YAMAHA

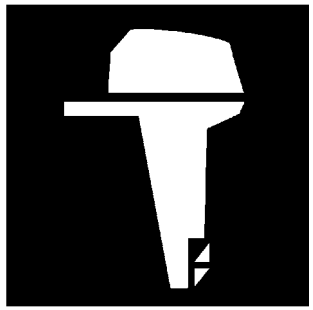

PARTS CATALOGUE
CATALOGUE DE PIECES DETACHEES

115CETO'05 (6N64)
130BETO'05 (6N74)

1D6N6-300F1

(2D6N6-300F1)

YAMAHA GENUINE Parts & Accessories

2017/8/25

NEWS NO.	DATE	COMMENT
PE0-OM-050018	Sep.,30,2005	COR:FIG.15 FLUSHING KIT LIST/ILLUSTRATION CORRECTION
PE0-OM-170036	Aug.,23,2017	COR:FIG.6, 28 LIST CORRECTION

FOREWORD

This Parts Catalogue is related to the parts for the model(s) on the cover page. When you are ordering replacement parts, please refer to this Parts Catalogue and quote both part numbers and part names correctly.

1. Modifications or additions which have been made after the issue of the Parts Catalogue will be announced in the Parts News.
   It is advisable that you make the necessary corrections to the Parts Catalogue according to the Parts News.

2. Abbreviations
   The following abbreviations are used in this Parts Catalogue.

   "UR" Use specified parts number.
   "UN" Use as many as needed.
   "AP" Alternate Parts
   "LM" Locally Made (Parts need to be ordered locally)
   "F#" Frame No. (Applicable machine No.)
   "O/S" Over Size

3. The number of components for assembly
   - Parts, which are to be supplied in an assembly, are listed with a dot (.) in front of the part name as shown below.
   - The numeral appearing to the right of each component part indicates the quantity of parts for each assembly unit.

PART NO.	DESCRIPTION	Q'TY	REMARKS
2F5–83310–60	FRONT FLASHER LIGHT ASSY	2	
115–83311–60	.BULB (6V–18W)	1	

4. Applicable colours of graphics are represented in the "REMARKS" as shown below.

PART NO.	DESCRIPTION	Q'TY	REMARKS
2N4–24110–00–X5	FUEL TANK COMP.	2	MXR
3J1–24240–10	.GRAPHIC, FUEL TANK	1	FOR MXR

5. Note that the illustrations for reference in finding parts numbers are not to be used for assembling. When assembling, please use the applicable service manual.

6. The asterisk (*) before a reference number indicates modified items after the first edition.

7. Applicable Serial No.

   Engine Serial No.

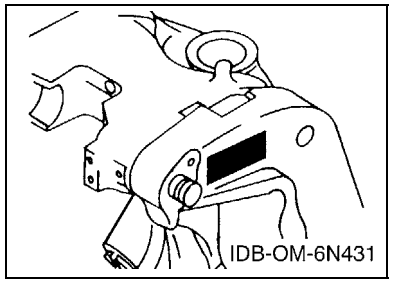

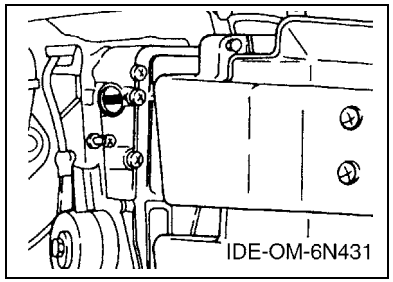

8. Applicable Engine Starting Serial No.

Model	Serial No.	Model	Serial No.
115C	6E5-1010659	130B	6L1-1001940

9. Applicable Colour Code

Abbreviation	Colour Name	Colour Code
DBNM2	DARK BLUISH GRAY METALLIC 2	004D

10. Quantity Column Information

Column No.	Name Of Q'ty Column	Applicable Model
1	6N64	115CETO
2	6N74	130BETO

AVANT–PROPOS

Ce catalogue de pièces détachées concerne les pièces pour le(s) modèle(s) indiqué(s) sur la page de couverture. Lorsque vous commandez des pièces de rechange, veuillez vous référer à ce catalogue de pieces détachées et indiquer clairement les numéros et les noms des pièces détachées.

1. Les modifications ou ajouts ayant été effectués après la parution du catalogue de pièces détachées seront décrits dans les Bulletins d'information concernant les pièces détachées.
   Il est recommandé que vous apportiez les corrections nécessaires au catalogue des pièces détachées en vous référant aux Bulletins d'information.

2. Abréviations
   Dans ce catalogue, les abréviations suivantes sont utilisées:

   "UR" Utiliser le numéro de pièces spécifié.
   "UN" Utiliser autant que nécessaire.
   "AP" Pièces de substitution
   "LM" Fabrication locale (les pièces doivent être commandées localement.)
   "F#" N° de cadre (applicable au N° de série)
   "O/S" Surdimensionné

3. Nombre de pièces d'un assemblage
   - Les pièces fournies comme composants d'un assemblage sont précédées d'un point (.) de la manière indiquée ci–dessous.
   - Le chiffre apparaissant à la droite de chaque composant indique la quantité de pièces pour chaque unité d'assemblage.

N° PIECES	DESCRIPTION	QTE	REMARQUES
2F5–83310–60	ENS. CLIGNOTANT AVANT	2	
115–83311–60	.AMPOULE (6V–18W)	1	

4. Les couleurs concernant les graphiques sont indiquées dans la colonne "REMARQUES", comme indiqué ci–dessous.

N° PIECES	DESCRIPTION	QTE	REMARQUES
2N4–24110–00–X5	RESERVOIR A ESSENCE.	2	MXR
3J1–24240–10	.GRAPHIQUE	1	POUR MXR

5. Veuillez noter que les illustrations sont indiquées à titre de référence pour trouver les numéros de pièces, non pour être utilisées lors de l'assemblage. Lors de l'assemblage, veuillez utiliser le manuel d'entretien adéquat.

6. L'astérisque (*) placé devant un numéro de référence indique des éléments qui ont été modifiés après la première édition.

7. N° de série applicable

   N° de Série du moteur

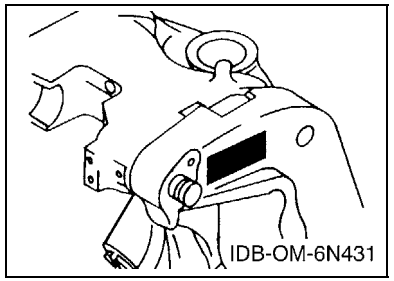

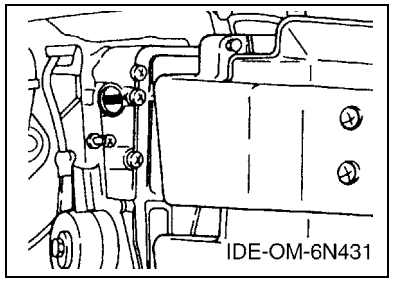

8. N° de série initial du moteur applicable

Modèle	N° de série	Modèle	N° de série
115C	6E5-1010659	130B	6L1-1001940

9. Code couleur applicable

Abréviation	Nom de la couleur	Code couleur
DBNM2	DARK BLUISH GRAY METALLIC 2	004D

10. Informations relatives à la colonne Quantité

N° de la colonne	Nom de la colonne Qté	Modèle applicable
1	6N64	115CETO
2	6N74	130BETO

CONTENTS

SHEET1/2
TOP COWLING A4
CYLINDER & CRANKCASE 1 ..... A5
CRANKSHAFT & PISTON A6
CYLINDER & CRANKCASE 2 ..... B1
INTAKE B3
CARBURETOR B5
OIL PUMP B7
OIL TANK C2
FUEL 1 ..... C5
FUEL 2 ..... C7
GENERATOR D1
ELECTRICAL 1 ..... D2
ELECTRICAL 2 ..... D3
STARTING MOTOR D5
BOTTOM COWLING D6
CONTROL E2
BRACKET 1 ..... E5
BRACKET 2 ..... E7
POWER TRIM & TILT ASSY 1 ..... F2
POWER TRIM & TILT ASSY 2 ..... F4
UPPER CASING F6

INDEX

NUMERICAL INDEX G1

SHEET2/2
LOWER CASING & DRIVE 1 ..... A4*
LOWER CASING & DRIVE 2 ..... B1*
STEERING GUIDE B3*
REMOTE CONTROL BOX B4*
REMOTE CONTROL ASSY B5*
METER C1*
REPAIR KIT 1 ..... C2*
REPAIR KIT 2 ..... C4*

INDEX

NUMERICAL INDEX G1*

TABLE DES MATIERES

Feuille1/2
CAPOT SUPERIEUR A4
CYLINDRE & CARTER 1 ..... A5
VILEBREQUIN & PISTON A6
CYLINDRE & CARTER 2 ..... B1
ADMISSION B3
CARBURATEUR B5
POMPE A HUILE B7
RESERVOIR A PETROLE C2
CARBURANT 1 ..... C5
CARBURANT 2 ..... C7
GENERATRICE D1
PARTIE ELECTRIQUE 1 ..... D2
PARTIE ELECTRIQUE 2 ..... D3
DEMARREUR ELECTRIQUE D5
CAPOT INFERIEUR D6
COMMANDE E2
SUPPORT 1 ..... E5
SUPPORT 2 ..... E7
PUISSANCE PARER ET INCLINER 1 ..... F2
PUISSANCE PARER ET INCLINER 2 ..... F4
FOURREAU F6

INDEX

INDEX NUMERIQUE G1

Feuille2/2
BOITIER D'HELICE TRANSMISSION1 ..... A4*
BOITIER D'HELICE TRANSMISSION2 ..... B1*
FIXATION DE DIRECTION B3*
BOITIER DE COMMANDE A DISTANCE B4*
BOITIER DE COMMANDE A DISTANCE B5*
COMPTEUR C1*
KITS DE REPARATION 1 ..... C2*
KITS DE REPARATION 2 ..... C4*

INDEX

INDEX NUMERIQUE G1*

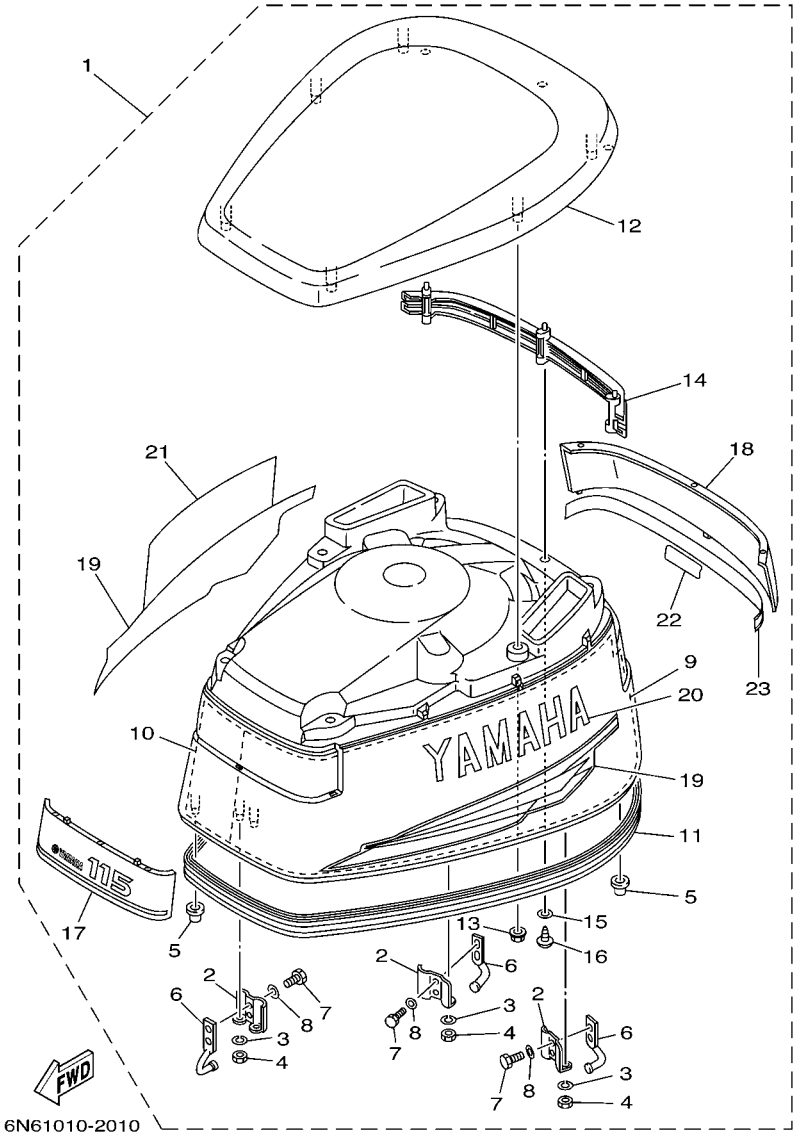

FIG. 1 TOP COWLING — CAPOT SUPERIEUR

REF. NO.	PART NO. N° PIECES	DESCRIPTION DESCRIPTION	6N64	6N74				REMARKS REMARQUES
1	6N6–42610–60–4D	TOP COWLING ASSY CAPOT (ENS.)	1					
	6N7–42610–60–4D	TOP COWLING ASSY CAPOT (ENS.)		1				
2	6R3–42647–00	.HOLDER, CLAMP BAND .SUPPORT, SANDOW DE SERRAGE	3	3				
3	92990–06100	.WASHER, SPRING .RONDELLE, GROWER	6	6				
4	95380–06600	.NUT, HEXAGON .ECROU	6	6				
5	6R3–42662–00	.DAMPER .AMORTISSEUR	3	3				
6	6R3–42814–00	.HOOK, CLAMP .CROCHET DE BRIDE	3	3				
7	97095–06012	.BOLT .BOULON	6	6				
8	92995–06600	.WASHER .RONDELLE	6	6				
9	6N7–42619–00	.DAMPER, FORM .BOURRELET, CAOUTCHOUC	1	1				
10	6N7–42627–00	.DAMPER, FORM .BOURRELET, CAOUTCHOUC	1	1				
11	6R3–42615–01	.SEAL .JOINT	1	1				
12	6N7–42613–00–4D	.MOLDING, AIR DUCT .MANCHON A AIR	1	1				
13	90179–06M24	.NUT .ECROU	6	6				
14	6N7–42636–00	.LOUVER 2 .VOLET 2	1	1				
15	92990–04600	.WASHER, PLATE .RONDELLE, PLATE	3	3				
16	97780–40520	.SCREW, TAPPING .VIS, TETE BOMBEE	3	3				
17	6N6–42686–40	.EMBLEM, FRONT .EMBLEME, AVANT	1					
	6N7–42686–40	.EMBLEM, FRONT .EMBLEME, AVANT		1				
18	6N6–42687–30	.EMBLEM, REAR .EMBLEME, ARRIERE	1					
	6N7–42687–30	.EMBLEM, REAR .EMBLEME, ARRIERE		1				
19	6N7–W0070–30	.GRAPHIC SET .JEU DIEMBLEMES	1	1				
20	6N7–42681–30	.MARK, COWLING .ADHESIF, CAPOT	1	1				
21	6N7–42682–30	.MARK, COWLING .ADHESIF, CAPOT	1	1				
22	6N7–42678–30	.GRAPHIC, REAR .ADHESIF, ARRIERE	1	1				
23	6N7–4267A–30	.GRAPHIC, REAR 2 .ADHESIF, ARRIERE 2	1	1				

FIG. 2 CYLINDER & CRANKCASE 1 CYLINDRE & CARTER 1

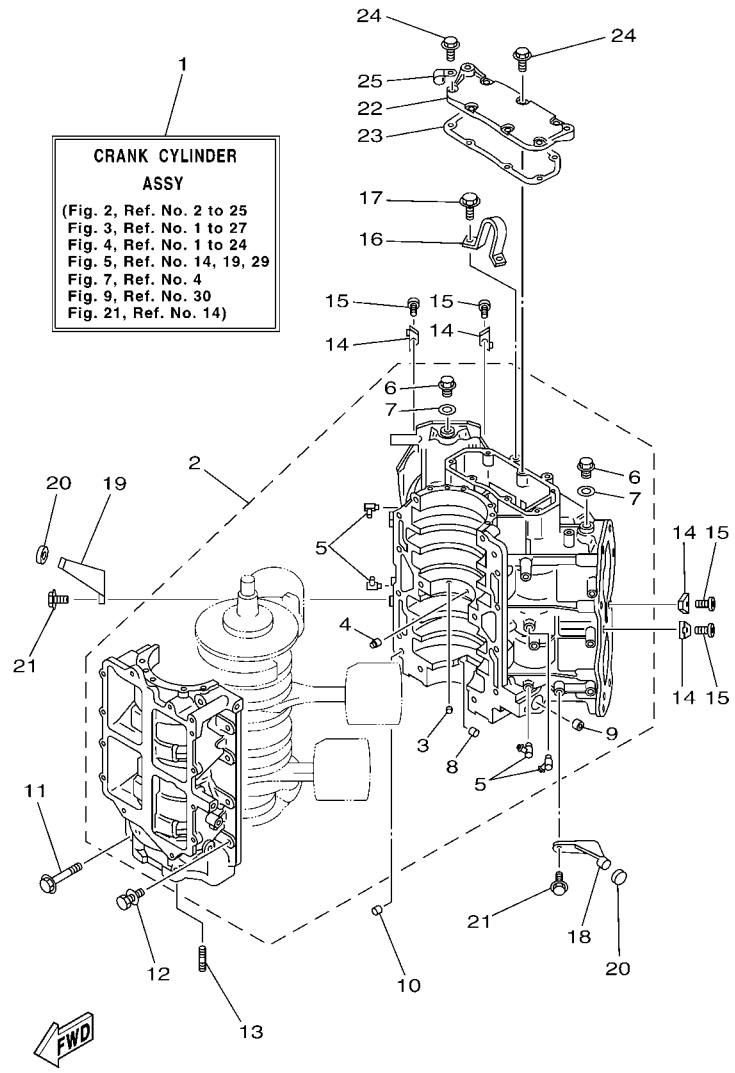

REF. NO.	PART NO. N° PIECES	DESCRIPTION DESCRIPTION	6N64	6N74				REMARKS REMARQUES
1	6N6–W0090–17–1S	CRANK CYLINDER ASSY EMBIELLAGE CYLINDRE (ENS.)	1					
	6N7–W0090–18–1S	CRANK CYLINDER ASSY EMBIELLAGE CYLINDRE (ENS.)		1				
2	6N6–15100–01–1S	CRANKCASE ASSY CARTER DE MOTEUR COMPLET	1					
	6N7–15100–01–1S	CRANKCASE ASSY CARTER DE MOTEUR COMPLET		1				
3	624–11379–00	.VALVE, CHECK .CLAPET	1	1				
4	663–11518–01	.LOCK, BEARING .CENTREUR, ROULEMENT	1	1				
5	6E5–11372–01	.NIPPLE, HOSE .RACCORD, TUYAU	4	4				
6	90340–14M00	.PLUG, STRAIGHT SCREW .PLOT, FILETE DROIT	2	2				
7	90430–14115	.GASKET .JOINT	2	2				
8	90384–06M07	.BUSH, BIMETAL FORMED .DOUILLE, BIMETAL MISE EN FORM	1	1				
9	90384–14M09	.BUSH, BIMETAL FORMED .DOUILLE, BIMETAL MISE EN FORM	1	1				
10	93608–12063	PIN, DOWEL AXE	2	2				
11	90105–10M20	BOLT, FLANGE BOULON	6	6				
12	90119–08M94	BOLT, WITH WASHER BOULON, AVEC RONDELLE	8	8				
13	90116–08M45	BOLT, STUD GOUJON	2	2				
14	6E5–11325–00	ANODE ANODE	4	4				
15	98780–04015	SCREW, FLAT HEAD VIS A TETE FRAISEE	4	4				
16	6E5–11119–01	HANGER, ENGINE ANNEAU, LEVAGE	1	1				
17	90119–08MA3	BOLT, WITH WASHER BOULON, AVEC RONDELLE	2	2				
18	6E5–42761–00–1S	STOPPER PLAQUETTE	1	1				
19	6E5–42762–00–1S	STOPPER PLAQUETTE	1	1				
20	68F–44533–00	DAMPER, UPPER MOUNT RUBBER COUVERCLE, SUSPENSION INFERIEU	2	2				
21	90119–06MA2	BOLT, WITH WASHER BOULON, AVEC RONDELLE	4	4				
22	6K7–11371–01–1S	COVER COUVERCLE	1	1				
23	6E5–11381–A2	GASKET 1 JOINT 1	1	1				
24	90119–06MA2	BOLT, WITH WASHER BOULON, AVEC RONDELLE	7	7				
25	90465–06M86	CLAMP BRIDE	1	1				

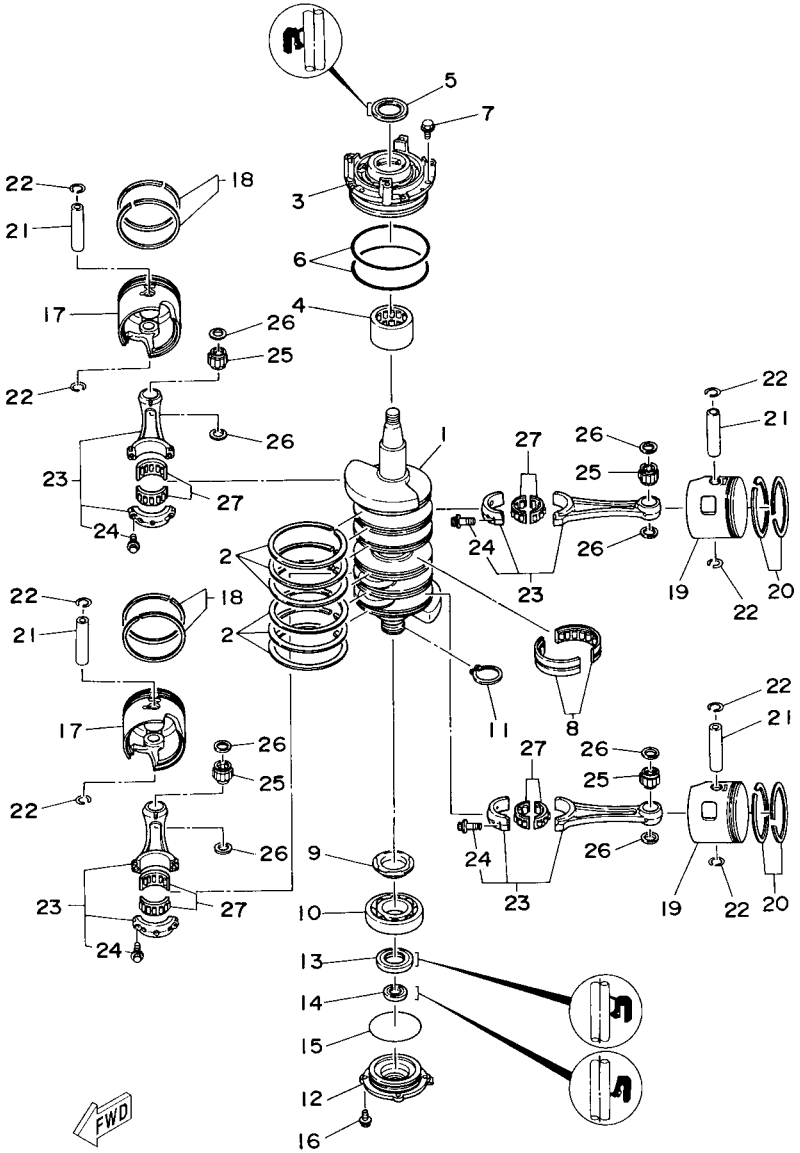

FIG. 3 CRANKSHAFT & PISTON — VILEBREQUIN & PISTON

REF. NO.	PART NO. N° PIECES	DESCRIPTION DESCRIPTION	6N64	6N74				REMARKS REMARQUES
1	6N7–11411–01	CRANKSHAFT VILEBREQUIN COMPLET	1	1				
2	6E5–11447–00	SEAL, CRANK JOINT, VILEBREQUIN	6	6				
3	6R3–15163–00–1S	HOUSING, BEARING 1 LOGEMENT, ROULEMENT 1	1	1				
4	93311–940U3	BEARING ROULEMENT	1	1				
5	93102–40M14	OIL SEAL JOINT SPY	1	1				
6	93211–04001	O-RING JOINT TORIQUE	2	2				
7	90119–06MA2	BOLT, WITH WASHER BOULON, AVEC RONDELLE	3	3				
8	93310–954U1	BEARING ROULEMENT	1	1				
9	6R3–11536–00	GEAR, DRIVE ENGRENAGE, MENANT	1	1				
10	93306–208U0	BEARING ROULEMENT	1	1				
11	93410–40M03	CIRCLIP CLIPS	1	1				
12	6G5–15359–00–94	HOUSING, OIL SEAL LOGEMENT, BAGUE D'ETANCHEITE	1	1				
13	93102–35M13	OIL SEAL JOINT SPY	1	1				
14	93101–22M15	OIL SEAL JOINT SPY	1	1				
15	93210–74M35	O-RING JOINT TORIQUE	1	1				
16	90119–06MA2	BOLT, WITH WASHER BOULON, AVEC RONDELLE	4	4				
17	6R5–11631–11–93	PISTON (STD) PISTON (STD)	2	2				
	6R5–11635–11	PISTON (0.25MM O/S) PISTON (0.25MM O/S)	2	2				AP AP
	6R5–11636–11	PISTON (0.50MM O/S) PISTON (0.50MM O/S)	2	2				AP AP
18	64D–11603–02	PISTON RING SET (STD) JEU DE SEGMENTS (STD)	2	2				
	64D–11604–02	PISTON RING SET (0.25MM O/S) JEU DE SEGMENTS (0.25MM O/S)	2	2				AP AP
	64D–11605–02	PISTON RING SET (0.50MM O/S) JEU DE SEGMENTS (0.50MM O/S)	2	2				AP AP
19	6R5–11642–11–93	PISTON 2 (STD) PISTON 2 (STD)	2	2				
	6R5–11645–11	PISTON 2 (0.25MM O/S) PISTON 2 (0.25MM O/S)	2	2				AP AP
	6R5–11646–11	PISTON 2 (0.50MM O/S) PISTON 2 (0.50MM O/S)	2	2				AP AP
20	64D–11603–02	PISTON RING SET (STD) JEU DE SEGMENTS (STD)	2	2				
	64D–11604–02	PISTON RING SET (0.25MM O/S) JEU DE SEGMENTS (0.25MM O/S)	2	2				AP AP

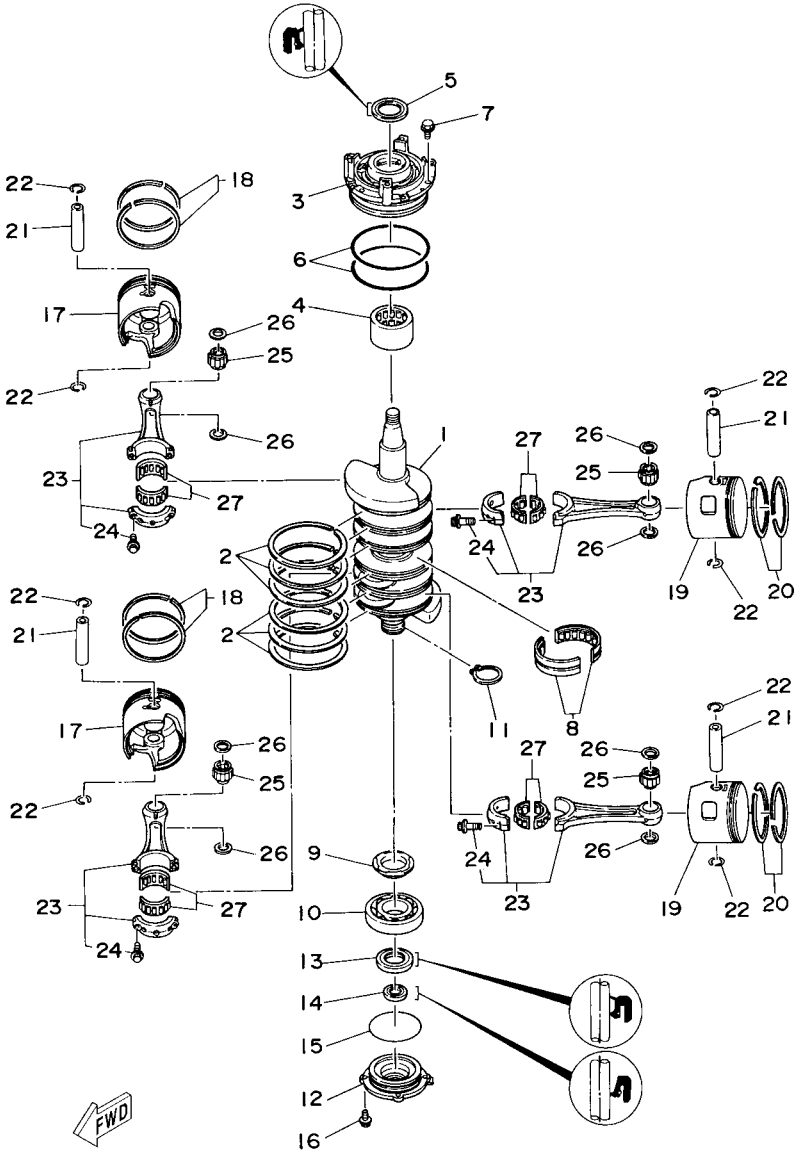

FIG. 3 CRANKSHAFT & PISTON — VILEBREQUIN & PISTON

REF. NO.	PART NO. N° PIECES	DESCRIPTION DESCRIPTION	6N64	6N74				REMARKS REMARQUES
20	64D–11605–02	PISTON RING SET (0.50MM O/S) JEU DE SEGMENTS (0.50MM O/S)	2	2				AP AP
21	6R5–11633–10	PIN, PISTON AXE, PISTON	4	4				
22	6R5–11634–10	CLIP, PISTON PIN AGRAFE, AXE DE PISTON	8	8				
23	6R5–11650–10	CONNECTING ROD ASSY BIELLE COMPLETTE	4	4				
24	90109–08022	.BOLT .BOULON	2	2				
25	93310–32337	BEARING ROULEMENT	4	4				
26	90201–23M01	WASHER, PLATE RONDELLE, PLATE	8	8				
27	93310–836U0	BEARING ROULEMENT	4	4				

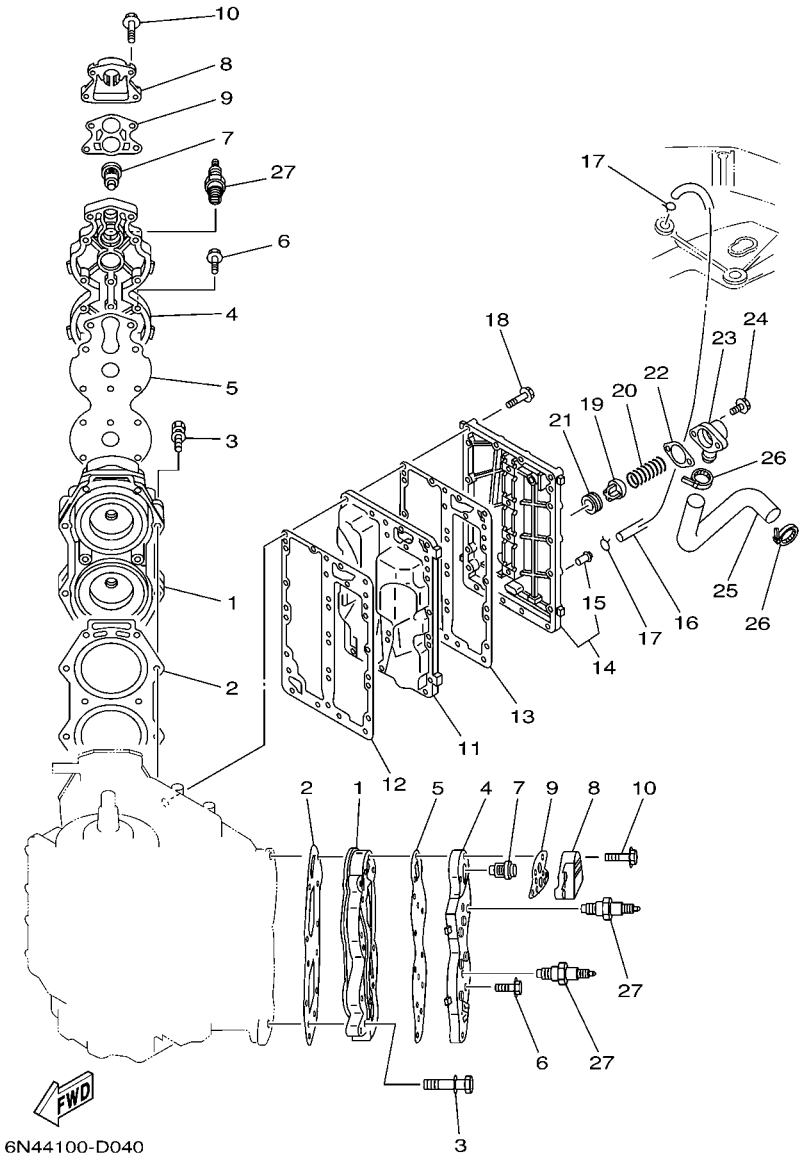

FIG. 4 CYLINDER & CRANKCASE 2 CYLINDRE & CARTER 2

REF. NO.	PART NO. N° PIECES	DESCRIPTION DESCRIPTION	6N64	6N74				REMARKS REMARQUES
1	6E5–11111–10–1S	HEAD, CYLINDER 1 CULASSE	2					
	6L1–11111–00–1S	HEAD, CYLINDER 1 CULASSE		2				
2	6E5–11181–A1	GASKET, CYLINDER HEAD 1 JOINT, DE CULASSE 1	2	2				
3	90119–08MA8	BOLT, WITH WASHER BOULON, AVEC RONDELLE	20	20				
4	6E5–11191–01–1S	COVER, CYLINDER HEAD 1 COUVERCLE, CULASSE 1	2	2				
5	6E5–11193–A0	GASKET, HEAD COVER 1 JOINT, COUVERCLE DE CULASSE 1	2	2				
6	90119–06MA4	BOLT, WITH WASHER BOULON, AVEC RONDELLE	24	24				
7	6E5–12411–30	THERMOSTAT THERMOSTAT	2	2				
8	6G5–12413–00–1S	COVER, THERMOSTAT COUVERCLE, THERMOSTAT	2	2				
9	688–12414–A1	GASKET, COVER JOINT, COUVERCLE	2	2				
10	90119–06MA6	BOLT, WITH WASHER BOULON, AVEC RONDELLE	8	8				
11	6E5–41111–00–1S	INNER COVER, EXHAUST PLAQUE, ECHAPPEMENT	1					
	6L1–41111–00–1S	INNER COVER, EXHAUST PLAQUE, ECHAPPEMENT		1				
12	6E5–41112–A1	GASKET, EXHAUST INNER COVER JOINT, PLAQUE D'ECHAPPEMENT	1	1				
13	6E5–41114–A0	GASKET, EXHAUST OUTER COVER JOINT, COUVERCLE D'ECHAPPEMENT	1	1				
14	6N7–41113–00–1S	OUTER COVER, EXHAUST COUVERCLE, ECHAPPEMENT	1	1				
15	650–24378–00	.PIPE, JOINT 4 .DURITE RACCORDEMENT 4	1	1				
16	6E5–24312–00	PIPE 2 DURITE 2	1	1				
17	90467–08004	CLIP JONC	2	2				
18	90119–06MA5	BOLT, WITH WASHER BOULON, AVEC RONDELLE	23	23				
19	60H–12416–00	VALVE, PRESSURE CONTROL SOUPAPE DE CONTROLEUR PRESS	1	1				
20	90501–16M11	SPRING, COMPRESSION RESSORT, COMPRESSION	1	1				
21	90480–20M05	GROMMET PASSE-FIL	1	1				
22	6G5–11382–A1	GASKET 2 JOINT 2	1	1				
23	6G5–11372–00–1S	COVER, BYPASS 2 CONVERCLE	1	1				
24	90119–06MA2	BOLT, WITH WASHER BOULON, AVEC RONDELLE	2	2				
25	6E5–12576–00	HOSE 1 TUYAU 1	1	1				

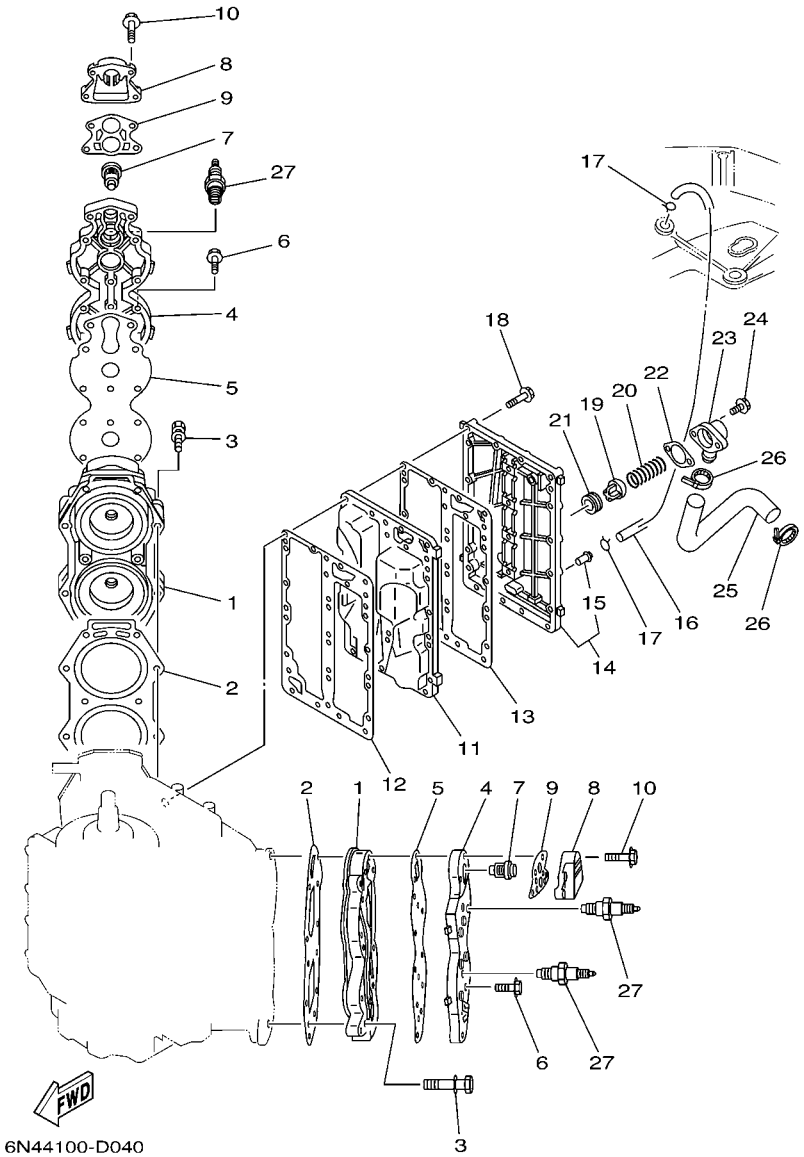

FIG. 4 CYLINDER & CRANKCASE 2 CYLINDRE & CARTER 2

REF. NO.	PART NO. N° PIECES	DESCRIPTION DESCRIPTION	6N64	6N74				REMARKS REMARQUES
26	90465–13M18	CLAMP BRIDE	2	2				
27	94702–00247	PLUG, SPARK (NGK BR8HS-10) BOUGIE D'ALLUMAGE(NGK BR8HS-10	4					
	94702–00309	PLUG, SPARK (NGK BR9HS-10) BOUGIE D'ALLUMAGE(NGK BR9HS-10		4				

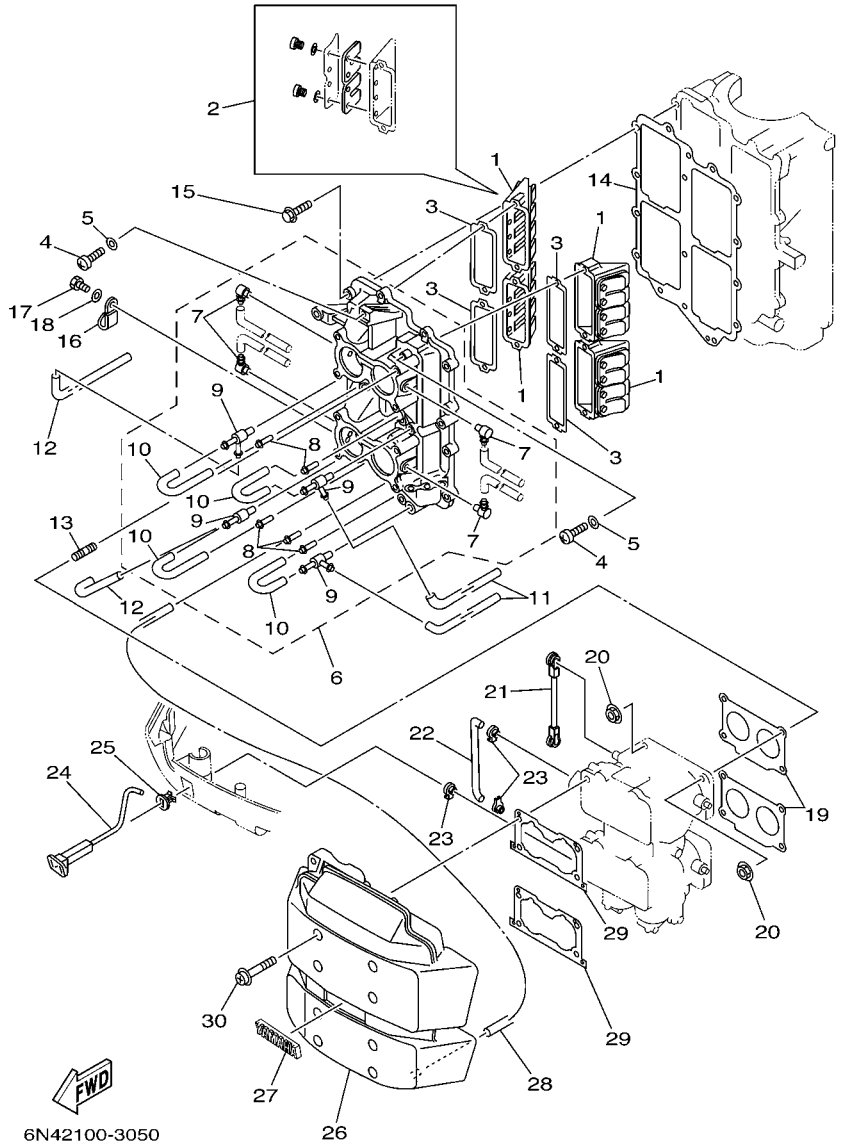

FIG. 5 INTAKE — ADMISSION

REF. NO.	PART NO. N° PIECES	DESCRIPTION DESCRIPTION	6N64	6N74				REMARKS REMARQUES
1	6E5–13610–00	REED VALVE ASSY CLAPET COMPLET	4	4				
2	6E5–W0004–00	.REED SET .JEU DE CLAPETS	1	1				
3	6E5–13621–A1	GASKET, VALVE SEAT JOINT, SIEGE DE CLAPET	4	4				
4	97880–05025	SCREW, PAN HEAD VIS, TETE TRONCONIQUE	8	8				
5	92990–05600	WASHER, PLATE RONDELLE, PLATE	8	8				
6	6E5–13641–11–1S	MANIFOLD 1 TUBULURE 1	1	1				
7	6E5–13552–01	.NOZZLE .GICLEUR	4	4				
8	624–14485–00	.PIPE, JOINT .DURITE	5	5				
9	6E5–11370–01	.CHECK VALVE ASSY .CLAPET (ENS.)	4	4				
10	90445–07M28	.HOSE (L70) .DURITE (L70)	4	4				
11	90445–07M24	HOSE (L240) DURITE (L240)	2	2				
12	90445–07M46	HOSE (L360) DURITE (L360)	2	2				
13	90116–06M30	BOLT, STUD GOUJON	8	8				
14	6E5–13645–A1	GASKET, MANIFOLD 1 JOINT, TUBULURE 1	1	1				
15	90119–06MA3	BOLT, WITH WASHER BOULON, AVEC RONDELLE	12	12				
16	90465–06M86	CLAMP BRIDE	1	1				
17	97095–06012	BOLT BOULON	1	1				
18	92995–06600	WASHER RONDELLE	1	1				
19	6E5–14198–A2	GASKET JOINT	2	2				
20	90179–06M28	NUT ECROU	8	8				
21	6E5–41217–01	ROD, ACCEL. LEVER TIGE, LEVIER ACCELERATION	1	1				
22	6E5–41256–01	ROD, CHOKE 1 TRINGLE 1, STARTER	1	1				
23	661–41262–02	JOINT, CHOKE LEVER RACCORD, LEVIER DE STARTER	3	3				
24	6N7–41271–00	KNOB, CHOKE BOUTON DE STARTER	1	1				
25	689–41273–00	GROMMET PASSE-FIL	1	1				
26	6N7–14440–01	SILENCER ASSY, INTAKE SIENCIEUX D'ADMISSION	1	1				
27	6E5–1441K–00	EMBLEM EMBLEME	1	1				

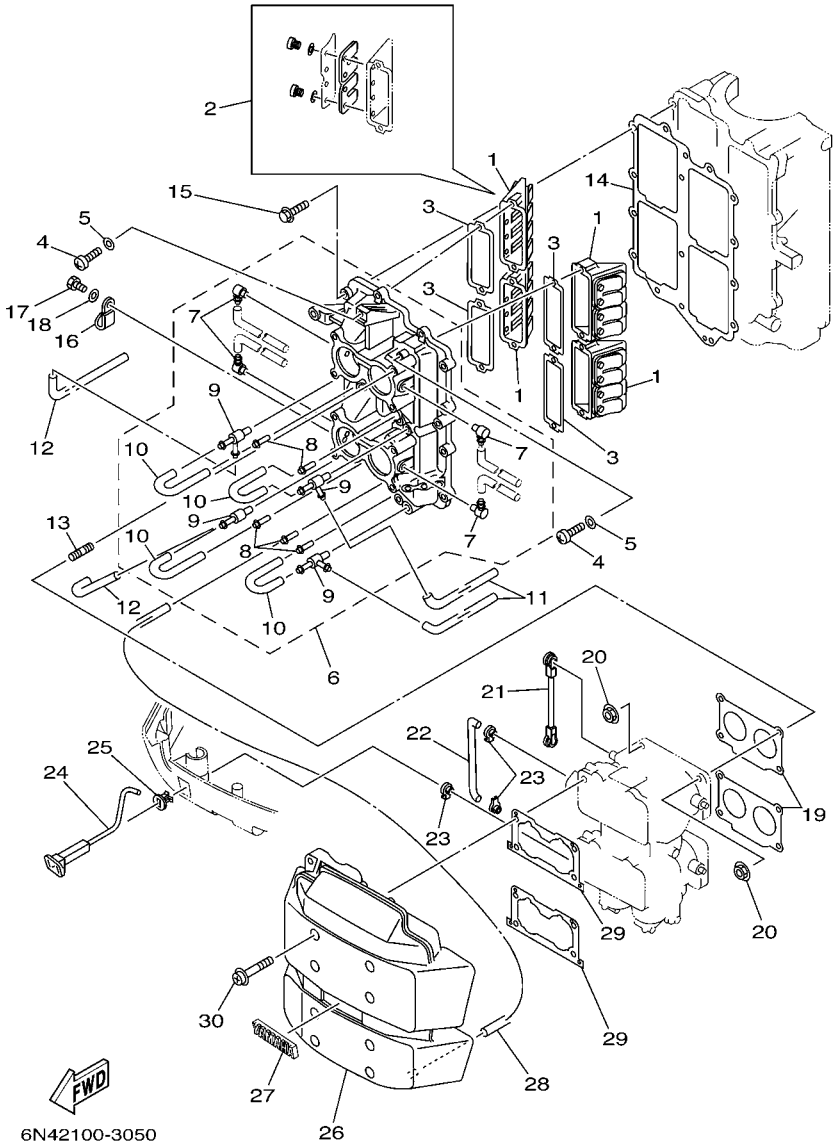

FIG. 5 INTAKE — ADMISSION

REF. NO.	PART NO. N° PIECES	DESCRIPTION DESCRIPTION	6N64	6N74				REMARKS REMARQUES
28	90445–07258	HOSE (L200) DURITE (L200)	1	1				
29	6K7–14483–00	GASKET JOINT	2	2				
30	90159–06M14	SCREW, WITH WASHER VIS, AVEC RONDELLE	8	8				

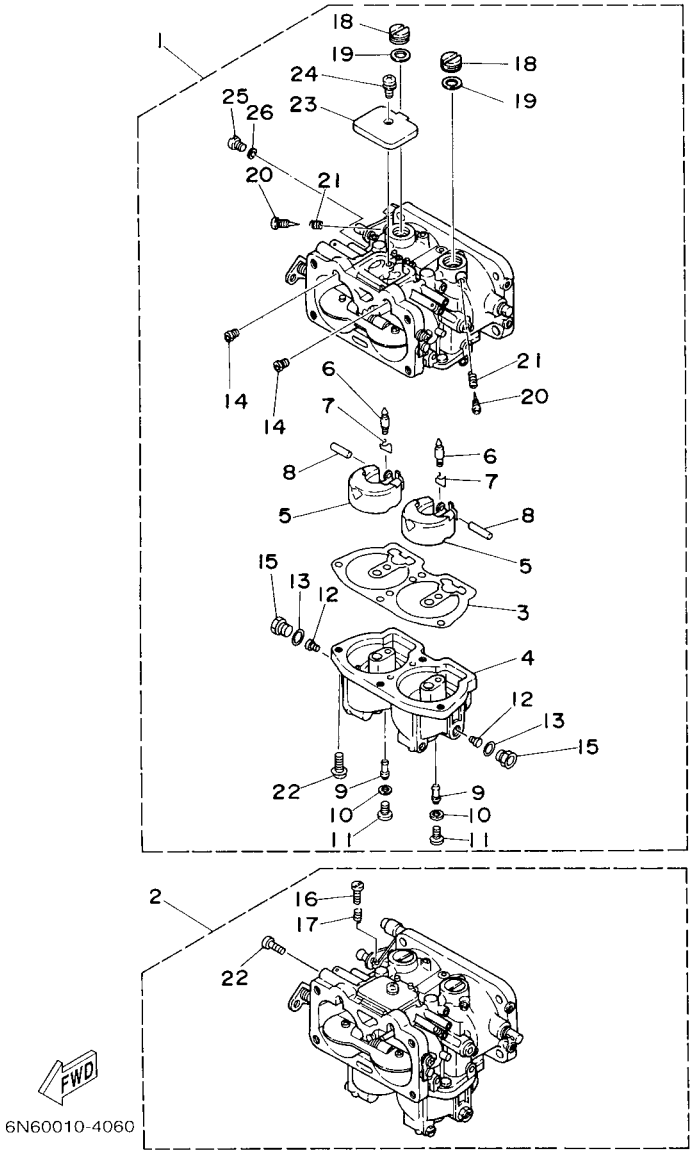

FIG. 6 CARBURETOR CARBURATEUR

REF. NO.	PART NO. N° PIECES	DESCRIPTION DESCRIPTION	6N64	6N74				REMARKS REMARQUES
1	6E5–14301–17	CARBURETOR ASSY 1 CARBURATEUR COMPLET 1	1					
	6L1–14301–05	CARBURETOR ASSY 1 CARBURATEUR COMPLET 1		1				
2	6E5–14302–17	CARBURETOR ASSY 2 CARBURATEUR COMPLET 2	1					
	6L1–14302–05	CARBURETOR ASSY 2 CARBURATEUR COMPLET 2		1				
3	64D–14384–01	.GASKET, FLOAT CHAMBER .JOINT, CUVE DE FLOTTEUR	2	2				
4	64D–14381–00	.BODY, FLOAT CHAMBER .CORPS, CUVE DE FLOTTEUR	2	2				
5	6E5–14385–02	.FLOAT .FLOTTEUR	4	4				
6	6E5–14546–00	.VALVE, NEEDLE .POINTEAU	4	4				
7	6E5–14159–00	.CLIP .JONC	4	4				
8	6E5–14386–02	.PIN, FLOAT .AXE, FLOTTEUR	4	4				
9	64D–1492F–39	.JET, AIR SLOW (#78) .GICLEUR, AIR (#78)	4					
	64D–1492F–41	.JET, AIR SLOW (#82) .GICLEUR, AIR (#82)		4				
10	61U–14959–00	.GASKET .JOINT	4	4				
11	64D–14394–00	.VALVE, DRAIN .SOUPAPE, VIDANGE	4	4				
12	64D–1492E–88	.JET, MAIN (#176) .GICLEUR, PRINCIPAL (#176)	4					
	64D–1492E–90	.JET, MAIN (#180) .GICLEUR, PRINCIPAL (#180)		4				
13	6E5–14398–01	.GASKET .JOINT	4	4				
14	61A–1492H–12	.JET, SLOW AIR BLEED (#60) .GICLEUR, AIR (#60)	4	4				
15	61A–14383–01	.SCREW, DRAIN .BOUCHON, PURGE	4	4				
16	6E5–14321–00	.SCREW, THROTTLE .VIS, ACCELERATEUR	1	1				#2 #2
17	6J8–14334–00	.SPRING, THROTTLE .RESSORT, ACCELERATEUR	1	1				#2 #2
18	6E5–14328–01	.PLUG .PLOT	4	4				
19	6E5–14979–00	.GASKET .JOINT	4	4				
20	6E5–14323–03	.SCREW, AIR ADJUSTING .VIS DE DOSEUR D'AIR	4	4				
21	6E5–14223–00	.SPRING, AIR ADJUSTING .RESSORT, DOSAGE DE L'AIR	4	4				
22	97980–05116	.SCREW, WITH WASHER .VIS, AVEC RONDELLE	9	9				
23	6E5–14527–01	.PLATE .PLAQUE	2	2				

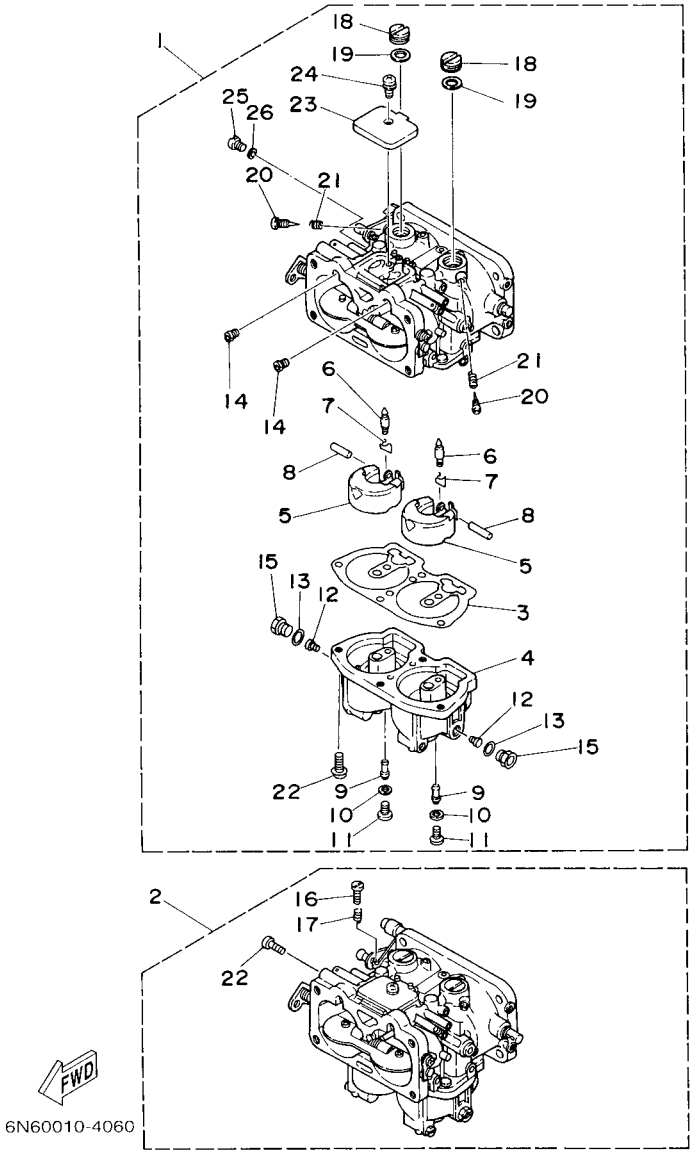

FIG. 6 CARBURETOR CARBURATEUR

REF. NO.	PART NO. N° PIECES	DESCRIPTION DESCRIPTION	6N64	6N74				REMARKS REMARQUES
24	97980–05108	.SCREW, WITH WASHER .VIS, AVEC RONDELLE	2	2				
25	6E5–14324–00	.SCREW, FLAT HEAD .VIS TETE PLATE	2	2				
26	6J8–14995–00	.GASKET .JOINT	2	2				

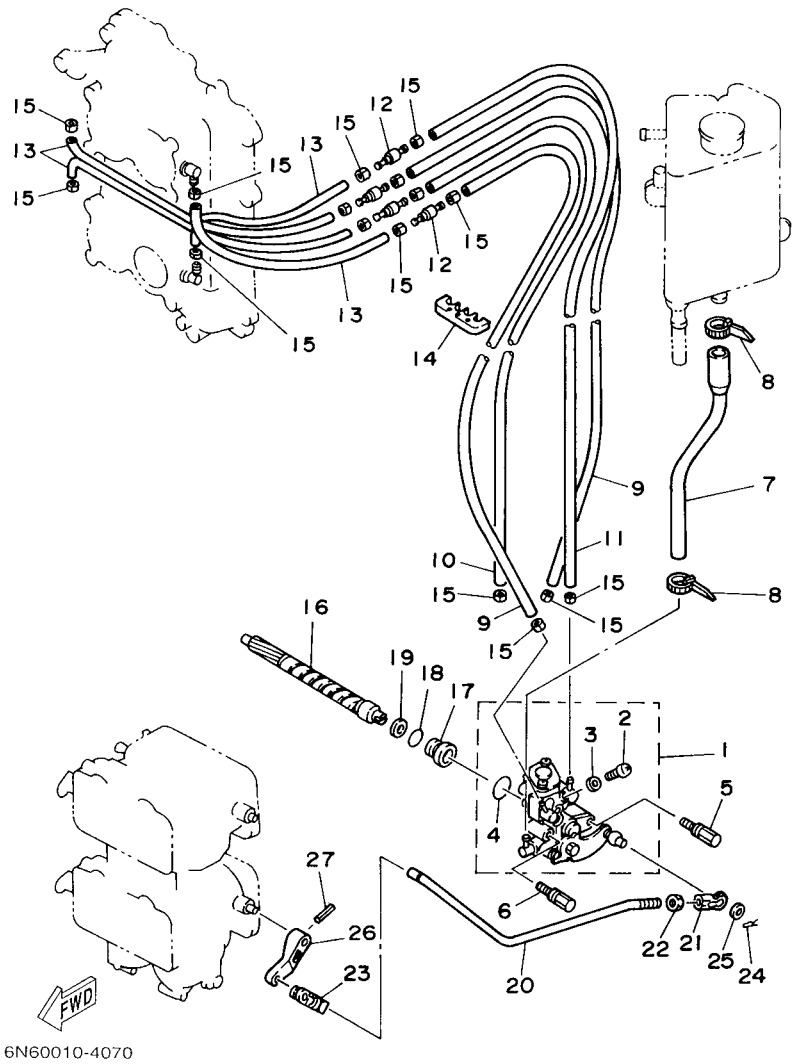

FIG. 7 OIL PUMP — POMPE A HUILE

REF. NO.	PART NO. N° PIECES	DESCRIPTION DESCRIPTION	6N64	6N74				REMARKS REMARQUES
1	6N6–13200–00	OIL INJECTION PUMP ASSY POMPE A HUILE COMPLET	1					
	6N7–13200–00	OIL INJECTION PUMP ASSY POMPE A HUILE COMPLET		1				
2	6R3–13471–00	.PLUG, DRAIN .PLOT, VIDANGE	1	1				
3	6L2–13475–00	.GASKET .JOINT	1	1				
4	93210–19MA7	.O-RING .JOINT TORIQUE	1	1				
5	90109–06M40	BOLT BOULON	1	1				
6	90109–06M39	BOLT BOULON	1	1				
7	6N7–13416–00	PIPE, OIL 1 DURITE A HUILE	1	1				
8	90465–11M10	CLAMP BRIDE	2	2				
9	90445–07M89	HOSE (L310) DURITE (L310)	2	2				
10	90445–07196	HOSE (L160) DURITE (L160)	1	1				
11	90445–07M72	HOSE (L250) DURITE (L250)	1	1				
12	6R3–13183–10	VALVE, CHECK S'OUPAPE DE RATANUE	4	4				
13	90445–07M87	HOSE (L110) DURITE (L110)	4	4				
14	90464–07M06	CLAMP BRIDE	1	1				
15	90468–07M02	CLIP JONC	16	16				
16	6R3–11537–00	GEAR, DRIVEN PIGNON SECONDAIRE	1	1				
17	6R3–13117–00	COLLAR, DISTANCE ENTRETOISE	1	1				
18	93210–13M04	O-RING JOINT TORIQUE	1	1				
19	90202–08M44	WASHER, PLATE RONDELLE, PLATE	1	1				
20	6R3–41241–00	ROD, LINK BIELLETTE	1	1				
21	6H1–41237–00	JOINT, LINK RACCORD	1	1				
22	95380–05600	NUT ECROU	1	1				
23	6R5–41237–00	JOINT, LINK RACCORD	1	1				
24	90468–05M03	CLIP JONC	1	1				
25	90202–05088	WASHER, PLATE RONDELLE, PLATE	1	1				
26	6E5–14276–01	LEVER LEVIER	1	1				

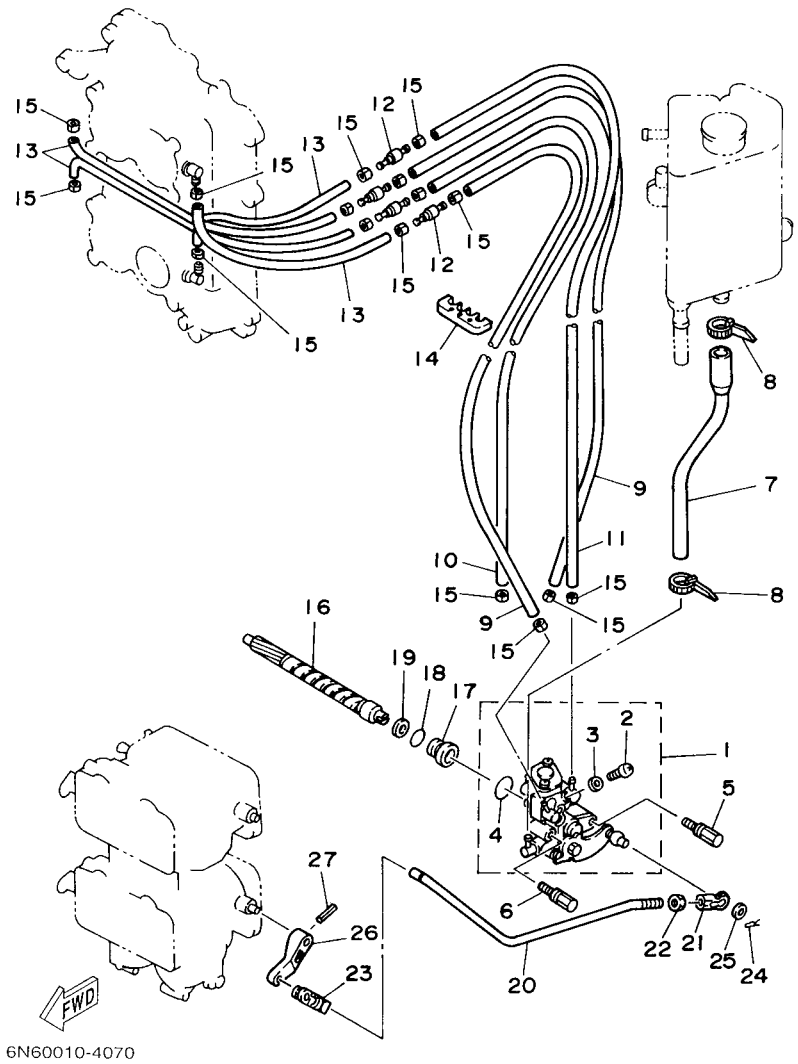

FIG. 7 OIL PUMP — POMPE A HUILE

REF. NO.	PART NO. N° PIECES	DESCRIPTION DESCRIPTION	6N64	6N74				REMARKS REMARQUES
27	91690–30016	PIN, SPRING AGRAFFE	1	1				

FIG. 8 OIL TANK — RESERVOIR A PETROLE

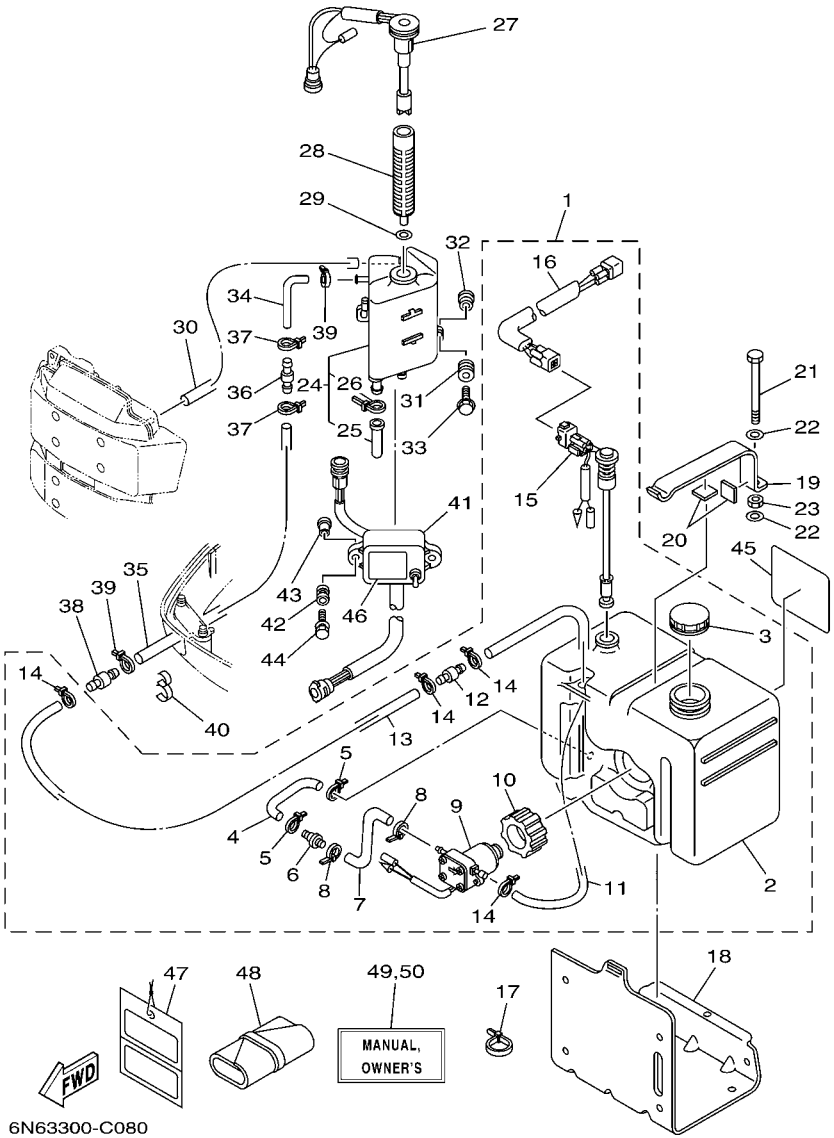

REF. NO.	PART NO. N° PIECES	DESCRIPTION DESCRIPTION	6N64	6N74				REMARKS REMARQUES
1	61A–21708–20	SUB OIL TANK ASSY RESERVOIR A HUILE SECOURS (ENS	1	1				
2	6E5–21733–20	.SUB TANK, OIL (10.5L) .RESERVOIR A HUILE SECOURS:10.	1	1				
3	6E5–21770–03	.OIL TANK CAP ASSY .CABOCHON DE RESERVOIR A HUILE	1	1				
4	6E5–24322–00	.PIPE 11 .DURITE 11	1	1				
5	90465–11M10	.CLAMP .BRIDE	2	2				
6	646–24251–02	.STRAINER 1 .FILTRE 1	1	1				
7	6E5–24319–01	.PIPE, OIL .DURITE A HUILE	1	1				
8	90465–11M10	.CLAMP .BRIDE	2	2				
9	6E5–81900–01	.OIL FEED PUMP ASSY .VIEUX	1	1				
10	6E5–81922–00	.GROMMET .OEILLET CAOUTCHOUC	1	1				
11	6E5–24321–01	.PIPE 10 .DURITE 10	1	1				
12	6E5–24379–00	.PIPE, JOINT 4 .DURITE RACCORDEMENT 4	1	1				
13	90445–11M26	.HOSE (L6500) .DURITE (L6500)	1	1				
14	90465–11M10	.CLAMP .BRIDE	4	4				
15	6E5–85720–05	.OIL LEVEL GAUGE ASSY .JAUGE A HUILE CPLT	1	1				
16	6R3–85721–80	.WIRE, LEAD (8M) .FIL, SECONDAIRE (8M)	1	1				
17	90465–13M11	CLAMP BRIDE	1	1				
18	6E5–21734–01–33	HOLDER, OIL SUB TANK SUPPORT, RESERV AUXIL A HUILE	1	1				
19	6E5–21798–01–33	BRACKET, DAMPER SUPPORT, AMORTISSEUR	1	1				
20	6E5–21746–00	DAMPER AMORTISSEUR	2	2				
21	97080–06100	BOLT BOULON	1	1				
22	92990–06600	WASHER, PLATE RONDELLE, PLATE	2	2				
23	95380–06600	NUT, HEXAGON ECROU	1	1				
24	6E5–21750–05	OIL TANK ASSY RESERVOIR A HUILE	1	1				
25	6E5–13448–00	.CAP .CAPUCHON	1	1				
26	90465–13M11	.CLAMP .BRIDE	1	1				
27	6G7–85730–04	OIL LEVEL GAUGE ASSY VIEUX	1	1				

FIG. 8 OIL TANK — RESERVOIR A PETROLE

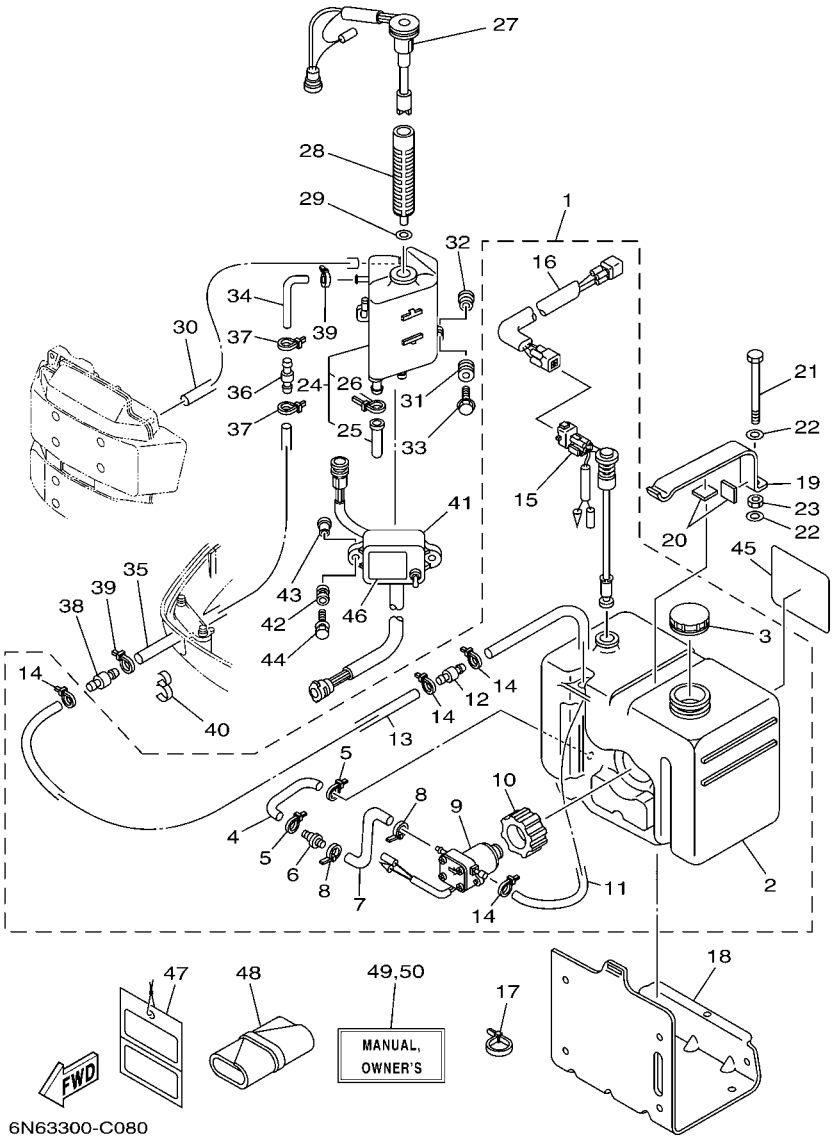

REF. NO.	PART NO. N° PIECES	DESCRIPTION DESCRIPTION	6N64	6N74				REMARKS REMARQUES
28	6E5–13411–00	STRAINER, OIL FILTRE, HUILE	1	1				
29	6E5–13414–00	GASKET, STRAINER COVER JOINT, COUVERCLE DE FILTRE	1	1				
30	90445–05M02	HOSE (L380) DURITE (L380)	1	1				
31	6A0–82317–00	DAMPER, IGNITION COIL AMORTISSEUR, BOBINE D'ALLUM	3	3				
32	624–42542–00	PIPE TUYAU	3	3				
33	90119–06M65	BOLT, WITH WASHER BOULON, AVEC RONDELLE	3	3				
34	64E–24323–00	PIPE 12 DURITE 12	1	1				
35	90445–12207	HOSE (L2400) DURITE (L2400)	1	1				
36	6E5–24379–00	PIPE, JOINT 4 DURITE RACCORDEMENT 4	1	1				
37	90465–11M10	CLAMP BRIDE	2	2				
38	6E5–24379–00	PIPE, JOINT 4 DURITE RACCORDEMENT 4	1	1				
39	90465–11M10	CLAMP BRIDE	2	2				
40	90464–13M34	CLAMP BRIDE	1	1				
41	6N7–85740–00	CONTROL UNIT ASSY UNITE DE CONTROLE COMPLETE	1	1				
42	6A0–82317–00	DAMPER, IGNITION COIL AMORTISSEUR, BOBINE D'ALLUM	2	2				
43	624–42542–00	PIPE TUYAU	2	2				
44	90119–06M65	BOLT, WITH WASHER BOULON, AVEC RONDELLE	2	2				
45	6E5–13437–62	MARK, CAUTION MAKER	1	1				
46	6E5–85711–60	MARK, CAUTION MAKER	1	1				
47	61H–2819R–31	TAG, WARNING ETIQUETTE, AVERTISSEMENT	1	1				
48	656–W2810–02	TOOL KIT TROUSSE A OUTILS	1	1				
49	6N6–28199–70–E0	MANUAL,OWNER'S MANUEL D'UTILISATION	1	1				UR (E) UR (E)
	6N6–28199–70–F0	MANUAL,OWNER'S MANUEL D'UTILISATION	1	1				UR (F) UR (F)
	6N6–28199–70–S0	MANUAL,OWNER'S MANUEL D'UTILISATION	1	1				UR (ES) UR (ES)
	6N6–28199–70–G0	MANUAL,OWNER'S MANUEL D'UTILISATION	1	1				UR (D) UR (D)
	6N6–28199–70–D0	MANUAL,OWNER'S MANUEL D'UTILISATION	1	1				UR (NL) UR (NL)
	6N6–28199–70–H0	MANUAL,OWNER'S MANUEL D'UTILISATION	1	1				UR (I) UR (I)

FIG. 8 OIL TANK — RESERVOIR A PETROLE

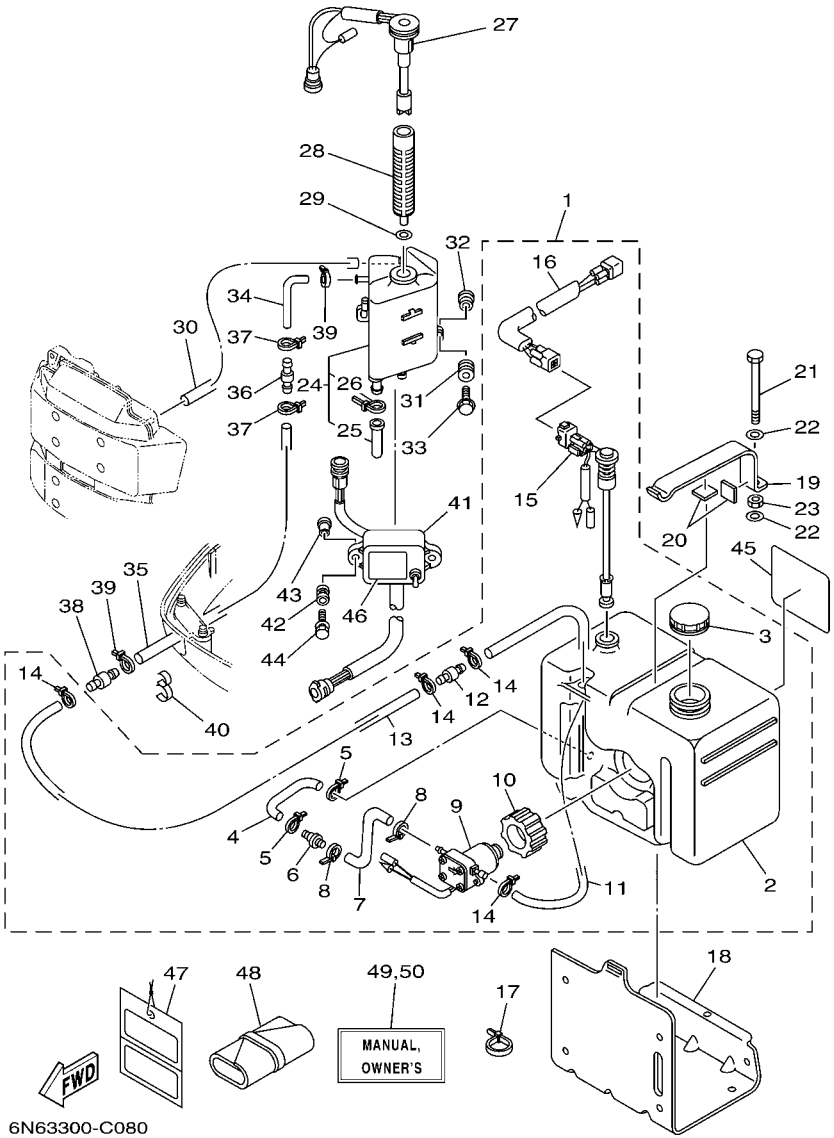

REF. NO.	PART NO. N° PIECES	DESCRIPTION DESCRIPTION	6N64	6N74				REMARKS REMARQUES
50	6N6–28199–87–K0	MANUAL,OWNER'S MANUEL D'UTILISATION	1	1				UR (DK) UR (DK)
	6N6–28199–87–R0	MANUAL,OWNER'S MANUEL D'UTILISATION	1	1				UR (GR) UR (GR)
	6N6–28199–87–P0	MANUAL,OWNER'S MANUEL D'UTILISATION	1	1				UR (P) UR (P)
	6N6–28199–87–N0	MANUAL,OWNER'S MANUEL D'UTILISATION	1	1				UR (N) UR (N)
	6N6–28199–87–M0	MANUAL,OWNER'S MANUEL D'UTILISATION	1	1				UR (S) UR (S)
	6N6–28199–87–L0	MANUAL,OWNER'S MANUEL D'UTILISATION	1	1				UR (SF) UR (SF)

FIG. 9 FUEL 1 — CARBURANT 1

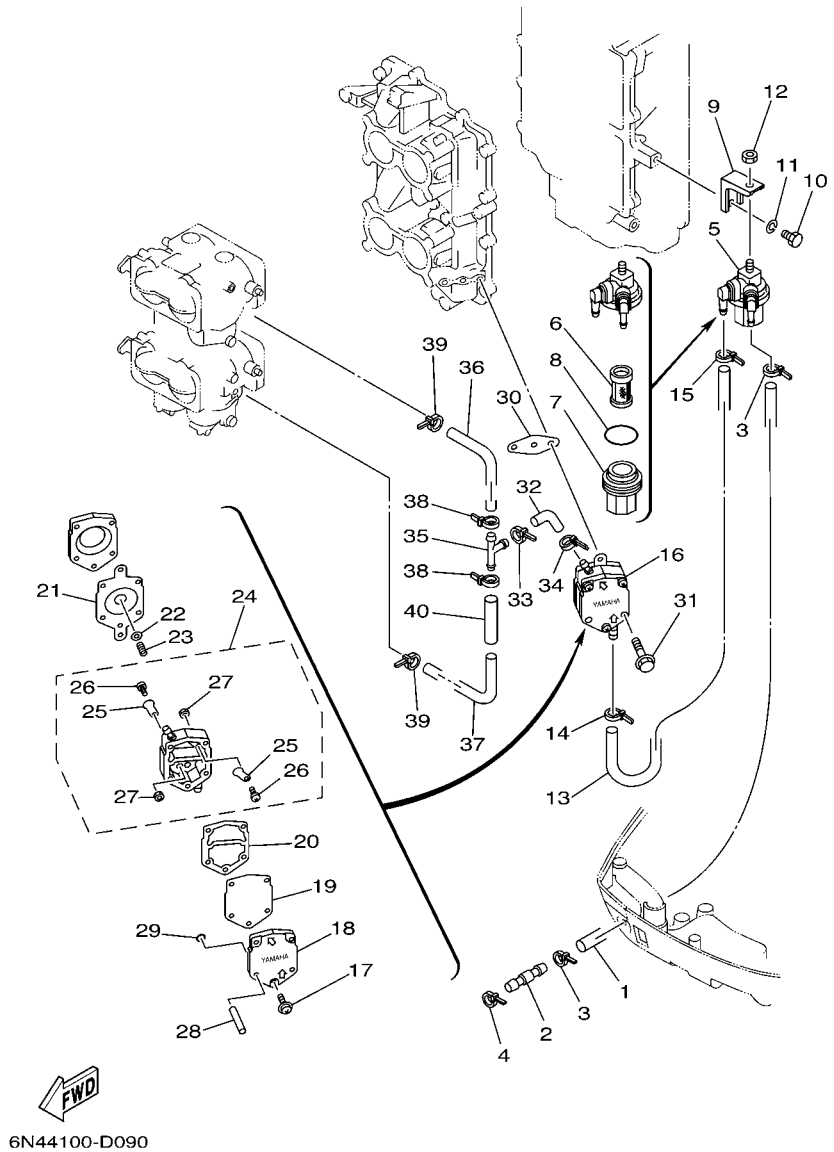

REF. NO.	PART NO. N° PIECES	DESCRIPTION DESCRIPTION	6N64	6N74				REMARKS REMARQUES
1	6R3–24313–20	PIPE 3 (L2820) DURITE 3 (L2820)	1	1				
2	6R3–24377–00	PIPE, JOINT 3 DURITE RACCORDEMENT 3	1	1				
3	90465–11M10	CLAMP BRIDE	2	2				
4	90465–11M10	CLAMP BRIDE	1	1				
5	6R3–24560–00	FILTER ASSY ENS FILTRE	1	1				
6	6R3–24563–00	.ELEMENT, FILTER .ELEMENT, FILTRE	1	1				
7	61N–24521–00	.CUP, FILTER .CUVETTE, FILTRE	1	1				
8	93210–32738	.O-RING .JOINT TORIQUE	1	1				
9	6E5–24566–00	BRACKET, FILTER SUPPORT, FILTRE	1	1				
10	97013–06014	BOLT BOULON	1	1				
11	92903–06100	WASHER, SPRING RONDELLE, GROWER	1	1				
12	95380–08600	NUT ECROU	1	1				
13	6E5–24314–00	PIPE 4 DURITE 4	1	1				
14	90465–11M10	CLAMP BRIDE	1	1				
15	90465–11M10	CLAMP BRIDE	1	1				
16	6E5–24410–04	FUEL PUMP ASSY POMPE A ESSENCE	1	1				
17	6E5–24444–01	.SCREW .VIS	3	3				
18	6E5–24413–01	.BODY 2 .CORPS 2	1	1				
19	6E5–24471–01	.DIAPHRAGM .DIAPHRAGME	1	1				
20	6E5–24435–01	.GASKET, BODY 2 .JOINT, CORPS 2	1	1				
21	6E5–24411–01	.DIAPHRAGM .DIAPHRAGME	1	1				
22	648–24424–00	.SEAT, SPRING .SIEGE, RESSORT	1	1				
23	6E5–24423–00	.SPRING, DIAPHRAGM .RESSORT, DIAPHRAGME	1	1				
24	6E5–24412–11	.BODY 1 .CORPS 1	1	1				
25	6A0–24421–01	..VALVE, CHECK ..SOUPAPE, RETENUE	4	4				
26	6A0–14325–00	..SCREW, PAN HEAD ..VIS TETE CONIQUE	4	4				
27	95380–03600	..NUT ..ECROU	4	4				

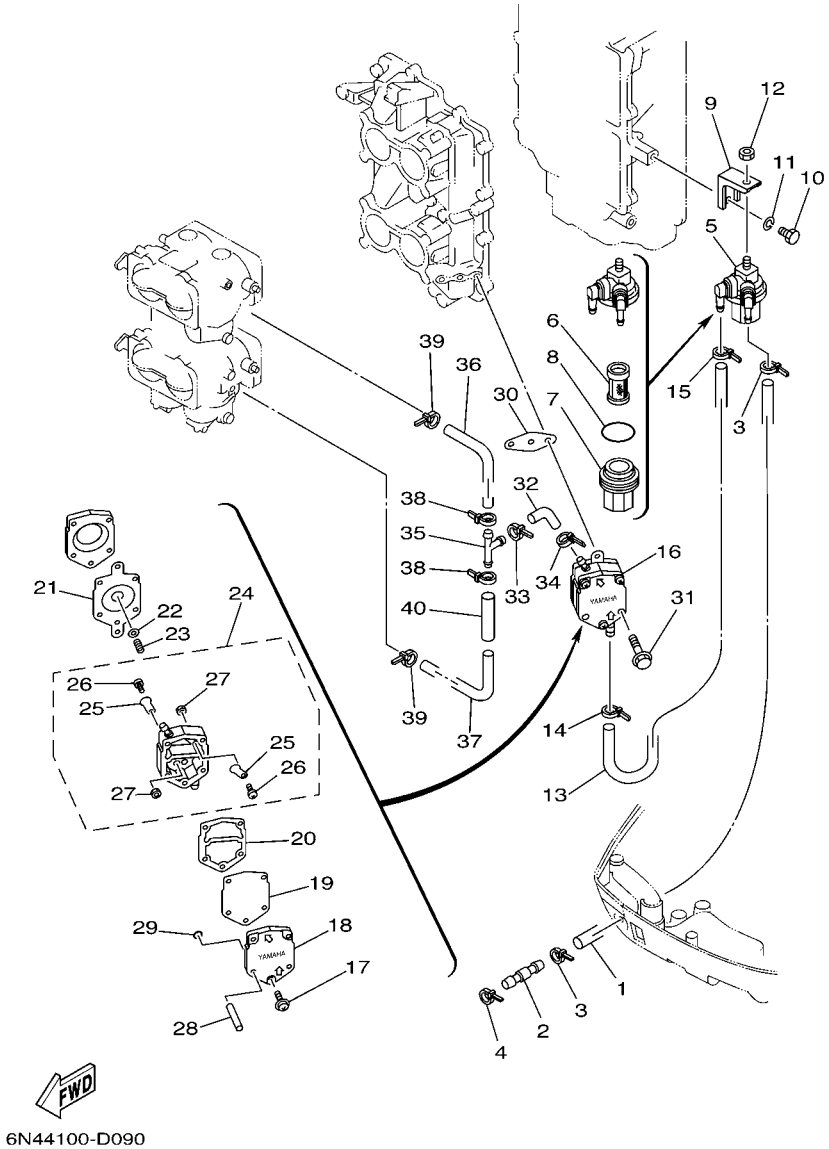

FIG. 9 FUEL 1 — CARBURANT 1

REF. NO.	PART NO. N° PIECES	DESCRIPTION DESCRIPTION	6N64	6N74				REMARKS REMARQUES
28	6E5–24492–00	.BUSH, FULEL PUMP .BAGUE	2	2				
29	6E5–24486–00	.O-RING .JOINT TORIQUE	2	2				
30	650–24431–A0	GASKET, FUEL PUMP 1 JOINT 1 DE POMPE A ESSENCE	1	1				
31	97595–06550	BOLT, WITH WASHER VIS HEXAGONAL AVC RONDELLE	2	2				
32	6G5–24316–10	PIPE 6 DURITE 6	1	1				
33	90465–11M10	CLAMP BRIDE	1	1				
34	90465–11M10	CLAMP BRIDE	1	1				
35	6E5–24376–10	PIPE, JOINT 1 DURITE 1, RACCORDEMENT	1	1				
36	6G5–24318–10	PIPE, OVERFLOW DURITE, REFOULEMENT	1	1				
37	6G5–24319–10	PIPE, OIL DURITE A HUILE	1	1				
38	90465–11M10	CLAMP BRIDE	2	2				
39	90465–11M10	CLAMP BRIDE	2	2				
40	90446–15M07	HOSE (L60) DURITE (L60)	1	1				

FIG. 10 FUEL 2 — CARBURANT 2

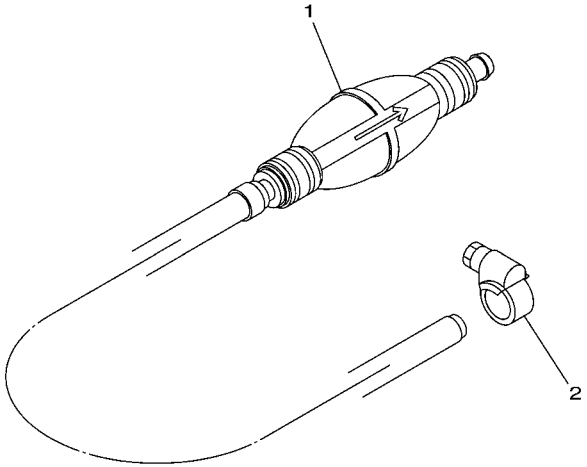

60X1300-3150

REF. NO.	PART NO. N° PIECES	DESCRIPTION DESCRIPTION	6N64	6N74				REMARKS REMARQUES
1	6YK–24307–42	FUEL PIPE COMP. 2 DURITE A ESSENCE 2	1	1				AP AP
2	90450–10M07	HOSE CLAMP ASSY BRIDE, DE DURITE	1	1				AP AP

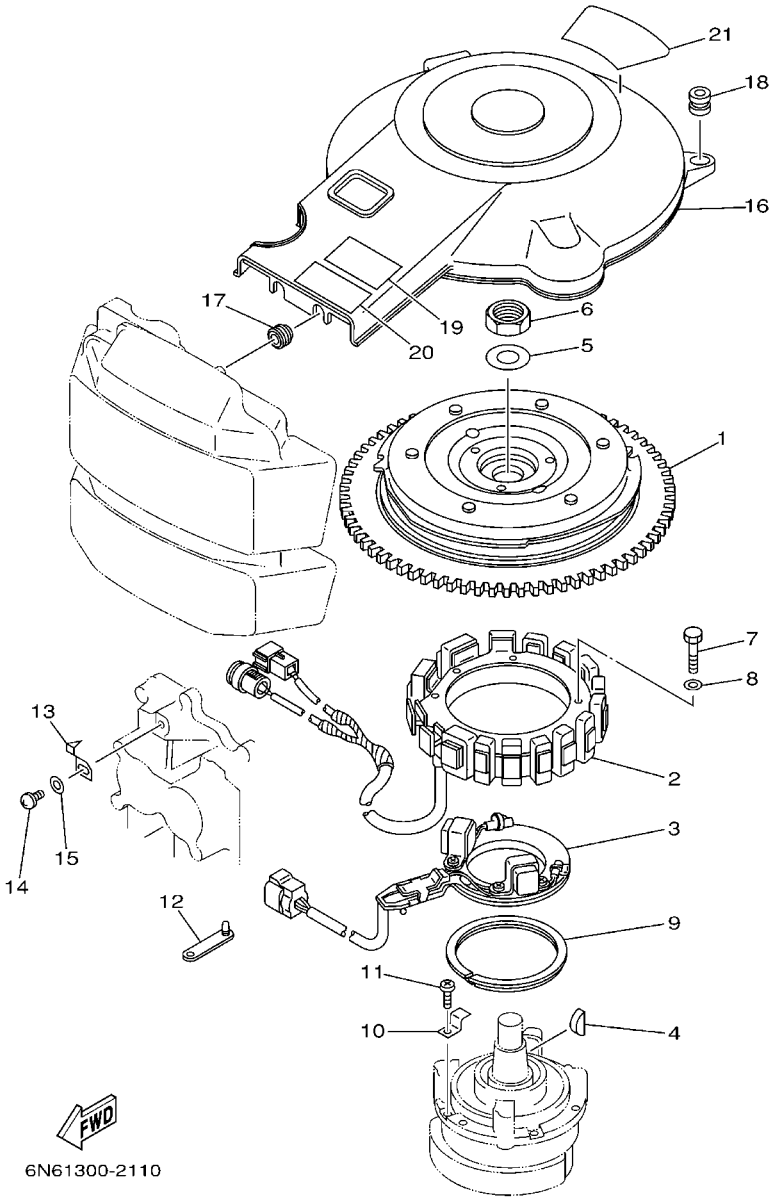

FIG. 11 GENERATOR GENERATRICE

REF. NO.	PART NO. N° PIECES	DESCRIPTION DESCRIPTION	6N64	6N74				REMARKS REMARQUES
1	6N7–85550–01	ROTOR ASSY ROTOR CPLT	1	1				
2	6N7–85510–00	STATOR ASSY STATOR CPLT	1	1				
3	6N7–85580–10	COIL, PULSER BOBINE, PULSEUR	1	1				
4	90280–05015	KEY, WOODRUFF CLAVETTE, DEMI-LUNE	1	1				
5	90201–21M18	WASHER, PLATE RONDELLE, PLATE	1	1				
6	90170–20137	NUT ECROU	1	1				
7	97013–06065	BOLT BOULON	4	4				
8	92903–06600	WASHER, PLATE RONDELLE, PLATE	4	4				
9	688–41611–00	RETAINER, MAGNETO BASE FLASQUE, PLATEAU D'AVANCE	1	1				
10	688–41612–00	RETAINER, MAGNETO BASE FLASQUE, PLATEAU D'AVANCE	4	4				
11	97880–06018	SCREW, PAN HEAD VIS, TETE TRONCONIQUE	4	4				
12	90464–12M00	CLAMP BRIDE	1	1				
13	6E5–81332–00	PLATE, TIMING PLATEAU, ALLUMAGE	1	1				
14	97885–06010	SCREW, PAN HEAD VIS, A ENCOCHE	1	1				
15	92995–06600	WASHER RONDELLE	1	1				
16	6N7–81337–00	COVER, FLYWHEEL COUVERCLE, VOLANT	1	1				
17	90480–12M11	GROMMET PASSE-FIL	2	2				
18	663–82317–01	DAMPER, IGNITION COIL AMORTISSEUR, BOBINE D'ALLUM	2	2				
19	6A1–83625–51	MARK 5 ETIQUETTE 5	1	1				
20	6A1–83625–41	MARK 5 ETIQUETTE 5	1	1				
21	6E5–14488–00	LABEL, CAUTION ETIQUETTE, RECOMMANDATION	1	1				

FIG. 12 ELECTRICAL 1 PARTIE ELECTRIQUE 1

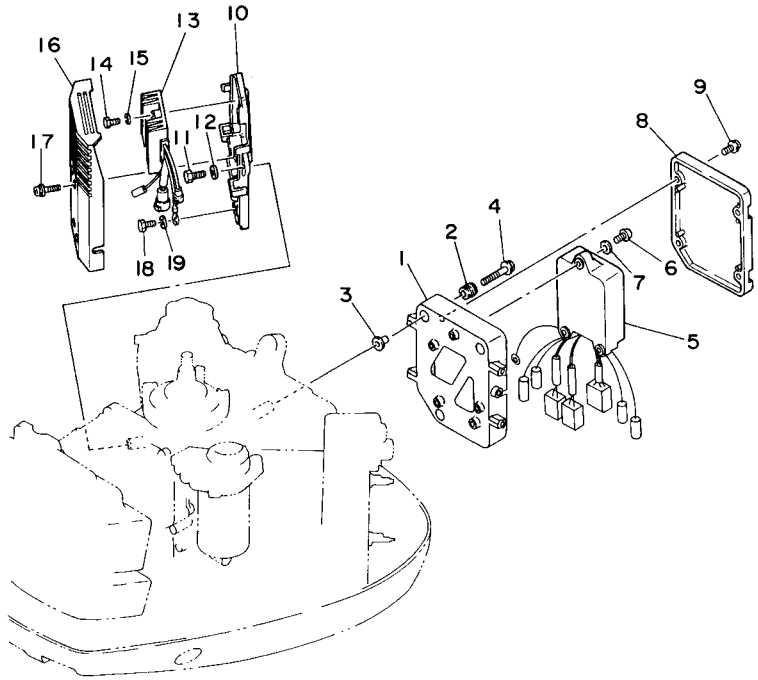

6N60010-4110

REF. NO.	PART NO. N° PIECES	DESCRIPTION DESCRIPTION	6N64	6N74				REMARKS REMARQUES
1	6N7–85542–01–1S	BRACKET SUPPORT	1	1				
2	6A0–82317–00	DAMPER, IGNITION COIL AMORTISSEUR, BOBINE D'ALLUM	3	3				
3	624–42542–00	PIPE TUYAU	3	3				
4	90119–06M59	BOLT, WITH WASHER BOULON, AVEC RONDELLE	3	3				
5	6N7–85540–01	C.D.I. UNIT ASSY BLOC C.D.I.	1	1				
6	97880–06020	SCREW, PAN HEAD VIS, TETE TRONCONIQUE	3	3				
7	92990–06600	WASHER, PLATE RONDELLE, PLATE	3	3				
8	6N7–85537–00	COVER COUVERCLE	1	1				
9	90159–06M11	SCREW, WITH WASHER VIS, AVEC RONDELLE	4	4				
10	6N7–81948–00–94	BRACKET JOINT TORIQUE	1	1				
11	97013–06016	BOLT BOULON	3	3				
12	92903–06600	WASHER, PLATE RONDELLE, PLATE	3	3				
13	6R3–81960–00	RECTIFIER & REGULATOR ASSY REDRESSEUR REGULATEUR CPLT	1	1				
14	97013–06025	BOLT BOULON	2	2				
15	92903–06600	WASHER, PLATE RONDELLE, PLATE	2	2				
16	6R3–81942–00	COVER COUVERCLE	1	1				
17	90159–06M08	SCREW, WITH WASHER VIS, AVEC RONDELLE	4	4				
18	97095–06012	BOLT BOULON	1	1				
19	92995–06600	WASHER RONDELLE	1	1				

FIG. 13 ELECTRICAL 2 — PARTIE ELECTRIQUE 2

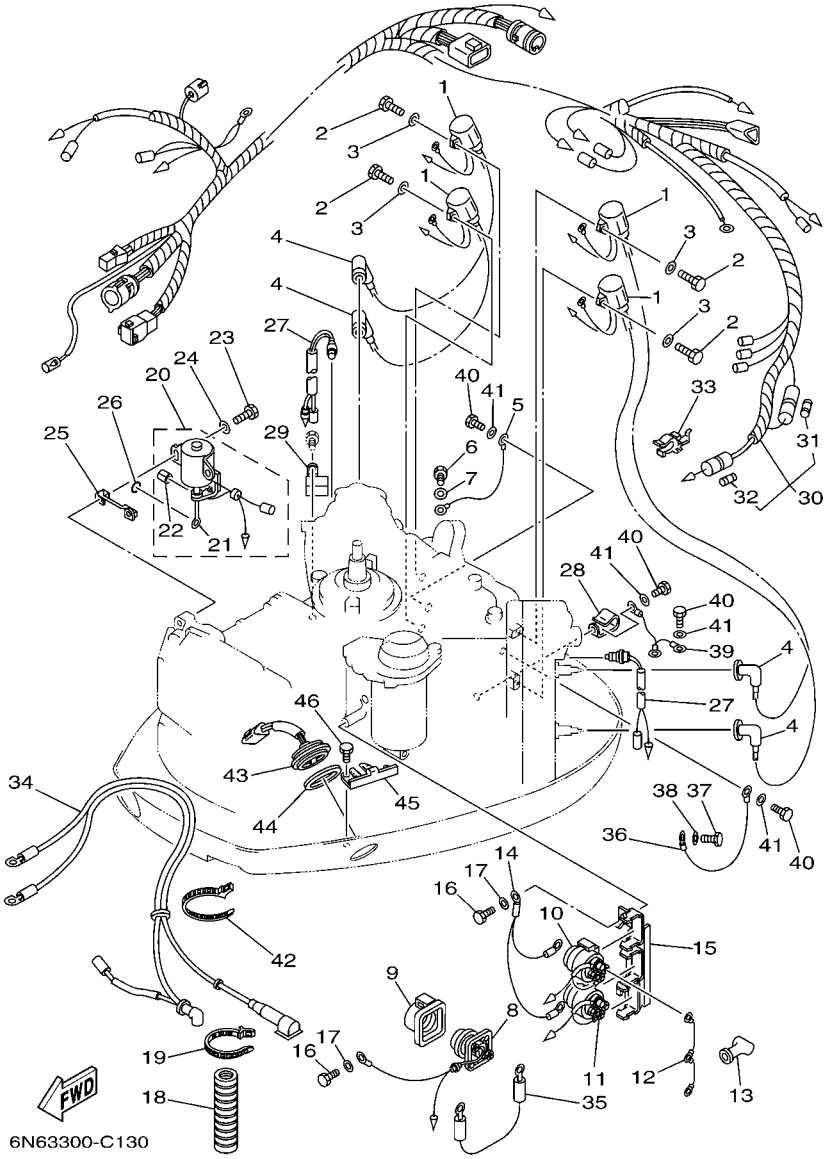

REF. NO.	PART NO. N° PIECES	DESCRIPTION DESCRIPTION	6N64	6N74				REMARKS REMARQUES
1	6R3–85570–01	IGNITION COIL ASSY BOBINE D'ALLUMAGE (ENS.)	4	4				
2	97095–06020	BOLT BOULON	4	4				
3	92995–06600	WASHER RONDELLE	4	4				
4	6G1–82370–21	PLUG CAP ASSY ANTIPARASITE	4	4				
5	662–82519–00	WIRE, EARTH LEAD FIL, MASSE	1	1				
6	97095–06012	BOLT BOULON	1	1				
7	92995–06600	WASHER RONDELLE	1	1				
8	61A–81941–00	STARTER RELAY ASSY LANCEUR RELAIS (ENS.)	1	1				
9	689–81952–10	HOLDER, RELAY SUPPORT, RELAIS	1	1				
10	6E5–81950–00	RELAY ASSY RELAIS COMPLET	1	1				
11	6E5–8195A–00	RELAY ASSY RELAIS COMPLET	1	1				
12	6G5–87149–10	CONNECTOR RACCORD	1	1				
13	6G5–82119–00	COVER, LEAD WIRE GARNITURE, FIL	2	2				
14	6E5–82116–00	WIRE, MINUS LEAD FIL, NEGATIF	1	1				
15	6E5–81948–22	BRACKET JOINT TORIQUE	1	1				
16	97095–06016	BOLT BOULON	2	2				
17	92995–06600	WASHER RONDELLE	2	2				
18	6N7–83557–00	TUBE (I.DIA:22MM) TUBE (I.DIA:22MM)	1	1				
19	90465–13M18	CLAMP BRIDE	1	1				
20	6N7–86110–00	SOLENOID SOLENOID	1	1				
21	6N7–86116–00	.WIRE, PULL .CABLE, TENSION	1	1				
22	91609–30010	.PIN, SPRING .AXE DE RESSORT	1	1				
23	97095–06030	BOLT BOULON	2	2				
24	92995–06600	WASHER RONDELLE	2	2				
25	6N7–86112–00	STAY, SOLENOID SUPPORT, SOLENOIDE	1	1				
26	93210–03261	O-RING JOINT TORIQUE	1	1				
27	688–82560–10	THERMO SWITCH ASSY THERMO-CONTACT COMPLET	2	2				

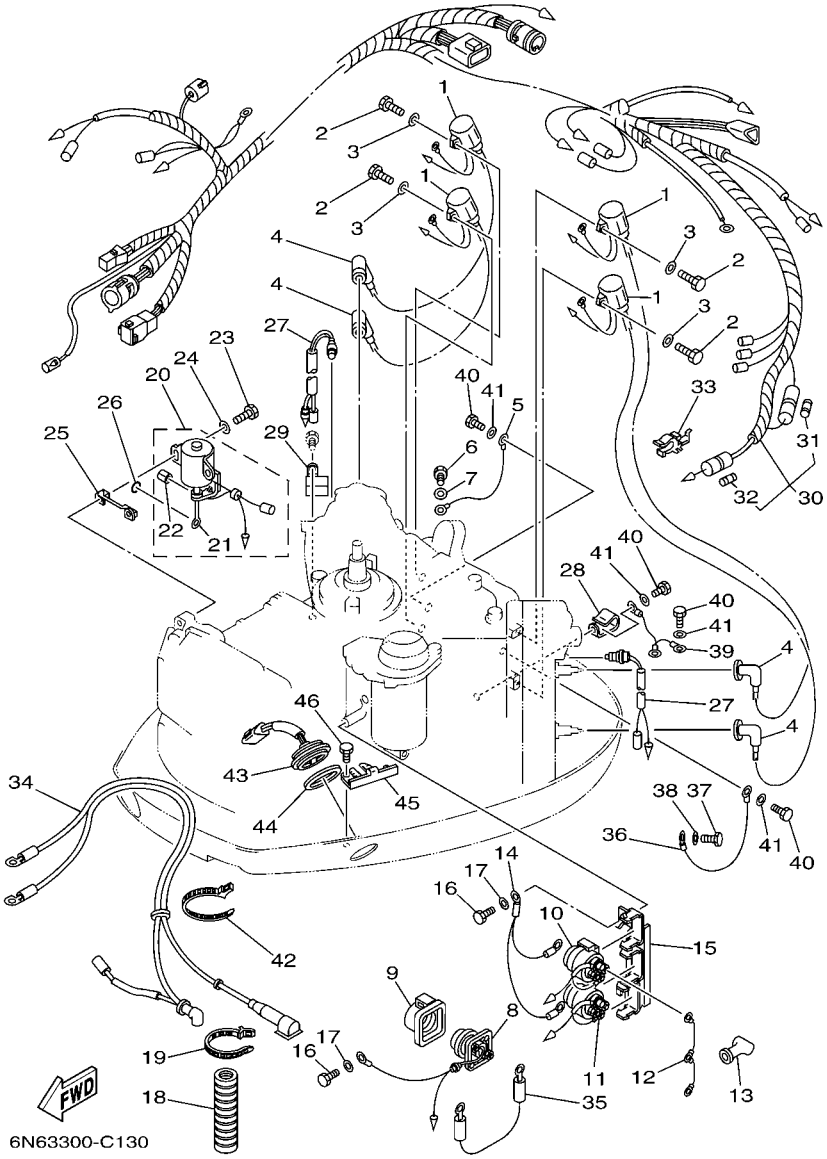

FIG. 13 ELECTRICAL 2 — PARTIE ELECTRIQUE 2

REF. NO.	PART NO. N° PIECES	DESCRIPTION DESCRIPTION	6N64	6N74				REMARKS REMARQUES
28	90465–05M87	CLAMP BRIDE	1	1				
29	90465–08M89	CLAMP BRIDE	1	1				
30	6N7–82590–20	WIRE HARNESS ASSY FAISCEAU DE FILS COMPLET	1	1				
31	663–82151–00	.FUSE (12V-20A) .FUSIBLE (12V-20A)	1	1				
32	705–82151–00	.FUSE (30A) .FUSIBLE (30A)	1	1				
33	6G5–82152–00	HOLDER, FUSE SUPPORT, FUSIBLE	2	2				
34	6N7–82105–02	WIRE HARNESS FAISCEAU DE FILS	1	1				
35	6E5–82117–01	WIRE, LEAD FIL	1	1				
36	6R3–82519–00	WIRE, EARTH LEAD FIL, MASSE	1	1				
37	97095–06012	BOLT BOULON	1	1				
38	92995–06600	WASHER RONDELLE	1	1				
39	6E5–82531–10	WIRE, LEAD FIL	1	1				
40	97095–06012	BOLT BOULON	4	4				
41	92995–06600	WASHER RONDELLE	4	4				
42	90465–13M18	CLAMP BRIDE	1	1				
43	6R3–82563–00	TRIM & TILT SWITCH ASSY INCLINER ET PARER COMMUTATEUR	1	1				
44	6E5–82587–00	GASKET JOINT	1	1				
45	6R3–83614–00	BRACKET SUPPORT	1	1				
46	97095–06012	BOLT BOULON	2	2				

FIG. 14 STARTING MOTOR DEMARREUR ELECTRIQUE

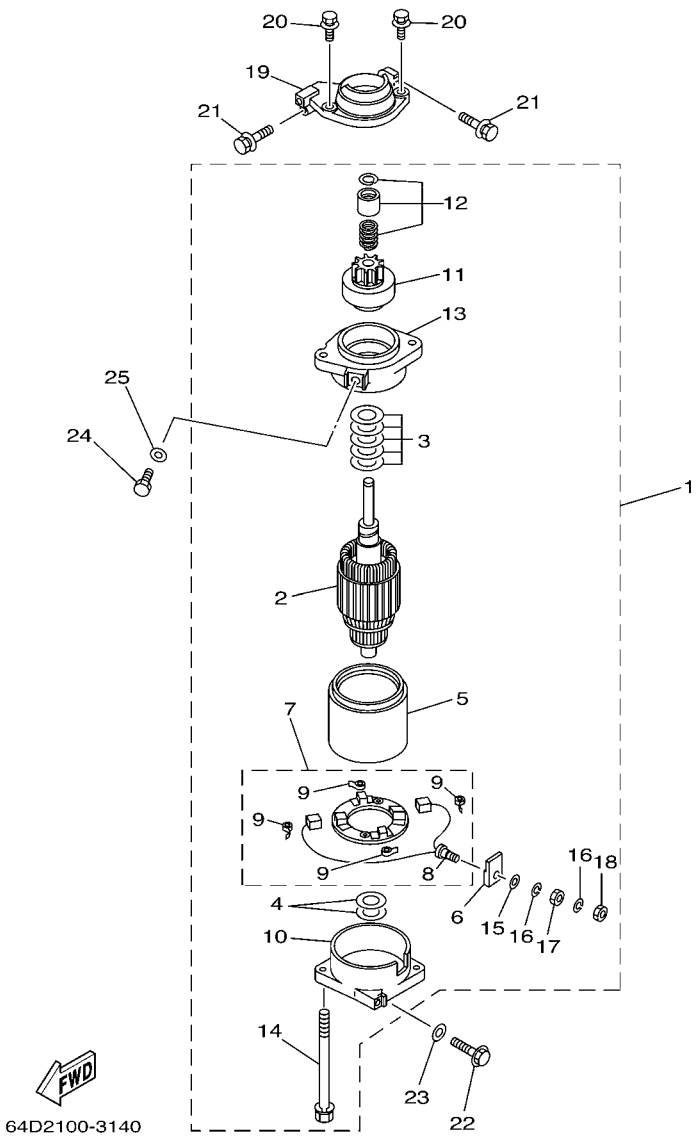

REF. NO.	PART NO. N° PIECES	DESCRIPTION DESCRIPTION	6N64	6N74				REMARKS REMARQUES
1	6N7–81800–10	STARTING MOTOR ASSY DEMARREUR ELECTRIQUE COMPLET	1	1				
2	6N7–81850–10	.ARMATURE ASSY .INDUIT	1	1				
3	61A–81809–00	.WASHER KIT .JEU DE RONDELLES	1	1				
4	61A–81824–00	.WASHER 2 .RONDELLE 2	2	2				
5	6N7–81810–00	.STATOR ASSY .STATOR COMPLET	1	1				
6	6K7–8182G–10	.BUSH, TERMINAL .DOUILLE	1	1				
7	6N7–81840–00	.BRUSH HOLDER ASSY .SUPPORT DE CHARBON	1	1				
8	6N7–81801–00	..BRUSH SET ..CHARBON	1	1				
9	6N7–81813–00	..SPRING, BRUSH ..RESSORT, DE CHARBON	4	4				
10	6N7–81820–10	.REAR BRACKET ASSY .SUPPORT ARRIERE COMPLET	1	1				
11	6N7–81807–00	.GEAR ASSY, STARTING MOTOR .PIGNON, DEMARREUR ELECTRIQUE	1	1				
12	6N7–81857–00	.RETAINER .ARRETOIR	1	1				
13	6N7–81830–00	.FRONT BRACKET ASSY .SUPPORT AVANT	1	1				
14	6K7–81826–10	.BOLT .BOULON	2	2				
15	6E5–8182E–10	.WASHER .RONDELLE	1	1				
16	6E5–8182F–10	.WASHER .RONDELLE	2	2				
17	6E5–8182A–10	.NUT .ECROU	1	1				
18	6E5–8182K–10	.NUT .ECROU	1	1				
19	6R3–81822–00–94	BRACKET, STARTING MOTOR SUPPORT, DEMARREUR ELECTRIQUE	1	1				
20	90119–08M76	BOLT, WITH WASHER BOULON, AVEC RONDELLE	2	2				
21	90119–08M77	BOLT, WITH WASHER BOULON, AVEC RONDELLE	2	2				
22	90119–08M57	BOLT, WITH WASHER BOULON, AVEC RONDELLE	1	1				
23	92990–08600	WASHER, PLATE RONDELLE, PLATE	1	1				
24	97095–08016	BOLT BOULON	1	1				
25	92995–08600	WASHER RONDELLE	1	1				

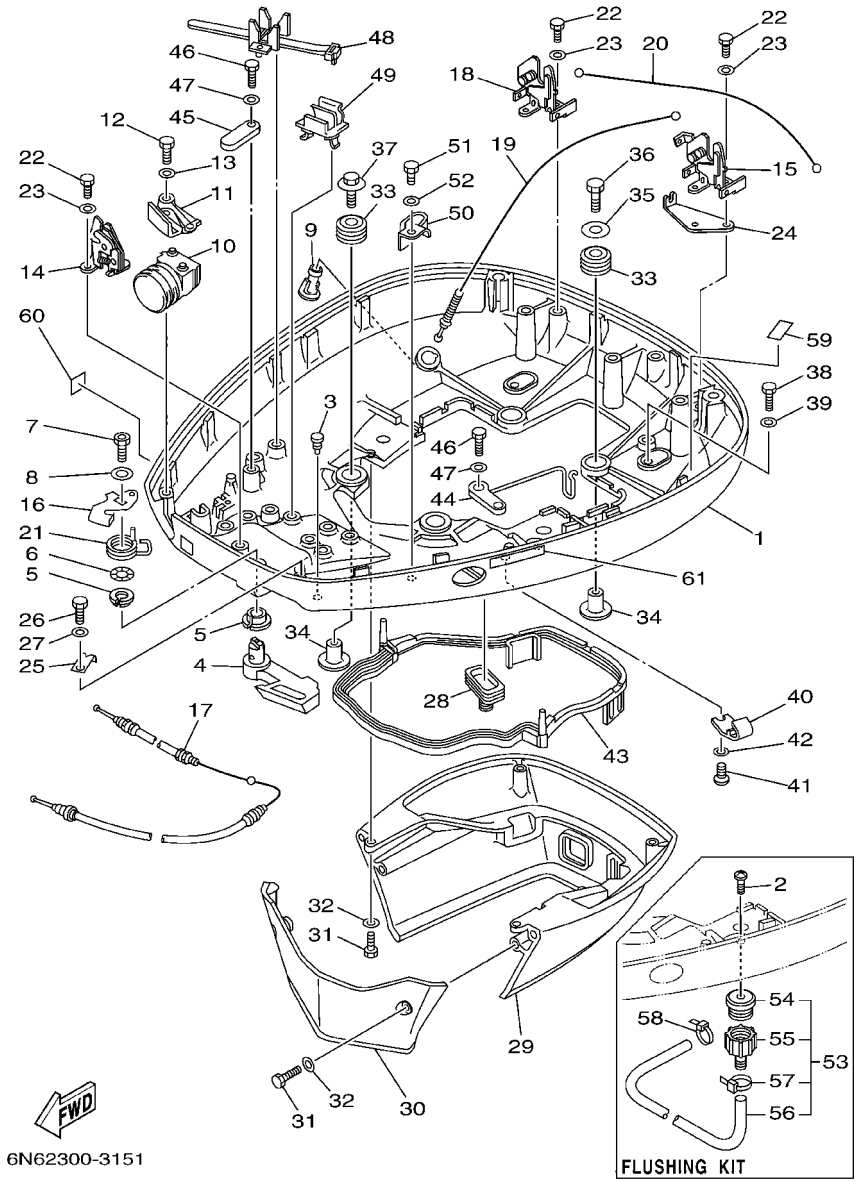

FIG. 15 BOTTOM COWLING CAPOT INFERIEUR

REF. NO.	PART NO. N° PIECES	DESCRIPTION DESCRIPTION	6N64	6N74				REMARKS REMARQUES
1	6N7–42711–43–8D	COWLING, BOTTOM CUVETTE	1	1				
2	90169–05M00	SCREW, TRUSS HEAD TAPPING VIS, TETE FRAISEE	1	1				
3	6H4–42748–00	GROMMET PASSE-FIL	1	1				
4	6N7–42815–01–8D	LEVER, CLAMP LEVIER, PRESSE	1	1				
5	90386–13M88	BUSH DOUILLE	2	2				
6	90206–13M10	WASHER, WAVE RONDELLE, ONDULEE	1	1				
7	90109–08M45	BOLT BOULON	1	1				
8	92990–08200	WASHER, PLAIN RONDELLE, PLATE	1	1				
9	6E5–44391–00	NIPPLE, HOSE RACCORD D'ESSENCE	1	1				
10	6N7–42725–30	GROMMET PASSE-FIL	1	1				
11	6N7–42738–02–5B	PLATE, FITTING ETRIER	1	1				
12	97095–06016	BOLT BOULON	2	2				
13	92995–06600	WASHER RONDELLE	2	2				
14	6R3–42824–00	BASE, CLAMP LEVER BASE, BIRDE LEVIER	1	1				
15	6R3–42811–01	STAY SUPPORT	1	1				
16	6R3–42816–00	LEVER, CLAMP LEVIER, PRESSE	1	1				
17	6N7–42850–00	WIRE COMPLETE FIL COMPLET	1	1				
18	6R3–42811–10	STAY SUPPORT	1	1				
19	6N7–42850–10	WIRE COMPLETE FIL COMPLET	1	1				
20	6N7–42850–20	WIRE COMPLETE FIL COMPLET	1	1				
21	6R3–42813–00	SPRING, CLAMP LEVER RESSORT	1	1				
22	97095–06016	BOLT BOULON	6	6				
23	92995–06600	WASHER RONDELLE	6	6				
24	6N7–42828–00	PLATE, CLAMP PLAQUE, PRESSE	1	1				
25	6R3–42828–00	PLATE, CLAMP PLAQUE, PRESSE	1	1				
26	97095–06010	BOLT BOULON	1	1				
27	92995–06600	WASHER RONDELLE	1	1				

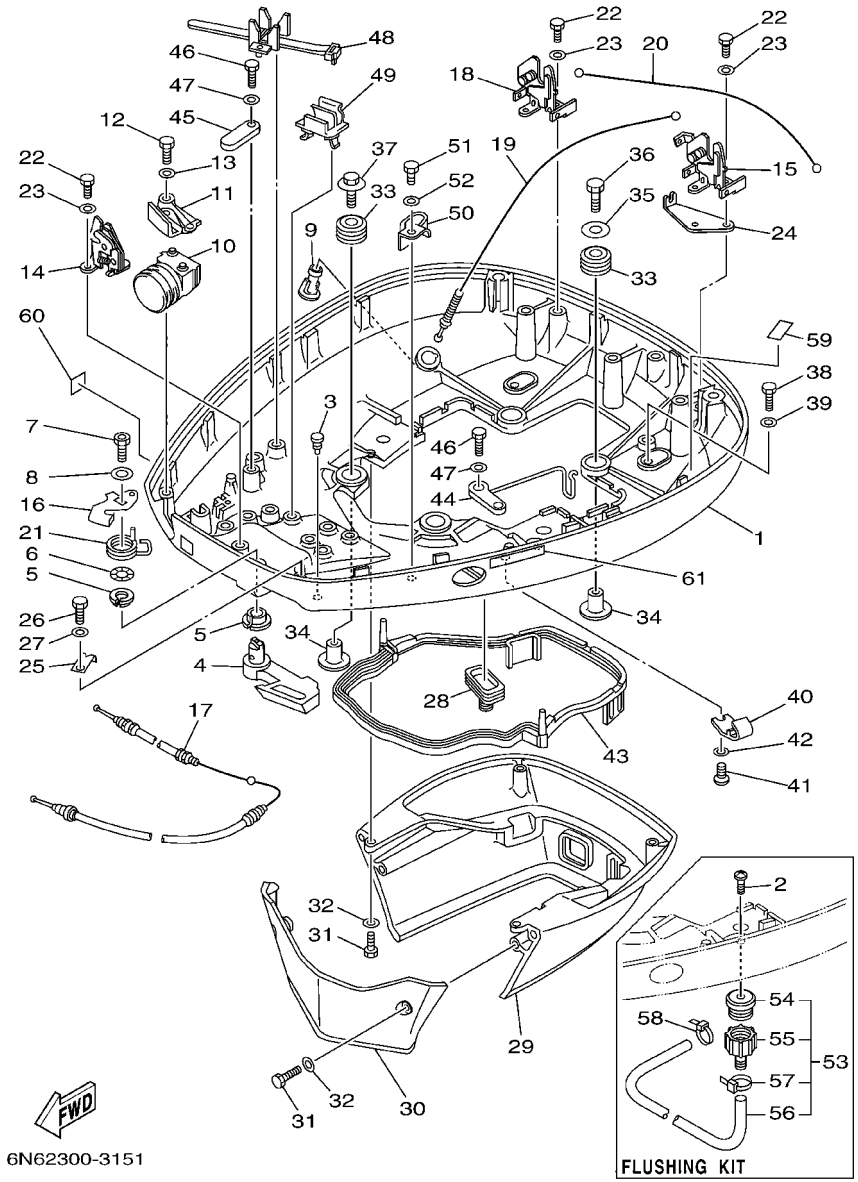

FIG. 15 BOTTOM COWLING CAPOT INFERIEUR

REF. NO.	PART NO. N° PIECES	DESCRIPTION DESCRIPTION	6N64	6N74				REMARKS REMARQUES
28	688–42726–10	GROMMET PASSE-FIL	1	1				
29	6N7–42741–01–8D	APRON CAPOT LATERAL	1	1				
30	6R3–42771–01–8D	APRON CAPOT LATERAL	1	1				
31	97095–06020	BOLT BOULON	4	4				
32	92995–06600	WASHER RONDELLE	4	4				
33	90480–22M15	GROMMET PASSE-FIL	4	4				
34	90387–08M37	COLLAR COLLERETTE	4	4				
35	90201–08M54	WASHER, PLATE RONDELLE, PLATE	1	1				
36	97075–08035	BOLT BOULON	1	1				
37	90119–08M22	BOLT, WITH WASHER BOULON, AVEC RONDELLE	3	3				
38	97095–06020	BOLT BOULON	2	2				
39	92995–06600	WASHER RONDELLE	2	2				
40	6E5–24367–10	CLAMP, FUEL PIPE 2 COLLIER DE DURITE A ESSENCE	1	1				
41	90157–06M01	SCREW, PAN HEAD VIS, TETE TRONCONIQUE	1	1				
42	92990–06600	WASHER, PLATE RONDELLE, PLATE	1	1				
43	6E5–42716–00	RUBBER, SEAL 1 JOINT EN CAOUTCHOUC 1	1	1				
44	6K7–82588–00	PLATE PLAQUE	1	1				
45	6E5–82588–00	PLATE PLAQUE	1	1				
46	97095–06020	BOLT BOULON	2	2				
47	92995–06600	WASHER RONDELLE	2	2				
48	688–82594–00	CLAMP BRIDE	1	1				
49	6E5–82594–00	CLAMP BRIDE	4	4				
50	90465–12M25	CLAMP BRIDE	1	1				
51	97095–06012	BOLT BOULON	1	1				
52	92995–06600	WASHER RONDELLE	1	1				
53	6R3–Y125J–70	FLUSHING KIT FLUSHING KIT	1	1				
54	6R3–12572–00	.ADAPTER .ADAPTATEUR	1	1				

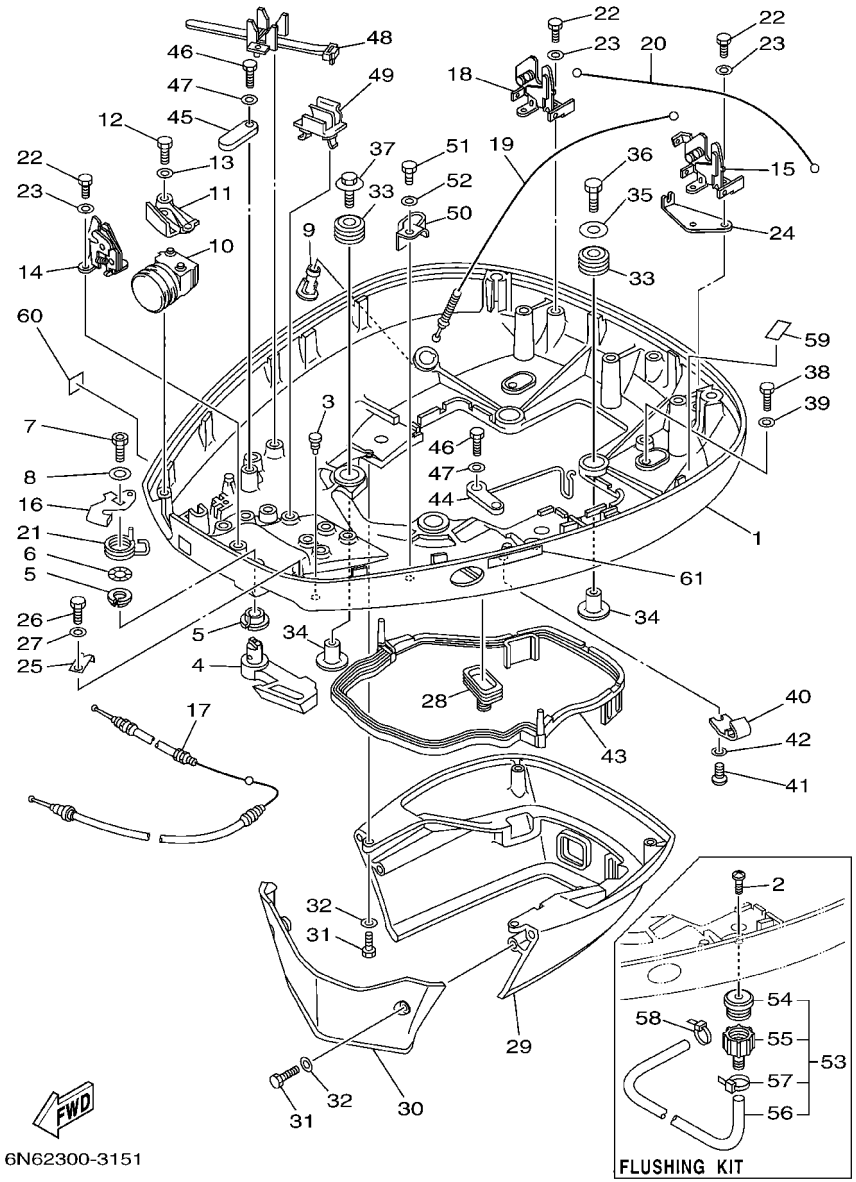

FIG. 15 BOTTOM COWLING CAPOT INFERIEUR

REF. NO.	PART NO. N° PIECES	DESCRIPTION DESCRIPTION	6N64	6N74				REMARKS REMARQUES
55	6R3–12580–00	.JOINT ASSY .ARTICULER (ENS.)	1	1				
56	90445–11M35	.HOSE (L540) .DURITE (L540)	1	1				
57	90465–11M10	.CLAMP .BRIDE	1	1				
58	90465–11M10	CLAMP BRIDE	1	1				
59	6G5–42791–10	MARK 1 ETIQUETTE 1	1					
	6K7–42791–00	MARK 1 ETIQUETTE 1		1				
60	6A1–28176–00	LABEL, CAUTION ETIQUETTE, RECOMMANDATION	1	1				
61	6E3–8257H–00	PLATE, MARK PLAQUE, ADHESIF	1	1				

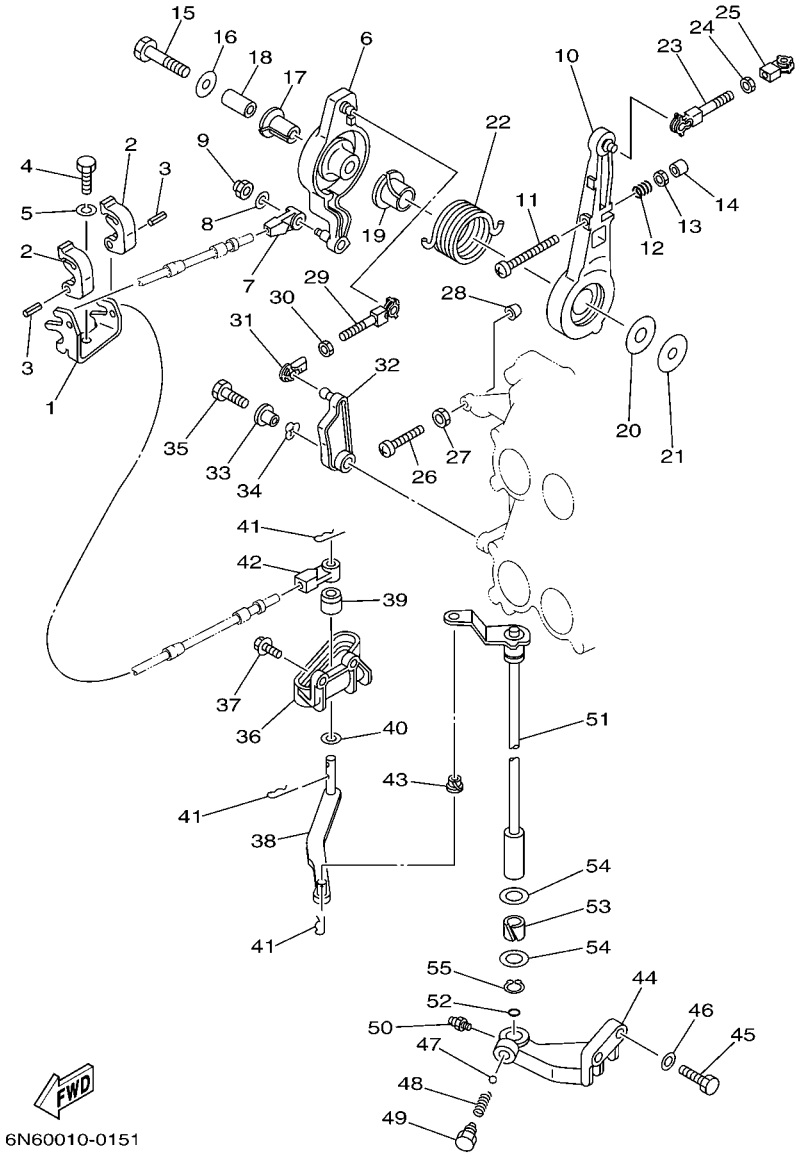

FIG. 16 CONTROL COMMANDE

REF. NO.	PART NO. N° PIECES	DESCRIPTION DESCRIPTION	6N64	6N74				REMARKS REMARQUES
1	6E5–48531–00	BRACKET, REMOTE CONTROL 1 ETRIER 1, COMMANDE A DISTANCE	1	1				
2	6E5–48538–00	CLAMP, CABLE COLLIER	2	2				
3	91690–30012	PIN, SPRING AGRAFFE	2	2				
4	97095–08020	BOLT BOULON	1	1				
5	92995–08100	WASHER RONDELLE	1	1				
6	6E5–41632–02–1S	LEVER, MAGNETO CONTROL LEVIER, COMMANDE D'AVANCE	1	1				
7	6E5–48344–00	CABLE END, REMOTE CONTROL CHAPE CABLE	1	1				
8	92990–06200	WASHER, PLAIN RONDELLE, PLATE	1	1				
9	90185–06M07	NUT, SELF-LOCKING ECROU, AUTO-BLOQUANT	1	1				
10	6E5–41631–01–1S	LEVER, MAGNETO CONTROL LEVIER, COMMANDE D'AVANCE	1	1				
11	90157–06013	SCREW, PAN HEAD VIS, TETE TRONCONIQUE	1	1				
12	90501–16M12	SPRING, COMPRESSION RESSORT, COMPRESSION	1	1				
13	95303–06600	NUT ECROU	1	1				
14	688–44194–00	CAP CAPUCHON	1	1				
15	97013–08045	BOLT BOULON	1	1				
16	90201–08M23	WASHER, PLATE RONDELLE, PLATE	1	1				
17	90386–12089	BUSH DOUILLE	1	1				
18	90387–08M16	COLLAR COLLERETTE	1	1				
19	90386–22M13	BUSH DOUILLE	1	1				
20	90202–12092	WASHER, PLATE RONDELLE, PLATE	1	1				
21	90201–08M13	WASHER, PLATE RONDELLE, PLATE	1	1				
22	90508–29M12	SPRING, TORSION RESSORT, TORSION	1	1				
23	6E5–41636–01	ROD, MAGNETO CONTROL BIELLETTE, COMMANDE D'AVANCE	1	1				
24	95380–05600	NUT ECROU	1	1				
25	662–41237–01	JOINT, LINK RACCORD	1	1				
26	90157–06013	SCREW, PAN HEAD VIS, TETE TRONCONIQUE	1	1				
27	95303–06600	NUT ECROU	1	1				

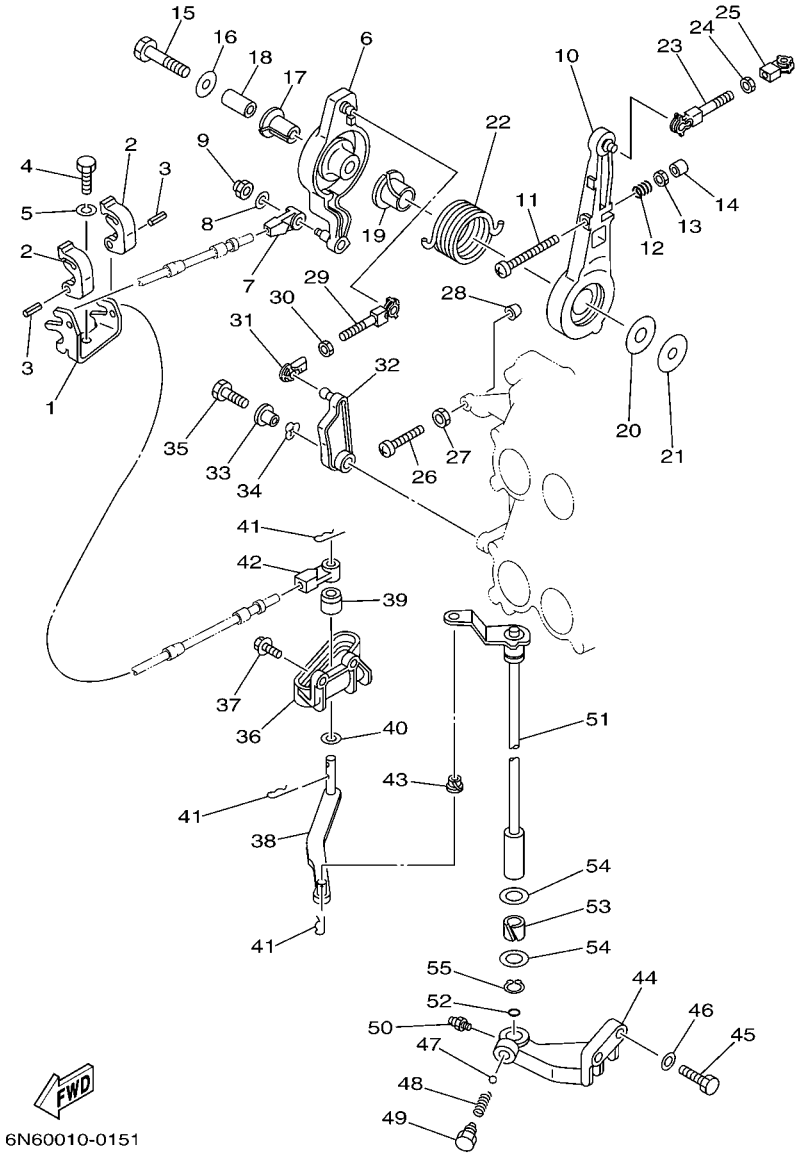

FIG. 16 CONTROL — COMMANDE

REF. NO.	PART NO. N° PIECES	DESCRIPTION DESCRIPTION	6N64	6N74				REMARKS REMARQUES
28	688–44194–00	CAP CAPUCHON	1	1				
29	688–41636–00	ROD, MAGNETO CONTROL BIELLETTE, COMMANDE D'AVANCE	1	1				
30	95380–05600	NUT ECROU	1	1				
31	662–41237–01	JOINT, LINK RACCORD	1	1				
32	6E5–41213–00	CAM, ACCEL. CAME, ACCELERATION	1	1				
33	90387–06M29	COLLAR COLLERETTE	1	1				
34	90206–10M04	WASHER, WAVE RONDELLE, ONDULEE	1	1				
35	97095–06025	BOLT BOULON	1	1				
36	6E5–44117–00–1S	BRACKET SUPPORT	1	1				
37	90119–06MA2	BOLT, WITH WASHER BOULON, AVEC RONDELLE	2	2				
38	68F–44121–00	LEVER, SHIFT ROD LEVIER, TIGE D'INVERSION	1	1				
39	6E5–44122–00	BUSHING, SHIFT ROD LEVER DOUILLE, LEVIER D'EMBRAYAGE	1	1				
40	90202–08M20	WASHER, PLATE RONDELLE, PLATE	1	1				
41	90468–18008	CLIP JONC	3	3				
42	6E5–48344–00	CABLE END, REMOTE CONTROL CHAPE CABLE	1	1				
43	90386–06M12	BUSH DOUILLE	1	1				
44	6E5–44118–01–94	BRACKET SUPPORT	1	1				
45	97013–08030	BOLT BOULON	2	2				
46	92903–08600	WASHER, PLATE RONDELLE, PLATE	2	2				
47	93501–04M02	BALL BILLE	1	1				
48	90501–12082	SPRING, COMPRESSION RESSORT, COMPRESSION	1	1				
49	648–42715–00	BUSHING COUSSINET	1	1				
50	93700–06M03	NIPPLE, GREASE PION	1	1				
51	6E5–44120–03	HANDLE GEAR SHIFT ASSY LEVIER D'EMBRAYAGE	1	1				L L
52	93210–09165	O-RING JOINT TORIQUE	1	1				
53	90386–16M66	BUSH DOUILLE	1	1				
54	90202–16061	WASHER, PLATE RONDELLE, PLATE	2	2				

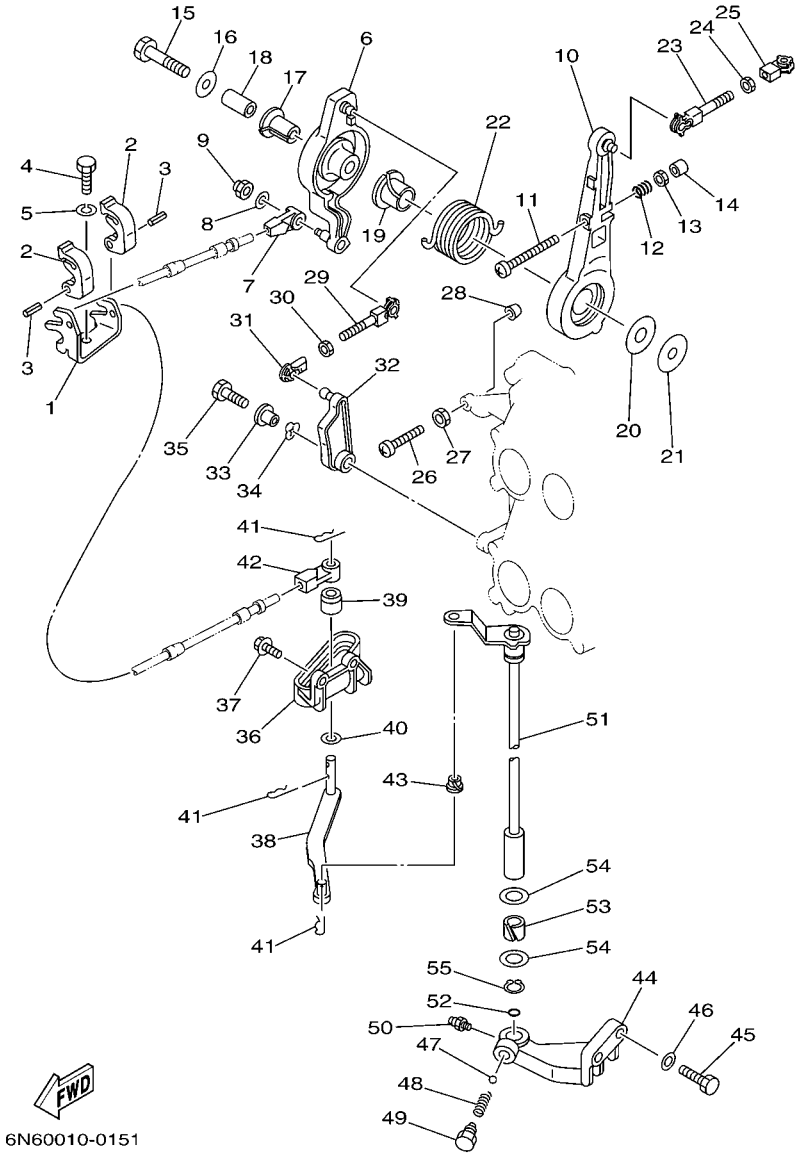

FIG. 16 CONTROL COMMANDE

REF. NO.	PART NO. N° PIECES	DESCRIPTION DESCRIPTION	6N64	6N74				REMARKS REMARQUES
55	93410–16006	CIRCLIP CLIPS	1	1				

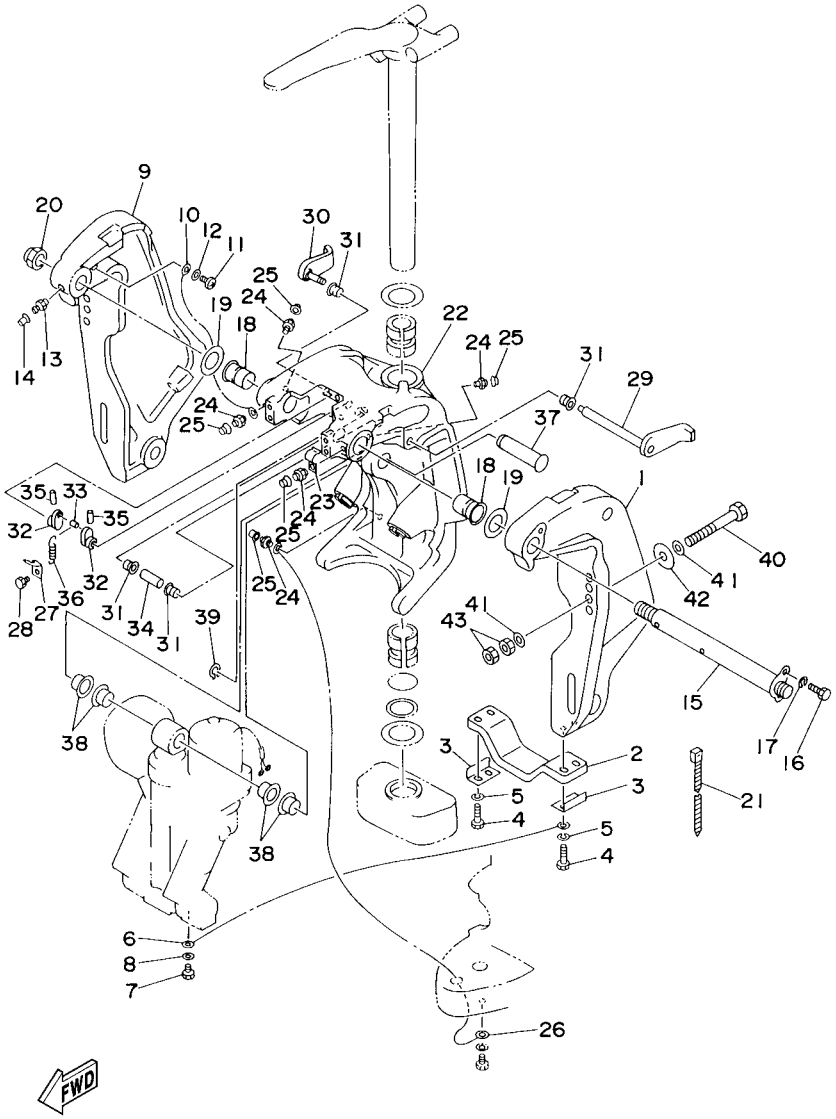

FIG. 17 BRACKET 1 SUPPORT 1

REF. NO.	PART NO. N° PIECES	DESCRIPTION DESCRIPTION	6N64	6N74				REMARKS REMARQUES
1	64E–43111–02–8D	BRACKET, CLAMP PRESSE	1	1				
2	6G5–45251–02	ANODE ANODE	1	1				
3	6G5–44526–00	PLATE PLAQUE	2	2				
4	97095–06030	BOLT BOULON	4	4				
5	92995–06100	WASHER, SPRING RONDELLE, GROWER	4	4				
6	6E5–82148–00	WIRE, LEAD 4 FIL 4	1	1				
7	97095–06010	BOLT BOULON	1	1				
8	92995–06600	WASHER RONDELLE	1	1				
9	64E–43112–02–8D	BRACKET, CLAMP PRESSE	1	1				
10	6E5–82148–00	WIRE, LEAD 4 FIL 4	1	1				
11	97880–06012	SCREW, PAN HEAD VIS, TETE TRONCONIQUE	1	1				
12	92990–06600	WASHER, PLATE RONDELLE, PLATE	1	1				
13	93700–06M03	NIPPLE, GREASE PION	1	1				
14	663–45119–00	CAP, GREASE NIPPLE CAPUCHON, GRAISSEUR	1	1				AP AP
15	64E–43131–01	BOLT, CLAMP BRACKET BOULON, PRESSE	1	1				
16	97095–08020	BOLT BOULON	1	1				
17	92995–08100	WASHER RONDELLE	1	1				
18	90386–25M31	BUSH DOUILLE	2	2				
19	90201–26M59	WASHER, PLATE RONDELLE, PLATE	2	2				
20	90185–22M11	NUT, SELF-LOCKING ECROU, AUTO-BLOQUANT	1	1				
21	90465–11M10	CLAMP BRIDE	1	1				
22	64E–43311–10–8D	BRACKET, SWIVEL 1 SUPPORT, PIVOT 1	1	1				L L
23	90465–08M63	CLAMP BRIDE	1	1				
24	93700–06M03	NIPPLE, GREASE PION	5	5				
25	663–45119–00	CAP, GREASE NIPPLE CAPUCHON, GRAISSEUR	5	5				AP AP
26	6E5–82147–00	WIRE, LEAD 4 FIL 4	1	1				L L
27	6G5–43144–00	HOOK, SPRING CROCHET	1	1				

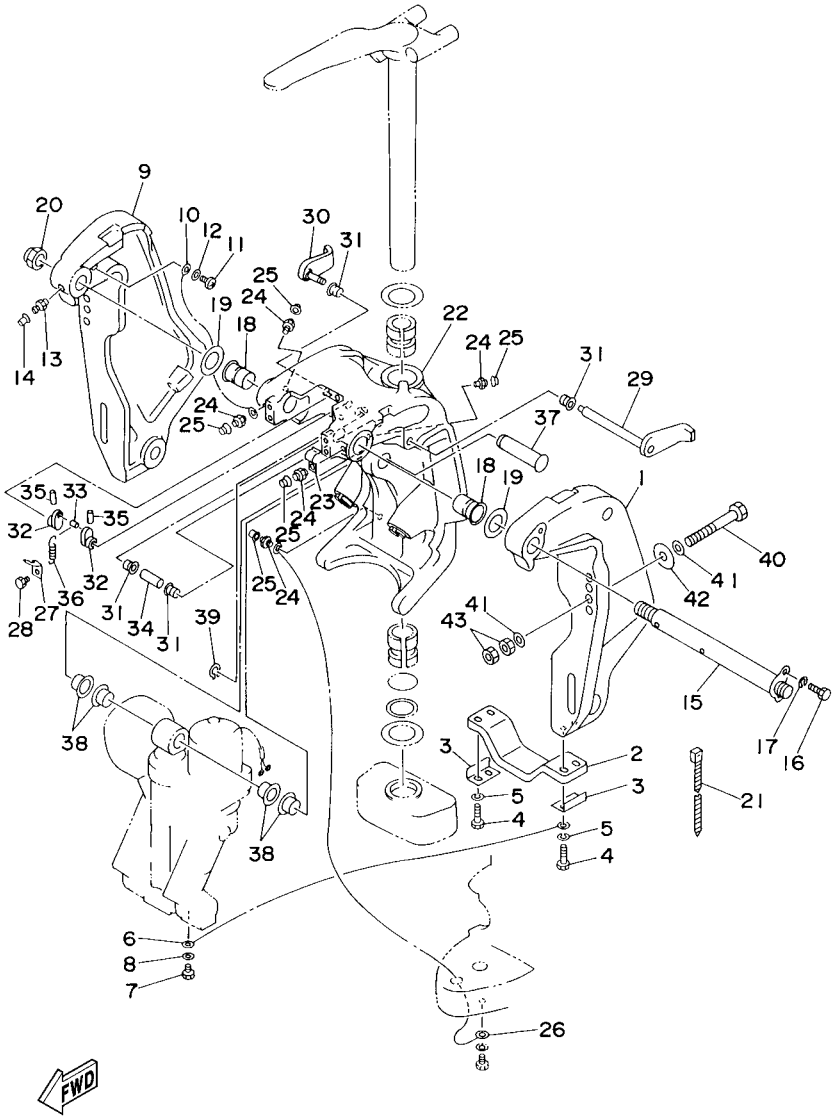

FIG. 17 BRACKET 1 SUPPORT 1

REF. NO.	PART NO. N° PIECES	DESCRIPTION DESCRIPTION	6N64	6N74				REMARKS REMARQUES
28	97095–06010	BOLT BOULON	1	1				
29	6G5–43181–02	LEVER, TILT STOP LEVIER, VERROUILLAGE RELEVAGE	1	1				
30	6G5–43185–02	LEVER, TILT STOP LEVIER, VERROUILLAGE RELEVAGE	1	1				
31	90386–10M16	BUSH DOUILLE	4	4				
32	6G5–43148–00	COLLAR, DISTANCE ENTRETOISE	2	2				
33	90249–06M19	PIN GOUPILLE	1	1				
34	90387–10M05	COLLAR COLLERETTE	1	1				
35	91690–30020	PIN, SPRING AGRAFFE	2	2				
36	90506–14M24	SPRING, TENSION RESSORT, TENSION	1	1				
37	64E–43126–00	PIN, UPPER SHOCK MOUNT AXE, SUPERIEUR AMORTISSEUR	1	1				
38	90386–22M98	BUSH DOUILLE	4	4				
39	93410–22M11	CIRCLIP CLIPS	1	1				
40	90101–12M03	BOLT (L:115MM) BOULON (L:115MM)	4	4				
41	90201–13M01	WASHER, PLATE RONDELLE, PLATE	8	8				
42	90201–12M05	WASHER, PLATE RONDELLE, PLATE	4	4				
43	95380–12600	NUT ECROU	8	8				

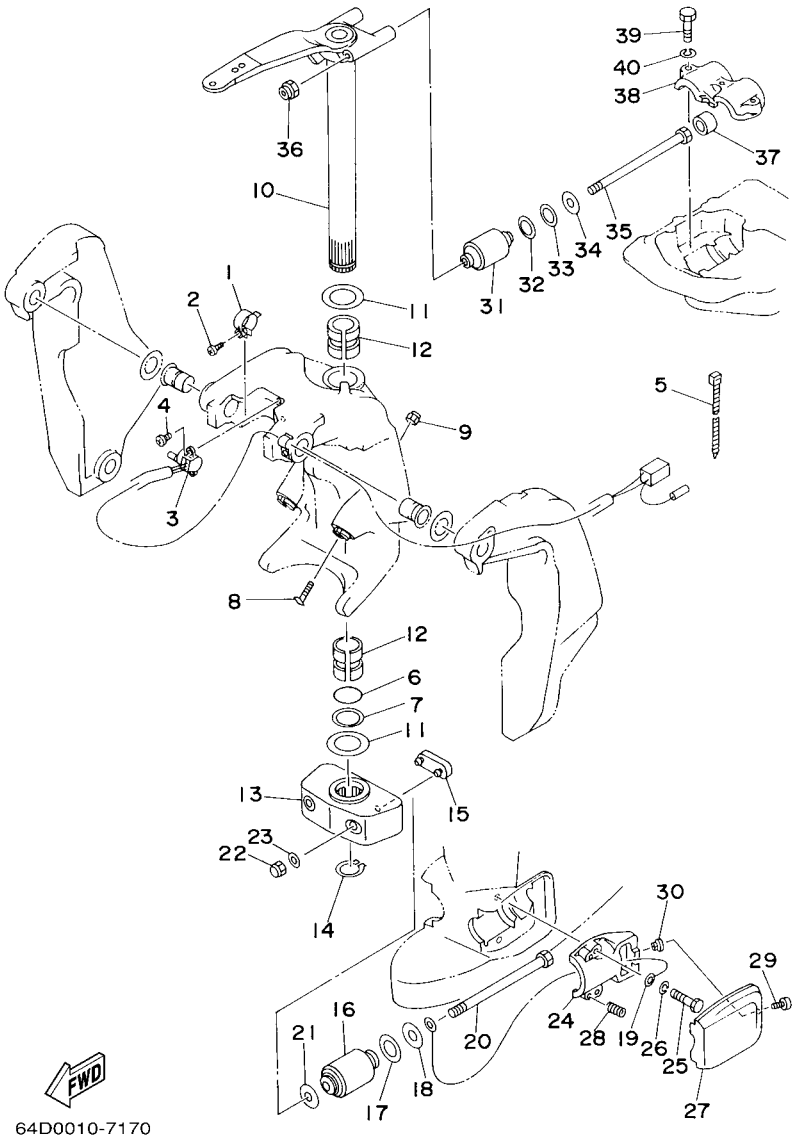

FIG. 18 BRACKET 2 SUPPORT 2

REF. NO.	PART NO. N° PIECES	DESCRIPTION DESCRIPTION	6N64	6N74				REMARKS REMARQUES
1	64E–43139–02	CAM, TRIM SENDER VILEBREQUIN TRUM	1	1				
2	97780–60525	SCREW, TAPPING VIS, TETE BOMBEE	1	1				
3	64E–83672–02	TRIM SENDER INCLINER RACCORD	1	1				
4	97885–06016	SCREW, PAN HEAD VIS, A ENCOCHE	2	2				
5	90465–11M10	CLAMP BRIDE	3	3				
6	93210–37MH7	O-RING JOINT TORIQUE	1	1				
7	90202–40M47	WASHER, PLATE RONDELLE, PLATE	1	1				
8	61A–43376–00	BOLT, THRUST RECEIVER BOULON	2	2				
9	95780–10300	NUT, FLANGE ECROU	2	2				
10	6E5–42510–A1–8D	STEERING BRACKET ASSY DIRECTION SUPPORT (ENS.)	1	1				L L
11	90201–38M60	WASHER, PLATE RONDELLE, PLATE	2	2				
12	90386–38M32	BUSH DOUILLE	2	2				
13	6G5–44551–01–8D	HOUSING, LOWER MOUNT RUBBER BOITIER, SILENT-BLOC INFERIEUR	1	1				
14	93410–37M04	CIRCLIP CLIPS	1	1				
15	6E5–44575–00	DAMPER, LOWER MOUNT RUBBER SILENT-BLOC, INFERIEUR	1	1				
16	6E5–44555–00–94	MOUNT DAMPER, LOWER SIDE SILENT-BLOC, INFERIEUR LATERAL	2	2				
17	90202–32M19	WASHER, PLATE RONDELLE, PLATE	2	2				
18	90201–16M55	WASHER, PLATE RONDELLE, PLATE	2	2				
19	6E5–82149–00	WIRE, LEAD 3 FIL 3	1	1				
20	90109–14M34	BOLT BOULON	2	2				
21	90201–15M58	WASHER, PLATE RONDELLE, PLATE	2	2				
22	95380–14800	NUT ECROU	2	2				
23	92995–14600	WASHER RONDELLE	2	2				
24	6E5–44552–01–94	HOUSING, LOWER MOUNT RUBBER BOITIER, SILENT-BLOC INFERIEUR	2	2				
25	97095–10045	BOLT BOULON	4	4				
26	92995–10100	WASHER RONDELLE	4	4				
27	6E5–44553–01–8D	COVER, LOWER MOUNT COUVERCLE, SUSPENSION INFERIEU	2	2				

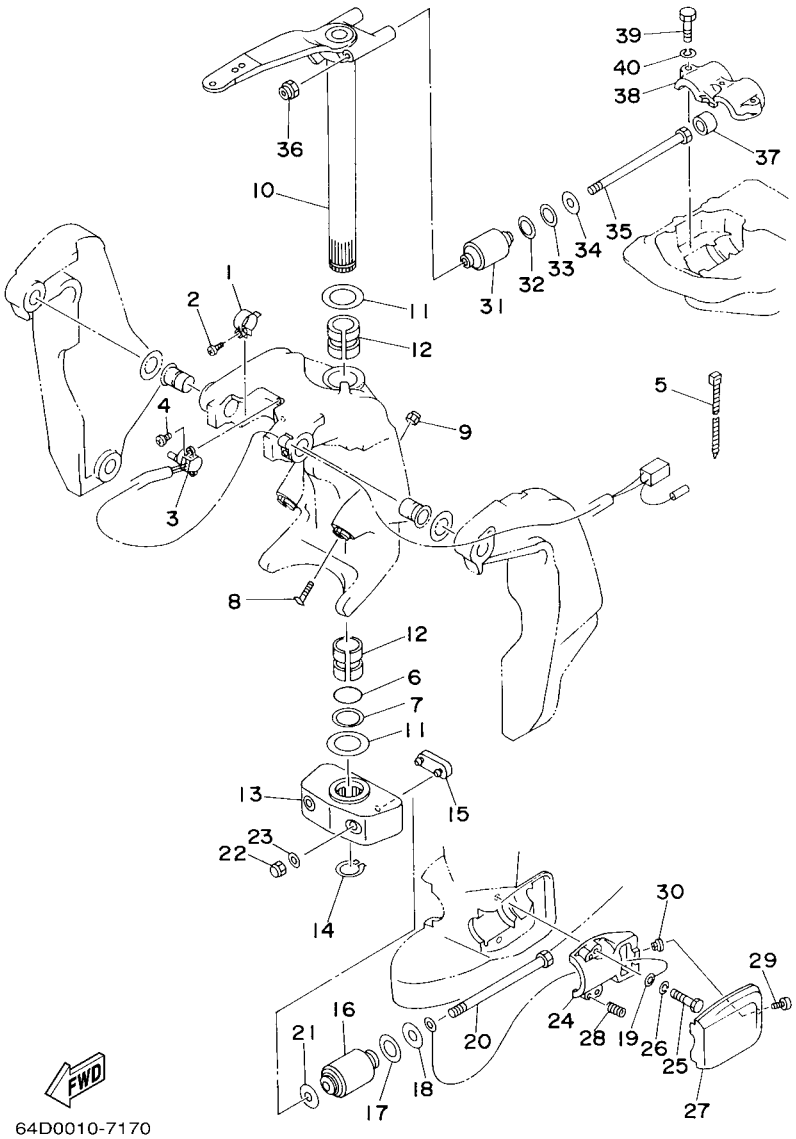

FIG. 18 BRACKET 2 SUPPORT 2

REF. NO.	PART NO. N° PIECES	DESCRIPTION DESCRIPTION	6N64	6N74				REMARKS REMARQUES
28	90501–16M28	SPRING, COMPRESSION RESSORT, COMPRESSION	4	4				
29	97885–06016	SCREW, PAN HEAD VIS, A ENCOCHE	2	2				
30	90179–06066	NUT ECROU	2	2				
31	6E5–44514–00–94	MOUNT DAMPER, UPPER SIDE SILENT-BLOC, SUPERIEUR LATERAL	2	2				
32	90201–26M57	WASHER, PLATE RONDELLE, PLATE	2	2				
33	90202–26M18	WASHER, PLATE RONDELLE, PLATE	2	2				
34	90201–14M56	WASHER, PLATE RONDELLE, PLATE	2	2				
35	90109–12007	BOLT BOULON	2	2				
36	90185–12M12	NUT, SELF-LOCKING ECROU, AUTO-BLOQUANT	2	2				
37	663–44575–00	DAMPER, LOWER MOUNT RUBBER SILENT-BLOC, INFERIEUR	2	2				
38	6E5–44511–00–5B	COVER, UPPER MOUNT COUVERCLE, SUSPENSION SUPERIEU	1	1				
39	97095–10045	BOLT BOULON	3	3				
40	92995–10100	WASHER RONDELLE	3	3				

FIG. 19 POWER TRIM & TILT ASSY 1 PUISSANCE PARER ET INCLINER 1

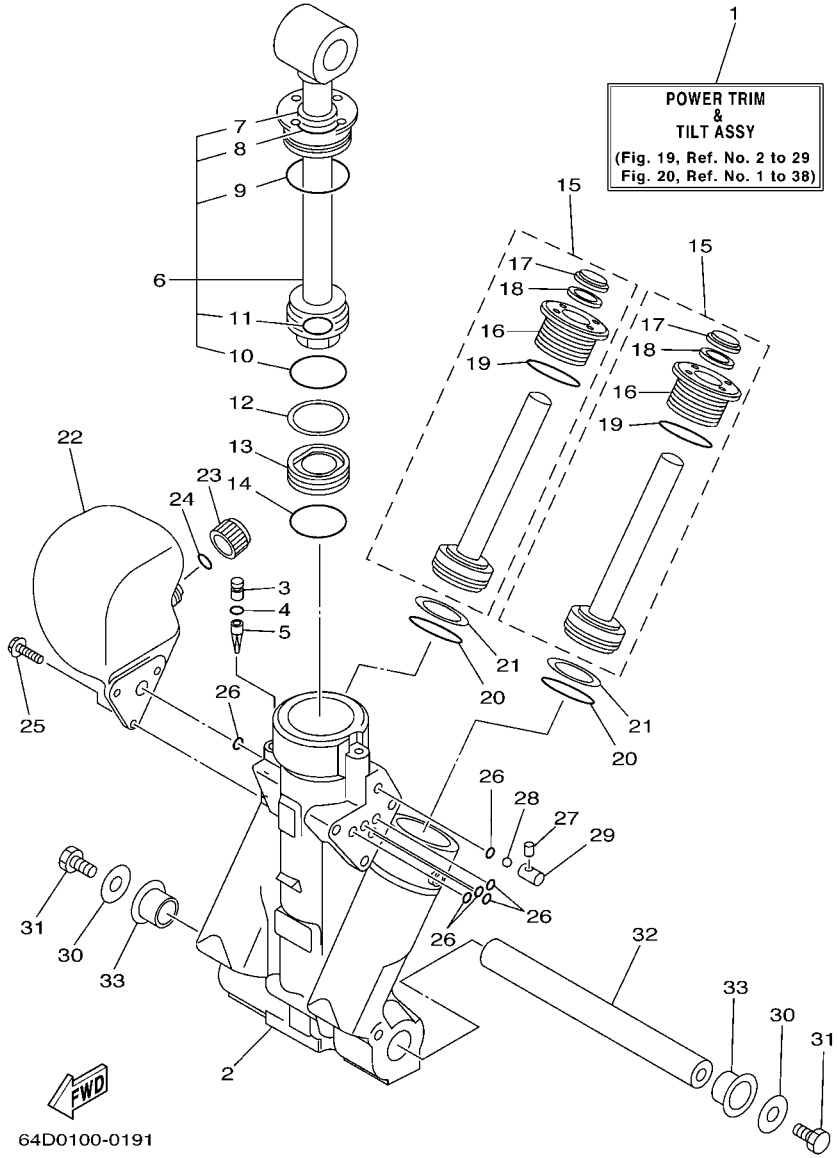

REF. NO.	PART NO. N° PIECES	DESCRIPTION DESCRIPTION	6N64	6N74				REMARKS REMARQUES
1	64E–43800–02–4D	POWER TRIM & TILT ASSY PUISSANCE PARER ET INCLINER (E	1	1				
2	64E–43825–01	HOUSING, TRIM & TILT CARTER	1	1				
3	64E–4388J–00	PLUG 2 BOUCHON 2	1	1				
4	93210–10M74	O-RING JOINT TORIQUE	1	1				
5	64E–43817–00	FILTER 2 FILTRE 2	1	1				
6	64E–43810–00	TILT PISTON SUB ASSY INCLINER PISTON AUXILIAIRE(ENS	1	1				
7	64E–43898–00	.SEAL ,DUST 2 .JOINT ANTI-PUSSIERE	1	1				
8	64E–43867–00	.O-RING .JOINT TORIQUE	1	1				
9	64E–43866–00	.O-RING .JOINT TORIQUE	1	1				
10	6E5–43862–00	.O-RING .JOINT TORIQUE	1	1				
11	64E–43883–00	.O-RING .JOINT TORIQUE	1	1				
12	6E5–43872–00	RING, BACK UP RESSORT	1	1				
13	6E5–43814–02	PISTON, FREE PISTON	1	1				
14	6E5–43862–00	O-RING JOINT TORIQUE	1	1				
15	64E–43820–00	TRIM PISTON SUB ASSY PARER PISTON AUXILIAIRE (ENS.)	2	2				
16	64E–43821–00	.SCREW, TRIM CYLINDER END .VIS	1	1				
17	64E–43822–00	.SEAL, TRIM DUST .JOINT	1	1				
18	64E–4384J–00	.SEAL, TRIM DOWN .JOINT	1	1				
19	6G5–43864–00	.O-RING .JOINT TORIQUE	1	1				
20	6E5–43864–00	O-RING JOINT TORIQUE	2	2				
21	6E5–43874–01	RING, BACK UP RESSORT	2	2				
22	64E–43828–00	BODY, RESERVOIR CORPS	1	1				
23	64E–43829–00	PLUG, RESERVOIR BOUCHON	1	1				
24	64E–43897–00	O-RING JOINT TORIQUE	1	1				
25	64E–4388E–00	BOLT ,SCREW (L:14MM) VIS (L:14MM)	3	3				
26	64E–43869–00	O-RING JOINT TORIQUE	6	6				
27	64E–4381G–00	PIN COUPILL	1	1				

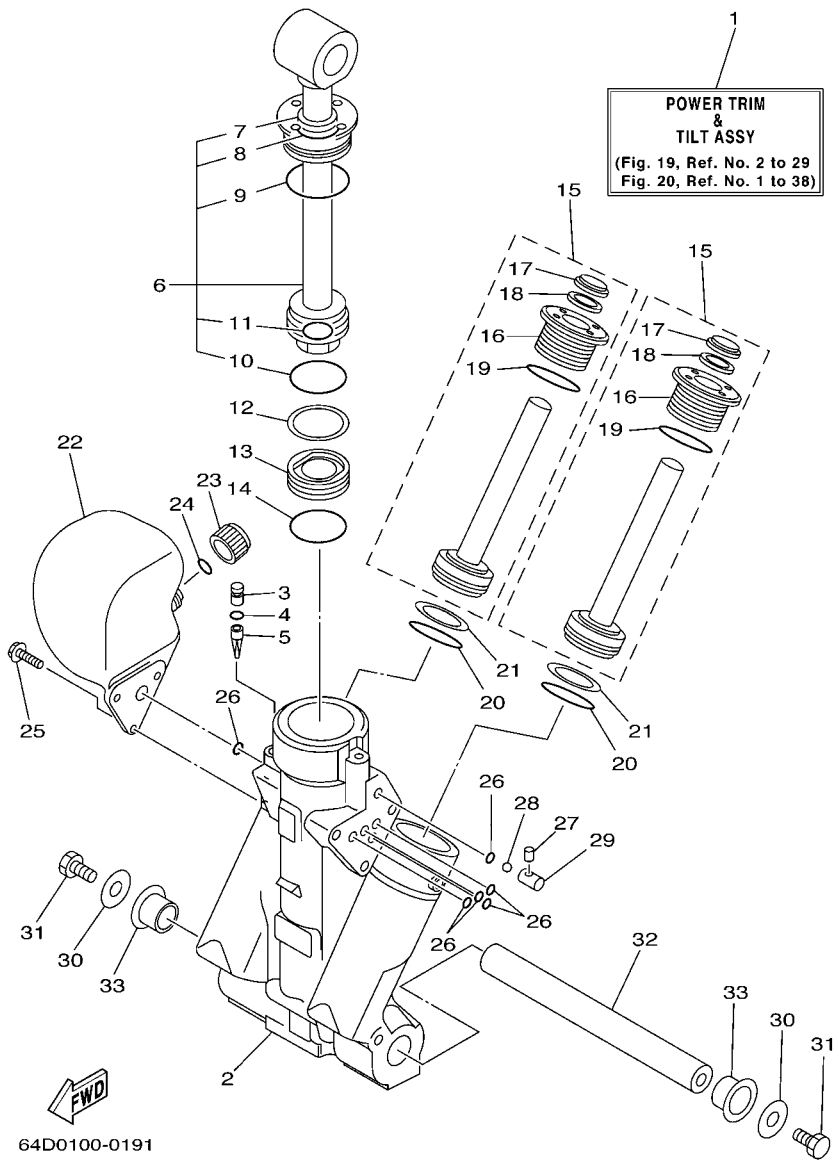

FIG. 19 POWER TRIM & TILT ASSY 1 PUISSANCE PARER ET INCLINER 1

REF. NO.	PART NO. N° PIECES	DESCRIPTION DESCRIPTION	6N64	6N74				REMARKS REMARQUES
28	6E5–43858–00	BALL BILLE	1	1				
29	64E–4382G–00	VALVE, SEAT JEU DE POINTEAUX	1	1				
30	90201–08M14	WASHER, PLATE RONDELLE, PLATE	2	2				
31	97080–08016	BOLT BOULON	2	2				
32	64E–43818–01	PIN, LOWER SHOCK MOUNT AXE, INFERIEUR AMORTISSEUR	1	1				
33	90386–22M98	BUSH DOUILLE	2	2				

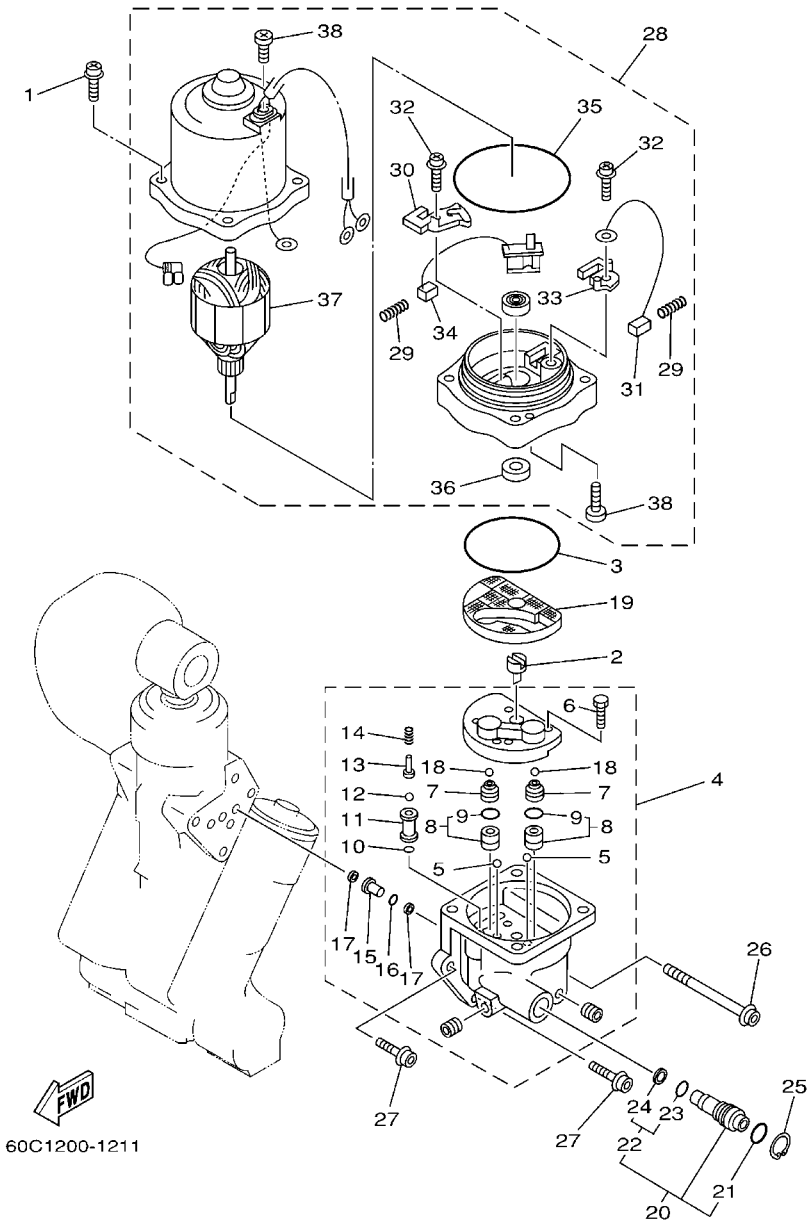

FIG. 20 POWER TRIM & TILT ASSY 2 PUISSANCE PARER ET INCLINER 2

REF. NO.	PART NO. N° PIECES	DESCRIPTION DESCRIPTION	6N64	6N74				REMARKS REMARQUES
1	64E–4388E–10	BOLT ,SCREW (L:34.7MM) VIS (L:34.7MM)	4	4				
2	64E–43831–00	CONNECTOR, SHAFT RACCORD	1	1				
3	64E–43868–00	O-RING JOINT TORIQUE	1	1				
4	64E–43830–00	GEAR PUMP ASSY POMPE A PIGNON (ENS.)	1	1				
5	72X–43858–00	.BALL .BILLE	2	2				
6	64E–43843–00	.SCREW, VALVE LOCK .VIS	4	4				
7	64E–43841–00	.PISTON, SHUTTLE .PISTON	2	2				
8	64E–43802–00	.VALVE SUB ASSY .CLAPET AUXILIAIRE (ENS.)	2	2				
9	6E5–43896–00	..O-RING ..JOINT TORIQUE	1	1				
10	6G5–43863–00	.O-RING .JOINT TORIQUE	1	1				
11	64E–43851–00	.SEAT, RELIEF VALVE .SIEGE	1	1				
12	64E–43858–00	.BALL .BILLE	1	1				
13	64E–43859–00	.PIN, VALVE SUPPORT .GOUPILLE	1	1				
14	64E–43855–00	.SPRING, UP RELIEF .RESSORT	1	1				
15	64E–43850–00	.VALVE SUB ASSY .CLAPET AUXILIAIRE (ENS.)	1	1				
16	64E–43865–00	.O-RING .JOINT TORIQUE	1	1				
17	64E–43816–00	.FILTER 1 .FILTRE 1	2	2				
18	64E–43858–00	.BALL .BILLE	2	2				
19	64E–43817–10	FILTER 2 FILTRE 2	1	1				
20	64E–43860–00	MANUAL VALVE SUB-ASSY SOUPAPE, MANUEL (ENS.)	1	1				
21	72X–85075–L0	.O-RING .JOINT TORIQUE	1	1				
22	64E–43827–00	.RING SET .BILLE	1	1				
23	64E–4387A–00	..O-RING ..JOINT TORIQUE	1	1				
24	64E–43873–00	..RING, BACK UP ..RESSORT	1	1				
25	64E–43875–00	RING, SNAP RESSORT	1	1				
26	64E–43879–10	SCREW, WITH WASHER VIS, AVEC RONDELLE	1	1				
27	64E–43879–00	SCREW, WITH WASHER VIS, AVEC RONDELLE	2	2				

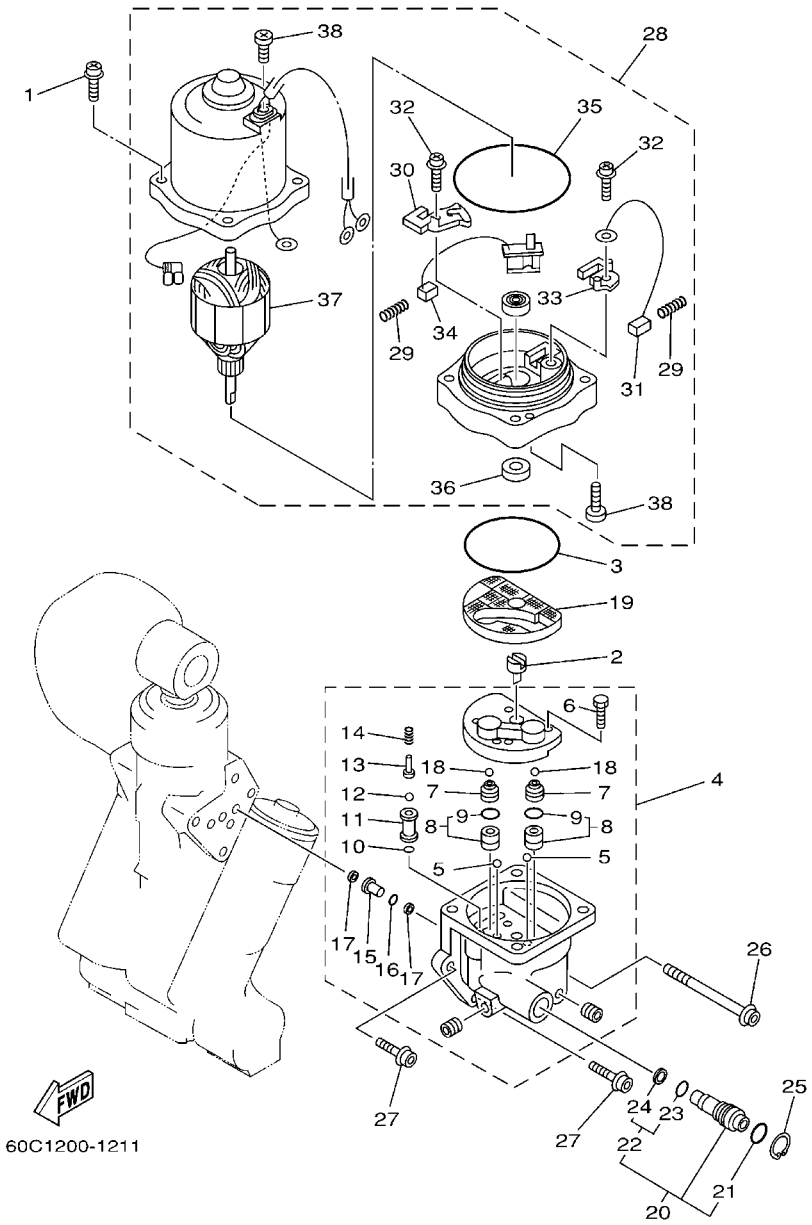

FIG. 20 POWER TRIM & TILT ASSY 2 PUISSANCE PARER ET INCLINER 2

REF. NO.	PART NO. N° PIECES	DESCRIPTION DESCRIPTION	6N64	6N74				REMARKS REMARQUES
28	64E–43880–01	MOTOR ASSY MOTEUR (ENS.)	1	1				
29	6H1–4386K–10	.SPRING, BRUSH .RESSORT, BALAI	2	2				
30	64E–4380J–00	.HOLDER, BRUSH .PORTE-BALAI	1	1				
31	64E–43891–00	.BRUSH 1 .BALAI 1	1	1				
32	97607–04310	.SCREW,WITH WASHER .VIS HEXAGONAL	2	2				
33	64E–4380F–00	.HOLDER, BRUSH 2 .PORTE-BALAI 2	1	1				
34	64E–43892–00	.BRUSH 2 .BALAI 2	1	1				
35	6G5–43865–00	.O-RING .JOINT TORIQUE	1	1				
36	93102–08M43	.OIL SEAL .JOINT SPY	1	1				
37	64E–43805–00	.ARMATURE ASSY .INDUIT (ENS.)	1	1				
38	64E–43843–10	.SCREW, VALVE LOCK .VIS	3	3				

FIG. 21 UPPER CASING FOURREAU

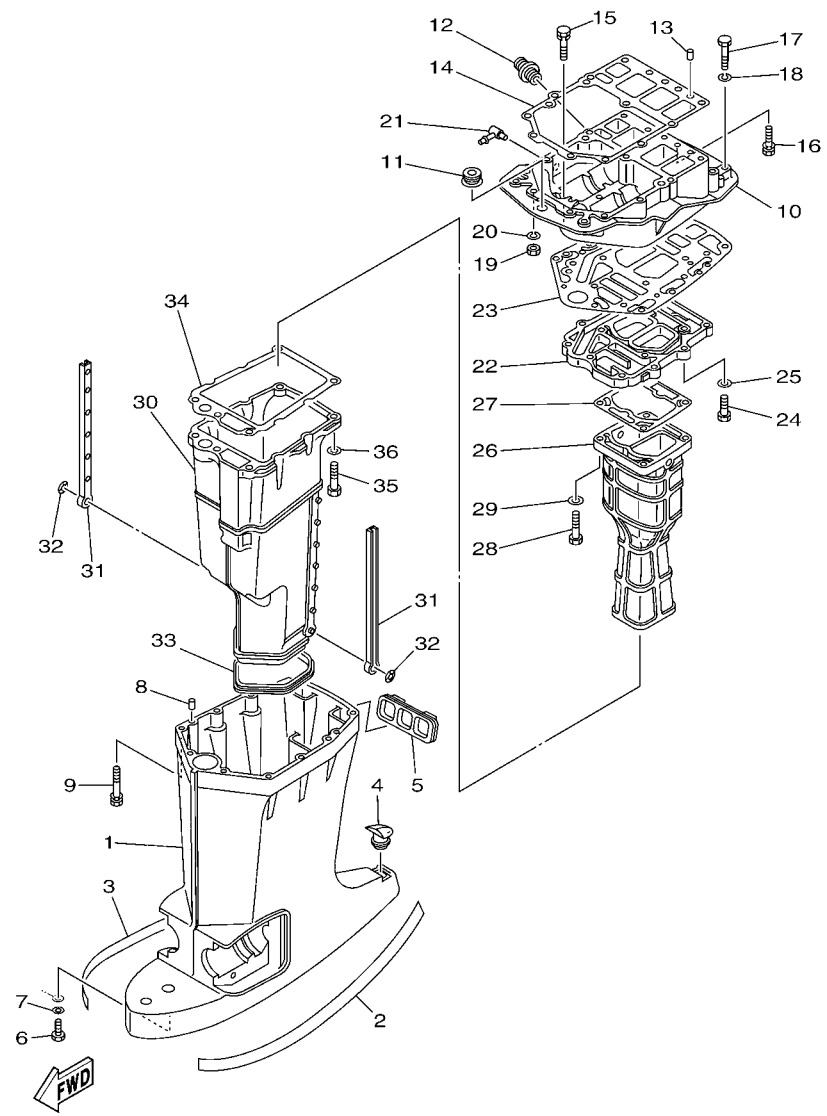

6N64300-D210

REF. NO.	PART NO. N° PIECES	DESCRIPTION DESCRIPTION	6N64	6N74				REMARKS REMARQUES
1	6E5–45111–02–8D	CASING, UPPER FOURREAU	1	1				L L
2	6R3–42791–41	MARK 1 ETIQUETTE 1	1	1				
3	6R3–42792–41	MARK ETIQUETTE	1	1				
4	6E5–45155–00	CAP CAPUCHON	1	1				
5	6E5–42769–00	SEAL, RUBBER BOURRELET, CAOUTCHOUC	1	1				
6	97095–06010	BOLT BOULON	1	1				
7	92995–06600	WASHER RONDELLE	1	1				
8	93608–12M05	PIN, DOWEL AXE	2	2				
9	90119–08078	BOLT, WITH WASHER BOULON, AVEC RONDELLE	6	6				
10	6G5–41137–11–94	GUIDE, EXHAUST COLLECTEUR D'ECHAPPEMENT	1	1				FLUSHING KIT FLUSHING KIT
11	6E5–42724–00	GROMMET PASSE-FIL	1	1				
12	6G5–12581–00	JOINT, HOSE 1 JOINT DE TUYAU	1	1				
13	93608–12M05	PIN, DOWEL AXE	2	2				
14	6G5–45113–A1	GASKET, UPPER CASING JOINT, TUBE D'ARBRE	1	1				
15	90119–08M79	BOLT, WITH WASHER BOULON, AVEC RONDELLE	2	2				
16	90119–08077	BOLT, WITH WASHER BOULON, AVEC RONDELLE	4	4				
17	97095–08045	BOLT BOULON	2	2				
18	92995–08100	WASHER RONDELLE	2	2				
19	95380–08700	NUT ECROU	2	2				
20	92995–08100	WASHER RONDELLE	2	2				
21	6H1–11372–00	NIPPLE, HOSE RACCORD, TUYAU	1	1				FLUSHING KIT FLUSHING KIT
22	6G5–41131–01–5B	MANIFOLD, EXT. 1 PIPE D'ECHAPPEMENT	1	1				
23	6G5–45114–A1	GASKET, UPPER CASING JOINT, TUBE D'ARBRE	1	1				
24	97095–08030	BOLT BOULON	4	4				
25	92995–08600	WASHER RONDELLE	4	4				
26	6E5–41132–10–5B	MANIFOLD, EXHAUST PIPE D'ECHAPPEMENT	1					
	6L1–41132–00–5B	MANIFOLD, EXHAUST PIPE D'ECHAPPEMENT		1				

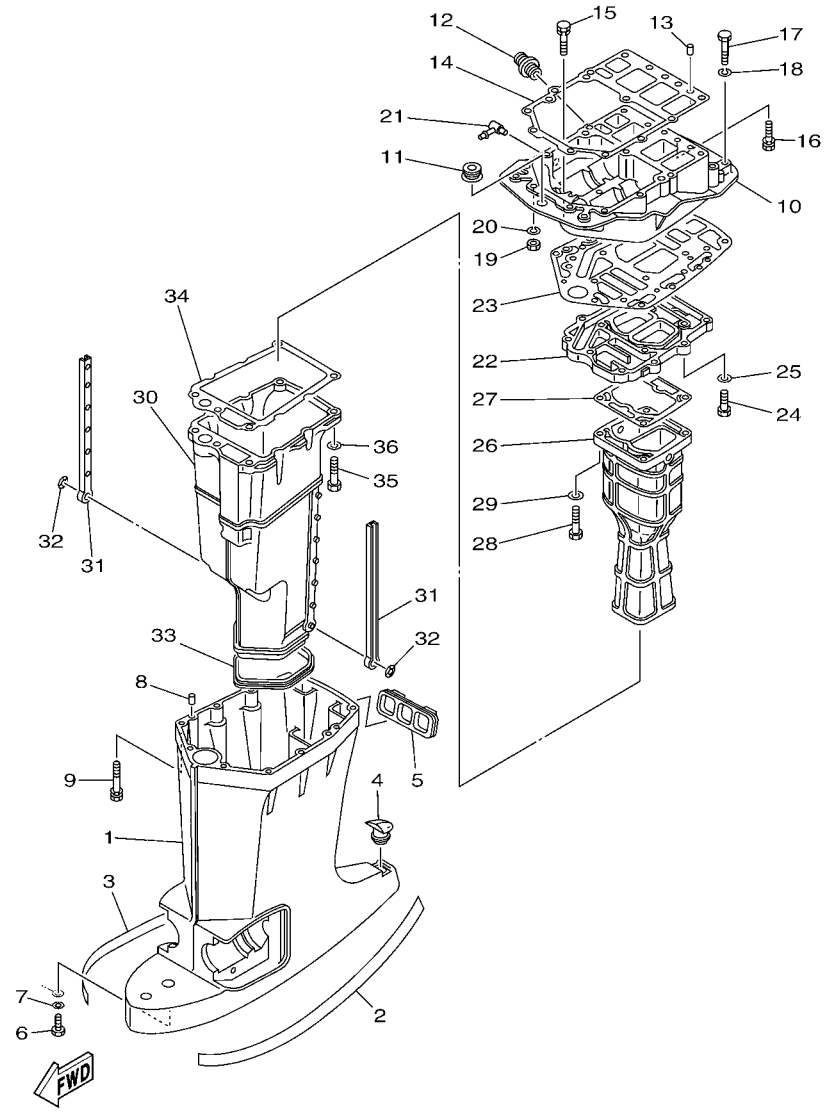

6N64300-D210

FIG. 21 UPPER CASING FOURREAU

REF. NO.	PART NO. N° PIECES	DESCRIPTION DESCRIPTION	6N64	6N74				REMARKS REMARQUES
27	6E5–41134–A0	GASKET, EXHAUST MANIFOLD JOINT, PIPE D'ECHAPPEMENT	1					
	6G5–41134–A1	GASKET, EXHAUST MANIFOLD JOINT, PIPE D'ECHAPPEMENT		1				
28	97095–08045	BOLT BOULON	4	4				
29	92995–08600	WASHER RONDELLE	4	4				
30	6E5–14711–01–5B	MUFFLER 1 POT D'ECHAPPEMENT 1	1	1				
31	6E5–14737–00	DAMPER, MUFFLER AMORTISSEUR DE POT D'ECHAPPT	2	2				
32	90183–05M02	NUT, SPRING ECROU, RESSORT	2	2				
33	6E5–45123–00	GASKET, MUFFLER JOINT, POT DE DETENTE	1	1				
34	6E5–41135–A0	GASKET, EXHAUST MANIFOLD JOINT, PIPE D'ECHAPPEMENT	1	1				
35	97095–08045	BOLT BOULON	5	5				
36	92995–08600	WASHER RONDELLE	5	5				

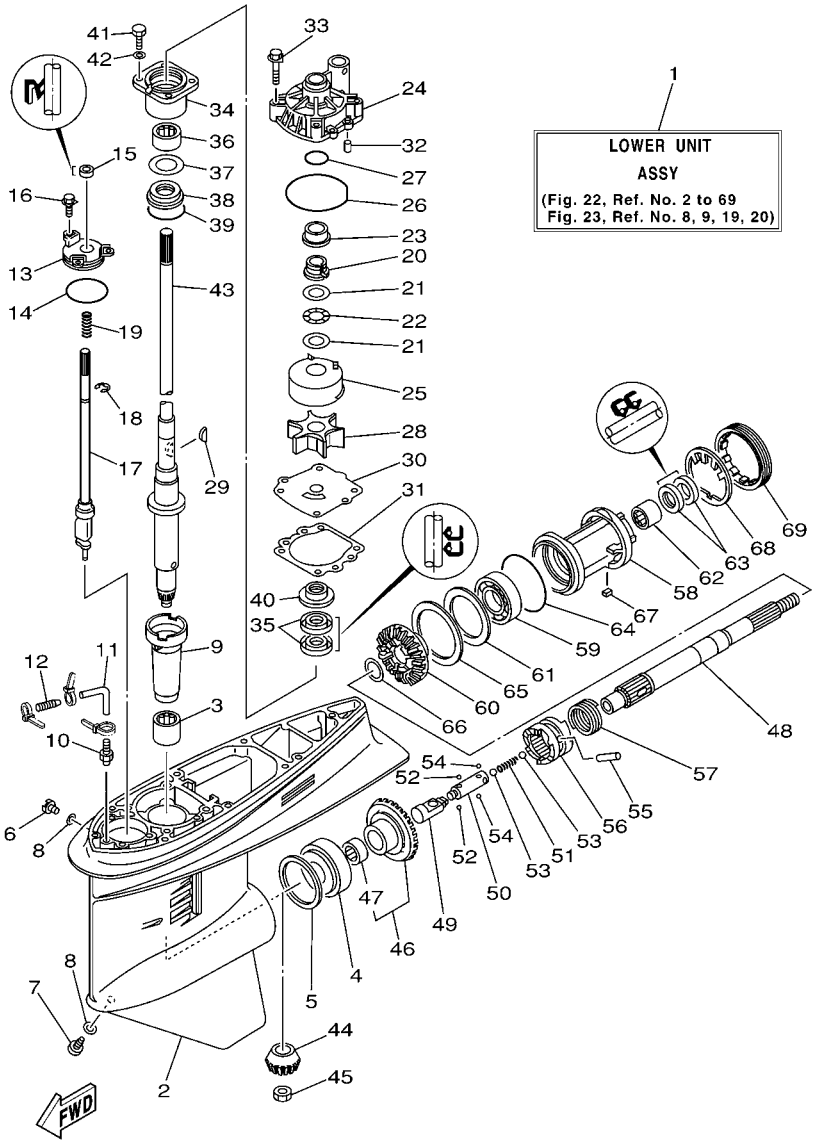

FIG. 22 LOWER CASING & DRIVE 1 BOITIER D'HELICE TRANSMISSION1

REF. NO.	PART NO. N° PIECES	DESCRIPTION DESCRIPTION	6N64	6N74				REMARKS REMARQUES
1	6E5–45300–17–8D	LOWER UNIT ASSY UNITE INFERIEURE (ENS.)	1	1				L L
2	6E5–45301–05–8D	CASING, LOWER BEQUILLE	1	1				
3	93315–628U9	BEARING ROULEMENT	1	1				
4	93332–000U7	BEARING ROULEMENT	1	1				
5	6E5–45567–01	SHIM (T:0.10MM) CALE (T:0.10MM)	1	1				UR UR
	6E5–45567–10	SHIM (T:0.12MM) CALE (T:0.12MM)	1	1				UR UR
	6E5–45567–20	SHIM (T:0.15MM) CALE (T:0.15MM)	1	1				UR UR
	6E5–45567–30	SHIM (T:0.18MM) CALE (T:0.18MM)	1	1				UR UR
	6E5–45567–40	SHIM (T:0.30MM) CALE (T:0.30MM)	1	1				UR UR
	6E5–45567–50	SHIM (T:0.40MM) CALE (T:0.40MM)	1	1				UR UR
	6E5–45567–60	SHIM (T:0.50MM) CALE (T:0.50MM)	1	1				UR UR
6	90340–08002	PLUG, STRAIGHT SCREW PLOT, FILETE DROIT	1	1				
7	688–45341–10	PLUG, DRAIN BOUCHON DE VIDANGE	1	1				
8	90430–08020	GASKET JOINT	2	2				
9	6E5–45536–00	SLEEVE, DRIVE SHAFT MANCHON, ARBRE MOTEUR	1	1				
10	6E5–45378–00	NIPPLE, HOSE RACCORD, TUYAU	1	1				
11	90445–07ME8	HOSE (L80) DURITE (L80)	1	1				L L
12	6E5–83558–10	END, NIPPLE RACCORD DE NIPPLE	1	1				
13	6E5–45321–00	PLATE PLAQUETTE	1	1				
14	93210–58144	O-RING JOINT TORIQUE	1	1				
15	93106–09014	OIL SEAL JOINT SPY	1	1				
16	90119–06M10	BOLT, WITH WASHER BOULON, AVEC RONDELLE	3	3				
17	6E5–44150–02	SHIFT CAM ASSY CAME D'INVERSION	1	1				
18	99001–08600	CIRCLIP CIRCLIP	1	1				
19	90501–11M10	SPRING, COMPRESSION RESSORT, COMPRESSION	1	1				
20	61A–45538–00	SPACER 1 ENTRETOISE	1	1				
21	90201–22M01	WASHER, PLATE RONDELLE, PLATE	2	2				

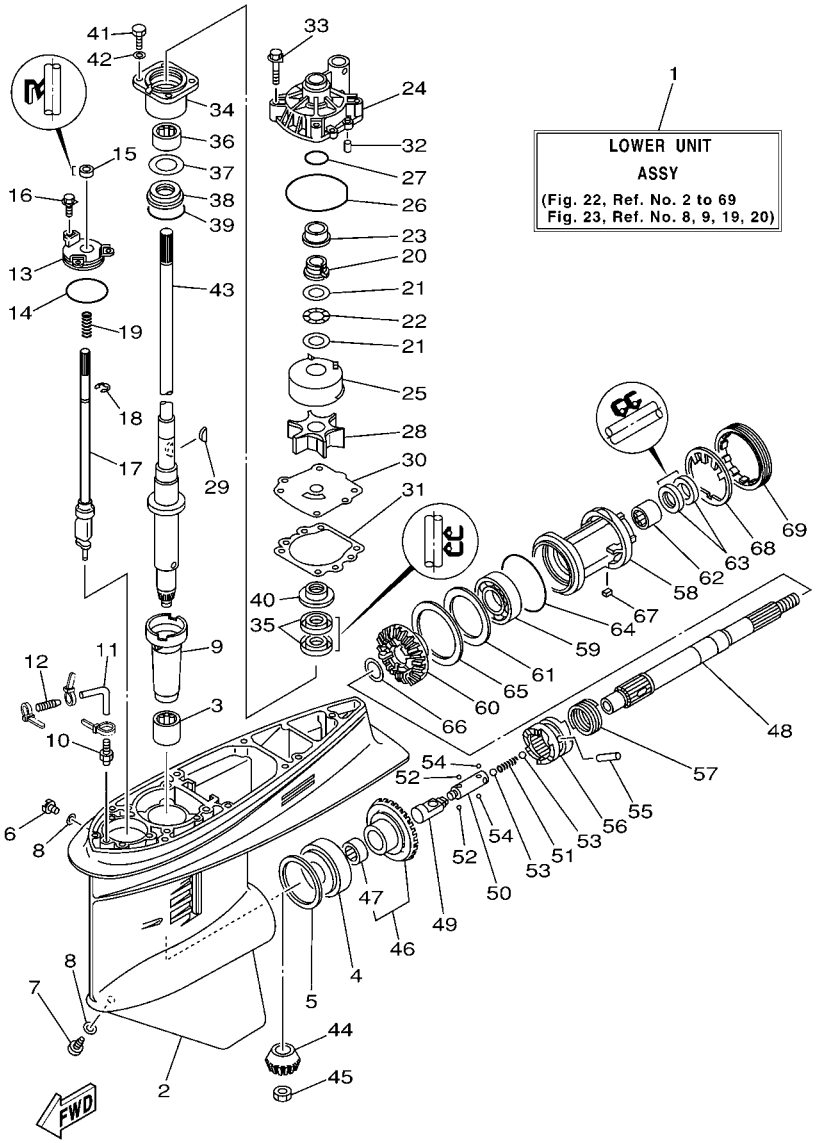

FIG. 22 LOWER CASING & DRIVE 1 BOITIER D'HELICE TRANSMISSION1

REF. NO.	PART NO. N° PIECES	DESCRIPTION DESCRIPTION	6N64	6N74				REMARKS REMARQUES
22	90206–22M19	WASHER, WAVE RONDELLE, ONDULEE	1	1				
23	61A–45527–00	COLLAR, DRIVE SHAFT ENTRETOISE	1	1				
24	61A–44311–01	HOUSING, WATER PUMP CORPS, POMPE A EAU	1	1				
25	61A–44322–02	INSERT, CARTRIDGE CUVETTE	1	1				
26	93210–86M38	O-RING JOINT TORIQUE	1	1				
27	93210–37160	O-RING JOINT TORIQUE	1	1				
28	6E5–44352–01	IMPELLER TURBINE	1	1				
29	90280–04M05	KEY, WOODRUFF CLAVETTE, DEMI-LUNE	1	1				
30	6E5–44323–00	OUTER PLATE, CARTRIDGE PLAQUE EXTERIEURE	1	1				
31	6E5–44315–A0	GASKET, WATER PUMP JOINT, POMPE A EAU	1	1				
32	93606–12019	PIN, DOWEL GOUPILLE	2	2				
33	90119–08M14	BOLT, WITH WASHER BOULON, AVEC RONDELLE	4	4				
34	6E5–45331–00–94	HOUSING, BEARING FLASQUE, ROULEMENT	1	1				
35	93101–28M16	OIL SEAL JOINT SPY	2	2				
36	93317–330U2	BEARING ROULEMENT	1	1				
37	6E5–45587–01	SHIM (T:0.10MM) CALE (T:0.10MM)	1	1				UR UR
	6E5–45587–10	SHIM (T:0.12MM) CALE (T:0.12MM)	1	1				UR UR
	6E5–45587–20	SHIM (T:0.15MM) CALE (T:0.15MM)	1	1				UR UR
	6E5–45587–30	SHIM (T:0.18MM) CALE (T:0.18MM)	1	1				UR UR
	6E5–45587–40	SHIM (T:0.30MM) CALE (T:0.30MM)	1	1				UR UR
	6E5–45587–50	SHIM (T:0.40MM) CALE (T:0.40MM)	1	1				UR UR
	6E5–45587–60	SHIM (T:0.50MM) CALE (T:0.50MM)	1	1				UR UR
38	93341–930V2	BEARING CERVEAUX DE DIRECTION	1	1				
39	93210–55M14	O-RING JOINT TORIQUE	1	1				
40	6E5–45344–00	COVER, OIL SEAL FLASQE, JOINT D'HUILE	1	1				
41	97095–08025	BOLT BOULON	4	4				
42	92995–08600	WASHER RONDELLE	4	4				

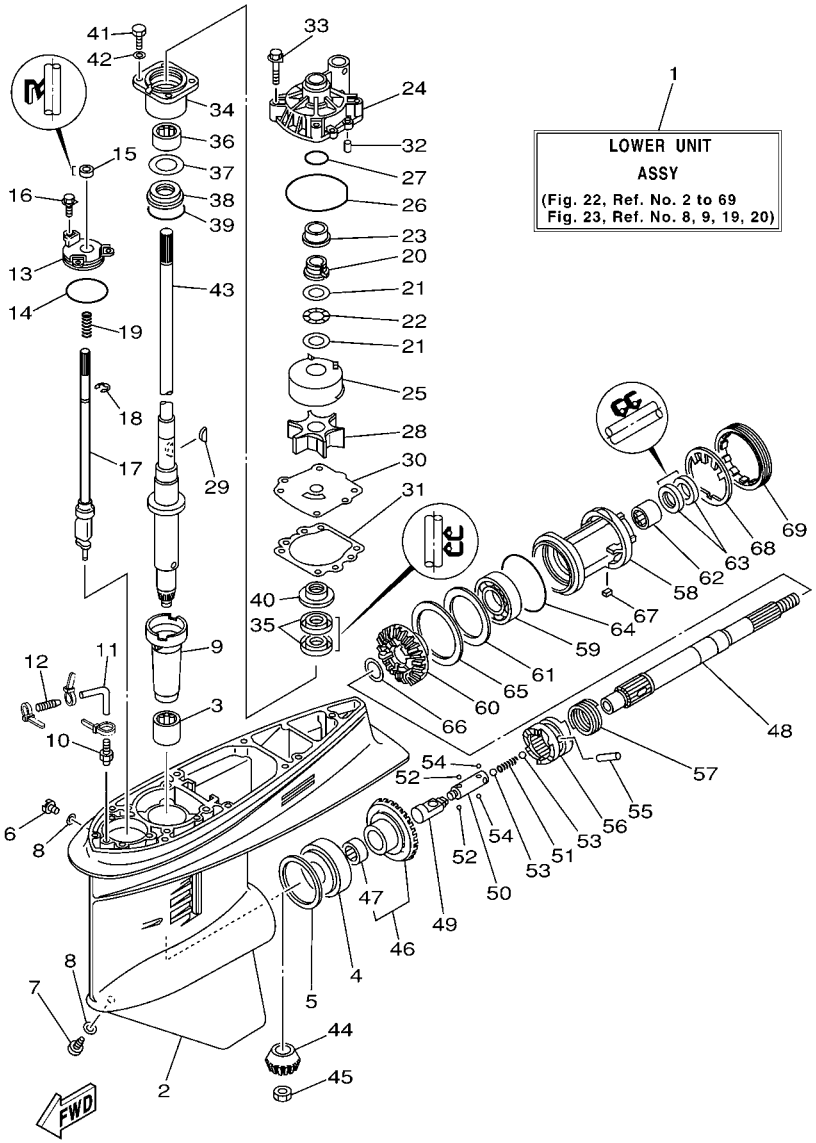

FIG. 22 LOWER CASING & DRIVE 1 BOITIER D'HELICE TRANSMISSION1

REF. NO.	PART NO. N° PIECES	DESCRIPTION DESCRIPTION	6N64	6N74				REMARKS REMARQUES
43	6E5–45501–01	DRIVE SHAFT COMP. ARBRE MOTEUR COMP.	1	1				L L
44	6E5–45551–02	PINION (13T) PIGNON D'ATTAQUE (13D)	1	1				
45	90170–16M01	NUT ECROU	1	1				
46	6E5–45560–01	GEAR 1 (26T) PIGNON 1 (26T)	1	1				
47	93315–425U7	.BEARING .ROULEMENT	1	1				
48	6E5–45611–01	SHAFT, PROPELLER ARBRE, HELICE	1	1				
49	6E5–45641–03	SHIFTER EMBRAYAGE	1	1				
50	6E5–45634–01	SLIDE, SHIFT CONTRE-POUSSOIR	1	1				
51	90501–16M37	SPRING, COMPRESSION RESSORT, COMPRESSION	1	1				
52	93507–32009	BALL BILLE	2	2				
53	93511–32017	BALL BILLES	2	2				
54	93503–16003	BALL BILLES	2	2				
55	90250–08M07	PIN, STRAIGHT GOUPILLE, DROITE	1	1				
56	6E5–45631–01	CLUTCH, DOG CRABOT	1	1				
57	6E5–45633–01	RING, CROSS PIN JONC, GOUPILLE CRABOT	1	1				
58	6E5–45332–00–94	HOUSING, BEARING FLASQUE, ROULEMENT	1	1				
59	93306–208U0	BEARING ROULEMENT	1	1				
60	6E5–45571–01	GEAR 2 (26T) PIGNON 2 (26T)	1	1				
61	6E5–45576–00	WASHER, THRUST RONDELLE DE CALAGE	1	1				
62	93315–43061	BEARING ROULEMENT	1	1				
63	93101–30M17	OIL SEAL JOINT SPY	2	2				
64	93210–86M39	O-RING JOINT TORIQUE	1	1				
65	6L6–45577–00	SHIM (T:0.10MM) CALE (T:0.10MM)	1	1				UR UR
	6L6–45577–10	SHIM (T:0.12MM) CALE (T:0.12MM)	1	1				UR UR
	6L6–45577–20	SHIM (T:0.15MM) CALE (T:0.15MM)	1	1				UR UR
	6L6–45577–30	SHIM (T:0.18MM) CALE (T:0.18MM)	1	1				UR UR
	6L6–45577–40	SHIM (T:0.30MM) CALE (T:0.30MM)	1	1				UR UR

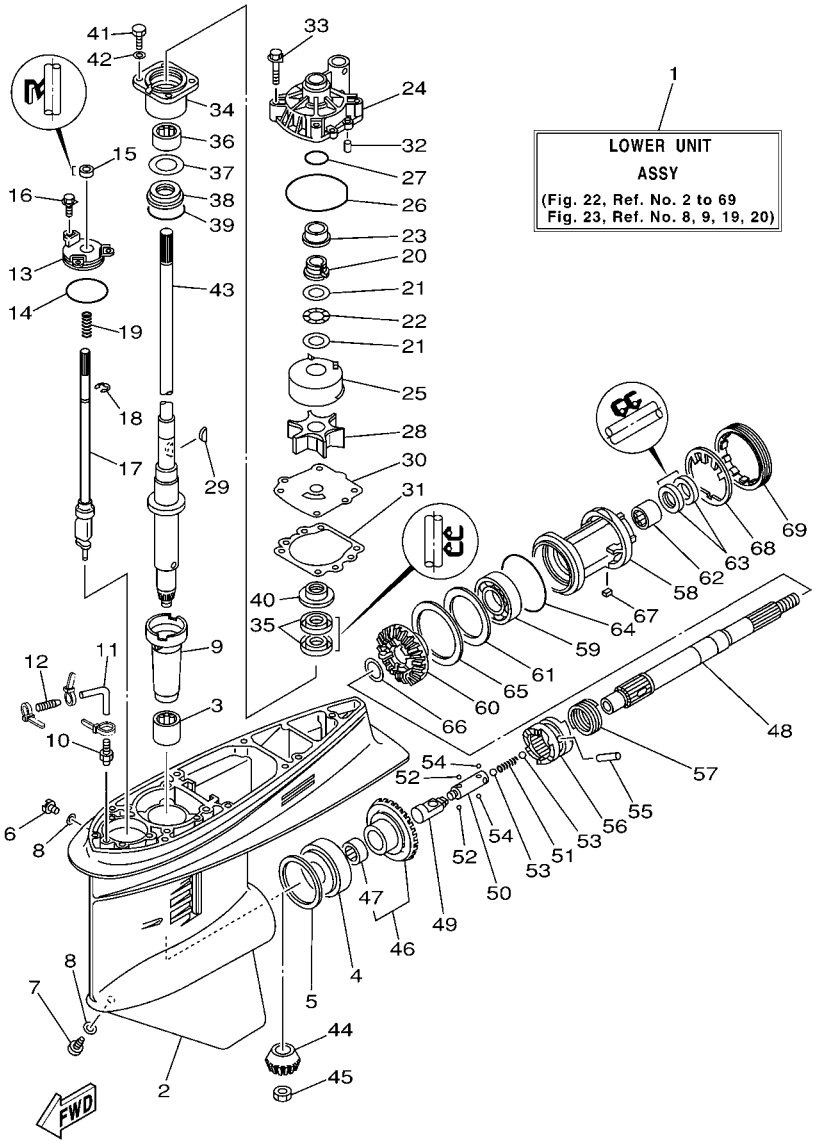

FIG. 22 LOWER CASING & DRIVE 1 BOITIER D'HELICE TRANSMISSION1

REF. NO.	PART NO. N° PIECES	DESCRIPTION DESCRIPTION	6N64	6N74				REMARKS REMARQUES
65	6L6–45577–50	SHIM (T:0.40MM) CALE (T:0.40MM)	1	1				UR UR
	6L6–45577–60	SHIM (T:0.50MM) CALE (T:0.50MM)	1	1				UR UR
66	90201–30M92	WASHER, PLATE RONDELLE, PLATE	1	1				
67	90282–04010	KEY, STRAIGHT CLAVETTE, DROITE	1	1				
68	688–45383–02	WASHER, CLAW FREIN D'ECROU	1	1				
69	688–45384–00	NUT ECROU	1	1				

FIG. 23 LOWER CASING & DRIVE 2 BOITIER D'HELICE TRANSMISSION2

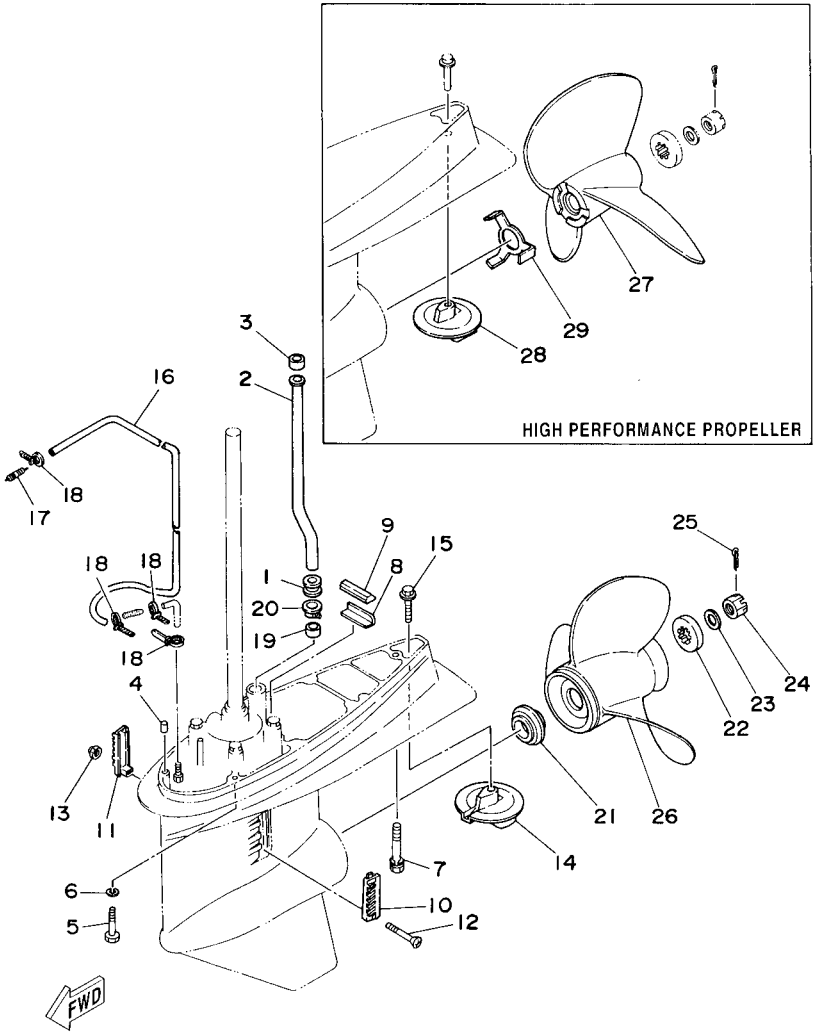

REF. NO.	PART NO. N° PIECES	DESCRIPTION DESCRIPTION	6N64	6N74				REMARKS REMARQUES
1	6E5–44366–00	DAMPER, WATER SEAL JOINT, TUBE D'EAU	1	1				
2	6E5–44361–00	TUBE, WATER TUBE D'EAU	1	1				L L
3	6E5–44365–00	DAMPER, WATER SEAL JOINT, TUBE D'EAU	1	1				
4	93608–12M05	PIN, DOWEL AXE	2	2				
5	97075–10045	BOLT BOULON	6	6				
6	92995–10100	WASHER RONDELLE	6	6				
7	90119–10M89	BOLT, WITH WASHER BOULON, AVEC RONDELLE	1	1				
8	663–45376–00–94	GUIDE, SEAL DAMPER BUTEE, JOINT CAOUTCHOUC	1	1				
9	688–45375–00	DAMPER, SEAL BOURRELET, CAOUTCHOUC	1	1				
10	688–45214–02	COVER, WATER INLET GRILLE, ENTREE D'EAU	1	1				
11	688–45215–02	COVER, WATER INLET GRILLE, ENTREE D'EAU	1	1				
12	90152–05M07	SCREW, COUNTERSUNK VIS, TETE NOYEE	1	1				
13	90185–05002	NUT, SELF-LOCKING ECROU, AUTO-BLOQUANT	1	1				
14	6E5–45371–01	TAB-TRIM ANODE DERIVE	1	1				
15	90105–10M00	BOLT, FLANGE BOULON	1	1				
16	90445–07MF0	HOSE (L1030) DURITE (L1030)	1	1				
17	6E5–83558–00	END, NIPPLE RACCORD DE NIPPLE	1	1				
18	90465–11M10	CLAMP BRIDE	4	4				
19	6E5–44365–00	DAMPER, WATER SEAL JOINT, TUBE D'EAU	1	1				
20	6E5–44312–00	COVER, WATER PUMP HOUSING COUVERCLE	1	1				
21	6E5–45987–01	SPACER ENTRETOISE	1	1				
22	688–45997–01	SPACER ENTRETOISE	1	1				
23	92990–18200	WASHER RONDELLE, PLATE	1	1				
24	90171–18M04	NUT, CASTLE ECROU, CRENELE	1	1				
25	91490–40030	PIN, COTTER GOUPILLE	1	1				
26	6E5–45941–00–EL	PROPELLER (3X13"X19"-K) HELICE (3X13"X19"-K)	1	1				UR UR
	6E5–45943–00–EL	PROPELLER (3X12-5/8"X21"-K) HELICE (3X12-5/8"X21"-K)	1	1				UR UR

FIG. 23 LOWER CASING & DRIVE 2 BOITIER D'HELICE TRANSMISSION2

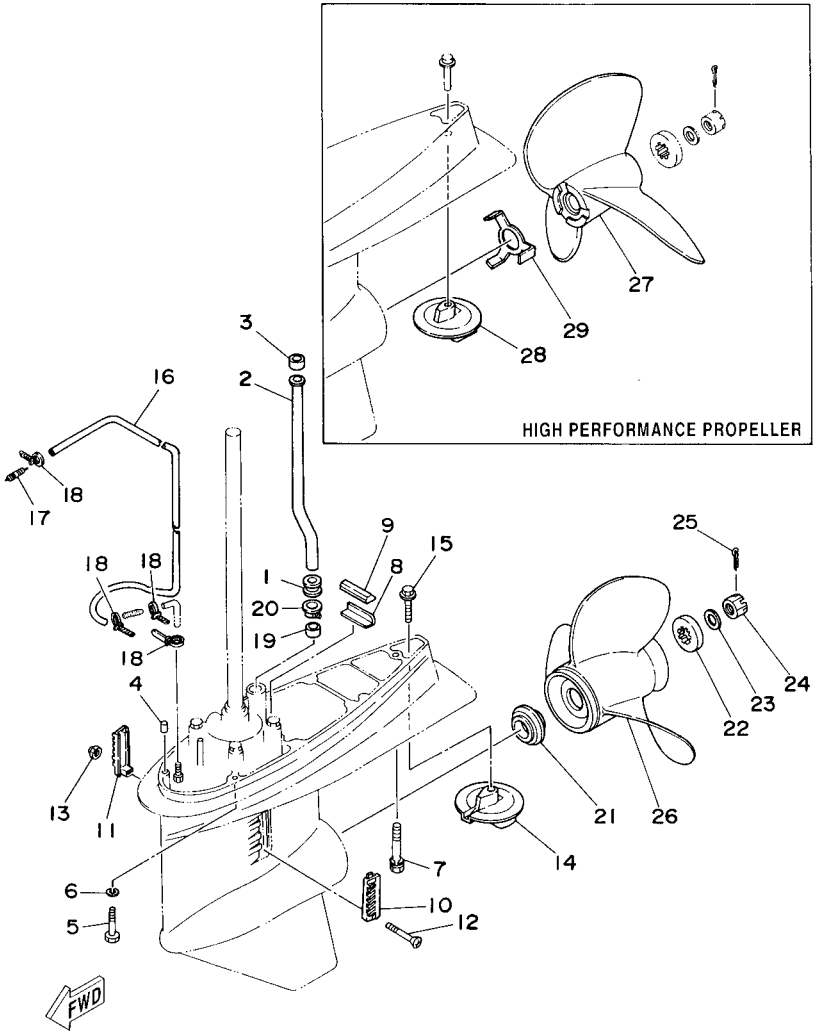

REF. NO.	PART NO. N° PIECES	DESCRIPTION DESCRIPTION	6N64	6N74				REMARKS REMARQUES
26	6E5–45945–01–EL	PROPELLER (3X13-1/4"X17"-K) HELICE (3X13-1/4"X17"-K)	1	1				UR UR
	6E5–45947–00–EL	PROPELLER (3X13-1/2"X15"-K) HELICE (3X13-1/2"X15"-K)	1	1				UR UR
	6E5–45949–00–EL	PROPELLER (3X13-5/8"X13"-K) HELICE (3X13-5/8"X13"-K)	1	1				UR UR
	6E5–45952–00–EL	PROPELLER (3X13"X23"-K) HELICE (3X13"X23"-K)	1	1				UR UR
	6E5–45954–00–EL	PROPELLER (3X14"X11"-K) HELICE (3X14"X11"-K)	1	1				UR UR
	6E5–45956–00–EL	PROPELLER (3X13"X25"-K) HELICE (3X13"X25"-K)	1	1				UR UR
	688–45930–02–98	PROPELLER (3X13"X17"-K) HELICE (3X13"X17"-K)	1	1				UR UR
	688–45932–60–98	PROPELLER (3X13-1/2"X14"-K) HELICE (3X13-1/2"X14"-K)	1	1				UR UR
	688–45970–03–98	PROPELLER (3X13"X19"-K) HELICE (3X13"X19"-K)	1	1				UR UR
	688–45972–02–98	PROPELLER (3X13"X21"-K) HELICE (3X13"X21"-K)	1	1				UR UR
	688–45974–02–98	PROPELLER (3X13"X23"-K) HELICE (3X13"X23"-K)	1	1				UR UR
	688–45976–01–98	PROPELLER (3X13"X25"-K) HELICE (3X13"X25"-K)	1	1				UR UR
	688–45978–60–98	PROPELLER (3X13-1/2"X16"-K) HELICE (3X13-1/2"X16"-K)	1	1				UR UR
27	6E5–45970–10	PROPELLER (3X14"X20"-P) HELICE (3X14"X20"-P)	1	1				UR UR
	6E5–45972–10	PROPELLER (3X14"X24"-P) HELICE (3X14"X24"-P)	1	1				UR UR
	6E5–45974–10	PROPELLER (3X14"X28"-P) HELICE (3X14"X28"-P)	1	1				UR UR
	6E5–45976–10	PROPELLER (3X14"X22"-P) HELICE (3X14"X22"-P)	1	1				UR UR
	6E5–45978–10	PROPELLER (3X14"X26"-P) HELICE (3X14"X26"-P)	1	1				UR UR
28	6E5–45371–10	TAB-TRIM ANODE DERIVE	1	1				
29	6E5–45994–10	PLATE, TOOTH PLAQUETTE	1	1				

FIG. 24 STEERING GUIDE FIXATION DE DIRECTION

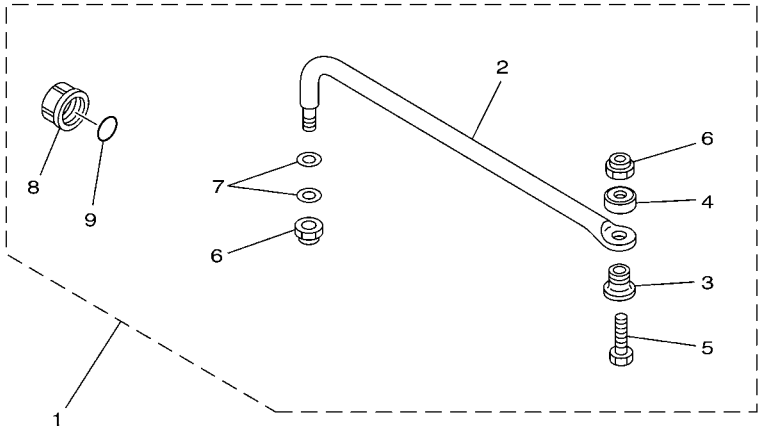

67H0100-9290

REF. NO.	PART NO. N° PIECES	DESCRIPTION DESCRIPTION	6N64	6N74				REMARKS REMARQUES
1	6E5–61350–02	STEERING GUIDE ATTACHMENT KIT FIXATIONS DE DIRECTION	1	1				AP AP
2	6E5–61351–01	.ROD, STEERING LINK .RENVOI DE DIRECTION	1	1				
3	90387–10M61	.COLLAR .COLLERETTE	1	1				
4	90560–12M01	.SPACER .ENTRETOISE	1	1				
5	6E5–61355–00	.BOLT .BOULON	1	1				
6	90185–09M01	.NUT, SELF-LOCKING .ECROU, AUTO-BLOQUANT	2	2				
7	90201–10M20	.WASHER, PLATE .RONDELLE, PLATE	2	2				
8	6E5–43145–01	.CAP, CLAMP BRACKET .CAPUCHON, PRESSE	1	1				
9	93210–16275	.O-RING .JOINT TORIQUE	1	1				

FIG. 25 REMOTE CONTROL BOX BOITIER DE COMMANDE A DISTANCE

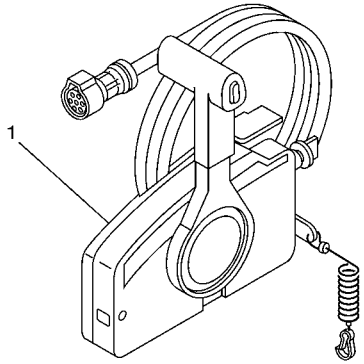

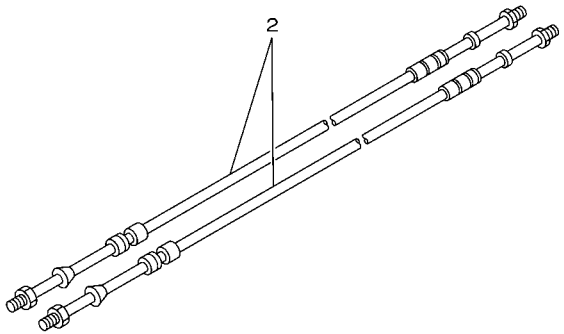

67M0100-8280

REF. NO.	PART NO. N° PIECES	DESCRIPTION DESCRIPTION	6N64	6N74				REMARKS REMARQUES
1	703–48205–17	REMOTE CONTROL ASSY (10P) BOITIER DE COMMANDE A DISTANCE	1	1				AP WITH PT/T SW. AP WITH PT/T SW.
2	701–48320–50	CABLE, REMOTE CONTROL L=15F CABLE, COMMANDE A DISTANCE:15F	2	2				UR UR
	701–48320–60	CABLE, REMOTE CONTROL L=16F CABLE, COMMANDE A DISTANCE:16F	2	2				UR UR
	701–48320–80	CABLE, REMOTE CONTROL L=17F CABLE, COMMANDE A DISTANCE:17F	2	2				UR UR
	701–48350–00	CABLE, REMOTE CONTROL L=21F CABLE, COMMANDE A DISTANCE:21F	2	2				UR UR
	701–48350–20	CABLE, REMOTE CONTROL L=23F CABLE, COMMANDE A DISTANCE:23F	2	2				UR UR

FIG. 26 REMOTE CONTROL ASSY BOITIER DE COMMANDE A DISTANCE

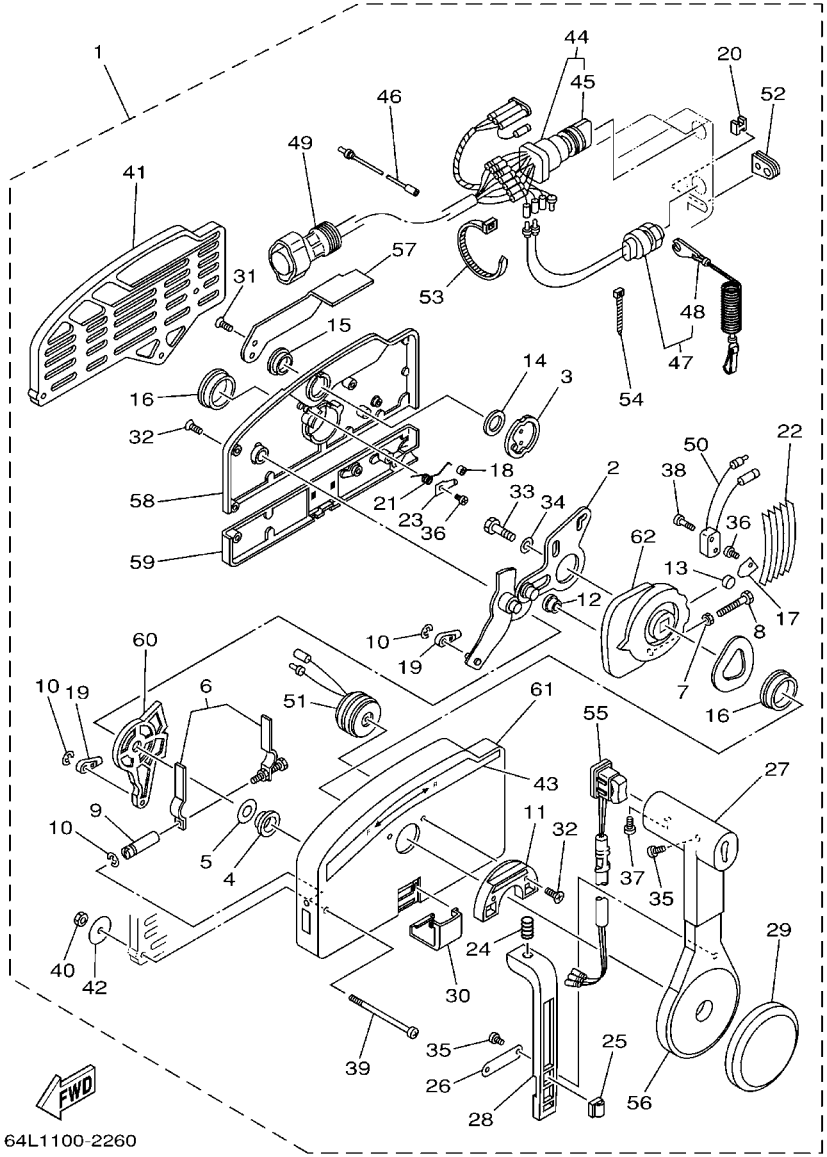

REF. NO.	PART NO. N° PIECES	DESCRIPTION DESCRIPTION	6N64	6N74				REMARKS REMARQUES
1	703–48205–17	REMOTE CONTROL ASSY (10P) BOITIER DE COMMANDE A DISTANCE	1	1				AP WITH PT/T SW. AP WITH PT/T SW.
2	703–48261–01	.ARM, THROTTLE .BRAS, ACCELERATION	1	1				
3	703–48153–00	.SHAFT, FREE ACCEL. .AXE	1	1				
4	703–48235–00	.BUSHING .COUSSINET	1	1				
5	703–48268–00	.SPACER .ENTRETOISE	1	1				
6	703–48264–00	.FRICTION, THROTTLE .FRICTION, ACCELERATION	1	1				
7	95380–05600	.NUT .ECROU	1	1				
8	97380–05025	.BOLT .BOULON, HEXAGONAL	1	1				
9	703–48265–00	.SHAFT, FRICTION .AXE, COPILOTE	1	1				
10	93430–06024	.CIRCLIP .CLIPS	3	3				
11	703–48245–00	.PLATE, LOCK .PLAQUE, VERROU	1	1				
12	703–48252–00	.ROLLER, CAM .POULIE	1	1				
13	701–48248–00	.ROLLER, FREE ACCEL. .POULIE	1	1				
14	703–48198–00	.WASHER, WAVE .RONDELLE, ELASTIQUE ONDULEE	1	1				
15	703–48243–00	.BUSHING .COUSSINET	1	1				
16	703–48236–00	.BUSHING 1 .POULIE	2	2				
17	703–48189–00	.RETAINER .FLASQUE	1	1				
18	703–48234–00	.ROLLER, DETENT .POULIE	1	1				
19	703–48345–01	.CABLE END, REMOTE CONTROL 2 .CHAPE CABLE	2	2				
20	703–48358–00	.ANCHOR, CABLE .COLLIER	1	1				
21	703–48244–00	.SPRING, FREE ACCEL. .RESSORT	1	1				
22	703–48238–00	.SPRING, DETENT .RESSORT	5	5				
23	703–48246–00	.SPACER .ENTRETOISE	1	1				
24	703–48227–00	.SPRING, NEUTRAL LOCK .RESSORT	1	1				
25	703–82594–00	.CLAMP .BRIDE	1	1				WITH PT/T SW. WITH PT/T SW.
26	703–48226–00	.PLATE, STOPPER .PLAQUETTE	1	1				
27	703–48222–00	.GRIP, CONTROL LEVER .POIGNEE, COMMANDE LEVIER	1	1				SINGLE SINGLE

FIG. 26 REMOTE CONTROL ASSY BOITIER DE COMMANDE A DISTANCE

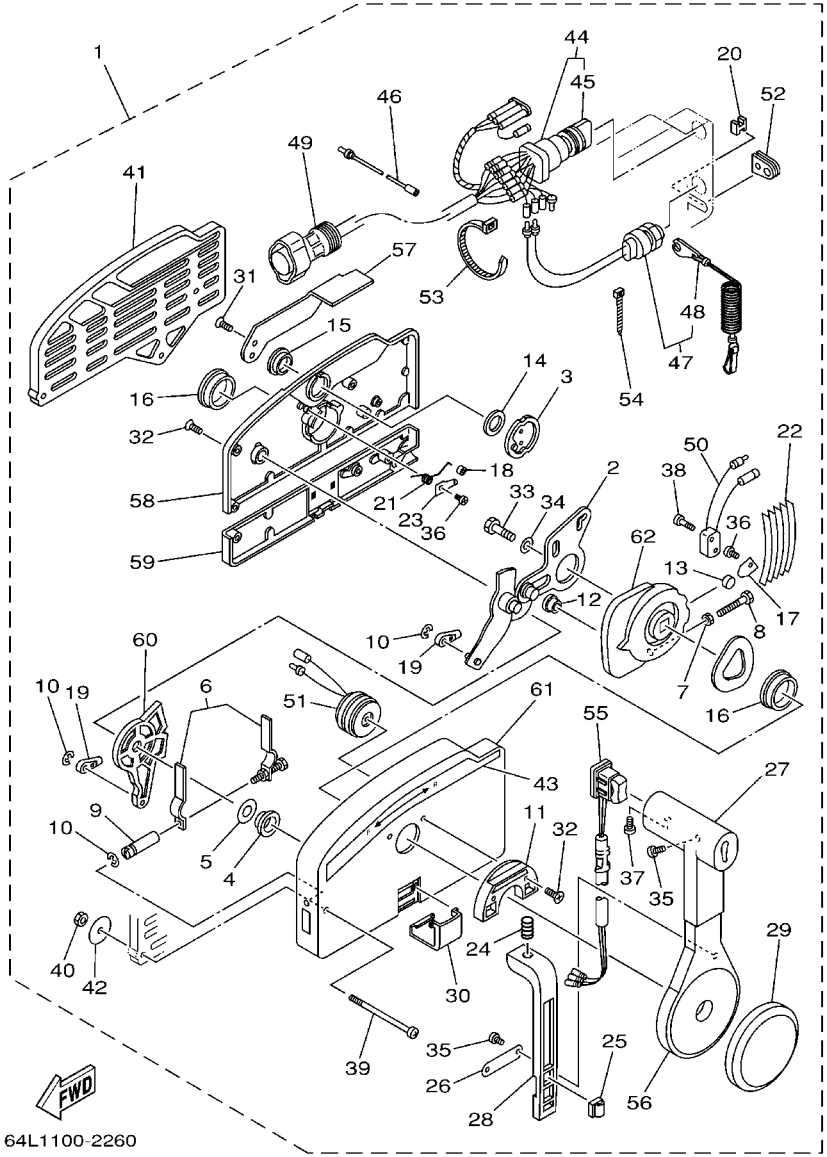

64L1100-2260

REF. NO.	PART NO. N° PIECES	DESCRIPTION DESCRIPTION	6N64	6N74				REMARKS REMARQUES
28	703–48223–00	.LOCK, NEUTRAL .VERROU, NEUTRAL	1	1				
29	703–48225–00	.COVER .COUVERCLE	1	1				
30	703–48219–00	.COVER, LEAD .COUVERCLE	1	1				
31	703–48281–00	.SCREW .VIS	2	2				
32	703–48282–00	.SCREW .VIS	7	7				
33	97380–08030	.BOLT .BOULON, HEXAGONAL	1	1				
34	92990–08600	.WASHER, PLATE .RONDELLE, PLATE	1	1				
35	98580–04010	.SCREW, PAN HEAD .VIS	3	3				
36	98580–04006	.SCREW, PAN HEAD .VIS	2	2				
37	98580–05010	.SCREW, PAN HEAD .VIS	1	1				
38	98580–03015	.SCREW, PAN HEAD .VIS	2	2				
39	703–48291–10	.SCREW (M6) .VIS (M6)	3	3				
40	95380–06600	.NUT, HEXAGON .ECROU	3	3				
41	703–48293–10	.SPACER, REMOTE CONTROL .ENTRETOISE	1	1				SINGLE SINGLE
42	701–48287–00	.WASHER .RONDELLE	3	3				
43	703–48215–00	.GRAPHIC .ADHESIF	1	1				
44	703–82510–43	.MAIN SWITCH ASSY .CONTACTEUR A CLEF COMPLET	1	1				
45	703–82577–00	..CAP, KEY ..CABOCHON	1	1				
46	703–82531–00	.WIRE, LEAD .FIL	1	1				
47	688–82575–01	.ENGINE STOP SWITCH ASSY .COUPE CIRCUIT CPLT	1	1				
48	682–82556–00	..STOPPER ..PLAQUETTE	1	1				
49	688–8258A–20	.EXTENSION, WIRE HARNESS .EXTENSION, FAISCEAU DE FILS	1	1				L:5M (10P) L:5M (10P)
50	703–82540–00	.NEUTRAL SWITCH ASSY .CONTACTEUR DE POINT-MORT	1	1				
51	703–83383–02	.BUZZER .RONFLEUR	1	1				
52	703–48284–00	.GROMMET .PASSE-FIL	1	1				
53	703–82591–00	.BAND .COLLIER	1	1				
54	703–82592–00	.BAND .COLLIER	1	1				

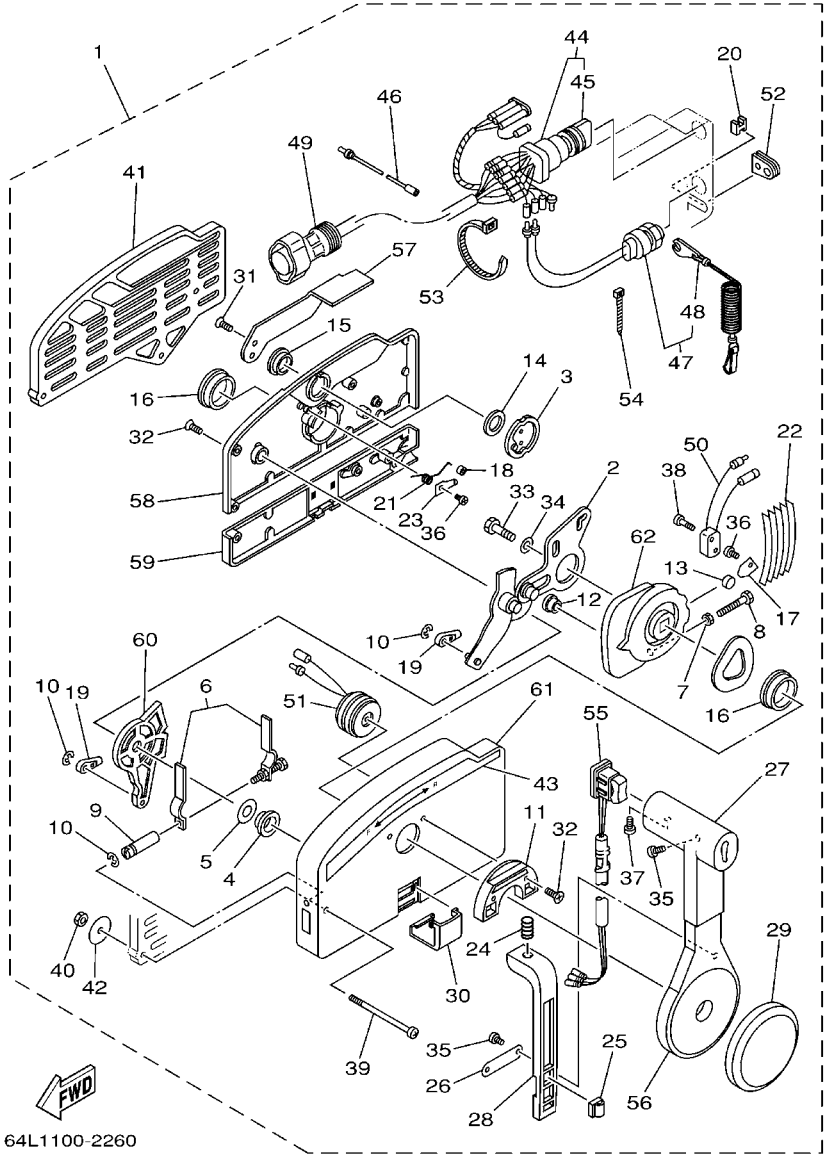

64L1100-2260

FIG. 26 REMOTE CONTROL ASSY BOITIER DE COMMANDE A DISTANCE

REF. NO.	PART NO. N° PIECES	DESCRIPTION DESCRIPTION	6N64	6N74				REMARKS REMARQUES
55	703–82563–02	.TRIM & TILT SWITCH ASSY .INCLINER ET PARER COMMUTATEUR	1	1				WITH PT/T SW. WITH PT/T SW.
56	703–48221–00	.LEVER, CONTROL .LEVIER, COMMANDE	1	1				
57	703–48152–00	.KNOB, FREE ACCEL. .BOUTON	1	1				
58	703–48212–00	.BACK PLATE 1 .PLAQUETTE 1	1	1				
59	703–48213–00	.BACK PLATE 2 .PLAQUETTE 2	1	1				
60	703–48271–00	.ARM, SHIFT .BRAS	1	1				
61	703–48211–01	.HOUSING,1 .CORPS	1	1				
62	703–48232–00	.GEAR .PIGNON	1	1				

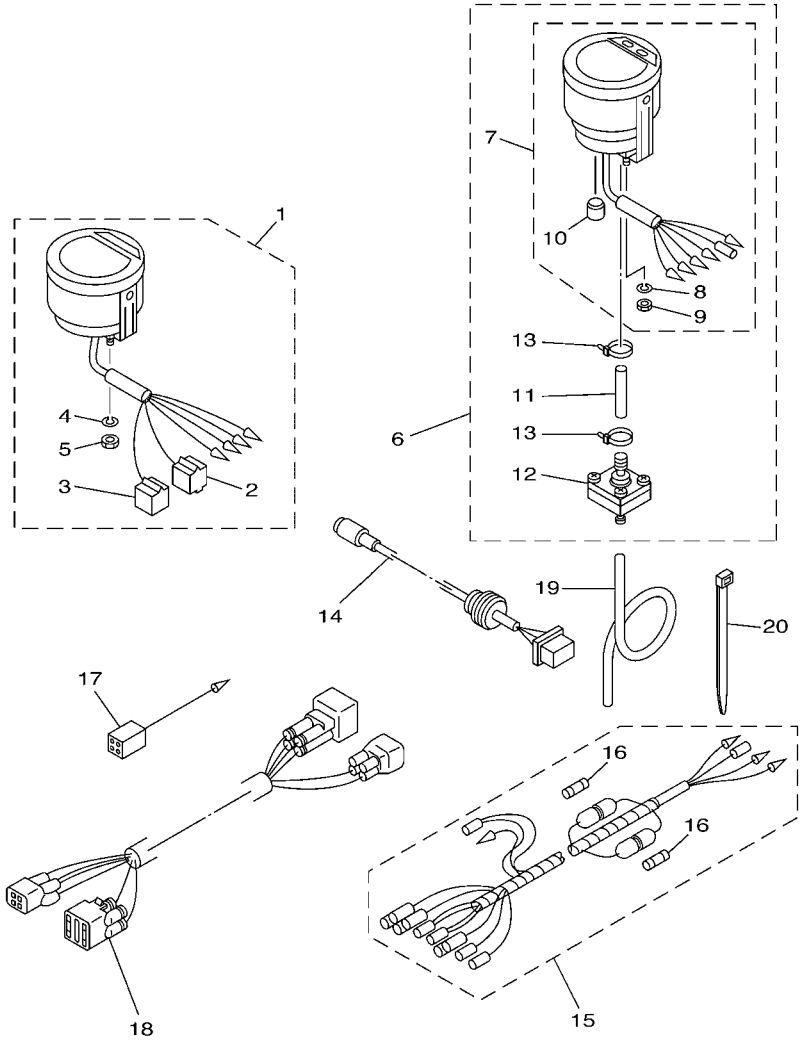

61A1700-2290

FIG. 27 METER COMPTEUR

REF. NO.	PART NO. N° PIECES	DESCRIPTION DESCRIPTION	6N64	6N74				REMARKS REMARQUES
1	6Y5–8350T–03	TACHOMETER ASSY COMPTE-TOURS CPLT	1	1				AP AP
2	9E450–04433	.CONNECTOR .CONNECTEUR	1	1				M-4-W M-4-W
3	9E450–04533	.CONNECTOR .CONNECTEUR	1	1				F-4-W F-4-W
4	92990–04100	.WASHER, SPRING .RONDELLE, GROWER	2	2				
5	95380–04600	.NUT .ECROU	2	2				
6	6Y5–83500–S5	DIGITAL SPEEDOMETER ASSY TACHYMETRE NUMERIQUE CPLT.	1	1				AP AP
7	6Y5–83570–S5	.SPEEDOMETER ASSY .COMPTEUR DE VITESSE CPLT	1	1				
8	92990–04100	..WASHER, SPRING ..RONDELLE, GROWER	2	2				
9	95380–04600	..NUT ..ECROU	2	2				
10	6Y5–83533–T2	..GROMMET ..RONDELLE CAOUTCHOUC	1	1				
11	6Y5–83557–31	.TUBE .TUBE	1	1				
12	6Y5–83728–00	.CONNECTOR ASSY .CONNEXION COMPLET	1	1				
13	90465–11M10	.CLAMP .BRIDE	2	2				
14	6Y5–87122–S0	CORD ASSY 1 COPDON COMPLET	1	1				AP AP
15	6Y5–83553–M0	WIRE, LEAD FIL	1	1				AP AP
16	1E6–82151–00	.FUSE (10A) .FUSIBLE (10A)	2	2				
17	6Y5–82117–00	WIRE, LEAD (BLACK) FIL (NOIR)	1	1				AP AP
18	68F–82553–80	EXTENSION, WIRE LEAD EXTENSION, FAISCEAU	1	1				AP AP
19	6Y5–83557–10	TUBE (8M) TUBE (8M)	1	1				AP AP
20	90465–11M10	CLAMP BRIDE	2	2				AP AP

FIG. 28 REPAIR KIT 1 — KITS DE REPARATION 1

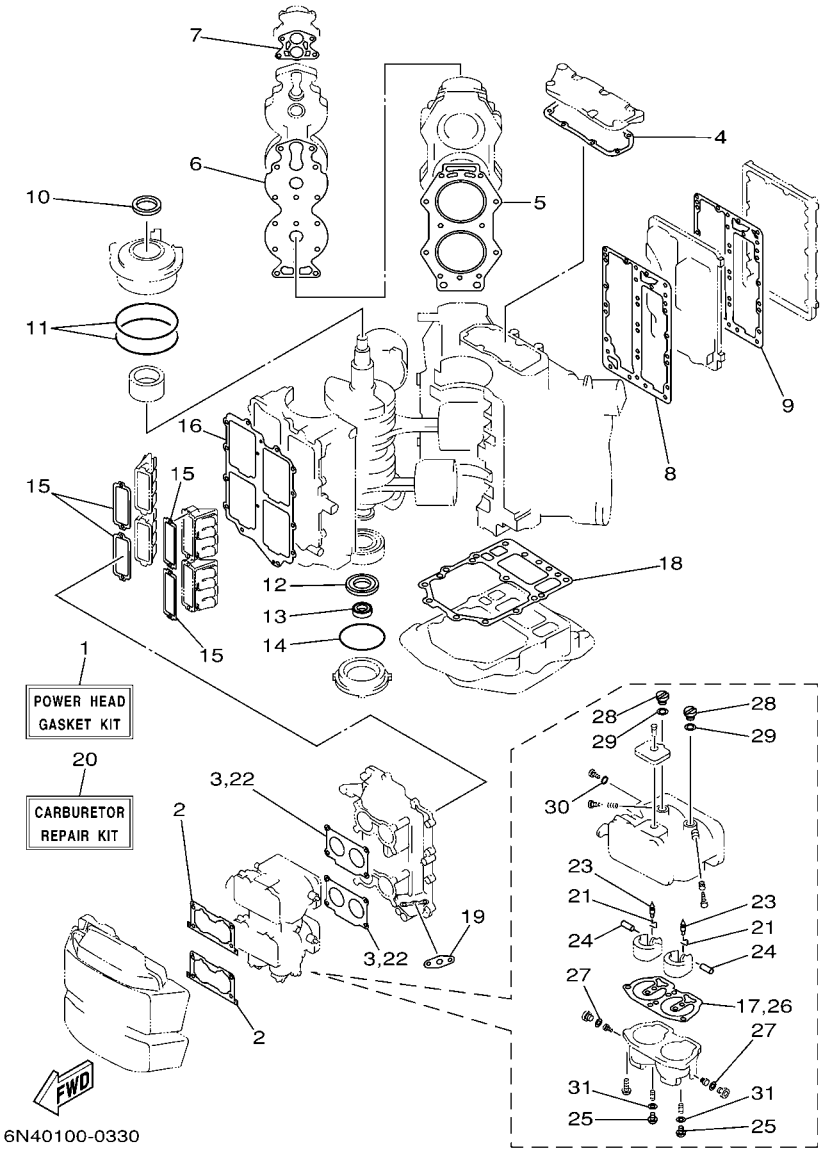

REF. NO.	PART NO. N° PIECES	DESCRIPTION DESCRIPTION	6N64	6N74				REMARKS REMARQUES
1	6N6–W0001–A5	POWER HEAD GASKET KIT POCHETTE DE JINTS TETE MOTRICE	1	1				
2	6K7–14483–00	.GASKET .JOINT	2	2				
3	6E5–14198–A2	.GASKET .JOINT	2	2				
4	6E5–11381–A2	.GASKET 1 .JOINT 1	1	1				
5	6E5–11181–A1	.GASKET, CYLINDER HEAD 1 .JOINT, DE CULASSE 1	2	2				
6	6E5–11193–A0	.GASKET, HEAD COVER 1 .JOINT, COUVERCLE DE CULASSE 1	2	2				
7	688–12414–A1	.GASKET, COVER .JOINT, COUVERCLE	2	2				
8	6E5–41112–A1	.GASKET, EXHAUST INNER COVER .JOINT, PLAQUE D'ECHAPPEMENT	1	1				
9	6E5–41114–A0	.GASKET, EXHAUST OUTER COVER .JOINT, COUVERCLE D'ECHAPPEMEN	1	1				
10	93102–40M14	.OIL SEAL .JOINT SPY	1	1				
11	93211–04001	.O-RING .JOINT TORIQUE	2	2				
12	93102–35M13	.OIL SEAL .JOINT SPY	1	1				
13	93101–22M15	.OIL SEAL .JOINT SPY	1	1				
14	93210–74M35	.O-RING .JOINT TORIQUE	1	1				
15	6E5–13621–A1	.GASKET, VALVE SEAT .JOINT, SIEGE DE CLAPET	4	4				
16	6E5–13645–A1	.GASKET, MANIFOLD 1 .JOINT, TUBULURE 1	1	1				
17	64D–14384–01	.GASKET, FLOAT CHAMBER .JOINT, CUVE DE FLOTTEUR	2	2				
18	6G5–45113–A1	.GASKET, UPPER CASING .JOINT, TUBE D'ARBRE	1	1				
19	650–24431–A0	.GASKET, FUEL PUMP 1 .JOINT 1 DE POMPE A ESSENCE	1	1				
20	6N6–W0093–09	CARBURETOR REPAIR KIT KIT DE REPARATION CARBURATEUR	1	1				
21	6E5–14159–00	.CLIP .JONC	2	2				
22	6E5–14198–A2	.GASKET .JOINT	1	1				
23	6E5–14546–00	.VALVE, NEEDLE .POINTEAU	2	2				
24	6E5–14386–02	.PIN, FLOAT .AXE, FLOTTEUR	2	2				
25	64D–14394–00	.VALVE, DRAIN .SOUPAPE, VIDANGE	2	2				
26	64D–14384–01	.GASKET, FLOAT CHAMBER .JOINT, CUVE DE FLOTTEUR	1	1				
27	6E5–14398–01	.GASKET .JOINT	2	2				

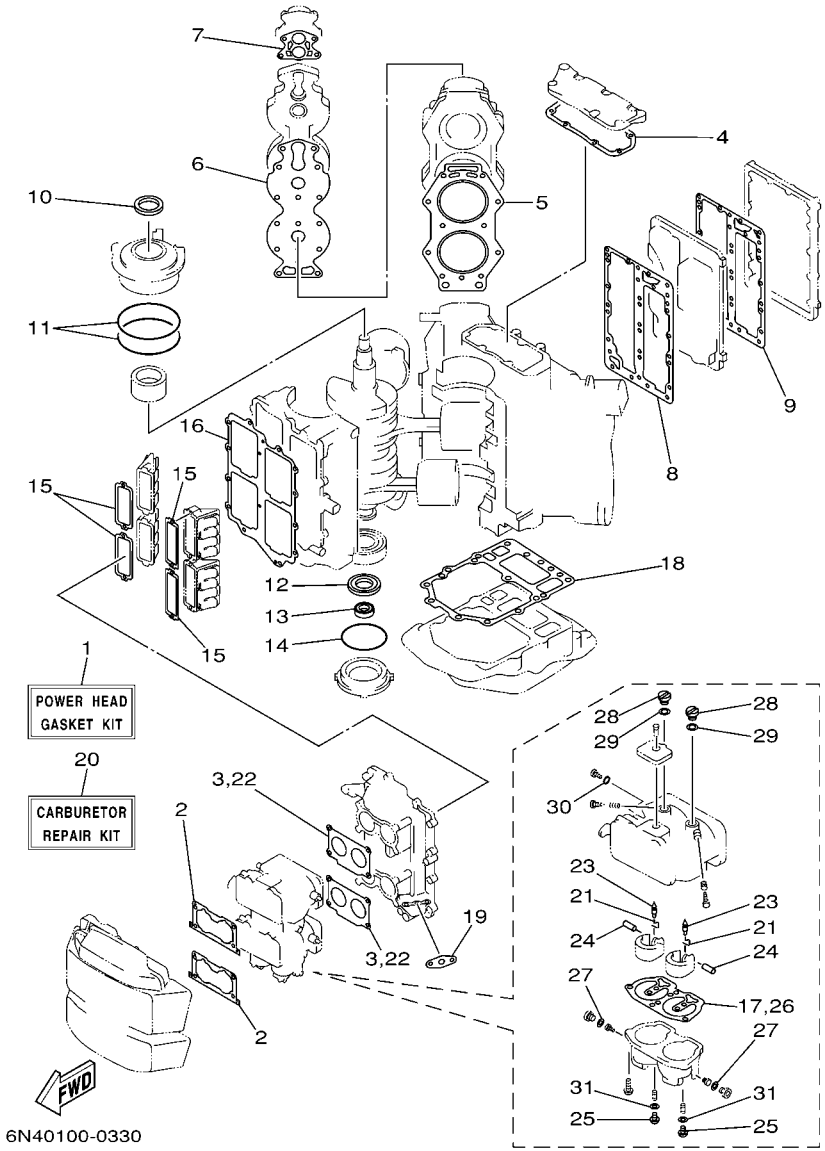

FIG. 28 REPAIR KIT 1 — KITS DE REPARATION 1

REF. NO.	PART NO. N° PIECES	DESCRIPTION DESCRIPTION	6N64	6N74				REMARKS REMARQUES
28	6E5–14328–01	.PLUG .PLOT	2	2				
29	6E5–14979–00	.GASKET .JOINT	2	2				
30	6J8–14995–00	.GASKET .JOINT	1	1				
31	61U–14959–00	.GASKET .JOINT	2	2				

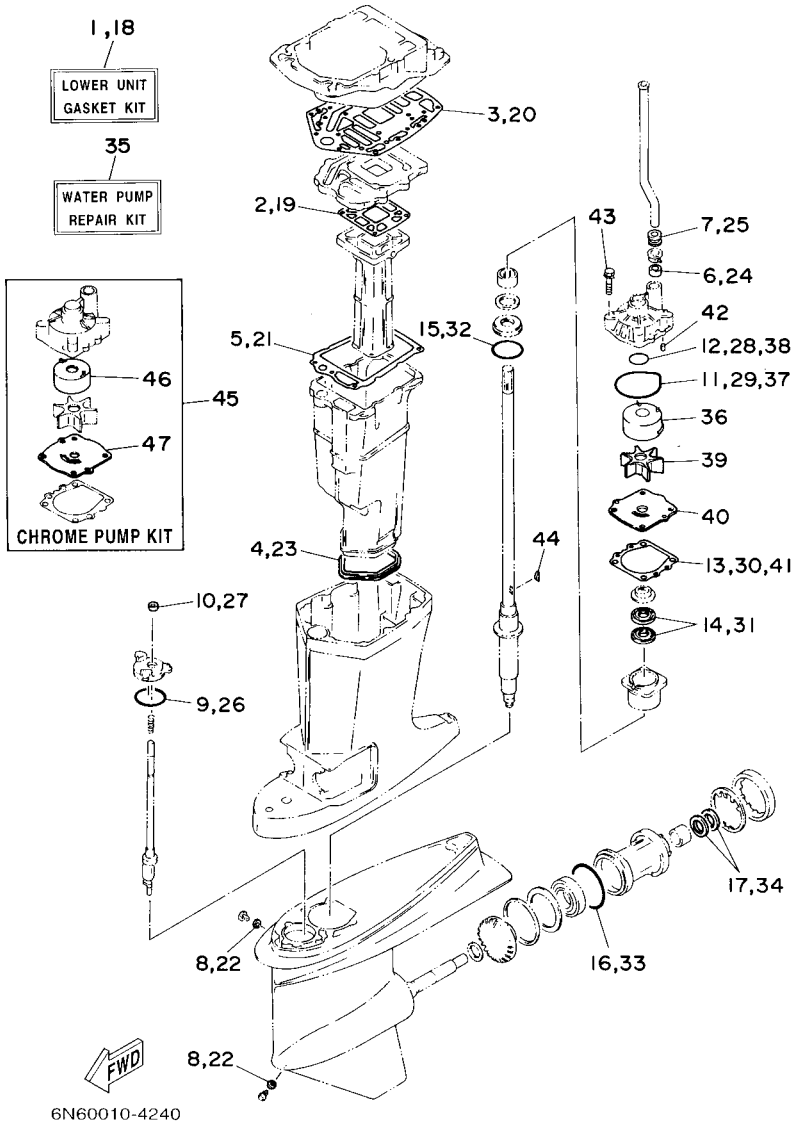

FIG. 29 REPAIR KIT 2 — KITS DE REPARATION 2

REF. NO.	PART NO. N° PIECES	DESCRIPTION DESCRIPTION	6N64	6N74				REMARKS REMARQUES
1	6E5–W0001–F1	LOWER UNIT GASKET KIT POCHETTE DE JOINTS EMBASE	1					
2	6E5–41134–A0	.GASKET, EXHAUST MANIFOLD .JOINT, PIPE D'ECHAPPEMENT	1					
3	6G5–45114–A1	.GASKET, UPPER CASING .JOINT, TUBE D'ARBRE	1					
4	6E5–45123–00	.GASKET, MUFFLER .JOINT, POT DE DETENTE	1					
5	6E5–41135–A0	.GASKET, EXHAUST MANIFOLD .JOINT, PIPE D'ECHAPPEMENT	1					
6	6E5–44365–00	.DAMPER, WATER SEAL .JOINT, TUBE D'EAU	1					
7	6E5–44366–00	.DAMPER, WATER SEAL .JOINT, TUBE D'EAU	1					
8	90430–08020	.GASKET .JOINT	2					
9	93210–58144	.O-RING .JOINT TORIQUE	1					
10	93106–09014	.OIL SEAL .JOINT SPY	1					
11	93210–86M38	.O-RING .JOINT TORIQUE	1					
12	93210–37160	.O-RING .JOINT TORIQUE	1					
13	6E5–44315–A0	.GASKET, WATER PUMP .JOINT, POMPE A EAU	1					
14	93101–28M16	.OIL SEAL .JOINT SPY	2					
15	93210–55M14	.O-RING .JOINT TORIQUE	1					
16	93210–86M39	.O-RING .JOINT TORIQUE	1					
17	93101–30M17	.OIL SEAL .JOINT SPY	2					
18	6F3–W0001–C1	LOWER UNIT GASKET KIT UNITE INFEPIEURE TETE MOTRICE		1				
19	6G5–41134–A1	.GASKET, EXHAUST MANIFOLD .JOINT, PIPE D'ECHAPPEMENT		1				
20	6G5–45114–A1	.GASKET, UPPER CASING .JOINT, TUBE D'ARBRE		1				
21	6E5–41135–A0	.GASKET, EXHAUST MANIFOLD .JOINT, PIPE D'ECHAPPEMENT		1				
22	90430–08020	.GASKET .JOINT		2				
23	6E5–45123–00	.GASKET, MUFFLER .JOINT, POT DE DETENTE		1				
24	6E5–44365–00	.DAMPER, WATER SEAL .JOINT, TUBE D'EAU		1				
25	6E5–44366–00	.DAMPER, WATER SEAL .JOINT, TUBE D'EAU		1				
26	93210–58144	.O-RING .JOINT TORIQUE		1				
27	93106–09014	.OIL SEAL .JOINT SPY		1				

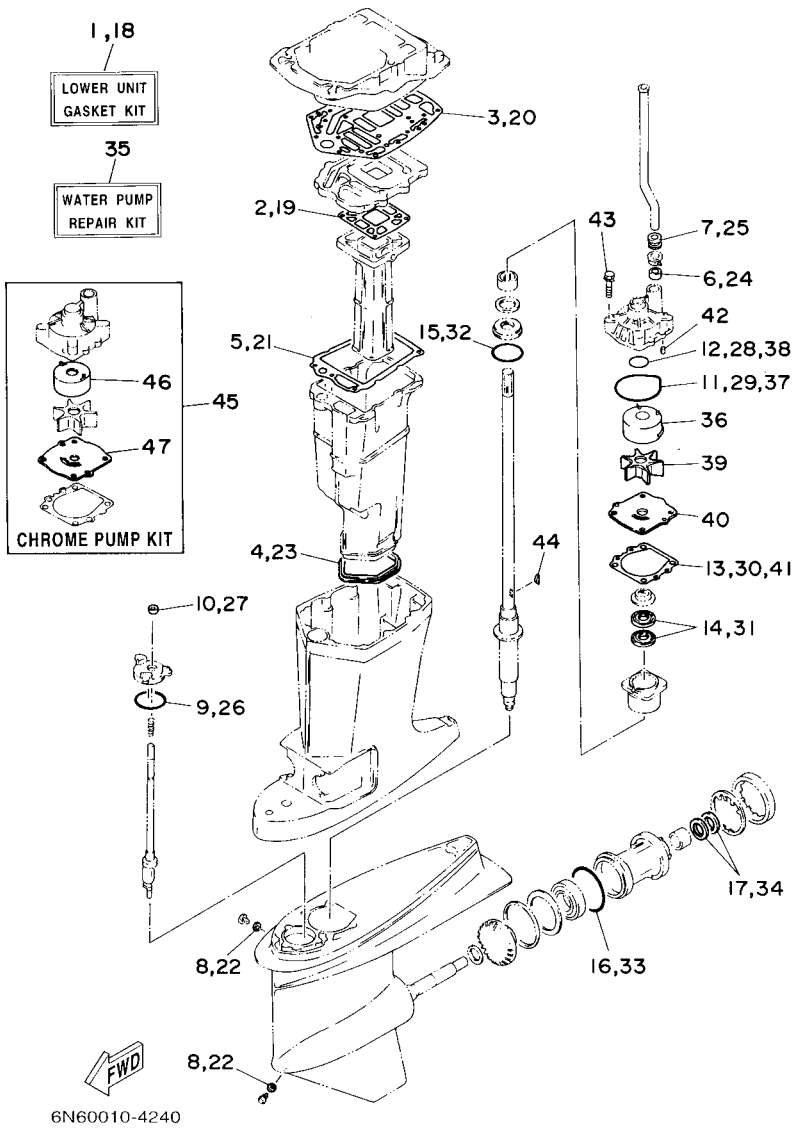

FIG. 29 REPAIR KIT 2 — KITS DE REPARATION 2

REF. NO.	PART NO. N° PIECES	DESCRIPTION DESCRIPTION	6N64	6N74				REMARKS REMARQUES
28	93210–37160	.O-RING .JOINT TORIQUE		1				
29	93210–86M38	.O-RING .JOINT TORIQUE		1				
30	6E5–44315–A0	.GASKET, WATER PUMP .JOINT, POMPE A EAU		1				
31	93101–28M16	.OIL SEAL .JOINT SPY		2				
32	93210–55M14	.O-RING .JOINT TORIQUE		1				
33	93210–86M39	.O-RING .JOINT TORIQUE		1				
34	93101–30M17	.OIL SEAL .JOINT SPY		2				
35	6N6–W0078–02	WATER PUMP REPAIR KIT KIT DE REPARATION DE LA POMPE	1	1				
36	61A–44322–02	.INSERT, CARTRIDGE .CUVETTE	1	1				
37	93210–86M38	.O-RING .JOINT TORIQUE	1	1				
38	93210–37160	.O-RING .JOINT TORIQUE	1	1				
39	6E5–44352–01	.IMPELLER .TURBINE	1	1				
40	6E5–44323–00	.OUTER PLATE, CARTRIDGE .PLAQUE EXTERIEURE	1	1				
41	6E5–44315–A0	.GASKET, WATER PUMP .JOINT, POMPE A EAU	1	1				
42	93606–12019	.PIN, DOWEL .GOUPILLE	2	2				
43	90119–08M14	.BOLT, WITH WASHER .BOULON, AVEC RONDELLE	4	4				
44	90280–04M05	.KEY, WOODRUFF .CLAVETTE, DEMI-LUNE	1	1				
45	6E5–W0078–3A	CHROME PUMP KIT KIT DE POMPE A EAU CHROMEE	1	1				
46	6R3–44322–42	.INSERT, CARTRIDGE .CUVETTE	1	1				
47	6E5–44323–40	.OUTER PLATE, CARTRIDGE .PLAQUE EXTERIEURE	1	1				

NUMERICAL INDEX
INDEX NUMERIQUE

PART NO. N° PIECES	REF. NO.
6L1–11111–00–1S	4 – 1
6E5–11111–10–1S	4 – 1
6E5–11119–01	2 – 16
6E5–11181–A1	4 – 2
	28 – 5
6E5–11191–01–1S	4 – 4
6E5–11193–A0	4 – 5
	28 – 6
6E5–11325–00	2 – 14
6E5–11370–01	5 – 9
6K7–11371–01–1S	2 – 22
6H1–11372–00	21 – 21
6G5–11372–00–1S	4 – 23
6E5–11372–01	2 – 5
624–11379–00	2 – 3
6E5–11381–A2	2 – 23
	28 – 4
6G5–11382–A1	4 – 22
6N7–11411–01	3 – 1
6E5–11447–00	3 – 2
663–11518–01	2 – 4
6R3–11536–00	3 – 9
6R3–11537–00	7 – 16
64D–11603–02	3 – 18
64D–11604–02	3 – 18
64D–11605–02	3 – 18
6R5–11631–11–93	3 – 17
6R5–11633–10	3 – 21
6R5–11634–10	3 – 22
6R5–11635–11	3 – 17
6R5–11636–11	3 – 17
6R5–11642–11–93	3 – 19
6R5–11645–11	3 – 19
6R5–11646–11	3 – 19
6R5–11650–10	3 – 23
6E5–12411–30	4 – 7
6G5–12413–00–1S	4 – 8
688–12414–A1	4 – 9
	28 – 7
60H–12416–00	4 – 19
6R3–12572–00	15 – 53
6E5–12576–00	4 – 25
6R3–12580–00	15 – 54
6G5–12581–00	21 – 12
6R3–13117–00	7 – 17
6R3–13183–10	7 – 12
6N6–13200–00	7 – 1
6N7–13200–00	7 – 1

PART NO. N° PIECES	REF. NO.
6E5–13411–00	8 – 28
6E5–13414–00	8 – 29
6N7–13416–00	7 – 7
6E5–13437–62	8 – 45
6E5–13448–00	8 – 25
6R3–13471–00	7 – 2
6L2–13475–00	7 – 3
6E5–13552–01	5 – 7
6E5–13610–00	5 – 1
6E5–13621–A1	5 – 3
	28 – 15
6E5–13641–11–1S	5 – 6
6E5–13645–A1	5 – 14
	28 – 16
6E5–14159–00	6 – 7
	28 – 21
6E5–14198–A2	5 – 19
	28 – 3
6E5–14223–00	6 – 21
6E5–14276–01	7 – 26
6L1–14301–05	6 – 1
6E5–14301–17	6 – 1
6L1–14302–05	6 – 2
6E5–14302–17	6 – 2
6E5–14321–00	6 – 16
6E5–14323–03	6 – 20
6E5–14324–00	6 – 25
6A0–14325–00	9 – 26
6E5–14328–01	6 – 18
	28 – 28
6J8–14334–00	6 – 17
64D–14381–00	6 – 4
61A–14383–01	6 – 15
64D–14384–01	6 – 3
	28 – 17
6E5–14385–02	6 – 5
6E5–14386–02	6 – 8
	28 – 24
64D–14394–00	6 – 11
	28 – 25
6E5–14398–00	6 – 13
	28 – 27
6E5–1441K–00	5 – 27
6N7–14440–01	5 – 26
6K7–14483–00	5 – 29
	28 – 2
624–14485–00	5 – 8
6E5–14488–00	11 – 21

PART NO. N° PIECES	REF. NO.
6E5–14527–01	6 – 23
6E5–14546–00	6 – 6
	28 – 23
6E5–14711–01–5B	21 – 30
6E5–14737–00	21 – 31
64D–1492E–88	6 – 12
64D–1492E–90	6 – 12
64D–1492F–39	6 – 9
64D–1492F–41	6 – 9
61A–1492H–12	6 – 14
61U–14959–00	6 – 10
	28 – 31
6E5–14979–00	6 – 19
	28 – 29
6J8–14995–00	6 – 26
	28 – 30
6N6–15100–01–1S	2 – 2
6N7–15100–01–1S	2 – 2
6R3–15163–00–1S	3 – 3
6G5–15359–00–94	3 – 12
61A–21708–20	8 – 1
6E5–21733–20	8 – 2
6E5–21734–01–33	8 – 18
6E5–21746–00	8 – 20
6E5–21750–05	8 – 24
6E5–21770–03	8 – 3
6E5–21798–01–33	8 – 19
646–24251–02	8 – 6
6YK–24307–42	10 – 1
6E5–24312–00	4 – 16
6R3–24313–20	9 – 1
6E5–24314–00	9 – 13
6G5–24316–10	9 – 32
6G5–24318–10	9 – 36
6E5–24319–01	8 – 7
6G5–24319–10	9 – 37
6E5–24321–01	8 – 11
6E5–24322–00	8 – 4
64E–24323–00	8 – 34
6E5–24367–10	15 – 40
6E5–24376–10	9 – 35
6R3–24377–00	9 – 2
650–24378–00	4 – 15
6E5–24379–00	8 – 12
6E5–24410–04	9 – 16
6E5–24411–01	9 – 21
6E5–24412–11	9 – 24
6E5–24413–01	9 – 18

PART NO. N° PIECES	REF. NO.
6A0–24421–01	9 – 25
6E5–24423–00	9 – 23
648–24424–00	9 – 22
650–24431–A0	9 – 30
	28 – 19
6E5–24435–01	9 – 20
6E5–24444–01	9 – 17
6E5–24471–01	9 – 19
6E5–24486–00	9 – 29
6E5–24492–00	9 – 28
61N–24521–00	9 – 7
6R3–24560–00	9 – 5
6R3–24563–00	9 – 6
6E5–24566–00	9 – 9
6A1–28176–00	15 – 58
6N6–28199–70–D0	8 – 49
6N6–28199–70–E0	8 – 49
6N6–28199–70–F0	8 – 49
6N6–28199–70–G0	8 – 49
6N6–28199–70–H0	8 – 49
6N6–28199–70–S0	8 – 49
6N6–28199–87–K0	8 – 50
6N6–28199–87–L0	8 – 50
6N6–28199–87–M0	8 – 50
6N6–28199–87–N0	8 – 50
6N6–28199–87–P0	8 – 50
6N6–28199–87–R0	8 – 50
61H–2819R–31	8 – 47
6E5–41111–00–1S	4 – 11
6L1–41111–00–1S	4 – 11
6E5–41112–A1	4 – 12
	28 – 8
6N7–41113–00–1S	4 – 14
6E5–41114–A0	4 – 13
	28 – 9
6G5–41131–01–5B	21 – 22
6L1–41132–00–5B	21 – 26
6E5–41132–10–5B	21 – 26
6E5–41134–A0	21 – 27
	29 – 2
6G5–41134–A1	21 – 27
	29 – 19
6E5–41135–A0	21 – 34
	29 – 5
6G5–41137–11–94	21 – 10
6E5–41213–00	16 – 32
6E5–41217–01	5 – 21
6H1–41237–00	7 – 21

PART NO. N° PIECES	REF. NO.
6R5–41237–00	7 – 23
662–41237–01	16 – 25
6R3–41241–00	7 – 20
6E5–41256–01	5 – 22
661–41262–02	5 – 23
6N7–41271–00	5 – 24
689–41273–00	5 – 25
688–41611–00	11 – 9
688–41612–00	11 – 10
6E5–41631–01–1S	16 – 10
6E5–41632–02–1S	16 – 6
688–41636–00	16 – 29
6E5–41636–01	16 – 23
6E5–42510–A1–8D	18 – 10
624–42542–00	8 – 32
	12 – 3
6N6–42610–60–4D	1 – 1
6N7–42610–60–4D	1 – 1
6N7–42613–00–4D	1 – 12
6R3–42615–01	1 – 11
6N7–42619–00	1 – 9
6N7–42627–00	1 – 10
6N7–42636–00	1 – 14
6R3–42647–00	1 – 2
6R3–42662–00	1 – 5
6N7–42678–30	1 – 22
6N7–4267A–30	1 – 23
6N7–42681–30	1 – 20
6N7–42682–30	1 – 21
6N6–42686–40	1 – 17
6N7–42686–40	1 – 17
6N6–42687–30	1 – 18
6N7–42687–30	1 – 18
6N7–42711–43–8D	15 – 1
648–42715–00	16 – 49
6E5–42716–00	15 – 43
6E5–42724–00	21 – 11
6N7–42725–30	15 – 10
688–42726–10	15 – 28
6N7–42738–02–5B	15 – 11
6N7–42741–01–8D	15 – 29
6H4–42748–00	15 – 3
6E5–42761–00–1S	2 – 18
6E5–42762–00–1S	2 – 19
6E5–42769–00	21 – 5
6R3–42771–01–8D	15 – 30
6K7–42791–00	15 – 57
6G5–42791–10	15 – 57

PART NO. N° PIECES	REF. NO.
6R3–42791–41	21 – 2
6R3–42792–41	21 – 3
6R3–42811–01	15 – 15
6R3–42811–10	15 – 18
6R3–42813–00	15 – 21
6R3–42814–00	1 – 6
6N7–42815–01–8D	15 – 4
6R3–42816–00	15 – 16
6R3–42824–00	15 – 14
6N7–42828–00	15 – 24
6R3–42828–00	15 – 25
6N7–42850–00	15 – 17
6N7–42850–10	15 – 19
6N7–42850–20	15 – 20
64E–43111–02–8D	17 – 1
64E–43112–02–8D	17 – 9
64E–43126–00	17 – 37
64E–43131–01	17 – 15
64E–43139–02	18 – 1
6G5–43144–00	17 – 27
6E5–43145–01	24 – 8
6G5–43148–00	17 – 32
6G5–43181–02	17 – 29
6G5–43185–02	17 – 30
64E–43311–10–8D	17 – 22
61A–43376–00	18 – 8
64E–43800–02–4D	19 – 1
64E–43802–00	20 – 8
64E–43805–00	20 – 37
64E–4380F–00	20 – 33
64E–4380J–00	20 – 30
64E–43810–00	19 – 6
6E5–43814–02	19 – 13
64E–43816–00	20 – 17
64E–43817–00	19 – 5
64E–43817–10	20 – 19
64E–43818–01	19 – 32
64E–4381G–00	19 – 27
64E–43820–00	19 – 15
64E–43821–00	19 – 16
64E–43822–00	19 – 17
64E–43825–01	19 – 2
64E–43827–00	20 – 22
64E–43828–00	19 – 22
64E–43829–00	19 – 23
64E–4382G–00	19 – 29
64E–43830–00	20 – 4
64E–43831–00	20 – 2

NUMERICAL INDEX
INDEX NUMERIQUE

PART NO. N° PIECES	REF. NO.
64E–43841–00	20 – 7
64E–43843–00	20 – 6
64E–43843–10	20 – 38
64E–4384J–00	19 – 18
64E–43850–00	20 – 15
64E–43851–00	20 – 11
64E–43855–00	20 – 14
64E–43858–00	20 – 12
6E5–43858–00	19 – 28
72X–43858–00	20 – 5
64E–43859–00	20 – 13
64E–43860–00	20 – 20
6E5–43862–00	19 – 10
6G5–43863–00	20 – 10
6E5–43864–00	19 – 20
6G5–43864–00	19 – 19
64E–43865–00	20 – 16
6G5–43865–00	20 – 35
64E–43866–00	19 – 9
64E–43867–00	19 – 8
64E–43868–00	20 – 3
64E–43869–00	19 – 26
6H1–4386K–10	20 – 29
6E5–43872–00	19 – 12
64E–43873–00	20 – 24
6E5–43874–01	19 – 21
64E–43875–00	20 – 25
64E–43879–00	20 – 27
64E–43879–10	20 – 26
64E–4387A–00	20 – 23
64E–43880–01	20 – 28
64E–43883–00	19 – 11
64E–4388E–00	19 – 25
64E–4388E–10	20 – 1
64E–4388J–00	19 – 3
64E–43891–00	20 – 31
64E–43892–00	20 – 34
6E5–43896–00	20 – 9
64E–43897–00	19 – 24
64E–43898–00	19 – 7
6E5–44117–00–1S	16 – 36
6E5–44118–01–94	16 – 44
6E5–44120–03	16 – 51
68F–44121–00	16 – 38
6E5–44122–00	16 – 39
6E5–44150–02	22 – 17
688–44194–00	16 – 14
61A–44311–01	22 – 24

PART NO. N° PIECES	REF. NO.
6E5–44312–00	23 – 20
6E5–44315–A0	22 – 31
	29 – 13
61A–44322–02	22 – 25
	29 – 36
6R3–44322–42	29 – 46
6E5–44323–00	22 – 30
	29 – 40
6E5–44323–40	29 – 47
6E5–44352–01	22 – 28
	29 – 39
6E5–44361–00	23 – 2
6E5–44365–00	23 – 3
	29 – 6
6E5–44366–00	23 – 1
	29 – 7
6E5–44391–00	15 – 9
6E5–44511–00–5B	18 – 38
6E5–44514–00–94	18 – 31
6G5–44526–00	17 – 3
68F–44533–00	2 – 20
6G5–44551–01–8D	18 – 13
6E5–44552–01–94	18 – 24
6E5–44553–01–8D	18 – 27
6E5–44555–00–94	18 – 16
663–44575–00	18 – 37
6E5–44575–00	18 – 15
6E5–45111–02–8D	21 – 1
6G5–45113–A1	21 – 14
	28 – 18
6G5–45114–A1	21 – 23
	29 – 3
663–45119–00	17 – 14
6E5–45123–00	21 – 33
	29 – 4
6E5–45155–00	21 – 4
688–45214–02	23 – 10
688–45215–02	23 – 11
6G5–45251–02	17 – 2
6E5–45300–17–8D	22 – 1
6E5–45301–05–8D	22 – 2
6E5–45321–00	22 – 13
6E5–45331–00–94	22 – 34
6E5–45332–00–94	22 – 58
688–45341–10	22 – 7
6E5–45344–00	22 – 40
6E5–45371–01	23 – 14
6E5–45371–10	23 – 28

PART NO. N° PIECES	REF. NO.
688–45375–00	23 – 9
663–45376–00–94	23 – 8
6E5–45378–00	22 – 10
688–45383–02	22 – 68
688–45384–00	22 – 69
6E5–45501–01	22 – 43
61A–45527–00	22 – 23
6E5–45536–00	22 – 9
61A–45538–00	22 – 20
6E5–45551–02	22 – 44
6E5–45560–01	22 – 46
6E5–45567–01	22 – 5
6E5–45567–10	22 – 5
6E5–45567–20	22 – 5
6E5–45567–30	22 – 5
6E5–45567–40	22 – 5
6E5–45567–50	22 – 5
6E5–45567–60	22 – 5
6E5–45571–01	22 – 60
6E5–45576–00	22 – 61
6L6–45577–00	22 – 65
6L6–45577–10	22 – 65
6L6–45577–20	22 – 65
6L6–45577–30	22 – 65
6L6–45577–40	22 – 65
6L6–45577–50	22 – 65
6L6–45577–60	22 – 65
6E5–45587–01	22 – 37
6E5–45587–10	22 – 37
6E5–45587–20	22 – 37
6E5–45587–30	22 – 37
6E5–45587–40	22 – 37
6E5–45587–50	22 – 37
6E5–45587–60	22 – 37
6E5–45611–01	22 – 48
6E5–45631–01	22 – 56
6E5–45633–01	22 – 57
6E5–45634–01	22 – 50
6E5–45641–03	22 – 49
688–45930–02–98	23 – 26
688–45932–60–98	23 – 26
6E5–45941–00–EL	23 – 26
6E5–45943–00–EL	23 – 26
6E5–45945–01–EL	23 – 26
6E5–45947–00–EL	23 – 26
6E5–45949–00–EL	23 – 26
6E5–45952–00–EL	23 – 26
6E5–45954–00–EL	23 – 26

PART NO. N° PIECES	REF. NO.
6E5–45956–00–EL	23 – 26
688–45970–03–98	23 – 26
6E5–45970–10	23 – 27
688–45972–02–98	23 – 26
6E5–45972–10	23 – 27
688–45974–02–98	23 – 26
6E5–45974–10	23 – 27
688–45976–01–98	23 – 26
6E5–45976–10	23 – 27
6E5–45978–10	23 – 27
688–45978–60–98	23 – 26
6E5–45987–01	23 – 21
6E5–45994–10	23 – 29
688–45997–01	23 – 22
703–48152–00	26 – 57
703–48153–00	26 – 3
703–48189–00	26 – 17
703–48198–00	26 – 14
703–48205–17	25 – 1
	26 – 1
703–48211–01	26 – 61
703–48212–00	26 – 58
703–48213–00	26 – 59
703–48215–00	26 – 43
703–48219–00	26 – 30
703–48221–00	26 – 56
703–48222–00	26 – 27
703–48223–00	26 – 28
703–48225–00	26 – 29
703–48226–00	26 – 26
703–48227–00	26 – 24
703–48232–00	26 – 62
703–48234–00	26 – 18
703–48235–00	26 – 4
703–48236–00	26 – 16
703–48238–00	26 – 22
703–48243–00	26 – 15
703–48244–00	26 – 21
703–48245–00	26 – 11
703–48246–00	26 – 23
701–48248–00	26 – 13
703–48252–00	26 – 12
703–48261–01	26 – 2
703–48264–00	26 – 6
703–48265–00	26 – 9
703–48268–00	26 – 5
703–48271–00	26 – 60
703–48281–00	26 – 31

PART NO. N° PIECES	REF. NO.
703–48282–00	26 – 32
703–48284–00	26 – 52
701–48287–00	26 – 42
703–48291–10	26 – 39
703–48293–10	26 – 41
701–48320–50	25 – 2
701–48320–60	25 – 2
701–48320–80	25 – 2
6E5–48344–00	16 – 7
703–48345–01	26 – 19
701–48350–00	25 – 2
701–48350–20	25 – 2
703–48358–00	26 – 20
6E5–48531–00	16 – 1
6E5–48538–00	16 – 2
6E5–61350–02	24 – 1
6E5–61351–01	24 – 2
6E5–61355–00	24 – 5
6E5–81332–00	11 – 13
6N7–81337–00	11 – 16
6N7–81800–10	14 – 1
6N7–81801–00	14 – 8
6N7–81807–00	14 – 11
61A–81809–00	14 – 3
6N7–81810–00	14 – 5
6N7–81813–00	14 – 9
6N7–81820–10	14 – 10
6R3–81822–00–94	14 – 19
61A–81824–00	14 – 4
6K7–81826–10	14 – 14
6E5–8182A–10	14 – 17
6E5–8182E–10	14 – 15
6E5–8182F–10	14 – 16
6K7–8182G–10	14 – 6
6E5–8182K–10	14 – 18
6N7–81830–00	14 – 13
6N7–81840–00	14 – 7
6N7–81850–10	14 – 2
6N7–81857–00	14 – 12
6E5–81900–01	8 – 9
6E5–81922–00	8 – 10
61A–81941–00	13 – 8
6R3–81942–00	12 – 16
6N7–81948–00–94	12 – 10
6E5–81948–22	13 – 15
6E5–81950–00	13 – 10
689–81952–10	13 – 9
6E5–8195A–00	13 – 11

PART NO. N° PIECES	REF. NO.
6R3–81960–00	12 – 13
6N7–82105–02	13 – 34
6E5–82116–00	13 – 14
6Y5–82117–00	27 – 17
6E5–82117–01	13 – 35
6G5–82119–00	13 – 13
6E5–82147–00	17 – 26
6E5–82148–00	17 – 6
6E5–82149–00	18 – 19
1E6–82151–00	27 – 16
663–82151–00	13 – 31
705–82151–00	13 – 32
6G5–82152–00	13 – 33
6A0–82317–00	8 – 31
	12 – 2
663–82317–01	11 – 18
6G1–82370–21	13 – 4
703–82510–43	26 – 44
662–82519–00	13 – 5
6R3–82519–00	13 – 36
703–82531–00	26 – 46
6E5–82531–10	13 – 39
703–82540–00	26 – 50
68F–82553–80	27 – 18
682–82556–00	26 – 48
688–82560–10	13 – 27
6R3–82563–00	13 – 43
703–82563–02	26 – 55
688–82575–01	26 – 47
703–82577–00	26 – 45
6E3–8257H–00	15 – 59
6E5–82587–00	13 – 44
6E5–82588–00	15 – 45
6K7–82588–00	15 – 44
688–8258A–20	26 – 49
6N7–82590–20	13 – 30
703–82591–00	26 – 53
703–82592–00	26 – 54
688–82594–00	15 – 48
6E5–82594–00	15 – 49
703–82594–00	26 – 25
703–83383–02	26 – 51
6Y5–83500–S5	27 – 6
6Y5–8350T–03	27 – 1
6Y5–83533–T2	27 – 10
6Y5–83553–M0	27 – 15
6N7–83557–00	13 – 18
6Y5–83557–10	27 – 19

NUMERICAL INDEX
INDEX NUMERIQUE

PART NO. N° PIECES	REF. NO.
6Y5–83557–31	27 – 11
6E5–83558–00	23 – 17
6E5–83558–10	22 – 12
6Y5–83570–S5	27 – 7
6R3–83614–00	13 – 45
6A1–83625–41	11 – 20
6A1–83625–51	11 – 19
64E–83672–02	18 – 3
6Y5–83728–00	27 – 12
72X–85075–L0	20 – 21
6N7–85510–00	11 – 2
6N7–85537–00	12 – 8
6N7–85540–01	12 – 5
6N7–85542–01–1S	12 – 1
6N7–85550–01	11 – 1
6R3–85570–01	13 – 1
6N7–85580–10	11 – 3
6E5–85711–60	8 – 46
6E5–85720–05	8 – 15
6R3–85721–80	8 – 16
6G7–85730–04	8 – 27
6N7–85740–00	8 – 41
6N7–86110–00	13 – 20
6N7–86112–00	13 – 25
6N7–86116–00	13 – 21
6Y5–87122–S0	27 – 14
6G5–87149–10	13 – 12
6N6–W0001–A5	28 – 1
6F3–W0001–C1	29 – 18
6E5–W0001–F1	29 – 1
6E5–W0004–00	5 – 2
6N7–W0070–30	1 – 19
6N6–W0078–02	29 – 35
6E5–W0078–3A	29 – 45
6N6–W0090–17–1S	2 – 1
6N7–W0090–18–1S	2 – 1
6N6–W0093–09	28 – 20
656–W2810–02	8 – 48
90101–12M03	17 – 40
90105–10M00	23 – 15
90105–10M20	2 – 11
90109–06M39	7 – 6
90109–06M40	7 – 5
90109–08022	3 – 24
90109–08M45	15 – 7
90109–12007	18 – 35
90109–14M34	18 – 20
90116–06M30	5 – 13

PART NO. N° PIECES	REF. NO.
90116–08M45	2 – 13
90119–06M10	22 – 16
90119–06M59	12 – 4
90119–06M65	8 – 33
90119–06MA2	2 – 21
	3 – 7
	4 – 24
	16 – 37
90119–06MA3	5 – 15
90119–06MA4	4 – 6
90119–06MA5	4 – 18
90119–06MA6	4 – 10
90119–08077	21 – 16
90119–08078	21 – 9
90119–08M14	22 – 33
	29 – 43
90119–08M22	15 – 37
90119–08M57	14 – 22
90119–08M76	14 – 20
90119–08M77	14 – 21
90119–08M79	21 – 15
90119–08M94	2 – 12
90119–08MA3	2 – 17
90119–08MA8	4 – 3
90119–10M89	23 – 7
90152–05M07	23 – 12
90157–06013	16 – 11
90157–06M01	15 – 41
90159–06M08	12 – 17
90159–06M11	12 – 9
90159–06M14	5 – 30
90169–05M00	15 – 2
90170–16M01	22 – 45
90170–20137	11 – 6
90171–18M04	23 – 24
90179–06066	18 – 30
90179–06M24	1 – 13
90179–06M28	5 – 20
90183–05M02	21 – 32
90185–05002	23 – 13
90185–06M07	16 – 9
90185–09M01	24 – 6
90185–12M12	18 – 36
90185–22M11	17 – 20
90201–08M13	16 – 21
90201–08M14	19 – 30
90201–08M23	16 – 16
90201–08M54	15 – 35

PART NO. N° PIECES	REF. NO.
90201–10M20	24 – 7
90201–12M05	17 – 42
90201–13M01	17 – 41
90201–14M56	18 – 34
90201–15M58	18 – 21
90201–16M55	18 – 18
90201–21M18	11 – 5
90201–22M01	22 – 21
90201–23M01	3 – 26
90201–26M57	18 – 32
90201–26M59	17 – 19
90201–30M92	22 – 66
90201–38M60	18 – 11
90202–05088	7 – 25
90202–08M20	16 – 40
90202–08M44	7 – 19
90202–12092	16 – 20
90202–16061	16 – 54
90202–26M18	18 – 33
90202–32M19	18 – 17
90202–40M47	18 – 7
90206–10M04	16 – 34
90206–13M10	15 – 6
90206–22M19	22 – 22
90249–06M19	17 – 33
90250–08M07	22 – 55
90280–04M05	22 – 29
	29 – 44
90280–05015	11 – 4
90282–04010	22 – 67
90340–08002	22 – 6
90340–14M00	2 – 6
90384–06M07	2 – 8
90384–14M09	2 – 9
90386–06M12	16 – 43
90386–10M16	17 – 31
90386–12089	16 – 17
90386–13M88	15 – 5
90386–16M66	16 – 53
90386–22M13	16 – 19
90386–22M98	17 – 38
	19 – 33
90386–25M31	17 – 18
90386–38M32	18 – 12
90387–06M29	16 – 33
90387–08M16	16 – 18
90387–08M37	15 – 34
90387–10M05	17 – 34

PART NO. N° PIECES	REF. NO.
90387–10M61	24 – 3
90430–08020	22 – 8
	29 – 8
90430–14115	2 – 7
90445–05M02	8 – 30
90445–07196	7 – 10
90445–07258	5 – 28
90445–07M24	5 – 11
90445–07M28	5 – 10
90445–07M46	5 – 12
90445–07M72	7 – 11
90445–07M87	7 – 13
90445–07M89	7 – 9
90445–07ME8	22 – 11
90445–07MF0	23 – 16
90445–11M26	8 – 13
90445–11M35	15 – 55
90445–12207	8 – 35
90446–15M07	9 – 40
90450–10M07	10 – 2
90464–07M06	7 – 14
90464–12M00	11 – 12
90464–13M34	8 – 40
90465–05M87	13 – 28
90465–06M86	2 – 25
	5 – 16
90465–08M63	17 – 23
90465–08M89	13 – 29
90465–11M10	7 – 8
	8 – 5
	9 – 3
	15 – 56
	17 – 21
	18 – 5
	23 – 18
	27 – 13
90465–12M25	15 – 50
90465–13M11	8 – 17
90465–13M18	4 – 26
	13 – 19
90467–08004	4 – 17
90468–05M03	7 – 24
90468–07M02	7 – 15
90468–18008	16 – 41
90480–12M11	11 – 17
90480–20M05	4 – 21
90480–22M15	15 – 33
90501–11M10	22 – 19

PART NO. N° PIECES	REF. NO.
90501–12082	16 – 48
90501–16M11	4 – 20
90501–16M12	16 – 12
90501–16M28	18 – 28
90501–16M37	22 – 51
90506–14M24	17 – 36
90508–29M12	16 – 22
90560–12M01	24 – 4
91490–40030	23 – 25
91609–30010	13 – 22
91690–30012	16 – 3
91690–30016	7 – 27
91690–30020	17 – 35
92903–06100	9 – 11
92903–06600	11 – 8
	12 – 12
92903–08600	16 – 46
92990–04100	27 – 4
92990–04600	1 – 15
92990–05600	5 – 5
92990–06100	1 – 3
92990–06200	16 – 8
92990–06600	8 – 22
	12 – 7
	15 – 42
	17 – 12
92990–08200	15 – 8
92990–08600	14 – 23
	26 – 34
92990–18200	23 – 23
92995–06100	17 – 5
92995–06600	1 – 8
	5 – 18
	11 – 15
	12 – 19
	13 – 3
	15 – 13
	17 – 8
	21 – 7
92995–08100	16 – 5
	17 – 17
	21 – 18
92995–08600	14 – 25
	21 – 25
	22 – 42
92995–10100	18 – 26
	23 – 6
92995–14600	18 – 23

PART NO. N° PIECES	REF. NO.
93101–22M15	3 – 14
	28 – 13
93101–28M16	22 – 35
	29 – 14
93101–30M17	22 – 63
	29 – 17
93102–08M43	20 – 36
93102–35M13	3 – 13
	28 – 12
93102–40M14	3 – 5
	28 – 10
93106–09014	22 – 15
	29 – 10
93210–03261	13 – 26
93210–09165	16 – 52
93210–10M74	19 – 4
93210–13M04	7 – 18
93210–16275	24 – 9
93210–19MA7	7 – 4
93210–32738	9 – 8
93210–37160	22 – 27
	29 – 12
93210–37MH7	18 – 6
93210–55M14	22 – 39
	29 – 15
93210–58144	22 – 14
	29 – 9
93210–74M35	3 – 15
	28 – 14
93210–86M38	22 – 26
	29 – 11
93210–86M39	22 – 64
	29 – 16
93211–04001	3 – 6
	28 – 11
93306–208U0	3 – 10
	22 – 59
93310–32337	3 – 25
93310–836U0	3 – 27
93310–954U1	3 – 8
93311–940U3	3 – 4
93315–425U7	22 – 47
93315–43061	22 – 62
93315–628U9	22 – 3
93317–330U2	22 – 36
93332–000U7	22 – 4
93341–930V2	22 – 38
93410–16006	16 – 55

NUMERICAL INDEX
INDEX NUMERIQUE

PART NO. N° PIECES	REF. NO.
93410–22M11	17 – 39
93410–37M04	18 – 14
93410–40M03	3 – 11
93430–06024	26 – 10
93501–04M02	16 – 47
93503–16003	22 – 54
93507–32009	22 – 52
93511–32017	22 – 53
93606–12019	22 – 32
	29 – 42
93608–12063	2 – 10
93608–12M05	21 – 8
	23 – 4
93700–06M03	16 – 50
	17 – 13
94702–00247	4 – 27
94702–00309	4 – 27
95303–06600	16 – 13
95380–03600	9 – 27
95380–04600	27 – 5
95380–05600	7 – 22
	16 – 24
	26 – 7
95380–06600	1 – 4
	8 – 23
	26 – 40
95380–08600	9 – 12
95380–08700	21 – 19
95380–12600	17 – 43
95380–14800	18 – 22
95780–10300	18 – 9
97013–06014	9 – 10
97013–06016	12 – 11
97013–06025	12 – 14
97013–06065	11 – 7
97013–08030	16 – 45
97013–08045	16 – 15
97075–08035	15 – 36
97075–10045	23 – 5
97080–06100	8 – 21
97080–08016	19 – 31
97095–06010	15 – 26
	17 – 7
	21 – 6
97095–06012	1 – 7
	5 – 17
	12 – 18
	13 – 6

PART NO. N° PIECES	REF. NO.
97095–06012	15 – 51
97095–06016	13 – 16
	15 – 12
97095–06020	13 – 2
	15 – 31
97095–06025	16 – 35
97095–06030	13 – 23
	17 – 4
97095–08016	14 – 24
97095–08020	16 – 4
	17 – 16
97095–08025	22 – 41
97095–08030	21 – 24
97095–08045	21 – 17
97095–10045	18 – 25
97380–05025	26 – 8
97380–08030	26 – 33
97595–06550	9 – 31
97607–04310	20 – 32
97780–40520	1 – 16
97780–60525	18 – 2
97880–05025	5 – 4
97880–06012	17 – 11
97880–06018	11 – 11
97880–06020	12 – 6
97885–06010	11 – 14
97885–06016	18 – 4
97980–05108	6 – 24
97980–05116	6 – 22
98580–03015	26 – 38
98580–04006	26 – 36
98580–04010	26 – 35
98580–05010	26 – 37
98780–04015	2 – 15
99001–08600	22 – 18
9E450–04433	27 – 2
9E450–04533	27 – 3

PART NO. N° PIECES	REF. NO.

PART NO. N° PIECES	REF. NO.

PART NO. N° PIECES	REF. NO.

PART NO. N° PIECES	REF. NO.

115CETO/130BETO
PARTS CATALOGUE
©2004 by Yamaha Motor Co., Ltd.
1st edition, July 2004
All rights reserved.
Any reprinting or unauthorized use
without the written permission of
Yamaha Motor Co., Ltd.
is expressly prohibited.
Printed in Japan.

115CETO/130BETO
CATALOGUE DE PIECES DETACHEES
©2004 par Yamaha Motor Co., Ltd.
1re édition, juillet 2004
Tous droits réservés
Toute réimpression ou utilisation
non autorisée sans la permission écrite
de la Yamaha Motor Co., Ltd.
est formellement interdite.
Imprimé au Japon