YAMAHA

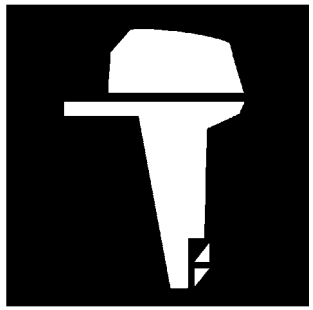

PARTS CATALOGUE
CATALOGUE DE PIECES DETACHEES

F115A'05 (68V4)
FL115A'05 (68W4)

1D68V-300F1

(2D68V-300F1)

YAMAHA GENUINE Parts & Accessories

2016/12/21

NEWS NO.	DATE	COMMENT
PE0-OM-040004	Sept.,07,2004	COR:FIG.1 TOP COWLING LIST/ILLUSTRATION CORRECTION
PE0-OM-160009	Apr.,11,2016	MOD:F(L)115A FUEL (1) LIST/ILLUSTRATION REVISION
PE0-OM-160040	Dec.,19,2016	MOD:FIG.36 REMOTE CONTROL ASSY 2 LIST REVISION

FOREWORD

This Parts Catalogue is related to the parts for the model(s) on the cover page. When you are ordering replacement parts, please refer to this Parts Catalogue and quote both part numbers and part names correctly.

1. Modifications or additions which have been made after the issue of the Parts Catalogue will be announced in the Parts News.
   It is advisable that you make the necessary corrections to the Parts Catalogue according to the Parts News.

2. Abbreviations
   The following abbreviations are used in this Parts Catalogue.

   "UR" Use specified parts number.
   "UN" Use as many as needed.
   "AP" Alternate Parts
   "LM" Locally Made (Parts need to be ordered locally)
   "F#" Frame No. (Applicable machine No.)
   "O/S" Over Size

3. The number of components for assembly
   - Parts, which are to be supplied in an assembly, are listed with a dot (.) in front of the part name as shown below.
   - The numeral appearing to the right of each component part indicates the quantity of parts for each assembly unit.

PART NO.	DESCRIPTION	Q'TY	REMARKS
2F5–83310–60	FRONT FLASHER LIGHT ASSY	2	
115–83311–60	.BULB (6V–18W)	1	

4. Applicable colours of graphics are represented in the "REMARKS" as shown below.

PART NO.	DESCRIPTION	Q'TY	REMARKS
2N4–24110–00–X5	FUEL TANK COMP.	2	MXR
3J1–24240–10	.GRAPHIC, FUEL TANK	1	FOR MXR

5. Note that the illustrations for reference in finding parts numbers are not to be used for assembling. When assembling, please use the applicable service manual.

6. The asterisk (*) before a reference number indicates modified items after the first edition.

7. Applicable Serial No.

   Engine Serial No.

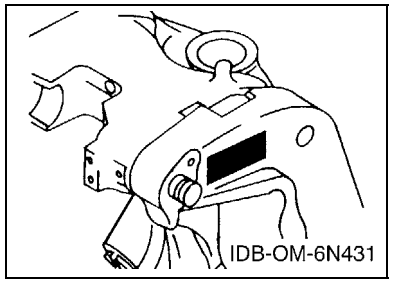

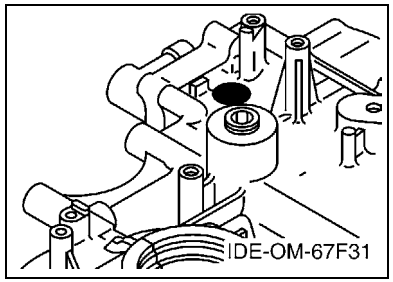

8. Applicable Engine Starting Serial No.

Model	Serial No.	Model	Serial No.
F115A	68V-1031796	FL115A	68W-1001396

9. Applicable Colour Code

Abbreviation	Colour Name	Colour Code
DBN1	DARK BLUISH GRAY 1	008D

10. Quantity Column Information

Column No.	Name Of Q'ty Column	Applicable Model
1	68V4	F115AET
2	68W4	FL115AET

AVANT–PROPOS

Ce catalogue de pièces détachées concerne les pièces pour le(s) modèle(s) indiqué(s) sur la page de couverture. Lorsque vous commandez des pièces de rechange, veuillez vous référer à ce catalogue de pieces détachées et indiquer clairement les numéros et les noms des pièces détachées.

1. Les modifications ou ajouts ayant été effectués après la parution du catalogue de pièces détachées seront décrits dans les Bulletins d'information concernant les pièces détachées.
   Il est recommandé que vous apportiez les corrections nécessaires au catalogue des pièces détachées en vous référant aux Bulletins d'information.

2. Abréviations
   Dans ce catalogue, les abréviations suivantes sont utilisées:

   "UR" Utiliser le numéro de pièces spécifié.
   "UN" Utiliser autant que nécessaire.
   "AP" Pièces de substitution
   "LM" Fabrication locale (les pièces doivent être commandées localement.)
   "F#" N° de cadre (applicable au N° de série)
   "O/S" Surdimensionné

3. Nombre de pièces d'un assemblage
   - Les pièces fournies comme composants d'un assemblage sont précédées d'un point (.) de la manière indiquée ci–dessous.
   - Le chiffre apparaissant à la droite de chaque composant indique la quantité de pièces pour chaque unité d'assemblage.

N° PIECES	DESCRIPTION	QTE	REMARQUES
2F5–83310–60	ENS. CLIGNOTANT AVANT	2	
115–83311–60	.AMPOULE (6V–18W)	1	

4. Les couleurs concernant les graphiques sont indiquées dans la colonne "REMARQUES", comme indiqué ci–dessous.

N° PIECES	DESCRIPTION	QTE	REMARQUES
2N4–24110–00–X5	RESERVOIR A ESSENCE.	2	MXR
3J1–24240–10	.GRAPHIQUE	1	POUR MXR

5. Veuillez noter que les illustrations sont indiquées à titre de référence pour trouver les numéros de pièces, non pour être utilisées lors de l'assemblage. Lors de l'assemblage, veuillez utiliser le manuel d'entretien adéquat.

6. L'astérisque (*) placé devant un numéro de référence indique des éléments qui ont été modifiés après la première édition.

7. N° de série applicable

   N° de Série du moteur

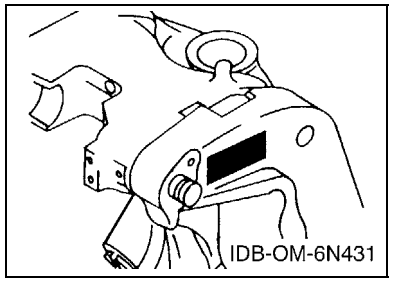

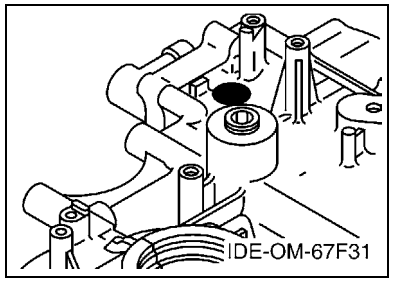

8. N° de série initial du moteur applicable

Modèle	N° de série	Modèle	N° de série
F115A	68V-1031796	FL115A	68W-1001396

9. Code couleur applicable

Abréviation	Nom de la couleur	Code couleur
DBN1	DARK BLUISH GRAY 1	008D

10. Informations relatives à la colonne Quantité

N° de la colonne	Nom de la colonne Qté	Modèle applicable
1	68V4	F115AET
2	68W4	FL115AET

CONTENTS

SHEET1/2
TOP COWLING A4
CYLINDER & CRANKCASE 1 ..... A6
CRANKSHAFT & PISTON B1
CYLINDER & CRANKCASE 2 ..... B2
VALVE B4
INTAKE 1 ..... B7
INTAKE 2 ..... C1
FUEL INJECTION NOZZLE C3
FUEL INJECTION PUMP C5
FUEL 1 ..... C7
FUEL 2 ..... D2
GENERATOR D3
ELECTRICAL 1 ..... D5
ELECTRICAL 2 ..... D6
ELECTRICAL 3 ..... E1
STARTING MOTOR E2
BOTTOM COWLING E4
STEERING 1 ..... E6
STEERING 2 ..... F2
STEERING FRICTION F4
CONTROL F5
BRACKET 1 ..... F7

INDEX

NUMERICAL INDEX G1

SHEET2/2
BRACKET 1 ..... A4*
BRACKET 2 ..... A5*
POWER TRIM & TILT ASSY 1 ..... A7*
POWER TRIM & TILT ASSY 2 ..... B2*
UPPER CASING B4*
OIL PAN B6*
LOWER CASING & DRIVE 1 ..... C1*
LOWER CASING & DRIVE 2 ..... C5*
LOWER CASING & DRIVE 3 ..... C7*
LOWER CASING & DRIVE 4 ..... D4*
STEERING GUIDE ATTACHMENT 1 ..... D6*
STEERING GUIDE ATTACHMENT 2 ..... D7*
REMOTE CONTROL BOX E1*
REMOTE CONTROL ASSY 1 ..... E2*
REMOTE CONTROL ASSY 2 ..... E5*
METER F1*
SWITCH & PANEL F3*
REPAIR KIT 1 ..... F4*
REPAIR KIT 2 ..... F5*

INDEX

NUMERICAL INDEX G1*

TABLE DES MATIERES

Feuille1/2
CAPOT SUPERIEUR A4
CYLINDRE & CARTER 1 ..... A6
VILEBREQUIN & PISTON B1
CYLINDRE & CARTER 2 ..... B2
SOUPAPE B4
ADMISSION 1 ..... B7
ADMISSION 2 ..... C1
FUEL INJECTION NOZZLE C3
FUEL INJECTION PUMP C5
CARBURANT 1 ..... C7
CARBURANT 2 ..... D2
GENERATRICE D3
PARTIE ELECTRIQUE 1 ..... D5
PARTIE ELECTRIQUE 2 ..... D6
PARTIE ELECTRIQUE 3 ..... E1
DEMARREUR ELECTRIQUE E2
CAPOT INFERIEUR E4
DIRECTION 1 ..... E6
DIRECTION 2 ..... F2
CUVETTE POIGNEE DE DIRECTION F4
COMMANDE F5
SUPPORT 1 ..... F7

INDEX

INDEX NUMERIQUE G1

Feuille2/2
SUPPORT 1 ..... A4*
SUPPORT 2 ..... A5*
PUISSANCE PARER ET INCLINER 1 ..... A7*
PUISSANCE PARER ET INCLINER 2 ..... B2*
FOURREAU B4*
VENTILATEUR D'HUILE B6*
BOITIER D'HELICE TRANSMISSION1 ..... C1*
BOITIER D'HELICE TRANSMISSION2 ..... C5*
BOITIER D'HELICE TRANSMISSION3 ..... C7*
BOITIER D'HELICE TRANSMISSION4 ..... D4*
DIRECTION GUIDE ACCESSOIRE 1 ..... D6*
DIRECTION GUIDE ACCESSOIRE 2 ..... D7*
BOITIER DE COMMANDE A DISTANCE E1*
BOITIER DE COMMANDE A DISTANCE 1..... E2*
BOITIER DE COMMANDE A DISTANCE 2..... E5*
COMPTEUR F1*
TABLEAU DE CONTACTEUR F3*
KITS DE REPARATION 1 ..... F4*
KITS DE REPARATION 2 ..... F5*

INDEX

INDEX NUMERIQUE G1*

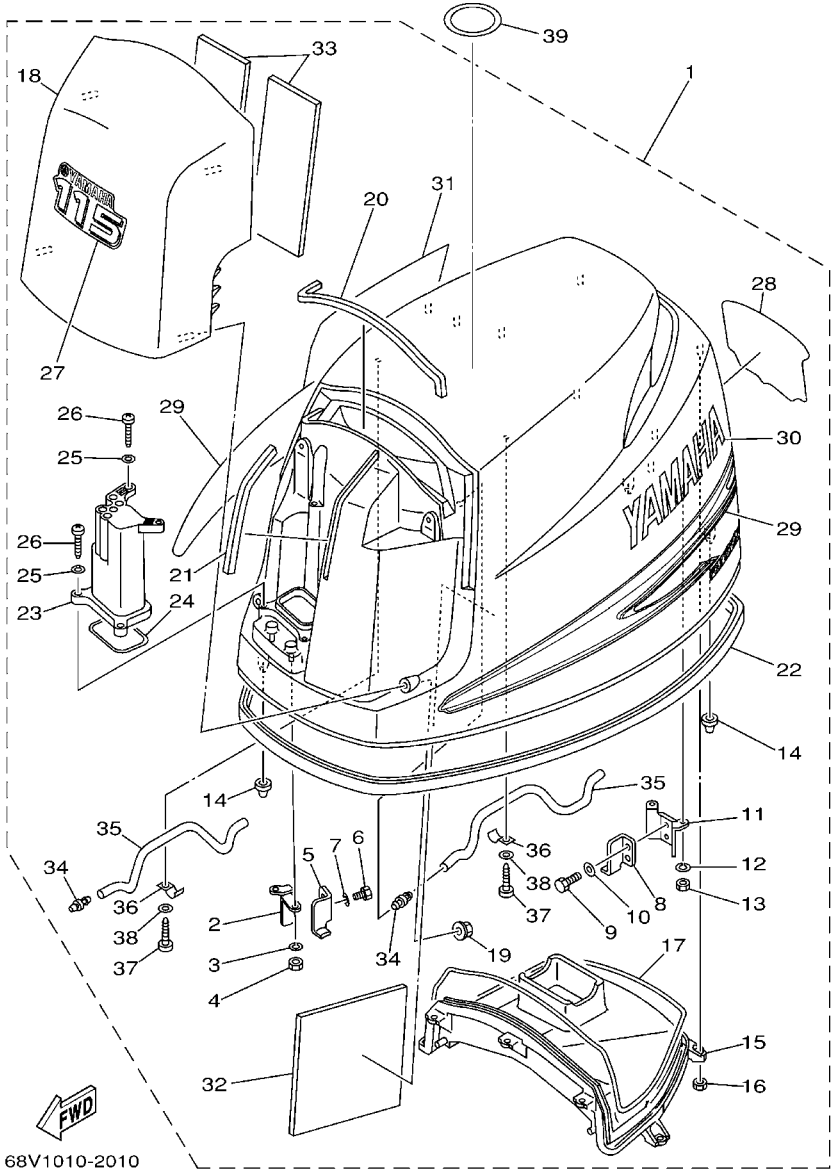

FIG. 1 TOP COWLING — CAPOT SUPERIEUR

REF. NO.	PART NO. N° PIECES	DESCRIPTION DESCRIPTION	68V4	68W4				REMARKS REMARQUES
1	68V–42610–10–8D	TOP COWLING ASSY CAPOT (ENS.)	1	1				
2	68V–42647–00	.HOLDER, CLAMP BAND .SUPPORT, SANDOW DE SERRAGE	1	1				
3	92990–06100	.WASHER, SPRING .RONDELLE, GROWER	2	2				
4	95380–06600	.NUT, HEXAGON .ECROU	2	2				
5	68V–42651–00	.HOOK .CROCHET	1	1				
6	97095–06012	.BOLT .BOULON	2	2				
7	92995–06600	.WASHER .RONDELLE	2	2				
8	68V–42652–00	.HOOK .CROCHET	1	1				
9	97095–06012	.BOLT .BOULON	2	2				
10	92995–06600	.WASHER .RONDELLE	2	2				
11	67F–42649–00	.HOLDER, CLAMP BAND .SUPPORT, SANDOW DE SERRAGE	1	1				
12	92990–06100	.WASHER, SPRING .RONDELLE, GROWER	2	2				
13	95380–06600	.NUT, HEXAGON .ECROU	2	2				
14	67F–42662–00	.DAMPER .AMORTISSEUR	3	3				
15	68V–42613–00	.MOLDING, AIR DUCT .MANCHON A AIR	1	1				
16	95380–06600	.NUT, HEXAGON .ECROU	7	7				
17	68V–42629–00	.SEAL .JOINT	1	1				
18	68V–42612–00–8D	.AIR DUCT, TOP COWLING .FLASQUE, PLATEAU D'AVANCE	1	1				
19	90179–06M28	.NUT .ECROU	4	4				
20	68V–42628–00	.SEAL .JOINT	1	1				
21	68V–42718–00	.RUBBER, SEAL 3 .JOINT	1	1				
22	68V–42615–00	.SEAL .JOINT	1	1				
23	68V–42632–00	.WINDOW .FENETRE	1	1				
24	68V–42634–00	.SEAL, WINDOW .JOINT	1	1				
25	92990–05200	.WASHER, PLAIN .RONDELLE, PLATE	4	4				
26	97780–50625	.SCREW, TAPPING .VIS, TETE BOMBEE	4	4				
27	68V–42677–10	.GRAPHIC, FRONT .ADHESIF, AVANT	1	1				

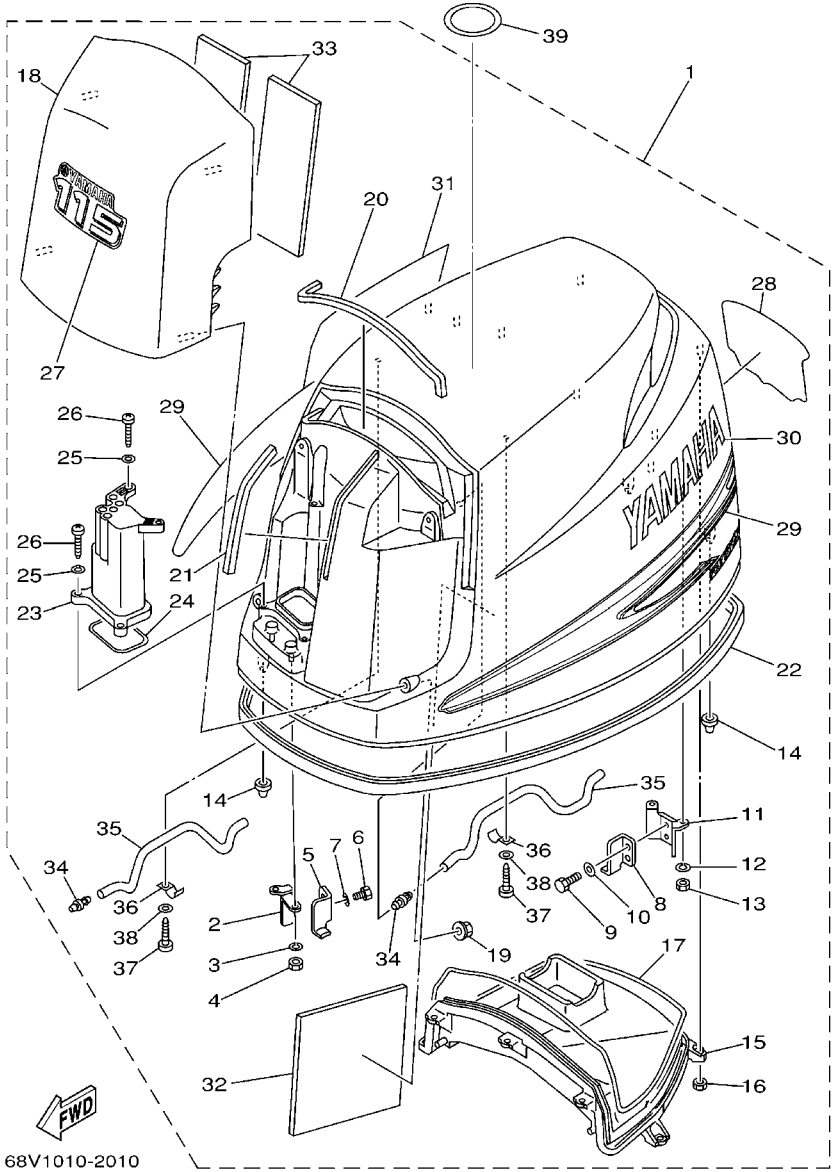

FIG. 1 TOP COWLING — CAPOT SUPERIEUR

REF. NO.	PART NO. N° PIECES	DESCRIPTION DESCRIPTION	68V4	68W4				REMARKS REMARQUES
28	68V–42678–10	.GRAPHIC, REAR .ADHESIF, ARRIERE	1	1				
29	68V–W0070–10	.GRAPHIC SET .JEU DIEMBLEMES	1	1				
30	68V–42681–10	.MARK, COWLING .ADHESIF, CAPOT	1	1				
31	68V–42682–10	.MARK, COWLING .ADHESIF, CAPOT	1	1				
32	68V–42617–00	.DAMPER, FORM .BOURRELET, CAOUTCHOUC	1	1				
33	68V–42619–00	.DAMPER, FORM .BOURRELET, CAOUTCHOUC	2	2				
34	6H3–44391–01	.NIPPLE, HOSE .RACCORD D'ESSENCE	2	2				
35	90445–10M18	.HOSE (L295) .DURITE (L295)	2	2				
36	90465–08M63	.CLAMP .BRIDE	2	2				
37	97780–50620	.SCREW, TAPPING .VIS, TETE BOMBEE	2	2				
38	92990–05200	.WASHER, PLAIN .RONDELLE, PLATE	2	2				
39	67F–13434–02	LABEL, CAUTION ETIQUETTE, ATTENTION	1	1				

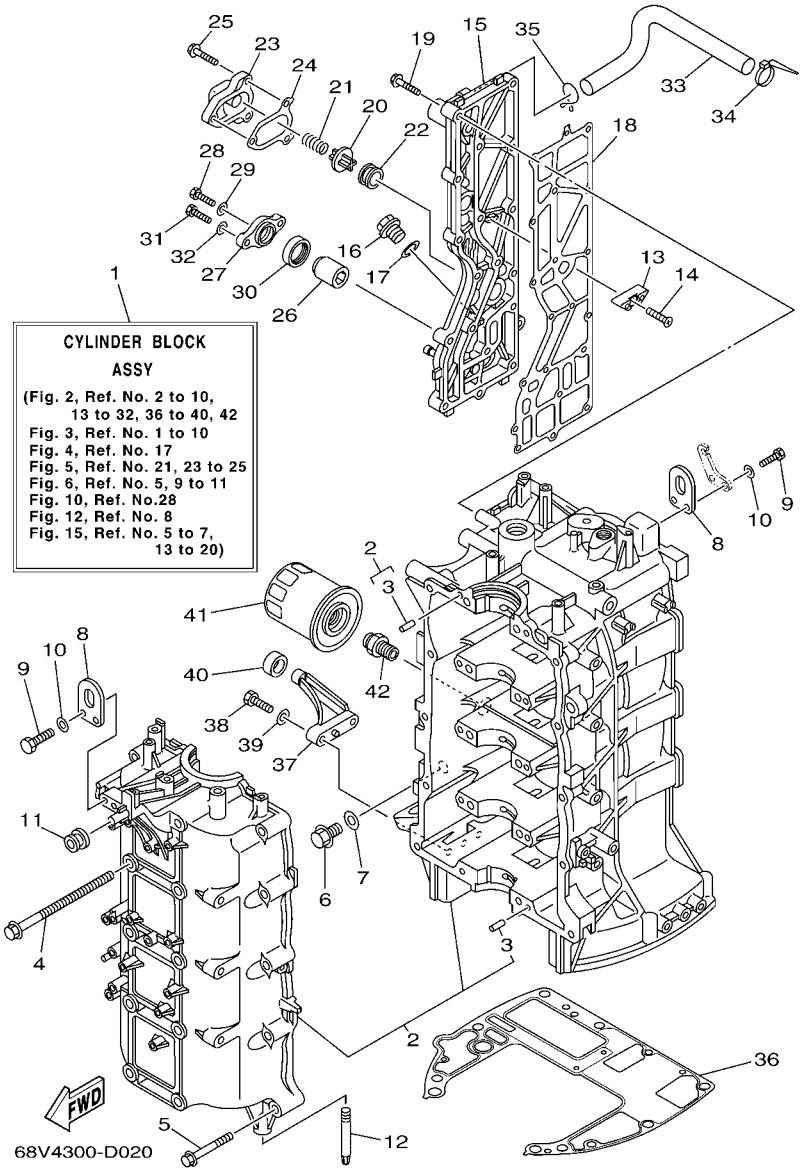

FIG. 2 CYLINDER & CRANKCASE 1 CYLINDRE & CARTER 1

REF. NO.	PART NO. N° PIECES	DESCRIPTION DESCRIPTION	68V4	68W4				REMARKS REMARQUES
1	68V–W009B–05–1S	CYLINDER BLOCK ASSY CYLINDRE GROUPE (ENS.)	1	1				
2	68V–15100–01–1S	CRANKCASE ASSY CARTER DE MOTEUR COMPLET	1	1				
3	93606–12019	.PIN, DOWEL .GOUPILLE	10	10				
4	90119–10M88	BOLT, WITH WASHER BOULON, AVEC RONDELLE	10	10				
5	90119–08M66	BOLT, WITH WASHER BOULON, AVEC RONDELLE	10	10				
6	90340–14M06	PLUG, STRAIGHT SCREW PLOT, FILETE DROIT	1	1				
7	90430–14115	GASKET JOINT	1	1				
8	62Y–11119–00	HANGER, ENGINE ANNEAU, LEVAGE	2	2				
9	97095–06020	BOLT BOULON	4	4				
10	92995–06600	WASHER RONDELLE	4	4				
11	90480–12072	GROMMET PASSE-FIL	1	1				
12	67F–15142–00	GUIDE 1 GUIDE 1	2	2				
13	6E5–11325–00	ANODE ANODE	3	3				
14	98780–04016	SCREW, FLAT HEAD VIS A TETE FRAISEE	3	3				
15	68V–41113–02–1S	OUTER COVER, EXHAUST COUVERCLE, ECHAPPEMENT	1	1				
16	90340–18M09	PLUG, STRAIGHT SCREW PLOT, FILETE DROIT	1	1				
17	90430–18130	GASKET JOINT	1	1				
18	67F–41114–A1	GASKET, EXHAUST OUTER COVER JOINT, COUVERCLE D'ECHAPPEMENT	1	1				
19	90119–06MA4	BOLT, WITH WASHER BOULON, AVEC RONDELLE	18	18				
20	6G5–12416–00	VALVE, PRESSURE CONTROL SOUPAPE DE CONTROLEUR PRESS	1	1				
21	90501–16M11	SPRING, COMPRESSION RESSORT, COMPRESSION	1	1				
22	90480–20M05	GROMMET PASSE-FIL	1	1				
23	67F–1246A–00–1S	COVER 1 COUVERCLE 1	1	1				
24	67F–12435–A0	GASKET JOINT	1	1				
25	90119–06MA2	BOLT, WITH WASHER BOULON, AVEC RONDELLE	3	3				
26	68V–11325–01	ANODE ANODE	1	1				
27	67F–11327–00–94	COVER, ANODE COUVERCLE	1	1				

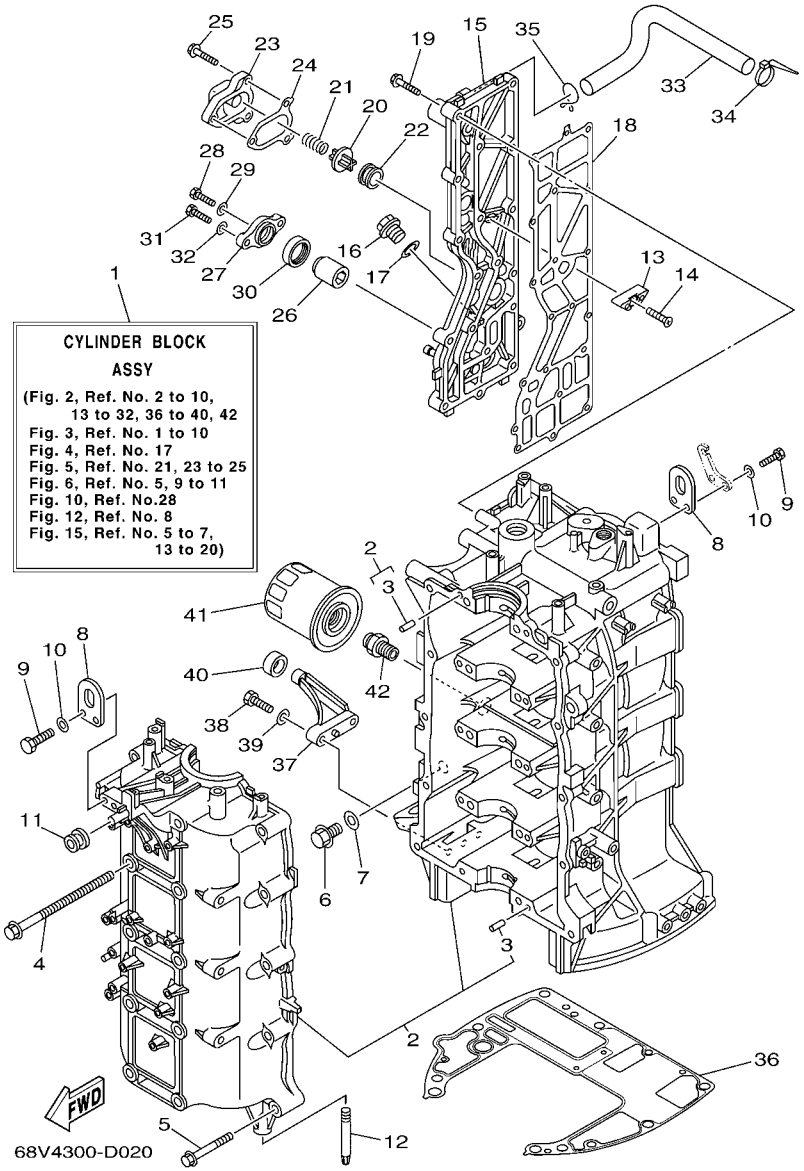

FIG. 2 CYLINDER & CRANKCASE 1 CYLINDRE & CARTER 1

REF. NO.	PART NO. N° PIECES	DESCRIPTION DESCRIPTION	68V4	68W4				REMARKS REMARQUES
28	97075–06020	BOLT BOULON	1	1				
29	92995–06600	WASHER RONDELLE	1	1				
30	67F–11328–00	GROMMET, ANODE PASSE-FIL	1	1				
31	97075–08025	BOLT BOULON	2	2				
32	92995–08600	WASHER RONDELLE	2	2				
33	67F–1243A–00	HOSE 1 DURITE 1	1	1				
34	90465–11M10	CLAMP BRIDE	1	1				
35	90467–20M15	CLIP JONC	1	1				
36	68V–11351–00	GASKET, CYLINDER JOINT, D'EMBASE	1	1				
37	67F–42761–00–94	STOPPER PLAQUETTE	2	2				
38	97095–06025	BOLT BOULON	4	4				
39	92995–06600	WASHER RONDELLE	4	4				
40	68F–44533–00	DAMPER, UPPER MOUNT RUBBER COUVERCLE, SUSPENSION INFERIEU	2	2				
41	5GH–13440–00	ELEMENT ASSY, OIL CLEANER ELEMENT, FILTRE A HUILE	1	1				
42	90401–20145	BOLT, UNION BOULON, RACCORD	1	1				

FIG. 3 CRANKSHAFT & PISTON VILEBREQUIN & PISTON

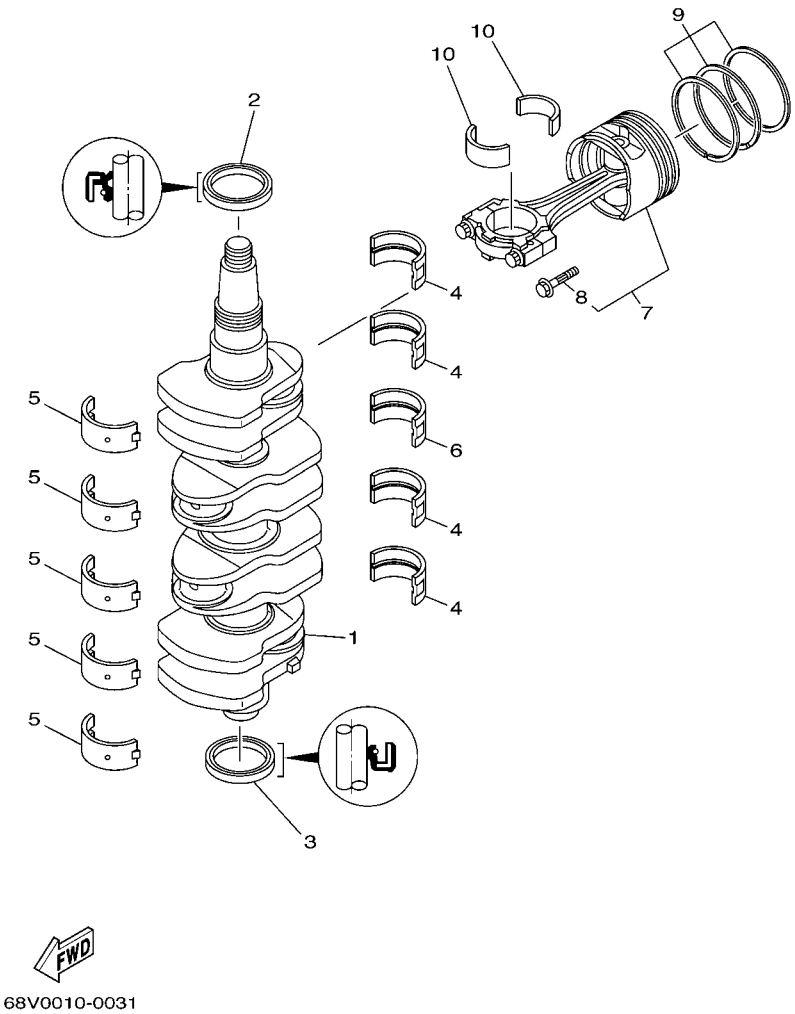

REF. NO.	PART NO. N° PIECES	DESCRIPTION DESCRIPTION	68V4	68W4				REMARKS REMARQUES
1	68V–11411–00	CRANKSHAFT VILEBREQUIN COMPLET	1	1				
2	93102–48009	OIL SEAL JOINT SPY	1	1				
3	93101–48002	OIL SEAL JOINT SPY	1	1				
4	67F–11416–00	PLANE BEARING, CRANKSHAFT 1 COUSSINET DE VILEBREQUIN 1	4	4				UR GREEN UR GREEN
	67F–11416–10	PLANE BEARING, CRANKSHAFT 1 COUSSINET DE VILEBREQUIN 1	4	4				UR BLUE UR BLUE
	67F–11416–20	PLANE BEARING, CRANKSHAFT 1 COUSSINET DE VILEBREQUIN 1	4	4				UR RED UR RED
5	67F–11417–00	PLANE BEARING, CRANKSHAFT 2 COUSSINET DE VILEBREQUIN 2	5	5				UR YELLOW UR YELLOW
	67F–11417–10	PLANE BEARING, CRANKSHAFT 2 COUSSINET DE VILEBREQUIN 2	5	5				UR GREEN UR GREEN
	67F–11417–20	PLANE BEARING, CRANKSHAFT 2 COUSSINET DE VILEBREQUIN 2	5	5				UR BLUE UR BLUE
	67F–11417–30	PLANE BEARING, CRANKSHAFT 2 COUSSINET DE VILEBREQUIN 2	5	5				UR RED UR RED
6	67F–11418–00	PLANE BEARING, CRANKSHAFT 3 COUSSINET DE VILEBREQUIN 3	1	1				UR GREEN UR GREEN
	67F–11418–10	PLANE BEARING, CRANKSHAFT 3 COUSSINET DE VILEBREQUIN 3	1	1				UR BLUE UR BLUE
	67F–11418–20	PLANE BEARING, CRANKSHAFT 3 COUSSINET DE VILEBREQUIN 3	1	1				UR RED UR RED
7	68V–W1164–00	PISTON/CON-ROD ASSY(STD) PISTON/BIELLE COMPLETTE(STD)	4	4				
	68V–W1164–10	PISTON/CON-ROD ASSY(0.25MM OS) PISTON/BIELLE COMPLETTE:0.25MM	4	4				AP AP
8	K1C–A3275–00	.BOLT, CONNECTING ROD .BOULON, BIELLE	2	2				
9	67F–11603–01	PISTON RING SET (STD) JEU DE SEGMENTS (STD)	4	4				
	67F–11604–01	PISTON RING SET (0.25MM O/S) JEU DE SEGMENTS (0.25MM O/S)	4	4				AP AP
10	68V–11656–00	PLANE BEARING, CONNECTING ROD ROULEMENT DE BIELLE	8	8				UR YELLOW UR YELLOW
	68V–11656–10	PLANE BEARING, CONNECTING ROD ROULEMENT DE BIELLE	8	8				UR GREEN UR GREEN
	68V–11656–20	PLANE BEARING, CONNECTING ROD ROULEMENT DE BIELLE	8	8				UR BLUE UR BLUE
	68V–11656–30	PLANE BEARING, CONNECTING ROD ROULEMENT DE BIELLE	8	8				UR RED UR RED

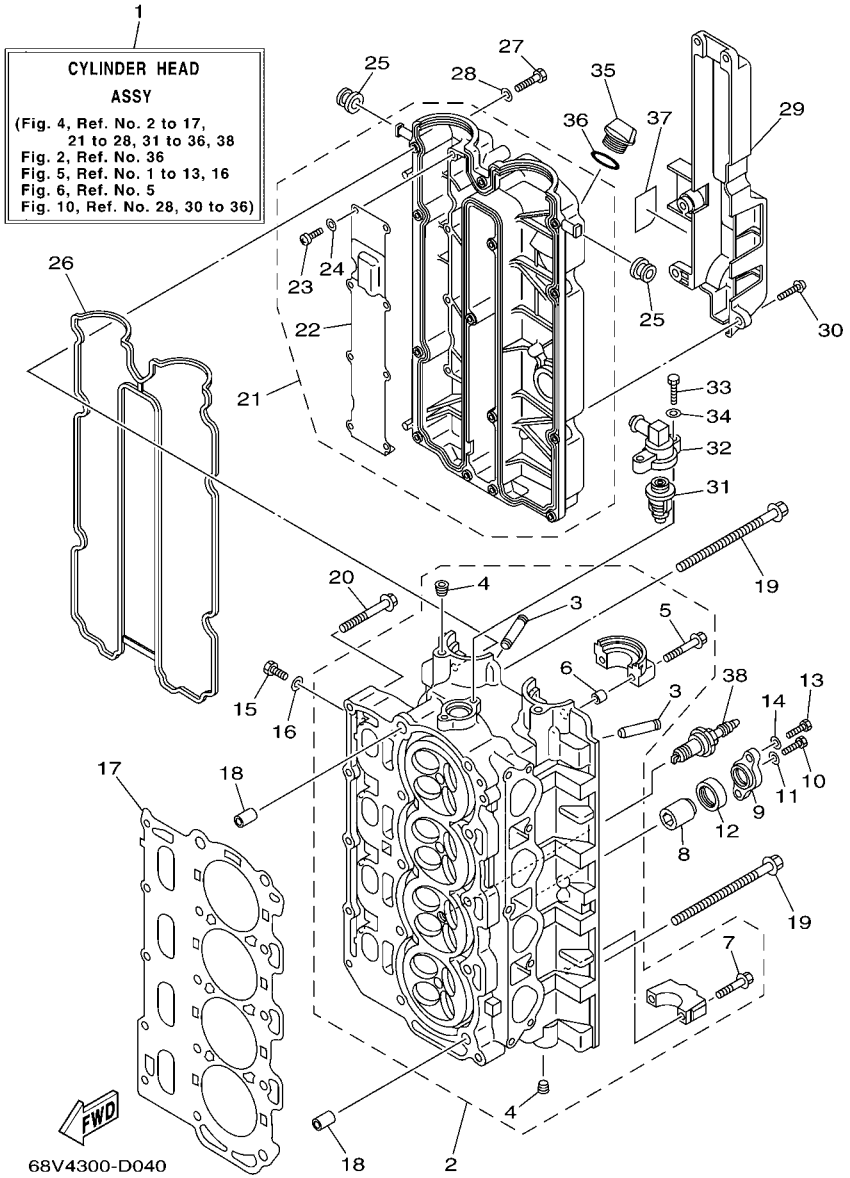

FIG. 4 CYLINDER & CRANKCASE 2 CYLINDRE & CARTER 2

REF. NO.	PART NO. N° PIECES	DESCRIPTION DESCRIPTION	68V4	68W4				REMARKS REMARQUES
1	68V–W009A–03–1S	CYLINDER HEAD ASSY CULASSE (ENS.)	1	1				
2	68V–11110–01–94	CYLINDER HEAD ASSY JEU DE CULASSE	1	1				
3	67F–11133–10	.GUIDE, VALVE 1 .GUIDE, SOUPAPE 1	16	16				
4	90344–51019	.PLUG, TAPER SCREW .PLOT, FILETE CONIQUE	4	4				
5	90119–07235	.BOLT/WASHER-CAM CAPS .BOULON, AVEC RONDELLE	4	4				
6	91809–08006	.SLEEVE GUIDE-DOWEL .GOUJON, D'ASSEMBLAGE	4	4				
7	K0F–A9904–20	.BOLT, WITH WASHER .BOULON, AVEC RONDELLE	16	16				
8	68V–11325–01	ANODE ANODE	2	2				
9	67F–11327–00–94	COVER, ANODE COUVERCLE	2	2				
10	97075–06020	BOLT BOULON	2	2				
11	92995–06600	WASHER RONDELLE	2	2				
12	67F–11328–00	GROMMET, ANODE PASSE-FIL	2	2				
13	97075–08025	BOLT BOULON	4	4				
14	92995–08600	WASHER RONDELLE	4	4				
15	97095–08014	BOLT BOULON	4	4				
16	90430–08143	GASKET JOINT	4	4				
17	67F–11181–02	GASKET, CYLINDER HEAD 1 JOINT, DE CULASSE 1	1	1				
18	90387–10M08	COLLAR COLLERETTE	2	2				
19	90105–10M89	BOLT, FLANGE BOULON	10	10				
20	90119–08M91	BOLT, WITH WASHER BOULON, AVEC RONDELLE	5	5				
21	68V–11191–00–1S	COVER, CYLINDER HEAD 1 COUVERCLE, CULASSE 1	1	1				
22	67F–11168–00	.COVER, BREATHER .COUVERCLE, RENIFLARD	1	1				
23	98507–04008	.SCREW, PAN HEAD .VIS, TETE TRONCONIQUE	8	8				
24	92907–04600	.WASHER .RONDELLE	8	8				
25	90480–12072	GROMMET PASSE-FIL	2	2				
26	67F–11356–00	SEAL, CYLINDER 2 JOINT, SPY CYLINDRE	1	1				
27	97095–06030	BOLT BOULON	14	14				

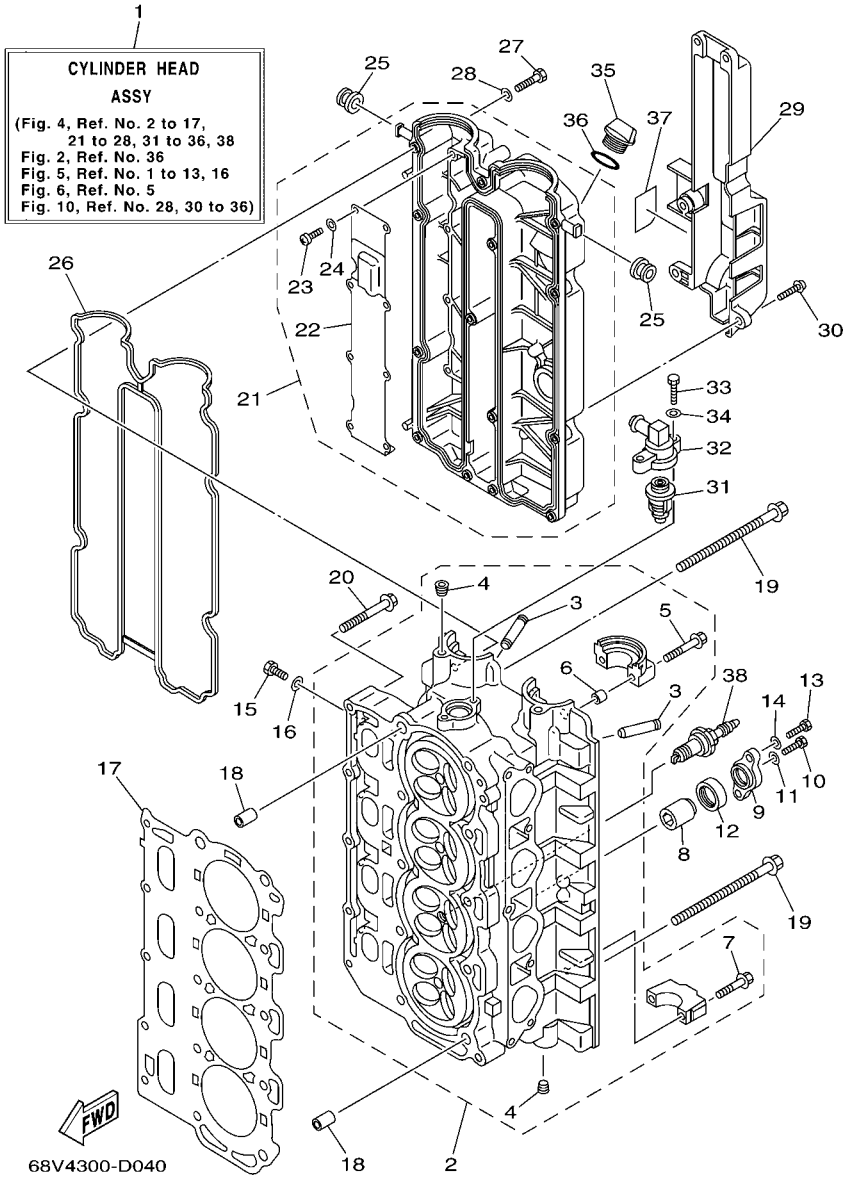

FIG. 4 CYLINDER & CRANKCASE 2 CYLINDRE & CARTER 2

REF. NO.	PART NO. N° PIECES	DESCRIPTION DESCRIPTION	68V4	68W4				REMARKS REMARQUES
28	92995–06600	WASHER RONDELLE	14	14				
29	67F–11192–01	COVER, CYLINDER HEAD 2 COUVERCLE, CULASSE 2	1	1				
30	90159–06M29	SCREW, WITH WASHER VIS, AVEC RONDELLE	5	5				
31	60V–12411–00	THERMOSTAT THERMOSTAT	1	1				
32	68V–12413–00–1S	COVER, THERMOSTAT COUVERCLE, THERMOSTAT	1	1				
33	97095–06025	BOLT BOULON	2	2				
34	92995–06600	WASHER RONDELLE	2	2				
35	6G8–15363–00	PLUG, OIL PLOT, HUILE	1	1				
36	93210–24M79	O-RING JOINT TORIQUE	1	1				
37	68V–83626–00	MARK 6 MARK 6	1	1				
38	94702–00400	PLUG, SPARK (NGK LFR6A-11) BOUGIE D'ALLUMAGE(NGK LFR6A-11	4	4				

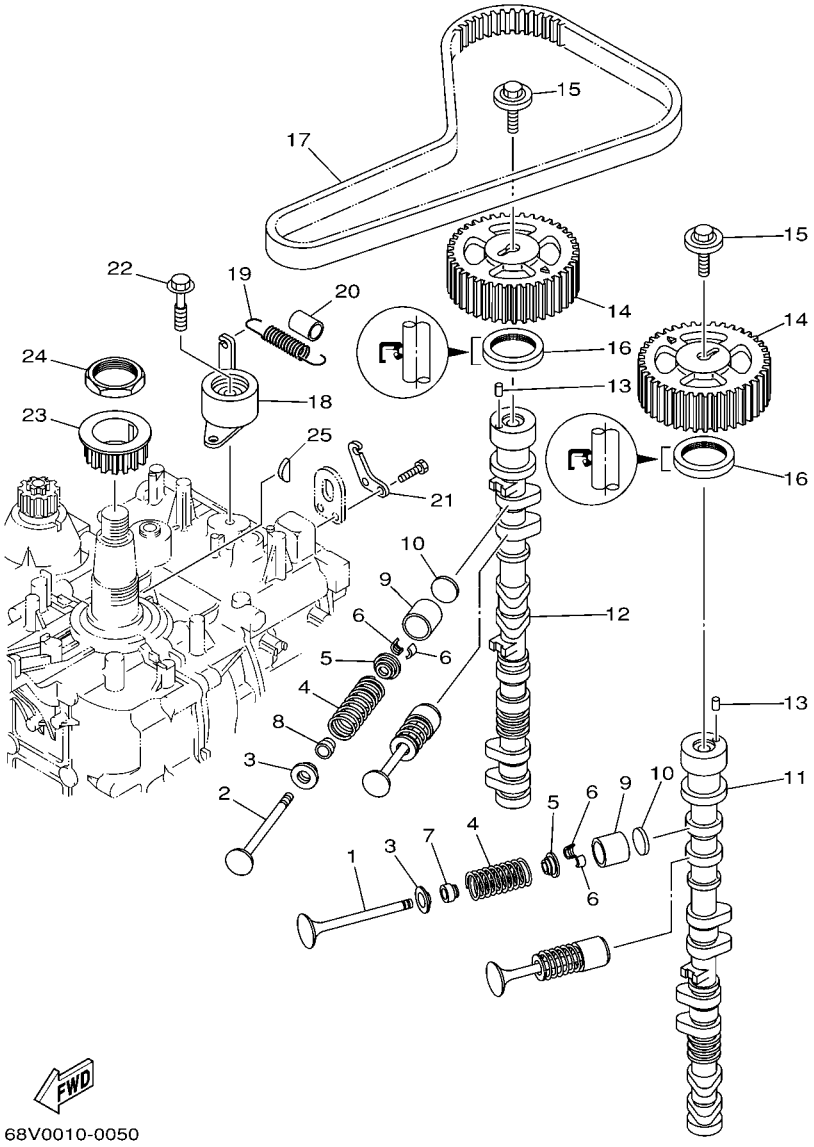

68V0010-0050

FIG. 5 VALVE SOUPAPE

REF. NO.	PART NO. N° PIECES	DESCRIPTION DESCRIPTION	68V4	68W4				REMARKS REMARQUES
1	68V–12111–00	VALVE, INTAKE SOUPAPE, ADMISSION	8	8				
2	68V–12121–00	VALVE, EXHAUST SOUPAPE, ECHAPPEMENT	8	8				
3	67F–12116–00	SEAT, VALVE SPRING SIEGE, RESSORT DE SOUPAPE	16	16				
4	67F–12114–00	SPRING, VALVE OUTER RESSORT DE SOUPAPE, EXTERNE	16	16				
5	67F–12117–00	RETAINER, VALVE SPRING BUTEE DE RESSORT DE SOUPAPE	16	16				
6	67F–12118–00	COTTER, VALVE FRAISE, SOUPAPE	32	32				
7	K0A–A3721–00	SEAL, VALVE STEM JOINT, QUEUE DE SOUPAPE	8	8				
8	K0A–A3722–00	SEAL, VALVE STEM 2 JOINT, QUEUE DE SOUPAPE 2	8	8				
9	67F–12153–00	LIFTER, VALVE LEVE-SOUPAPE	16	16				
10	67F–12168–00	PAD, ADJUSTING (2.000) PASTILLE, DE REGLAGE (2.000)	16	16				UR UR
	67F–12168–10	PAD, ADJUSTING (2.025) PASTILLE, DE REGLAGE (2.025)	16	16				UR UR
	67F–12168–20	PAD, ADJUSTING (2.050) PASTILLE, DE REGLAGE (2.050)	16	16				UR UR
	67F–12168–30	PAD, ADJUSTING (2.075) PASTILLE, DE REGLAGE (2.075)	16	16				UR UR
	67F–12168–40	PAD, ADJUSTING (2.100) PASTILLE, DE REGLAGE (2.100)	16	16				UR UR
	67F–12168–50	PAD, ADJUSTING (2.125) PASTILLE, DE REGLAGE (2.125)	16	16				UR UR
	67F–12168–60	PAD, ADJUSTING (2.150) PASTILLE, DE REGLAGE (2.150)	16	16				UR UR
	67F–12168–70	PAD, ADJUSTING (2.175) PASTILLE, DE REGLAGE (2.175)	16	16				UR UR
	67F–12168–80	PAD, ADJUSTING (2.200) PASTILLE, DE REGLAGE (2.200)	16	16				UR UR
	67F–12168–A0	PAD, ADJUSTING (2.225) PASTILLE, DE REGLAGE (2.225)	16	16				UR UR
	67F–12168–B0	PAD, ADJUSTING (2.250) PASTILLE, DE REGLAGE (2.250)	16	16				UR UR
	67F–12168–C0	PAD, ADJUSTING (2.275) PASTILLE, DE REGLAGE (2.275)	16	16				UR UR
	67F–12168–D0	PAD, ADJUSTING (2.300) PASTILLE, DE REGLAGE (2.300)	16	16				UR UR
	67F–12168–E0	PAD, ADJUSTING (2.325) PASTILLE, DE REGLAGE (2.325)	16	16				UR UR
	67F–12168–F0	PAD, ADJUSTING (2.350) PASTILLE, DE REGLAGE (2.350)	16	16				UR UR
	67F–12168–G0	PAD, ADJUSTING (2.375) PASTILLE, DE REGLAGE (2.375)	16	16				UR UR
	67F–12168–H0	PAD, ADJUSTING (2.400) PASTILLE, DE REGLAGE (2.400)	16	16				UR UR
	67F–12168–J0	PAD, ADJUSTING (2.425) PASTILLE, DE REGLAGE (2.425)	16	16				UR UR

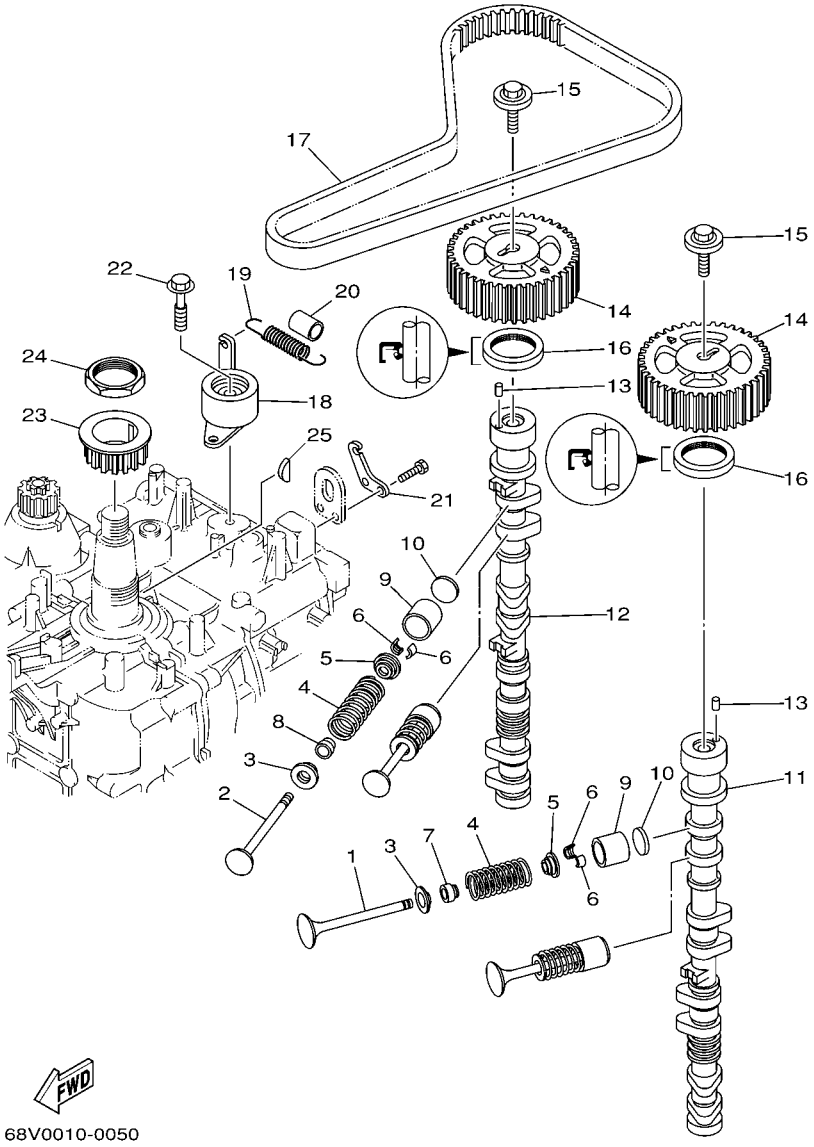

68V0010-0050

FIG. 5 VALVE SOUPAPE

REF. NO.	PART NO. N° PIECES	DESCRIPTION DESCRIPTION	68V4	68W4				REMARKS REMARQUES
10	67F–12168–K0	PAD, ADJUSTING (2.450) PASTILLE, DE REGLAGE (2.450)	16	16				UR UR
	67F–12168–L0	PAD, ADJUSTING (2.475) PASTILLE, DE REGLAGE (2.475)	16	16				UR UR
	67F–12168–M0	PAD, ADJUSTING (2.500) PASTILLE, DE REGLAGE (2.500)	16	16				UR UR
	67F–12168–N0	PAD, ADJUSTING (2.525) PASTILLE, DE REGLAGE (2.525)	16	16				UR UR
	67F–12168–P0	PAD, ADJUSTING (2.550) PASTILLE, DE REGLAGE (2.550)	16	16				UR UR
	67F–12168–R0	PAD, ADJUSTING (2.575) PASTILLE, DE REGLAGE (2.575)	16	16				UR UR
	67F–12168–S0	PAD, ADJUSTING (2.600) PASTILLE, DE REGLAGE (2.600)	16	16				UR UR
	67F–12168–T0	PAD, ADJUSTING (2.625) PASTILLE, DE REGLAGE (2.625)	16	16				UR UR
	67F–12168–U0	PAD, ADJUSTING (2.650) PASTILLE, DE REGLAGE (2.650)	16	16				UR UR
	67F–12168–V0	PAD, ADJUSTING (2.675) PASTILLE, DE REGLAGE (2.675)	16	16				UR UR
	67F–12168–W0	PAD, ADJUSTING (2.700) PASTILLE, DE REGLAGE (2.700)	16	16				UR UR
	67F–12168–X0	PAD, ADJUSTING (2.725) PASTILLE, DE REGLAGE (2.725)	16	16				UR UR
	67F–12168–Y0	PAD, ADJUSTING (2.750) PASTILLE, DE REGLAGE (2.750)	16	16				UR UR
	67F–12169–00	PAD, ADJUSTING (2.775) PASTILLE, DE REGLAGE (2.775)	16	16				UR UR
	67F–12169–10	PAD, ADJUSTING (2.800) PASTILLE, DE REGLAGE (2.800)	16	16				UR UR
	67F–12169–20	PAD, ADJUSTING (2.825) PASTILLE, DE REGLAGE (2.825)	16	16				UR UR
	67F–12169–30	PAD, ADJUSTING (2.850) PASTILLE, DE REGLAGE (2.850)	16	16				UR UR
	67F–12169–40	PAD, ADJUSTING (2.875) PASTILLE, DE REGLAGE (2.875)	16	16				UR UR
	67F–12169–50	PAD, ADJUSTING (2.900) PASTILLE, DE REGLAGE (2.900)	16	16				UR UR
	67F–12169–60	PAD, ADJUSTING (2.925) PASTILLE, DE REGLAGE (2.925)	16	16				UR UR
	67F–12169–70	PAD, ADJUSTING (2.950) PASTILLE, DE REGLAGE (2.950)	16	16				UR UR
	67F–12169–80	PAD, ADJUSTING (2.975) PASTILLE, DE REGLAGE (2.975)	16	16				UR UR
	67F–12169–A0	PAD, ADJUSTING (3.000) PASTILLE, DE REGLAGE (3.000)	16	16				UR UR
	67F–12169–B0	PAD, ADJUSTING (3.025) PASTILLE, DE REGLAGE (3.025)	16	16				UR UR
	67F–12169–C0	PAD, ADJUSTING (3.050) PASTILLE, DE REGLAGE (3.050)	16	16				UR UR
	67F–12169–D0	PAD, ADJUSTING (3.075) PASTILLE, DE REGLAGE (3.075)	16	16				UR UR
	67F–12169–E0	PAD, ADJUSTING (3.100) PASTILLE, DE REGLAGE (3.100)	16	16				UR UR

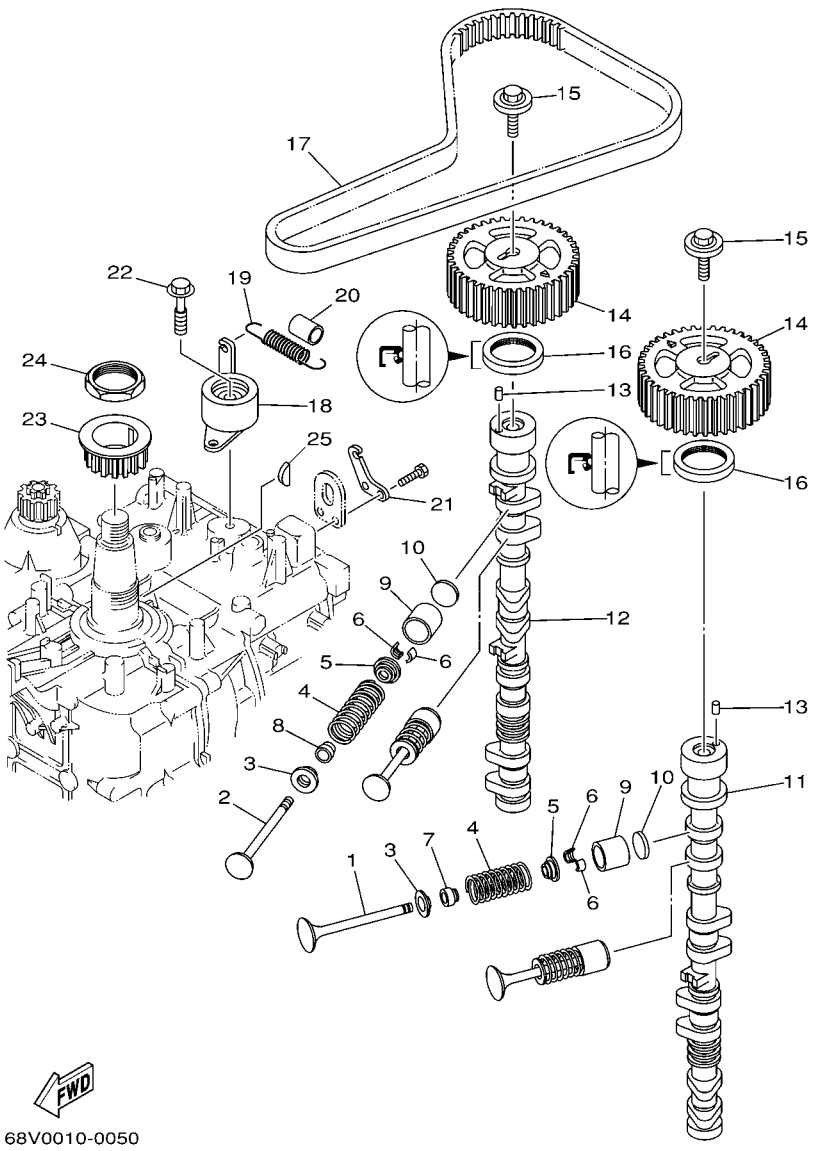

68V0010-0050

FIG. 5 VALVE SOUPAPE

REF. NO.	PART NO. N° PIECES	DESCRIPTION DESCRIPTION	68V4	68W4				REMARKS REMARQUES
10	67F–12169–F0	PAD, ADJUSTING (3.125) PASTILLE, DE REGLAGE (3.125)	16	16				UR UR
	67F–12169–G0	PAD, ADJUSTING (3.150) PASTILLE, DE REGLAGE (3.150)	16	16				UR UR
	67F–12169–H0	PAD, ADJUSTING (3.175) PASTILLE, DE REGLAGE (3.175)	16	16				UR UR
	67F–12169–J0	PAD, ADJUSTING (3.200) PASTILLE, DE REGLAGE (3.200)	16	16				UR UR
	67F–12169–K0	PAD, ADJUSTING (3.225) PASTILLE, DE REGLAGE (3.225)	16	16				UR UR
	67F–12169–L0	PAD, ADJUSTING (3.250) PASTILLE, DE REGLAGE (3.250)	16	16				UR UR
	67F–12169–M0	PAD, ADJUSTING (3.275) PASTILLE, DE REGLAGE (3.275)	16	16				UR UR
	67F–12169–N0	PAD, ADJUSTING (3.300) PASTILLE, DE REGLAGE (3.300)	16	16				UR UR
11	67F–12171–00	CAMSHAFT 1 ARBRE A CAMES 1	1	1				
12	67F–12181–00	CAMSHAFT 2 ARBRE A CAMES 2	1	1				
13	93605–10108	PIN, DOWEL AXE	2	2				
14	67F–11537–00	GEAR, DRIVEN PIGNON SECONDAIRE	2	2				
15	90119–10M06	BOLT, WITH WASHER BOULON, AVEC RONDELLE	2	2				
16	93102–38M59	OIL SEAL JOINT SPY	2	2				
17	67F–46241–00	BELT COURROIE TRAPEZOIDALE	1	1				
18	67F–11590–00	TENSIONER ASSY TENDEUR (ENS.)	1	1				
19	90506–16M39	SPRING, TENSION RESSORT, TENSION	1	1				
20	90445–15M03	HOSE (L23) DURITE (L23)	1	1				
21	67F–11595–00	PLATE,VALVE PLAQUE DE SOUPAPE	1	1				
22	90119–10M72	BOLT, WITH WASHER BOULON, AVEC RONDELLE	1	1				
23	67F–11536–00	GEAR, DRIVE ENGRENAGE, MENANT	1	1				
24	90170–40003	NUT ECROU	1	1				
25	90280–04008	KEY, WOODRUFF CLAVETTE, DEMI-LUNE	1	1				

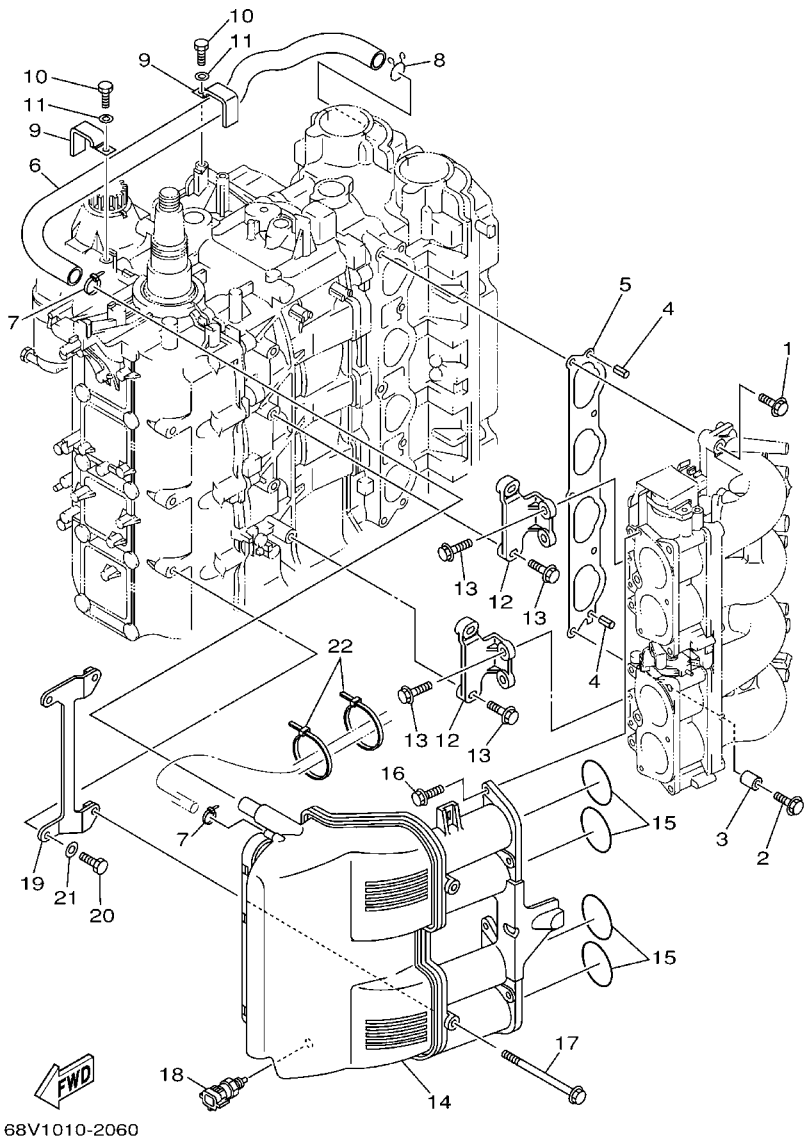

FIG. 6 INTAKE 1 — ADMISSION 1

REF. NO.	PART NO. N° PIECES	DESCRIPTION DESCRIPTION	68V4	68W4				REMARKS REMARQUES
1	97575–08540	BOLT, WITH WASHER VIS HEXAGONAL AVC RONDELLE	4	4				
2	90119–08M68	BOLT, WITH WASHER BOULON, AVEC RONDELLE	1	1				
3	90387–08M32	COLLAR COLLERETTE	1	1				
4	91690–50014	PIN, SPRING AGRAFFE	2	2				
5	68V–13645–00	GASKET, MANIFOLD 1 JOINT, TUBULURE 1	1	1				
6	67F–15373–00	PIPE, BREATHER DURITE DE RENIFLARD	1	1				
7	90465–11M10	CLAMP BRIDE	2	2				
8	90467–20M15	CLIP JONC	1	1				
9	90465–12M03	CLAMP BRIDE	2	2				
10	97095–06012	BOLT BOULON	2	2				
11	92995–06600	WASHER RONDELLE	2	2				
12	68V–14291–00–94	BRACKET 1 SUPPORT 1	2	2				
13	90119–06M49	BOLT, WITH WASHER BOULON, AVEC RONDELLE	8	8				
14	68V–14440–00	SILENCER ASSY, INTAKE SIENCIEUX D'ADMISSION	1	1				
15	93210–48MJ9	O-RING JOINT TORIQUE	4	4				
16	90119–06M82	BOLT, WITH WASHER BOULON, AVEC RONDELLE	6	6				
17	90119–06ME1	BOLT, WITH WASHER BOULON, AVEC RONDELLE	2	2				
18	65L–85886–00	THERMOSENSOR SENSITOMETRE	1	1				
19	68V–14292–00	BRACKET 2 SUPPORT 2	1	1				
20	97095–08020	BOLT BOULON	2	2				
21	92995–08600	WASHER RONDELLE	2	2				
22	90465–13M18	CLAMP BRIDE	2	2				

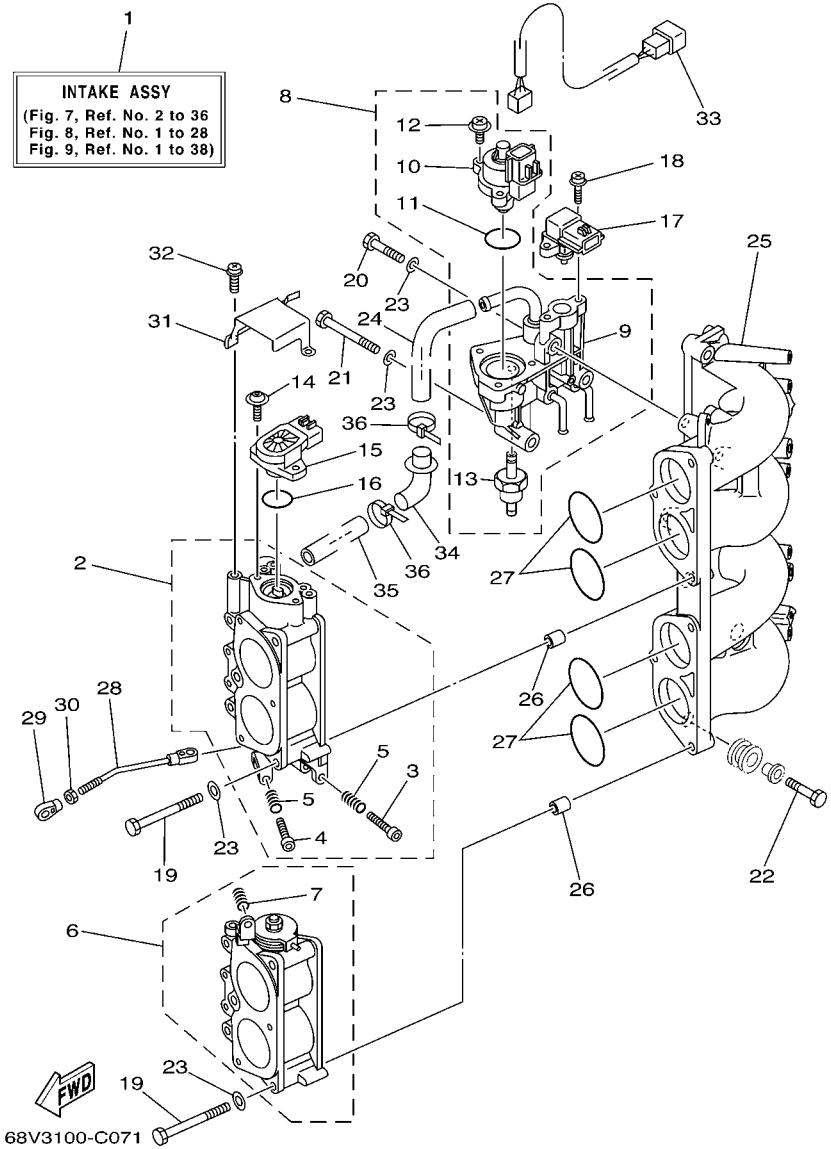

FIG. 7 INTAKE 2 — ADMISSION 2

REF. NO.	PART NO. N° PIECES	DESCRIPTION DESCRIPTION	68V4	68W4				REMARKS REMARQUES
1	68V–14200–03	INTAKE ASSY ADMISSION (ENS.)	1	1				
2	68V–13751–01	BODY, THROTTLE 1 CARTER 1	1	1				
3	68V–14323–00	.SCREW, AIR ADJUSTING .VIS DE DOSEUR D'AIR	1	1				
4	68V–14321–00	.SCREW, THROTTLE .VIS, ACCELERATEUR	1	1				
5	68V–14331–00	.SPRING, THROTTLE VALVE .RESSORT, BOISSEAU	2	2				
6	68V–13752–01	BODY, THROTTLE 2 CARTER 2	1	1				
7	68V–14331–00	.SPRING, THROTTLE VALVE .RESSORT, BOISSEAU	1	1				
8	68V–13105–00	CONTROL VALVE ASSY SOUPAPE DE CONTROLE COMPLET	1	1				
9	68V–14960–00	.BODY ASSY .CARTER (ENS.)	1	1				
10	68V–1312A–00	.VALVE, CONTROL .EMBLEME, YAMAHA	1	1				
11	68V–13473–00	.O-RING .JOINT TORIQUE	1	1				
12	68V–81146–01	.SCREW 2 .VIS 2	3	3				
13	68V–14511–00	.FILTER ASSY .ENS FILTRE	1	1				
14	68V–81145–01	SCREW 1 VIS 1	2	2				
15	68V–85885–00	THROTTLE SENSOR ASSY SENSITOMETRE (ENS.)	1	1				
16	68V–8182L–00	O-RING 1 JOINT TORIQUE 1	1	1				
17	68V–82380–00	SENSOR, PRESSURE SONDE DE PRESSION	1	1				
18	68V–81147–00	SCREW 3 VIS 3	2	2				
19	68V–14496–00	BOLT BOULON	6	6				
20	68V–13574–00	BOLT 2 BOULON 2	1	1				
21	68V–13573–00	BOLT 1 BOULON 1	2	2				
22	68V–14777–00	BOLT BOULON	3	3				
23	68V–14475–00	WASHER RONDELLE	9	9				
24	68V–14419–10	PIPE DURITE	1	1				
25	68V–13641–00–94	MANIFOLD 1 TUBULURE 1	1	1				
26	99530–10114	PIN, DOWEL GOUJON, D'ASSEMBLAGE	4	4				
27	93210–48MG8	O-RING JOINT TORIQUE	4	4				

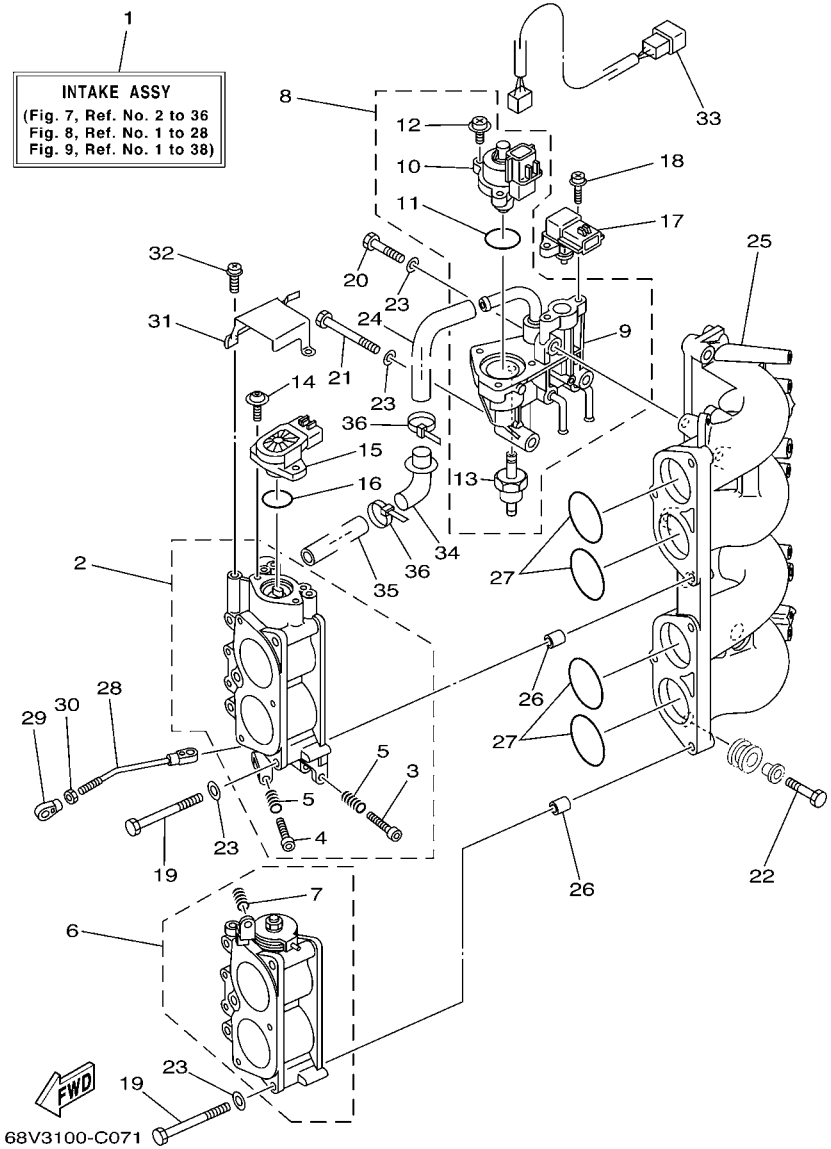

FIG. 7 INTAKE 2 — ADMISSION 2

REF. NO.	PART NO. N° PIECES	DESCRIPTION DESCRIPTION	68V4	68W4				REMARKS REMARQUES
28	68V–41237–00	JOINT, LINK RACCORD	1	1				
29	6H4–41237–00	JOINT, LINK RACCORD	1	1				
30	95380–05700	NUT ECROU	1	1				
31	68V–1441L–00	BRACKET 1 SUPPORT 1	1	1				
32	68V–81145–00	SCREW 1 VIS 1	3	3				
33	68V–8259N–00	WIRE HARNESS ASSY 3 FAISCEAU DE FILS	1	1				
34	68V–14453–00	JOINT, AIR CLEANER 1 RACCORD, FILTRE A AIR 1	1	1				
35	68V–1441J–00	PIPE, SILENCER DURITE, DE SILENCIEUX	1	1				
36	68V–2417H–00	CLAMP 1 COLLIER 1	2	2				

FIG. 8 FUEL INJECTION NOZZLE FUEL INJECTION NOZZLE

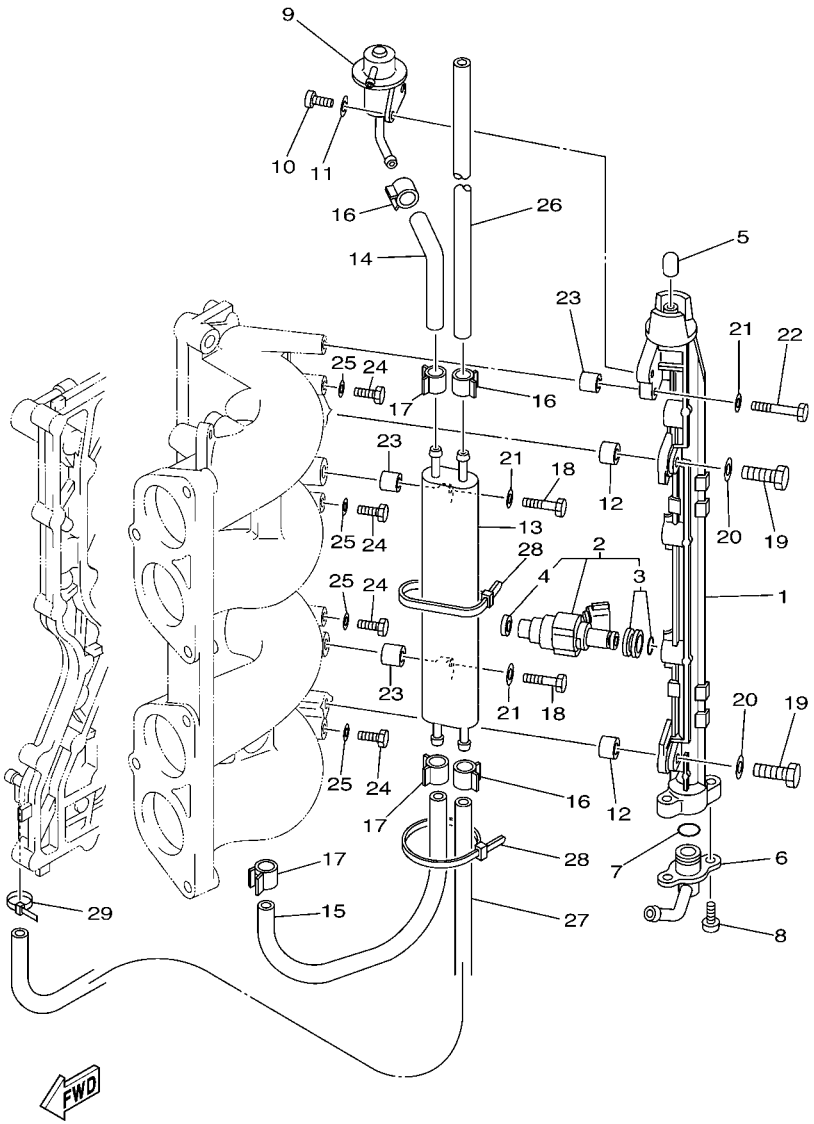

68V1010-2080

REF. NO.	PART NO. N° PIECES	DESCRIPTION DESCRIPTION	68V4	68W4				REMARKS REMARQUES
1	68V–13160–00	DELIVERY PIPE ASSY 1 ENS. TUBE DE REFOULEMENT 1	1	1				
2	68V–8A360–00	INJECTOR UNIT INJECTEUR	4	4				
3	68V–1410B–00	.PACKING KIT .POCHETTE DE JOINTS	1	1				
4	68V–13766–00	.RUBBER, INJECTOR .RONDELLE CAOUTCHOUC	1	1				
5	68V–14225–00	CAP COUVERCLE	1	1				
6	68V–13435–00	NIPPLE RACCORD	1	1				
7	68V–14397–00	O-RING JOINT TORIQUE	1	1				
8	68V–81147–00	SCREW 3 VIS 3	2	2				
9	68V–13906–00	REGULATOR, PRESSURE REGULATEUR DE PRESSION	1	1				
10	68V–14565–00	SCREW VIS	2	2				
11	68V–14356–00	WASHER, SPRING RONDELLE	2	2				
12	68V–14264–00	COLLAR COLLERETTE	2	2				
13	68V–21841–00	COOLER RADIATEUR	1	1				
14	68V–13971–00	PIPE, FUEL 1 TUBE 1, CARBURANT	1	1				
15	68V–13972–00	PIPE, FUEL 2 TUBE 2, CARBURANT	1	1				
16	68V–24519–00	CLIP JONC	3	3				
17	68V–2411M–00	CLIP JONC	3	3				
18	68V–14777–00	BOLT BOULON	2	2				
19	68V–14428–00	BOLT BOULON	2	2				
20	68V–14475–00	WASHER RONDELLE	2	2				
21	68V–14357–00	WASHER, PLAIN RONDELLE PLATE	3	3				
22	68V–14446–00	BOLT BOULON	1	1				
23	68V–14265–00	COLLAR COLLERETTE	3	3				
24	97095–06010	BOLT BOULON	4	4				
25	90430–06014	GASKET JOINT	4	4				
26	68V–2447A–00	HOSE 1 DURITE 1	1	1				
27	68V–2247B–00	HOSE 2 DURITE 2	1	1				

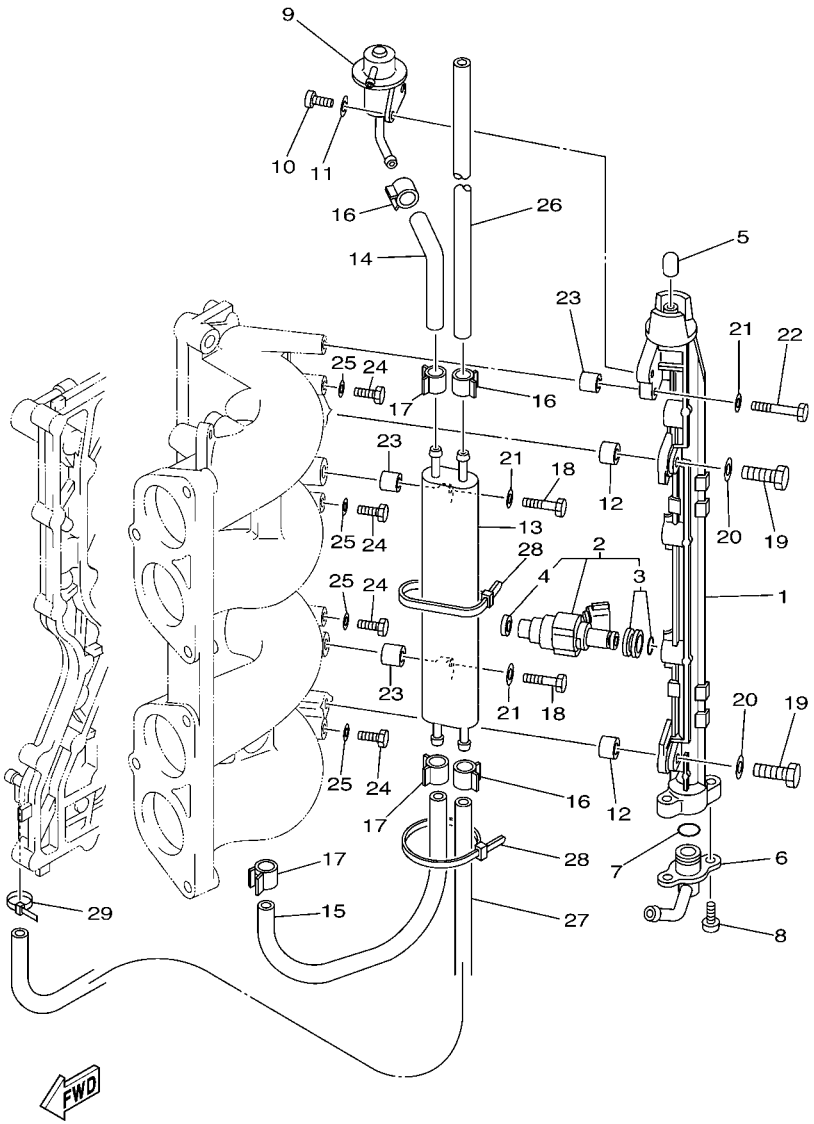

FIG. 8 FUEL INJECTION NOZZLE — FUEL INJECTION NOZZLE

REF. NO.	PART NO. N° PIECES	DESCRIPTION DESCRIPTION	68V4	68W4				REMARKS REMARQUES
28	68V–2481H–00	CLAMP BRIDE	2	2				
29	90465–11M10	CLAMP BRIDE	1	1				

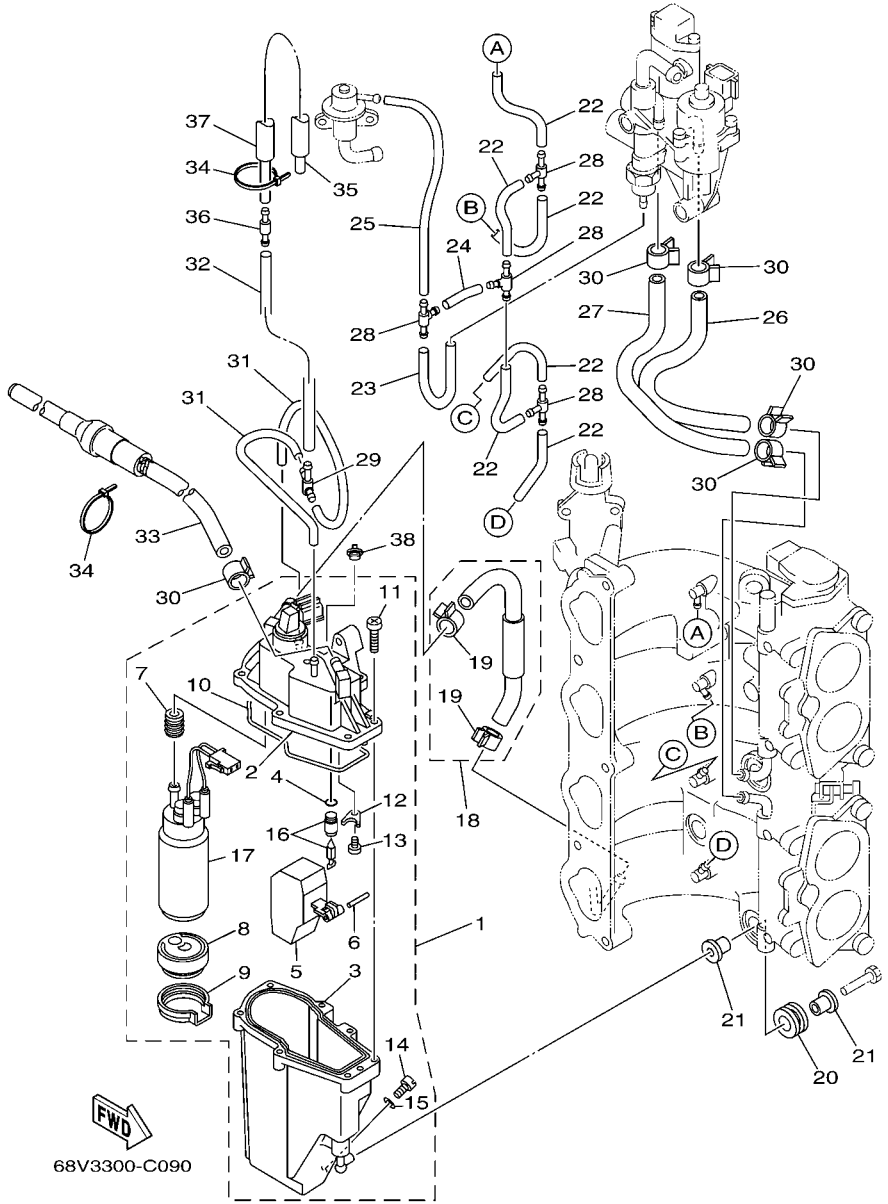

FIG. 9 FUEL INJECTION PUMP FUEL INJECTION PUMP

REF. NO.	PART NO. N° PIECES	DESCRIPTION DESCRIPTION	68V4	68W4				REMARKS REMARQUES
1	68V–14180–02	FLOAT CHAMBER ASSY CUVE DE FLOTTEUR	1	1				
2	68V–14182–01	.COVER, FLOAT CHAMBER .COUVERCLE, CUVE DE FLOTTEUR	1	1				
3	68V–14181–00	.BODY, FLOAT CHAMBER 1 .CORPS, CUVE DE FLOTTEUR 1	1	1				
4	68V–13769–00	.O-RING .JOINT TORIQUE	1	1				
5	68V–14985–00	.FLOAT .FLOTTEUR	1	1				
6	68V–14386–00	.PIN, FLOAT .AXE, FLOTTEUR	1	1				
7	68V–13781–00	.DAMPER, PUMP .AMORTISSEUR, POMPE	1	1				
8	68V–13915–00	.FILTER .FILTRE	1	1				
9	68V–13784–00	.COVER, PUMP .COUVERCLE, POMPE	1	1				
10	68V–14984–00	.GASKET, FLOAT CHAMBER .JOINT, CUVE DE FLOTTEUR	1	1				
11	68V–14567–00	.SCREW .VIS	7	7				
12	68V–14255–00	.PLATE .PLAQUE	1	1				
13	68V–14592–00	.SCREW .VIS	1	1				
14	68V–14191–00	.PLUG, DRAIN .PLOT, VIDANGE	1	1				
15	68V–14126–00	.GASKET .JOINT	1	1				
16	68V–14546–00	.VALVE, NEEDLE .POINTEAU	1	1				
17	68V–13907–02	.FUEL PUMP COMP. .POMPE A CARBURANT COMP.	1	1				
18	68V–14807–00	HOSE COMP. DURITE (ENS.)	1	1				
19	68V–24387–00	.CLIP .SANDOW	2	2				
20	68V–13593–00	DAMPER AMORTISSEUR	3	3				
21	68V–13716–00	COLLAR COLLERETTE	6	6				
22	68V–13542–00	HOSE, VACUUM SENSING 1 DURITE 1	6	6				
23	68V–13533–00	HOSE, VACUUM SENSING 4 DURITE 4	1	1				
24	68V–13544–00	HOSE, VACUUM SENSING 2 DURITE 2	1	1				
25	68V–13532–00	HOSE, VACUUM SENSING 3 DURITE 3	1	1				
26	68V–13545–00	HOSE 1 DURITE 1	1	1				
27	68V–13546–00	HOSE 2 DURITE 2	1	1				

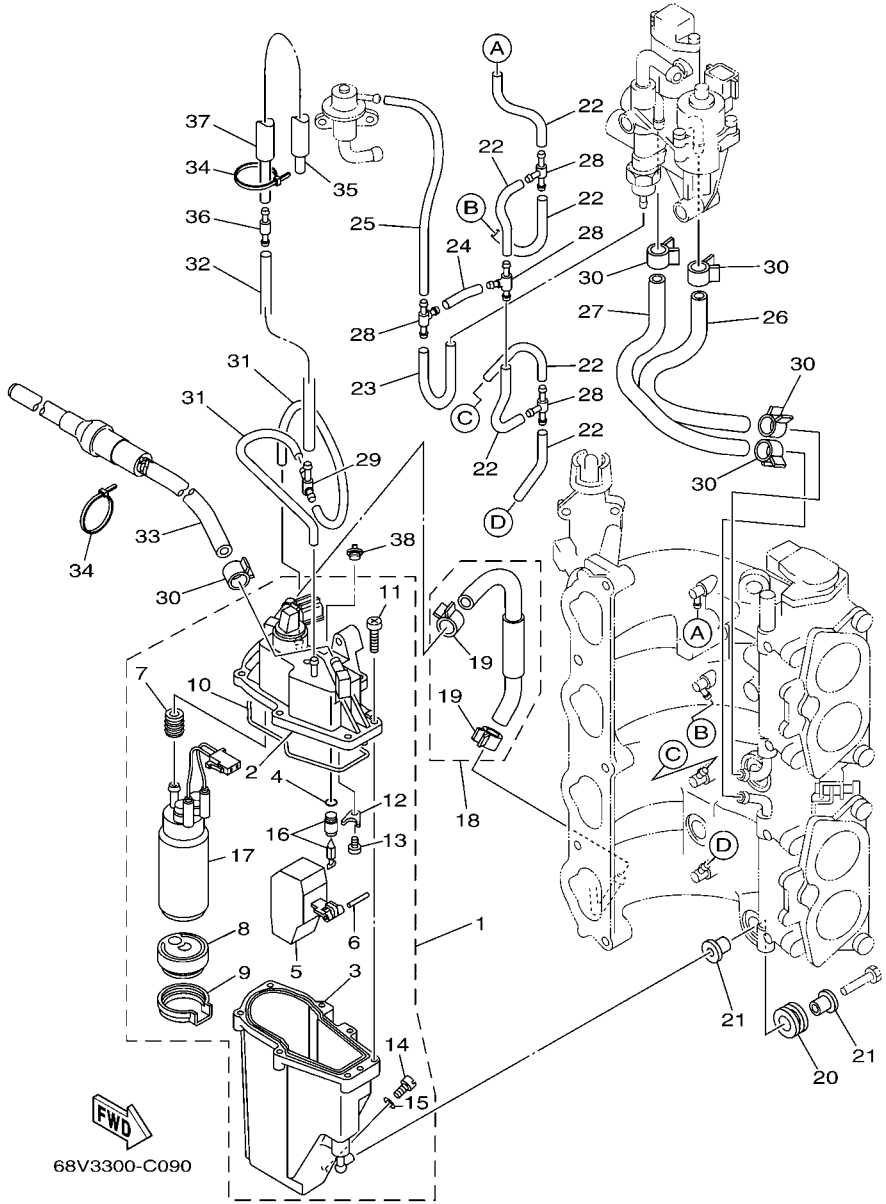

FIG. 9 FUEL INJECTION PUMP — FUEL INJECTION PUMP

REF. NO.	PART NO. N° PIECES	DESCRIPTION DESCRIPTION	68V4	68W4				REMARKS REMARQUES
28	68V–24377–00	PIPE, JOINT 3 DURITE RACCORDEMENT 3	4	4				
29	68V–24379–00	PIPE, JOINT 4 DURITE RACCORDEMENT 4	1	1				
30	68V–13577–00	CLIP AGRAFE	5	5				
31	68V–13534–00	HOSE, VACUUM SENSING 5 DURITE 5	2	2				
32	68V–13547–01	HOSE 3 DURITE 3	1	1				
33	68V–24502–00	FILTER, FUEL FILTRE	1	1				
34	68V–2481H–00	CLAMP BRIDE	2	2				
35	68V–13535–00	HOSE, VACUUM SENSING 5 DURITE 5	1	1				
36	68V–13490–01	RELIEF VALVE ASSY SOUPAPE DE SECURITE COMPLET	1	1				
37	68V–13543–00	HOSE, AIR DURITE, A AIR	1	1				
38	69J–14225–00	CAP COUVERCLE	1	1				

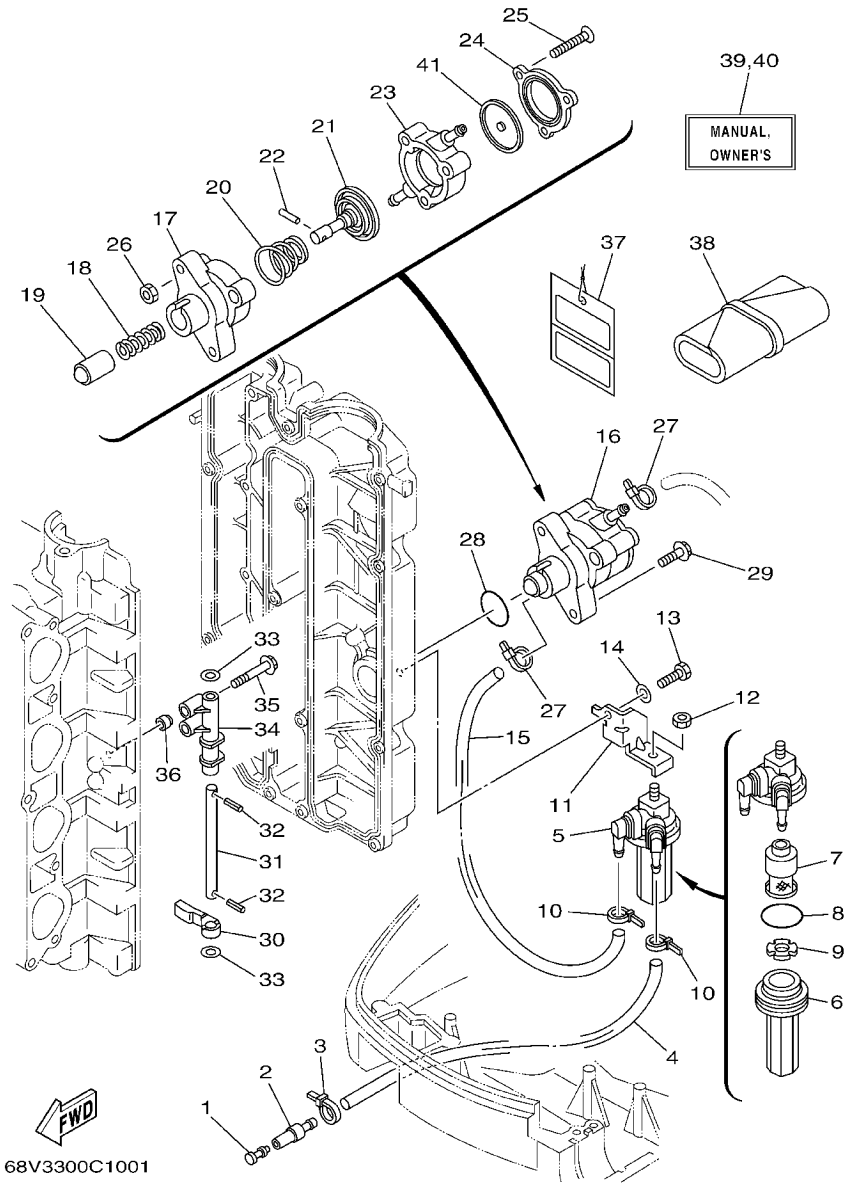

FIG. 10 FUEL 1 — CARBURANT 1

REF. NO.	PART NO. N° PIECES	DESCRIPTION DESCRIPTION	68V4	68W4				REMARKS REMARQUES
1	689–85547–00	DAMPER AMORTISSEUR	1	1				
2	6R3–24377–00	PIPE, JOINT 3 DURITE RACCORDEMENT 3	1	1				
3	90465–11M10	CLAMP BRIDE	1	1				
4	90445–13M27	HOSE (L950) DURITE (L950)	1	1				
5	68V–24560–01	FILTER ASSY ENS FILTRE	1	1				
6	68V–24521–01	.CUP, FILTER .CUVETTE, FILTRE	1	1				
7	68V–24563–00	.ELEMENT, FILTER .ELEMENT, FILTRE	1	1				
8	93210–32738	.O-RING .JOINT TORIQUE	1	1				
9	68V–24469–01	.FLOAT, WATER LEVEL .FLOTTEUR	1	1				
10	90465–11M10	CLAMP BRIDE	2	2				
11	68V–24566–00	BRACKET, FILTER SUPPORT, FILTRE	1	1				
12	95380–08600	NUT ECROU	1	1				
13	97095–06016	BOLT BOULON	1	1				
14	92995–06600	WASHER RONDELLE	1	1				
15	90445–13M11	HOSE (L300) DURITE (L300)	1	1				
16	68V–24410–00	FUEL PUMP ASSY POMPE A ESSENCE	1	1				
17	68V–24412–00	.BODY 1 .CORPS 1	1	1				
18	68V–24454–00	.SPRING .RESSORT	1	1				
19	68V–13131–00	.PLUNGER .PLONGEUR	1	1				
20	68V–24423–00	.SPRING, DIAPHRAGM .RESSORT, DIAPHRAGME	1	1				
21	68V–24411–00	.DIAPHRAGM .DIAPHRAGME	1	1				
22	68V–24374–00	.PIN .GOUPILLE	1	1				
23	68V–24413–00	.BODY 2 .CORPS 2	1	1				
24	68V–24414–00	.BODY 3 .CORPS 3	1	1				
25	68V–24444–00	.SCREW .VIS	3	3				
26	68V–24149–00	.NUT .ECROU	3	3				
27	90465–11M10	CLAMP BRIDE	2	2				

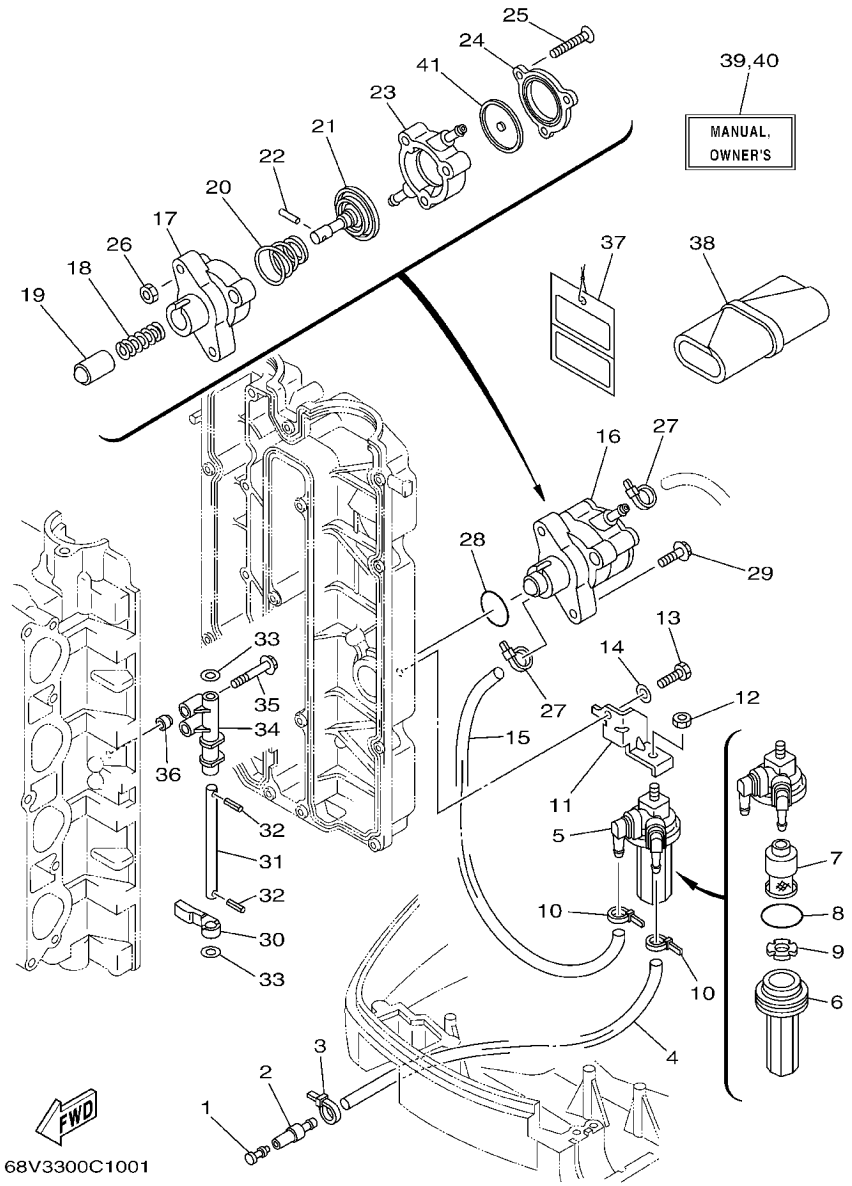

FIG. 10 FUEL 1 — CARBURANT 1

REF. NO.	PART NO. N° PIECES	DESCRIPTION DESCRIPTION	68V4	68W4				REMARKS REMARQUES
28	93210–30682	O-RING JOINT TORIQUE	1	1				
29	90119–06M83	BOLT, WITH WASHER BOULON, AVEC RONDELLE	2	2				
30	67F–24575–00	LEVER, FUEL CHANGE LEVIER, D'ESSENCE	1	1				
31	68V–24495–00	SHAFT AXE	1	1				
32	91609–25014	PIN, SPRING AXE DE RESSORT	2	2				
33	90201–08M12	WASHER, PLATE RONDELLE, PLATE	2	2				
34	67F–24491–00	BRACKET, FUEL PUMP SUPPORT, POMPE A ESSENCE	1	1				
35	90119–07235	BOLT/WASHER-CAM CAPS BOULON, AVEC RONDELLE	2	2				
36	91809–08006	SLEEVE GUIDE-DOWEL GOUJON, D'ASSEMBLAGE	2	2				
37	61H–2819R–31	TAG, WARNING ETIQUETTE, AVERTISSEMENT	1	1				
38	67F–28100–01	TOOL KIT TROUSSE A OUTILS	1	1				
39	68V–28199–75–E0	MANUAL,OWNER'S MANUEL D'UTILISATION	1	1				UR (E) UR (E)
	68V–28199–75–F0	MANUAL,OWNER'S MANUEL D'UTILISATION	1	1				UR (F) UR (F)
	68V–28199–75–S0	MANUAL,OWNER'S MANUEL D'UTILISATION	1	1				UR (ES) UR (ES)
	68V–28199–75–G0	MANUAL,OWNER'S MANUEL D'UTILISATION	1	1				UR (D) UR (D)
	68V–28199–75–D0	MANUAL,OWNER'S MANUEL D'UTILISATION	1	1				UR (NL) UR (NL)
	68V–28199–75–H0	MANUAL,OWNER'S MANUEL D'UTILISATION	1	1				UR (I) UR (I)
40	68V–28199–86–K0	MANUAL,OWNER'S MANUEL D'UTILISATION	1	1				UR (DK) UR (DK)
	68V–28199–86–R0	MANUAL,OWNER'S MANUEL D'UTILISATION	1	1				UR (GR) UR (GR)
	68V–28199–86–P0	MANUAL,OWNER'S MANUEL D'UTILISATION	1	1				UR (P) UR (P)
	68V–28199–86–N0	MANUAL,OWNER'S MANUEL D'UTILISATION	1	1				UR (N) UR (N)
	68V–28199–86–M0	MANUAL,OWNER'S MANUEL D'UTILISATION	1	1				UR (S) UR (S)
	68V–28199–86–L0	MANUAL,OWNER'S MANUEL D'UTILISATION	1	1				UR (SF) UR (SF)
41	68V–24471–10	.DIAPHRAGM .DIAPHRAGME	1	1				

FIG. 11 FUEL 2 — CARBURANT 2

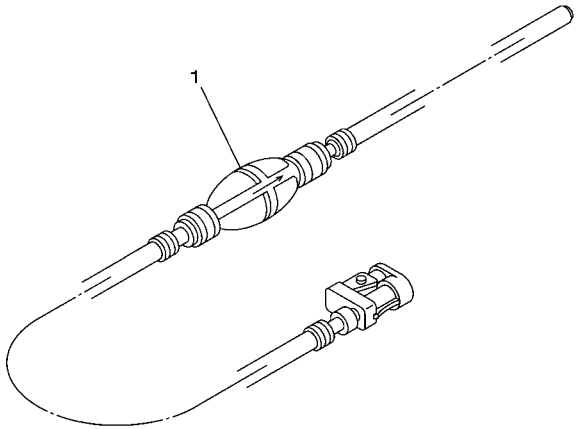

67F3300-C110

REF. NO.	PART NO. N° PIECES	DESCRIPTION DESCRIPTION	68V4	68W4				REMARKS REMARQUES
1	6YK–24306–43	FUEL PIPE COMP. 1 DURITE A ESSENCE 1	1	1				AP AP

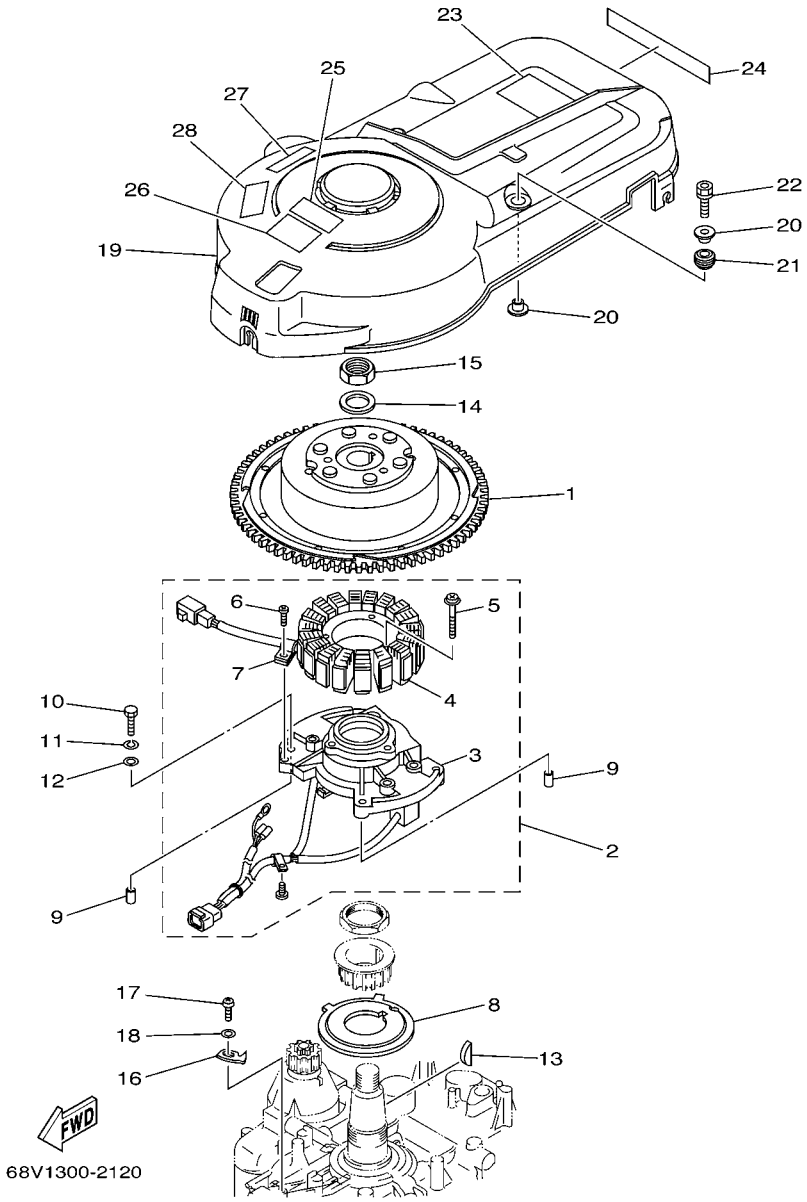

FIG. 12 GENERATOR GENERATRICE

REF. NO.	PART NO. N° PIECES	DESCRIPTION DESCRIPTION	68V4	68W4				REMARKS REMARQUES
1	68V–81450–00	ROTOR ASSY ROTOR COMPLET	1	1				
2	68V–81460–00	BASE ASSY ENS. FLASQUE	1	1				
3	68V–85580–00	.COIL, PULSER .BOBINE, PULSEUR	1	1				
4	68V–81410–00	.STATOR ASSY .STATOR COMPLET	1	1				
5	63D–81345–20	.SCREW, WITH WASHER (M6X30) .VIS, AVEC RONDELLE (M6X30)	3	3				
6	97607–04110	.SCREW,WITH WASHER .VIS HEXAGONAL	1	1				
7	445–81328–20	.CLAMP .COLLIER	1	1				
8	68V–81673–00	ROTOR ROTOR	1	1				
9	99530–08012	PIN, DOWEL GOUJON, D'ASSEMBLAGE	2	2				
10	97095–06030	BOLT BOULON	4	4				
11	92995–06100	WASHER, SPRING RONDELLE, GROWER	4	4				
12	92995–06600	WASHER RONDELLE	4	4				
13	90280–04M08	KEY, WOODRUFF CLAVETTE, DEMI-LUNE	1	1				
14	90201–24014	WASHER, PLATE RONDELLE, PLATE	1	1				
15	90179–24002	NUT ECROU	1	1				
16	6D8–81332–00	PLATE, TIMING PLATEAU, ALLUMAGE	1	1				
17	97885–06010	SCREW, PAN HEAD VIS, A ENCOCHE	1	1				
18	92995–06600	WASHER RONDELLE	1	1				
19	67F–81337–01	COVER, FLYWHEEL COUVERCLE, VOLANT	1	1				
20	90387–06M71	COLLAR COLLERETTE	4	4				
21	90480–15M31	GROMMET PASSE-FIL	2	2				
22	90119–06M92	BOLT, WITH WASHER BOULON, AVEC RONDELLE	2	2				
23	67F–12138–60	MARK, CAUTION MAKER	1	1				
24	68V–13437–60	MARK, CAUTION MAKER	1	1				
25	6A1–83625–41	MARK 5 ETIQUETTE 5	1	1				
26	6A1–83625–51	MARK 5 ETIQUETTE 5	1	1				
27	6K1–83623–41	MARK 3 ETIQUETTE 3		1				

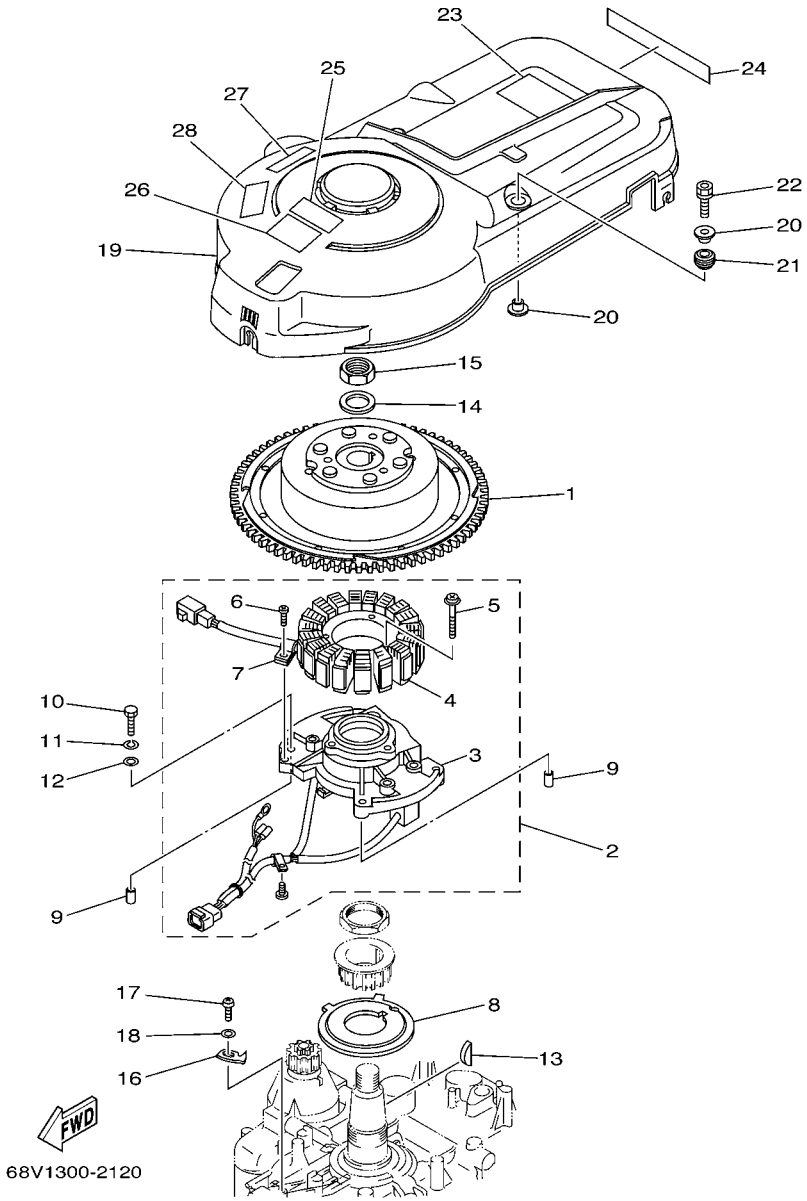

FIG. 12 GENERATOR GENERATRICE

REF. NO.	PART NO. N° PIECES	DESCRIPTION DESCRIPTION	68V4	68W4				REMARKS REMARQUES
28	6K1–83623–50	MARK 3 ETIQUETTE 3		1				

FIG. 13 ELECTRICAL 1 PARTIE ELECTRIQUE 1

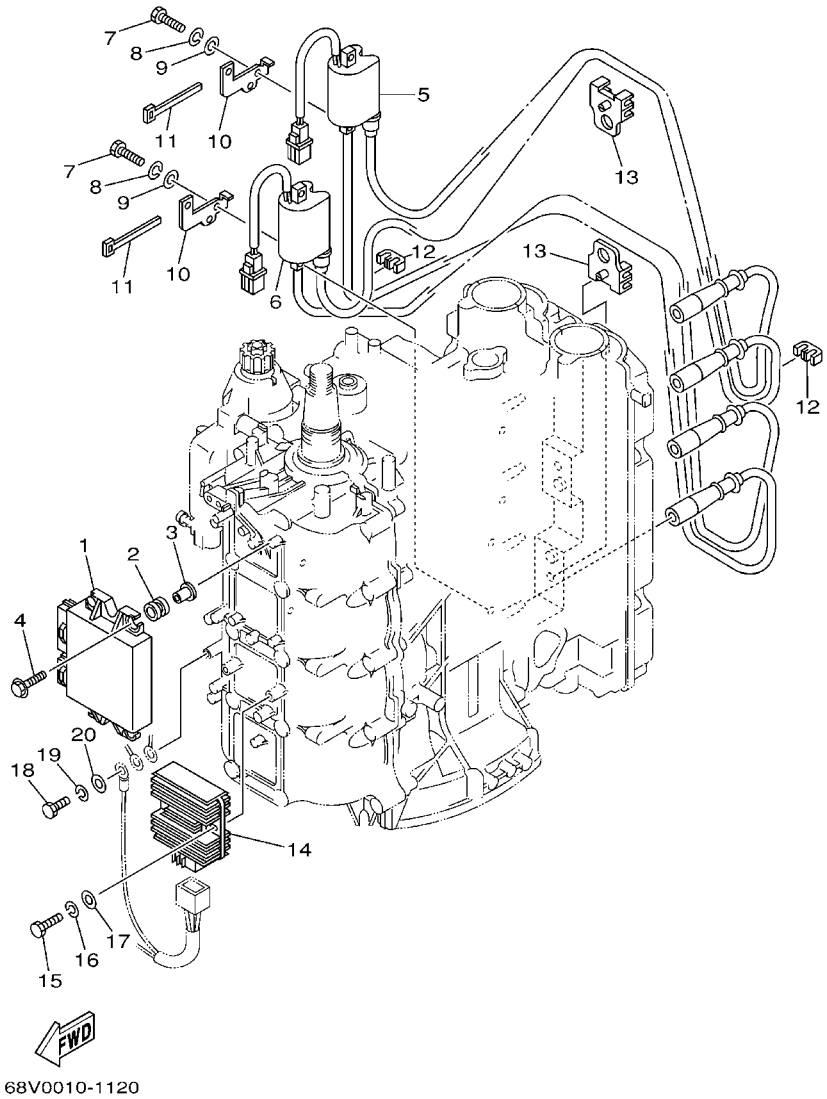

REF. NO.	PART NO. N° PIECES	DESCRIPTION DESCRIPTION	68V4	68W4				REMARKS REMARQUES
1	68V–8591A–13	ENGINE CONTROL UNIT ASSY BLOC DE CONTROL	1	1				
2	68V–82317–00	DAMPER, IGNITION COIL AMORTISSEUR, BOBINE D'ALLUM	4	4				
3	624–42542–00	PIPE TUYAU	4	4				
4	90119–06M59	BOLT, WITH WASHER BOULON, AVEC RONDELLE	4	4				
5	68V–82310–00	IGNITION COIL ASSY BOBINE D'ALLUMAGE	1	1				
6	68V–82310–10	IGNITION COIL ASSY BOBINE D'ALLUMAGE	1	1				
7	97095–06025	BOLT BOULON	4	4				
8	92995–06100	WASHER, SPRING RONDELLE, GROWER	4	4				
9	92995–06600	WASHER RONDELLE	4	4				
10	68V–82388–00	PLATE PLAQUETTE	2	2				
11	90464–06001	CLAMP BRIDE	2	2				
12	67F–82361–00	CLAMP, CORD COLLIER, CORDON	2	2				
13	67F–82362–00	CLAMP, CORD 2 COLLIER, CABLE 2	2	2				
14	68V–81960–00	RECTIFIER & REGULATOR ASSY REDRESSEUR REGULATEUR CPLT	1	1				
15	97095–06025	BOLT BOULON	2	2				
16	92995–06100	WASHER, SPRING RONDELLE, GROWER	2	2				
17	92995–06600	WASHER RONDELLE	2	2				
18	97095–06020	BOLT BOULON	1	1				
19	92995–06100	WASHER, SPRING RONDELLE, GROWER	1	1				
20	92995–06600	WASHER RONDELLE	1	1				

FIG. 14 ELECTRICAL 2 PARTIE ELECTRIQUE 2

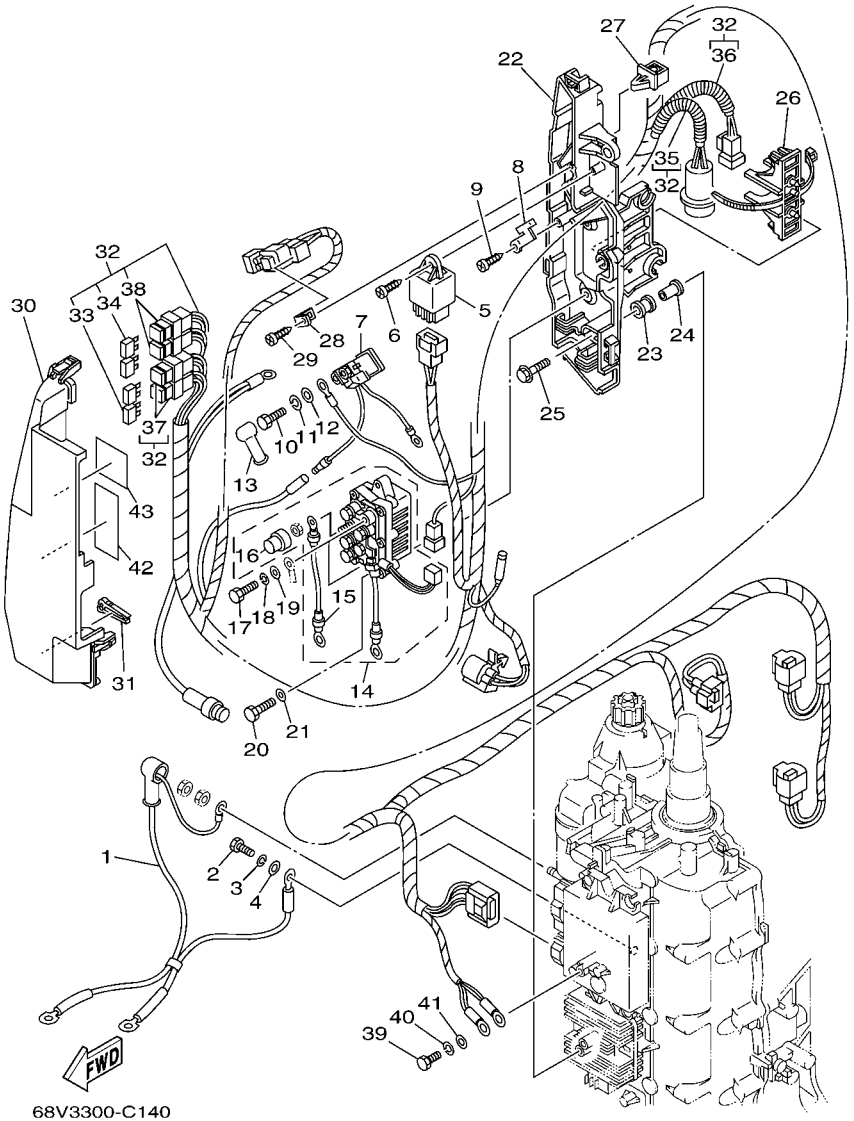

REF. NO.	PART NO. N° PIECES	DESCRIPTION DESCRIPTION	68V4	68W4				REMARKS REMARQUES
1	68V–82105–00	WIRE HARNESS FAISCEAU DE FILS	1	1				
2	97013–06020	BOLT BOULON	1	1				
3	92903–06100	WASHER, SPRING RONDELLE, GROWER	1	1				
4	92903–06600	WASHER, PLATE RONDELLE, PLATE	1	1				
5	68V–81950–00	RELAY ASSY RELAIS COMPLET	1	1				
6	97780–60625	SCREW, TAPPING VIS, TETE BOMBEE	1	1				
7	68V–8194A–00	RELAY RELAIS	1	1				
8	68V–81953–00	STAY, RELAY SUPPORT, RELAIS	1	1				
9	97780–60620	SCREW, TAPPING VIS, TETE BOMBEE	1	1				
10	97095–06010	BOLT BOULON	2	2				
11	92995–06100	WASHER, SPRING RONDELLE, GROWER	2	2				
12	92995–06600	WASHER RONDELLE	2	2				
13	6G5–82119–00	COVER, LEAD WIRE GARNITURE, FIL	2	2				
14	68V–8195B–01	RELAY ASSY RELAIS COMPLET	1	1				
15	68V–81949–00	.WIRE, LEAD .FIL	1	1				
16	68V–82532–00	.CAP .COUVERCLE	1	1				
17	97095–06010	BOLT BOULON	2	2				
18	92995–06100	WASHER, SPRING RONDELLE, GROWER	2	2				
19	92995–06600	WASHER RONDELLE	2	2				
20	97013–06020	BOLT BOULON	2	2				
21	92903–06600	WASHER, PLATE RONDELLE, PLATE	2	2				
22	68V–81948–01	BRACKET JOINT TORIQUE	1	1				
23	6A0–82317–00	DAMPER, IGNITION COIL AMORTISSEUR, BOBINE D'ALLUM	5	5				
24	624–42542–00	PIPE TUYAU	5	5				
25	90119–06M59	BOLT, WITH WASHER BOULON, AVEC RONDELLE	5	5				
26	68V–82594–00	CLAMP BRIDE	1	1				
27	90464–12M58	CLAMP BRIDE	1	1				

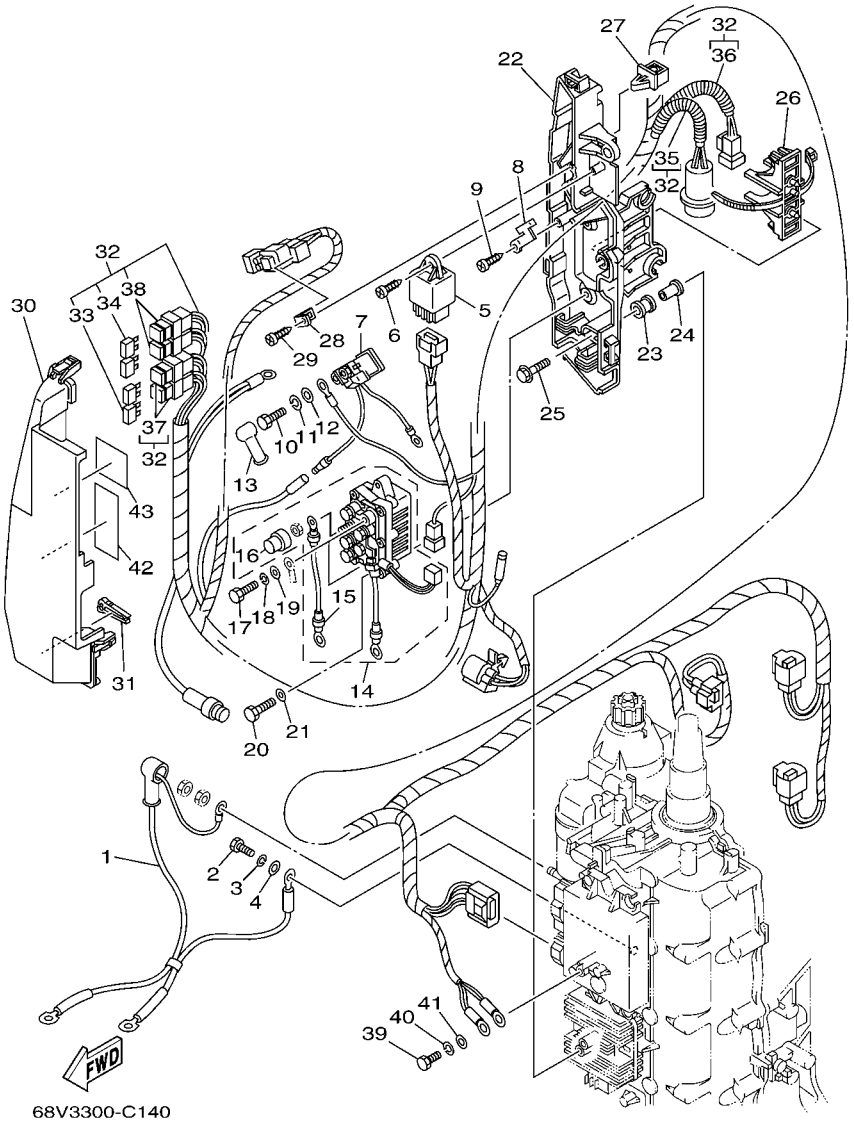

FIG. 14 ELECTRICAL 2 PARTIE ELECTRIQUE 2

REF. NO.	PART NO. N° PIECES	DESCRIPTION DESCRIPTION	68V4	68W4				REMARKS REMARQUES
28	68V–85548–00	HOLDER SUPPORT	1	1				
29	97780–60620	SCREW, TAPPING VIS, TETE BOMBEE	1	1				
30	68V–81942–02	COVER COUVERCLE	1	1				
31	67F–2812A–00	PULLER, FUSE TENDEUR, FUSIBLE	1	1				
32	68V–82590–10	WIRE HARNESS ASSY FAISCEAU DE FILS COMPLET	1	1				
33	67F–82151–00	.FUSE (20A) .FUSIBLE (20A)	4	4				
34	67F–82151–10	.FUSE (30A) .FUSIBLE (30A)	4	4				
35	90447–10003	.HOSE, WITH SPRING .DURITE, AVEC RESSORT	1	1				
36	90447–07007	.HOSE, WITH SPRING .DURITE, AVEC RESSORT	1	1				
37	67F–8215B–10	.CAP (YELLOW) .BOUCHON (YELLOW)	2	2				
38	67F–8215B–20	.CAP (GREEN) .BOUCHON (GREEN)	2	2				
39	97095–06020	BOLT BOULON	1	1				
40	92995–06100	WASHER, SPRING RONDELLE, GROWER	1	1				
41	92995–06600	WASHER RONDELLE	1	1				
42	68V–81919–00	GRAPHIC, REGULATOR ADHESIF, REGULATEUR	1	1				
43	68V–81919–10	GRAPHIC, REGULATOR ADHESIF, REGULATEUR	1	1				

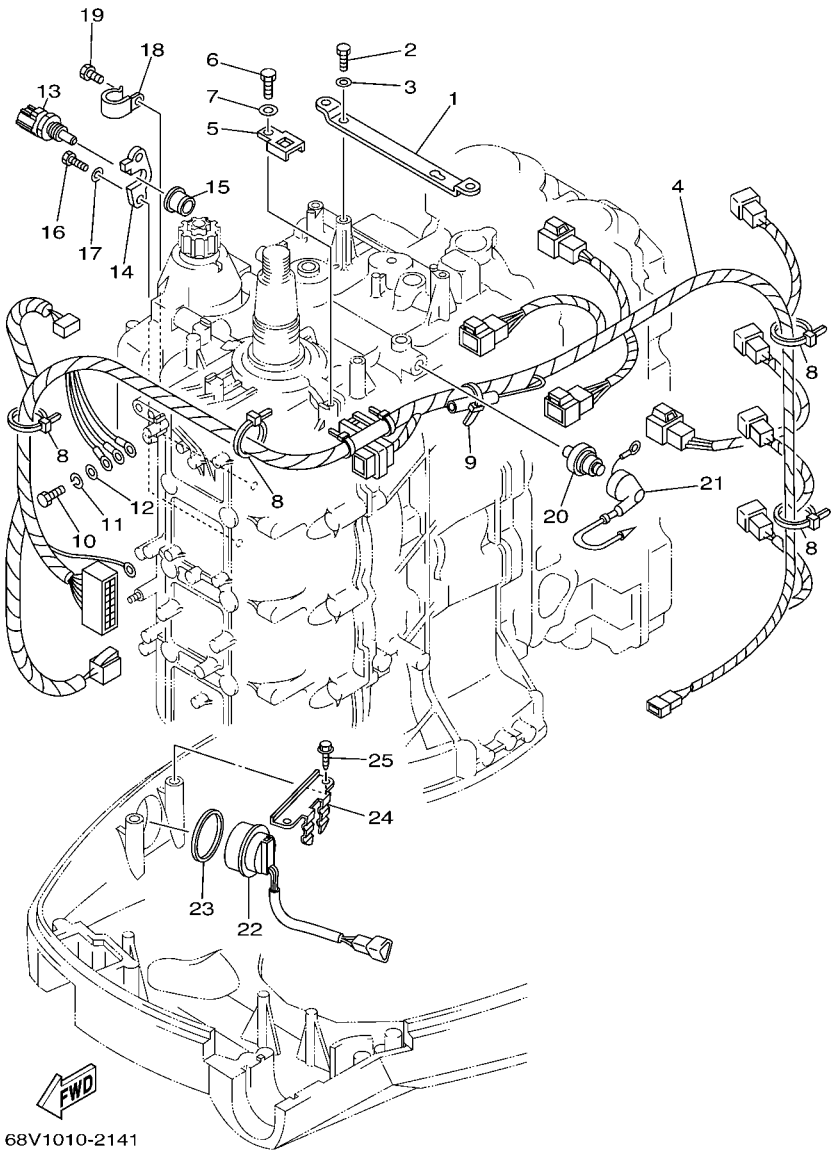

FIG. 15 ELECTRICAL 3 — PARTIE ELECTRIQUE 3

REF. NO.	PART NO. N° PIECES	DESCRIPTION DESCRIPTION	68V4	68W4				REMARKS REMARQUES
1	67F–8132G–01	PLATE PLAQUE	1	1				
2	97095–06016	BOLT BOULON	2	2				
3	92995–06600	WASHER RONDELLE	2	2				
4	68V–8259M–00	WIRE HARNESS ASSY 2 FAISCEAU DE FILS	1	1				
5	68V–82588–00	PLATE PLAQUE	1	1				
6	97095–06012	BOLT BOULON	1	1				
7	92995–06600	WASHER RONDELLE	1	1				
8	90465–13M18	CLAMP BRIDE	7	7				
9	90465–11M10	CLAMP BRIDE	1	1				
10	97095–06020	BOLT BOULON	1	1				
11	92995–06100	WASHER, SPRING RONDELLE, GROWER	1	1				
12	92995–06600	WASHER RONDELLE	1	1				
13	67F–85790–00	THERMOSENSOR ASSY SENSITOMETRE	1	1				
14	67F–85757–00	RETAINER ARRETOIR	1	1				
15	68V–85753–00	GASKET, SENDER UNIT JOINT, DE PERCEPTION	1	1				
16	97095–06016	BOLT BOULON	2	2				
17	92995–06600	WASHER RONDELLE	2	2				
18	90465–06M86	CLAMP BRIDE	1	1				
19	97095–06010	BOLT BOULON	1	1				
20	68V–82504–00	OIL PRESSURE SWITCH ASSY CONTACTEUR DE PRESSION D'HUILE	1	1				
21	68V–81315–00	LEAD WIRE ASSY FIL	1	1				
22	63D–82563–10	TRIM & TILT SWITCH ASSY INCLINER ET PARER COMMUTATEUR	1	1				
23	6E5–82587–00	GASKET JOINT	1	1				
24	67F–83614–00	BRACKET SUPPORT	1	1				
25	90109–06M86	BOLT BOULON	2	2				

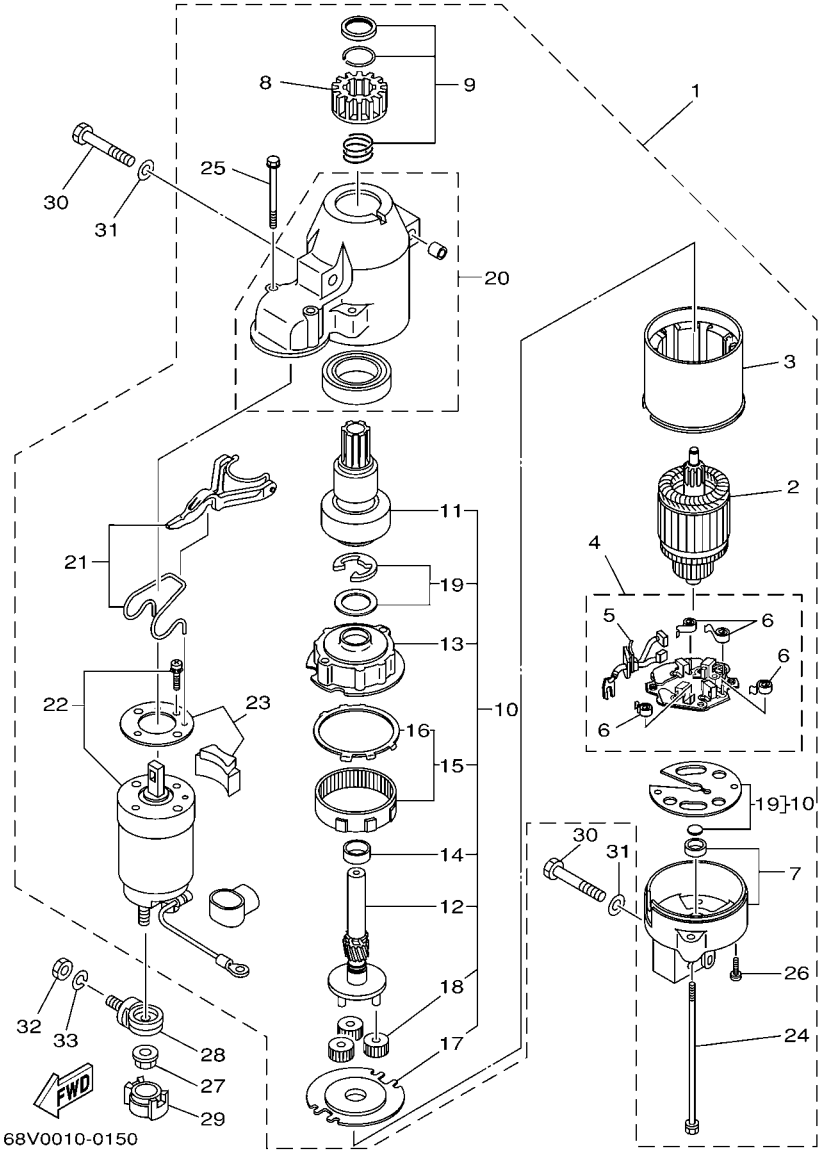

FIG. 16 STARTING MOTOR DEMARREUR ELECTRIQUE

REF. NO.	PART NO. N° PIECES	DESCRIPTION DESCRIPTION	68V4	68W4				REMARKS REMARQUES
1	68V–81800–01	STARTING MOTOR ASSY DEMARREUR ELECTRIQUE COMPLET	1	1				
2	67F–81850–00	.ARMATURE ASSY .INDUIT	1	1				
3	67F–81810–00	.STATOR ASSY .STATOR COMPLET	1	1				
4	68F–81840–00	.BRUSH HOLDER ASSY .SUPPORT DE CHARBON	1	1				
5	67F–81801–00	..BRUSH SET ..CHARBON	1	1				
6	67F–81813–00	..SPRING, BRUSH ..RESSORT, DE CHARBON	4	4				
7	68F–81820–00	.REAR BRACKET ASSY .SUPPORT ARRIERE COMPLET	1	1				
8	67F–81808–00	.PINION ASSY .PIGNON	1	1				
9	67F–81857–00	.PINION STOPPER SET .BUTEE PIGNON	1	1				
10	67F–81807–00	.GEAR ASSY, STARTING MOTOR .PIGNON, DEMARREUR ELECTRIQUE	1	1				
11	67F–81832–00	..CLUTCH, OVER RUN ..EMBRAYAGE, ROUE LIBRE	1	1				
12	67F–81836–00	..SHAFT, PINION ..AXE, PIGNON	1	1				
13	67F–81821–00	..BRACKET, CENTER 1 ..SUPPORT, CENTRE 1	1	1				
14	67F–81841–00	..BEARING ..ROULEMENT	1	1				
15	67F–81891–00	..GEAR, RING ..ROUE DENTEE	1	1				
16	67F–8183R–00	...GASKET ...JOINT	1	1				
17	67F–81830–00	..BRACKET, CENTER 2 ..SUPPORT, CENTRE 2	1	1				
18	60V–8183T–00	..GEAR, IDLER ..PIGNON, INTERMEDIAIRE	3	3				
19	67F–81809–00	..WASHER KIT ..JEU DE RONDELLES	1	1				
20	67F–81842–00	.COVER .COUVERCLE	1	1				
21	67F–81839–00	.LEVER ASSY .LEVIER COMPLET	1	1				
22	68V–81941–01	.STARTER RELAY ASSY .LANCEUR RELAIS (ENS.)	1	1				
23	67F–81869–00	.COVER, DUST .COUVERCLE, POUSSIERE	1	1				
24	6K7–81826–10	.BOLT .BOULON	2	2				
25	67F–81828–00	.BOLT 2 .RONDELLE, BUTEE 2	2	2				
26	67F–81846–00	.SCREW .VIS	2	2				
27	90179–08003	NUT ECROU	1	1				

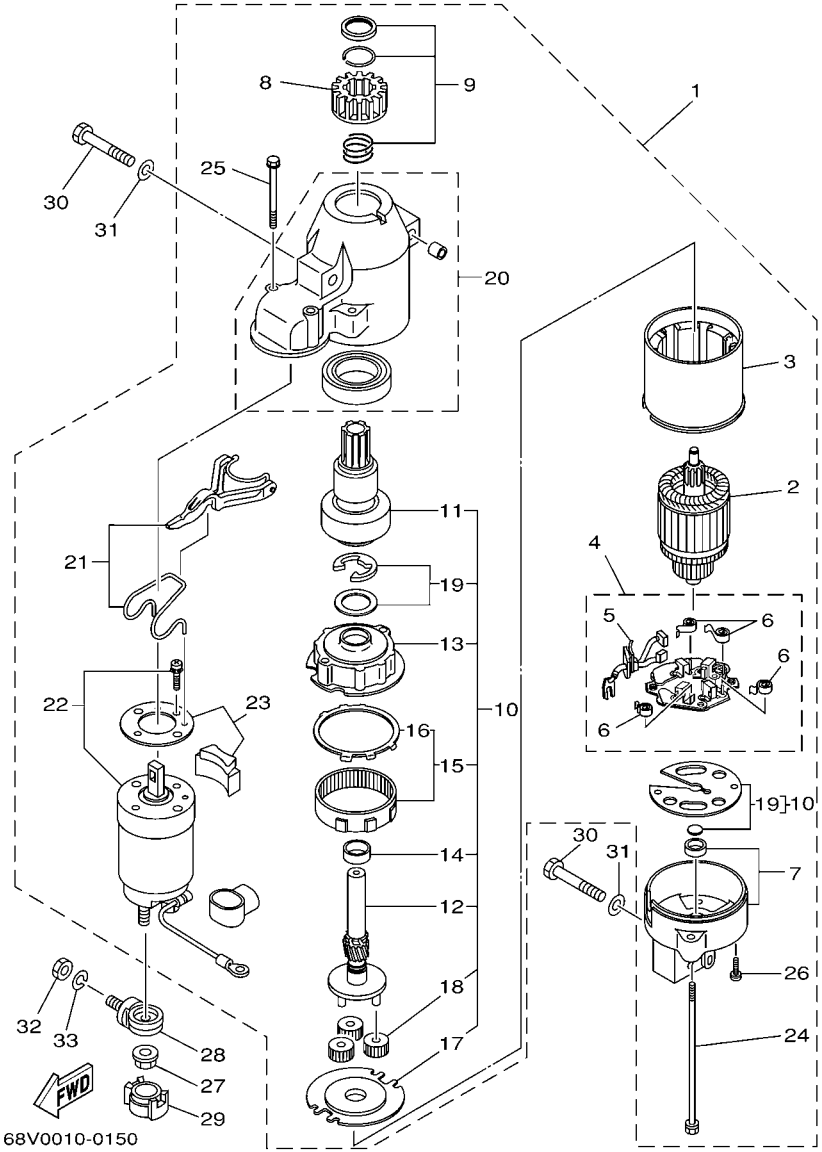

FIG. 16 STARTING MOTOR DEMARREUR ELECTRIQUE

REF. NO.	PART NO. N° PIECES	DESCRIPTION DESCRIPTION	68V4	68W4				REMARKS REMARQUES
28	60V–81925–00	TERMINAL BORNE	1	1				
29	68F–82582–00	COVER, WIRE HARNESS COUVERCLE, FAISCEAU DE FILS	1	1				
30	97013–08045	BOLT BOULON	3	3				
31	92903–08600	WASHER, PLATE RONDELLE, PLATE	3	3				
32	95333–08600	NUT ECROU	1	1				
33	92903–08100	WASHER, SPRING RONDELLE, GROWER	1	1				

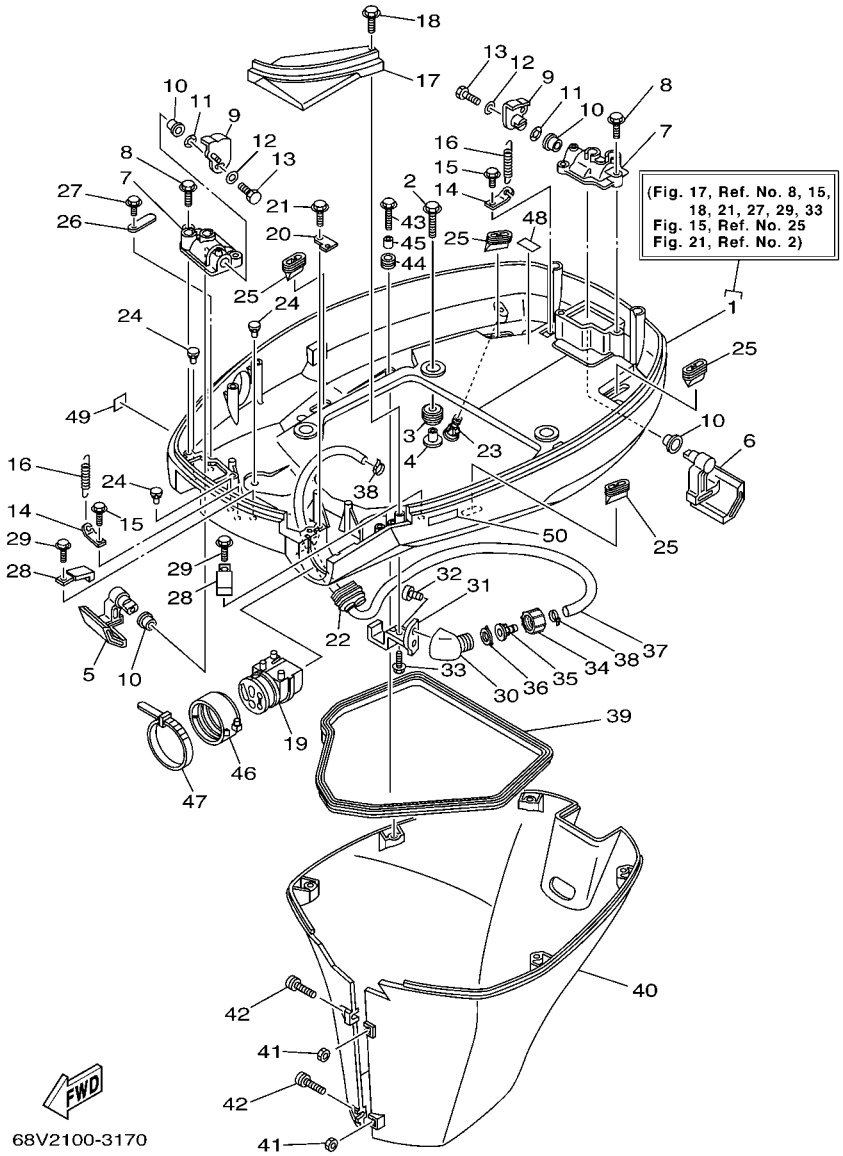

FIG. 17 BOTTOM COWLING CAPOT INFERIEUR

REF. NO.	PART NO. N° PIECES	DESCRIPTION DESCRIPTION	68V4	68W4				REMARKS REMARQUES
1	68V–42710–01–8D	BOTTOM COWLING ASSY ENS. EMBASE	1	1				
2	90119–08M22	BOLT, WITH WASHER BOULON, AVEC RONDELLE	4	4				
3	90480–22M15	GROMMET PASSE-FIL	4	4				
4	90387–08M37	COLLAR COLLERETTE	4	4				
5	67F–42815–00–8D	LEVER, CLAMP LEVIER, PRESSE	1	1				
6	67F–42816–00–8D	LEVER, CLAMP LEVIER, PRESSE	1	1				
7	67F–42828–00–5B	PLATE, CLAMP PLAQUE, PRESSE	2	2				
8	90109–06M82	BOLT BOULON	4	4				
9	68V–42818–01	LEVER, CLAMP LEVIER, PRESSE	2	2				
10	90386–15M73	BUSH DOUILLE	4	4				
11	90206–15M18	WASHER, WAVE RONDELLE, ONDULEE	2	2				
12	90201–06068	WASHER, PLATE RONDELLE, PLATE	2	2				
13	97095–06016	BOLT BOULON	2	2				
14	64D–43144–00	HOOK, SPRING CROCHET	2	2				
15	90109–06M80	BOLT BOULON	2	2				
16	90506–16M34	SPRING, TENSION RESSORT, TENSION	2	2				
17	68V–42738–00–5B	PLATE, FITTING ETRIER	1	1				
18	90109–06M82	BOLT BOULON	2	2				
19	68V–42725–00	GROMMET PASSE-FIL	1	1				
20	67F–42756–00	STAY, CLAMP SUPPORT, COLLIER	1	1				
21	90109–06M86	BOLT BOULON	1	1				
22	6H1–42726–21	GROMMET PASSE-FIL	1	1				FLUSHING KIT FLUSHING KIT
23	6H3–44391–01	NIPPLE, HOSE RACCORD D'ESSENCE	1	1				
24	6H4–42748–00	GROMMET PASSE-FIL	3	3				
25	67F–42717–00	RUBBER, SEAL 2 JOINT EN CAOUTCHOUC 2	4	4				
26	6E5–82588–00	PLATE PLAQUE	1	1				
27	90109–06M81	BOLT BOULON	1	1				

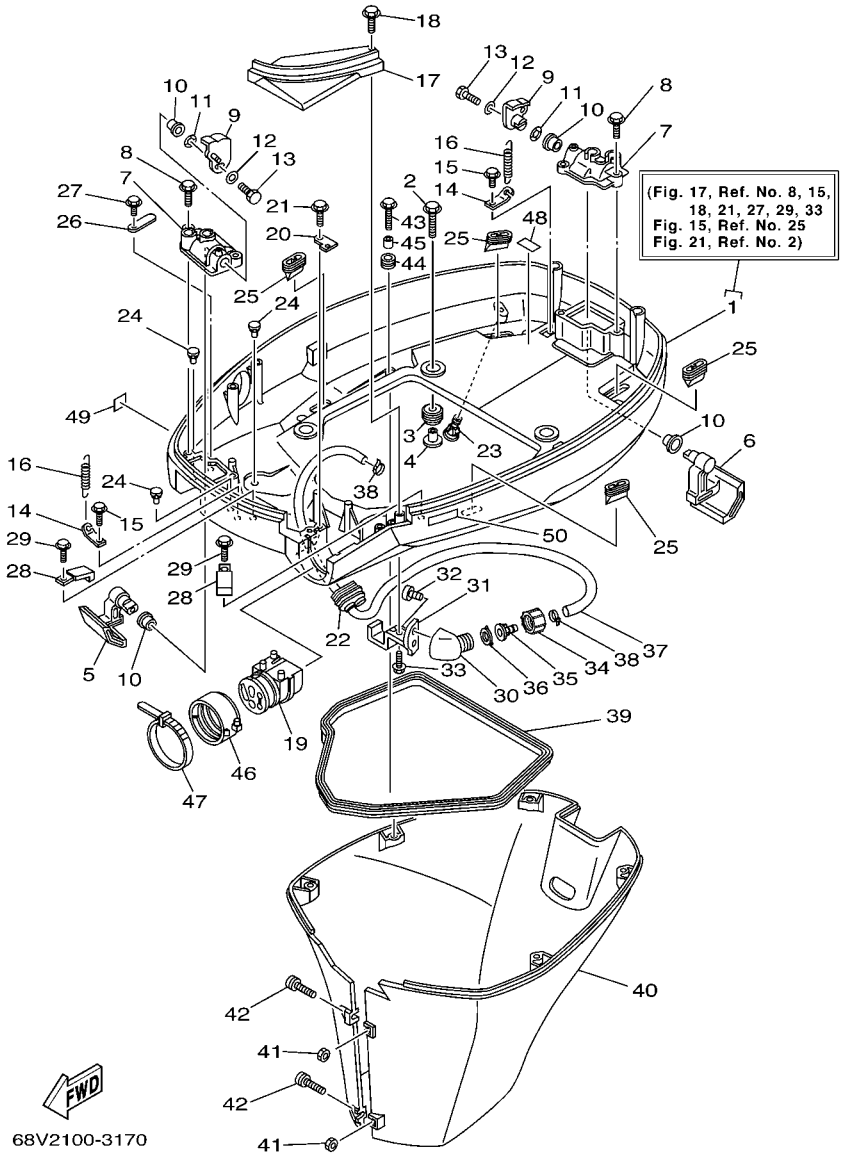

FIG. 17 BOTTOM COWLING CAPOT INFERIEUR

REF. NO.	PART NO. N° PIECES	DESCRIPTION DESCRIPTION	68V4	68W4				REMARKS REMARQUES
28	90465–08M23	CLAMP BRIDE	2	2				
29	90109–06M80	BOLT BOULON	2	2				
30	68T–12572–00	ADAPTER ADAPTATEUR	1	1				FLUSHING KIT FLUSHING KIT
31	67F–12535–00	PLATE PLAQUE	1	1				FLUSHING KIT FLUSHING KIT
32	90167–06002	SCREW, TAPPING VIS, TETE FRAISEE	2	2				FLUSHING KIT FLUSHING KIT
33	90109–06M86	BOLT BOULON	1	1				FLUSHING KIT FLUSHING KIT
34	6R3–12581–00	JOINT, HOSE 1 JOINT DE TUYAU	1	1				FLUSHING KIT FLUSHING KIT
35	6R3–12582–00	JOINT, HOSE 2 RACCORD DE TUYAU 1	1	1				FLUSHING KIT FLUSHING KIT
36	6R3–12583–00	GASKET, HOSE JOINT JOINT	1	1				FLUSHING KIT FLUSHING KIT
37	68V–24312–00	PIPE 2 DURITE 2	1	1				FLUSHING KIT FLUSHING KIT
38	90465–11M10	CLAMP BRIDE	2	2				FLUSHING KIT FLUSHING KIT
39	61A–42716–00	RUBBER, SEAL 1 JOINT EN CAOUTCHOUC 1	1	1				
40	67F–42741–01–8D	APRON CAPOT LATERAL	1	1				
41	95380–06600	NUT, HEXAGON ECROU	2	2				
42	90159–06M28	SCREW, WITH WASHER VIS, AVEC RONDELLE	2	2				
43	90109–06M80	BOLT BOULON	5	5				
44	90480–13M24	GROMMET PASSE-FIL	5	5				
45	90387–06M43	COLLAR COLLERETTE	5	5				
46	68F–42753–00	FASTNER ATTACHE	1	1				AP AP
47	90464–20258	CLAMP BRIDE	1	1				AP AP
48	68V–82377–00	LABEL ETIQUETTE	1	1				
49	6A1–28176–00	LABEL, CAUTION ETIQUETTE, RECOMMANDATION	1	1				
50	6E3–8257H–00	PLATE, MARK PLAQUE, ADHESIF	1	1				

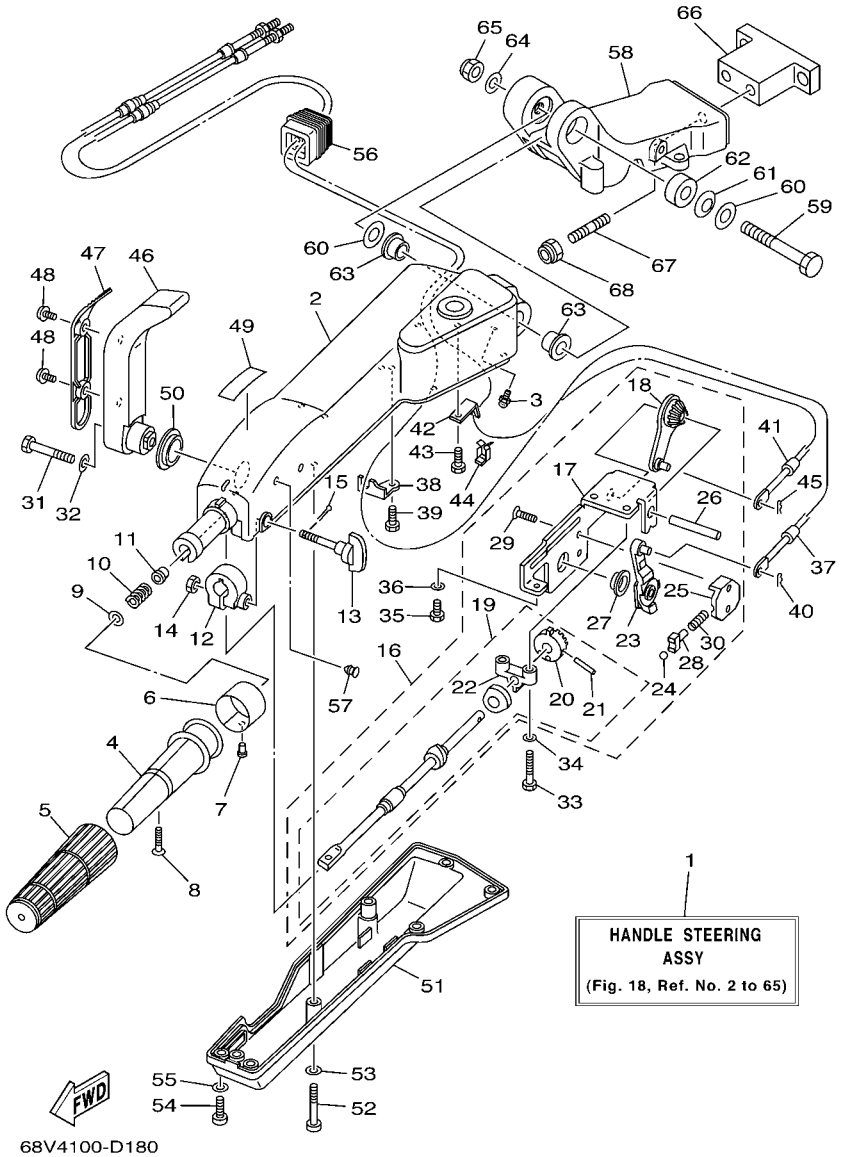

FIG. 18 STEERING 1 DIRECTION 1

REF. NO.	PART NO. N° PIECES	DESCRIPTION DESCRIPTION	68V4	68W4				REMARKS REMARQUES
1	67G–W0084–14–4D	HANDLE STEERING ASSY BARRE FRANCHE (ENS.)	1					AP AP
2	67G–42111–02–4D	HANDLE, STEERING POIGNEE	1					
3	93700–06M03	NIPPLE, GREASE PION	1					
4	664–42119–00	GRIP, STEERING HANDLE POIGNEE, BARRE FRANCHE	1					
5	6G1–42177–00	RUBBER, HANDLE CAOUTCHOUC, POIGNEE	1					
6	6H2–42137–00	INDICATOR, THROTTLE INDICATEUR, ACCELERATION	1					
7	90269–02M09	RIVET RIVET	1					
8	90149–05M13	SCREW VIS	1					
9	92903–10600	WASHER, PLATE RONDELLE, PLATE	1					
10	90501–23215	SPRING, COMPRESSION RESSORT, COMPRESSION	1					
11	90386–08032	BUSH DOUILLE	1					
12	63D–42126–00	FRICTION, STEERING HANDLE GRIP CUVETTE, POIGNEE DE DIRECTION	1					
13	63D–48154–00	KNOB, THROTTLE BOUTON, ACCELERATEUR	1					
14	95380–06600	NUT, HEXAGON ECROU	1					
15	91490–20010	PIN, COTTER GOUPILLE	1					
16	67G–44100–10	SHIFT LINK ASSY MAILLON DE SELECTEUR	1					
17	67G–44104–00	.PLATE COMP. .PLAQUE COMPLET	1					
18	67G–48261–00	.ARM, THROTTLE .BRAS, ACCELERATION	1					
19	67G–42115–10	.SHAFT, STEERING HANDLE .AXE, BARRE FRANCHE	1					
20	650–42152–00–94	..GEAR ..PIGNON	1					
21	91690–30025	..PIN, SPRING ..AGRAFFE	1					
22	67G–42159–00	..STAY ..SUPPORT	1					
23	67G–44113–00	.CAM PLATE, HANDLE .CAME, VERROUILLAGE	1					
24	63D–48236–00	.ROLLER, DETENT .POULIE	1					
25	63D–48119–00	.COVER .COQUILLE	1					
26	67G–42153–00	.SHAFT, THROTTLE CONTROL .AXE, COMMANDE D'ACCELERATION	1					
27	67G–44132–00	.BUSHING .COUSSINET	1					

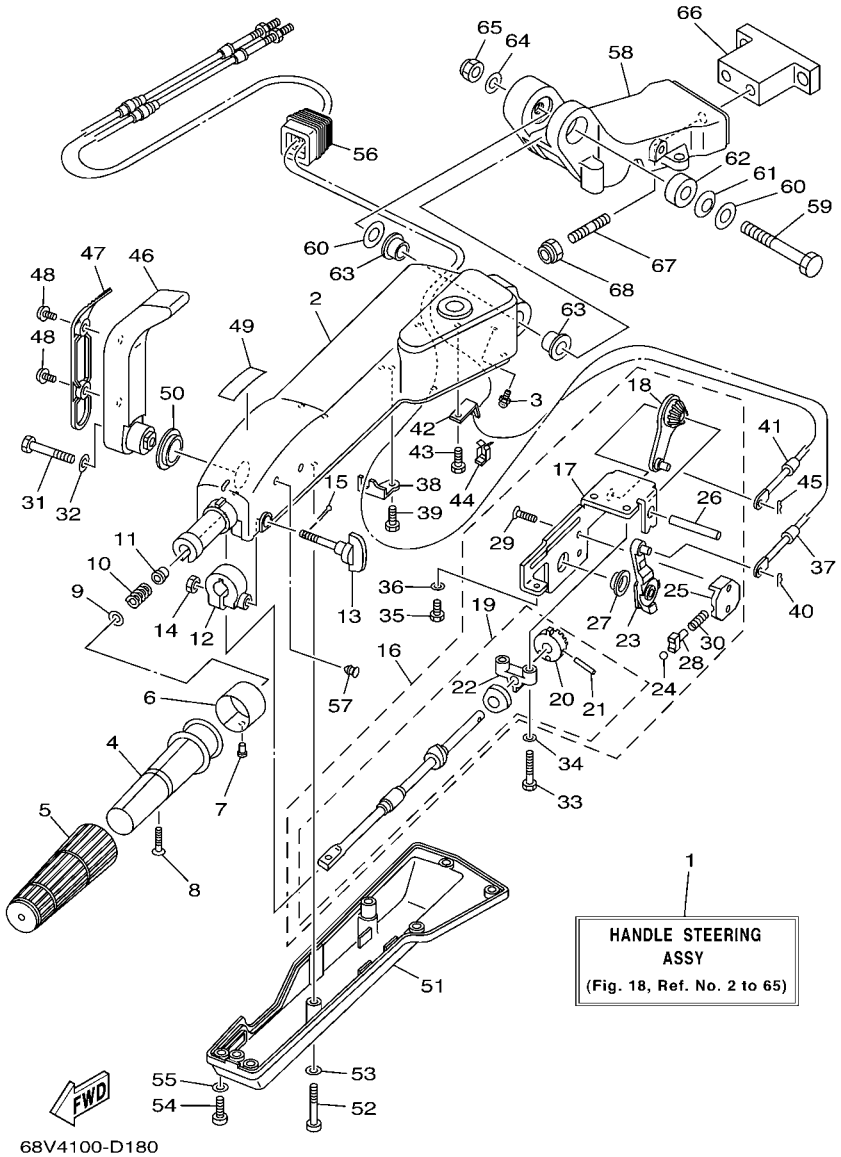

FIG. 18 STEERING 1 — DIRECTION 1

REF. NO.	PART NO. N° PIECES	DESCRIPTION DESCRIPTION	68V4	68W4				REMARKS REMARQUES
28	63D–48237–00	.ADAPTOR .ADAPTEUR	1					
29	98785–05014	.SCREW, FLAT HEAD .VIS, TETE PLATE	2					
30	63D–48238–00	.SPRING, DETENT .RESSORT	1					
31	97095–08040	BOLT BOULON	1					
32	92995–08600	WASHER RONDELLE	1					
33	97095–06030	BOLT BOULON	2					
34	92995–06600	WASHER RONDELLE	2					
35	97095–06014	BOLT BOULON	1					
36	92995–06600	WASHER RONDELLE	1					
37	67G–48321–10	CABLE CABLE	1					
38	67G–48531–00	BRACKET, REMOTE CONTROL 1 ETRIER 1, COMMANDE A DISTANCE	1					
39	97095–06014	BOLT BOULON	1					
40	90468–10005	CLIP JONC	1					
41	67G–26301–10	THROTTLE CABLE ASSY CABLE D'ACCELERATEUR	1					
42	66R–48538–00	CLAMP, CABLE 1 COLLIER	1					
43	97095–06014	BOLT BOULON	1					
44	63D–48538–00	CLAMP, CABLE 1 COLLIER	1					
45	90468–10005	CLIP JONC	1					
46	67G–44159–00–4D	HANDLE, GEAR SHIFT POIGNEE, LEVIER D'EMBRAYAGE	1					
47	67G–44173–00	LEVER, SHIFT CONTROL POIGNEE, INVERSION	1					
48	90159–06M18	SCREW, WITH WASHER VIS, AVEC RONDELLE	2					
49	6G8–44191–00	INDICATOR, SHIFT ETIQUETTE, EMBRAYAGE	1					
50	90386–26MA3	BUSH DOUILLE	1					
51	67G–42131–00	COVER, HANDLE STEERING COUVERCLE	1					
52	97885–06040	SCREW, PAN HEAD VIS, A ENCOCHE	2					
53	92995–06600	WASHER RONDELLE	2					
54	97885–06016	SCREW, PAN HEAD VIS, A ENCOCHE	5					

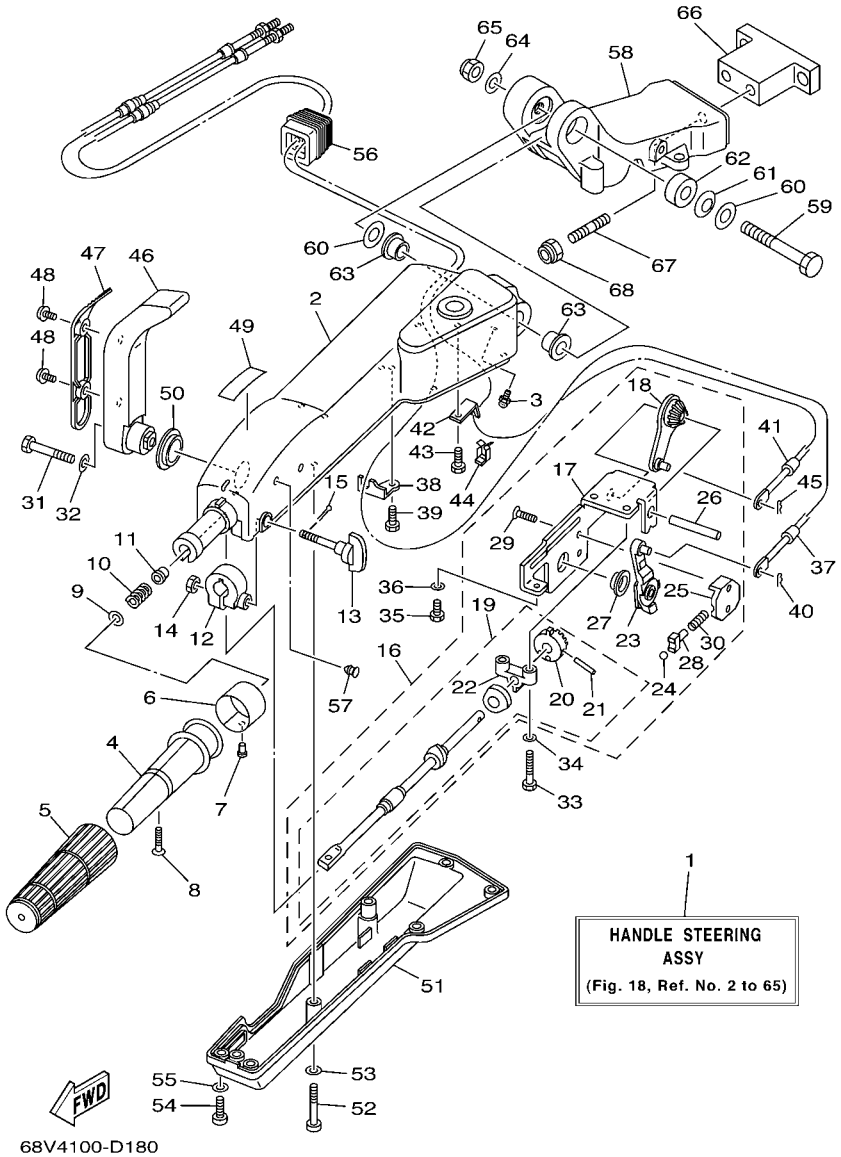

FIG. 18 STEERING 1 — DIRECTION 1

REF. NO.	PART NO. N° PIECES	DESCRIPTION DESCRIPTION	68V4	68W4				REMARKS REMARQUES
55	92995–06600	WASHER RONDELLE	5					
56	63D–42725–00	GROMMET PASSE-FIL	1					
57	90338–07180	PLUG PLOT	2					
58	63D–42121–30–4D	BRACKET SUPPORT	1					
59	90101–12014	BOLT BOULON	1					
60	92990–12200	WASHER, PLAIN RONDELLE, PLATE	2					
61	90206–12M22	WASHER, WAVE RONDELLE, ONDULEE	1					
62	90387–12M02	COLLAR COLLERETTE	1					
63	90386–12M93	BUSH DOUILLE	2					
64	92990–12600	WASHER, PLATE RONDELLE, PLATE	1					
65	90185–12M12	NUT, SELF-LOCKING ECROU, AUTO-BLOQUANT	1					
66	68V–42121–00–4D	BRACKET SUPPORT	1					AP AP
67	90116–10175	BOLT, STUD GOUJON	2					AP AP
68	90185–10051	NUT, SELF-LOCKING ECROU, AUTO-BLOQUANT	2					AP AP

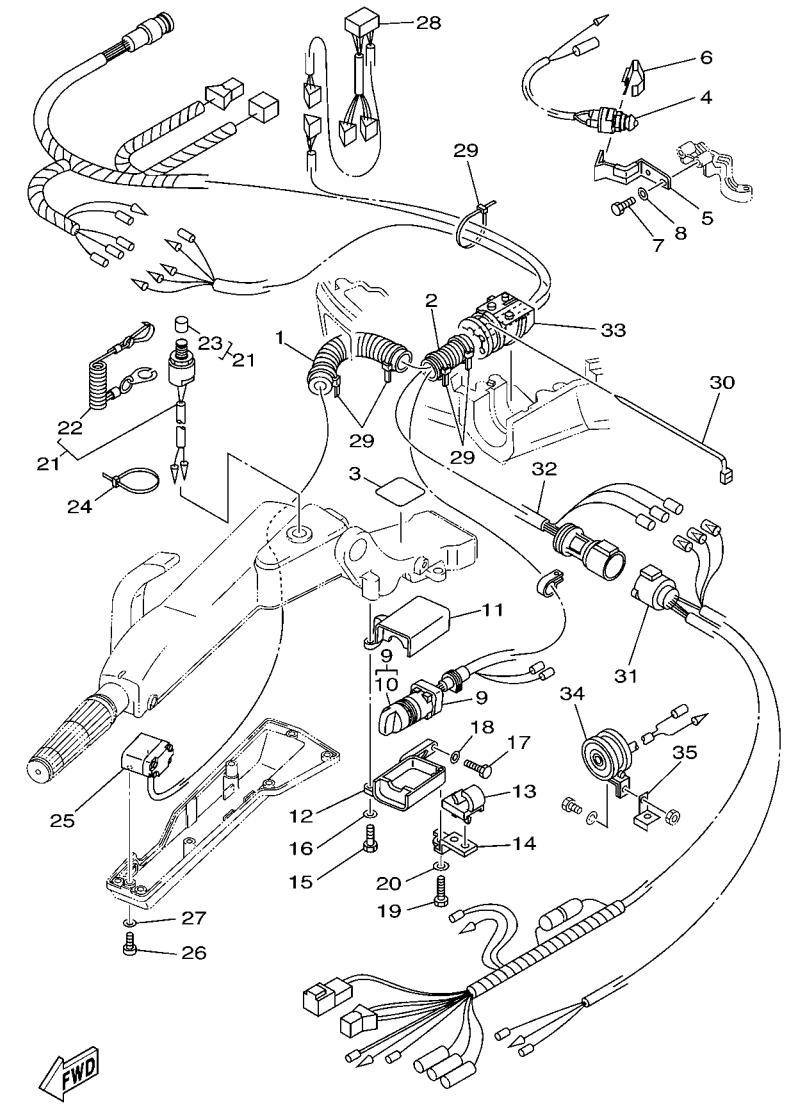

68V3100-C190

FIG. 19 STEERING 2 — DIRECTION 2

REF. NO.	PART NO. N° PIECES	DESCRIPTION DESCRIPTION	68V4	68W4				REMARKS REMARQUES
1	90446–24M79	HOSE (L230) DURITE (L230)	1					AP AP
2	6K3–83557–00	TUBE TUBE	1					AP AP
3	67G–42735–00	PROTECTOR PROTECTEUR	1					AP AP
4	688–82540–11	NEUTRAL SWITCH ASSY CONTACTEUR DE POINT-MORT	1					AP AP
5	67G–82554–01	STAY, NEUTRAL SWITCH SUPPORT, CONT DE POINT-MORT	1					AP AP
6	62Y–82555–00	DAMPER, MAIN SWITCH 1 AMORTISSEUR 1, CONTACT A CLEF	1					AP AP
7	97095–06014	BOLT BOULON	2					AP AP
8	92995–06600	WASHER RONDELLE	2					AP AP
9	67G–82510–50	MAIN SWITCH ASSY CONTACTEUR A CLEF COMPLET	1					AP AP
10	676–82577–00	.CAP, KEY .CABOCHON	1					
11	63D–8252E–01–4D	COVER, MAIN SWITCH COUVERCLE	1					AP AP
12	63D–8252F–01–4D	COVER, MAIN SWITCH 2 COUVERCLE 2	1					AP AP
13	63D–24367–00	CLAMP, FUEL PIPE 2 COLLIER DE DURITE A ESSENCE	1					AP AP
14	63D–24364–00	STAY SUPPORT	1					AP AP
15	97095–06025	BOLT BOULON	1					AP AP
16	92995–06600	WASHER RONDELLE	1					AP AP
17	97095–06020	BOLT BOULON	1					AP AP
18	92995–06600	WASHER RONDELLE	1					AP AP
19	97095–06030	BOLT BOULON	1					AP AP
20	92995–06600	WASHER RONDELLE	1					AP AP
21	69W–82575–00	ENGINE STOP SWITCH ASSY COUPE CIRCUIT CPLT	1					AP AP
22	682–82556–00	.STOPPER .PLAQUETTE	1					
23	689–8257Y–00	.CAP .CHAPEAU	1					
24	90465–13M11	CLAMP BRIDE	1					AP AP
25	67G–82563–00	TRIM & TILT SWITCH ASSY INCLINER ET PARER COMMUTATEUR	1					AP AP
26	97885–06016	SCREW, PAN HEAD VIS, A ENCOCHE	2					AP AP
27	92995–06600	WASHER RONDELLE	2					AP AP

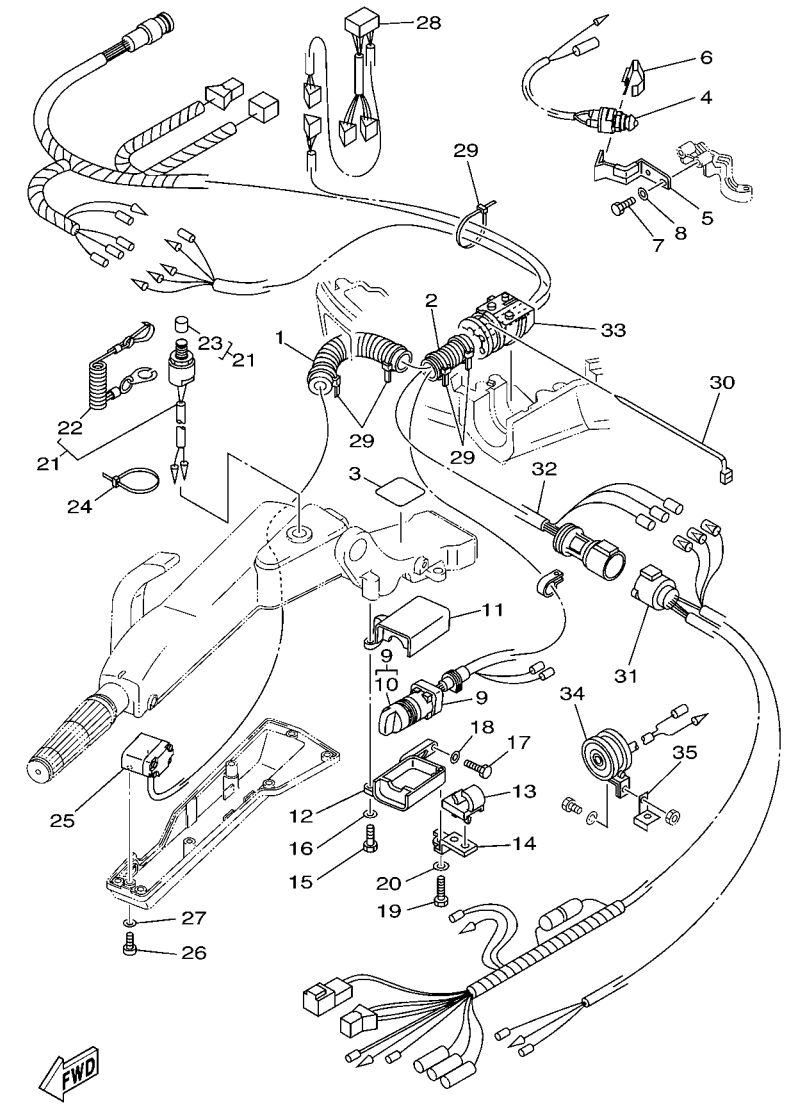

68V3100-C190

FIG. 19 STEERING 2 — DIRECTION 2

REF. NO.	PART NO. N° PIECES	DESCRIPTION DESCRIPTION	68V4	68W4				REMARKS REMARQUES
28	63D–83728–00	CONNECTOR ASSY CONNEXION COMPLET	1					AP AP
29	90465–13M24	CLAMP BRIDE	5					AP AP
30	90465–13M30	CLAMP BRIDE	1					AP AP
31	6H5–83553–12	WIRE, LEAD FIL	1					AP AP
32	63D–82586–01	EXTENSION, WIRE HARNESS EXTENSION, FAISCEAU DE FILS	1					AP AP
33	67G–42725–01	GROMMET PASSE-FIL	1					AP AP
34	688–83383–11	BUZZER RONFLEUR	1					AP AP
35	6H5–83386–00	STAY, BUZZER SUPPOR, RONFLEUR	1					AP AP

FIG. 20 STEERING FRICTION CUVETTE POIGNEE DE DIRECTION

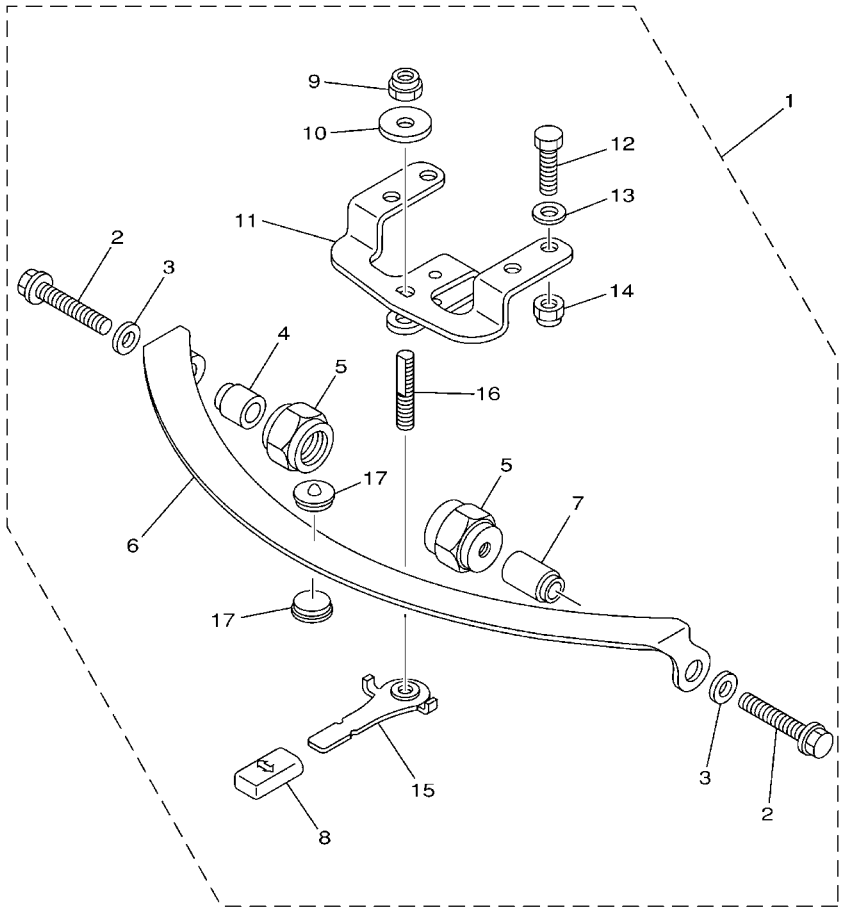

67F1100-2200

REF. NO.	PART NO. N° PIECES	DESCRIPTION DESCRIPTION	68V4	68W4				REMARKS REMARQUES
1	67G–42508–00	STEERING FRICTION ASSY DIRECTION FRICTION (ENS.)	1					AP AP
2	90119–08M74	.BOLT, WITH WASHER .BOULON, AVEC RONDELLE	2					
3	90201–08M01	.WASHER, PLATE .RONDELLE, PLATE	2					
4	67G–42541–00	.DAMPER .AMORTISSEUR	1					
5	67G–42546–00	.NUT .ECROU	2					
6	63D–42527–00	.PLATE, FRICTION .PLAQUE, FRICTION	1					
7	67G–42541–10	.DAMPER .AMORTISSEUR	1					
8	682–43318–01	.COVER .CAPUCHON	1					
9	90185–10M14	.NUT, SELF-LOCKING .ECROU, AUTO-BLOQUANT	1					
10	90201–10M76	.WASHER, PLATE .RONDELLE, PLATE	1					
11	67G–42526–00	.PLATE, FRICTION .PLAQUE, FRICTION	1					
12	97095–08025	.BOLT .BOULON	2					
13	92995–08600	.WASHER .RONDELLE	2					
14	90185–08057	.NUT, SELF-LOCKING .ECROU, AUTO-BLOQUANT	2					
15	67G–42561–00	.KNOB, STEERING LOCK .BOUTON	1					
16	67G–42562–00	.SHAFT, STEERING LOCK .ARBRE,ANTIVOL DE DIRECTION	1					
17	63D–42528–00	.PLATE, FRICTION .PLAQUE, FRICTION	2					

FIG. 21 CONTROL COMMANDE

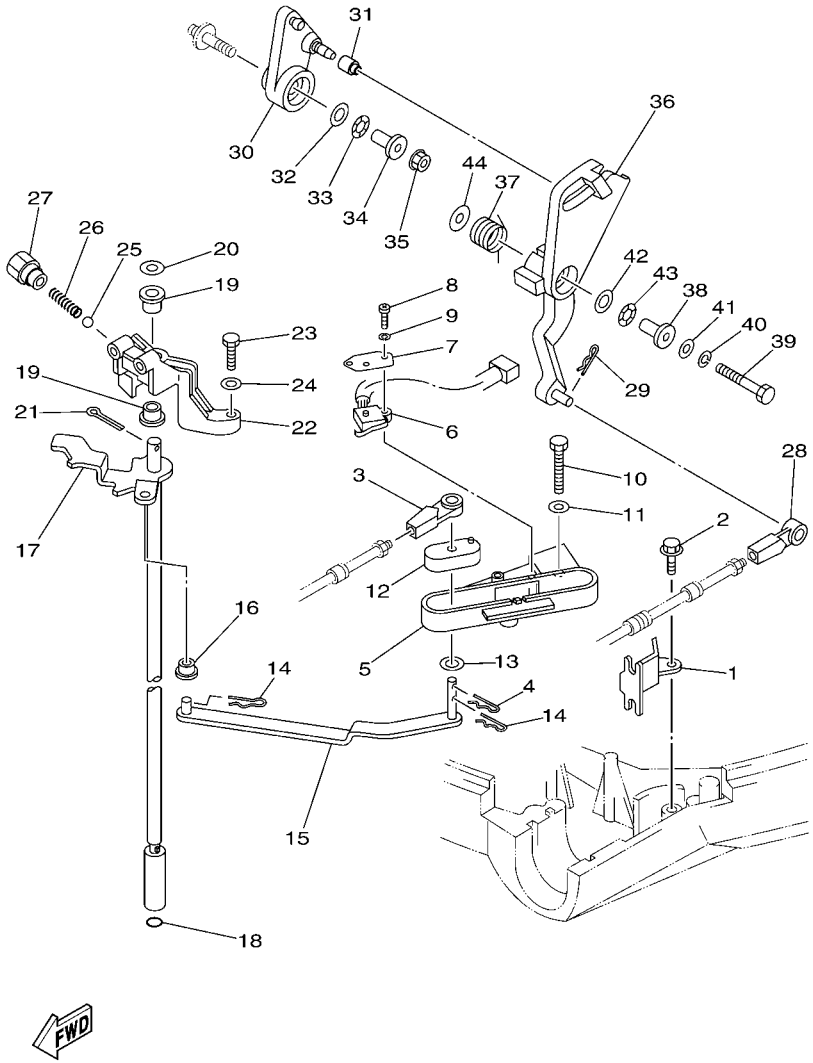

REF. NO.	PART NO. N° PIECES	DESCRIPTION DESCRIPTION	68V4	68W4				REMARKS REMARQUES
1	67F–48538–00	CLAMP, CABLE 1 COLLIER	1	1				
2	90109–06M86	BOLT BOULON	1	1				
3	663–48344–00	CABLE END, REMOTE CONTROL CHAPE CABLE	1	1				
4	90468–18008	CLIP JONC	1	1				
5	68V–44117–00	BRACKET SUPPORT	1	1				
6	68F–8259F–00	SWITCH ASSY COMMUTATEUR	1	1				
7	61A–82588–01	PLATE PLAQUE	1	1				
8	97885–04016	SCREW, PAN HEAD VIS, A ENCOCHE	2	2				
9	92995–04100	WASHER RONDELLE	2	2				
10	97095–06040	BOLT BOULON	2	2				
11	92995–06600	WASHER RONDELLE	2	2				
12	68V–44122–01	BUSHING, SHIFT ROD LEVER DOUILLE, LEVIER D'EMBRAYAGE	1	1				
13	90202–07M07	WASHER, PLATE RONDELLE, PLATE	1	1				
14	90468–18008	CLIP JONC	2	2				
15	68V–44121–00	LEVER, SHIFT ROD LEVIER, TIGE D'INVERSION	1	1				
16	90386–06M12	BUSH DOUILLE	1	1				
17	68V–44120–10	HANDLE GEAR SHIFT ASSY LEVIER D'EMBRAYAGE	1					L L
	68V–44120–30	HANDLE GEAR SHIFT ASSY LEVIER D'EMBRAYAGE	1	1				X X
18	93210–09165	O-RING JOINT TORIQUE	1	1				
19	90386–90M90	BUSH DOUILLE	2	2				
20	90201–09M02	WASHER, PLATE RONDELLE, PLATE	1	1				
21	91490–20015	PIN, COTTER GOUPILLE	1	1				
22	68V–44118–00	BRACKET SUPPORT	1	1				
23	97075–06025	BOLT BOULON	2	2				
24	92995–06600	WASHER RONDELLE	2	2				
25	93501–04M02	BALL BILLE	1	1				
26	90501–12082	SPRING, COMPRESSION RESSORT, COMPRESSION	1	1				

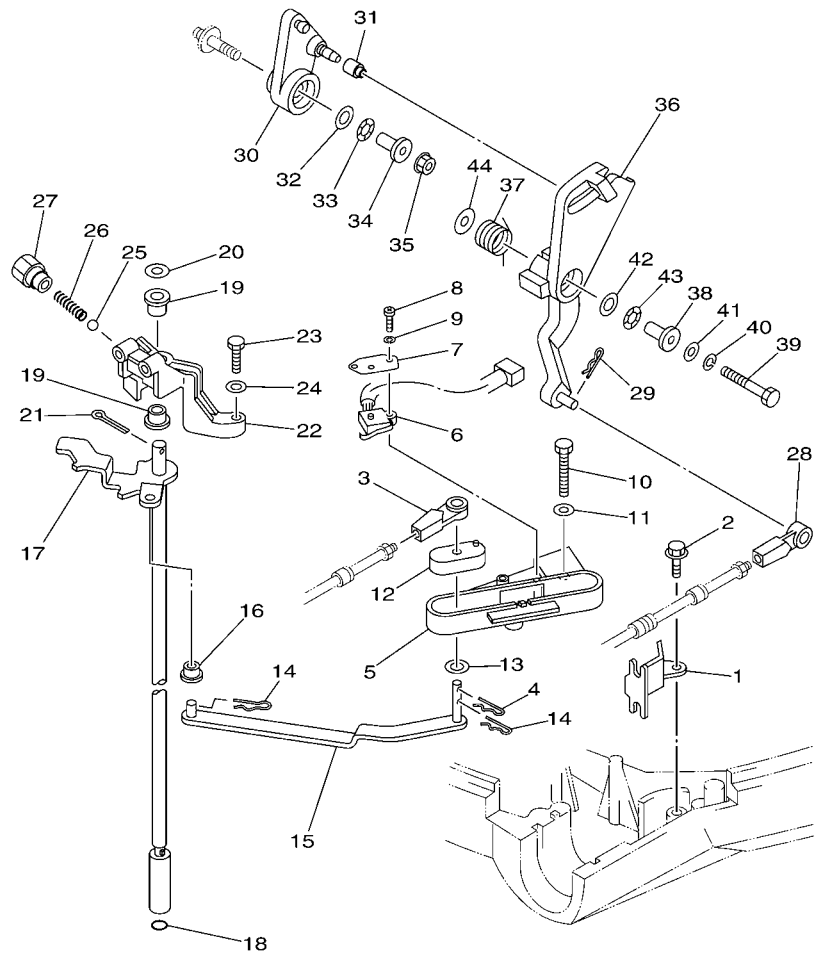

68V3100-C210

FIG. 21 CONTROL COMMANDE

REF. NO.	PART NO. N° PIECES	DESCRIPTION DESCRIPTION	68V4	68W4				REMARKS REMARQUES
27	648–42715–00	BUSHING COUSSINET	1	1				
28	663–48344–00	CABLE END, REMOTE CONTROL CHAPE CABLE	1	1				
29	90468–18008	CLIP JONC	1	1				
30	68V–42157–00	LEVER, THROTTLE LEVIER DE AVANCE	1	1				
31	68V–42171–00	BUSHING COUSSINET	1	1				
32	90201–10M02	WASHER, PLATE RONDELLE, PLATE	1	1				
33	90206–10M04	WASHER, WAVE RONDELLE, ONDULEE	1	1				
34	90387–06M21	COLLAR COLLERETTE	1	1				
35	90179–06M28	NUT ECROU	1	1				
36	68V–42154–00	LEVER, THROTTLE CONTROL LEVIER DE COMMANDE D'AVANCE	1	1				
37	67F–44135–00	SPRING RESSORT	1	1				
38	90387–06M21	COLLAR COLLERETTE	1	1				
39	97095–06035	BOLT BOULON	1	1				
40	92995–06100	WASHER, SPRING RONDELLE, GROWER	1	1				
41	92995–06600	WASHER RONDELLE	1	1				
42	90201–10M02	WASHER, PLATE RONDELLE, PLATE	1	1				
43	90206–10M04	WASHER, WAVE RONDELLE, ONDULEE	1	1				
44	90201–06M31	WASHER, PLATE RONDELLE, PLATE	1	1				

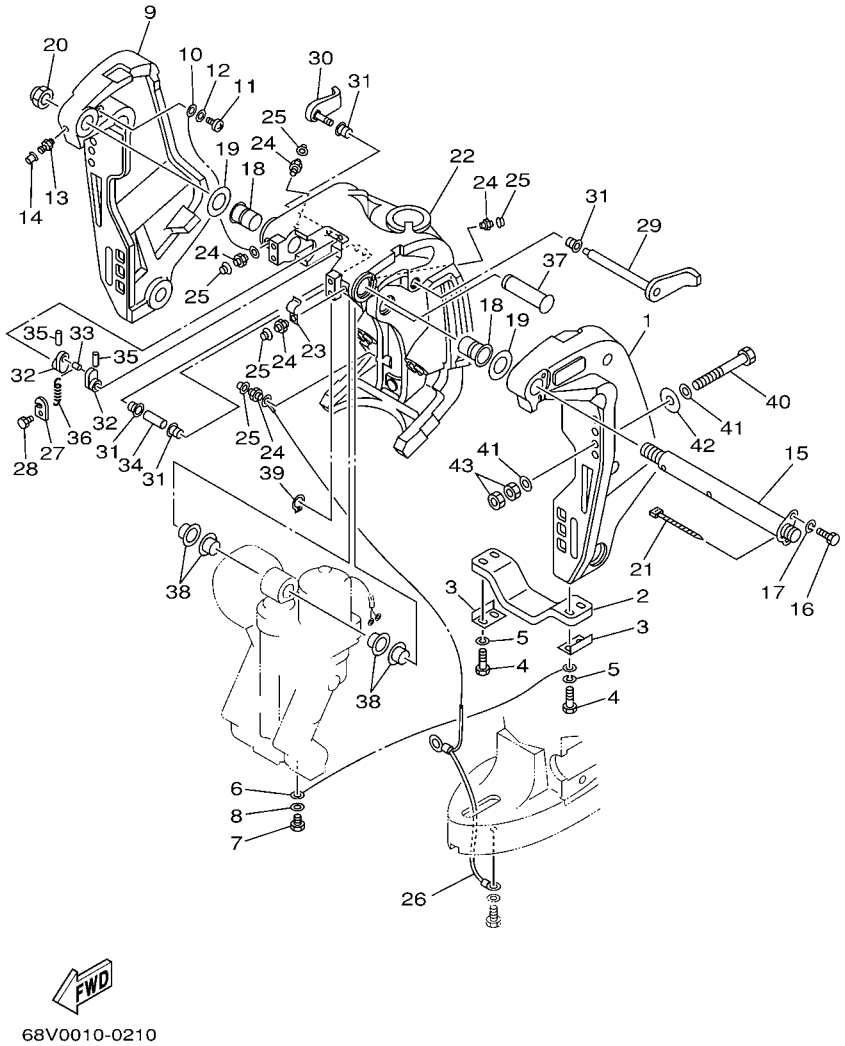

FIG. 22 BRACKET 1 SUPPORT 1

REF. NO.	PART NO. N° PIECES	DESCRIPTION DESCRIPTION	68V4	68W4				REMARKS REMARQUES
1	68V–43111–01–8D	BRACKET, CLAMP PRESSE	1	1				
2	6G5–45251–02	ANODE ANODE	1	1				
3	6G5–44526–00	PLATE PLAQUE	2	2				
4	97095–06030	BOLT BOULON	4	4				
5	92995–06100	WASHER, SPRING RONDELLE, GROWER	4	4				
6	6E5–82148–00	WIRE, LEAD 4 FIL 4	1	1				
7	97095–06010	BOLT BOULON	1	1				
8	92995–06600	WASHER RONDELLE	1	1				
9	68V–43112–01–8D	BRACKET, CLAMP PRESSE	1	1				
10	6E5–82148–00	WIRE, LEAD 4 FIL 4	1	1				
11	97880–06012	SCREW, PAN HEAD VIS, TETE TRONCONIQUE	1	1				
12	92990–06600	WASHER, PLATE RONDELLE, PLATE	1	1				
13	93700–06M03	NIPPLE, GREASE PION	1	1				
14	663–45119–00	CAP, GREASE NIPPLE CAPUCHON, GRAISSEUR	1	1				AP AP
15	64E–43131–01	BOLT, CLAMP BRACKET BOULON, PRESSE	1	1				
16	97095–08020	BOLT BOULON	1	1				
17	92995–08100	WASHER RONDELLE	1	1				
18	90386–25M31	BUSH DOUILLE	2	2				
19	90201–26M59	WASHER, PLATE RONDELLE, PLATE	2	2				
20	90185–22M11	NUT, SELF-LOCKING ECROU, AUTO-BLOQUANT	1	1				
21	90465–11M10	CLAMP BRIDE	1	1				
22	64E–43311–10–8D	BRACKET, SWIVEL 1 SUPPORT, PIVOT 1	1					L L
	64E–43311–20–8D	BRACKET, SWIVEL 1 SUPPORT, PIVOT 1	1	1				X X
23	90465–08M63	CLAMP BRIDE	1	1				
24	93700–06M03	NIPPLE, GREASE PION	5	5				
25	663–45119–00	CAP, GREASE NIPPLE CAPUCHON, GRAISSEUR	5	5				AP AP
26	66K–82149–00	WIRE, LEAD 3 FIL 3	1					L L

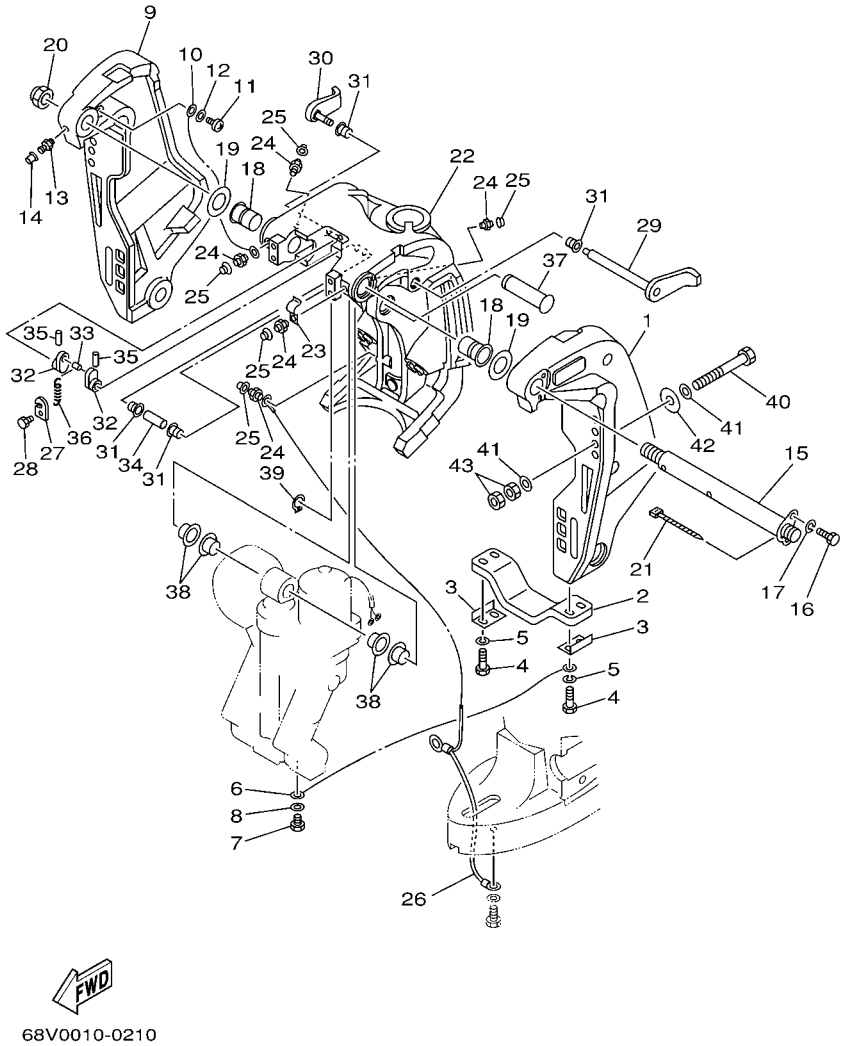

FIG. 22 BRACKET 1 SUPPORT 1

REF. NO.	PART NO. N° PIECES	DESCRIPTION DESCRIPTION	68V4	68W4				REMARKS REMARQUES
26	68V–82149–30	WIRE, LEAD 3 FIL 3	1	1				X X
27	66T–43144–00	HOOK, SPRING CROCHET	1	1				
28	97095–06010	BOLT BOULON	1	1				
29	6G5–43181–02	LEVER, TILT STOP LEVIER, VERROUILLAGE RELEVAGE	1	1				
30	6G5–43185–02	LEVER, TILT STOP LEVIER, VERROUILLAGE RELEVAGE	1	1				
31	90386–10M16	BUSH DOUILLE	4	4				
32	6G5–43148–00	COLLAR, DISTANCE ENTRETOISE	2	2				
33	90249–06M19	PIN GOUPILLE	1	1				
34	90387–10M05	COLLAR COLLERETTE	1	1				
35	91690–30020	PIN, SPRING AGRAFFE	2	2				
36	90506–14M24	SPRING, TENSION RESSORT, TENSION	1	1				
37	64E–43126–00	PIN, UPPER SHOCK MOUNT AXE, SUPERIEUR AMORTISSEUR	1	1				
38	90386–22M98	BUSH DOUILLE	4	4				
39	93410–22M11	CIRCLIP CLIPS	1	1				
40	90101–12M05	BOLT (L:130MM) BOULON (L:130MM)	4	4				
41	90201–13M01	WASHER, PLATE RONDELLE, PLATE	8	8				
42	90201–12M05	WASHER, PLATE RONDELLE, PLATE	4	4				
43	95380–12600	NUT ECROU	8	8				

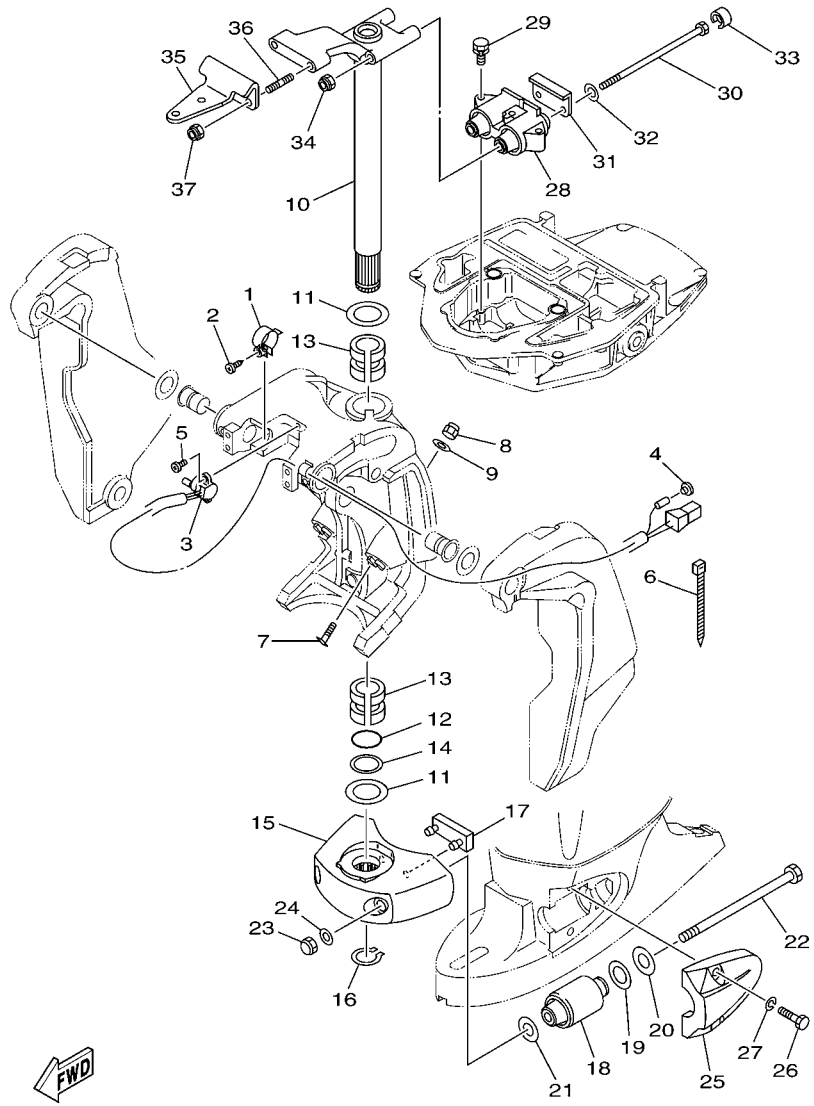

68V3010-C220

FIG. 23 BRACKET 2 SUPPORT 2

REF. NO.	PART NO. N° PIECES	DESCRIPTION DESCRIPTION	68V4	68W4				REMARKS REMARQUES
1	64E–43139–02	CAM, TRIM SENDER VILEBREQUIN TRUM	1	1				
2	97780–60525	SCREW, TAPPING VIS, TETE BOMBEE	1	1				
3	64E–83672–02	TRIM SENDER INCLINER RACCORD	1	1				
4	703–82119–00	COVER, LEAD WIRE GARNITURE, FIL	1	1				
5	97885–06016	SCREW, PAN HEAD VIS, A ENCOCHE	2	2				
6	90465–11M10	CLAMP BRIDE	3	3				
7	63P–43376–00	BOLT, THRUST RECEIVER BOULON	2	2				
8	95780–10300	NUT, FLANGE ECROU	2	2				
9	92995–10600	WASHER RONDELLE	2	2				
10	68V–42510–10–8D	STEERING BRACKET ASSY DIRECTION SUPPORT (ENS.)	1					L L
	68V–42510–30–8D	STEERING BRACKET ASSY DIRECTION SUPPORT (ENS.)	1	1				X X
11	90201–38M60	WASHER, PLATE RONDELLE, PLATE	2	2				
12	93210–37MH7	O-RING JOINT TORIQUE	1	1				
13	90386–38M32	BUSH DOUILLE	2	2				
14	90202–40M47	WASHER, PLATE RONDELLE, PLATE	1	1				
15	68V–44551–00–8D	HOUSING, LOWER MOUNT RUBBER BOITIER, SILENT-BLOC INFERIEUR	1	1				
16	93410–37M04	CIRCLIP CLIPS	1	1				
17	61A–44575–00	DAMPER, LOWER MOUNT RUBBER SILENT-BLOC, INFERIEUR	1	1				
18	61A–44555–01–94	MOUNT DAMPER, LOWER SIDE SILENT-BLOC, INFERIEUR LATERAL	2	2				
19	90202–32M19	WASHER, PLATE RONDELLE, PLATE	2	2				
20	90201–16M55	WASHER, PLATE RONDELLE, PLATE	2	2				
21	90201–15M58	WASHER, PLATE RONDELLE, PLATE	2	2				
22	90109–14007	BOLT BOULON	2	2				
23	95380–14600	NUT ECROU	2	2				
24	92995–14600	WASHER RONDELLE	2	2				
25	68V–44553–00–8D	COVER, LOWER MOUNT COUVERCLE, SUSPENSION INFERIEU	2	2				
26	97075–10040	BOLT BOULON	4	4				

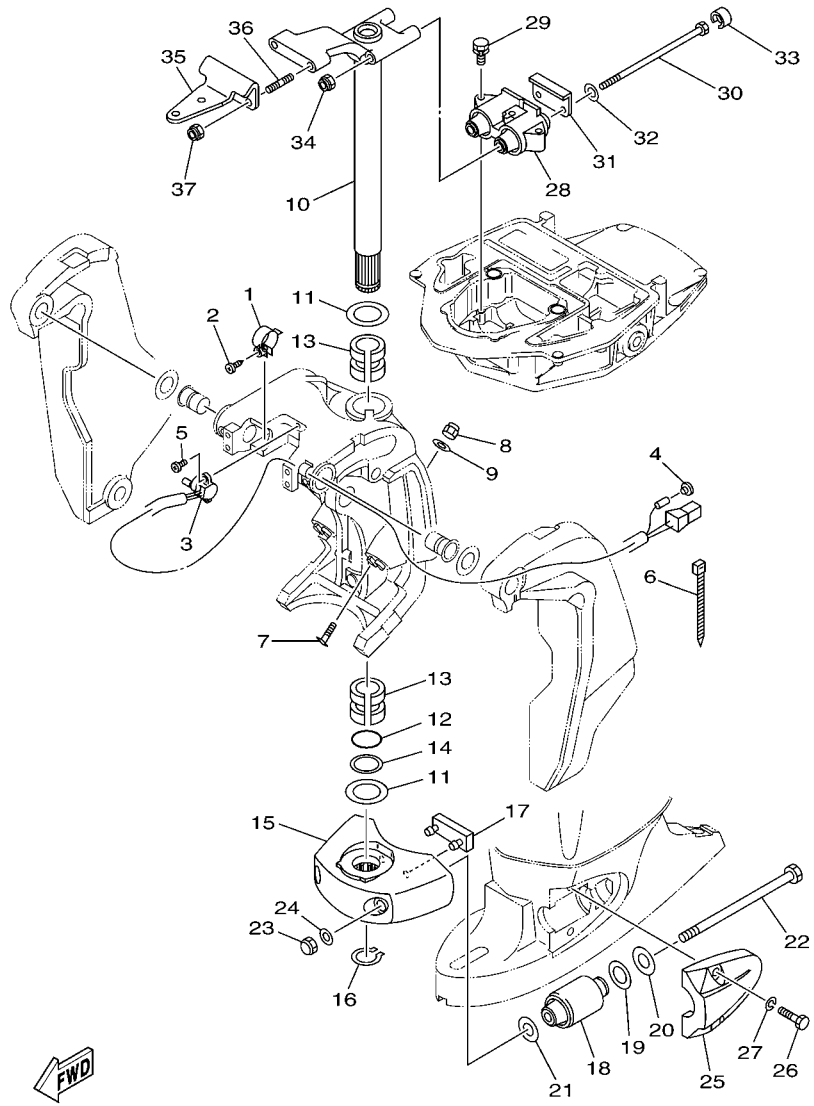

FIG. 23 BRACKET 2 SUPPORT 2

REF. NO.	PART NO. N° PIECES	DESCRIPTION DESCRIPTION	68V4	68W4				REMARKS REMARQUES
27	92995–10100	WASHER RONDELLE	4	4				
28	67F–44514–00–94	MOUNT DAMPER, UPPER SIDE SILENT-BLOC, SUPERIEUR LATERAL	1	1				
29	97575–08445	BOLT, WITH WASHER VIS HEXAGONAL AVC RONDELLE	3	3				
30	90109–12007	BOLT BOULON	2	2				
31	67F–44526–00	PLATE PLAQUE	1	1				
32	90201–12M09	WASHER, PLATE RONDELLE, PLATE	2	2				
33	67F–44533–00	DAMPER, UPPER MOUNT RUBBER COUVERCLE, SUSPENSION INFERIEU	2	2				
34	90185–12M12	NUT, SELF-LOCKING ECROU, AUTO-BLOQUANT	2	2				
35	68V–48511–00–8D	HOOK, STEERING ATTACHE, DIRECTION	1	1				
36	90116–10175	BOLT, STUD GOUJON	2	2				
37	90185–10051	NUT, SELF-LOCKING ECROU, AUTO-BLOQUANT	2	2				

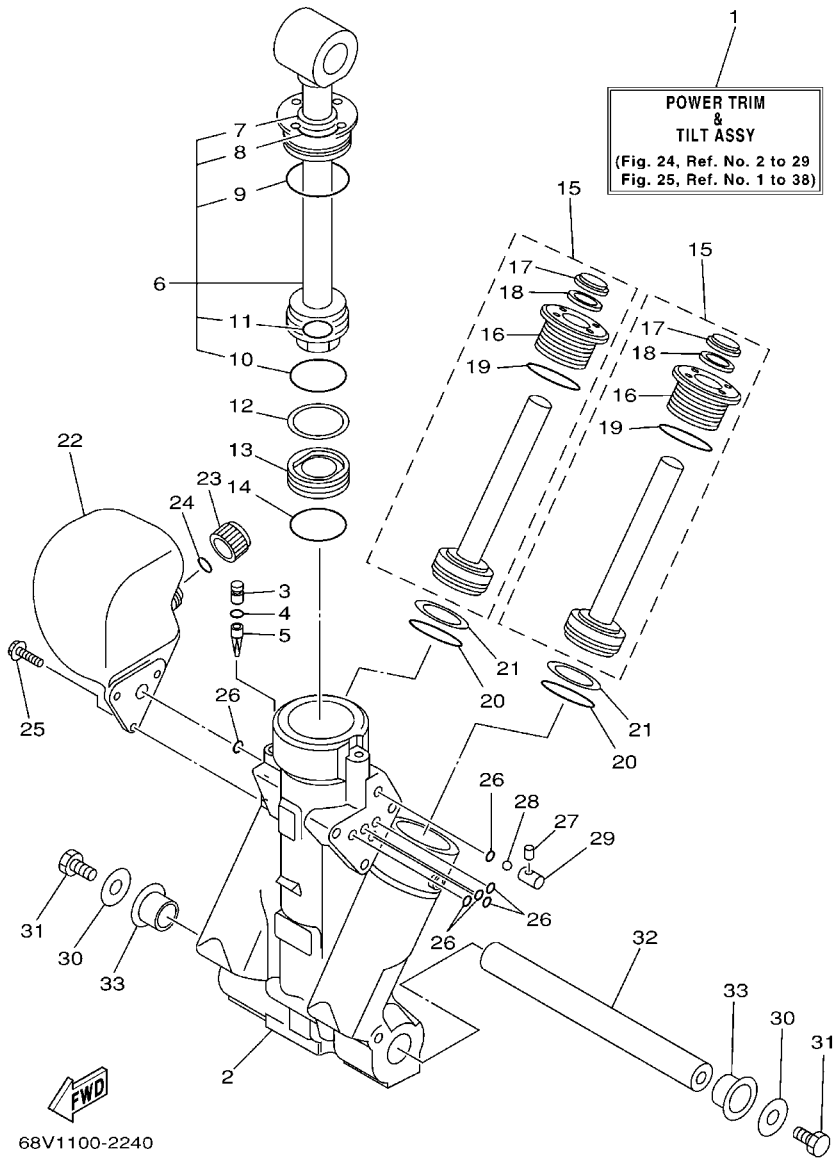

FIG. 24 POWER TRIM & TILT ASSY 1 PUISSANCE PARER ET INCLINER 1

REF. NO.	PART NO. N° PIECES	DESCRIPTION DESCRIPTION	68V4	68W4				REMARKS REMARQUES
1	68V–43800–01–4D	POWER TRIM & TILT ASSY PUISSANCE PARER ET INCLINER (E	1	1				
2	64E–43825–01	HOUSING, TRIM & TILT CARTER	1	1				
3	64E–4388J–00	PLUG 2 BOUCHON 2	1	1				
4	93210–10M74	O-RING JOINT TORIQUE	1	1				
5	64E–43817–00	FILTER 2 FILTRE 2	1	1				
6	64E–43810–00	TILT PISTON SUB ASSY INCLINER PISTON AUXILIAIRE(ENS	1	1				
7	64E–43898–00	.SEAL ,DUST 2 .JOINT ANTI-PUSSIERE	1	1				
8	64E–43867–00	.O-RING .JOINT TORIQUE	1	1				
9	64E–43866–00	.O-RING .JOINT TORIQUE	1	1				
10	6E5–43862–00	.O-RING .JOINT TORIQUE	1	1				
11	64E–43883–00	.O-RING .JOINT TORIQUE	1	1				
12	6E5–43872–00	RING, BACK UP RESSORT	1	1				
13	6E5–43814–02	PISTON, FREE PISTON	1	1				
14	6E5–43862–00	O-RING JOINT TORIQUE	1	1				
15	64E–43820–00	TRIM PISTON SUB ASSY PARER PISTON AUXILIAIRE (ENS.)	2	2				
16	64E–43821–00	.SCREW, TRIM CYLINDER END .VIS	1	1				
17	64E–43822–00	.SEAL, TRIM DUST .JOINT	1	1				
18	64E–4384J–00	.SEAL, TRIM DOWN .JOINT	1	1				
19	6G5–43864–00	.O-RING .JOINT TORIQUE	1	1				
20	6E5–43864–00	O-RING JOINT TORIQUE	2	2				
21	6E5–43874–01	RING, BACK UP RESSORT	2	2				
22	64E–43828–00	BODY, RESERVOIR CORPS	1	1				
23	64E–43829–00	PLUG, RESERVOIR BOUCHON	1	1				
24	64E–43897–00	O-RING JOINT TORIQUE	1	1				
25	64E–4388E–00	BOLT ,SCREW (L:14MM) VIS (L:14MM)	3	3				
26	64E–43869–00	O-RING JOINT TORIQUE	6	6				
27	64E–4381G–00	PIN COUPILL	1	1				

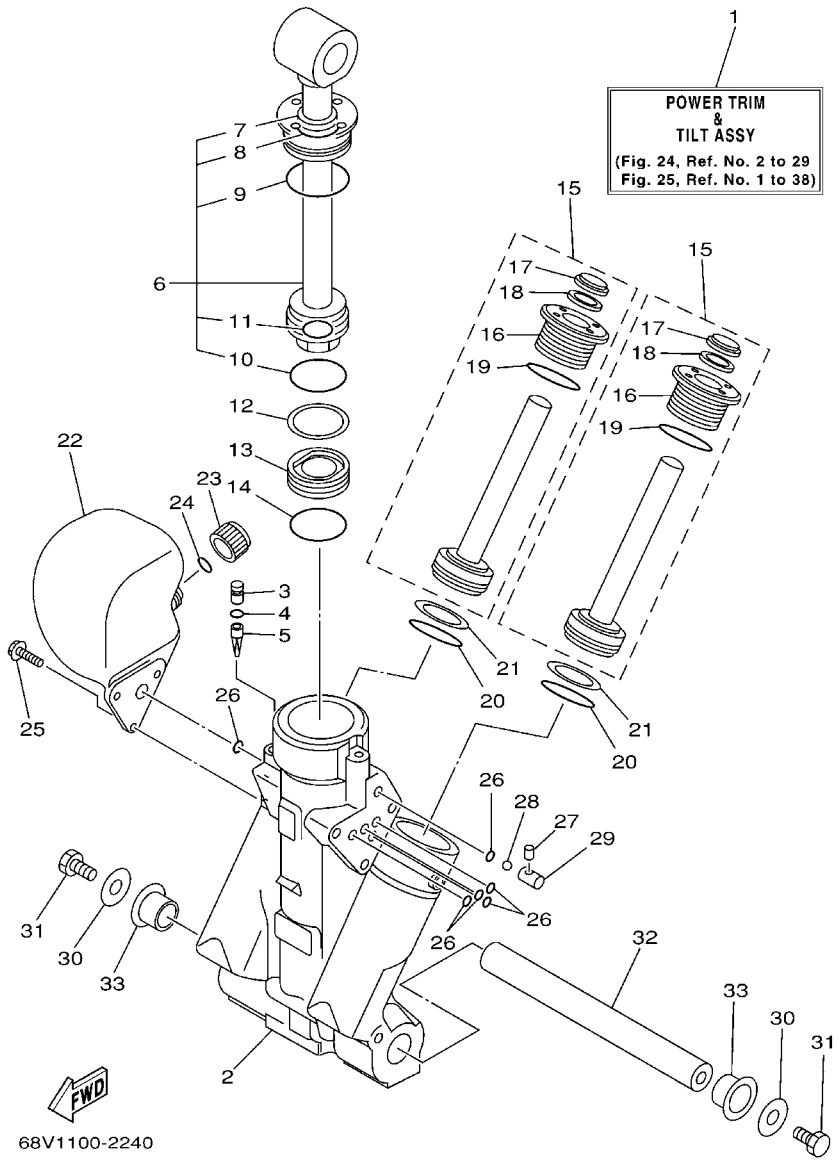

FIG. 24 POWER TRIM & TILT ASSY 1 PUISSANCE PARER ET INCLINER 1

REF. NO.	PART NO. N° PIECES	DESCRIPTION DESCRIPTION	68V4	68W4				REMARKS REMARQUES
28	6E5–43858–00	BALL BILLE	1	1				
29	64E–4382G–00	VALVE, SEAT JEU DE POINTEAUX	1	1				
30	90201–08M14	WASHER, PLATE RONDELLE, PLATE	2	2				
31	97080–08016	BOLT BOULON	2	2				
32	64E–43818–01	PIN, LOWER SHOCK MOUNT AXE, INFERIEUR AMORTISSEUR	1	1				
33	90386–22M98	BUSH DOUILLE	2	2				

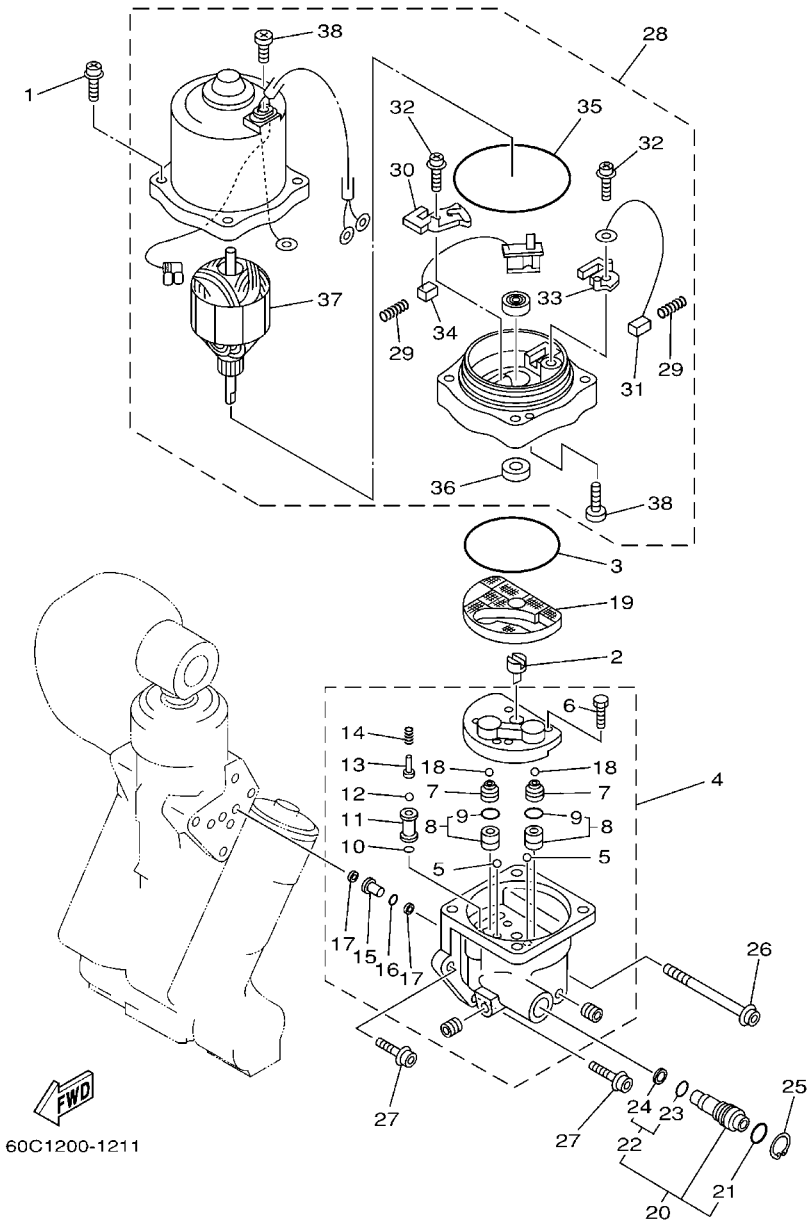

FIG. 25 POWER TRIM & TILT ASSY 2 PUISSANCE PARER ET INCLINER 2

REF. NO.	PART NO. N° PIECES	DESCRIPTION DESCRIPTION	68V4	68W4				REMARKS REMARQUES
1	64E–4388E–10	BOLT ,SCREW (L:34.7MM) VIS (L:34.7MM)	4	4				
2	64E–43831–00	CONNECTOR, SHAFT RACCORD	1	1				
3	64E–43868–00	O-RING JOINT TORIQUE	1	1				
4	68V–43830–00	GEAR PUMP ASSY POMPE A PIGNON (ENS.)	1	1				
5	72X–43858–00	.BALL .BILLE	2	2				
6	64E–43843–00	.SCREW, VALVE LOCK .VIS	4	4				
7	64E–43841–00	.PISTON, SHUTTLE .PISTON	2	2				
8	64E–43802–00	.VALVE SUB ASSY .CLAPET AUXILIAIRE (ENS.)	2	2				
9	6E5–43896–00	..O-RING ..JOINT TORIQUE	1	1				
10	6G5–43863–00	.O-RING .JOINT TORIQUE	1	1				
11	66Y–43851–00	.SEAT, RELIEF VALVE .SIEGE	1	1				
12	64E–43858–00	.BALL .BILLE	1	1				
13	64E–43859–00	.PIN, VALVE SUPPORT .GOUPILLE	1	1				
14	68V–43855–00	.SPRING, UP RELIEF .RESSORT	1	1				
15	64E–43850–00	.VALVE SUB ASSY .CLAPET AUXILIAIRE (ENS.)	1	1				
16	64E–43865–00	.O-RING .JOINT TORIQUE	1	1				
17	64E–43816–00	.FILTER 1 .FILTRE 1	2	2				
18	64E–43858–00	.BALL .BILLE	2	2				
19	64E–43817–10	FILTER 2 FILTRE 2	1	1				
20	64E–43860–00	MANUAL VALVE SUB-ASSY SOUPAPE, MANUEL (ENS.)	1	1				
21	72X–85075–L0	.O-RING .JOINT TORIQUE	1	1				
22	64E–43827–00	.RING SET .BILLE	1	1				
23	64E–4387A–00	..O-RING ..JOINT TORIQUE	1	1				
24	64E–43873–00	..RING, BACK UP ..RESSORT	1	1				
25	64E–43875–00	RING, SNAP RESSORT	1	1				
26	64E–43879–10	SCREW, WITH WASHER VIS, AVEC RONDELLE	1	1				
27	64E–43879–00	SCREW, WITH WASHER VIS, AVEC RONDELLE	2	2				

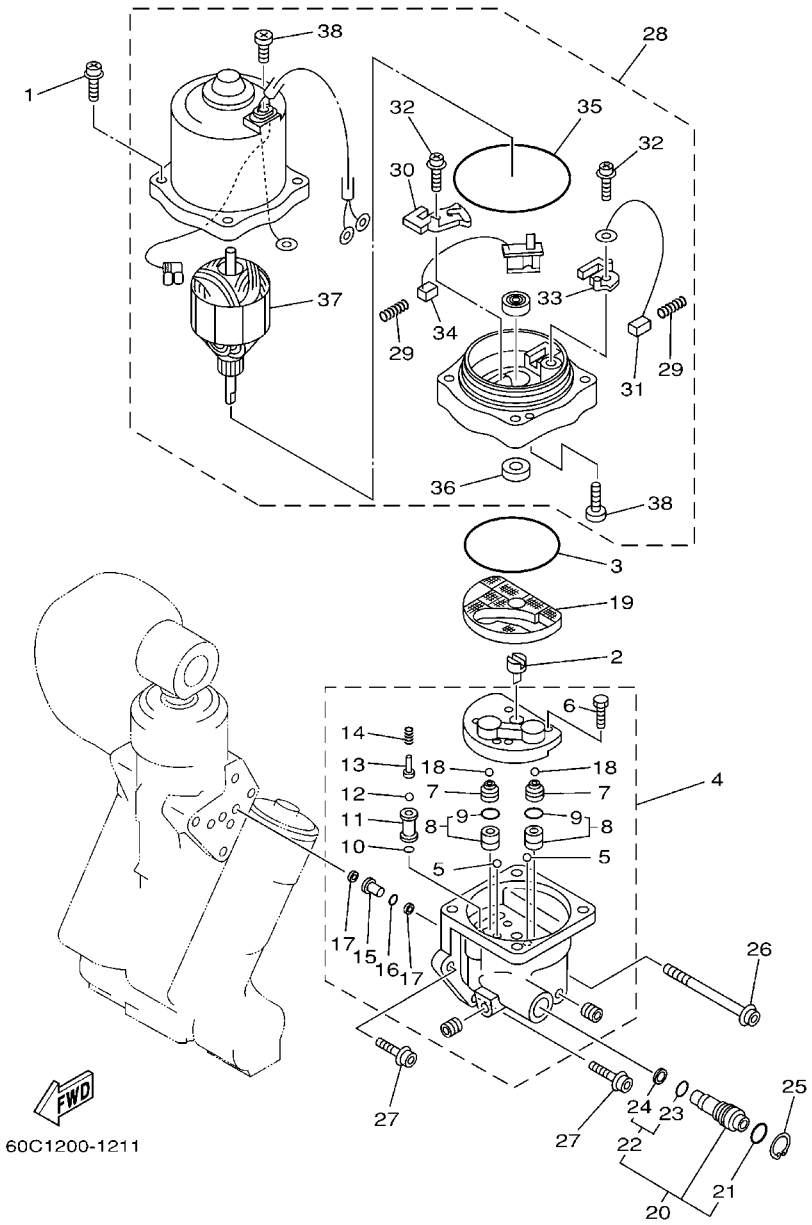

FIG. 25 POWER TRIM & TILT ASSY 2 PUISSANCE PARER ET INCLINER 2

REF. NO.	PART NO. N° PIECES	DESCRIPTION DESCRIPTION	68V4	68W4				REMARKS REMARQUES
28	68V–43880–01	MOTOR ASSY MOTEUR (ENS.)	1	1				
29	6H1–4386K–10	.SPRING, BRUSH .RESSORT, BALAI	2	2				
30	64E–4380J–00	.HOLDER, BRUSH .PORTE-BALAI	1	1				
31	64E–43891–00	.BRUSH 1 .BALAI 1	1	1				
32	97607–04310	.SCREW,WITH WASHER .VIS HEXAGONAL	2	2				
33	64E–4380F–00	.HOLDER, BRUSH 2 .PORTE-BALAI 2	1	1				
34	64E–43892–00	.BRUSH 2 .BALAI 2	1	1				
35	6G5–43865–00	.O-RING .JOINT TORIQUE	1	1				
36	93102–08M43	.OIL SEAL .JOINT SPY	1	1				
37	64E–43805–00	.ARMATURE ASSY .INDUIT (ENS.)	1	1				
38	64E–43843–10	.SCREW, VALVE LOCK .VIS	3	3				

FIG. 26 UPPER CASING FOURREAU

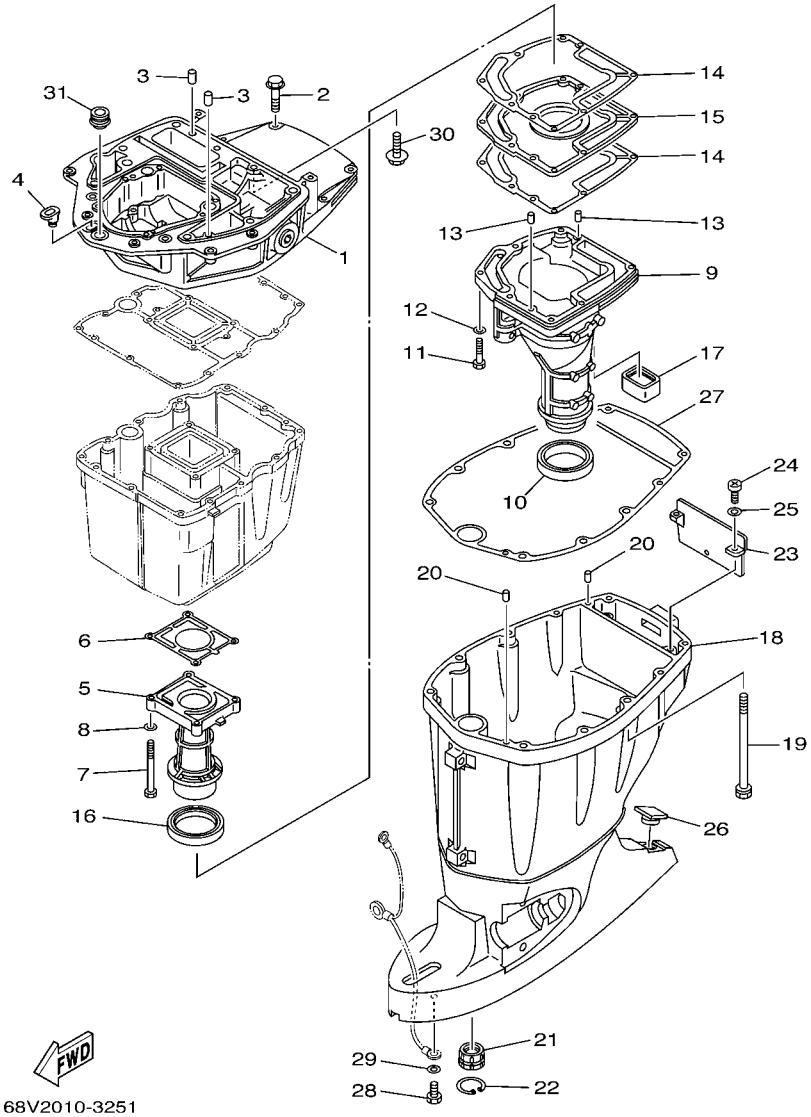

REF. NO.	PART NO. N° PIECES	DESCRIPTION DESCRIPTION	68V4	68W4				REMARKS REMARQUES
1	67F–41137–02–94	GUIDE, EXHAUST COLLECTEUR D'ECHAPPEMENT	1	1				
2	97575–08540	BOLT, WITH WASHER VIS HEXAGONAL AVC RONDELLE	4	4				
3	93608–16M16	PIN, DOWEL AXE	2	2				
4	6G1–42727–00	GROMMET PASSE-FIL	1	1				
5	67F–41131–01–5B	MANIFOLD, EXT. 1 PIPE D'ECHAPPEMENT	1	1				
6	67F–41133–A1	GASKET, EXHAUST MANIFOLD 1 JOINT, PIPE D'ECHAPPEMENT	1	1				
7	97075–06070	BOLT BOULON	4	4				
8	92995–06600	WASHER RONDELLE	4	4				
9	68V–14711–10–5B	MUFFLER 1 POT D'ECHAPPEMENT 1	1					L L
	68V–14711–30–5B	MUFFLER 1 POT D'ECHAPPEMENT 1	1	1				X X
10	68V–45123–00	GASKET, MUFFLER JOINT, POT DE DETENTE	1	1				
11	97075–06030	BOLT BOULON	7	7				
12	92995–06600	WASHER RONDELLE	7	7				
13	93606–19M23	PIN, DOWEL GOUPILLE	2	2				
14	67F–41134–A0	GASKET, EXHAUST MANIFOLD JOINT, PIPE D'ECHAPPEMENT	2	2				
15	67F–45181–00–5B	PLATE PLAQUETTE	1	1				
16	67F–41138–00	SEAL, EXT. 1 JOINT DE GROUPE 1	1	1				
17	67F–45127–00	SEAL JOINT	1	1				
18	68V–45111–11–8D	CASING, UPPER FOURREAU	1					L L
	68V–45111–31–8D	CASING, UPPER FOURREAU	1	1				X X
19	90119–10M08	BOLT, WITH WASHER BOULON, AVEC RONDELLE	6	6				
20	93608–16M16	PIN, DOWEL AXE	2	2				
21	6E5–45318–00	BUSHING, DRIVE SHAFT DOUILLE, ARBRE MOTEUR	1	1				
22	93420–36M01	CIRCLIP CIRCLIP, TYPE S	1	1				
23	67F–45151–00	COVER, UPPER CASING CAPUCHON, FOURREAU	1	1				
24	97880–06016	SCREW, PAN HEAD VIS, TETE TRONCONIQUE	2	2				
25	92990–06600	WASHER, PLATE RONDELLE, PLATE	2	2				

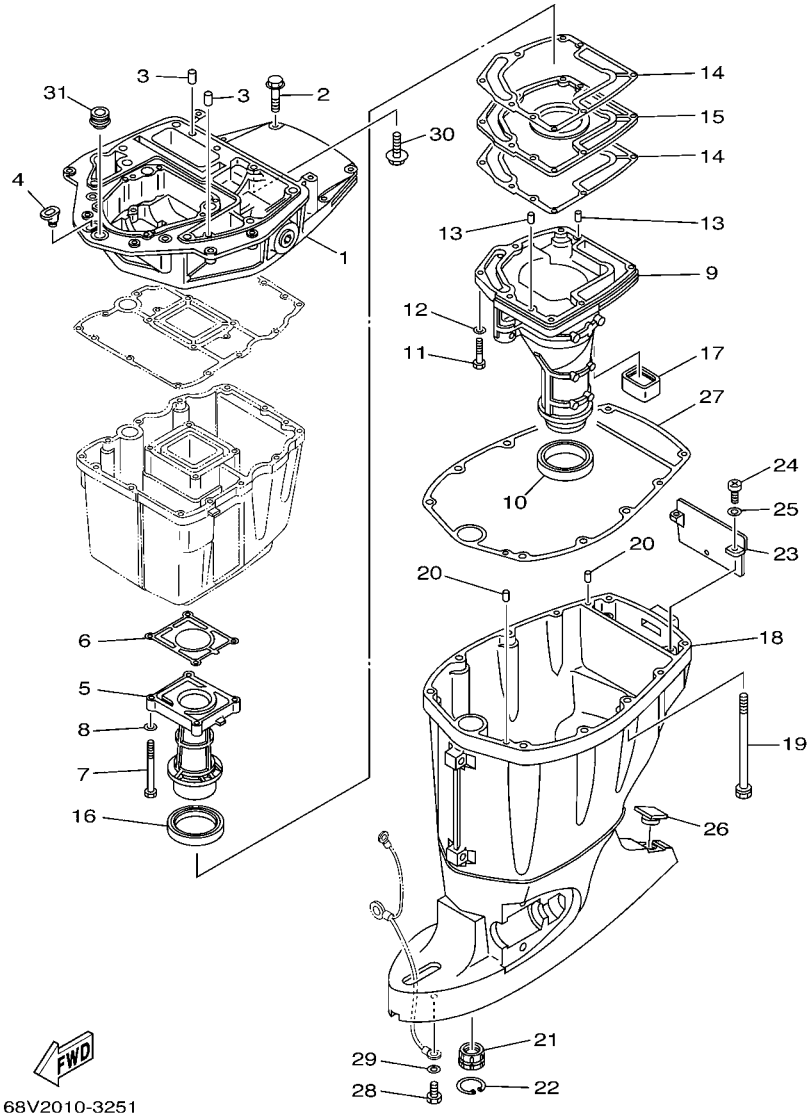

FIG. 26 UPPER CASING FOURREAU

REF. NO.	PART NO. N° PIECES	DESCRIPTION DESCRIPTION	68V4	68W4				REMARKS REMARQUES
26	6H3–45155–00	CAP CAPUCHON	1	1				
27	67F–45113–00	GASKET, UPPER CASING JOINT, TUBE D'ARBRE	1	1				
28	97095–06010	BOLT BOULON	1	1				
29	92995–06600	WASHER RONDELLE	1	1				
30	90119–08M58	BOLT, WITH WASHER BOULON, AVEC RONDELLE	2	2				
31	67F–42724–00	GROMMET PASSE-FIL	1	1				

FIG. 27 OIL PAN — VENTILATEUR D'HUILE

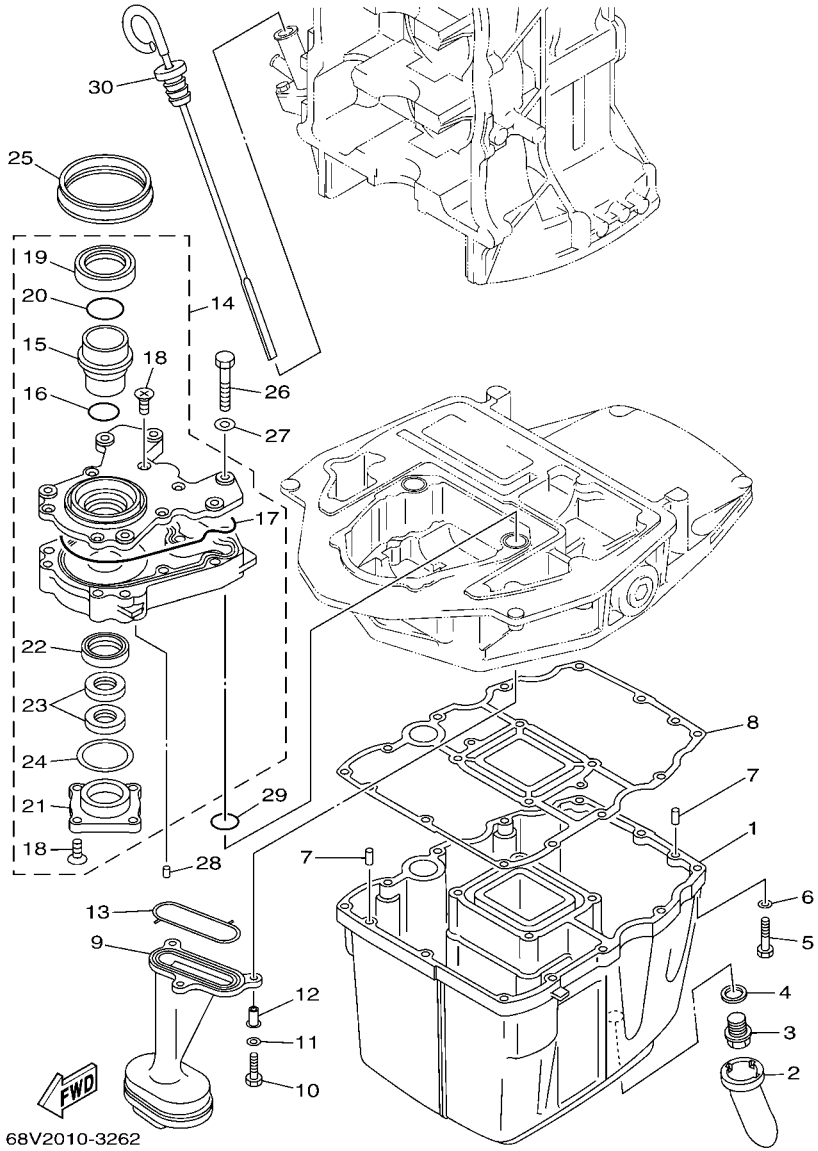

REF. NO.	PART NO. N° PIECES	DESCRIPTION DESCRIPTION	68V4	68W4				REMARKS REMARQUES
1	68V–15311–00–5B	OIL PAN VENTILATEUR D'HUILE	1	1				
2	67F–15316–00	DAMPER 1 AMORTISSEUR 1	1	1				
3	90340–14M06	PLUG, STRAIGHT SCREW PLOT, FILETE DROIT	1	1				
4	90430–14M09	GASKET JOINT	1	1				
5	97075–06025	BOLT BOULON	12	12				
6	92995–06600	WASHER RONDELLE	12	12				
7	93606–12019	PIN, DOWEL GOUPILLE	2	2				
8	68V–15312–00	GASKET, OIL PAN JOINT DE VENTILATEUR D'HUILE	1	1				
9	67F–13411–00	STRAINER, OIL FILTRE, HUILE	1	1				
10	97027–06025	BOLT BOULON	3	3				
11	92907–06600	WASHER, PLATE RONDELLE	3	3				
12	90387–06M64	COLLAR COLLERETTE	3	3				
13	67F–13415–00	SEAL, OIL STRAINER JOINT, FILTRE A HUILE	1	1				
14	67F–13300–10	OIL PUMP ASSY POMPE A HUILE COMPLETE	1	1				
15	67F–13314–02	.SHAFT, PUMP .AXE DE POMPE	1	1				
16	67F–13473–01	.O-RING .JOINT TORIQUE	1	1				
17	67F–13329–00	.GASKET, PUMP COVER .JOINT, COUVERCLE DE POMPE	1	1				
18	67F–13495–00	.SCREW .VIS	10	10				
19	67F–13119–01	.OIL SEAL .JOINT SPY	1	1				
20	67F–13769–00	.O-RING .JOINT TORIQUE	1	1				
21	67F–13914–00	.HOUSING, PUMP .CORPS, POMPE	1	1				
22	67F–13631–03	.OIL SEAL .JOINT SPY	1	1				
23	67F–13149–00	.OIL SEAL .JOINT SPY	2	2				
24	67F–13339–00	.GASKET, PUMP COVER .BAINT, COUVERCLE DE POME	1	1				
25	67F–13338–00	SEAL JOINT	1	1				
26	97095–06045	BOLT BOULON	6	6				
27	92995–06600	WASHER RONDELLE	6	6				

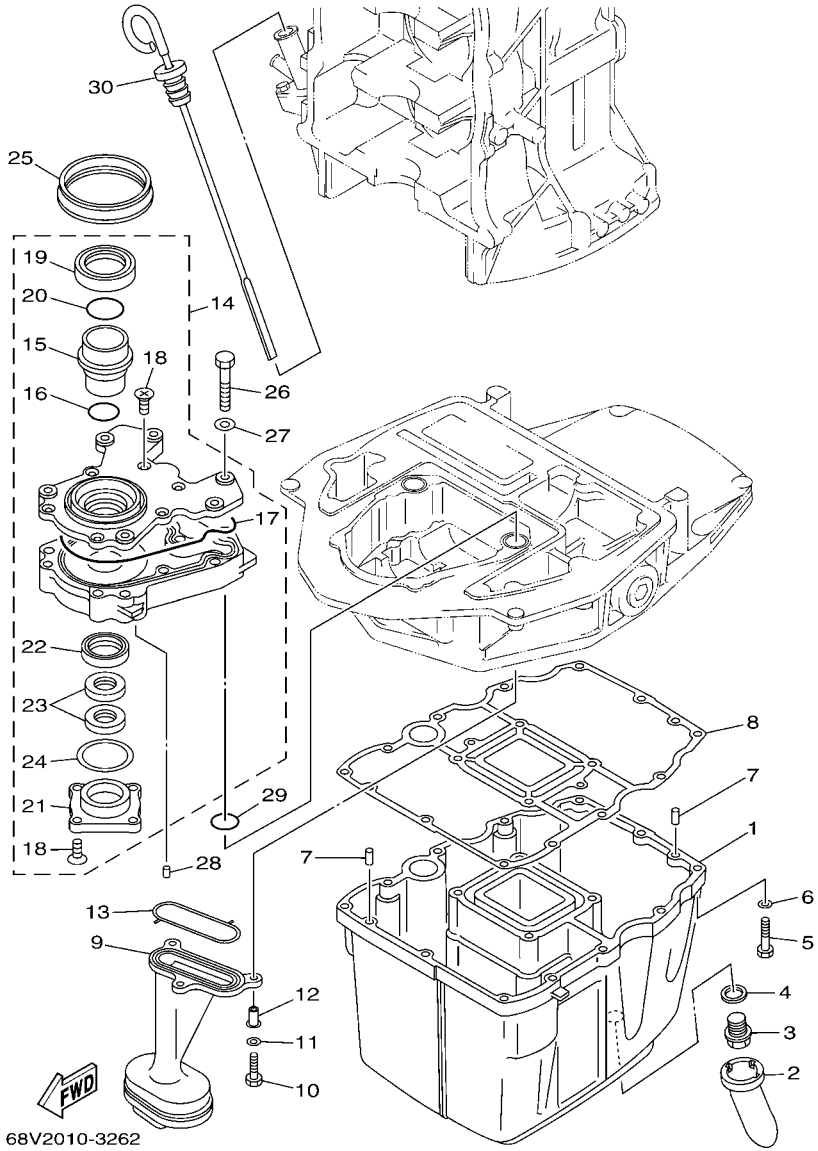

FIG. 27 OIL PAN — VENTILATEUR D'HUILE

REF. NO.	PART NO. N° PIECES	DESCRIPTION DESCRIPTION	68V4	68W4				REMARKS REMARQUES
28	93604–12M07	PIN, DOWEL CLAVETTE	2	2				
29	93210–19MJ1	O-RING JOINT TORIQUE	2	2				
30	68V–15362–10	PLUG, OIL LEVEL PLOT, NIVEAU D'HUILE	1	1				

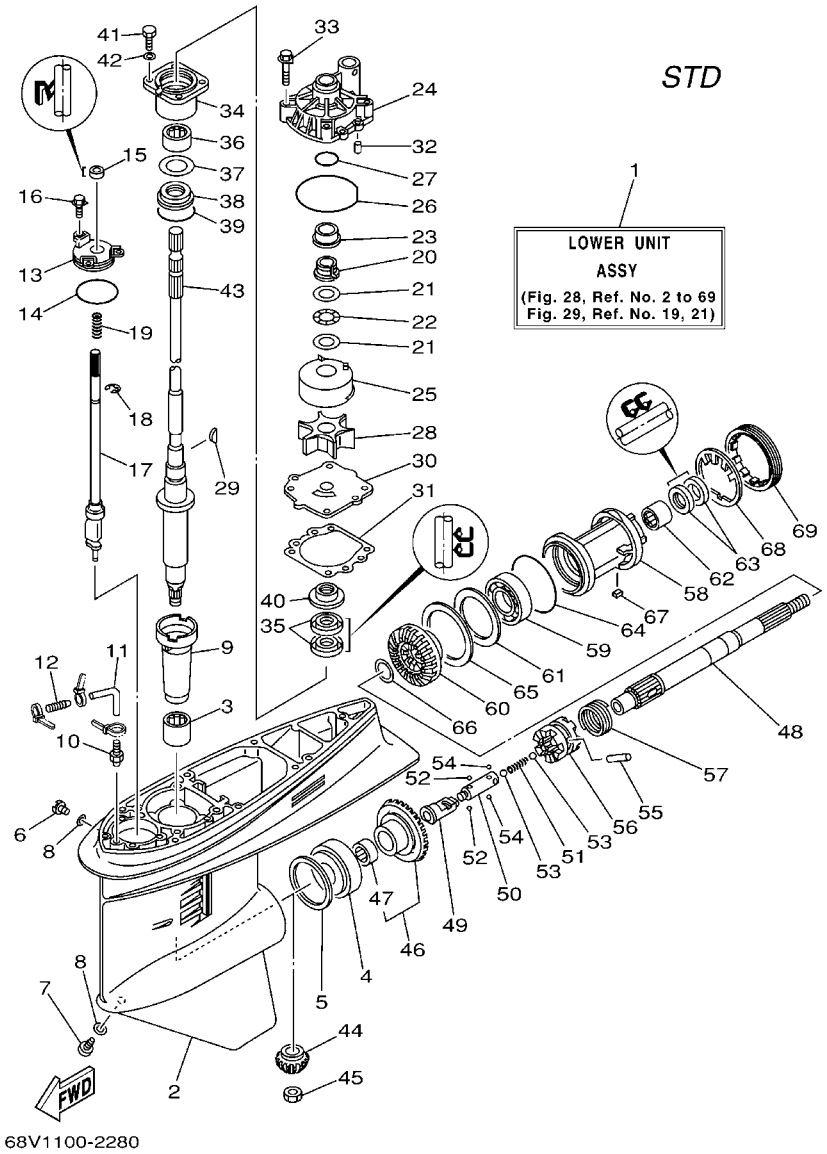

FIG. 28 LOWER CASING & DRIVE 1 BOITIER D'HELICE TRANSMISSION1

REF. NO.	PART NO. N° PIECES	DESCRIPTION DESCRIPTION	68V4	68W4				REMARKS REMARQUES
1	68V–45300–12–8D	LOWER UNIT ASSY UNITE INFERIEURE (ENS.)	1					L L
	68V–45300–32–8D	LOWER UNIT ASSY UNITE INFERIEURE (ENS.)	1					X X
2	6E5–45301–05–8D	CASING, LOWER BEQUILLE	1					
3	93315–628U9	BEARING ROULEMENT	1					
4	93332–000U7	BEARING ROULEMENT	1					
5	6E5–45567–01	SHIM (T:0.10MM) CALE (T:0.10MM)	1					UR UR
	6E5–45567–10	SHIM (T:0.12MM) CALE (T:0.12MM)	1					UR UR
	6E5–45567–20	SHIM (T:0.15MM) CALE (T:0.15MM)	1					UR UR
	6E5–45567–30	SHIM (T:0.18MM) CALE (T:0.18MM)	1					UR UR
	6E5–45567–40	SHIM (T:0.30MM) CALE (T:0.30MM)	1					UR UR
	6E5–45567–50	SHIM (T:0.40MM) CALE (T:0.40MM)	1					UR UR
	6E5–45567–60	SHIM (T:0.50MM) CALE (T:0.50MM)	1					UR UR
6	90340–08002	PLUG, STRAIGHT SCREW PLOT, FILETE DROIT	1					
7	688–45341–10	PLUG, DRAIN BOUCHON DE VIDANGE	1					
8	90430–08020	GASKET JOINT	2					
9	6E5–45536–00	SLEEVE, DRIVE SHAFT MANCHON, ARBRE MOTEUR	1					
10	6E5–45378–00	NIPPLE, HOSE RACCORD, TUYAU	1					
11	90445–07ME8	HOSE (L80) DURITE (L80)	1					L L
	90445–07ME9	HOSE (L120) DURITE (L120)	1					X X
12	6E5–83558–10	END, NIPPLE RACCORD DE NIPPLE	1					
13	6E5–45321–00	PLATE PLAQUETTE	1					
14	93210–58144	O-RING JOINT TORIQUE	1					
15	93106–09014	OIL SEAL JOINT SPY	1					
16	90119–06M10	BOLT, WITH WASHER BOULON, AVEC RONDELLE	3					
17	6L6–44150–01	SHIFT CAM ASSY CAME D'INVERSION	1					
18	99001–08600	CIRCLIP CIRCLIP	1					
19	90501–11M10	SPRING, COMPRESSION RESSORT, COMPRESSION	1					

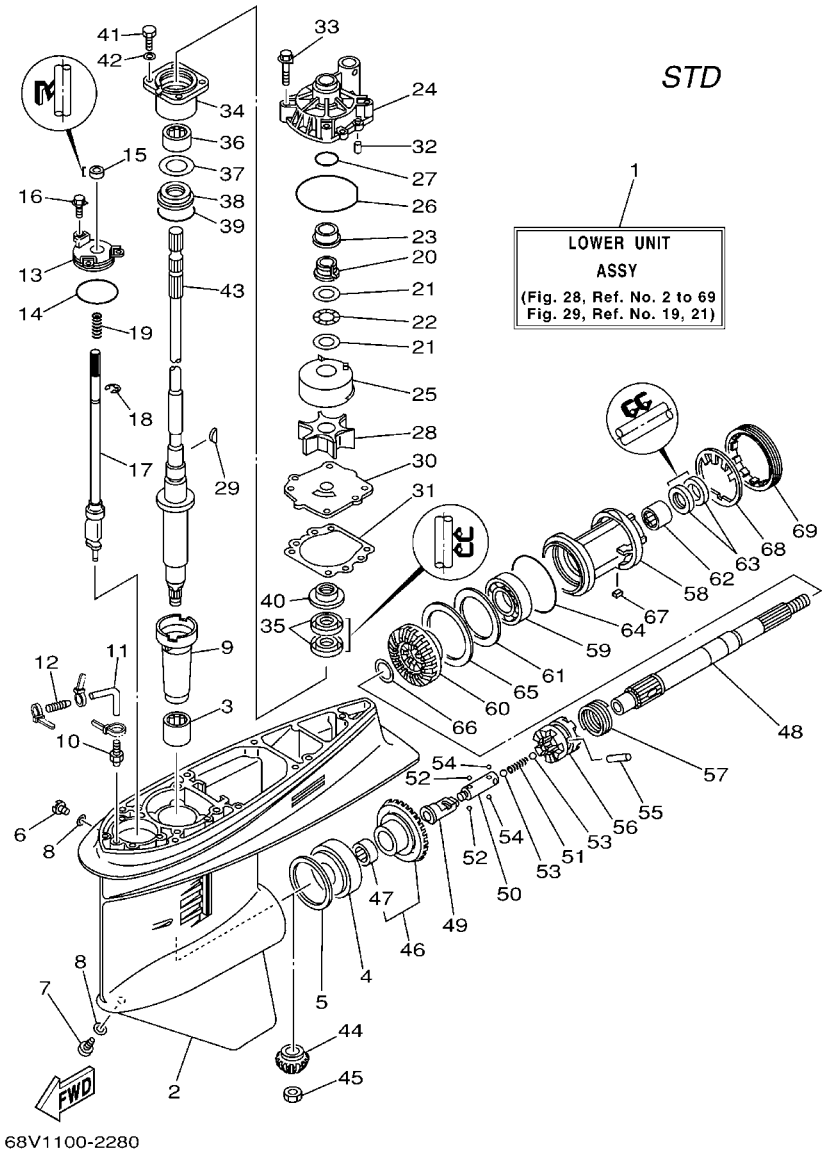

FIG. 28 LOWER CASING & DRIVE 1 BOITIER D'HELICE TRANSMISSION1

REF. NO.	PART NO. N° PIECES	DESCRIPTION DESCRIPTION	68V4	68W4				REMARKS REMARQUES
20	61A–45538–00	SPACER 1 ENTRETOISE	1					
21	90201–22M01	WASHER, PLATE RONDELLE, PLATE	2					
22	90206–22M19	WASHER, WAVE RONDELLE, ONDULEE	1					
23	61A–45527–00	COLLAR, DRIVE SHAFT ENTRETOISE	1					
24	61A–44311–01	HOUSING, WATER PUMP CORPS, POMPE A EAU	1					
25	61A–44322–02	INSERT, CARTRIDGE CUVETTE	1					
26	93210–86M38	O-RING JOINT TORIQUE	1					
27	93210–37160	O-RING JOINT TORIQUE	1					
28	6E5–44352–01	IMPELLER TURBINE	1					
29	90280–04M05	KEY, WOODRUFF CLAVETTE, DEMI-LUNE	1					
30	68V–44323–00	OUTER PLATE, CARTRIDGE PLAQUE EXTERIEURE	1					
31	6E5–44315–A0	GASKET, WATER PUMP JOINT, POMPE A EAU	1					
32	93606–12019	PIN, DOWEL GOUPILLE	2					
33	90119–08M14	BOLT, WITH WASHER BOULON, AVEC RONDELLE	4					
34	6E5–45331–00–94	HOUSING, BEARING FLASQUE, ROULEMENT	1					
35	93101–28M16	OIL SEAL JOINT SPY	2					
36	93317–330U2	BEARING ROULEMENT	1					
37	6E5–45587–01	SHIM (T:0.10MM) CALE (T:0.10MM)	1					UR UR
	6E5–45587–10	SHIM (T:0.12MM) CALE (T:0.12MM)	1					UR UR
	6E5–45587–20	SHIM (T:0.15MM) CALE (T:0.15MM)	1					UR UR
	6E5–45587–30	SHIM (T:0.18MM) CALE (T:0.18MM)	1					UR UR
	6E5–45587–40	SHIM (T:0.30MM) CALE (T:0.30MM)	1					UR UR
	6E5–45587–50	SHIM (T:0.40MM) CALE (T:0.40MM)	1					UR UR
	6E5–45587–60	SHIM (T:0.50MM) CALE (T:0.50MM)	1					UR UR
38	93341–930V2	BEARING CERVEAUX DE DIRECTION	1					
39	93210–55M14	O-RING JOINT TORIQUE	1					
40	6E5–45344–00	COVER, OIL SEAL FLASQE, JOINT D'HUILE	1					

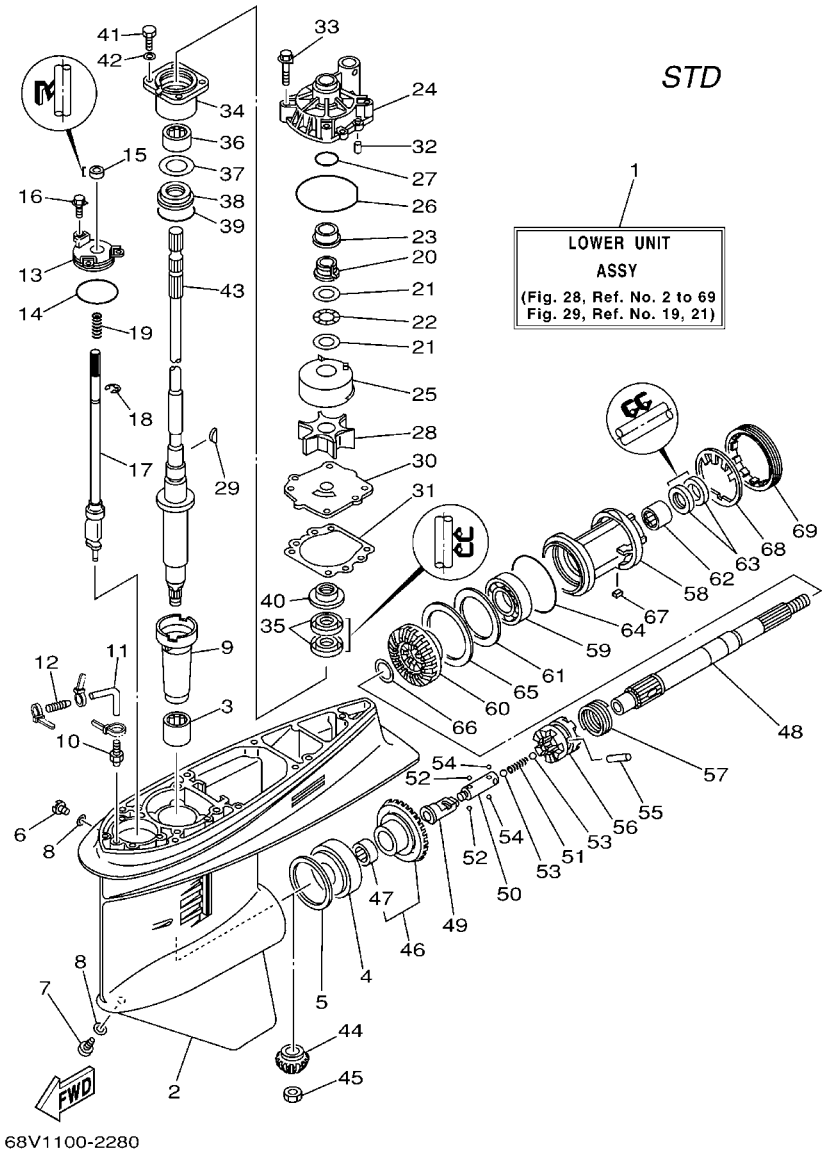

FIG. 28 LOWER CASING & DRIVE 1 BOITIER D'HELICE TRANSMISSION1

REF. NO.	PART NO. N° PIECES	DESCRIPTION DESCRIPTION	68V4	68W4				REMARKS REMARQUES
41	97095–08025	BOLT BOULON	4					
42	92995–08600	WASHER RONDELLE	4					
43	68V–45501–10	DRIVE SHAFT COMP. ARBRE MOTEUR COMP.	1					L L
	68V–45501–30	DRIVE SHAFT COMP. ARBRE MOTEUR COMP.	1					X X
44	68V–45551–00	PINION (13T) PIGNON D'ATTAQUE (13D)	1					
45	90170–16M01	NUT ECROU	1					
46	68V–45560–00	GEAR 1 (28T) PIGNON 1 (28T)	1					
47	93315–425U7	.BEARING .ROULEMENT	1					
48	6E5–45611–01	SHAFT, PROPELLER ARBRE, HELICE	1					
49	6K1–45641–01	SHIFTER EMBRAYAGE	1					
50	6E5–45634–01	SLIDE, SHIFT CONTRE-POUSSOIR	1					
51	90501–16M37	SPRING, COMPRESSION RESSORT, COMPRESSION	1					
52	93507–32009	BALL BILLE	2					
53	93511–32017	BALL BILLES	2					
54	93503–16003	BALL BILLES	2					
55	90250–08M07	PIN, STRAIGHT GOUPILLE, DROITE	1					
56	68V–45631–01	CLUTCH, DOG CRABOT	1					
57	6E5–45633–01	RING, CROSS PIN JONC, GOUPILLE CRABOT	1					
58	6E5–45332–00–94	HOUSING, BEARING FLASQUE, ROULEMENT	1					
59	93306–208U0	BEARING ROULEMENT	1					
60	68V–45571–00	GEAR 2 (28T) PIGNON 2 (28T)	1					
61	6E5–45576–00	WASHER, THRUST RONDELLE DE CALAGE	1					
62	93315–430U8	BEARING ROULEMENT	1					
63	93101–30M17	OIL SEAL JOINT SPY	2					
64	93210–86M39	O-RING JOINT TORIQUE	1					
65	6L6–45577–00	SHIM (T:0.10MM) CALE (T:0.10MM)	1					UR UR
	6L6–45577–10	SHIM (T:0.12MM) CALE (T:0.12MM)	1					UR UR

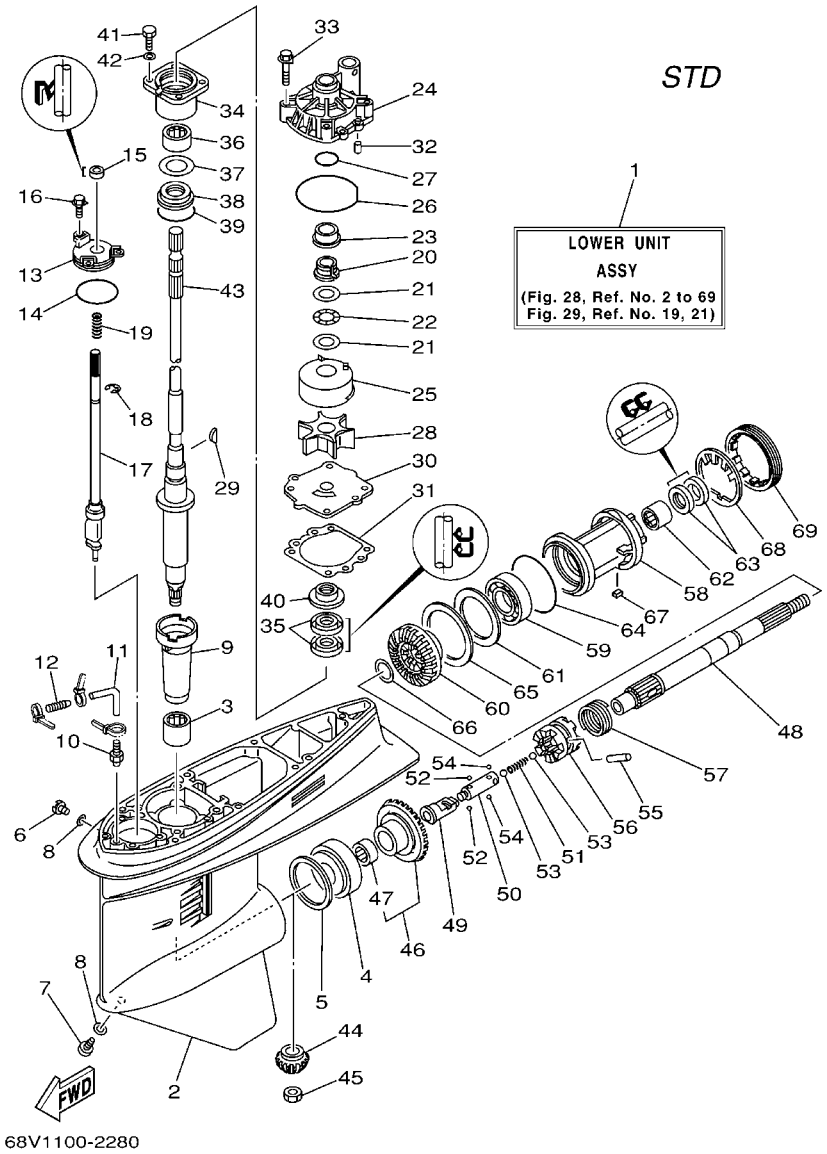

FIG. 28 LOWER CASING & DRIVE 1 BOITIER D'HELICE TRANSMISSION1

REF. NO.	PART NO. N° PIECES	DESCRIPTION DESCRIPTION	68V4	68W4				REMARKS REMARQUES
65	6L6–45577–20	SHIM (T:0.15MM) CALE (T:0.15MM)	1					UR UR
	6L6–45577–30	SHIM (T:0.18MM) CALE (T:0.18MM)	1					UR UR
	6L6–45577–40	SHIM (T:0.30MM) CALE (T:0.30MM)	1					UR UR
	6L6–45577–50	SHIM (T:0.40MM) CALE (T:0.40MM)	1					UR UR
	6L6–45577–60	SHIM (T:0.50MM) CALE (T:0.50MM)	1					UR UR
66	90201–30M92	WASHER, PLATE RONDELLE, PLATE	2					
67	90282–04010	KEY, STRAIGHT CLAVETTE, DROITE	1					
68	688–45383–02	WASHER, CLAW FREIN D'ECROU	1					
69	688–45384–00	NUT ECROU	1					

FIG. 29 LOWER CASING & DRIVE 2 BOITIER D'HELICE TRANSMISSION2

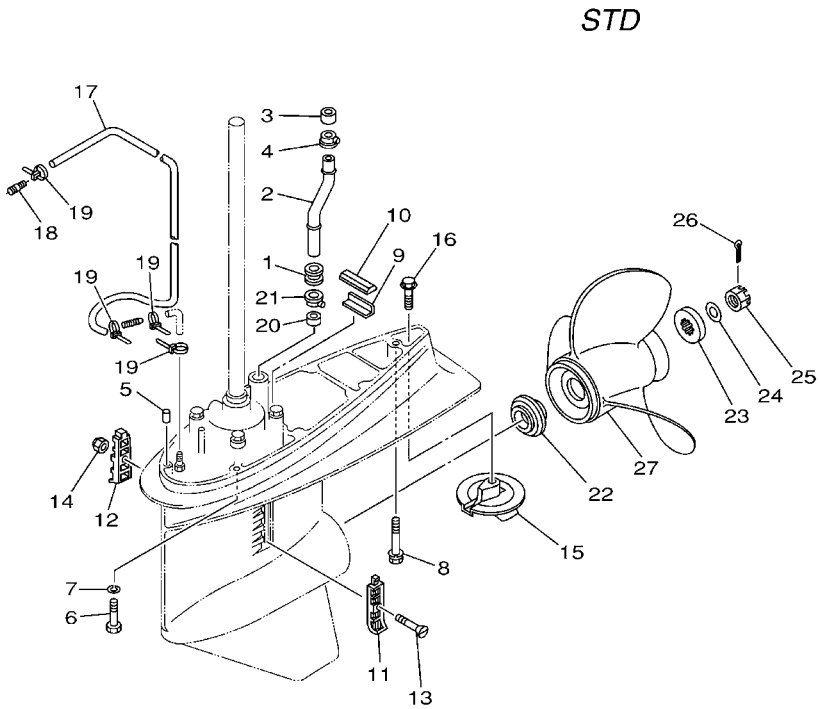

REF. NO.	PART NO. N° PIECES	DESCRIPTION DESCRIPTION	68V4	68W4				REMARKS REMARQUES
1	6E5–44366–00	DAMPER, WATER SEAL JOINT, TUBE D'EAU	1					
2	68V–44361–11	TUBE, WATER TUBE D'EAU	1					L L
	68V–44361–30	TUBE, WATER TUBE D'EAU	1					X X
3	6E5–44365–00	DAMPER, WATER SEAL JOINT, TUBE D'EAU	1					
4	6E5–44312–00	COVER, WATER PUMP HOUSING COUVERCLE	1					
5	93608–12M05	PIN, DOWEL AXE	2					
6	97075–10045	BOLT BOULON	6					
7	92995–10100	WASHER RONDELLE	6					
8	90119–10M89	BOLT, WITH WASHER BOULON, AVEC RONDELLE	1					
9	663–45376–00–94	GUIDE, SEAL DAMPER BUTEE, JOINT CAOUTCHOUC	1					
10	688–45375–00	DAMPER, SEAL BOURRELET, CAOUTCHOUC	1					
11	688–45214–02	COVER, WATER INLET GRILLE, ENTREE D'EAU	1					
12	688–45215–02	COVER, WATER INLET GRILLE, ENTREE D'EAU	1					
13	90152–05M07	SCREW, COUNTERSUNK VIS, TETE NOYEE	1					
14	90185–05002	NUT, SELF-LOCKING ECROU, AUTO-BLOQUANT	1					
15	6E5–45371–01	TAB-TRIM ANODE DERIVE	1					
16	90105–10M00	BOLT, FLANGE BOULON	1					
17	90445–076K2	HOSE (L1550) DURITE (L1550)	1					
18	6E5–83558–00	END, NIPPLE RACCORD DE NIPPLE	1					
19	90465–11M10	CLAMP BRIDE	4					
20	6E5–44365–00	DAMPER, WATER SEAL JOINT, TUBE D'EAU	1					
21	6E5–44312–00	COVER, WATER PUMP HOUSING COUVERCLE	1					
22	63P–45987–00	SPACER ENTRETOISE	1					
23	688–45997–01	SPACER ENTRETOISE	1					
24	92990–18200	WASHER RONDELLE, PLATE	1					
25	90171–18M04	NUT, CASTLE ECROU, CRENELE	1					
26	91490–40030	PIN, COTTER GOUPILLE	1					

FIG. 29 LOWER CASING & DRIVE 2 BOITIER D'HELICE TRANSMISSION2

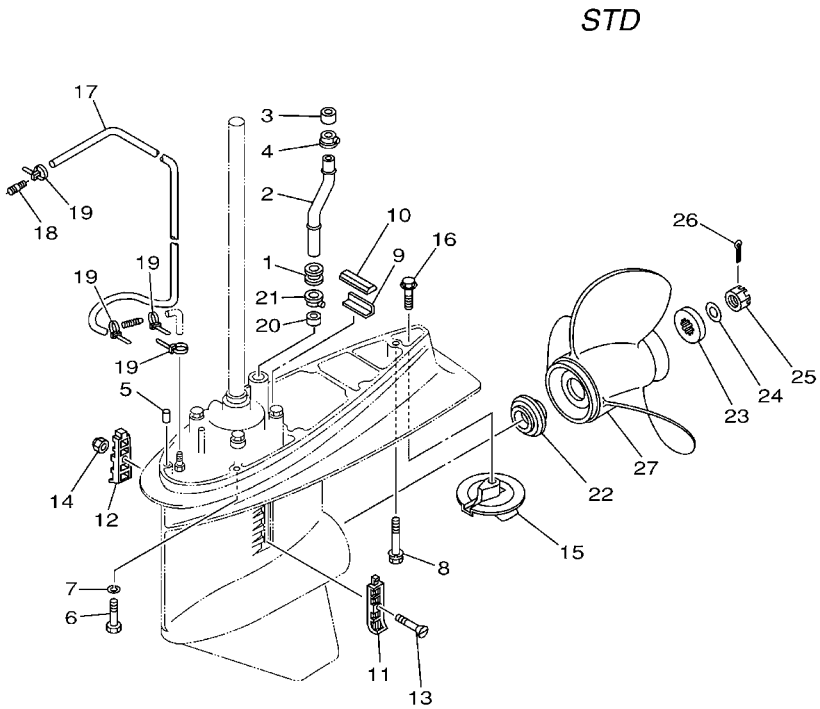

REF. NO.	PART NO. N° PIECES	DESCRIPTION DESCRIPTION	68V4	68W4				REMARKS REMARQUES
27	6E5–45941–00–EL	PROPELLER (3X13"X19"-K) HELICE (3X13"X19"-K)	1					UR UR
	6E5–45943–00–EL	PROPELLER (3X12-5/8"X21"-K) HELICE (3X12-5/8"X21"-K)	1					UR UR
	6E5–45945–01–EL	PROPELLER (3X13-1/4"X17"-K) HELICE (3X13-1/4"X17"-K)	1					UR UR
	6E5–45947–00–EL	PROPELLER (3X13-1/2"X15"-K) HELICE (3X13-1/2"X15"-K)	1					UR UR
	6E5–45949–00–EL	PROPELLER (3X13-5/8"X13"-K) HELICE (3X13-5/8"X13"-K)	1					UR UR
	6E5–45952–00–EL	PROPELLER (3X13"X23"-K) HELICE (3X13"X23"-K)	1					UR UR
	6E5–45954–00–EL	PROPELLER (3X14"X11"-K) HELICE (3X14"X11"-K)	1					UR UR
	6E5–45956–00–EL	PROPELLER (3X13"X25"-K) HELICE (3X13"X25"-K)	1					UR UR
	688–45930–02–98	PROPELLER (3X13"X17"-K) HELICE (3X13"X17"-K)	1					UR UR
	688–45932–60–98	PROPELLER (3X13-1/2"X14"-K) HELICE (3X13-1/2"X14"-K)	1					UR UR
	688–45970–03–98	PROPELLER (3X13"X19"-K) HELICE (3X13"X19"-K)	1					UR UR
	688–45972–02–98	PROPELLER (3X13"X21"-K) HELICE (3X13"X21"-K)	1					UR UR
	688–45974–02–98	PROPELLER (3X13"X23"-K) HELICE (3X13"X23"-K)	1					UR UR
	688–45976–01–98	PROPELLER (3X13"X25"-K) HELICE (3X13"X25"-K)	1					UR UR
	688–45978–60–98	PROPELLER (3X13-1/2"X16"-K) HELICE (3X13-1/2"X16"-K)	1					UR UR
	62A–45970–10	PROPELLER (3X13-1/2"X21"-K) HELICE (3X13-1/2"X21"-K)	1					UR UR
	62A–45972–10	PROPELLER (3X13-1/2"X23"-K) HELICE (3X13-1/2"X23"-K)	1					UR UR
	62A–45974–10	PROPELLER (3X13-1/2"X19"-K) HELICE (3X13-1/2"X19"-K)	1					UR UR

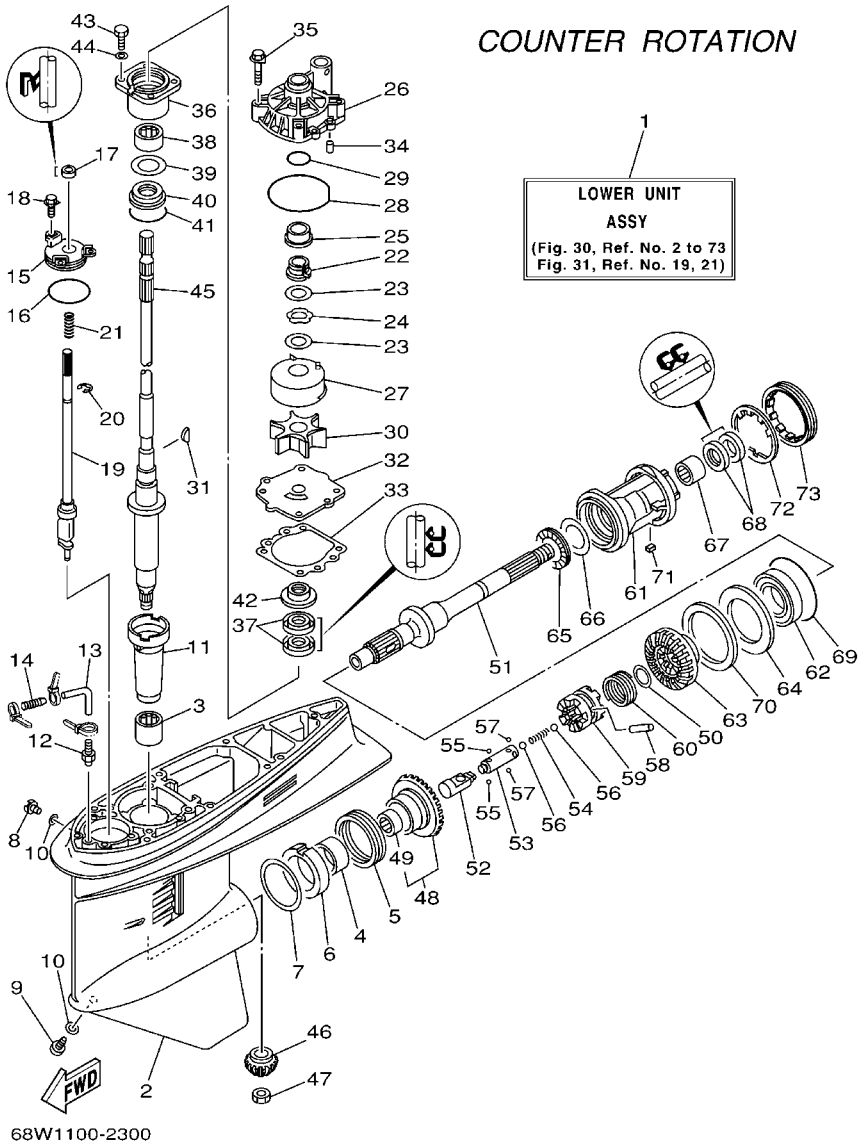

FIG. 30 LOWER CASING & DRIVE 3 BOITIER D'HELICE TRANSMISSION3

REF. NO.	PART NO. N° PIECES	DESCRIPTION DESCRIPTION	68V4	68W4				REMARKS REMARQUES
1	68W–45300–32–8D	LOWER UNIT ASSY UNITE INFERIEURE (ENS.)		1				X X
2	6E5–45301–05–8D	CASING, LOWER BEQUILLE		1				
3	93315–628U9	BEARING ROULEMENT		1				
4	93315–345W0	BEARING ROULEMENT		1				
5	93341–360U8	BEARING CERVEAUX DE DIRECTION		1				
6	6L6–45538–00	SPACER 1 ENTRETOISE		1				
7	6E5–45567–01	SHIM (T:0.10MM) CALE (T:0.10MM)		1				UR UR
	6E5–45567–10	SHIM (T:0.12MM) CALE (T:0.12MM)		1				UR UR
	6E5–45567–20	SHIM (T:0.15MM) CALE (T:0.15MM)		1				UR UR
	6E5–45567–30	SHIM (T:0.18MM) CALE (T:0.18MM)		1				UR UR
	6E5–45567–40	SHIM (T:0.30MM) CALE (T:0.30MM)		1				UR UR
	6E5–45567–50	SHIM (T:0.40MM) CALE (T:0.40MM)		1				UR UR
	6E5–45567–60	SHIM (T:0.50MM) CALE (T:0.50MM)		1				UR UR
8	90340–08002	PLUG, STRAIGHT SCREW PLOT, FILETE DROIT		1				
9	688–45341–10	PLUG, DRAIN BOUCHON DE VIDANGE		1				
10	90430–08020	GASKET JOINT		2				
11	6E5–45536–00	SLEEVE, DRIVE SHAFT MANCHON, ARBRE MOTEUR		1				
12	6E5–45378–00	NIPPLE, HOSE RACCORD, TUYAU		1				
13	90445–07ME9	HOSE (L120) DURITE (L120)		1				X X
14	6E5–83558–10	END, NIPPLE RACCORD DE NIPPLE		1				
15	6E5–45321–00	PLATE PLAQUETTE		1				
16	93210–58144	O-RING JOINT TORIQUE		1				
17	93106–09014	OIL SEAL JOINT SPY		1				
18	90119–06M10	BOLT, WITH WASHER BOULON, AVEC RONDELLE		3				
19	6E5–44150–02	SHIFT CAM ASSY CAME D'INVERSION		1				
20	99001–08600	CIRCLIP CIRCLIP		1				
21	90501–11M10	SPRING, COMPRESSION RESSORT, COMPRESSION		1				

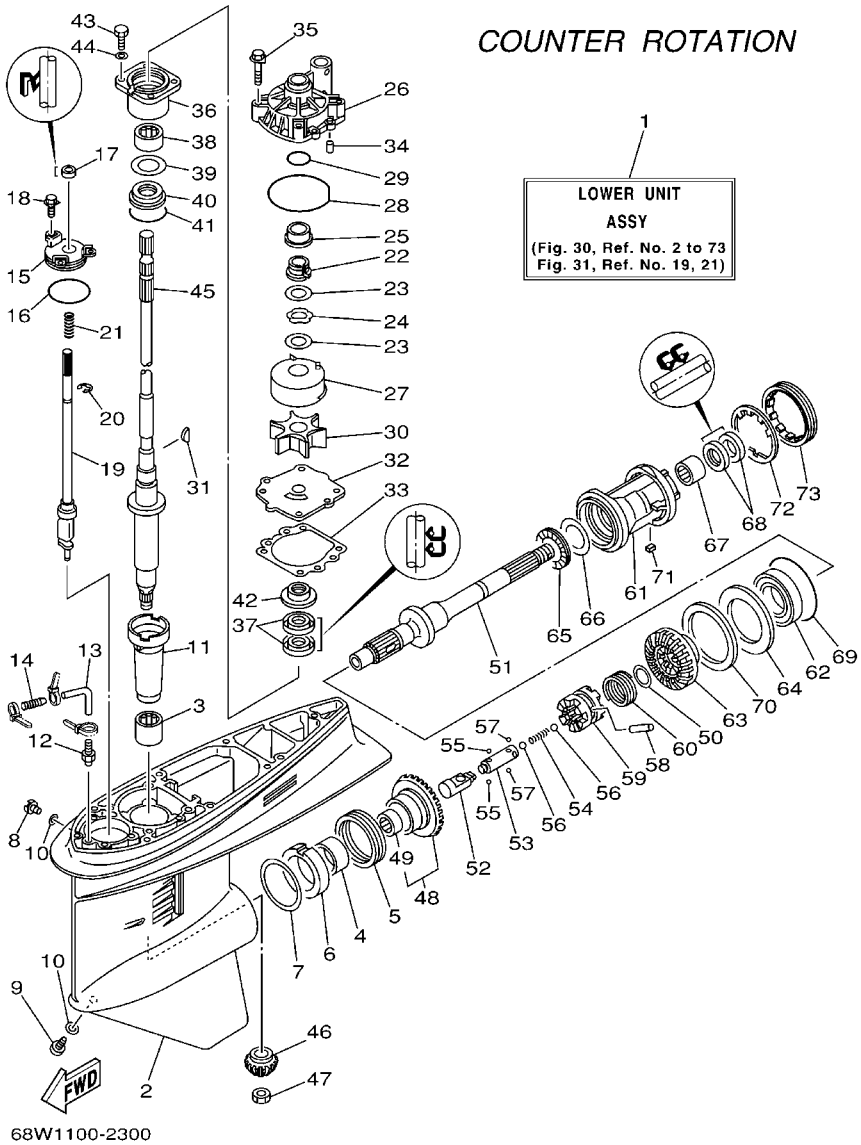

FIG. 30 LOWER CASING & DRIVE 3 BOITIER D'HELICE TRANSMISSION3

REF. NO.	PART NO. N° PIECES	DESCRIPTION DESCRIPTION	68V4	68W4				REMARKS REMARQUES
22	61A–45538–00	SPACER 1 ENTRETOISE		1				
23	90201–22M01	WASHER, PLATE RONDELLE, PLATE		2				
24	90206–22M19	WASHER, WAVE RONDELLE, ONDULEE		1				
25	61A–45527–00	COLLAR, DRIVE SHAFT ENTRETOISE		1				
26	61A–44311–01	HOUSING, WATER PUMP CORPS, POMPE A EAU		1				
27	61A–44322–02	INSERT, CARTRIDGE CUVETTE		1				
28	93210–86M38	O-RING JOINT TORIQUE		1				
29	93210–37160	O-RING JOINT TORIQUE		1				
30	6E5–44352–01	IMPELLER TURBINE		1				
31	90280–04M05	KEY, WOODRUFF CLAVETTE, DEMI-LUNE		1				
32	68V–44323–00	OUTER PLATE, CARTRIDGE PLAQUE EXTERIEURE		1				
33	6E5–44315–A0	GASKET, WATER PUMP JOINT, POMPE A EAU		1				
34	93606–12019	PIN, DOWEL GOUPILLE		2				
35	90119–08M14	BOLT, WITH WASHER BOULON, AVEC RONDELLE		4				
36	6E5–45331–00–94	HOUSING, BEARING FLASQUE, ROULEMENT		1				
37	93101–28M16	OIL SEAL JOINT SPY		2				
38	93317–330U2	BEARING ROULEMENT		1				
39	6E5–45587–01	SHIM (T:0.10MM) CALE (T:0.10MM)		1				UR UR
	6E5–45587–10	SHIM (T:0.12MM) CALE (T:0.12MM)		1				UR UR
	6E5–45587–20	SHIM (T:0.15MM) CALE (T:0.15MM)		1				UR UR
	6E5–45587–30	SHIM (T:0.18MM) CALE (T:0.18MM)		1				UR UR
	6E5–45587–40	SHIM (T:0.30MM) CALE (T:0.30MM)		1				UR UR
	6E5–45587–50	SHIM (T:0.40MM) CALE (T:0.40MM)		1				UR UR
	6E5–45587–60	SHIM (T:0.50MM) CALE (T:0.50MM)		1				UR UR
40	93341–930V2	BEARING CERVEAUX DE DIRECTION		1				
41	93210–55M14	O-RING JOINT TORIQUE		1				
42	6E5–45344–00	COVER, OIL SEAL FLASQE, JOINT D'HUILE		1				

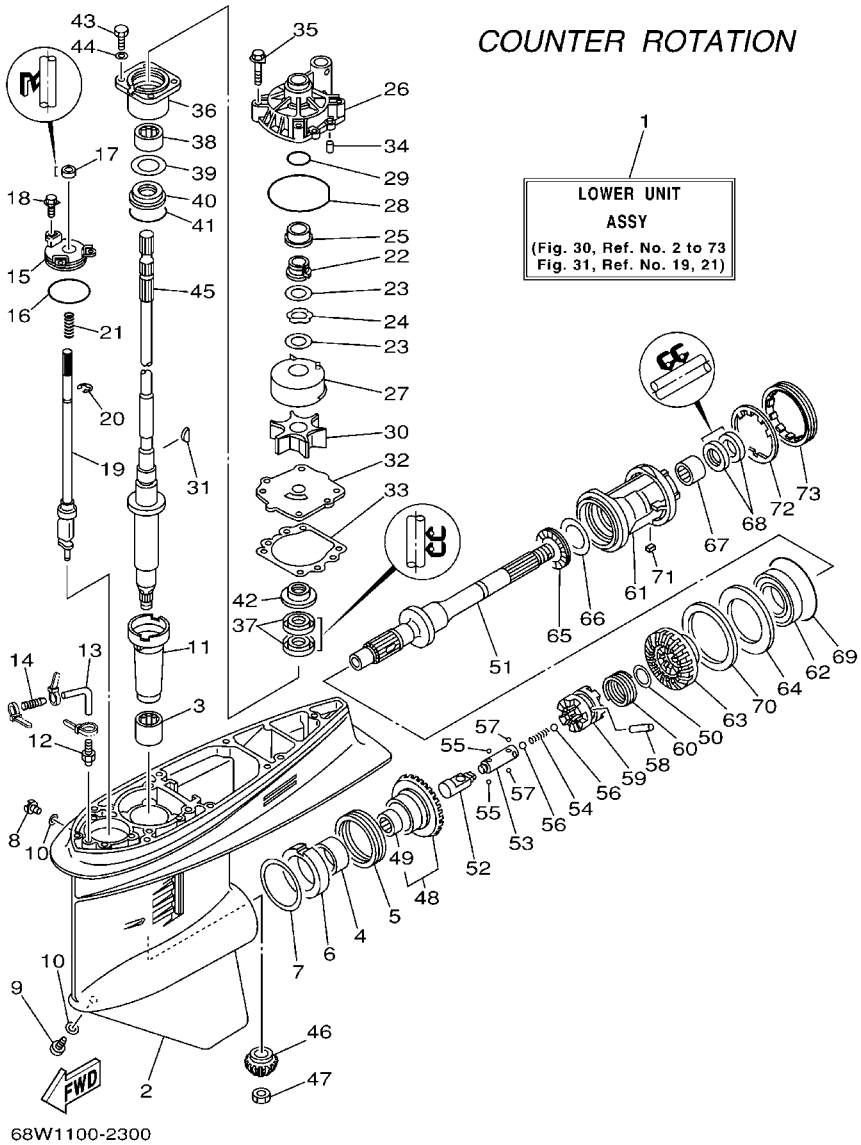

FIG. 30 LOWER CASING & DRIVE 3 BOITIER D'HELICE TRANSMISSION3

REF. NO.	PART NO. N° PIECES	DESCRIPTION DESCRIPTION	68V4	68W4				REMARKS REMARQUES
43	97095–08025	BOLT BOULON		4				
44	92995–08600	WASHER RONDELLE		4				
45	68V–45501–30	DRIVE SHAFT COMP. ARBRE MOTEUR COMP.		1				X X
46	68V–45551–00	PINION (13T) PIGNON D'ATTAQUE (13D)		1				
47	90170–16M01	NUT ECROU		1				
48	68W–45560–00	GEAR 1 (28T) PIGNON 1 (28T)		1				
49	93315–425U7	.BEARING .ROULEMENT		1				
50	90201–26M00	WASHER, PLATE RONDELLE, PLATE		1				
51	68W–45611–00	SHAFT, PROPELLER ARBRE, HELICE		1				
52	6E5–45641–03	SHIFTER EMBRAYAGE		1				
53	6E5–45634–01	SLIDE, SHIFT CONTRE-POUSSOIR		1				
54	90501–16M37	SPRING, COMPRESSION RESSORT, COMPRESSION		1				
55	93507–32009	BALL BILLE		2				
56	93511–32017	BALL BILLES		2				
57	93503–16003	BALL BILLES		2				
58	90250–08M07	PIN, STRAIGHT GOUPILLE, DROITE		1				
59	68V–45631–01	CLUTCH, DOG CRABOT		1				
60	6E5–45633–01	RING, CROSS PIN JONC, GOUPILLE CRABOT		1				
61	6L6–45332–00–94	HOUSING, BEARING FLASQUE, ROULEMENT		1				
62	93332–000V7	BEARING ROULEMENT		1				
63	68W–45570–10	GEAR 2 (28T) PIGNON 2 (28T)		1				
64	6L6–45576–00	WASHER, THRUST RONDELLE DE CALAGE		1				
65	93341–440U5	BEARING CERVEAUX DE DIRECTION		1				
66	6K1–45578–01	SHIM (T:0.10MM) CALE (T:0.10MM)		1				UR UR
	6K1–45578–10	SHIM (T:0.12MM) CALE (T:0.12MM)		1				UR UR
	6K1–45578–20	SHIM (T:0.15MM) CALE (T:0.15MM)		1				UR UR
	6K1–45578–30	SHIM (T:0.18MM) CALE (T:0.18MM)		1				UR UR

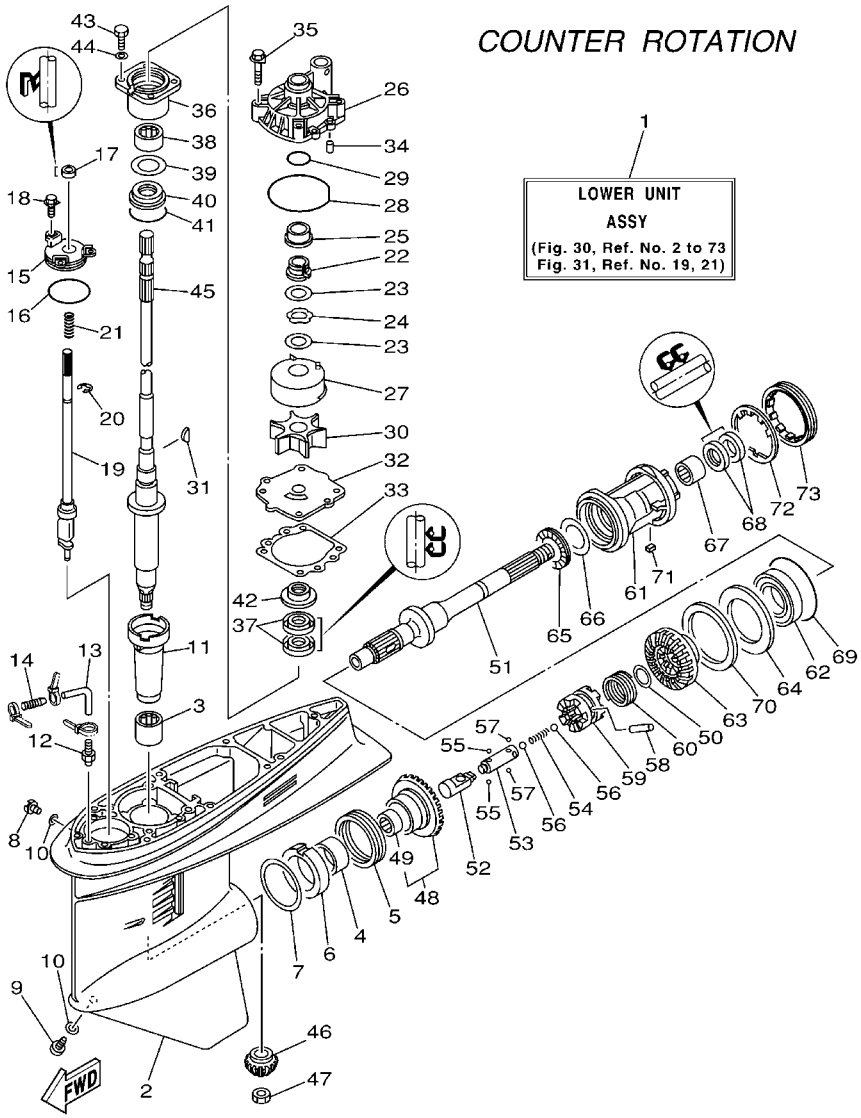

FIG. 30 LOWER CASING & DRIVE 3 BOITIER D'HELICE TRANSMISSION3

REF. NO.	PART NO. N° PIECES	DESCRIPTION DESCRIPTION	68V4	68W4				REMARKS REMARQUES
66	6K1–45578–40	SHIM (T:0.30MM) CALE (T:0.30MM)		1				UR UR
	6K1–45578–50	SHIM (T:0.40MM) CALE (T:0.40MM)		1				UR UR
	6K1–45578–60	SHIM (T:0.50MM) CALE (T:0.50MM)		1				UR UR
67	93317–330U5	BEARING ROULEMENT		1				
68	93101–30M17	OIL SEAL JOINT SPY		2				
69	93210–86M39	O-RING JOINT TORIQUE		1				
70	6L6–45577–00	SHIM (T:0.10MM) CALE (T:0.10MM)		1				UR UR
	6L6–45577–10	SHIM (T:0.12MM) CALE (T:0.12MM)		1				UR UR
	6L6–45577–20	SHIM (T:0.15MM) CALE (T:0.15MM)		1				UR UR
	6L6–45577–30	SHIM (T:0.18MM) CALE (T:0.18MM)		1				UR UR
	6L6–45577–40	SHIM (T:0.30MM) CALE (T:0.30MM)		1				UR UR
	6L6–45577–50	SHIM (T:0.40MM) CALE (T:0.40MM)		1				UR UR
	6L6–45577–60	SHIM (T:0.50MM) CALE (T:0.50MM)		1				UR UR
71	90282–04010	KEY, STRAIGHT CLAVETTE, DROITE		1				
72	688–45383–02	WASHER, CLAW FREIN D'ECROU		1				
73	688–45384–00	NUT ECROU		1				

FIG. 31 LOWER CASING & DRIVE 4 BOITIER D'HELICE TRANSMISSION4

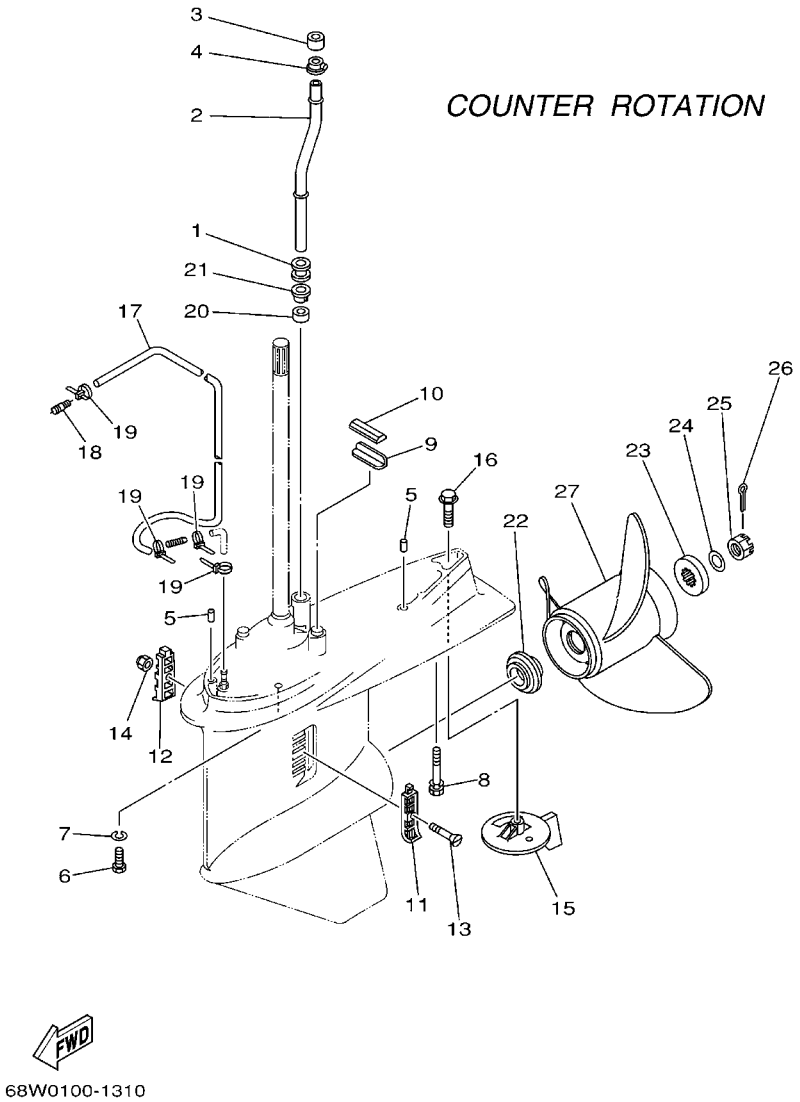

REF. NO.	PART NO. N° PIECES	DESCRIPTION DESCRIPTION	68V4	68W4				REMARKS REMARQUES
1	6E5–44366–00	DAMPER, WATER SEAL JOINT, TUBE D'EAU		1				
2	68V–44361–30	TUBE, WATER TUBE D'EAU		1				X X
3	6E5–44365–00	DAMPER, WATER SEAL JOINT, TUBE D'EAU		1				
4	6E5–44312–00	COVER, WATER PUMP HOUSING COUVERCLE		1				
5	93608–12M05	PIN, DOWEL AXE		2				
6	97075–10045	BOLT BOULON		6				
7	92995–10100	WASHER RONDELLE		6				
8	90119–10M89	BOLT, WITH WASHER BOULON, AVEC RONDELLE		1				
9	663–45376–00–94	GUIDE, SEAL DAMPER BUTEE, JOINT CAOUTCHOUC		1				
10	688–45375–00	DAMPER, SEAL BOURRELET, CAOUTCHOUC		1				
11	688–45214–02	COVER, WATER INLET GRILLE, ENTREE D'EAU		1				
12	688–45215–02	COVER, WATER INLET GRILLE, ENTREE D'EAU		1				
13	90152–05M07	SCREW, COUNTERSUNK VIS, TETE NOYEE		1				
14	90185–05002	NUT, SELF-LOCKING ECROU, AUTO-BLOQUANT		1				
15	6L6–45371–00	TAB-TRIM ANODE DERIVE		1				
16	90105–10M00	BOLT, FLANGE BOULON		1				
17	90445–076K2	HOSE (L1550) DURITE (L1550)		1				
18	6E5–83558–00	END, NIPPLE RACCORD DE NIPPLE		1				
19	90465–11M10	CLAMP BRIDE		4				
20	6E5–44365–00	DAMPER, WATER SEAL JOINT, TUBE D'EAU		1				
21	6E5–44312–00	COVER, WATER PUMP HOUSING COUVERCLE		1				
22	63P–45987–00	SPACER ENTRETOISE		1				
23	688–45997–01	SPACER ENTRETOISE		1				
24	92990–18200	WASHER RONDELLE, PLATE		1				
25	90171–18M04	NUT, CASTLE ECROU, CRENELE		1				
26	91490–40030	PIN, COTTER GOUPILLE		1				
27	6L6–45930–01–98	PROPELLER (3X13"X17"-KL) HELICE (3X13"X17"-KL)		1				UR UR

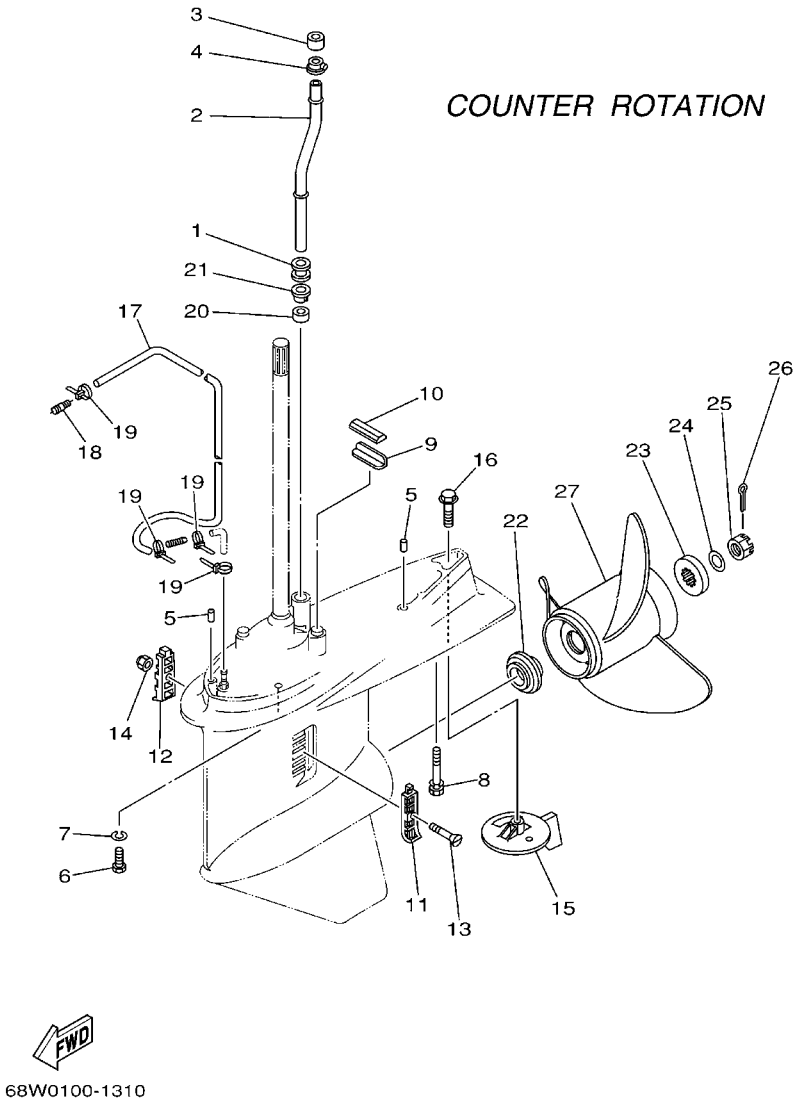

FIG. 31 LOWER CASING & DRIVE 4 BOITIER D'HELICE TRANSMISSION4

REF. NO.	PART NO. N° PIECES	DESCRIPTION DESCRIPTION	68V4	68W4				REMARKS REMARQUES
27	6L6–45970–00–98	PROPELLER (3X13"X19"-KL) HELICE (3X13"X19"-KL)		1				UR UR
	6L6–45972–00–98	PROPELLER (3X13"X21"-KL) HELICE (3X13"X21"-KL)		1				UR UR

FIG. 32 STEERING GUIDE ATTACHMENT 1 DIRECTION GUIDE ACCESSOIRE 1

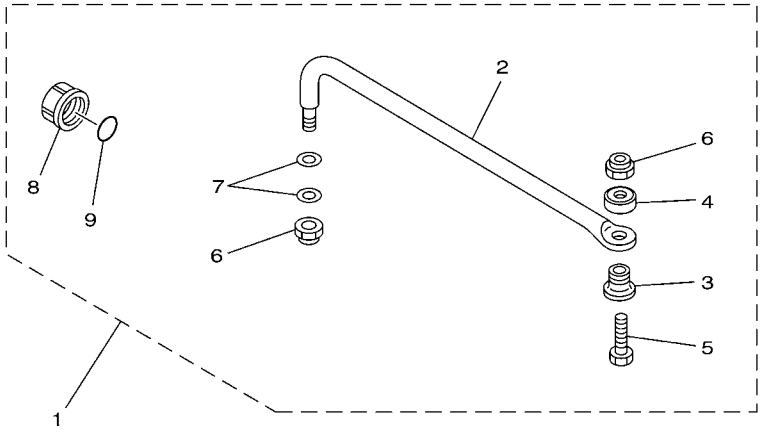

67H0100-9290

REF. NO.	PART NO. N° PIECES	DESCRIPTION DESCRIPTION	68V4	68W4				REMARKS REMARQUES
1	6E5–61350–02	STEERING GUIDE ATTACHMENT KIT FIXATIONS DE DIRECTION	1	1				AP AP
2	6E5–61351–01	.ROD, STEERING LINK .RENVOI DE DIRECTION	1	1				
3	90387–10M61	.COLLAR .COLLERETTE	1	1				
4	90560–12M01	.SPACER .ENTRETOISE	1	1				
5	6E5–61355–00	.BOLT .BOULON	1	1				
6	90185–09M01	.NUT, SELF-LOCKING .ECROU, AUTO-BLOQUANT	2	2				
7	90201–10M20	.WASHER, PLATE .RONDELLE, PLATE	2	2				
8	6E5–43145–01	.CAP, CLAMP BRACKET .CAPUCHON, PRESSE	1	1				
9	93210–16275	.O-RING .JOINT TORIQUE	1	1				

FIG. 33 STEERING GUIDE ATTACHMENT 2 DIRECTION GUIDE ACCESSOIRE 2

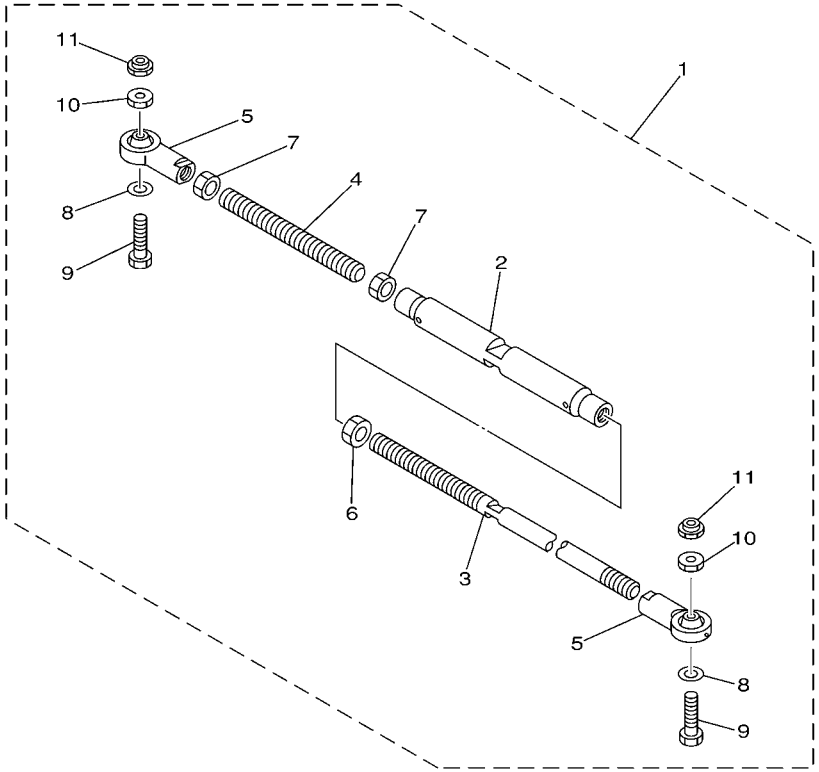

67H0100-0300

REF. NO.	PART NO. N° PIECES	DESCRIPTION DESCRIPTION	68V4	68W4				REMARKS REMARQUES
1	6E5–61301–01	TWIN KIT (L:600-800MM) JUMELE KIT (L:600-800MM)		1				AP AP
2	6E5–61313–00	.ADJUSTER .TENDEUR		1				
3	6E5–61311–11	.TIE BAR .BARRE D'ACCOUPLEMENT		1				
4	6E5–61315–00	.TIE BAR .BARRE D'ACCOUPLEMENT		1				
5	6E5–61303–00	.STEERING EYE COMP. .AXE COMP.		2				
6	90170–14M06	.NUT .ECROU		1				
7	95380–14700	.NUT .ECROU		2				
8	90201–10M76	.WASHER, PLATE .RONDELLE, PLATE		2				
9	90101–09M70	.BOLT .BOULON		2				
10	90170–09M05	.NUT .ECROU		2				
11	90185–09M01	.NUT, SELF-LOCKING .ECROU, AUTO-BLOQUANT		2				

FIG. 34 REMOTE CONTROL BOX BOITIER DE COMMANDE A DISTANCE

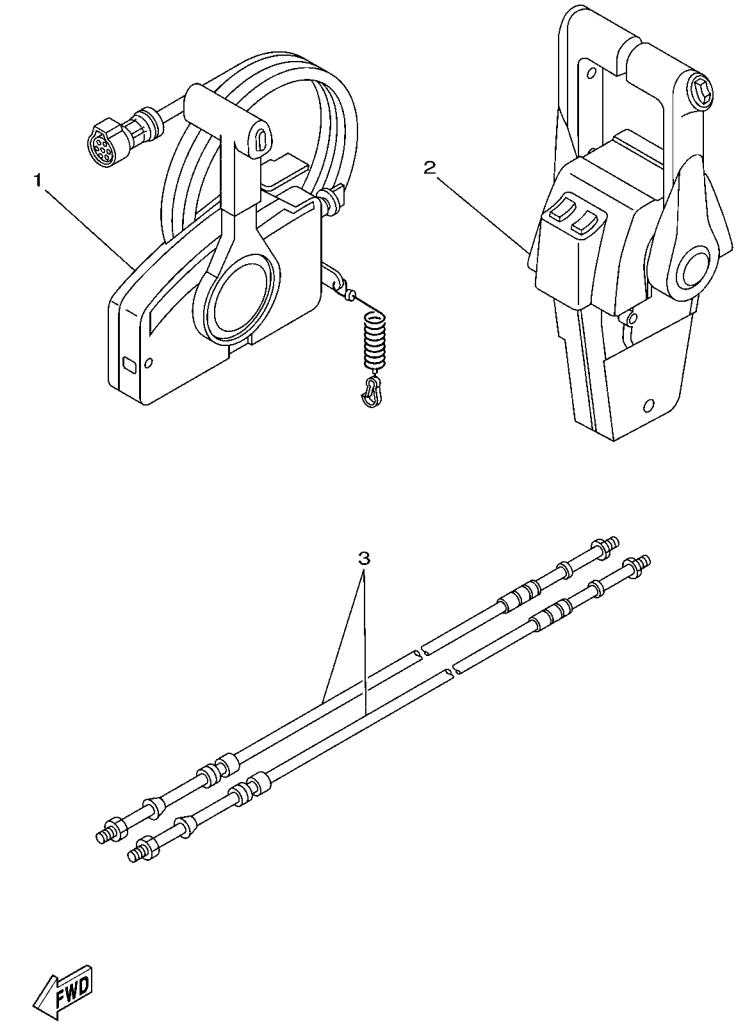

REF. NO.	PART NO. N° PIECES	DESCRIPTION DESCRIPTION	68V4	68W4				REMARKS REMARQUES
1	703–48205–17	REMOTE CONTROL ASSY (10P) BOITIER DE COMMANDE A DISTANCE	1					AP WITH PT/T SW. AP WITH PT/T SW.
2	704–48207–P0	REMOTE CONTROL ASSY BOITIER DE COMMANDE A DISTANCE		1				AP WITH PT/T SW. AP WITH PT/T SW.
3	701–48320–50	CABLE, REMOTE CONTROL L=15F CABLE, COMMANDE A DISTANCE:15F	2	2				UR UR
	701–48320–60	CABLE, REMOTE CONTROL L=16F CABLE, COMMANDE A DISTANCE:16F	2	2				UR UR
	701–48320–80	CABLE, REMOTE CONTROL L=17F CABLE, COMMANDE A DISTANCE:17F	2	2				UR UR
	701–48350–00	CABLE, REMOTE CONTROL L=21F CABLE, COMMANDE A DISTANCE:21F	2	2				UR UR
	701–48350–20	CABLE, REMOTE CONTROL L=23F CABLE, COMMANDE A DISTANCE:23F	2	2				UR UR

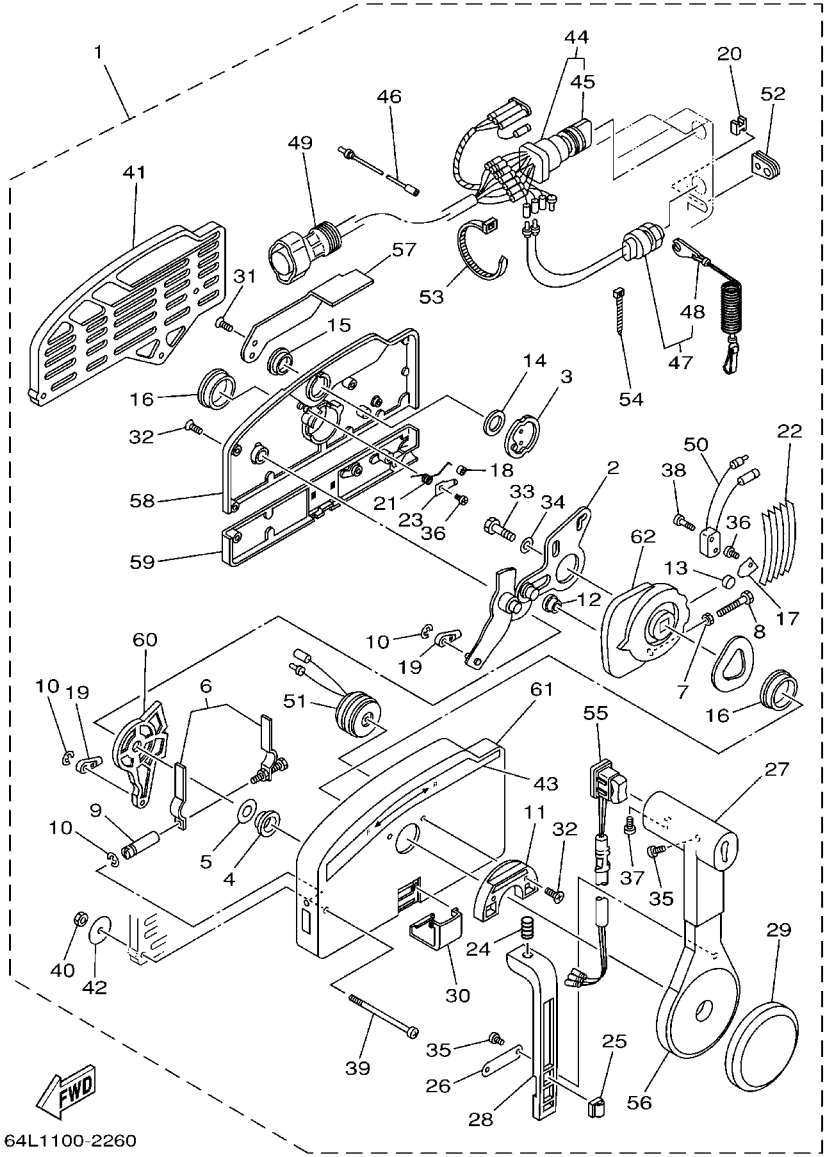

FIG. 35 REMOTE CONTROL ASSY 1 BOITIER DE COMMANDE A DISTANCE 1

REF. NO.	PART NO. N° PIECES	DESCRIPTION DESCRIPTION	68V4	68W4				REMARKS REMARQUES
1	703–48205–17	REMOTE CONTROL ASSY (10P) BOITIER DE COMMANDE A DISTANCE	1					AP WITH PT/T SW. AP WITH PT/T SW.
2	703–48261–01	.ARM, THROTTLE .BRAS, ACCELERATION	1					
3	703–48153–00	.SHAFT, FREE ACCEL. .AXE	1					
4	703–48235–00	.BUSHING .COUSSINET	1					
5	703–48268–00	.SPACER .ENTRETOISE	1					
6	703–48264–00	.FRICTION, THROTTLE .FRICTION, ACCELERATION	1					
7	95380–05600	.NUT .ECROU	1					
8	97380–05025	.BOLT .BOULON, HEXAGONAL	1					
9	703–48265–00	.SHAFT, FRICTION .AXE, COPILOTE	1					
10	93430–06024	.CIRCLIP .CLIPS	3					
11	703–48245–00	.PLATE, LOCK .PLAQUE, VERROU	1					
12	703–48252–00	.ROLLER, CAM .POULIE	1					
13	701–48248–00	.ROLLER, FREE ACCEL. .POULIE	1					
14	703–48198–00	.WASHER, WAVE .RONDELLE, ELASTIQUE ONDULEE	1					
15	703–48243–00	.BUSHING .COUSSINET	1					
16	703–48236–00	.BUSHING 1 .POULIE	2					
17	703–48189–00	.RETAINER .FLASQUE	1					
18	703–48234–00	.ROLLER, DETENT .POULIE	1					
19	703–48345–01	.CABLE END, REMOTE CONTROL 2 .CHAPE CABLE	2					
20	703–48358–00	.ANCHOR, CABLE .COLLIER	1					
21	703–48244–00	.SPRING, FREE ACCEL. .RESSORT	1					
22	703–48238–00	.SPRING, DETENT .RESSORT	5					
23	703–48246–00	.SPACER .ENTRETOISE	1					
24	703–48227–00	.SPRING, NEUTRAL LOCK .RESSORT	1					
25	703–82594–00	.CLAMP .BRIDE	1					WITH PT/T SW. WITH PT/T SW.
26	703–48226–00	.PLATE, STOPPER .PLAQUETTE	1					
27	703–48222–00	.GRIP, CONTROL LEVER .POIGNEE, COMMANDE LEVIER	1					SINGLE SINGLE

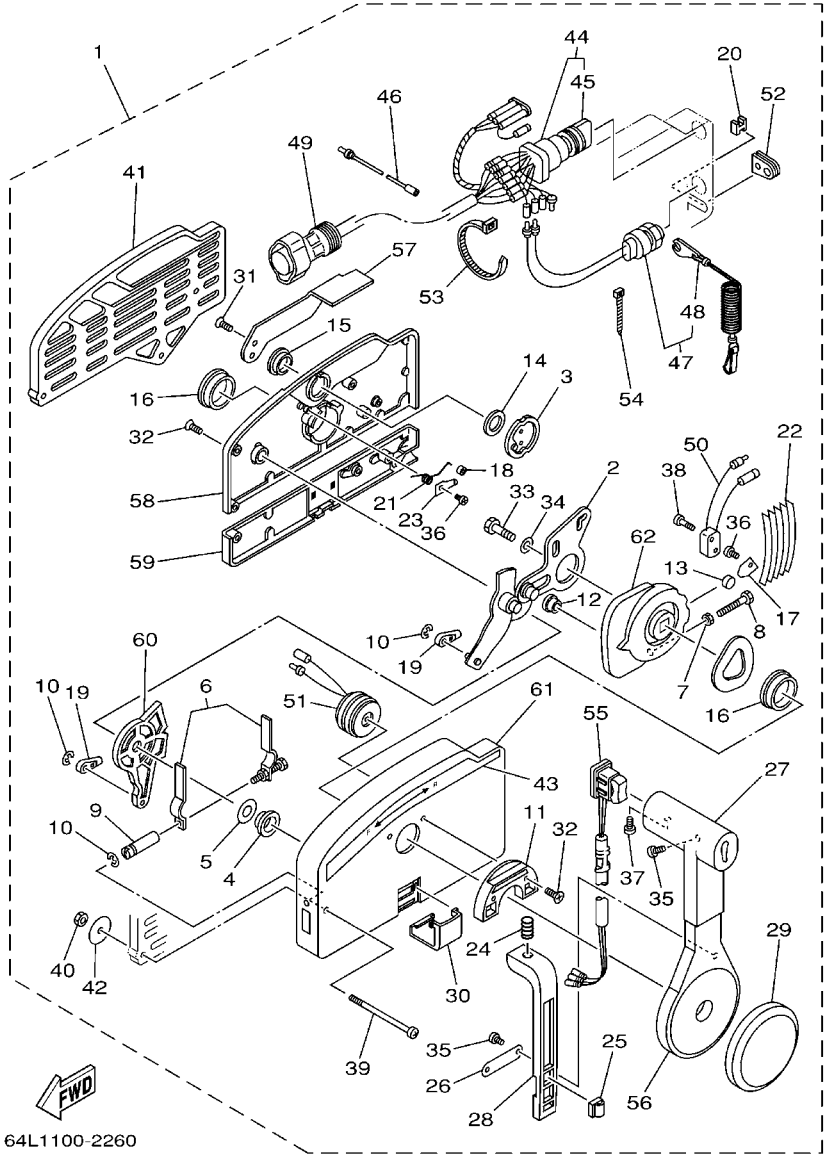

FIG. 35 REMOTE CONTROL ASSY 1 BOITIER DE COMMANDE A DISTANCE 1

REF. NO.	PART NO. N° PIECES	DESCRIPTION DESCRIPTION	68V4	68W4				REMARKS REMARQUES
28	703–48223–00	.LOCK, NEUTRAL .VERROU, NEUTRAL	1					
29	703–48225–00	.COVER .COUVERCLE	1					
30	703–48219–00	.COVER, LEAD .COUVERCLE	1					
31	703–48281–00	.SCREW .VIS	2					
32	703–48282–00	.SCREW .VIS	7					
33	97380–08030	.BOLT .BOULON, HEXAGONAL	1					
34	92990–08600	.WASHER, PLATE .RONDELLE, PLATE	1					
35	98580–04010	.SCREW, PAN HEAD .VIS	3					
36	98580–04006	.SCREW, PAN HEAD .VIS	2					
37	98580–05010	.SCREW, PAN HEAD .VIS	1					
38	98580–03015	.SCREW, PAN HEAD .VIS	2					
39	703–48291–10	.SCREW (M6) .VIS (M6)	3					
40	95380–06600	.NUT, HEXAGON .ECROU	3					
41	703–48293–10	.SPACER, REMOTE CONTROL .ENTRETOISE	1					SINGLE SINGLE
42	701–48287–00	.WASHER .RONDELLE	3					
43	703–48215–00	.GRAPHIC .ADHESIF	1					
44	703–82510–43	.MAIN SWITCH ASSY .CONTACTEUR A CLEF COMPLET	1					
45	703–82577–00	..CAP, KEY ..CABOCHON	1					
46	703–82531–00	.WIRE, LEAD .FIL	1					
47	688–82575–01	.ENGINE STOP SWITCH ASSY .COUPE CIRCUIT CPLT	1					
48	682–82556–00	..STOPPER ..PLAQUETTE	1					
49	688–8258A–20	.EXTENSION, WIRE HARNESS .EXTENSION, FAISCEAU DE FILS	1					L:5M (10P) L:5M (10P)
50	703–82540–00	.NEUTRAL SWITCH ASSY .CONTACTEUR DE POINT-MORT	1					
51	703–83383–02	.BUZZER .RONFLEUR	1					
52	703–48284–00	.GROMMET .PASSE-FIL	1					
53	703–82591–00	.BAND .COLLIER	1					
54	703–82592–00	.BAND .COLLIER	1					

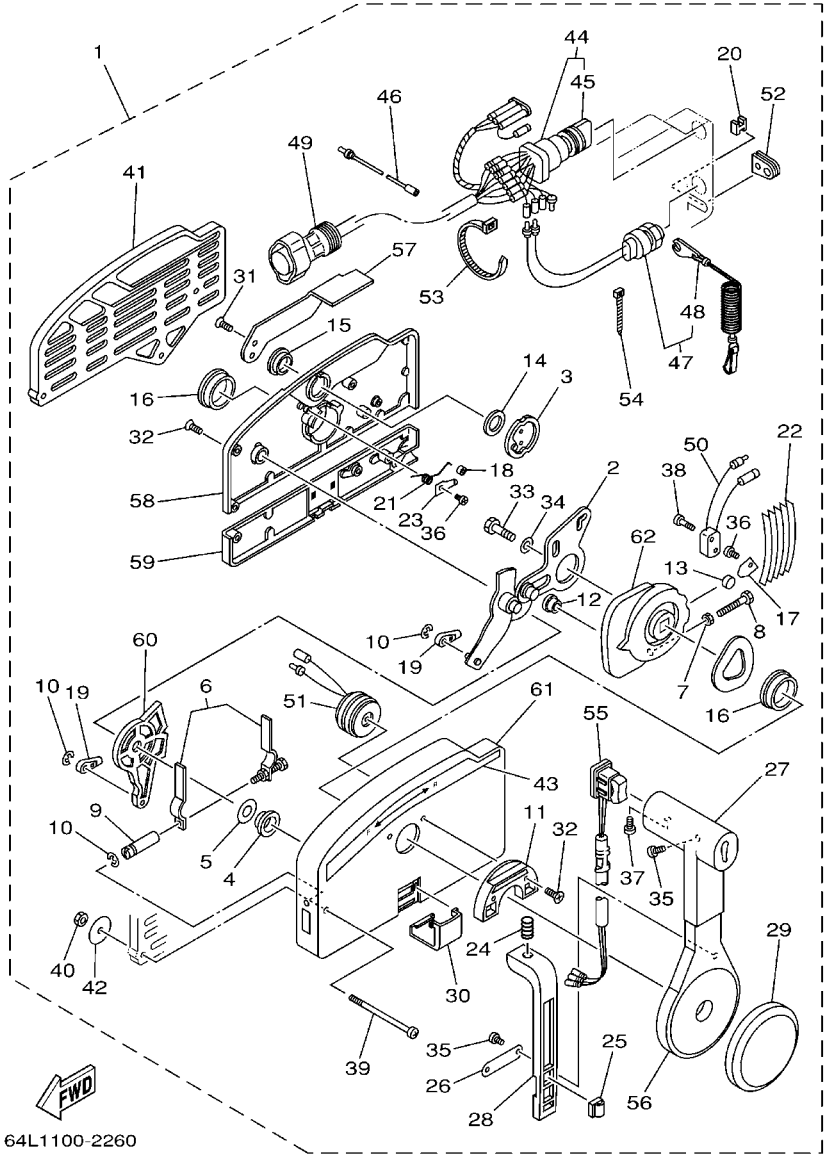

64L1100-2260

FIG. 35 REMOTE CONTROL ASSY 1 BOITIER DE COMMANDE A DISTANCE 1

REF. NO.	PART NO. N° PIECES	DESCRIPTION DESCRIPTION	68V4	68W4				REMARKS REMARQUES
55	703–82563–02	.TRIM & TILT SWITCH ASSY .INCLINER ET PARER COMMUTATEUR	1					WITH PT/T SW. WITH PT/T SW.
56	703–48221–00	.LEVER, CONTROL .LEVIER, COMMANDE	1					
57	703–48152–00	.KNOB, FREE ACCEL. .BOUTON	1					
58	703–48212–00	.BACK PLATE 1 .PLAQUETTE 1	1					
59	703–48213–00	.BACK PLATE 2 .PLAQUETTE 2	1					
60	703–48271–00	.ARM, SHIFT .BRAS	1					
61	703–48211–01	.HOUSING,1 .CORPS	1					
62	703–48232–00	.GEAR .PIGNON	1					

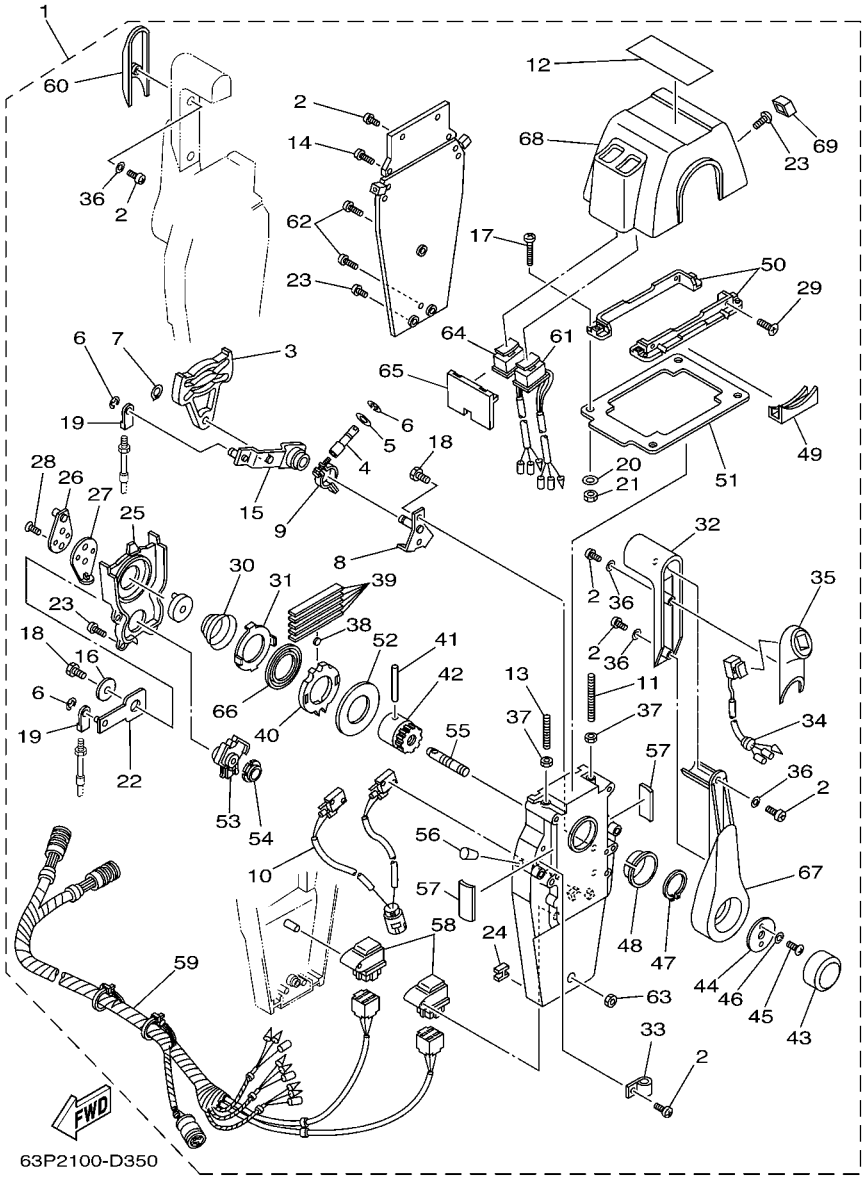

FIG. 36 REMOTE CONTROL ASSY 2 BOITIER DE COMMANDE A DISTANCE 2

REF. NO.	PART NO. N° PIECES	DESCRIPTION DESCRIPTION	68V4	68W4				REMARKS REMARQUES
1	704–48207–P0	REMOTE CONTROL ASSY BOITIER DE COMMANDE A DISTANCE		1				AP WITH PT/T SW. AP WITH PT/T SW.
2	704–48129–00	.SCREW 3 .VIS 3		12				
3	EL8–48251–00	.PLATE, CAM .PLAQUE, CAME		2				
4	704–48265–00	.SHAFT, FRICTION .AXE, COPILOTE		2				
5	701–48246–00	.SPACER .ENTRETOISE		2				
6	93430–06024	.CIRCLIP .CLIPS		8				
7	EL8–48259–00	.CIRCLIP 1 .CIRCLIP		2				
8	704–48262–00	.SHAFT, THROTTLE .AXE, ACCELERATION		2				
9	704–48264–00	.THROTTLE, FRICTION .FRICTION, ACCELERATION		2				
10	704–82540–30	.NEUTRAL SWITCH ASSY .CONTACTEUR DE POINT-MORT		1				
11	EL8–48281–00	.SCREW .VIS		2				
12	704–48215–30	.GRAPHIC .ADHESIF		1				
13	704–48281–00	.SCREW .VIS		2				
14	97890–05025	.SCREW, PAN HEAD .VIS, CRUCIFORME		4				
15	704–48261–00	.ARM, THROTTLE .BRAS, ACCELERATION		2				
16	EL8–48191–00	.WASHER 1 .RONDELLE		2				
17	704–48283–00	.SCREW .VIS		4				
18	97380–06018	.BOLT .BOULON, HEXAGONAL		6				
19	703–48345–01	.CABLE END, REMOTE CONTROL 2 .CHAPE CABLE		4				
20	704–48287–00	.WASHER .RONDELLE		4				
21	95380–05600	.NUT .ECROU		4				
22	704–48271–00	.ARM, SHIFT .BRAS		2				
23	EL8–48127–00	.SCREW 1 .VIS 1		18				
24	703–48358–00	.ANCHOR, CABLE .COLLIER		2				
25	704–48231–00	.HOUSING, GEAR .CARTER, ENGRENAGE		2				
26	EL8–48241–00	.ARM, DRIVE .BRAS, COMMANDE		2				
27	EL8–48254–00	.STOPPER, THROTTLE ADJUSTING .BUTEE		2				

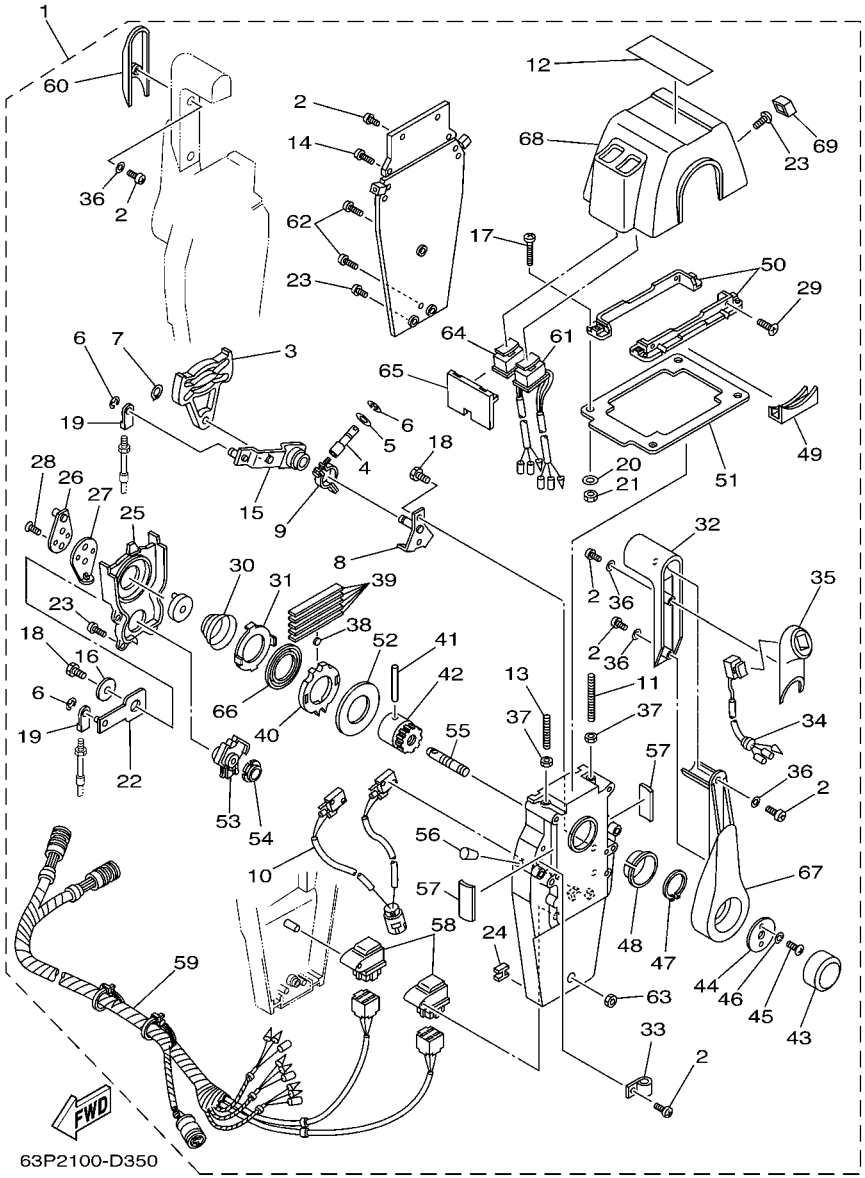

FIG. 36 REMOTE CONTROL ASSY 2 BOITIER DE COMMANDE A DISTANCE 2

REF. NO.	PART NO. N° PIECES	DESCRIPTION DESCRIPTION	68V4	68W4				REMARKS REMARQUES
28	92780–06020	.SCREW, FLAT HEAD .VIS A TETE FRAISEE		4				
29	98780–05018	.SCREW, FLAT HEAD .VIS A TETE FRAISEE		4				
30	EL8–48244–00	.SPRING, FREE ACCEL. .RESSORT		2				
31	EL8–48245–00	.PLATE, LOCK .PLAQUE, VERROU		2				
32	704–48222–P0	.GRIP, CONTROL LEVER .POIGNEE, COMMANDE LEVIER		2				
33	704–82594–00	.CLAMP .BRIDE		1				
34	704–82563–50	.TRIM & TILT SWITCH ASSY .INCLINER ET PARER COMMUTATEUR		1				
35	704–48229–P1	.GRIP, CONTROL LEVER .POIGNEE, COMMANDE LEVIER		1				
36	92990–05300	.WASHER, INTERNAL TOOTH .RONDELLE, DENTURE INTERNE		6				
37	95380–06600	.NUT, HEXAGON .ECROU		4				
38	701–48248–00	.ROLLER, FREE ACCEL. .POULIE		2				
39	704–48238–00	.SPRING, DETENT .RESSORT		10				
40	704–48232–P1	.GEAR .PIGNON		2				
41	EL8–48164–00	.PIN 2 .PION 2		2				
42	704–48242–10	.SHAFT, DRIVE .ARBRE, MOTEUR		2				
43	6X3–48225–20	.COVER .COUVERCLE		2				
44	704–48192–00	.WASHER 2 .RONDELLE 2		2				
45	97890–06018	.SCREW, PAN HEAD .VIS, CRUCIFORME		4				
46	92990–06300	.WASHER, INTERNAL TOOTH .RONDELLE, DENTURE INTERNE		4				
47	EL8–48279–00	.CIRCLIP 2 .CIRCLIP 2		2				
48	704–48234–00	.BUSHING 1 .POULIE		2				
49	704–48219–P0	.COVER, LEAD .COUVERCLE		2				
50	704–48144–20	.PLATE, STOPPER 2 .PLAQUETTE 2		2				
51	704–48176–10	.GROMMET .PASSE-FIL		1				
52	704–48192–00	.WASHER 2 .RONDELLE 2		2				
53	704–48233–00	.GEAR 2 .PIGNON 2		2				
54	702–48235–00	.BUSHING .COUSSINET		2				

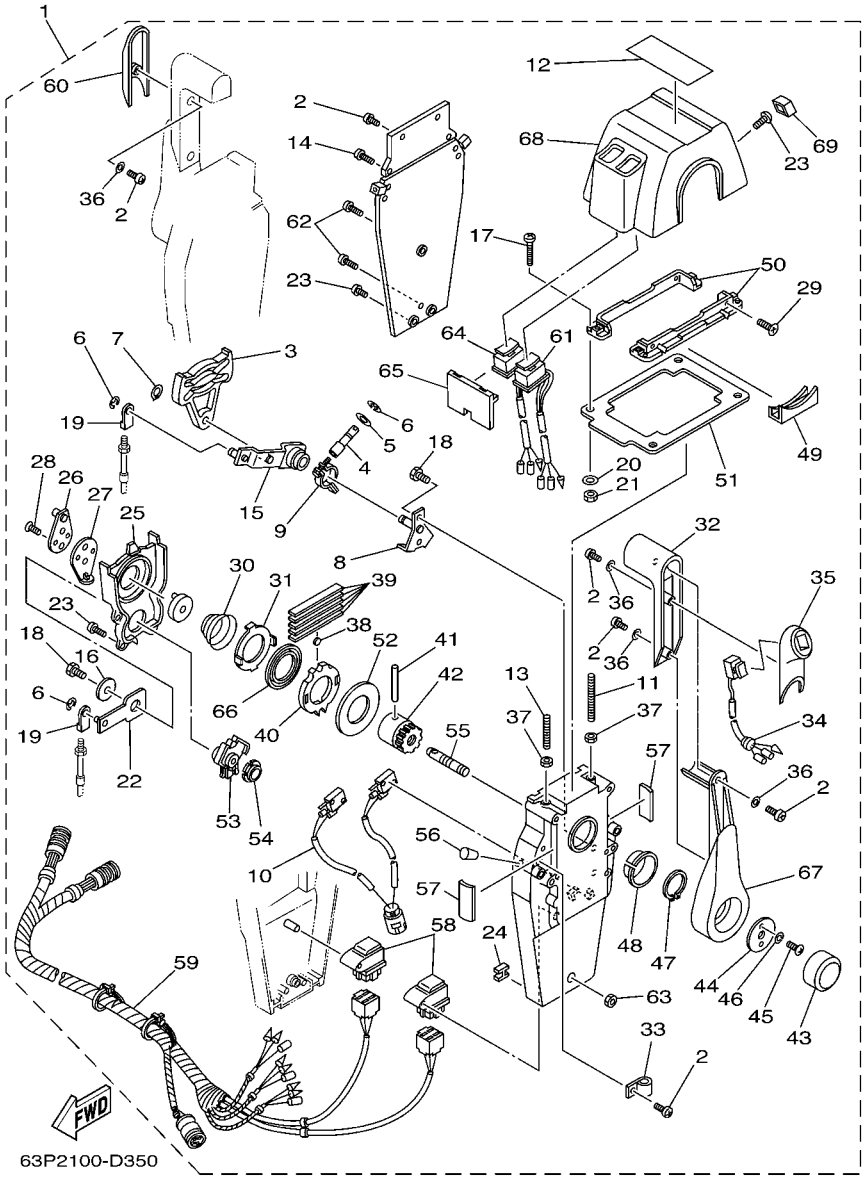

FIG. 36 REMOTE CONTROL ASSY 2 BOITIER DE COMMANDE A DISTANCE 2

REF. NO.	PART NO. N° PIECES	DESCRIPTION DESCRIPTION	68V4	68W4				REMARKS REMARQUES
55	704–48153–00	.SHAFT, FREE ACCEL. .AXE		2				
56	704–48166–00	.PLUG .BOUCHON		2				
57	704–48284–P0	.GROMMET .PASSE-FIL		4				
58	704–81950–10	.RELAY ASSY .RELAIS COMPLET		2				
59	704–82590–10	.WIRE HARNESS ASSY .FAISCEAU DE FILS COMPLET		1				
60	704–48229–00	.GRIP, CONTROL LEVER .POIGNEE, COMMANDE LEVIER		1				
61	704–82563–H0	.TRIM & TILT SWITCH ASSY .INCLINER ET PARER COMMUTATEUR		1				
62	704–48128–00	.SCREW 2 .VIS 2		3				
63	704–48156–00	.NUT 1 .ECROU 1		1				
64	704–82563–J0	.TRIM & TILT SWITCH ASSY .INCLINER ET PARER COMMUTATEUR		1				
65	704–48285–10	.GROMMET 2 .PASSE-FIL 2		1				
66	704–48178–10	.PLATE, SHIFT .PLAQUETTE		2				
67	704–48221–P0	.LEVER, CONTROL .LEVIER, COMMANDE		2				
68	704–48119–40	.COVER .COQUILLE		1				
69	704–48167–10	.PLUG .BOUCHON		1				

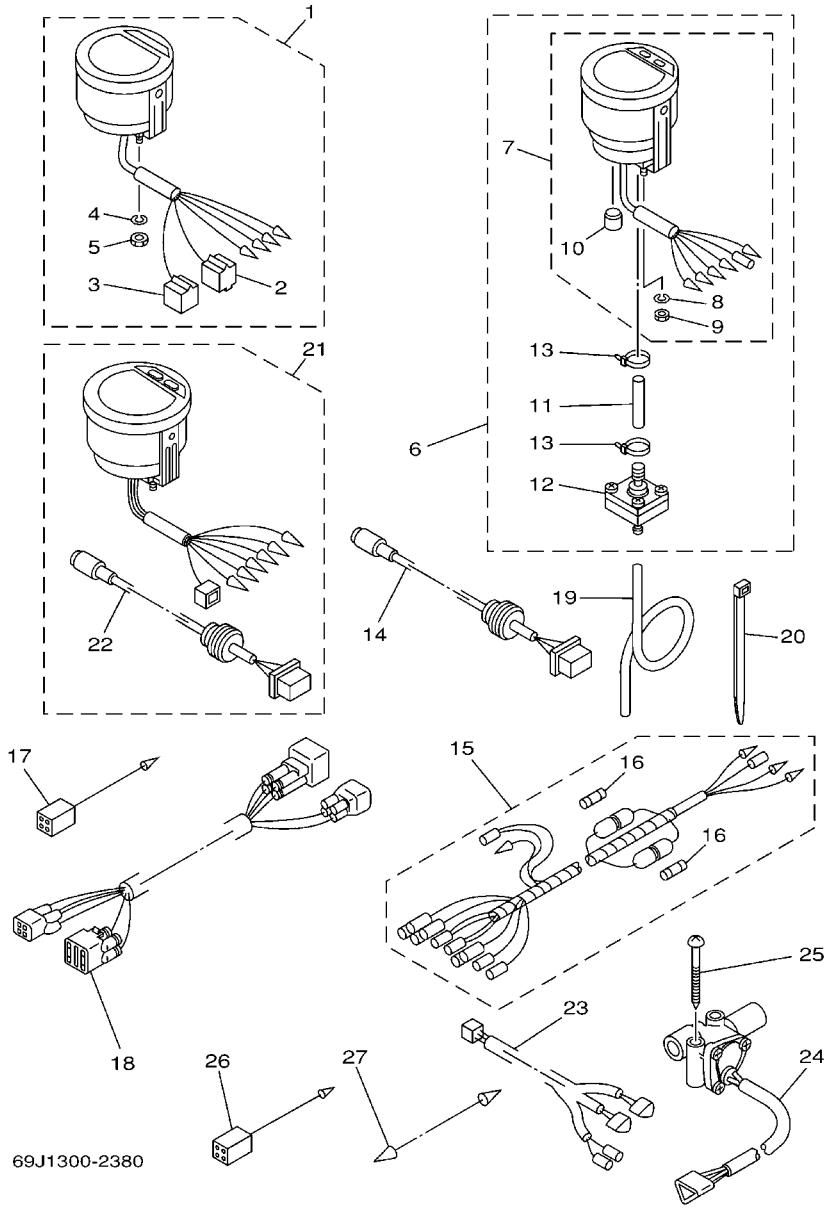

FIG. 37 METER COMPTEUR

REF. NO.	PART NO. N° PIECES	DESCRIPTION DESCRIPTION	68V4	68W4				REMARKS REMARQUES
1	6Y5–8350T–03	TACHOMETER ASSY COMPTE-TOURS CPLT	1	1				AP AP
2	9E450–04433	.CONNECTOR .CONNECTEUR	1	1				M-4-W M-4-W
3	9E450–04533	.CONNECTOR .CONNECTEUR	1	1				F-4-W F-4-W
4	92990–04100	.WASHER, SPRING .RONDELLE, GROWER	2	2				
5	95380–04600	.NUT .ECROU	2	2				
6	6Y5–83500–S5	DIGITAL SPEEDOMETER ASSY TACHYMETRE NUMERIQUE CPLT.	1					AP AP
7	6Y5–83570–S5	.SPEEDOMETER ASSY .COMPTEUR DE VITESSE CPLT	1					
8	92990–04100	..WASHER, SPRING ..RONDELLE, GROWER	2					
9	95380–04600	..NUT ..ECROU	2					
10	6Y5–83533–T2	..GROMMET ..RONDELLE CAOUTCHOUC	1					
11	6Y5–83557–31	.TUBE .TUBE	1					
12	6Y5–83728–00	.CONNECTOR ASSY .CONNEXION COMPLET	1					
13	90465–11M10	.CLAMP .BRIDE	2					
14	6Y5–87122–S0	CORD ASSY 1 COPDON COMPLET	1					AP AP
15	6Y5–83553–M0	WIRE, LEAD FIL	1					AP AP
	6Y5–83553–00	WIRE, LEAD FIL		1				AP AP
16	1E6–82151–00	.FUSE (10A) .FUSIBLE (10A)	2					FOR 6Y5-83553-M0 FOR 6Y5-83553-M0
	1E6–82151–00	.FUSE (10A) .FUSIBLE (10A)		1				FOR 6Y5-83553-00 FOR 6Y5-83553-00
17	6Y5–82117–00	WIRE, LEAD (BLACK) FIL (NOIR)	1					AP AP
18	68F–82553–80	EXTENSION, WIRE LEAD EXTENSION, FAISCEAU	1					AP AP
	68F–82553–90	EXTENSION, WIRE LEAD EXTENSION, FAISCEAU		1				AP AP
19	6Y5–83557–10	TUBE (8M) TUBE (8M)	1					AP AP
20	90465–11M10	CLAMP BRIDE	2					AP AP
21	6Y5–8350F–00	FUEL MANAGEMENT METER COMPT. DE GESTION DU CARBURANT		1				AP AP
22	6Y5–87122–S0	.CORD ASSY 1 .COPDON COMPLET		1				
23	6Y5–83553–F1	WIRE, LEAD FIL		1				AP AP
24	6Y5–85752–01	SENDER UNIT ASSY, FUEL METER PERCEPTION DE JAUGE A ESSENCE		2				AP AP

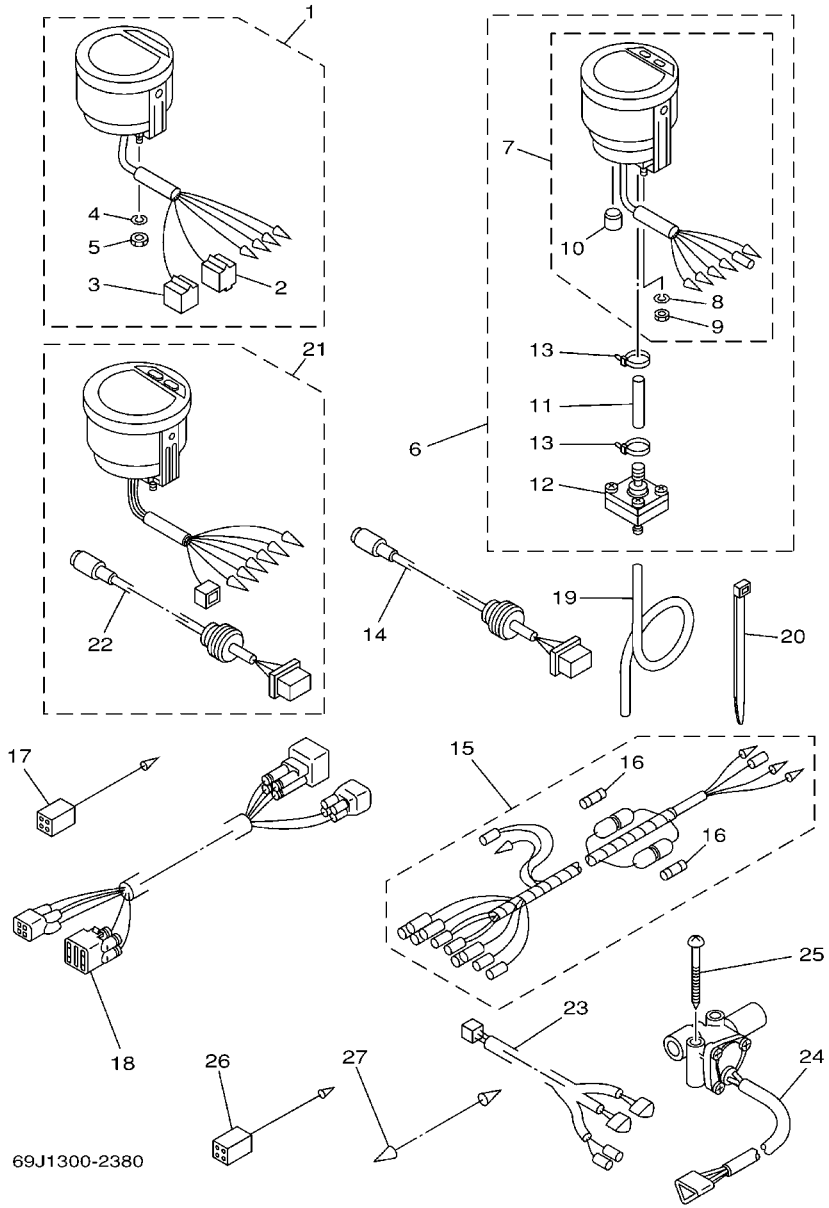

FIG. 37 METER COMPTEUR

REF. NO.	PART NO. N° PIECES	DESCRIPTION DESCRIPTION	68V4	68W4				REMARKS REMARQUES
25	90158–06002	SCREW, WOOD VIS, A BOIS		4				AP AP
26	6Y5–82117–00	WIRE, LEAD (BLACK) FIL (NOIR)		1				AP AP
27	703–82531–00	WIRE, LEAD FIL		1				AP AP

FIG. 38 SWITCH & PANEL — TABLEAU DE CONTACTEUR

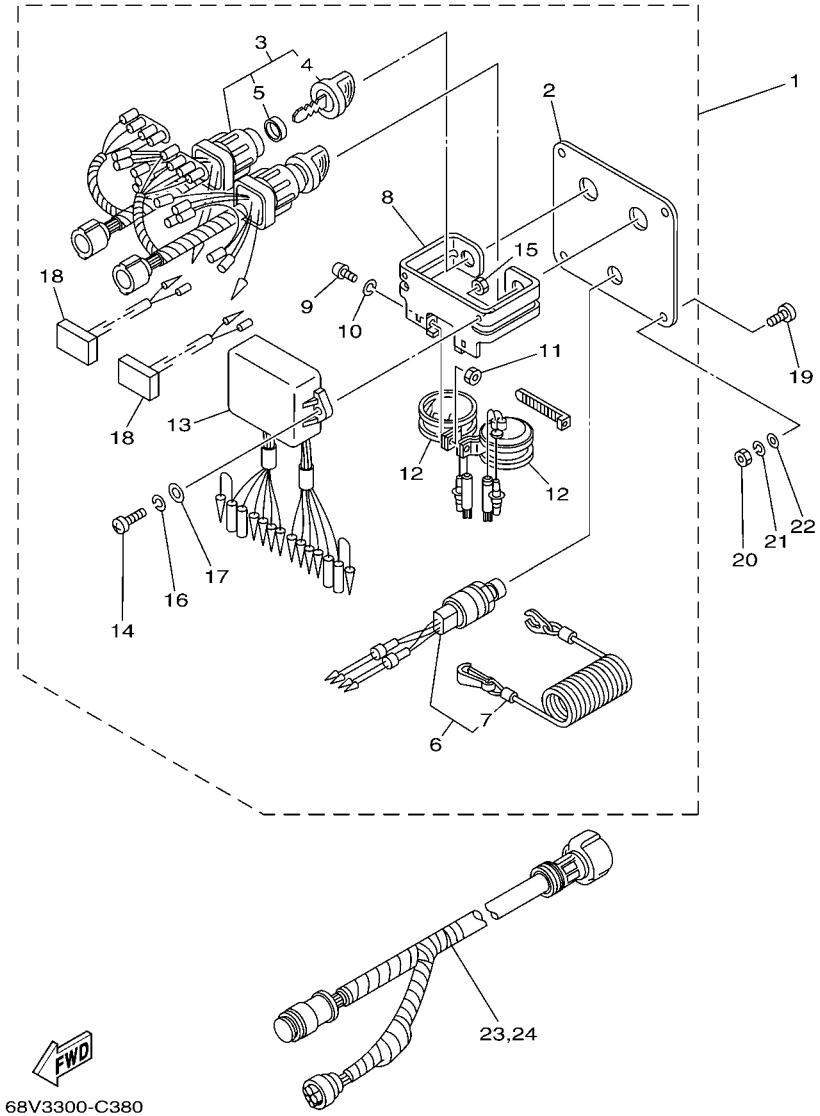

REF. NO.	PART NO. N° PIECES	DESCRIPTION DESCRIPTION	68V4	68W4				REMARKS REMARQUES
1	6K1–82570–08	PANEL SWITCH ASSY PLATINE D'INTERRUPEUR CPLT		1				AP AP
2	6K1–82571–02	.PANEL, SWITCH .TABLEAU, CONTACTEUR		1				
3	6K1–82510–06	.MAIN SWITCH ASSY .CONTACTEUR A CLEF COMPLET		2				
4	703–82577–00	..CAP, KEY ..CABOCHON		1				
5	6K1–82532–00	..CAP ..COUVERCLE		1				
6	6K1–82575–00	.ENGINE STOP SWITCH ASSY .COUPE CIRCUIT CPLT		1				
7	682–82556–00	..STOPPER ..PLAQUETTE		1				
8	6K1–83614–01	.BRACKET .SUPPORT		1				
9	98980–05010	.SCREW, BIND .VIS, DE PRESSION		2				
10	92990–05100	.WASHER, SPRING .RONDELLE, GROWER		2				
11	95380–05600	.NUT .ECROU		2				
12	688–83383–11	.BUZZER .RONFLEUR		2				
13	6K1–85830–01	.CONTROL UNIT ASSY .BLOC DE CONTROLE		1				
14	98980–06020	.SCREW, BIND .VIS, DE PRESSION		2				
15	95380–06600	.NUT, HEXAGON .ECROU		2				
16	92990–06100	.WASHER, SPRING .RONDELLE, GROWER		2				
17	92990–06600	.WASHER, PLATE .RONDELLE, PLATE		2				
18	6K1–81980–00	.DIODE ASSY .REDRESSEUR 2		2				
19	90149–05M05	SCREW VIS		4				AP AP
20	95380–05600	NUT ECROU		4				AP AP
21	92990–05100	WASHER, SPRING RONDELLE, GROWER		4				AP AP
22	92990–05600	WASHER, PLATE RONDELLE, PLATE		4				AP AP
23	6K1–8258A–40	EXTENSION, WIRE HARNESS EXTENSION, FAISCEAU DE FILS		1				AP AP
24	61B–8258A–01	EXTENSION, WIRE HARNESS EXTENSION, FAISCEAU DE FILS		1				AP AP

FIG. 39 REPAIR KIT 1 — KITS DE REPARATION 1

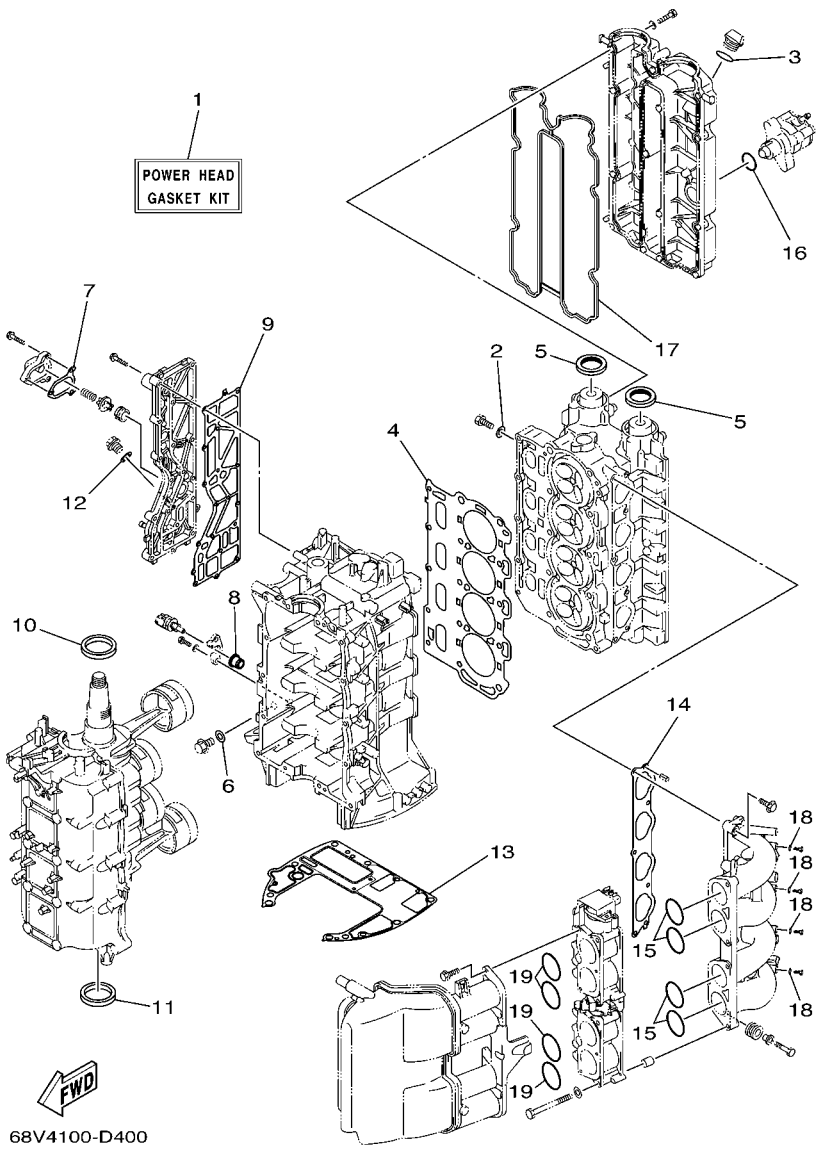

REF. NO.	PART NO. N° PIECES	DESCRIPTION DESCRIPTION	68V4	68V4				REMARKS REMARQUES
1	68V–W0001–03	POWER HEAD GASKET KIT POCHETTE DE JINTS TETE MOTRICE	1	1				
2	90430–08143	.GASKET .JOINT	4	4				
3	93210–24M79	.O-RING .JOINT TORIQUE	1	1				
4	67F–11181–02	.GASKET, CYLINDER HEAD 1 .JOINT, DE CULASSE 1	1	1				
5	93102–38M59	.OIL SEAL .JOINT SPY	2	2				
6	90430–14115	.GASKET .JOINT	1	1				
7	67F–12435–A0	.GASKET .JOINT	1	1				
8	68V–85753–00	.GASKET, SENDER UNIT .JOINT, DE PERCEPTION	1	1				
9	67F–41114–A1	.GASKET, EXHAUST OUTER COVER .JOINT, COUVERCLE D'ECHAPPEMEN	1	1				
10	93102–48009	.OIL SEAL .JOINT SPY	1	1				
11	93101–48002	.OIL SEAL .JOINT SPY	1	1				
12	90430–18130	.GASKET .JOINT	1	1				
13	68V–11351–00	.GASKET, CYLINDER .JOINT, D'EMBASE	1	1				
14	68V–13645–00	.GASKET, MANIFOLD 1 .JOINT, TUBULURE 1	1	1				
15	93210–48MG8	.O-RING .JOINT TORIQUE	4	4				
16	93210–30682	.O-RING .JOINT TORIQUE	1	1				
17	67F–11356–00	.SEAL, CYLINDER 2 .JOINT, SPY CYLINDRE	1	1				
18	90430–06014	.GASKET .JOINT	4	4				
19	93210–48MJ9	.O-RING .JOINT TORIQUE	4	4				

FIG. 40 REPAIR KIT 2 — KITS DE REPARATION 2

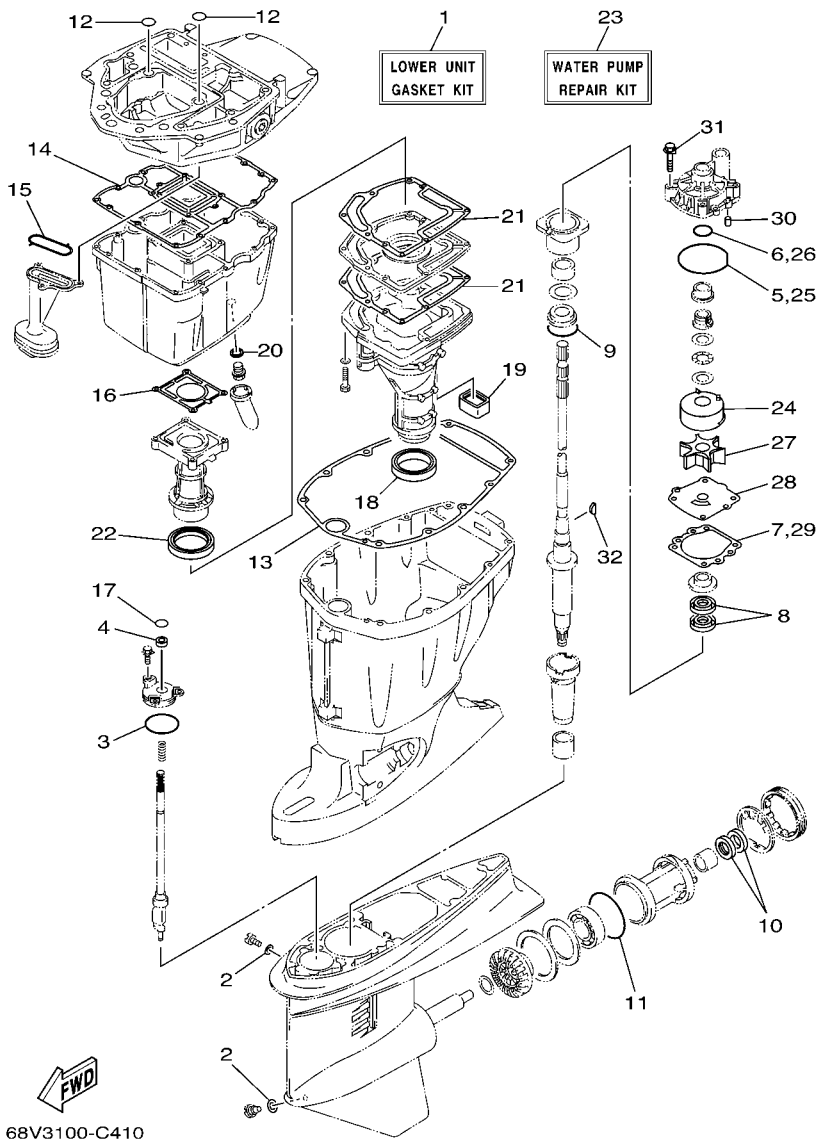

REF. NO.	PART NO. N° PIECES	DESCRIPTION DESCRIPTION	68V4	68W4				REMARKS REMARQUES
1	68V–W0001–21	LOWER UNIT GASKET KIT POCHETTE DE JOINTS EMBASE	1	1				
2	90430–08020	.GASKET .JOINT	2	2				
3	93210–58144	.O-RING .JOINT TORIQUE	1	1				
4	93106–09014	.OIL SEAL .JOINT SPY	1	1				
5	93210–86M38	.O-RING .JOINT TORIQUE	1	1				
6	93210–37160	.O-RING .JOINT TORIQUE	1	1				
7	6E5–44315–A0	.GASKET, WATER PUMP .JOINT, POMPE A EAU	1	1				
8	93101–28M16	.OIL SEAL .JOINT SPY	2	2				
9	93210–55M14	.O-RING .JOINT TORIQUE	1	1				
10	93101–30M17	.OIL SEAL .JOINT SPY	2	2				
11	93210–86M39	.O-RING .JOINT TORIQUE	1	1				
12	93210–19MJ1	.O-RING .JOINT TORIQUE	2	2				
13	67F–45113–00	.GASKET, UPPER CASING .JOINT, TUBE D'ARBRE	1	1				
14	68V–15312–00	.GASKET, OIL PAN .JOINT DE VENTILATEUR D'HUILE	1	1				
15	67F–13415–00	.SEAL, OIL STRAINER .JOINT, FILTRE A HUILE	1	1				
16	67F–41133–A1	.GASKET, EXHAUST MANIFOLD 1 .JOINT, PIPE D'ECHAPPEMENT	1	1				
17	93210–09165	.O-RING .JOINT TORIQUE	1	1				
18	68V–45123–00	.GASKET, MUFFLER .JOINT, POT DE DETENTE	1	1				
19	67F–45127–00	.SEAL .JOINT	1	1				
20	90430–14M09	.GASKET .JOINT	1	1				
21	67F–41134–A0	.GASKET, EXHAUST MANIFOLD .JOINT, PIPE D'ECHAPPEMENT	2	2				
22	67F–41138–00	.SEAL, EXT. 1 .JOINT DE GROUPE 1	1	1				
23	68V–W0078–00	WATER PUMP REPAIR KIT KIT DE REPARATION DE LA POMPE	1	1				
24	61A–44322–02	.INSERT, CARTRIDGE .CUVETTE	1	1				
25	93210–86M38	.O-RING .JOINT TORIQUE	1	1				
26	93210–37160	.O-RING .JOINT TORIQUE	1	1				
27	6E5–44352–01	.IMPELLER .TURBINE	1	1				

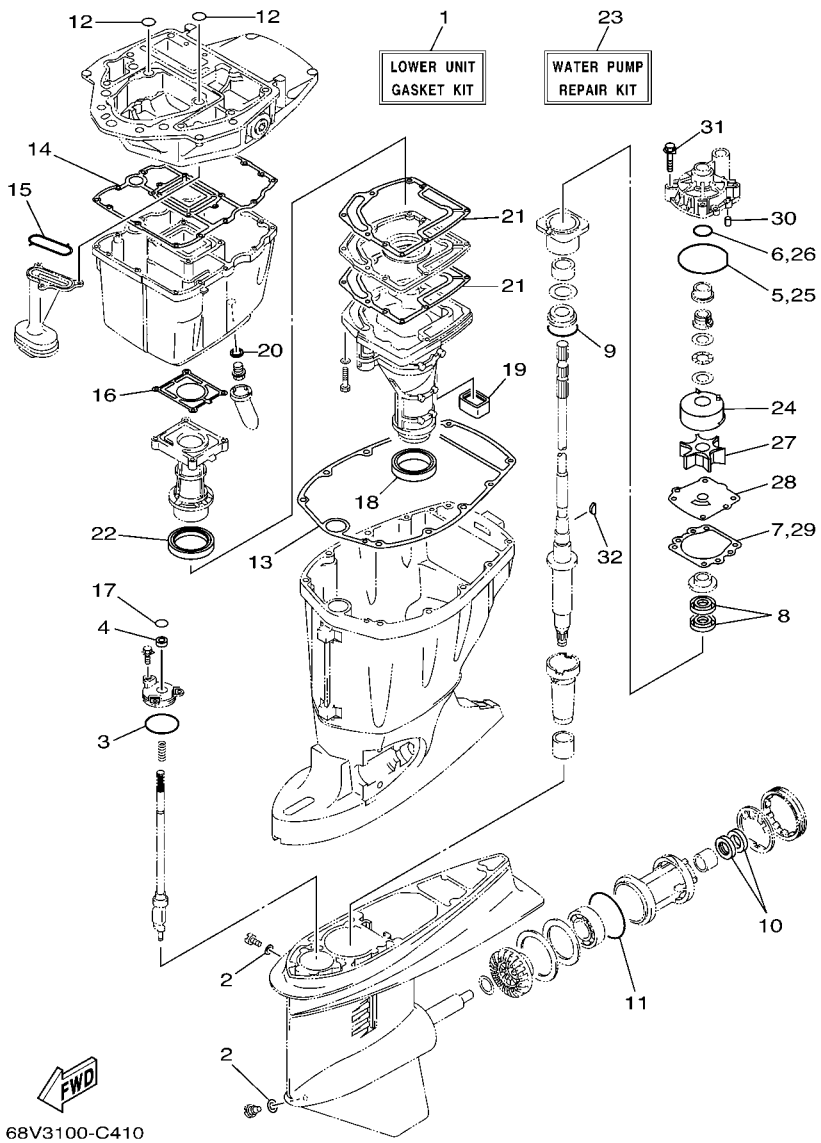

FIG. 40 REPAIR KIT 2 — KITS DE REPARATION 2

REF. NO.	PART NO. N° PIECES	DESCRIPTION DESCRIPTION	68V4	68W4				REMARKS REMARQUES
28	68V–44323–00	.OUTER PLATE, CARTRIDGE .PLAQUE EXTERIEURE	1	1				
29	6E5–44315–A0	.GASKET, WATER PUMP .JOINT, POMPE A EAU	1	1				
30	93606–12019	.PIN, DOWEL .GOUPILLE	2	2				
31	90119–08M14	.BOLT, WITH WASHER .BOULON, AVEC RONDELLE	4	4				
32	90280–04M05	.KEY, WOODRUFF .CLAVETTE, DEMI-LUNE	1	1				

NUMERICAL INDEX
INDEX NUMERIQUE

PART NO. N° PIECES	REF. NO.
68V–11110–01–94	4 – 2
62Y–11119–00	2 – 8
67F–11133–10	4 – 3
67F–11168–00	4 – 22
67F–11181–02	4 – 17
	39 – 4
68V–11191–00–1S	4 – 21
67F–11192–01	4 – 29
6E5–11325–00	2 – 13
68V–11325–01	2 – 26
	4 – 8
67F–11327–00–94	2 – 27
	4 – 9
67F–11328–00	2 – 30
	4 – 12
68V–11351–00	2 – 36
	39 – 13
67F–11356–00	4 – 26
	39 – 17
68V–11411–00	3 – 1
67F–11416–00	3 – 4
67F–11416–10	3 – 4
67F–11416–20	3 – 4
67F–11417–00	3 – 5
67F–11417–10	3 – 5
67F–11417–20	3 – 5
67F–11417–30	3 – 5
67F–11418–00	3 – 6
67F–11418–10	3 – 6
67F–11418–20	3 – 6
67F–11536–00	5 – 23
67F–11537–00	5 – 14
67F–11590–00	5 – 18
67F–11595–00	5 – 21
67F–11603–01	3 – 9
67F–11604–01	3 – 9
68V–11656–00	3 – 10
68V–11656–10	3 – 10
68V–11656–20	3 – 10
68V–11656–30	3 – 10
68V–12111–00	5 – 1
67F–12114–00	5 – 4
67F–12116–00	5 – 3
67F–12117–00	5 – 5
67F–12118–00	5 – 6
68V–12121–00	5 – 2
67F–12138–60	12 – 23
67F–12153–00	5 – 9

PART NO. N° PIECES	REF. NO.
67F–12168–00	5 – 10
67F–12168–10	5 – 10
67F–12168–20	5 – 10
67F–12168–30	5 – 10
67F–12168–40	5 – 10
67F–12168–50	5 – 10
67F–12168–60	5 – 10
67F–12168–70	5 – 10
67F–12168–80	5 – 10
67F–12168–A0	5 – 10
67F–12168–B0	5 – 10
67F–12168–C0	5 – 10
67F–12168–D0	5 – 10
67F–12168–E0	5 – 10
67F–12168–F0	5 – 10
67F–12168–G0	5 – 10
67F–12168–H0	5 – 10
67F–12168–J0	5 – 10
67F–12168–K0	5 – 10
67F–12168–L0	5 – 10
67F–12168–M0	5 – 10
67F–12168–N0	5 – 10
67F–12168–P0	5 – 10
67F–12168–R0	5 – 10
67F–12168–S0	5 – 10
67F–12168–T0	5 – 10
67F–12168–U0	5 – 10
67F–12168–V0	5 – 10
67F–12168–W0	5 – 10
67F–12168–X0	5 – 10
67F–12168–Y0	5 – 10
67F–12169–00	5 – 10
67F–12169–10	5 – 10
67F–12169–20	5 – 10
67F–12169–30	5 – 10
67F–12169–40	5 – 10
67F–12169–50	5 – 10
67F–12169–60	5 – 10
67F–12169–70	5 – 10
67F–12169–80	5 – 10
67F–12169–A0	5 – 10
67F–12169–B0	5 – 10
67F–12169–C0	5 – 10
67F–12169–D0	5 – 10
67F–12169–E0	5 – 10
67F–12169–F0	5 – 10
67F–12169–G0	5 – 10
67F–12169–H0	5 – 10

PART NO. N° PIECES	REF. NO.
67F–12169–J0	5 – 10
67F–12169–K0	5 – 10
67F–12169–L0	5 – 10
67F–12169–M0	5 – 10
67F–12169–N0	5 – 10
67F–12171–00	5 – 11
67F–12181–00	5 – 12
60V–12411–00	4 – 31
68V–12413–00–1S	4 – 32
6G5–12416–00	2 – 20
67F–12435–A0	2 – 24
	39 – 7
67F–1243A–00	2 – 33
67F–1246A–00–1S	2 – 23
67F–12535–00	17 – 31
68T–12572–00	17 – 30
6R3–12581–00	17 – 34
6R3–12582–00	17 – 35
6R3–12583–00	17 – 36
68V–13105–00	7 – 8
67F–13119–01	27 – 19
68V–1312A–00	7 – 10
68V–13131–00	10 – 19
67F–13149–00	27 – 23
68V–13160–00	8 – 1
67F–13300–10	27 – 14
67F–13314–02	27 – 15
67F–13329–00	27 – 17
67F–13338–00	27 – 25
67F–13339–00	27 – 24
67F–13411–00	27 – 9
67F–13415–00	27 – 13
	40 – 15
67F–13434–02	1 – 38
68V–13435–00	8 – 6
68V–13437–60	12 – 24
5GH–13440–00	2 – 41
68V–13473–00	7 – 11
67F–13473–01	27 – 16
68V–13490–01	9 – 36
67F–13495–00	27 – 18
68V–13532–00	9 – 25
68V–13533–00	9 – 23
68V–13534–00	9 – 31
68V–13535–00	9 – 35
68V–13542–00	9 – 22
68V–13543–00	9 – 37
68V–13544–00	9 – 24

PART NO. N° PIECES	REF. NO.
68V–13545–00	9 – 26
68V–13546–00	9 – 27
68V–13547–01	9 – 32
68V–13573–00	7 – 21
68V–13574–00	7 – 20
68V–13577–00	9 – 30
68V–13593–00	9 – 20
67F–13631–03	27 – 22
68V–13641–00–94	7 – 25
68V–13645–00	6 – 5
	39 – 14
68V–13716–00	9 – 21
68V–13751–01	7 – 2
68V–13752–01	7 – 6
68V–13766–00	8 – 4
67F–13769–00	27 – 20
68V–13769–00	9 – 4
68V–13781–00	9 – 7
68V–13784–00	9 – 9
68V–13906–00	8 – 9
68V–13907–02	9 – 17
67F–13914–00	27 – 21
68V–13915–00	9 – 8
68V–13971–00	8 – 14
68V–13972–00	8 – 15
68V–1410B–00	8 – 3
68V–14126–00	9 – 15
68V–14180–02	9 – 1
68V–14181–00	9 – 3
68V–14182–01	9 – 2
68V–14191–00	9 – 14
68V–14200–03	7 – 1
68V–14225–00	8 – 5
69J–14225–00	9 – 38
68V–14255–00	9 – 12
68V–14264–00	8 – 12
68V–14265–00	8 – 23
68V–14291–00–94	6 – 12
68V–14292–00	6 – 19
68V–14321–00	7 – 4
68V–14323–00	7 – 3
68V–14331–00	7 – 5
68V–14356–00	8 – 11
68V–14357–00	8 – 21
68V–14386–00	9 – 6
68V–14397–00	8 – 7
68V–14419–10	7 – 24
68V–1441J–00	7 – 35

PART NO. N° PIECES	REF. NO.
68V–1441L–00	7 – 31
68V–14428–00	8 – 19
68V–14440–00	6 – 14
68V–14446–00	8 – 22
68V–14453–00	7 – 34
68V–14475–00	7 – 23
	8 – 20
68V–14496–00	7 – 19
68V–14511–00	7 – 13
68V–14546–00	9 – 16
68V–14565–00	8 – 10
68V–14567–00	9 – 11
68V–14592–00	9 – 13
68V–14711–10–5B	26 – 9
68V–14711–30–5B	26 – 9
68V–14777–00	7 – 22
	8 – 18
68V–14807–00	9 – 18
68V–14960–00	7 – 9
68V–14984–00	9 – 10
68V–14985–00	9 – 5
68V–15100–01–1S	2 – 2
67F–15142–00	2 – 12
68V–15311–00–5B	27 – 1
68V–15312–00	27 – 8
	40 – 14
67F–15316–00	27 – 2
68V–15362–10	27 – 30
6G8–15363–00	4 – 35
67F–15373–00	6 – 6
68V–21841–00	8 – 13
68V–2247B–00	8 – 27
68V–2411M–00	8 – 17
68V–24149–00	10 – 26
68V–2417H–00	7 – 36
6YK–24306–43	11 – 1
68V–24312–00	17 – 37
63D–24364–00	19 – 14
63D–24367–00	19 – 13
68V–24374–00	10 – 22
68V–24377–00	9 – 28
6R3–24377–00	10 – 2
68V–24379–00	9 – 29
68V–24387–00	9 – 19
68V–24410–00	10 – 16
68V–24411–00	10 – 21
68V–24412–00	10 – 17
68V–24413–00	10 – 23

PART NO. N° PIECES	REF. NO.
68V–24414–00	10 – 24
68V–24423–00	10 – 20
68V–24444–00	10 – 25
68V–24454–00	10 – 18
68V–24469–01	10 – 9
68V–2447A–00	8 – 26
67F–24491–00	10 – 34
68V–24495–00	10 – 31
68V–24502–00	9 – 33
68V–24519–00	8 – 16
68V–24521–01	10 – 6
68V–24560–01	10 – 5
68V–24563–00	10 – 7
68V–24566–00	10 – 11
67F–24575–00	10 – 30
68V–2481H–00	8 – 28
	9 – 34
67G–26301–10	18 – 41
67F–28100–01	10 – 38
67F–2812A–00	14 – 31
6A1–28176–00	17 – 49
68V–28199–75–D0	10 – 39
68V–28199–75–E0	10 – 39
68V–28199–75–F0	10 – 39
68V–28199–75–G0	10 – 39
68V–28199–75–H0	10 – 39
68V–28199–75–S0	10 – 39
68V–28199–86–K0	10 – 40
68V–28199–86–L0	10 – 40
68V–28199–86–M0	10 – 40
68V–28199–86–N0	10 – 40
68V–28199–86–P0	10 – 40
68V–28199–86–R0	10 – 40
61H–2819R–31	10 – 37
68V–41113–02–1S	2 – 15
67F–41114–A1	2 – 18
	39 – 9
67F–41131–01–5B	26 – 5
67F–41133–A1	26 – 6
	40 – 16
67F–41134–A0	26 – 14
	40 – 21
67F–41137–02–94	26 – 1
67F–41138–00	26 – 16
	40 – 22
68V–41237–00	7 – 28
6H4–41237–00	7 – 29
67G–42111–02–4D	18 – 2

NUMERICAL INDEX
INDEX NUMERIQUE

PART NO. N° PIECES	REF. NO.
67G–42115–10	18 – 19
664–42119–00	18 – 4
68V–42121–00–4D	18 – 66
63D–42121–30–4D	18 – 58
63D–42126–00	18 – 12
67G–42131–00	18 – 51
6H2–42137–00	18 – 6
650–42152–00–94	18 – 20
67G–42153–00	18 – 26
68V–42154–00	21 – 36
68V–42157–00	21 – 30
67G–42159–00	18 – 22
68V–42171–00	21 – 31
6G1–42177–00	18 – 5
67G–42508–00	20 – 1
68V–42510–10–8D	23 – 10
68V–42510–30–8D	23 – 10
67G–42526–00	20 – 11
63D–42527–00	20 – 6
63D–42528–00	20 – 17
67G–42541–00	20 – 4
67G–42541–10	20 – 7
624–42542–00	13 – 3
	14 – 24
67G–42546–00	20 – 5
67G–42561–00	20 – 15
67G–42562–00	20 – 16
68V–42610–11–8D	1 – 1
68V–42612–00–8D	1 – 18
68V–42613–00	1 – 15
68V–42615–00	1 – 22
68V–42617–00	1 – 32
68V–42619–00	1 – 33
68V–42628–00	1 – 20
68V–42629–00	1 – 17
68V–42632–00	1 – 23
68V–42634–00	1 – 24
68V–42647–00	1 – 2
67F–42649–00	1 – 11
68V–42651–00	1 – 5
68V–42652–00	1 – 8
67F–42662–00	1 – 14
68V–42677–10	1 – 27
68V–42678–10	1 – 28
68V–42681–10	1 – 30
68V–42682–10	1 – 31
68V–42710–01–8D	17 – 1
648–42715–00	21 – 27

PART NO. N° PIECES	REF. NO.
61A–42716–00	17 – 39
67F–42717–00	17 – 25
68V–42718–00	1 – 21
67F–42724–00	26 – 31
63D–42725–00	18 – 56
68V–42725–00	17 – 19
67G–42725–01	19 – 33
6H1–42726–21	17 – 22
6G1–42727–00	26 – 4
67G–42735–00	19 – 3
68V–42738–00–5B	17 – 17
67F–42741–01–8D	17 – 40
6H4–42748–00	17 – 24
68F–42753–00	17 – 46
67F–42756–00	17 – 20
67F–42761–00–94	2 – 37
67F–42815–00–8D	17 – 5
67F–42816–00–8D	17 – 6
68V–42818–01	17 – 9
67F–42828–00–5B	17 – 7
68V–43111–01–8D	22 – 1
68V–43112–01–8D	22 – 9
64E–43126–00	22 – 37
64E–43131–01	22 – 15
64E–43139–02	23 – 1
64D–43144–00	17 – 14
66T–43144–00	22 – 27
6E5–43145–01	32 – 8
6G5–43148–00	22 – 32
6G5–43181–02	22 – 29
6G5–43185–02	22 – 30
64E–43311–10–8D	22 – 22
64E–43311–20–8D	22 – 22
682–43318–01	20 – 8
63P–43376–00	23 – 7
68V–43800–01–4D	24 – 1
64E–43802–00	25 – 8
64E–43805–00	25 – 37
64E–4380F–00	25 – 33
64E–4380J–00	25 – 30
64E–43810–00	24 – 6
6E5–43814–02	24 – 13
64E–43816–00	25 – 17
64E–43817–00	24 – 5
64E–43817–10	25 – 19
64E–43818–01	24 – 32
64E–4381G–00	24 – 27
64E–43820–00	24 – 15

PART NO. N° PIECES	REF. NO.
64E–43821–00	24 – 16
64E–43822–00	24 – 17
64E–43825–01	24 – 2
64E–43827–00	25 – 22
64E–43828–00	24 – 22
64E–43829–00	24 – 23
64E–4382G–00	24 – 29
68V–43830–00	25 – 4
64E–43831–00	25 – 2
64E–43841–00	25 – 7
64E–43843–00	25 – 6
64E–43843–10	25 – 38
64E–4384J–00	24 – 18
64E–43850–00	25 – 15
66Y–43851–00	25 – 11
68V–43855–00	25 – 14
64E–43858–00	25 – 12
6E5–43858–00	24 – 28
72X–43858–00	25 – 5
64E–43859–00	25 – 13
64E–43860–00	25 – 20
6E5–43862–00	24 – 10
6G5–43863–00	25 – 10
6E5–43864–00	24 – 20
6G5–43864–00	24 – 19
64E–43865–00	25 – 16
6G5–43865–00	25 – 35
64E–43866–00	24 – 9
64E–43867–00	24 – 8
64E–43868–00	25 – 3
64E–43869–00	24 – 26
6H1–4386K–10	25 – 29
6E5–43872–00	24 – 12
64E–43873–00	25 – 24
6E5–43874–01	24 – 21
64E–43875–00	25 – 25
64E–43879–00	25 – 27
64E–43879–10	25 – 26
64E–4387A–00	25 – 23
68V–43880–01	25 – 28
64E–43883–00	24 – 11
64E–4388E–00	24 – 25
64E–4388E–10	25 – 1
64E–4388J–00	24 – 3
64E–43891–00	25 – 31
64E–43892–00	25 – 34
6E5–43896–00	25 – 9
64E–43897–00	24 – 24

PART NO. N° PIECES	REF. NO.
64E–43898–00	24 – 7
67G–44100–10	18 – 16
67G–44104–00	18 – 17
67G–44113–00	18 – 23
68V–44117–00	21 – 5
68V–44118–00	21 – 22
68V–44120–10	21 – 17
68V–44120–30	21 – 17
68V–44121–00	21 – 15
68V–44122–01	21 – 12
67G–44132–00	18 – 27
67F–44135–00	21 – 37
6L6–44150–01	28 – 17
6E5–44150–02	30 – 19
67G–44159–00–4D	18 – 46
67G–44173–00	18 – 47
6G8–44191–00	18 – 49
61A–44311–01	28 – 24
	30 – 26
6E5–44312–00	29 – 4
	31 – 4
6E5–44315–A0	28 – 31
	30 – 33
	40 – 7
61A–44322–02	28 – 25
	30 – 27
	40 – 24
68V–44323–00	28 – 30
	30 – 32
	40 – 28
6E5–44352–01	28 – 28
	30 – 30
	40 – 27
68V–44361–11	29 – 2
68V–44361–30	29 – 2
	31 – 2
6E5–44365–00	29 – 3
	31 – 3
6E5–44366–00	29 – 1
	31 – 1
6H3–44391–01	1 – 34
	17 – 23
67F–44514–00–94	23 – 28
67F–44526–00	23 – 31
6G5–44526–00	22 – 3
67F–44533–00	23 – 33
68F–44533–00	2 – 40
68V–44551–00–8D	23 – 15

PART NO. N° PIECES	REF. NO.
68V–44553–00–8D	23 – 25
61A–44555–01–94	23 – 18
61A–44575–00	23 – 17
68V–45111–11–8D	26 – 18
68V–45111–31–8D	26 – 18
67F–45113–00	26 – 27
	40 – 13
663–45119–00	22 – 14
68V–45123–00	26 – 10
	40 – 18
67F–45127–00	26 – 17
	40 – 19
67F–45151–00	26 – 23
6H3–45155–00	26 – 26
67F–45181–00–5B	26 – 15
688–45214–02	29 – 11
	31 – 11
688–45215–02	29 – 12
	31 – 12
6G5–45251–02	22 – 2
68V–45300–12–8D	28 – 1
68V–45300–32–8D	28 – 1
68W–45300–32–8D	30 – 1
6E5–45301–05–8D	28 – 2
	30 – 2
6E5–45318–00	26 – 21
6E5–45321–00	28 – 13
	30 – 15
6E5–45331–00–94	28 – 34
	30 – 36
6E5–45332–00–94	28 – 58
6L6–45332–00–94	30 – 61
688–45341–10	28 – 7
	30 – 9
6E5–45344–00	28 – 40
	30 – 42
6L6–45371–00	31 – 15
6E5–45371–01	29 – 15
688–45375–00	29 – 10
	31 – 10
663–45376–00–94	29 – 9
	31 – 9
6E5–45378–00	28 – 10
	30 – 12
688–45383–02	28 – 68
	30 – 72
688–45384–00	28 – 69
	30 – 73

PART NO. N° PIECES	REF. NO.
68V–45501–10	28 – 43
68V–45501–30	28 – 43
	30 – 45
61A–45527–00	28 – 23
	30 – 25
6E5–45536–00	28 – 9
	30 – 11
61A–45538–00	28 – 20
	30 – 22
6L6–45538–00	30 – 6
68V–45551–00	28 – 44
	30 – 46
68V–45560–00	28 – 46
68W–45560–00	30 – 48
6E5–45567–01	28 – 5
	30 – 7
6E5–45567–10	28 – 5
	30 – 7
6E5–45567–20	28 – 5
	30 – 7
6E5–45567–30	28 – 5
	30 – 7
6E5–45567–40	28 – 5
	30 – 7
6E5–45567–50	28 – 5
	30 – 7
6E5–45567–60	28 – 5
	30 – 7
68W–45570–10	30 – 63
68V–45571–00	28 – 60
6E5–45576–00	28 – 61
6L6–45576–00	30 – 64
6L6–45577–00	28 – 65
	30 – 70
6L6–45577–10	28 – 65
	30 – 70
6L6–45577–20	28 – 65
	30 – 70
6L6–45577–30	28 – 65
	30 – 70
6L6–45577–40	28 – 65
	30 – 70
6L6–45577–50	28 – 65
	30 – 70
6L6–45577–60	28 – 65
	30 – 70
6K1–45578–01	30 – 66
6K1–45578–10	30 – 66

NUMERICAL INDEX
INDEX NUMERIQUE

PART NO. N° PIECES	REF. NO.
6K1–45578–20	30 – 66
6K1–45578–30	30 – 66
6K1–45578–40	30 – 66
6K1–45578–50	30 – 66
6K1–45578–60	30 – 66
6E5–45587–01	28 – 37
	30 – 39
6E5–45587–10	28 – 37
	30 – 39
6E5–45587–20	28 – 37
	30 – 39
6E5–45587–30	28 – 37
	30 – 39
6E5–45587–40	28 – 37
	30 – 39
6E5–45587–50	28 – 37
	30 – 39
6E5–45587–60	28 – 37
	30 – 39
68W–45611–00	30 – 51
6E5–45611–01	28 – 48
68V–45631–01	28 – 56
	30 – 59
6E5–45633–01	28 – 57
	30 – 60
6E5–45634–01	28 – 50
	30 – 53
6K1–45641–01	28 – 49
6E5–45641–03	30 – 52
6L6–45930–01–98	31 – 27
688–45930–02–98	29 – 27
688–45932–60–98	29 – 27
6E5–45941–00–EL	29 – 27
6E5–45943–00–EL	29 – 27
6E5–45945–01–EL	29 – 27
6E5–45947–00–EL	29 – 27
6E5–45949–00–EL	29 – 27
6E5–45952–00–EL	29 – 27
6E5–45954–00–EL	29 – 27
6E5–45956–00–EL	29 – 27
6L6–45970–00–98	31 – 27
688–45970–03–98	29 – 27
62A–45970–10	29 – 27
6L6–45972–00–98	31 – 27
688–45972–02–98	29 – 27
62A–45972–10	29 – 27
688–45974–02–98	29 – 27
62A–45974–10	29 – 27

PART NO. N° PIECES	REF. NO.
688–45976–01–98	29 – 27
688–45978–60–98	29 – 27
63P–45987–00	29 – 22
	31 – 22
688–45997–01	29 – 23
	31 – 23
67F–46241–00	5 – 17
63D–48119–00	18 – 25
704–48119–40	36 – 68
EL8–48127–00	36 – 23
704–48128–00	36 – 2
704–48144–20	36 – 50
703–48152–00	35 – 57
703–48153–00	35 – 3
704–48153–00	36 – 55
63D–48154–00	18 – 13
704–48156–00	36 – 63
EL8–48164–00	36 – 41
704–48166–00	36 – 56
704–48167–10	36 – 69
704–48176–10	36 – 51
704–48178–10	36 – 66
703–48189–00	35 – 17
EL8–48191–00	36 – 16
704–48192–00	36 – 44
703–48198–00	35 – 14
703–48205–17	34 – 1
	35 – 1
704–48207–P0	34 – 2
	36 – 1
703–48211–01	35 – 61
703–48212–00	35 – 58
703–48213–00	35 – 59
703–48215–00	35 – 43
704–48215–30	36 – 12
703–48219–00	35 – 30
704–48219–P0	36 – 49
703–48221–00	35 – 56
704–48221–P0	36 – 67
703–48222–00	35 – 27
704–48222–P0	36 – 32
703–48223–00	35 – 28
703–48225–00	35 – 29
6X3–48225–20	36 – 43
703–48226–00	35 – 26
703–48227–00	35 – 24
704–48229–00	36 – 60
704–48229–P1	36 – 35

PART NO. N° PIECES	REF. NO.
704–48231–00	36 – 25
703–48232–00	35 – 62
704–48232–P1	36 – 40
704–48233–00	36 – 53
703–48234–00	35 – 18
704–48234–00	36 – 48
702–48235–00	36 – 54
703–48235–00	35 – 4
63D–48236–00	18 – 24
703–48236–00	35 – 16
63D–48237–00	18 – 28
63D–48238–00	18 – 30
703–48238–00	35 – 22
704–48238–00	36 – 39
EL8–48241–00	36 – 26
704–48242–10	36 – 42
703–48243–00	35 – 15
703–48244–00	35 – 21
EL8–48244–00	36 – 30
703–48245–00	35 – 11
EL8–48245–00	36 – 31
701–48246–00	36 – 5
703–48246–00	35 – 23
701–48248–00	35 – 13
	36 – 38
EL8–48251–00	36 – 3
703–48252–00	35 – 12
EL8–48254–00	36 – 27
EL8–48259–00	36 – 7
67G–48261–00	18 – 18
704–48261–00	36 – 15
703–48261–01	35 – 2
704–48262–00	36 – 8
703–48264–00	35 – 6
704–48264–00	36 – 9
703–48265–00	35 – 9
704–48265–00	36 – 4
703–48268–00	35 – 5
703–48271–00	35 – 60
704–48271–00	36 – 22
EL8–48279–00	36 – 47
703–48281–00	35 – 31
704–48281–00	36 – 13
EL8–48281–00	36 – 11
703–48282–00	35 – 32
704–48283–00	36 – 17
703–48284–00	35 – 52
704–48284–P0	36 – 57

PART NO. N° PIECES	REF. NO.
704–48285–10	36 – 65
701–48287–00	35 – 42
704–48287–00	36 – 20
703–48291–10	35 – 39
703–48293–10	35 – 41
701–48320–50	34 – 3
701–48320–60	34 – 3
701–48320–80	34 – 3
67G–48321–10	18 – 37
663–48344–00	21 – 3
703–48345–01	35 – 19
	36 – 19
701–48350–00	34 – 3
701–48350–20	34 – 3
703–48358–00	35 – 20
	36 – 24
68V–48511–00–8D	23 – 35
67G–48531–00	18 – 38
63D–48538–00	18 – 44
66R–48538–00	18 – 42
67F–48538–00	21 – 1
6E5–61301–01	33 – 1
6E5–61303–00	33 – 5
6E5–61311–11	33 – 3
6E5–61313–00	33 – 2
6E5–61315–00	33 – 4
6E5–61350–02	32 – 1
6E5–61351–01	32 – 2
6E5–61355–00	32 – 5
68V–81145–00	7 – 32
68V–81145–01	7 – 14
68V–81146–01	7 – 12
68V–81147–00	7 – 18
	8 – 8
68V–81315–00	15 – 21
445–81328–20	12 – 7
67F–8132G–01	15 – 1
6D8–81332–00	12 – 16
67F–81337–01	12 – 19
63D–81345–20	12 – 5
68V–81410–00	12 – 4
68V–81450–00	12 – 1
68V–81460–00	12 – 2
68V–81673–00	12 – 8
68V–81800–01	16 – 1
67F–81801–00	16 – 5
67F–81807–00	16 – 10
67F–81808–00	16 – 8

PART NO. N° PIECES	REF. NO.
67F–81809–00	16 – 19
67F–81810–00	16 – 3
67F–81813–00	16 – 6
68F–81820–00	16 – 7
67F–81821–00	16 – 13
6K7–81826–10	16 – 24
67F–81828–00	16 – 25
68V–8182L–00	7 – 16
67F–81830–00	16 – 17
67F–81832–00	16 – 11
67F–81836–00	16 – 12
67F–81839–00	16 – 21
67F–8183R–00	16 – 16
60V–8183T–00	16 – 18
68F–81840–00	16 – 4
67F–81841–00	16 – 14
67F–81842–00	16 – 20
67F–81846–00	16 – 26
67F–81850–00	16 – 2
67F–81857–00	16 – 9
67F–81869–00	16 – 23
67F–81891–00	16 – 15
68V–81919–00	14 – 42
68V–81919–10	14 – 43
60V–81925–00	16 – 28
68V–81941–01	16 – 22
68V–81942–02	14 – 30
68V–81948–01	14 – 22
68V–81949–00	14 – 15
68V–8194A–00	14 – 7
68V–81950–00	14 – 5
704–81950–10	36 – 58
68V–81953–00	14 – 8
68V–8195B–01	14 – 14
68V–81960–00	13 – 14
6K1–81980–00	38 – 18
68V–82105–00	14 – 1
6Y5–82117–00	37 – 17
6G5–82119–00	14 – 13
703–82119–00	23 – 4
6E5–82148–00	22 – 6
66K–82149–00	22 – 26
68V–82149–30	22 – 26
1E6–82151–00	37 – 16
67F–82151–00	14 – 33
67F–82151–10	14 – 34
67F–8215B–10	14 – 37
67F–8215B–20	14 – 38

PART NO. N° PIECES	REF. NO.
68V–82310–00	13 – 5
68V–82310–10	13 – 6
68V–82317–00	13 – 2
6A0–82317–00	14 – 23
67F–82361–00	13 – 12
67F–82362–00	13 – 13
68V–82377–00	17 – 48
68V–82380–00	7 – 17
68V–82388–00	13 – 10
68V–82504–00	15 – 20
6K1–82510–06	38 – 3
703–82510–43	35 – 44
67G–82510–50	19 – 9
63D–8252E–01–4D	19 – 11
63D–8252F–01–4D	19 – 12
703–82531–00	35 – 46
	37 – 27
68V–82532–00	14 – 16
6K1–82532–00	38 – 5
703–82540–00	35 – 50
688–82540–11	19 – 4
704–82540–30	36 – 10
68F–82553–80	37 – 18
68F–82553–90	37 – 18
67G–82554–01	19 – 5
62Y–82555–00	19 – 6
682–82556–00	19 – 22
	35 – 48
	38 – 7
67G–82563–00	19 – 25
703–82563–02	35 – 55
63D–82563–10	15 – 22
704–82563–50	36 – 34
704–82563–H0	36 – 61
704–82563–J0	36 – 64
6K1–82570–08	38 – 1
6K1–82571–02	38 – 2
69W–82575–00	19 – 21
6K1–82575–00	38 – 6
688–82575–01	35 – 47
676–82577–00	19 – 10
703–82577–00	35 – 45
	38 – 4
6E3–8257H–00	17 – 50
689–8257Y–00	19 – 23
68F–82582–00	16 – 29
63D–82586–01	19 – 32
6E5–82587–00	15 – 23

NUMERICAL INDEX
INDEX NUMERIQUE

PART NO. N° PIECES	REF. NO.
68V–82588–00	15 – 5
6E5–82588–00	17 – 26
61A–82588–01	21 – 7
61B–8258A–01	38 – 24
688–8258A–20	35 – 49
6K1–8258A–40	38 – 23
68V–82590–10	14 – 32
704–82590–10	36 – 59
703–82591–00	35 – 53
703–82592–00	35 – 54
68V–82594–00	14 – 26
703–82594–00	35 – 25
704–82594–00	36 – 33
68F–8259F–00	21 – 6
68V–8259M–00	15 – 4
68V–8259N–00	7 – 33
703–83383–02	35 – 51
688–83383–11	19 – 34
	38 – 12
6H5–83386–00	19 – 35
6Y5–83500–S5	37 – 6
6Y5–8350F–00	37 – 21
6Y5–8350T–03	37 – 1
6Y5–83533–T2	37 – 10
6Y5–83553–00	37 – 15
6H5–83553–12	19 – 31
6Y5–83553–F1	37 – 23
6Y5–83553–M0	37 – 15
6K3–83557–00	19 – 2
6Y5–83557–10	37 – 19
6Y5–83557–31	37 – 11
6E5–83558–00	29 – 18
	31 – 18
6E5–83558–10	28 – 12
	30 – 14
6Y5–83570–S5	37 – 7
67F–83614–00	15 – 24
6K1–83614–01	38 – 8
6K1–83623–41	12 – 27
6K1–83623–50	12 – 28
6A1–83625–41	12 – 25
6A1–83625–51	12 – 26
68V–83626–00	4 – 37
64E–83672–02	23 – 3
63D–83728–00	19 – 28
6Y5–83728–00	37 – 12
72X–85075–L0	25 – 21
689–85547–00	10 – 1

PART NO. N° PIECES	REF. NO.
68V–85548–00	14 – 28
68V–85580–00	12 – 3
6Y5–85752–01	37 – 24
68V–85753–00	15 – 15
	39 – 8
67F–85757–00	15 – 14
67F–85790–00	15 – 13
6K1–85830–01	38 – 13
68V–85885–00	7 – 15
65L–85886–00	6 – 18
68V–8591A–13	13 – 1
6Y5–87122–S0	37 – 14
68V–8A360–00	8 – 2
K1C–A3275–00	3 – 8
K0A–A3721–00	5 – 7
K0A–A3722–00	5 – 8
K0F–A9904–20	4 – 7
68V–W0001–03	39 – 1
68V–W0001–21	40 – 1
68V–W0070–10	1 – 29
68V–W0078–00	40 – 23
67G–W0084–14–4D	18 – 1
68V–W009A–03–1S	4 – 1
68V–W009B–05–1S	2 – 1
68V–W1164–00	3 – 7
68V–W1164–10	3 – 7
90101–09M70	33 – 9
90101–12014	18 – 59
90101–12M05	22 – 40
90105–10M00	29 – 16
	31 – 16
90105–10M89	4 – 19
90109–06M80	17 – 15
90109–06M81	17 – 27
90109–06M82	17 – 8
90109–06M86	15 – 25
	17 – 21
	21 – 2
90109–12007	23 – 30
90109–14007	23 – 22
90116–10175	18 – 67
	23 – 36
90119–06M10	28 – 16
	30 – 18
90119–06M49	6 – 13
90119–06M59	13 – 4
	14 – 25
90119–06M82	6 – 16

PART NO. N° PIECES	REF. NO.
90119–06M83	10 – 29
90119–06M92	12 – 22
90119–06MA2	2 – 25
90119–06MA4	2 – 19
90119–06ME1	6 – 17
90119–07235	4 – 5
	10 – 35
90119–08M14	28 – 33
	30 – 35
	40 – 31
90119–08M22	17 – 2
90119–08M58	26 – 30
90119–08M66	2 – 5
90119–08M68	6 – 2
90119–08M74	20 – 2
90119–08M91	4 – 20
90119–10M06	5 – 15
90119–10M08	26 – 19
90119–10M72	5 – 22
90119–10M88	2 – 4
90119–10M89	29 – 8
	31 – 8
90149–05M05	38 – 19
90149–05M13	18 – 8
90152–05M07	29 – 13
	31 – 13
90158–06002	37 – 25
90159–06M18	18 – 48
90159–06M28	17 – 42
90159–06M29	4 – 30
90167–06002	17 – 32
90170–09M05	33 – 10
90170–14M06	33 – 6
90170–16M01	28 – 45
	30 – 47
90170–40003	5 – 24
90171–18M04	29 – 25
	31 – 25
90179–06M28	1 – 19
	21 – 35
90179–08003	16 – 27
90179–24002	12 – 15
90185–05002	29 – 14
	31 – 14
90185–08057	20 – 14
90185–09M01	32 – 6
	33 – 11
90185–10051	18 – 68

PART NO. N° PIECES	REF. NO.
90185–10051	23 – 37
90185–10M14	20 – 9
90185–12M12	18 – 65
	23 – 34
90185–22M11	22 – 20
90201–06068	17 – 12
90201–06M31	21 – 44
90201–08M01	20 – 3
90201–08M12	10 – 33
90201–08M14	24 – 30
90201–09M02	21 – 20
90201–10M02	21 – 32
90201–10M20	32 – 7
90201–10M76	20 – 10
	33 – 8
90201–12M05	22 – 42
90201–12M09	23 – 32
90201–13M01	22 – 41
90201–15M58	23 – 21
90201–16M55	23 – 20
90201–22M01	28 – 21
	30 – 23
90201–24014	12 – 14
90201–26M00	30 – 50
90201–26M59	22 – 19
90201–30M92	28 – 66
90201–38M60	23 – 11
90202–07M07	21 – 13
90202–32M19	23 – 19
90202–40M47	23 – 14
90206–10M04	21 – 33
90206–12M22	18 – 61
90206–15M18	17 – 11
90206–22M19	28 – 22
	30 – 24
90249–06M19	22 – 33
90250–08M07	28 – 55
	30 – 58
90269–02M09	18 – 7
90280–04008	5 – 25
90280–04M05	28 – 29
	30 – 31
	40 – 32
90280–04M08	12 – 13
90282–04010	28 – 67
	30 – 71
90338–07180	18 – 57
90340–08002	28 – 6

PART NO. N° PIECES	REF. NO.
90340–08002	30 – 8
90340–14M06	2 – 6
	27 – 3
90340–18M09	2 – 16
90344–51019	4 – 4
90386–06M12	21 – 16
90386–08032	18 – 11
90386–10M16	22 – 31
90386–12M93	18 – 63
90386–15M73	17 – 10
90386–22M98	22 – 38
	24 – 33
90386–25M31	22 – 18
90386–26MA3	18 – 50
90386–38M32	23 – 13
90386–90M90	21 – 19
90387–06M21	21 – 34
90387–06M43	17 – 45
90387–06M64	27 – 12
90387–06M71	12 – 20
90387–08M32	6 – 3
90387–08M37	17 – 4
90387–10M05	22 – 34
90387–10M08	4 – 18
90387–10M61	32 – 3
90387–12M02	18 – 62
90401–20145	2 – 42
90430–06014	8 – 25
	39 – 18
90430–08020	28 – 8
	30 – 10
	40 – 2
90430–08143	4 – 16
	39 – 2
90430–14115	2 – 7
	39 – 6
90430–14M09	27 – 4
	40 – 20
90430–18130	2 – 17
	39 – 12
90445–076K2	29 – 17
	31 – 17
90445–07ME8	28 – 11
90445–07ME9	28 – 11
	30 – 13
90445–10M18	1 – 35
90445–13M11	10 – 15
90445–13M27	10 – 4

PART NO. N° PIECES	REF. NO.
90445–15M03	5 – 20
90446–24M79	19 – 1
90447–07007	14 – 36
90447–10003	14 – 35
90462–08018	1 – 36
90464–06001	13 – 11
90464–12M58	14 – 27
90464–20258	17 – 47
90465–06M86	15 – 18
90465–08M23	17 – 28
90465–08M63	22 – 23
90465–11M10	2 – 34
	6 – 7
	8 – 29
	10 – 3
	15 – 9
	17 – 38
	22 – 21
	23 – 6
	29 – 19
	31 – 19
	37 – 13
90465–12M03	6 – 9
90465–13M11	19 – 24
90465–13M18	6 – 22
	15 – 8
90465–13M24	19 – 29
90465–13M30	19 – 30
90467–20M15	2 – 35
	6 – 8
90468–10005	18 – 40
90468–18008	21 – 4
90480–12072	2 – 11
	4 – 25
90480–13M24	17 – 44
90480–15M31	12 – 21
90480–20M05	2 – 22
90480–22M15	17 – 3
90501–11M10	28 – 19
	30 – 21
90501–12082	21 – 26
90501–16M11	2 – 21
90501–16M37	28 – 51
	30 – 54
90501–23215	18 – 10
90506–14M24	22 – 36
90506–16M34	17 – 16
90506–16M39	5 – 19

NUMERICAL INDEX
INDEX NUMERIQUE

PART NO. N° PIECES	REF. NO.
90560–12M01	32 – 4
91490–20010	18 – 15
91490–20015	21 – 21
91490–40030	29 – 26
	31 – 26
91609–25014	10 – 32
91690–30020	22 – 35
91690–30025	18 – 21
91690–50014	6 – 4
91809–08006	4 – 6
	10 – 36
92780–06020	36 – 28
92903–06100	14 – 3
92903–06600	14 – 4
92903–08100	16 – 33
92903–08600	16 – 31
92903–10600	18 – 9
92907–04600	4 – 24
92907–06600	27 – 11
92990–04100	37 – 4
92990–05100	38 – 10
92990–05200	1 – 25
92990–05300	36 – 36
92990–05600	38 – 22
92990–06100	1 – 3
	38 – 16
92990–06300	36 – 46
92990–06600	22 – 12
	26 – 25
	38 – 17
92990–08600	35 – 34
92990–12200	18 – 60
92990–12600	18 – 64
92990–18200	29 – 24
	31 – 24
92995–04100	21 – 9
92995–06100	12 – 11
	13 – 8
	14 – 11
	15 – 11
	21 – 40
	22 – 5
92995–06600	1 – 7
	2 – 10
	4 – 11
	6 – 11
	10 – 14
	12 – 12

PART NO. N° PIECES	REF. NO.
92995–06600	13 – 9
	14 – 12
	15 – 3
	18 – 34
	19 – 8
	21 – 11
	22 – 8
	26 – 8
	27 – 6
92995–08100	22 – 17
92995–08600	2 – 32
	4 – 14
	6 – 21
	18 – 32
	20 – 13
	28 – 42
	30 – 44
92995–10100	23 – 27
	29 – 7
	31 – 7
92995–10600	23 – 9
92995–14600	23 – 24
93101–28M16	28 – 35
	30 – 37
	40 – 8
93101–30M17	28 – 63
	30 – 68
	40 – 10
93101–48002	3 – 3
	39 – 11
93102–08M43	25 – 36
93102–38M59	5 – 16
	39 – 5
93102–48009	3 – 2
	39 – 10
93106–09014	28 – 15
	30 – 17
	40 – 4
93210–09165	21 – 18
	40 – 17
93210–10M74	24 – 4
93210–16275	32 – 9
93210–19MJ1	27 – 29
	40 – 12
93210–24M79	4 – 36
	39 – 3
93210–30682	10 – 28
	39 – 16

PART NO. N° PIECES	REF. NO.
93210–32738	10 – 8
93210–37160	28 – 27
	30 – 29
	40 – 6
93210–37MH7	23 – 12
93210–48MG8	7 – 27
	39 – 15
93210–48MJ9	6 – 15
	39 – 19
93210–55M14	28 – 39
	30 – 41
	40 – 9
93210–58144	28 – 14
	30 – 16
	40 – 3
93210–86M38	28 – 26
	30 – 28
	40 – 5
93210–86M39	28 – 64
	30 – 69
	40 – 11
93306–208U0	28 – 59
93315–345W0	30 – 4
93315–425U7	28 – 47
	30 – 49
93315–430U8	28 – 62
93315–628U9	28 – 3
	30 – 3
93317–330U2	28 – 36
	30 – 38
93317–330U5	30 – 67
93332–000U7	28 – 4
93332–000V7	30 – 62
93341–360U8	30 – 5
93341–440U5	30 – 65
93341–930V2	28 – 38
	30 – 40
93410–22M11	22 – 39
93410–37M04	23 – 16
93420–36M01	26 – 22
93430–06024	35 – 10
	36 – 6
93501–04M02	21 – 25
93503–16003	28 – 54
	30 – 57
93507–32009	28 – 52
	30 – 55
93511–32017	28 – 53

PART NO. N° PIECES	REF. NO.
93511–32017	30 – 56
93604–12M07	27 – 28
93605–10108	5 – 13
93606–12019	2 – 3
	27 – 7
	28 – 32
	30 – 34
	40 – 30
93606–19M23	26 – 13
93608–12M05	29 – 5
	31 – 5
93608–16M16	26 – 3
93700–06M03	18 – 3
	22 – 13
94702–00400	4 – 38
95333–08600	16 – 32
95380–04600	37 – 5
95380–05600	35 – 7
	36 – 21
	38 – 11
95380–05700	7 – 30
95380–06600	1 – 4
	17 – 41
	18 – 14
	35 – 40
	36 – 37
	38 – 15
95380–08600	10 – 12
95380–12600	22 – 43
95380–14600	23 – 23
95380–14700	33 – 7
95780–10300	23 – 8
97013–06020	14 – 2
97013–08045	16 – 30
97027–06025	27 – 10
97075–06020	2 – 28
	4 – 10
97075–06025	21 – 23
	27 – 5
97075–06030	26 – 11
97075–06070	26 – 7
97075–08025	2 – 31
	4 – 13
97075–10040	23 – 26
97075–10045	29 – 6
	31 – 6
97080–08016	24 – 31
97095–06010	8 – 24

PART NO. N° PIECES	REF. NO.
97095–06010	14 – 10
	15 – 19
	22 – 7
	26 – 28
97095–06012	1 – 6
	6 – 10
	15 – 6
97095–06014	18 – 35
	19 – 7
97095–06016	10 – 13
	15 – 2
	17 – 13
97095–06020	2 – 9
	13 – 18
	14 – 39
	15 – 10
	19 – 17
97095–06025	2 – 38
	4 – 33
	13 – 7
	19 – 15
97095–06030	4 – 27
	12 – 10
	18 – 33
	19 – 19
	22 – 4
97095–06035	21 – 39
97095–06040	21 – 10
97095–06045	27 – 26
97095–08014	4 – 15
97095–08020	6 – 20
	22 – 16
97095–08025	20 – 12
	28 – 41
	30 – 43
97095–08040	18 – 31
97380–05025	35 – 8
97380–06018	36 – 18
97380–08030	35 – 33
97575–08445	23 – 29
97575–08540	6 – 1
	26 – 2
97607–04110	12 – 6
97607–04310	25 – 32
97780–50620	1 – 37
97780–50625	1 – 26
97780–60525	23 – 2
97780–60620	14 – 9

PART NO. N° PIECES	REF. NO.
97780–60625	14 – 6
97880–06012	22 – 11
97880–06016	26 – 24
97885–04016	21 – 8
97885–06010	12 – 17
97885–06016	18 – 54
	19 – 26
	23 – 5
97885–06040	18 – 52
97890–05025	36 – 14
97890–06018	36 – 45
98507–04008	4 – 23
98580–03015	35 – 38
98580–04006	35 – 36
98580–04010	35 – 35
98580–05010	35 – 37
98780–04016	2 – 14
98780–05018	36 – 29
98785–05014	18 – 29
98980–05010	38 – 9
98980–06020	38 – 14
99001–08600	28 – 18
	30 – 20
99530–08012	12 – 9
99530–10114	7 – 26
9E450–04433	37 – 2
9E450–04533	37 – 3

F115A/FL115A
PARTS CATALOGUE
©2004 by Yamaha Motor Co., Ltd.
1st edition, June 2004
All rights reserved.
Any reprinting or unauthorized use
without the written permission of
Yamaha Motor Co., Ltd.
is expressly prohibited.
Printed in Japan.

F115A/FL115A
CATALOGUE DE PIECES DETACHEES
©2004 par Yamaha Motor Co., Ltd.
1re édition, juin 2004
Tous droits réservés
Toute réimpression ou utilisation
non autorisée sans la permission écrite
de la Yamaha Motor Co., Ltd.
est formellement interdite.
Imprimé au Japon