YAMAHA

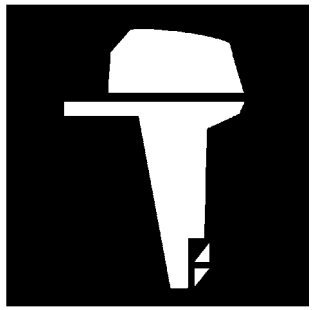

PARTS CATALOGUE
CATALOGUE DE PIECES DETACHEES

F150AET'05 (63P2)
FL150AET'05 (64P2)

1D63P-300F2

(2D63P-300F2)

YAMAHA GENUINE Parts & Accessories

2018/8/28

NEWS NO.	DATE	COMMENT
PE0-OM-060011	May 25,2006	MOD:FIG.11,REF.3 RELIEF VALVE ASSY P/No. REVISION
PE0-OM-120035	Jun. 1,2012	MOD:FIG.3,6,15 LIST/ILLUSTRATION REVISION
PE0-OM-160040	Dec.,19,2016	MOD:FIG.35 REMOTE CONTROL ASSY 3 LIST REVISION
PE0-OM-180023	Aug.,22,2018	MOD:FIG.3 CRANKSHAFT & PISTON LIST/ILLUSTRATION REVISION

FOREWORD

This Parts Catalogue is related to the parts for the model(s) on the cover page. When you are ordering replacement parts, please refer to this Parts Catalogue and quote both part numbers and part names correctly.

1. Modifications or additions which have been made after the issue of the Parts Catalogue will be announced in the Parts News.
   It is advisable that you make the necessary corrections to the Parts Catalogue according to the Parts News.

2. Abbreviations
   The following abbreviations are used in this Parts Catalogue.

   "UR" Use specified parts number.
   "UN" Use as many as needed.
   "AP" Alternate Parts
   "LM" Locally Made (Parts need to be ordered locally)
   "F#" Frame No. (Applicable machine No.)
   "O/S" Over Size

3. The number of components for assembly
   - Parts, which are to be supplied in an assembly, are listed with a dot (.) in front of the part name as shown below.
   - The numeral appearing to the right of each component part indicates the quantity of parts for each assembly unit.

PART NO.	DESCRIPTION	Q'TY	REMARKS
2F5–83310–60	FRONT FLASHER LIGHT ASSY	2	
115–83311–60	.BULB (6V–18W)	1	

4. Applicable colours of graphics are represented in the "REMARKS" as shown below.

PART NO.	DESCRIPTION	Q'TY	REMARKS
2N4–24110–00–X5	FUEL TANK COMP.	2	MXR
3J1–24240–10	.GRAPHIC, FUEL TANK	1	FOR MXR

5. Note that the illustrations for reference in finding parts numbers are not to be used for assembling. When assembling, please use the applicable service manual.

6. The asterisk (*) before a reference number indicates modified items after the first edition.

7. Applicable Serial No.

   Engine Serial No.

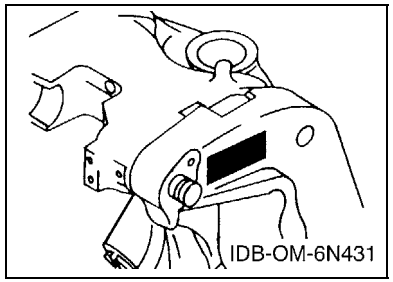

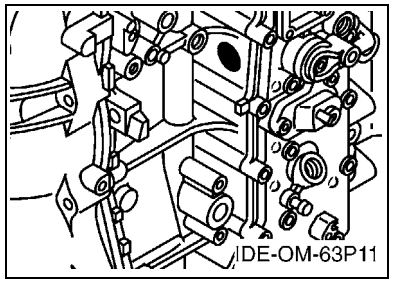

8. Applicable Engine Starting Serial No.

Model	Serial No.	Model	Serial No.
F150A	63P-1014727	FL150A	64P-1001555

9. Applicable Colour Code

Abbreviation	Colour Name	Colour Code
DBN1	DARK BLUISH GRAY 1	008D

10. Quantity Column Information

Column No.	Name Of Q'ty Column	Applicable Model
1	63P2	F150AET
2	64P2	FL150AET

AVANT–PROPOS

Ce catalogue de pièces détachées concerne les pièces pour le(s) modèle(s) indiqué(s) sur la page de couverture. Lorsque vous commandez des pièces de rechange, veuillez vous référer à ce catalogue de pieces détachées et indiquer clairement les numéros et les noms des pièces détachées.

1. Les modifications ou ajouts ayant été effectués après la parution du catalogue de pièces détachées seront décrits dans les Bulletins d'information concernant les pièces détachées.
   Il est recommandé que vous apportiez les corrections nécessaires au catalogue des pièces détachées en vous référant aux Bulletins d'information.

2. Abréviations
   Dans ce catalogue, les abréviations suivantes sont utilisées:

   "UR" Utiliser le numéro de pièces spécifié.
   "UN" Utiliser autant que nécessaire.
   "AP" Pièces de substitution
   "LM" Fabrication locale (les pièces doivent être commandées localement.)
   "F#" N° de cadre (applicable au N° de série)
   "O/S" Surdimensionné

3. Nombre de pièces d'un assemblage
   - Les pièces fournies comme composants d'un assemblage sont précédées d'un point (.) de la manière indiquée ci–dessous.
   - Le chiffre apparaissant à la droite de chaque composant indique la quantité de pièces pour chaque unité d'assemblage.

N° PIECES	DESCRIPTION	QTE	REMARQUES
2F5–83310–60	ENS. CLIGNOTANT AVANT	2	
115–83311–60	.AMPOULE (6V–18W)	1	

4. Les couleurs concernant les graphiques sont indiquées dans la colonne "REMARQUES", comme indiqué ci–dessous.

N° PIECES	DESCRIPTION	QTE	REMARQUES
2N4–24110–00–X5	RESERVOIR A ESSENCE.	2	MXR
3J1–24240–10	.GRAPHIQUE	1	POUR MXR

5. Veuillez noter que les illustrations sont indiquées à titre de référence pour trouver les numéros de pièces, non pour être utilisées lors de l'assemblage. Lors de l'assemblage, veuillez utiliser le manuel d'entretien adéquat.

6. L'astérisque (*) placé devant un numéro de référence indique des éléments qui ont été modifiés après la première édition.

7. N° de série applicable

   N° de Série du moteur

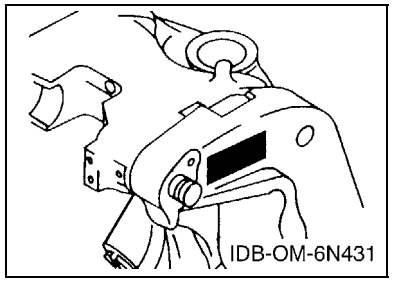

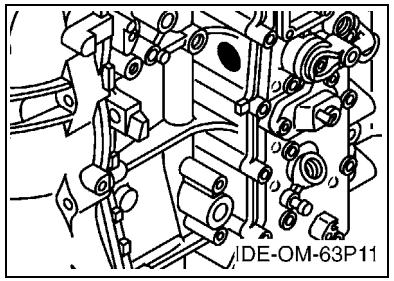

8. N° de série initial du moteur applicable

Modèle	N° de série	Modèle	N° de série
F150A	63P-1014727	FL150A	64P-1001555

9. Code couleur applicable

Abréviation	Nom de la couleur	Code couleur
DBN1	DARK BLUISH GRAY 1	008D

10. Informations relatives à la colonne Quantité

N° de la colonne	Nom de la colonne Qté	Modèle applicable
1	63P2	F150AET
2	64P2	FL150AET

CONTENTS

SHEET1/2
TOP COWLING A4
CYLINDER & CRANKCASE 1 ..... A6
CRANKSHAFT & PISTON B1
CYLINDER & CRANKCASE 2 ..... B2
CYLINDER & CRANKCASE 3 ..... B4
VALVE B6
INTAKE 1 ..... C1
INTAKE 2 ..... C2
INTAKE 3 ..... C3
FUEL INJECTION PUMP 1 ..... C5
FUEL INJECTION PUMP 2 ..... C6
FUEL INJECTION PUMP 3 ..... C7
FUEL 1 ..... D1
FUEL 2 ..... D4
GENERATOR D5
ELECTRICAL 1 ..... D6
ELECTRICAL 2 ..... D7
ELECTRICAL 3 ..... E2
STARTING MOTOR E3
BOTTOM COWLING E5
CONTROL E7
BRACKET 1 ..... F3
BRACKET 2 ..... F5
POWER TRIM & TILT ASSY 1 ..... F7

INDEX

NUMERICAL INDEX G1

SHEET2/2
POWER TRIM & TILT ASSY 1 ..... A4*
POWER TRIM & TILT ASSY 2 ..... A5*
UPPER CASING A7*
OIL PAN B2*
LOWER CASING & DRIVE 1 ..... B4*
LOWER CASING & DRIVE 2 ..... C1*
LOWER CASING & DRIVE 3 ..... C3*
LOWER CASING & DRIVE 4 ..... C7*
STEERING GUIDE D2*
REMOTE CONTROL BOX D3*
REMOTE CONTROL ASSY 1 ..... D4*
REMOTE CONTROL ASSY 2 ..... D7*
METER E3*
SWITCH & PANEL E5*
REPAIR KIT 1 ..... E6*
REPAIR KIT 2 ..... E7*

INDEX

NUMERICAL INDEX G1*

TABLE DES MATIERES

Feuille1/2
CAPOT SUPERIEUR A4
CYLINDRE & CARTER 1 ..... A6
VILEBREQUIN & PISTON B1
CYLINDRE & CARTER 2 ..... B2
CYLINDRE & CARTER 3 ..... B4
SOUPAPE B6
ADMISSION 1 ..... C1
ADMISSION 2 ..... C2
ADMISSION 3 ..... C3
POMPE A INJECTEUR 1 ..... C5
POMPE A INJECTEUR 2 ..... C6
POMPE A INJECTEUR 3 ..... C7
CARBURANT 1 ..... D1
CARBURANT 2 ..... D4
GENERATRICE D5
PARTIE ELECTRIQUE 1 ..... D6
PARTIE ELECTRIQUE 2 ..... D7
PARTIE ELECTRIQUE 3 ..... E2
DEMARREUR ELECTRIQUE E3
CAPOT INFERIEUR E5
COMMANDE E7
SUPPORT 1 ..... F3
SUPPORT 2 ..... F5
PUISSANCE PARER ET INCLINER 1 ..... F7

INDEX

INDEX NUMERIQUE G1

Feuille2/2
PUISSANCE PARER ET INCLINER 1 ..... A4*
PUISSANCE PARER ET INCLINER 2 ..... A5*
FOURREAU A7*
VENTILATEUR D'HUILE B2*
BOITIER D'HELICE TRANSMISSION1 ..... B4*
BOITIER D'HELICE TRANSMISSION2 ..... C1*
BOITIER D'HELICE TRANSMISSION3 ..... C3*
BOITIER D'HELICE TRANSMISSION4 ..... C7*
FIXATION DE DIRECTION D2*
BOITIER DE COMMANDE A DISTANCE D3*
BOITIER DE COMMANDE A DISTANCE D4*
BOITIER DE COMMANDE A DISTANCE D7*
COMPTEUR E3*
TABLEAU DE CONTACTEUR E5*
KITS DE REPARATION 1 ..... E6*
KITS DE REPARATION 2 ..... E7*

INDEX

INDEX NUMERIQUE G1*

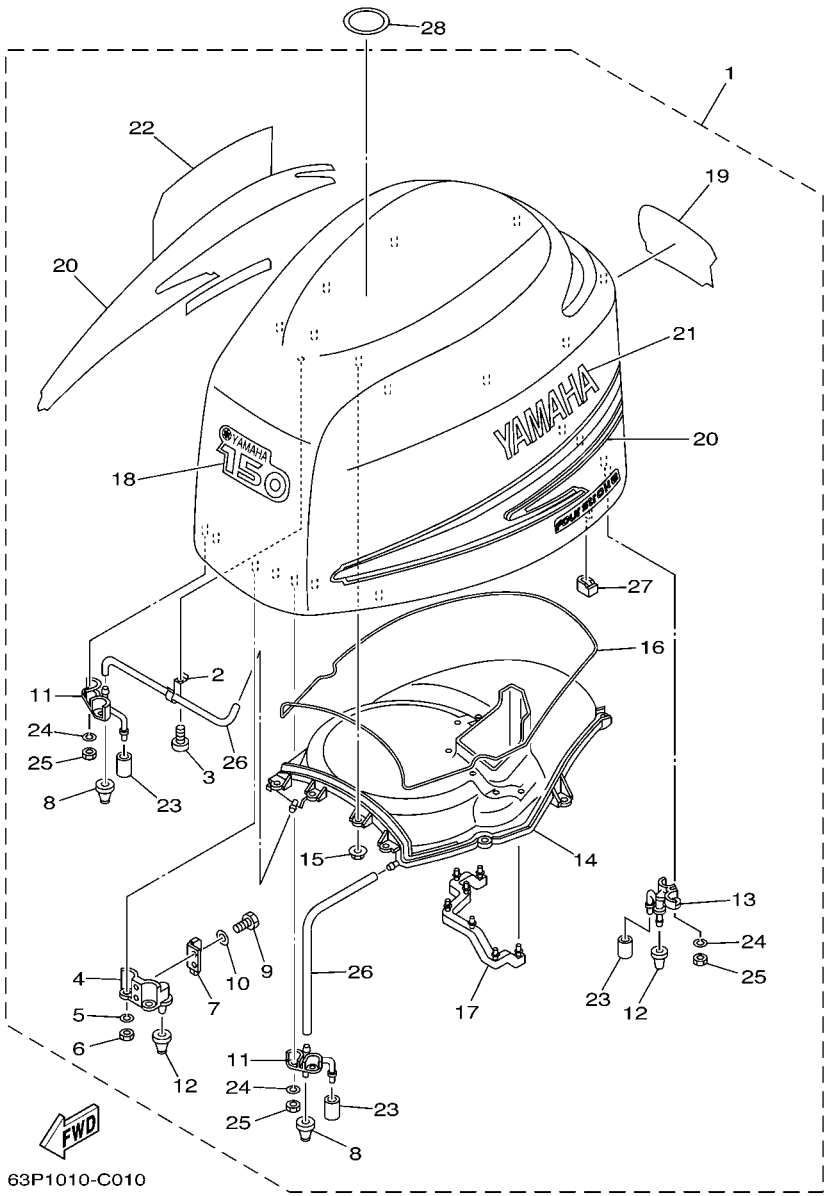

FIG. 1 TOP COWLING — CAPOT SUPERIEUR

REF. NO.	PART NO. N° PIECES	DESCRIPTION DESCRIPTION	63P2	64P2				REMARKS REMARQUES
1	63P–42610–00–8D	TOP COWLING ASSY CAPOT (ENS.)	1	1				
2	90465–10032	.CLAMP .BRIDE	1	1				
3	97780–50620	.SCREW, TAPPING .VIS, TETE BOMBEE	1	1				
4	63P–42647–00–94	.HOLDER, CLAMP BAND .SUPPORT, SANDOW DE SERRAGE	2	2				
5	92990–06100	.WASHER, SPRING .RONDELLE, GROWER	4	4				
6	95380–06600	.NUT, HEXAGON .ECROU	4	4				
7	60V–42651–01	.HOOK .CROCHET	2	2				
8	69J–42663–00	.DAMPER .AMORTISSEUR	2	2				
9	97095–06016	.BOLT .BOULON	4	4				
10	92995–06600	.WASHER .RONDELLE	4	4				
11	63P–42643–00–94	.PLATE, CLAMP .PLAQUE, PRESSE	2	2				
12	68F–42663–00	.DAMPER .AMORTISSEUR	4	4				
13	63P–42644–00–94	.PLATE, CLAMP 2 .PLAQUE, PRESSE 2	2	2				
14	63P–42613–00	.MOLDING, AIR DUCT .MANCHON A AIR	1	1				
15	90179–06M24	.NUT .ECROU	10	10				
16	63P–42629–00	.SEAL .JOINT	1	1				
17	63P–42617–00	.DAMPER, FORM .BOURRELET, CAOUTCHOUC	1	1				
18	63P–42677–00	.GRAPHIC, FRONT .ADHESIF, AVANT	1	1				
19	63P–42678–00	.GRAPHIC, REAR .ADHESIF, ARRIERE	1	1				
20	63P–W0070–00	.GRAPHIC SET .JEU DIEMBLEMES	1	1				
21	63P–42681–00	.MARK, COWLING .ADHESIF, CAPOT	1	1				
22	63P–42682–00	.MARK, COWLING .ADHESIF, CAPOT	1	1				
23	67F–13448–00	.CAP .CAPUCHON	4	4				
24	92990–06100	.WASHER, SPRING .RONDELLE, GROWER	8	8				
25	95380–06600	.NUT, HEXAGON .ECROU	8	8				
26	90445–11020	.HOSE (L400) .DURITE (L400)	2	2				
27	63P–42662–00	.DAMPER .AMORTISSEUR	4	4				

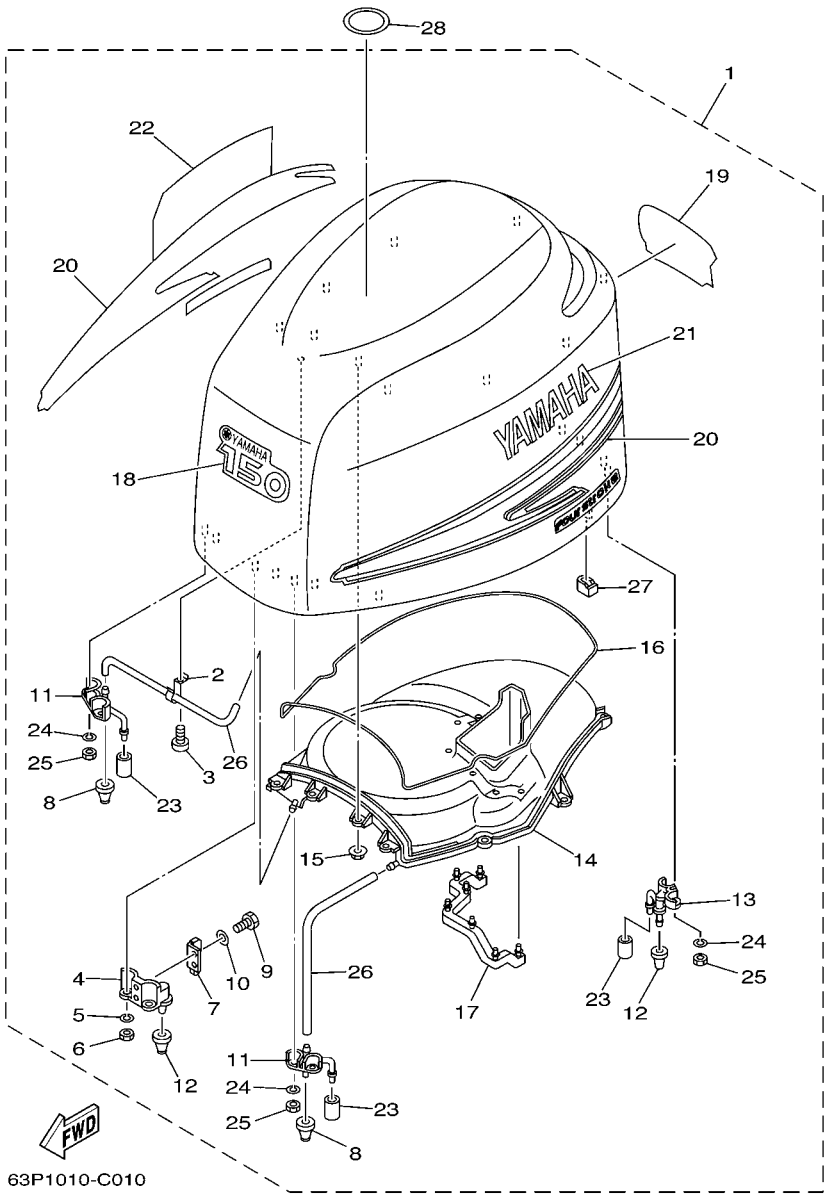

FIG. 1 TOP COWLING — CAPOT SUPERIEUR

REF. NO.	PART NO. N° PIECES	DESCRIPTION DESCRIPTION	63P2	64P2				REMARKS REMARQUES
28	67F–13434–02	LABEL, CAUTION ETIQUETTE, ATTENTION	1	1				

FIG. 2 CYLINDER & CRANKCASE 1 CYLINDRE & CARTER 1

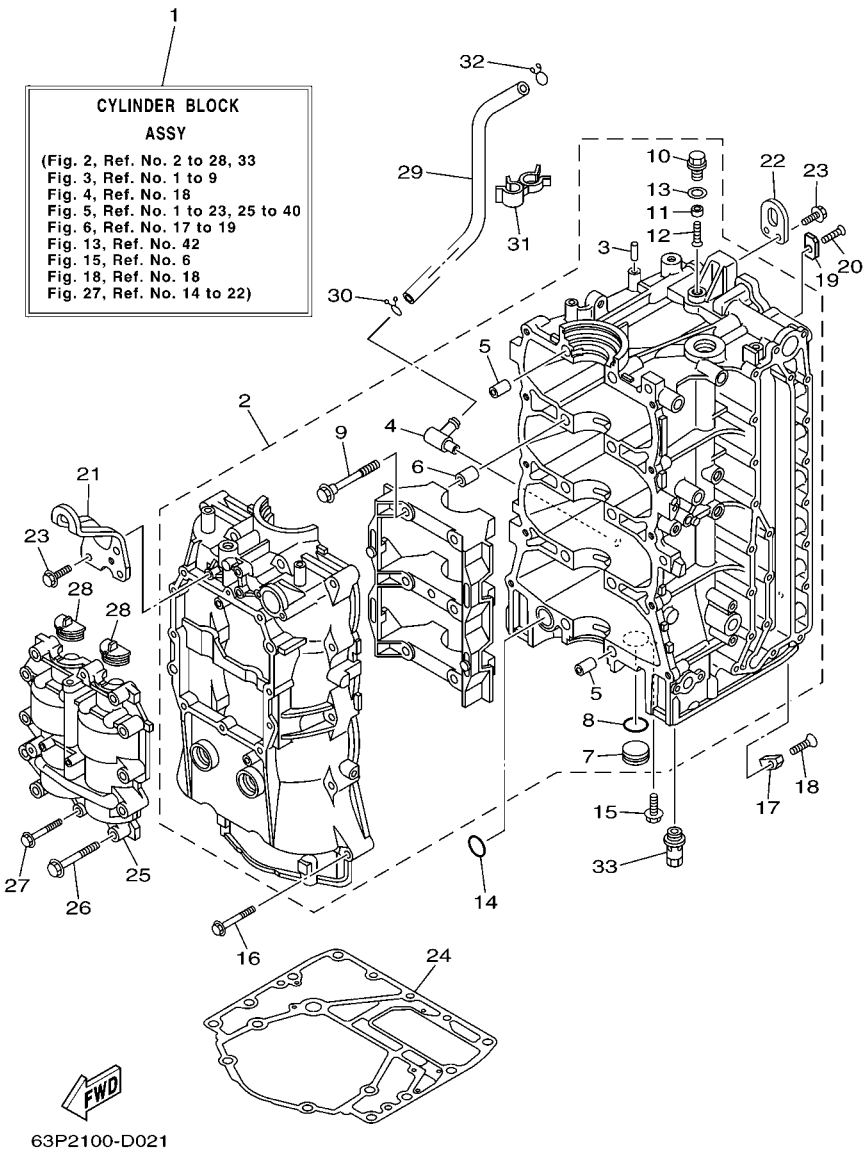

REF. NO.	PART NO. N° PIECES	DESCRIPTION DESCRIPTION	63P2	64P2				REMARKS REMARQUES
1	63P–W009B–00–1S	CYLINDER BLOCK ASSY CYLINDRE GROUPE (ENS.)	1	1				
2	63P–W1510–00–1S	CRANKCASE ASSY CARTER DE MOTEUR COMPLET	1	1				
3	93606–12019	.PIN, DOWEL .GOUPILLE	1	1				
4	63P–11372–00	.NIPPLE, HOSE .RACCORD, TUYAU	1	1				
5	91814–18001	.PIN, DOWEL .GOUJON, D'ASSEMBLAGE	4	4				
6	91814–18001	.PIN, DOWEL .GOUJON, D'ASSEMBLAGE	6	6				
7	90338–25004	.PLUG .PLOT	1	1				
8	93210–25647	.O-RING .JOINT TORIQUE	1	1				
9	90105–10071	.BOLT, FLANGE .BOULON	10	10				
10	63P–11197–00	.PLUG, BLIND .PLOT, BORGNE	1	1				
11	63P–11325–21	.ANODE .ANODE	1	1				
12	98780–05016	.SCREW, FLAT HEAD .VIS A TETE FRAISEE	1	1				
13	90430–14115	.GASKET .JOINT	1	1				
14	93210–25552	O-RING JOINT TORIQUE	1	1				
15	90119–06M81	BOLT, WITH WASHER BOULON, AVEC RONDELLE	1	1				
16	90119–08M66	BOLT, WITH WASHER BOULON, AVEC RONDELLE	10	10				
17	63P–11325–01	ANODE ANODE	1	1				
18	90151–06M02	SCREW, COUNTERSUNK VIS, TETE NOYEE	1	1				
19	63P–11325–11	ANODE ANODE	2	2				
20	90151–06M02	SCREW, COUNTERSUNK VIS, TETE NOYEE	2	2				
21	63P–11119–00	HANGER, ENGINE ANNEAU, LEVAGE	1	1				
22	68F–11119–00	HANGER, ENGINE ANNEAU, LEVAGE	1	1				
23	90119–06MA2	BOLT, WITH WASHER BOULON, AVEC RONDELLE	5	5				
24	63P–11351–00	GASKET, CYLINDER JOINT, D'EMBASE	1	1				
25	63P–11500–00	BALANCER ASSY ARBRE D'EQUILIBRAGE COMPLET	1	1				
26	90119–08M66	BOLT, WITH WASHER BOULON, AVEC RONDELLE	10	10				
27	90119–06MA6	BOLT, WITH WASHER BOULON, AVEC RONDELLE	2	2				

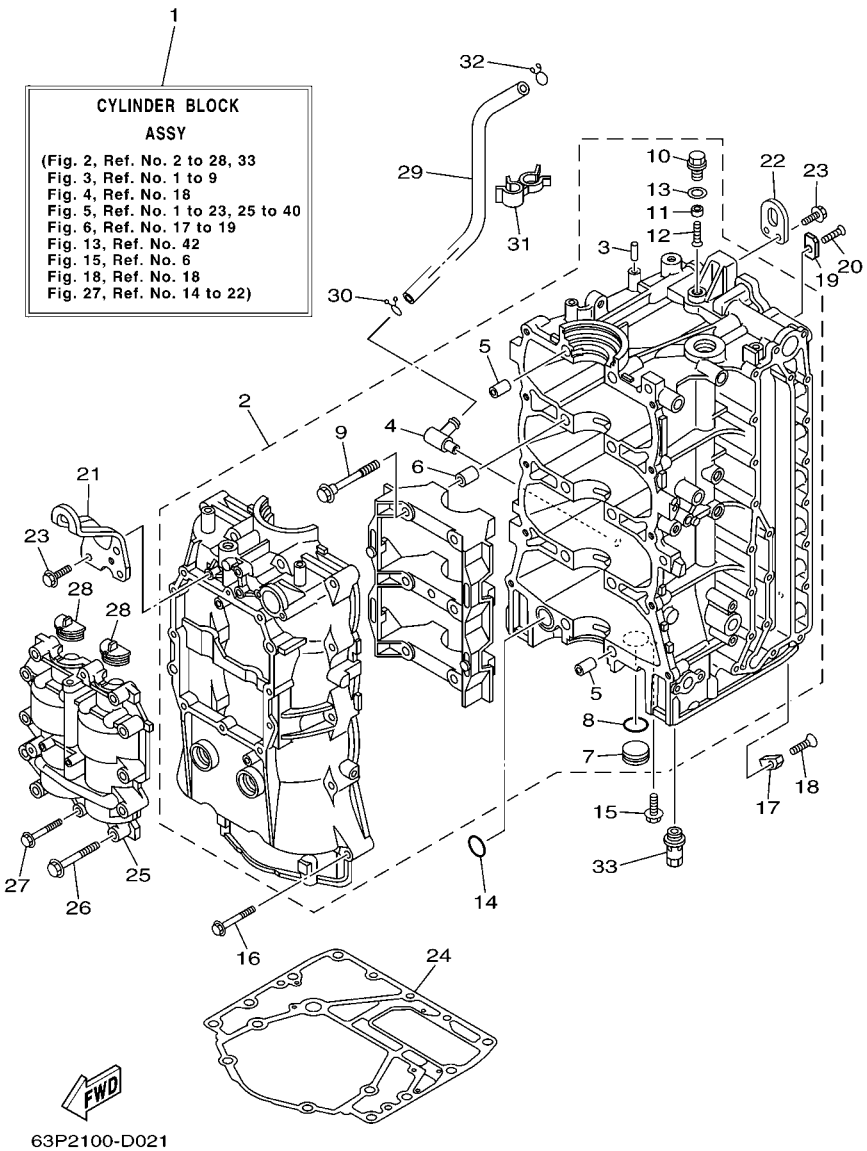

FIG. 2 CYLINDER & CRANKCASE 1 CYLINDRE & CARTER 1

REF. NO.	PART NO. N° PIECES	DESCRIPTION DESCRIPTION	63P2	64P2				REMARKS REMARQUES
28	63P–11512–00	SEAL, CRANK COVER JOINT, COUV DE VILEBREQUIN	2	2				
29	63P–11377–00	HOSE DURITE	1	1				
30	90467–15M14	CLIP JONC	1	1				
31	90464–16013	CLAMP BRIDE	1	1				
32	90467–15M14	CLIP JONC	1	1				
33	63P–13490–00	RELIEF VALVE ASSY SOUPAPE DE SECURITE COMPLET	1	1				

FIG. 3 CRANKSHAFT & PISTON VILEBREQUIN & PISTON

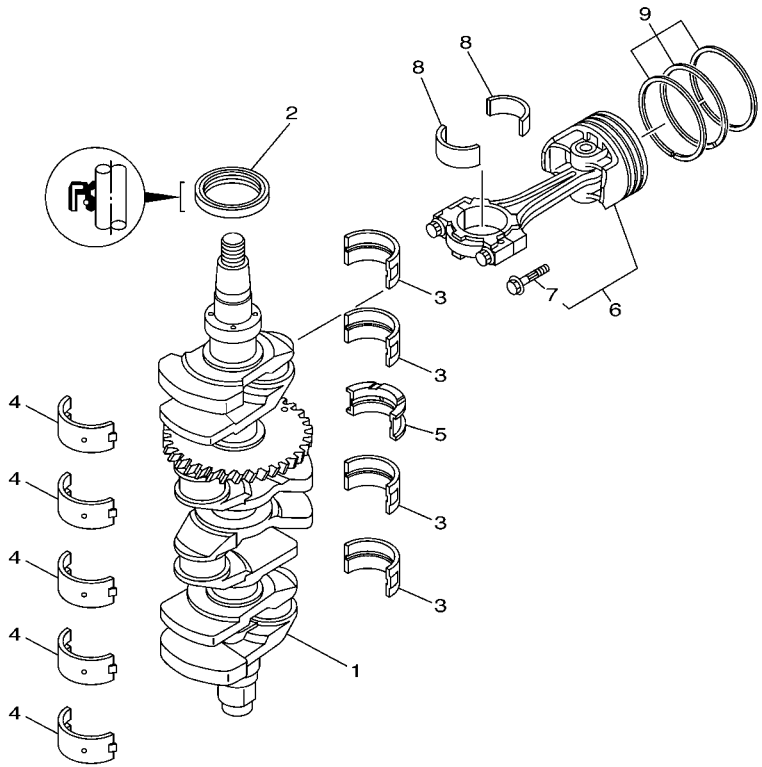

63P1010-C030

REF. NO.	PART NO. N° PIECES	DESCRIPTION DESCRIPTION	63P2	64P2				REMARKS REMARQUES
1	63P–11410–00	CRANKSHAFT VILEBREQUIN COMPLET	1	1				Go to P/N : PE0-OM-120035
2	93102–60004	OIL SEAL JOINT SPY	1	1				
3	63P–11416–00 Go to P/N : PE0-OM-180023	PLANE BEARING, CRANKSHAFT 1 COUSSINET DE VILEBREQUIN 1	4	4				UR GREEN UR GREEN
	63P–11416–10 Go to P/N : PE0-OM-180023	PLANE BEARING, CRANKSHAFT 1 COUSSINET DE VILEBREQUIN 1	4	4				UR RED UR RED
	63P–11416–20 Go to P/N : PE0-OM-180023	PLANE BEARING, CRANKSHAFT 1 COUSSINET DE VILEBREQUIN 1	4	4				UR YELLOW UR YELLOW
4	63P–11417–00 Go to P/N : PE0-OM-180023	PLANE BEARING, CRANKSHAFT 2 COUSSINET DE VILEBREQUIN 2	5	5				UR GREEN UR GREEN
	63P–11417–10 Go to P/N : PE0-OM-180023	PLANE BEARING, CRANKSHAFT 2 COUSSINET DE VILEBREQUIN 2	5	5				UR RED UR RED
	63P–11417–20 Go to P/N : PE0-OM-180023	PLANE BEARING, CRANKSHAFT 2 COUSSINET DE VILEBREQUIN 2	5	5				UR YELLOW UR YELLOW
	63P–11417–30 Go to P/N : PE0-OM-180023	PLANE BEARING, CRANKSHAFT 2 COUSSINET DE VILEBREQUIN 2	5	5				UR BLUE/ GREEN UR BLUE/ GREEN
5	63P–11426–00 Go to P/N : PE0-OM-180023	PLANE BEARING, CRANKSHAFT 1 COUSSINET, VILEBREQUIN 1	1	1				UR GREEN UR GREEN
	63P–11426–10 Go to P/N : PE0-OM-180023	PLANE BEARING, CRANKSHAFT 1 COUSSINET, VILEBREQUIN 1	1	1				UR RED UR RED
	63P–11426–20 Go to P/N : PE0-OM-180023	PLANE BEARING, CRANKSHAFT 1 COUSSINET, VILEBREQUIN 1	1	1				UR YELLOW UR YELLOW
6	63P–W1164–00	PISTON/CONROD ASSY(STD) PISTON/BIELLE COMPLETTE(STD)	4	4				
7	63P–11654–00	.BOLT, CONNECTING ROD .BOULON, BIELLE	2	2				
8	63P–11656–00	PLANE BEARING, CONNECTING ROD ROULEMENT DE BIELLE	8	8				UR GREEN UR GREEN
	63P–11656–10	PLANE BEARING, CONNECTING ROD ROULEMENT DE BIELLE	8	8				UR BLUE UR BLUE
	63P–11656–20	PLANE BEARING, CONNECTING ROD ROULEMENT DE BIELLE	8	8				UR RED UR RED
9	63P–11603–00	PISTON RING SET (STD) JEU DE SEGMENTS (STD)	4	4				

PARTS NEWS

YAMAHA
YAMAHA MOTOR CO., LTD.
2500 SHINGAI IWATA SHIZUOKA JAPAN

News No. PE0-OM-120035(1/2)

Date:2012/06/01

Signature:S. Ishibashi

Cause: ☑ Revision Notice ☐ Correction ☐ Sales Unit Change ☐ Others

Model	F150TR, F150AET (63P*) / LF150TR, FL150AET (64P*)
Subject	PARTS CATALOGUE CORRECTIONS
CATALOGUE NO.	See the"List of Models and CATALOGUE No's below."

Time of YPEC Revision Text, Illustration --> Jun./29/2012 PDF Replace --> Jun./29/2012

(YPEC = Yamaha Parts Electrical Catalogue = Website parts catalogue)

Applicable Engine Serial No.

MODEL NAME	MODEL CODE	Applicable Engine Serial No.
F150, F150A	63P1,2,3,4	63P:1069194-
LF150, FL150A	64P1,2,3,4	64P:1009682-

*1: Interchangeability

A	Old Parts → Old Parts New Parts → New Parts	
B	Old Parts → Old Parts New Parts → New Parts	
C	Old Parts → Old Parts New Parts → New Parts	
○	These parts are interchangeable with a set	

1.LIST CORRECTION

FIG.3 CRANKSHAFT & PISTON

Ref. No.		PART NO.	DESCRIPTION	Q'TY	*Interchangeability	REMARKS
1	OLD	63P-11410-00	CRANKSHAFT	1		***Part number revision**
	NEW	**63P-11410-01**			○	

FIG.6 VALVE

17	OLD	63P-11536-00	GEAR, DRIVE	1		***Part number revision**
	NEW	**63P-11536-01**			○	
19	OLD	90280-04008	KEY, WOODRUFF	1		
	NEW	**93605-17002**	PIN, DOWEL	1	○	

FIG.13, 14, or 15 GENERATOR

6	OLD	63P-81673-00	ROTOR	1		***Part number revision**
	NEW	**63P-81673-01**			○	

SET NO. 99999-03779

***63P-11410-00 is superseded to 99999-03779.**

Parts Manager Check	Service Manager Check	Parts Manager File

YAMAHA MOTOR CO.,LTD
2500 Shingai Iwata Shizuoka 438-8501.Japan
Technical Publication Dept.

YAMAHA GENUINE Parts & Accessories

PARTS NEWS

YAMAHA
YAMAHA MOTOR CO., LTD.
2500 SHINGAI IWATA SHIZUOKA JAPAN

News No. PE0-OM-120035(2/2)

Date:2012/06/01

Signature:S. Ishibashi

Cause: ☑ Revision Notice ☐ Correction ☐ Sales Unit Change ☐ Others

Model	F150TR, F150AET (63P*) / LF150TR, FL150AET (64P*)
Subject	PARTS CATALOGUE CORRECTIONS
CATALOGUE NO.	See the"List of Models and CATALOGUE No's below."

Time of YPEC Revision Text, Illustration --> Jun./29/2012 PDF Replace --> Jun./29/2012

(YPEC = Yamaha Parts Electrical Catalogue = Website parts catalogue)

2.ILLUSTRATION CORRECTION

FIG.6 VALVE

(OLD)

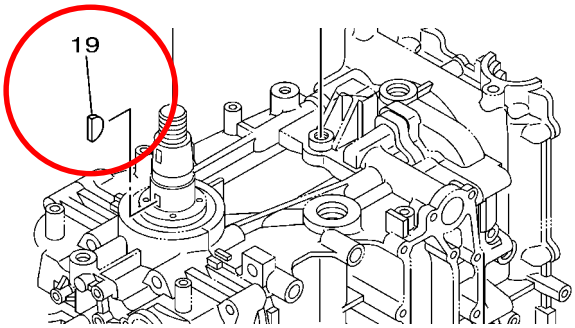

(NEW)

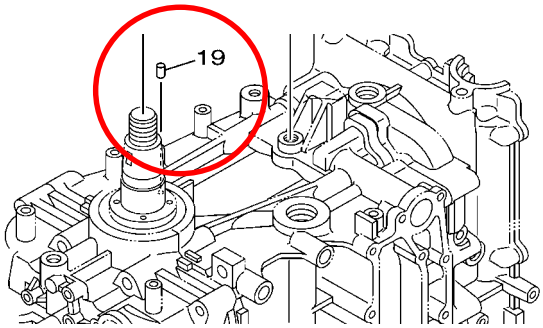

3.LIST of Models and CATALOGUE No's.

The applicable MODELS, MODEL CODES, and CATALOGUE No's are as follows.

MODEL NAME	MODEL CODE	CATALOGUE NO.
F150TRC, F150AET LF150TRC, FL150AET	63P1 64P1	1C63P-100E1
F150AET FL150AET	63P1 64P1	1C63P-300F1
F150TRD, F150AET LF150TRD, FL150AET	63P2 64P2	1D63P-100E2
F150AET FL150AET	63P2 64P2	1D63P-300F2
F150TR, F150AET LF150TR, FL150AET	63P3 64P3	1E63P-100E1
F150AET FL150AET	63P3 64P3	1E63P-300F1
F150TR(F), F150AET LF150TR(F), FL150AET	63P4 64P4	1F63P-100E1
F150AET FL150AET	63P4 64P4	1F63P-300F1

Thank you very much for your cooperation.

Parts Manager Check	Service Manager Check	Parts Manager File

YAMAHA MOTOR CO.,LTD
2500 Shingai Iwata Shizuoka 438-8501.Japan
Technical Publication Dept.

YAMAHA GENUINE Parts & Accessories

PARTS NEWS

YAMAHA
YAMAHA MOTOR CO., LTD.
2500 SHINGAI IWATA SHIZUOKA JAPAN

News No. PE0-OM-180023(1/3)

Date:2018/08/22

Signature:K.Tanaka

Cause : ☐ Revision Notice ☐ Correction ☑ Sales Unit Change ☐ Others

Model	F150A / FL150A (See the"List of Models and CATALOGUE No's below.")
Subject	PARTS CATALOGUE CORRECTIONS
CATALOGUE NO.	See the"List of Models and CATALOGUE No's below."

Time of YPEC Revision Text, Illustration --> Sep./30/2018 PDF Replace --> Sep./30/201

(YPEC = Yamaha Parts Electrical Catalogue = Website parts catalogue)

FIG.3 CRANKSHAFT & PISTON

1. LIST CORRECTION

Ref. No.	OLD P/No.	NEW P/No.	DESCRIPTION	Q'TY	*Interchangeability	REMARKS
*1	63P-11416-0*	63P-11416-31	PLANE BEARING, CRANKSHAFT 1 UR GREEN	4	D	*Part revision
	63P-11416-1*	63P-11416-41	PLANE BEARING, CRANKSHAFT 1 UR RED	4		
	63P-11416-2*	63P-11416-51	PLANE BEARING, CRANKSHAFT 1 UR YELLOW	4		
*2	-	63P-11417-41	PLANE BEARING, CRANKSHAFT 2 UR BROWN	5	D	
	63P-11417-0*	63P-11417-51	PLANE BEARING, CRANKSHAFT 2 UR GREEN	5		
	63P-11417-1*	63P-11417-61	PLANE BEARING, CRANKSHAFT 2 UR RED	5		
	63P-11417-2*	63P-11417-71	PLANE BEARING, CRANKSHAFT 2 UR YELLOW	5		
	~~63P-11417-3*~~	-	~~PLANE BEARING, CRANKSHAFT 2 UR BLUE/GREEN~~	~~5~~		
	-	63P-11417-81	PLANE BEARING, CRANKSHAFT 2 UR BLUE	5		
*3	63P-11426-00	63P-11426-31	BEARING, THRUST 1 UR GREEN	1	D	
	63P-11426-10	63P-11426-41	BEARING, THRUST 1 UR RED	1		
	63P-11426-20	63P-11426-51	BEARING, THRUST 1 UR YELLOW	1		

* These changes are applied from initial production.

Interchangeability

A	Old Parts → New Parts Old Parts → New Parts	B	Old Parts → New Parts Old Parts → New Parts	C	Old Parts → New Parts Old Parts → New Parts	D	Old Parts → New Parts Old Parts → New Parts	○	These parts are interchangeable with a set

Parts Manager Check	Service Manager Check	Parts Manager File

YAMAHA MOTOR CO.,LTD
Spare Parts Section
Parts & ACC. Engineering Div., YMC.

YAMAHA GENUINE Parts & Accessories

PARTS NEWS

YAMAHA
YAMAHA MOTOR CO., LTD.
2500 SHINGAI IWATA SHIZUOKA JAPAN

News No. PE0-OM-180023(2/3)

Date:2018/08/22

Signature:K.Tanaka

Cause : ☐ Revision Notice ☐ Correction ☑ Sales Unit Change ☐ Others

Model	F150A / FL150A (See the"List of Models and CATALOGUE No's below.")
Subject	PARTS CATALOGUE CORRECTIONS
CATALOGUE NO.	See the"List of Models and CATALOGUE No's below."
Time of YPEC Revision	Text, Illustration --> Sep./30/2018 PDF Replace --> Sep./30/201
(YPEC = Yamaha Parts Electrical Catalogue = Website parts catalogue)	

FIG.3 CRANKSHAFT & PISTON

2. ILLUSTRATION CORRECTION

(OLD)

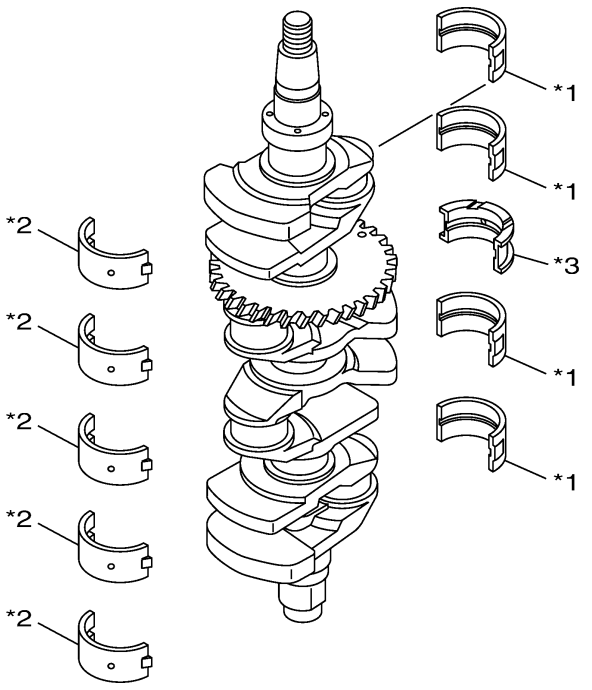

(NEW)

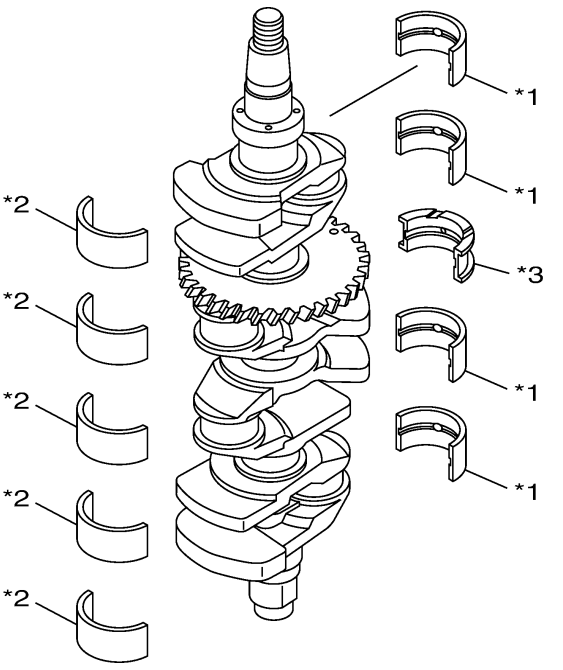

3. LIST of Models and CATALOGUE No's.

The applicable MODELS, MODEL CODES, and CATALOGUE No's are as follows.

MODEL NAME	MODEL CODE	MODEL YEAR	CATALOGUE NO.	Ref.No.		
				*1	*2	*3
F150TRC, F150AET LF150TRC, FL150AET	63P1 64P1	2004	1C63P-100E1	3	4	5
F150AET FL150AET	63P1 64P1	2004	1C63P-300F1	3	4	5
F150TRD, F150AET LF150TRD, FL150AET	63P2 64P2	2005	1D63P-100E2	3	4	5

Parts Manager Check	Service Manager Check	Parts Manager File

YAMAHA MOTOR CO.,LTD
Spare Parts Section
Parts & ACC. Engineering Div., YMC.

YAMAHA GENUINE Parts & Accessories

PARTS NEWS

YAMAHA
YAMAHA MOTOR CO., LTD.
2500 SHINGAI IWATA SHIZUOKA JAPAN

News No. PE0-OM-180023(3/3)

Date:2018/08/22

Signature:K.Tanaka

Cause : ☐ Revision Notice ☐ Correction ☑ Sales Unit Change ☐ Others

Model	F150A / FL150A (See the"List of Models and CATALOGUE No's below.")
Subject	PARTS CATALOGUE CORRECTIONS
CATALOGUE NO.	See the"List of Models and CATALOGUE No's below."

Time of YPEC Revision Text, Illustration --> Sep./30/2018 PDF Replace --> Sep./30/201

(YPEC = Yamaha Parts Electrical Catalogue = Website parts catalogue)

3. LIST of Models and CATALOGUE No's.

The applicable MODELS, MODEL CODES, and CATALOGUE No's are as follows.

MODEL NAME	MODEL CODE	MODEL YEAR	CATALOGUE NO.	Ref.No.		
				*1	*2	*3
F150AET FL150AET	63P2 64P2	2005	1D63P-300F2	3	4	5
F150TR, F150AET LF150TR, FL150AET	63P3 64P3	2006	1E63P-100E1	3	4	5
F150AET FL150AET	63P3 64P3	2006	1E63P-300F1	3	4	5
F150TR(F), F150AET LF150TR(F), FL150AET	63P4 64P4	2007	1F63P-100E1	3	4	5
F150AET FL150AET	63P4 64P4	2007	1F63P-300F1	3	4	5
F150TR(G), F150AET LF150TR(G), FL150AET	63P5 64P5	2008	1G63P-100E1	3	4	5
F150AET FL150AET	63P5 64P5	2008	1G63P-300F1	3	4	5
F150TRH, F150AET LF150TRH, FL150AET	63P6 64P6	2009	1H63P-100E1	4	5	6
F150TR	63P6	2009	1H63P-110E1	4	5	6
LF150TR	64P6	2009	1H64P-110E1	4	5	6
F150AET FL150AET	63P6 64P6	2009	1H63P-300F1	4	5	6
F150, F150AET LF150, FL150AET	63P7 64P7	2010	1J63P-100E1	4	5	6
F150TR	63P7	2010	1J63P-110E1	4	5	6
LF150TR	64P7	2010	1J64P-110E1	4	5	6
F150AET FL150AET	63P7 64P7	2010	1J63P-300F1	4	5	6

Thank you very much for your cooperation.

Parts Manager Check	Service Manager Check	Parts Manager File

YAMAHA MOTOR CO.,LTD
Spare Parts Section
Parts & ACC. Engineering Div., YMC.

YAMAHA GENUINE Parts & Accessories

FIG. 4 CYLINDER & CRANKCASE 2 CYLINDRE & CARTER 2

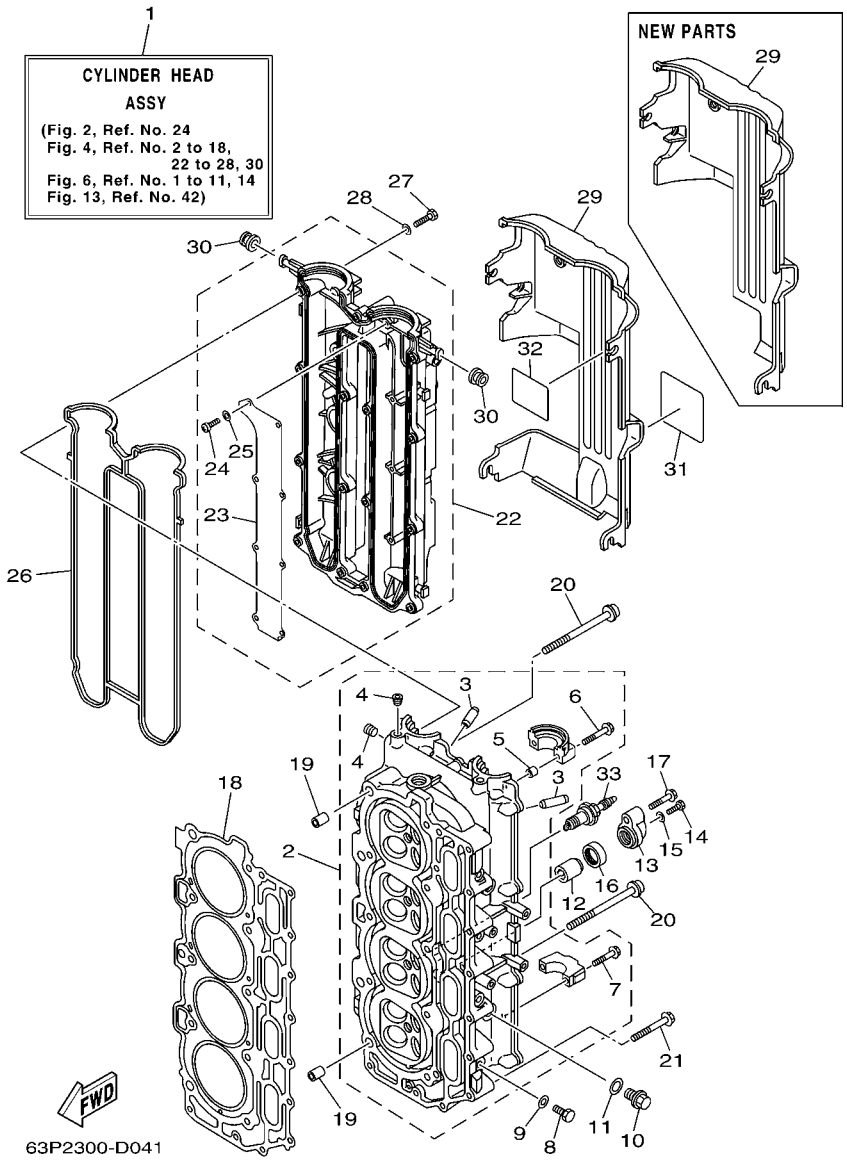

1: NEW PARTS
STARTING SERIAL NO. : 63P-1025889 ~
64P-1003013 ~

REF. NO.	PART NO. N° PIECES	DESCRIPTION DESCRIPTION	63P2	64P2				REMARKS REMARQUES
1	63P–W009A–00–1S	CYLINDER HEAD ASSY CULASSE (ENS.)	1	1				
	63P–W009A–01–1S	CYLINDER HEAD ASSY CULASSE (ENS.)	1	1				NEW PARTS *1 NEW PARTS *1
2	63P–11110–00–94	CYLINDER HEAD ASSY JEU DE CULASSE	1	1				
3	69J–11133–10	.GUIDE, VALVE 1 .GUIDE, SOUPAPE 1	16	16				
4	90344–51019	.PLUG, TAPER SCREW .PLOT, FILETE CONIQUE	3	3				
5	91809–08006	.SLEEVE GUIDE-DOWEL .GOUJON, D'ASSEMBLAGE	4	4				
6	90119–07235	.BOLT/WASHER-CAM CAPS .BOULON, AVEC RONDELLE	4	4				
7	90119–07234	.BOLT, WITH WASHER .BOULON, AVEC RONDELLE	16	16				
8	97095–08014	BOLT BOULON	4	4				
9	90430–08143	GASKET JOINT	4	4				
10	90340–14M06	PLUG, STRAIGHT SCREW PLOT, FILETE DROIT	2	2				
11	90430–14115	GASKET JOINT	2	2				
12	68V–11325–01	ANODE ANODE	2	2				
13	69J–11327–00–94	COVER, ANODE COUVERCLE	2	2				
14	97075–06020	BOLT BOULON	2	2				
15	92995–06600	WASHER RONDELLE	2	2				
16	67F–11328–00	GROMMET, ANODE PASSE-FIL	2	2				
17	97575–08540	BOLT, WITH WASHER VIS HEXAGONAL AVC RONDELLE	2	2				
18	63P–11181–00	GASKET, CYLINDER HEAD 1 JOINT, DE CULASSE 1	1	1				
19	90387–10M08	COLLAR COLLERETTE	2	2				
20	90155–10001	SCREW, FLAT FILLISTER VIS, TETE OVALE PLATE	10	10				
21	90119–08M91	BOLT, WITH WASHER BOULON, AVEC RONDELLE	10	10				
22	63P–11191–00–1S	COVER, CYLINDER HEAD 1 COUVERCLE, CULASSE 1	1	1				
23	63P–11135–00	.PLATE, BREATHER 3 .PLAQUE, RENIFLARD 3	1	1				
24	98507–04008	.SCREW, PAN HEAD .VIS, TETE TRONCONIQUE	8	8				
25	92907–04600	.WASHER .RONDELLE	8	8				
26	63P–11193–00	GASKET, HEAD COVER 1 JOINT, COUVERCLE DE CULASSE 1	1	1				

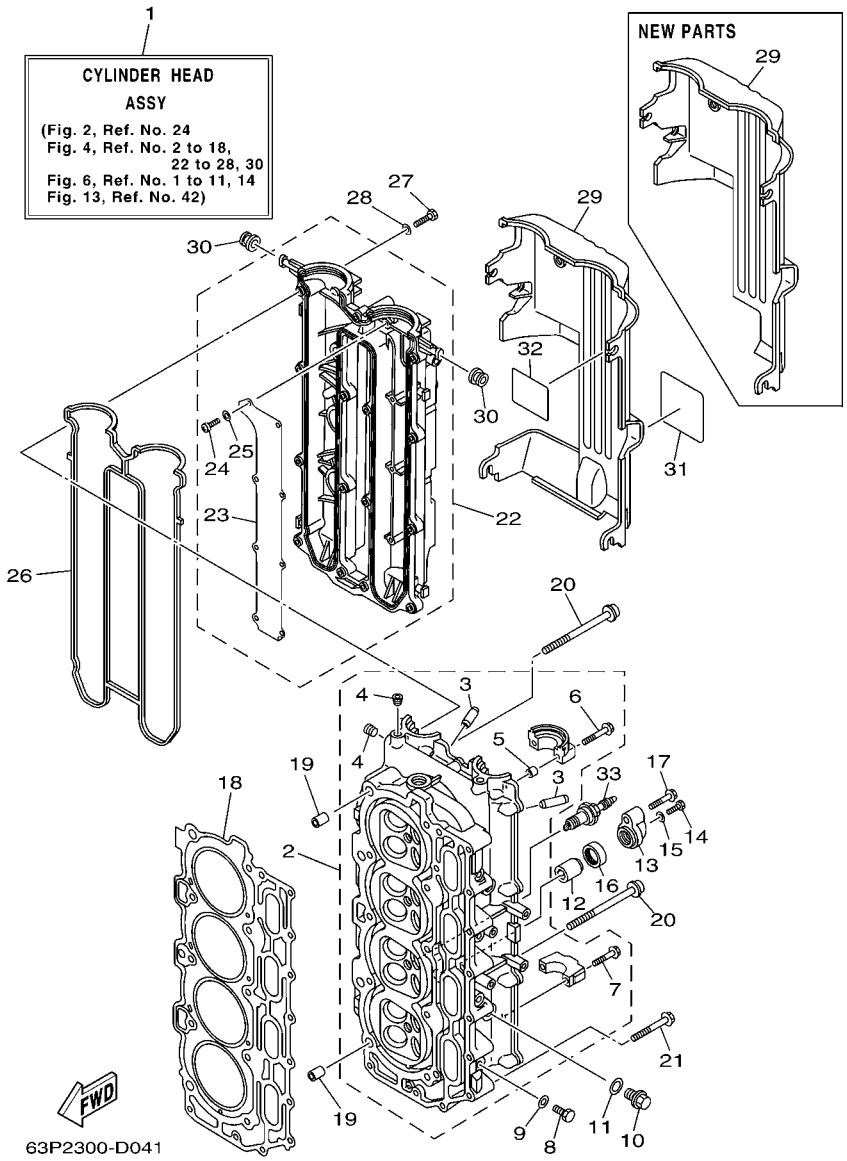

1: NEW PARTS
STARTING SERIAL NO. : 63P-1025889 ~
64P-1003013 ~

FIG. 4 CYLINDER & CRANKCASE 2 CYLINDRE & CARTER 2

REF. NO.	PART NO. N° PIECES	DESCRIPTION DESCRIPTION	63P2	64P2				REMARKS REMARQUES
27	97095–06030	BOLT BOULON	15	15				
	97095–06030	BOLT BOULON	13	13				NEW PARTS *1 NEW PARTS *1
28	92995–06600	WASHER RONDELLE	15	15				
	92995–06600	WASHER RONDELLE	13	13				NEW PARTS *1 NEW PARTS *1
29	63P–11192–00	COVER, CYLINDER HEAD 2 COUVERCLE, CULASSE 2	1	1				
	63P–11192–01	COVER, CYLINDER HEAD 2 COUVERCLE, CULASSE 2	1	1				NEW PARTS *1 NEW PARTS *1
30	90480–12072	GROMMET PASSE-FIL	6	6				
	90480–12072	GROMMET PASSE-FIL	5	5				NEW PARTS *1 NEW PARTS *1
31	63P–83626–00	MARK 6 MARK 6	1	1				
32	67F–12138–60	MARK, CAUTION MAKER	1	1				
33	94702–00391	PLUG, SPARK (NGK LFR5A-11) BOUGIE D'ALLUMAGE(NGK LFR5A-11	4	4				

FIG. 5 CYLINDER & CRANKCASE 3 CYLINDRE & CARTER 3

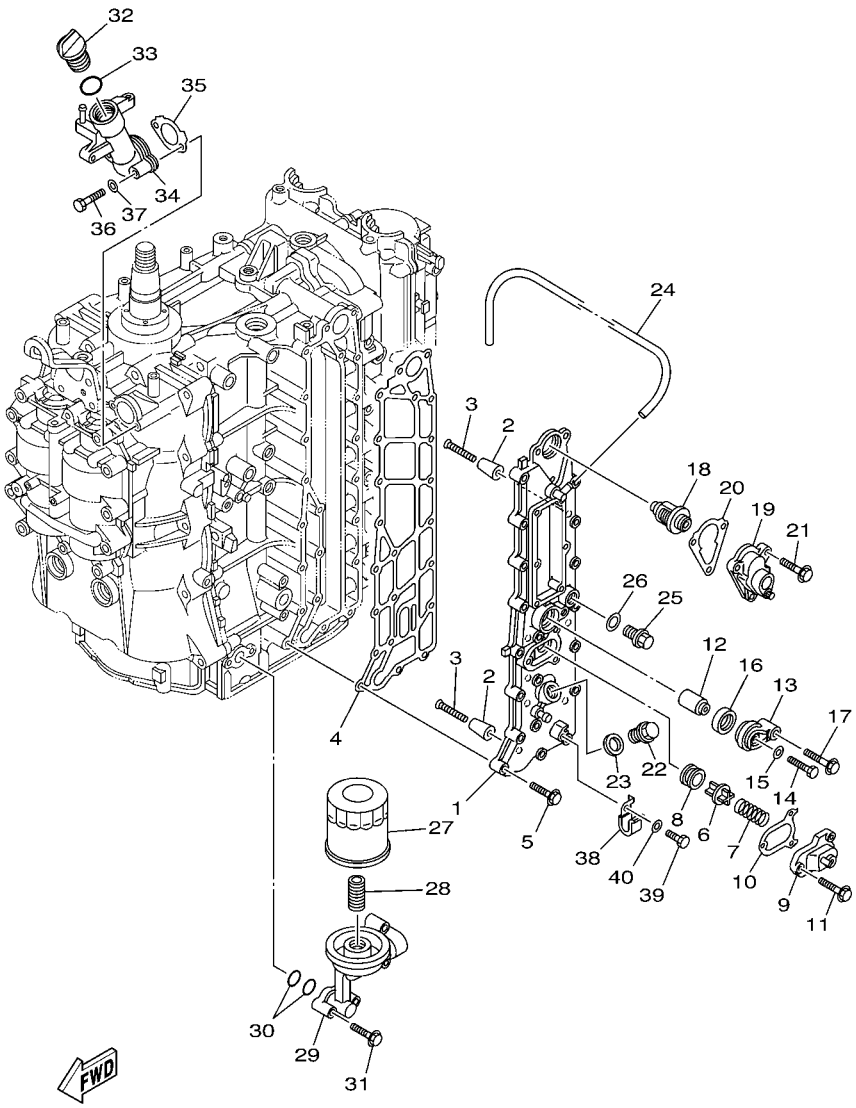

63P2100-D050

REF. NO.	PART NO. N° PIECES	DESCRIPTION DESCRIPTION	63P2	64P2				REMARKS REMARQUES
1	63P–41113–00–1S	OUTER COVER, EXHAUST COUVERCLE, ECHAPPEMENT	1	1				
2	68T–11325–00	ANODE ANODE	7	7				
3	90151–05M05	SCREW, COUNTERSUNK VIS, TETE NOYEE	7	7				
4	63P–41114–A1	GASKET, EXHAUST OUTER COVER JOINT, COUVERCLE D'ECHAPPEMENT	1	1				
5	90119–06MA4	BOLT, WITH WASHER BOULON, AVEC RONDELLE	19	19				
6	6G5–12416–00	VALVE, PRESSURE CONTROL SOUPAPE DE CONTROLEUR PRESS	1	1				
7	90501–16M11	SPRING, COMPRESSION RESSORT, COMPRESSION	1	1				
8	90480–20M05	GROMMET PASSE-FIL	1	1				
9	67F–1246A–00–1S	COVER 1 COUVERCLE 1	1	1				
10	67F–12435–A0	GASKET JOINT	1	1				
11	90119–06MA2	BOLT, WITH WASHER BOULON, AVEC RONDELLE	3	3				
12	68V–11325–01	ANODE ANODE	1	1				
13	69J–11327–00–94	COVER, ANODE COUVERCLE	1	1				
14	97075–06020	BOLT BOULON	1	1				
15	92995–06600	WASHER RONDELLE	1	1				
16	67F–11328–00	GROMMET, ANODE PASSE-FIL	1	1				
17	97575–08540	BOLT, WITH WASHER VIS HEXAGONAL AVC RONDELLE	1	1				
18	67F–12411–01	THERMOSTAT THERMOSTAT	1	1				
19	63P–1240H–00–1S	COVER ASSEMBLY BOITIER DISTRIBUTEUR COMPLET	1	1				
20	63P–12414–00	GASKET, COVER JOINT, COUVERCLE	1	1				
21	90119–06MA4	BOLT, WITH WASHER BOULON, AVEC RONDELLE	3	3				
22	90340–18M09	PLUG, STRAIGHT SCREW PLOT, FILETE DROIT	1	1				
23	90430–18130	GASKET JOINT	1	1				
24	90445–10027	HOSE (L670) DURITE (L670)	1	1				
25	90340–14M06	PLUG, STRAIGHT SCREW PLOT, FILETE DROIT	1	1				
26	90430–14115	GASKET JOINT	1	1				
27	69J–13440–00	ELEMENT ASSY, OIL CLEANER ELEMENT, FILTRE A HUILE	1	1				

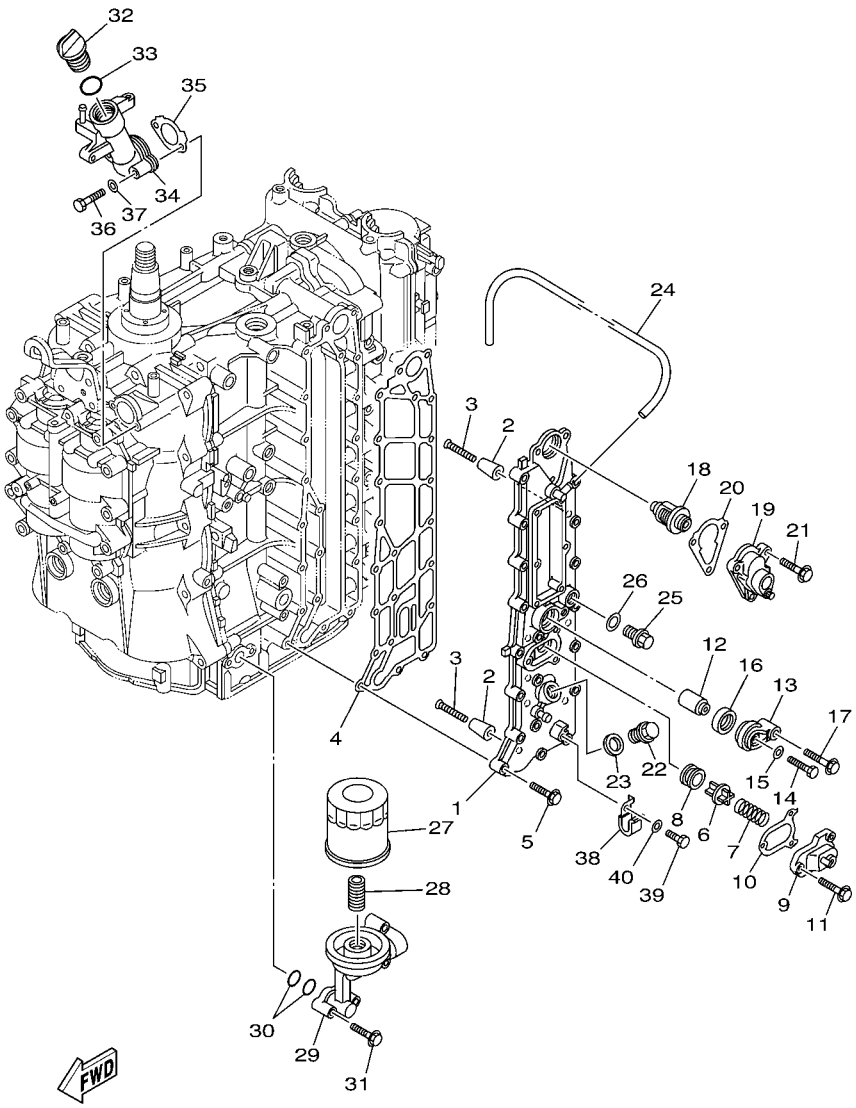

FIG. 5 CYLINDER & CRANKCASE 3 CYLINDRE & CARTER 3

REF. NO.	PART NO. N° PIECES	DESCRIPTION DESCRIPTION	63P2	64P2				REMARKS REMARQUES
28	69J–12858–00	BOLT, UNION BOULON, RACCORD	1	1				
29	63P–13446–00–94	CONNECTOR CONNECTEUR	1	1				
30	93210–19MJ1	O-RING JOINT TORIQUE	2	2				
31	97575–06540	BOLT, WITH WASHER VIS HEXAGONAL AVC RONDELLE	4	4				
32	6G8–15363–00	PLUG, OIL PLOT, HUILE	1	1				
33	93210–24M79	O-RING JOINT TORIQUE	1	1				
34	63P–15319–00–1S	JOINT JOINT	1	1				
35	63P–15364–A0	GASKET, OIL PLUG JOINT, PLOT D'HUILE	1	1				
36	97095–06045	BOLT BOULON	2	2				
37	92995–06600	WASHER RONDELLE	2	2				
38	90465–08M99	CLAMP BRIDE	1	1				
39	97095–06012	BOLT BOULON	1	1				
40	92995–06600	WASHER RONDELLE	1	1				

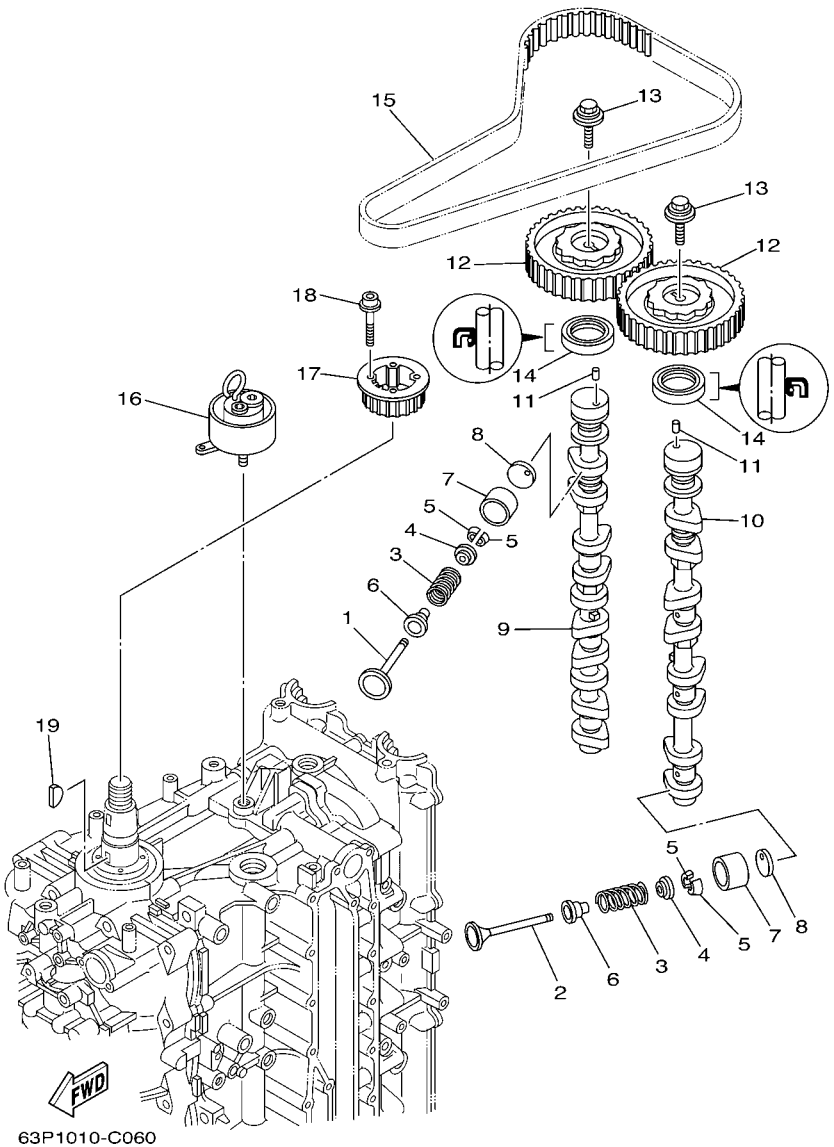

FIG. 6 VALVE SOUPAPE

REF. NO.	PART NO. N° PIECES	DESCRIPTION DESCRIPTION	63P2	64P2				REMARKS REMARQUES
1	69J–12111–00	VALVE, INTAKE SOUPAPE, ADMISSION	8	8				
2	69J–12121–00	VALVE, EXHAUST SOUPAPE, ECHAPPEMENT	8	8				
3	69J–12113–01	SPRING, VALVE INNER RESSORT DE SOUPAPE, INTERNE	16	16				
4	69J–12117–01	RETAINER, VALVE SPRING BUTEE DE RESSORT DE SOUPAPE	16	16				
5	69J–12118–00	COTTER, VALVE FRAISE, SOUPAPE	32	32				
6	69J–12119–00	SEAL, VALVE STEM JOINT, QUEUE DE SOUPAPE	16	16				
7	69J–12153–00	LIFTER, VALVE LEVE-SOUPAPE	16	16				
8	69J–12168–00	PAD, ADJUSTING (2.320) PASTILLE, DE REGLAGE (2.320)	16	16				UR UR
	69J–12168–10	PAD, ADJUSTING (2.340) PASTILLE, DE REGLAGE (2.340)	16	16				UR UR
	69J–12168–20	PAD, ADJUSTING (2.360) PASTILLE, DE REGLAGE (2.360)	16	16				UR UR
	69J–12168–30	PAD, ADJUSTING (2.380) PASTILLE, DE REGLAGE (2.380)	16	16				UR UR
	69J–12168–40	PAD, ADJUSTING (2.400) PASTILLE, DE REGLAGE (2.400)	16	16				UR UR
	69J–12168–50	PAD, ADJUSTING (2.420) PASTILLE, DE REGLAGE (2.420)	16	16				UR UR
	69J–12168–60	PAD, ADJUSTING (2.440) PASTILLE, DE REGLAGE (2.440)	16	16				UR UR
	69J–12168–70	PAD, ADJUSTING (2.460) PASTILLE, DE REGLAGE (2.460)	16	16				UR UR
	69J–12168–80	PAD, ADJUSTING (2.480) PASTILLE, DE REGLAGE (2.480)	16	16				UR UR
	69J–12168–90	PAD, ADJUSTING (2.500) PASTILLE, DE REGLAGE (2.500)	16	16				UR UR
	69J–12168–A0	PAD, ADJUSTING (2.520) PASTILLE, DE REGLAGE (2.520)	16	16				UR UR
	69J–12168–B0	PAD, ADJUSTING (2.540) PASTILLE, DE REGLAGE (2.540)	16	16				UR UR
	69J–12168–C0	PAD, ADJUSTING (2.560) PASTILLE, DE REGLAGE (2.560)	16	16				UR UR
	69J–12168–D0	PAD, ADJUSTING (2.580) PASTILLE, DE REGLAGE (2.580)	16	16				UR UR
	69J–12168–E0	PAD, ADJUSTING (2.600) PASTILLE, DE REGLAGE (2.600)	16	16				UR UR
	69J–12168–F0	PAD, ADJUSTING (2.620) PASTILLE, DE REGLAGE (2.620)	16	16				UR UR
	69J–12168–G0	PAD, ADJUSTING (2.640) PASTILLE, DE REGLAGE (2.640)	16	16				UR UR
	69J–12168–H0	PAD, ADJUSTING (2.660) PASTILLE, DE REGLAGE (2.660)	16	16				UR UR
	69J–12168–J0	PAD, ADJUSTING (2.680) PASTILLE, DE REGLAGE (2.680)	16	16				UR UR
	69J–12168–K0	PAD, ADJUSTING (2.700) PASTILLE, DE REGLAGE (2.700)	16	16				UR UR

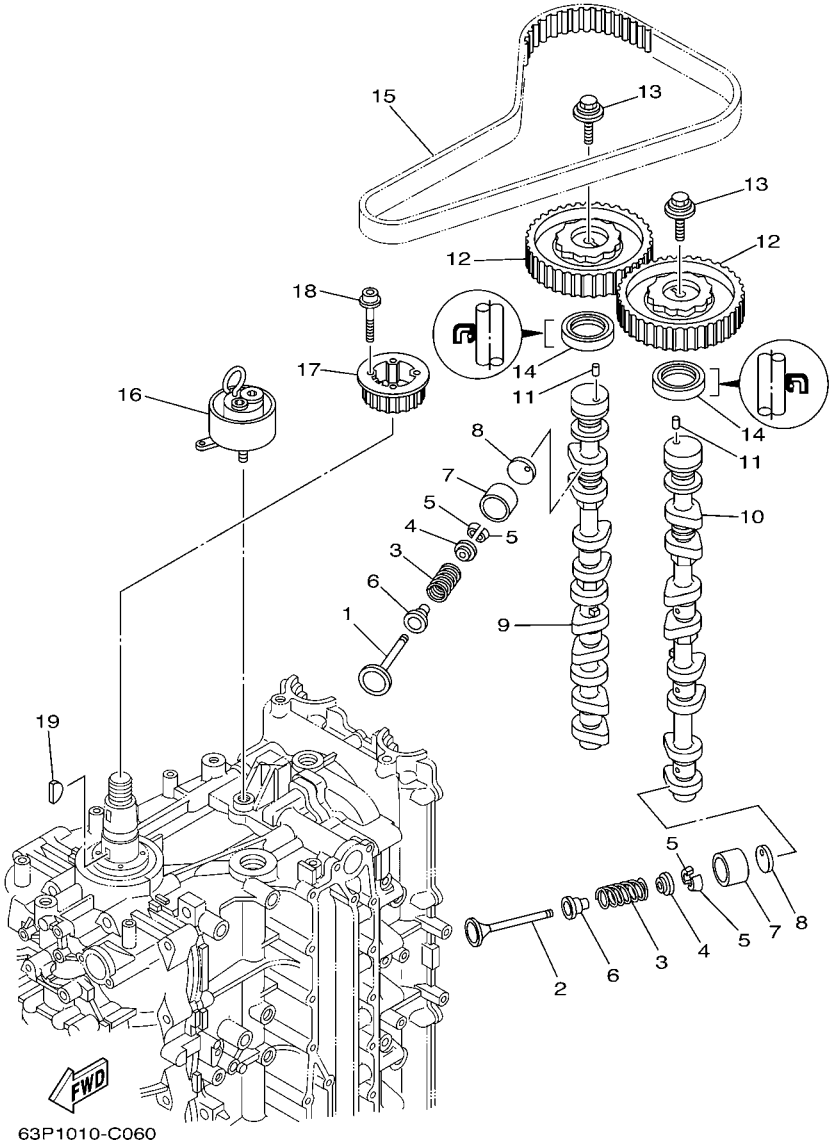

FIG. 6 VALVE SOUPAPE

REF. NO.	PART NO. N° PIECES	DESCRIPTION DESCRIPTION	63P2	64P2				REMARKS REMARQUES
8	69J–12168–L0	PAD, ADJUSTING (2.720) PASTILLE, DE REGLAGE (2.720)	16	16				UR UR
	69J–12168–M0	PAD, ADJUSTING (2.740) PASTILLE, DE REGLAGE (2.740)	16	16				UR UR
	69J–12168–N0	PAD, ADJUSTING (2.760) PASTILLE, DE REGLAGE (2.760)	16	16				UR UR
	69J–12168–P0	PAD, ADJUSTING (2.780) PASTILLE, DE REGLAGE (2.780)	16	16				UR UR
	69J–12168–R0	PAD, ADJUSTING (2.800) PASTILLE, DE REGLAGE (2.800)	16	16				UR UR
	69J–12168–S0	PAD, ADJUSTING (2.820) PASTILLE, DE REGLAGE (2.820)	16	16				UR UR
	69J–12168–T0	PAD, ADJUSTING (2.840) PASTILLE, DE REGLAGE (2.840)	16	16				UR UR
	69J–12168–U0	PAD, ADJUSTING (2.860) PASTILLE, DE REGLAGE (2.860)	16	16				UR UR
	69J–12168–V0	PAD, ADJUSTING (2.880) PASTILLE, DE REGLAGE (2.880)	16	16				UR UR
	69J–12168–W0	PAD, ADJUSTING (2.900) PASTILLE, DE REGLAGE (2.900)	16	16				UR UR
	69J–12168–X0	PAD, ADJUSTING (2.920) PASTILLE, DE REGLAGE (2.920)	16	16				UR UR
	69J–12168–Y0	PAD, ADJUSTING (2.940) PASTILLE, DE REGLAGE (2.940)	16	16				UR UR
	69J–12169–00	PAD, ADJUSTING (2.960) PASTILLE, DE REGLAGE (2.960)	16	16				UR UR
9	63P–12171–00	CAMSHAFT 1 ARBRE A CAMES 1	1	1				
10	63P–12181–00	CAMSHAFT 2 ARBRE A CAMES 2	1	1				
11	93605–10108	PIN, DOWEL AXE	2	2				
12	63P–11537–00	GEAR, DRIVEN PIGNON SECONDAIRE	2	2				
13	90119–10M06	BOLT, WITH WASHER BOULON, AVEC RONDELLE	2	2				
14	93102–38M59	OIL SEAL JOINT SPY	2	2				
15	63P–46241–00	V-BELT COURROIE TRAPEZOIDALE	1	1				
16	63P–11590–00	TENSIONER ASSY TENDEUR (ENS.)	1	1				
17	63P–11536–00	GEAR, DRIVE ENGRENAGE, MENANT	1	1				Go to P/N : PE0-OM-120035
18	90110–05020	BOLT, HEXAGON SOCKET HEAD BOULON, TETE HEXAGONALE CREUSE	4	4				
19	90280–04008	KEY, WOODRUFF CLAVETTE, DEMI-LUNE	1	1				Go to P/N : PE0-OM-120035

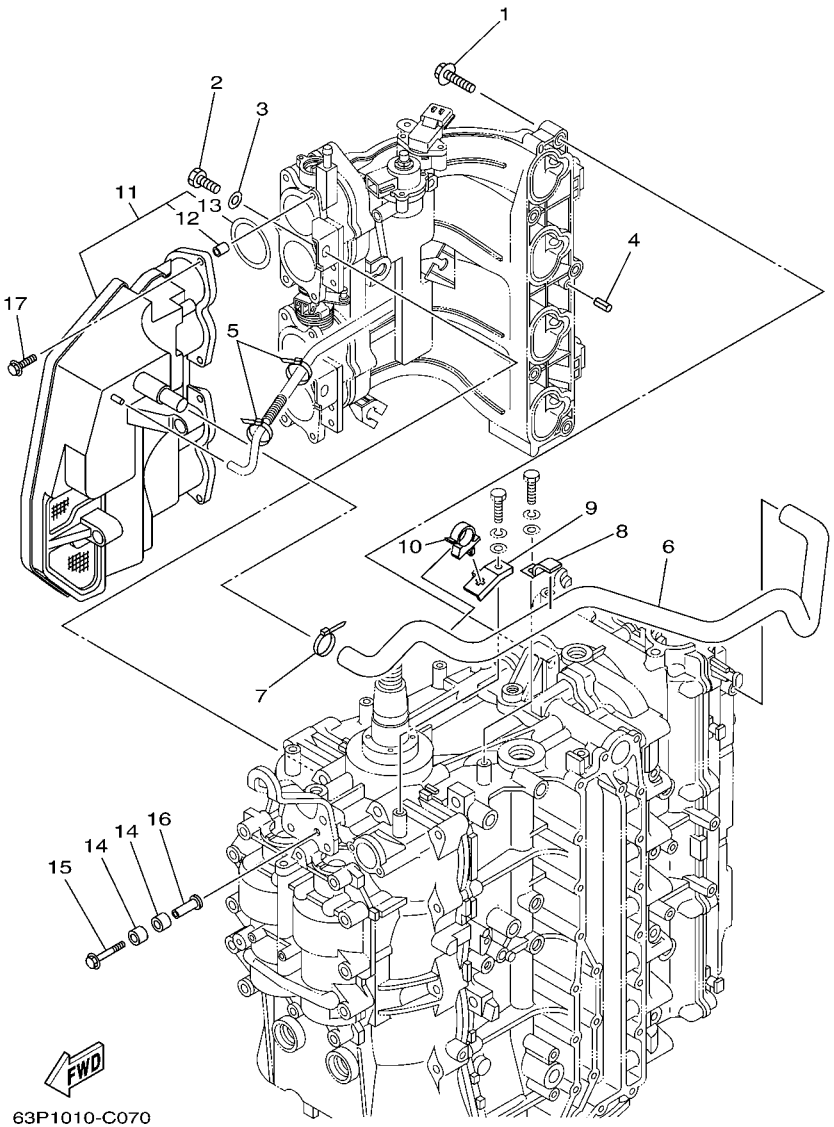

FIG. 7 INTAKE 1 — ADMISSION 1

REF. NO.	PART NO. N° PIECES	DESCRIPTION DESCRIPTION	63P2	64P2				REMARKS REMARQUES
1	97575–08540	BOLT, WITH WASHER VIS HEXAGONAL AVC RONDELLE	5	5				
2	97013–08020	BOLT BOULON	2	2				
3	92903–08600	WASHER, PLATE RONDELLE, PLATE	2	2				
4	91690–50014	PIN, SPRING AGRAFFE	2	2				
5	90465–11M59	CLAMP BRIDE	2	2				OLD PARTS OLD PARTS
6	63P–15373–00	PIPE, BREATHER DURITE DE RENIFLARD	1	1				
7	90465–11M59	CLAMP BRIDE	1	1				
8	90462–10023	CLAMP BRIDE	1	1				
9	63P–15378–00	HOLDER SUPPORT	1	1				
10	90464–20006	CLAMP BRIDE	1	1				
11	63P–14440–00	SILENCER ASSY, INTAKE SIENCIEUX D'ADMISSION	1	1				
12	63P–14449–00	.COLLAR .COLLERETTE	6	6				
13	63P–14457–00	.SEAL .JOINT	4	4				
14	90386–08001	BUSH DOUILLE	4	4				
15	90119–06076	BOLT, WITH WASHER BOULON, AVEC RONDELLE	2	2				
16	90387–06038	COLLAR COLLERETTE	2	2				
17	90119–06M82	BOLT, WITH WASHER BOULON, AVEC RONDELLE	6	6				

FIG. 8 INTAKE 2 — ADMISSION 2

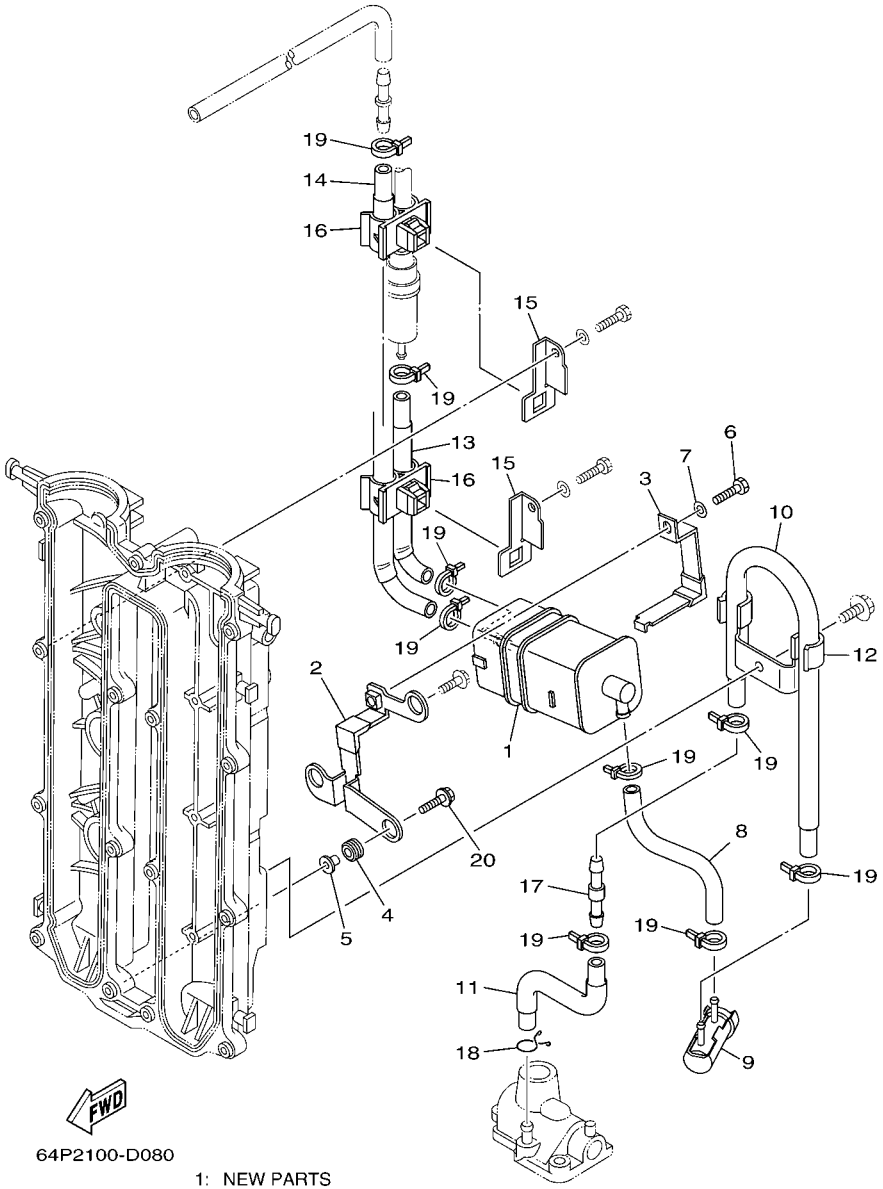

1: NEW PARTS
STARTING SERIAL NO. : 63P-1025889 ~
64P-1003013 ~

REF. NO.	PART NO. N° PIECES	DESCRIPTION DESCRIPTION	63P2	64P2				REMARKS REMARQUES
1	6P2–24170–00	CANISTER ASSY BANDE, RASERVOIR A ESSENCE	1	1				NEW PARTS *1 NEW PARTS *1
2	63P–2134X–00	BRACKET, CANISTER SUPPORT	1	1				NEW PARTS *1 NEW PARTS *1
3	63P–2419A–00	HOLDER SUPPORT	1	1				NEW PARTS *1 NEW PARTS *1
4	90480–10M23	GROMMET PASSE-FIL	3	3				NEW PARTS *1 NEW PARTS *1
5	90387–06M60	COLLAR COLLERETTE	3	3				NEW PARTS *1 NEW PARTS *1
6	97095–06016	BOLT BOULON	1	1				NEW PARTS *1 NEW PARTS *1
7	92995–06600	WASHER RONDELLE	1	1				NEW PARTS *1 NEW PARTS *1
8	64P–24313–00	PIPE 3 DURITE 3	1	1				NEW PARTS *1 NEW PARTS *1
9	69J–24502–00	FILTER, FUEL FILTRE	1	1				NEW PARTS *1 NEW PARTS *1
10	64P–24312–00	PIPE 2 DURITE 2	1	1				NEW PARTS *1 NEW PARTS *1
11	64P–24311–00	PIPE, FUEL 1 DURITE A ESSENCE	1	1				NEW PARTS *1 NEW PARTS *1
12	63P–24367–00	CLAMP, FUEL PIPE 2 COLLIER DE DURITE A ESSENCE	1	1				NEW PARTS *1 NEW PARTS *1
13	64P–24315–00	PIPE 5 DURITE 5	1	1				NEW PARTS *1 NEW PARTS *1
14	64P–24314–00	PIPE 4 DURITE 4	1	1				NEW PARTS *1 NEW PARTS *1
15	63P–24364–00	STAY SUPPORT	2	2				NEW PARTS *1 NEW PARTS *1
16	90464–11012	CLAMP BRIDE	2	2				NEW PARTS *1 NEW PARTS *1
17	6E5–24379–00	PIPE, JOINT 4 DURITE RACCORDEMENT 4	1	1				NEW PARTS *1 NEW PARTS *1
18	90467–09M09	CLIP JONC	1	1				NEW PARTS *1 NEW PARTS *1
19	90465–11M10	CLAMP BRIDE	9	9				NEW PARTS *1 NEW PARTS *1
20	90119–06135	BOLT, WITH WASHER BOULON, AVEC RONDELLE	2	2				NEW PARTS *1 NEW PARTS *1

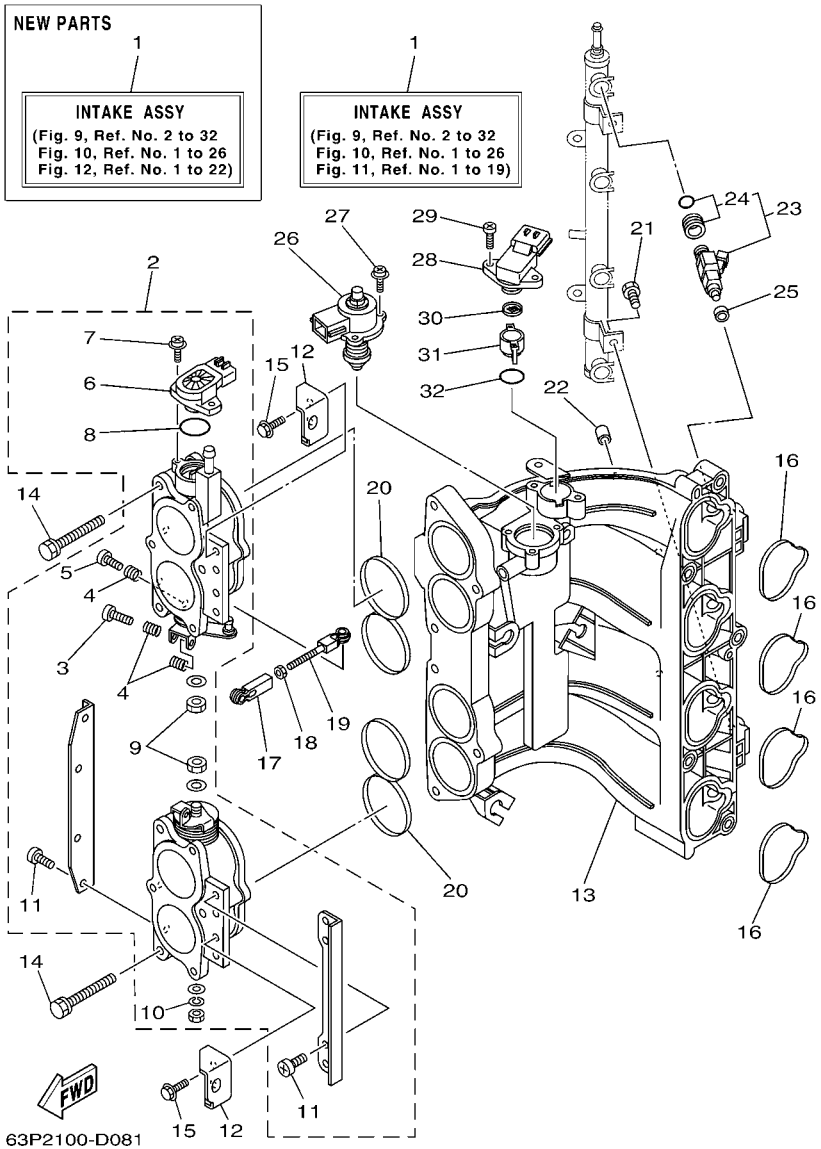

1: NEW PARTS
STARTING SERIAL NO. : 63P-1025889 ~
64P-1003013 ~

FIG. 9 INTAKE 3 — ADMISSION 3

REF. NO.	PART NO. N° PIECES	DESCRIPTION DESCRIPTION	63P2	64P2				REMARKS REMARQUES
1	63P–14200–00	INTAKE ASSY ADMISSION (ENS.)	1	1				
	63P–14200–20	INTAKE ASSY ADMISSION (ENS.)	1	1				NEW PARTS *1 NEW PARTS *1
2	63P–13751–00	BODY, THROTTLE 1 CARTER 1	1	1				
	63P–13751–01	BODY, THROTTLE 1 CARTER 1	1	1				NEW PARTS *1 NEW PARTS *1
3	69J–14321–00	.SCREW, THROTTLE .VIS, ACCELERATEUR	1	1				
4	68V–14331–00	.SPRING, THROTTLE VALVE .RESSORT, BOISSEAU	3	3				
5	68V–14323–00	.SCREW, AIR ADJUSTING .VIS DE DOSEUR D'AIR	1	1				
6	69J–85885–00	THROTTLE SENSOR ASSY SENSITOMETRE (ENS.)	1	1				
	6S1–85885–00	.THROTTLE SENSOR ASSY .SENSITOMETRE (ENS.)	1	1				NEW PARTS *1 NEW PARTS *1
7	68V–81145–01	.SCREW 1 .VIS 1	2	2				
8	68V–8182L–00	.O-RING 1 .JOINT TORIQUE 1	1	1				
9	3CF–14594–00	.NUT .ECROU	2	2				
10	68V–14356–00	.WASHER, SPRING .RONDELLE	1	1				
11	68V–14565–00	.SCREW .VIS	8	8				
12	63P–14291–00	BRACKET 1 SUPPORT 1	2	2				
13	63P–13641–00	MANIFOLD 1 TUBULURE 1	1	1				
14	63P–14496–00	BOLT BOULON	6	6				
15	97595–06516	BOLT, WITH WASHER VIS HEXAGONAL AVC RONDELLE	4	4				
16	63P–13645–00	GASKET, MANIFOLD 1 JOINT, TUBULURE 1	4	4				
17	6H4–41237–00	JOINT, LINK RACCORD	1	1				
18	95380–05700	NUT ECROU	1	1				
19	682–41238–01	JOINT, LINK RACCORD	1	1				
20	63P–13557–00	GASKET JOINT	2	2				
21	63P–14446–00	BOLT BOULON	2	2				
22	63P–13643–00	COVER, MANIFOLD COUVERCLE, TUBULURE	4	4				
23	63P–13761–00	INJECTOR ASSY INJECTEUR	4	4				
24	68V–1410B–00	.PACKING KIT .POCHETTE DE JOINTS	1	1				

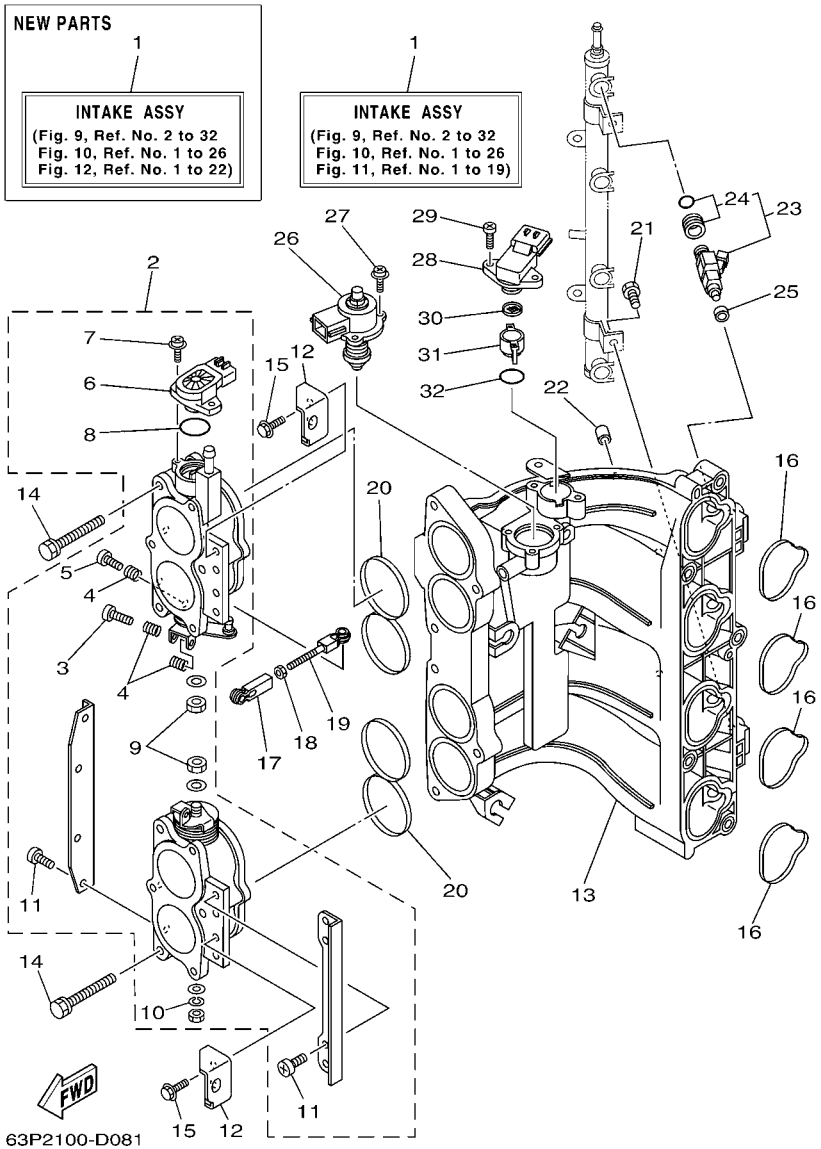

1: NEW PARTS
STARTING SERIAL NO. : 63P-1025889 ~
64P-1003013 ~

FIG. 9 INTAKE 3 — ADMISSION 3

REF. NO.	PART NO. N° PIECES	DESCRIPTION DESCRIPTION	63P2	64P2				REMARKS REMARQUES
25	68V–13766–00	RUBBER, INJECTOR RONDELLE CAOUTCHOUC	4	4				
26	63P–1312A–00	VALVE, CONTROL EMBLEME, YAMAHA	1	1				
27	68V–81146–01	SCREW 2 VIS 2	3	3				
28	63P–82380–00	SENSOR, PRESSURE SONDE DE PRESSION	1	1				
29	68V–81147–00	SCREW 3 VIS 3	2	2				
30	63P–13905–00	FILTER COMP. ENS FILTRE	1	1				
31	63P–13898–00	HOLDER SUPPORT	1	1				
32	63P–13769–00	O-RING JOINT TORIQUE	1	1				

FIG. 10 FUEL INJECTION PUMP 1 POMPE A INJECTEUR 1

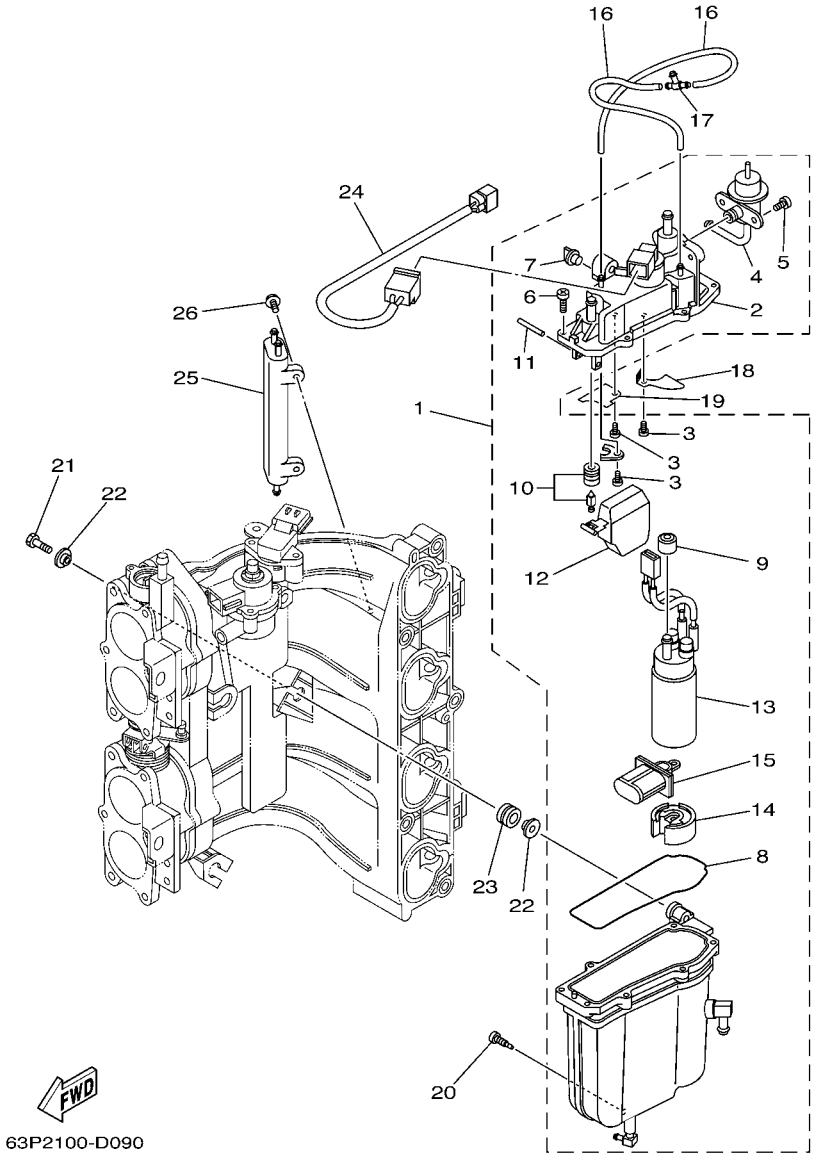

REF. NO.	PART NO. N° PIECES	DESCRIPTION DESCRIPTION	63P2	64P2				REMARKS REMARQUES
1	63P–14180–00	FLOAT CHAMBER ASSY CUVE DE FLOTTEUR	1	1				
2	63P–14182–00	.COVER, FLOAT CHAMBER .COUVERCLE, CUVE DE FLOTTEUR	1	1				
3	4SV–24453–00	.SCREW .VIS	3	3				
4	63P–13906–00	.REGULATOR, PRESSURE .REGULATEUR DE PRESSION	1	1				
5	63P–14565–00	.SCREW .VIS	2	2				
6	63P–14567–00	.SCREW .VIS	7	7				
7	69J–14225–00	.CAP .COUVERCLE	1	1				
8	63P–14984–00	.GASKET, FLOAT CHAMBER .JOINT, CUVE DE FLOTTEUR	1	1				
9	68V–13781–10	.DAMPER, PUMP .AMORTISSEUR, POMPE	1	1				
10	63P–14546–00	.VALVE, NEEDLE .POINTEAU	1	1				
11	68V–14386–00	.PIN, FLOAT .AXE, FLOTTEUR	1	1				
12	63P–14985–00	.FLOAT .FLOTTEUR	1	1				
13	63P–13907–01	.FUEL PUMP COMP. .POMPE A CARBURANT COMP.	1	1				
14	63P–13784–00	.COVER, PUMP .COUVERCLE, POMPE	1	1				
15	63P–13915–00	.FILTER .FILTRE	1	1				
16	63P–14148–00	PIPE DURITE	2	2				
17	69J–24379–00	PIPE, JOINT 4 DURITE RACCORDEMENT 4	1	1				
18	63P–2411R–00	PLATE 1 PLAQUE 1	1	1				
19	63P–2411T–00	PLATE 2 PLAQUE 2	1	1				
20	63P–14191–00	PLUG, DRAIN PLOT, VIDANGE	1	1				
21	63P–14777–00	BOLT BOULON	3	3				
22	69J–13716–00	COLLAR COLLERETTE	6	6				
23	69J–13593–00	DAMPER AMORTISSEUR	3	3				
24	63P–8259L–00	WIRE HARNESS ASSY 1 FAISCEAU DE FILS COMPLET 1	1	1				
25	63P–21841–00	COOLER RADIATEUR	1	1				
26	68V–14446–00	BOLT BOULON	2	2				

FIG. 11 FUEL INJECTION PUMP 2 POMPE A INJECTEUR 2

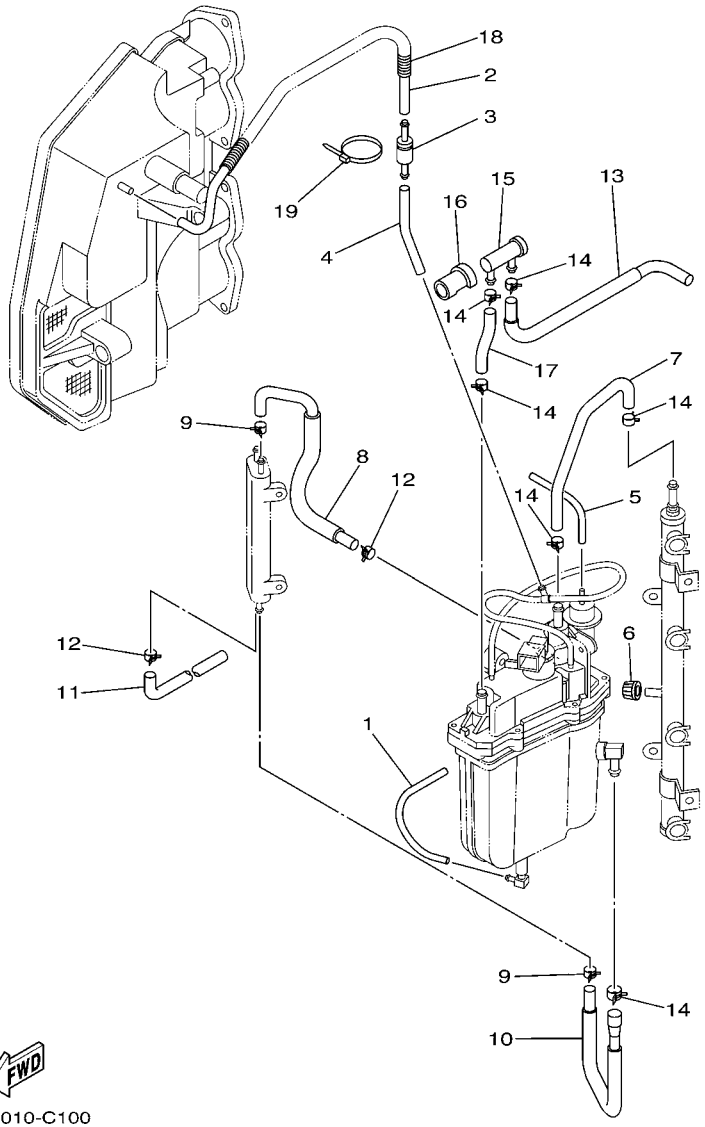

63P1010-C100

REF. NO.	PART NO. N° PIECES	DESCRIPTION DESCRIPTION	63P2	64P2				REMARKS REMARQUES
1	63P–14149–00	PIPE DURITE	1	1				OLD PARTS OLD PARTS
2	63P–1441J–00	PIPE, SILENCER DURITE, DE SILENCIEUX	1	1				OLD PARTS OLD PARTS
3	63P–24460–00	RELIEF VALVE ASSY SOUPAPE DE SECURITE COMPLET	1	1				OLD PARTS OLD PARTS
4	63P–14197–00	PIPE DURITE	1	1				OLD PARTS OLD PARTS
5	63P–13532–00	HOSE, VACUUM SENSING 3 DURITE 3	1	1				OLD PARTS OLD PARTS
6	63P–14225–00	CAP COUVERCLE	1	1				OLD PARTS OLD PARTS
7	63P–13974–00	PIPE, FUEL 4 TUBE 4, CARBURANT	1	1				OLD PARTS OLD PARTS
8	63P–13976–00	PIPE, FUEL 6 TUBE 6, CARBURANT	1	1				OLD PARTS OLD PARTS
9	68V–2411M–00	CLIP JONC	2	2				OLD PARTS OLD PARTS
10	63P–24317–00	PIPE 7 DURITE 7	1	1				OLD PARTS OLD PARTS
11	63P–22478–00	PIPE 2 DURITE 2	1	1				OLD PARTS OLD PARTS
12	68V–24519–00	CLIP JONC	2	2				OLD PARTS OLD PARTS
13	63P–24325–00	PIPE 14 DURITE 14	1	1				OLD PARTS OLD PARTS
14	68V–13577–00	CLIP AGRAFE	6	6				OLD PARTS OLD PARTS
15	69J–24501–00	FILTER, FUEL FILTRE	1	1				OLD PARTS OLD PARTS
16	69J–24599–00	CAP CAPUCHON	1	1				OLD PARTS OLD PARTS
17	63P–13975–00	PIPE, FUEL 5 TUBE 5, CARBURANT	1	1				OLD PARTS OLD PARTS
18	63P–13881–00	COVER 1 COUVERCLE 1	1	1				OLD PARTS OLD PARTS
19	68V–2481H–00	CLAMP BRIDE	1	1				OLD PARTS OLD PARTS

FIG. 12 FUEL INJECTION PUMP 3 POMPE A INJECTEUR 3

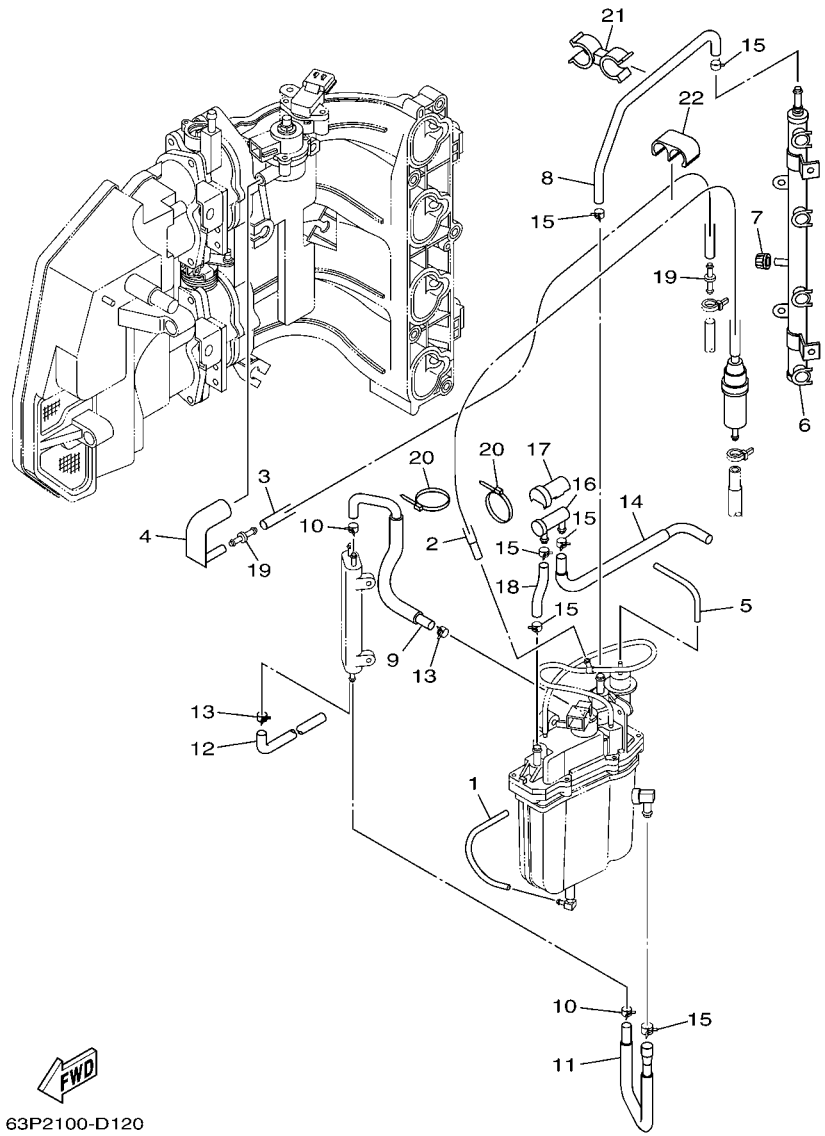

63P2100-D120

1: NEW PARTS
STARTING SERIAL NO. : 63P-1025889 ~
64P-1003013 ~

REF. NO.	PART NO. N° PIECES	DESCRIPTION DESCRIPTION	63P2	64P2				REMARKS REMARQUES
1	63P–14149–00	PIPE DURITE	1	1				NEW PARTS *1 NEW PARTS *1
2	63P–13971–00	PIPE, FUEL 1 TUBE 1, CARBURANT	1	1				NEW PARTS *1 NEW PARTS *1
3	63P–13546–00	HOSE 2 DURITE 2	1	1				NEW PARTS *1 NEW PARTS *1
4	63P–13545–00	HOSE 1 DURITE 1	1	1				NEW PARTS *1 NEW PARTS *1
5	63P–13532–00	HOSE, VACUUM SENSING 3 DURITE 3	1	1				NEW PARTS *1 NEW PARTS *1
6	63P–13160–00	DELIVERY PIPE ASSY 1 ENS. TUBE DE REFOULEMENT 1	1	1				NEW PARTS *1 NEW PARTS *1
7	63P–14225–00	CAP COUVERCLE	1	1				NEW PARTS *1 NEW PARTS *1
8	63P–13974–10	PIPE, FUEL 4 TUBE 4, CARBURANT	1	1				NEW PARTS *1 NEW PARTS *1
9	63P–13976–00	PIPE, FUEL 6 TUBE 6, CARBURANT	1	1				NEW PARTS *1 NEW PARTS *1
10	68V–2411M–00	CLIP JONC	2	2				NEW PARTS *1 NEW PARTS *1
11	63P–24317–00	PIPE 7 DURITE 7	1	1				NEW PARTS *1 NEW PARTS *1
12	63P–2247B–00	HOSE 2 DURITE 2	1	1				NEW PARTS *1 NEW PARTS *1
13	68V–24519–00	CLIP JONC	2	2				NEW PARTS *1 NEW PARTS *1
14	63P–24325–00	PIPE 14 DURITE 14	1	1				NEW PARTS *1 NEW PARTS *1
15	68V–13577–00	CLIP AGRAFE	6	6				NEW PARTS *1 NEW PARTS *1
16	69J–24501–10	FILTER, FUEL FILTRE	1	1				NEW PARTS *1 NEW PARTS *1
17	69J–24599–10	CAP CAPUCHON	1	1				NEW PARTS *1 NEW PARTS *1
18	63P–13975–00	PIPE, FUEL 5 TUBE 5, CARBURANT	1	1				NEW PARTS *1 NEW PARTS *1
19	6P2–13758–00	PIPE, JOINT DURITE	2	2				NEW PARTS *1 NEW PARTS *1
20	68V–2481H–00	CLAMP BRIDE	2	2				NEW PARTS *1 NEW PARTS *1
21	63P–2417H–00	CLAMP 1 COLLIER 1	1	1				NEW PARTS *1 NEW PARTS *1
22	63P–2417J–00	CLAMP 2 COLLIER 2	1	1				NEW PARTS *1 NEW PARTS *1

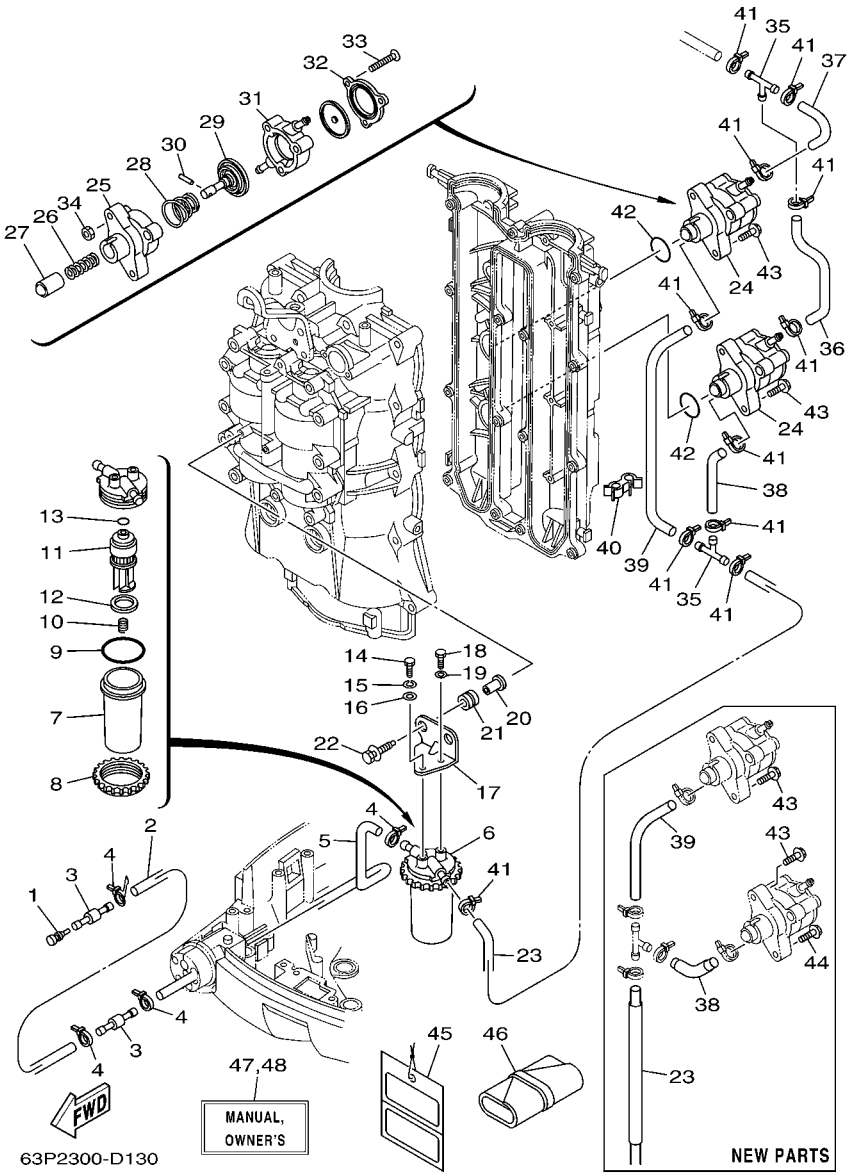

1: NEW PARTS
STARTING SERIAL NO. : 63P-1025889 ~
64P-1003013 ~

FIG. 13 FUEL 1 — CARBURANT 1

REF. NO.	PART NO. N° PIECES	DESCRIPTION DESCRIPTION	63P2	64P2				REMARKS REMARQUES
1	689–85547–00	DAMPER AMORTISSEUR	1	1				
2	90445–13511	HOSE (L2000) DURITE (L2000)	1	1				
3	6R3–24377–10	PIPE, JOINT 3 DURITE RACCORDEMENT 3	2	2				
4	90465–11M10	CLAMP BRIDE	4	4				
5	63P–24316–00	PIPE 6 DURITE 6	1	1				
6	65L–24560–00	FILTER ASSY ENS FILTRE	1	1				
7	61A–24521–00	.CUP, FILTER .CUVETTE, FILTRE	1	1				
8	65L–24531–01	.NUT .ECROU	1	1				
9	61A–24564–00	.O-RING .JOINT TORIQUE	1	1				
10	65L–24577–00	.SPRING .RESSORT	1	1				
11	65L–24563–00	.ELEMENT, FILTER .ELEMENT, FILTRE	1	1				
12	61A–24469–00	.FLOAT, WATER LEVEL .FLOTTEUR	1	1				
13	65L–24564–00	.O-RING .JOINT TORIQUE	1	1				
14	97095–06016	BOLT BOULON	1	1				
15	92995–06100	WASHER, SPRING RONDELLE, GROWER	1	1				
16	90201–06068	WASHER, PLATE RONDELLE, PLATE	1	1				
17	63P–24566–00	BRACKET, FILTER SUPPORT, FILTRE	1	1				
18	97095–06014	BOLT BOULON	1	1				
19	92995–06600	WASHER RONDELLE	1	1				
20	90387–06M60	COLLAR COLLERETTE	2	2				
21	90480–10M23	GROMMET PASSE-FIL	2	2				
22	90119–06071	BOLT, WITH WASHER BOULON, AVEC RONDELLE	2	2				
23	63P–24311–00	PIPE, FUEL 1 DURITE A ESSENCE	1	1				
	63P–24311–10	PIPE, FUEL 1 DURITE A ESSENCE	1	1				NEW PARTS *1 NEW PARTS *1
24	63P–24410–00	FUEL PUMP ASSY POMPE A ESSENCE	2	2				
25	68V–24412–00	.BODY 1 .CORPS 1	1	1				
26	68V–24454–00	.SPRING .RESSORT	1	1				

FIG. 13 FUEL 1 — CARBURANT 1

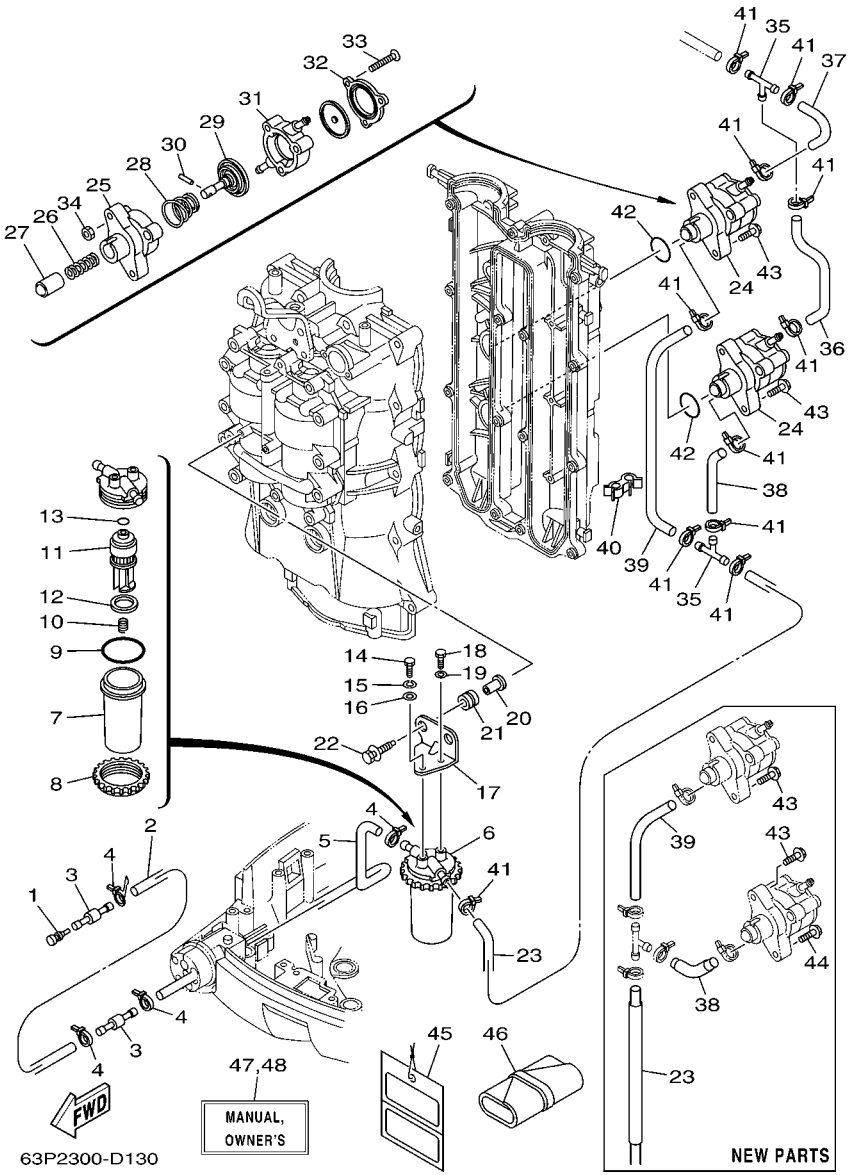

1: NEW PARTS
STARTING SERIAL NO. : 63P-1025889 ~
64P-1003013 ~

REF. NO.	PART NO. N° PIECES	DESCRIPTION DESCRIPTION	63P2	64P2				REMARKS REMARQUES
27	63P–13131–00	.PLUNGER .PLONGEUR	1	1				
28	63P–24423–00	.SPRING, DIAPHRAGM .RESSORT, DIAPHRAGME	1	1				
29	68V–24411–00	.DIAPHRAGM .DIAPHRAGME	1	1				
30	68V–24374–00	.PIN .GOUPILLE	1	1				
31	68V–24413–00	.BODY 2 .CORPS 2	1	1				
32	63P–24414–00	.BODY 3 .CORPS 3	1	1				
33	68V–24444–00	.SCREW .VIS	3	3				
34	68V–24149–00	.NUT .ECROU	3	3				
35	6E5–24378–00	PIPE, JOINT 3 DURITE, RACCORDEMENT 3	2	2				
36	63P–24314–00	PIPE 4 DURITE 4	1	1				
37	63P–24315–00	PIPE 5 DURITE 5	1	1				
38	63P–24312–00	PIPE 2 DURITE 2	1	1				
	63P–24312–10	PIPE 2 DURITE 2	1	1				NEW PARTS *1 NEW PARTS *1
39	63P–24313–00	PIPE 3 DURITE 3	1	1				
	63P–24313–10	PIPE 3 DURITE 3	1	1				NEW PARTS *1 NEW PARTS *1
40	90464–12004	CLAMP BRIDE	1	1				OLD PARTS OLD PARTS
41	90465–11M10	CLAMP BRIDE	11	11				
42	93210–30682	O-RING JOINT TORIQUE	2	2				
43	90119–06M83	BOLT, WITH WASHER BOULON, AVEC RONDELLE	4	4				
	90119–06M83	BOLT, WITH WASHER BOULON, AVEC RONDELLE	3	3				NEW PARTS *1 NEW PARTS *1
44	90119–06135	BOLT, WITH WASHER BOULON, AVEC RONDELLE	1	1				NEW PARTS *1 NEW PARTS *1
45	61H–2819R–31	TAG, WARNING ETIQUETTE, AVERTISSEMENT	1	1				
46	67F–28100–01	TOOL KIT TROUSSE A OUTILS	1	1				
47	63P–28199–72–E0	MANUAL,OWNER'S MANUEL D'UTILISATION	1	1				UR (E) UR (E)
	63P–28199–72–F0	MANUAL,OWNER'S MANUEL D'UTILISATION	1	1				UR (F) UR (F)
	63P–28199–72–S0	MANUAL,OWNER'S MANUEL D'UTILISATION	1	1				UR (ES) UR (ES)
	63P–28199–72–G0	MANUAL,OWNER'S MANUEL D'UTILISATION	1	1				UR (D) UR (D)

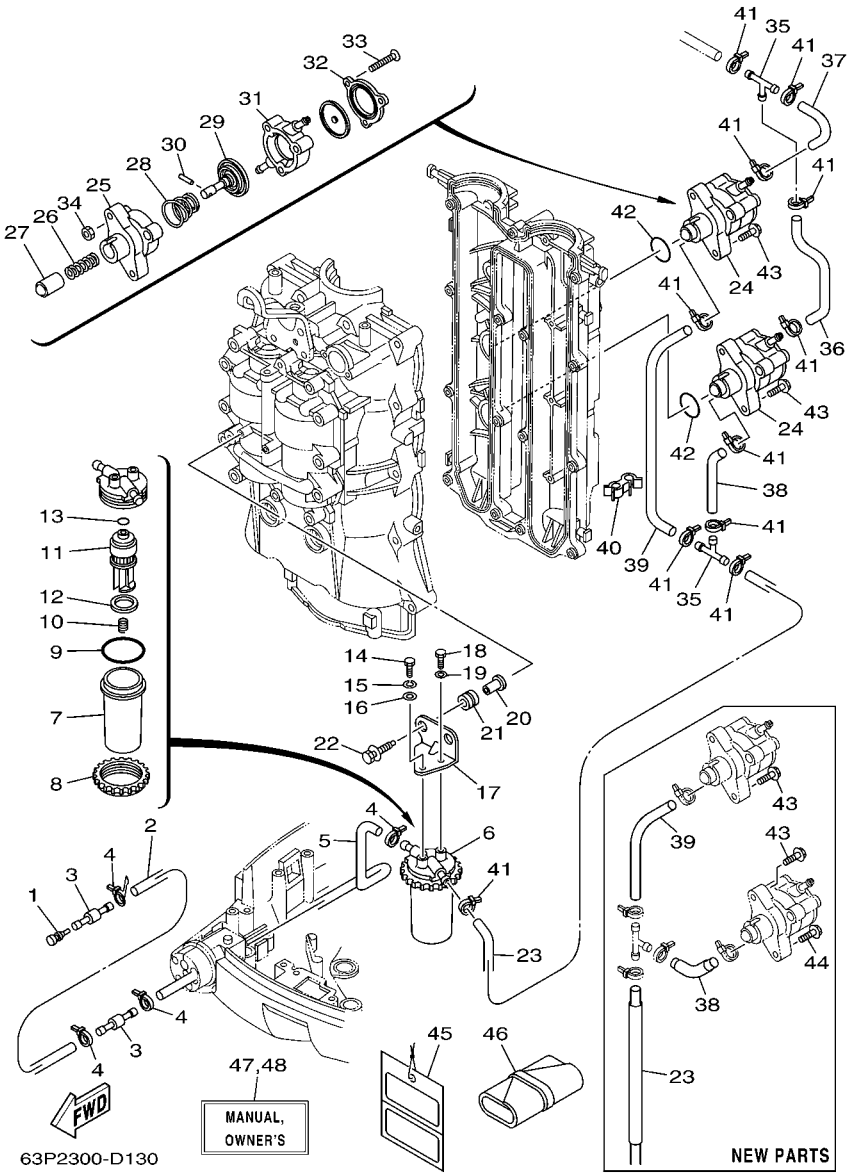

1: NEW PARTS
STARTING SERIAL NO. : 63P-1025889 ~
64P-1003013 ~

FIG. 13 FUEL 1 — CARBURANT 1

REF. NO.	PART NO. N° PIECES	DESCRIPTION DESCRIPTION	63P2	64P2				REMARKS REMARQUES
47	63P–28199–72–D0	MANUAL,OWNER'S MANUEL D'UTILISATION	1	1				UR (NL) UR (NL)
	63P–28199–72–H0	MANUAL,OWNER'S MANUEL D'UTILISATION	1	1				UR (I) UR (I)
48	63P–28199–82–K0	MANUAL,OWNER'S MANUEL D'UTILISATION	1	1				UR (DK) UR (DK)
	63P–28199–82–R0	MANUAL,OWNER'S MANUEL D'UTILISATION	1	1				UR (GR) UR (GR)
	63P–28199–82–P0	MANUAL,OWNER'S MANUEL D'UTILISATION	1	1				UR (P) UR (P)
	63P–28199–82–N0	MANUAL,OWNER'S MANUEL D'UTILISATION	1	1				UR (N) UR (N)
	63P–28199–82–M0	MANUAL,OWNER'S MANUEL D'UTILISATION	1	1				UR (S) UR (S)
	63P–28199–82–L0	MANUAL,OWNER'S MANUEL D'UTILISATION	1	1				UR (SF) UR (SF)

FIG. 14 FUEL 2 — CARBURANT 2

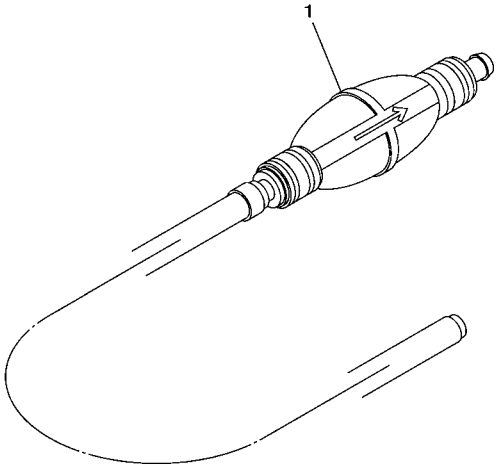

63P1300-C120

REF. NO.	PART NO. N° PIECES	DESCRIPTION DESCRIPTION	63P2	64P2				REMARKS REMARQUES
1	6YK–24307–42	FUEL PIPE COMP. 2 DURITE A ESSENCE 2	1	1				AP AP

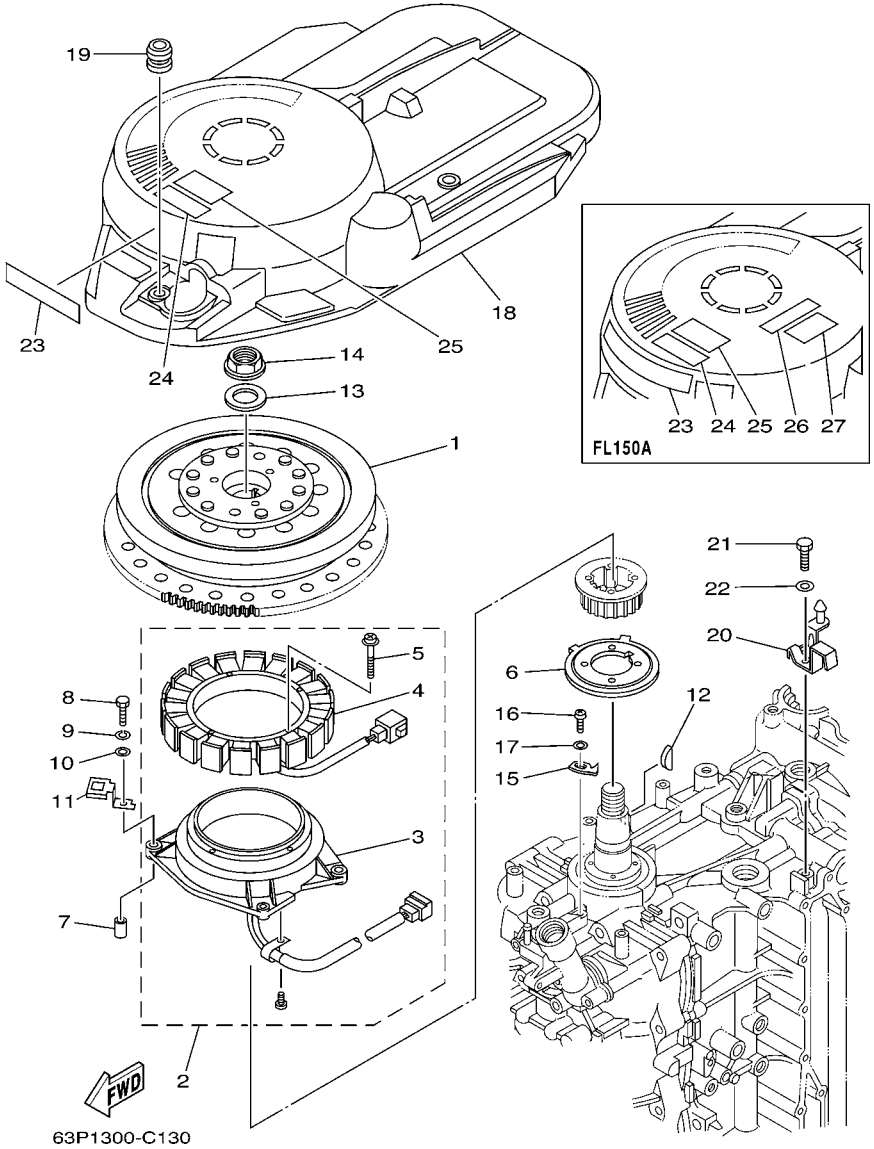

FIG. 15 GENERATOR GENERATRICE

REF. NO.	PART NO. N° PIECES	DESCRIPTION DESCRIPTION	63P2	64P2				REMARKS REMARQUES
1	63P–81450–00	ROTOR ASSY ROTOR COMPLET	1	1				
2	63P–81460–00	BASE ASSY ENS. FLASQUE	1	1				
3	63P–85580–00	.COIL, PULSER .BOBINE, PULSEUR	1	1				
4	63P–81410–00	.STATOR ASSY .STATOR COMPLET	1	1				
5	63D–81345–20	.SCREW, WITH WASHER (M6X30) .VIS, AVEC RONDELLE (M6X30)	4	4				
6	63P–81673–00	ROTOR ROTOR	1	1				Go to P/N : PE0-OM-120035
7	99530–08012	PIN, DOWEL GOUJON, D'ASSEMBLAGE	2	2				
8	97095–06035	BOLT BOULON	4	4				
9	92995–06100	WASHER, SPRING RONDELLE, GROWER	4	4				
10	92995–06600	WASHER RONDELLE	4	4				
11	63P–81845–00	PLATE PLAQUE	2	2				
12	90280–05015	KEY, WOODRUFF CLAVETTE, DEMI-LUNE	1	1				
13	90201–24014	WASHER, PLATE RONDELLE, PLATE	1	1				
14	90179–24002	NUT ECROU	1	1				
15	67F–81332–00	PLATE, TIMING PLATEAU, ALLUMAGE	1	1				
16	97885–06010	SCREW, PAN HEAD VIS, A ENCOCHE	1	1				
17	92995–06600	WASHER RONDELLE	1	1				
18	63P–81337–00	COVER, FLYWHEEL COUVERCLE, VOLANT	1	1				
19	663–82317–01	DAMPER, IGNITION COIL AMORTISSEUR, BOBINE D'ALLUM	3	3				
20	63P–8132G–00	PLATE PLAQUE	1	1				
21	97095–06016	BOLT BOULON	1	1				
22	92995–06600	WASHER RONDELLE	1	1				
23	63P–13437–60	MARK, CAUTION MAKER	1	1				
24	6A1–83625–41	MARK 5 ETIQUETTE 5	1	1				
25	6A1–83625–51	MARK 5 ETIQUETTE 5	1	1				
26	6K1–83623–41	MARK 3 ETIQUETTE 3		1				
27	6K1–83623–50	MARK 3 ETIQUETTE 3		1				

FIG. 16 ELECTRICAL 1 PARTIE ELECTRIQUE 1

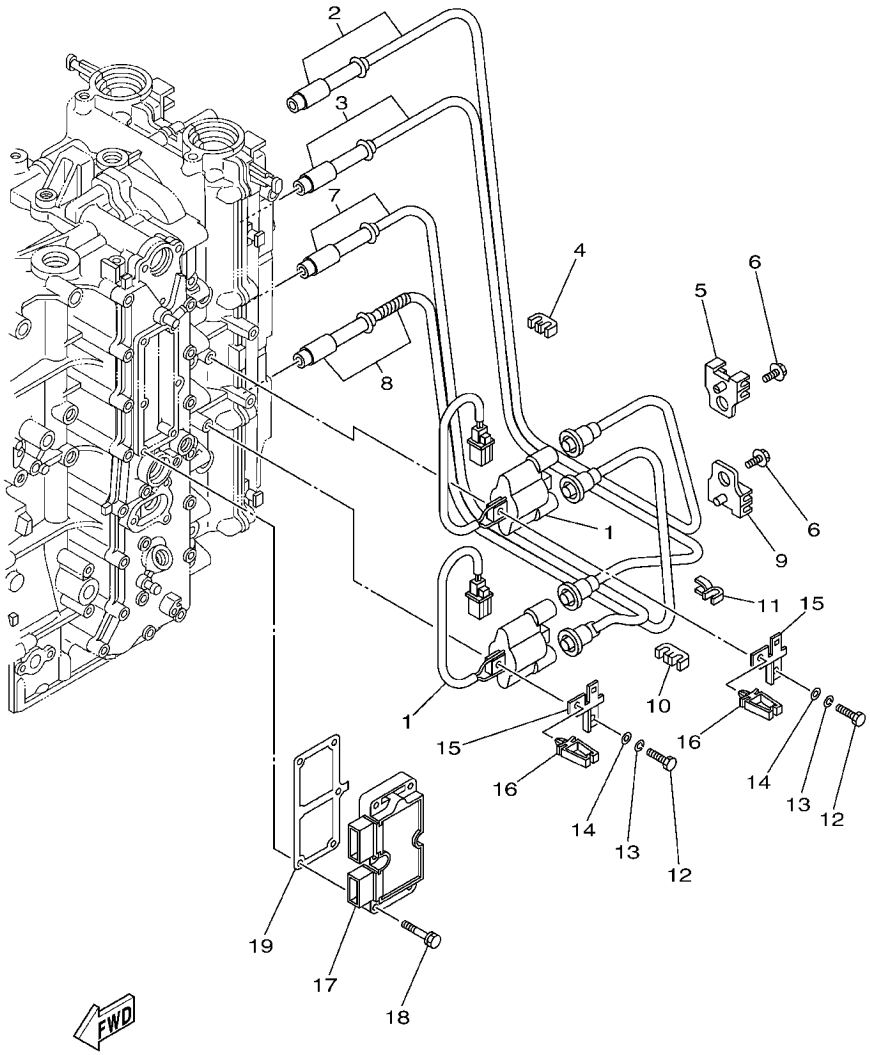

63P2100-D143

1: NEW PARTS
STARTING SERIAL NO. : 63P-1025889 ~
64P-1003013 ~

REF. NO.	PART NO. N° PIECES	DESCRIPTION DESCRIPTION	63P2	64P2				REMARKS REMARQUES
1	63P–82310–01	IGNITION COIL ASSY BOBINE D'ALLUMAGE	2	2				
2	63P–W823A–00	CORD, HIGH TENSION 1 CORDON, HAUTE-TENSION 1	1	1				
3	63P–W823B–00	CORD, HIGH TENSION 2 CORDON, HAUTE-TENSION 2	1	1				
4	67F–82361–00	CLAMP, CORD COLLIER, CORDON	1	1				
5	67F–82362–00	CLAMP, CORD 2 COLLIER, CABLE 2	1	1				
6	90119–06M73	BOLT, WITH WASHER BOULON, AVEC RONDELLE	2	2				
	90119–06134	BOLT, WITH WASHER BOULON, AVEC RONDELLE	2	2				NEW PARTS *1 NEW PARTS *1
7	63P–W823C–00	CORD, HIGH TENSION 3 CORDON, HAUTE-TENSION 3	1	1				
8	63P–W823D–00	CORD, HIGH TENSION 4 CORDON, HAUTE TENSION 4	1	1				
9	67F–82362–00	CLAMP, CORD 2 COLLIER, CABLE 2	1	1				
10	67F–82361–00	CLAMP, CORD COLLIER, CORDON	1	1				
11	90464–07M41	CLAMP BRIDE	1	1				
12	97095–06025	BOLT BOULON	4	4				
13	92995–06100	WASHER, SPRING RONDELLE, GROWER	4	4				
14	92995–06600	WASHER RONDELLE	4	4				
15	63P–82388–00	PLATE PLAQUETTE	2	2				
16	90464–05141	CLAMP BRIDE	2	2				
17	63P–81960–00	RECTIFIER & REGULATOR ASSY REDRESSEUR REGULATEUR CPLT	1	1				
18	90119–06MA4	BOLT, WITH WASHER BOULON, AVEC RONDELLE	6	6				
19	63P–81975–00	PLATE, RECTIFIER FITTING PLAQUE, FIXATION DU REDRESSEUR	1	1				

FIG. 17 ELECTRICAL 2 PARTIE ELECTRIQUE 2

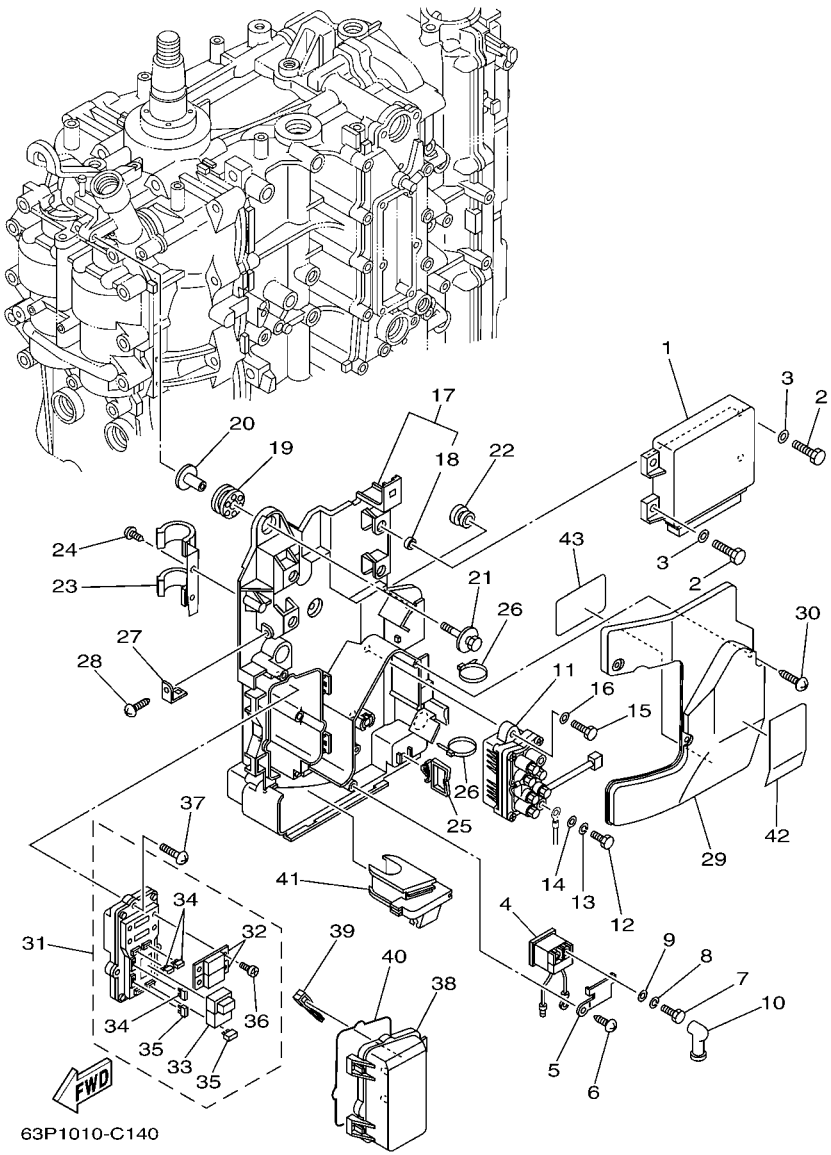

REF. NO.	PART NO. N° PIECES	DESCRIPTION DESCRIPTION	63P2	64P2				REMARKS REMARQUES
1	63P–8591A–00	ENGINE CONTROL UNIT ASSY BLOC DE CONTROL	1	1				
2	97095–06016	BOLT BOULON	4	4				
3	92995–06600	WASHER RONDELLE	4	4				
4	68V–8194A–00	RELAY RELAIS	1	1				
5	68V–81953–00	STAY, RELAY SUPPORT, RELAIS	1	1				
6	97780–60620	SCREW, TAPPING VIS, TETE BOMBEE	1	1				
7	97095–06010	BOLT BOULON	2	2				
8	92995–06100	WASHER, SPRING RONDELLE, GROWER	2	2				
9	92995–06600	WASHER RONDELLE	2	2				
10	6G5–82119–00	COVER, LEAD WIRE GARNITURE, FIL	2	2				
11	63P–81950–00	RELAY ASSY RELAIS COMPLET	1	1				
12	97095–06010	BOLT BOULON	2	2				
13	92995–06100	WASHER, SPRING RONDELLE, GROWER	2	2				
14	92995–06600	WASHER RONDELLE	2	2				
15	97013–06020	BOLT BOULON	2	2				
16	92903–06600	WASHER, PLATE RONDELLE, PLATE	2	2				
17	63P–81948–00	BRACKET JOINT TORIQUE	1	1				
18	90387–06010	.COLLAR .COLLERETTE	4	4				
19	68F–85516–01	SPACER ENTRETOISE	3	3				
20	68F–86129–00	COLLAR COLLERETTE	3	3				
21	68F–85119–00	BOLT BOULON	3	3				
22	90480–10627	GROMMET PASSE-FIL	1	1				
23	63P–82594–00	CLAMP BRIDE	1	1				
24	97780–60620	SCREW, TAPPING VIS, TETE BOMBEE	1	1				
25	90464–23199	CLAMP BRIDE	1	1				
26	90465–13M18	CLAMP BRIDE	3	3				
27	68V–85548–00	HOLDER SUPPORT	1	1				

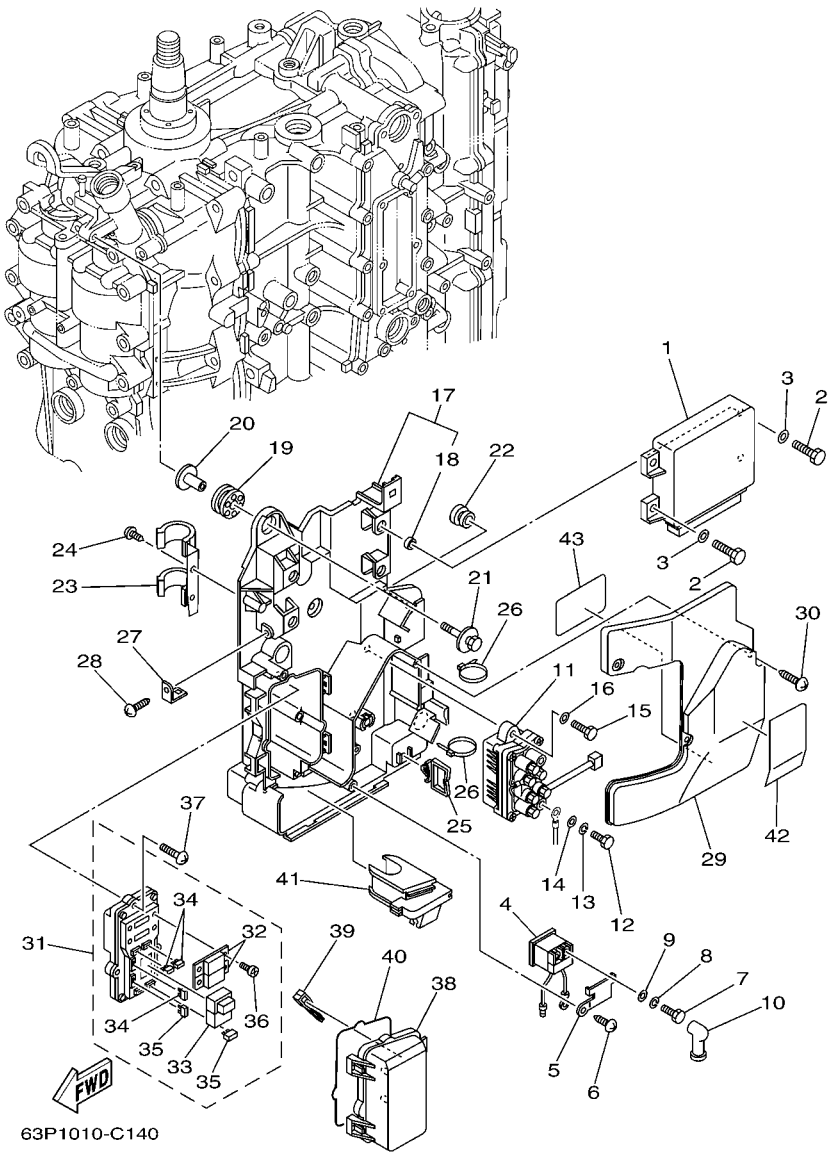

FIG. 17 ELECTRICAL 2 — PARTIE ELECTRIQUE 2

REF. NO.	PART NO. N° PIECES	DESCRIPTION DESCRIPTION	63P2	64P2				REMARKS REMARQUES
28	97780–60620	SCREW, TAPPING VIS, TETE BOMBEE	1	1				
29	63P–81942–00	COVER COUVERCLE	1	1				
30	90169–05M00	SCREW, TRUSS HEAD TAPPING VIS, TETE FRAISEE	3	3				
31	63P–82170–00	FUSE BOX ASSY BOITE A FUSIBLES	1	1				
32	63P–82151–00	.FUSE (50A) .FUSIBLE (50A)	2	2				
33	68F–8195A–00	.RELAY ASSY .RELAIS COMPLET	1	1				
34	67F–82151–00	.FUSE (20A) .FUSIBLE (20A)	3	3				
35	67F–82151–10	.FUSE (30A) .FUSIBLE (30A)	2	2				
36	68F–82846–00	.SCREW, PAN HEAD (M5) .VIS, TETE TRONCONIQUE (M5)	4	4				
37	97780–50620	SCREW, TAPPING VIS, TETE BOMBEE	3	3				
38	60V–85544–00	CASE BOITIER	1	1				
39	67F–2812A–00	PULLER, FUSE TENDEUR, FUSIBLE	1	1				
40	60V–82157–00	DAMPER AMORTISSEUR	1	1				
41	63P–81336–00	GROMMET OEILLET CAOUTCHOUC	1	1				
42	63P–81919–00	GRAPHIC, REGULATOR ADHESIF, REGULATEUR	1	1				
43	63P–81919–10	GRAPHIC, REGULATOR ADHESIF, REGULATEUR	1	1				

FIG. 18 ELECTRICAL 3 — PARTIE ELECTRIQUE 3

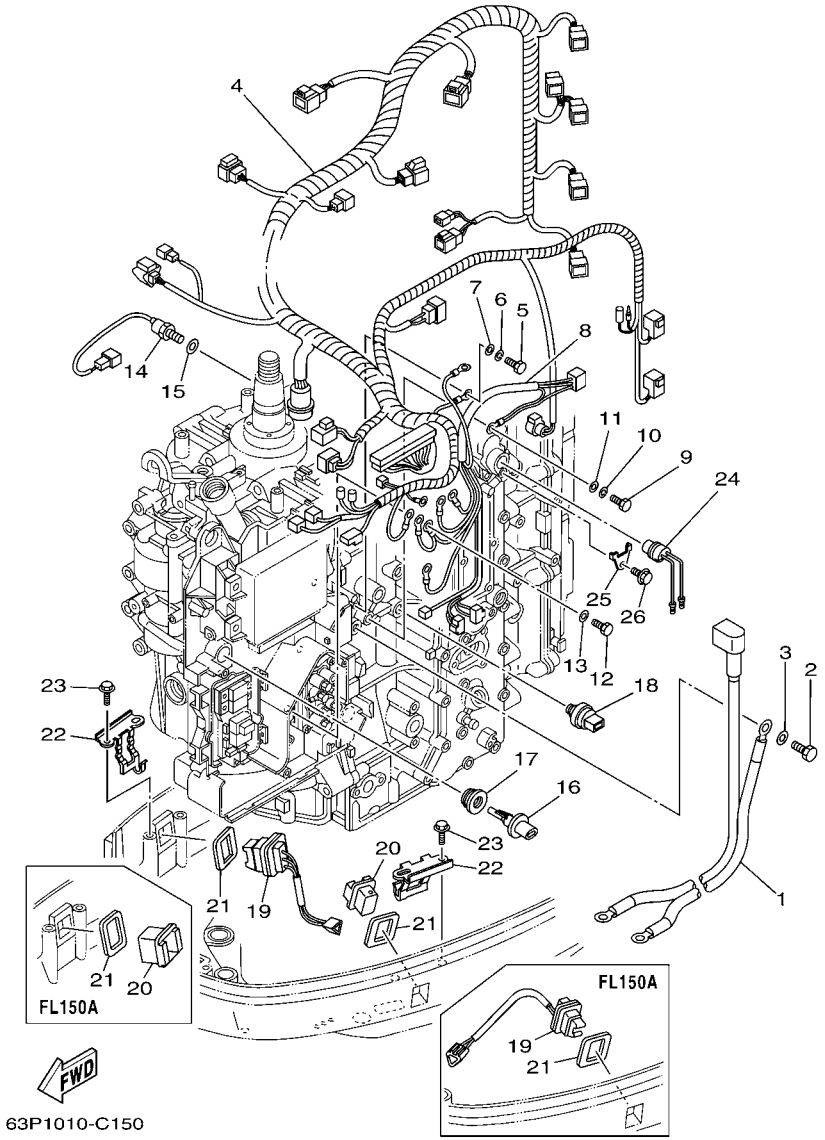

REF. NO.	PART NO. N° PIECES	DESCRIPTION DESCRIPTION	63P2	64P2				REMARKS REMARQUES
1	63P–82105–00	WIRE HARNESS FAISCEAU DE FILS	1	1				
2	97095–08016	BOLT BOULON	1	1				
3	92995–08600	WASHER RONDELLE	1	1				
4	63P–82590–00	WIRE HARNESS ASSY FAISCEAU DE FILS COMPLET	1	1				
5	97095–06020	BOLT BOULON	1	1				
6	92995–06100	WASHER, SPRING RONDELLE, GROWER	1	1				
7	92995–06600	WASHER RONDELLE	1	1				
8	63P–8259M–00	WIRE HARNESS ASSY 2 FAISCEAU DE FILS	1	1				
9	97095–06020	BOLT BOULON	1	1				
10	92995–06100	WASHER, SPRING RONDELLE, GROWER	1	1				
11	92995–06600	WASHER RONDELLE	1	1				
12	97095–06012	BOLT BOULON	1	1				
13	92995–06600	WASHER RONDELLE	1	1				
14	61A–85790–00	THERMOSENSOR ASSY SENSITOMETRE	1	1				
15	92990–10600	WASHER, PLATE RONDELLE, PLATE	1	1				
16	63P–85886–00	SENSOR,AIR TEMPERATURE SUPPORT	1	1				
17	63P–14435–00	GROMMET RONDELLE CAOUTCHOUC	1	1				
18	69J–83651–00	SENDER, OIL PRESSURE RACCORD, PRESSION D'HUILE	1	1				
19	69J–82563–00	TRIM & TILT SWITCH ASSY INCLINER ET PARER COMMUTATEUR	1	1				
20	69J–42723–00–8D	COVER, BOTTOM COUVERCLE	1	1				
21	69J–82587–00	GASKET JOINT	2	2				
22	63P–83614–00	BRACKET SUPPORT	2	2				
23	90109–06M86	BOLT BOULON	4	4				
24	69J–82560–00	THERMO SWITCH ASSY THERMO-CONTACT COMPLET	1	1				
25	6E9–82588–00	PLATE PLAQUE	1	1				
26	90109–06M86	BOLT BOULON	1	1				

FIG. 19 STARTING MOTOR DEMARREUR ELECTRIQUE

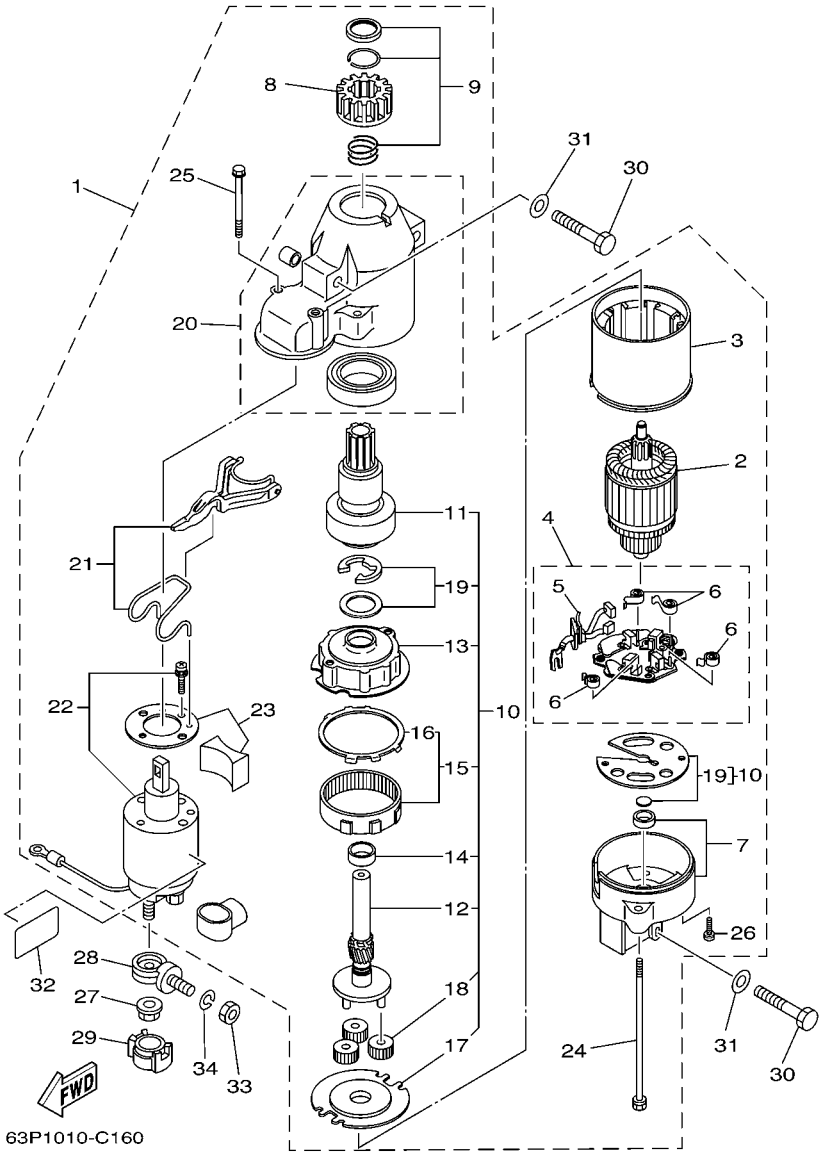

REF. NO.	PART NO. N° PIECES	DESCRIPTION DESCRIPTION	63P2	64P2				REMARKS REMARQUES
1	63P–81800–00	STARTING MOTOR ASSY DEMARREUR ELECTRIQUE COMPLET	1	1				
2	67F–81850–00	.ARMATURE ASSY .INDUIT	1	1				
3	67F–81810–00	.STATOR ASSY .STATOR COMPLET	1	1				
4	69J–81840–00	.BRUSH HOLDER ASSY .SUPPORT DE CHARBON	1	1				
5	69J–81801–00	..BRUSH SET ..CHARBON	1	1				
6	67F–81813–00	..SPRING, BRUSH ..RESSORT, DE CHARBON	4	4				
7	68F–81820–00	.REAR BRACKET ASSY .SUPPORT ARRIERE COMPLET	1	1				
8	67F–81808–00	.PINION ASSY .PIGNON	1	1				
9	67F–81857–00	.PINION STOPPER SET .BUTEE PIGNON	1	1				
10	67F–81807–00	.GEAR ASSY, STARTING MOTOR .PIGNON, DEMARREUR ELECTRIQUE	1	1				
11	67F–81832–00	..CLUTCH, OVER RUN ..EMBRAYAGE, ROUE LIBRE	1	1				
12	67F–81836–00	..SHAFT, PINION ..AXE, PIGNON	1	1				
13	67F–81821–00	..BRACKET, CENTER 1 ..SUPPORT, CENTRE 1	1	1				
14	67F–81841–00	..BEARING ..ROULEMENT	1	1				
15	67F–81891–00	..GEAR, RING ..ROUE DENTEE	1	1				
16	67F–8183R–00	...GASKET ...JOINT	1	1				
17	67F–81830–00	..BRACKET, CENTER 2 ..SUPPORT, CENTRE 2	1	1				
18	60V–8183T–00	..GEAR, IDLER ..PIGNON, INTERMEDIAIRE	3	3				
19	67F–81809–00	..WASHER KIT ..JEU DE RONDELLES	1	1				
20	69J–81842–00	.COVER .COUVERCLE	1	1				
21	69J–81839–00	.LEVER ASSY .LEVIER COMPLET	1	1				
22	63P–81941–00	.STARTER RELAY ASSY .LANCEUR RELAIS (ENS.)	1	1				
23	69J–81869–00	.COVER, DUST .COUVERCLE, POUSSIERE	1	1				
24	6K7–81826–10	.BOLT .BOULON	2	2				
25	69J–81828–00	.BOLT 2 .RONDELLE, BUTEE 2	2	2				
26	67F–81846–00	.SCREW .VIS	2	2				
27	90179–08003	NUT ECROU	1	1				

FIG. 19 STARTING MOTOR DEMARREUR ELECTRIQUE

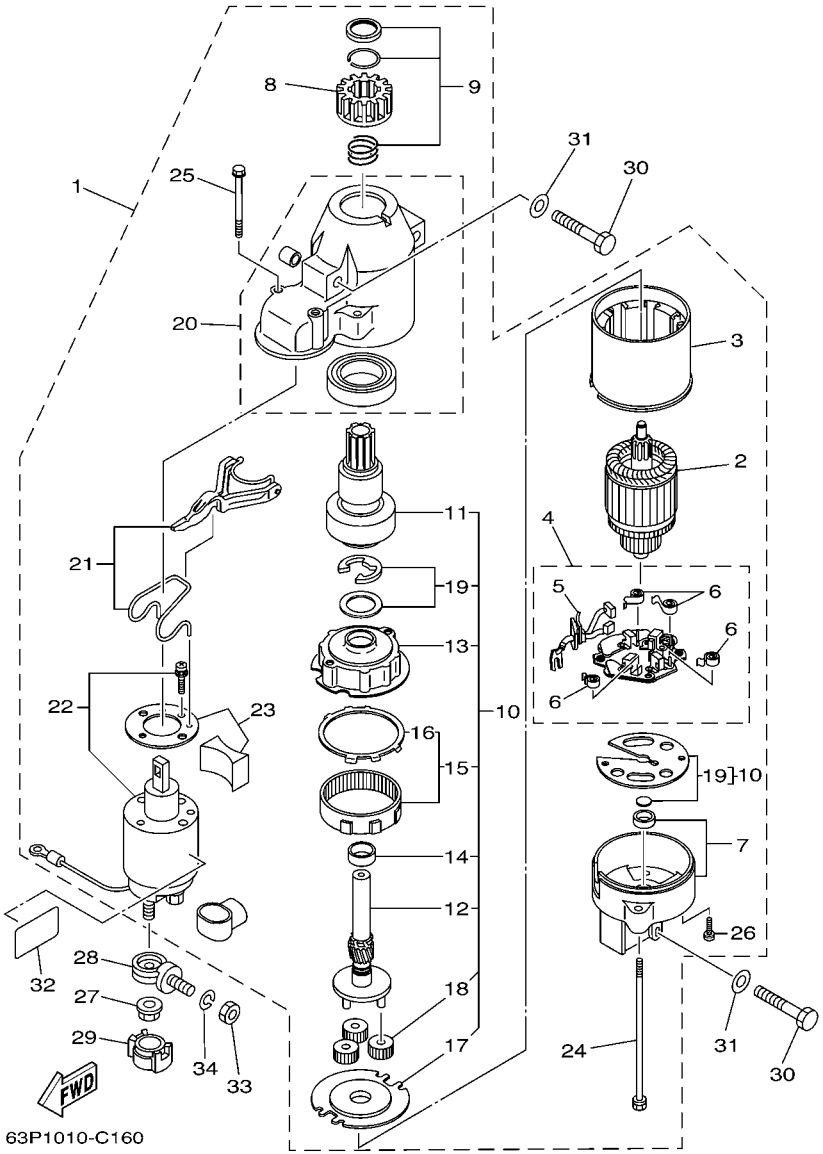

REF. NO.	PART NO. N° PIECES	DESCRIPTION DESCRIPTION	63P2	64P2				REMARKS REMARQUES
28	60V–81925–00	TERMINAL BORNE	1	1				
29	68F–82582–00	COVER, WIRE HARNESS COUVERCLE, FAISCEAU DE FILS	1	1				
30	97013–08045	BOLT BOULON	3	3				
31	92903–08600	WASHER, PLATE RONDELLE, PLATE	3	3				
32	67F–83627–01	LABEL, CAUTION 7 ETIQUETTE, RECOMMANDATION 7	1	1				
33	95333–08600	NUT ECROU	1	1				
34	92903–08100	WASHER, SPRING RONDELLE, GROWER	1	1				

FIG. 20 BOTTOM COWLING CAPOT INFERIEUR

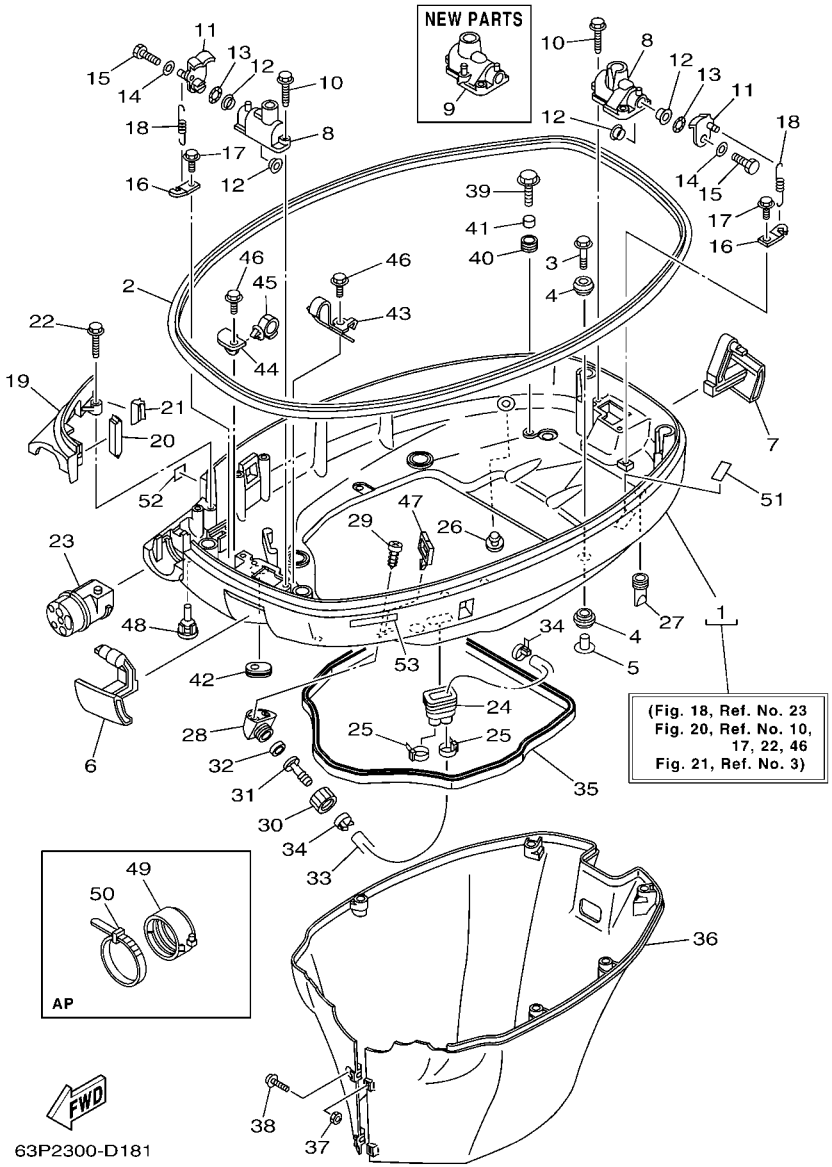

REF. NO.	PART NO. N° PIECES	DESCRIPTION DESCRIPTION	63P2	64P2				REMARKS REMARQUES
1	63P–42710–00–8D	BOTTOM COWLING ASSY ENS. EMBASE	1	1				
2	63P–42615–00	SEAL JOINT	1	1				
3	90119–08M22	BOLT, WITH WASHER BOULON, AVEC RONDELLE	4	4				
4	90480–22M81	GROMMET PASSE-FIL	8	8				
5	90387–08M37	COLLAR COLLERETTE	4	4				
6	63P–42815–00–8D	LEVER, CLAMP LEVIER, PRESSE	1	1				
7	63P–42816–00–8D	LEVER, CLAMP LEVIER, PRESSE	1	1				
8	68F–42828–00–5B	PLATE, CLAMP PLAQUE, PRESSE	2	2				
	68F–42828–03–94	PLATE, CLAMP PLAQUE, PRESSE	1	1				NEW PARTS *1 NEW PARTS *1
9	63P–42828–00–94	PLATE, CLAMP PLAQUE, PRESSE	1	1				NEW PARTS *1 NEW PARTS *1
10	90109–06M82	BOLT BOULON	4	4				
11	63P–42818–01	LEVER, CLAMP LEVIER, PRESSE	2	2				
12	90386–15M73	BUSH DOUILLE	4	4				
13	90206–15M18	WASHER, WAVE RONDELLE, ONDULEE	2	2				
14	90201–06068	WASHER, PLATE RONDELLE, PLATE	2	2				
15	97095–06020	BOLT BOULON	2	2				
16	64D–43144–00	HOOK, SPRING CROCHET	2	2				
17	90109–06M86	BOLT BOULON	2	2				
18	90506–16M34	SPRING, TENSION RESSORT, TENSION	2	2				
19	63P–42738–00–8D	PLATE, FITTING ETRIER	1	1				
20	63P–42717–00	RUBBER, SEAL 2 JOINT EN CAOUTCHOUC 2	1	1				
21	63P–42718–00	RUBBER, SEAL 3 JOINT	1	1				
22	90109–06M82	BOLT BOULON	2	2				
23	63P–42725–00	GROMMET PASSE-FIL	1	1				
24	6H1–42726–21	GROMMET PASSE-FIL	1	1				
25	90465–11M10	CLAMP BRIDE	2	2				
26	69J–44391–00	NIPPLE, HOSE RACCORD D'ESSENCE	1	1				

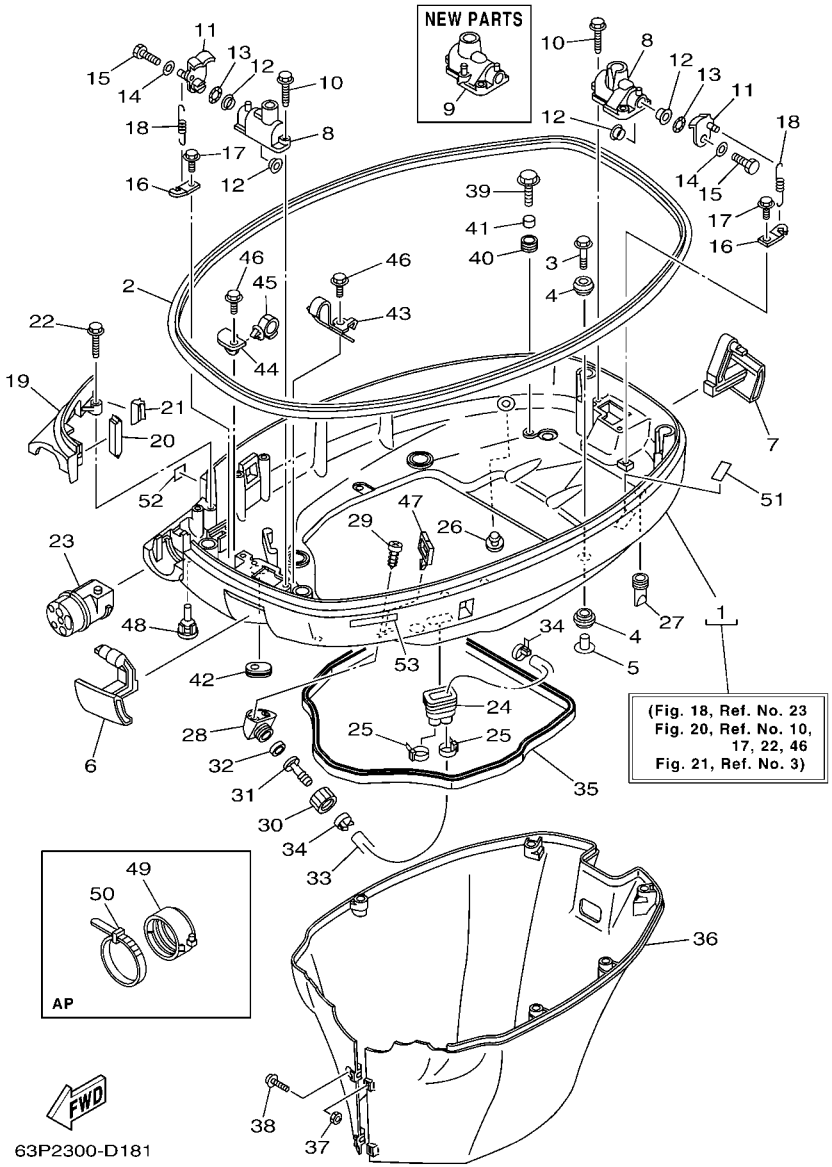

FIG. 20 BOTTOM COWLING CAPOT INFERIEUR

REF. NO.	PART NO. N° PIECES	DESCRIPTION DESCRIPTION	63P2	64P2				REMARKS REMARQUES
27	61A–42717–00	RUBBER, SEAL 2 JOINT EN CAOUTCHOUC 2	4	4				
28	68T–12572–00	ADAPTER ADAPTATEUR	1	1				
29	97780–60520	SCREW, TAPPING VIS, TETE BOMBEE	2	2				
30	6R3–12581–00	JOINT, HOSE 1 JOINT DE TUYAU	1	1				
31	6R3–12582–00	JOINT, HOSE 2 RACCORD DE TUYAU 1	1	1				
32	6R3–12583–00	GASKET, HOSE JOINT JOINT	1	1				
33	63P–42541–00	PIPE 1 DURITE 1	1	1				
34	90465–11M10	CLAMP BRIDE	2	2				
35	63P–42716–00	RUBBER, SEAL 1 JOINT EN CAOUTCHOUC 1	1	1				
36	63P–42741–01–8D	APRON CAPOT LATERAL	1	1				
37	95380–06600	NUT, HEXAGON ECROU	2	2				
38	90159–06M28	SCREW, WITH WASHER VIS, AVEC RONDELLE	2	2				
39	90109–06M80	BOLT BOULON	4	4				
40	90480–13M24	GROMMET PASSE-FIL	4	4				
41	90387–06M43	COLLAR COLLERETTE	4	4				
42	61A–42727–00	GROMMET PASSE-FIL	1	1				
43	63P–42811–01	STAY SUPPORT	1	1				
44	63P–42756–00	STAY, CLAMP SUPPORT, COLLIER	1	1				
45	90464–20181	CLAMP BRIDE	1	1				
46	90109–06M86	BOLT BOULON	2	2				
47	90464–23199	CLAMP BRIDE	1	1				
48	6H4–42748–00	GROMMET PASSE-FIL	2	2				
49	68F–42753–00	FASTNER ATTACHE	1	1				AP AP
50	90464–20258	CLAMP BRIDE	1	1				AP AP
51	67F–82377–00	LABEL ETIQUETTE	1	1				
52	6A1–28176–00	LABEL, CAUTION ETIQUETTE, RECOMMANDATION	1	1				
53	6E3–8257H–00	PLATE, MARK PLAQUE, ADHESIF	1	1				

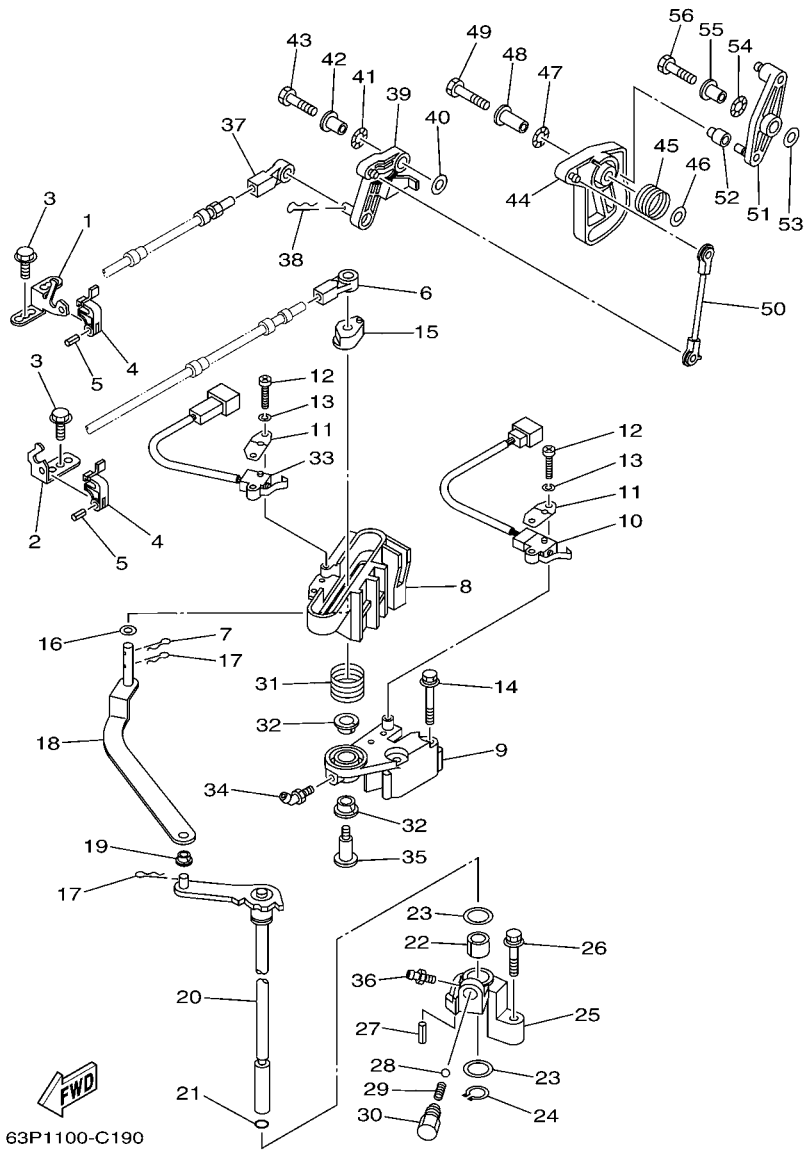

FIG. 21 CONTROL COMMANDE

REF. NO.	PART NO. N° PIECES	DESCRIPTION DESCRIPTION	63P2	64P2				REMARKS REMARQUES
1	63P–48531–00	BRACKET, REMOTE CONTROL 1 ETRIER 1, COMMANDE A DISTANCE	1	1				
2	63P–48532–00	BRACKET, REMOTE CONTROL 2 ETRIER 2, COMMANDE A DISTANCE	1	1				
3	90109–06M86	BOLT BOULON	3	3				
4	63P–48538–00	CLAMP, CABLE 1 COLLIER	2	2				
5	91690–30010	PIN, SPRING AGRAFFE	2	2				
6	6E5–48344–00	CABLE END, REMOTE CONTROL CHAPE CABLE	1	1				
7	90468–18008	CLIP JONC	1	1				
8	63P–44176–00–1S	BRACKET SUPPORT	1	1				
9	63P–44117–00–1S	BRACKET SUPPORT	1	1				
10	69J–8259F–00	SWITCH ASSY COMMUTATEUR	1	1				
11	61A–82588–01	PLATE PLAQUE	2	2				
12	97885–04016	SCREW, PAN HEAD VIS, A ENCOCHE	4	4				
13	92995–04100	WASHER RONDELLE	4	4				
14	97595–06550	BOLT, WITH WASHER VIS HEXAGONAL AVC RONDELLE	2	2				
15	63P–44122–00	BUSHING, SHIFT ROD LEVER DOUILLE, LEVIER D'EMBRAYAGE	1	1				
16	90202–08M20	WASHER, PLATE RONDELLE, PLATE	1	1				
17	90468–18008	CLIP JONC	2	2				
18	63P–44121–00	LEVER, SHIFT ROD LEVIER, TIGE D'INVERSION	1	1				
19	90386–06M12	BUSH DOUILLE	1	1				
20	63P–44120–00	HANDLE GEAR SHIFT ASSY LEVIER D'EMBRAYAGE	1	1				
21	93210–09165	O-RING JOINT TORIQUE	1	1				
22	90386–16M66	BUSH DOUILLE	1	1				
23	90202–16061	WASHER, PLATE RONDELLE, PLATE	2	2				
24	93410–16006	CIRCLIP CLIPS	1	1				
25	63P–44118–00–8D	BRACKET SUPPORT	1	1				
26	97575–06535	BOLT, WITH WASHER VIS HEXAGONAL AVC RONDELLE	1	1				
27	91690–30010	PIN, SPRING AGRAFFE	1	1				

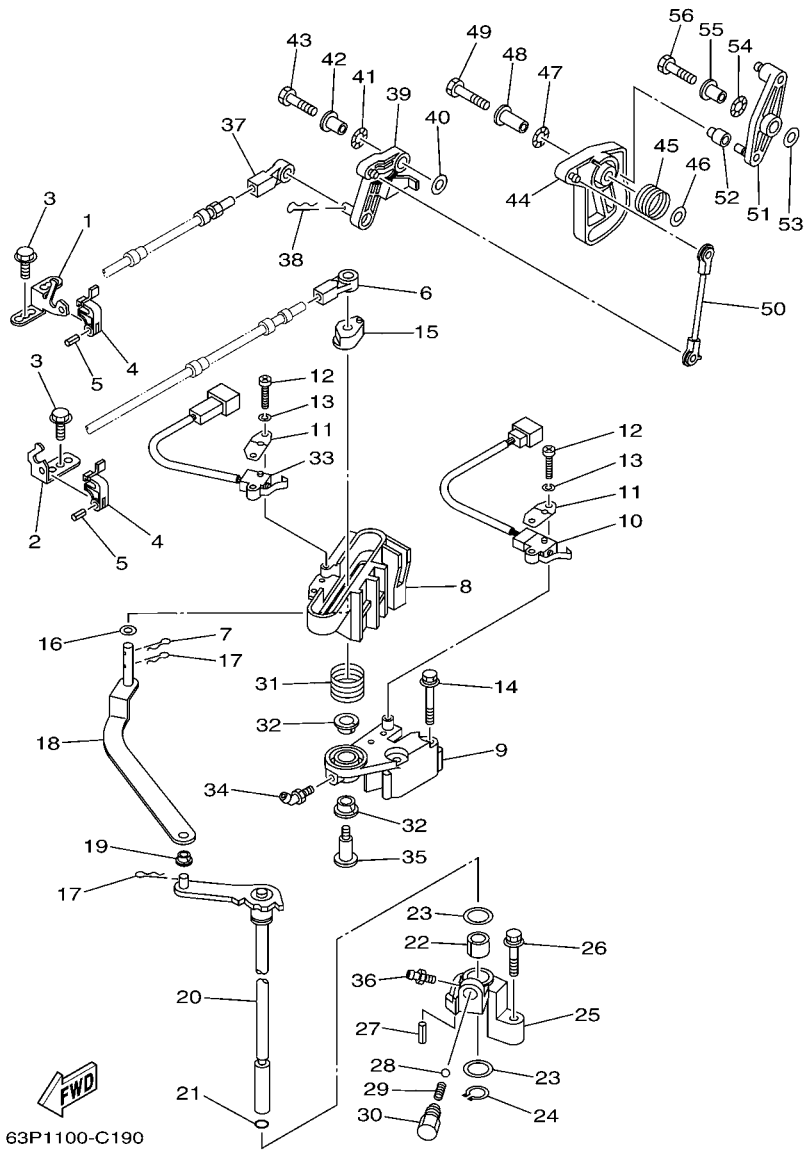

FIG. 21 CONTROL COMMANDE

REF. NO.	PART NO. N° PIECES	DESCRIPTION DESCRIPTION	63P2	64P2				REMARKS REMARQUES
28	93501–04M02	BALL BILLE	1	1				
29	90501–12082	SPRING, COMPRESSION RESSORT, COMPRESSION	1	1				
30	648–42715–00	BUSHING COUSSINET	1	1				
31	90508–20M31	SPRING, TORSION RESSORT, TORSION	1	1				
32	90386–12069	BUSH DOUILLE	2	2				
33	60V–8259F–00	SWITCH ASSY COMMUTATEUR	1	1				
34	93700–06M01	NIPPLE, GREASE PION	1	1				
35	90109–08019	BOLT BOULON	1	1				
36	93700–06M03	NIPPLE, GREASE PION	1	1				
37	6E5–48344–00	CABLE END, REMOTE CONTROL CHAPE CABLE	1	1				
38	90468–18008	CLIP JONC	1	1				
39	63P–42154–00	LEVER, THROTTLE CONTROL LEVIER DE COMMANDE D'AVANCE	1	1				
40	90201–06M31	WASHER, PLATE RONDELLE, PLATE	1	1				
41	90206–10M04	WASHER, WAVE RONDELLE, ONDULEE	1	1				
42	90387–06M29	COLLAR COLLERETTE	1	1				
43	97095–06025	BOLT BOULON	1	1				
44	63P–41213–00	CAM, ACCEL. CAME, ACCELERATION	1	1				
45	69J–44135–00	SPRING RESSORT	1	1				
46	90201–06M31	WASHER, PLATE RONDELLE, PLATE	1	1				
47	90206–10M04	WASHER, WAVE RONDELLE, ONDULEE	1	1				
48	90387–06M82	COLLAR COLLERETTE	1	1				
49	97095–06035	BOLT BOULON	1	1				
50	63P–41237–00	JOINT, LINK RACCORD	1	1				
51	63P–42157–00	LEVER, THROTTLE LEVIER DE AVANCE	1	1				
52	68V–42171–00	BUSHING COUSSINET	1	1				
53	90201–06M31	WASHER, PLATE RONDELLE, PLATE	1	1				
54	90206–10M04	WASHER, WAVE RONDELLE, ONDULEE	1	1				

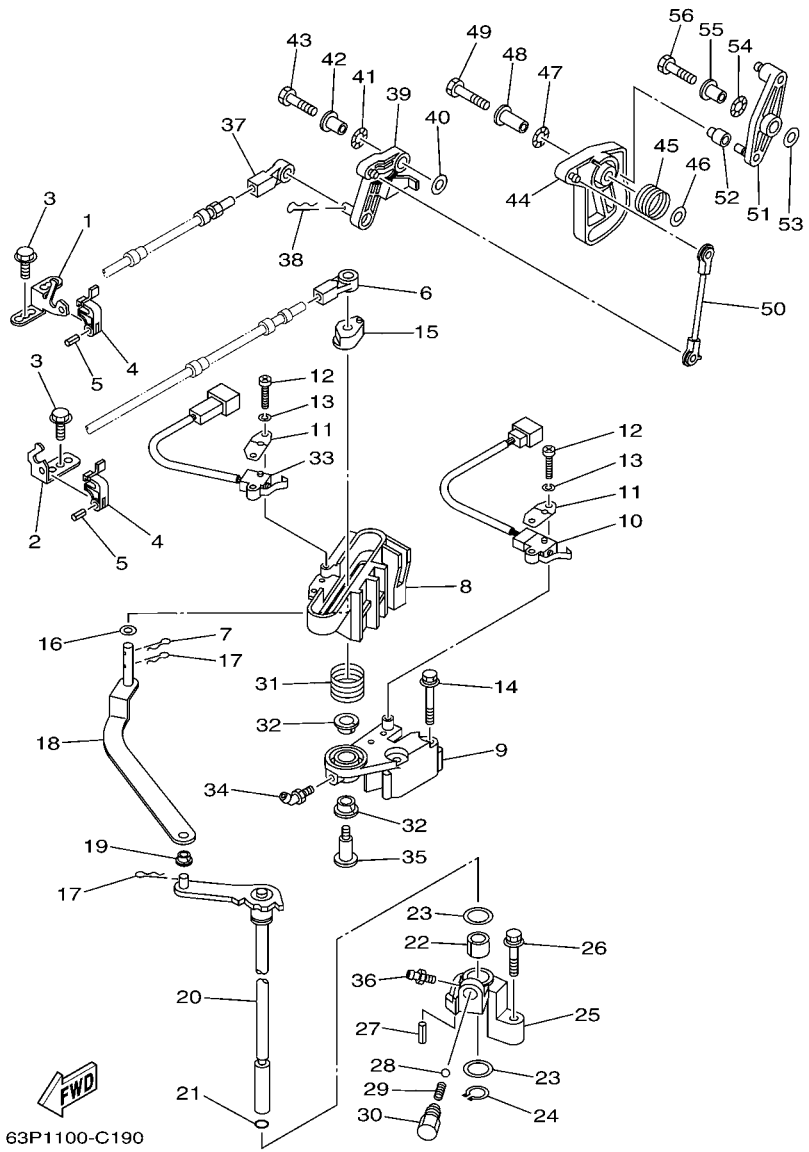

FIG. 21 CONTROL — COMMANDE

REF. NO.	PART NO. N° PIECES	DESCRIPTION DESCRIPTION	63P2	64P2				REMARKS REMARQUES
55	90387–06M29	COLLAR COLLERETTE	1	1				
56	97095–06025	BOLT BOULON	1	1				

FIG. 22 BRACKET 1 SUPPORT 1

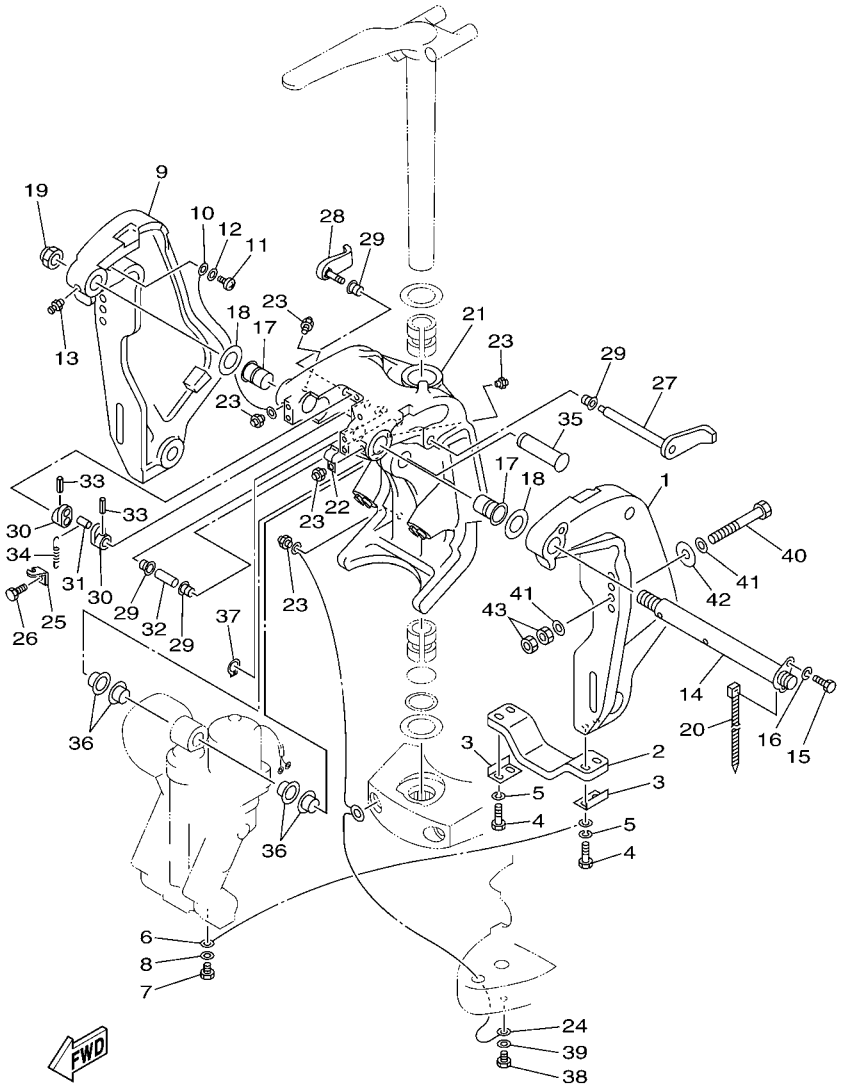

REF. NO.	PART NO. N° PIECES	DESCRIPTION DESCRIPTION	63P2	64P2				REMARKS REMARQUES
1	64E–43111–02–8D	BRACKET, CLAMP 1 PRESSE 1	1	1				
2	6G5–45251–02	ANODE ANODE	1	1				
3	6G5–44526–00	PLATE PLAQUE	2	2				
4	97095–06030	BOLT BOULON	4	4				
5	92995–06100	WASHER, SPRING RONDELLE, GROWER	4	4				
6	6E5–82148–00	WIRE, LEAD 4 FIL 4	1	1				
7	97095–06010	BOLT BOULON	1	1				
8	92995–06600	WASHER RONDELLE	1	1				
9	64E–43112–02–8D	BRACKET, CLAMP 2 PRESSE 2	1	1				
10	6E5–82148–00	WIRE, LEAD 4 FIL 4	1	1				
11	97880–06012	SCREW, PAN HEAD VIS, TETE TRONCONIQUE	1	1				
12	92990–06600	WASHER, PLATE RONDELLE, PLATE	1	1				
13	93700–06M03	NIPPLE, GREASE PION	1	1				
14	64E–43131–01	BOLT, CLAMP BRACKET BOULON, PRESSE	1	1				
15	97095–08020	BOLT BOULON	1	1				
16	92995–08100	WASHER RONDELLE	1	1				
17	90386–25M31	BUSH DOUILLE	2	2				
18	90201–26M59	WASHER, PLATE RONDELLE, PLATE	2	2				
19	90185–22M11	NUT, SELF-LOCKING ECROU, AUTO-BLOCANT	1	1				
20	90465–11M10	CLAMP BRIDE	1	1				
21	64E–43311–10–8D	BRACKET, SWIVEL 1 SUPPORT, PIVOT 1	1	1				
22	90465–08M63	CLAMP BRIDE	1	1				
23	93700–06M03	NIPPLE, GREASE PION	5	5				
24	66K–82149–00	WIRE, LEAD 3 FIL 3	1	1				
25	6G5–43144–00	HOOK, SPRING CROCHET	1	1				
26	97095–06010	BOLT BOULON	1	1				
27	6G5–43181–02	LEVER, TILT STOP LEVIER, VERROUILLAGE RELEVAGE	1	1				

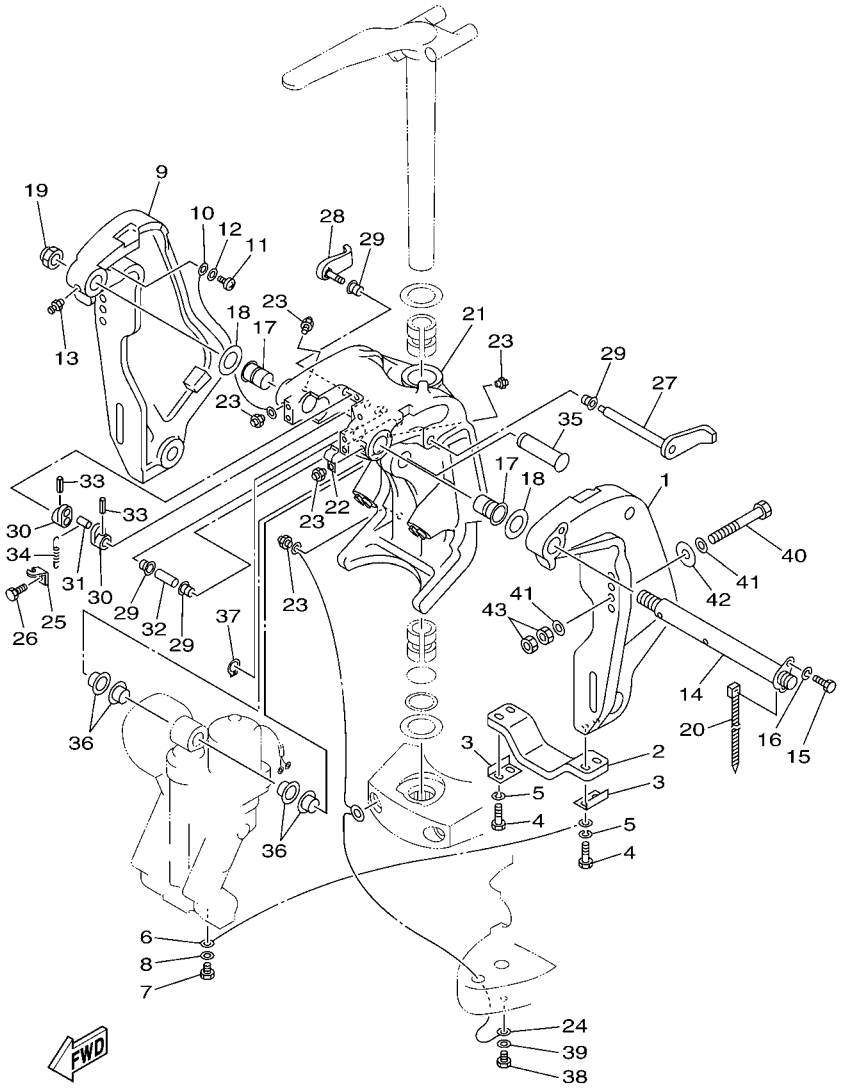

FIG. 22 BRACKET 1 SUPPORT 1

REF. NO.	PART NO. N° PIECES	DESCRIPTION DESCRIPTION	63P2	64P2				REMARKS REMARQUES
28	6G5–43185–02	LEVER, TILT STOP LEVIER, VERROUILLAGE RELEVAGE	1	1				
29	90386–10M16	BUSH DOUILLE	4	4				
30	6G5–43148–00	COLLAR, DISTANCE ENTRETOISE	2	2				
31	90249–06M19	PIN GOUPILLE	1	1				
32	90387–10M05	COLLAR COLLERETTE	1	1				
33	91690–30020	PIN, SPRING AGRAFFE	2	2				
34	90506–16003	SPRING, TENSION RESSORT, TENSION	1	1				
35	64E–43126–00	PIN, UPPER SHOCK MOUNT AXE, SUPERIEUR AMORTISSEUR	1	1				
36	90386–22M98	BUSH DOUILLE	4	4				
37	93410–22M11	CIRCLIP CLIPS	1	1				
38	97095–06010	BOLT BOULON	1	1				
39	92995–06600	WASHER RONDELLE	1	1				
40	90101–12M05	BOLT (L:130MM) BOULON (L:130MM)	4	4				
41	90201–13M01	WASHER, PLATE RONDELLE, PLATE	8	8				
42	90201–12M05	WASHER, PLATE RONDELLE, PLATE	4	4				
43	95380–12600	NUT ECROU	8	8				

FIG. 23 BRACKET 2 SUPPORT 2

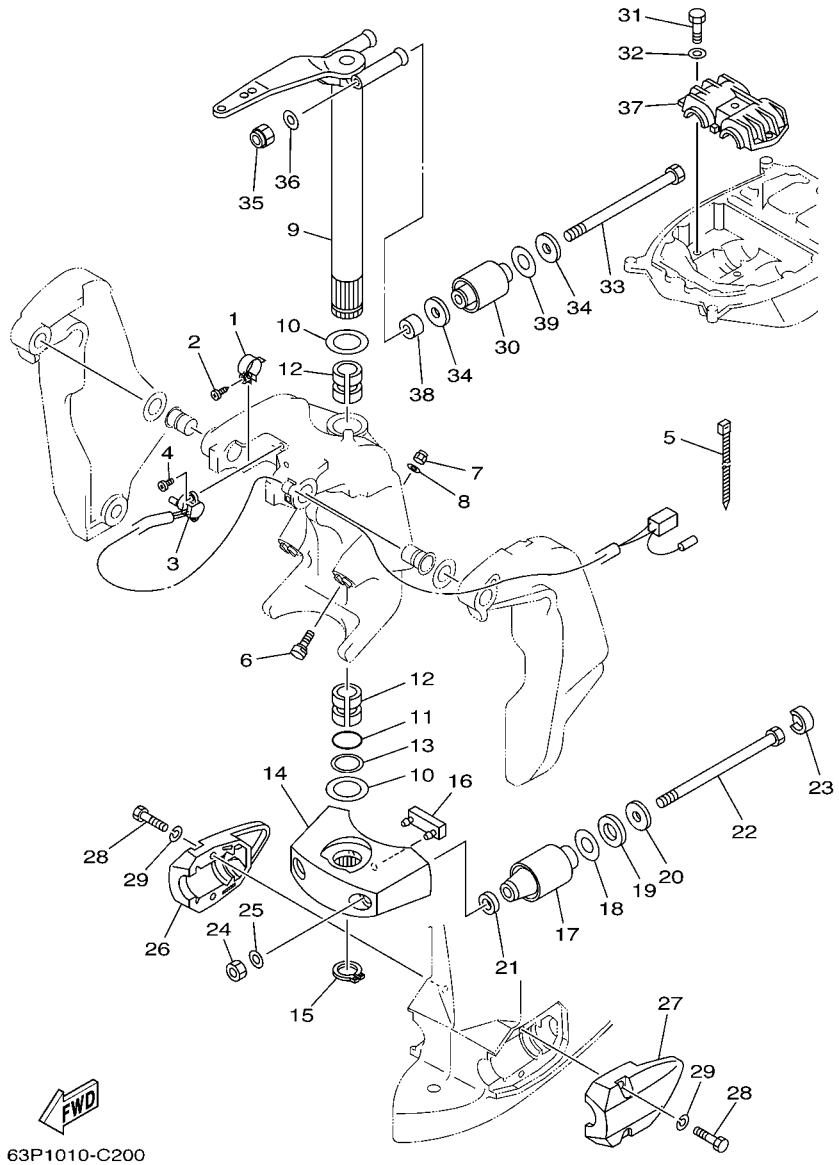

REF. NO.	PART NO. N° PIECES	DESCRIPTION DESCRIPTION	63P2	64P2				REMARKS REMARQUES
1	64E–43139–02	CAM, TRIM SENDER VILEBREQUIN TRUM	1	1				
2	97780–60525	SCREW, TAPPING VIS, TETE BOMBEE	1	1				
3	64E–83672–02	TRIM SENDER INCLINER RACCORD	1	1				
4	97885–06016	SCREW, PAN HEAD VIS, A ENCOCHE	2	2				
5	90465–11M10	CLAMP BRIDE	3	3				
6	63P–43376–00	BOLT, THRUST RECEIVER BOULON	2	2				
7	95780–10300	NUT, FLANGE ECROU	2	2				
8	92995–10600	WASHER RONDELLE	2	2				
9	66K–42510–01–8D	STEERING BRACKET ASSY DIRECTION SUPPORT (ENS.)	1	1				
10	90201–38M60	WASHER, PLATE RONDELLE, PLATE	2	2				
11	93210–37MH7	O-RING JOINT TORIQUE	1	1				
12	90386–38M32	BUSH DOUILLE	2	2				
13	90202–40M47	WASHER, PLATE RONDELLE, PLATE	1	1				
14	68V–44551–00–8D	HOUSING, LOWER MOUNT RUBBER BOITIER, SILENT-BLOC INFERIEUR	1	1				
15	93410–37M04	CIRCLIP CLIPS	1	1				
16	61A–44575–00	DAMPER, LOWER MOUNT RUBBER SILENT-BLOC, INFERIEUR	1	1				
17	60V–44555–00–94	MOUNT DAMPER, LOWER SIDE SILENT-BLOC, INFERIEUR LATERAL	2	2				L L
	63P–44555–00–94	MOUNT DAMPER, LOWER SIDE SILENT-BLOC, INFERIEUR LATERAL	2	2				X X
18	90201–35008	WASHER, PLATE RONDELLE, PLATE	2	2				
19	90202–32M19	WASHER, PLATE RONDELLE, PLATE	2	2				
20	90201–16M55	WASHER, PLATE RONDELLE, PLATE	2	2				
21	90201–15M58	WASHER, PLATE RONDELLE, PLATE	2	2				
22	90109–14007	BOLT BOULON	2	2				
23	69J–44533–00	DAMPER, UPPER MOUNT RUBBER COUVERCLE, SUSPENSION INFERIEU	2	2				
24	95380–14600	NUT ECROU	2	2				
25	92995–14600	WASHER RONDELLE	2	2				
26	63P–44553–00–8D	COVER, LOWER MOUNT COUVERCLE, SUSPENSION INFERIEU	1	1				

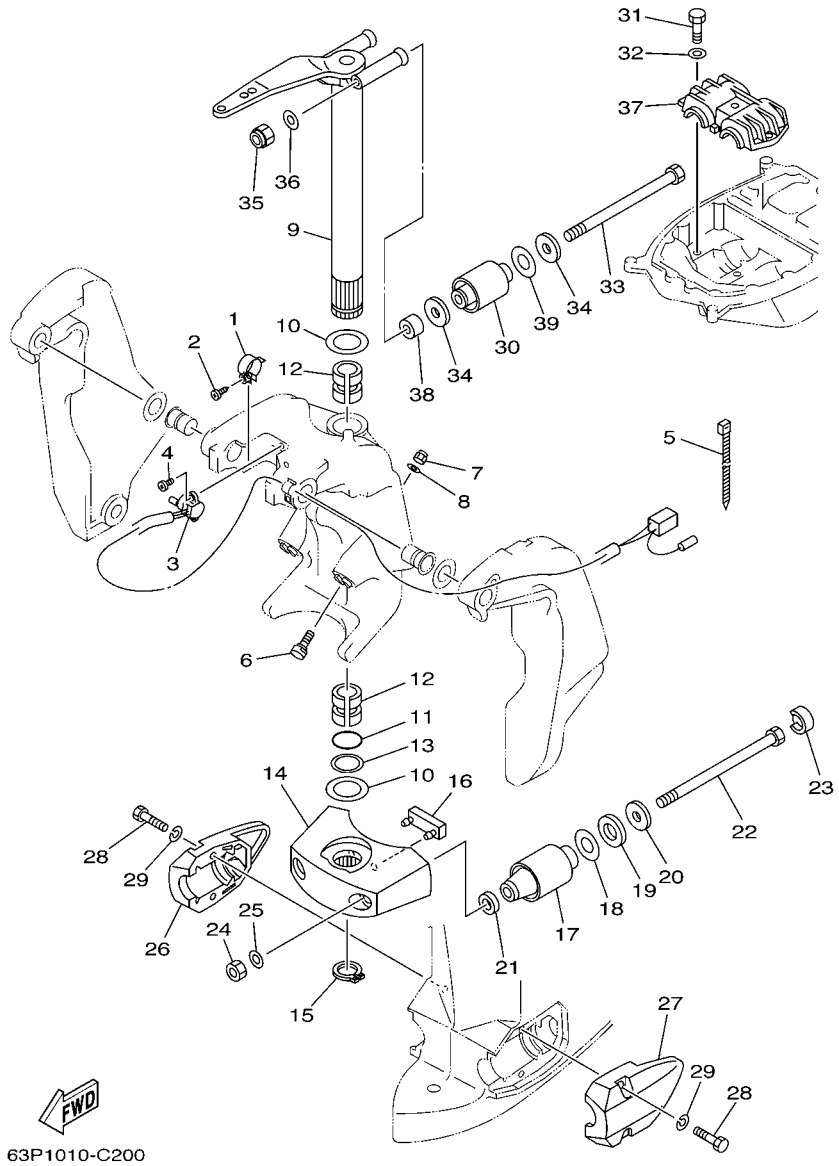

FIG. 23 BRACKET 2 SUPPORT 2

REF. NO.	PART NO. N° PIECES	DESCRIPTION DESCRIPTION	63P2	64P2				REMARKS REMARQUES
27	63P–44556–00–8D	COVER, LOWER MOUNT 2 COUVERCLE,SUSPENSION INFERIEU	1	1				
28	97075–10040	BOLT BOULON	4	4				
29	92995–10100	WASHER RONDELLE	4	4				
30	63P–44514–00–94	MOUNT DAMPER, UPPER SIDE SILENT-BLOC, SUPERIEUR LATERAL	2	2				
31	97075–10045	BOLT BOULON	3	3				
32	92995–10600	WASHER RONDELLE	3	3				
33	90109–14005	BOLT BOULON	2	2				
34	90201–16M01	WASHER, PLATE RONDELLE, PLATE	4	4				
35	90185–14M00	NUT, SELF-LOCKING ECROU, AUTO-BLOCANT	2	2				
36	92995–14600	WASHER RONDELLE	2	2				
37	63P–44511–00–94	COVER, UPPER MOUNT COUVERCLE, SUSPENSION SUPERIEU	1	1				
38	90387–14004	COLLAR COLLERETTE	2	2				
39	90202–28001	WASHER, PLATE RONDELLE, PLATE	2	2				

FIG. 24 POWER TRIM & TILT ASSY 1 PUISSANCE PARER ET INCLINER 1

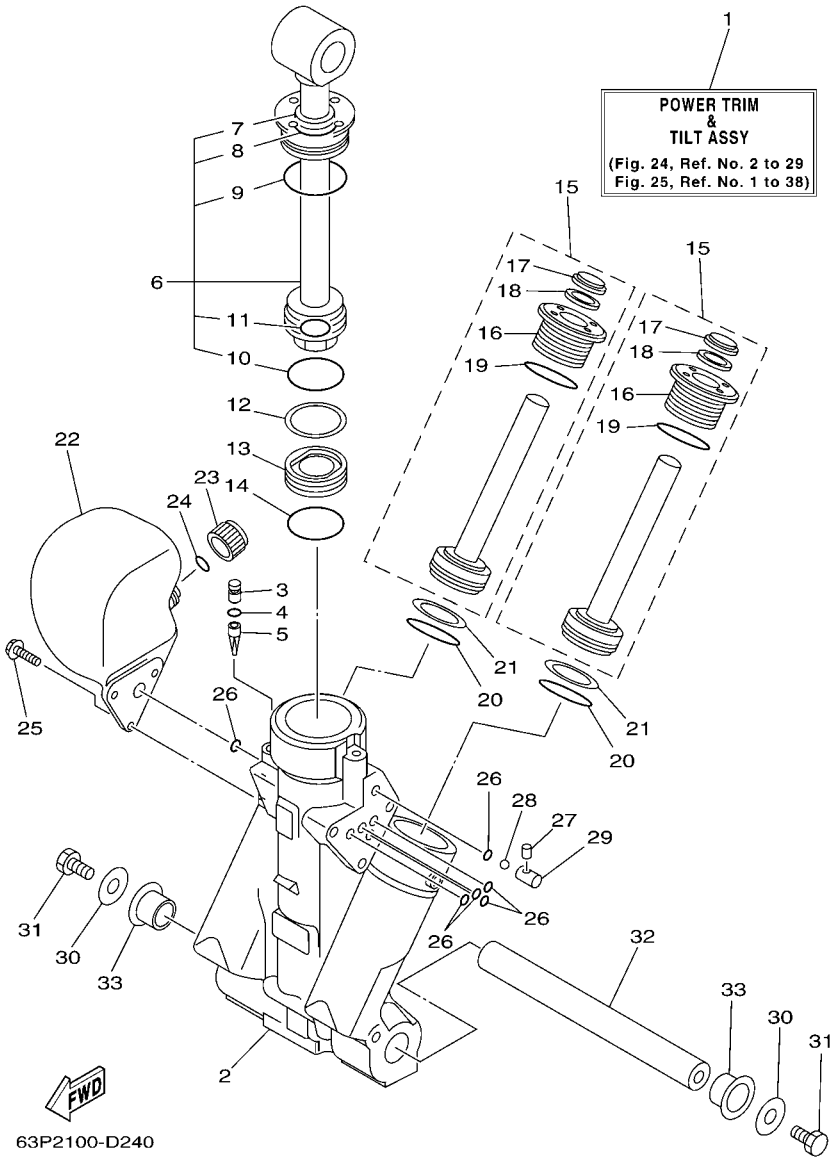

REF. NO.	PART NO. N° PIECES	DESCRIPTION DESCRIPTION	63P2	64P2				REMARKS REMARQUES
1	63P–43800–00–4D	POWER TRIM & TILT ASSY PUISSANCE PARER ET INCLINER (E	1	1				
2	64E–43825–01	HOUSING, TRIM & TILT CARTER	1	1				
3	64E–4388J–00	PLUG 2 BOUCHON 2	1	1				
4	93210–10M74	O-RING JOINT TORIQUE	1	1				
5	64E–43817–00	FILTER 2 FILTRE 2	1	1				
6	63P–43810–00	TILT PISTON SUB ASSY INCLINER PISTON AUXILIAIRE(ENS	1	1				
7	64E–43898–00	.SEAL ,DUST 2 .JOINT ANTI-PUSSIERE	1	1				
8	64E–43867–00	.O-RING .JOINT TORIQUE	1	1				
9	64E–43866–00	.O-RING .JOINT TORIQUE	1	1				
10	6E5–43862–00	.O-RING .JOINT TORIQUE	1	1				
11	64E–43883–00	.O-RING .JOINT TORIQUE	1	1				
12	6E5–43872–00	RING, BACK UP RESSORT	1	1				
13	6E5–43814–02	PISTON, FREE PISTON	1	1				
14	6E5–43862–00	O-RING JOINT TORIQUE	1	1				
15	64E–43820–00	TRIM PISTON SUB ASSY PARER PISTON AUXILIAIRE (ENS.)	2	2				
16	64E–43821–00	.SCREW, TRIM CYLINDER END .VIS	1	1				
17	64E–43822–00	.SEAL, TRIM DUST .JOINT	1	1				
18	64E–4384J–00	.SEAL, TRIM DOWN .JOINT	1	1				
19	6G5–43864–00	.O-RING .JOINT TORIQUE	1	1				
20	6E5–43864–00	O-RING JOINT TORIQUE	2	2				
21	6E5–43874–01	RING, BACK UP RESSORT	2	2				
22	64E–43828–00	BODY, RESERVOIR CORPS	1	1				
23	64E–43829–00	PLUG, RESERVOIR BOUCHON	1	1				
24	64E–43897–00	O-RING JOINT TORIQUE	1	1				
25	64E–4388E–00	BOLT ,SCREW (L:14MM) VIS (L:14MM)	3	3				
26	64E–43869–00	O-RING JOINT TORIQUE	6	6				
27	64E–4381G–00	PIN COUPILL	1	1				

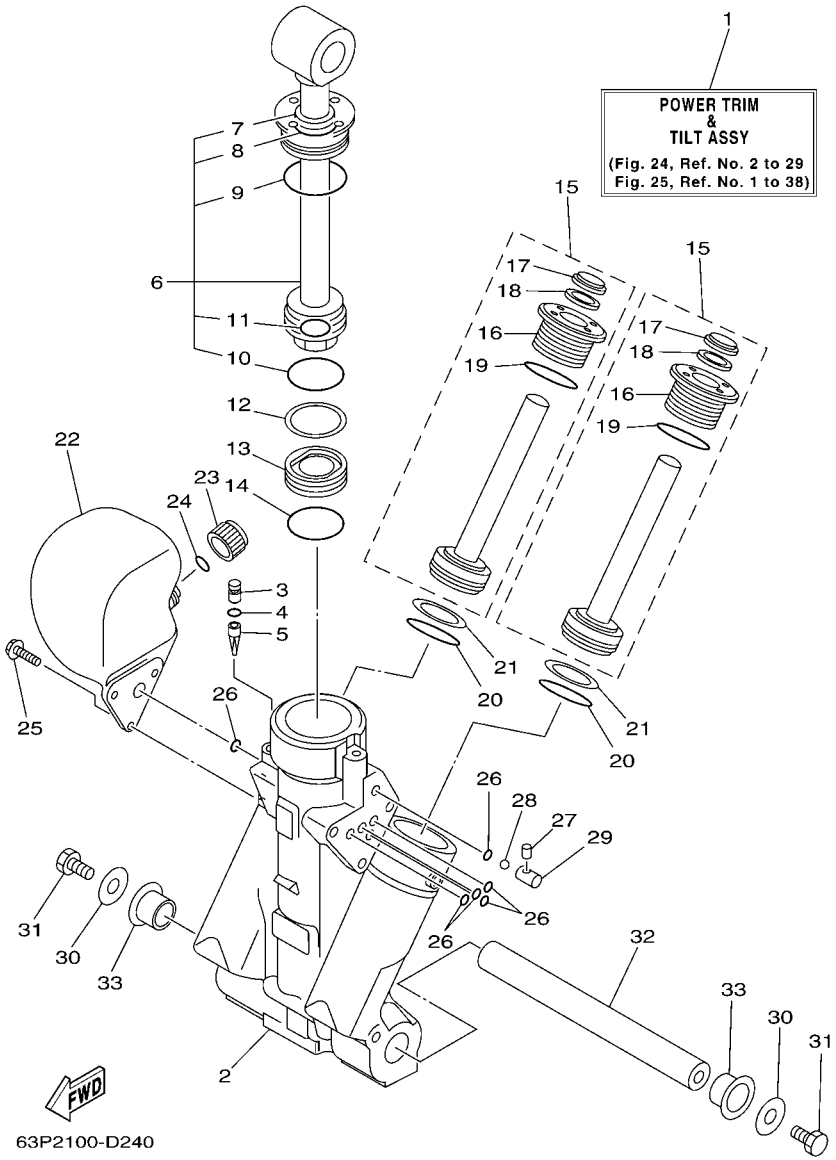

FIG. 24 POWER TRIM & TILT ASSY 1 PUISSANCE PARER ET INCLINER 1

REF. NO.	PART NO. N° PIECES	DESCRIPTION DESCRIPTION	63P2	64P2				REMARKS REMARQUES
28	6E5–43858–00	BALL BILLE	1	1				
29	64E–4382G–00	VALVE, SEAT JEU DE POINTEAUX	1	1				
30	90201–08M14	WASHER, PLATE RONDELLE, PLATE	2	2				
31	97080–08016	BOLT BOULON	2	2				
32	64E–43818–01	PIN, LOWER SHOCK MOUNT AXE, INFERIEUR AMORTISSEUR	1	1				
33	90386–22M98	BUSH DOUILLE	2	2				

FIG. 25 POWER TRIM & TILT ASSY 2 PUISSANCE PARER ET INCLINER 2

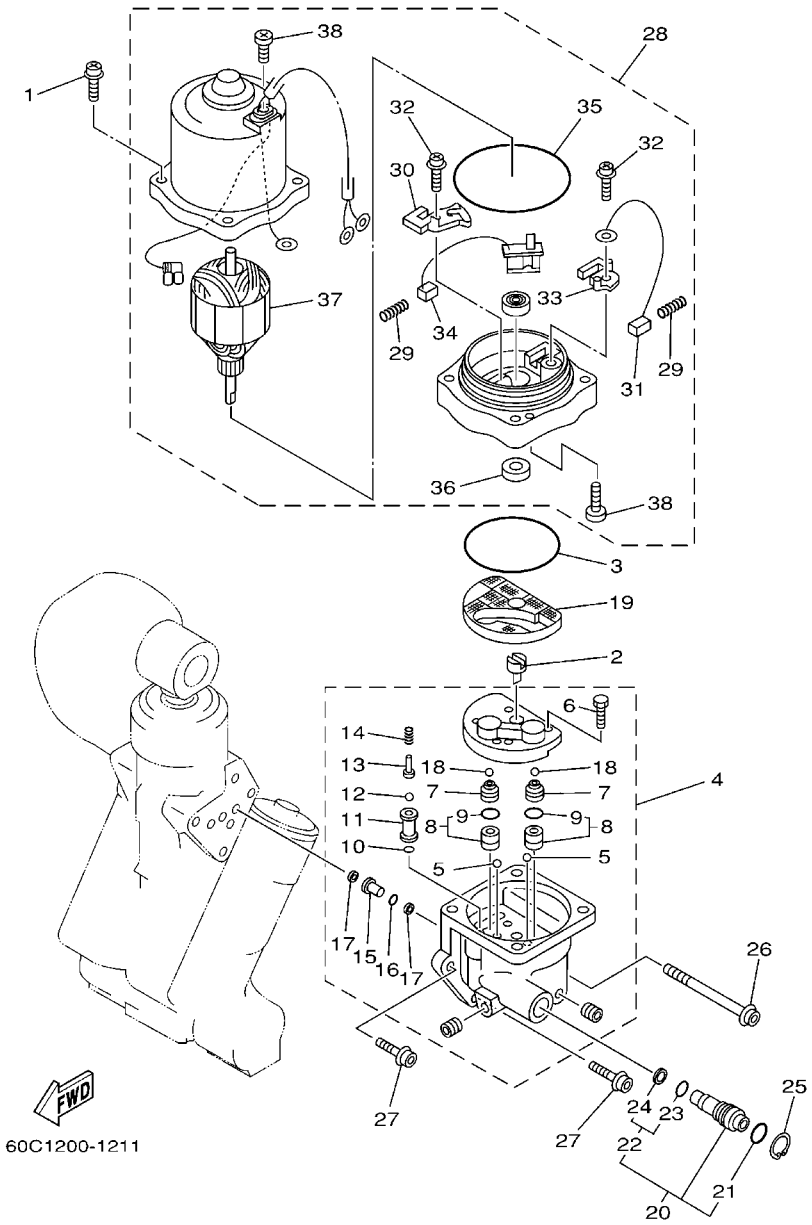

REF. NO.	PART NO. N° PIECES	DESCRIPTION DESCRIPTION	63P2	64P2				REMARKS REMARQUES
1	64E–4388E–10	BOLT ,SCREW (L:34.7MM) VIS (L:34.7MM)	4	4				
2	64E–43831–00	CONNECTOR, SHAFT RACCORD	1	1				
3	64E–43868–00	O-RING JOINT TORIQUE	1	1				
4	64E–43830–00	GEAR PUMP ASSY POMPE A PIGNON (ENS.)	1	1				
5	72X–43858–00	.BALL .BILLE	2	2				
6	64E–43843–00	.SCREW, VALVE LOCK .VIS	4	4				
7	64E–43841–00	.PISTON, SHUTTLE .PISTON	2	2				
8	64E–43802–00	.VALVE SUB ASSY .CLAPET AUXILIAIRE (ENS.)	2	2				
9	6E5–43896–00	..O-RING ..JOINT TORIQUE	1	1				
10	6G5–43863–00	.O-RING .JOINT TORIQUE	1	1				
11	64E–43851–00	.SEAT, RELIEF VALVE .SIEGE	1	1				
12	64E–43858–00	.BALL .BILLE	1	1				
13	64E–43859–00	.PIN, VALVE SUPPORT .GOUPILLE	1	1				
14	64E–43855–00	.SPRING, UP RELIEF .RESSORT	1	1				
15	64E–43850–00	.VALVE SUB ASSY .CLAPET AUXILIAIRE (ENS.)	1	1				
16	64E–43865–00	.O-RING .JOINT TORIQUE	1	1				
17	64E–43816–00	.FILTER 1 .FILTRE 1	2	2				
18	64E–43858–00	.BALL .BILLE	2	2				
19	64E–43817–10	FILTER 2 FILTRE 2	1	1				
20	64E–43860–00	MANUAL VALVE SUB-ASSY SOUPAPE, MANUEL (ENS.)	1	1				
21	72X–85075–L0	.O-RING .JOINT TORIQUE	1	1				
22	64E–43827–00	.RING SET .BILLE	1	1				
23	64E–4387A–00	..O-RING ..JOINT TORIQUE	1	1				
24	64E–43873–00	..RING, BACK UP ..RESSORT	1	1				
25	64E–43875–00	RING, SNAP RESSORT	1	1				
26	64E–43879–10	SCREW, WITH WASHER VIS, AVEC RONDELLE	1	1				
27	64E–43879–00	SCREW, WITH WASHER VIS, AVEC RONDELLE	2	2				

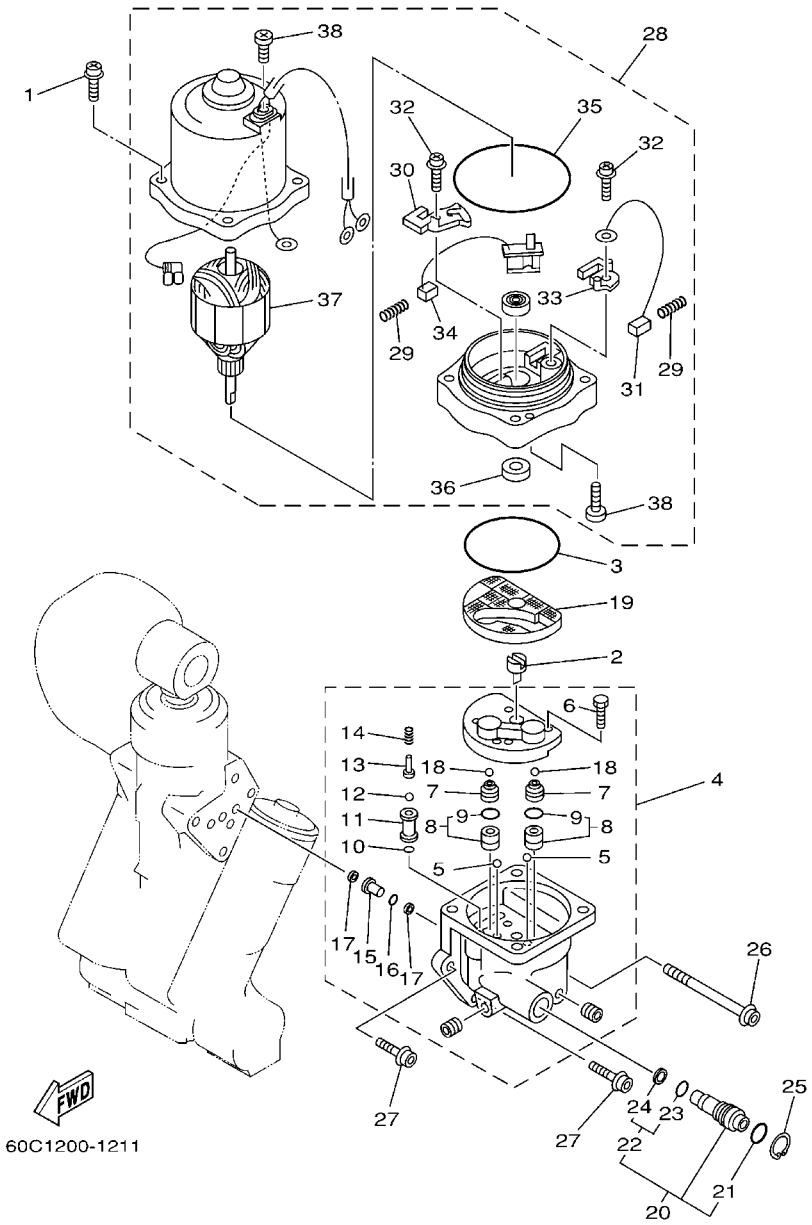

FIG. 25 POWER TRIM & TILT ASSY 2 PUISSANCE PARER ET INCLINER 2

REF. NO.	PART NO. N° PIECES	DESCRIPTION DESCRIPTION	63P2	64P2				REMARKS REMARQUES
28	67H–43880–01	MOTOR ASSY MOTEUR (ENS.)	1	1				
29	6H1–4386K–10	.SPRING, BRUSH .RESSORT, BALAI	2	2				
30	64E–4380J–00	.HOLDER, BRUSH .PORTE-BALAI	1	1				
31	64E–43891–00	.BRUSH 1 .BALAI 1	1	1				
32	97607–04310	.SCREW,WITH WASHER .VIS HEXAGONAL	2	2				
33	64E–4380F–00	.HOLDER, BRUSH 2 .PORTE-BALAI 2	1	1				
34	64E–43892–00	.BRUSH 2 .BALAI 2	1	1				
35	6G5–43865–00	.O-RING .JOINT TORIQUE	1	1				
36	93102–08M43	.OIL SEAL .JOINT SPY	1	1				
37	64E–43805–00	.ARMATURE ASSY .INDUIT (ENS.)	1	1				
38	64E–43843–10	.SCREW, VALVE LOCK .VIS	3	3				

FIG. 26 UPPER CASING FOURREAU

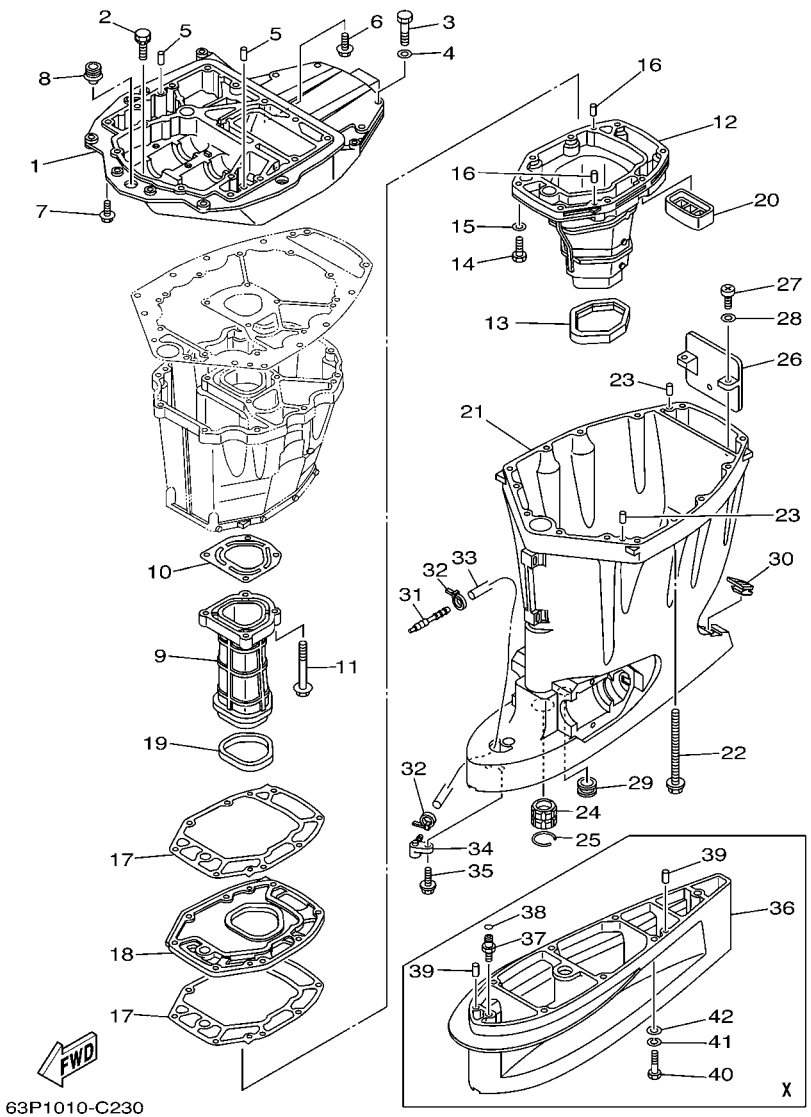

63P1010-C230

REF. NO.	PART NO. N° PIECES	DESCRIPTION DESCRIPTION	63P2	64P2				REMARKS REMARQUES
1	63P–41137–00	GUIDE, EXHAUST COLLECTEUR D'ECHAPPEMENT	1	1				
2	90119–08M79	BOLT, WITH WASHER BOULON, AVEC RONDELLE	2	2				
3	97075–10045	BOLT BOULON	4	4				
4	92995–10600	WASHER RONDELLE	4	4				
5	93608–16M16	PIN, DOWEL AXE	2	2				
6	90119–08M58	BOLT, WITH WASHER BOULON, AVEC RONDELLE	3	3				
7	97575–10535	BOLT, WITH WASHER VIS HEXAGONAL AVC RONDELLE	4	4				
8	6E5–42724–00	GROMMET PASSE-FIL	1	1				
9	63P–41131–00–5B	MANIFOLD, EXT. 1 PIPE D'ECHAPPEMENT	1	1				
10	63P–41133–A0	GASKET, EXHAUST MANIFOLD 1 JOINT, PIPE D'ECHAPPEMENT	1	1				
11	97575–08560	BOLT, WITH WASHER VIS HEXAGONAL AVC RONDELLE	4	4				
12	63P–14711–00–5B	MUFFLER 1 POT D'ECHAPPEMENT 1	1	1				
13	69J–45123–00	GASKET, MUFFLER JOINT, POT DE DETENTE	1	1				
14	97075–08035	BOLT BOULON	8	8				
15	92995–08600	WASHER RONDELLE	8	8				
16	93606–19M23	PIN, DOWEL GOUPILLE	2	2				
17	63P–41134–A0	GASKET, EXHAUST MANIFOLD JOINT, PIPE D'ECHAPPEMENT	2	2				
18	63P–45181–00–5B	PLATE PLAQUETTE	1	1				
19	63P–41138–00	SEAL, EXT. 1 JOINT DE GROUPE 1	1	1				
20	69J–45127–00	SEAL JOINT	1	1				
21	63P–45111–00–8D	CASING, UPPER FOURREAU	1	1				
22	90119–10007	BOLT, WITH WASHER BOULON, AVEC RONDELLE	8	8				
23	93608–16M16	PIN, DOWEL AXE	2	2				
24	6E5–45318–00	BUSHING, DRIVE SHAFT DOUILLE, ARBRE MOTEUR	1	1				
25	93420–36M01	CIRCLIP CIRCLIP, TYPE S	1	1				
26	69J–14624–01	COVER, EXHAUST CACHE D'ECHAPPEMENT	1	1				
27	97880–06016	SCREW, PAN HEAD VIS, TETE TRONCONIQUE	2	2				

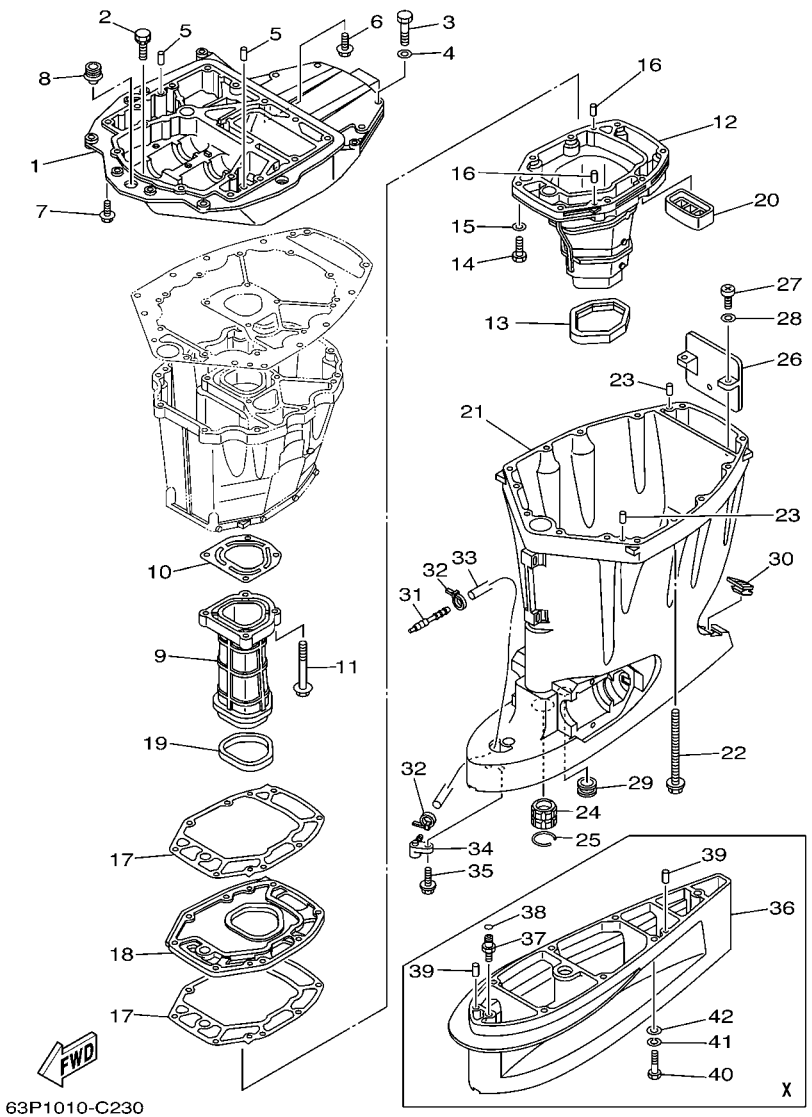

63P1010-C230

FIG. 26 UPPER CASING FOURREAU

REF. NO.	PART NO. N° PIECES	DESCRIPTION DESCRIPTION	63P2	64P2				REMARKS REMARQUES
28	92990–06600	WASHER, PLATE RONDELLE, PLATE	2	2				
29	6E5–44366–00	DAMPER, WATER SEAL JOINT, TUBE D'EAU	1	1				
30	6H3–45155–00	CAP CAPUCHON	1	1				
31	6E5–83558–00	END, NIPPLE RACCORD DE NIPPLE	1	1				
32	90465–11M10	CLAMP BRIDE	2	2				
33	90445–070F1	HOSE (L950) DURITE (L950)	1	1				
34	63P–45379–00	NIPPLE, HOSE RACCORD D'ESSENCE	1	1				
35	90119–06M18	BOLT, WITH WASHER BOULON, AVEC RONDELLE	1	1				
36	63P–45211–00–8D	EXTENSION EXTENSION	1	1				X X
37	63P–45378–00	NIPPLE, HOSE RACCORD, TUYAU	1	1				X X
38	93210–07003	O-RING JOINT TORIQUE	1	1				X X
39	93608–16M16	PIN, DOWEL AXE	2	2				X X
40	97095–10045	BOLT BOULON	6	6				X X
41	92995–10100	WASHER RONDELLE	6	6				X X
42	92995–10600	WASHER RONDELLE	6	6				X X

FIG. 27 OIL PAN — VENTILATEUR D'HUILE

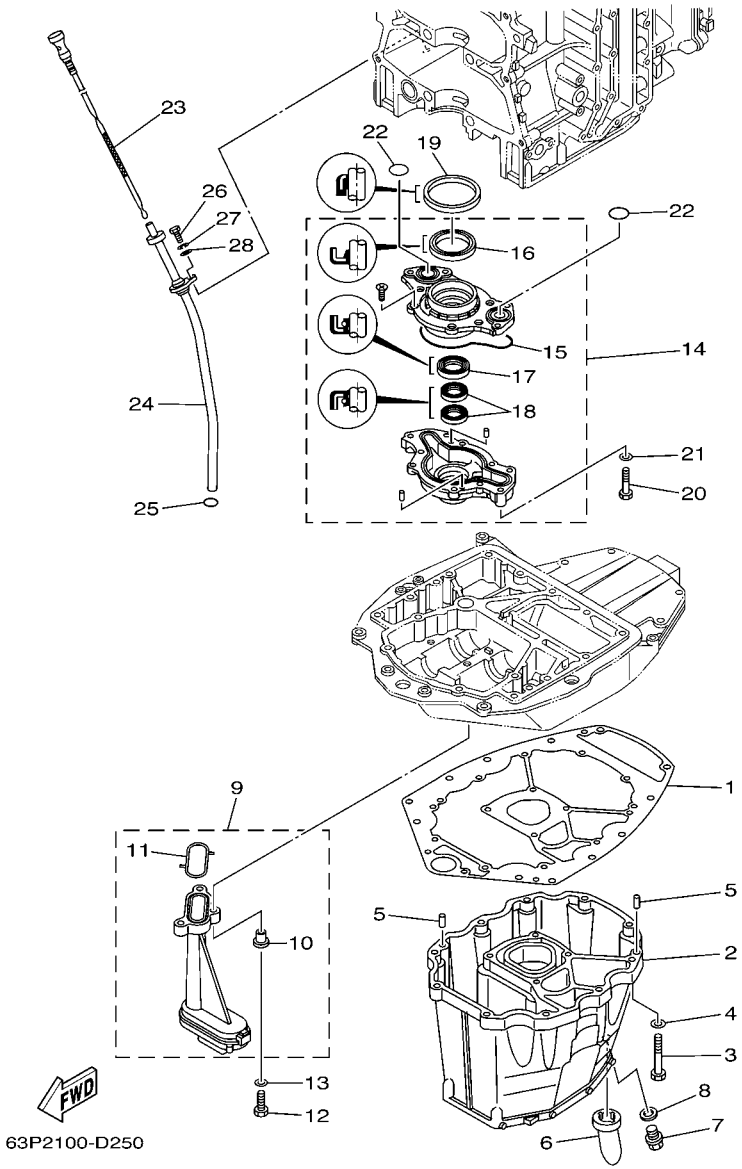

REF. NO.	PART NO. N° PIECES	DESCRIPTION DESCRIPTION	63P2	64P2				REMARKS REMARQUES
1	63P–15312–00	GASKET, OIL PAN JOINT DE VENTILATEUR D'HUILE	1	1				
2	63P–15311–00–5B	OIL PAN VENTILATEUR D'HUILE	1	1				
3	97075–08035	BOLT BOULON	10	10				
4	92995–08600	WASHER RONDELLE	10	10				
5	93608–16M16	PIN, DOWEL AXE	2	2				
6	63P–15316–00	DAMPER, ENGINE MOUNT 1 AMORTISSEUR DE SUPPORT	1	1				
7	90340–14M06	PLUG, STRAIGHT SCREW PLOT, FILETE DROIT	1	1				
8	90430–14M09	GASKET JOINT	1	1				
9	63P–13411–00	STRAINER, OIL FILTRE, HUILE	1	1				
10	90387–06M64	.COLLAR .COLLERETTE	3	3				
11	63P–13415–00	.SEAL, OIL STRAINER .JOINT, FILTRE A HUILE	1	1				
12	97027–06025	BOLT BOULON	3	3				
13	92907–06600	WASHER, PLATE RONDELLE	3	3				
14	63P–13300–00	OIL PUMP ASSY POMPE A HUILE COMPLETE	1	1				
15	63P–13329–00	.GASKET, PUMP COVER .JOINT, COUVERCLE DE POMPE	1	1				
16	69J–13338–00	.OIL SEAL .JOINT SPY	1	1				
17	69J–13119–00	.OIL SEAL .JOINT SPY	1	1				
18	69J–13631–00	.OIL SEAL .JOINT SPY	2	2				
19	69J–11355–00	SEAL, CYLINDER 1 JOINT, SPY CYLINDRE	1	1				
20	97095–06040	BOLT BOULON	4	4				
21	92995–06600	WASHER RONDELLE	4	4				
22	93210–25552	O-RING JOINT TORIQUE	2	2				
23	63P–15362–00	PLUG, OIL LEVEL PLOT, NIVEAU D'HUILE	1	1				
24	63P–15377–00	GUIDE, INLET GUIDE D'ADMISSION	1	1				
25	93210–19MJ3	O-RING JOINT TORIQUE	1	1				
26	97095–06020	BOLT BOULON	1	1				
27	92995–06100	WASHER, SPRING RONDELLE, GROWER	1	1				

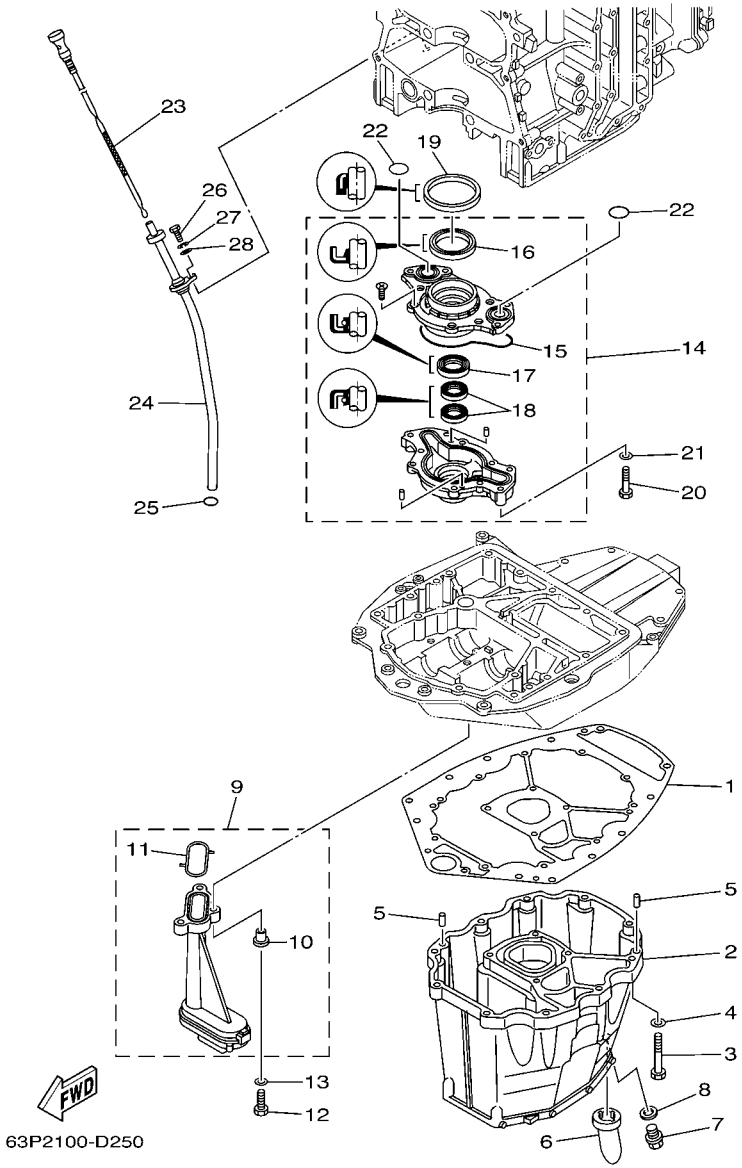

FIG. 27 OIL PAN — VENTILATEUR D'HUILE

REF. NO.	PART NO. N° PIECES	DESCRIPTION DESCRIPTION	63P2	64P2				REMARKS REMARQUES
28	92995–06600	WASHER RONDELLE	1	1				

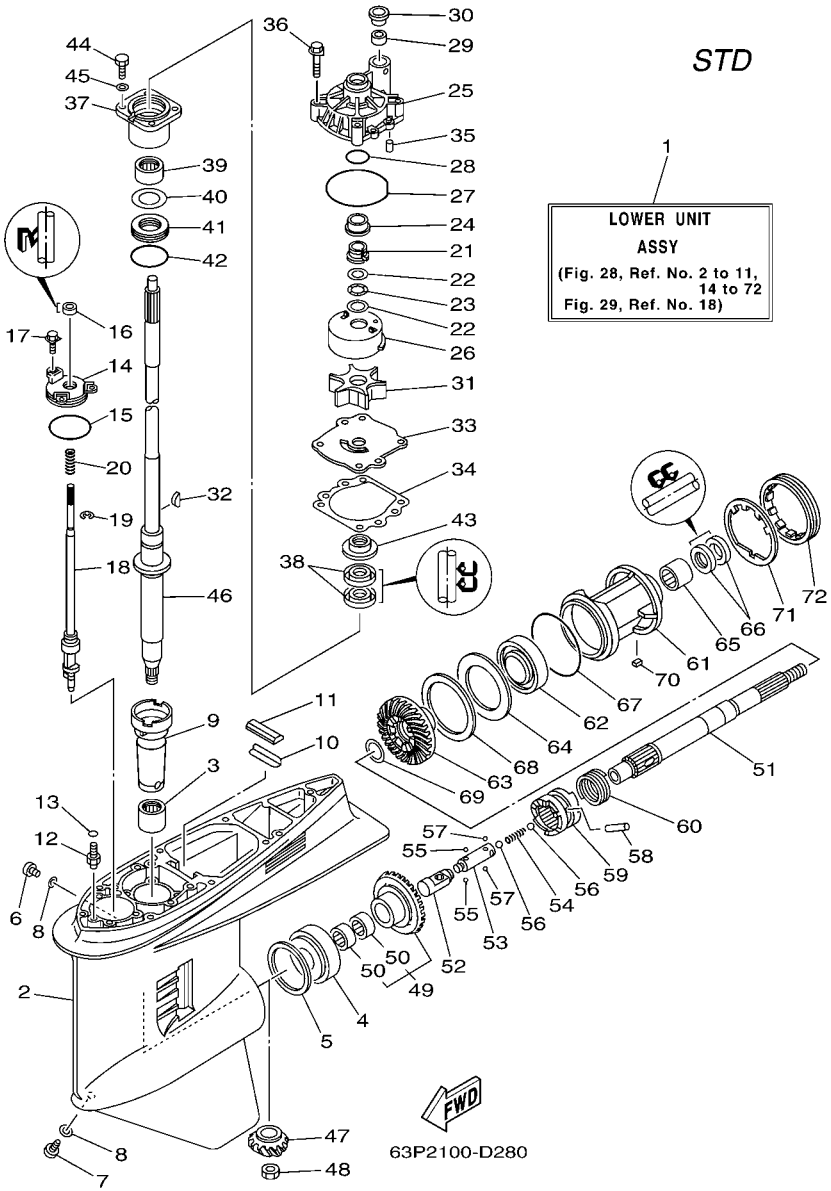

FIG. 28 LOWER CASING & DRIVE 1 BOITIER D'HELICE TRANSMISSION1

REF. NO.	PART NO. N° PIECES	DESCRIPTION DESCRIPTION	63P2	64P2				REMARKS REMARQUES
1	63P–45300–01–8D	LOWER UNIT ASSY UNITE INFERIEURE (ENS.)	1					L L
	63P–45300–11–8D	LOWER UNIT ASSY UNITE INFERIEURE (ENS.)	1					X X
2	6J9–45301–05–8D	CASING, LOWER BEQUILLE	1					
3	93311–928U5	BEARING ROULEMENT	1					
4	93332–000V3	BEARING ROULEMENT	1					
5	6G5–45567–01	SHIM (T:0.10MM) CALE (T:0.10MM)	1					UR UR
	6G5–45567–10	SHIM (T:0.12MM) CALE (T:0.12MM)	1					UR UR
	6G5–45567–20	SHIM (T:0.15MM) CALE (T:0.15MM)	1					UR UR
	6G5–45567–30	SHIM (T:0.18MM) CALE (T:0.18MM)	1					UR UR
	6G5–45567–40	SHIM (T:0.30MM) CALE (T:0.30MM)	1					UR UR
	6G5–45567–50	SHIM (T:0.40MM) CALE (T:0.40MM)	1					UR UR
	6G5–45567–60	SHIM (T:0.50MM) CALE (T:0.50MM)	1					UR UR
6	90340–08002	PLUG, STRAIGHT SCREW PLOT, FILETE DROIT	1					
7	688–45341–10	PLUG, DRAIN BOUCHON DE VIDANGE	1					
8	90430–08020	GASKET JOINT	2					
9	6G5–45536–01	SLEEVE, DRIVE SHAFT MANCHON, ARBRE MOTEUR	1					
10	663–45376–00–94	GUIDE, SEAL DAMPER BUTEE, JOINT CAOUTCHOUC	1					
11	688–45375–00	DAMPER, SEAL BOURRELET, CAOUTCHOUC	1					
12	63P–45378–00	NIPPLE, HOSE RACCORD, TUYAU	1					
13	93210–07003	O-RING JOINT TORIQUE	1					
14	6E5–45321–00	PLATE PLAQUETTE	1					
15	93210–58144	O-RING JOINT TORIQUE	1					
16	93106–09014	OIL SEAL JOINT SPY	1					
17	90119–06M10	BOLT, WITH WASHER BOULON, AVEC RONDELLE	3					
18	63P–44150–00	SHIFT CAM ASSY CAME D'INVERSION	1					L L
	63P–44150–10	SHIFT CAM ASSY CAME D'INVERSION	1					X X
19	99001–08600	CIRCLIP CIRCLIP	1					

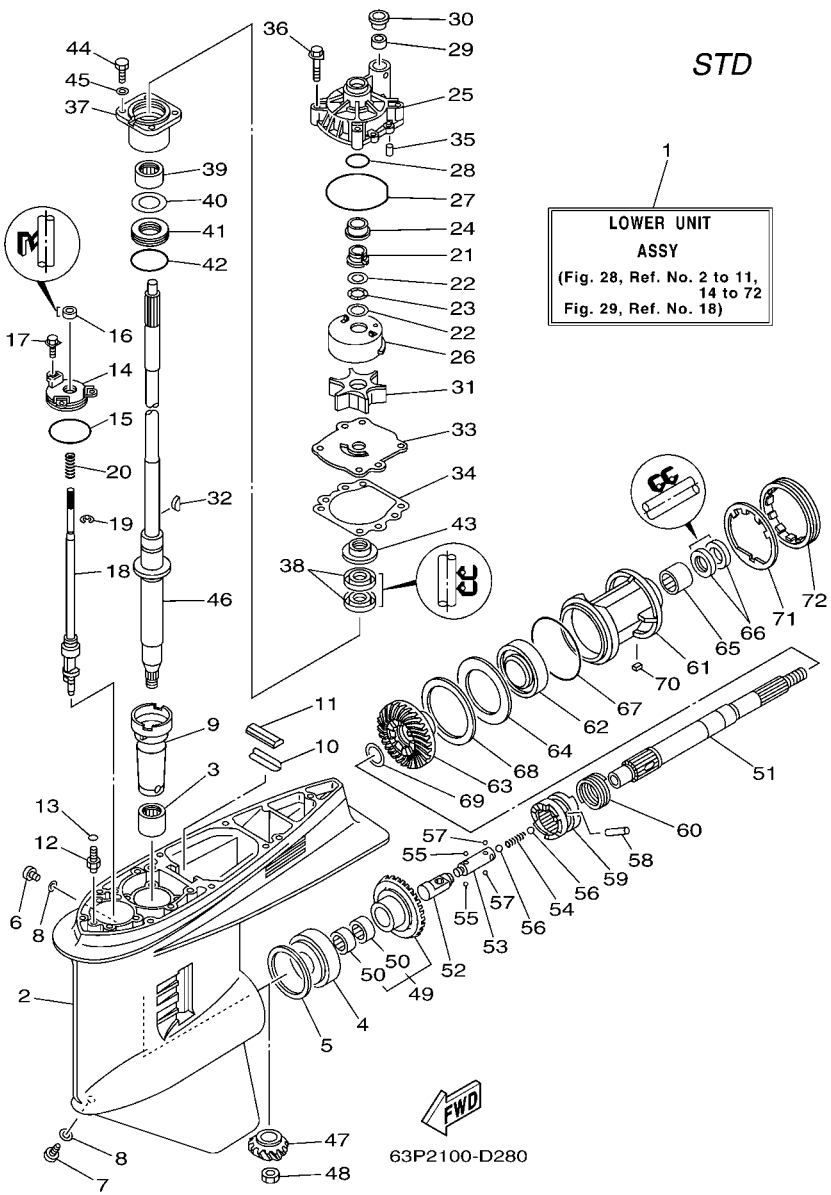

FIG. 28 LOWER CASING & DRIVE 1 BOITIER D'HELICE TRANSMISSION1

REF. NO.	PART NO. N° PIECES	DESCRIPTION DESCRIPTION	63P2	64P2				REMARKS REMARQUES
20	90501–11M10	SPRING, COMPRESSION RESSORT, COMPRESSION	1					
21	61A–45538–00	SPACER 1 ENTRETOISE	1					
22	90201–22M01	WASHER, PLATE RONDELLE, PLATE	2					
23	90206–22M19	WASHER, WAVE RONDELLE, ONDULEE	1					
24	61A–45527–00	COLLAR, DRIVE SHAFT ENTRETOISE	1					
25	61A–44311–01	HOUSING, WATER PUMP CORPS, POMPE A EAU	1					
26	61A–44322–02	INSERT, CARTRIDGE CUVETTE	1					
27	93210–86M38	O-RING JOINT TORIQUE	1					
28	93210–37160	O-RING JOINT TORIQUE	1					
29	6E5–44365–00	DAMPER, WATER SEAL JOINT, TUBE D'EAU	1					
30	6E5–44312–00	COVER, WATER PUMP HOUSING COUVERCLE	1					
31	6E5–44352–01	IMPELLER TURBINE	1					
32	90280–04M05	KEY, WOODRUFF CLAVETTE, DEMI-LUNE	1					
33	6G5–44323–00	OUTER PLATE, CARTRIDGE PLAQUE EXTERIEURE	1					
34	6E5–44315–A0	GASKET, WATER PUMP JOINT, POMPE A EAU	1					
35	93606–12019	PIN, DOWEL GOUPILLE	2					
36	90119–08M14	BOLT, WITH WASHER BOULON, AVEC RONDELLE	4					
37	6E5–45331–00–94	HOUSING, BEARING FLASQUE, ROULEMENT	1					
38	93101–28M16	OIL SEAL JOINT SPY	2					
39	93317–330U2	BEARING ROULEMENT	1					
40	6E5–45587–01	SHIM (T:0.10MM) CALE (T:0.10MM)	1					UR UR
	6E5–45587–10	SHIM (T:0.12MM) CALE (T:0.12MM)	1					UR UR
	6E5–45587–20	SHIM (T:0.15MM) CALE (T:0.15MM)	1					UR UR
	6E5–45587–30	SHIM (T:0.18MM) CALE (T:0.18MM)	1					UR UR
	6E5–45587–40	SHIM (T:0.30MM) CALE (T:0.30MM)	1					UR UR
	6E5–45587–50	SHIM (T:0.40MM) CALE (T:0.40MM)	1					UR UR
	6E5–45587–60	SHIM (T:0.50MM) CALE (T:0.50MM)	1					UR UR

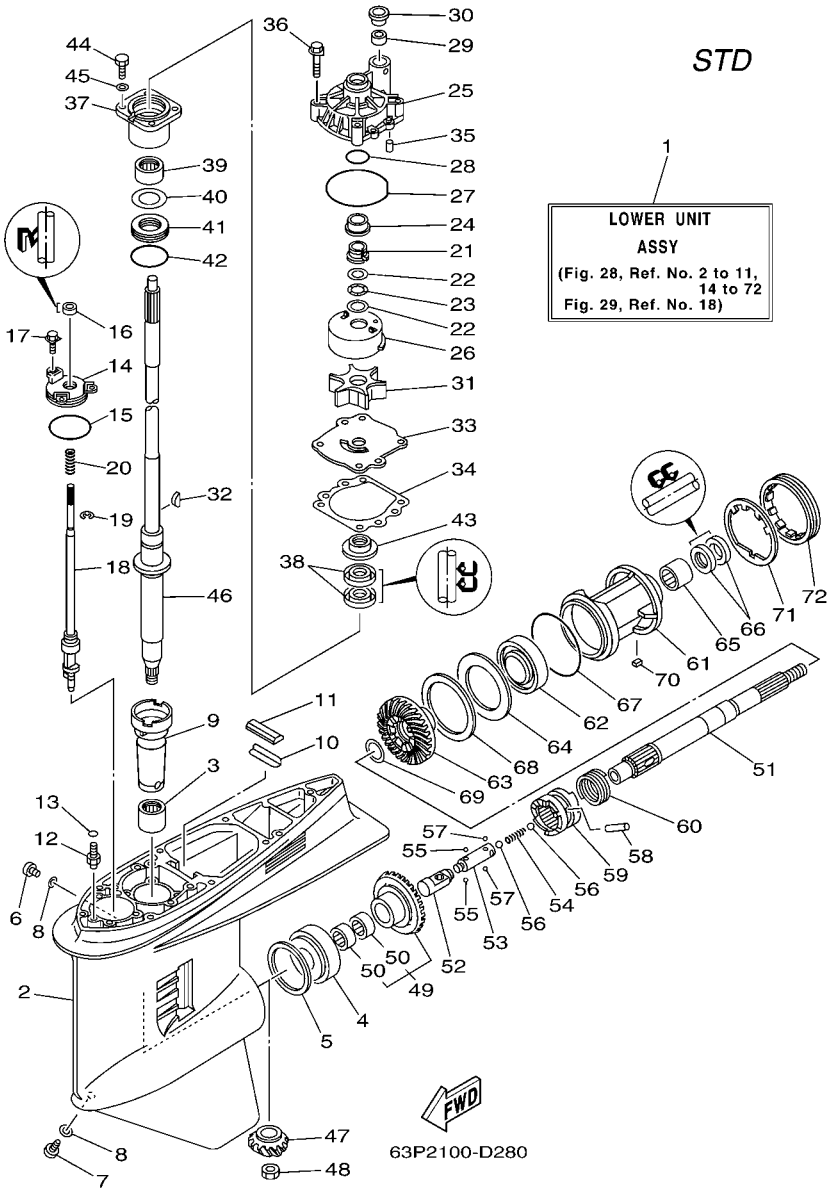

FIG. 28 LOWER CASING & DRIVE 1 BOITIER D'HELICE TRANSMISSION1

REF. NO.	PART NO. N° PIECES	DESCRIPTION DESCRIPTION	63P2	64P2				REMARKS REMARQUES
41	93341–930V2	BEARING CERVEAUX DE DIRECTION	1					
42	93210–55M14	O-RING JOINT TORIQUE	1					
43	6E5–45344–00	COVER, OIL SEAL FLASQE, JOINT D'HUILE	1					
44	97095–08025	BOLT BOULON	4					
45	92995–08600	WASHER RONDELLE	4					
46	63P–45501–00	DRIVE SHAFT COMP. ARBRE MOTEUR COMP.	1					L L
	63P–45501–10	DRIVE SHAFT COMP. ARBRE MOTEUR COMP.	1					X X
47	63P–45551–00	PINION (14T) PIGNON D'ATTAQUE (14D)	1					
48	90170–16M01	NUT ECROU	1					
49	63P–45560–01	GEAR 1 (28T) PIGNON 1 (28T)	1					
50	93315–425V3	.BEARING .ROULEMENT	2					
51	6J9–45611–01	SHAFT, PROPELLER ARBRE, HELICE	1					
52	6E5–45641–03	SHIFTER EMBRAYAGE	1					
53	6E5–45634–01	SLIDE, SHIFT CONTRE-POUSSOIR	1					
54	90501–16M37	SPRING, COMPRESSION RESSORT, COMPRESSION	1					
55	93507–32009	BALL BILLE	2					
56	93511–32017	BALL BILLES	2					
57	93503–16003	BALL BILLES	2					
58	90250–08M07	PIN, STRAIGHT GOUPILLE, DROITE	1					
59	63P–45631–01	CLUTCH, DOG CRABOT	1					
60	6E5–45633–01	RING, CROSS PIN JONC, GOUPILLE CRABOT	1					
61	6J9–45332–00–8D	HOUSING, BEARING FLASQUE, ROULEMENT	1					
62	93306–209U0	BEARING ROULEMENT	1					
63	63P–45571–01	GEAR 2 (28T) PIGNON 2 (28T)	1					
64	6G5–45576–10	WASHER, THRUST RONDELLE DE CALAGE	1					
65	93315–43061	BEARING ROULEMENT	1					
66	93101–30M17	OIL SEAL JOINT SPY	2					

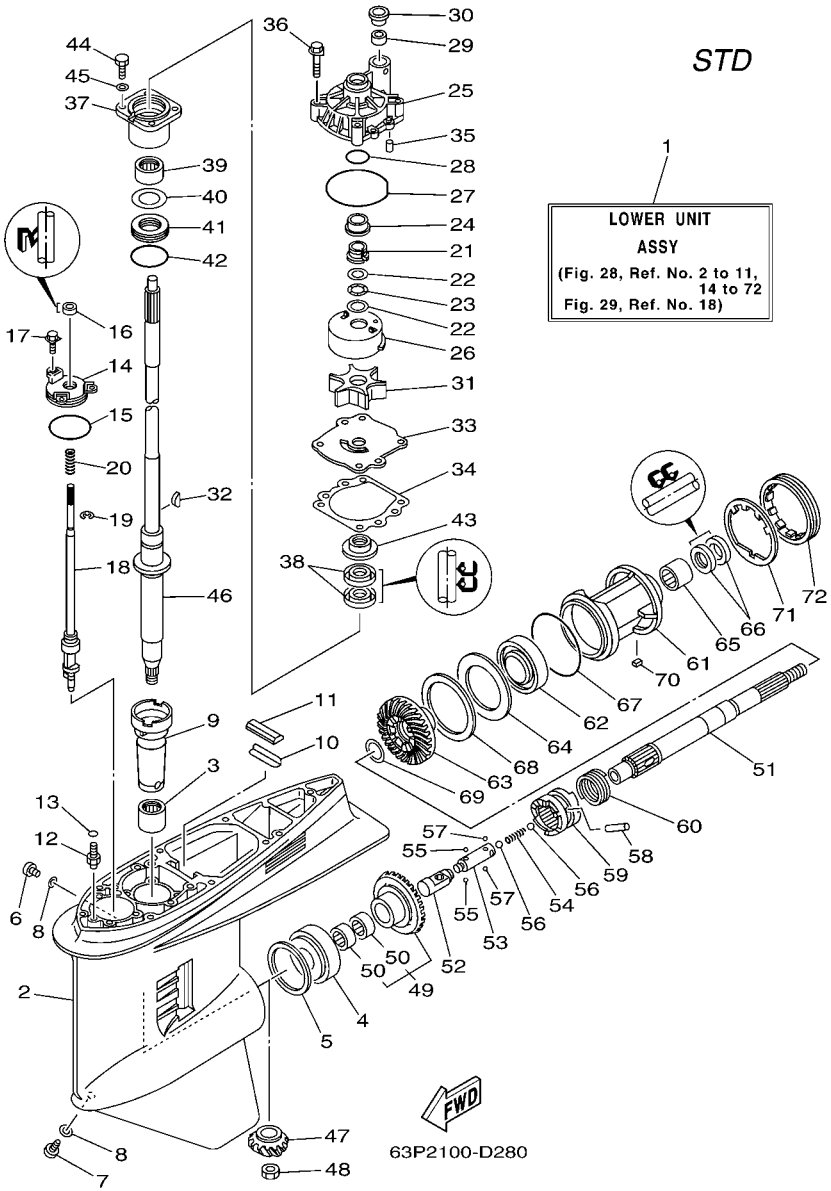

FIG. 28 LOWER CASING & DRIVE 1 BOITIER D'HELICE TRANSMISSION1

REF. NO.	PART NO. N° PIECES	DESCRIPTION DESCRIPTION	63P2	64P2				REMARKS REMARQUES
67	93210–97M55	O-RING JOINT TORIQUE	1					
68	6G5–45577–02	SHIM (T:0.10MM) CALE (T:0.10MM)	1					UR UR
	6G5–45577–10	SHIM (T:0.12MM) CALE (T:0.12MM)	1					UR UR
	6G5–45577–20	SHIM (T:0.15MM) CALE (T:0.15MM)	1					UR UR
	6G5–45577–30	SHIM (T:0.18MM) CALE (T:0.18MM)	1					UR UR
	6G5–45577–40	SHIM (T:0.30MM) CALE (T:0.30MM)	1					UR UR
	6G5–45577–50	SHIM (T:0.40MM) CALE (T:0.40MM)	1					UR UR
	6G5–45577–60	SHIM (T:0.50MM) CALE (T:0.50MM)	1					UR UR
69	90201–30M92	WASHER, PLATE RONDELLE, PLATE	1					
70	90282–04M00	KEY, STRAIGHT CLAVETTE, DROITE	1					
71	6G5–45383–01	WASHER, CLAW FREIN D'ECROU	1					
72	6G5–45384–02	NUT ECROU	1					

FIG. 29 LOWER CASING & DRIVE 2 BOITIER D'HELICE TRANSMISSION2

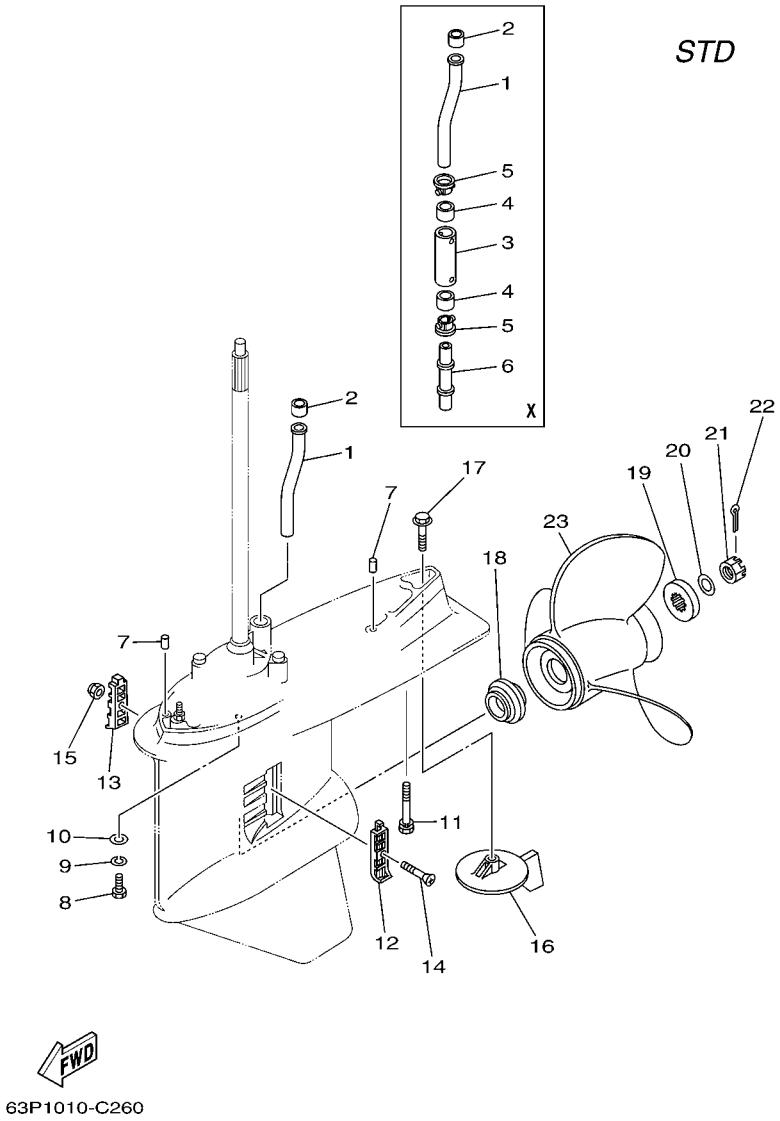

REF. NO.	PART NO. N° PIECES	DESCRIPTION DESCRIPTION	63P2	64P2				REMARKS REMARQUES
1	63P–44361–00	TUBE, WATER TUBE D'EAU	1					
2	6E5–44365–00	DAMPER, WATER SEAL JOINT, TUBE D'EAU	1					
3	63P–44362–00	TUBE, WATER TUBE D'EAU	1					X X
4	6E5–44365–00	DAMPER, WATER SEAL JOINT, TUBE D'EAU	2					X X
5	6E5–44312–00	COVER, WATER PUMP HOUSING COUVERCLE	2					X X
6	63P–44363–00	TUBE, WATER 3 TUBE D'EAU 3	1					X X
7	93608–16M16	PIN, DOWEL AXE	2					
8	97095–10045	BOLT BOULON	6					
9	92995–10100	WASHER RONDELLE	6					
10	92995–10600	WASHER RONDELLE	6					
11	90119–10MA2	BOLT, WITH WASHER BOULON, AVEC RONDELLE	1					L L
	90119–10008	BOLT, WITH WASHER BOULON, AVEC RONDELLE	1					X X
12	6J9–45214–00	COVER, WATER INLET 1 GRILLE, ENTREE D'EAU 1	1					
13	6J9–45215–00	COVER, WATER INLET 2 GRILLE, ENTREE D'EAU 2	1					
14	90152–05M08	SCREW, COUNTERSUNK VIS, TETE NOYEE	1					
15	90185–05002	NUT, SELF-LOCKING ECROU, AUTO-BLOCANT	1					
16	6J9–45371–01	TAB-TRIM ANODE DERIVE	1					
17	90105–10M00	BOLT, FLANGE BOULON	1					
18	63P–45987–00	SPACER ENTRETOISE	1					
19	688–45997–01	SPACER ENTRETOISE	1					
20	92990–18200	WASHER RONDELLE, PLATE	1					
21	90171–18M04	NUT, CASTLE ECROU, CRENELE	1					
22	91490–40030	PIN, COTTER GOUPILLE	1					
23	6G5–45941–00–98	PROPELLER (3X15-1/4"X15"-M) HELICE (3X15-1/4"X15"-M)	1					UR UR
	6G5–45943–01–98	PROPELLER (3X13-3/4"X21"-M) HELICE (3X13-3/4"X21"-M)	1					UR UR
	6G5–45945–01–98	PROPELLER (3X14"X19"-M) HELICE (3X14"X19"-M)	1					UR UR
	6G5–45947–01–98	PROPELLER (3X14-1/2"X17"-M) HELICE (3X14-1/2"X17"-M)	1					UR UR

FIG. 29 LOWER CASING & DRIVE 2 BOITIER D'HELICE TRANSMISSION2

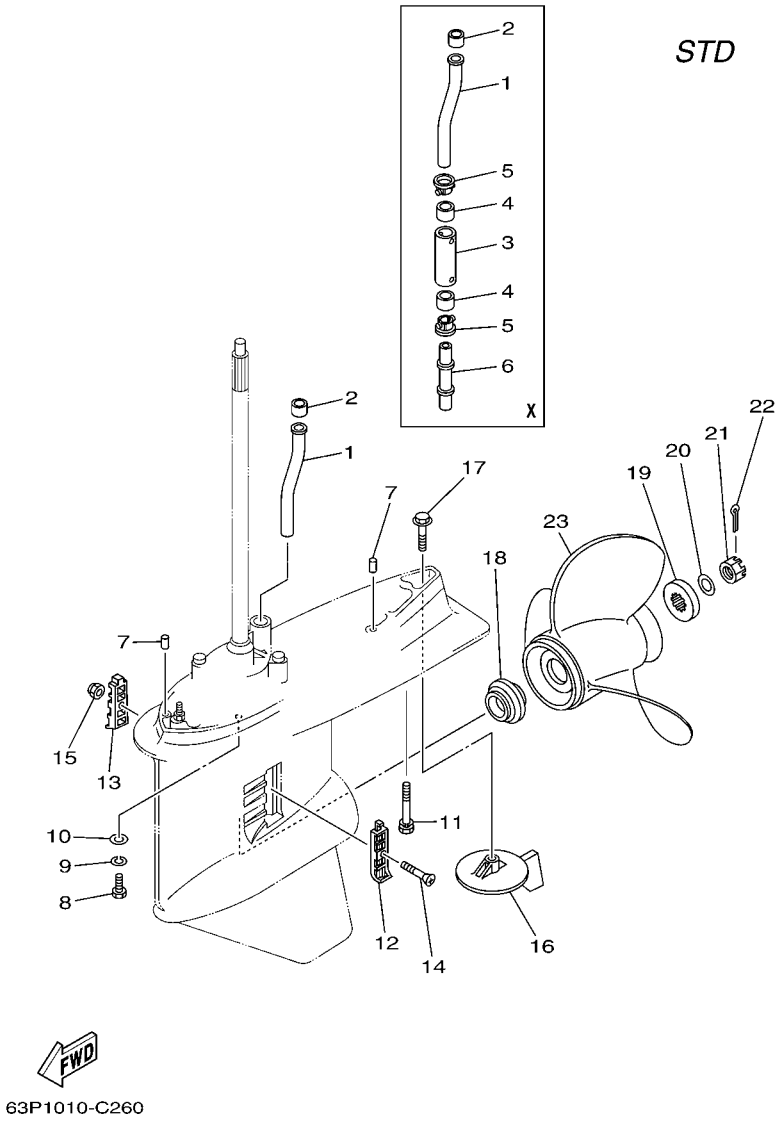

REF. NO.	PART NO. N° PIECES	DESCRIPTION DESCRIPTION	63P2	64P2				REMARKS REMARQUES
23	6G5–45949–00–98	PROPELLER (3X13-1/2"X23"-M) HELICE (3X13-1/2"X23"-M)	1					UR UR
	6G5–45930–00–98	PROPELLER (3X13-3/8"X25"-M) HELICE (3X13-3/8"X25"-M)	1					UR UR
	6G5–45932–00–98	PROPELLER (3X15-3/4"X13"-M) HELICE (3X15-3/4"X13"-M)	1					UR UR
	6G5–45970–02–98	PROPELLER (3X15-1/4"X15"-M) HELICE (3X15-1/4"X15"-M)	1					UR UR
	6G5–45972–02–98	PROPELLER (3X13-3/4"X21"-M) HELICE (3X13-3/4"X21"-M)	1					UR UR
	6G5–45974–03–98	PROPELLER (3X13-3/4"X19"-M2) HELICE (3X13-3/4"X19"-M2)	1					UR UR
	6G5–45976–01–98	PROPELLER (3X13-3/8"X23"-M) HELICE (3X13-3/8"X23"-M)	1					UR UR
	6G5–45978–03–98	PROPELLER (3X13-3/4"X17"-M2) HELICE (3X13-3/4"X17"-M2)	1					UR UR
	6R4–45970–A0	PROPELLER (3X15-1/4"X19"-M) HELICE (3X15-1/4"X19"-M)	1					UR UR
	6R4–45972–A0	PROPELLER (3X14-7/8"X21"-M) HELICE (3X14-7/8"X21"-M)	1					UR UR
	6R4–45974–A0	PROPELLER (3X14-1/2"X23"-M) HELICE (3X14-1/2"X23"-M)	1					UR UR
	6R4–45976–A0	PROPELLER (3X14-1/2"X15"-M) HELICE (3X14-1/2"X15"-M)	1					UR UR
	6R4–45978–A0	PROPELLER (3X15-1/4"X17"-M) HELICE (3X15-1/4"X17"-M)	1					UR UR
	6J9–45970–10	PROPELLER (3X14-1/2"X25"-M) HELICE (3X14-1/2"X25"-M)	1					UR UR
	6J9–45972–10	PROPELLER (3X14-1/2"X23"-M) HELICE (3X14-1/2"X23"-M)	1					UR UR
	6J9–45974–10	PROPELLER (3X14-1/2"X27"-M) HELICE (3X14-1/2"X27"-M)	1					UR UR
	6J9–45976–10	PROPELLER (3X14-1/2"X21"-M) HELICE (3X14-1/2"X21"-M)	1					UR UR

FIG. 30 LOWER CASING & DRIVE 3 BOITIER D'HELICE TRANSMISSION3

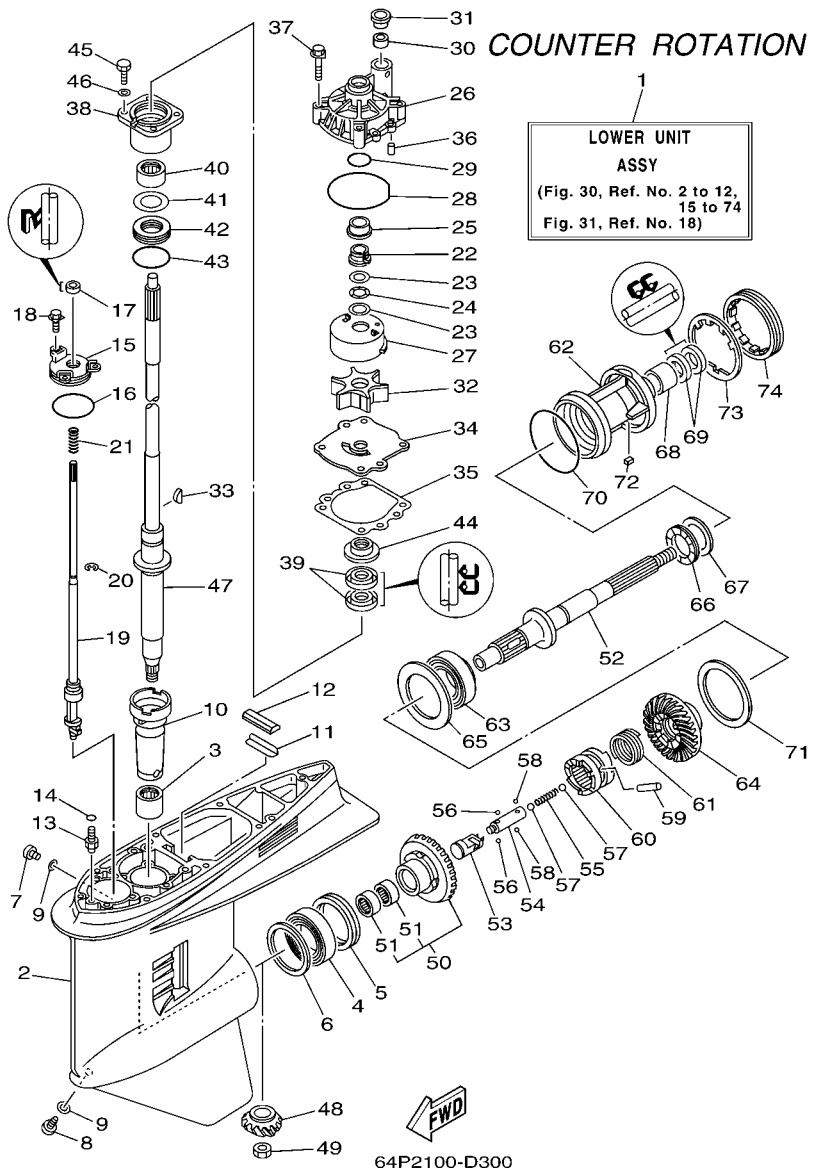

REF. NO.	PART NO. N° PIECES	DESCRIPTION DESCRIPTION	63P2	64P2				REMARKS REMARQUES
1	64P–45300–01–8D	LOWER UNIT ASSY UNITE INFERIEURE (ENS.)		1				L L
	64P–45300–11–8D	LOWER UNIT ASSY UNITE INFERIEURE (ENS.)		1				X X
2	6J9–45301–05–8D	CASING, LOWER BEQUILLE		1				
3	93311–928U5	BEARING ROULEMENT		1				
4	93390–000U2	BEARING ROULEMENT		1				
5	93341–465U4	BEARING CERVEAUX DE DIRECTION		1				
6	6G5–45567–01	SHIM (T:0.10MM) CALE (T:0.10MM)		1				UR UR
	6G5–45567–10	SHIM (T:0.12MM) CALE (T:0.12MM)		1				UR UR
	6G5–45567–20	SHIM (T:0.15MM) CALE (T:0.15MM)		1				UR UR
	6G5–45567–30	SHIM (T:0.18MM) CALE (T:0.18MM)		1				UR UR
	6G5–45567–40	SHIM (T:0.30MM) CALE (T:0.30MM)		1				UR UR
	6G5–45567–50	SHIM (T:0.40MM) CALE (T:0.40MM)		1				UR UR
	6G5–45567–60	SHIM (T:0.50MM) CALE (T:0.50MM)		1				UR UR
7	90340–08002	PLUG, STRAIGHT SCREW PLOT, FILETE DROIT		1				
8	688–45341–10	PLUG, DRAIN BOUCHON DE VIDANGE		1				
9	90430–08020	GASKET JOINT		2				
10	6G5–45536–01	SLEEVE, DRIVE SHAFT MANCHON, ARBRE MOTEUR		1				
11	663–45376–00–94	GUIDE, SEAL DAMPER BUTEE, JOINT CAOUTCHOUC		1				
12	688–45375–00	DAMPER, SEAL BOURRELET, CAOUTCHOUC		1				
13	63P–45378–00	NIPPLE, HOSE RACCORD, TUYAU		1				
14	93210–07003	O-RING JOINT TORIQUE		1				
15	6E5–45321–00	PLATE PLAQUETTE		1				
16	93210–58144	O-RING JOINT TORIQUE		1				
17	93106–09014	OIL SEAL JOINT SPY		1				
18	90119–06M10	BOLT, WITH WASHER BOULON, AVEC RONDELLE		3				
19	64P–44150–00	SHIFT CAM ASSY CAME D'INVERSION		1				L L
	64P–44150–10	SHIFT CAM ASSY CAME D'INVERSION		1				X X

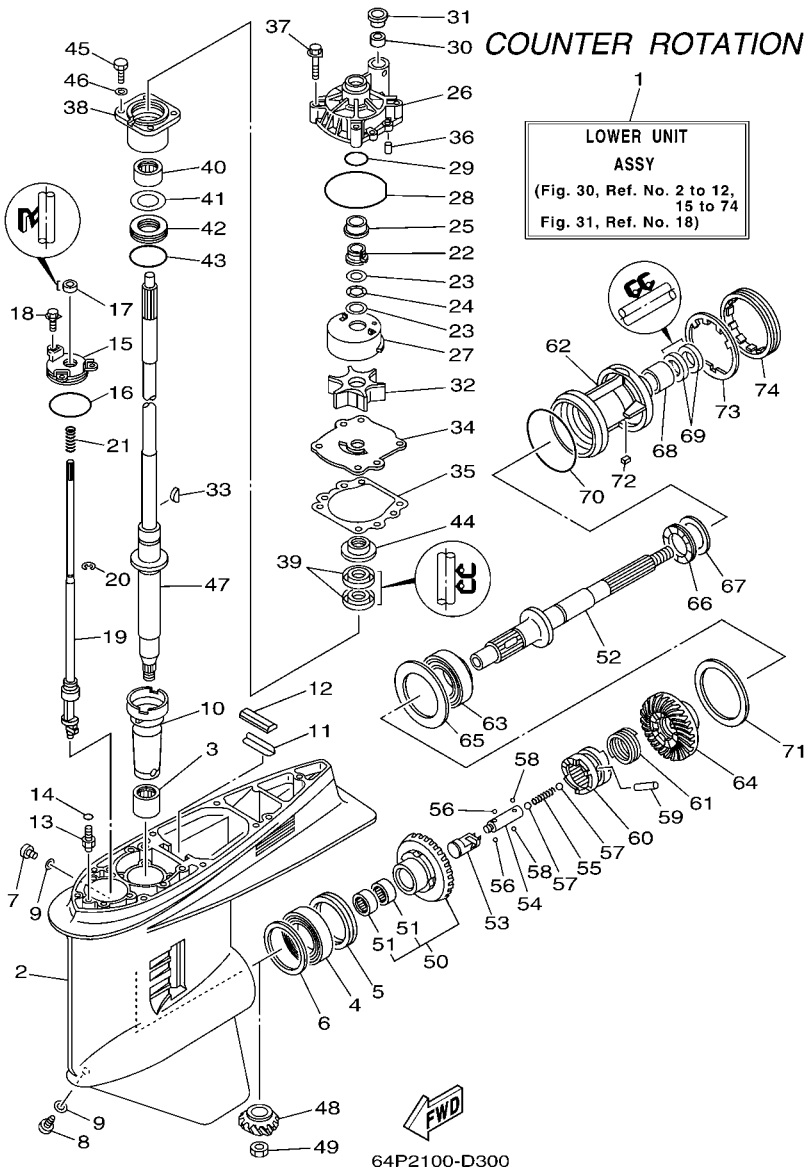

FIG. 30 LOWER CASING & DRIVE 3 BOITIER D'HELICE TRANSMISSION3

REF. NO.	PART NO. N° PIECES	DESCRIPTION DESCRIPTION	63P2	64P2				REMARKS REMARQUES
20	99001–08600	CIRCLIP CIRCLIP		1				
21	90501–11M10	SPRING, COMPRESSION RESSORT, COMPRESSION		1				
22	61A–45538–00	SPACER 1 ENTRETOISE		1				
23	90201–22M01	WASHER, PLATE RONDELLE, PLATE		2				
24	90206–22M19	WASHER, WAVE RONDELLE, ONDULEE		1				
25	61A–45527–00	COLLAR, DRIVE SHAFT ENTRETOISE		1				
26	61A–44311–01	HOUSING, WATER PUMP CORPS, POMPE A EAU		1				
27	61A–44322–02	INSERT, CARTRIDGE CUVETTE		1				
28	93210–86M38	O-RING JOINT TORIQUE		1				
29	93210–37160	O-RING JOINT TORIQUE		1				
30	6E5–44365–00	DAMPER, WATER SEAL JOINT, TUBE D'EAU		1				
31	6E5–44312–00	COVER, WATER PUMP HOUSING COUVERCLE		1				
32	6E5–44352–01	IMPELLER TURBINE		1				
33	90280–04M05	KEY, WOODRUFF CLAVETTE, DEMI-LUNE		1				
34	6G5–44323–00	OUTER PLATE, CARTRIDGE PLAQUE EXTERIEURE		1				
35	6E5–44315–A0	GASKET, WATER PUMP JOINT, POMPE A EAU		1				
36	93606–12019	PIN, DOWEL GOUPILLE		2				
37	90119–08M14	BOLT, WITH WASHER BOULON, AVEC RONDELLE		4				
38	6E5–45331–00–94	HOUSING, BEARING FLASQUE, ROULEMENT		1				
39	93101–28M16	OIL SEAL JOINT SPY		2				
40	93317–330U2	BEARING ROULEMENT		1				
41	6E5–45587–01	SHIM (T:0.10MM) CALE (T:0.10MM)		1				UR UR
	6E5–45587–10	SHIM (T:0.12MM) CALE (T:0.12MM)		1				UR UR
	6E5–45587–20	SHIM (T:0.15MM) CALE (T:0.15MM)		1				UR UR
	6E5–45587–30	SHIM (T:0.18MM) CALE (T:0.18MM)		1				UR UR
	6E5–45587–40	SHIM (T:0.30MM) CALE (T:0.30MM)		1				UR UR
	6E5–45587–50	SHIM (T:0.40MM) CALE (T:0.40MM)		1				UR UR

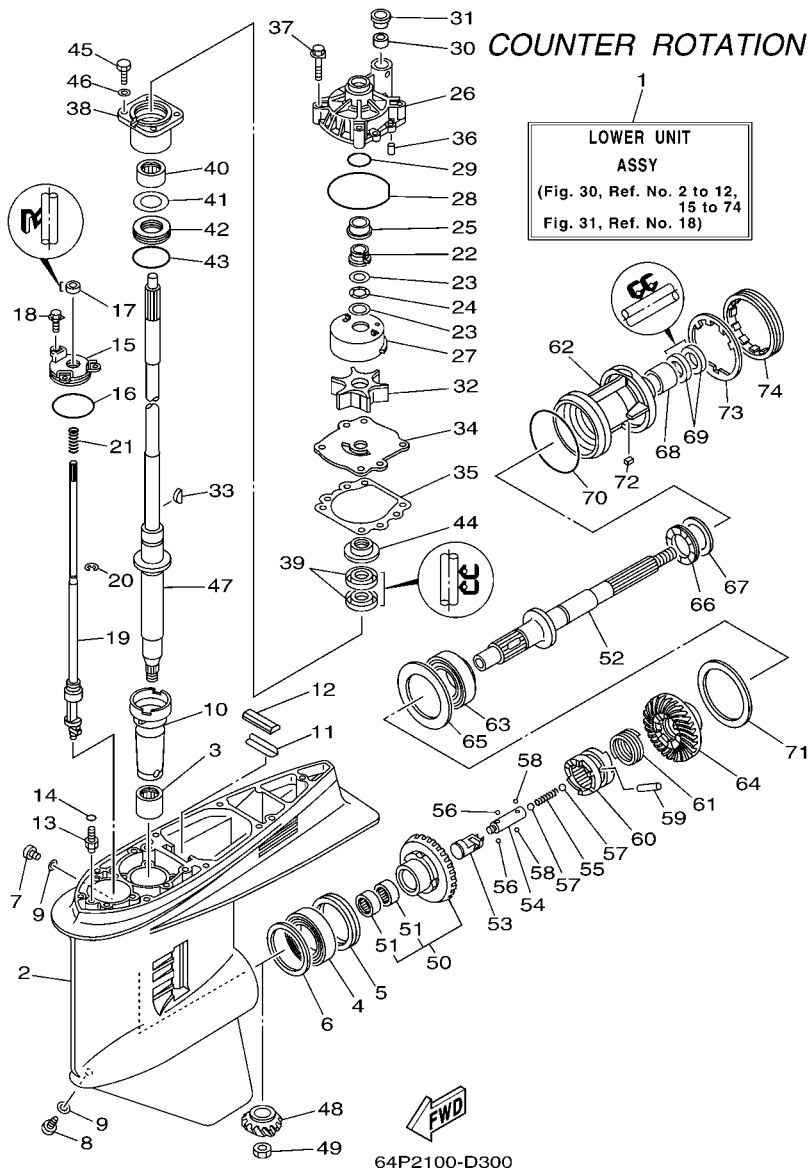

FIG. 30 LOWER CASING & DRIVE 3 BOITIER D'HELICE TRANSMISSION3

REF. NO.	PART NO. N° PIECES	DESCRIPTION DESCRIPTION	63P2	64P2				REMARKS REMARQUES
41	6E5–45587–60	SHIM (T:0.50MM) CALE (T:0.50MM)		1				UR UR
42	93341–930V2	BEARING CERVEAUX DE DIRECTION		1				
43	93210–55M14	O-RING JOINT TORIQUE		1				
44	6E5–45344–00	COVER, OIL SEAL FLASQE, JOINT D'HUILE		1				
45	97095–08025	BOLT BOULON		4				
46	92995–08600	WASHER RONDELLE		4				
47	63P–45501–00	DRIVE SHAFT COMP. ARBRE MOTEUR COMP.		1				L L
	63P–45501–10	DRIVE SHAFT COMP. ARBRE MOTEUR COMP.		1				X X
48	63P–45551–00	PINION (14T) PIGNON D'ATTAQUE (14D)		1				
49	90170–16M01	NUT ECROU		1				
50	64P–45560–01	GEAR 1 (28T) PIGNON 1 (28T)		1				
51	93315–425V3	.BEARING .ROULEMENT		2				
52	6K1–45611–10	SHAFT, PROPELLER ARBRE, HELICE		1				
53	6K1–45641–01	SHIFTER EMBRAYAGE		1				
54	6E5–45634–01	SLIDE, SHIFT CONTRE-POUSSOIR		1				
55	90501–16M37	SPRING, COMPRESSION RESSORT, COMPRESSION		1				
56	93507–32009	BALL BILLE		2				
57	93511–32017	BALL BILLES		2				
58	93503–16003	BALL BILLES		2				
59	90250–08M07	PIN, STRAIGHT GOUPILLE, DROITE		1				
60	63P–45631–01	CLUTCH, DOG CRABOT		1				
61	6E5–45633–01	RING, CROSS PIN JONC, GOUPILLE CRABOT		1				
62	6K1–45332–01–8D	HOUSING, BEARING FLASQUE, ROULEMENT		1				
63	93332–00048	BEARING ROULEMENT		1				
64	64P–45570–01	GEAR 2 (28T) PIGNON 2 (28T)		1				
65	6K1–45576–00	WASHER, THRUST RONDELLE DE CALAGE		1				
66	93341–440U5	BEARING CERVEAUX DE DIRECTION		1				

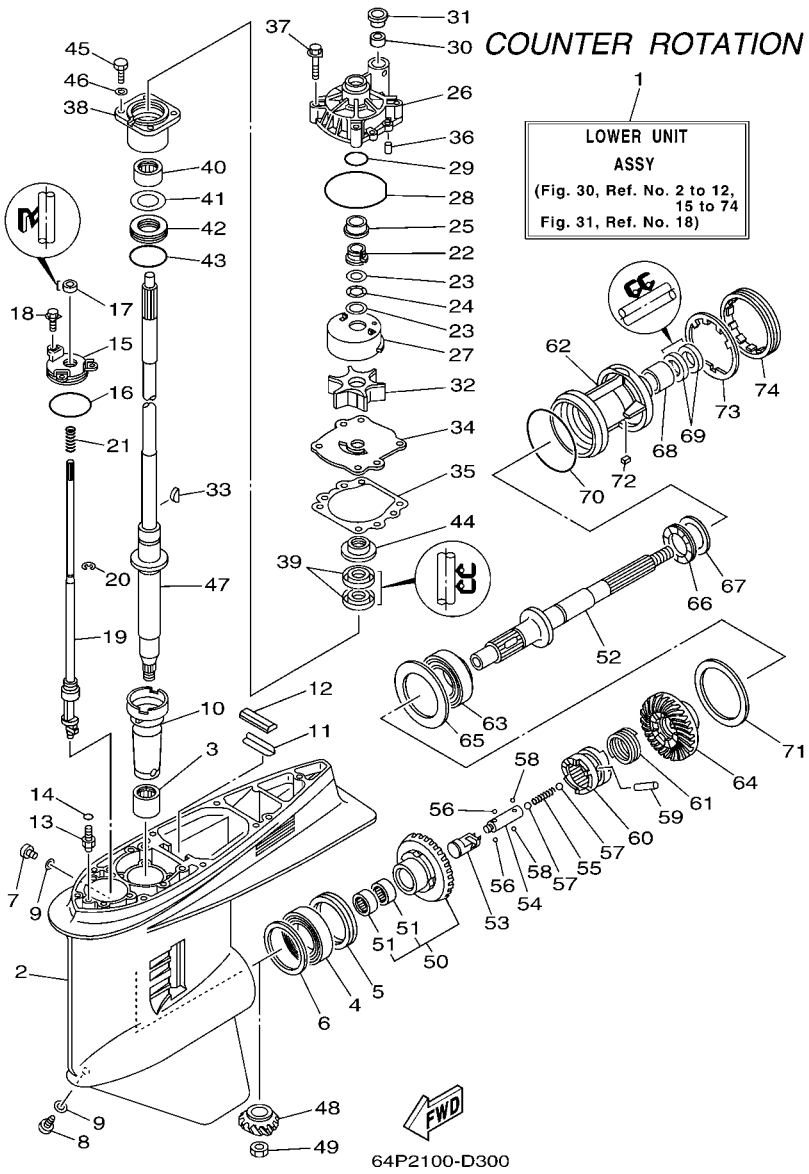

FIG. 30 LOWER CASING & DRIVE 3 BOITIER D'HELICE TRANSMISSION3

REF. NO.	PART NO. N° PIECES	DESCRIPTION DESCRIPTION	63P2	64P2				REMARKS REMARQUES
67	6K1–45578–01	SHIM (T:0.10MM) CALE (T:0.10MM)		1				UR UR
	6K1–45578–10	SHIM (T:0.12MM) CALE (T:0.12MM)		1				UR UR
	6K1–45578–20	SHIM (T:0.15MM) CALE (T:0.15MM)		1				UR UR
	6K1–45578–30	SHIM (T:0.18MM) CALE (T:0.18MM)		1				UR UR
	6K1–45578–40	SHIM (T:0.30MM) CALE (T:0.30MM)		1				UR UR
	6K1–45578–50	SHIM (T:0.40MM) CALE (T:0.40MM)		1				UR UR
	6K1–45578–60	SHIM (T:0.50MM) CALE (T:0.50MM)		1				UR UR
68	93315–43061	BEARING ROULEMENT		1				
69	93101–30M17	OIL SEAL JOINT SPY		2				
70	93210–97M55	O-RING JOINT TORIQUE		1				
71	6G5–45577–02	SHIM (T:0.10MM) CALE (T:0.10MM)		1				UR UR
	6G5–45577–10	SHIM (T:0.12MM) CALE (T:0.12MM)		1				UR UR
	6G5–45577–20	SHIM (T:0.15MM) CALE (T:0.15MM)		1				UR UR
	6G5–45577–30	SHIM (T:0.18MM) CALE (T:0.18MM)		1				UR UR
	6G5–45577–40	SHIM (T:0.30MM) CALE (T:0.30MM)		1				UR UR
	6G5–45577–50	SHIM (T:0.40MM) CALE (T:0.40MM)		1				UR UR
	6G5–45577–60	SHIM (T:0.50MM) CALE (T:0.50MM)		1				UR UR
72	90282–04M00	KEY, STRAIGHT CLAVETTE, DROITE		1				
73	6G5–45383–01	WASHER, CLAW FREIN D'ECROU		1				
74	6G5–45384–02	NUT ECROU		1				

FIG. 31 LOWER CASING & DRIVE 4 BOITIER D'HELICE TRANSMISSION4

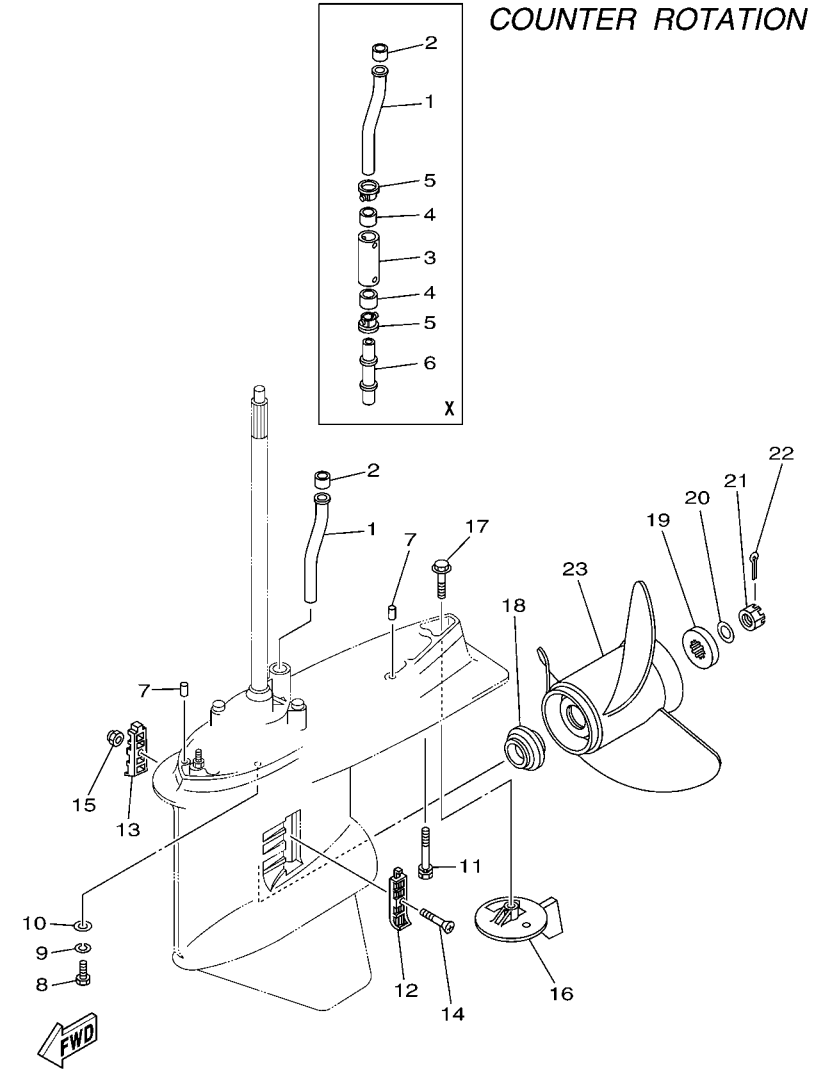

REF. NO.	PART NO. N° PIECES	DESCRIPTION DESCRIPTION	63P2	64P2				REMARKS REMARQUES
1	63P–44361–00	TUBE, WATER TUBE D'EAU		1				
2	6E5–44365–00	DAMPER, WATER SEAL JOINT, TUBE D'EAU		1				
3	63P–44362–00	TUBE, WATER TUBE D'EAU		1				X X
4	6E5–44365–00	DAMPER, WATER SEAL JOINT, TUBE D'EAU		2				X X
5	6E5–44312–00	COVER, WATER PUMP HOUSING COUVERCLE		2				X X
6	63P–44363–00	TUBE, WATER 3 TUBE D'EAU 3		1				X X
7	93608–16M16	PIN, DOWEL AXE		2				
8	97095–10045	BOLT BOULON		6				
9	92995–10100	WASHER RONDELLE		6				
10	92995–10600	WASHER RONDELLE		6				
11	90119–10MA2	BOLT, WITH WASHER BOULON, AVEC RONDELLE		1				L L
	90119–10008	BOLT, WITH WASHER BOULON, AVEC RONDELLE		1				X X
12	6J9–45214–00	COVER, WATER INLET 1 GRILLE, ENTREE D'EAU 1		1				
13	6J9–45215–00	COVER, WATER INLET 2 GRILLE, ENTREE D'EAU 2		1				
14	90152–05M08	SCREW, COUNTERSUNK VIS, TETE NOYEE		1				
15	90185–05002	NUT, SELF-LOCKING ECROU, AUTO-BLOCANT		1				
16	6K1–45371–02	TAB-TRIM ANODE DERIVE		1				
17	90105–10M00	BOLT, FLANGE BOULON		1				
18	63P–45987–00	SPACER ENTRETOISE		1				
19	688–45997–01	SPACER ENTRETOISE		1				
20	92990–18200	WASHER RONDELLE, PLATE		1				
21	90171–18M04	NUT, CASTLE ECROU, CRENELE		1				
22	91490–40030	PIN, COTTER GOUPILLE		1				
23	6K1–45970–01–98	PROPELLER (3X15-1/4"X15"-ML) HELICE (3X15-1/4"X15"-ML)		1				UR UR
	6K1–45972–01–98	PROPELLER (3X13-3/4"X21"-ML) HELICE (3X13-3/4"X21"-ML)		1				UR UR
	6K1–45974–02–98	PROPELLER (3X13-3/4"X19"-ML1) HELICE (3X13-3/4"X19"-ML1)		1				UR UR
	6K1–45976–00–98	PROPELLER (3X13-3/8"X23"-ML) HELICE (3X13-3/8"X23"-ML)		1				UR UR

FIG. 31 LOWER CASING & DRIVE 4 BOITIER D'HELICE TRANSMISSION4

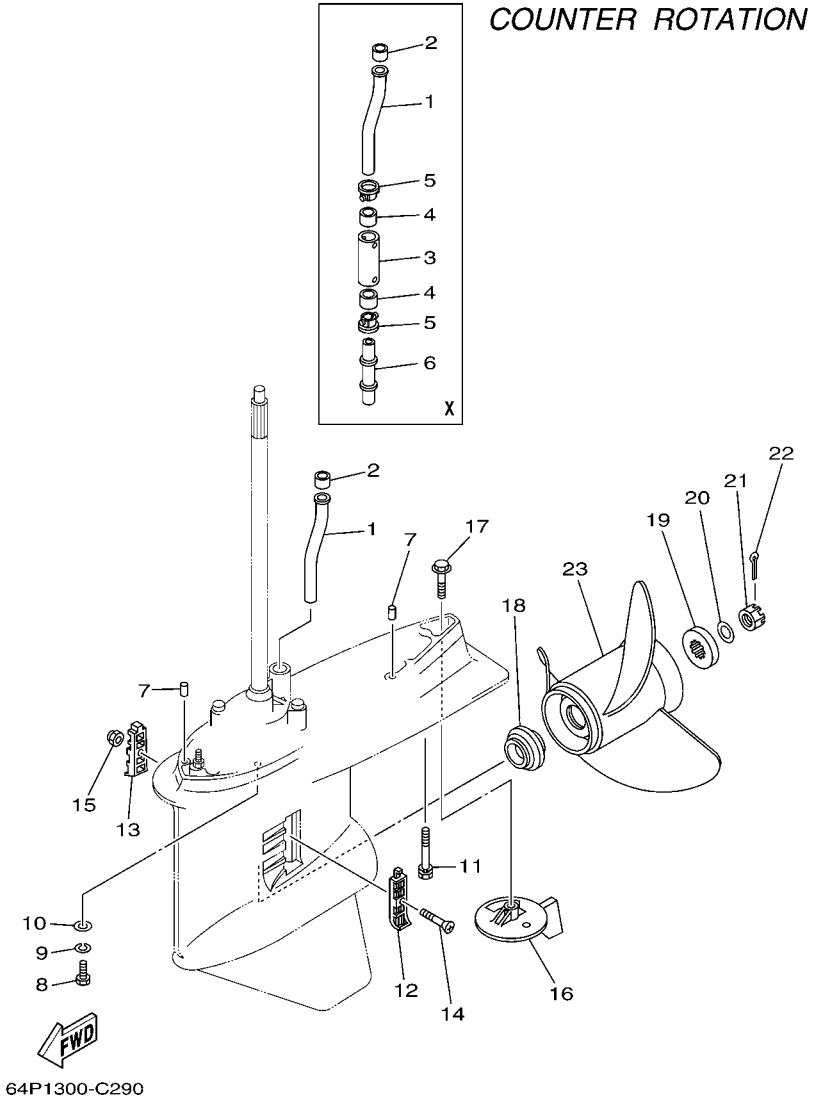

REF. NO.	PART NO. N° PIECES	DESCRIPTION DESCRIPTION	63P2	64P2				REMARKS REMARQUES
23	6K1–45978–02–98	PROPELLER (3X13-3/4"X17"-ML1) HELICE (3X13-3/4"X17"-ML1)		1				UR UR
	6K1–45945–00–98	PROPELLER (3X14"X19"-ML) HELICE (3X14"X19"-ML)		1				UR UR
	6K1–45947–00–98	PROPELLER (3X14-1/2"X17"-ML) HELICE (3X14-1/2"X17"-ML)		1				UR UR
	6R1–45970–A0	PROPELLER (3X15-1/4"X19"-ML) HELICE (3X15-1/4"X19"-ML)		1				UR UR
	6R1–45972–A0	PROPELLER (3X14-7/8"X21"-ML) HELICE (3X14-7/8"X21"-ML)		1				UR UR
	6R1–45974–A0	PROPELLER (3X14-1/2"X23"-ML) HELICE (3X14-1/2"X23"-ML)		1				UR UR
	6R1–45976–A0	PROPELLER (3X15-1/4"X15"-ML) HELICE (3X15-1/4"X15"-ML)		1				UR UR
	6R1–45978–A0	PROPELLER (3X15-1/4"X17"-ML) HELICE (3X15-1/4"X17"-ML)		1				UR UR

FIG. 32 STEERING GUIDE FIXATION DE DIRECTION

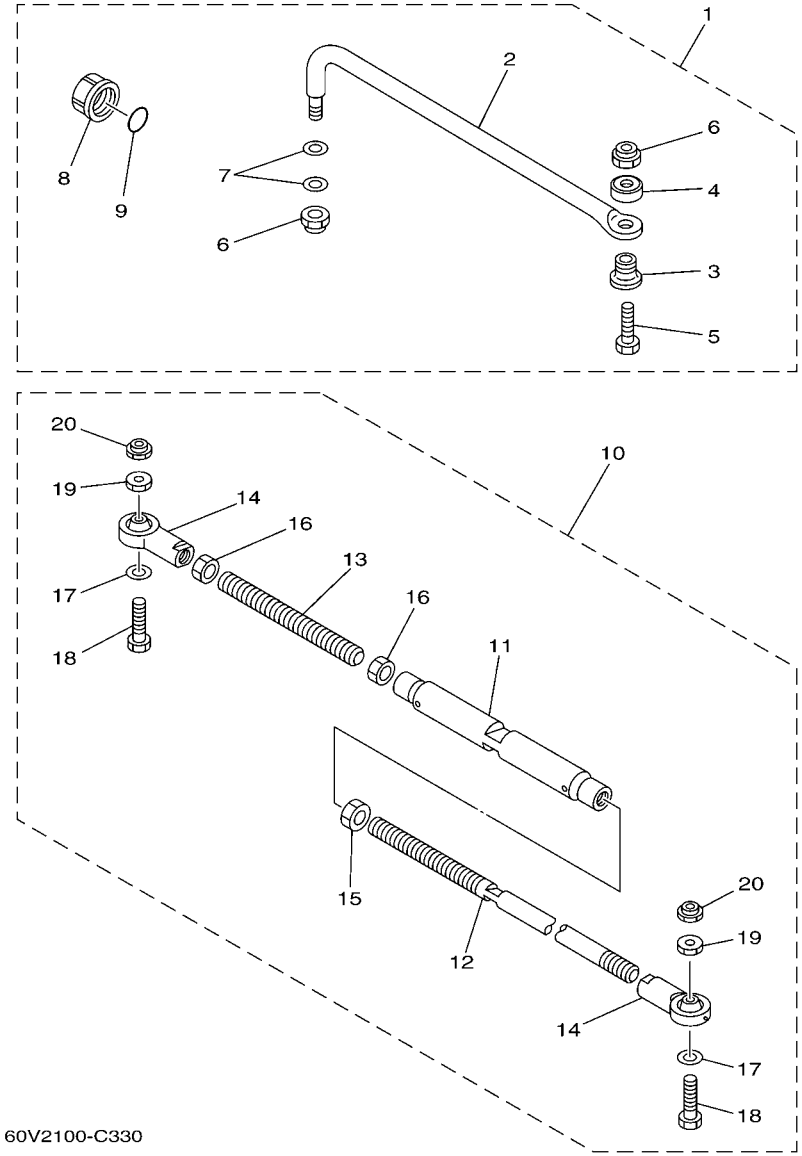

REF. NO.	PART NO. N° PIECES	DESCRIPTION DESCRIPTION	63P2	64P2				REMARKS REMARQUES
1	6E5–61350–02	STEERING GUIDE ATTACHMENT KIT FIXATIONS DE DIRECTION	1					AP AP
2	6E5–61351–01	.ROD, STEERING LINK .RENVOI DE DIRECTION	1					
3	90387–10M61	.COLLAR .COLLERETTE	1					
4	90560–12M01	.SPACER .ENTRETOISE	1					
5	6E5–61355–00	.BOLT .BOULON	1					
6	90185–09M01	.NUT, SELF-LOCKING .ECROU, AUTO-BLOCANT	2					
7	90201–10M20	.WASHER, PLATE .RONDELLE, PLATE	2					
8	6E5–43145–01	.CAP, CLAMP BRACKET .CAPUCHON, PRESSE	1					
9	93210–16275	.O-RING .JOINT TORIQUE	1					
10	6E5–61301–01	TWIN KIT (L:600-800MM) JUMELE KIT (L:600-800MM)		1				AP AP
11	6E5–61313–00	.ADJUSTER .TENDEUR		1				
12	6E5–61311–11	.TIE BAR .BARRE D'ACCOUPLEMENT		1				
13	6E5–61315–00	.TIE BAR .BARRE D'ACCOUPLEMENT		1				
14	6E5–61303–00	.STEERING EYE COMP. .AXE COMP.		2				
15	90170–14M06	.NUT .ECROU		1				
16	95380–14700	.NUT .ECROU		2				
17	90201–10M76	.WASHER, PLATE .RONDELLE, PLATE		2				
18	90101–09M70	.BOLT .BOULON		2				
19	90170–09M05	.NUT .ECROU		2				
20	90185–09M01	.NUT, SELF-LOCKING .ECROU, AUTO-BLOCANT		2				

FIG. 33 REMOTE CONTROL BOX BOITIER DE COMMANDE A DISTANCE

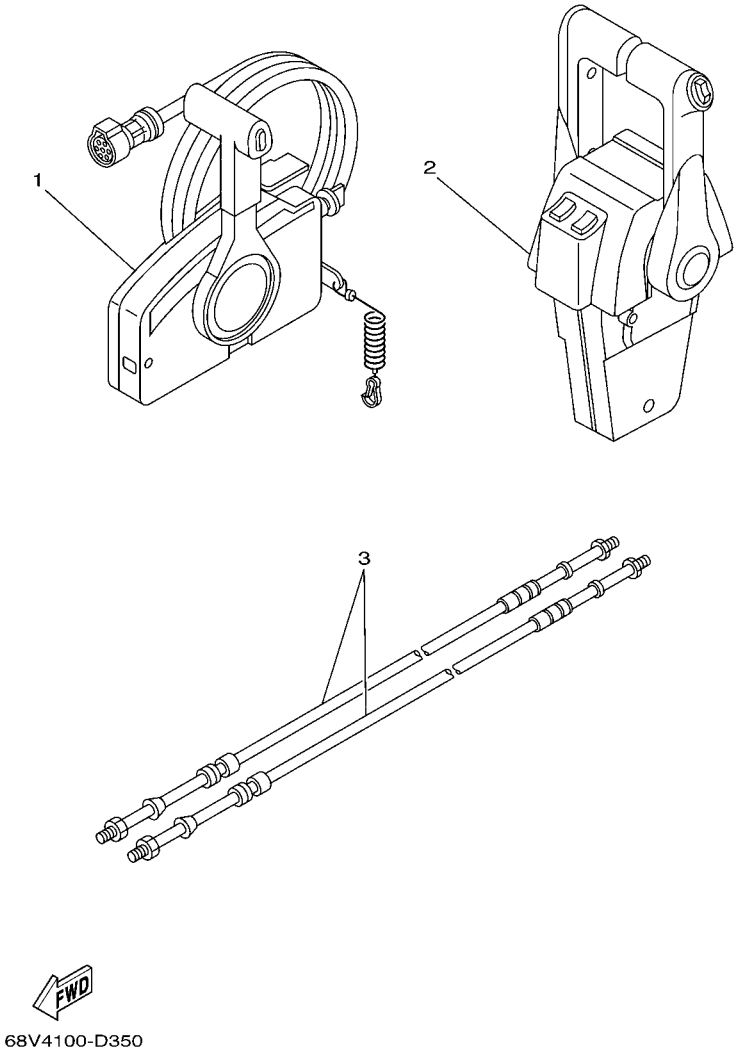

REF. NO.	PART NO. N° PIECES	DESCRIPTION DESCRIPTION	63P2	64P2				REMARKS REMARQUES
1	703–48205–17	REMOTE CONTROL ASSY (10P) BOITIER DE COMMANDE A DISTANCE	1					AP WITH PT/T SW. AP WITH PT/T SW.
2	704–48207–P0	REMOTE CONTROL ASSY BOITIER DE COMMANDE A DISTANCE		1				AP WITH PT/T SW. AP WITH PT/T SW.
3	701–48320–50	CABLE, REMOTE CONTROL L=15F CABLE, COMMANDE A DISTANCE:15F	2	2				UR UR
	701–48320–60	CABLE, REMOTE CONTROL L=16F CABLE, COMMANDE A DISTANCE:16F	2	2				UR UR
	701–48320–80	CABLE, REMOTE CONTROL L=17F CABLE, COMMANDE A DISTANCE:17F	2	2				UR UR
	701–48350–00	CABLE, REMOTE CONTROL L=21F CABLE, COMMANDE A DISTANCE:21F	2	2				UR UR
	701–48350–20	CABLE, REMOTE CONTROL L=23F CABLE, COMMANDE A DISTANCE:23F	2	2				UR UR

FIG. 34 REMOTE CONTROL ASSY 1 BOITIER DE COMMANDE A DISTANCE

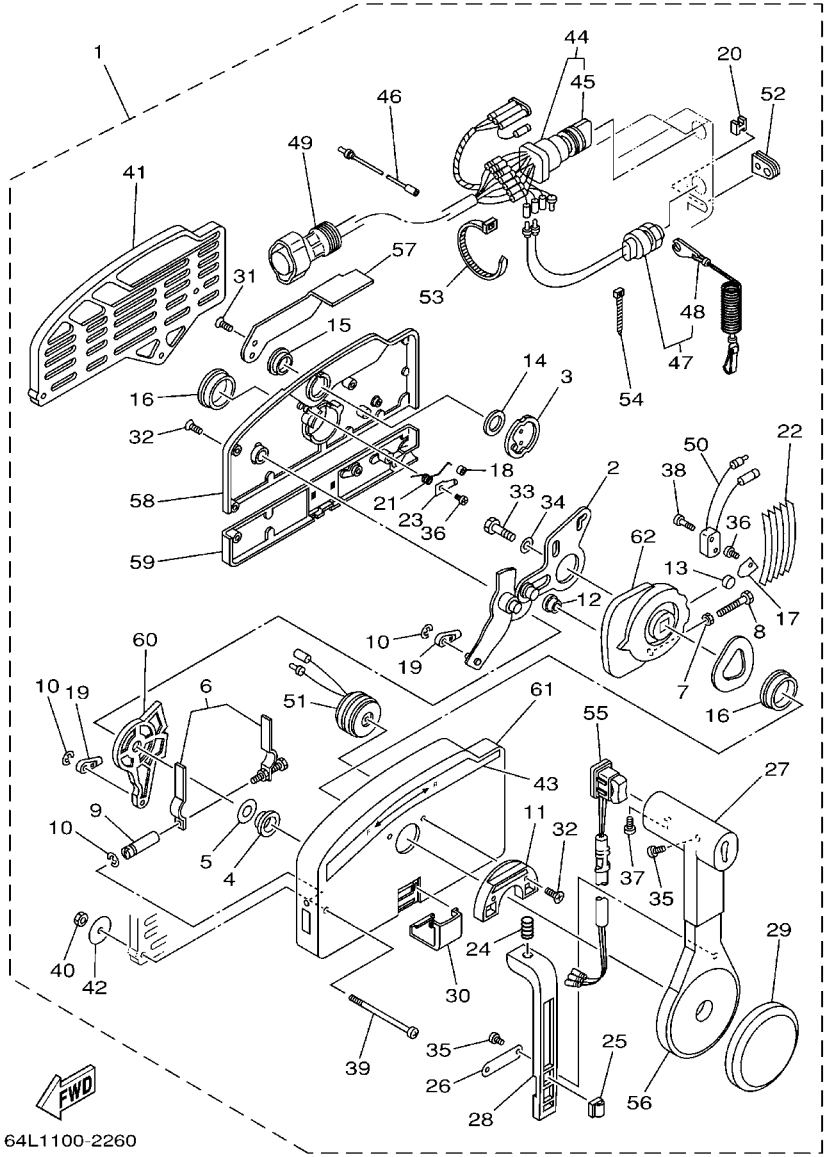

64L1100-2260

REF. NO.	PART NO. N° PIECES	DESCRIPTION DESCRIPTION	63P2	64P2				REMARKS REMARQUES
1	703–48205–17	REMOTE CONTROL ASSY (10P) BOITIER DE COMMANDE A DISTANCE	1					AP WITH PT/T SW. AP WITH PT/T SW.
2	703–48261–01	.ARM, THROTTLE .BRAS, ACCELERATION	1					
3	703–48153–00	.SHAFT, FREE ACCEL. .AXE	1					
4	703–48235–00	.BUSHING .COUSSINET	1					
5	703–48268–00	.SPACER .ENTRETOISE	1					
6	703–48264–00	.FRICTION, THROTTLE .FRICTION, ACCELERATION	1					
7	95380–05600	.NUT .ECROU	1					
8	97380–05025	.BOLT .BOULON, HEXAGONAL	1					
9	703–48265–00	.SHAFT, FRICTION .AXE, COPILOTE	1					
10	93430–06024	.CIRCLIP .CLIPS	3					
11	703–48245–00	.PLATE, LOCK .PLAQUE, VERROU	1					
12	703–48252–00	.ROLLER, CAM .POULIE	1					
13	701–48248–00	.ROLLER, FREE ACCEL. .POULIE	1					
14	703–48198–00	.WASHER, WAVE .RONDELLE, ELASTIQUE ONDULEE	1					
15	703–48243–00	.BUSHING .COUSSINET	1					
16	703–48236–00	.BUSHING 1 .POULIE	2					
17	703–48189–00	.RETAINER .FLASQUE	1					
18	703–48234–00	.ROLLER, DETENT .POULIE	1					
19	703–48345–01	.CABLE END, REMOTE CONTROL 2 .CHAPE CABLE	2					
20	703–48358–00	.ANCHOR, CABLE .COLLIER	1					
21	703–48244–00	.SPRING, FREE ACCEL. .RESSORT	1					
22	703–48238–00	.SPRING, DETENT .RESSORT	5					
23	703–48246–00	.SPACER .ENTRETOISE	1					
24	703–48227–00	.SPRING, NEUTRAL LOCK .RESSORT	1					
25	703–82594–00	.CLAMP .BRIDE	1					WITH PT/T SW. WITH PT/T SW.
26	703–48226–00	.PLATE, STOPPER .PLAQUETTE	1					
27	703–48222–00	.GRIP, CONTROL LEVER .POIGNEE, COMMANDE LEVIER	1					SINGLE SINGLE

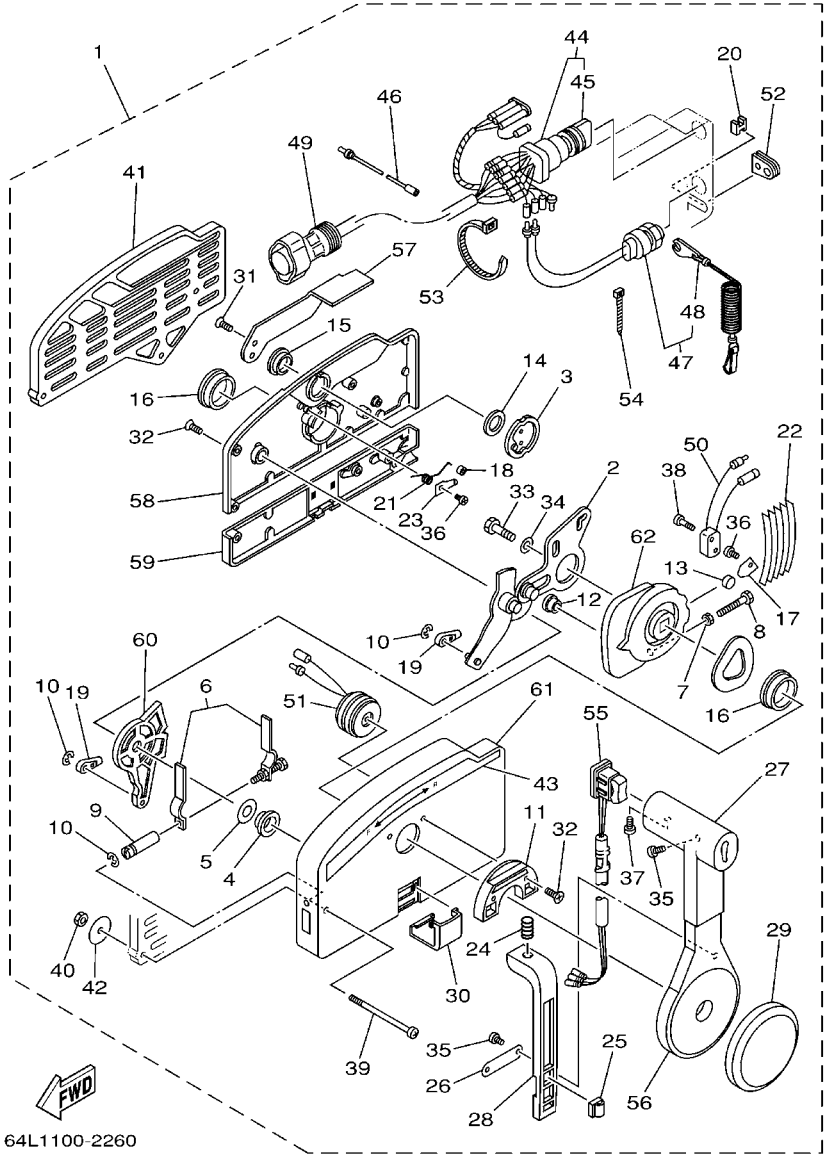

FIG. 34 REMOTE CONTROL ASSY 1 BOITIER DE COMMANDE A DISTANCE

REF. NO.	PART NO. N° PIECES	DESCRIPTION DESCRIPTION	63P2	64P2				REMARKS REMARQUES
28	703–48223–00	.LOCK, NEUTRAL .VERROU, NEUTRAL	1					
29	703–48225–00	.COVER .COUVERCLE	1					
30	703–48219–00	.COVER, LEAD .COUVERCLE	1					
31	703–48281–00	.SCREW .VIS	2					
32	703–48282–00	.SCREW .VIS	7					
33	97380–08030	.BOLT .BOULON, HEXAGONAL	1					
34	92990–08600	.WASHER, PLATE .RONDELLE, PLATE	1					
35	98580–04010	.SCREW, PAN HEAD .VIS	3					
36	98580–04006	.SCREW, PAN HEAD .VIS	2					
37	98580–05010	.SCREW, PAN HEAD .VIS	1					
38	98580–03015	.SCREW, PAN HEAD .VIS	2					
39	703–48291–10	.SCREW (M6) .VIS (M6)	3					
40	95380–06600	.NUT, HEXAGON .ECROU	3					
41	703–48293–10	.SPACER, REMOTE CONTROL .ENTRETOISE	1					SINGLE SINGLE
42	701–48287–00	.WASHER .RONDELLE	3					
43	703–48215–00	.GRAPHIC .ADHESIF	1					
44	703–82510–43	.MAIN SWITCH ASSY .CONTACTEUR A CLEF COMPLET	1					
45	703–82577–00	..CAP, KEY ..CABOCHON	1					
46	703–82531–00	.WIRE, LEAD .FIL	1					
47	688–82575–01	.ENGINE STOP SWITCH ASSY .COUPE CIRCUIT CPLT	1					
48	682–82556–00	..STOPPER ..PLAQUETTE	1					
49	688–8258A–20	.EXTENSION, WIRE HARNESS .EXTENSION, FAISCEAU DE FILS	1					L:5M (10P) L:5M (10P)
50	703–82540–00	.NEUTRAL SWITCH ASSY .CONTACTEUR DE POINT-MORT	1					
51	703–83383–02	.BUZZER .RONFLEUR	1					
52	703–48284–00	.GROMMET .PASSE-FIL	1					
53	703–82591–00	.BAND .COLLIER	1					
54	703–82592–00	.BAND .COLLIER	1					

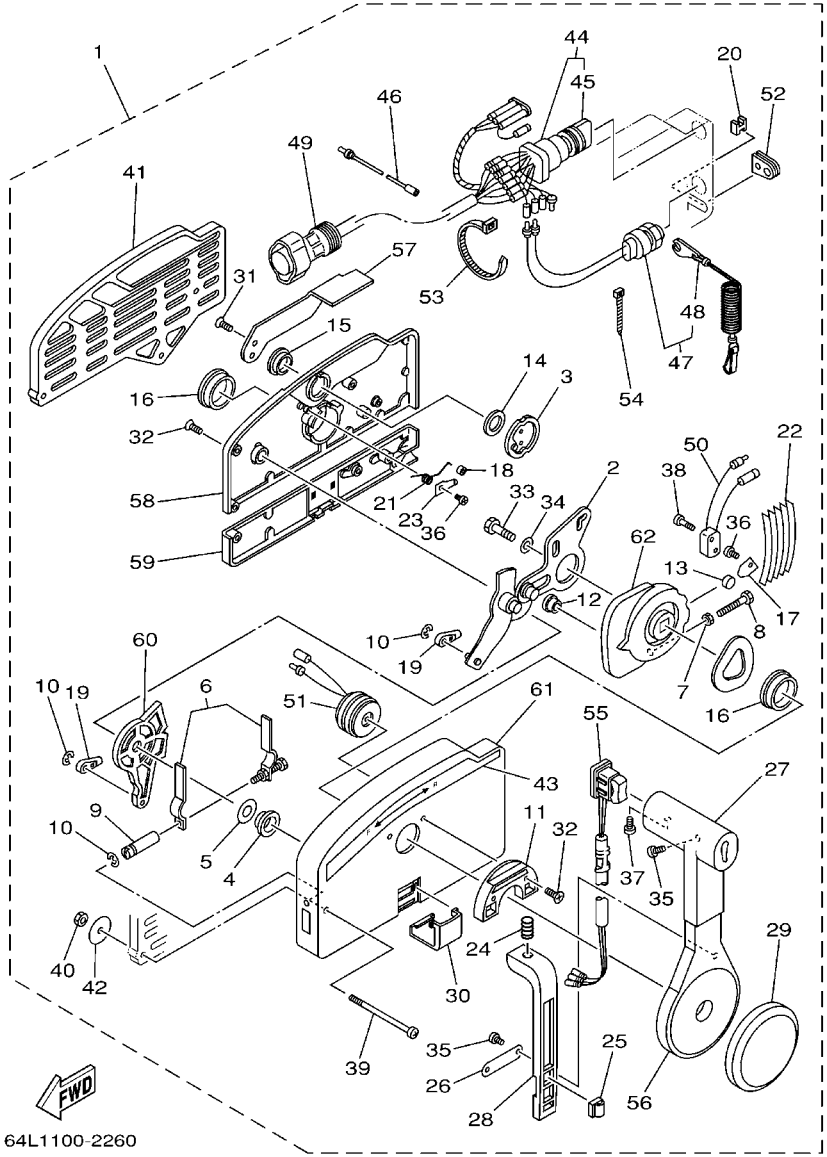

64L1100-2260

FIG. 34 REMOTE CONTROL ASSY 1 BOITIER DE COMMANDE A DISTANCE

REF. NO.	PART NO. N° PIECES	DESCRIPTION DESCRIPTION	63P2	64P2				REMARKS REMARQUES
55	703–82563–02	.TRIM & TILT SWITCH ASSY .INCLINER ET PARER COMMUTATEUR	1					WITH PT/T SW. WITH PT/T SW.
56	703–48221–00	.LEVER, CONTROL .LEVIER, COMMANDE	1					
57	703–48152–00	.KNOB, FREE ACCEL. .BOUTON	1					
58	703–48212–00	.BACK PLATE 1 .PLAQUETTE 1	1					
59	703–48213–00	.BACK PLATE 2 .PLAQUETTE 2	1					
60	703–48271–00	.ARM, SHIFT .BRAS	1					
61	703–48211–01	.HOUSING,1 .CORPS	1					
62	703–48232–00	.GEAR .PIGNON	1					

FIG. 35 REMOTE CONTROL ASSY 2 BOITIER DE COMMANDE A DISTANCE

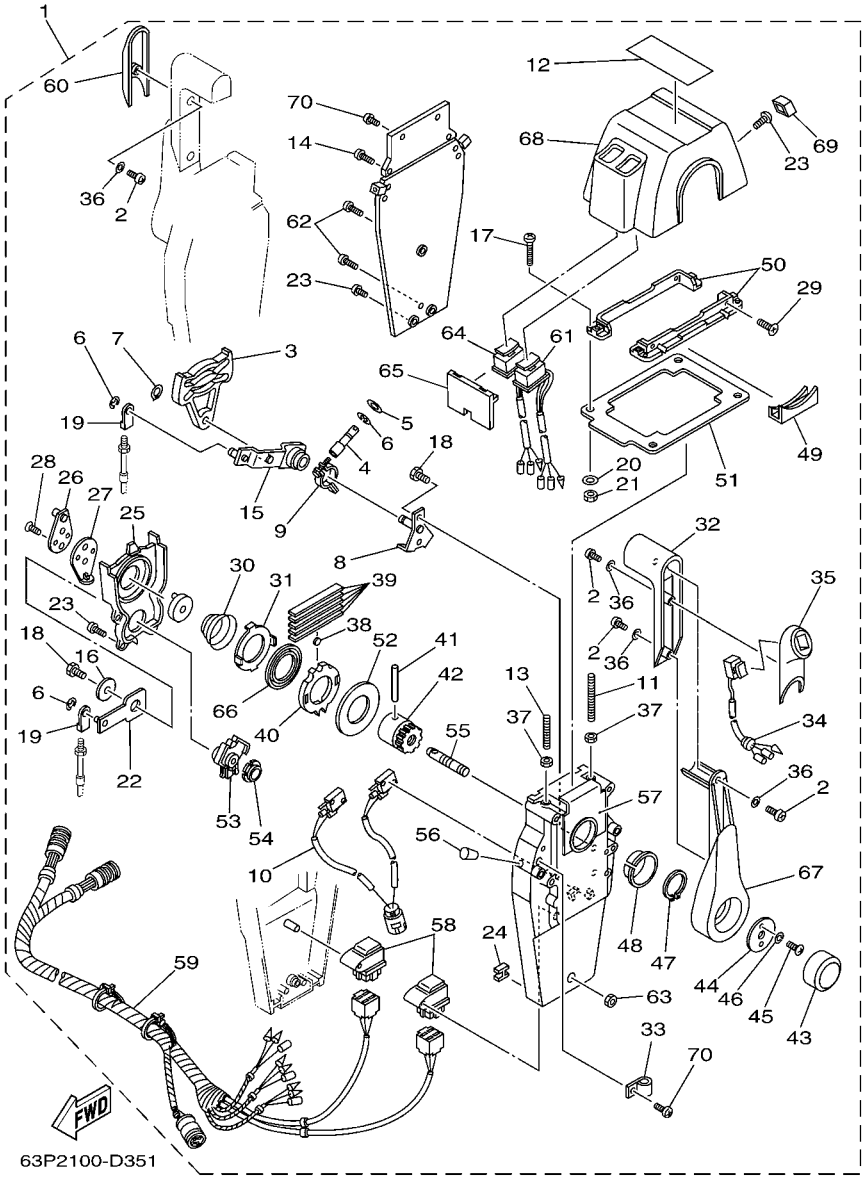

REF. NO.	PART NO. N° PIECES	DESCRIPTION DESCRIPTION	63P2	64P2				REMARKS REMARQUES
1	704–48207–P0	REMOTE CONTROL ASSY BOITIER DE COMMANDE A DISTANCE		1				AP WITH PT/T SW. AP WITH PT/T SW.
2	704–48129–00	.SCREW 3 .VIS 3		6				
3	EL8–48251–00	.PLATE, CAM .PLAQUE, CAME		2				
4	704–48265–00	.SHAFT, FRICTION .AXE, COPILOTE		2				
5	701–48246–00	.SPACER .ENTRETOISE		2				
6	93430–06024	.CIRCLIP .CLIPS		8				
7	EL8–48259–00	.CIRCLIP 1 .CIRCLIP		2				
8	704–48262–00	.SHAFT, THROTTLE .AXE, ACCELERATION		2				
9	704–48264–00	.THROTTLE, FRICTION .FRICTION, ACCELERATION		2				
10	704–82540–30	.NEUTRAL SWITCH ASSY .CONTACTEUR DE POINT-MORT		1				
11	EL8–48281–00	.SCREW .VIS		2				
12	704–48215–30	.GRAPHIC .ADHESIF		1				
13	704–48281–00	.SCREW .VIS		2				
14	97890–05025	.SCREW, PAN HEAD .VIS, CRUCIFORME		4				
15	704–48261–00	.ARM, THROTTLE .BRAS, ACCELERATION		2				
16	EL8–48191–00	.WASHER 1 .RONDELLE		2				
17	704–48283–00	.SCREW .VIS		4				
18	97380–06018	.BOLT .BOULON, HEXAGONAL		6				
19	703–48345–01	.CABLE END, REMOTE CONTROL 2 .CHAPE CABLE		4				
20	704–48287–00	.WASHER .RONDELLE		4				
21	95380–05600	.NUT .ECROU		4				
22	704–48271–00	.ARM, SHIFT .BRAS		2				
23	EL8–48127–00	.SCREW 1 .VIS 1		18				
24	703–48358–00	.ANCHOR, CABLE .COLLIER		2				
25	704–48231–00	.HOUSING, GEAR .CARTER, ENGRENAGE		2				
26	EL8–48241–00	.ARM, DRIVE .BRAS, COMMANDE		2				
27	EL8–48254–00	.STOPPER, THROTTLE ADJUSTING .BUTEE		2				

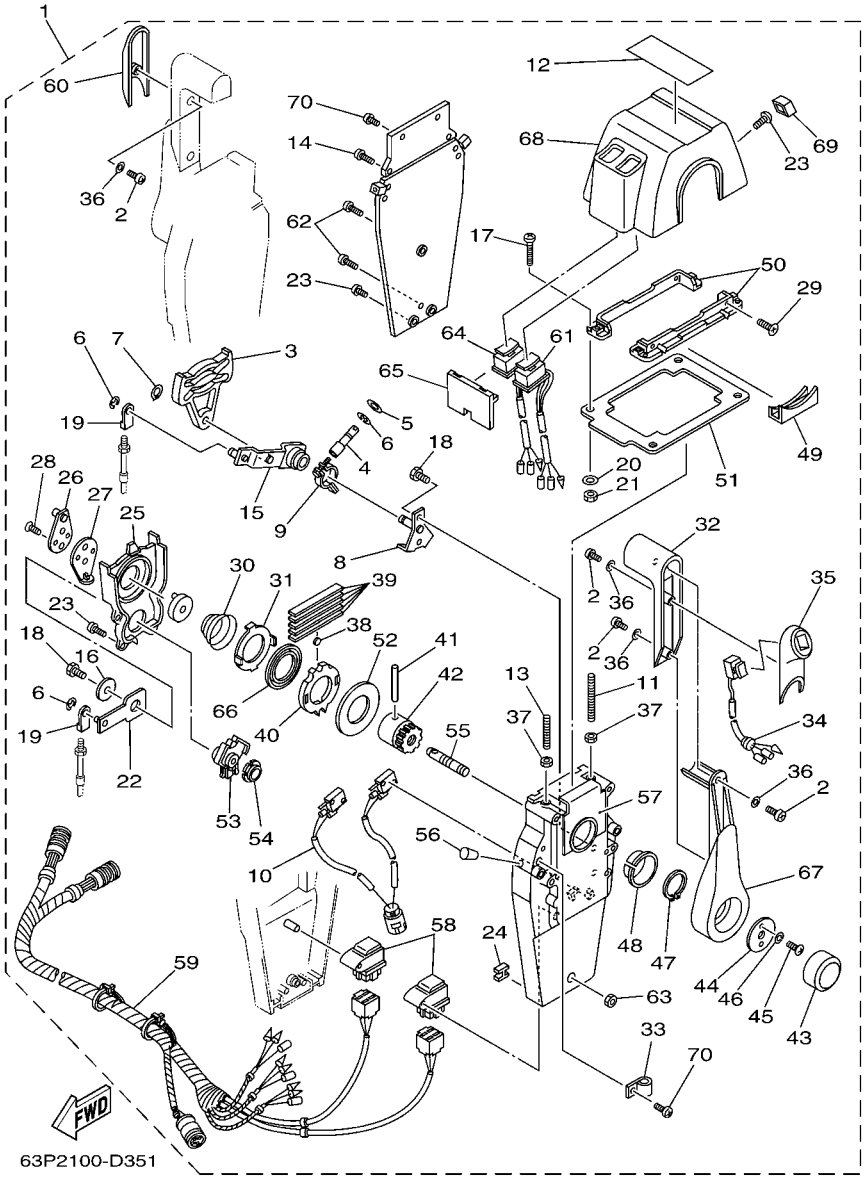

FIG. 35 REMOTE CONTROL ASSY 2 BOITIER DE COMMANDE A DISTANCE

REF. NO.	PART NO. N° PIECES	DESCRIPTION DESCRIPTION	63P2	64P2				REMARKS REMARQUES
28	92780–06020	.SCREW, FLAT HEAD .VIS A TETE FRAISEE		4				
29	98780–05018	.SCREW, FLAT HEAD .VIS A TETE FRAISEE		4				
30	EL8–48244–00	.SPRING, FREE ACCEL. .RESSORT		2				
31	EL8–48245–00	.PLATE, LOCK .PLAQUE, VERROU		2				
32	704–48222–P0	.GRIP, CONTROL LEVER .POIGNEE, COMMANDE LEVIER		2				
33	704–82594–00	.CLAMP .BRIDE		1				
34	704–82563–50	.TRIM & TILT SWITCH ASSY .INCLINER ET PARER COMMUTATEUR		1				
35	704–48229–P1	.GRIP, CONTROL LEVER .POIGNEE, COMMANDE LEVIER		1				
36	92990–05300	.WASHER, INTERNAL TOOTH .RONDELLE, DENTURE INTERNE		6				
37	95380–06600	.NUT, HEXAGON .ECROU		4				
38	701–48248–00	.ROLLER, FREE ACCEL. .POULIE		2				
39	704–48238–00	.SPRING, DETENT .RESSORT		10				
40	704–48232–P1	.GEAR .PIGNON		2				
41	EL8–48164–00	.PIN 2 .PION 2		2				
42	704–48242–10	.SHAFT, DRIVE .ARBRE, MOTEUR		2				
43	6X3–48225–20	.COVER .COUVERCLE		2				
44	704–48192–00	.WASHER 2 .RONDELLE 2		2				
45	97890–06018	.SCREW, PAN HEAD .VIS, CRUCIFORME		4				
46	92990–06300	.WASHER, INTERNAL TOOTH .RONDELLE, DENTURE INTERNE		4				
47	EL8–48279–00	.CIRCLIP 2 .CIRCLIP 2		2				
48	704–48234–00	.BUSHING 1 .POULIE		2				
49	704–48219–P0	.COVER, LEAD .COUVERCLE		2				
50	704–48144–20	.PLATE, STOPPER 2 .PLAQUETTE 2		2				
51	704–48176–10	.GROMMET .PASSE-FIL		1				
52	704–48192–P0	.WASHER 2 .RONDELLE 2		2				
53	704–48233–00	.GEAR 2 .PIGNON 2		2				
54	704–48235–00	.BUSHING .COUSSINET		2				

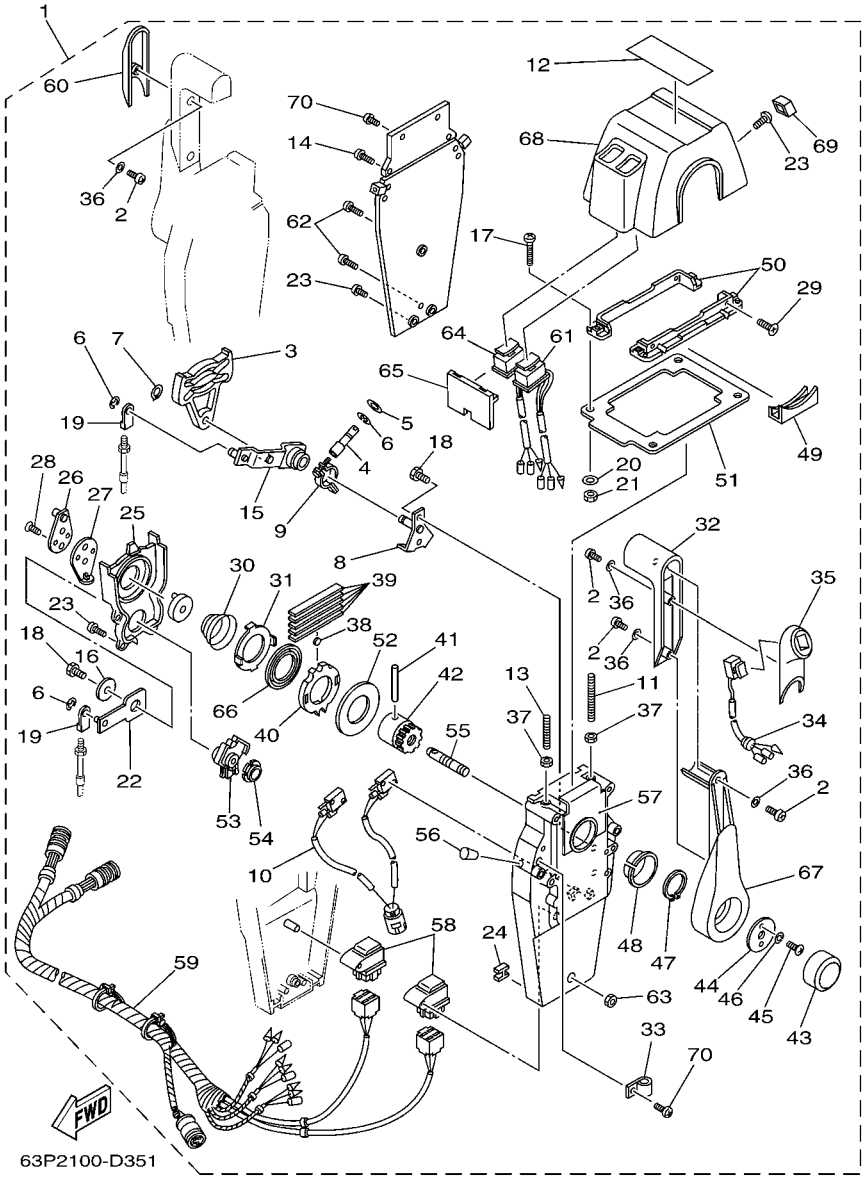

FIG. 35 REMOTE CONTROL ASSY 2 BOITIER DE COMMANDE A DISTANCE

REF. NO.	PART NO. N° PIECES	DESCRIPTION DESCRIPTION	63P2	64P2				REMARKS REMARQUES
55	704–48153–00	.SHAFT, FREE ACCEL. .AXE		2				
56	704–48166–00	.PLUG .BOUCHON		2				
57	704–48284–P0	.GROMMET .PASSE-FIL		2				
58	704–81950–10	.RELAY ASSY .RELAIS COMPLET		2				
59	704–82590–10	.WIRE HARNESS ASSY .FAISCEAU DE FILS COMPLET		1				
60	704–48229–00	.GRIP, CONTROL LEVER .POIGNEE, COMMANDE LEVIER		1				
61	704–82563–H0	.TRIM & TILT SWITCH ASSY .INCLINER ET PARER COMMUTATEUR		1				
62	704–48128–00	.SCREW 2 .VIS 2		3				
63	704–48156–00	.NUT 1 .ECROU 1		1				
64	704–82563–J0	.TRIM & TILT SWITCH ASSY .INCLINER ET PARER COMMUTATEUR		1				
65	704–48285–10	.GROMMET 2 .PASSE-FIL 2		1				
66	704–48178–00	.PLATE, SHIFT .PLAQUETTE		2				
67	704–48221–P0	.LEVER, CONTROL .LEVIER, COMMANDE		2				
68	704–48119–40	.COVER .COQUILLE		1				
69	704–48167–10	.PLUG .BOUCHON		1				
70	97890–05016	.SCREW, PAN HEAD .VIS, CRUCIFORME		5				

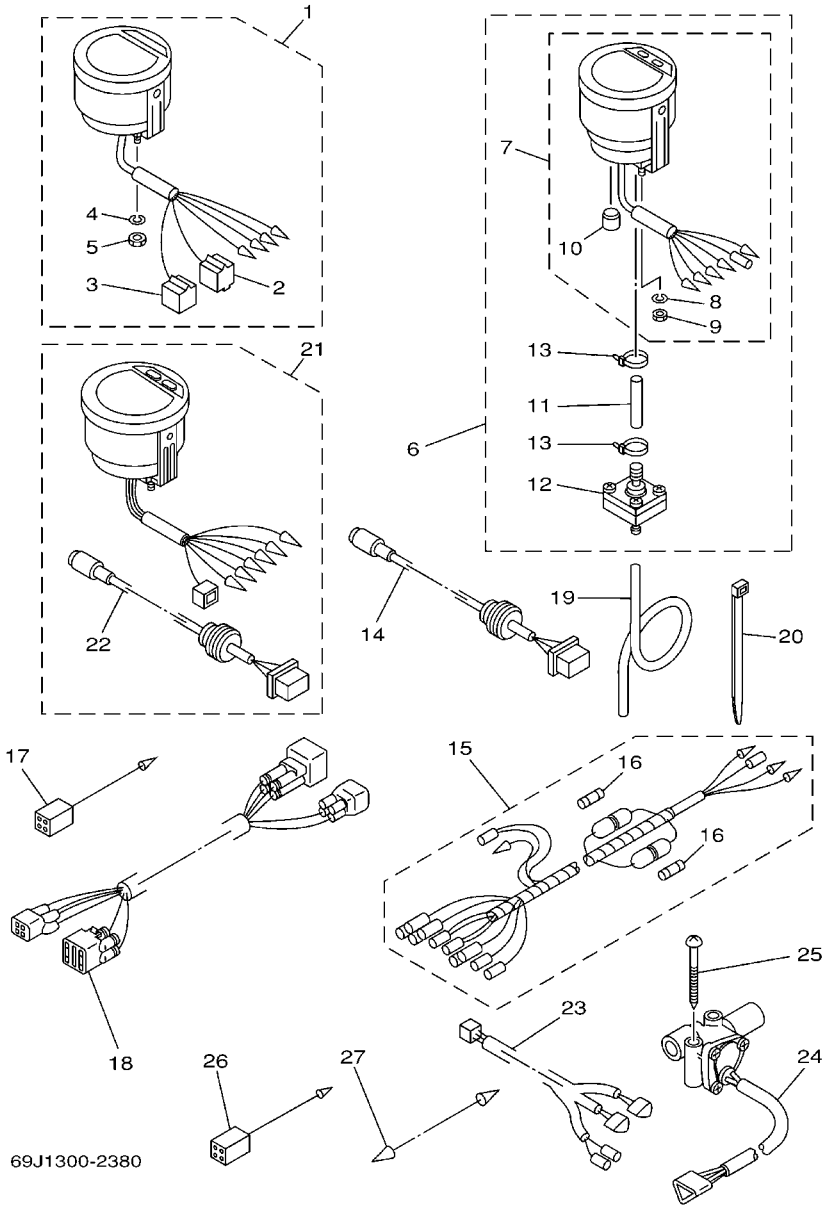

FIG. 36 METER COMPTEUR

REF. NO.	PART NO. N° PIECES	DESCRIPTION DESCRIPTION	63P2	64P2				REMARKS REMARQUES
1	6Y5–8350T–03	DIGITAL TACHOMETER ASSY COMPTE-TOURS NUMERIQUE CPLT	1	1				AP AP
2	9E450–04433	.CONNECTOR .CONNECTEUR	1	1				M-4-W M-4-W
3	9E450–04533	.CONNECTOR .CONNECTEUR	1	1				F-4-W F-4-W
4	92990–04100	.WASHER, SPRING .RONDELLE, GROWER	2	2				
5	95380–04600	.NUT .ECROU	2	2				
6	6Y5–83500–S5	DIGITAL SPEEDOMETER ASSY TACHYMETRE NUMERIQUE CPLT.	1					AP AP
7	6Y5–83570–S5	.SPEEDOMETER ASSY .COMPTEUR DE VITESSE CPLT	1					
8	92990–04100	..WASHER, SPRING ..RONDELLE, GROWER	2					
9	95380–04600	..NUT ..ECROU	2					
10	6Y5–83533–T2	..GROMMET ..RONDELLE CAOUTCHOUC	1					
11	6Y5–83557–31	.TUBE .TUBE	1					
12	6Y5–83728–00	.CONNECTOR ASSY .CONNEXION COMPLET	1					
13	90465–11M10	.CLAMP .BRIDE	2					
14	6Y5–87122–S0	CORD ASSY 1 CORDON COMPLET 1	1					AP AP
15	6Y5–83553–M0	WIRE, LEAD (L=2.5M) FIL (L=2.5M)	1					AP AP
	6Y5–83553–00	WIRE, LEAD (L=2.5M) FIL (L=2.5M)		1				AP AP
16	1E6–82151–00	.FUSE (10A) .FUSIBLE (10A)	2					FOR 6Y5-83553-M0 FOR 6Y5-83553-M0
	1E6–82151–00	.FUSE (10A) .FUSIBLE (10A)		1				FOR 6Y5-83553-00 FOR 6Y5-83553-00
17	6Y5–82117–00	WIRE, LEAD (BLACK) FIL (NOIR)	1					AP AP
18	68F–82553–80	EXTENSION, WIRE LEAD (L=8.0M) EXTENSION, FAISCEAU (L=8.0M)	1					AP AP
	68F–82553–90	EXTENSION, WIRE LEAD (L=9.5M) EXTENSION, FAISCEAU (L=9.5M)		1				AP AP
19	6Y5–83557–10	TUBE (8M) TUBE (8M)	1					AP AP
20	90465–11M10	CLAMP BRIDE	2					AP AP
21	6Y5–8350F–00	FUEL MANAGEMENT METER COMPT. DE GESTION DU CARBURANT		1				AP AP
22	6Y5–87122–S0	.CORD ASSY 1 .CORDON COMPLET 1		1				
23	6Y5–83553–F1	WIRE, LEAD (L=8.0M) FIL (L=8.0M)		1				AP AP
24	6Y5–85752–01	SENDER UNIT ASSY, FUEL METER PERCEPTION DE JAUGE A ESSENCE		2				AP AP

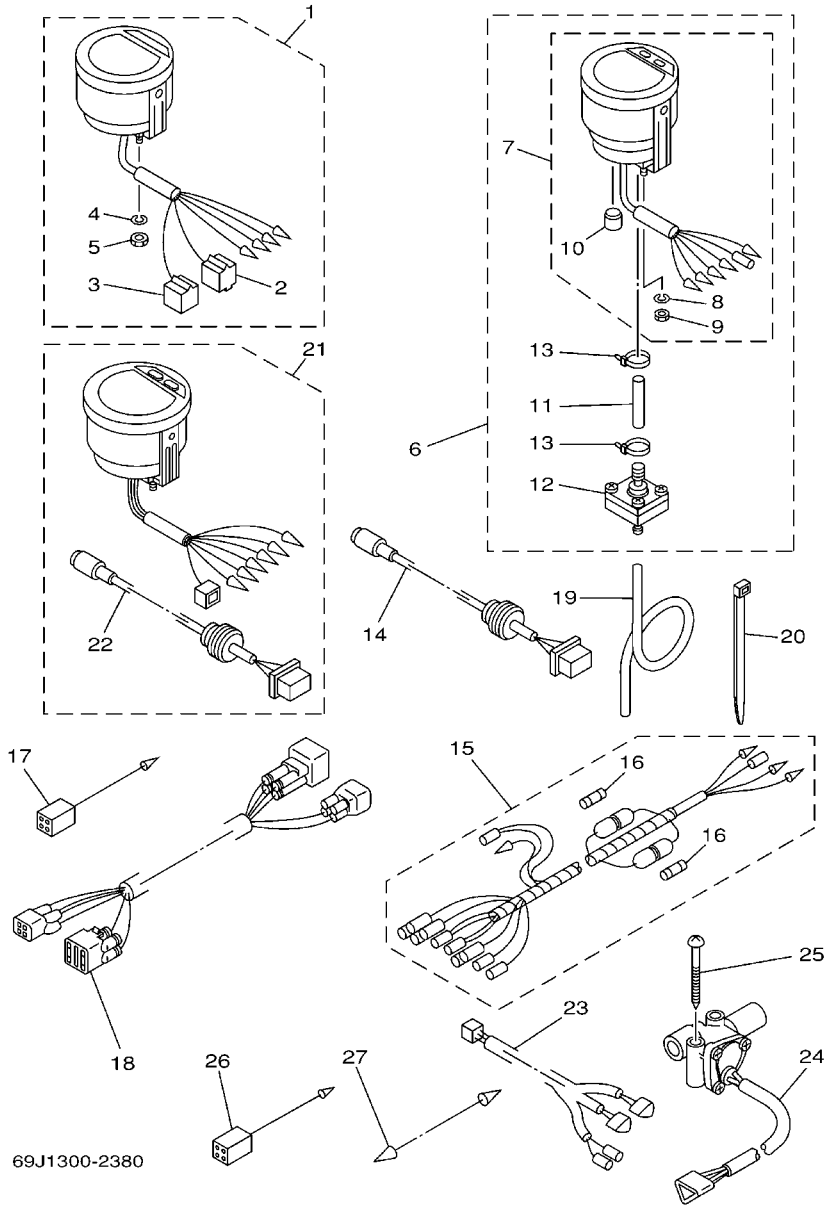

FIG. 36 METER COMPTEUR

REF. NO.	PART NO. N° PIECES	DESCRIPTION DESCRIPTION	63P2	64P2				REMARKS REMARQUES
25	90158–06002	SCREW, WOOD VIS, A BOIS		4				AP AP
26	6Y5–82117–00	WIRE, LEAD (BLACK) FIL (NOIR)		1				AP AP
27	703–82531–00	WIRE, LEAD FIL		1				AP AP

FIG. 37 SWITCH & PANEL — TABLEAU DE CONTACTEUR

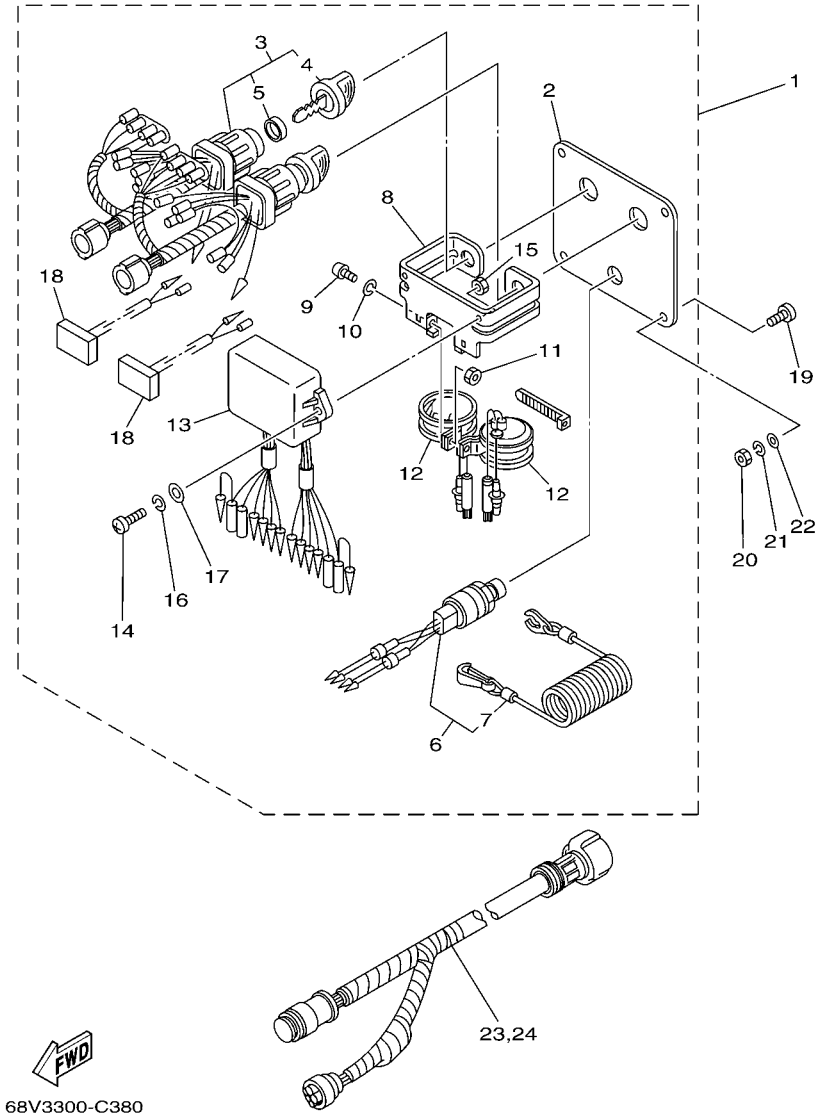

REF. NO.	PART NO. N° PIECES	DESCRIPTION DESCRIPTION	63P2	64P2				REMARKS REMARQUES
1	6K1–82570–08	PANEL SWITCH ASSY PLATINE D'INTERRUPEUR CPLT		1				AP AP
2	6K1–82571–02	.PANEL, SWITCH .TABLEAU, CONTACTEUR		1				
3	6K1–82510–06	.MAIN SWITCH ASSY .CONTACTEUR A CLEF COMPLET		2				
4	703–82577–00	..CAP, KEY ..CABOCHON		1				
5	6K1–82532–00	..CAP ..COUVERCLE		1				
6	6K1–82575–00	.ENGINE STOP SWITCH ASSY .COUPE CIRCUIT CPLT		1				
7	682–82556–00	..STOPPER ..PLAQUETTE		1				
8	6K1–83614–01	.BRACKET .SUPPORT		1				
9	98980–05010	.SCREW, BIND .VIS, DE PRESSION		2				
10	92990–05100	.WASHER, SPRING .RONDELLE, GROWER		2				
11	95380–05600	.NUT .ECROU		2				
12	688–83383–11	.BUZZER .RONFLEUR		2				
13	6K1–85830–01	.CONTROL UNIT ASSY .BLOC DE CONTROLE		1				
14	98980–06020	.SCREW, BIND .VIS, DE PRESSION		2				
15	95380–06600	.NUT, HEXAGON .ECROU		2				
16	92990–06100	.WASHER, SPRING .RONDELLE, GROWER		2				
17	92990–06600	.WASHER, PLATE .RONDELLE, PLATE		2				
18	6K1–81980–00	.DIODE ASSY .REDRESSEUR 2		2				
19	90149–05M05	SCREW VIS		4				AP AP
20	95380–05600	NUT ECROU		4				AP AP
21	92990–05100	WASHER, SPRING RONDELLE, GROWER		4				AP AP
22	92990–05600	WASHER, PLATE RONDELLE, PLATE		4				AP AP
23	6K1–8258A–40	EXTENSION, WIRE HARNESS (8M) EXTENSION, FAISCEAU DE FILS		1				AP (10P) AP (10P)
24	61B–8258A–01	EXTENSION, WIRE HARNESS (9.5M) EXTENSION, FAISCEAU DE FILS		1				AP (10P) AP (10P)

FIG. 38 REPAIR KIT 1 — KITS DE REPARATION 1

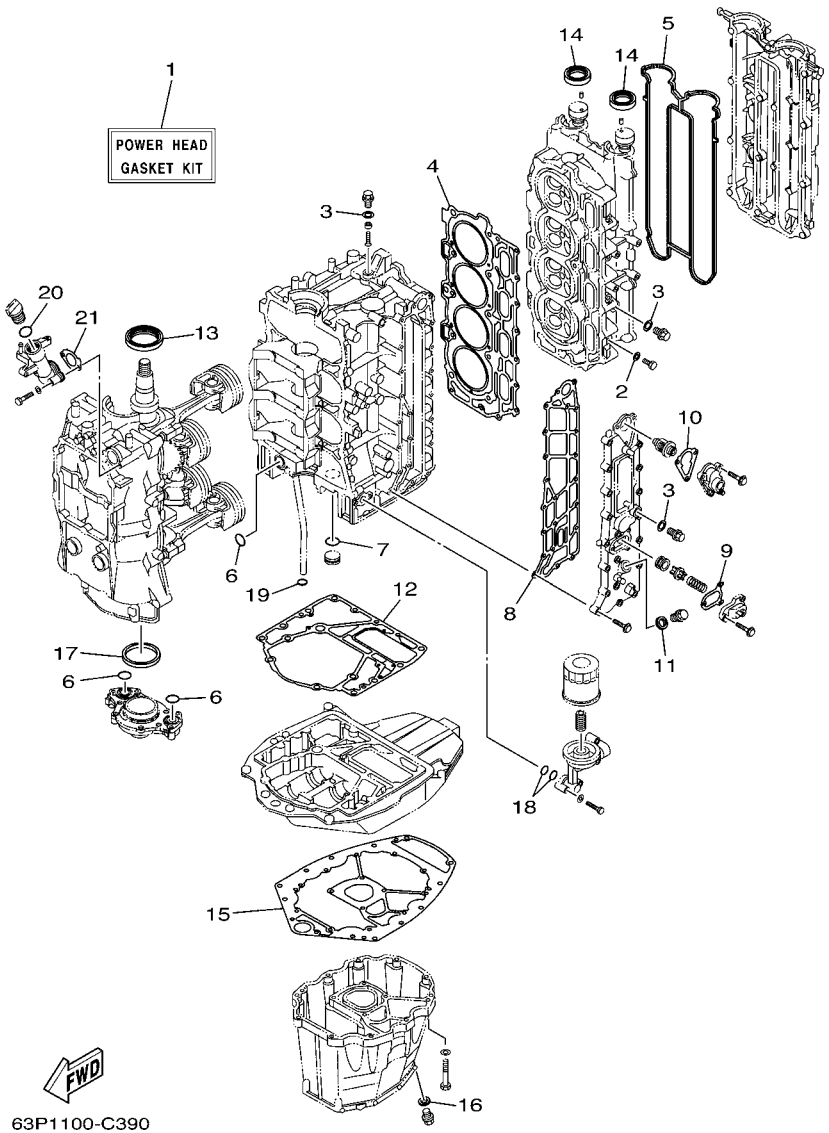

REF. NO.	PART NO. N° PIECES	DESCRIPTION DESCRIPTION	63P2	64P2				REMARKS REMARQUES
1	63P–W0001–01	POWER HEAD GASKET KIT POCHETTE DE JINTS TETE MOTRICE	1	1				
2	90430–08143	.GASKET .JOINT	4	4				
3	90430–14115	.GASKET .JOINT	4	4				
4	63P–11181–00	.GASKET, CYLINDER HEAD 1 .JOINT, DE CULASSE 1	1	1				
5	63P–11193–00	.GASKET, HEAD COVER 1 .JOINT, COUVERCLE DE CULASSE 1	1	1				
6	93210–25552	.O-RING .JOINT TORIQUE	3	3				
7	93210–25647	.O-RING .JOINT TORIQUE	1	1				
8	63P–41114–A1	.GASKET, EXHAUST OUTER COVER .JOINT, COUVERCLE D'ECHAPPEMEN	1	1				
9	67F–12435–A0	.GASKET .JOINT	1	1				
10	63P–12414–00	.GASKET, COVER .JOINT, COUVERCLE	1	1				
11	90430–18130	.GASKET .JOINT	1	1				
12	63P–11351–00	.GASKET, CYLINDER .JOINT, D'EMBASE	1	1				
13	93102–60004	.OIL SEAL .JOINT SPY	1	1				
14	93102–38M59	.OIL SEAL .JOINT SPY	2	2				
15	63P–15312–00	.GASKET, OIL PAN .JOINT DE VENTILATEUR D'HUILE	1	1				
16	90430–14M09	.GASKET .JOINT	1	1				
17	69J–11355–00	.SEAL, CYLINDER 1 .JOINT, SPY CYLINDRE	1	1				
18	93210–19MJ1	.O-RING .JOINT TORIQUE	2	2				
19	93210–19MJ3	.O-RING .JOINT TORIQUE	1	1				
20	93210–24M79	.O-RING .JOINT TORIQUE	1	1				
21	63P–15364–A0	.GASKET, OIL PLUG .JOINT, PLOT D'HUILE	1	1				

FIG. 39 REPAIR KIT 2 — KITS DE REPARATION 2

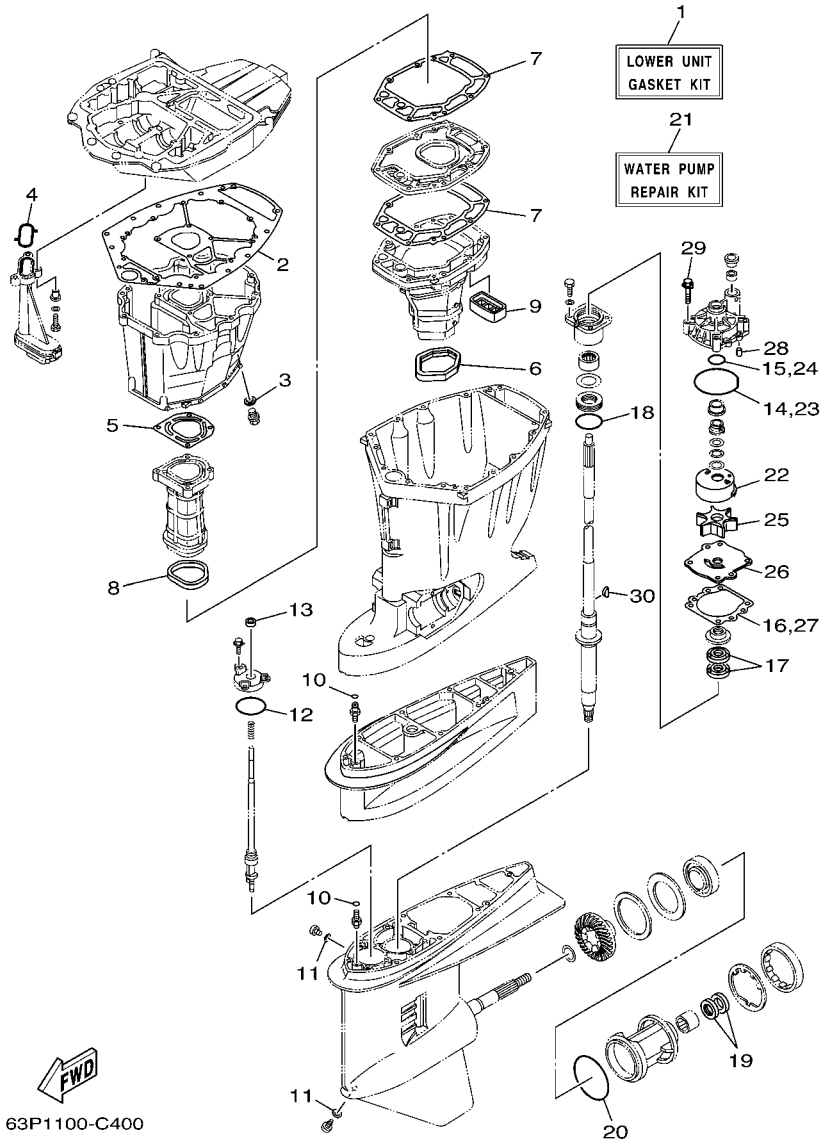

REF. NO.	PART NO. N° PIECES	DESCRIPTION DESCRIPTION	63P2	64P2				REMARKS REMARQUES
1	63P–W0001–20	LOWER UNIT GASKET KIT POCHETTE DE JOINTS EMBASE	1	1				
2	63P–15312–00	.GASKET, OIL PAN .JOINT DE VENTILATEUR D'HUILE	1	1				
3	90430–14M09	.GASKET .JOINT	1	1				
4	63P–13415–00	.SEAL, OIL STRAINER .JOINT, FILTRE A HUILE	1	1				
5	63P–41133–A0	.GASKET, EXHAUST MANIFOLD 1 .JOINT, PIPE D'ECHAPPEMENT	1	1				
6	69J–45123–00	.GASKET, MUFFLER .JOINT, POT DE DETENTE	1	1				
7	63P–41134–A0	.GASKET, EXHAUST MANIFOLD .JOINT, PIPE D'ECHAPPEMENT	2	2				
8	63P–41138–00	.SEAL, EXT. 1 .JOINT DE GROUPE 1	1	1				
9	69J–45127–00	.SEAL .JOINT	1	1				
10	93210–07003	.O-RING .JOINT TORIQUE	2	2				
11	90430–08020	.GASKET .JOINT	2	2				
12	93210–58144	.O-RING .JOINT TORIQUE	1	1				
13	93106–09014	.OIL SEAL .JOINT SPY	1	1				
14	93210–86M38	.O-RING .JOINT TORIQUE	1	1				
15	93210–37160	.O-RING .JOINT TORIQUE	1	1				
16	6E5–44315–A0	.GASKET, WATER PUMP .JOINT, POMPE A EAU	1	1				
17	93101–28M16	.OIL SEAL .JOINT SPY	2	2				
18	93210–55M14	.O-RING .JOINT TORIQUE	1	1				
19	93101–30M17	.OIL SEAL .JOINT SPY	2	2				
20	93210–97M55	.O-RING .JOINT TORIQUE	1	1				
21	61A–W0078–A3	WATER PUMP REPAIR KIT KIT DE REPARATION DE LA POMPE	1	1				
22	61A–44322–02	.INSERT, CARTRIDGE .CUVETTE	1	1				
23	93210–86M38	.O-RING .JOINT TORIQUE	1	1				
24	93210–37160	.O-RING .JOINT TORIQUE	1	1				
25	6E5–44352–01	.IMPELLER .TURBINE	1	1				
26	6G5–44323–00	.OUTER PLATE, CARTRIDGE .PLAQUE EXTERIEURE	1	1				
27	6E5–44315–A0	.GASKET, WATER PUMP .JOINT, POMPE A EAU	1	1				

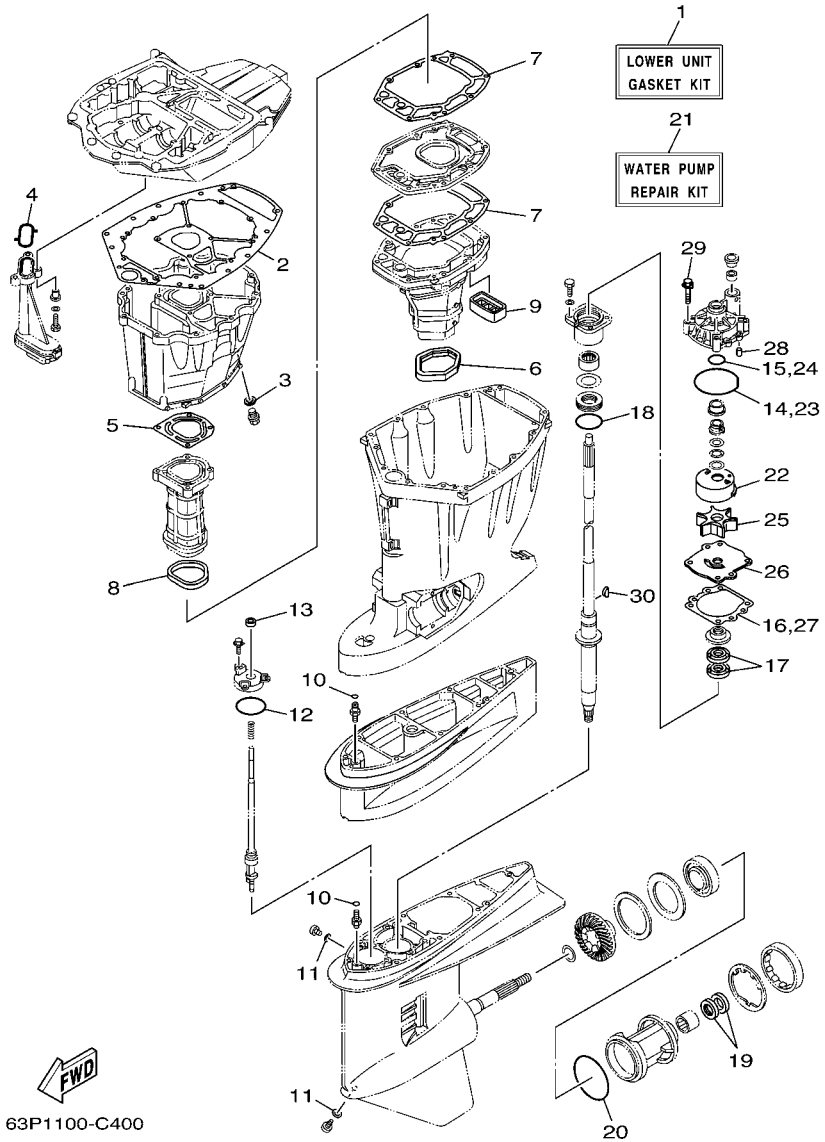

FIG. 39 REPAIR KIT 2 — KITS DE REPARATION 2

REF. NO.	PART NO. N° PIECES	DESCRIPTION DESCRIPTION	63P2	64P2				REMARKS REMARQUES
28	93606–12019	.PIN, DOWEL .GOUPILLE	2	2				
29	90119–08M14	.BOLT, WITH WASHER .BOULON, AVEC RONDELLE	4	4				
30	90280–04M05	.KEY, WOODRUFF .CLAVETTE, DEMI-LUNE	1	1				

NUMERICAL INDEX
INDEX NUMERIQUE

PART NO. N° PIECES	REF. NO.
63P–11110–00–94	4 – 2
63P–11119–00	2 – 21
68F–11119–00	2 – 22
69J–11133–10	4 – 3
63P–11135–00	4 – 23
63P–11181–00	4 – 18
	38 – 4
63P–11191–00–1S	4 – 22
63P–11192–00	4 – 29
63P–11192–01	4 – 29
63P–11193–00	4 – 26
	38 – 5
63P–11197–00	2 – 10
68T–11325–00	5 – 2
63P–11325–01	2 – 17
68V–11325–01	4 – 12
	5 – 12
63P–11325–11	2 – 19
63P–11325–21	2 – 11
69J–11327–00–94	4 – 13
	5 – 13
67F–11328–00	4 – 16
	5 – 16
63P–11351–00	2 – 24
	38 – 12
69J–11355–00	27 – 19
	38 – 17
63P–11372–00	2 – 4
63P–11377–00	2 – 29
63P–11410–00	3 – 1
63P–11416–00	3 – 3
63P–11416–10	3 – 3
63P–11416–20	3 – 3
63P–11417–00	3 – 4
63P–11417–10	3 – 4
63P–11417–20	3 – 4
63P–11417–30	3 – 4
63P–11426–00	3 – 5
63P–11426–10	3 – 5
63P–11426–20	3 – 5
63P–11500–00	2 – 25
63P–11512–00	2 – 28
63P–11536–00	6 – 17
63P–11537–00	6 – 12
63P–11590–00	6 – 16
63P–11603–00	3 – 9
63P–11654–00	3 – 7
63P–11656–00	3 – 8

PART NO. N° PIECES	REF. NO.
63P–11656–10	3 – 8
63P–11656–20	3 – 8
69J–12111–00	6 – 1
69J–12113–01	6 – 3
69J–12117–01	6 – 4
69J–12118–00	6 – 5
69J–12119–00	6 – 6
69J–12121–00	6 – 2
67F–12138–60	4 – 32
69J–12153–00	6 – 7
69J–12168–00	6 – 8
69J–12168–10	6 – 8
69J–12168–20	6 – 8
69J–12168–30	6 – 8
69J–12168–40	6 – 8
69J–12168–50	6 – 8
69J–12168–60	6 – 8
69J–12168–70	6 – 8
69J–12168–80	6 – 8
69J–12168–90	6 – 8
69J–12168–A0	6 – 8
69J–12168–B0	6 – 8
69J–12168–C0	6 – 8
69J–12168–D0	6 – 8
69J–12168–E0	6 – 8
69J–12168–F0	6 – 8
69J–12168–G0	6 – 8
69J–12168–H0	6 – 8
69J–12168–J0	6 – 8
69J–12168–K0	6 – 8
69J–12168–L0	6 – 8
69J–12168–M0	6 – 8
69J–12168–N0	6 – 8
69J–12168–P0	6 – 8
69J–12168–R0	6 – 8
69J–12168–S0	6 – 8
69J–12168–T0	6 – 8
69J–12168–U0	6 – 8
69J–12168–V0	6 – 8
69J–12168–W0	6 – 8
69J–12168–X0	6 – 8
69J–12168–Y0	6 – 8
69J–12169–00	6 – 8
63P–12171–00	6 – 9
63P–12181–00	6 – 10
63P–1240H–00–1S	5 – 19
67F–12411–01	5 – 18
63P–12414–00	5 – 20

PART NO. N° PIECES	REF. NO.
63P–12414–00	38 – 10
6G5–12416–00	5 – 6
67F–12435–A0	5 – 10
	38 – 9
67F–1246A–00–1S	5 – 9
68T–12572–00	20 – 28
6R3–12581–00	20 – 30
6R3–12582–00	20 – 31
6R3–12583–00	20 – 32
69J–12858–00	5 – 28
69J–13119–00	27 – 17
63P–1312A–00	9 – 26
63P–13131–00	13 – 27
63P–13160–00	12 – 6
63P–13300–00	27 – 14
63P–13329–00	27 – 15
69J–13338–00	27 – 16
63P–13411–00	27 – 9
63P–13415–00	27 – 11
	39 – 4
67F–13434–02	1 – 28
63P–13437–60	15 – 23
69J–13440–00	5 – 27
63P–13446–00–94	5 – 29
67F–13448–00	1 – 23
63P–13490–00	2 – 33
	11 – 3
63P–13532–00	11 – 5
	12 – 5
63P–13545–00	12 – 4
63P–13546–00	12 – 3
63P–13557–00	9 – 20
68V–13577–00	11 – 14
	12 – 15
69J–13593–00	10 – 23
69J–13631–00	27 – 18
63P–13641–00	9 – 13
63P–13643–00	9 – 22
63P–13645–00	9 – 16
69J–13716–00	10 – 22
63P–13751–00	9 – 2
63P–13751–01	9 – 2
6P2–13758–00	12 – 19
63P–13761–00	9 – 23
68V–13766–00	9 – 25
63P–13769–00	9 – 32
68V–13781–10	10 – 9
63P–13784–00	10 – 14

PART NO. N° PIECES	REF. NO.
63P–13881–00	11 – 18
63P–13898–00	9 – 31
63P–13905–00	9 – 30
63P–13906–00	10 – 4
63P–13907–01	10 – 13
63P–13915–00	10 – 15
63P–13971–00	12 – 2
63P–13974–00	11 – 7
63P–13974–10	12 – 8
63P–13975–00	11 – 17
	12 – 18
63P–13976–00	11 – 8
	12 – 9
68V–1410B–00	9 – 24
63P–14148–00	10 – 16
63P–14149–00	11 – 1
	12 – 1
63P–14180–00	10 – 1
63P–14182–00	10 – 2
63P–14191–00	10 – 20
63P–14197–00	11 – 4
63P–14200–00	9 – 1
63P–14200–20	9 – 1
63P–14225–00	11 – 6
	12 – 7
69J–14225–00	10 – 7
63P–14291–00	9 – 12
69J–14321–00	9 – 3
68V–14323–00	9 – 5
68V–14331–00	9 – 4
68V–14356–00	9 – 10
68V–14386–00	10 – 11
63P–1441J–00	11 – 2
63P–14435–00	18 – 17
63P–14440–00	7 – 11
63P–14446–00	9 – 21
68V–14446–00	10 – 26
63P–14449–00	7 – 12
63P–14457–00	7 – 13
63P–14496–00	9 – 14
63P–14546–00	10 – 10
63P–14565–00	10 – 5
68V–14565–00	9 – 11
63P–14567–00	10 – 6
3CF–14594–00	9 – 9
69J–14624–01	26 – 26
63P–14711–00–5B	26 – 12
63P–14777–00	10 – 21

PART NO. N° PIECES	REF. NO.
63P–14984–00	10 – 8
63P–14985–00	10 – 12
63P–15311–00–5B	27 – 2
63P–15312–00	27 – 1
	38 – 15
	39 – 2
63P–15316–00	27 – 6
63P–15319–00–1S	5 – 34
63P–15362–00	27 – 23
6G8–15363–00	5 – 32
63P–15364–A0	5 – 35
	38 – 21
63P–15373–00	7 – 6
63P–15377–00	27 – 24
63P–15378–00	7 – 9
63P–2134X–00	8 – 2
63P–21841–00	10 – 25
63P–22478–00	11 – 11
63P–2247B–00	12 – 12
68V–2411M–00	11 – 9
	12 – 10
63P–2411R–00	10 – 18
63P–2411T–00	10 – 19
68V–24149–00	13 – 34
6P2–24170–00	8 – 1
63P–2417H–00	12 – 21
63P–2417J–00	12 – 22
63P–2419A–00	8 – 3
6YK–24307–42	14 – 1
63P–24311–00	13 – 23
64P–24311–00	8 – 11
63P–24311–10	13 – 23
63P–24312–00	13 – 38
64P–24312–00	8 – 10
63P–24312–10	13 – 38
63P–24313–00	13 – 39
64P–24313–00	8 – 8
63P–24313–10	13 – 39
63P–24314–00	13 – 36
64P–24314–00	8 – 14
63P–24315–00	13 – 37
64P–24315–00	8 – 13
63P–24316–00	13 – 5
63P–24317–00	11 – 10
	12 – 11
63P–24325–00	11 – 13
	12 – 14
63P–24364–00	8 – 15

PART NO. N° PIECES	REF. NO.
63P–24367–00	8 – 12
68V–24374–00	13 – 30
6R3–24377–10	13 – 3
6E5–24378–00	13 – 35
69J–24379–00	10 – 17
6E5–24379–00	8 – 17
63P–24410–00	13 – 24
68V–24411–00	13 – 29
68V–24412–00	13 – 25
68V–24413–00	13 – 31
63P–24414–00	13 – 32
63P–24423–00	13 – 28
68V–24444–00	13 – 33
4SV–24453–00	10 – 3
68V–24454–00	13 – 26
61A–24469–00	13 – 12
69J–24501–00	11 – 15
69J–24501–10	12 – 16
69J–24502–00	8 – 9
68V–24519–00	11 – 12
	12 – 13
61A–24521–00	13 – 7
65L–24531–01	13 – 8
65L–24560–00	13 – 6
65L–24563–00	13 – 11
61A–24564–00	13 – 9
65L–24564–00	13 – 13
63P–24566–00	13 – 17
65L–24577–00	13 – 10
69J–24599–00	11 – 16
69J–24599–10	12 – 17
68V–2481H–00	11 – 19
	12 – 20
67F–28100–01	13 – 46
67F–2812A–00	17 – 39
6A1–28176–00	20 – 52
63P–28199–72–D0	13 – 47
63P–28199–72–E0	13 – 47
63P–28199–72–F0	13 – 47
63P–28199–72–G0	13 – 47
63P–28199–72–H0	13 – 47
63P–28199–72–S0	13 – 47
63P–28199–82–K0	13 – 48
63P–28199–82–L0	13 – 48
63P–28199–82–M0	13 – 48
63P–28199–82–N0	13 – 48
63P–28199–82–P0	13 – 48
63P–28199–82–R0	13 – 48

NUMERICAL INDEX
INDEX NUMERIQUE

PART NO. N° PIECES	REF. NO.
61H–2819R–31	13 – 45
63P–41113–00–1S	5 – 1
63P–41114–A1	5 – 4
	38 – 8
63P–41131–00–5B	26 – 9
63P–41133–A0	26 – 10
	39 – 5
63P–41134–A0	26 – 17
	39 – 7
63P–41137–00	26 – 1
63P–41138–00	26 – 19
	39 – 8
63P–41213–00	21 – 44
63P–41237–00	21 – 50
6H4–41237–00	9 – 17
682–41238–01	9 – 19
63P–42154–00	21 – 39
63P–42157–00	21 – 51
68V–42171–00	21 – 52
66K–42510–01–8D	23 – 9
63P–42541–00	20 – 33
63P–42610–00–8D	1 – 1
63P–42613–00	1 – 14
63P–42615–00	20 – 2
63P–42617–00	1 – 17
63P–42629–00	1 – 16
63P–42643–00–94	1 – 11
63P–42644–00–94	1 – 13
63P–42647–00–94	1 – 4
60V–42651–01	1 – 7
63P–42662–00	1 – 27
68F–42663–00	1 – 12
69J–42663–00	1 – 8
63P–42677–00	1 – 18
63P–42678–00	1 – 19
63P–42681–00	1 – 21
63P–42682–00	1 – 22
63P–42710–00–8D	20 – 1
648–42715–00	21 – 30
63P–42716–00	20 – 35
61A–42717–00	20 – 27
63P–42717–00	20 – 20
63P–42718–00	20 – 21
69J–42723–00–8D	18 – 20
6E5–42724–00	26 – 8
63P–42725–00	20 – 23
6H1–42726–21	20 – 24
61A–42727–00	20 – 42

PART NO. N° PIECES	REF. NO.
63P–42738–00–8D	20 – 19
63P–42741–01–8D	20 – 36
6H4–42748–00	20 – 48
68F–42753–00	20 – 49
63P–42756–00	20 – 44
63P–42811–01	20 – 43
63P–42815–00–8D	20 – 6
63P–42816–00–8D	20 – 7
63P–42818–01	20 – 11
68F–42828–00–5B	20 – 8
63P–42828–00–94	20 – 9
68F–42828–03–94	20 – 8
64E–43111–02–8D	22 – 1
64E–43112–02–8D	22 – 9
64E–43126–00	22 – 35
64E–43131–01	22 – 14
64E–43139–02	23 – 1
64D–43144–00	20 – 16
6G5–43144–00	22 – 25
6E5–43145–01	32 – 8
6G5–43148–00	22 – 30
6G5–43181–02	22 – 27
6G5–43185–02	22 – 28
64E–43311–10–8D	22 – 21
63P–43376–00	23 – 6
63P–43800–00–4D	24 – 1
64E–43802–00	25 – 8
64E–43805–00	25 – 37
64E–4380F–00	25 – 33
64E–4380J–00	25 – 30
63P–43810–00	24 – 6
6E5–43814–02	24 – 13
64E–43816–00	25 – 17
64E–43817–00	24 – 5
64E–43817–10	25 – 19
64E–43818–01	24 – 32
64E–4381G–00	24 – 27
64E–43820–00	24 – 15
64E–43821–00	24 – 16
64E–43822–00	24 – 17
64E–43825–01	24 – 2
64E–43827–00	25 – 22
64E–43828–00	24 – 22
64E–43829–00	24 – 23
64E–4382G–00	24 – 29
64E–43830–00	25 – 4
64E–43831–00	25 – 2
64E–43841–00	25 – 7

PART NO. N° PIECES	REF. NO.
64E–43843–00	25 – 6
64E–43843–10	25 – 38
64E–4384J–00	24 – 18
64E–43850–00	25 – 15
64E–43851–00	25 – 11
64E–43855–00	25 – 14
64E–43858–00	25 – 12
6E5–43858–00	24 – 28
72X–43858–00	25 – 5
64E–43859–00	25 – 13
64E–43860–00	25 – 20
6E5–43862–00	24 – 10
6G5–43863–00	25 – 10
6E5–43864–00	24 – 20
6G5–43864–00	24 – 19
64E–43865–00	25 – 16
6G5–43865–00	25 – 35
64E–43866–00	24 – 9
64E–43867–00	24 – 8
64E–43868–00	25 – 3
64E–43869–00	24 – 26
6H1–4386K–10	25 – 29
6E5–43872–00	24 – 12
64E–43873–00	25 – 24
6E5–43874–01	24 – 21
64E–43875–00	25 – 25
64E–43879–00	25 – 27
64E–43879–10	25 – 26
64E–4387A–00	25 – 23
67H–43880–01	25 – 28
64E–43883–00	24 – 11
64E–4388E–00	24 – 25
64E–4388E–10	25 – 1
64E–4388J–00	24 – 3
64E–43891–00	25 – 31
64E–43892–00	25 – 34
6E5–43896–00	25 – 9
64E–43897–00	24 – 24
64E–43898–00	24 – 7
63P–44117–00–1S	21 – 9
63P–44118–00–8D	21 – 25
63P–44120–00	21 – 20
63P–44121–00	21 – 18
63P–44122–00	21 – 15
69J–44135–00	21 – 45
63P–44150–00	28 – 18
64P–44150–00	30 – 19
63P–44150–10	28 – 18

PART NO. N° PIECES	REF. NO.
64P–44150–10	30 – 19
63P–44176–00–1S	21 – 8
61A–44311–01	28 – 25
	30 – 26
6E5–44312–00	28 – 30
	29 – 5
	30 – 31
	31 – 5
6E5–44315–A0	28 – 34
	30 – 35
	39 – 16
61A–44322–02	28 – 26
	30 – 27
	39 – 22
6G5–44323–00	28 – 33
	30 – 34
	39 – 26
6E5–44352–01	28 – 31
	30 – 32
	39 – 25
63P–44361–00	29 – 1
	31 – 1
63P–44362–00	29 – 3
	31 – 3
63P–44363–00	29 – 6
	31 – 6
6E5–44365–00	28 – 29
	29 – 2
	30 – 30
	31 – 2
6E5–44366–00	26 – 29
69J–44391–00	20 – 26
63P–44511–00–94	23 – 37
63P–44514–00–94	23 – 30
6G5–44526–00	22 – 3
69J–44533–00	23 – 23
68V–44551–00–8D	23 – 14
63P–44553–00–8D	23 – 26
60V–44555–00–94	23 – 17
63P–44555–00–94	23 – 17
63P–44556–00–8D	23 – 27
61A–44575–00	23 – 16
63P–45111–00–8D	26 – 21
69J–45123–00	26 – 13
	39 – 6
69J–45127–00	26 – 20
	39 – 9
6H3–45155–00	26 – 30

PART NO. N° PIECES	REF. NO.
63P–45181–00–5B	26 – 18
63P–45211–00–8D	26 – 36
6J9–45214–00	29 – 12
	31 – 12
6J9–45215–00	29 – 13
	31 – 13
6G5–45251–02	22 – 2
63P–45300–01–8D	28 – 1
64P–45300–01–8D	30 – 1
63P–45300–11–8D	28 – 1
64P–45300–11–8D	30 – 1
6J9–45301–05–8D	28 – 2
	30 – 2
6E5–45318–00	26 – 24
6E5–45321–00	28 – 14
	30 – 15
6E5–45331–00–94	28 – 37
	30 – 38
6J9–45332–00–8D	28 – 61
6K1–45332–01–8D	30 – 62
688–45341–10	28 – 7
	30 – 8
6E5–45344–00	28 – 43
	30 – 44
6J9–45371–01	29 – 16
6K1–45371–02	31 – 16
688–45375–00	28 – 11
	30 – 12
663–45376–00–94	28 – 10
	30 – 11
63P–45378–00	26 – 37
	28 – 12
	30 – 13
63P–45379–00	26 – 34
6G5–45383–01	28 – 71
	30 – 73
6G5–45384–02	28 – 72
	30 – 74
63P–45501–00	28 – 46
	30 – 47
63P–45501–10	28 – 46
	30 – 47
61A–45527–00	28 – 24
	30 – 25
6G5–45536–01	28 – 9
	30 – 10
61A–45538–00	28 – 21
	30 – 22

PART NO. N° PIECES	REF. NO.
63P–45551–00	28 – 47
	30 – 48
63P–45560–01	28 – 49
64P–45560–01	30 – 50
6G5–45567–01	28 – 5
	30 – 6
6G5–45567–10	28 – 5
	30 – 6
6G5–45567–20	28 – 5
	30 – 6
6G5–45567–30	28 – 5
	30 – 6
6G5–45567–40	28 – 5
	30 – 6
6G5–45567–50	28 – 5
	30 – 6
6G5–45567–60	28 – 5
	30 – 6
64P–45570–01	30 – 64
63P–45571–01	28 – 63
6K1–45576–00	30 – 65
6G5–45576–10	28 – 64
6G5–45577–02	28 – 68
	30 – 71
6G5–45577–10	28 – 68
	30 – 71
6G5–45577–20	28 – 68
	30 – 71
6G5–45577–30	28 – 68
	30 – 71
6G5–45577–40	28 – 68
	30 – 71
6G5–45577–50	28 – 68
	30 – 71
6G5–45577–60	28 – 68
	30 – 71
6K1–45578–01	30 – 67
6K1–45578–10	30 – 67
6K1–45578–20	30 – 67
6K1–45578–30	30 – 67
6K1–45578–40	30 – 67
6K1–45578–50	30 – 67
6K1–45578–60	30 – 67
6E5–45587–01	28 – 40
	30 – 41
6E5–45587–10	28 – 40
	30 – 41
6E5–45587–20	28 – 40

NUMERICAL INDEX
INDEX NUMERIQUE

PART NO. N° PIECES	REF. NO.
6E5–45587–20	30 – 41
6E5–45587–30	28 – 40
	30 – 41
6E5–45587–40	28 – 40
	30 – 41
6E5–45587–50	28 – 40
	30 – 41
6E5–45587–60	28 – 40
	30 – 41
6J9–45611–01	28 – 51
6K1–45611–10	30 – 52
63P–45631–01	28 – 59
	30 – 60
6E5–45633–01	28 – 60
	30 – 61
6E5–45634–01	28 – 53
	30 – 54
6K1–45641–01	30 – 53
6E5–45641–03	28 – 52
6G5–45930–00–98	29 – 23
6G5–45932–00–98	29 – 23
6G5–45941–00–98	29 – 23
6G5–45943–01–98	29 – 23
6K1–45945–00–98	31 – 23
6G5–45945–01–98	29 – 23
6K1–45947–00–98	31 – 23
6G5–45947–01–98	29 – 23
6G5–45949–00–98	29 – 23
6K1–45970–01–98	31 – 23
6G5–45970–02–98	29 – 23
6J9–45970–10	29 – 23
6R1–45970–A0	31 – 23
6R4–45970–A0	29 – 23
6K1–45972–01–98	31 – 23
6G5–45972–02–98	29 – 23
6J9–45972–10	29 – 23
6R1–45972–A0	31 – 23
6R4–45972–A0	29 – 23
6K1–45974–02–98	31 – 23
6G5–45974–03–98	29 – 23
6J9–45974–10	29 – 23
6R1–45974–A0	31 – 23
6R4–45974–A0	29 – 23
6K1–45976–00–98	31 – 23
6G5–45976–01–98	29 – 23
6J9–45976–10	29 – 23
6R1–45976–A0	31 – 23
6R4–45976–A0	29 – 23

PART NO. N° PIECES	REF. NO.
6K1–45978–02–98	31 – 23
6G5–45978–03–98	29 – 23
6R1–45978–A0	31 – 23
6R4–45978–A0	29 – 23
63P–45987–00	29 – 18
	31 – 18
688–45997–01	29 – 19
	31 – 19
63P–46241–00	6 – 15
704–48119–40	35 – 68
EL8–48127–00	35 – 23
704–48128–00	35 – 2
704–48144–20	35 – 50
703–48152–00	34 – 57
703–48153–00	34 – 3
704–48153–00	35 – 55
704–48156–00	35 – 63
EL8–48164–00	35 – 41
704–48166–00	35 – 56
704–48167–10	35 – 69
704–48176–10	35 – 51
704–48178–00	35 – 66
703–48189–00	34 – 17
EL8–48191–00	35 – 16
704–48192–00	35 – 44
704–48192–P0	35 – 52
703–48198–00	34 – 14
703–48205–17	33 – 1
	34 – 1
704–48207–P0	33 – 2
	35 – 1
703–48211–01	34 – 61
703–48212–00	34 – 58
703–48213–00	34 – 59
703–48215–00	34 – 43
704–48215–30	35 – 12
703–48219–00	34 – 30
704–48219–P0	35 – 49
703–48221–00	34 – 56
704–48221–P0	35 – 67
703–48222–00	34 – 27
704–48222–P0	35 – 32
703–48223–00	34 – 28
703–48225–00	34 – 29
6X3–48225–20	35 – 43
703–48226–00	34 – 26
703–48227–00	34 – 24
704–48229–00	35 – 60

PART NO. N° PIECES	REF. NO.
704–48229–P1	35 – 35
704–48231–00	35 – 25
703–48232–00	34 – 62
704–48232–P1	35 – 40
704–48233–00	35 – 53
703–48234–00	34 – 18
704–48234–00	35 – 48
703–48235–00	34 – 4
704–48235–00	35 – 54
703–48236–00	34 – 16
703–48238–00	34 – 22
704–48238–00	35 – 39
EL8–48241–00	35 – 26
704–48242–10	35 – 42
703–48243–00	34 – 15
703–48244–00	34 – 21
EL8–48244–00	35 – 30
703–48245–00	34 – 11
EL8–48245–00	35 – 31
701–48246–00	35 – 5
703–48246–00	34 – 23
701–48248–00	34 – 13
	35 – 38
EL8–48251–00	35 – 3
703–48252–00	34 – 12
EL8–48254–00	35 – 27
EL8–48259–00	35 – 7
704–48261–00	35 – 15
703–48261–01	34 – 2
704–48262–00	35 – 8
703–48264–00	34 – 6
704–48264–00	35 – 9
703–48265–00	34 – 9
704–48265–00	35 – 4
703–48268–00	34 – 5
703–48271–00	34 – 60
704–48271–00	35 – 22
EL8–48279–00	35 – 47
703–48281–00	34 – 31
704–48281–00	35 – 13
EL8–48281–00	35 – 11
703–48282–00	34 – 32
704–48283–00	35 – 17
703–48284–00	34 – 52
704–48284–P0	35 – 57
704–48285–10	35 – 65
701–48287–00	34 – 42
704–48287–00	35 – 20

PART NO. N° PIECES	REF. NO.
703–48291–10	34 – 39
703–48293–10	34 – 41
701–48320–50	33 – 3
701–48320–60	33 – 3
701–48320–80	33 – 3
6E5–48344–00	21 – 6
703–48345–01	34 – 19
	35 – 19
701–48350–00	33 – 3
701–48350–20	33 – 3
703–48358–00	34 – 20
	35 – 24
63P–48531–00	21 – 1
63P–48532–00	21 – 2
63P–48538–00	21 – 4
6E5–61301–01	32 – 10
6E5–61303–00	32 – 14
6E5–61311–11	32 – 12
6E5–61313–00	32 – 11
6E5–61315–00	32 – 13
6E5–61350–02	32 – 1
6E5–61351–01	32 – 2
6E5–61355–00	32 – 5
68V–81145–01	9 – 7
68V–81146–01	9 – 27
68V–81147–00	9 – 29
63P–8132G–00	15 – 20
67F–81332–00	15 – 15
63P–81336–00	17 – 41
63P–81337–00	15 – 18
63D–81345–20	15 – 5
63P–81410–00	15 – 4
63P–81450–00	15 – 1
63P–81460–00	15 – 2
63P–81673–00	15 – 6
63P–81800–00	19 – 1
69J–81801–00	19 – 5
67F–81807–00	19 – 10
67F–81808–00	19 – 8
67F–81809–00	19 – 19
67F–81810–00	19 – 3
67F–81813–00	19 – 6
68F–81820–00	19 – 7
67F–81821–00	19 – 13
6K7–81826–10	19 – 24
69J–81828–00	19 – 25
68V–8182L–00	9 – 8
67F–81830–00	19 – 17

PART NO. N° PIECES	REF. NO.
67F–81832–00	19 – 11
67F–81836–00	19 – 12
69J–81839–00	19 – 21
67F–8183R–00	19 – 16
60V–8183T–00	19 – 18
69J–81840–00	19 – 4
67F–81841–00	19 – 14
69J–81842–00	19 – 20
63P–81845–00	15 – 11
67F–81846–00	19 – 26
67F–81850–00	19 – 2
67F–81857–00	19 – 9
69J–81869–00	19 – 23
67F–81891–00	19 – 15
63P–81919–00	17 – 42
63P–81919–10	17 – 43
60V–81925–00	19 – 28
63P–81941–00	19 – 22
63P–81942–00	17 – 29
63P–81948–00	17 – 17
68V–8194A–00	17 – 4
63P–81950–00	17 – 11
704–81950–10	35 – 58
68V–81953–00	17 – 5
68F–8195A–00	17 – 33
63P–81960–00	16 – 17
63P–81975–00	16 – 19
6K1–81980–00	37 – 18
63P–82105–00	18 – 1
6Y5–82117–00	36 – 17
6G5–82119–00	17 – 10
6E5–82148–00	22 – 6
66K–82149–00	22 – 24
1E6–82151–00	36 – 16
63P–82151–00	17 – 32
67F–82151–00	17 – 34
67F–82151–10	17 – 35
60V–82157–00	17 – 40
63P–82170–00	17 – 31
63P–82310–01	16 – 1
663–82317–01	15 – 19
63P–82341–00	16 – 2
63P–82342–00	16 – 3
63P–82343–00	16 – 7
63P–82344–00	16 – 8
67F–82361–00	16 – 4
67F–82362–00	16 – 5
67F–82377–00	20 – 51

PART NO. N° PIECES	REF. NO.
63P–82380–00	9 – 28
63P–82388–00	16 – 15
6K1–82510–06	37 – 3
703–82510–43	34 – 44
703–82531–00	34 – 46
	36 – 27
6K1–82532–00	37 – 5
703–82540–00	34 – 50
704–82540–30	35 – 10
68F–82553–80	36 – 18
68F–82553–90	36 – 18
682–82556–00	34 – 48
	37 – 7
69J–82560–00	18 – 24
69J–82563–00	18 – 19
703–82563–02	34 – 55
704–82563–50	35 – 34
704–82563–H0	35 – 61
704–82563–J0	35 – 64
6K1–82570–08	37 – 1
6K1–82571–02	37 – 2
6K1–82575–00	37 – 6
688–82575–01	34 – 47
703–82577–00	34 – 45
	37 – 4
6E3–8257H–00	20 – 53
68F–82582–00	19 – 29
69J–82587–00	18 – 21
6E9–82588–00	18 – 25
61A–82588–01	21 – 11
61B–8258A–01	37 – 24
688–8258A–20	34 – 49
6K1–8258A–40	37 – 23
63P–82590–00	18 – 4
704–82590–10	35 – 59
703–82591–00	34 – 53
703–82592–00	34 – 54
63P–82594–00	17 – 23
703–82594–00	34 – 25
704–82594–00	35 – 33
60V–8259F–00	21 – 33
69J–8259F–00	21 – 10
63P–8259L–00	10 – 24
63P–8259M–00	18 – 8
68F–82846–00	17 – 36
703–83383–02	34 – 51
688–83383–11	37 – 12
6Y5–83500–S5	36 – 6

NUMERICAL INDEX
INDEX NUMERIQUE

PART NO. N° PIECES	REF. NO.
6Y5–8350F–00	36 – 21
6Y5–8350T–03	36 – 1
6Y5–83533–T2	36 – 10
6Y5–83553–00	36 – 15
6Y5–83553–F1	36 – 23
6Y5–83553–M0	36 – 15
6Y5–83557–10	36 – 19
6Y5–83557–31	36 – 11
6E5–83558–00	26 – 31
6Y5–83570–S5	36 – 7
63P–83614–00	18 – 22
6K1–83614–01	37 – 8
6K1–83623–41	15 – 26
6K1–83623–50	15 – 27
6A1–83625–41	15 – 24
6A1–83625–51	15 – 25
63P–83626–00	4 – 31
67F–83627–01	19 – 32
69J–83651–00	18 – 18
64E–83672–02	23 – 3
6Y5–83728–00	36 – 12
72X–85075–L0	25 – 21
68F–85119–00	17 – 21
68F–85516–01	17 – 19
60V–85544–00	17 – 38
689–85547–00	13 – 1
68V–85548–00	17 – 27
63P–85580–00	15 – 3
6Y5–85752–01	36 – 24
61A–85790–00	18 – 14
6K1–85830–01	37 – 13
69J–85885–00	9 – 6
6S1–85885–00	9 – 6
63P–85886–00	18 – 16
63P–8591A–00	17 – 1
68F–86129–00	17 – 20
6Y5–87122–S0	36 – 14
63P–W0001–01	38 – 1
63P–W0001–20	39 – 1
63P–W0070–00	1 – 20
61A–W0078–A3	39 – 21
63P–W009A–00–1S	4 – 1
63P–W009A–01–1S	4 – 1
63P–W009B–00–1S	2 – 1
63P–W1164–00	3 – 6
63P–W1510–00–1S	2 – 2
90101–09M70	32 – 18
90101–12M05	22 – 40

PART NO. N° PIECES	REF. NO.
90105–10071	2 – 9
90105–10M00	29 – 17
	31 – 17
90109–06M80	20 – 39
90109–06M82	20 – 10
90109–06M86	18 – 23
	20 – 17
	21 – 3
90109–08019	21 – 35
90109–14005	23 – 33
90109–14007	23 – 22
90110–05020	6 – 18
90119–06071	13 – 22
90119–06076	7 – 15
90119–06134	16 – 6
90119–06135	8 – 20
	13 – 44
90119–06M10	28 – 17
	30 – 18
90119–06M18	26 – 35
90119–06M73	16 – 6
90119–06M81	2 – 15
90119–06M82	7 – 17
90119–06M83	13 – 43
90119–06MA2	2 – 23
	5 – 11
90119–06MA4	5 – 5
	16 – 18
90119–06MA6	2 – 27
90119–07234	4 – 7
90119–07235	4 – 6
90119–08M14	28 – 36
	30 – 37
	39 – 29
90119–08M22	20 – 3
90119–08M58	26 – 6
90119–08M66	2 – 16
90119–08M79	26 – 2
90119–08M91	4 – 21
90119–10007	26 – 22
90119–10008	29 – 11
	31 – 11
90119–10M06	6 – 13
90119–10MA2	29 – 11
	31 – 11
90149–05M05	37 – 19
90151–05M05	5 – 3
90151–06M02	2 – 18

PART NO. N° PIECES	REF. NO.
90152–05M08	29 – 14
	31 – 14
90155–10001	4 – 20
90158–06002	36 – 25
90159–06M28	20 – 38
90169–05M00	17 – 30
90170–09M05	32 – 19
90170–14M06	32 – 15
90170–16M01	28 – 48
	30 – 49
90171–18M04	29 – 21
	31 – 21
90179–06M24	1 – 15
90179–08003	19 – 27
90179–24002	15 – 14
90185–05002	29 – 15
	31 – 15
90185–09M01	32 – 6
90185–14M00	23 – 35
90185–22M11	22 – 19
90201–06068	13 – 16
	20 – 14
90201–06M31	21 – 40
90201–08M14	24 – 30
90201–10M20	32 – 7
90201–10M76	32 – 17
90201–12M05	22 – 42
90201–13M01	22 – 41
90201–15M58	23 – 21
90201–16M01	23 – 34
90201–16M55	23 – 20
90201–22M01	28 – 22
	30 – 23
90201–24014	15 – 13
90201–26M59	22 – 18
90201–30M92	28 – 69
90201–35008	23 – 18
90201–38M60	23 – 10
90202–08M20	21 – 16
90202–16061	21 – 23
90202–28001	23 – 39
90202–32M19	23 – 19
90202–40M47	23 – 13
90206–10M04	21 – 41
90206–15M18	20 – 13
90206–22M19	28 – 23
	30 – 24
90249–06M19	22 – 31

PART NO. N° PIECES	REF. NO.
90250–08M07	28 – 58
	30 – 59
90280–04008	6 – 19
90280–04M05	28 – 32
	30 – 33
	39 – 30
90280–05015	15 – 12
90282–04M00	28 – 70
	30 – 72
90338–25004	2 – 7
90340–08002	28 – 6
	30 – 7
90340–14M06	4 – 10
	5 – 25
	27 – 7
90340–18M09	5 – 22
90344–51019	4 – 4
90386–06M12	21 – 19
90386–08001	7 – 14
90386–10M16	22 – 29
90386–12069	21 – 32
90386–15M73	20 – 12
90386–16M66	21 – 22
90386–22M98	22 – 36
	24 – 33
90386–25M31	22 – 17
90386–38M32	23 – 12
90387–06010	17 – 18
90387–06038	7 – 16
90387–06M29	21 – 42
90387–06M43	20 – 41
90387–06M60	8 – 5
	13 – 20
90387–06M64	27 – 10
90387–06M82	21 – 48
90387–08M37	20 – 5
90387–10M05	22 – 32
90387–10M08	4 – 19
90387–10M61	32 – 3
90387–14004	23 – 38
90430–08020	28 – 8
	30 – 9
	39 – 11
90430–08143	4 – 9
	38 – 2
90430–14115	2 – 13
	4 – 11
	5 – 26

PART NO. N° PIECES	REF. NO.
90430–14115	38 – 3
90430–14M09	27 – 8
	38 – 16
	39 – 3
90430–18130	5 – 23
	38 – 11
90445–070F1	26 – 33
90445–10027	5 – 24
90445–11020	1 – 26
90445–13511	13 – 2
90462–10023	7 – 8
90464–05141	16 – 16
90464–07M41	16 – 11
90464–11012	8 – 16
90464–12004	13 – 40
90464–16013	2 – 31
90464–20006	7 – 10
90464–20181	20 – 45
90464–20258	20 – 50
90464–23199	17 – 25
	20 – 47
90465–08M63	22 – 22
90465–08M99	5 – 38
90465–10032	1 – 2
90465–11M10	8 – 19
	13 – 4
	20 – 25
	22 – 20
	23 – 5
	26 – 32
	36 – 13
90465–11M59	7 – 5
90465–13M18	17 – 26
90467–09M09	8 – 18
90467–15M14	2 – 30
90468–18008	21 – 7
90480–10627	17 – 22
90480–10M23	8 – 4
	13 – 21
90480–12072	4 – 30
90480–13M24	20 – 40
90480–20M05	5 – 8
90480–22M81	20 – 4
90501–11M10	28 – 20
	30 – 21
90501–12082	21 – 29
90501–16M11	5 – 7
90501–16M37	28 – 54

PART NO. N° PIECES	REF. NO.
90501–16M37	30 – 55
90506–16003	22 – 34
90506–16M34	20 – 18
90508–20M31	21 – 31
90560–12M01	32 – 4
91490–40030	29 – 22
	31 – 22
91690–30010	21 – 5
91690–30020	22 – 33
91690–50014	7 – 4
91809–08006	4 – 5
91814–18001	2 – 5
92780–06020	35 – 28
92903–06600	17 – 16
92903–08100	19 – 34
92903–08600	7 – 3
	19 – 31
92907–04600	4 – 25
92907–06600	27 – 13
92990–04100	36 – 4
92990–05100	37 – 10
92990–05300	35 – 36
92990–05600	37 – 22
92990–06100	1 – 5
	37 – 16
92990–06300	35 – 46
92990–06600	22 – 12
	26 – 28
	37 – 17
92990–08600	34 – 34
92990–10600	18 – 15
92990–18200	29 – 20
	31 – 20
92995–04100	21 – 13
92995–06100	13 – 15
	15 – 9
	16 – 13
	17 – 8
	18 – 6
	22 – 5
	27 – 27
92995–06600	1 – 10
	4 – 15
	5 – 15
	8 – 7
	13 – 19
	15 – 10
	16 – 14

NUMERICAL INDEX
INDEX NUMERIQUE

PART NO. N° PIECES	REF. NO.
92995–06600	17 – 3
	18 – 7
	22 – 8
	27 – 21
92995–08100	22 – 16
92995–08600	18 – 3
	26 – 15
	27 – 4
	28 – 45
	30 – 46
92995–10100	23 – 29
	26 – 41
	29 – 9
	31 – 9
92995–10600	23 – 8
	26 – 4
	29 – 10
	31 – 10
92995–14600	23 – 25
93101–28M16	28 – 38
	30 – 39
	39 – 17
93101–30M17	28 – 66
	30 – 69
	39 – 19
93102–08M43	25 – 36
93102–38M59	6 – 14
	38 – 14
93102–60004	3 – 2
	38 – 13
93106–09014	28 – 16
	30 – 17
	39 – 13
93210–07003	26 – 38
	28 – 13
	30 – 14
	39 – 10
93210–09165	21 – 21
93210–10M74	24 – 4
93210–16275	32 – 9
93210–19MJ1	5 – 30
	38 – 18
93210–19MJ3	27 – 25
	38 – 19
93210–24M79	5 – 33
	38 – 20
93210–25552	2 – 14
	27 – 22

PART NO. N° PIECES	REF. NO.
93210–25552	38 – 6
93210–25647	2 – 8
	38 – 7
93210–30682	13 – 42
93210–37160	28 – 28
	30 – 29
	39 – 15
93210–37MH7	23 – 11
93210–55M14	28 – 42
	30 – 43
	39 – 18
93210–58144	28 – 15
	30 – 16
	39 – 12
93210–86M38	28 – 27
	30 – 28
	39 – 14
93210–97M55	28 – 67
	30 – 70
	39 – 20
93306–209U0	28 – 62
93311–928U5	28 – 3
	30 – 3
93315–425V3	28 – 50
	30 – 51
93315–43061	28 – 65
	30 – 68
93317–330U2	28 – 39
	30 – 40
93332–00048	30 – 63
93332–000V3	28 – 4
93341–440U5	30 – 66
93341–465U4	30 – 5
93341–930V2	28 – 41
	30 – 42
93390–000U2	30 – 4
93410–16006	21 – 24
93410–22M11	22 – 37
93410–37M04	23 – 15
93420–36M01	26 – 25
93430–06024	34 – 10
	35 – 6
93501–04M02	21 – 28
93503–16003	28 – 57
	30 – 58
93507–32009	28 – 55
	30 – 56
93511–32017	28 – 56

PART NO. N° PIECES	REF. NO.
93511–32017	30 – 57
93605–10108	6 – 11
93606–12019	2 – 3
	28 – 35
	30 – 36
	39 – 28
93606–19M23	26 – 16
93608–16M16	26 – 5
	27 – 5
	29 – 7
	31 – 7
93700–06M01	21 – 34
93700–06M03	21 – 36
	22 – 13
94702–00391	4 – 33
95333–08600	19 – 33
95380–04600	36 – 5
95380–05600	34 – 7
	35 – 21
	37 – 11
95380–05700	9 – 18
95380–06600	1 – 6
	20 – 37
	34 – 40
	35 – 37
	37 – 15
95380–12600	22 – 43
95380–14600	23 – 24
95380–14700	32 – 16
95780–10300	23 – 7
97013–06020	17 – 15
97013–08020	7 – 2
97013–08045	19 – 30
97027–06025	27 – 12
97075–06020	4 – 14
	5 – 14
97075–08035	26 – 14
	27 – 3
97075–10040	23 – 28
97075–10045	23 – 31
	26 – 3
97080–08016	24 – 31
97095–06010	17 – 7
	22 – 7
97095–06012	5 – 39
	18 – 12
97095–06014	13 – 18
97095–06016	1 – 9

PART NO. N° PIECES	REF. NO.
97095–06016	8 – 6
	13 – 14
	15 – 21
	17 – 2
97095–06020	18 – 5
	20 – 15
	27 – 26
97095–06025	16 – 12
	21 – 43
97095–06030	4 – 27
	22 – 4
97095–06035	15 – 8
	21 – 49
97095–06040	27 – 20
97095–06045	5 – 36
97095–08014	4 – 8
97095–08016	18 – 2
97095–08020	22 – 15
97095–08025	28 – 44
	30 – 45
97095–10045	26 – 40
	29 – 8
	31 – 8
97380–05025	34 – 8
97380–06018	35 – 18
97380–08030	34 – 33
97575–06535	21 – 26
97575–06540	5 – 31
97575–08540	4 – 17
	5 – 17
	7 – 1
97575–08560	26 – 11
97575–10535	26 – 7
97595–06516	9 – 15
97595–06550	21 – 14
97607–04310	25 – 32
97780–50620	1 – 3
	17 – 37
97780–60520	20 – 29
97780–60525	23 – 2
97780–60620	17 – 6
97880–06012	22 – 11
97880–06016	26 – 27
97885–04016	21 – 12
97885–06010	15 – 16
97885–06016	23 – 4
97890–05016	35 – 70
97890–05025	35 – 14

PART NO. N° PIECES	REF. NO.
97890–06018	35 – 45
98507–04008	4 – 24
98580–03015	34 – 38
98580–04006	34 – 36
98580–04010	34 – 35
98580–05010	34 – 37
98780–05016	2 – 12
98780–05018	35 – 29
98980–05010	37 – 9
98980–06020	37 – 14
99001–08600	28 – 19
	30 – 20
99530–08012	15 – 7
9E450–04433	36 – 2
9E450–04533	36 – 3

PART NO. N° PIECES	REF. NO.

F150AET/FL150AET
PARTS CATALOGUE
©2005 by Yamaha Motor Co., Ltd.
1st edition, February 2005
All rights reserved.
Any reprinting or unauthorized use
without the written permission of
Yamaha Motor Co., Ltd.
is expressly prohibited.
Printed in Japan.

F150AET/FL150AET
CATALOGUE DE PIECES DETACHEES
©2005 par Yamaha Motor Co., Ltd.
1re édition, février 2005
Tous droits réservés
Toute réimpression ou utilisation
non autorisée sans la permission écrite
de la Yamaha Motor Co., Ltd.
est formellement interdite.
Imprimé au Japon