YAMAHA

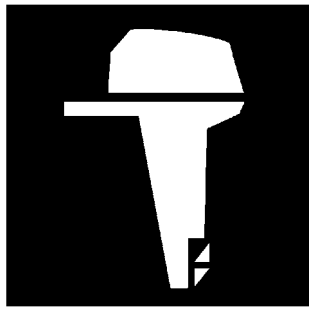

PARTS CATALOGUE
CATALOGUE DE PIECES DETACHEES

FT25BET'05 (68U4)

1D68U-300F1

(2D68U-300F1)

YAMAHA GENUINE Parts & Accessories

2014/7/17

NEWS NO.	DATE	COMMENT
PE0-OM-070030	July,24,2007	MOD:FIG.18 POWER TRIM & TILT ASSY LIST/ILLUSTRATION REVISION
PE0-OM-080002	Jan.,31,2008	COR:FIG.18 PTT(67C-43800-00-4D) P/No. CORRECTION
PE0-OM-140006	July,1,2014	MOD:FIG.18 PTT(67C-43800-00-4D) LIST/ILLUSTRATION REVISION

FOREWORD

This Parts Catalogue is related to the parts for the model(s) on the cover page. When you are ordering replacement parts, please refer to this Parts Catalogue and quote both part numbers and part names correctly.

1. Modifications or additions which have been made after the issue of the Parts Catalogue will be announced in the Parts News.
   It is advisable that you make the necessary corrections to the Parts Catalogue according to the Parts News.

2. Abbreviations
   The following abbreviations are used in this Parts Catalogue.

   "UR" Use specified parts number.
   "UN" Use as many as needed.
   "AP" Alternate Parts
   "LM" Locally Made (Parts need to be ordered locally)
   "F#" Frame No. (Applicable machine No.)
   "O/S" Over Size

3. The number of components for assembly
   - Parts, which are to be supplied in an assembly, are listed with a dot (.) in front of the part name as shown below.
   - The numeral appearing to the right of each component part indicates the quantity of parts for each assembly unit.

PART NO.	DESCRIPTION	Q'TY	REMARKS
2F5–83310–60	FRONT FLASHER LIGHT ASSY	2	
115–83311–60	.BULB (6V–18W)	1	

4. Applicable colours of graphics are represented in the "REMARKS" as shown below.

PART NO.	DESCRIPTION	Q'TY	REMARKS
2N4–24110–00–X5	FUEL TANK COMP.	2	MXR
3J1–24240–10	.GRAPHIC, FUEL TANK	1	FOR MXR

5. Note that the illustrations for reference in finding parts numbers are not to be used for assembling. When assembling, please use the applicable service manual.

6. The asterisk (*) before a reference number indicates modified items after the first edition.

7. Applicable Serial No.

   Engine Serial No.

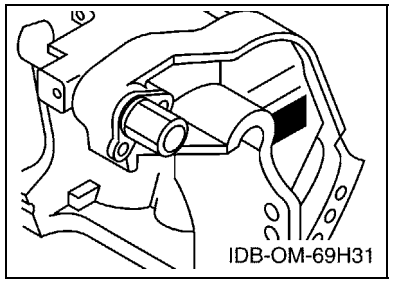

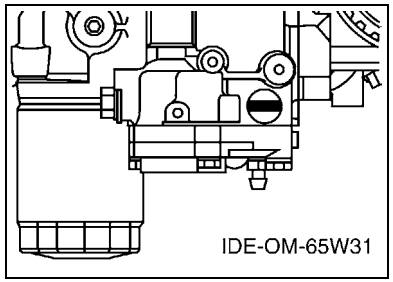

8. Applicable Engine Starting Serial No.

Model	Serial No.	Model	Serial No.
FT25B	65W-1017422		

9. Applicable Colour Code

Abbreviation	Colour Name	Colour Code
DBNM2	DARK BLUISH GRAY METALLIC 2	004D

10. Quantity Column Information

Column No.	Name Of Q'ty Column	Applicable Model
1	68U4	FT25BET

AVANT–PROPOS

Ce catalogue de pièces détachées concerne les pièces pour le(s) modèle(s) indiqué(s) sur la page de couverture. Lorsque vous commandez des pièces de rechange, veuillez vous référer à ce catalogue de pieces détachées et indiquer clairement les numéros et les noms des pièces détachées.

1. Les modifications ou ajouts ayant été effectués après la parution du catalogue de pièces détachées seront décrits dans les Bulletins d'information concernant les pièces détachées.
   Il est recommandé que vous apportiez les corrections nécessaires au catalogue des pièces détachées en vous référant aux Bulletins d'information.

2. Abréviations
   Dans ce catalogue, les abréviations suivantes sont utilisées:

   "UR" Utiliser le numéro de pièces spécifié.
   "UN" Utiliser autant que nécessaire.
   "AP" Pièces de substitution
   "LM" Fabrication locale (les pièces doivent être commandées localement.)
   "F#" N° de cadre (applicable au N° de série)
   "O/S" Surdimensionné

3. Nombre de pièces d'un assemblage
   - Les pièces fournies comme composants d'un assemblage sont précédées d'un point (.) de la manière indiquée ci–dessous.
   - Le chiffre apparaissant à la droite de chaque composant indique la quantité de pièces pour chaque unité d'assemblage.

N° PIECES	DESCRIPTION	QTE	REMARQUES
2F5–83310–60	ENS. CLIGNOTANT AVANT	2	
115–83311–60	.AMPOULE (6V–18W)	1	

4. Les couleurs concernant les graphiques sont indiquées dans la colonne "REMARQUES", comme indiqué ci–dessous.

N° PIECES	DESCRIPTION	QTE	REMARQUES
2N4–24110–00–X5	RESERVOIR A ESSENCE.	2	MXR
3J1–24240–10	.GRAPHIQUE	1	POUR MXR

5. Veuillez noter que les illustrations sont indiquées à titre de référence pour trouver les numéros de pièces, non pour être utilisées lors de l'assemblage. Lors de l'assemblage, veuillez utiliser le manuel d'entretien adéquat.

6. L'astérisque (*) placé devant un numéro de référence indique des éléments qui ont été modifiés après la première édition.

7. N° de série applicable

   N° de Série du moteur

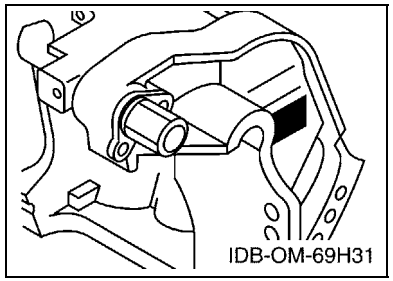

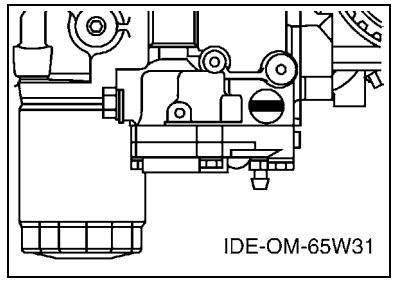

8. N° de série initial du moteur applicable

Modèle	N° de série	Modèle	N° de série
FT25B	65W-1017422		

9. Code couleur applicable

Abréviation	Nom de la couleur	Code couleur
DBNM2	DARK BLUISH GRAY METALLIC 2	004D

10. Informations relatives à la colonne Quantité

N° de la colonne	Nom de la colonne Qté	Modèle applicable
1	68U4	FT25BET

CONTENTS

SHEET1/2
TOP COWLING A4
CYLINDER & CRANKCASE 1 ..... A5
CRANKSHAFT & PISTON A7
CYLINDER & CRANKCASE 2 ..... B1
VALVE B2
INTAKE B3
CARBURETOR B4
OIL PUMP B6
FUEL B7
GENERATOR C2
ELECTRICAL 1 ..... C4
ELECTRICAL 2 ..... C6
STARTING MOTOR D1
BOTTOM COWLING D2
CONTROL D4
BRACKET 1 ..... D6
BRACKET 2 ..... E1
POWER TRIM & TILT ASSY E3
UPPER CASING E6
OIL PAN E7
LOWER CASING & DRIVE 1 ..... F1
LOWER CASING & DRIVE 2 ..... F4
FUEL TANK F5
STEERING GUIDE F6
REMOTE CONTROL BOX F7

INDEX

NUMERICAL INDEX G1

SHEET2/2
REMOTE CONTROL ASSY A4*
REPAIR KIT 1 ..... A7*
REPAIR KIT 2 ..... B1*
REPAIR KIT 3 ..... B2*

INDEX

NUMERICAL INDEX G1*

TABLE DES MATIERES

Feuille1/2
CAPOT SUPERIEUR A4
CYLINDRE & CARTER 1 ..... A5
VILEBREQUIN & PISTON A7
CYLINDRE & CARTER 2 ..... B1
SOUPAPE B2
ADMISSION B3
CARBURATEUR B4
POMPE A HUILE B6
CARBURANT B7
GENERATRICE C2
PARTIE ELECTRIQUE 1 ..... C4
PARTIE ELECTRIQUE 2 ..... C6
DEMARREUR ELECTRIQUE D1
CAPOT INFERIEUR D2
COMMANDE D4
SUPPORT 1 ..... D6
SUPPORT 2 ..... E1
PUISSANCE PARER ET INCLINER E3
FOURREAU E6
VENTILATEUR D'HUILE E7
BOITIER D'HELICE TRANSMISSION1 ..... F1
BOITIER D'HELICE TRANSMISSION2 ..... F4
RESERVOIR A CARBURANT F5
FIXATION DE DIRECTION F6
BOITIER DE COMMANDE A DISTANCE F7

INDEX

INDEX NUMERIQUE G1

Feuille2/2
BOITIER DE COMMANDE A DISTANCE A4*
KITS DE REPARATION 1 ..... A7*
KITS DE REPARATION 2 ..... B1*
KITS DE PEPARATION 3 ..... B2*

INDEX

INDEX NUMERIQUE G1*

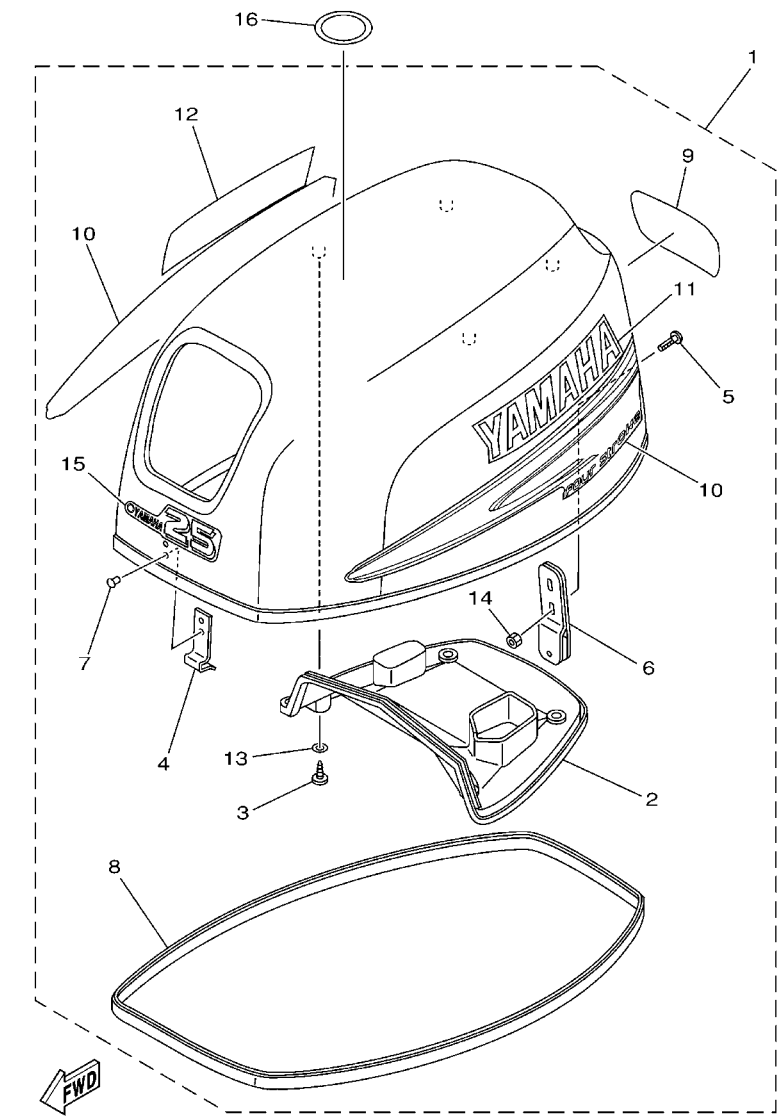

FIG. 1 TOP COWLING — CAPOT SUPERIEUR

REF. NO.	PART NO. N° PIECES	DESCRIPTION DESCRIPTION	68U4					REMARKS REMARQUES
1	68U–42610–12–4D	TOP COWLING ASSY CAPOT (ENS.)	1					
2	65W–42613–00	.MOLDING, AIR DUCT .MANCHON A AIR	1					
3	97780–60520	.SCREW, TAPPING .VIS, TETE BOMBEE	4					
4	65W–42651–01	.HOOK .CROCHET	1					
5	90109–06MA4	.BOLT .BOULON	2					
6	65W–42652–01	.HOOK .CROCHET	1					
7	90266–06M02	.RIVET .RIVET	2					
8	6D5–42615–00	.SEAL .JOINT	1					
9	68U–42678–10	.GRAPHIC, REAR .ADHESIF, ARRIERE	1					
10	65W–W0070–20	.GRAPHIC SET .JEU DIEMBLEMES	1					
11	65W–42681–20	.MARK, COWLING .ADHESIF, CAPOT	1					
12	65W–42682–20	.MARK, COWLING .ADHESIF, CAPOT	1					
13	90202–05M38	.WASHER, PLATE .RONDELLE, PLATE	4					
14	95680–06100	.NUT, U .ECROU, U	2					
15	65W–42677–00	.GRAPHIC, FRONT .ADHESIF, AVANT	1					
16	67F–13434–02	LABEL, CAUTION ETIQUETTE, ATTENTION	1					

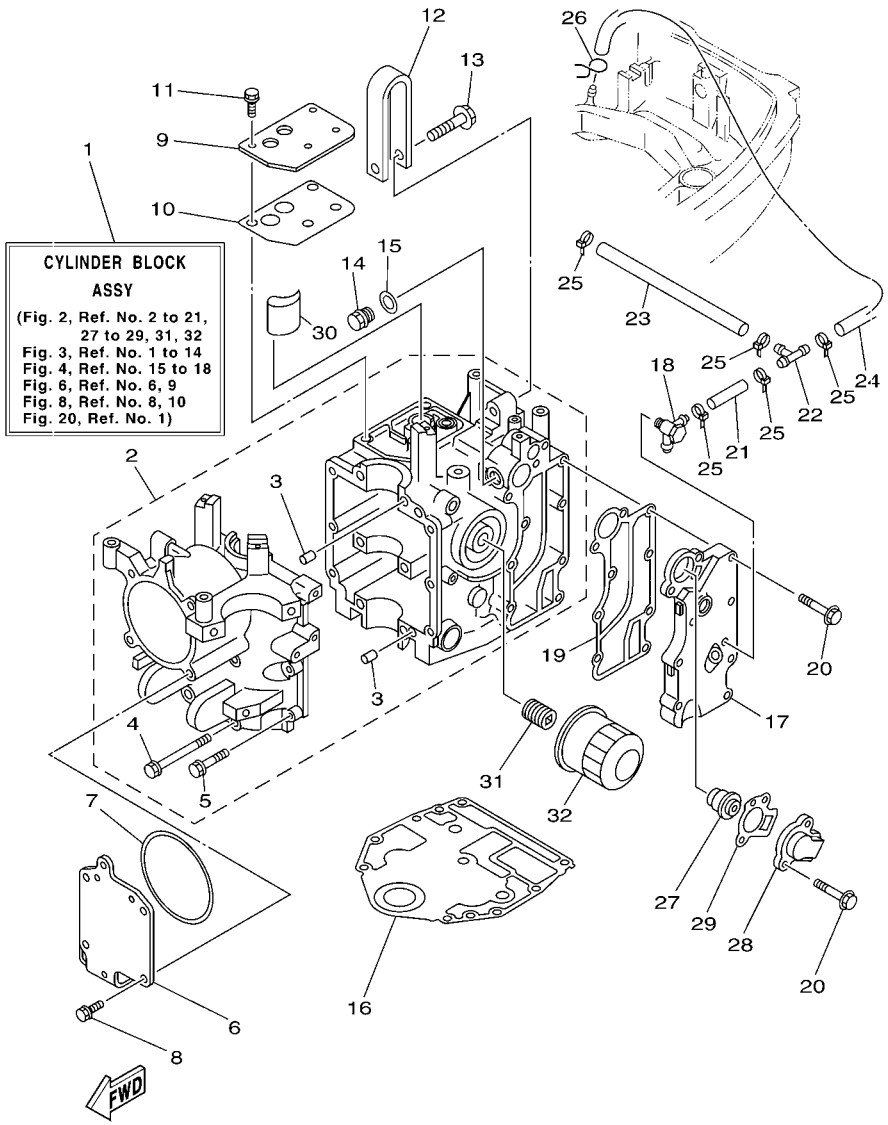

FIG. 2 CYLINDER & CRANKCASE 1 CYLINDRE & CARTER 1

REF. NO.	PART NO. N° PIECES	DESCRIPTION DESCRIPTION	68U4					REMARKS REMARQUES
1	65W–W009B–12–1S	CYLINDER BLOCK ASSY CYLINDRE GROUPE (ENS.)	1					
2	65W–15100–11–1S	CRANKCASE ASSY CARTER DE MOTEUR COMPLET	1					
3	99530–08012	.PIN, DOWEL .GOUJON, D'ASSEMBLAGE	2					
4	90119–08M01	.BOLT, WITH WASHER .BOULON, AVEC RONDELLE	6					
5	90119–06MA5	.BOLT, WITH WASHER .BOULON, AVEC RONDELLE	6					
6	65W–15121–01	CRANKCASE 2 CARTER DE MOTEUR	1					
7	65W–15663–00	SEAL JOINT	1					
8	65W–12228–00	BOLT BOULON	4					
9	65W–11168–01	COVER, BREATHER COUVERCLE, RENIFLARD	1					
10	65W–11169–01	GASKET, BREATHER COVER JOINT, COUVERCLE DE RENIFLARD	1					
11	65W–12228–00	BOLT BOULON	4					
12	65W–11119–00	HANGER, ENGINE ANNEAU, LEVAGE	1					
13	90105–08M87	BOLT, FLANGE BOULON	1					
14	90340–14M06	PLUG, STRAIGHT SCREW PLOT, FILETE DROIT	1					
15	90430–14115	GASKET JOINT	1					
16	65W–11351–10	GASKET, CYLINDER JOINT, D'EMBASE	1					
17	65W–41113–10–1S	OUTER COVER, EXHAUST COUVERCLE, ECHAPPEMENT	1					
18	62Y–11372–01	NIPPLE, HOSE RACCORD, TUYAU	1					FLUSHING KIT FLUSHING KIT
19	65W–41114–00	GASKET, EXHAUST OUTER COVER JOINT, COUVERCLE D'ECHAPPEMENT	1					
20	90119–06MA5	BOLT, WITH WASHER BOULON, AVEC RONDELLE	9					
21	90445–09068	HOSE (L110) DURITE (L110)	1					
22	688–24378–00	PIPE, JOINT 4 DURITE RACCORDEMENT 4	1					
23	90445–09095	HOSE (L215) DURITE (L215)	1					
24	90445–09104	HOSE (L300) DURITE (L300)	1					
25	90465–11M10	CLAMP BRIDE	5					
26	90467–08004	CLIP JONC	1					
27	6G8–12411–03	THERMOSTAT THERMOSTAT	1					

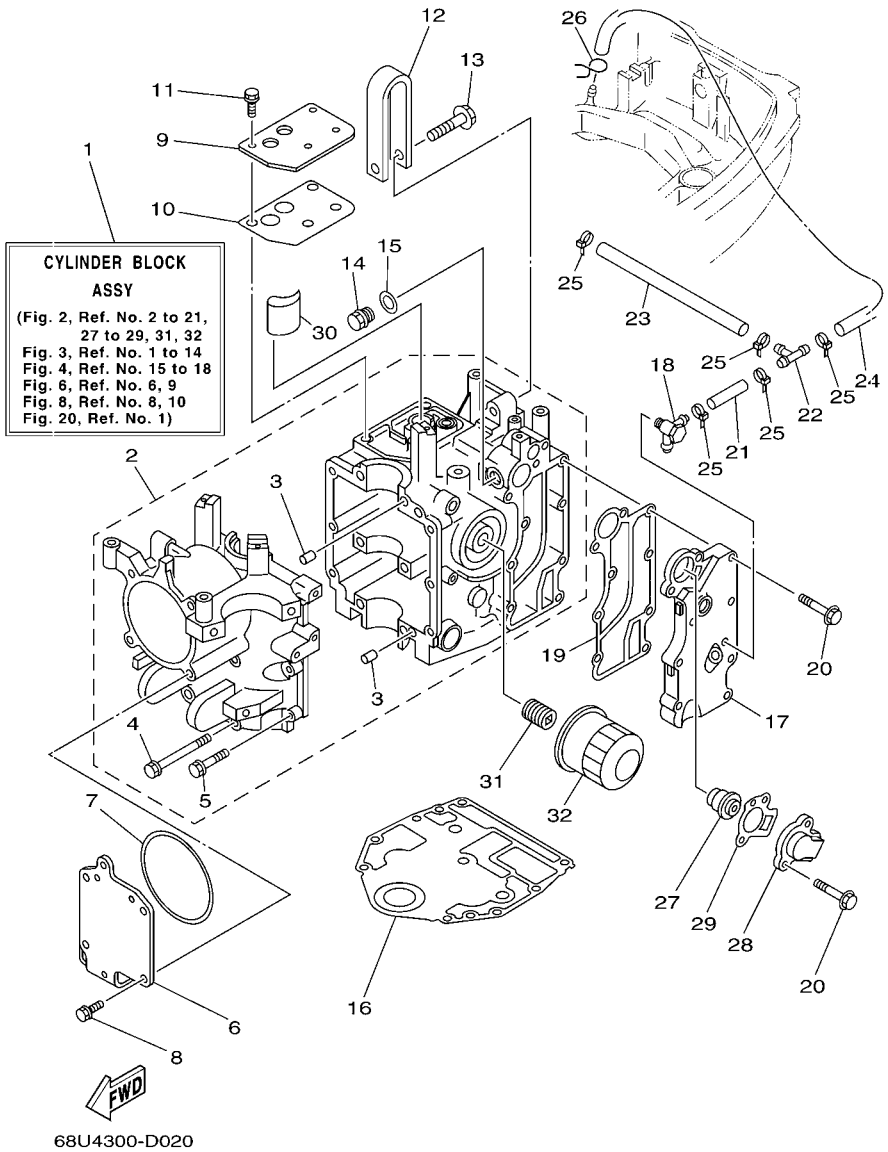

FIG. 2 CYLINDER & CRANKCASE 1 CYLINDRE & CARTER 1

REF. NO.	PART NO. N° PIECES	DESCRIPTION DESCRIPTION	68U4					REMARKS REMARQUES
28	6H3–12413–00–1S	COVER, THERMOSTAT COUVERCLE, THERMOSTAT	1					
29	62Y–12414–00	GASKET, COVER JOINT, COUVERCLE	1					
30	65W–13286–00	CLEANER FILTRE	1					
31	90401–20M00	BOLT, UNION BOULON, RACCORD	1					
32	5GH–13440–00	ELEMENT ASSY, OIL CLEANER ELEMENT, FILTRE A HUILE	1					

FIG. 3 CRANKSHAFT & PISTON VILEBREQUIN & PISTON

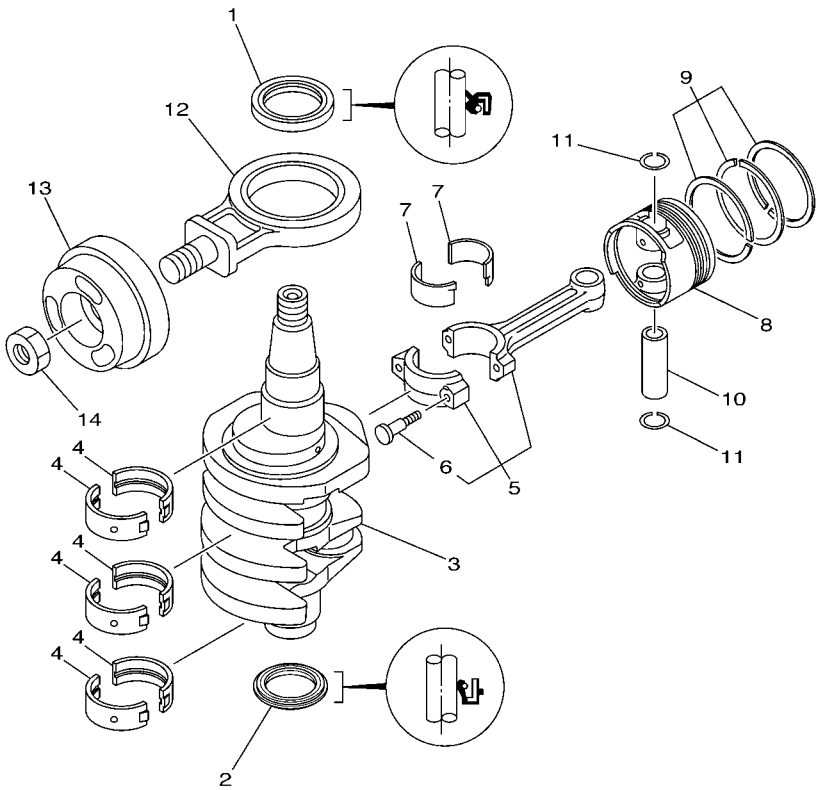

6D51200-C030

REF. NO.	PART NO. N° PIECES	DESCRIPTION DESCRIPTION	68U4					REMARKS REMARQUES
1	93102–43004	OIL SEAL JOINT SPY	1					
2	93101–35002	OIL SEAL JOINT SPY	1					
3	65W–11411–01	CRANKSHAFT VILEBREQUIN COMPLET	1					
4	62Y–11416–00	PLANE BEARING, CRANKSHAFT 1 COUSSINET DE VILEBREQUIN 1	6					UR BROWN UR BROWN
	62Y–11416–10	PLANE BEARING, CRANKSHAFT 1 COUSSINET DE VILEBREQUIN 1	6					UR BLACK UR BLACK
	62Y–11416–20	PLANE BEARING, CRANKSHAFT 1 COUSSINET DE VILEBREQUIN 1	6					UR BLUE UR BLUE
5	62Y–11650–20	CONNECTING ROD ASSY BIELLE COMPLETTE	2					
6	62Y–11654–00	.BOLT, CONNECTING ROD .BOULON, BIELLE	2					
7	62Y–11656–00	PLANE BEARING, CONNECTING ROD ROULEMENT DE BIELLE	4					UR BROWN UR BROWN
	62Y–11656–10	PLANE BEARING, CONNECTING ROD ROULEMENT DE BIELLE	4					UR BLACK UR BLACK
	62Y–11656–20	PLANE BEARING, CONNECTING ROD ROULEMENT DE BIELLE	4					UR BLUE UR BLUE
8	65W–11631–00–96	PISTON (STD) PISTON (STD)	2					
	65W–11635–00	PISTON (0.25MM O/S) PISTON (0.25MM O/S)	2					AP AP
	65W–11636–00	PISTON (0.50MM O/S) PISTON (0.50MM O/S)	2					AP AP
9	68U–11603–00	PISTON RING SET (STD) JEU DE SEGMENTS (STD)	2					
	68U–11604–00	PISTON RING SET (0.25MM O/S) JEU DE SEGMENTS (0.25MM O/S)	2					AP AP
	68U–11605–00	PISTON RING SET (0.50MM O/S) JEU DE SEGMENTS (0.50MM O/S)	2					AP AP
10	62Y–11633–00	PIN, PISTON AXE, PISTON	2					
11	93450–17129	CIRCLIP CIRCLIP, TYPE S	4					
12	65W–11665–00	CON-ROD ASSY, BALANCE BIELLE COMPLETTE, BALANCE	1					
13	65W–11642–11	PISTON, BALANCE PISTON, BALANCE	1					
14	90170–20137	NUT ECROU	1					

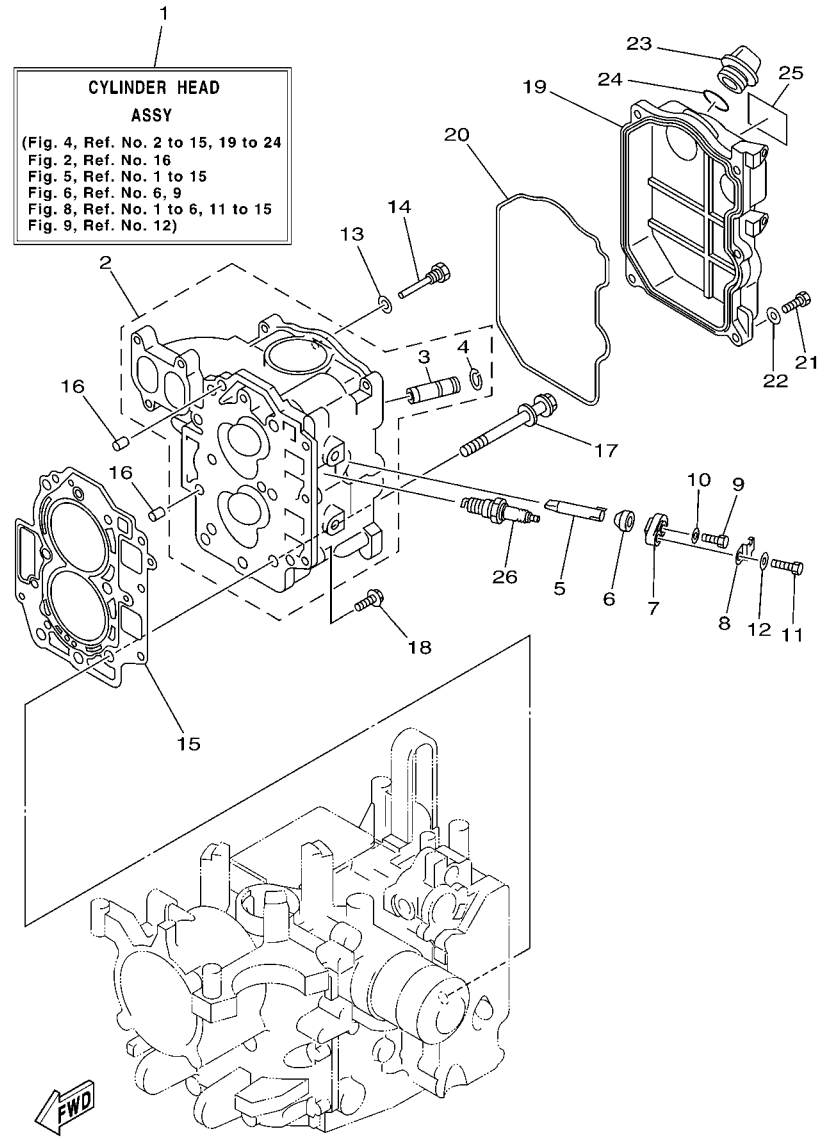

FIG. 4 CYLINDER & CRANKCASE 2 CYLINDRE & CARTER 2

REF. NO.	PART NO. N° PIECES	DESCRIPTION DESCRIPTION	68U4					REMARKS REMARQUES
1	65W–W009A–15–1S	CYLINDER HEAD ASSY CULASSE (ENS.)	1					
2	65W–11111–20–1S	HEAD, CYLINDER 1 CULASSE	1					
3	62Y–11133–30	.GUIDE, VALVE 1 .GUIDE, SOUPAPE 1	4					
4	93450–09M01	.CIRCLIP .CIRCLIP, TYPE S	4					
5	62Y–11325–00	ANODE ANODE	2					
6	66M–11328–00	GROMMET, ANODE PASSE-FIL	2					
7	66M–11327–00–94	COVER, ANODE COUVERCLE	2					
8	66M–12535–00	PLATE PLAQUE	2					
9	97095–05012	BOLT BOULON	2					
10	92995–05600	WASHER RONDELLE	2					
11	97095–06020	BOLT BOULON	2					
12	92995–06600	WASHER RONDELLE	2					
13	90430–06014	GASKET JOINT	1					
14	90109–06M65	BOLT BOULON	1					
15	65W–11181–30	GASKET, CYLINDER HEAD 1 JOINT, DE CULASSE 1	1					
16	99530–08012	PIN, DOWEL GOUJON, D'ASSEMBLAGE	2					
17	90119–09M00	BOLT, WITH WASHER BOULON, AVEC RONDELLE	6					
18	90119–06MA3	BOLT, WITH WASHER BOULON, AVEC RONDELLE	3					
19	65W–11191–00–1S	COVER, CYLINDER HEAD 1 COUVERCLE, CULASSE 1	1					
20	65W–11356–00	SEAL, CYLINDER 2 JOINT, SPY CYLINDRE	1					
21	97095–06020	BOLT BOULON	5					
22	92995–06600	WASHER RONDELLE	5					
23	6G8–15363–00	PLUG, OIL PLOT, HUILE	1					
24	93210–24M79	O-RING JOINT TORIQUE	1					
25	62Y–12138–60	MARK, CAUTION MAKER	1					
26	94701–00375	PLUG, SPARK (NGK DPR6EA-9) BOUGIE D'ALLUMAGE(NGK DPR6EA-9	2					

FIG. 5 VALVE SOUPAPE

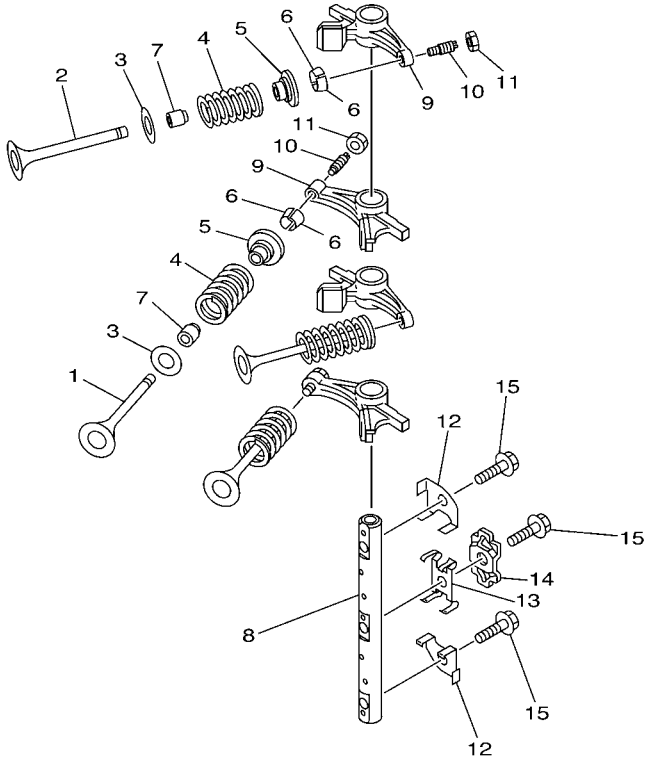

65W1010-2050

REF. NO.	PART NO. N° PIECES	DESCRIPTION DESCRIPTION	68U4					REMARKS REMARQUES
1	67C–12111–00	VALVE, INTAKE SOUPAPE, ADMISSION	2					
2	62Y–12121–00	VALVE, EXHAUST SOUPAPE, ECHAPPEMENT	2					
3	62Y–12116–00	SEAT, VALVE SPRING SIEGE, RESSORT DE SOUPAPE	4					
4	51Y–12114–00	SPRING, VALVE OUTER RESSORT DE SOUPAPE, EXTERNE	4					
5	30X–12117–00	RETAINER, VALVE SPRING BUTEE DE RESSORT DE SOUPAPE	4					
6	30X–12118–00	COTTER, VALVE FRAISE, SOUPAPE	8					
7	51Y–12119–00	SEAL, VALVE STEM JOINT, QUEUE DE SOUPAPE	4					
8	65W–12146–00	SHAFT, ROCKER AXE, CULBUTEUR	1					
9	65W–12151–00	ARM, VALVE ROCKER CULBUTEUR	4					
10	62Y–12159–00	SCREW, VALVE ADJUSTING VIS, REGLAGE DE SOUPAPE	4					
11	62Y–12158–00	NUT, LOCK CONTRE-ECROU	4					
12	62Y–12238–00	PLATE, BOLT STOPPER PLAQUE, BUTEE DE BOULON	2					
13	62Y–12216–00	SPRING RESSORT	1					
14	62Y–12231–00	GUIDE, STOPPER 1 GUIDE, BUTEE 1	1					
15	90109–08M63	BOLT BOULON	3					

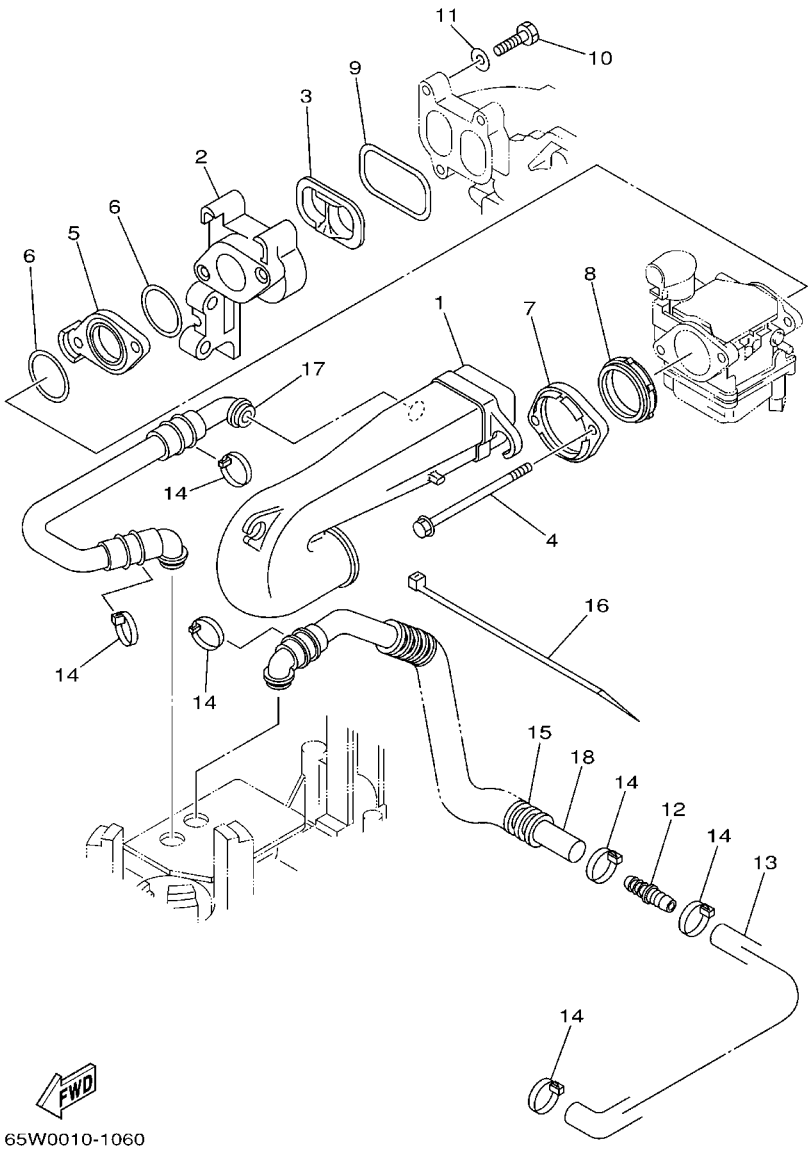

FIG. 6 INTAKE — ADMISSION

REF. NO.	PART NO. N° PIECES	DESCRIPTION DESCRIPTION	68U4					REMARKS REMARQUES
1	65W–14440–00	SILENCER ASSY, INTAKE SIENCIEUX D'ADMISSION	1					
2	65W–13640–00	MANIFOLD TUBULURE	1					
3	65W–13323–00	INSERT PIECE RAPPORTEE	1					
4	65W–14496–00	BOLT BOULON	2					
5	65W–14271–00	INSULATOR ISOLATEUR	1					
6	65W–14198–00	GASKET JOINT	2					
7	65W–14262–00	FLANGE COLLERETTE	1					
8	65W–14457–10	SEAL JOINT	1					
9	65W–13645–00	GASKET, MANIFOLD 1 JOINT, TUBULURE 1	1					
10	97095–06025	BOLT BOULON	3					
11	92995–06600	WASHER RONDELLE	3					
12	65W–24377–00	PIPE, JOINT 3 DURITE RACCORDEMENT 3	1					
13	65W–15397–10	HOSE DURITE	1					
14	90465–13M36	CLAMP BRIDE	6					
15	90446–24M54	HOSE (L260) DURITE (L260)	1					
16	90465–11M52	CLAMP BRIDE	1					
17	65W–15370–00	BREATHER ASSY RESPIRADERO	1					
18	65W–15370–10	BREATHER ASSY RESPIRADERO	1					

FIG. 7 CARBURETOR CARBURATEUR

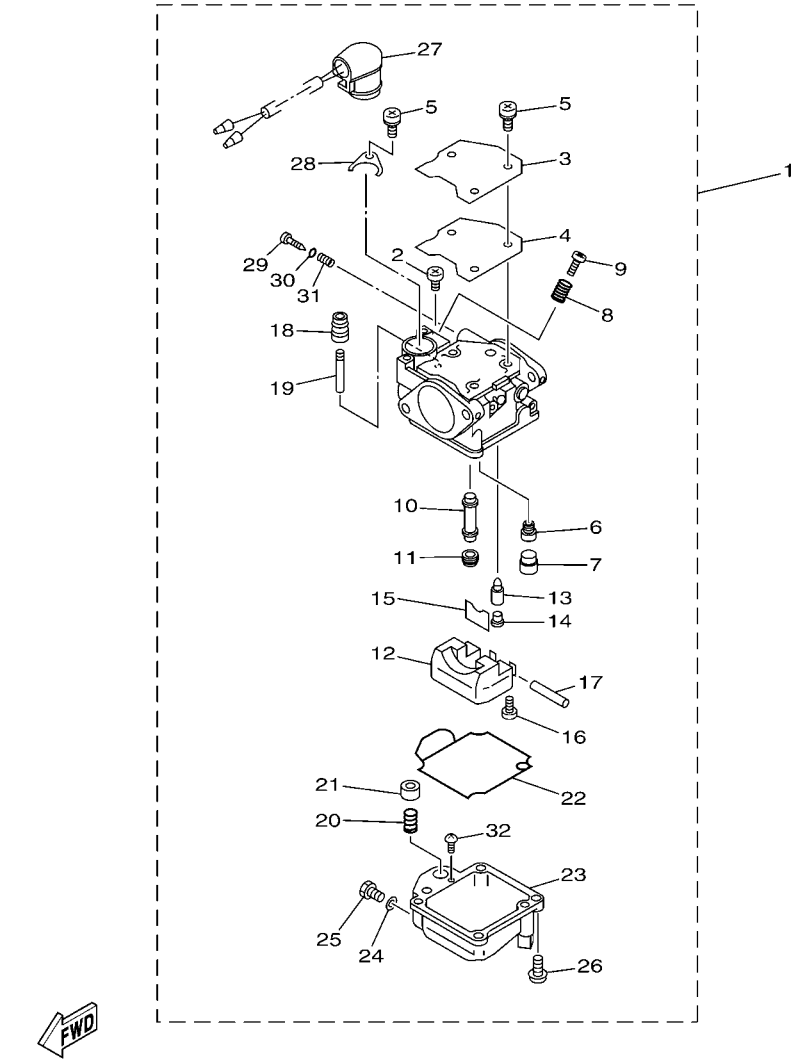

65W3010-C070

REF. NO.	PART NO. N° PIECES	DESCRIPTION DESCRIPTION	68U4					REMARKS REMARQUES
1	65W–14901–01	CARBURETOR ASSY 1 CARBURATEUR 1 COMPLET	1					
2	98580–04006	.SCREW, PAN HEAD .VIS	1					
3	65W–14572–00	.PLATE .PLAQUE	1					
4	65W–14126–00	.GASKET .JOINT	1					
5	97803–04010	.SCREW, PAN HEAD .VIS, CRUCIFORME	4					
6	676–14948–07	.JET (#50) .GICLEUR (#50)	1					
7	679–14966–00	.RUBBER CAP .CAOUTCHOUC CASQUILLO	1					
8	90501–10326	.SPRING, COMPRESSION .RESSORT, COMPRESSION	1					
9	63V–14523–00	.SCREW, STOP .VIS, BUTEE	1					
10	65W–14947–00	.JET, NEEDLE .GICLEUR DE STARTER	1					
11	65W–14943–29	.JET, MAIN (#112) .GICLEUR, PRINCIPAL (#112)	1					
12	63V–14985–00	.FLOAT .FLOTTEUR	1					
13	6G1–14546–01	.VALVE, NEEDLE .POINTEAU	1					
14	676–14186–00	.PIN, FLOAT .AXE, FLOTTEUR	1					
15	663–14159–00	.CLIP .JONC	1					
16	98580–04008	.SCREW, PAN HEAD .VIS	1					
17	6H4–14548–00	.PIN, FLOAT ARM .AXE, BRAS DE FLOTTEUR	1					
18	65W–14373–00	.COVER, PLUNGER CAP .COUVERCLE DE PLONGEUR	1					
19	65W–14379–00	.ROD, STARTER .TRINGLE, STARTER	1					
20	65W–14335–00	.SPRING, PLUNGER .RESSORT, PLONGEUR	1					
21	65W–14371–00	.PLUNGER, STARTER .PLONGEUR, STARTER	1					
22	65W–14384–00	.GASKET, FLOAT CHAMBER .JOINT, CUVE DE FLOTTEUR	1					
23	65W–14980–00	.BODY, FLOAT CHAMBER .CORPS, CUVE DE FLOTTEUR	1					
24	65W–14398–00	.GASKET .JOINT	1					
25	65W–14992–00	.SCREW, DRAIN .BOUCHON, PURGE	1					
26	97980–04114	.SCREW, WITH WASHER .VIS, AVEC RONDELLE	4					
27	65W–14380–00	.PRIME STARTER ASSY .DEMARREUR D'AMARCAGE ENS.	1					

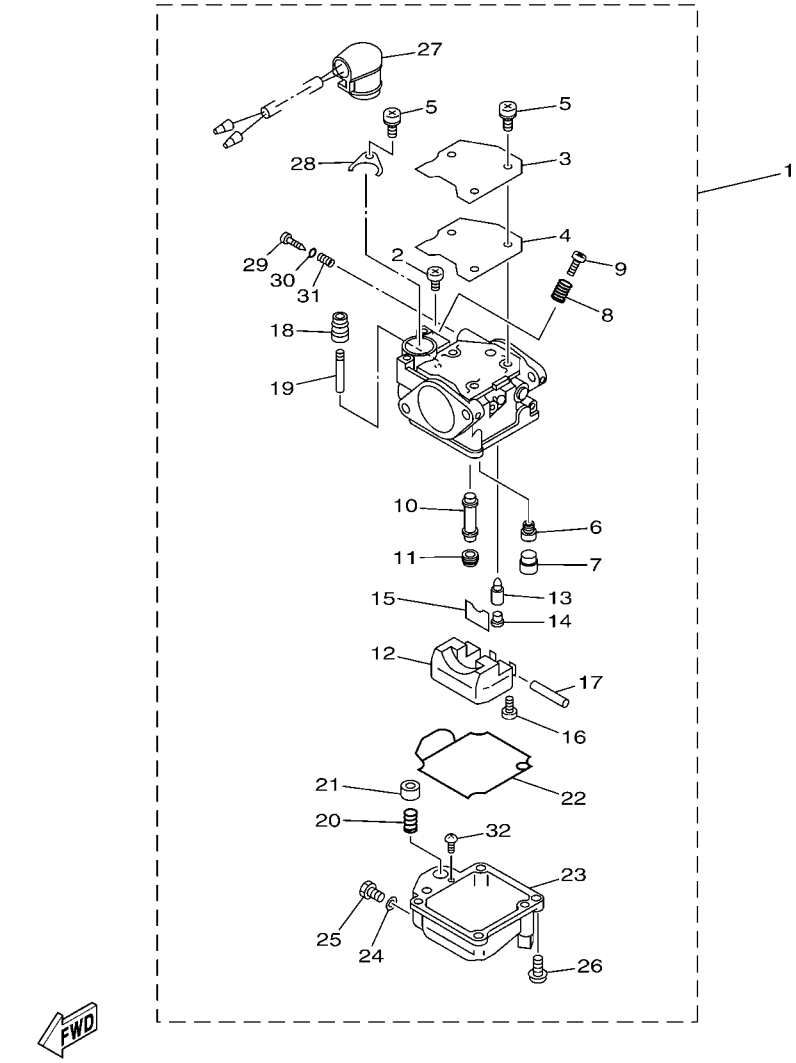

FIG. 7 CARBURETOR CARBURATEUR

REF. NO.	PART NO. N° PIECES	DESCRIPTION DESCRIPTION	68U4					REMARKS REMARQUES
28	65W–14346–00	.PLATE .PLAQUE	1					
29	67C–14923–00	.SCREW, PILOT .VIS, RALENTI	1					
30	67C–14397–00	.O-RING .JOINT TORIQUE	1					
31	67C–14555–00	.SPRING .RESSORT	1					
32	67C–14567–00	.SCREW .VIS	1					

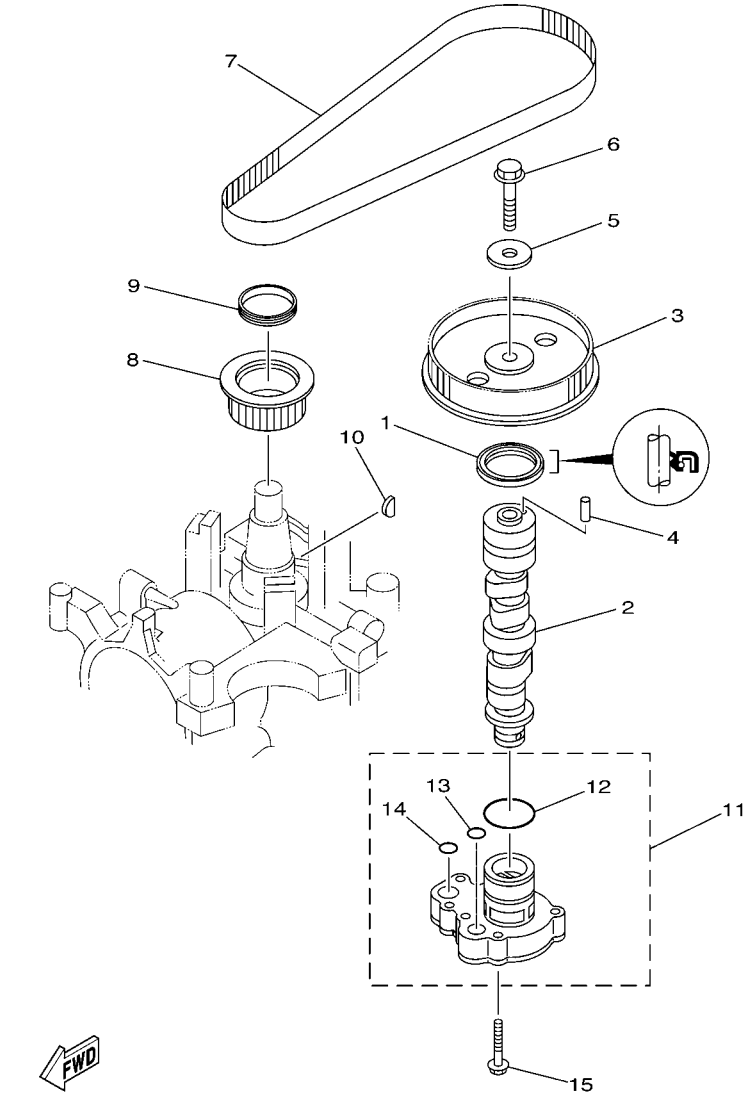

FIG. 8 OIL PUMP — POMPE A HUILE

REF. NO.	PART NO. N° PIECES	DESCRIPTION DESCRIPTION	68U4					REMARKS REMARQUES
1	93102–37M40	OIL SEAL JOINT SPY	1					
2	65W–12171–01	CAMSHAFT 1 ARBRE A CAMES 1	1					
3	65W–11537–01	GEAR, DRIVEN PIGNON SECONDAIRE	1					
4	93605–14143	PIN, DOWEL AXE	1					
5	90201–10M06	WASHER, PLATE RONDELLE, PLATE	1					
6	95895–10040	BOLT, FLANGE BOULON	1					
7	65W–46241–00	V-BELT COURROIE TRAPEZOIDALE	1					
8	65W–11536–10	GEAR, DRIVE ENGRENAGE, MENANT	1					
9	65W–11476–00	SPRING RESSORT	1					
10	90280–04M06	KEY, WOODRUFF CLAVETTE, DEMI-LUNE	1					
11	65W–13300–00	OIL PUMP ASSY POMPE A HUILE COMPLETE	1					
12	93210–33MH2	.O-RING .JOINT TORIQUE	1					
13	93210–12MG9	.O-RING .JOINT TORIQUE	1					
14	93210–14515	.O-RING .JOINT TORIQUE	1					
15	90119–06MA5	BOLT, WITH WASHER BOULON, AVEC RONDELLE	4					

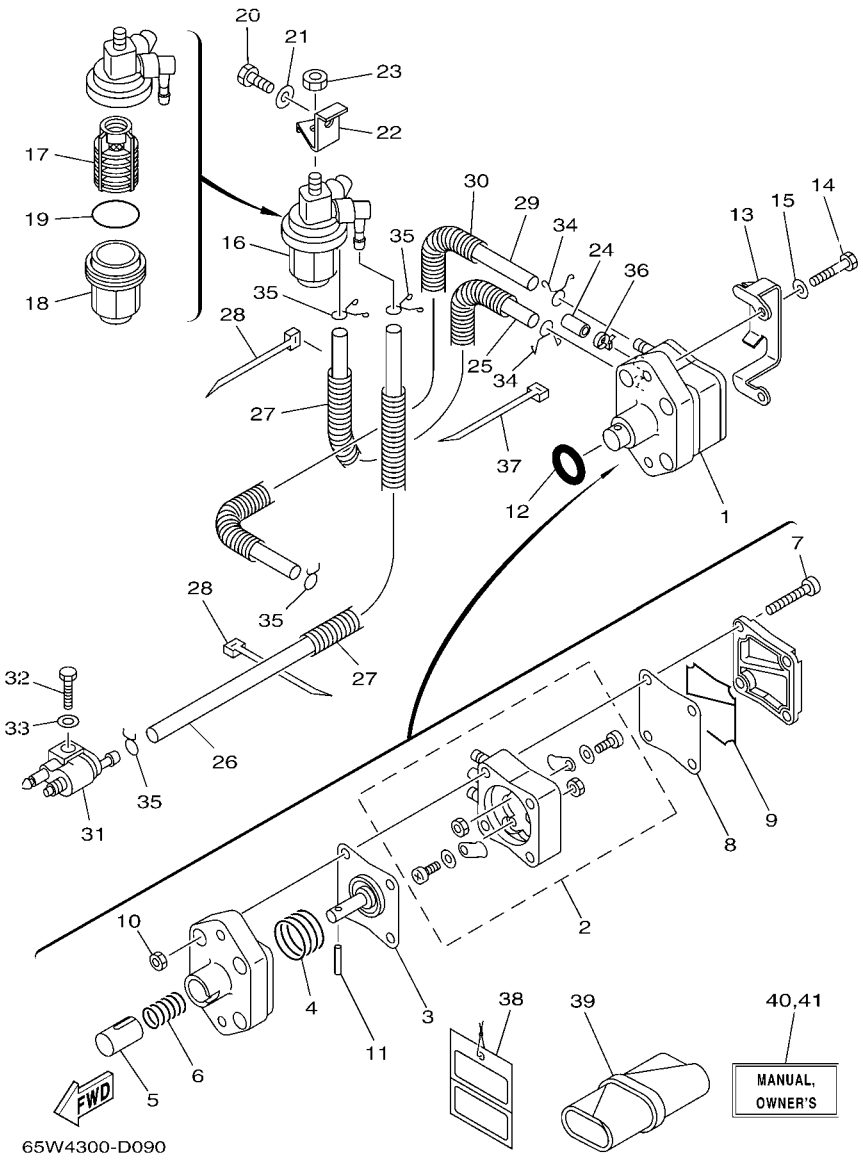

FIG. 9 FUEL CARBURANT

REF. NO.	PART NO. N° PIECES	DESCRIPTION DESCRIPTION	68U4					REMARKS REMARQUES
1	62Y–24410–03	FUEL PUMP ASSY POMPE A ESSENCE	1					
2	62Y–24415–00	.PUMP BODY SUB ASSY .CORPS D' POMPE SUB COPM.	1					
3	62Y–24411–02	.DIAPHRAGM .DIAPHRAGME	1					
4	62Y–24423–00	.SPRING, DIAPHRAGM .RESSORT, DIAPHRAGME	1					
5	62Y–13131–01	.PLUNGER .PLONGEUR	1					
6	62Y–24454–00	.SPRING .RESSORT	1					
7	62Y–24444–01	.SCREW .VIS	4					
8	62Y–24471–00	.DIAPHRAGM .DIAPHRAGME	1					
9	62Y–24452–00	.PACKING .JOINT	1					
10	95380–05600	.NUT .ECROU	4					
11	62Y–24374–01	.PIN .PIN	1					
12	93210–24M79	O-RING JOINT TORIQUE	1					
13	65W–24474–10	COVER COUVERCLE	1					
14	97095–06030	BOLT BOULON	2					
15	92995–06600	WASHER RONDELLE	2					
16	61N–24560–00	FILTER ASSY ENS FILTRE	1					
17	61N–24563–00	.ELEMENT, FILTER .ELEMENT, FILTRE	1					
18	61N–24521–00	.CUP, FILTER .CUVETTE, FILTRE	1					
19	93210–32738	.O-RING .JOINT TORIQUE	1					
20	97095–08014	BOLT BOULON	1					
21	92995–08600	WASHER RONDELLE	1					
22	6D5–24566–00	BRACKET, FILTER SUPPORT, FILTRE	1					
23	95380–08600	NUT ECROU	1					
24	65W–24481–00	PLUG COUVERCLE	1					
25	90445–10MG6	HOSE (L180) DURITE (L180)	1					
26	90445–10M34	HOSE (L550) DURITE (L550)	1					
27	90446–14M12	HOSE DURITE	2					

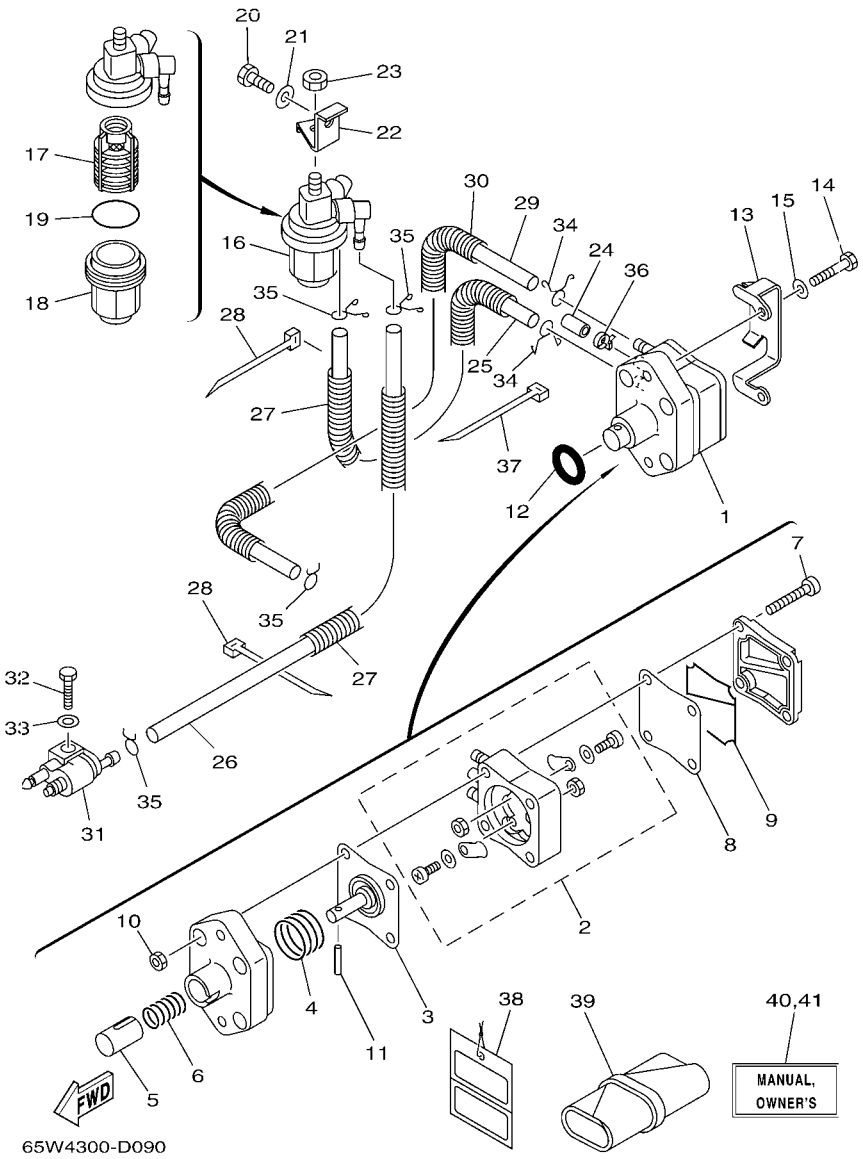

FIG. 9 FUEL CARBURANT

REF. NO.	PART NO. N° PIECES	DESCRIPTION DESCRIPTION	68U4					REMARKS REMARQUES
28	90465–11M10	CLAMP BRIDE	2					
29	90445–10MG7	HOSE (L350) DURITE (L350)	1					
30	90446–14M51	HOSE DURITE	1					
31	6G1–24304–02	FUEL PIPE JOINT COMP. 1 DURITE RACCORDEMT. A ESSENCE	1					
32	97095–06025	BOLT BOULON	1					
33	92995–06600	WASHER RONDELLE	1					
34	90467–10M04	CLIP JONC	2					
35	90467–09M17	CLIP JONC	4					
36	90465–11M10	CLAMP BRIDE	1					
37	90465–13M18	CLAMP BRIDE	1					
38	61H–2819R–31	TAG, WARNING ETIQUETTE, AVERTISSEMENT	1					
39	62Y–28100–00	TOOL KIT TROUSSE A OUTILS	1					
40	65W–28199–7A–E0	MANUAL,OWNER'S MANUEL D'UTILISATION	1					UR (E) UR (E)
	65W–28199–7A–F0	MANUAL,OWNER'S MANUEL D'UTILISATION	1					UR (F) UR (F)
	65W–28199–7A–S0	MANUAL,OWNER'S MANUEL D'UTILISATION	1					UR (ES) UR (ES)
	65W–28199–7A–G0	MANUAL,OWNER'S MANUEL D'UTILISATION	1					UR (D) UR (D)
	65W–28199–7A–D0	MANUAL,OWNER'S MANUEL D'UTILISATION	1					UR (NL) UR (NL)
	65W–28199–7A–H0	MANUAL,OWNER'S MANUEL D'UTILISATION	1					UR (I) UR (I)
41	65W–28199–8B–K0	MANUAL,OWNER'S MANUEL D'UTILISATION	1					UR (DK) UR (DK)
	65W–28199–8B–R0	MANUAL,OWNER'S MANUEL D'UTILISATION	1					UR (GR) UR (GR)
	65W–28199–8B–P0	MANUAL,OWNER'S MANUEL D'UTILISATION	1					UR (P) UR (P)
	65W–28199–8B–N0	MANUAL,OWNER'S MANUEL D'UTILISATION	1					UR (N) UR (N)
	65W–28199–8B–M0	MANUAL,OWNER'S MANUEL D'UTILISATION	1					UR (S) UR (S)
	65W–28199–8B–L0	MANUAL,OWNER'S MANUEL D'UTILISATION	1					UR (SF) UR (SF)

FIG. 10 GENERATOR GENERATRICE

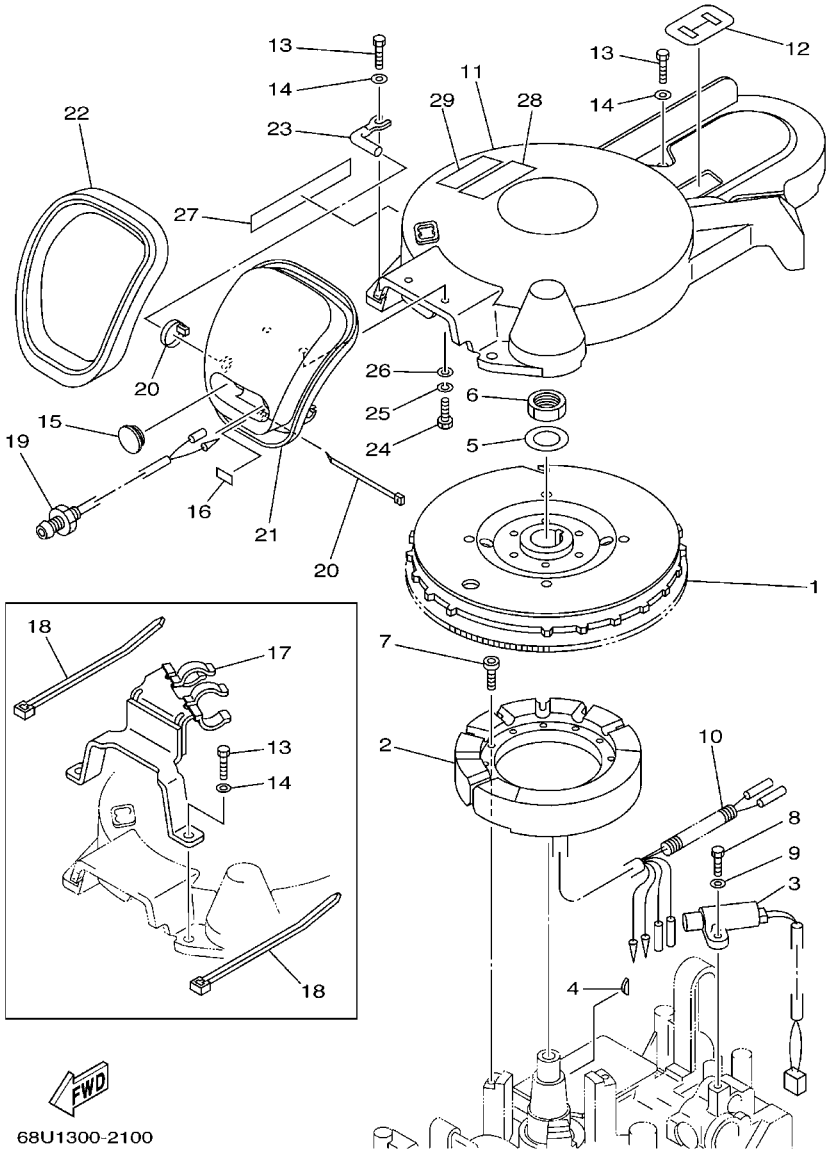

REF. NO.	PART NO. N° PIECES	DESCRIPTION DESCRIPTION	68U4					REMARKS REMARQUES
1	65W–85550–01	ROTOR ASSY ROTOR CPLT	1					
2	65W–85510–10	STATOR ASSY STATOR CPLT	1					
3	65W–85580–00	COIL, PULSER BOBINE, PULSEUR	1					
4	65W–11545–00	KEY, WOODRUFF CLAVETTE, DEMI-LUNE	1					
5	90201–21M18	WASHER, PLATE RONDELLE, PLATE	1					
6	90170–20137	NUT ECROU	1					
7	91380–05030	BOLT BOULON	3					
8	97095–05016	BOLT BOULON	2					
9	92995–05600	WASHER RONDELLE	2					
10	90446–10M82	HOSE (L90) DURITE (L90)	1					
11	65W–81337–00	COVER, FLYWHEEL COUVERCLE, VOLANT	1					
12	65W–81639–00	PLATE, ARMATURE FITTING PLAQUE, FIXATION D'INDUIT	1					
13	97095–06025	BOLT BOULON	4					
14	92995–06600	WASHER RONDELLE	4					
15	6G1–42725–00	GROMMET PASSE-FIL	1					
16	65W–84342–00	SEAT, EMBLEM SIEGE, EMBLEME	1					
17	65W–82594–10	CLAMP BRIDE	1					
18	90465–13M18	CLAMP BRIDE	2					
19	65W–85410–01	EMERGENCY SIGNAL LIGHT ASSY FEU DE DETRESSE	1					
20	90465–11M10	CLAMP BRIDE	2					
21	65W–15758–10	GUIDE, ROPE GUIDE DE CABLE	1					
22	65W–15762–00	SEAL, RUBBER 2 JOINT CAOUTCHOUC 2	1					
23	65W–15771–00	STAY 1 SUPPORT 1	1					
24	97095–06020	BOLT BOULON	2					
25	92995–06100	WASHER, SPRING RONDELLE, GROWER	2					
26	92995–06600	WASHER RONDELLE	2					
27	68U–13437–60	MARK, CAUTION MAKER	1					

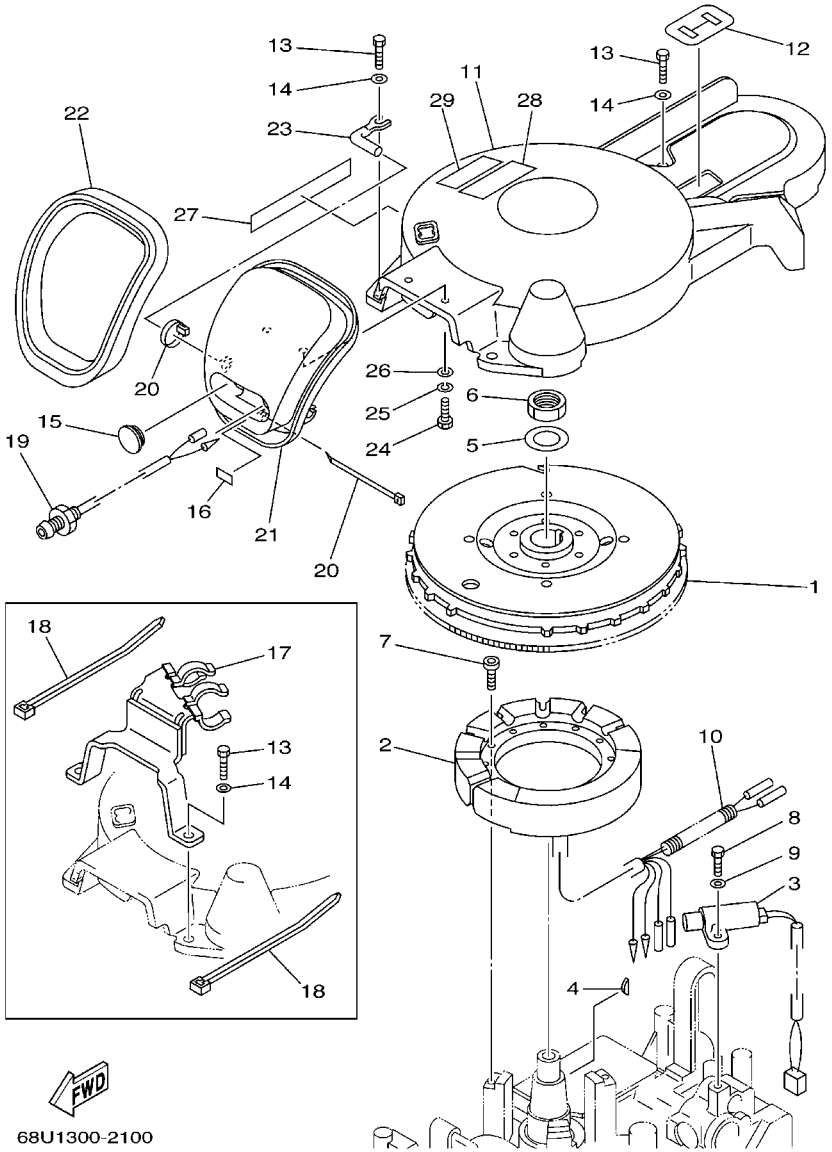

FIG. 10 GENERATOR GENERATRICE

REF. NO.	PART NO. N° PIECES	DESCRIPTION DESCRIPTION	68U4					REMARKS REMARQUES
28	6A1–83625–41	MARK 5 ETIQUETTE 5	1					
29	6A1–83625–51	MARK 5 ETIQUETTE 5	1					

FIG. 11 ELECTRICAL 1 — PARTIE ELECTRIQUE 1

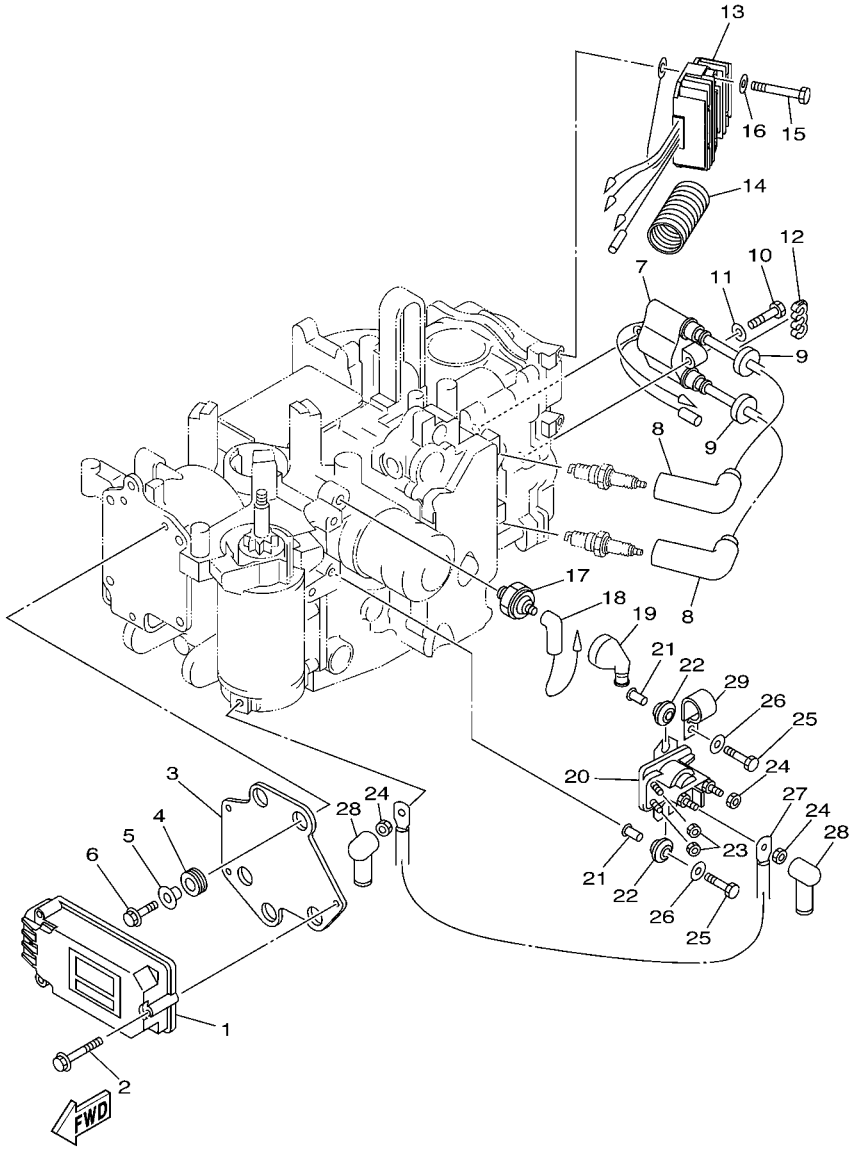

68U3100-C120

REF. NO.	PART NO. N° PIECES	DESCRIPTION DESCRIPTION	68U4					REMARKS REMARQUES
1	65W–85540–20	C.D.I. UNIT ASSY BLOC C.D.I.	1					
2	65W–8252V–00	SCREW, SPECIAL VIS, SPECIALE	3					
3	65W–85542–00	BRACKET SUPPORT	1					
4	65W–85547–00	DAMPER AMORTISSEUR	3					
5	65W–86129–20	COLLAR COLLERETTE	3					
6	65W–8252V–10	SCREW, SPECIAL VIS, SPECIALE	3					
7	65W–85570–01	IGNITION COIL ASSY BOBINE D'ALLUMAGE (ENS.)	1					
8	6G8–82370–30	PLUG CAP ASSY ANTIPARASITE	2					
9	90480–25161	GROMMET PASSE-FIL	2					
10	97095–06030	BOLT BOULON	2					
11	92995–06600	WASHER RONDELLE	2					
12	90464–07M05	CLAMP BRIDE	1					
13	65W–81960–10	RECTIFIER & REGULATOR ASSY REDRESSEUR REGULATEUR CPLT	1					
14	6K3–83557–00	TUBE TUBE	1					
15	97095–06040	BOLT BOULON	2					
16	92995–06600	WASHER RONDELLE	2					
17	65W–82504–00	OIL PRESSURE SWITCH ASSY CONTACTEUR DE PRESSION D'HUILE	1					
18	65W–82127–00	WIRE, LEAD 2 FIL 2	1					
19	65W–82532–00	CAP COUVERCLE	1					
20	65W–81941–00	STARTER RELAY ASSY LANCEUR RELAIS (ENS.)	1					
21	65W–8191C–00	COLLAR COLLERETTE	2					
22	65W–81922–00	GROMMET OEILLET CAOUTCHOUC	2					
23	65W–8182A–00	NUT ECROU	2					
24	65W–8182B–00	NUT, SPECIAL ECROU, SPECIAL	3					
25	97095–06025	BOLT BOULON	2					
26	92995–06600	WASHER RONDELLE	2					
27	65W–82117–00	WIRE, LEAD FIL	1					

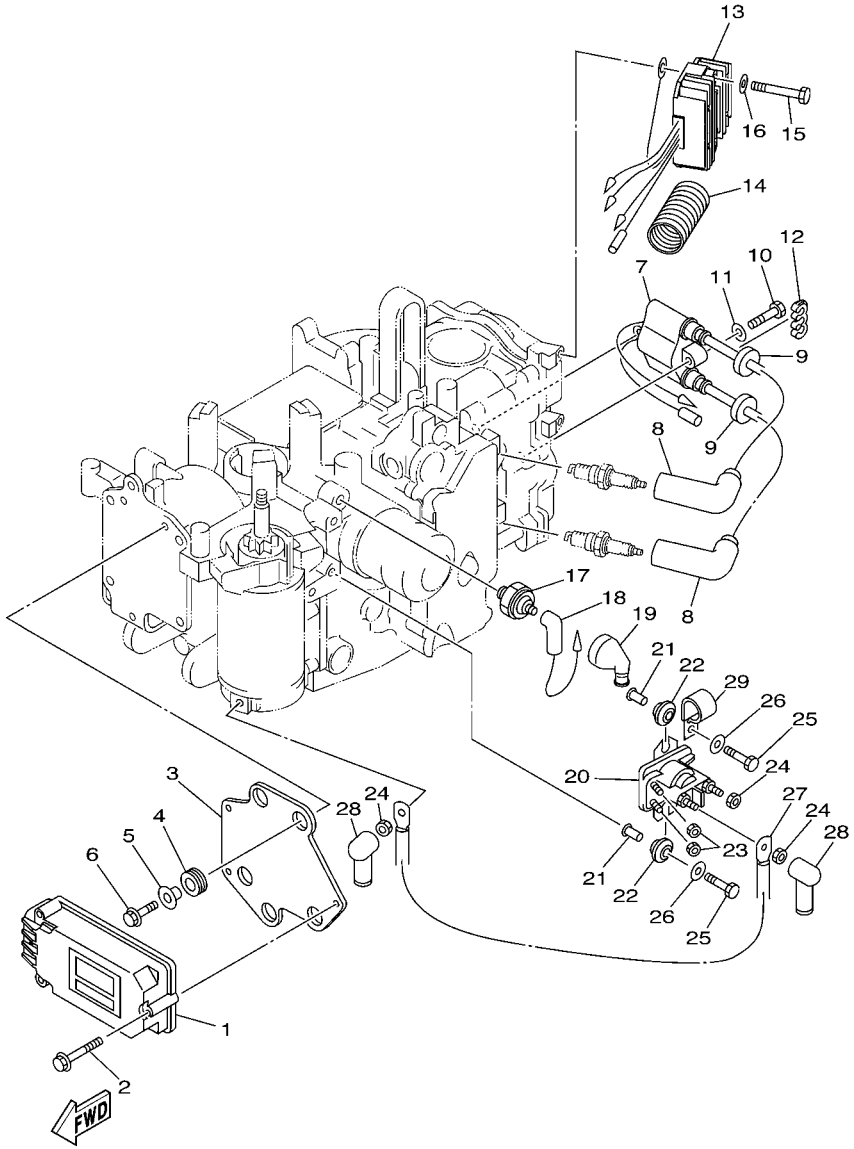

FIG. 11 ELECTRICAL 1 — PARTIE ELECTRIQUE 1

REF. NO.	PART NO. N° PIECES	DESCRIPTION DESCRIPTION	68U4					REMARKS REMARQUES
28	6G5–82119–10	COVER, LEAD WIRE GARNITURE, FIL	2					
29	65W–8339X–00	CLAMP, CORD COLLIER, CORDON	1					

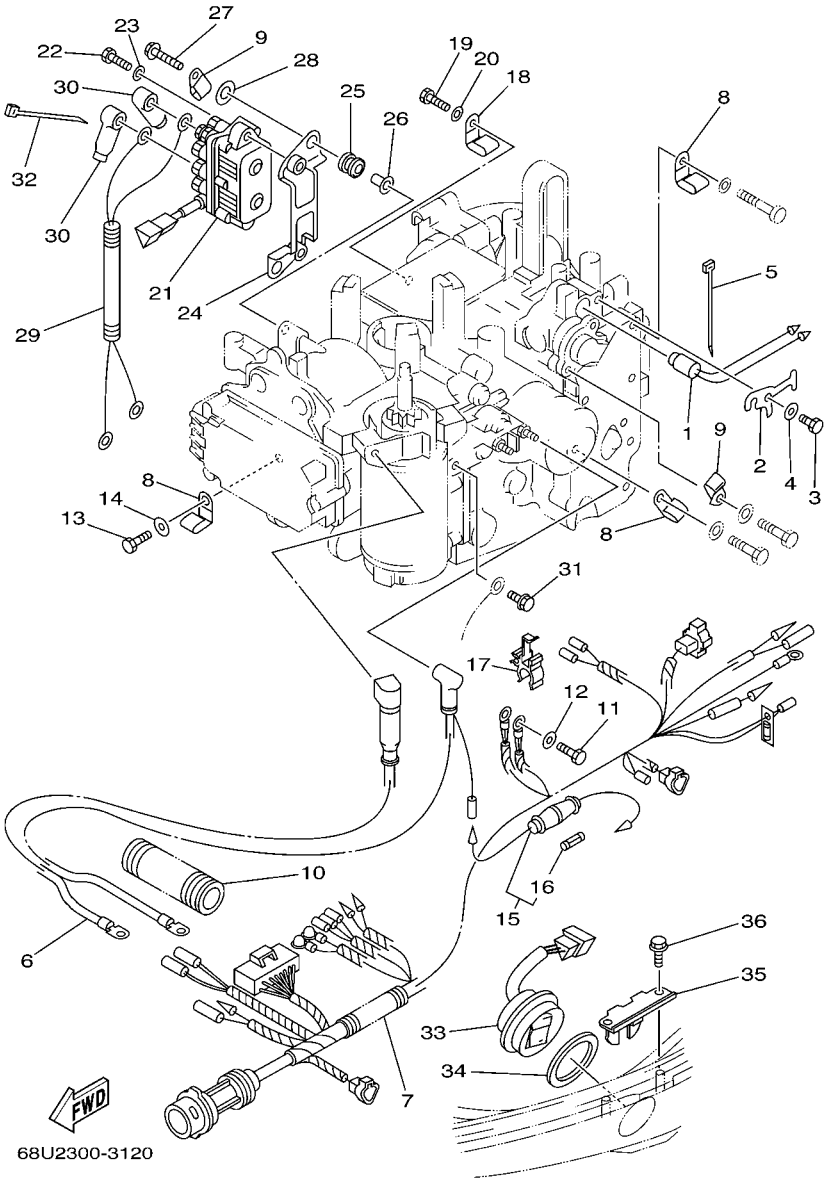

FIG. 12 ELECTRICAL 2 — PARTIE ELECTRIQUE 2

REF. NO.	PART NO. N° PIECES	DESCRIPTION DESCRIPTION	68U4					REMARKS REMARQUES
1	65W–85790–00	THERMOSENSOR ASSY SENSITOMETRE	1					
2	65W–85757–00	RETAINER ARRETOIR	1					
3	97095–06012	BOLT BOULON	1					
4	92995–06600	WASHER RONDELLE	1					
5	90465–11M10	CLAMP BRIDE	1					
6	65W–82105–00	WIRE HARNESS FAISCEAU DE FILS	1					
7	65W–82590–30	WIRE HARNESS ASSY (10P) FAISCEAU DE FILS COMPLET (10P)	1					
8	90465–08M08	CLAMP BRIDE	3					
9	90465–06M88	CLAMP BRIDE	2					
10	6N7–83557–00	TUBE (I.DIA:22MM) TUBE (I.DIA:22MM)	1					
11	97095–06016	BOLT BOULON	2					
12	92995–06600	WASHER RONDELLE	2					
13	97095–05016	BOLT BOULON	1					
14	92995–05600	WASHER RONDELLE	1					
15	6G8–82150–00	FUSE HOLDER ASSY SUPPORT DE FUSIBLE	1					
16	663–82151–00	.FUSE (12V-20A) .FUSIBLE (12V-20A)	1					
17	6G5–82152–00	HOLDER, FUSE SUPPORT, FUSIBLE	1					
18	90465–08M08	CLAMP BRIDE	1					
19	97095–06016	BOLT BOULON	1					
20	92995–06600	WASHER RONDELLE	1					
21	61A–81950–00	RELAY ASSY RELAIS COMPLET	1					
22	97075–06020	BOLT BOULON	2					
23	92995–06600	WASHER RONDELLE	2					
24	65W–81948–00	BRACKET JOINT TORIQUE	1					
25	6A0–82317–00	DAMPER, IGNITION COIL AMORTISSEUR, BOBINE D'ALLUM	2					
26	624–42542–00	PIPE TUYAU	2					
27	95895–06030	BOLT, FLANGE BOULON	2					

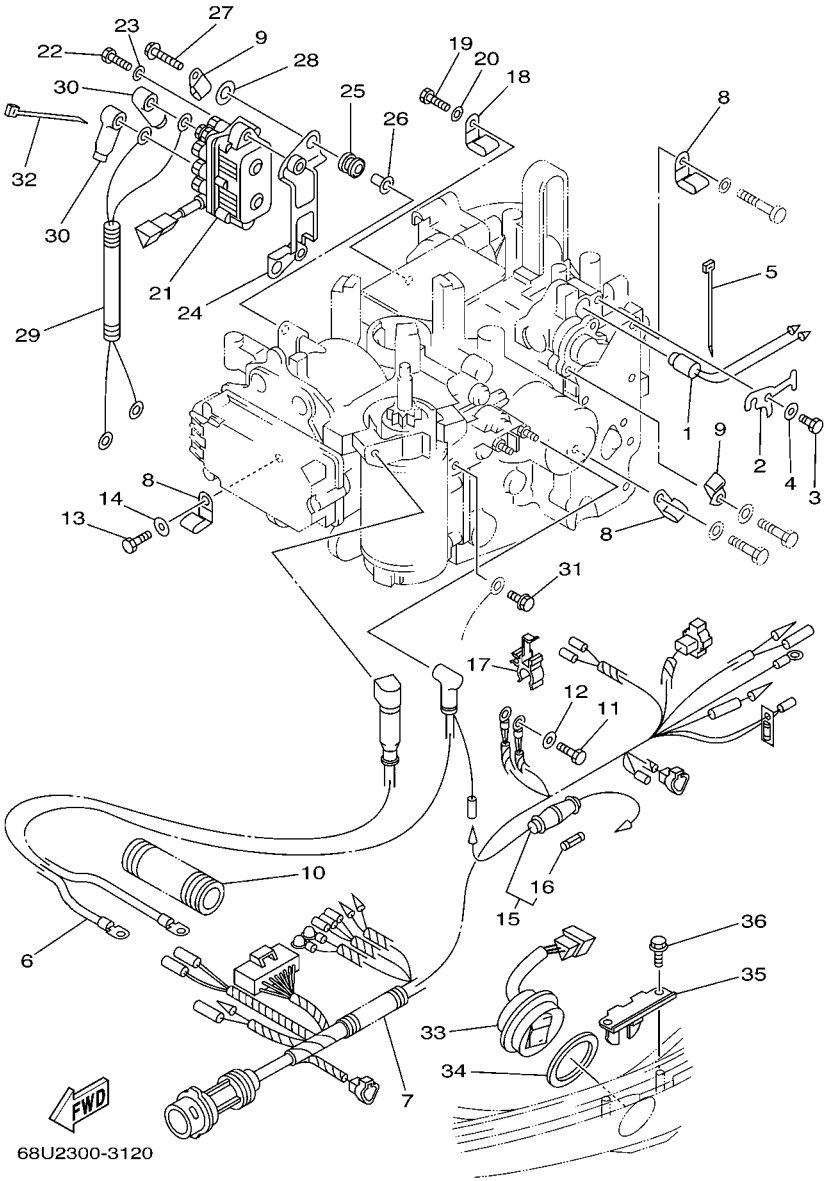

FIG. 12 ELECTRICAL 2 — PARTIE ELECTRIQUE 2

REF. NO.	PART NO. N° PIECES	DESCRIPTION DESCRIPTION	68U4					REMARKS REMARQUES
28	90201–12M16	WASHER, PLATE RONDELLE, PLATE	2					
29	65W–81949–00	WIRE, LEAD FIL	1					
30	682–82119–01	COVER, LEAD WIRE GARNITURE, FIL	4					
31	97575–06516	BOLT, WITH WASHER VIS HEXAGONAL AVC RONDELLE	1					
32	90465–11M10	CLAMP BRIDE	1					
33	6H1–82563–10	TRIM & TILT SWITCH ASSY INCLINER ET PARER COMMUTATEUR	1					
34	6E5–82587–00	GASKET JOINT	1					
35	62Y–83614–00	BRACKET SUPPORT	1					
36	90109–06M86	BOLT BOULON	2					

FIG. 13 STARTING MOTOR DEMARREUR ELECTRIQUE

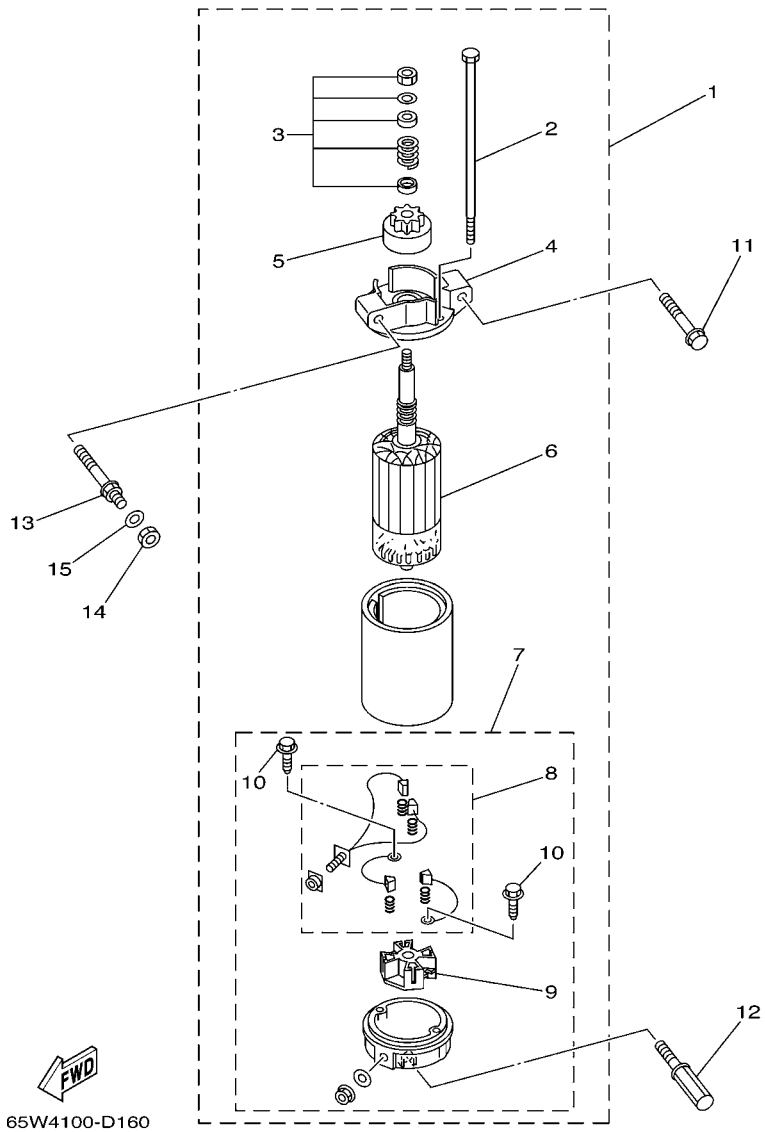

REF. NO.	PART NO. N° PIECES	DESCRIPTION DESCRIPTION	68U4					REMARKS REMARQUES
1	65W–81800–02	STARTING MOTOR ASSY DEMARREUR ELECTRIQUE COMPLET	1					
2	65W–81826–00	.BOLT .BOULON	2					
3	65W–81857–02	.PINION STOPPER SET .BUTEE PIGNON	1					
4	65W–81830–00	.FRONT BRACKET ASSY .SUPPORT AVANT	1					
5	65W–81807–00	.GEAR ASSY, STARTING MOTOR .PIGNON, DEMARREUR ELECTRIQUE	1					
6	65W–81850–02	.ARMATURE ASSY .INDUIT	1					
7	65W–81820–00	.REAR BRACKET ASSY .SUPPORT ARRIERE COMPLET	1					
8	65W–81801–00	..BRUSH SET ..CHARBON	1					
9	65W–81840–00	..BRUSH HOLDER ASSY ..SUPPORT DE CHARBON	1					
10	65W–8182S–00	..SCREW ..VIS	2					
11	90119–08M39	BOLT, WITH WASHER BOULON, AVEC RONDELLE	1					
12	90109–08M77	BOLT BOULON	1					
13	90109–08M78	BOLT BOULON	1					
14	95380–08700	NUT ECROU	1					
15	92990–08600	WASHER, PLATE RONDELLE, PLATE	2					

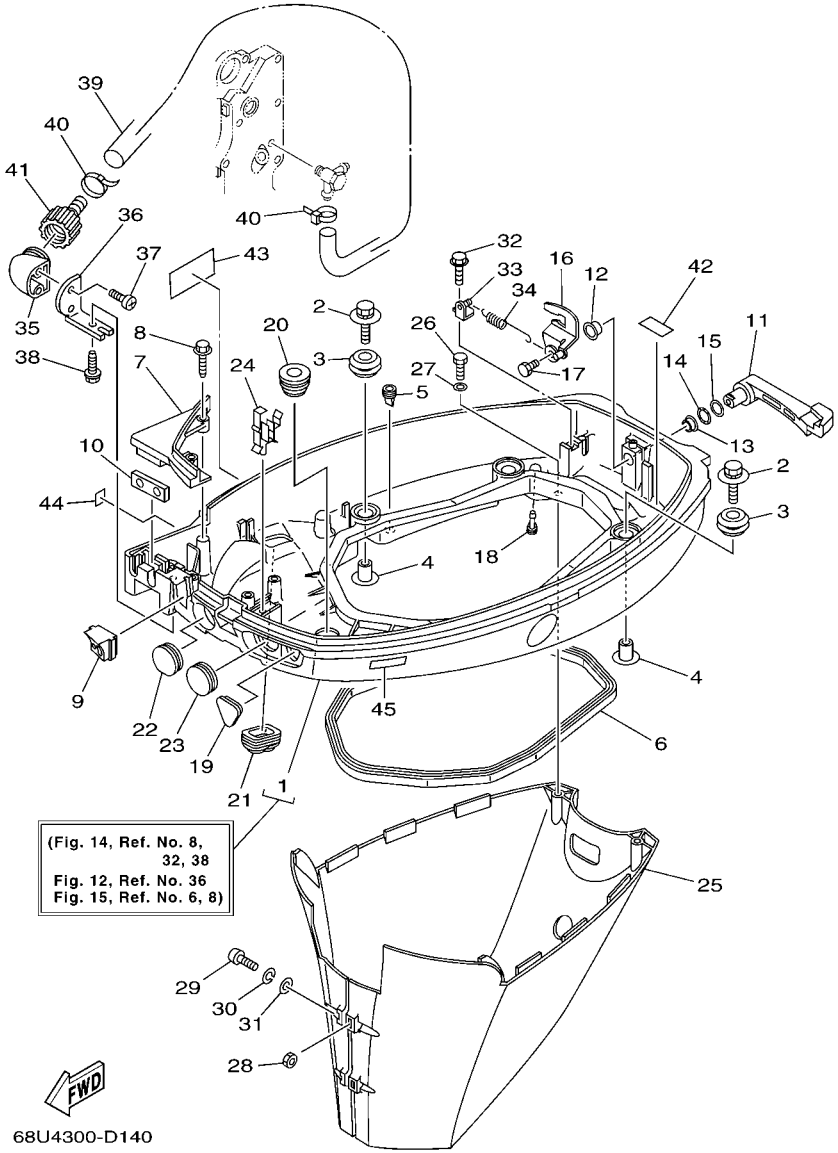

FIG. 14 BOTTOM COWLING CAPOT INFERIEUR

REF. NO.	PART NO. N° PIECES	DESCRIPTION DESCRIPTION	68U4					REMARKS REMARQUES
1	68U–42710–12–4D	BOTTOM COWLING ASSY ENS. EMBASE	1					WITH TAPPING BOLT WITH TAPPING BOLT
2	90119–06M08	BOLT, WITH WASHER BOULON, AVEC RONDELLE	4					
3	90480–09M12	GROMMET PASSE-FIL	4					
4	90387–06060	COLLAR COLLERETTE	4					
5	65W–42717–00	RUBBER, SEAL 2 JOINT EN CAOUTCHOUC 2	6					
6	62Y–42716–00	RUBBER, SEAL 1 JOINT EN CAOUTCHOUC 1	1					
7	65W–42738–01–4D	PLATE, FITTING ETRIER	1					
8	90109–06M82	BOLT BOULON	2					
9	65W–42725–21	GROMMET PASSE-FIL	1					
10	62Y–42727–00	GROMMET PASSE-FIL	1					
11	6D5–42815–00–4D	LEVER, CLAMP LEVIER, PRESSE	1					
12	90386–12M37	BUSH DOUILLE	1					
13	90386–12MA2	BUSH DOUILLE	1					
14	90206–12052	WASHER, WAVE RONDELLE, ONDULEE	1					
15	90201–12M07	WASHER, PLATE RONDELLE, PLATE	1					
16	6D5–42816–00	LEVER, CLAMP LEVIER, PRESSE	1					
17	97095–06012	BOLT BOULON	1					
18	6H3–44391–01	NIPPLE, HOSE RACCORD D'ESSENCE	1					
19	65W–26326–10	GROMMET RONDELLE CAOUTCHOUC	1					
20	68U–42727–00	GROMMET PASSE-FIL	1					
21	6H1–42726–21	GROMMET PASSE-FIL	1					FLUSHING KIT FLUSHING KIT
22	6G1–42725–00	GROMMET PASSE-FIL	1					
23	65W–42726–10	GROMMET PASSE-FIL	1					
24	90465–25M57	CLAMP BRIDE	1					
25	68U–42741–00–4D	APRON CAPOT LATERAL	1					
26	97095–06014	BOLT BOULON	2					
27	92995–06600	WASHER RONDELLE	2					

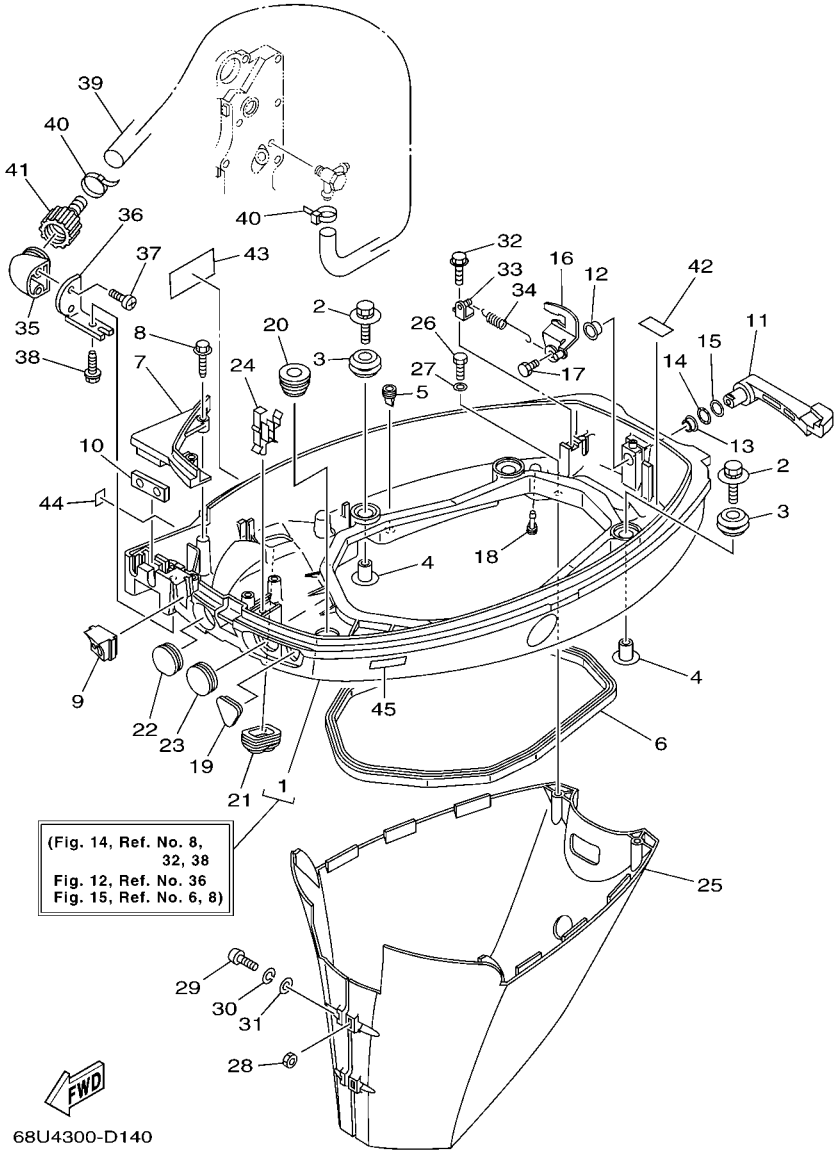

FIG. 14 BOTTOM COWLING CAPOT INFERIEUR

REF. NO.	PART NO. N° PIECES	DESCRIPTION DESCRIPTION	68U4					REMARKS REMARQUES
28	95380–06600	NUT, HEXAGON ECROU	2					
29	97880–06025	SCREW, PAN HEAD VIS, TETE TRONCONIQUE	2					
30	92990–06100	WASHER, SPRING RONDELLE, GROWER	2					
31	92990–06600	WASHER, PLATE RONDELLE, PLATE	2					
32	90109–06M86	BOLT BOULON	1					
33	6D5–43144–00	HOOK, SPRING CROCHET	1					
34	90506–18010	SPRING, TENSION RESSORT, TENSION	1					
35	68T–12572–00	ADAPTER ADAPTATEUR	1					FLUSHING KIT FLUSHING KIT
36	69W–12535–00	PLATE PLAQUE	1					FLUSHING KIT FLUSHING KIT
37	90167–06002	SCREW, TAPPING VIS, TETE FRAISEE	2					FLUSHING KIT FLUSHING KIT
38	90109–06M86	BOLT BOULON	1					FLUSHING KIT FLUSHING KIT
39	90445–11M82	HOSE DURITE	1					FLUSHING KIT FLUSHING KIT
40	90465–11M10	CLAMP BRIDE	2					FLUSHING KIT FLUSHING KIT
41	6R3–12580–00	JOINT ASSY ARTICULER (ENS.)	1					FLUSHING KIT FLUSHING KIT
42	62Y–82377–00	LABEL ETIQUETTE	1					
43	6G8–13444–51	MARK MAKER	1					
44	6A1–28176–00	LABEL, CAUTION ETIQUETTE, RECOMMANDATION	1					
45	6E3–8257H–00	PLATE, MARK PLAQUE, ADHESIF	1					

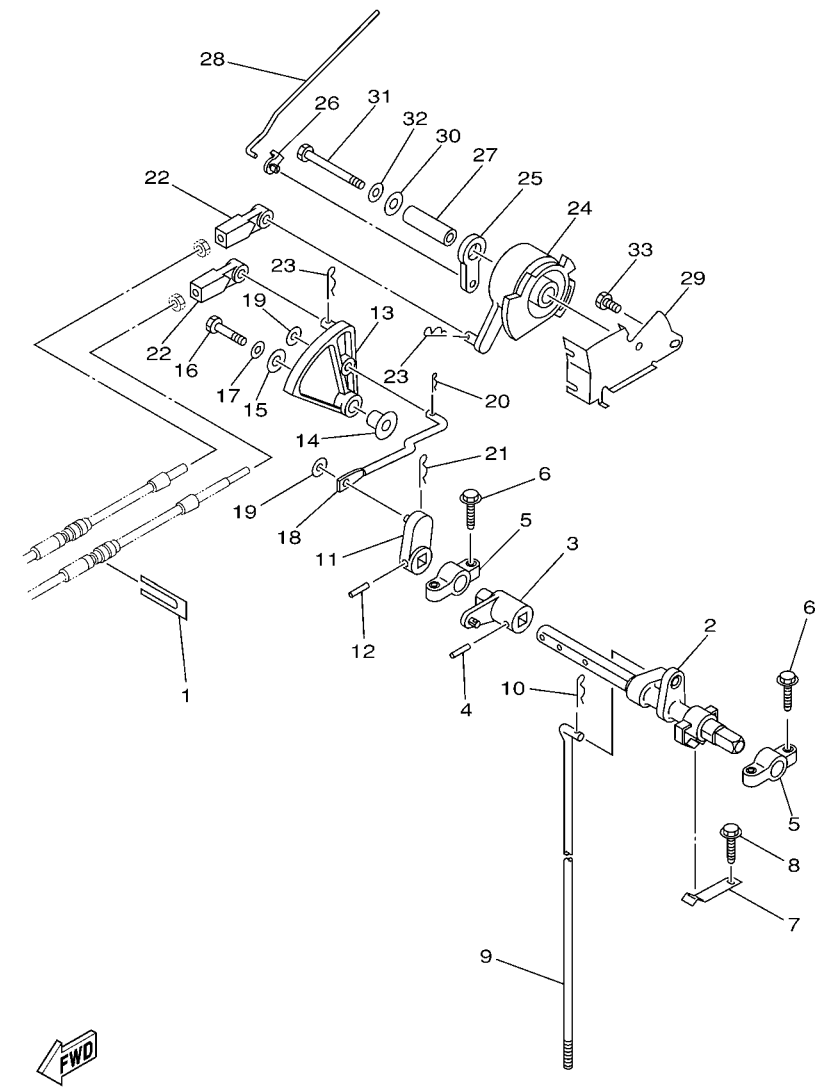

68U0100-0160

FIG. 15 CONTROL COMMANDE

REF. NO.	PART NO. N° PIECES	DESCRIPTION DESCRIPTION	68U4					REMARKS REMARQUES
1	6H3–48538–00	CLAMP, CABLE 1 COLLIER	1					
2	65W–44121–00	LEVER, SHIFT ROD LEVIER, TIGE D'INVERSION	1					
3	65W–44122–00	BUSHING, SHIFT ROD LEVER DOUILLE, LEVIER D'EMBRAYAGE	1					
4	90254–03M05	PIN, SPRING RIVET, TETE TRONCONIQUE	1					
5	6F5–41662–00	BRACKET SUPPORT	2					
6	90109–06M81	BOLT BOULON	4					
7	65W–44116–00	SPRING RESSORT	1					
8	90109–06M86	BOLT BOULON	1					
9	68U–44143–10	ROD, SHIFT TIGE D'EMBRAYAGE	1					
10	90468–18008	CLIP JONC	1					
11	65W–44142–00	JOINT AXE	1					
12	90254–03M05	PIN, SPRING RIVET, TETE TRONCONIQUE	1					
13	68U–44125–00	LEVER, SHIFT ROD LEVIER, TIGE D'INVERSION	1					
14	90387–06M29	COLLAR COLLERETTE	1					
15	90201–06M31	WASHER, PLATE RONDELLE, PLATE	1					
16	97095–06025	BOLT BOULON	1					
17	92995–06600	WASHER RONDELLE	1					
18	65W–44192–00	JOINT, ROD 1 RACCORD 1, BIELLETTE	1					
19	90201–05M06	WASHER, PLATE RONDELLE, PLATE	2					
20	90468–10005	CLIP JONC	1					
21	90468–18008	CLIP JONC	1					
22	663–48344–00	CABLE END, REMOTE CONTROL CHAPE CABLE	2					
23	90468–18008	CLIP JONC	2					
24	68U–41638–00	PULLEY POULIE	1					
25	65W–41283–00	LEVER, FREE ACCEL. LEVIER	1					
26	661–41262–02	JOINT, CHOKE LEVER RACCORD, LEVIER DE STARTER	1					
27	90387–06064	COLLAR COLLERETTE	1					

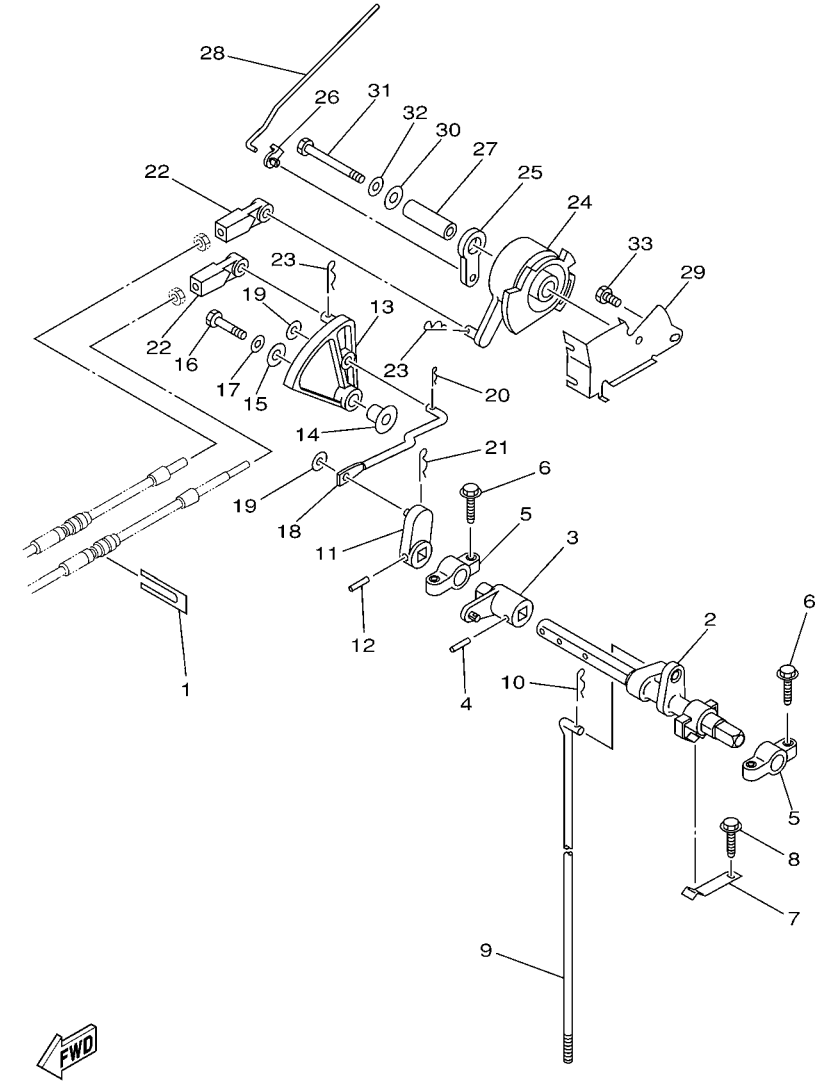

68U0100-0160

FIG. 15 CONTROL COMMANDE

REF. NO.	PART NO. N° PIECES	DESCRIPTION DESCRIPTION	68U4					REMARKS REMARQUES
28	65W–41211–00	LINK, ACCEL. BIELLETTE, ACCELERATION	1					
29	65W–14497–01	STAY, THROTTLE WIRE SUPPORT DE BOISSEAU	1					
30	90201–06M31	WASHER, PLATE RONDELLE, PLATE	1					
31	97095–06055	BOLT BOULON	1					
32	92995–06600	WASHER RONDELLE	1					
33	97095–06010	BOLT BOULON	1					

FIG. 16 BRACKET 1 SUPPORT 1

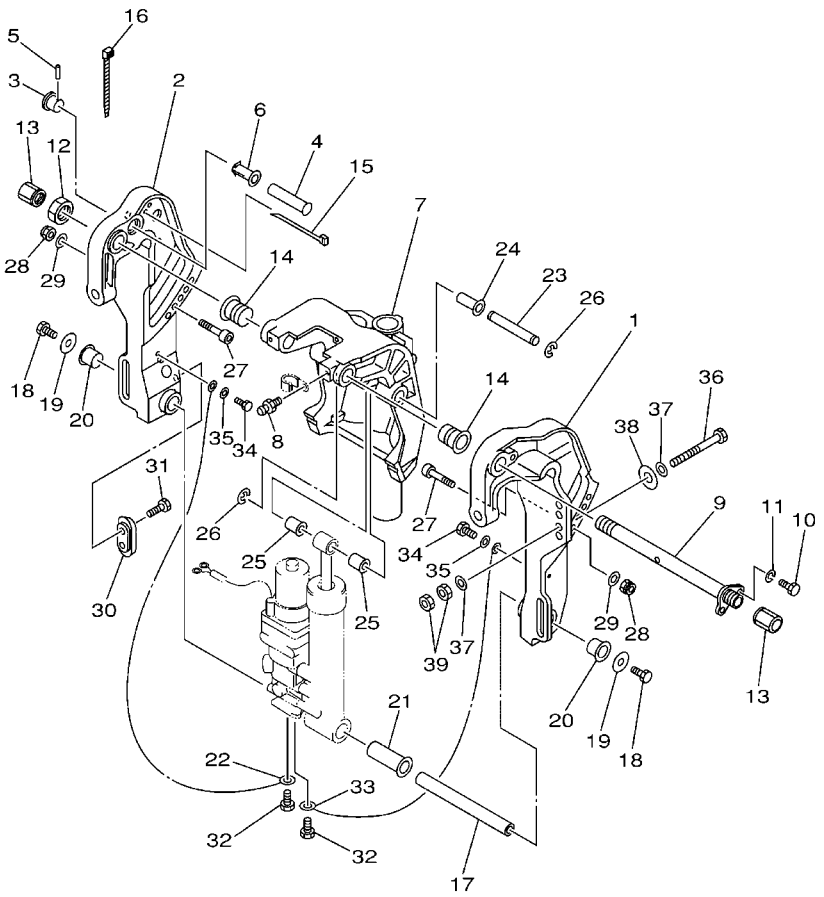

68U0300-1180

REF. NO.	PART NO. N° PIECES	DESCRIPTION DESCRIPTION	68U4					REMARKS REMARQUES
1	67C–43111–10–4D	BRACKET, CLAMP PRESSE	1					
2	67C–43112–10–4D	BRACKET, CLAMP PRESSE	1					
3	65W–43192–00	KNOB, STOPPER BOUTON, BUTEE DE RELEVAGE	1					
4	65W–43191–00	SHAFT, STOPPER AXE, BUTEE	1					
5	91690–30018	PIN, SPRING AGRAFFE	1					
6	90386–14MA1	BUSH DOUILLE	1					
7	68U–43311–10–4D	BRACKET, SWIVEL 1 SUPPORT, PIVOT 1	1					
8	93700–06M03	NIPPLE, GREASE PION	3					
9	6K9–43131–01	BOLT, CLAMP BRACKET BOULON, PRESSE	1					
10	97095–08020	BOLT BOULON	1					
11	92995–08100	WASHER RONDELLE	1					
12	90185–22M11	NUT, SELF-LOCKING ECROU, AUTO-BLOQUANT	1					
13	6G5–43145–01	CAP, CLAMP BRACKET CAPUCHON, PRESSE	2					
14	90386–22MA4	BUSH DOUILLE	2					
15	90465–13M11	CLAMP BRIDE	2					
16	90465–11M10	CLAMP BRIDE	1					
17	90249–18M35	PIN GOUPILLE	1					
18	97080–08016	BOLT BOULON	2					
19	90201–08M00	WASHER, PLATE RONDELLE, PLATE	2					
20	90386–18M44	BUSH DOUILLE	2					
21	90386–18MA0	BUSH DOUILLE	1					
22	6H1–82148–00	WIRE, LEAD 4 FIL 4	1					
23	90249–12M38	PIN GOUPILLE	1					
24	90381–12M10	BUSH, SOLID DOUILLE, SOLIDE	1					
25	90381–12M11	BUSH, SOLID DOUILLE, SOLIDE	2					
26	93430–10M00	CIRCLIP CLIPS	2					
27	90110–10M02	BOLT, HEXAGON SOCKET HEAD BOULON, TETE HEXAGONALE CREUSE	2					

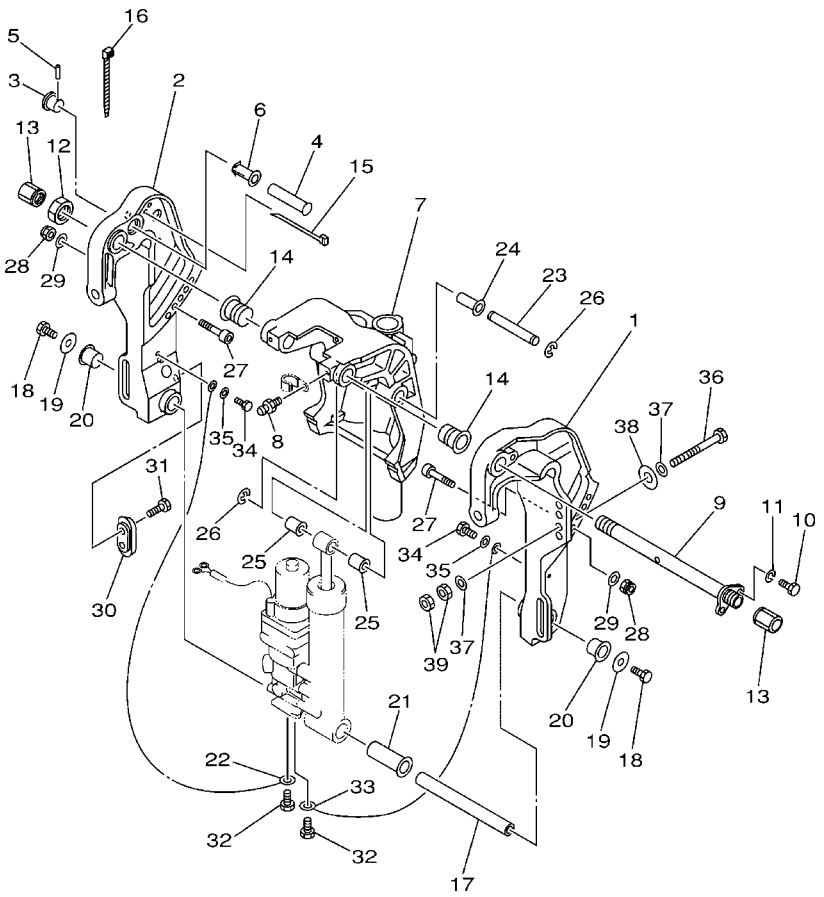

FIG. 16 BRACKET 1 SUPPORT 1

REF. NO.	PART NO. N° PIECES	DESCRIPTION DESCRIPTION	68U4					REMARKS REMARQUES
28	90185–10M13	NUT, SELF-LOCKING ECROU, AUTO-BLOQUANT	2					
29	92995–10600	WASHER RONDELLE	2					
30	65W–45251–00	ANODE ANODE	1					
31	90101–06020	BOLT BOULON	2					
32	97085–06010	BOLT BOULON	2					
33	6U0–82127–00	WIRE, LEAD 2 FIL 2	1					
34	97095–06014	BOLT BOULON	2					
35	92995–06600	WASHER RONDELLE	2					
36	90101–12M65	BOLT BOULON	4					
37	92995–12200	WASHER RONDELLE	8					
38	90201–12426	WASHER, PLATE RONDELLE, PLATE	4					
39	95380–12600	NUT ECROU	8					

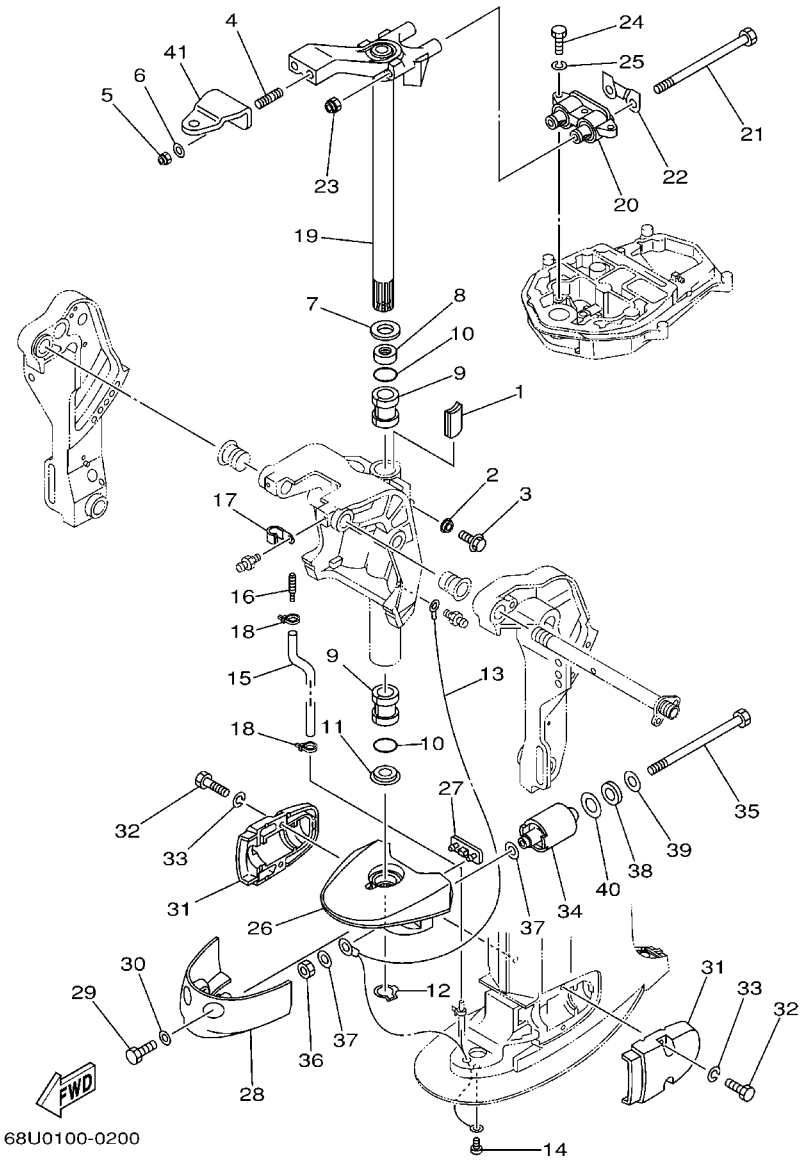

FIG. 17 BRACKET 2 SUPPORT 2

REF. NO.	PART NO. N° PIECES	DESCRIPTION DESCRIPTION	68U4					REMARKS REMARQUES
1	6J8–42528–00	PLATE, FRICTION PLAQUE, FRICTION	1					
2	689–43373–01	SEAL, DAMPER JOINT	1					
3	90105–06M18	BOLT, FLANGE BOULON	1					
4	90116–10M70	BOLT, STUD GOUJON	2					
5	90185–10051	NUT, SELF-LOCKING ECROU, AUTO-BLOQUANT	2					
6	92995–10600	WASHER RONDELLE	2					
7	90201–30M00	WASHER, PLATE RONDELLE, PLATE	1					
8	90386–30M78	BUSH DOUILLE	1					
9	90386–30M77	BUSH DOUILLE	2					
10	93210–29M94	O-RING JOINT TORIQUE	2					
11	90386–30M60	BUSH DOUILLE	1					
12	93410–28M06	CIRCLIP CLIPS	1					
13	67C–82127–10	WIRE, LEAD 2 FIL 2	1					
14	97885–06008	SCREW, PAN HEAD VIS, A ENCOCHE	1					
15	90445–07M53	HOSE (L700) DURITE (L700)	1					
16	6E5–83558–00	END, NIPPLE RACCORD DE NIPPLE	1					
17	90465–08M07	CLAMP BRIDE	1					
18	90465–11M10	CLAMP BRIDE	2					
19	68U–42510–11–4D	STEERING BRACKET ASSY DIRECTION SUPPORT (ENS.)	1					
20	67C–44514–10–4D	MOUNT DAMPER, UPPER SIDE SILENT-BLOC, SUPERIEUR LATERAL	1					
21	90101–08M15	BOLT BOULON	2					
22	66T–44526–30	PLATE PLAQUE	1					
23	90185–08045	NUT, SELF-LOCKING ECROU, AUTO-BLOQUANT	2					
24	97075–08030	BOLT BOULON	3					
25	92995–08100	WASHER RONDELLE	3					
26	67C–44551–10–4D	HOUSING, LOWER MOUNT RUBBER BOITIER, SILENT-BLOC INFERIEUR	1					
27	67C–44575–00	DAMPER, LOWER MOUNT RUBBER SILENT-BLOC, INFERIEUR	1					

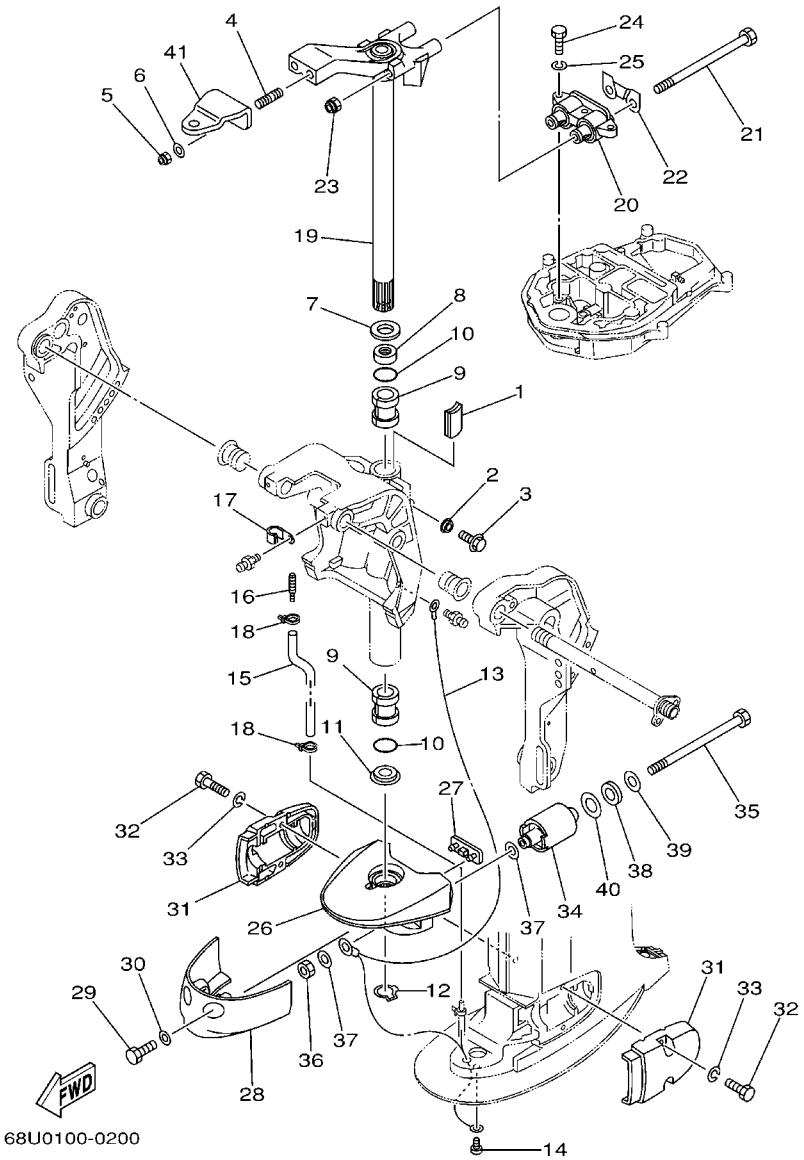

FIG. 17 BRACKET 2 SUPPORT 2

REF. NO.	PART NO. N° PIECES	DESCRIPTION DESCRIPTION	68U4					REMARKS REMARQUES
28	67C–44553–00–4D	COVER, LOWER MOUNT COUVERCLE, SUSPENSION INFERIEU	1					
29	97095–08020	BOLT BOULON	2					
30	92995–08600	WASHER RONDELLE	2					
31	67C–44552–01–4D	HOUSING, LOWER MOUNT RUBBER BOITIER, SILENT-BLOC INFERIEUR	2					
32	97075–08030	BOLT BOULON	4					
33	92995–08100	WASHER RONDELLE	4					
34	68U–44555–11–94	MOUNT DAMPER, LOWER SIDE SILENT-BLOC, INFERIEUR LATERAL	2					L
35	90109–12MA3	BOLT BOULON	2					
36	95380–12700	NUT ECROU	2					
37	90201–12M16	WASHER, PLATE RONDELLE, PLATE	4					
38	90202–21100	WASHER, PLATE RONDELLE, PLATE	2					
39	90201–13M19	WASHER, PLATE RONDELLE, PLATE	2					
40	90201–22M05	WASHER, PLATE RONDELLE, PLATE	2					
41	65W–48511–00	HOOK, STEERING ATTACHE, DIRECTION	1					

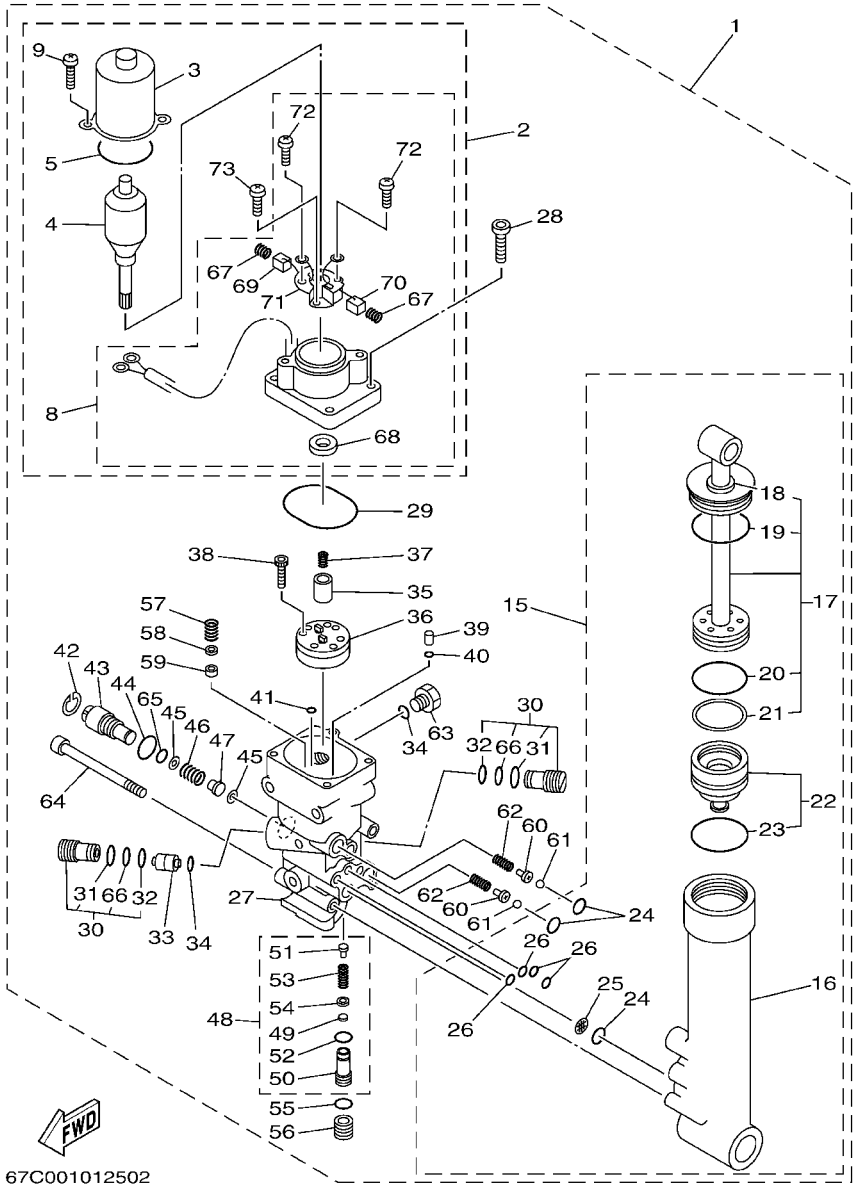

FIG. 18 POWER TRIM & TILT ASSY PUISSANCE PARER ET INCLINER

REF. NO.	PART NO. N° PIECES	DESCRIPTION DESCRIPTION	68U4					REMARKS REMARQUES
1	67C–43800–00–4D	POWER TRIM & TILT ASSY PUISSANCE PARER ET INCLINER (E	1					
2	67C–43880–00	.MOTOR ASSY .MOTEUR (ENS.)	1					
3	65W–43804–00	..STATOR ASSY ..STATOR (ENS.)	1					
4	65W–43805–00	..ARMATURE ASSY ..INDUIT (ENS.)	1					
5	65W–43869–00	..O-RING ..JOINT TORIQUE	1					
8	67C–43881–00	..FRAME, END ..BATI	1					
9	65W–43887–00	..BOLT, THROUGH ..BOULON	2					
15	67C–43840–00	.POWER TILT ASSY .PUISSANCE INCLINER (ENS.)	1					
16	65W–4380K–00	..CYLINDER, TILT SUB ASSY ..CYLINDRE	1					
17	67C–43810–00	..TILT PISTON SUB ASSY ..INCLINER PISTON AUXILIAIRE(E	1					
18	65W–43812–00	...SEAL, DUST ...JOINT	1					
19	65W–43865–00	...O-RING ...JOINT TORIQUE	1					
20	6H1–43861–10	...O-RING ...JOINT TORIQUE	1					
21	65W–43871–00	...RING, BACK UP ...SEGMENT	1					
22	65W–4381B–00	..FREE PISTON SUB ASSY ..PISTON AUXILIAIRE (ENS.)	1					
23	6H1–43861–10	...O-RING ...JOINT TORIQUE	1					
24	93210–11368	..O-RING ..JOINT TORIQUE	3					
25	6H1–43816–00	..FILTER 1 ..FILTRE 1	1					
26	93210–064A5	..O-RING ..JOINT TORIQUE	4					
27	67C–4380L–00	.HOUSING, TRIM & TILT SUB ASSY .CARTER	1					

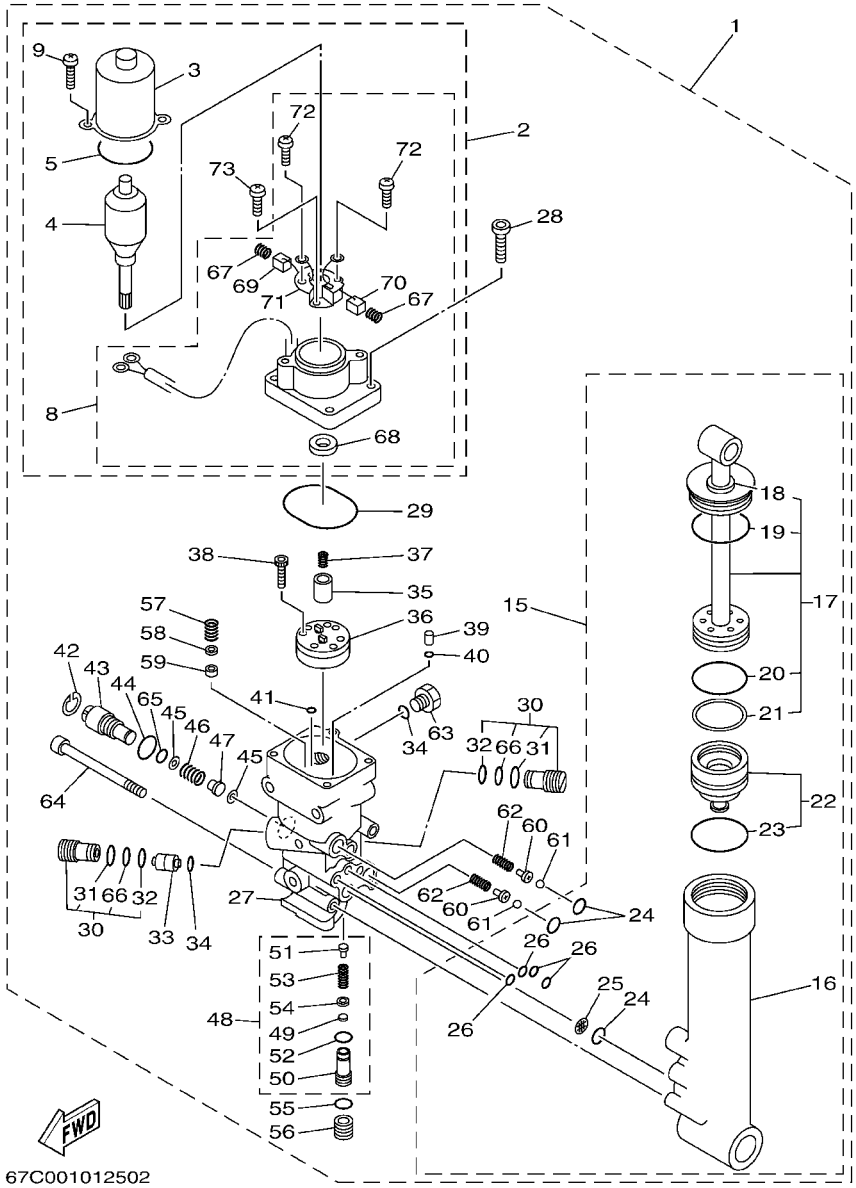

FIG. 18 POWER TRIM & TILT ASSY PUISSANCE PARER ET INCLINER

REF. NO.	PART NO. N° PIECES	DESCRIPTION DESCRIPTION	68U4					REMARKS REMARQUES
28	65W–43888–00	.BOLT, SOCKET .BOULON	4					
29	93210–50768	.O-RING .JOINT TORIQUE	1					
30	6T4–43802–03	.VALVE SUB ASSY .CLAPET AUXILIAIRE (ENS.)	2					
31	6H1–43866–00	..O-RING ..JOINT TORIQUE	1					
32	6H1–43867–00	..O-RING ..JOINT TORIQUE	1					
33	62X–43841–00	.PISTON, SHUTTLE .PISTON	1					
34	93210–09165	.O-RING .JOINT TORIQUE	3					
35	65W–43831–00	.CONNECTOR, SHAFT .RACCORD	1					
36	65W–43830–00	.GEAR PUMP ASSY .POMPE A PIGNON (ENS.)	1					
37	6T4–43853–00	.SPRING, MAIN VALVE .RESSORT	1					
38	91318–04025	.BOLT .BOULON	4					
39	65W–43817–00	.FILTER 2 .FILTRE 2	2					
40	65W–43861–00	.O-RING .JOINT TORIQUE	2					
41	65W–43862–00	.O-RING .JOINT TORIQUE	2					
42	6H1–43875–00	.RING, SNAP .RESSORT	1					
43	6H1–43845–00	.SCREW, MANUAL RELEASE .VIS	1					
44	93210–18397	.O-RING .JOINT TORIQUE	1					
45	6H1–43847–00	.SEAT, MANUAL VALVE .SIEGE	2					
46	65W–43854–00	.SPRING, MANUAL RELEASE .RESSORT	1					
47	65W–4382A–00	.ADAPTOR 1 .ADAPTEUR 1	1					
48	CS2–43803–81	.CASE VALVE COMP. .CARTER VALVE COMP.	1					
49	6H1–4384G–11	..SEAL, RELIEF VALVE ..JOINT	1					
50	CS2–43851–80	..SEAT, RELIEF VALVE ..SIEGE	1					
51	67F–43843–00	..SCREW, VALVE LOCK ..VIS	1					
52	93210–10M74	..O-RING ..JOINT TORIQUE	1					
53	6H1–43856–10	..SPRING, DOWN RELIEF ..RESSORT	1					
54	6H1–43844–10	..PIN, VALVE SUPPORT ..GOUPILLE	1					

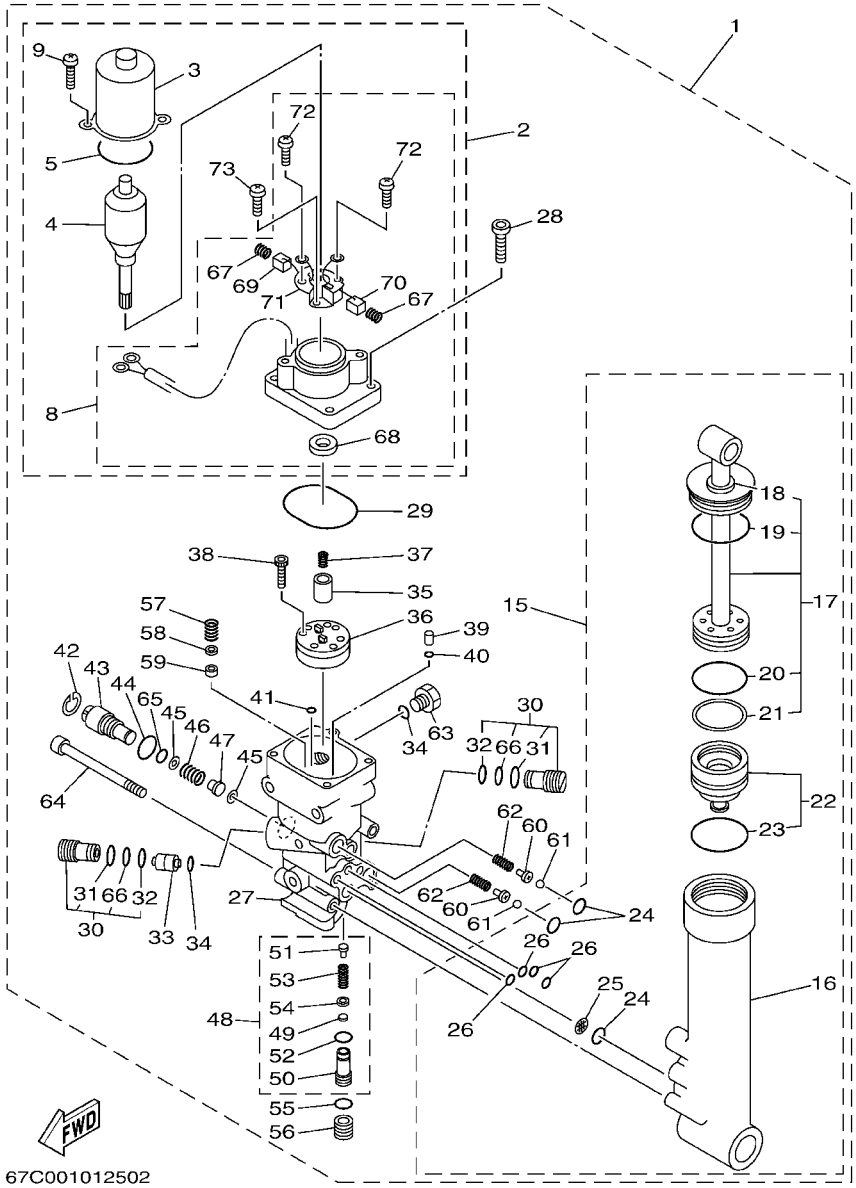

FIG. 18 POWER TRIM & TILT ASSY PUISSANCE PARER ET INCLINER

REF. NO.	PART NO. N° PIECES	DESCRIPTION DESCRIPTION	68U4					REMARKS REMARQUES
55	93210–11073	.O-RING .JOINT TORIQUE	1					
56	65W–43843–00	.SCREW, VALVE LOCK .VIS	1					
57	6H1–43856–10	.SPRING, DOWN RELIEF .RESSORT	1					
58	6H1–43844–10	.PIN, VALVE SUPPORT .GOUPILLE	1					
59	6H1–4384F–10	.SEAL, MAIN VALVE .JOINT	1					
60	65W–4386A–00	.PIN, ABSORBER VALVE .GOUPILLE, SOUPAPE	2					
61	93501–08001	.BALL .BILLE	2					
62	65W–43853–00	.SPRING, MAIN VALVE .RESSORT	2					
63	6H1–43829–00	.PLUG, RESERVOIR .BOUCHON	1					
64	62X–43878–00	.BOLT, SOCKET .BOULON	3					
65	93210–10M74	.O-RING .JOINT TORIQUE	1					
66	93210–10M74	..O-RING ..JOINT TORIQUE	1					
67	65W–4386K–00	...SPRING, BRUSH ...RESSORT, BALAI	2					
68	65W–43882–00	...OIL SEAL ...JOINT SPI	1					
69	65W–43892–00	...BRUSH 2 ...BALAI 2	1					
70	65W–43891–00	...BRUSH 1 ...BALAI 1	1					
71	65W–4380F–00	...PLATE, BRUSH HOLDER ...PLAQUE	1					
72	65W–43879–00	...SCREW, WITH WASHER ...VIS, AVEC RONDELLE	2					
73	65W–4388E–00	..BOLT ..BOULON	1					

FIG. 19 UPPER CASING FOURREAU

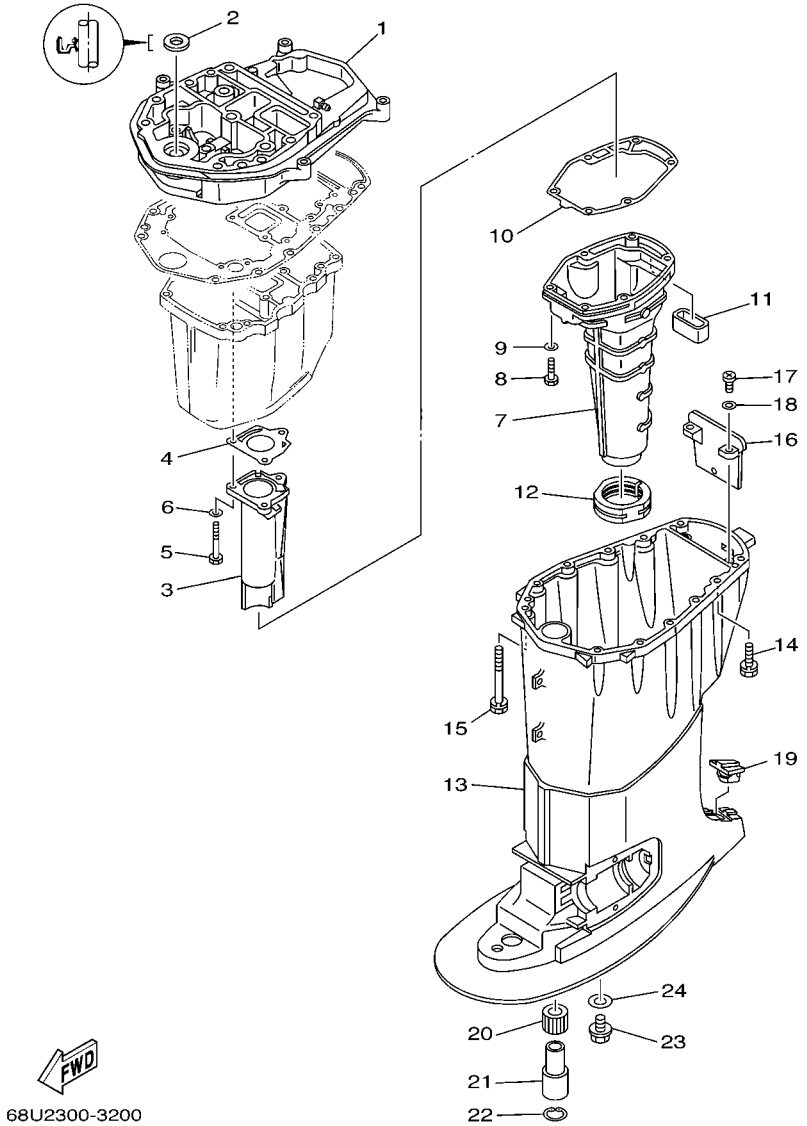

REF. NO.	PART NO. N° PIECES	DESCRIPTION DESCRIPTION	68U4					REMARKS REMARQUES
1	68U–41137–01–94	GUIDE, EXHAUST COLLECTEUR D'ECHAPPEMENT	1					
2	93110–16004	OIL SEAL JOINT D'HUILE	1					
3	68U–41131–00–5B	MANIFOLD, EXT. 1 PIPE D'ECHAPPEMENT	1					
4	67C–41133–00	GASKET, EXHAUST MANIFOLD 1 JOINT, PIPE D'ECHAPPEMENT	1					
5	97075–06050	BOLT BOULON	3					
6	92995–06600	WASHER RONDELLE	3					
7	67C–14711–12–5B	MUFFLER 1 POT D'ECHAPPEMENT 1	1					
8	97075–06025	BOLT BOULON	6					
9	92995–06600	WASHER RONDELLE	6					
10	62Y–41134–01	GASKET, EXHAUST MANIFOLD JOINT, PIPE D'ECHAPPEMENT	1					
11	62Y–45127–00	SEAL JOINT	1					
12	67C–45123–00	GASKET, MUFFLER JOINT, POT DE DETENTE	1					
13	67C–45111–21–4D	CASING, UPPER FOURREAU	1					
14	90119–08M79	BOLT, WITH WASHER BOULON, AVEC RONDELLE	4					
15	90119–08M80	BOLT, WITH WASHER BOULON, AVEC RONDELLE	8					
16	67C–45151–00	COVER, UPPER CASING CAPUCHON, FOURREAU	1					
17	97880–05016	SCREW, PAN HEAD VIS, TETE TRONCONIQUE	2					
18	92990–05600	WASHER, PLATE RONDELLE, PLATE	2					
19	6H3–45155–00	CAP CAPUCHON	1					
20	679–45318–00	BUSHING, DRIVE SHAFT DOUILLE, ARBRE MOTEUR	1					
21	90387–23002	COLLAR COLLERETTE	1					
22	93420–36M01	CIRCLIP CIRCLIP, TYPE S	1					
23	90340–14M06	PLUG, STRAIGHT SCREW PLOT, FILETE DROIT	1					
24	90430–14M09	GASKET JOINT	1					

FIG. 20 OIL PAN — VENTILATEUR D'HUILE

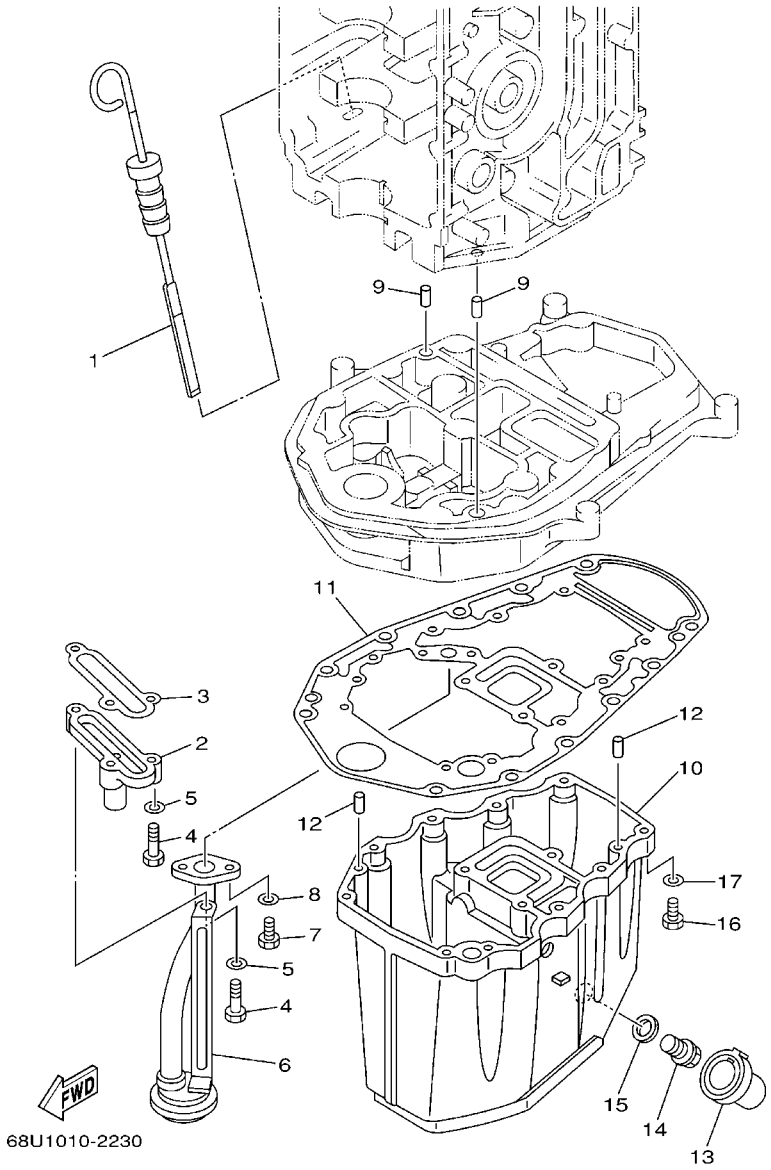

REF. NO.	PART NO. N° PIECES	DESCRIPTION DESCRIPTION	68U4					REMARKS REMARQUES
1	65W–15362–01	PLUG, OIL LEVEL PLOT, NIVEAU D'HUILE	1					
2	62Y–11575–00	RELIEF VALVE ASSY SOUPAPE DE RENTREE D'AIR	1					
3	62Y–13475–00	GASKET JOINT	1					
4	97013–06025	BOLT BOULON	3					
5	92903–06600	WASHER, PLATE RONDELLE, PLATE	3					
6	62Y–13411–00	STRAINER, OIL FILTRE, HUILE	1					
7	97013–06016	BOLT BOULON	2					
8	92903–06600	WASHER, PLATE RONDELLE, PLATE	2					
9	93608–12M05	PIN, DOWEL AXE	2					
10	62Y–15311–02–5B	OIL PAN VENTILATEUR D'HUILE	1					
11	69W–15312–00	GASKET, OIL PAN JOINT DE VENTILATEUR D'HUILE	1					
12	93606–12019	PIN, DOWEL GOUPILLE	4					
13	67C–15316–00	DAMPER, ENGINE MOUNT 1 AMORTISSEUR DE SUPPORT	1					
14	90340–14M06	PLUG, STRAIGHT SCREW PLOT, FILETE DROIT	1					
15	90430–14M09	GASKET JOINT	1					
16	97075–06025	BOLT BOULON	10					
17	92995–06600	WASHER RONDELLE	10					

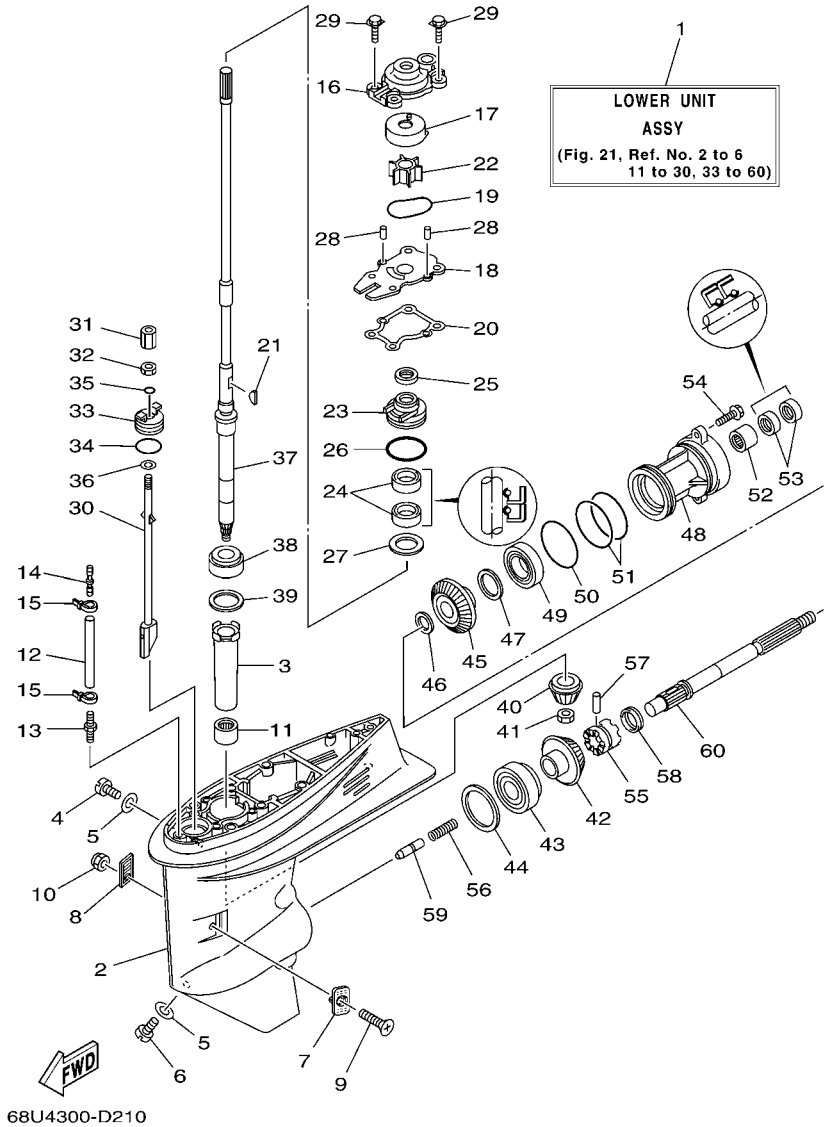

FIG. 21 LOWER CASING & DRIVE 1 BOITIER D'HELICE TRANSMISSION1

REF. NO.	PART NO. N° PIECES	DESCRIPTION DESCRIPTION	68U4					REMARKS REMARQUES
1	68U–45300–11–4D	LOWER UNIT ASSY UNITE INFERIEURE (ENS.)	1					L L
2	67C–45301–00–4D	CASING, LOWER BEQUILLE	1					
3	6H4–45536–00	SLEEVE, DRIVE SHAFT MANCHON, ARBRE MOTEUR	1					
4	90340–08002	PLUG, STRAIGHT SCREW PLOT, FILETE DROIT	1					
5	90430–08020	GASKET JOINT	2					
6	688–45341–10	PLUG, DRAIN BOUCHON DE VIDANGE	1					
7	63D–45214–00	COVER, WATER INLET GRILLE, ENTREE D'EAU	1					
8	63D–45215–00	COVER, WATER INLET GRILLE, ENTREE D'EAU	1					
9	90142–05M06	SCREW, COUNTERSUNK VIS, TETE NOYEE	1					
10	95380–05600	NUT ECROU	1					
11	93315–32224	BEARING ROULEMENT	1					
12	90445–07ME8	HOSE (L80) DURITE (L80)	1					L L
13	6E5–45378–00	NIPPLE, HOSE RACCORD, TUYAU	1					
14	6E5–83558–10	END, NIPPLE RACCORD DE NIPPLE	1					
15	90465–11M10	CLAMP BRIDE	2					
16	66T–44311–00	HOUSING, WATER PUMP CORPS, POMPE A EAU	1					
17	63D–44322–00	INSERT, CARTRIDGE CUVETTE	1					
18	66T–44323–00	OUTER PLATE, CARTRIDGE PLAQUE EXTERIEURE	1					
19	93210–59MG7	O-RING JOINT TORIQUE	1					
20	63D–44316–00	GASKET, WATER PUMP JOINT, POMPE A EAU	1					
21	90280–03M03	KEY, WOODRUFF CLAVETTE, DEMI-LUNE	1					
22	6H4–44352–02	IMPELLER TURBINE	1					
23	63D–44341–00	HOUSING, WATER PUMP CORPS, POMPE A EAU	1					
24	93101–22M60	OIL SEAL JOINT SPY	2					
25	66T–45344–01	COVER, OIL SEAL FLASQE, JOINT D'HUILE	1					
26	93210–48MG8	O-RING JOINT TORIQUE	1					
27	90201–27M00	WASHER, PLATE RONDELLE, PLATE	1					

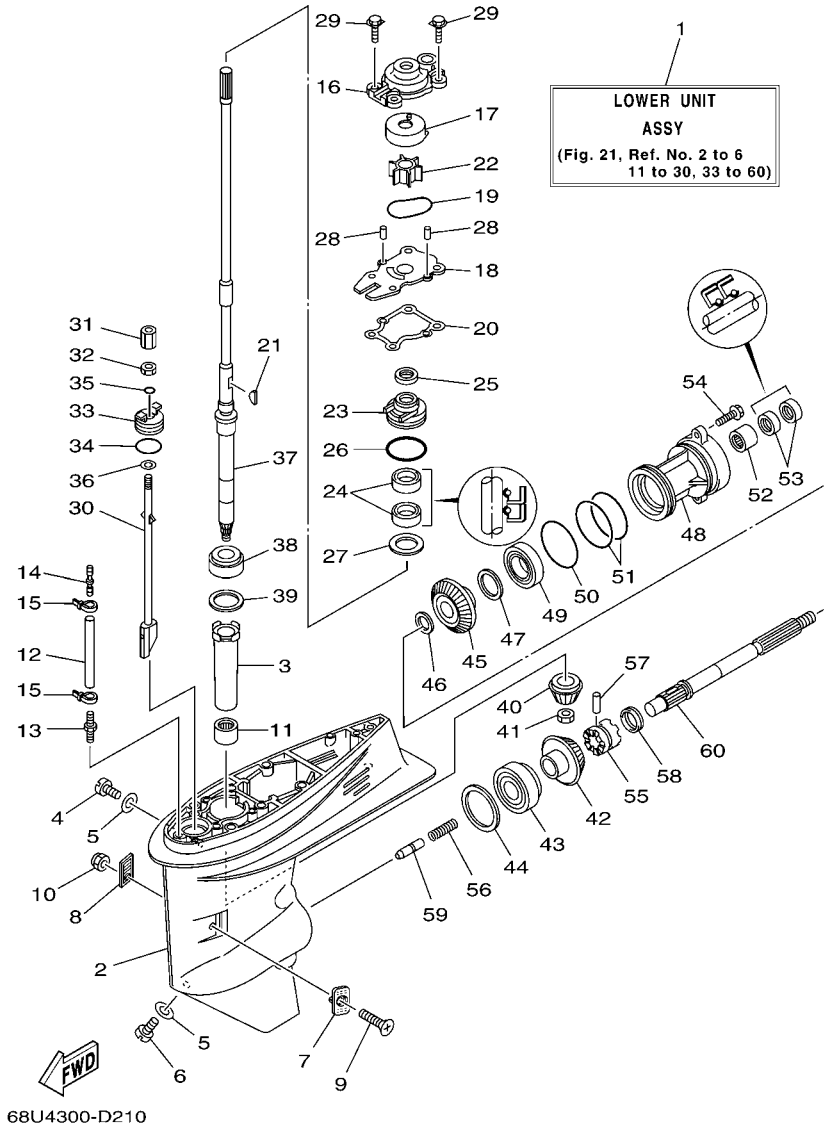

FIG. 21 LOWER CASING & DRIVE 1 BOITIER D'HELICE TRANSMISSION1

REF. NO.	PART NO. N° PIECES	DESCRIPTION DESCRIPTION	68U4					REMARKS REMARQUES
28	93604–08062	PIN, DOWEL CLAVETTE	2					
29	90119–08M15	BOLT, WITH WASHER BOULON, AVEC RONDELLE	4					
30	67C–44150–10	SHIFT CAM ASSY CAME D'INVERSION	1					L L
31	67C–44146–00	CONNECTOR, SHIFT ROD CONNECTEUR, TIGE D'INVERSION	1					
32	95380–06700	NUT ECROU	1					
33	68U–45321–00	PLATE PLAQUETTE	1					
34	93210–33MG4	O-RING JOINT TORIQUE	1					
35	93210–06ME6	O-RING JOINT TORIQUE	1					
36	92990–06600	WASHER, PLATE RONDELLE, PLATE	1					
37	68U–45501–11	DRIVE SHAFT COMP. ARBRE MOTEUR COMP.	1					L L
38	93332–00001	BEARING ROULEMENT	1					
39	663–45587–01	SHIM (T:0.10MM) CALE (T:0.10MM)	1					UR UR
	663–45587–10	SHIM (T:0.12MM) CALE (T:0.12MM)	1					UR UR
	663–45587–20	SHIM (T:0.15MM) CALE (T:0.15MM)	1					UR UR
	663–45587–30	SHIM (T:0.18MM) CALE (T:0.18MM)	1					UR UR
	663–45587–40	SHIM (T:0.30MM) CALE (T:0.30MM)	1					UR UR
	663–45587–50	SHIM (T:0.40MM) CALE (T:0.40MM)	1					UR UR
	663–45587–60	SHIM (T:0.50MM) CALE (T:0.50MM)	1					UR UR
40	68U–45551–00	PINION (12T) PIGNON D'ATTAQUE (12D)	1					
41	90179–10M38	NUT ECROU	1					
42	68U–45560–00	GEAR 1 (29T) PIGNON 1 (29T)	1					
43	93332–00003	BEARING ROULEMENT	1					
44	663–45567–01	SHIM (T:0.10MM) CALE (T:0.10MM)	1					UR UR
	663–45567–10	SHIM (T:0.12MM) CALE (T:0.12MM)	1					UR UR
	663–45567–20	SHIM (T:0.15MM) CALE (T:0.15MM)	1					UR UR
	663–45567–30	SHIM (T:0.18MM) CALE (T:0.18MM)	1					UR UR
	663–45567–40	SHIM (T:0.30MM) CALE (T:0.30MM)	1					UR UR

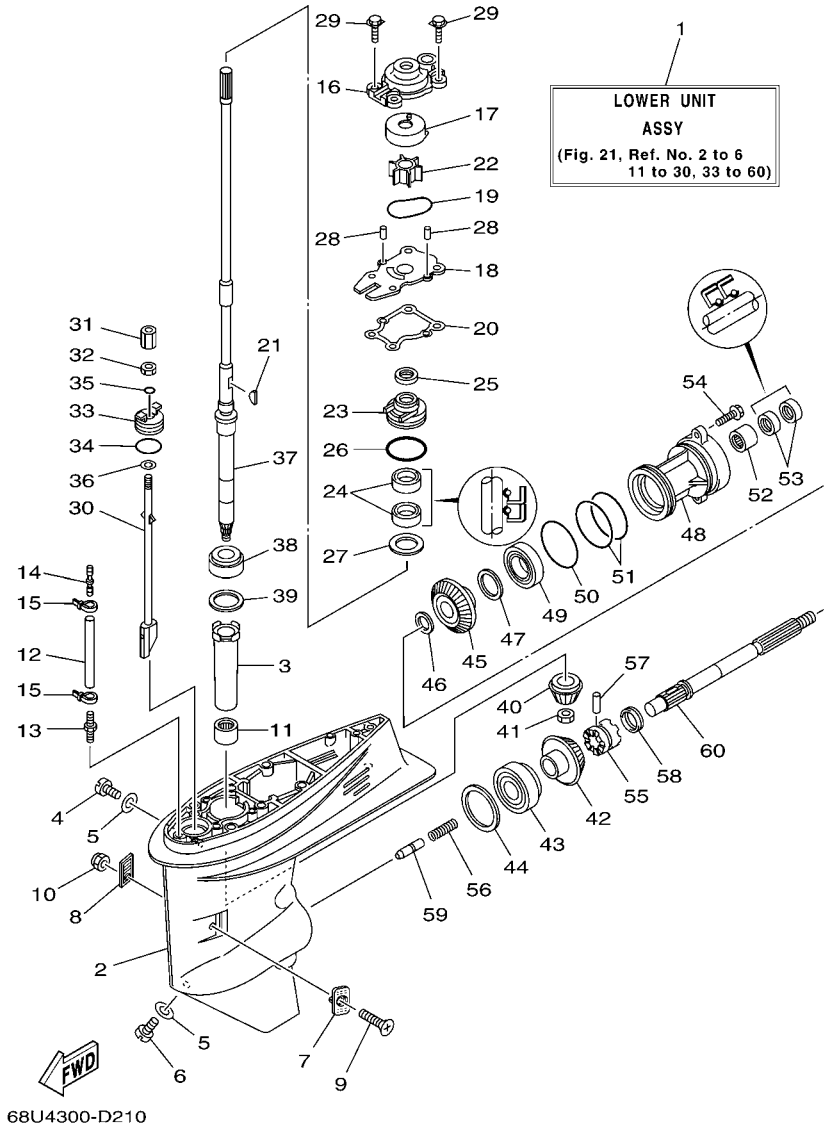

FIG. 21 LOWER CASING & DRIVE 1 BOITIER D'HELICE TRANSMISSION1

REF. NO.	PART NO. N° PIECES	DESCRIPTION DESCRIPTION	68U4					REMARKS REMARQUES
44	663–45567–50	SHIM (T:0.40MM) CALE (T:0.40MM)	1					UR UR
	663–45567–60	SHIM (T:0.50MM) CALE (T:0.50MM)	1					UR UR
45	68U–45571–00	GEAR 2 (29T) PIGNON 2 (29T)	1					
46	90201–22429	WASHER, PLATE RONDELLE, PLATE	1					
47	63D–45577–00	SHIM (T:0.10MM) CALE (T:0.10MM)	1					UR UR
	63D–45577–10	SHIM (T:0.12MM) CALE (T:0.12MM)	1					UR UR
	63D–45577–20	SHIM (T:0.15MM) CALE (T:0.15MM)	1					UR UR
	63D–45577–30	SHIM (T:0.18MM) CALE (T:0.18MM)	1					UR UR
	63D–45577–40	SHIM (T:0.30MM) CALE (T:0.30MM)	1					UR UR
	63D–45577–50	SHIM (T:0.40MM) CALE (T:0.40MM)	1					UR UR
	63D–45577–60	SHIM (T:0.50MM) CALE (T:0.50MM)	1					UR UR
48	63D–45361–02–4D	CAP, LOWER CASING COUVERCLE, BOITIER D'HELICE	1					
49	93306–001U1	BEARING ROULEMENT	1					
50	93210–69MG6	O-RING JOINT TORIQUE	1					
51	93210–74MG5	O-RING JOINT TORIQUE	2					
52	93317–22204	BEARING ROULEMENT	1					
53	93101–22M00	OIL SEAL JOINT SPY	2					
54	90105–08M61	BOLT, FLANGE BOULON	2					
55	68U–45631–00	CLUTCH, DOG CRABOT	1					
56	90501–15M01	SPRING, COMPRESSION RESSORT, COMPRESSION	1					
57	90250–06023	PIN, STRAIGHT GOUPILLE, DROITE	1					
58	67C–45633–00	RING, CROSS PIN JONC, GOUPILLE CRABOT	1					
59	66T–45635–00	PLUNGER, SHIFT POUSSOIR D'EMBRAYAGE	1					
60	66T–45611–00	SHAFT, PROPELLER ARBRE, HELICE	1					

FIG. 22 LOWER CASING & DRIVE 2 BOITIER D'HELICE TRANSMISSION2

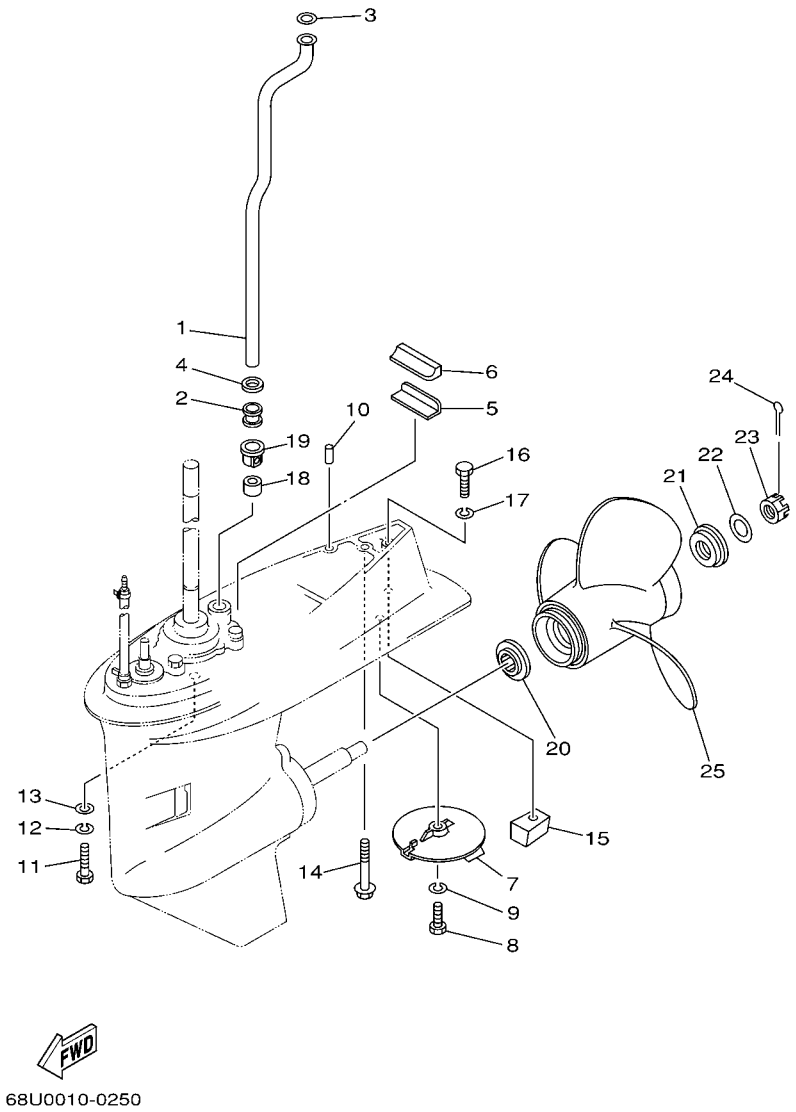

REF. NO.	PART NO. N° PIECES	DESCRIPTION DESCRIPTION	68U4					REMARKS REMARQUES
1	62Y–44361–00	TUBE, WATER TUBE D'EAU	1					L L
2	663–44367–00	DAMPER, WATER SEAL JOINT TUBE D'EAU	1					
3	90202–12060	WASHER, PLATE RONDELLE, PLATE	1					
4	90430–12072	GASKET JOINT	1					
5	663–45376–00–94	GUIDE, SEAL DAMPER BUTEE, JOINT CAOUTCHOUC	1					
6	63D–45375–00	DAMPER, SEAL BOURRELET, CAOUTCHOUC	1					
7	67C–45371–00	TAB-TRIM ANODE DERIVE	1					
8	97095–08025	BOLT BOULON	1					
9	92995–08100	WASHER RONDELLE	1					
10	93606–12019	PIN, DOWEL GOUPILLE	2					
11	97075–10040	BOLT BOULON	4					L L
12	92995–10100	WASHER RONDELLE	4					L L
13	92995–10600	WASHER RONDELLE	4					L L
14	90119–08M44	BOLT, WITH WASHER BOULON, AVEC RONDELLE	1					L L
15	67C–45251–00	ANODE ANODE	1					
16	97095–08035	BOLT BOULON	1					
17	92995–08100	WASHER RONDELLE	1					
18	663–44366–00	DAMPER, WATER SEAL JOINT, TUBE D'EAU	1					
19	63D–44312–00	COVER, WATER PUMP HOUSING COUVERCLE	1					
20	663–45987–02	SPACER ENTRETOISE	1					
21	68U–45997–00	SPACER ENTRETOISE	1					
22	92990–16200	WASHER, PLAIN RONDELLE, PLATE	1					
23	90171–16011	NUT, CASTLE ECROU, CRENELE	1					
24	91490–30025	PIN, COTTER GOUPILLE	1					
25	68U–45941–00–EL	PROPELLER (3X12-1/4"X9"-G) HELICE (3X12-1/4"X9"-G)	1					

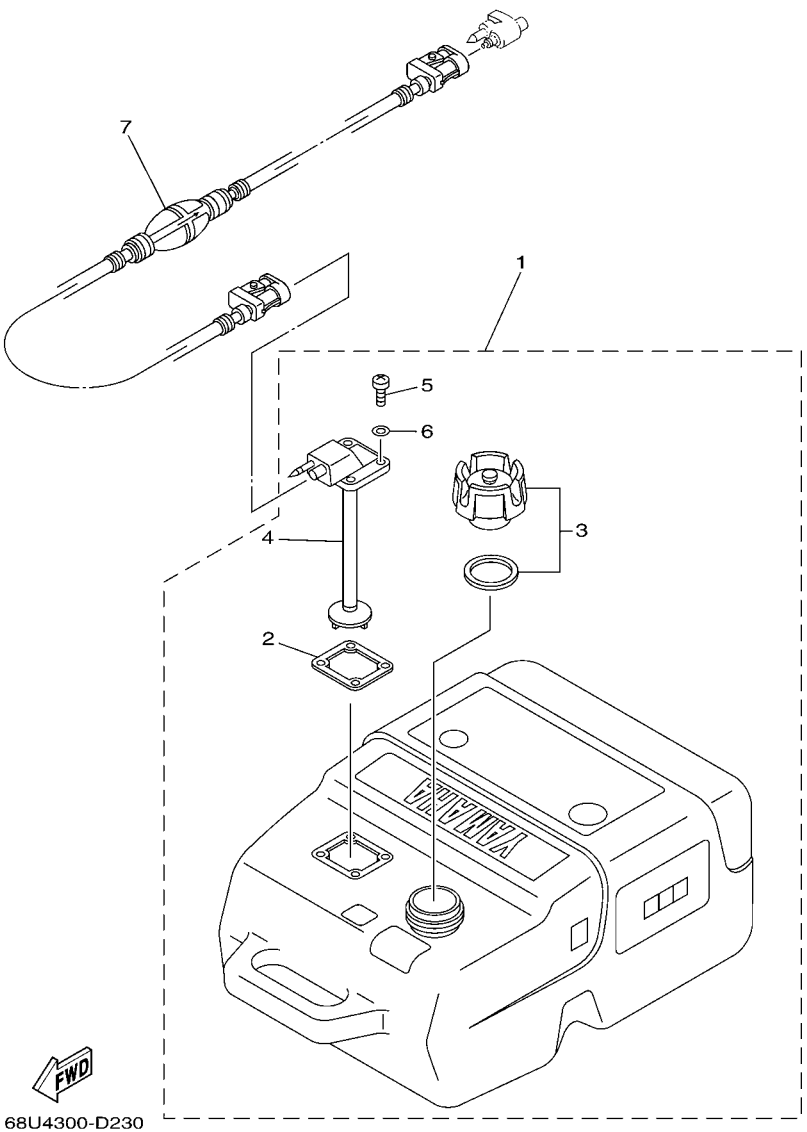

FIG. 23 FUEL TANK — RESERVOIR A CARBURANT

REF. NO.	PART NO. N° PIECES	DESCRIPTION DESCRIPTION	68U4					REMARKS REMARQUES
1	6YK–24201–02	FUEL TANK ASSY (25L) RESERVOIR A ESSENCE (ENS.) 25L	1					AP AP
2	6YL–24268–01	.GASKET, FUEL METER .JOINT, JAUGE A CARBURANT	1					
3	6YK–24610–01	.CAP ASSY .BOUCHON	1					
4	6YK–24260–01	.FUEL METER ASSY .INDICATEUR DE CARBURANT	1					
5	90157–05M16	.SCREW, PAN HEAD .VIS, TETE TRONCONIQUE	4					
6	6YL–24329–00	.SEAL .JOINT	4					
7	6YL–24306–53	FUEL PIPE COMP. 1 DURITE A ESSENCE 1	1					AP AP

FIG. 24 STEERING GUIDE FIXATION DE DIRECTION

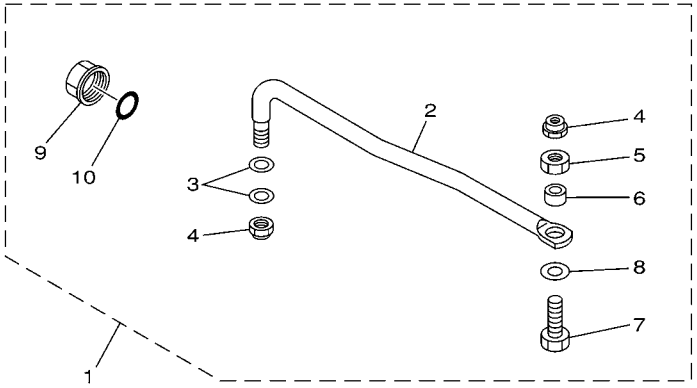

65W0010-8210

REF. NO.	PART NO. N° PIECES	DESCRIPTION DESCRIPTION	68U4					REMARKS REMARQUES
1	65W–61350–00	STEERING GUIDE ATTACHMENT KIT FIXATIONS DE DIRECTION	1					AP AP
2	65W–61351–00	.ROD, STEERING LINK .RENVOI DE DIRECTION	1					
3	90201–10M20	.WASHER, PLATE .RONDELLE, PLATE	2					
4	90185–09M01	.NUT, SELF-LOCKING .ECROU, AUTO-BLOQUANT	2					
5	90170–09M03	.NUT .ECROU	1					
6	90387–10M42	.COLLAR .COLLERETTE	1					
7	90101–09M01	.BOLT .BOULON	1					
8	90201–10M63	.WASHER, PLATE .RONDELLE, PLATE	1					
9	6E5–43145–01	.CAP, CLAMP BRACKET .CAPUCHON, PRESSE	1					
10	93210–16275	.O-RING .JOINT TORIQUE	1					

FIG. 25 REMOTE CONTROL BOX BOITIER DE COMMANDE A DISTANCE

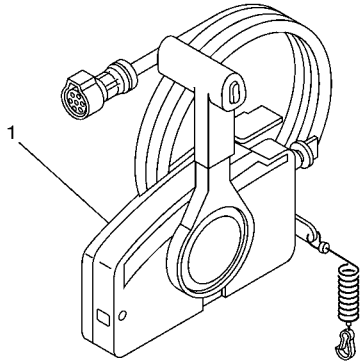

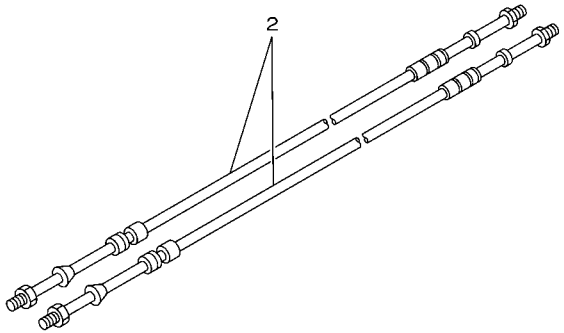

67M0100-8280

REF. NO.	PART NO. N° PIECES	DESCRIPTION DESCRIPTION	68U4					REMARKS REMARQUES
1	703–48205–A5	REMOTE CONTROL ASSY (10P) BOITIER DE COMMANDE A DISTANCE	1					AP WITH PT/T SW. AP WITH PT/T SW.
2	701–48310–90	CABLE, REMOTE CONTROL L=11F CABLE, COMMANDE A DISTANCE:11F	2					UR UR
	701–48320–00	CABLE, REMOTE CONTROL L=12F CABLE, COMMANDE A DISTANCE:12F	2					UR UR
	701–48320–20	CABLE, REMOTE CONTROL L=13F CABLE, COMMANDE A DISTANCE:13F	2					UR UR
	701–48320–50	CABLE, REMOTE CONTROL L=15F CABLE, COMMANDE A DISTANCE:15F	2					UR UR

FIG. 26 REMOTE CONTROL ASSY BOITIER DE COMMANDE A DISTANCE

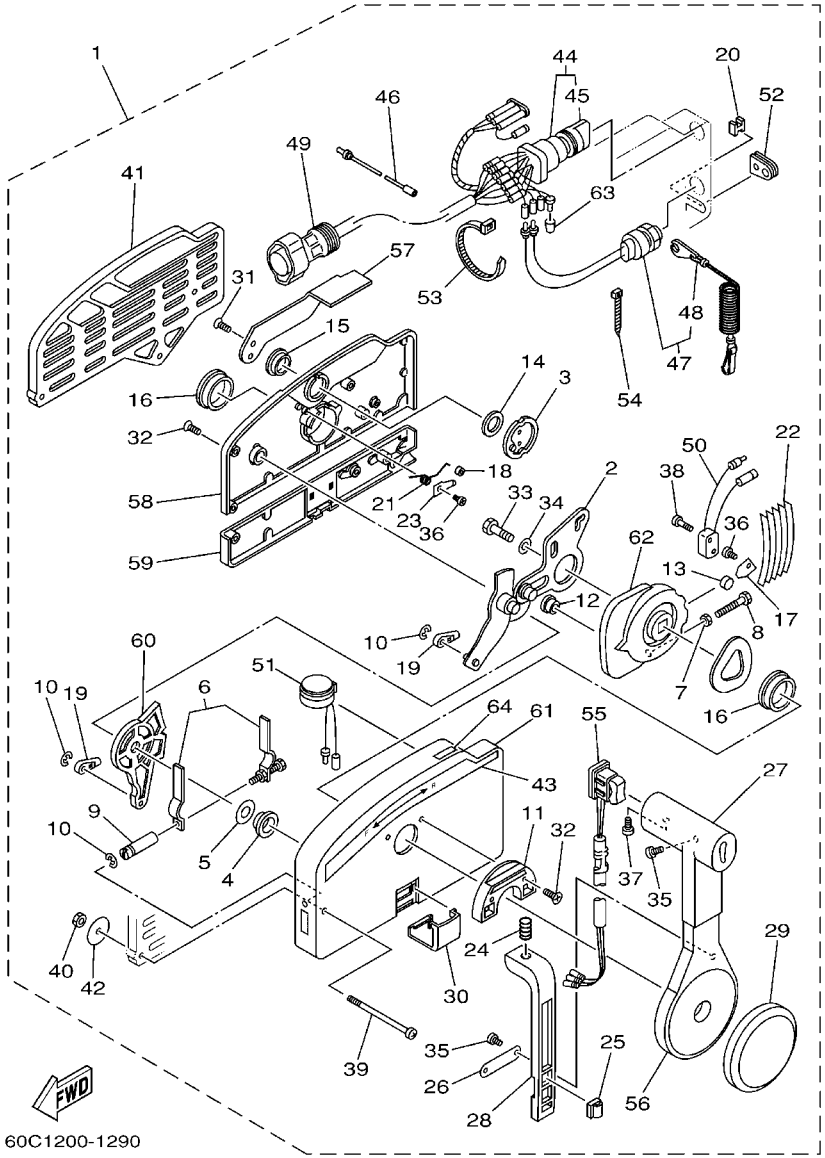

REF. NO.	PART NO. N° PIECES	DESCRIPTION DESCRIPTION	68U4					REMARKS REMARQUES
1	703–48205–A5	REMOTE CONTROL ASSY (10P) BOITIER DE COMMANDE A DISTANCE	1					AP WITH PT/T SW. AP WITH PT/T SW.
2	703–48261–01	.ARM, THROTTLE .BRAS, ACCELERATION	1					
3	703–48153–00	.SHAFT, FREE ACCEL. .AXE	1					
4	703–48235–00	.BUSHING .COUSSINET	1					
5	703–48268–00	.SPACER .ENTRETOISE	1					
6	703–48264–00	.FRICTION, THROTTLE .FRICTION, ACCELERATION	1					
7	95380–05600	.NUT .ECROU	1					
8	97380–05025	.BOLT .BOULON, HEXAGONAL	1					
9	703–48265–00	.SHAFT, FRICTION .AXE, COPILOTE	1					
10	93430–06024	.CIRCLIP .CLIPS	3					
11	703–48245–00	.PLATE, LOCK .PLAQUE, VERROU	1					
12	703–48252–00	.ROLLER, CAM .POULIE	1					
13	701–48248–00	.ROLLER, FREE ACCEL. .POULIE	1					
14	703–48198–00	.WASHER, WAVE .RONDELLE, ELASTIQUE ONDULEE	1					
15	703–48243–00	.BUSHING .COUSSINET	1					
16	703–48236–00	.BUSHING 1 .POULIE	2					
17	703–48189–00	.RETAINER .FLASQUE	1					
18	703–48234–00	.ROLLER, DETENT .POULIE	1					
19	703–48345–01	.CABLE END, REMOTE CONTROL 2 .CHAPE CABLE	2					
20	703–48358–00	.ANCHOR, CABLE .COLLIER	1					
21	703–48244–00	.SPRING, FREE ACCEL. .RESSORT	1					
22	703–48238–00	.SPRING, DETENT .RESSORT	5					
23	703–48246–00	.SPACER .ENTRETOISE	1					
24	703–48227–00	.SPRING, NEUTRAL LOCK .RESSORT	1					
25	703–82594–00	.CLAMP .BRIDE	1					WITH PT/T SW. WITH PT/T SW.
26	703–48226–00	.PLATE, STOPPER .PLAQUETTE	1					
27	703–48222–00	.GRIP, CONTROL LEVER .POIGNEE, COMMANDE LEVIER	1					SINGLE SINGLE

FIG. 26 REMOTE CONTROL ASSY BOITIER DE COMMANDE A DISTANCE

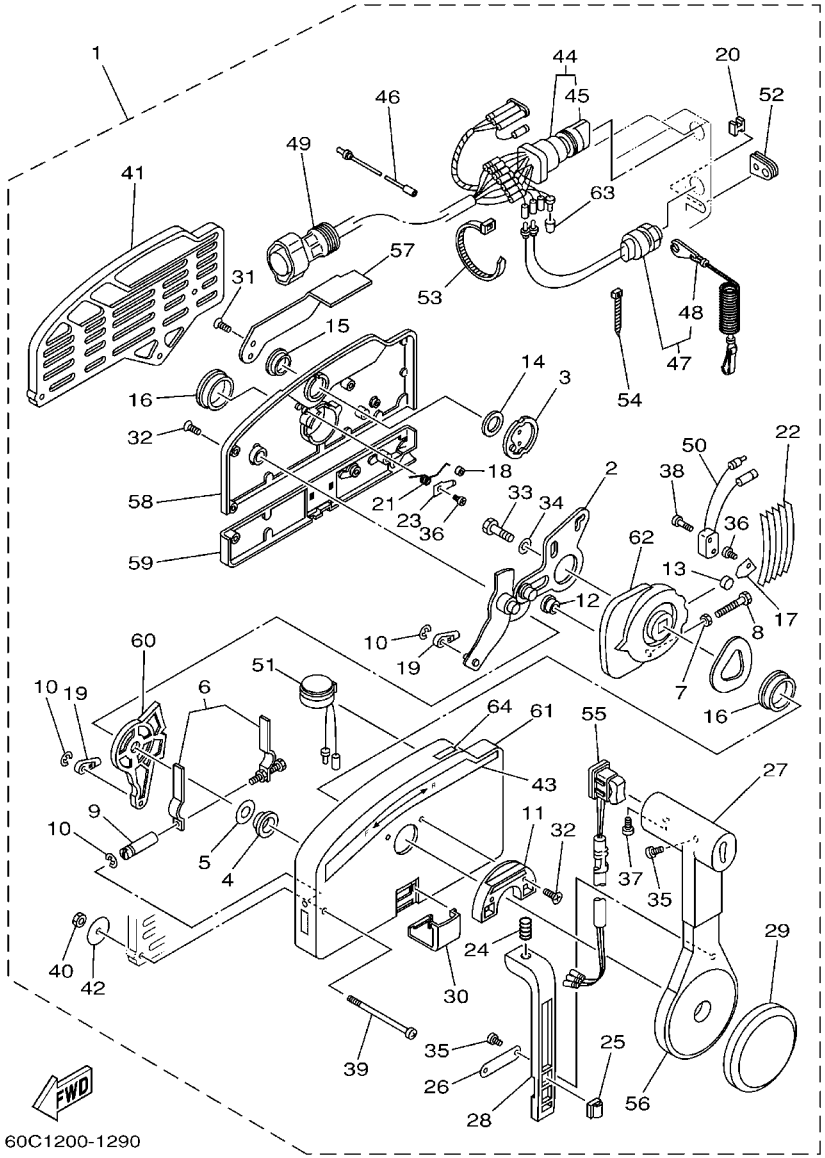

60C1200-1290

REF. NO.	PART NO. N° PIECES	DESCRIPTION DESCRIPTION	68U4					REMARKS REMARQUES
28	703–48223–00	.LOCK, NEUTRAL .VERROU, NEUTRAL	1					
29	703–48225–00	.COVER .COUVERCLE	1					
30	703–48219–00	.COVER, LEAD .COUVERCLE	1					
31	703–48281–00	.SCREW .VIS	2					
32	703–48282–00	.SCREW .VIS	7					
33	97380–08030	.BOLT .BOULON, HEXAGONAL	1					
34	92990–08600	.WASHER, PLATE .RONDELLE, PLATE	1					
35	98580–04010	.SCREW, PAN HEAD .VIS	3					
36	98580–04006	.SCREW, PAN HEAD .VIS	2					
37	98580–05010	.SCREW, PAN HEAD .VIS	1					
38	98580–03015	.SCREW, PAN HEAD .VIS	2					
39	703–48291–10	.SCREW (M6) .VIS (M6)	3					
40	95380–06600	.NUT, HEXAGON .ECROU	3					
41	703–48293–10	.SPACER, REMOTE CONTROL .ENTRETOISE	1					SINGLE SINGLE
42	701–48287–00	.WASHER .RONDELLE	3					
43	703–48215–00	.GRAPHIC .ADHESIF	1					
44	703–82510–12	.MAIN SWITCH ASSY .CONTACTEUR A CLEF COMPLET	1					PRIME START PRIME START
45	676–82577–00	..CAP, KEY ..CABOCHON	1					
46	703–82531–00	.WIRE, LEAD .FIL	1					
47	688–82575–01	.ENGINE STOP SWITCH ASSY .COUPE CIRCUIT CPLT	1					
48	682–82556–00	..STOPPER ..PLAQUETTE	1					
49	688–8258A–20	.EXTENSION, WIRE HARNESS .EXTENSION, FAISCEAU DE FILS	1					L:5M (10P) L:5M (10P)
50	703–82540–00	.NEUTRAL SWITCH ASSY .CONTACTEUR DE POINT-MORT	1					
51	703–83383–B0	.BUZZER .RONFLEUR	1					
52	703–48284–00	.GROMMET .PASSE-FIL	1					
53	703–82591–00	.BAND .COLLIER	1					
54	703–82592–00	.BAND .COLLIER	1					

FIG. 26 REMOTE CONTROL ASSY BOITIER DE COMMANDE A DISTANCE

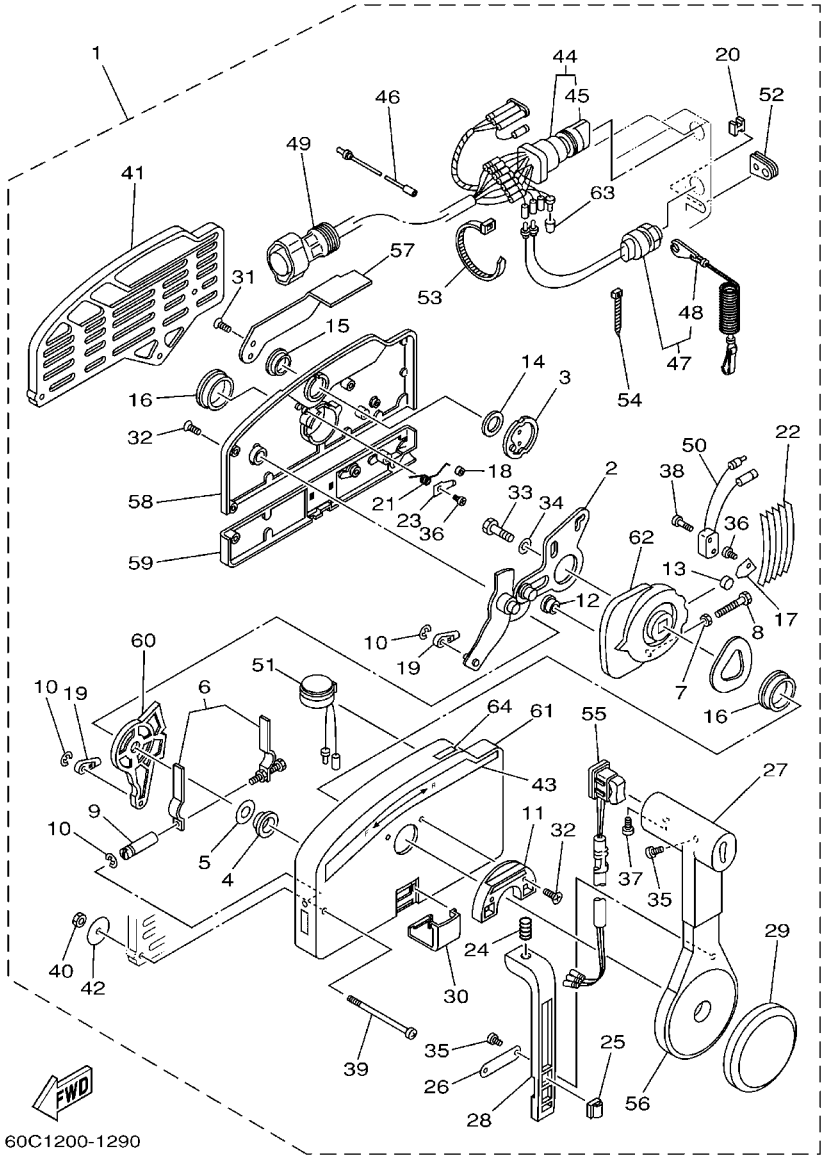

REF. NO.	PART NO. N° PIECES	DESCRIPTION DESCRIPTION	68U4					REMARKS REMARQUES
55	703–82563–02	.TRIM & TILT SWITCH ASSY .INCLINER ET PARER COMMUTATEUR	1					WITH PT/T SW. WITH PT/T SW.
56	703–48221–00	.LEVER, CONTROL .LEVIER, COMMANDE	1					
57	703–48152–00	.KNOB, FREE ACCEL. .BOUTON	1					
58	703–48212–00	.BACK PLATE 1 .PLAQUETTE 1	1					
59	703–48213–00	.BACK PLATE 2 .PLAQUETTE 2	1					
60	703–48271–00	.ARM, SHIFT .BRAS	1					
61	703–48211–01	.HOUSING,1 .CORPS	1					
62	703–48232–00	.GEAR .PIGNON	1					
63	703–82542–00	.CAP .COUVERCLE	1					
64	703–48218–00	.GRAPHIC .ADHESIF	1					

FIG. 27 REPAIR KIT 1 — KITS DE REPARATION 1

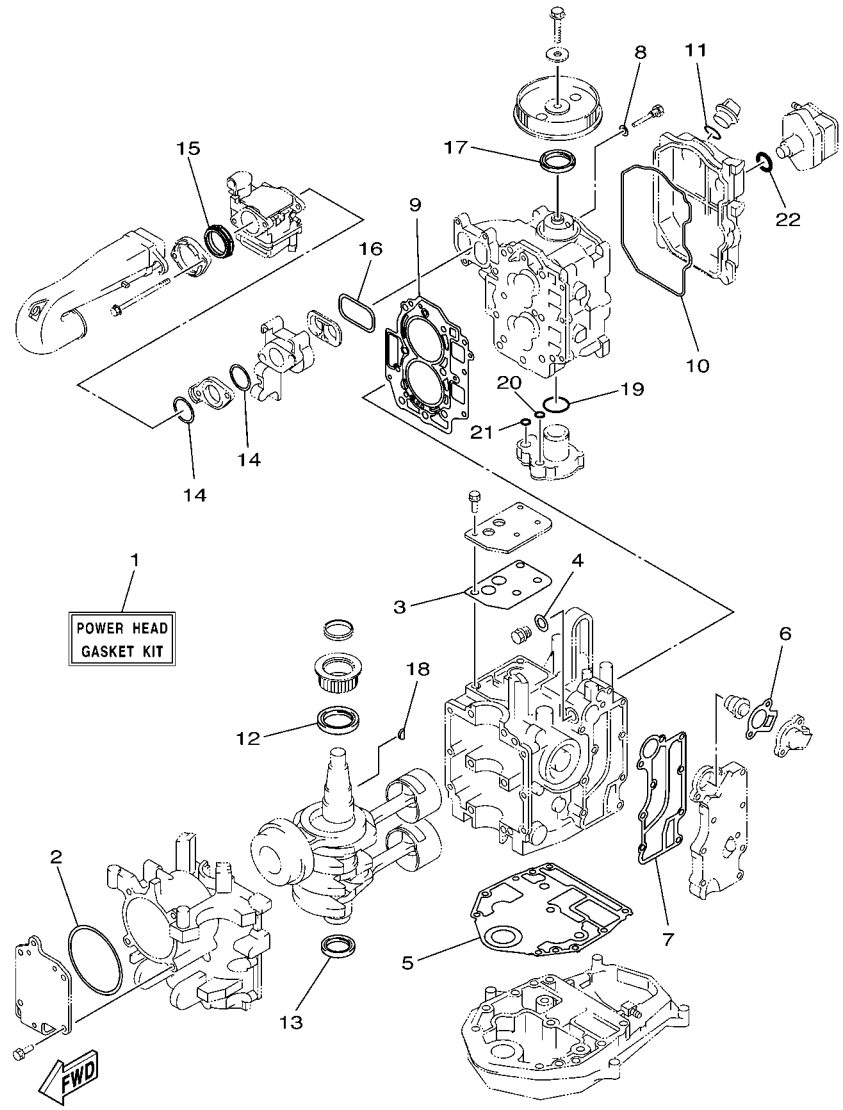

REF. NO.	PART NO. N° PIECES	DESCRIPTION DESCRIPTION	68U4					REMARKS REMARQUES
1	6D5–W0001–00	POWER HEAD GASKET KIT POCHETTE DE JINTS TETE MOTRICE	1					
2	65W–15663–00	.SEAL .JOINT	1					
3	65W–11169–01	.GASKET, BREATHER COVER .JOINT, COUVERCLE DE RENIFLARD	1					
4	90430–14115	.GASKET .JOINT	1					
5	65W–11351–10	.GASKET, CYLINDER .JOINT, D'EMBASE	1					
6	62Y–12414–00	.GASKET, COVER .JOINT, COUVERCLE	1					
7	65W–41114–00	.GASKET, EXHAUST OUTER COVER .JOINT, COUVERCLE D'ECHAPPEMEN	1					
8	90430–06014	.GASKET .JOINT	1					
9	65W–11181–30	.GASKET, CYLINDER HEAD 1 .JOINT, DE CULASSE 1	1					
10	65W–11356–00	.SEAL, CYLINDER 2 .JOINT, SPY CYLINDRE	1					
11	93210–24M79	.O-RING .JOINT TORIQUE	1					
12	93102–43004	.OIL SEAL .JOINT SPY	1					
13	93101–35002	.OIL SEAL .JOINT SPY	1					
14	65W–14198–00	.GASKET .JOINT	2					
15	65W–14457–10	.SEAL .JOINT	1					
16	65W–13645–00	.GASKET, MANIFOLD 1 .JOINT, TUBULURE 1	1					
17	93102–37M40	.OIL SEAL .JOINT SPY	1					
18	90280–04M06	.KEY, WOODRUFF .CLAVETTE, DEMI-LUNE	1					
19	93210–33MH2	.O-RING .JOINT TORIQUE	1					
20	93210–12MG9	.O-RING .JOINT TORIQUE	1					
21	93210–14515	.O-RING .JOINT TORIQUE	1					
22	93210–24M79	.O-RING .JOINT TORIQUE	1					

FIG. 28 REPAIR KIT 2 — KITS DE REPARATION 2

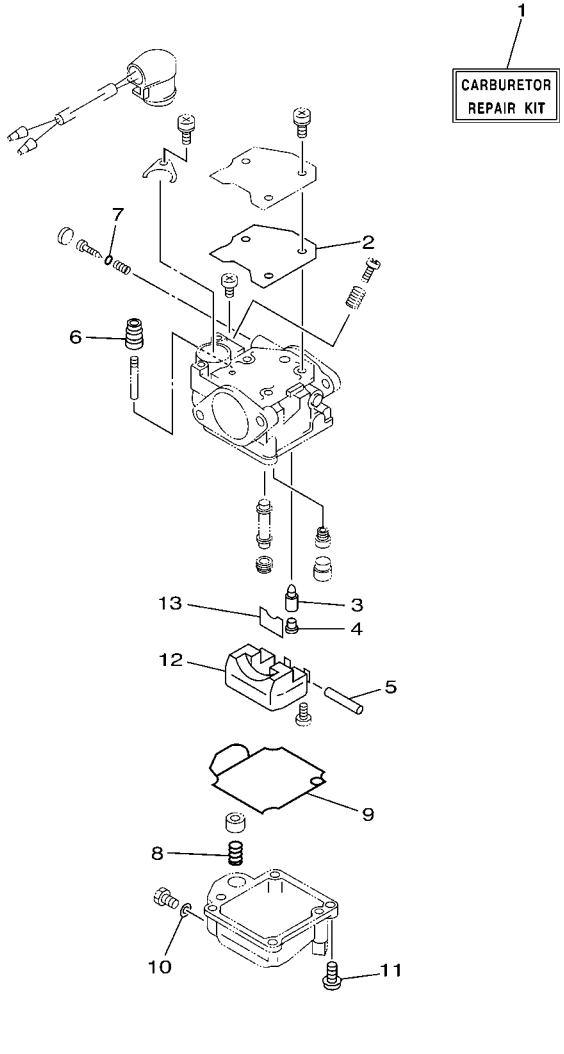

REF. NO.	PART NO. N° PIECES	DESCRIPTION DESCRIPTION	68U4					REMARKS REMARQUES
1	65W–W0093–01	CARBURETOR REPAIR KIT KIT DE REPARATION CARBURATEUR	1					
2	65W–14126–00	.GASKET .JOINT	1					
3	6G1–14546–01	.VALVE, NEEDLE .POINTEAU	1					
4	676–14186–00	.PIN, FLOAT .AXE, FLOTTEUR	1					
5	6H4–14548–00	.PIN, FLOAT ARM .AXE, BRAS DE FLOTTEUR	1					
6	65W–14373–00	.COVER, PLUNGER CAP .COUVERCLE DE PLONGEUR	1					
7	67C–14397–00	.O-RING .JOINT TORIQUE	1					
8	65W–14335–00	.SPRING, PLUNGER .RESSORT, PLONGEUR	1					
9	65W–14384–00	.GASKET, FLOAT CHAMBER .JOINT, CUVE DE FLOTTEUR	1					
10	65W–14398–00	.GASKET .JOINT	1					
11	97980–04114	.SCREW, WITH WASHER .VIS, AVEC RONDELLE	4					
12	63V–14985–00	.FLOAT .FLOTTEUR	1					
13	663–14159–00	.CLIP .JONC	1					

FIG. 29 REPAIR KIT 3 — KITS DE PEPARATION 3

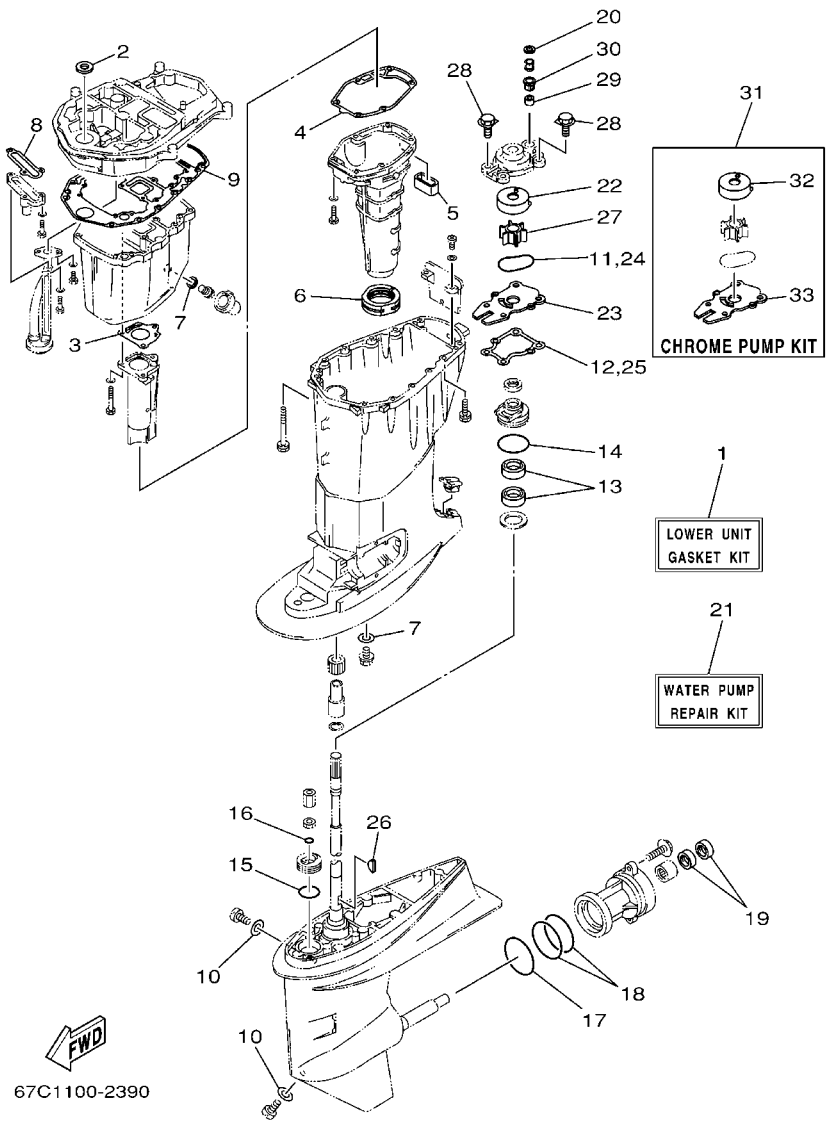

REF. NO.	PART NO. N° PIECES	DESCRIPTION DESCRIPTION	68U4					REMARKS REMARQUES
1	67C–W0001–22	LOWER UNIT GASKET KIT POCHETTE DE JOINTS EMBASE	1					
2	93110–16004	.OIL SEAL .JOINT D'HUILE	1					
3	67C–41133–00	.GASKET, EXHAUST MANIFOLD 1 .JOINT, PIPE D'ECHAPPEMENT	1					
4	62Y–41134–01	.GASKET, EXHAUST MANIFOLD .JOINT, PIPE D'ECHAPPEMENT	1					
5	62Y–45127–00	.SEAL .JOINT	1					
6	67C–45123–00	.GASKET, MUFFLER .JOINT, POT DE DETENTE	1					
7	90430–14M09	.GASKET .JOINT	2					
8	62Y–13475–00	.GASKET .JOINT	1					
9	69W–15312–00	.GASKET, OIL PAN .JOINT DE VENTILATEUR D'HUILE	1					
10	90430–08020	.GASKET .JOINT	2					
11	93210–59MG7	.O-RING .JOINT TORIQUE	1					
12	63D–44316–00	.GASKET, WATER PUMP .JOINT, POMPE A EAU	1					
13	93101–22M60	.OIL SEAL .JOINT SPY	2					
14	93210–48MG8	.O-RING .JOINT TORIQUE	1					
15	93210–33MG4	.O-RING .JOINT TORIQUE	1					
16	93210–06ME6	.O-RING .JOINT TORIQUE	1					
17	93210–69MG6	.O-RING .JOINT TORIQUE	1					
18	93210–74MG5	.O-RING .JOINT TORIQUE	2					
19	93101–22M00	.OIL SEAL .JOINT SPY	2					
20	90430–12072	.GASKET .JOINT	1					
21	66T–W0078–00	WATER PUMP REPAIR KIT KIT DE REPARATION DE LA POMPE	1					
22	63D–44322–00	.INSERT, CARTRIDGE .CUVETTE	1					
23	66T–44323–00	.OUTER PLATE, CARTRIDGE .PLAQUE EXTERIEURE	1					
24	93210–59MG7	.O-RING .JOINT TORIQUE	1					
25	63D–44316–00	.GASKET, WATER PUMP .JOINT, POMPE A EAU	1					
26	90280–03M03	.KEY, WOODRUFF .CLAVETTE, DEMI-LUNE	1					
27	6H4–44352–02	.IMPELLER .TURBINE	1					

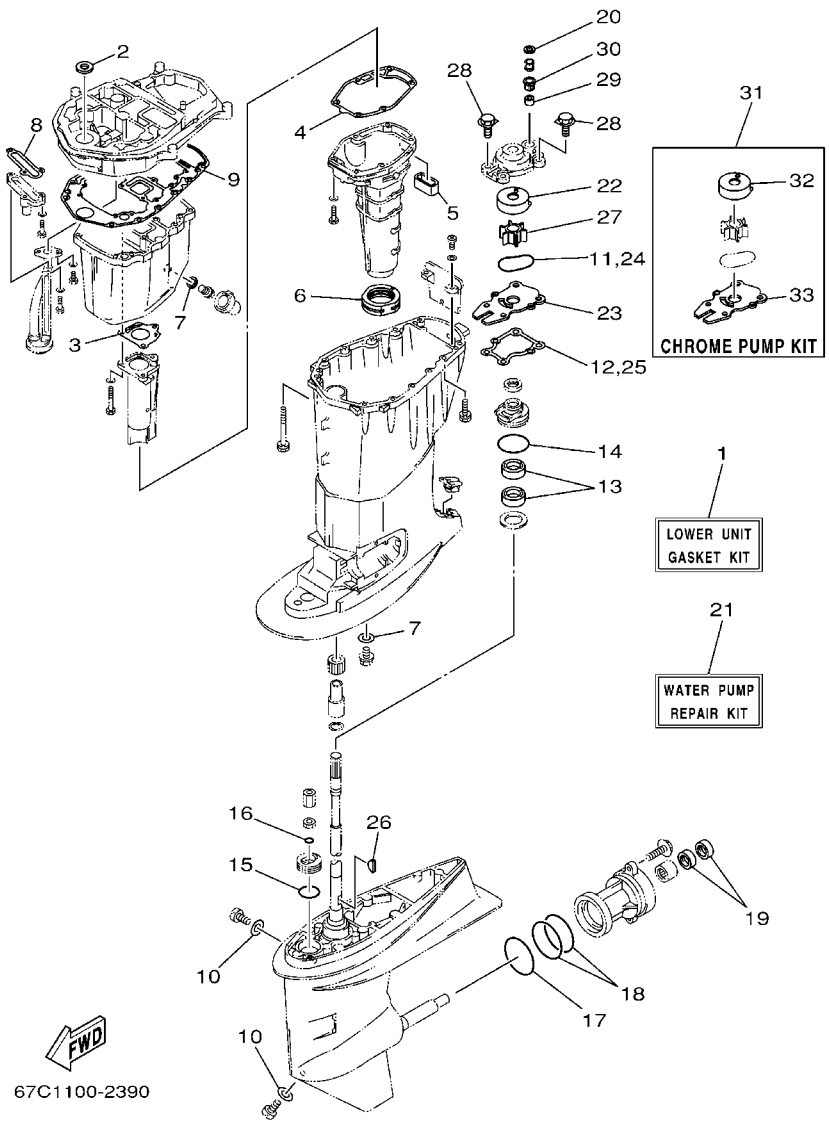

FIG. 29 REPAIR KIT 3 — KITS DE PEPARATION 3

REF. NO.	PART NO. N° PIECES	DESCRIPTION DESCRIPTION	68U4					REMARKS REMARQUES
28	90119–08M15	.BOLT, WITH WASHER .BOULON, AVEC RONDELLE	4					
29	663–44366–00	.DAMPER, WATER SEAL .JOINT, TUBE D'EAU	1					
30	63D–44312–00	.COVER, WATER PUMP HOUSING .COUVERCLE	1					
31	66T–W0078–0A	CHROME PUMP KIT KIT DE POMPE A EAU CHROMEE	1					
32	63D–44322–40	.INSERT, CARTRIDGE .CUVETTE	1					
33	66T–44323–40	.OUTER PLATE, CARTRIDGE .PLAQUE EXTERIEURE	1					

NUMERICAL INDEX
INDEX NUMERIQUE

PART NO. N° PIECES	REF. NO.
65W–11111–20–1S	4 – 2
65W–11119–00	2 – 12
62Y–11133–30	4 – 3
65W–11168–01	2 – 9
65W–11169–01	2 – 10
	27 – 3
65W–11181–30	4 – 15
	27 – 9
65W–11191–00–1S	4 – 19
62Y–11325–00	4 – 5
66M–11327–00–94	4 – 7
66M–11328–00	4 – 6
65W–11351–10	2 – 16
	27 – 5
65W–11356–00	4 – 20
	27 – 10
62Y–11372–01	2 – 18
65W–11411–01	3 – 3
62Y–11416–00	3 – 4
62Y–11416–10	3 – 4
62Y–11416–20	3 – 4
65W–11476–00	8 – 9
65W–11536–10	8 – 8
65W–11537–01	8 – 3
65W–11545–00	10 – 4
62Y–11575–00	20 – 2
68U–11603–00	3 – 9
68U–11604–00	3 – 9
68U–11605–00	3 – 9
65W–11631–00–96	3 – 8
62Y–11633–00	3 – 10
65W–11635–00	3 – 8
65W–11636–00	3 – 8
65W–11642–11	3 – 13
62Y–11650–20	3 – 5
62Y–11654–00	3 – 6
62Y–11656–00	3 – 7
62Y–11656–10	3 – 7
62Y–11656–20	3 – 7
65W–11665–00	3 – 12
67C–12111–00	5 – 1
51Y–12114–00	5 – 4
62Y–12116–00	5 – 3
30X–12117–00	5 – 5
30X–12118–00	5 – 6
51Y–12119–00	5 – 7
62Y–12121–00	5 – 2
62Y–12138–60	4 – 25

PART NO. N° PIECES	REF. NO.
65W–12146–00	5 – 8
65W–12151–00	5 – 9
62Y–12158–00	5 – 11
62Y–12159–00	5 – 10
65W–12171–01	8 – 2
62Y–12216–00	5 – 13
65W–12228–00	2 – 8
62Y–12231–00	5 – 14
62Y–12238–00	5 – 12
6G8–12411–03	2 – 27
6H3–12413–00–1S	2 – 28
62Y–12414–00	2 – 29
	27 – 6
66M–12535–00	4 – 8
69W–12535–00	14 – 36
68T–12572–00	14 – 35
6R3–12580–00	14 – 41
62Y–13131–01	9 – 5
65W–13286–00	2 – 30
65W–13300–00	8 – 11
65W–13323–00	6 – 3
62Y–13411–00	20 – 6
67F–13434–02	1 – 16
68U–13437–60	10 – 27
5GH–13440–00	2 – 32
6G8–13444–51	14 – 43
62Y–13475–00	20 – 3
	29 – 8
65W–13640–00	6 – 2
65W–13645–00	6 – 9
	27 – 16
65W–14126–00	7 – 4
	28 – 2
663–14159–00	7 – 15
	28 – 13
676–14186–00	7 – 14
	28 – 4
65W–14198–00	6 – 6
	27 – 14
65W–14262–00	6 – 7
65W–14271–00	6 – 5
65W–14335–00	7 – 20
	28 – 8
65W–14346–00	7 – 28
65W–14371–00	7 – 21
65W–14373–00	7 – 18
	28 – 6
65W–14379–00	7 – 19

PART NO. N° PIECES	REF. NO.
65W–14380–00	7 – 27
65W–14384–00	7 – 22
	28 – 9
67C–14397–00	7 – 30
	28 – 7
65W–14398–00	7 – 24
	28 – 10
65W–14440–00	6 – 1
65W–14457–10	6 – 8
	27 – 15
65W–14496–00	6 – 4
65W–14497–01	15 – 29
63V–14523–00	7 – 9
6G1–14546–01	7 – 13
	28 – 3
6H4–14548–00	7 – 17
	28 – 5
67C–14555–00	7 – 31
67C–14567–00	7 – 32
65W–14572–00	7 – 3
67C–14711–12–5B	19 – 7
65W–14901–01	7 – 1
67C–14923–00	7 – 29
65W–14943–29	7 – 11
65W–14947–00	7 – 10
676–14948–07	7 – 6
679–14966–00	7 – 7
65W–14980–00	7 – 23
63V–14985–00	7 – 12
	28 – 12
65W–14992–00	7 – 25
65W–15100–11–1S	2 – 2
65W–15121–01	2 – 6
62Y–15311–02–5B	20 – 10
69W–15312–00	20 – 11
	29 – 9
67C–15316–00	20 – 13
65W–15362–01	20 – 1
6G8–15363–00	4 – 23
65W–15370–00	6 – 17
65W–15370–10	6 – 18
65W–15397–10	6 – 13
65W–15663–00	2 – 7
	27 – 2
65W–15758–10	10 – 21
65W–15762–00	10 – 22
65W–15771–00	10 – 23
6YK–24201–02	23 – 1

PART NO. N° PIECES	REF. NO.
6YK–24260–01	23 – 4
6YL–24268–01	23 – 2
6G1–24304–02	9 – 31
6YL–24306–53	23 – 7
6YL–24329–00	23 – 6
62Y–24374–01	9 – 11
65W–24377–00	6 – 12
688–24378–00	2 – 22
62Y–24410–03	9 – 1
62Y–24411–02	9 – 3
62Y–24415–00	9 – 2
62Y–24423–00	9 – 4
62Y–24444–01	9 – 7
62Y–24452–00	9 – 9
62Y–24454–00	9 – 6
62Y–24471–00	9 – 8
65W–24474–10	9 – 13
65W–24481–00	9 – 24
61N–24521–00	9 – 18
61N–24560–00	9 – 16
61N–24563–00	9 – 17
6D5–24566–00	9 – 22
6YK–24610–01	23 – 3
65W–26326–10	14 – 19
62Y–28100–00	9 – 39
6A1–28176–00	14 – 44
65W–28199–7A–D0	9 – 40
65W–28199–7A–E0	9 – 40
65W–28199–7A–F0	9 – 40
65W–28199–7A–G0	9 – 40
65W–28199–7A–H0	9 – 40
65W–28199–7A–S0	9 – 40
65W–28199–8B–K0	9 – 41
65W–28199–8B–L0	9 – 41
65W–28199–8B–M0	9 – 41
65W–28199–8B–N0	9 – 41
65W–28199–8B–P0	9 – 41
65W–28199–8B–R0	9 – 41
61H–2819R–31	9 – 38
65W–41113–10–1S	2 – 17
65W–41114–00	2 – 19
	27 – 7
68U–41131–00–5B	19 – 3
67C–41133–00	19 – 4
	29 – 3
62Y–41134–01	19 – 10
	29 – 4
68U–41137–01–94	19 – 1

PART NO. N° PIECES	REF. NO.
65W–41211–00	15 – 28
661–41262–02	15 – 26
65W–41283–00	15 – 25
68U–41638–00	15 – 24
6F5–41662–00	15 – 5
68U–42510–11–4D	17 – 19
6J8–42528–00	17 – 1
624–42542–00	12 – 26
68U–42610–12–4D	1 – 1
65W–42613–00	1 – 2
6D5–42615–00	1 – 8
65W–42651–01	1 – 4
65W–42652–01	1 – 6
65W–42677–00	1 – 15
68U–42678–10	1 – 9
65W–42681–20	1 – 11
65W–42682–20	1 – 12
68U–42710–12–4D	14 – 1
62Y–42716–00	14 – 6
65W–42717–00	14 – 5
6G1–42725–00	10 – 15
	14 – 22
65W–42725–21	14 – 9
65W–42726–10	14 – 23
6H1–42726–21	14 – 21
62Y–42727–00	14 – 10
68U–42727–00	14 – 20
65W–42738–01–4D	14 – 7
68U–42741–00–4D	14 – 25
6D5–42815–00–4D	14 – 11
6D5–42816–00	14 – 16
67C–43111–10–4D	16 – 1
67C–43112–10–4D	16 – 2
6K9–43131–01	16 – 9
6D5–43144–00	14 – 33
6E5–43145–01	24 – 9
6G5–43145–01	16 – 13
65W–43191–00	16 – 4
65W–43192–00	16 – 3
68U–43311–10–4D	16 – 7
689–43373–01	17 – 2
67C–43800–00–4D	18 – 1
6T4–43802–03	18 – 30
CS2–43803–81	18 – 48
65W–43804–00	18 – 3
65W–43805–00	18 – 4
65W–4380F–00	18 – 12
65W–4380K–00	18 – 16

PART NO. N° PIECES	REF. NO.
67C–4380L–00	18 – 27
65W–43810–00	18 – 17
65W–43812–00	18 – 18
6H1–43816–00	18 – 25
65W–43817–00	18 – 39
65W–4381B–00	18 – 22
6H1–43829–00	18 – 63
65W–4382A–00	18 – 47
65W–43830–00	18 – 36
65W–43831–00	18 – 35
65W–43840–00	18 – 15
62X–43841–00	18 – 33
65W–43843–00	18 – 56
67F–43843–00	18 – 51
6H1–43844–10	18 – 54
6H1–43845–00	18 – 43
6H1–43847–00	18 – 45
6H1–4384F–10	18 – 59
6H1–4384G–11	18 – 49
CS2–43851–80	18 – 50
65W–43853–00	18 – 62
6T4–43853–00	18 – 37
65W–43854–00	18 – 46
6H1–43856–10	18 – 53
65W–43861–00	18 – 40
6H1–43861–10	18 – 20
65W–43862–00	18 – 41
65W–43865–00	18 – 19
6H1–43866–00	18 – 31
6H1–43867–00	18 – 32
65W–43869–00	18 – 5
65W–4386A–00	18 – 60
65W–4386K–00	18 – 6
65W–43871–00	18 – 21
6H1–43875–00	18 – 42
62X–43878–00	18 – 64
65W–43879–00	18 – 13
67C–43880–00	18 – 2
67C–43881–00	18 – 8
65W–43882–00	18 – 7
65W–43887–00	18 – 9
65W–43888–00	18 – 28
65W–4388E–00	18 – 14
65W–43891–00	18 – 11
65W–43892–00	18 – 10
65W–44116–00	15 – 7
65W–44121–00	15 – 2
65W–44122–00	15 – 3

NUMERICAL INDEX
INDEX NUMERIQUE

PART NO. N° PIECES	REF. NO.
68U–44125–00	15 – 13
65W–44142–00	15 – 11
68U–44143–10	15 – 9
67C–44146–00	21 – 31
67C–44150–10	21 – 30
65W–44192–00	15 – 18
66T–44311–00	21 – 16
63D–44312–00	22 – 19
	29 – 30
63D–44316–00	21 – 20
	29 – 12
63D–44322–00	21 – 17
	29 – 22
63D–44322–40	29 – 32
66T–44323–00	21 – 18
	29 – 23
66T–44323–40	29 – 33
63D–44341–00	21 – 23
6H4–44352–02	21 – 22
	29 – 27
62Y–44361–00	22 – 1
663–44366–00	22 – 18
	29 – 29
663–44367–00	22 – 2
6H3–44391–01	14 – 18
67C–44514–10–4D	17 – 20
66T–44526–30	17 – 22
67C–44551–10–4D	17 – 26
67C–44552–01–4D	17 – 31
67C–44553–00–4D	17 – 28
68U–44555–11–94	17 – 34
67C–44575–00	17 – 27
67C–45111–21–4D	19 – 13
67C–45123–00	19 – 12
	29 – 6
62Y–45127–00	19 – 11
	29 – 5
67C–45151–00	19 – 16
6H3–45155–00	19 – 19
63D–45214–00	21 – 7
63D–45215–00	21 – 8
65W–45251–00	16 – 30
67C–45251–00	22 – 15
68U–45300–11–4D	21 – 1
67C–45301–00–4D	21 – 2
679–45318–00	19 – 20
68U–45321–00	21 – 33
688–45341–10	21 – 6

PART NO. N° PIECES	REF. NO.
66T–45344–01	21 – 25
63D–45361–02–4D	21 – 48
67C–45371–00	22 – 7
63D–45375–00	22 – 6
663–45376–00–94	22 – 5
6E5–45378–00	21 – 13
68U–45501–11	21 – 37
6H4–45536–00	21 – 3
68U–45551–00	21 – 40
68U–45560–00	21 – 42
663–45567–01	21 – 44
663–45567–10	21 – 44
663–45567–20	21 – 44
663–45567–30	21 – 44
663–45567–40	21 – 44
663–45567–50	21 – 44
663–45567–60	21 – 44
68U–45571–00	21 – 45
63D–45577–00	21 – 47
63D–45577–10	21 – 47
63D–45577–20	21 – 47
63D–45577–30	21 – 47
63D–45577–40	21 – 47
63D–45577–50	21 – 47
63D–45577–60	21 – 47
663–45587–01	21 – 39
663–45587–10	21 – 39
663–45587–20	21 – 39
663–45587–30	21 – 39
663–45587–40	21 – 39
663–45587–50	21 – 39
663–45587–60	21 – 39
66T–45611–00	21 – 60
68U–45631–00	21 – 55
67C–45633–00	21 – 58
66T–45635–00	21 – 59
68U–45941–00–EL	22 – 25
663–45987–02	22 – 20
68U–45997–00	22 – 21
65W–46241–00	8 – 7
703–48152–00	26 – 57
703–48153–00	26 – 3
703–48189–00	26 – 17
703–48198–00	26 – 14
703–48205–A5	25 – 1
	26 – 1
703–48211–01	26 – 61
703–48212–00	26 – 58

PART NO. N° PIECES	REF. NO.
703–48213–00	26 – 59
703–48215–00	26 – 43
703–48218–00	26 – 64
703–48219–00	26 – 30
703–48221–00	26 – 56
703–48222–00	26 – 27
703–48223–00	26 – 28
703–48225–00	26 – 29
703–48226–00	26 – 26
703–48227–00	26 – 24
703–48232–00	26 – 62
703–48234–00	26 – 18
703–48235–00	26 – 4
703–48236–00	26 – 16
703–48238–00	26 – 22
703–48243–00	26 – 15
703–48244–00	26 – 21
703–48245–00	26 – 11
703–48246–00	26 – 23
701–48248–00	26 – 13
703–48252–00	26 – 12
703–48261–01	26 – 2
703–48264–00	26 – 6
703–48265–00	26 – 9
703–48268–00	26 – 5
703–48271–00	26 – 60
703–48281–00	26 – 31
703–48282–00	26 – 32
703–48284–00	26 – 52
701–48287–00	26 – 42
703–48291–10	26 – 39
703–48293–10	26 – 41
701–48310–90	25 – 2
701–48320–00	25 – 2
701–48320–20	25 – 2
701–48320–50	25 – 2
663–48344–00	15 – 22
703–48345–01	26 – 19
703–48358–00	26 – 20
65W–48511–00	17 – 41
6H3–48538–00	15 – 1
65W–61350–00	24 – 1
65W–61351–00	24 – 2
65W–81337–00	10 – 11
65W–81639–00	10 – 12
65W–81800–02	13 – 1
65W–81801–00	13 – 8
65W–81807–00	13 – 5

PART NO. N° PIECES	REF. NO.
65W–81820–00	13 – 7
65W–81826–00	13 – 2
65W–8182A–00	11 – 23
65W–8182B–00	11 – 24
65W–8182S–00	13 – 10
65W–81830–00	13 – 4
65W–81840–00	13 – 9
65W–81850–02	13 – 6
65W–81857–02	13 – 3
65W–8191C–00	11 – 21
65W–81922–00	11 – 22
65W–81941–00	11 – 20
65W–81948–00	12 – 24
65W–81949–00	12 – 29
61A–81950–00	12 – 21
65W–81960–10	11 – 13
65W–82105–00	12 – 6
65W–82117–00	11 – 27
682–82119–01	12 – 30
6G5–82119–10	11 – 28
65W–82127–00	11 – 18
6U0–82127–00	16 – 33
67C–82127–10	17 – 13
6H1–82148–00	16 – 22
6G8–82150–00	12 – 15
663–82151–00	12 – 16
6G5–82152–00	12 – 17
6A0–82317–00	12 – 25
6G8–82370–30	11 – 8
62Y–82377–00	14 – 42
65W–82504–00	11 – 17
703–82510–12	26 – 44
65W–8252V–00	11 – 2
65W–8252V–10	11 – 6
703–82531–00	26 – 46
65W–82532–00	11 – 19
703–82540–00	26 – 50
703–82542–00	26 – 63
682–82556–00	26 – 48
703–82563–02	26 – 55
6H1–82563–10	12 – 33
688–82575–01	26 – 47
676–82577–00	26 – 45
6E3–8257H–00	14 – 45
6E5–82587–00	12 – 34
688–8258A–20	26 – 49
65W–82590–30	12 – 7
703–82591–00	26 – 53

PART NO. N° PIECES	REF. NO.
703–82592–00	26 – 54
703–82594–00	26 – 25
65W–82594–10	10 – 17
703–83383–B0	26 – 51
65W–8339X–00	11 – 29
6K3–83557–00	11 – 14
6N7–83557–00	12 – 10
6E5–83558–00	17 – 16
6E5–83558–10	21 – 14
62Y–83614–00	12 – 35
6A1–83625–41	10 – 28
6A1–83625–51	10 – 29
65W–84342–00	10 – 16
65W–85410–01	10 – 19
65W–85510–10	10 – 2
65W–85540–20	11 – 1
65W–85542–00	11 – 3
65W–85547–00	11 – 4
65W–85550–01	10 – 1
65W–85570–01	11 – 7
65W–85580–00	10 – 3
65W–85757–00	12 – 2
65W–85790–00	12 – 1
65W–86129–20	11 – 5
6D5–W0001–00	27 – 1
67C–W0001–22	29 – 1
65W–W0070–20	1 – 10
66T–W0078–00	29 – 21
66T–W0078–0A	29 – 31
65W–W0093–01	28 – 1
65W–W009A–15–1S	4 – 1
65W–W009B–12–1S	2 – 1
90101–06020	16 – 31
90101–08M15	17 – 21
90101–09M01	24 – 7
90101–12M65	16 – 36
90105–06M18	17 – 3
90105–08M61	21 – 54
90105–08M87	2 – 13
90109–06M65	4 – 14
90109–06M81	15 – 6
90109–06M82	14 – 8
90109–06M86	12 – 36
	14 – 32
	15 – 8
90109–06MA4	1 – 5
90109–08M63	5 – 15
90109–08M77	13 – 12

PART NO. N° PIECES	REF. NO.
90109–08M78	13 – 13
90109–12MA3	17 – 35
90110–10M02	16 – 27
90116–10M70	17 – 4
90119–06M08	14 – 2
90119–06MA3	4 – 18
90119–06MA5	2 – 5
	8 – 15
90119–08M01	2 – 4
90119–08M15	21 – 29
	29 – 28
90119–08M39	13 – 11
90119–08M44	22 – 14
90119–08M79	19 – 14
90119–08M80	19 – 15
90119–09M00	4 – 17
90142–05M06	21 – 9
90157–05M16	23 – 5
90167–06002	14 – 37
90170–09M03	24 – 5
90170–20137	3 – 14
	10 – 6
90171–16011	22 – 23
90179–10M38	21 – 41
90185–08045	17 – 23
90185–09M01	24 – 4
90185–10051	17 – 5
90185–10M13	16 – 28
90185–22M11	16 – 12
90201–05M06	15 – 19
90201–06M31	15 – 15
90201–08M00	16 – 19
90201–10M06	8 – 5
90201–10M20	24 – 3
90201–10M63	24 – 8
90201–12426	16 – 38
90201–12M07	14 – 15
90201–12M16	12 – 28
	17 – 37
90201–13M19	17 – 39
90201–21M18	10 – 5
90201–22429	21 – 46
90201–22M05	17 – 40
90201–27M00	21 – 27
90201–30M00	17 – 7
90202–05M38	1 – 13
90202–12060	22 – 3
90202–21100	17 – 38

NUMERICAL INDEX
INDEX NUMERIQUE

PART NO. N° PIECES	REF. NO.
90206–12052	14 – 14
90249–12M38	16 – 23
90249–18M35	16 – 17
90250–06023	21 – 57
90254–03M05	15 – 4
90266–06M02	1 – 7
90280–03M03	21 – 21
	29 – 26
90280–04M06	8 – 10
	27 – 18
90340–08002	21 – 4
90340–14M06	2 – 14
	19 – 23
	20 – 14
90381–12M10	16 – 24
90381–12M11	16 – 25
90386–12M37	14 – 12
90386–12MA2	14 – 13
90386–14MA1	16 – 6
90386–18M44	16 – 20
90386–18MA0	16 – 21
90386–22MA4	16 – 14
90386–30M60	17 – 11
90386–30M77	17 – 9
90386–30M78	17 – 8
90387–06060	14 – 4
90387–06064	15 – 27
90387–06M29	15 – 14
90387–10M42	24 – 6
90387–23002	19 – 21
90401–20M00	2 – 31
90430–06014	4 – 13
	27 – 8
90430–08020	21 – 5
	29 – 10
90430–12072	22 – 4
	29 – 20
90430–14115	2 – 15
	27 – 4
90430–14M09	19 – 24
	20 – 15
	29 – 7
90445–07M53	17 – 15
90445–07ME8	21 – 12
90445–09068	2 – 21
90445–09095	2 – 23
90445–09104	2 – 24
90445–10M34	9 – 26

PART NO. N° PIECES	REF. NO.
90445–10MG6	9 – 25
90445–10MG7	9 – 29
90445–11M82	14 – 39
90446–10M82	10 – 10
90446–14M12	9 – 27
90446–14M51	9 – 30
90446–24M54	6 – 15
90464–07M05	11 – 12
90465–06M88	12 – 9
90465–08M07	17 – 17
90465–08M08	12 – 8
90465–11M10	2 – 25
	9 – 28
	10 – 20
	12 – 5
	14 – 40
	16 – 16
	17 – 18
	21 – 15
90465–11M52	6 – 16
90465–13M11	16 – 15
90465–13M18	9 – 37
	10 – 18
90465–13M36	6 – 14
90465–25M57	14 – 24
90467–08004	2 – 26
90467–09M17	9 – 35
90467–10M04	9 – 34
90468–10005	15 – 20
90468–18008	15 – 10
90480–09M12	14 – 3
90480–25161	11 – 9
90501–10326	7 – 8
90501–15M01	21 – 56
90506–18010	14 – 34
91318–04025	18 – 38
91380–05030	10 – 7
91490–30025	22 – 24
91690–30018	16 – 5
92903–06600	20 – 5
92990–05600	19 – 18
92990–06100	14 – 30
92990–06600	14 – 31
	21 – 36
92990–08600	13 – 15
	26 – 34
92990–16200	22 – 22
92995–05600	4 – 10

PART NO. N° PIECES	REF. NO.
92995–05600	10 – 9
	12 – 14
92995–06100	10 – 25
92995–06600	4 – 12
	6 – 11
	9 – 15
	10 – 14
	11 – 11
	12 – 4
	14 – 27
	15 – 17
	16 – 35
	19 – 6
	20 – 17
92995–08100	16 – 11
	17 – 25
	22 – 9
92995–08600	9 – 21
	17 – 30
92995–10100	22 – 12
92995–10600	16 – 29
	17 – 6
	22 – 13
92995–12200	16 – 37
93101–22M00	21 – 53
	29 – 19
93101–22M60	21 – 24
	29 – 13
93101–35002	3 – 2
	27 – 13
93102–37M40	8 – 1
	27 – 17
93102–43004	3 – 1
	27 – 12
93110–16004	19 – 2
	29 – 2
93210–064A5	18 – 26
93210–06ME6	21 – 35
	29 – 16
93210–09165	18 – 34
93210–10M74	18 – 52
93210–11073	18 – 55
93210–11368	18 – 24
93210–12MG9	8 – 13
	27 – 20
93210–14515	8 – 14
	27 – 21
93210–16275	24 – 10

PART NO. N° PIECES	REF. NO.
93210–18397	18 – 44
93210–24M79	4 – 24
	9 – 12
	27 – 11
93210–29M94	17 – 10
93210–32738	9 – 19
93210–33MG4	21 – 34
	29 – 15
93210–33MH2	8 – 12
	27 – 19
93210–48MG8	21 – 26
	29 – 14
93210–50768	18 – 29
93210–59MG7	21 – 19
	29 – 11
93210–69MG6	21 – 50
	29 – 17
93210–74MG5	21 – 51
	29 – 18
93306–001U1	21 – 49
93315–32224	21 – 11
93317–22204	21 – 52
93332–00001	21 – 38
93332–00003	21 – 43
93410–28M06	17 – 12
93420–36M01	19 – 22
93430–06024	26 – 10
93430–10M00	16 – 26
93450–09M01	4 – 4
93450–17129	3 – 11
93501–08001	18 – 61
93604–08062	21 – 28
93605–14143	8 – 4
93606–12019	20 – 12
	22 – 10
93608–12M05	20 – 9
93700–06M03	16 – 8
94701–00375	4 – 26
95380–05600	9 – 10
	21 – 10
	26 – 7
95380–06600	14 – 28
	26 – 40
95380–06700	21 – 32
95380–08600	9 – 23
95380–08700	13 – 14
95380–12600	16 – 39
95380–12700	17 – 36

PART NO. N° PIECES	REF. NO.
95680–06100	1 – 14
95895–06030	12 – 27
95895–10040	8 – 6
97013–06016	20 – 7
97013–06025	20 – 4
97075–06020	12 – 22
97075–06025	19 – 8
	20 – 16
97075–06050	19 – 5
97075–08030	17 – 24
97075–10040	22 – 11
97080–08016	16 – 18
97085–06010	16 – 32
97095–05012	4 – 9
97095–05016	10 – 8
	12 – 13
97095–06010	15 – 33
97095–06012	12 – 3
	14 – 17
97095–06014	14 – 26
	16 – 34
97095–06016	12 – 11
97095–06020	4 – 11
	10 – 24
97095–06025	6 – 10
	9 – 32
	10 – 13
	11 – 25
	15 – 16
97095–06030	9 – 14
	11 – 10
97095–06040	11 – 15
97095–06055	15 – 31
97095–08014	9 – 20
97095–08020	16 – 10
	17 – 29
97095–08025	22 – 8
97095–08035	22 – 16
97380–05025	26 – 8
97380–08030	26 – 33
97575–06516	12 – 31
97780–60520	1 – 3
97803–04010	7 – 5
97880–05016	19 – 17
97880–06025	14 – 29
97885–06008	17 – 14
97980–04114	7 – 26
	28 – 11

PART NO. N° PIECES	REF. NO.
98580–03015	26 – 38
98580–04006	7 – 2
	26 – 36
98580–04008	7 – 16
98580–04010	26 – 35
98580–05010	26 – 37
99530–08012	2 – 3
	4 – 16

FT25BET
PARTS CATALOGUE
©2004 by Yamaha Motor Co., Ltd.
1st edition, June 2004
All rights reserved.
Any reprinting or unauthorized use
without the written permission of
Yamaha Motor Co., Ltd.
is expressly prohibited.
Printed in Japan.

FT25BET
CATALOGUE DE PIECES DETACHEES
©2004 par Yamaha Motor Co., Ltd.
1re édition, juin 2004
Tous droits réservés
Toute réimpression ou utilisation
non autorisée sans la permission écrite
de la Yamaha Motor Co., Ltd.
est formellement interdite.
Imprimé au Japon