YAMAHA

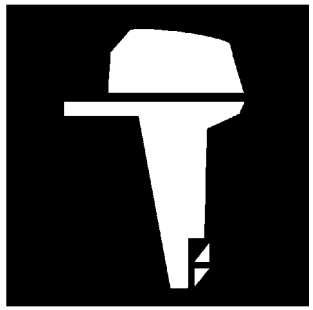

PARTS CATALOGUE
CATALOGUE DE PIECES DETACHEES

FT50GET'05 (6C21)
FT60DET'05 (6C61)

1D6C2-300F1

(2D6C2-300F1)

YAMAHA GENUINE Parts & Accessories

2015/9/9

NEWS NO.	DATE	COMMENT
PE0-OM-050005	Jun.,6,2005	MOD:FIG.15 ELECTRICAL 3 REVISION
PE0-OM-050016	Sep.,23,2005	COR:FIG.8 ILLUSTRATION CORRECTION
PE0-OM-090021	Mar.,2,2009	MOD:FIG.23,24 PTT(6C5-43800-01-8D) P/No. REVISION
PE0-OM-110001	Jan.,6,2011	COR:FIG.24 PTT LIST/ILLUSTRATION CORRECTION
PE0-OM-110047	Dec.,22,2011	MOD:FIG.6 INTAKE 1 LIST REVISION

NEWS NO.	DATE	COMMENT
PE0-OM-150022	Sep.,1,2015	COR:FUEL INJECTION PUMP 1 ILLUSTRATION CORRECTION

FOREWORD

This Parts Catalogue is related to the parts for the model(s) on the cover page. When you are ordering replacement parts, please refer to this Parts Catalogue and quote both part numbers and part names correctly.

1. Modifications or additions which have been made after the issue of the Parts Catalogue will be announced in the Parts News.
   It is advisable that you make the necessary corrections to the Parts Catalogue according to the Parts News.

2. Abbreviations
   The following abbreviations are used in this Parts Catalogue.

   "UR" Use specified parts number.
   "UN" Use as many as needed.
   "AP" Alternate Parts
   "LM" Locally Made (Parts need to be ordered locally)
   "F#" Frame No. (Applicable machine No.)
   "O/S" Over Size

3. The number of components for assembly
   - Parts, which are to be supplied in an assembly, are listed with a dot (.) in front of the part name as shown below.
   - The numeral appearing to the right of each component part indicates the quantity of parts for each assembly unit.

PART NO.	DESCRIPTION	Q'TY	REMARKS
2F5–83310–60	FRONT FLASHER LIGHT ASSY	2	
115–83311–60	.BULB (6V–18W)	1	

4. Applicable colours of graphics are represented in the "REMARKS" as shown below.

PART NO.	DESCRIPTION	Q'TY	REMARKS
2N4–24110–00–X5	FUEL TANK COMP.	2	MXR
3J1–24240–10	.GRAPHIC, FUEL TANK	1	FOR MXR

5. Note that the illustrations for reference in finding parts numbers are not to be used for assembling. When assembling, please use the applicable service manual.

6. The asterisk (*) before a reference number indicates modified items after the first edition.

7. Applicable Serial No.

   Engine Serial No.

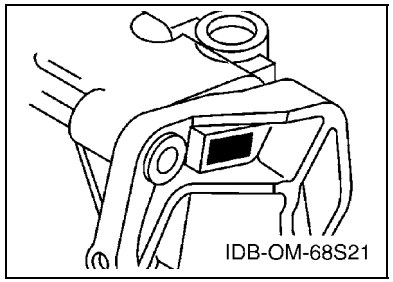

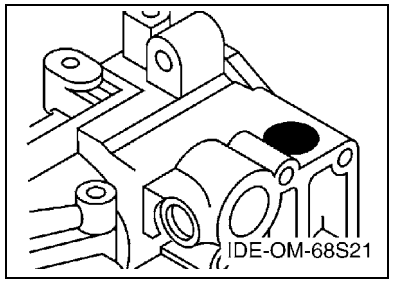

8. Applicable Engine Starting Serial No.

Model	Serial No.	Model	Serial No.
FT50G	6C2-1000001	FT60D	6C6-1000001

9. Applicable Colour Code

Abbreviation	Colour Name	Colour Code
DBNM2	DARK BLUISH GRAY METALLIC 2	004D

10. Quantity Column Information

Column No.	Name Of Q'ty Column	Applicable Model
1	6C21	FT50GET
2	6C61	FT60DET

AVANT–PROPOS

Ce catalogue de pièces détachées concerne les pièces pour le(s) modèle(s) indiqué(s) sur la page de couverture. Lorsque vous commandez des pièces de rechange, veuillez vous référer à ce catalogue de pieces détachées et indiquer clairement les numéros et les noms des pièces détachées.

1. Les modifications ou ajouts ayant été effectués après la parution du catalogue de pièces détachées seront décrits dans les Bulletins d'information concernant les pièces détachées.
   Il est recommandé que vous apportiez les corrections nécessaires au catalogue des pièces détachées en vous référant aux Bulletins d'information.

2. Abréviations
   Dans ce catalogue, les abréviations suivantes sont utilisées:

   "UR" Utiliser le numéro de pièces spécifié.
   "UN" Utiliser autant que nécessaire.
   "AP" Pièces de substitution
   "LM" Fabrication locale (les pièces doivent être commandées localement.)
   "F#" N° de cadre (applicable au N° de série)
   "O/S" Surdimensionné

3. Nombre de pièces d'un assemblage
   - Les pièces fournies comme composants d'un assemblage sont précédées d'un point (.) de la manière indiquée ci–dessous.
   - Le chiffre apparaissant à la droite de chaque composant indique la quantité de pièces pour chaque unité d'assemblage.

N° PIECES	DESCRIPTION	QTE	REMARQUES
2F5–83310–60	ENS. CLIGNOTANT AVANT	2	
115–83311–60	.AMPOULE (6V–18W)	1	

4. Les couleurs concernant les graphiques sont indiquées dans la colonne "REMARQUES", comme indiqué ci–dessous.

N° PIECES	DESCRIPTION	QTE	REMARQUES
2N4–24110–00–X5	RESERVOIR A ESSENCE.	2	MXR
3J1–24240–10	.GRAPHIQUE	1	POUR MXR

5. Veuillez noter que les illustrations sont indiquées à titre de référence pour trouver les numéros de pièces, non pour être utilisées lors de l'assemblage. Lors de l'assemblage, veuillez utiliser le manuel d'entretien adéquat.

6. L'astérisque (*) placé devant un numéro de référence indique des éléments qui ont été modifiés après la première édition.

7. N° de série applicable

   N° de Série du moteur

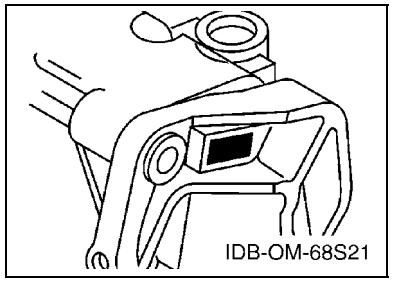

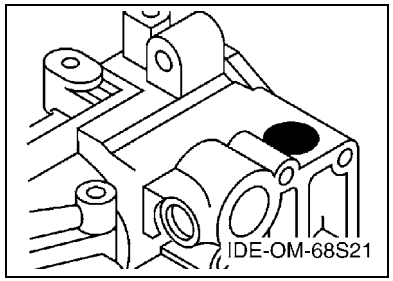

8. N° de série initial du moteur applicable

Modèle	N° de série	Modèle	N° de série
FT50G	6C2-1000001	FT60D	6C6-1000001

9. Code couleur applicable

Abréviation	Nom de la couleur	Code couleur
DBNM2	DARK BLUISH GRAY METALLIC 2	004D

10. Informations relatives à la colonne Quantité

N° de la colonne	Nom de la colonne Qté	Modèle applicable
1	6C21	FT50GET
2	6C61	FT60DET

CONTENTS

SHEET1/2
TOP COWLING A4
CYLINDER & CRANKCASE 1 ..... A5
CRANKSHAFT & PISTON A7
CYLINDER & CRANKCASE 2 ..... B1
VALVE B3
INTAKE 1 ..... B4
INTAKE 2 ..... B5
FUEL INJECTION PUMP 1 ..... B6
FUEL INJECTION PUMP 2 ..... B7
OIL PUMP C1
FUEL C2
GENERATOR C4
ELECTRICAL 1 ..... C5
ELECTRICAL 2 ..... C6
ELECTRICAL 3 ..... D1
ELECTRICAL 4 ..... D3
STARTING MOTOR D4
BOTTOM COWLING 1 ..... D5
BOTTOM COWLING 2 ..... D7
CONTROL E1
BRACKET 1 ..... E3
BRACKET 2 ..... E5
POWER TRIM & TILT ASSY 1 ..... E7
POWER TRIM & TILT ASSY 2 ..... F3
UPPER CASING F4
OIL PAN F5
LOWER CASING & DRIVE 1 ..... F6

INDEX

NUMERICAL INDEX G1

SHEET2/2
LOWER CASING & DRIVE 1 ..... A4*
LOWER CASING & DRIVE 2 ..... A5*
FUEL TANK A6*
STEERING GUIDE A7*
REMOTE CONTROL BOX B1*
REMOTE CONTROL ASSY B2*
METER B5*
OPTIONAL PARTS B6*
REPAIR KIT 1 ..... B7*
REPAIR KIT 2 ..... C1*

INDEX

NUMERICAL INDEX G1*

TABLE DES MATIERES

Feuille1/2
CAPOT SUPERIEUR A4
CYLINDRE & CARTER 1 ..... A5
VILEBREQUIN & PISTON A7
CYLINDRE & CARTER 2 ..... B1
SOUPAPE B3
ADMISSION 1 ..... B4
ADMISSION 2 ..... B5
POMPE A INJECTEUR 1 ..... B6
POMPE A INJECTEUR 2 ..... B7
POMPE A HUILE C1
CARBURANT C2
GENERATRICE C4
PARTIE ELECTRIQUE 1 ..... C5
PARTIE ELECTRIQUE 2 ..... C6
PARTIE ELECTRIQUE 3 ..... D1
PARTIE ELECTRIQUE 4 ..... D3
DEMARREUR ELECTRIQUE D4
CAPOT INFERIEUR 1 ..... D5
CAPOT INFERIEUR 2 ..... D7
COMMANDE E1
SUPPORT 1 ..... E3
SUPPORT 2 ..... E5
PUISSANCE PARER ET INCLINER 1 ..... E7
PUISSANCE PARER ET INCLINER 2 ..... F3
FOURREAU F4
VENTILATEUR D'HUILE F5
BOITIER D'HELICE TRANSMISSION1 ..... F6

INDEX

INDEX NUMERIQUE G1

Feuille2/2
BOITIER D'HELICE TRANSMISSION1 ..... A4*
BOITIER D'HELICE TRANSMISSION2 ..... A5*
RESERVOIR A CARBURANT A6*
FIXATION DE DIRECTION A7*
BOITIER DE COMMANDE A DISTANCE B1*
BOITIER DE COMMANDE A DISTANCE B2*
COMPTEUR B5*
PIECES OPTIONNELLES B6*
KITS DE REPARATION 1 ..... B7*
KITS DE REPARATION 2 ..... C1*

INDEX

INDEX NUMERIQUE G1*

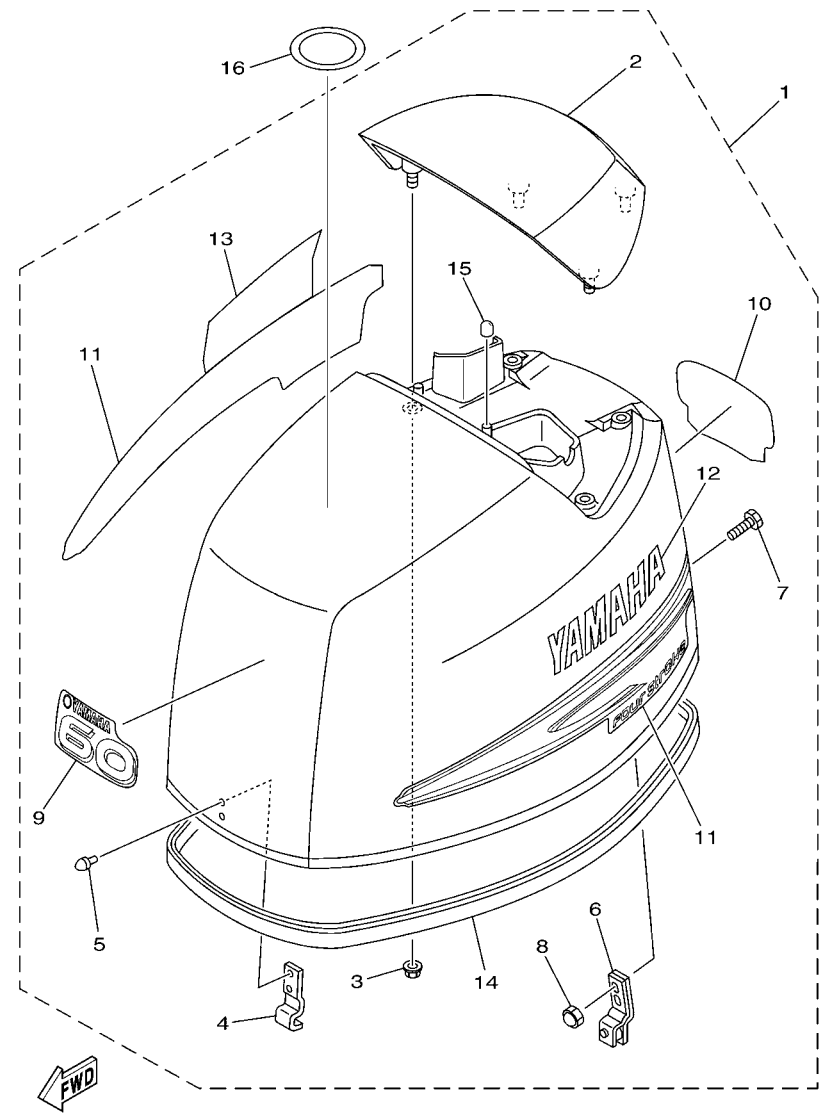

6C11010-D010

FIG. 1 TOP COWLING — CAPOT SUPERIEUR

REF. NO.	PART NO. N° PIECES	DESCRIPTION DESCRIPTION	6C21	6C61				REMARKS REMARQUES
1	6C2–42610–00–4D	TOP COWLING ASSY CAPOT (ENS.)	1					
	6C6–42610–00–4D	TOP COWLING ASSY CAPOT (ENS.)		1				
2	67C–42613–00–4D	.MOLDING, AIR DUCT .MANCHON A AIR	1	1				
3	90179–06M24	.NUT .ECROU	4	4				
4	6C5–42651–00	.HOOK .CROCHET	1	1				
5	90266–06M02	.RIVET .RIVET	2	2				
6	67C–42652–01	.HOOK .CROCHET	1	1				
7	90109–06047	.BOLT .BOULON	2	2				
8	90185–06M05	.NUT, SELF-LOCKING .ECROU, AUTO-BLOQUANT	2	2				
9	62Y–42677–30	.GRAPHIC, FRONT .ADHESIF, AVANT	1					
	69W–42677–00	.GRAPHIC, FRONT .ADHESIF, AVANT		1				
10	6C2–42678–00	.GRAPHIC, REAR .ADHESIF, ARRIERE	1					
	6C6–42678–00	.GRAPHIC, REAR .ADHESIF, ARRIERE		1				
11	69W–W0070–00	.GRAPHIC SET .JEU DIEMBLEMES	1	1				
12	69W–42681–00	.MARK, COWLING .ADHESIF, CAPOT	1	1				
13	69W–42682–00	.MARK, COWLING .ADHESIF, CAPOT	1	1				
14	6C5–42615–00	.SEAL .JOINT	1	1				
15	69W–13448–00	.CAP .CAPUCHON	2	2				
16	67F–13434–02	LABEL, CAUTION ETIQUETTE, ATTENTION	1	1				

FIG. 2 CYLINDER & CRANKCASE 1 CYLINDRE & CARTER 1

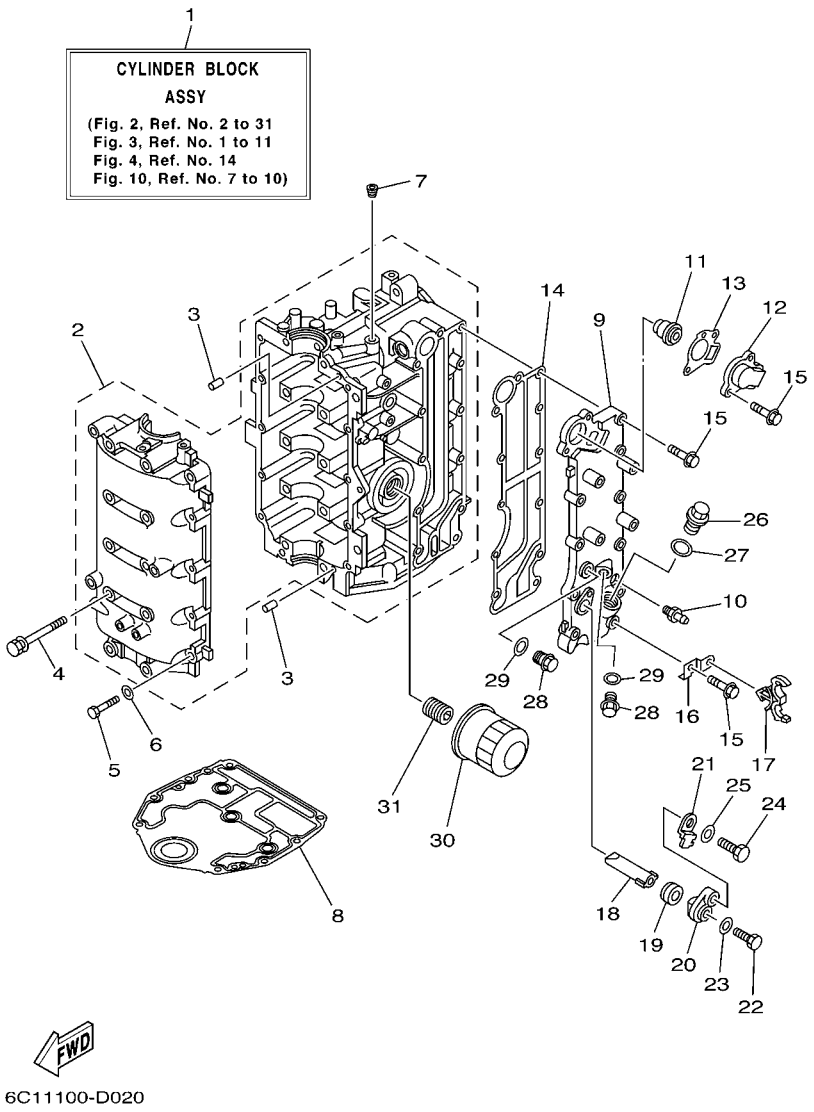

REF. NO.	PART NO. N° PIECES	DESCRIPTION DESCRIPTION	6C21	6C61				REMARKS REMARQUES
1	6C5–W009B–00–1S	CYLINDER BLOCK ASSY CYLINDRE GROUPE (ENS.)	1	1				
2	6C5–15100–00–1S	CRANKCASE ASSY CARTER DE MOTEUR COMPLET	1	1				
3	93606–12019	PIN, DOWEL GOUPILLE	4	4				
4	90119–08M01	BOLT, WITH WASHER BOULON, AVEC RONDELLE	10	10				
5	97013–06035	BOLT BOULON	10	10				
6	92903–06600	WASHER, PLATE RONDELLE, PLATE	10	10				
7	90344–51003	PLUG, TAPER SCREW PLOT, FILETE CONIQUE	1	1				
8	67C–11351–01	GASKET, CYLINDER JOINT, D'EMBASE	1	1				
9	6C5–41113–00–1S	OUTER COVER, EXHAUST COUVERCLE, ECHAPPEMENT	1	1				
10	62Y–12481–10	PIPE 1 DURITE 1	1	1				
11	6G8–12411–03	THERMOSTAT THERMOSTAT	1	1				
12	6H3–12413–00–1S	COVER, THERMOSTAT COUVERCLE, THERMOSTAT	1	1				
13	62Y–12414–00	GASKET, COVER JOINT, COUVERCLE	1	1				
14	6C5–41114–00	GASKET, EXHAUST OUTER COVER JOINT, COUVERCLE D'ECHAPPEMENT	1	1				
15	90119–06MA5	BOLT, WITH WASHER BOULON, AVEC RONDELLE	12	12				
16	6C5–1135A–00	BRACKET SUPPORT	1	1				
17	90464–18246	CLAMP BRIDE	1	1				
18	62Y–11325–00	ANODE ANODE	1	1				
19	66M–11328–00	GROMMET, ANODE PASSE-FIL	1	1				
20	66M–11327–00–94	COVER, ANODE COUVERCLE	1	1				
21	66M–12535–00	PLATE PLAQUE	1	1				
22	97095–05012	BOLT BOULON	1	1				
23	92995–05600	WASHER RONDELLE	1	1				
24	97095–06020	BOLT BOULON	1	1				
25	92995–06600	WASHER RONDELLE	1	1				
26	90340–18M09	PLUG, STRAIGHT SCREW PLOT, FILETE DROIT	1	1				
27	90430–18130	GASKET JOINT	1	1				

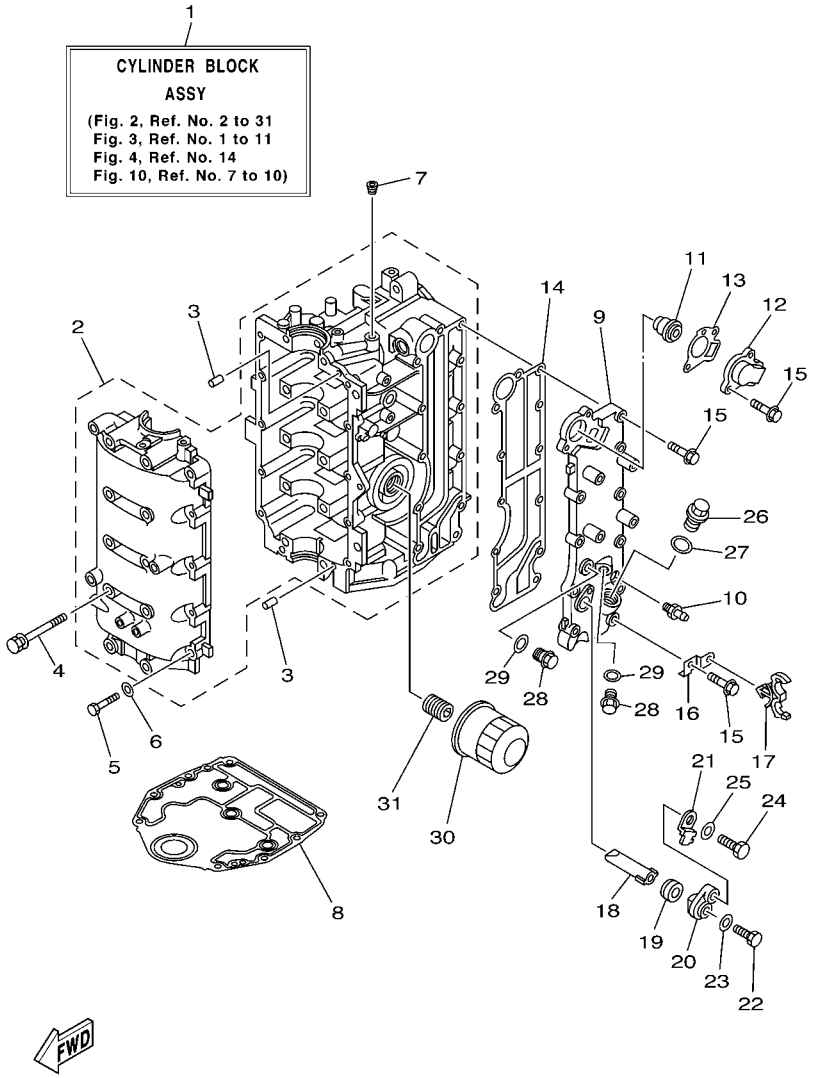

6C11100-D020

FIG. 2 CYLINDER & CRANKCASE 1 CYLINDRE & CARTER 1

REF. NO.	PART NO. N° PIECES	DESCRIPTION DESCRIPTION	6C21	6C61				REMARKS REMARQUES
28	90340–14M06	PLUG, STRAIGHT SCREW PLOT, FILETE DROIT	2	2				
29	90430–14115	GASKET JOINT	2	2				
30	5GH–13440–10	ELEMENT ASSY, OIL CLEANER ELEMENT, FILTRE A HUILE	1	1				
31	6C5–12858–00	BOLT, UNION BOULON, RACCORD	1	1				

FIG. 3 CRANKSHAFT & PISTON VILEBREQUIN & PISTON

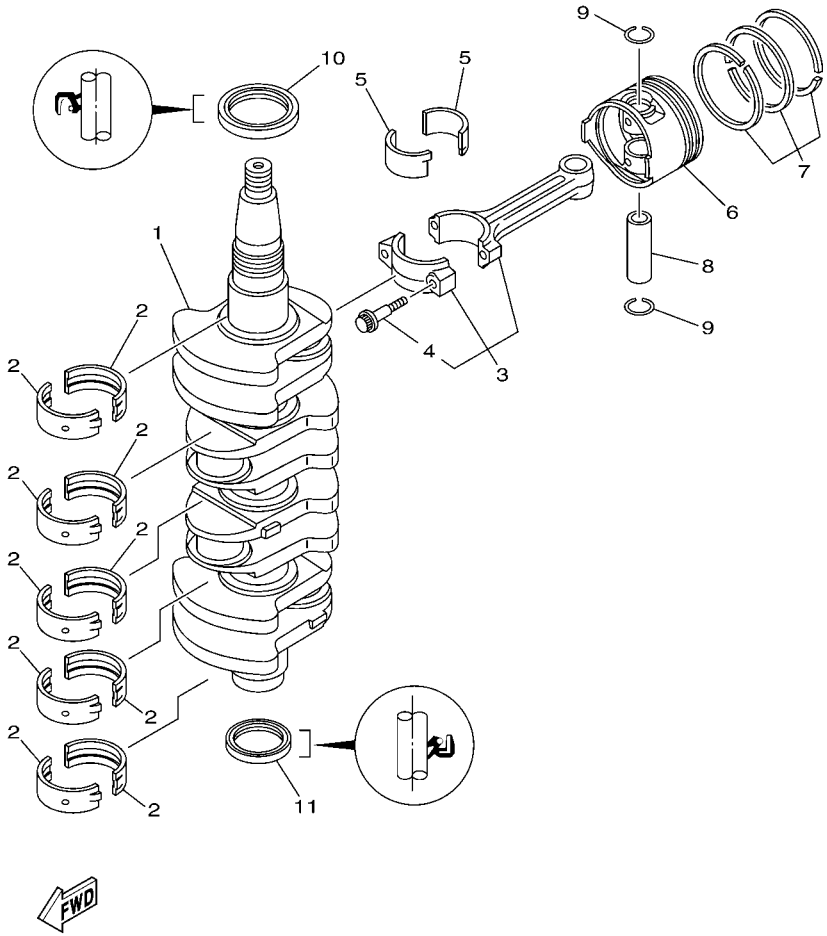

REF. NO.	PART NO. N° PIECES	DESCRIPTION DESCRIPTION	6C21	6C61				REMARKS REMARQUES
1	6C5–11411–00	CRANKSHAFT VILEBREQUIN COMPLET	1	1				
2	6C5–11416–00	PLANE BEARING, CRANKSHAFT 1 COUSSINET DE VILEBREQUIN 1	10	10				UR YELLOW UR YELLOW
	6C5–11416–10	PLANE BEARING, CRANKSHAFT 1 COUSSINET DE VILEBREQUIN 1	10	10				UR RED UR RED
	6C5–11416–20	PLANE BEARING, CRANKSHAFT 1 COUSSINET DE VILEBREQUIN 1	10	10				UR PINK UR PINK
	6C5–11416–30	PLANE BEARING, CRANKSHAFT 1 COUSSINET DE VILEBREQUIN 1	10	10				UR GREEN UR GREEN
3	6C5–11650–00	CONNECTING ROD ASSY BIELLE COMPLETTE	4	4				
4	6C5–11654–00	.BOLT, CONNECTING ROD .BOULON, BIELLE	2	2				
5	6C5–11656–00	PLANE BEARING, CONNECTING ROD ROULEMENT DE BIELLE	8	8				UR YELLOW UR YELLOW
	6C5–11656–10	PLANE BEARING, CONNECTING ROD ROULEMENT DE BIELLE	8	8				UR RED UR RED
	6C5–11656–20	PLANE BEARING, CONNECTING ROD ROULEMENT DE BIELLE	8	8				UR PINK UR PINK
	6C5–11656–30	PLANE BEARING, CONNECTING ROD ROULEMENT DE BIELLE	8	8				UR GREEN UR GREEN
6	69W–11631–00–97	PISTON (STD) PISTON (STD)	4	4				
	69W–11635–00	PISTON (0.25MM O/S) PISTON (0.25MM O/S)	4	4				AP AP
	69W–11636–00	PISTON (0.50MM O/S) PISTON (0.50MM O/S)	4	4				AP AP
7	67C–11603–00	PISTON RING SET (STD) JEU DE SEGMENTS (STD)	4	4				
	67C–11604–00	PISTON RING SET (0.25MM O/S) JEU DE SEGMENTS (0.25MM O/S)	4	4				AP AP
	67C–11605–00	PISTON RING SET (0.50MM O/S) JEU DE SEGMENTS (0.50MM O/S)	4	4				AP AP
8	62Y–11633–00	PIN, PISTON AXE, PISTON	4	4				
9	93450–17129	CIRCLIP CIRCLIP, TYPE S	8	8				
10	93102–43M42	OIL SEAL JOINT SPY	1	1				
11	93101–35002	OIL SEAL JOINT SPY	1	1				

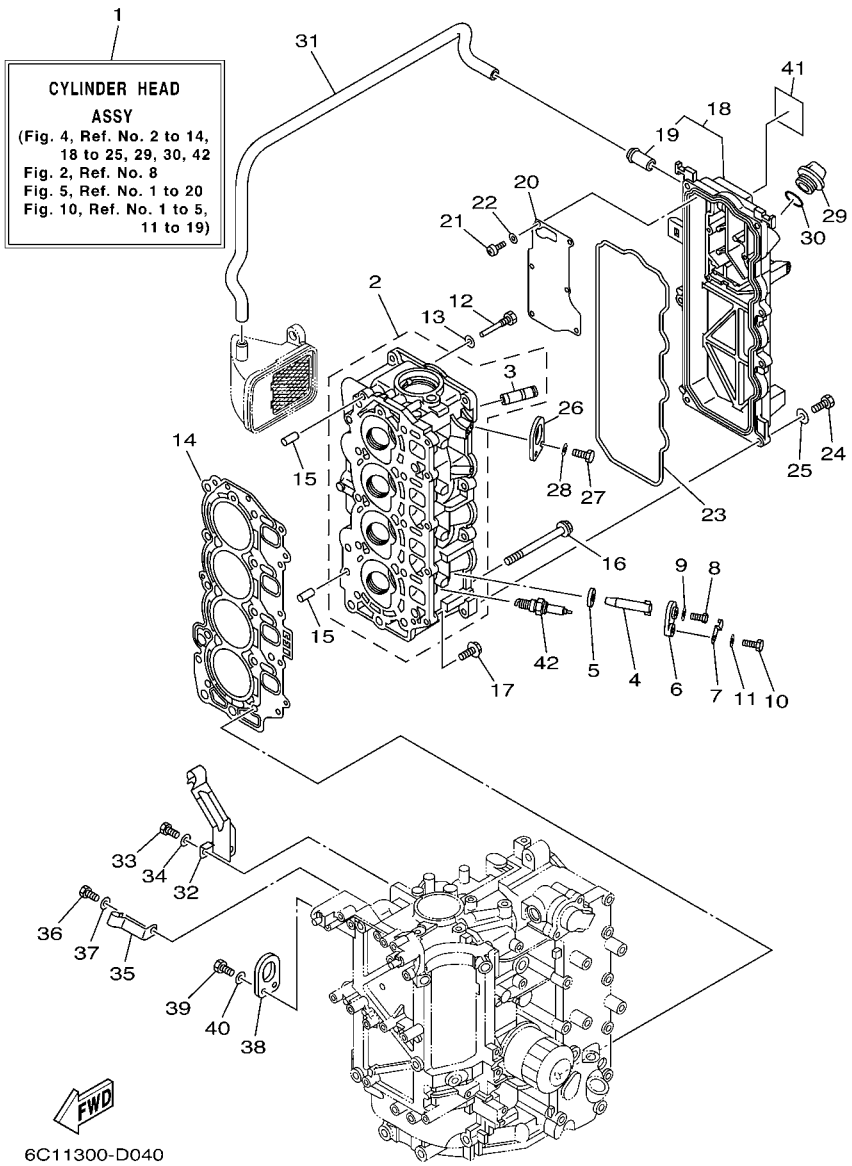

FIG. 4 CYLINDER & CRANKCASE 2 CYLINDRE & CARTER 2

REF. NO.	PART NO. N° PIECES	DESCRIPTION DESCRIPTION	6C21	6C61				REMARKS REMARQUES
1	6C5–W009A–00–1S	CYLINDER HEAD ASSY CULASSE (ENS.)	1	1				
2	6C5–11111–00–1S	HEAD, CYLINDER 1 CULASSE	1	1				
3	62Y–11133–30	.GUIDE, VALVE 1 .GUIDE, SOUPAPE 1	8	8				
4	62Y–11325–00	ANODE ANODE	4	4				
5	66M–11328–00	GROMMET, ANODE PASSE-FIL	4	4				
6	66M–11327–00–94	COVER, ANODE COUVERCLE	4	4				
7	66M–12535–00	PLATE PLAQUE	4	4				
8	97095–05012	BOLT BOULON	4	4				
9	92995–05600	WASHER RONDELLE	4	4				
10	97095–06020	BOLT BOULON	4	4				
11	92995–06600	WASHER RONDELLE	4	4				
12	90109–06M65	BOLT BOULON	1	1				
13	90430–06014	GASKET JOINT	1	1				
14	6C5–11181–01	GASKET, CYLINDER HEAD 1 JOINT, DE CULASSE 1	1	1				
15	99530–08012	PIN, DOWEL GOUJON, D'ASSEMBLAGE	2	2				
16	90105–09005	BOLT, FLANGE BOULON	10	10				
17	90119–06MA3	BOLT, WITH WASHER BOULON, AVEC RONDELLE	5	5				
18	6C5–11191–00–1S	COVER, CYLINDER HEAD 1 COUVERCLE, CULASSE 1	1	1				
19	62Y–14485–00	.PIPE, JOINT .DURITE	1	1				
20	6C5–11168–00	COVER, BREATHER COUVERCLE, RENIFLARD	1	1				
21	98507–04010	SCREW, PAN HEAD VIS, TETE TRONCONIQUE	6	6				
22	92907–04600	WASHER RONDELLE	6	6				
23	62Y–11356–00	SEAL, CYLINDER 2 JOINT, SPY CYLINDRE	1	1				
24	97095–06020	BOLT BOULON	7	7				
25	92995–06600	WASHER RONDELLE	7	7				
26	62Y–11119–00	HANGER, ENGINE ANNEAU, LEVAGE	1	1				
27	97095–06020	BOLT BOULON	2	2				

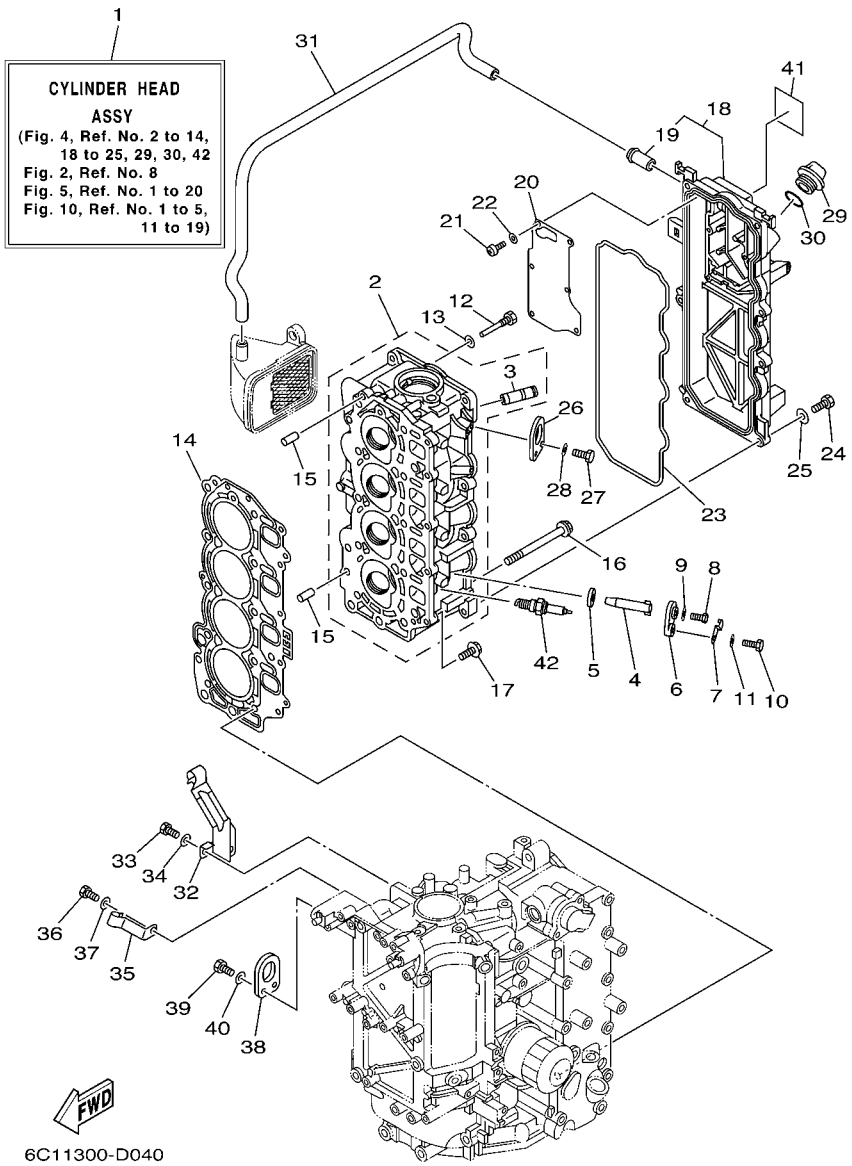

FIG. 4 CYLINDER & CRANKCASE 2 CYLINDRE & CARTER 2

REF. NO.	PART NO. N° PIECES	DESCRIPTION DESCRIPTION	6C21	6C61				REMARKS REMARQUES
28	92995–06600	WASHER RONDELLE	2	2				
29	6G8–15363–00	PLUG, OIL PLOT, HUILE	1	1				
30	93210–24M79	O-RING JOINT TORIQUE	1	1				
31	6C5–1531A–00	HOSE, BREATHER 1 DURITE DE RENIFLARD 1	1	1				
32	6C5–15378–00	HOLDER SUPPORT	1	1				
33	97095–06014	BOLT BOULON	1	1				
34	92995–06600	WASHER RONDELLE	1	1				
35	6C5–15378–10	HOLDER SUPPORT	1	1				
36	97095–06014	BOLT BOULON	1	1				
37	92995–06600	WASHER RONDELLE	1	1				
38	62Y–11119–00	HANGER, ENGINE ANNEAU, LEVAGE	1	1				
39	97095–06020	BOLT BOULON	2	2				
40	92995–06600	WASHER RONDELLE	2	2				
41	62Y–12138–60	MARK, CAUTION MAKER	1	1				
42	94702–00418	PLUG, SPARK (NGK DPR6EB) BOUGIE D,ALLUMAGE (NGK DPR6EB)	4	4				

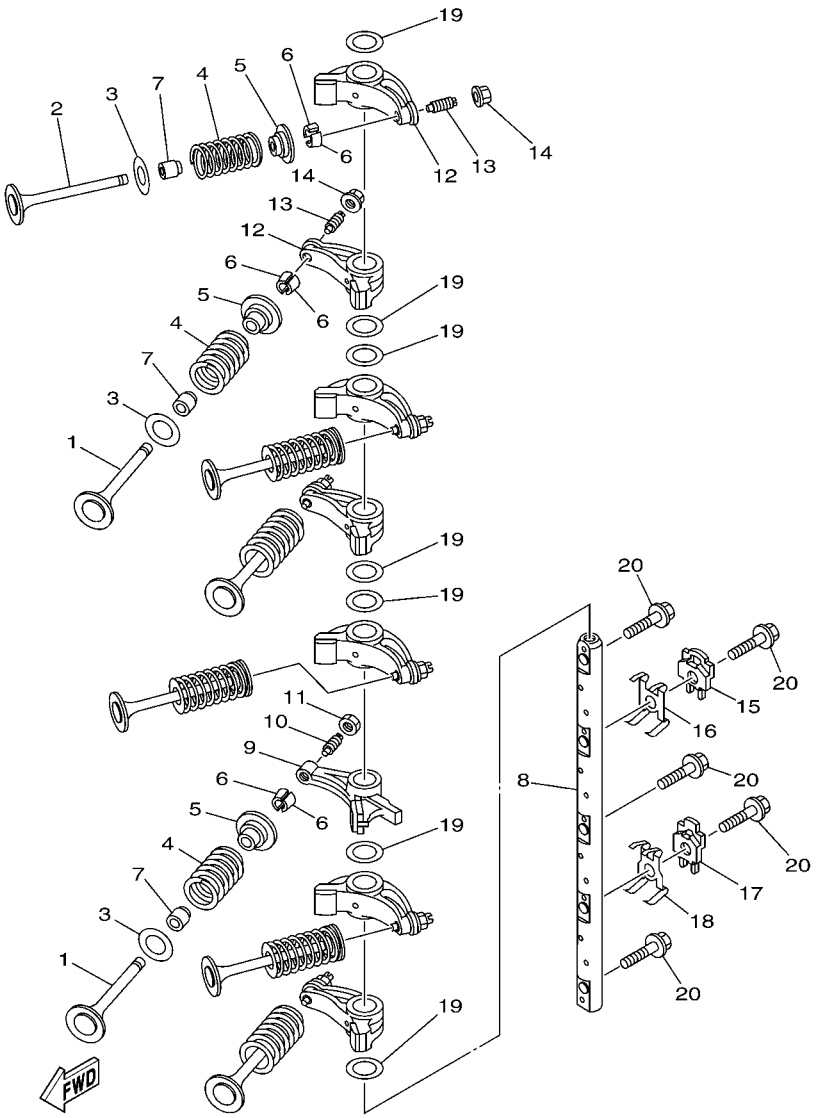

6C11010-D050

FIG. 5 VALVE SOUPAPE

REF. NO.	PART NO. N° PIECES	DESCRIPTION DESCRIPTION	6C21	6C61				REMARKS REMARQUES
1	69W–12111–00	VALVE, INTAKE SOUPAPE, ADMISSION	4	4				
2	69W–12121–00	VALVE, EXHAUST SOUPAPE, ECHAPPEMENT	4	4				
3	62Y–12116–00	SEAT, VALVE SPRING SIEGE, RESSORT DE SOUPAPE	8	8				
4	51Y–12114–00	SPRING, VALVE OUTER RESSORT DE SOUPAPE, EXTERNE	8	8				
5	30X–12117–00	RETAINER, VALVE SPRING BUTEE DE RESSORT DE SOUPAPE	8	8				
6	30X–12118–00	COTTER, VALVE FRAISE, SOUPAPE	16	16				
7	51Y–12119–00	SEAL, VALVE STEM JOINT, QUEUE DE SOUPAPE	8	8				
8	6C5–12146–00	SHAFT, ROCKER AXE, CULBUTEUR	1	1				
9	62Y–12151–00	ARM, VALVE ROCKER CULBUTEUR	1	1				
10	64J–12159–00	SCREW, VALVE ADJUSTING VIS, REGLAGE DE SOUPAPE	1	1				
11	62Y–12158–00	NUT, LOCK CONTRE-ECROU	1	1				
12	6C5–12151–00	ARM, VALVE ROCKER CULBUTEUR	7	7				
13	6C5–12159–00	SCREW, VALVE ADJUSTING VIS, REGLAGE DE SOUPAPE	7	7				
14	6C5–12158–00	NUT, LOCK CONTRE-ECROU	7	7				
15	6C5–12231–00	GUIDE, STOPPER 1 GUIDE, BUTEE 1	1	1				
16	6C5–12233–00	PLATE, GUIDE STOPPER 1 PLAQUE, GUIDE BUTEE 1	1	1				
17	6C5–12241–00	GUIDE, STOPPER 2 GUIDE, BUTEE 2	1	1				
18	6C5–12243–00	PLATE, GUIDE STOPPER 2 PLAQUE, GUIDE BUTEE 2	1	1				
19	90201–16014	WASHER, PLATE RONDELLE, PLATE	7	7				
20	90105–08060	BOLT, FLANGE BOULON	5	5				

FIG. 6 INTAKE 1 — ADMISSION 1

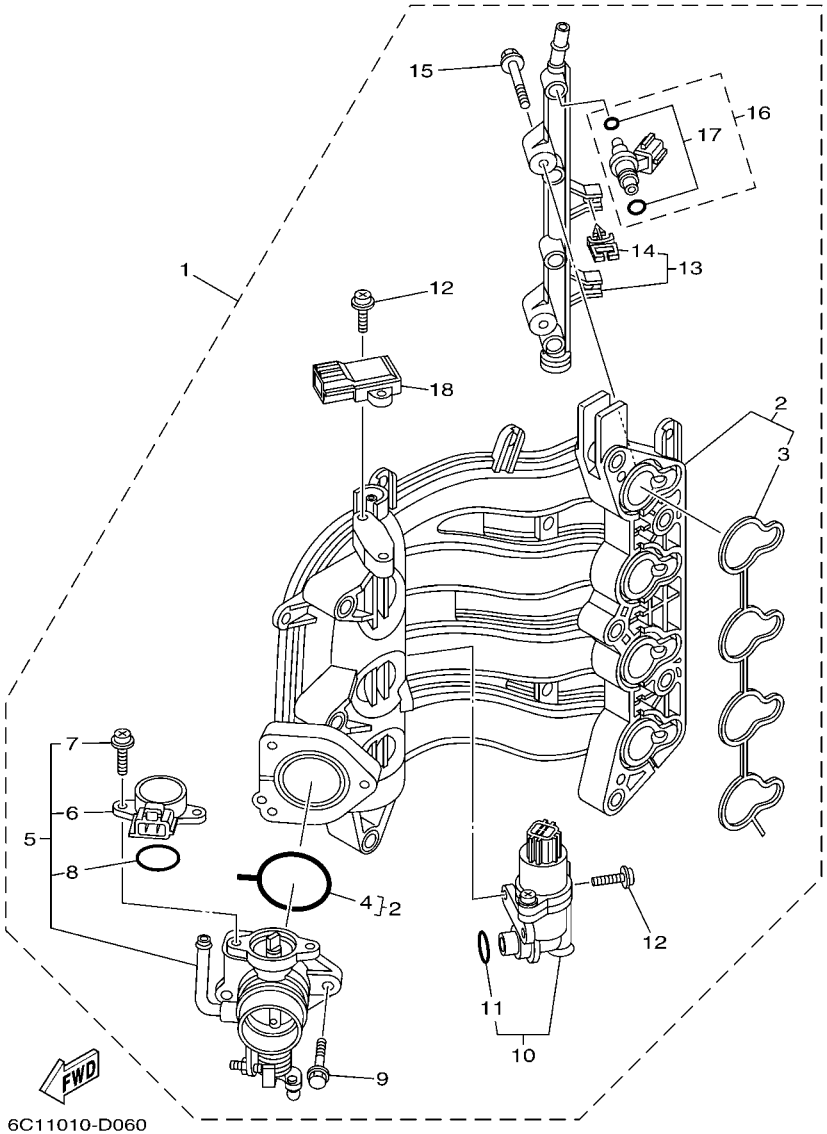

REF. NO.	PART NO. N° PIECES	DESCRIPTION DESCRIPTION	6C21	6C61				REMARKS REMARQUES
1	6C5–14200–00	INTAKE ASSY ADMISSION (ENS.)	1	1				
2	6C5–13641–00	.MANIFOLD 1 .TUBULURE 1	1	1				
3	6C5–13645–00	..GASKET, MANIFOLD 1 ..JOINT, TUBULURE 1	1	1				
4	6C5–13557–00	..GASKET ..JOINT	1	1				
5	6C5–13750–00	.THROTTLE BODY ASSY .CARTER D'ACCELERATEUR COMPLET	1	1				
6	6C5–85885–00	..THROTTLE SENSOR ASSY ..SENSITOMETRE (ENS.)	1	1				
7	6C5–81145–00	..SCREW 1 ..VIS 1	2	2				
8	6C5–8182L–00	..O-RING 1 ..JOINT TORIQUE 1	1	1				
9	6C5–14496–00	.BOLT .BOULON	3	3				
10	6C5–13105–00	.CONTROL VALVE ASSY .SOUPAPE DE CONTROLE COMPLET	1	1				
11	6C5–1319C–00	..O-RING ..JOINT TORIQUE	1	1				
12	6C5–81146–00	.SCREW 2 .VIS 2	4	4				
13	6C5–13161–00	.PIPE, DELIVERY 1 .DURITE REFOULEMENT 1	1	1				
14	90464–07M56	..CLAMP ..BRIDE	2	2				
15	6C5–14446–00	.BOLT .BOULON	2	2				
16	6C5–13761–00	.INJECTOR ASSY .INJECTEUR	4	4				
17	6C5–1410B–00	..PACKING KIT ..POCHETTE DE JOINTS	1	1				
18	68F–83688–00	.SENSOR ASSY .SONDE (ENS.)	1	1				

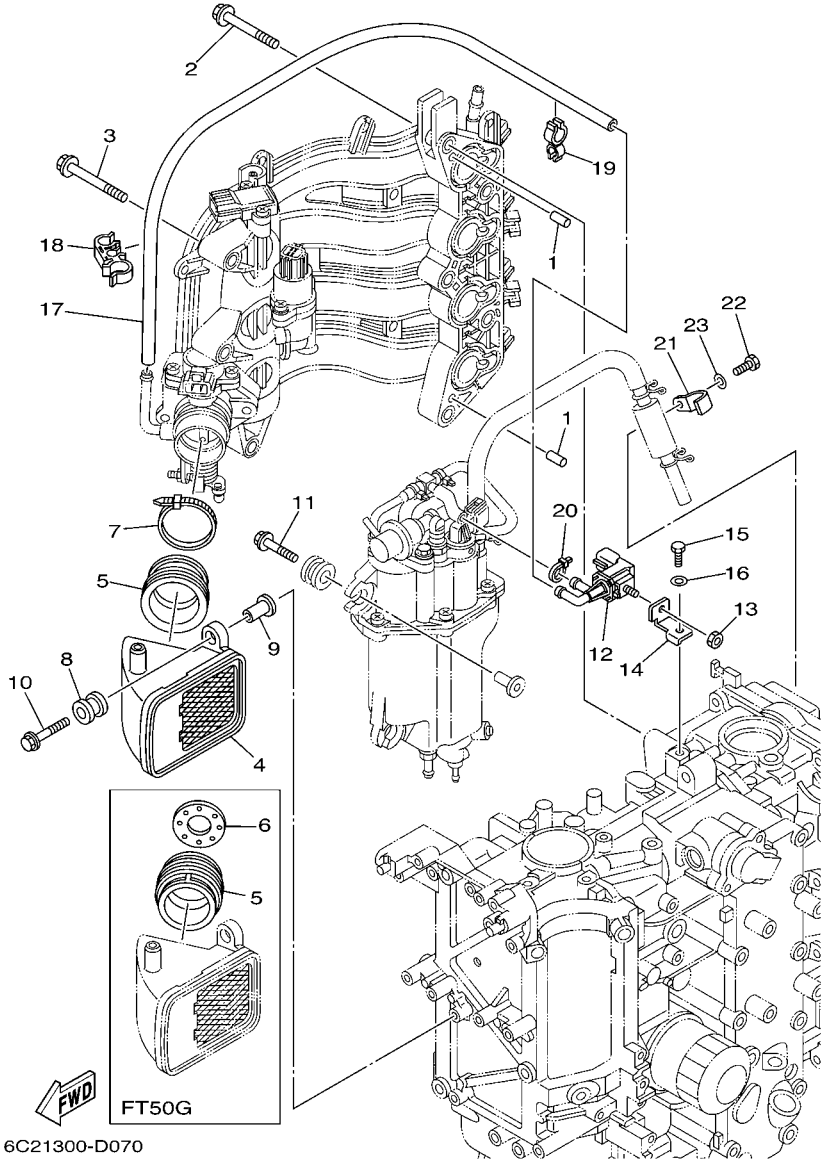

FIG. 7 INTAKE 2 — ADMISSION 2

REF. NO.	PART NO. N° PIECES	DESCRIPTION DESCRIPTION	6C21	6C61				REMARKS REMARQUES
1	93608–12M05	PIN, DOWEL AXE	2	2				
2	90119–08069	BOLT, WITH WASHER BOULON, AVEC RONDELLE	5	5				
3	90119–06087	BOLT, WITH WASHER BOULON, AVEC RONDELLE	3	3				
4	6C5–14440–00	SILENCER ASSY, INTAKE SIENCIEUX D'ADMISSION	1	1				
5	6C1–14453–00	JOINT, AIR CLEANER 1 RACCORD, FILTRE A AIR 1	1					
	6C5–14453–00	JOINT, AIR CLEANER 1 RACCORD, FILTRE A AIR 1		1				
6	6C1–14477–00	PLATE PLAQUE	1					
7	90464–76001	CLAMP BRIDE	1	1				
8	6A0–82317–00	DAMPER, IGNITION COIL AMORTISSEUR, BOBINE D'ALLUM	2	2				
9	624–42542–00	PIPE TUYAU	2	2				
10	90119–06106	BOLT, WITH WASHER BOULON, AVEC RONDELLE	2	2				
11	90119–06M08	BOLT, WITH WASHER BOULON, AVEC RONDELLE	3	3				
12	6C5–86120–00	SOLENOID VALVE ASSY SOLENOIDE	1	1				
13	95380–06600	NUT, HEXAGON ECROU	1	1				
14	6C5–86112–00	STAY, SOLENOID SUPPORT, SOLENOIDE	1	1				
15	97095–06016	BOLT BOULON	1	1				
16	92995–06600	WASHER RONDELLE	1	1				
17	90445–115J5	HOSE (L460) DURITE (L460)	1	1				
18	90464–15008	CLAMP BRIDE	1	1				
19	90464–12006	CLAMP BRIDE	1	1				
20	90465–11M10	CLAMP BRIDE	1	1				
21	6C5–13428–00	BRACKET, STRAINER 1 SUPPORT, FILTRE 1	1	1				
22	97095–06016	BOLT BOULON	1	1				
23	92995–06600	WASHER RONDELLE	1	1				

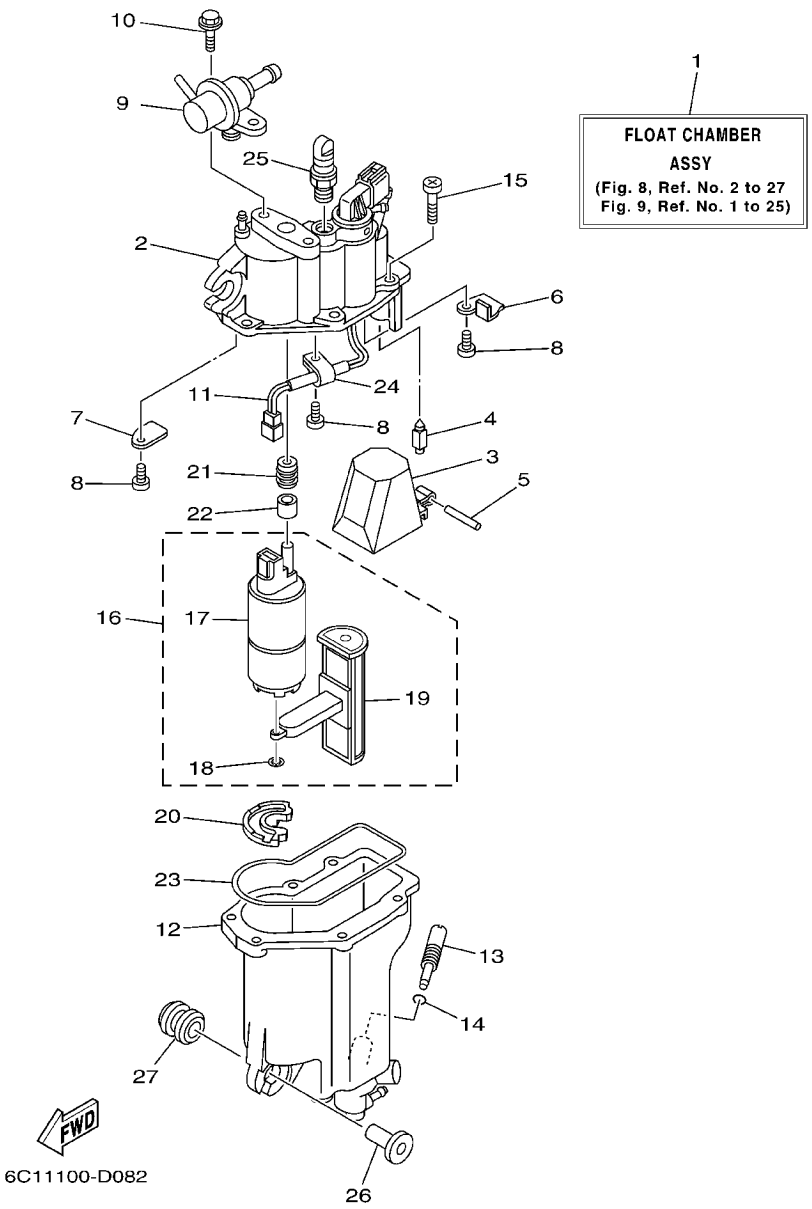

FIG. 8 FUEL INJECTION PUMP 1 POMPE A INJECTEUR 1

REF. NO.	PART NO. N° PIECES	DESCRIPTION DESCRIPTION	6C21	6C61				REMARKS REMARQUES
1	6C5–14180–00	FLOAT CHAMBER ASSY CUVE DE FLOTTEUR	1	1				
2	6C5–14182–00	COVER, FLOAT CHAMBER COUVERCLE, CUVE DE FLOTTEUR	1	1				
3	6C5–14985–00	FLOAT FLOTTEUR	1	1				
4	6C5–14546–00	VALVE, NEEDLE POINTEAU	1	1				
5	6C5–14386–00	PIN, FLOAT AXE, FLOTTEUR	1	1				
6	6C5–2441R–00	PLATE, BAFFLE 1 SEPARATEUR 1	1	1				
7	6C5–2441T–00	PLATE, BAFFLE 2 SEPARATEUR 2	1	1				
8	6C5–24453–00	SCREW VIS	3	3				
9	6C5–13906–00	REGULATOR, PRESSURE REGULATEUR DE PRESSION	1	1				
10	6C5–24592–00	BOLT BOLTE	2	2				
11	6C5–87226–00	WIRE HARNESS ASSY ENS. FAISCEAU ELECTRIQUE	1	1				
12	6C5–14960–00	BODY ASSY CARTER (ENS.)	1	1				
13	6C5–14191–00	PLUG, DRAIN PLOT, VIDANGE	1	1				
14	6C5–14397–00	O-RING JOINT TORIQUE	1	1				
15	6C5–14567–00	SCREW VIS	6	6				
16	6C5–13910–00	FUEL PUMP ASSY POMPE A ESSENCE COMPLET	1	1				
17	6C5–13907–00	.FUEL PUMP COMP. .POMPE A CARBURANT COMP.	1	1				
18	6C5–14127–00	.CLIP .JONC	1	1				
19	6C5–13915–00	.FILTER .FILTRE	1	1				
20	6C5–13593–00	DAMPER AMORTISSEUR	1	1				
21	6C5–13781–00	DAMPER, PUMP AMORTISSEUR, POMPE	1	1				
22	6C5–13716–00	COLLAR COLLERETTE	1	1				
23	6C5–14984–00	GASKET, FLOAT CHAMBER JOINT, CUVE DE FLOTTEUR	1	1				
24	6C5–21337–00	CLAMP, CABLE COLLIER, CABLE	1	1				
25	6C5–14225–00	CAP COUVERCLE	1	1				
26	90387–06M69	COLLAR COLLERETTE	3	3				
27	90480–09M12	GROMMET PASSE-FIL	3	3				

FIG. 9 FUEL INJECTION PUMP 2 POMPE A INJECTEUR 2

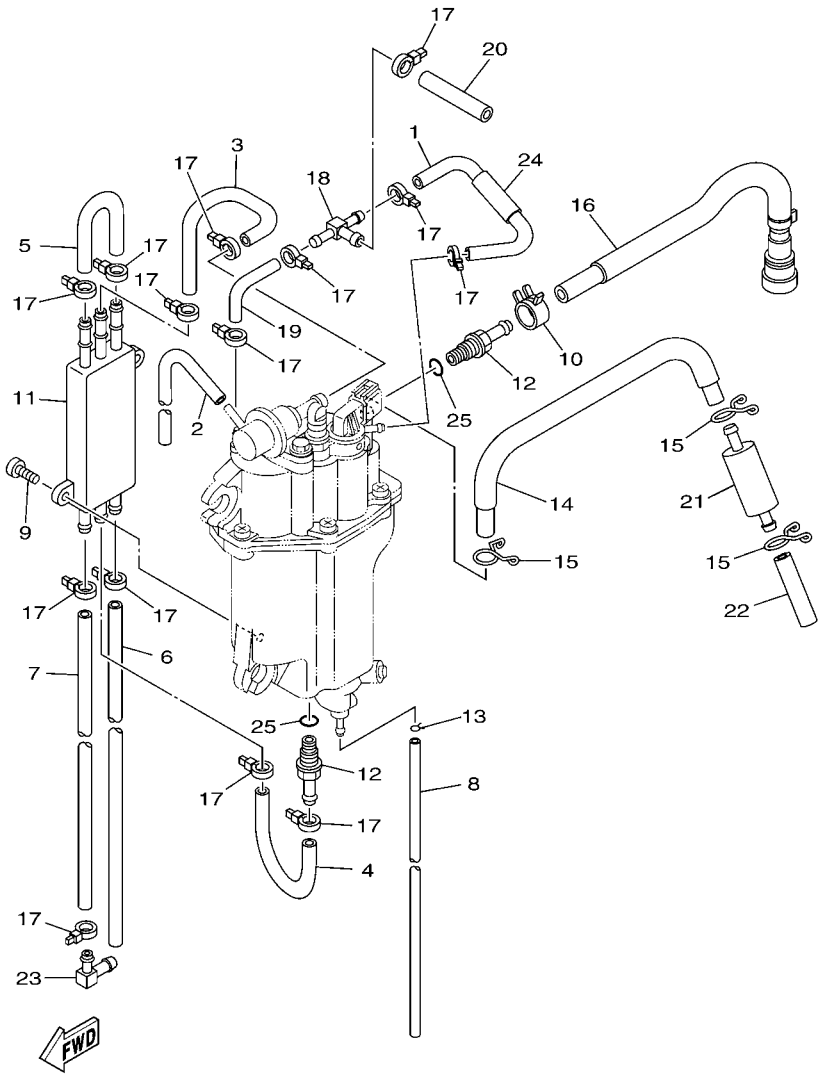

6C11010-D090

REF. NO.	PART NO. N° PIECES	DESCRIPTION DESCRIPTION	6C21	6C61				REMARKS REMARQUES
1	6C5–13546–00	HOSE 2 DURITE 2	1	1				
2	6C5–13542–00	HOSE, VACUUM SENSING 1 DURITE 1	1	1				
3	6C5–24321–00	PIPE 10 DURITE 10	1	1				
4	6C5–24322–00	PIPE 11 DURITE 11	1	1				
5	6C5–24323–00	PIPE 12 DURITE 12	1	1				
6	6C5–24324–00	PIPE 13 (L150) DURITE 13 (L150)	1	1				
7	6C5–24325–00	PIPE 14 (L110) DURITE 14 (L110)	1	1				
8	6C5–14149–00	PIPE (L200) DURITE (L200)	1	1				
9	6C5–24444–00	SCREW VIS	2	2				
10	6C5–13577–00	CLIP AGRAFE	1	1				
11	6C5–21841–00	COOLER RADIATEUR	1	1				
12	6C5–14251–00	NIPPLE RACCORD	2	2				
13	6C5–2411M–00	CLIP JONC	1	1				
14	6C5–14148–00	PIPE DURITE	1	1				
15	6C5–24387–00	CLIP SANDOW	3	3				
16	6C5–13974–00	PIPE, FUEL 4 TUBE 4, CARBURANT	1	1				
17	90465–11M10	CLAMP BRIDE	14	14				
18	6C5–24379–00	PIPE, JOINT 4 DURITE RACCORDEMENT 4	1	1				
19	6C5–13545–00	HOSE 1 DURITE 1	1	1				
20	6C5–13547–00	HOSE 3 DURITE 3	1	1				
21	6C5–24251–00	STRAINER 1 FILTRE 1	1	1				
22	6C5–2451B–00	HOSE, FUEL INLET DURITE	1	1				
23	6C5–1410F–00	CONNECTOR CONNECTEUR	1	1				
24	6C5–13548–00	HOSE, AIR 4 DURITE, A AIR 4	1	1				
25	6C5–13739–00	O-RING JOINT TORIQUE	2	2				

FIG. 10 OIL PUMP POMPE A HUILE

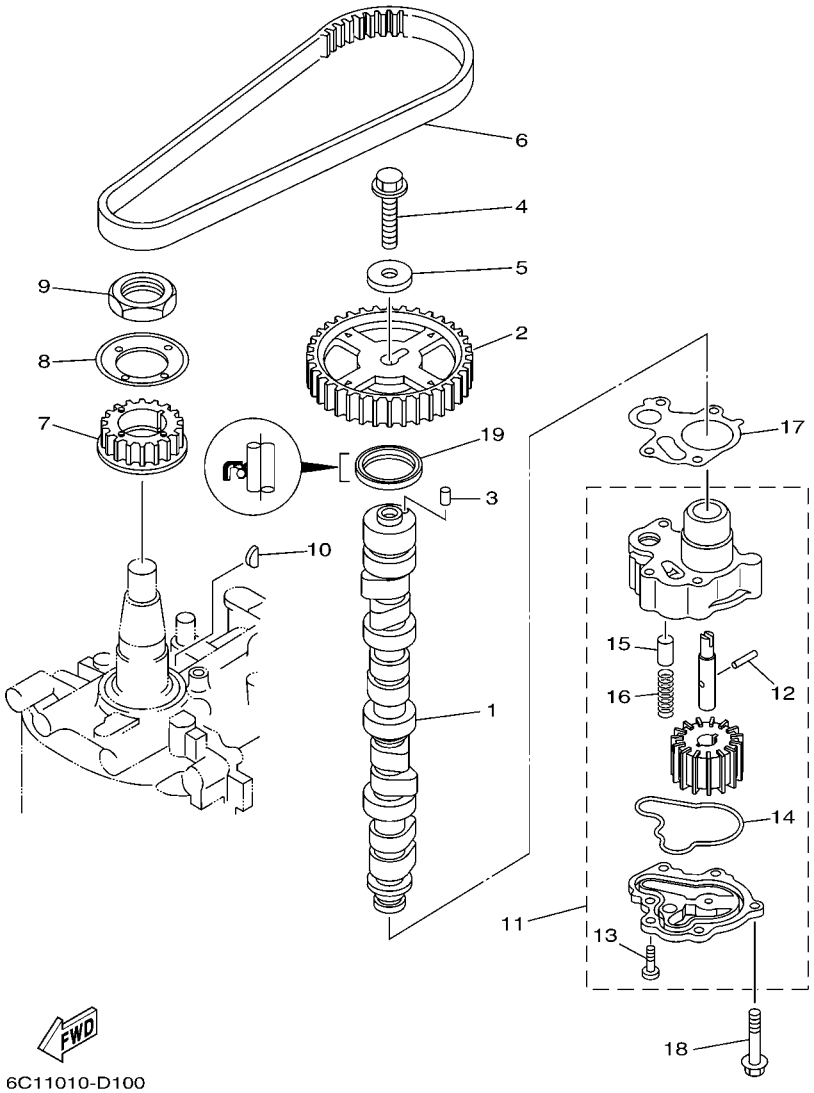

REF. NO.	PART NO. N° PIECES	DESCRIPTION DESCRIPTION	6C21	6C61				REMARKS REMARQUES
1	6C5–12171–00	CAMSHAFT 1 ARBRE A CAMES 1	1	1				
2	6C5–11537–00	GEAR, DRIVEN PIGNON SECONDAIRE	1	1				
3	93605–17002	PIN, DOWEL AXE	1	1				
4	95817–10035	BOLT, FLANGE BOULON, A COLLERETTE	1	1				
5	90201–10144	WASHER, PLATE RONDELLE, PLATE	1	1				
6	6C5–46241–00	V-BELT COURROIE TRAPEZOIDALE	1	1				
7	6C5–11536–00	GEAR, DRIVE ENGRENAGE, MENANT	1	1				
8	62Y–11557–00	WASHER 1 RONDELLE 1	1	1				
9	90170–35008	NUT ECROU	1	1				
10	90280–03M01	KEY, WOODRUFF CLAVETTE, DEMI-LUNE	1	1				
11	6C5–13300–00	OIL PUMP ASSY POMPE A HUILE COMPLETE	1	1				
12	93603–17070	.PIN, DOWEL .CLAVETTE	1	1				
13	98580–06016	.SCREW, PAN HEAD .VIS	2	2				
14	6C5–13142–00	.GASKET .JOINT	1	1				
15	6G8–11577–00	.PLUNGER, RELIEF .PLONGEUR DE SECURITE	1	1				
16	90501–6C500	.SPRING, COMPRESSION .RESSORT, COMPRESSION	1	1				
17	6C5–13329–00	GASKET, PUMP COVER JOINT, COUVERCLE DE POMPE	1	1				
18	90119–06025	BOLT, WITH WASHER BOULON, AVEC RONDELLE	4	4				
19	93102–37M40	OIL SEAL JOINT SPY	1	1				

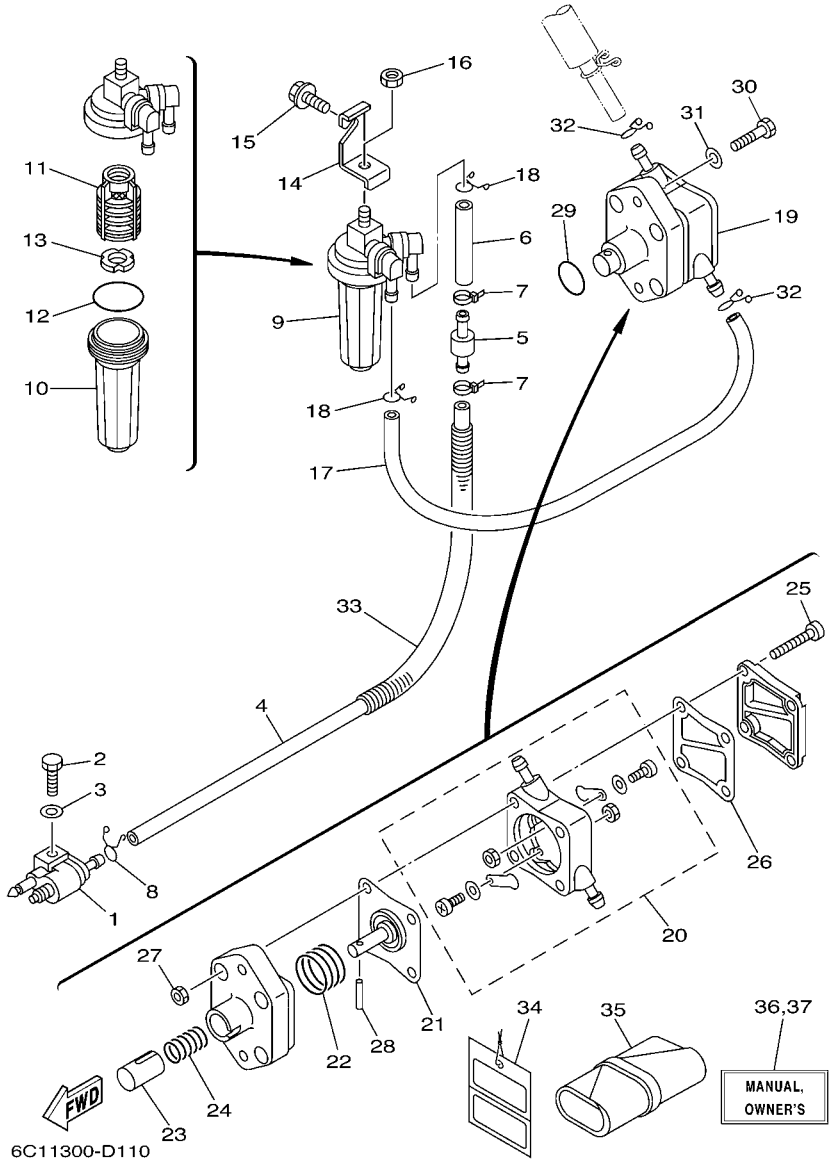

FIG. 11 FUEL CARBURANT

REF. NO.	PART NO. N° PIECES	DESCRIPTION DESCRIPTION	6C21	6C61				REMARKS REMARQUES
1	6G1–24304–02	FUEL PIPE JOINT COMP. 1 DURITE RACCORDEMT. A ESSENCE	1	1				
2	97095–06025	BOLT BOULON	1	1				
3	92995–06600	WASHER RONDELLE	1	1				
4	90445–10020	HOSE (L590) DURITE (L590)	1	1				
5	67F–24377–00	PIPE, JOINT 3 DURITE RACCORDEMENT 3	1	1				
6	90445–13M14	HOSE (L70) DURITE (L70)	1	1				
7	90465–11M10	CLAMP BRIDE	2	2				
8	90467–09M17	CLIP JONC	1	1				
9	68V–24560–01	FILTER ASSY ENS FILTRE	1	1				
10	68V–24521–01	.CUP, FILTER .CUVETTE, FILTRE	1	1				
11	68V–24563–00	.ELEMENT, FILTER .ELEMENT, FILTRE	1	1				
12	93210–32738	.O-RING .JOINT TORIQUE	1	1				
13	68V–24469–01	.FLOAT, WATER LEVEL .FLOTTEUR	1	1				
14	6C5–24566–00	BRACKET, FILTER SUPPORT, FILTRE	1	1				
15	95895–08016	BOLT, FLANGE BOULON	1	1				
16	95380–08600	NUT ECROU	1	1				
17	90445–13M36	HOSE (L350) DURITE (L350)	1	1				
18	90467–10M04	CLIP JONC	2	2				
19	6C5–24410–00	FUEL PUMP ASSY POMPE A ESSENCE	1	1				
20	6C5–24415–00	.BODY 4 .CORPS 4	1	1				
21	62Y–24411–02	.DIAPHRAGM .DIAPHRAGME	1	1				
22	62Y–24423–00	.SPRING, DIAPHRAGM .RESSORT, DIAPHRAGME	1	1				
23	62Y–13131–00	.PLUNGER .PLONGEUR	1	1				
24	62Y–24454–00	.SPRING .RESSORT	1	1				
25	62Y–24444–01	.SCREW .VIS	4	4				
26	6C5–24471–00	.DIAPHRAGM .DIAPHRAGME	1	1				
27	95380–05600	.NUT .ECROU	4	4				

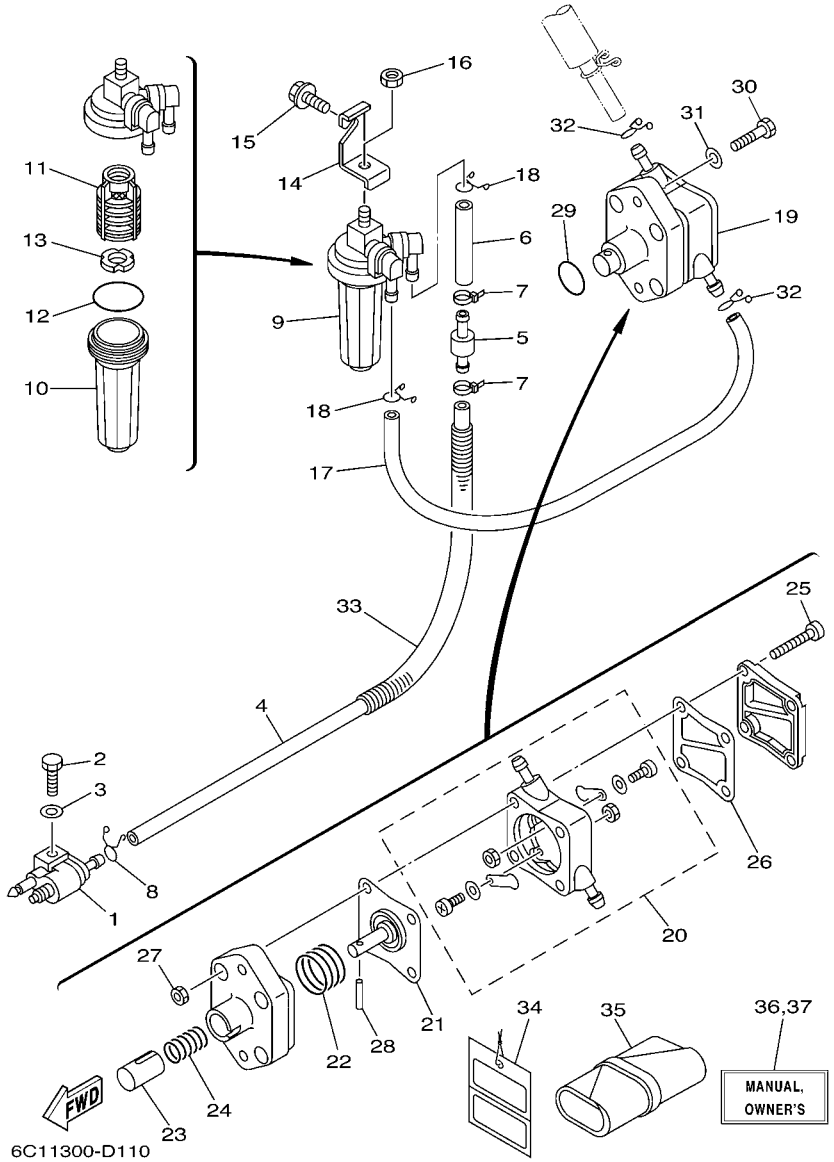

FIG. 11 FUEL CARBURANT

REF. NO.	PART NO. N° PIECES	DESCRIPTION DESCRIPTION	6C21	6C61				REMARKS REMARQUES
28	62Y–24374–01	.PIN .PIN	1	1				
29	93210–24M79	O-RING JOINT TORIQUE	1	1				
30	97095–06030	BOLT BOULON	2	2				
31	92995–06600	WASHER RONDELLE	2	2				
32	90467–10M04	CLIP JONC	2	2				
33	90446–14M62	HOSE (L320) DURITE (L320)	1	1				
34	61H–2819R–31	TAG, WARNING ETIQUETTE, AVERTISSEMENT	1	1				
35	6C5–28100–00	TOOL KIT TROUSSE A OUTILS	1	1				
36	6C1–28199–70–E0	MANUAL,OWNER'S MANUEL D'UTILISATION	1	1				UR (E) UR (E)
	6C1–28199–70–F0	MANUAL,OWNER'S MANUEL D'UTILISATION	1	1				UR (F) UR (F)
	6C1–28199–70–S0	MANUAL,OWNER'S MANUEL D'UTILISATION	1	1				UR (ES) UR (ES)
	6C1–28199–70–G0	MANUAL,OWNER'S MANUEL D'UTILISATION	1	1				UR (D) UR (D)
	6C1–28199–70–D0	MANUAL,OWNER'S MANUEL D'UTILISATION	1	1				UR (NL) UR (NL)
	6C1–28199–70–H0	MANUAL,OWNER'S MANUEL D'UTILISATION	1	1				UR (I) UR (I)
37	6C1–28199–80–K0	MANUAL,OWNER'S MANUEL D'UTILISATION	1	1				UR (DK) UR (DK)
	6C1–28199–80–R0	MANUAL,OWNER'S MANUEL D'UTILISATION	1	1				UR (GR) UR (GR)
	6C1–28199–80–P0	MANUAL,OWNER'S MANUEL D'UTILISATION	1	1				UR (P) UR (P)
	6C1–28199–80–N0	MANUAL,OWNER'S MANUEL D'UTILISATION	1	1				UR (N) UR (N)
	6C1–28199–80–M0	MANUAL,OWNER'S MANUEL D'UTILISATION	1	1				UR (S) UR (S)
	6C1–28199–80–L0	MANUAL,OWNER'S MANUEL D'UTILISATION	1	1				UR (SF) UR (SF)

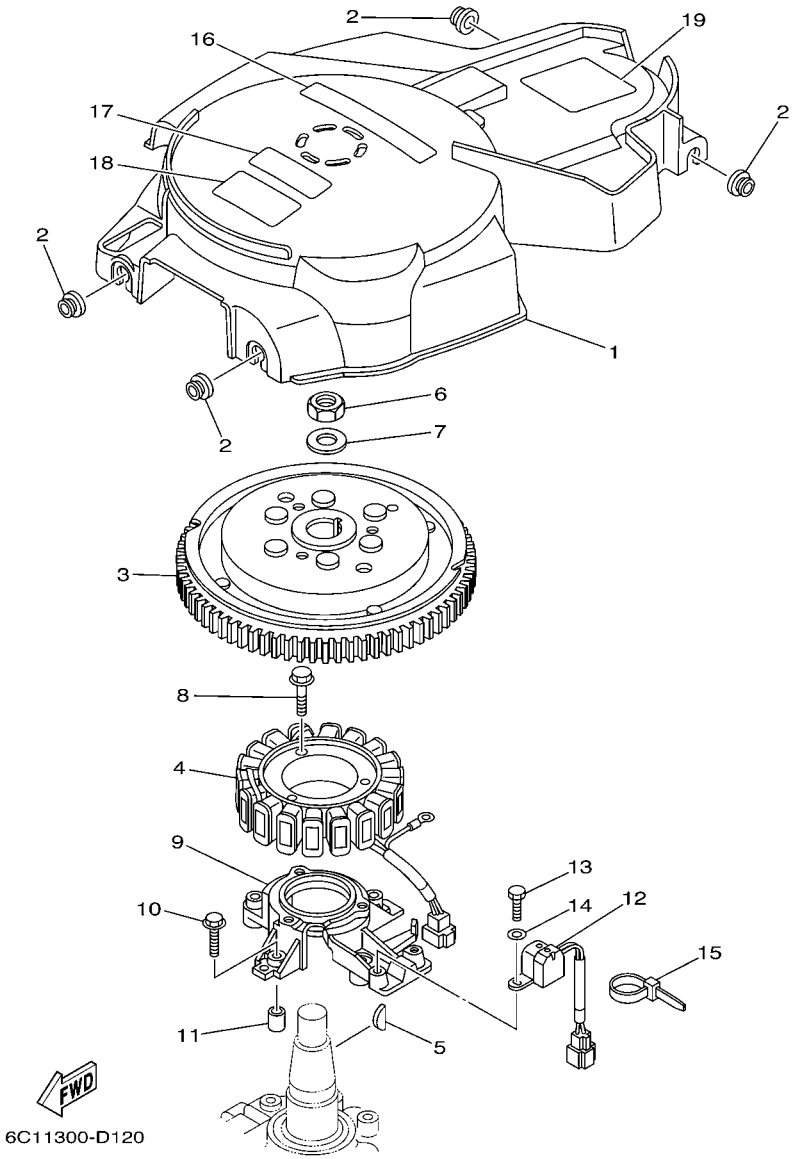

FIG. 12 GENERATOR GENERATRICE

REF. NO.	PART NO. N° PIECES	DESCRIPTION DESCRIPTION	6C21	6C61				REMARKS REMARQUES
1	6C5–81337–00	COVER, FLYWHEEL COUVERCLE, VOLANT	1	1				
2	90480–12072	GROMMET PASSE-FIL	4	4				
3	6C5–81450–00	ROTOR ASSY ROTOR COMPLET	1	1				
4	6C5–81410–00	STATOR ASSY STATOR COMPLET	1	1				
5	6H4–11545–00	KEY, WOODRUFF CLAVETTE, DEMI-LUNE	1	1				
6	90170–20137	NUT ECROU	1	1				
7	90201–21M18	WASHER, PLATE RONDELLE, PLATE	1	1				
8	95023–06030	BOLT BOULON, A COLLERETTE	3	3				
9	6C5–85561–00–94	BASE, MAGNETO BASE, MAGNETO	1	1				
10	95023–06030	BOLT BOULON, A COLLERETTE	4	4				
11	99530–08012	PIN, DOWEL GOUJON, D'ASSEMBLAGE	2	2				
12	62Y–85580–00	COIL, PULSER BOBINE, PULSEUR	1	1				
13	97095–05012	BOLT BOULON	2	2				
14	92995–05600	WASHER RONDELLE	2	2				
15	90465–13M97	CLAMP BRIDE	1	1				
16	6C5–13437–60	MARK, CAUTION MAKER	1	1				
17	6A1–83625–41	MARK 5 ETIQUETTE 5	1	1				
18	6A1–83625–51	MARK 5 ETIQUETTE 5	1	1				
19	62Y–83626–00	MARK 6 MARK 6	1	1				

FIG. 13 ELECTRICAL 1 PARTIE ELECTRIQUE 1

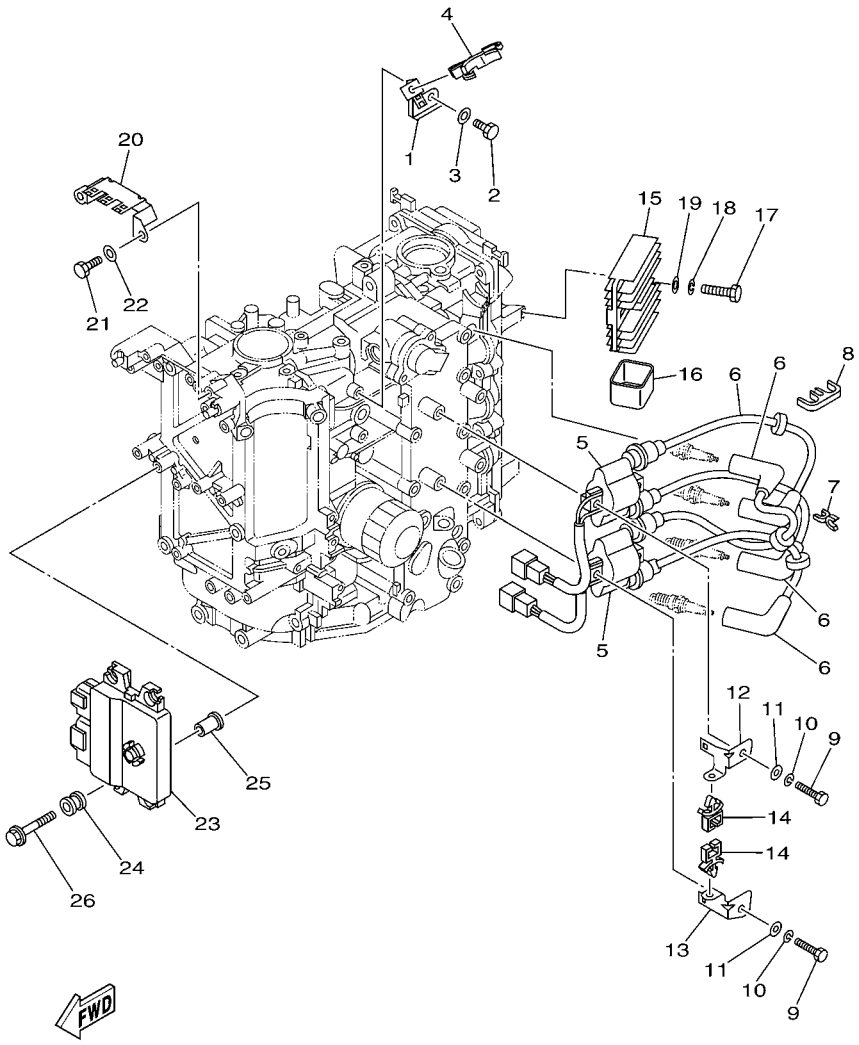

REF. NO.	PART NO. N° PIECES	DESCRIPTION DESCRIPTION	6C21	6C61				REMARKS REMARQUES
1	6C5–85525–00	COVER CAPUCHON	1	1				
2	97095–06014	BOLT BOULON	1	1				
3	92995–06600	WASHER RONDELLE	1	1				
4	90464–18246	CLAMP BRIDE	1	1				
5	63P–82310–01	IGNITION COIL ASSY BOBINE D'ALLUMAGE	2	2				
6	6C5–82340–00	HIGH TENSION CORD ASSY 1 CABLE HAUTE TENSION 1	4	4				
7	90464–07M41	CLAMP BRIDE	1	1				
8	67F–82361–00	CLAMP, CORD COLLIER, CORDON	1	1				
9	97095–06030	BOLT BOULON	4	4				
10	92995–06100	WASHER, SPRING RONDELLE, GROWER	4	4				
11	92995–06600	WASHER RONDELLE	4	4				
12	6C5–82316–00	BRACKET, IGNITION COIL SUPPORT, BOBINE D'ALLUMAGE	1	1				
13	6C5–82316–10	BRACKET, IGNITION COIL SUPPORT, BOBINE D'ALLUMAGE	1	1				
14	90464–07M56	CLAMP BRIDE	2	2				
15	68V–81960–00	RECTIFIER & REGULATOR ASSY REDRESSEUR REGULATEUR CPLT	1	1				
16	6C5–81961–00	COVER COUVERCLE	1	1				
17	97095–06025	BOLT BOULON	2	2				
18	92995–06100	WASHER, SPRING RONDELLE, GROWER	2	2				
19	92995–06600	WASHER RONDELLE	2	2				
20	6C5–82171–00	STAY, FUSE BOX SUPPORT, BOITE A FUSIBLES	1	1				
21	97095–06014	BOLT BOULON	2	2				
22	92995–06600	WASHER RONDELLE	2	2				
23	6C1–8591A–00	ENGINE CONTROL UNIT ASSY BLOC DE CONTROL	1					
	6C5–8591A–00	ENGINE CONTROL UNIT ASSY BLOC DE CONTROL		1				
24	6C5–82317–00	DAMPER, IGNITION COIL AMORTISSEUR, BOBINE D'ALLUM	4	4				
25	624–42542–00	PIPE TUYAU	4	4				
26	90119–06M59	BOLT, WITH WASHER BOULON, AVEC RONDELLE	4	4				

FIG. 14 ELECTRICAL 2 — PARTIE ELECTRIQUE 2

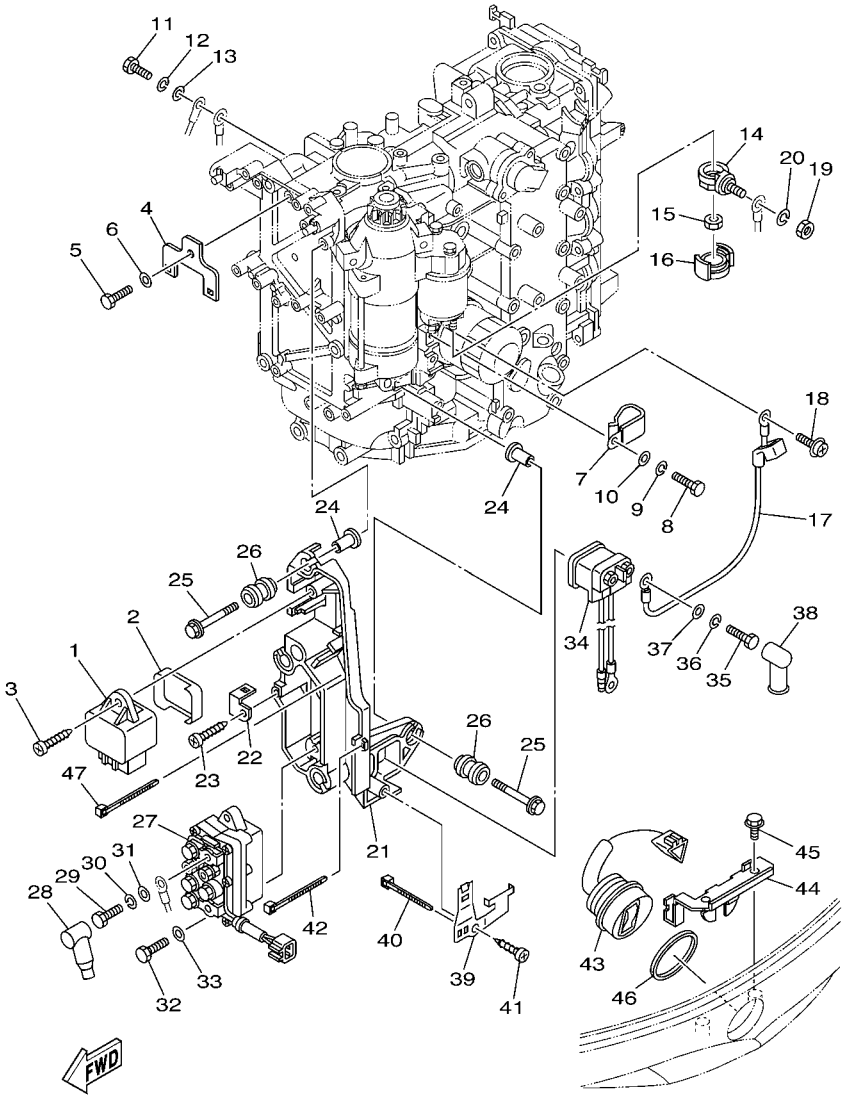

6C21100-D150

REF. NO.	PART NO. N° PIECES	DESCRIPTION DESCRIPTION	6C21	6C61				REMARKS REMARQUES
1	60E–81950–00	RELAY ASSY RELAIS COMPLET	1	1				
2	6C5–81336–00	GROMMET OEILLET CAOUTCHOUC	1	1				
3	97780–60620	SCREW, TAPPING VIS, TETE BOMBEE	1	1				
4	6C5–8257V–00	PLATE, CONNECTOR PLAQUE, CONNECTEUR	1	1				
5	97095–06014	BOLT BOULON	1	1				
6	92995–06600	WASHER RONDELLE	1	1				
7	90465–05M87	CLAMP BRIDE	1	1				
8	97095–06020	BOLT BOULON	4	4				
9	92995–06100	WASHER, SPRING RONDELLE, GROWER	4	4				
10	92995–06600	WASHER RONDELLE	4	4				
11	97095–06020	BOLT BOULON	1	1				
12	92995–06100	WASHER, SPRING RONDELLE, GROWER	1	1				
13	92995–06600	WASHER RONDELLE	1	1				
14	60V–81925–00	TERMINAL BORNE	1	1				
15	90179–08003	NUT ECROU	1	1				
16	68F–82582–00	COVER, WIRE HARNESS COUVERCLE, FAISCEAU DE FILS	1	1				
17	6C5–81815–00	CORD, STARTER MOTOR FIL, DEMARREUR ELECTRIQUE	1	1				
18	90159–04005	SCREW, WITH WASHER VIS, AVEC RONDELLE	1	1				
19	95333–08600	NUT ECROU	1	1				
20	92903–08100	WASHER, SPRING RONDELLE, GROWER	1	1				
21	6C5–81948–00	BRACKET JOINT TORIQUE	1	1				
22	6C5–85548–00	HOLDER SUPPORT	1	1				
23	97780–60620	SCREW, TAPPING VIS, TETE BOMBEE	1	1				
24	624–42542–00	PIPE TUYAU	4	4				
25	90119–06M59	BOLT, WITH WASHER BOULON, AVEC RONDELLE	4	4				
26	6A0–82317–00	DAMPER, IGNITION COIL AMORTISSEUR, BOBINE D'ALLUM	4	4				
27	63P–81950–00	RELAY ASSY RELAIS COMPLET	1	1				

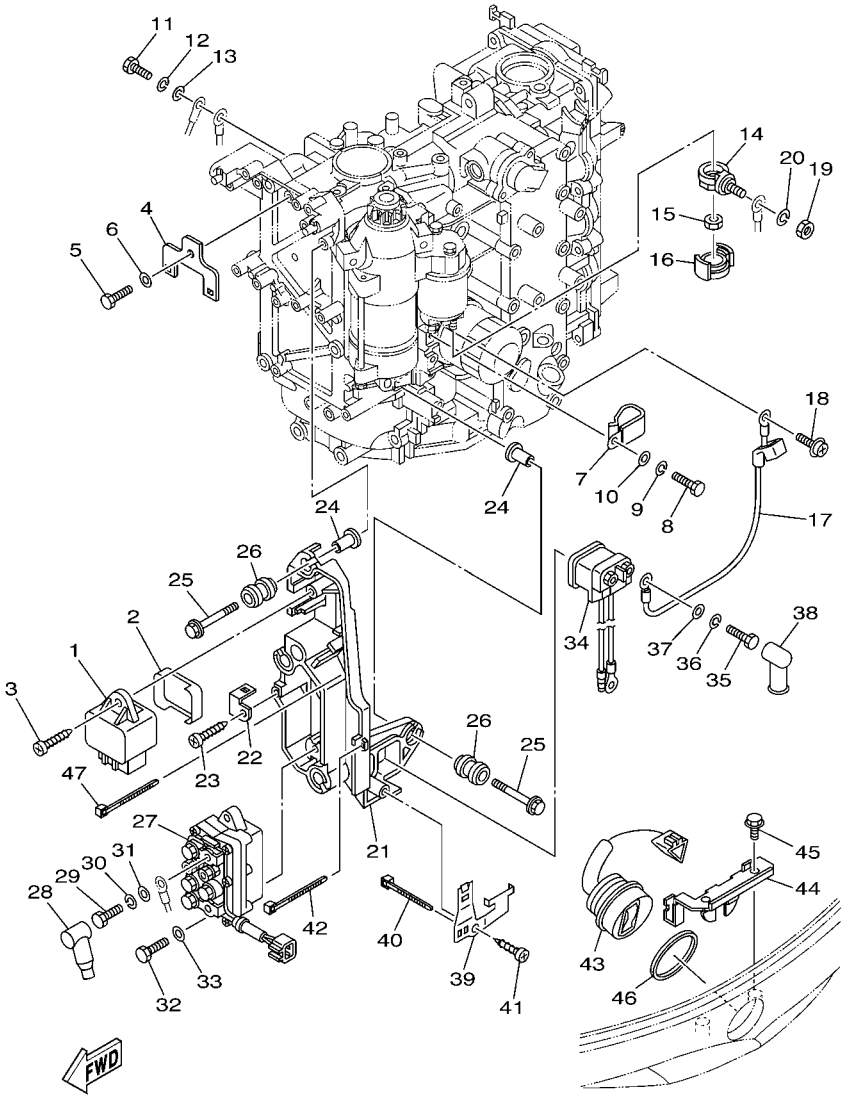

FIG. 14 ELECTRICAL 2 — PARTIE ELECTRIQUE 2

REF. NO.	PART NO. N° PIECES	DESCRIPTION DESCRIPTION	6C21	6C61				REMARKS REMARQUES
28	682–82119–01	COVER, LEAD WIRE GARNITURE, FIL	2	2				
29	97095–06010	BOLT BOULON	2	2				
30	92995–06100	WASHER, SPRING RONDELLE, GROWER	2	2				
31	92995–06600	WASHER RONDELLE	2	2				
32	97013–06020	BOLT BOULON	2	2				
33	92903–06600	WASHER, PLATE RONDELLE, PLATE	2	2				
34	68V–8194A–00	RELAY RELAIS	1	1				
35	97095–06010	BOLT BOULON	2	2				
36	92995–06100	WASHER, SPRING RONDELLE, GROWER	2	2				
37	92995–06600	WASHER RONDELLE	2	2				
38	6G5–82119–00	COVER, LEAD WIRE GARNITURE, FIL	2	2				
39	6C5–81953–00	STAY, RELAY SUPPORT, RELAIS	1	1				
40	90465–11M10	CLAMP BRIDE	1	1				
41	97780–60620	SCREW, TAPPING VIS, TETE BOMBEE	1	1				
42	90465–13M97	CLAMP BRIDE	1	1				
43	63D–82563–10	TRIM & TILT SWITCH ASSY INCLINER ET PARER COMMUTATEUR	1	1				
44	6C5–83614–00	BRACKET SUPPORT	1	1				
45	90109–06M86	BOLT BOULON	2	2				
46	6E5–82587–00	GASKET JOINT	1	1				
47	90465–13M97	CLAMP BRIDE	1	1				

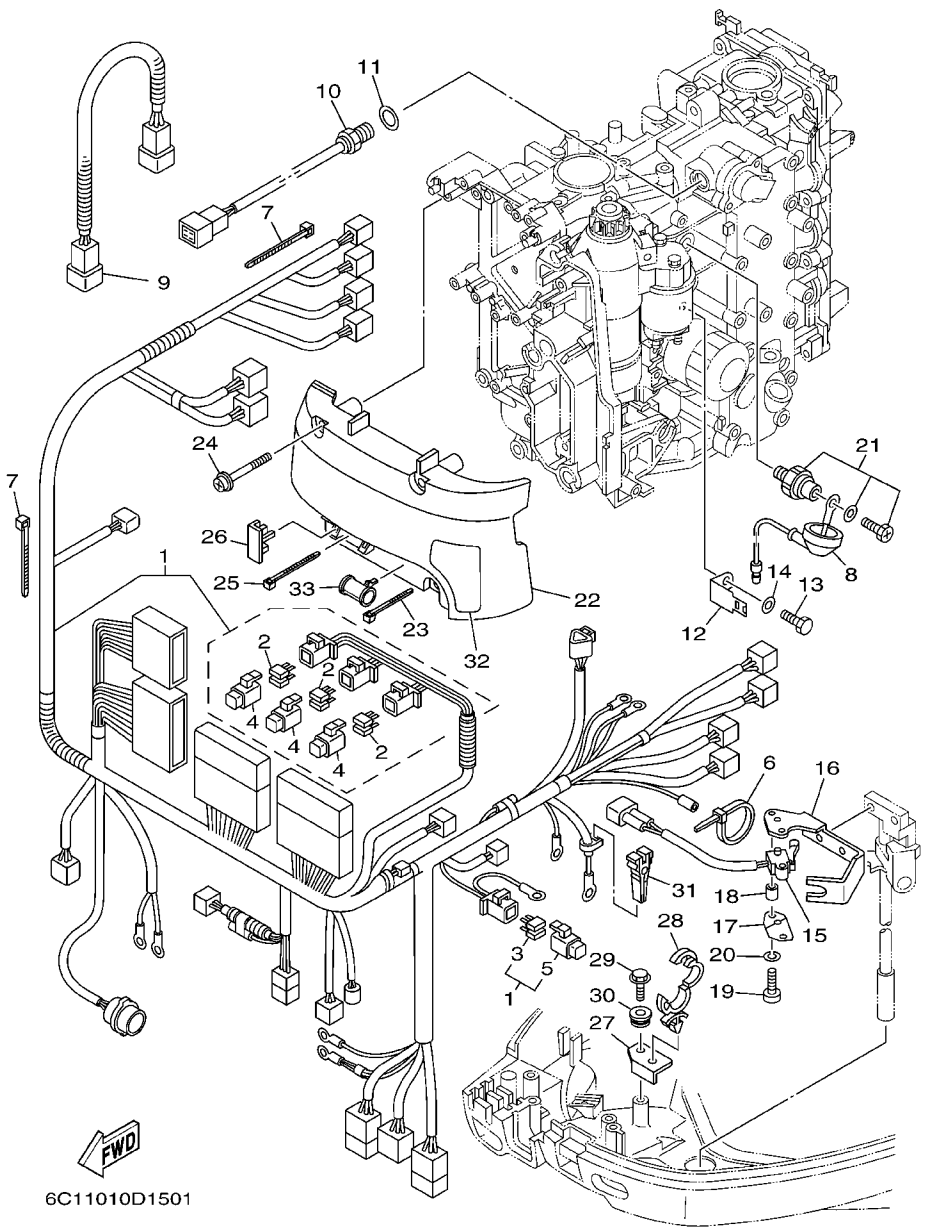

FIG. 15 ELECTRICAL 3 — PARTIE ELECTRIQUE 3

REF. NO.	PART NO. N° PIECES	DESCRIPTION DESCRIPTION	6C21	6C61				REMARKS REMARQUES
1	6C5–82590–10	WIRE HARNESS ASSY FAISCEAU DE FILS COMPLET	1	1				
2	67F–82151–00	.FUSE (20A) .FUSIBLE (20A)	6	6				
3	67F–82151–10	.FUSE (30A) .FUSIBLE (30A)	2	2				
4	67F–8215B–10	.CAP (YELLOW) .BOUCHON (YELLOW)	3	3				
5	67F–8215B–20	.CAP (GREEN) .BOUCHON (GREEN)	1	1				
6	90465–13M24	CLAMP BRIDE	1	1				
7	90465–13M11	CLAMP BRIDE	2	2				
8	68V–81315–00	LEAD WIRE ASSY FIL	1	1				
9	6C5–82553–00	EXTENSION, WIRE LEAD EXTENSION, FAISCEAU	1	1				
10	6C5–85790–00	THERMOSENSOR ASSY SENSITOMETRE	1	1				
11	90430–14115	GASKET JOINT	1	1				
12	6C5–82388–00	PLATE PLAQUETTE	1	1				
13	97095–06014	BOLT BOULON	1	1				
14	92995–06600	WASHER RONDELLE	1	1				
15	60V–8259F–00	SWITCH ASSY COMMUTATEUR	1	1				
16	6C5–82554–00	STAY, NEUTRAL SWITCH SUPPORT, CONT DE POINT-MORT	1	1				
17	61A–82588–01	PLATE PLAQUE	1	1				
18	90387–04001	COLLAR COLLERETTE	1	1				
19	97885–04016	SCREW, PAN HEAD VIS, A ENCOCHE	2	2				
20	92995–04100	WASHER RONDELLE	2	2				
21	64J–82504–00	OIL PRESSURE SWITCH ASSY CONTACTEUR DE PRESSION D'HUILE	1	1				
22	6C5–81942–00	COVER COUVERCLE	1	1				
23	90465–13M39	CLAMP BRIDE	1	1				
24	90159–06M14	SCREW, WITH WASHER VIS, AVEC RONDELLE	4	4				
25	90465–13M24	CLAMP BRIDE	1	1				
26	6C5–82176–00	DAMPER AMORTISSEUR	2	2				
27	6C5–42811–00	STAY SUPPORT	1	1				

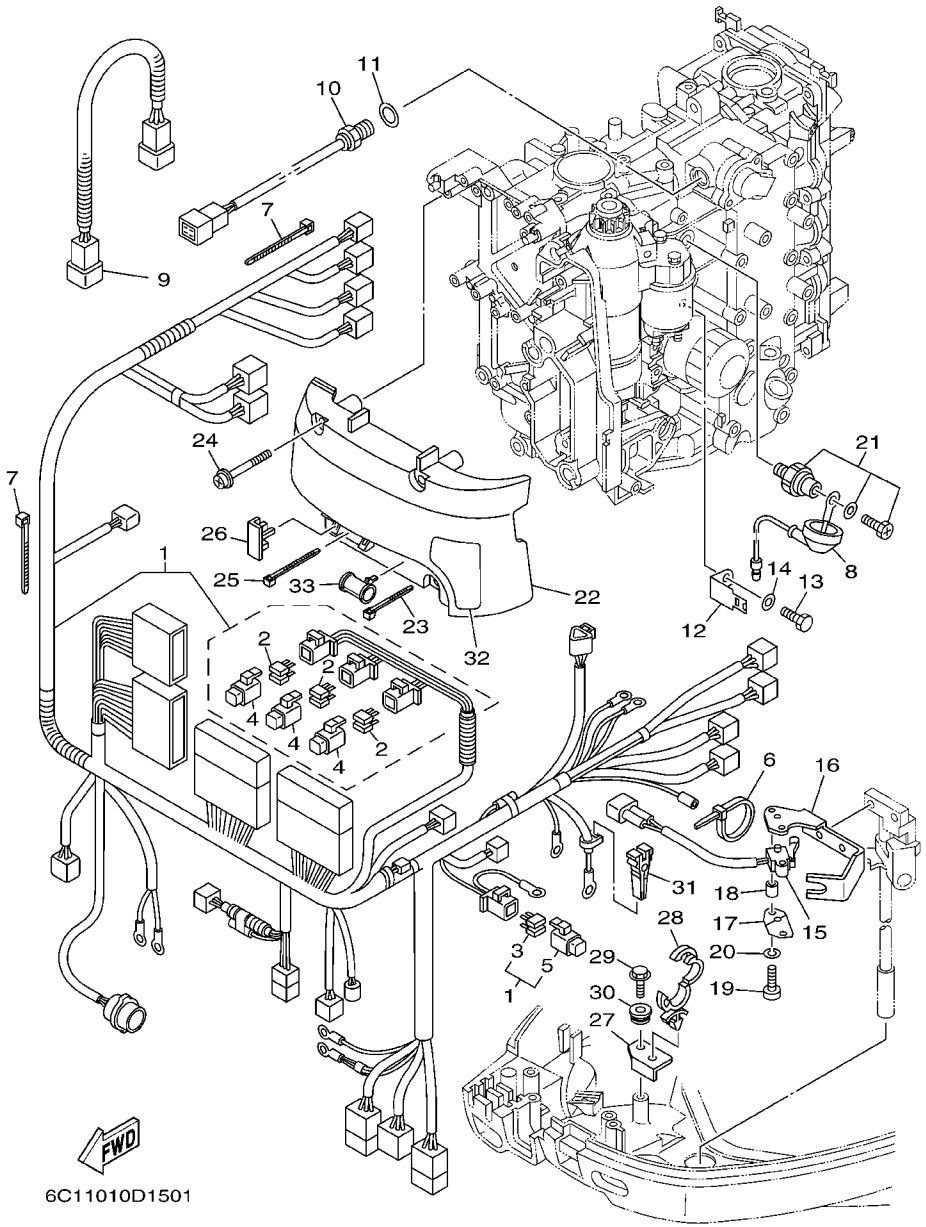

FIG. 15 ELECTRICAL 3 — PARTIE ELECTRIQUE 3

REF. NO.	PART NO. N° PIECES	DESCRIPTION DESCRIPTION	6C21	6C61				REMARKS REMARQUES
28	90464–18246	CLAMP BRIDE	1	1				
29	90109–06M80	BOLT BOULON	1	1				
30	90480–12072	GROMMET PASSE-FIL	1	1				
31	67F–2812A–00	PULLER, FUSE TENDEUR, FUSIBLE	1	1				
32	6C5–81919–00	GRAPHIC, REGULATOR ADHESIF, REGULATEUR	1	1				
33	6C5–8252R–00	DAMPER AMORTISSEUR	1	1				6C2:1001728-,6C6:1001973-

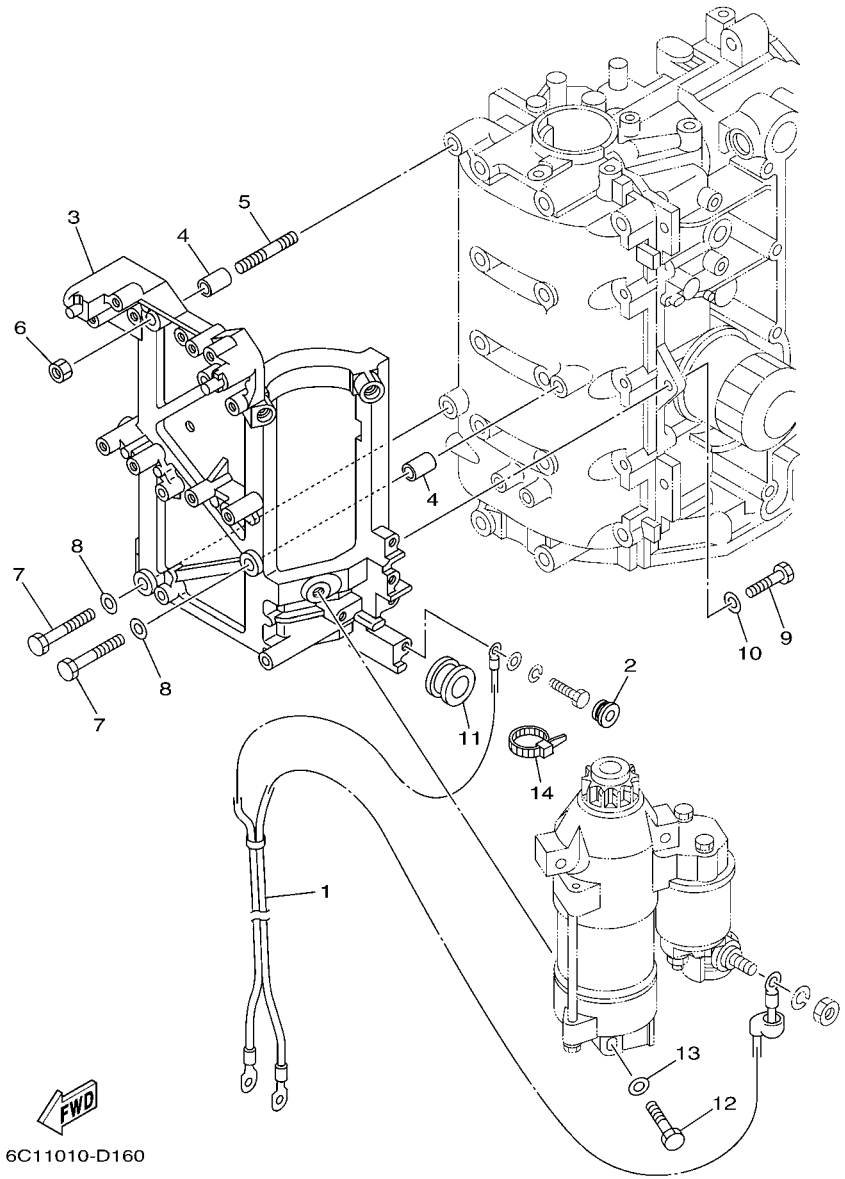

FIG. 16 ELECTRICAL 4 — PARTIE ELECTRIQUE 4

REF. NO.	PART NO. N° PIECES	DESCRIPTION DESCRIPTION	6C21	6C61				REMARKS REMARQUES
1	6C5–82105–00	WIRE HARNESS FAISCEAU DE FILS	1	1				
2	90480–12072	GROMMET PASSE-FIL	1	1				
3	6C5–81822–00–94	BRACKET, STARTING MOTOR SUPPORT, DEMARREUR ELECTRIQUE	1	1				
4	99590–10114	PIN, DOWEL GOUJON, D'ASSEMBLAGE	2	2				
5	95680–08330	BOLT, STUD GOUJON	1	1				
6	95380–08600	NUT ECROU	1	1				
7	97095–08035	BOLT BOULON	2	2				
8	92995–08600	WASHER RONDELLE	2	2				
9	97095–08025	BOLT BOULON	2	2				
10	92995–08600	WASHER RONDELLE	2	2				
11	90480–24003	GROMMET PASSE-FIL	1	1				
12	97013–08045	BOLT BOULON	3	3				
13	92903–08600	WASHER, PLATE RONDELLE, PLATE	3	3				
14	90465–13M18	CLAMP BRIDE	1	1				

FIG. 17 STARTING MOTOR DEMARREUR ELECTRIQUE

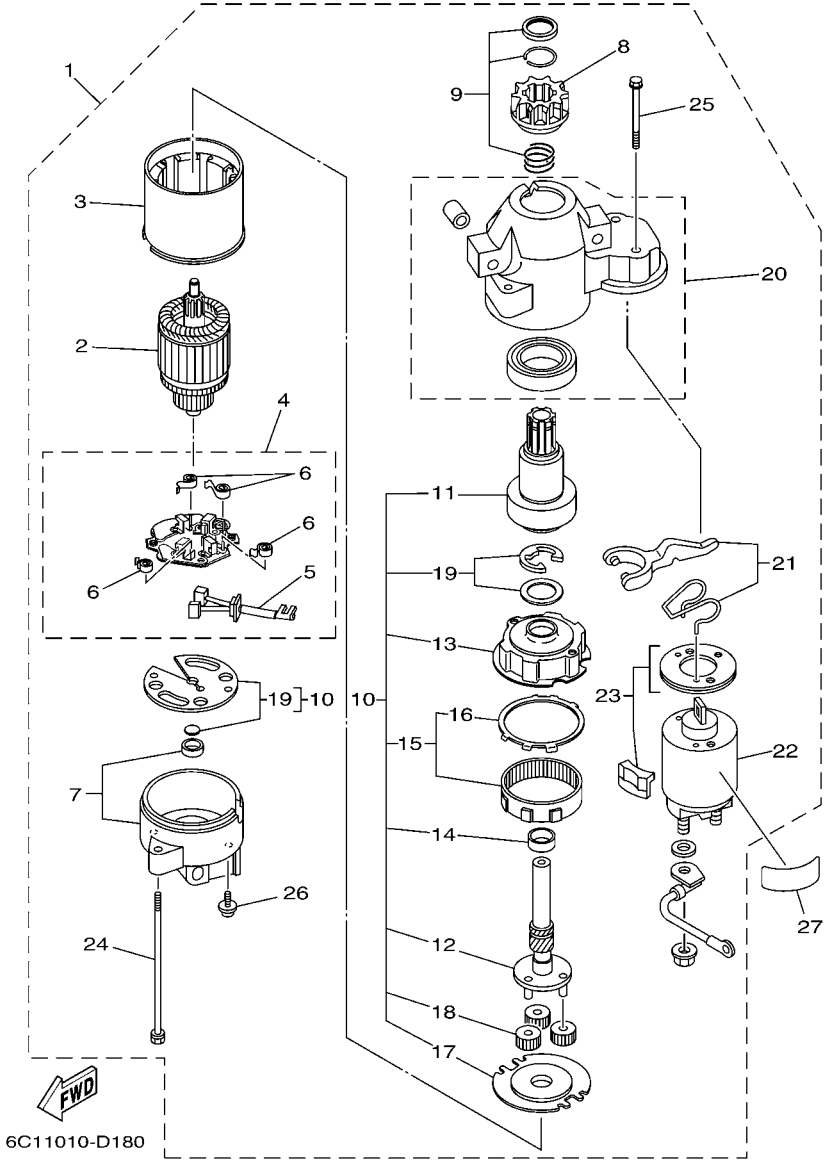

REF. NO.	PART NO. N° PIECES	DESCRIPTION DESCRIPTION	6C21	6C61				REMARKS REMARQUES
1	6C5–81800–00	STARTING MOTOR ASSY DEMARREUR ELECTRIQUE COMPLET	1	1				
2	67F–81850–00	.ARMATURE ASSY .INDUIT	1	1				
3	67F–81810–00	.STATOR ASSY .STATOR COMPLET	1	1				
4	69J–81840–00	.BRUSH HOLDER ASSY .SUPPORT DE CHARBON	1	1				
5	69J–81801–00	..BRUSH SET ..CHARBON	1	1				
6	67F–81813–00	..SPRING, BRUSH ..RESSORT, DE CHARBON	4	4				
7	68F–81820–00	.REAR BRACKET ASSY .SUPPORT ARRIERE COMPLET	1	1				
8	67F–81808–00	.PINION ASSY .PIGNON	1	1				
9	67F–81857–00	.PINION STOPPER SET .BUTEE PIGNON	1	1				
10	67F–81807–00	.GEAR ASSY, STARTING MOTOR .PIGNON, DEMARREUR ELECTRIQUE	1	1				
11	67F–81832–00	..CLUTCH, OVER RUN ..EMBRAYAGE, ROUE LIBRE	1	1				
12	67F–81836–00	..SHAFT, PINION ..AXE, PIGNON	1	1				
13	67F–81821–00	..BRACKET, CENTER 1 ..SUPPORT, CENTRE 1	1	1				
14	67F–81841–00	..BEARING ..ROULEMENT	1	1				
15	67F–81891–00	..GEAR, RING ..ROUE DENTEE	1	1				
16	67F–8183R–00	...GASKET ...JOINT	1	1				
17	67F–81830–00	..BRACKET, CENTER 2 ..SUPPORT, CENTRE 2	1	1				
18	60V–8183T–00	..GEAR, IDLER ..PIGNON, INTERMEDIAIRE	3	3				
19	67F–81809–00	..WASHER KIT ..JEU DE RONDELLES	1	1				
20	6C5–81842–00	.COVER .COUVERCLE	1	1				
21	69J–81839–00	.LEVER ASSY .LEVIER COMPLET	1	1				
22	6C5–81941–00	.STARTER RELAY ASSY .LANCEUR RELAIS (ENS.)	1	1				
23	69J–81869–00	.COVER, DUST .COUVERCLE, POUSSIERE	1	1				
24	6K7–81826–10	.BOLT .BOULON	2	2				
25	69J–81828–00	.BOLT 2 .RONDELLE, BUTEE 2	2	2				
26	67F–81846–00	.SCREW .VIS	2	2				
27	67F–83627–01	LABEL, CAUTION 7 ETIQUETTE, RECOMMANDATION 7	1	1				

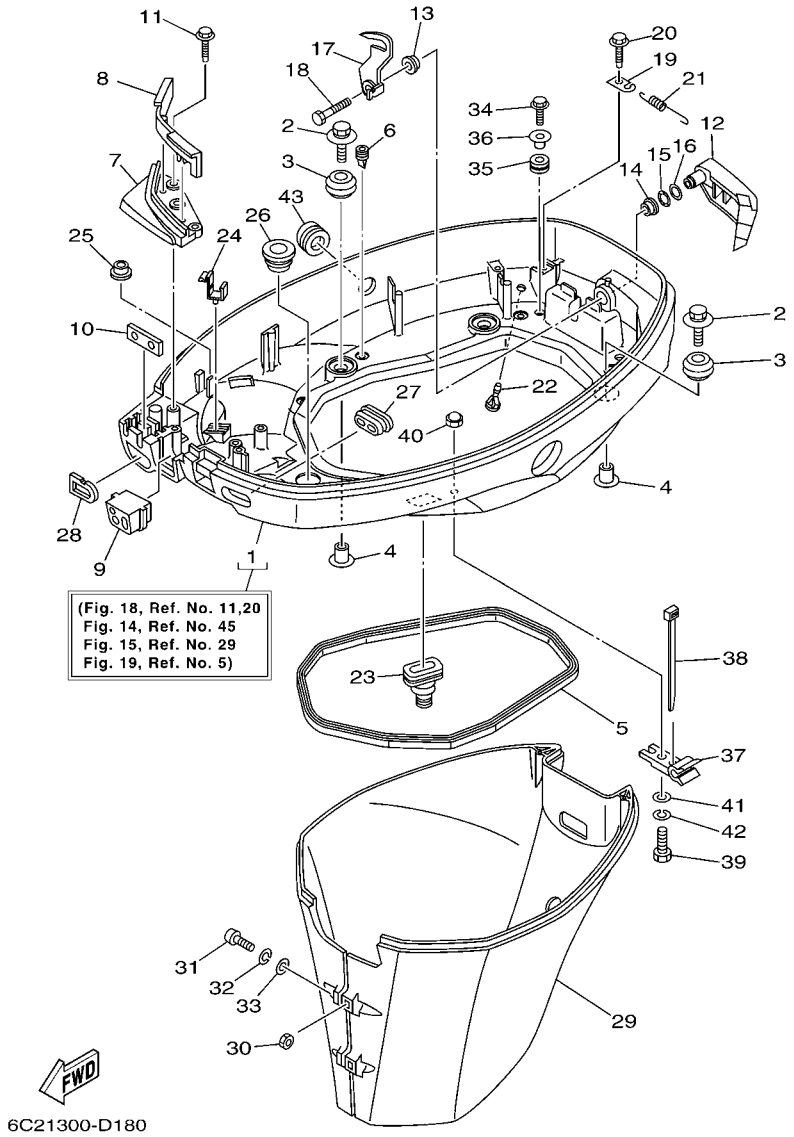

FIG. 18 BOTTOM COWLING 1 CAPOT INFERIEUR 1

REF. NO.	PART NO. N° PIECES	DESCRIPTION DESCRIPTION	6C21	6C61				REMARKS REMARQUES
1	6C5–42710–10–4D	BOTTOM COWLING ASSY ENS. EMBASE	1	1				
2	90119–06M08	BOLT, WITH WASHER BOULON, AVEC RONDELLE	4	4				
3	90480–09M12	GROMMET PASSE-FIL	4	4				
4	90387–06060	COLLAR COLLERETTE	4	4				
5	62Y–42716–00	RUBBER, SEAL 1 JOINT EN CAOUTCHOUC 1	1	1				
6	65W–42717–00	RUBBER, SEAL 2 JOINT EN CAOUTCHOUC 2	4	4				
7	6C5–42738–00–4D	PLATE, FITTING ETRIER	1	1				
8	6C5–42718–00	RUBBER, SEAL 3 JOINT	1	1				
9	6C5–42725–30	GROMMET PASSE-FIL	1	1				
10	62Y–42727–00	GROMMET PASSE-FIL	1	1				
11	90109–06M81	BOLT BOULON	3	3				
12	67C–42815–00–4D	LEVER, CLAMP LEVIER, PRESSE	1	1				
13	90386–12M37	BUSH DOUILLE	1	1				
14	90386–12MA2	BUSH DOUILLE	1	1				
15	90206–12052	WASHER, WAVE RONDELLE, ONDULEE	1	1				
16	90201–12M07	WASHER, PLATE RONDELLE, PLATE	1	1				
17	67C–42816–01	LEVER, CLAMP LEVIER, PRESSE	1	1				
18	97095–06014	BOLT BOULON	1	1				
19	66T–43144–00	HOOK, SPRING CROCHET	1	1				
20	90109–06M86	BOLT BOULON	1	1				
21	90506–18M40	SPRING, TENSION RESSORT, TENSION	1	1				
22	6H3–44391–01	NIPPLE, HOSE RACCORD D'ESSENCE	1	1				
23	6C5–42724–00	GROMMET PASSE-FIL	1	1				
24	90464–09M13	CLAMP BRIDE	1	1				
25	6E7–82317–00	DAMPER, IGNITION COIL AMORTISSEUR, BOBINE D'ALLUM	1	1				
26	68U–42727–00	GROMMET PASSE-FIL	1	1				
27	6H3–42727–00	GROMMET PASSE-FIL	1	1				

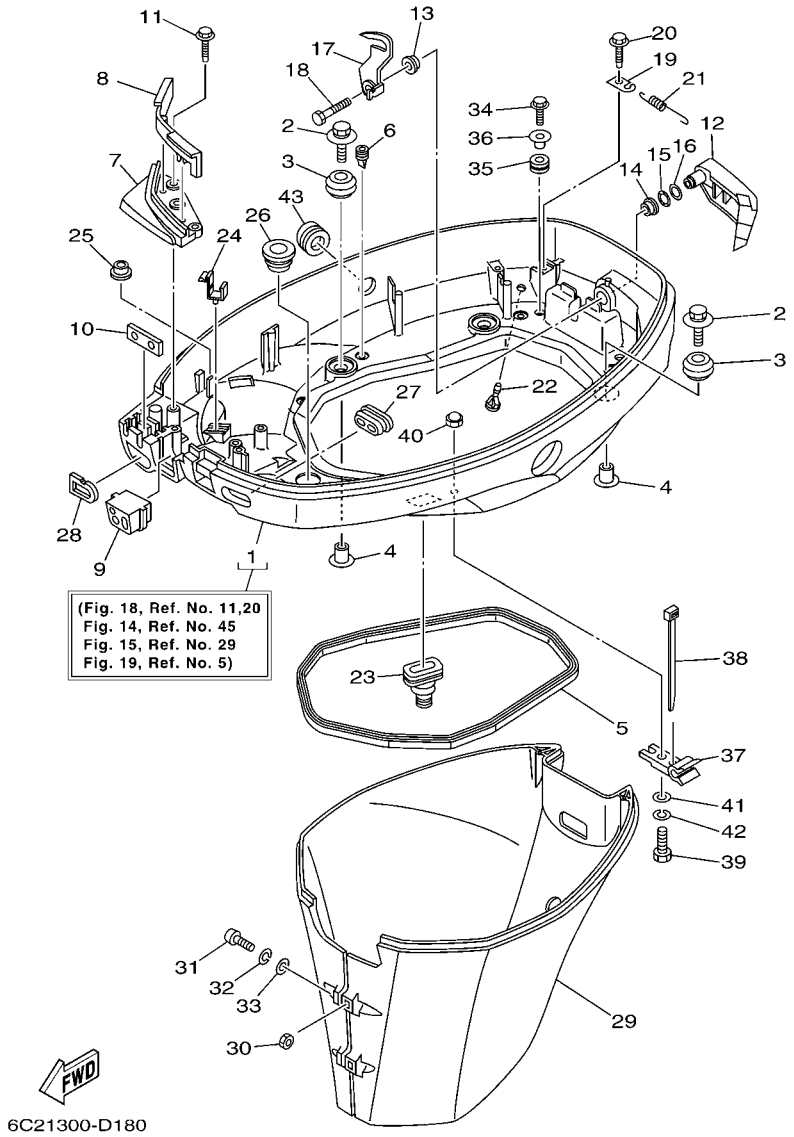

FIG. 18 BOTTOM COWLING 1 CAPOT INFERIEUR 1

REF. NO.	PART NO. N° PIECES	DESCRIPTION DESCRIPTION	6C21	6C61				REMARKS REMARQUES
28	61N–24329–00	SEAL JOINT	1	1				
29	67C–42741–10–4D	APRON CAPOT LATERAL	1	1				
30	95380–06600	NUT, HEXAGON ECROU	2	2				
31	97880–06025	SCREW, PAN HEAD VIS, TETE TRONCONIQUE	2	2				
32	92990–06100	WASHER, SPRING RONDELLE, GROWER	2	2				
33	92990–06600	WASHER, PLATE RONDELLE, PLATE	2	2				
34	90109–06M80	BOLT BOULON	2	2				
35	90480–13M24	GROMMET PASSE-FIL	2	2				
36	90387–06M43	COLLAR COLLERETTE	2	2				
37	90464–09M49	CLAMP BRIDE	1	1				
38	90465–11M10	CLAMP BRIDE	2	2				
39	97095–06020	BOLT BOULON	1	1				
40	95380–06800	NUT ECROU	1	1				
41	92990–06600	WASHER, PLATE RONDELLE, PLATE	1	1				
42	92995–06100	WASHER, SPRING RONDELLE, GROWER	1	1				
43	6C5–42726–00	GROMMET PASSE-FIL	1	1				

FIG. 19 BOTTOM COWLING 2 CAPOT INFERIEUR 2

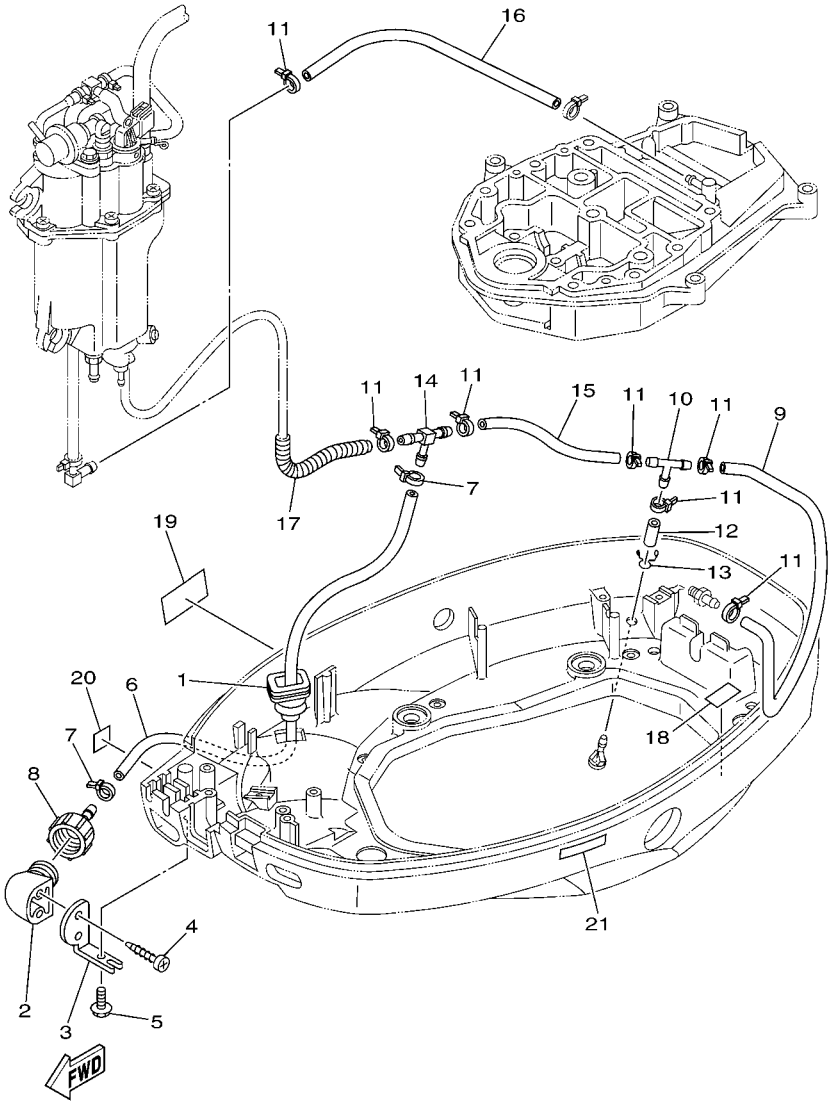

REF. NO.	PART NO. N° PIECES	DESCRIPTION DESCRIPTION	6C21	6C61				REMARKS REMARQUES
1	65W–42724–10	GROMMET PASSE-FIL	1	1				
2	68T–12572–00	ADAPTER ADAPTATEUR	1	1				
3	69W–12535–00	PLATE PLAQUE	1	1				
4	90167–06002	SCREW, TAPPING VIS, TETE FRAISEE	2	2				
5	90109–06M80	BOLT BOULON	1	1				
6	6C5–24312–00	PIPE 2 DURITE 2	1	1				
7	90465–11M10	CLAMP BRIDE	2	2				
8	6R3–12580–00	JOINT ASSY ARTICULER (ENS.)	1	1				
9	90445–09226	HOSE (L390) DURITE (L390)	1	1				
10	688–24378–00	PIPE, JOINT 4 DURITE RACCORDEMENT 4	1	1				
11	90465–11M10	CLAMP BRIDE	7	7				
12	90445–09220	HOSE (L30) DURITE (L30)	1	1				
13	90467–08M18	CLIP JONC	1	1				
14	6C5–24378–00	PIPE, JOINT 4 DURITE RACCORDEMENT 4	1	1				
15	90445–09091	HOSE (L135) DURITE (L135)	1	1				
16	90445–09104	HOSE (L300) DURITE (L300)	1	1				
17	90447–10006	HOSE, WITH SPRING DURITE, AVEC RESSORT	1	1				
18	6C5–82377–00	LABEL ETIQUETTE	1	1				
19	62Y–13444–50	MARK MAKER	1	1				
20	6A1–28176–00	LABEL, CAUTION ETIQUETTE, RECOMMANDATION	1	1				
21	6E3–8257H–00	PLATE, MARK PLAQUE, ADHESIF	1	1				

FIG. 20 CONTROL COMMANDE

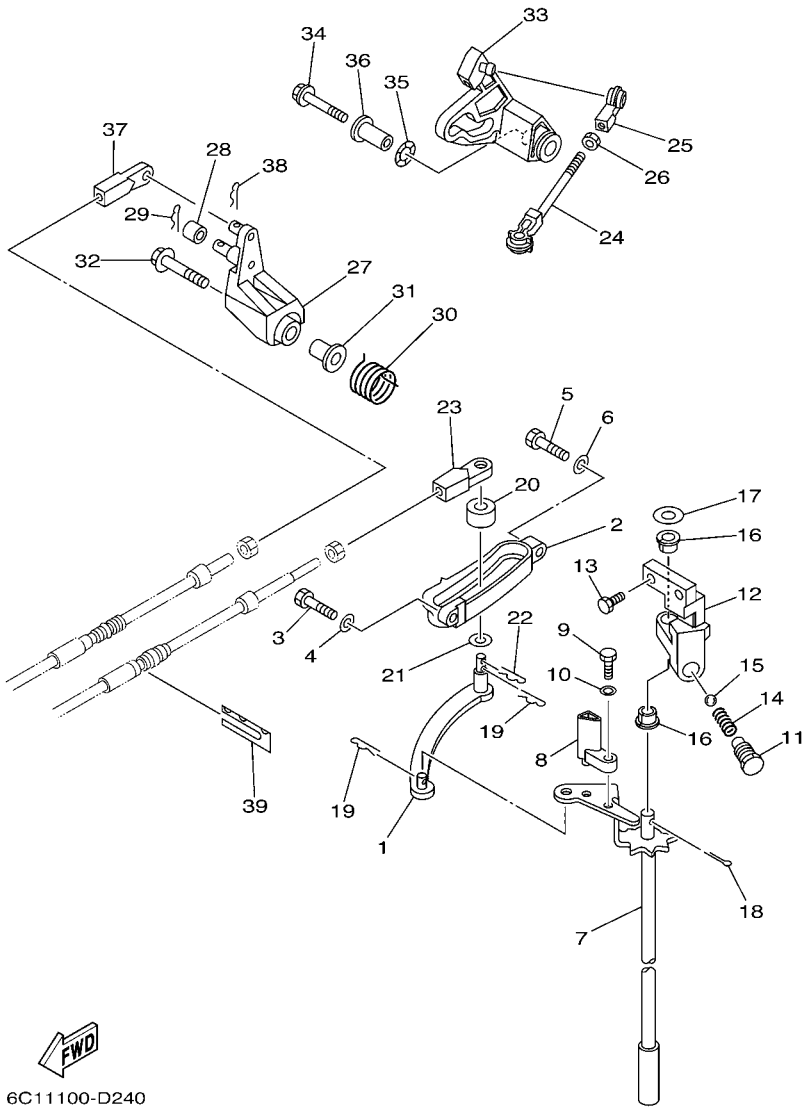

REF. NO.	PART NO. N° PIECES	DESCRIPTION DESCRIPTION	6C21	6C61				REMARKS REMARQUES
1	69W–44121–00	LEVER, SHIFT ROD LEVIER, TIGE D'INVERSION	1	1				
2	62Y–44117–01–4D	BRACKET SUPPORT	1	1				
3	97095–06020	BOLT BOULON	1	1				
4	92995–06600	WASHER RONDELLE	1	1				
5	97095–06025	BOLT BOULON	1	1				
6	92995–06600	WASHER RONDELLE	1	1				
7	6C5–44120–00	HANDLE GEAR SHIFT ASSY LEVIER D'EMBRAYAGE	1	1				L L
8	6C5–44122–00	BUSHING, SHIFT ROD LEVER DOUILLE, LEVIER D'EMBRAYAGE	1	1				
9	97095–05014	BOLT BOULON	1	1				
10	92995–05600	WASHER RONDELLE	1	1				
11	62Y–42715–01	BUSHING COUSSINET	1	1				
12	62Y–44118–00	BRACKET SUPPORT	1	1				
13	97095–06020	BOLT BOULON	2	2				
14	90501–12082	SPRING, COMPRESSION RESSORT, COMPRESSION	1	1				
15	93501–04M02	BALL BILLE	1	1				
16	90386–90M90	BUSH DOUILLE	2	2				
17	90201–10M20	WASHER, PLATE RONDELLE, PLATE	1	1				
18	91490–20015	PIN, COTTER GOUPILLE	1	1				
19	90468–18008	CLIP JONC	2	2				
20	688–44122–00	BUSHING, SHIFT ROD LEVER DOUILLE, LEVIER D'EMBRAYAGE	1	1				
21	90202–07M07	WASHER, PLATE RONDELLE, PLATE	1	1				
22	90468–18008	CLIP JONC	1	1				
23	69W–48344–00	CABLE END, REMOTE CONTROL CHAPE CABLE	1	1				
24	688–41211–01	LINK, ACCEL. BIELLETTE, ACCELERATION	1	1				
25	6H4–41237–00	JOINT, LINK RACCORD	1	1				
26	95380–05700	NUT ECROU	1	1				
27	62Y–42154–00	LEVER, THROTTLE CONTROL LEVIER DE COMMANDE D'AVANCE	1	1				

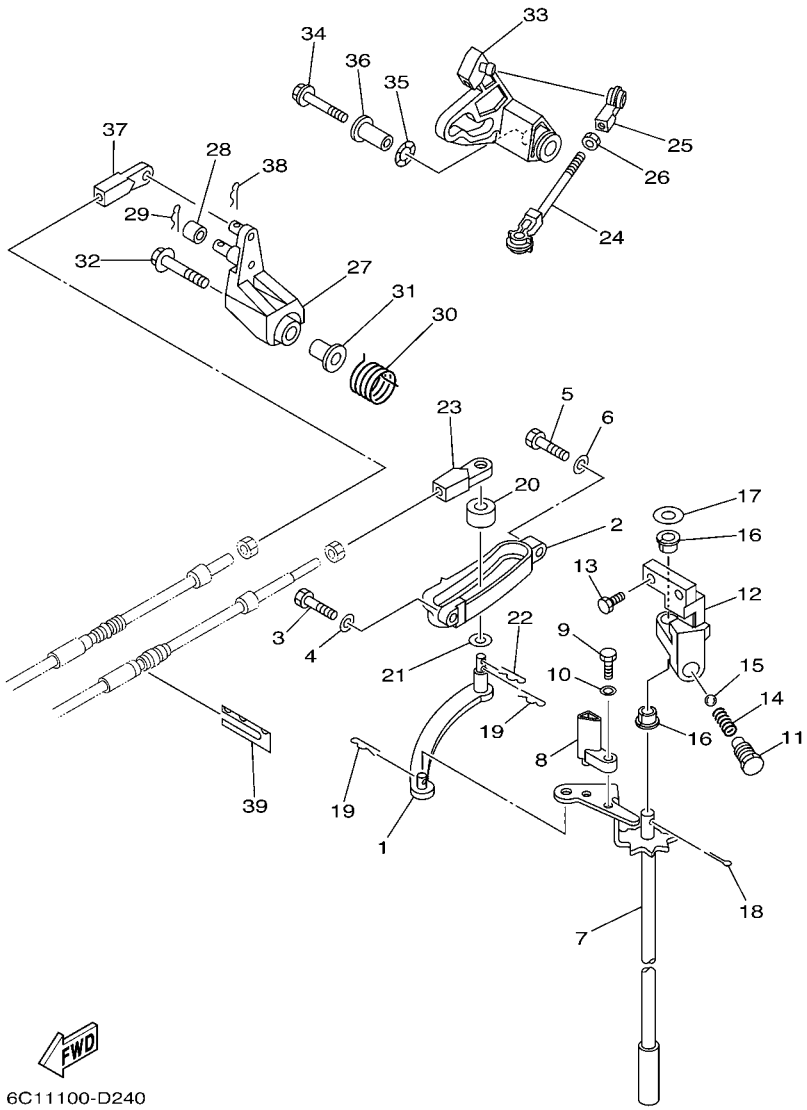

FIG. 20 CONTROL COMMANDE

REF. NO.	PART NO. N° PIECES	DESCRIPTION DESCRIPTION	6C21	6C61				REMARKS REMARQUES
28	6C5–42171–00	BUSHING COUSSINET	1	1				
29	91490–16010	PIN, COTTER GOUPILLE	1	1				
30	62Y–44135–00	SPRING RESSORT	1	1				
31	90387–06M45	COLLAR COLLERETTE	1	1				
32	90119–06106	BOLT, WITH WASHER BOULON, AVEC RONDELLE	1	1				
33	6C5–42335–00	LEVER, ACCEL. CONTROL LEVIER, ACCELERATION	1	1				
34	95895–06035	BOLT, FLANGE BOULON	1	1				
35	90206–10M04	WASHER, WAVE RONDELLE, ONDULEE	1	1				
36	90387–06M82	COLLAR COLLERETTE	1	1				
37	69W–48344–00	CABLE END, REMOTE CONTROL CHAPE CABLE	1	1				
38	90468–18008	CLIP JONC	1	1				
39	62Y–48538–00	CLAMP, CABLE 1 COLLIER	1	1				

FIG. 21 BRACKET 1 SUPPORT 1

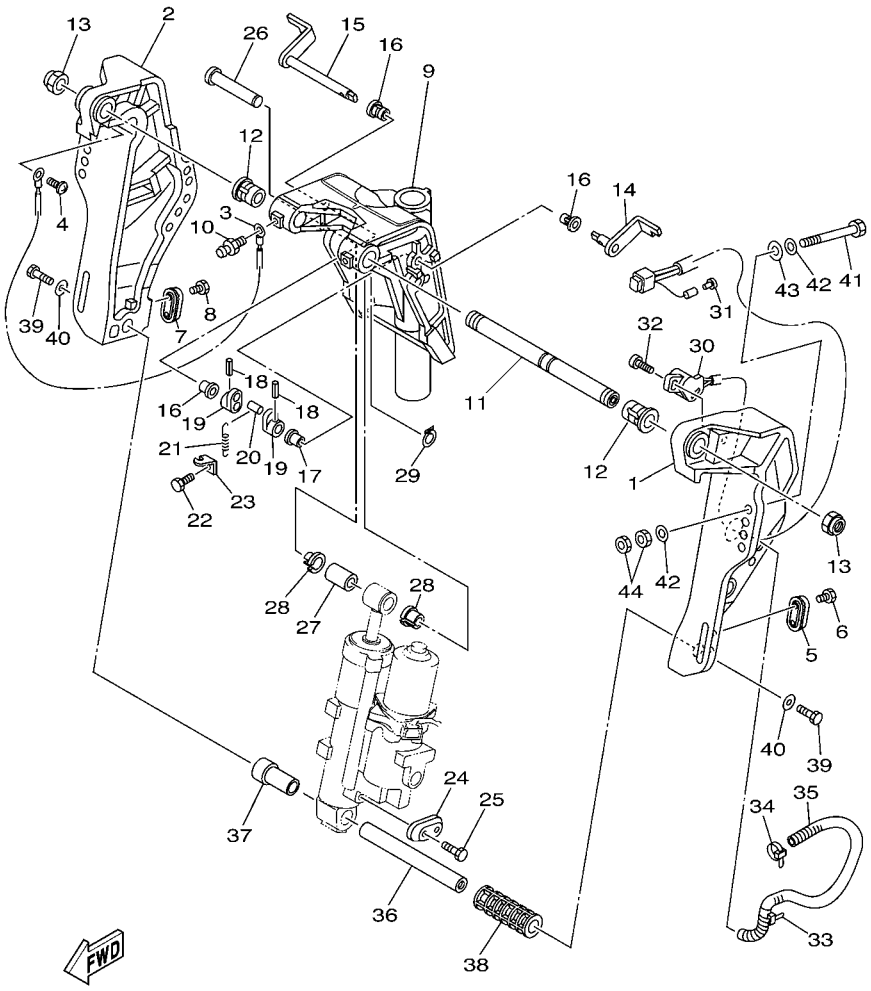

6C11300-D220

REF. NO.	PART NO. N° PIECES	DESCRIPTION DESCRIPTION	6C21	6C61				REMARKS REMARQUES
1	6C5–43111–00–4D	BRACKET, CLAMP PRESSE	1	1				
2	6C5–43112–00–4D	BRACKET, CLAMP PRESSE	1	1				
3	6E5–82148–00	WIRE, LEAD 4 FIL 4	1	1				
4	97885–06008	SCREW, PAN HEAD VIS, A ENCOCHE	1	1				
5	65W–45251–00	ANODE ANODE	1	1				
6	90101–06020	BOLT BOULON	2	2				
7	65W–45251–00	ANODE ANODE	1	1				
8	90101–06020	BOLT BOULON	2	2				
9	6C5–43311–00–4D	BRACKET, SWIVEL 1 SUPPORT, PIVOT 1	1	1				
10	93700–06M03	NIPPLE, GREASE PION	3	3				
11	63D–43131–01	BOLT, CLAMP BRACKET BOULON, PRESSE	1	1				
12	90386–22MA4	BUSH DOUILLE	2	2				
13	90185–22M11	NUT, SELF-LOCKING ECROU, AUTO-BLOQUANT	2	2				
14	6C5–43181–00	LEVER, TILT STOP LEVIER, VERROUILLAGE RELEVAGE	1	1				
15	6C5–43185–00	LEVER, TILT STOP LEVIER, VERROUILLAGE RELEVAGE	1	1				
16	90386–10M16	BUSH DOUILLE	3	3				
17	90386–10025	BUSH DOUILLE	1	1				
18	91690–30020	PIN, SPRING AGRAFFE	2	2				
19	6G5–43148–00	COLLAR, DISTANCE ENTRETOISE	2	2				
20	90249–06M19	PIN GOUPILLE	1	1				
21	90506–14M24	SPRING, TENSION RESSORT, TENSION	1	1				
22	97095–06010	BOLT BOULON	1	1				
23	6G5–43144–00	HOOK, SPRING CROCHET	1	1				
24	65W–45251–00	ANODE ANODE	1	1				
25	90101–06020	BOLT BOULON	2	2				
26	6E5–43126–02	PIN, UPPER SHOCK MOUNT AXE, SUPERIEUR AMORTISSEUR	1	1				
27	90386–18M92	BUSH DOUILLE	1	1				

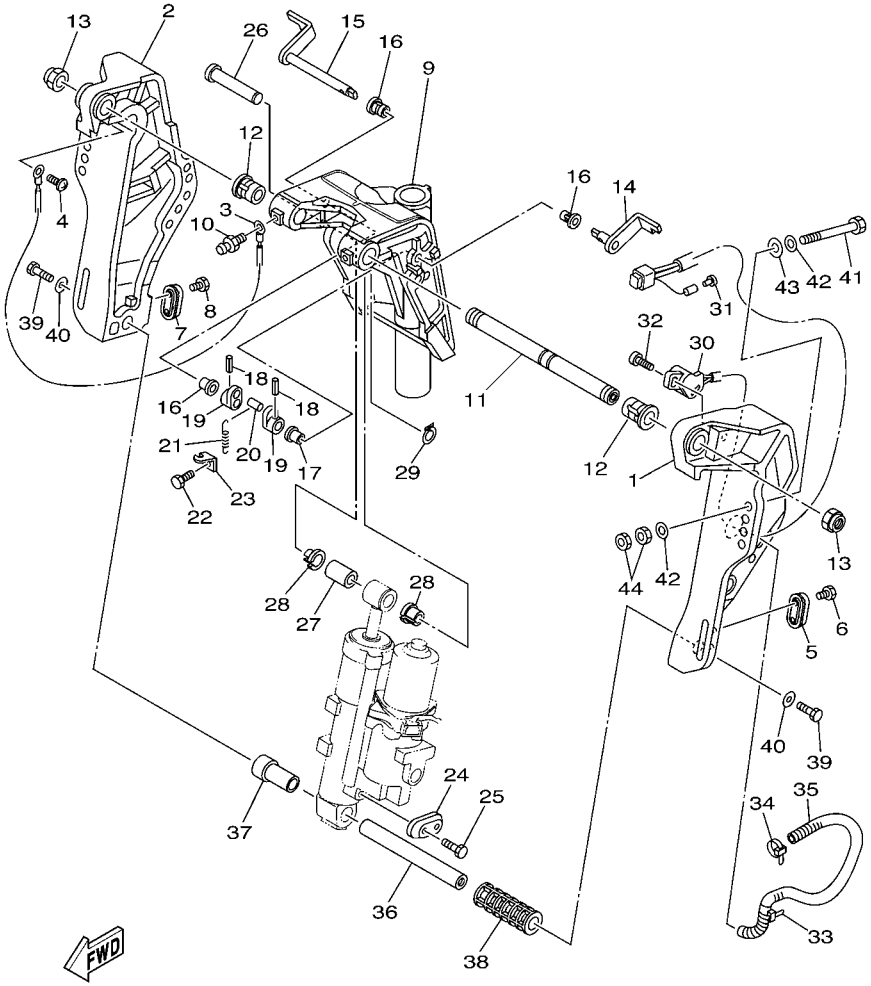

FIG. 21 BRACKET 1 — SUPPORT 1

REF. NO.	PART NO. N° PIECES	DESCRIPTION DESCRIPTION	6C21	6C61				REMARKS REMARQUES
28	90386–18M35	BUSH DOUILLE	2	2				
29	93410–18M02	CIRCLIP CLIPS	1	1				
30	63D–83672–01	TRIM SENDER INCLINER RACCORD	1	1				
31	703–82119–00	COVER, LEAD WIRE GARNITURE, FIL	1	1				
32	97885–06016	SCREW, PAN HEAD VIS, A ENCOCHE	2	2				
33	90465–13M18	CLAMP BRIDE	1	1				
34	90465–11M10	CLAMP BRIDE	1	1				
35	90447–13010	HOSE, WITH SPRING DURITE, AVEC RESSORT	1	1				
36	6C5–43818–00	PIN, LOWER SHOCK MOUNT AXE, INFERIEUR AMORTISSEUR	1	1				
37	6C5–43833–00	PIPE TUYAU	1	1				
38	6C5–43834–00	PIPE TUYAU	1	1				
39	97080–08020	BOLT BOULON	2	2				
40	90201–08M14	WASHER, PLATE RONDELLE, PLATE	2	2				
41	90101–12M65	BOLT BOULON	4	4				
42	92995–12200	WASHER RONDELLE	8	8				
43	90201–12426	WASHER, PLATE RONDELLE, PLATE	4	4				
44	95380–12600	NUT ECROU	8	8				

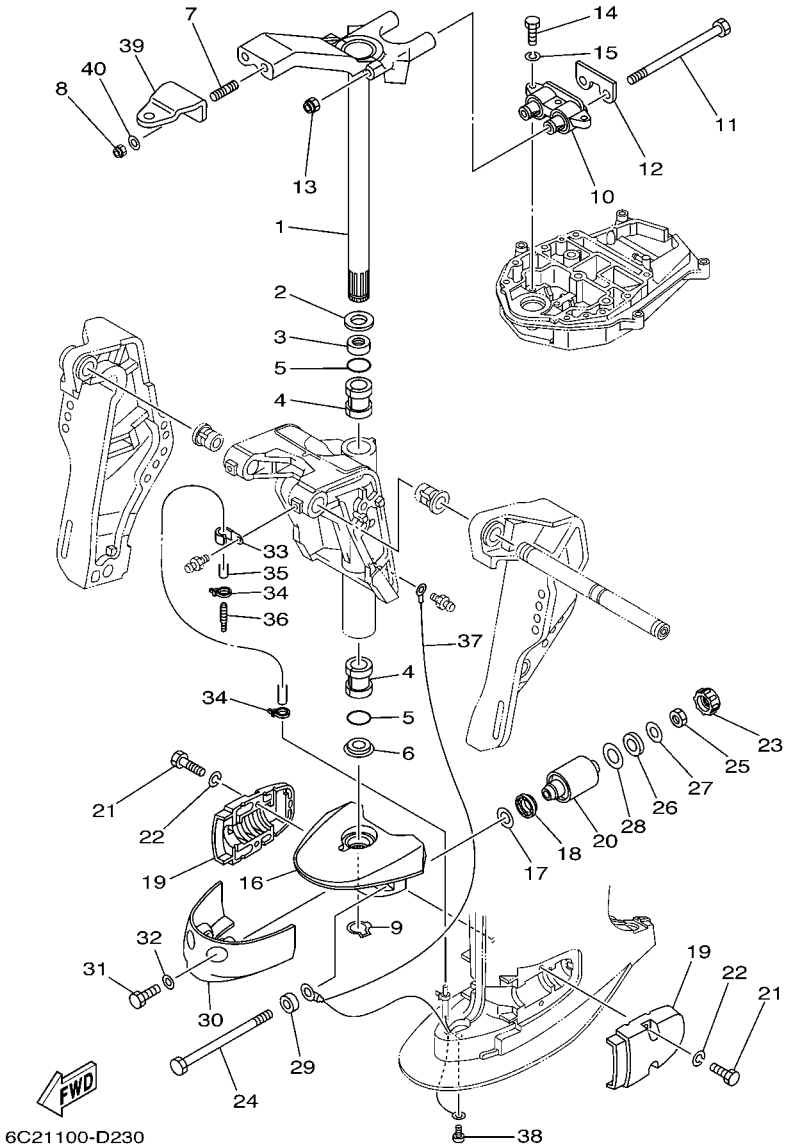

FIG. 22 BRACKET 2 SUPPORT 2

REF. NO.	PART NO. N° PIECES	DESCRIPTION DESCRIPTION	6C21	6C61				REMARKS REMARQUES
1	69W–42510–01–4D	STEERING BRACKET ASSY DIRECTION SUPPORT (ENS.)	1	1				
2	90201–30M00	WASHER, PLATE RONDELLE, PLATE	1	1				
3	90386–30M78	BUSH DOUILLE	1	1				
4	90386–30M77	BUSH DOUILLE	2	2				
5	93210–29M94	O-RING JOINT TORIQUE	2	2				
6	90386–30M60	BUSH DOUILLE	1	1				
7	90116–10M28	BOLT, STUD GOUJON	2	2				
8	90185–10051	NUT, SELF-LOCKING ECROU, AUTO-BLOQUANT	2	2				
9	93410–28M06	CIRCLIP CLIPS	1	1				
10	64J–44514–00–4D	MOUNT DAMPER, UPPER SIDE SILENT-BLOC, SUPERIEUR LATERAL	1	1				
11	90101–08M15	BOLT BOULON	2	2				
12	69W–44526–01	PLATE PLAQUE	1	1				
13	90185–08045	NUT, SELF-LOCKING ECROU, AUTO-BLOQUANT	2	2				
14	97075–08030	BOLT BOULON	3	3				
15	92995–08100	WASHER RONDELLE	3	3				
16	69W–44551–00–4D	HOUSING, LOWER MOUNT RUBBER BOITIER, SILENT-BLOC INFERIEUR	1	1				
17	90201–12M16	WASHER, PLATE RONDELLE, PLATE	2	2				
18	6C5–43885–00	GROMMET PASSE-FIL	2	2				
19	6C5–44552–00–4D	HOUSING, LOWER MOUNT RUBBER BOITIER, SILENT-BLOC INFERIEUR	2	2				
20	69W–44555–00–4D	MOUNT DAMPER, LOWER SIDE SILENT-BLOC, INFERIEUR LATERAL	2	2				
21	97075–08030	BOLT BOULON	4	4				
22	92995–08100	WASHER RONDELLE	4	4				
23	6C5–44575–00	DAMPER, LOWER MOUNT RUBBER SILENT-BLOC, INFERIEUR	2	2				
24	90109–12MA3	BOLT BOULON	2	2				
25	95380–12700	NUT ECROU	2	2				
26	90202–21100	WASHER, PLATE RONDELLE, PLATE	2	2				
27	90201–13M19	WASHER, PLATE RONDELLE, PLATE	2	2				

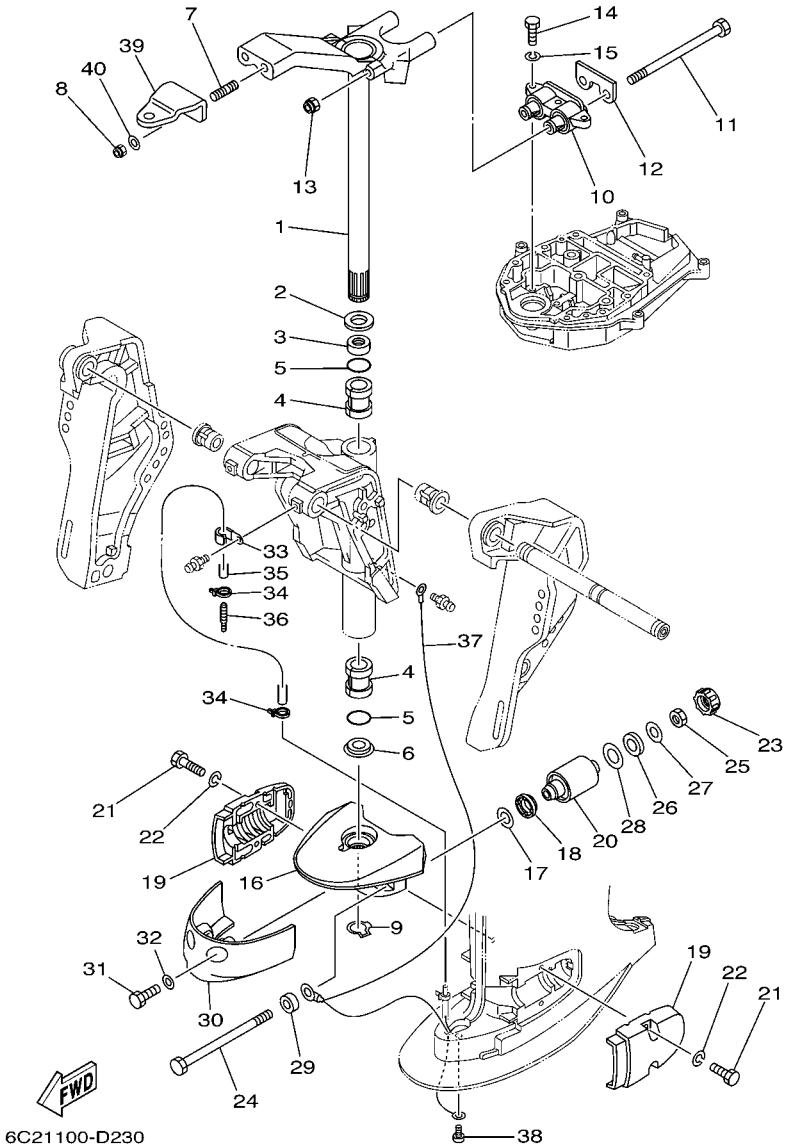

FIG. 22 BRACKET 2 SUPPORT 2

REF. NO.	PART NO. N° PIECES	DESCRIPTION DESCRIPTION	6C21	6C61				REMARKS REMARQUES
28	90201–22M05	WASHER, PLATE RONDELLE, PLATE	2	2				
29	6C6–43127–00	COLLAR CO-LIER	2	2				
30	67C–44553–00–4D	COVER, LOWER MOUNT COUVERCLE, SUSPENSION INFERIEU	1	1				
31	97095–08020	BOLT BOULON	2	2				
32	92995–08600	WASHER RONDELLE	2	2				
33	90465–06M86	CLAMP BRIDE	1	1				
34	90465–11M10	CLAMP BRIDE	2	2				
35	90445–07M53	HOSE (L700) DURITE (L700)	1	1				
36	6E5–83558–00	END, NIPPLE RACCORD DE NIPPLE	1	1				
37	67C–82127–10	WIRE, LEAD 2 FIL 2	1	1				
38	97885–06008	SCREW, PAN HEAD VIS, A ENCOCHE	1	1				
39	65W–48511–00	HOOK, STEERING ATTACHE, DIRECTION	1	1				
40	92995–10600	WASHER RONDELLE	2	2				

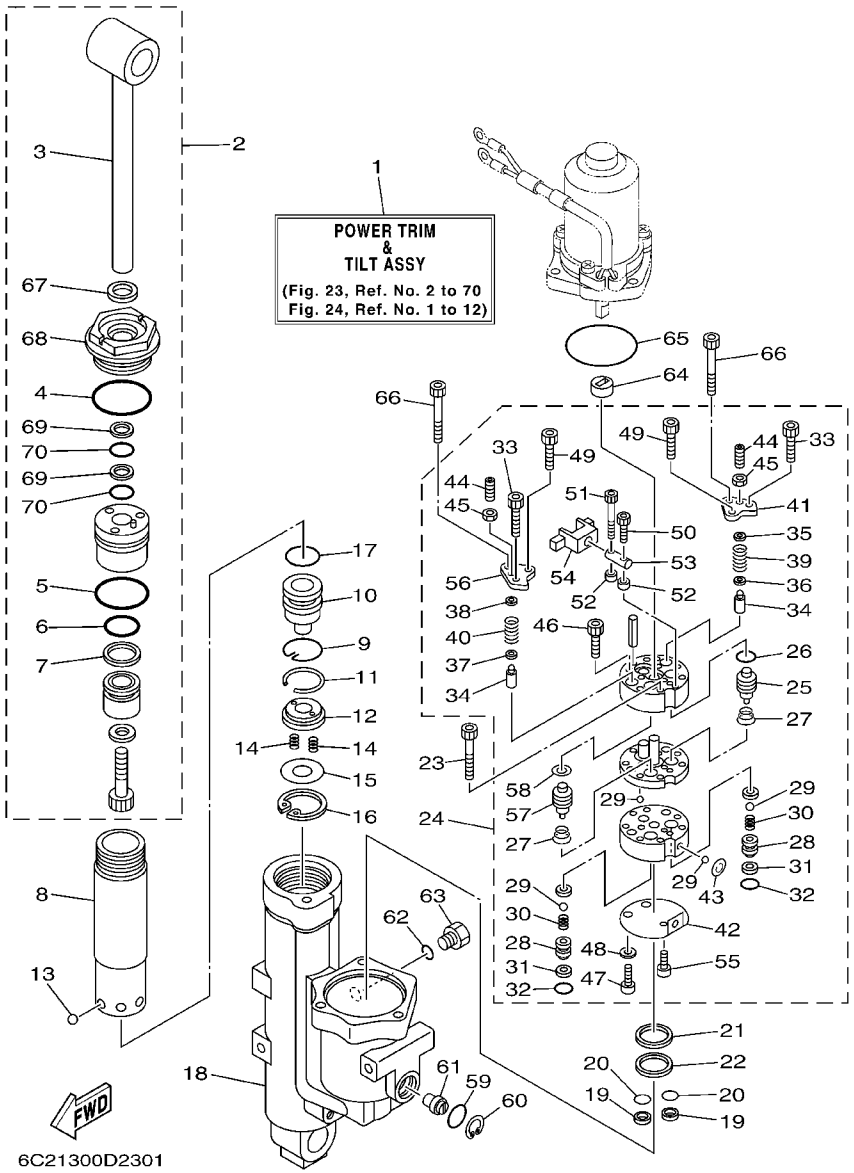

FIG. 23 POWER TRIM & TILT ASSY 1 PUISSANCE PARER ET INCLINER 1

REF. NO.	PART NO. N° PIECES	DESCRIPTION DESCRIPTION	6C21	6C61				REMARKS REMARQUES
1	6C5–43800–01–8D	POWER TRIM & TILT ASSY PUISSANCE PARER ET INCLINER (E	1	1				
2	6C5–43810–00	TILT PISTON SUB ASSY INCLINER PISTON AUXILIAIRE(ENS	1	1				
3	6C5–43801–00	.ROD .TIGE	1	1				
4	62Y–43863–00	.O-RING .JOINT TORIQUE	1	1				
5	6C5–43862–00	.O-RING .JOINT TORIQUE	1	1				
6	6C5–43861–00	.O-RING .JOINT TORIQUE	1	1				
7	6C5–43871–00	.RING, BACK UP .SEGMENT	1	1				
8	6C5–22471–00	CYLINDER, SHOCK ABSORBER CYLINDRE, AMORTISSEUR	1	1				
9	6C5–43875–00	RING, SNAP RESSORT	1	1				
10	6C5–4381B–00	FREE PISTON SUB ASSY PISTON AUXILIAIRE (ENS.)	1	1				
11	93450–32116	CIRCLIP CIRCLIP, TYPE S	1	1				
12	6C5–43899–00	PLATE STOPPER PLAQUETTE	1	1				
13	93503–16003	BALL BILLES	6	6				
14	62X–4384H–00	SPRING RESSORT	2	2				
15	6C5–22435–00	PLATE, VALVE 2 PLAQUE, CLAPET 2	1	1				
16	99009–32500	CIRCLIP CIRCLIP	1	1				
17	6C5–43861–00	O-RING JOINT TORIQUE	1	1				
18	6C5–4380K–00	CYLINDER, TILT SUB ASSY CYLINDRE	1	1				
19	6C5–43817–10	FILTER 2 FILTRE 2	2	2				
20	69J–4389J–00	O-RING JOINT TORIQUE	2	2				
21	6C5–43816–00	FILTER 1 FILTRE 1	1	1				
22	6C5–4380G–00	PLATE PLAQUE	1	1				
23	91312–05045	BOLT BOULON	2	2				
24	6C5–43830–00	GEAR PUMP ASSY POMPE A PIGNON (ENS.)	1	1				
25	6C6–43841–00	.PISTON, SHUTTLE .PISTON	1	1				
26	6H1–43883–00	.O-RING .JOINT TORIQUE	1	1				
27	6C6–43894–00	.SPRING, SHUTTLE RETURN .RESSORT	2	2				

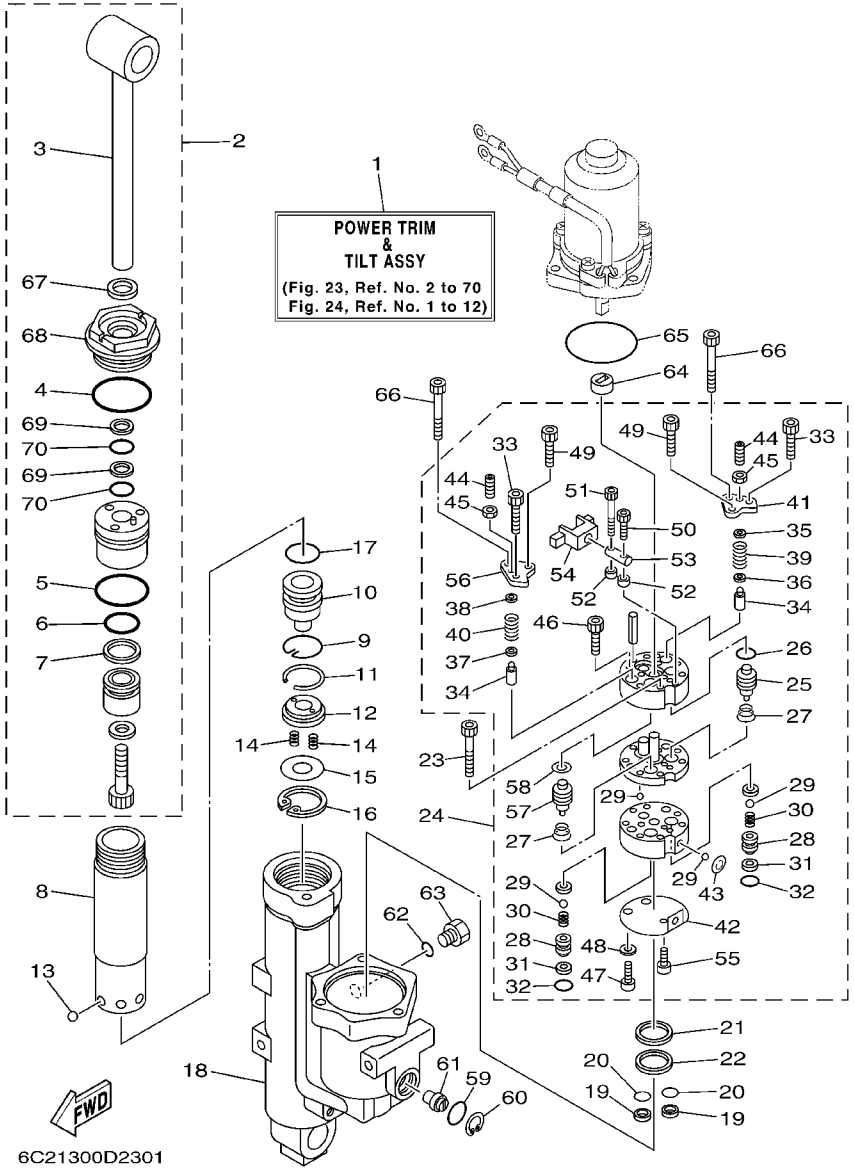

FIG. 23 POWER TRIM & TILT ASSY 1 PUISSANCE PARER ET INCLINER 1

REF. NO.	PART NO. N° PIECES	DESCRIPTION DESCRIPTION	6C21	6C61				REMARKS REMARQUES
28	6C6–4382E–00	.ADAPTOR 2 .ADAPTEUR 2	2	2				
29	93505–32038	.BALL .BILLE	6	6				
30	6C6–43853–00	.SPRING, MAIN VALVE .RESSORT	2	2				
31	6C6–4387G–00	.WASHER .RONDELLE	2	2				
32	69J–4389J–00	.O-RING .JOINT TORIQUE	2	2				
33	91312–05030	.BOLT .BOULON	2	2				
34	6C5–43851–00	.SEAT, RELIEF VALVE .SIEGE	2	2				
35	6C5–4381K–00	.HOLDER .MORDAZA	1	1				
36	6C5–43893–00	.WASHER .RONDELLE	1	1				
37	6C6–43893–00	.WASHER .RONDELLE	1	1				
38	6C6–4381K–00	.HOLDER .MORDAZA	1	1				
39	6C5–43855–00	.SPRING, UP RELIEF .RESSORT	1	1				
40	6C5–43856–00	.SPRING, DOWN RELIEF .RESSORT	1	1				
41	6C5–4382K–00	.CAP, RELIEF VALVE .CHAPEAU	1	1				
42	6C5–43895–00	.SEAT, RELIEF VALVE .SIEGE	1	1				
43	6C5–43854–00	.SPRING, MANUAL RELEASE .RESSORT	1	1				
44	92A08–03110	.SCREW SET .VIS	2	2				
45	95302–03600	.NUT .ECROU	2	2				
46	91312–05025	.BOLT .BOULON	2	2				
47	6C6–43878–00	.BOLT, SOCKET .BOULON	2	2				
48	62Y–4387G–00	.WASHER .RONDELLE	2	2				
49	91312–04030	.BOLT .BOULON	2	2				
50	91312–03016	.BOLT .BOULON	1	1				
51	6C6–4388E–00	.PLUG, TAPER SCREW .BOUCHON	1	1				
52	6C6–4388F–00	.SPACER .ENTRETOISE	2	2				
53	6C6–4386G–00	.PIN, STRAIGHT 2 .RESSORT 2	1	1				
54	6C6–4386E–00	.LEVER 1 .LEVIER 1	1	1				

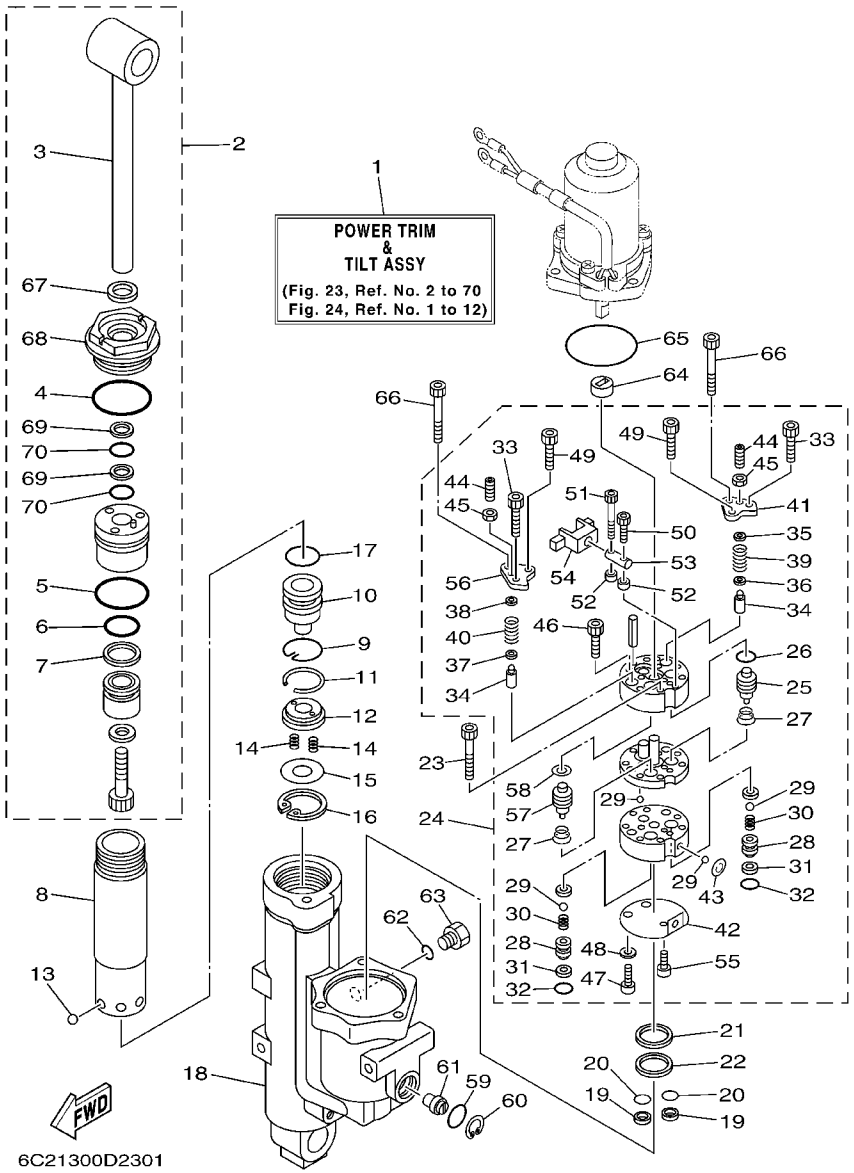

FIG. 23 POWER TRIM & TILT ASSY 1 PUISSANCE PARER ET INCLINER 1

REF. NO.	PART NO. N° PIECES	DESCRIPTION DESCRIPTION	6C21	6C61				REMARKS REMARQUES
55	91312–03005	.BOLT .BOULON	1	1				
56	6C5–4382L–00	.CAP, RELIEF VALVE .CAPUCHON	1	1				
57	6C5–43841–00	.PISTON, SHUTTLE .PISTON	1	1				
58	6C5–43872–00	.RING, BACK UP .RESSORT	1	1				
59	93210–18397	O-RING JOINT TORIQUE	1	1				
60	6H1–43875–00	RING, SNAP RESSORT	1	1				
61	6C5–43845–00	SCREW, MANUAL RELEASE VIS	1	1				
62	93210–09165	O-RING JOINT TORIQUE	1	1				
63	6H1–43829–00	PLUG, RESERVOIR BOUCHON	1	1				
64	6C5–43831–00	CONNECTOR, SHAFT RACCORD	1	1				
65	93210–64488	O-RING JOINT TORIQUE	1	1				
66	91312–05050	BOLT BOULON	2	2				
67	62Y–43822–00	.SEAL, TRIM DUST .JOINT	1	1				
68	6C5–43821–00	.SCREW, TRIM CYLINDER END .VIS	1	1				
69	62X–43872–00	.RING, BACK UP .RESSORT	2	2				
70	6C5–43863–00	.O-RING .JOINT TORIQUE	2	2				

FIG. 24 POWER TRIM & TILT ASSY 2 PUISSANCE PARER ET INCLINER 2

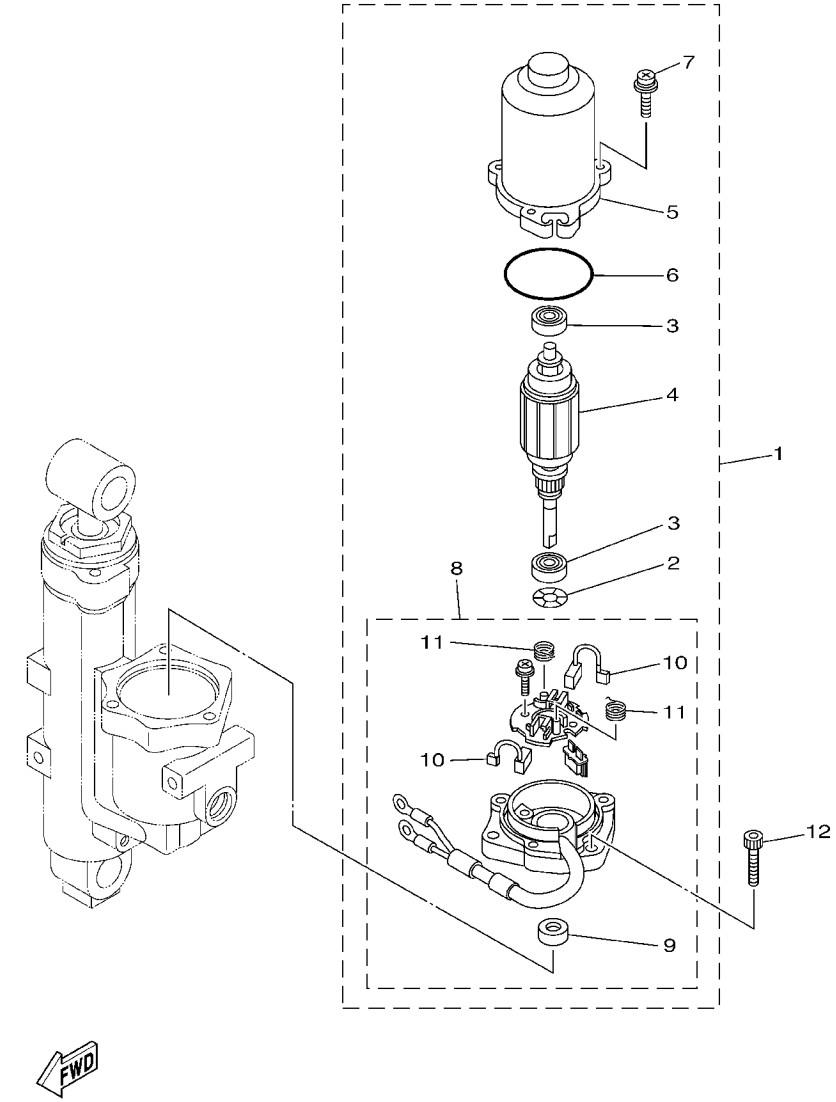

REF. NO.	PART NO. N° PIECES	DESCRIPTION DESCRIPTION	6C21	6C61				REMARKS REMARQUES
1	6C5–43880–01	MOTOR ASSY MOTEUR (ENS.)	1	1				
2	90206–08N51	.WASHER, WAVE .RONDELLE, ONDULEE	1	1				
3	93399–999T8	.BEARING .ROULEMENT	2	2				
4	6C5–43805–00	.ARMATURE ASSY .INDUIT (ENS.)	1	1				
5	6C5–43804–01	.STATOR ASSY .STATOR (ENS.)	1	1				
6	6C5–43869–00	.O-RING .JOINT TORIQUE	1	1				
7	6C5–43879–00	.SCREW, WITH WASHER .VIS, AVEC RONDELLE	3	3				
8	6C5–43881–01	.FRAME, END .BATI	1	1				WITH CIRCUIT BREAKER WITH CIRCUIT BREAKER
9	6C5–43882–00	..OIL SEAL ..JOINT SPI	1	1				
10	6C5–43891–00	..BRUSH 1 ..BALAI 1	2	2				
11	6C5–4386K–00	..SPRING, BRUSH ..RESSORT, BALAI	2	2				
12	62X–43888–00	BOLT, SOCKET BOULON	3	3				

FIG. 25 UPPER CASING FOURREAU

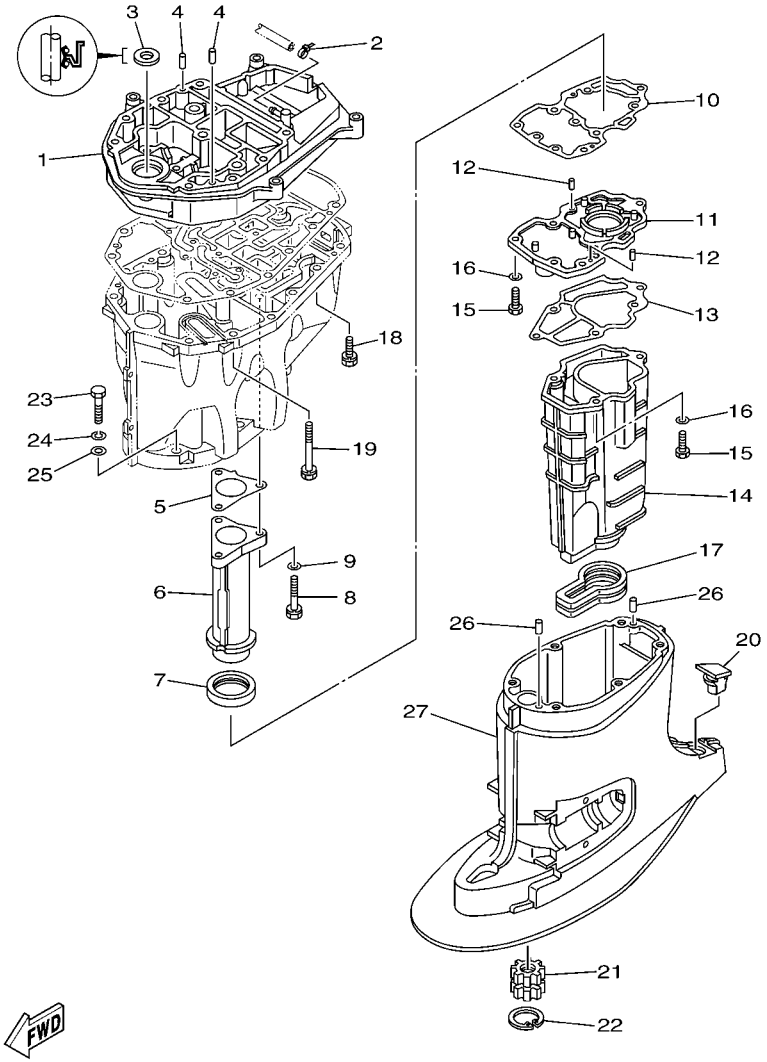

6C11010-D290

REF. NO.	PART NO. N° PIECES	DESCRIPTION DESCRIPTION	6C21	6C61				REMARKS REMARQUES
1	6C5–41137–00–94	GUIDE, EXHAUST COLLECTEUR D'ECHAPPEMENT	1	1				
2	90465–11M10	CLAMP BRIDE	1	1				
3	93103–18011	OIL SEAL JOINT SPY	1	1				
4	93608–12M05	PIN, DOWEL AXE	2	2				
5	6C5–41133–00	GASKET, EXHAUST MANIFOLD 1 JOINT, PIPE D'ECHAPPEMENT	1	1				
6	6C5–41131–00–5B	MANIFOLD, EXT. 1 PIPE D'ECHAPPEMENT	1	1				
7	6C5–46132–00	GASKET 1 JOINT 1	1	1				
8	90119–06120	BOLT, WITH WASHER BOULON, AVEC RONDELLE	3	3				
9	90201–06015	WASHER, PLATE RONDELLE, PLATE	3	3				
10	6C5–41134–00	GASKET, EXHAUST MANIFOLD JOINT, PIPE D'ECHAPPEMENT	1	1				
11	6C5–45181–00–5B	PLATE PLAQUETTE	1	1				
12	93604–10M03	PIN, DOWEL CLAVETTE	2	2				
13	6C5–41135–00	GASKET, EXHAUST MANIFOLD JOINT, PIPE D'ECHAPPEMENT	1	1				
14	6C5–14711–00–5B	MUFFLER 1 POT D'ECHAPPEMENT 1	1	1				
15	97075–06025	BOLT BOULON	6	6				
16	92995–06600	WASHER RONDELLE	6	6				
17	6C5–45123–00	GASKET, MUFFLER JOINT, POT DE DETENTE	1	1				
18	90119–08M79	BOLT, WITH WASHER BOULON, AVEC RONDELLE	4	4				
19	90119–08M82	BOLT, WITH WASHER BOULON, AVEC RONDELLE	8	8				
20	6C5–45155–00	CAP CAPUCHON	1	1				
21	69W–45318–00	BUSHING, DRIVE SHAFT DOUILLE, ARBRE MOTEUR	1	1				
22	93420–36M01	CIRCLIP CIRCLIP, TYPE S	1	1				
23	97075–10045	BOLT BOULON	6	6				
24	92995–10100	WASHER RONDELLE	6	6				
25	92995–10600	WASHER RONDELLE	6	6				
26	93606–12019	PIN, DOWEL GOUPILLE	2	2				
27	6C5–45111–00–4D	CASING, UPPER FOURREAU	1	1				

FIG. 26 OIL PAN — VENTILATEUR D'HUILE

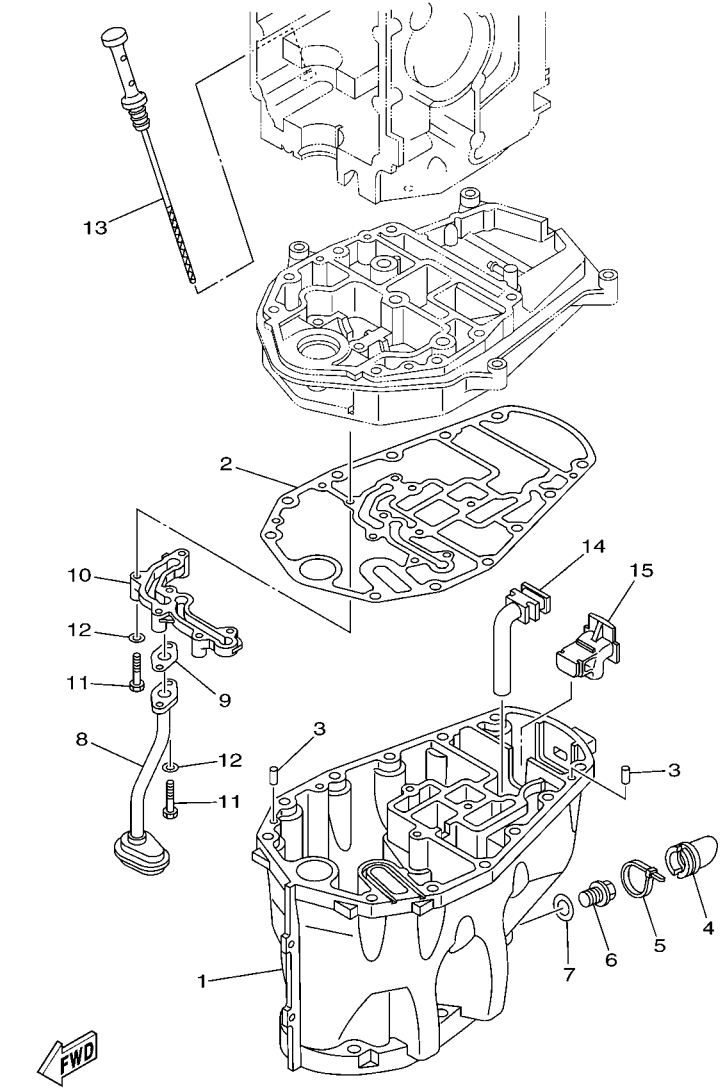

6C11010-D300

REF. NO.	PART NO. N° PIECES	DESCRIPTION DESCRIPTION	6C21	6C61				REMARKS REMARQUES
1	6C5–15311–00–5B	OIL PAN VENTILATEUR D'HUILE	1	1				
2	6C5–15312–00	GASKET, OIL PAN JOINT DE VENTILATEUR D'HUILE	1	1				
3	93606–12019	PIN, DOWEL GOUPILLE	2	2				
4	6C5–15316–00	DAMPER, ENGINE MOUNT 1 AMORTISSEUR DE SUPPORT	1	1				
5	90465–11M59	CLAMP BRIDE	1	1				
6	90340–14M06	PLUG, STRAIGHT SCREW PLOT, FILETE DROIT	1	1				
7	90430–14M09	GASKET JOINT	1	1				
8	6C5–13411–00	STRAINER, OIL FILTRE, HUILE	1	1				
9	6C5–13414–00	GASKET, STRAINER COVER JOINT, COUVERCLE DE FILTRE	1	1				
10	6C5–15333–00	COVER COUVERCLE	1	1				
11	97013–06030	BOLT BOULON	6	6				
12	92903–06600	WASHER, PLATE RONDELLE, PLATE	6	6				
13	6C5–15362–00	PLUG, OIL LEVEL PLOT, NIVEAU D'HUILE	1	1				
14	6C5–45135–01	PIPE TUYAU	1	1				
15	6C5–45136–01	PIPE DURITE	1	1				

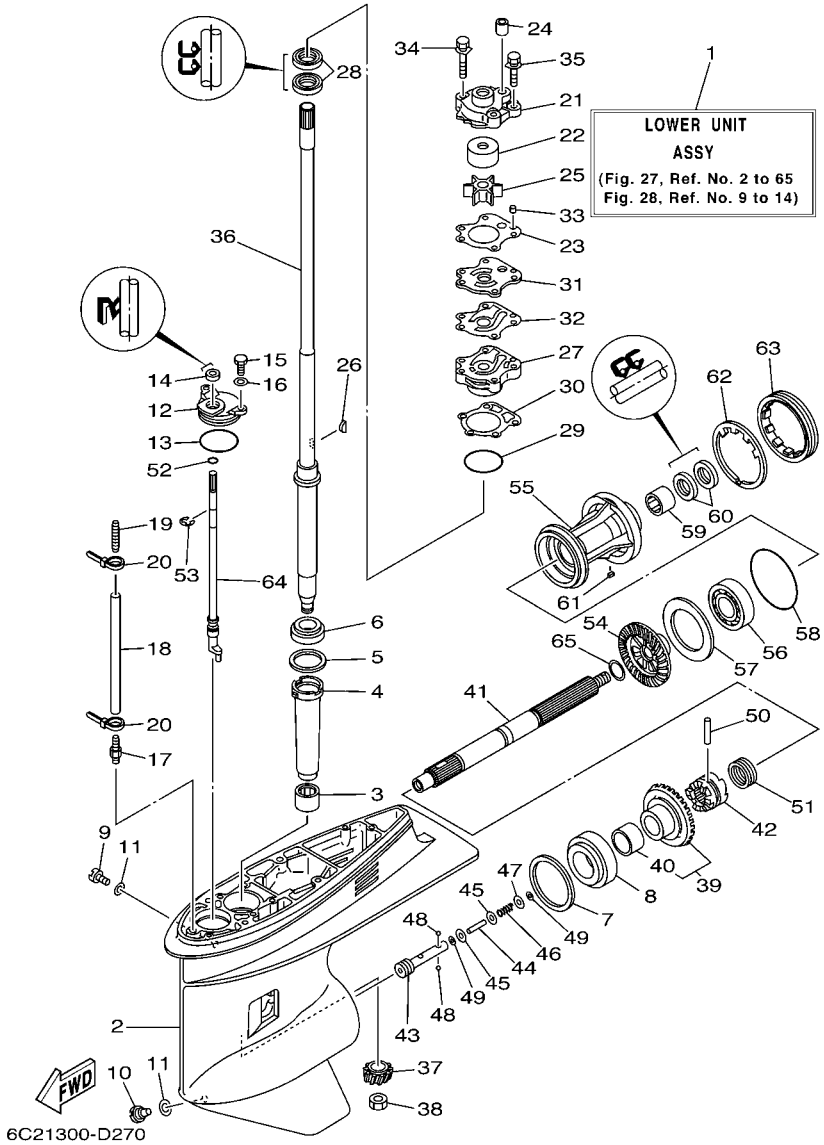

FIG. 27 LOWER CASING & DRIVE 1 BOITIER D'HELICE TRANSMISSION1

REF. NO.	PART NO. N° PIECES	DESCRIPTION DESCRIPTION	6C21	6C61				REMARKS REMARQUES
1	68S–45300–30–4D	LOWER UNIT ASSY UNITE INFERIEURE (ENS.)	1	1				L L
2	67F–45301–00–4D	CASING, LOWER BEQUILLE	1	1				
3	93315–52563	BEARING ROULEMENT	1	1				
4	688–45536–01	SLEEVE, DRIVE SHAFT MANCHON, ARBRE MOTEUR	1	1				
5	688–45587–01	SHIM (T:0.10MM) CALE (T:0.10MM)	1	1				UR UR
	688–45587–10	SHIM (T:0.12MM) CALE (T:0.12MM)	1	1				UR UR
	688–45587–20	SHIM (T:0.15MM) CALE (T:0.15MM)	1	1				UR UR
	688–45587–30	SHIM (T:0.18MM) CALE (T:0.18MM)	1	1				UR UR
	688–45587–40	SHIM (T:0.30MM) CALE (T:0.30MM)	1	1				UR UR
	688–45587–50	SHIM (T:0.40MM) CALE (T:0.40MM)	1	1				UR UR
	688–45587–60	SHIM (T:0.50MM) CALE (T:0.50MM)	1	1				UR UR
6	93332–000U3	BEARING ROULEMENT	1	1				
7	688–45567–01	SHIM (T:0.10MM) CALE (T:0.10MM)	1	1				UR UR
	688–45567–10	SHIM (T:0.12MM) CALE (T:0.12MM)	1	1				UR UR
	688–45567–20	SHIM (T:0.15MM) CALE (T:0.15MM)	1	1				UR UR
	688–45567–30	SHIM (T:0.18MM) CALE (T:0.18MM)	1	1				UR UR
	688–45567–40	SHIM (T:0.30MM) CALE (T:0.30MM)	1	1				UR UR
	688–45567–50	SHIM (T:0.40MM) CALE (T:0.40MM)	1	1				UR UR
	688–45567–60	SHIM (T:0.50MM) CALE (T:0.50MM)	1	1				UR UR
8	93332–00095	BEARING ROULEMENT	1	1				
9	90340–08002	PLUG, STRAIGHT SCREW PLOT, FILETE DROIT	1	1				
10	688–45341–10	PLUG, DRAIN BOUCHON DE VIDANGE	1	1				
11	90430–08020	GASKET JOINT	2	2				
12	688–45321–00	PLATE PLAQUETTE	1	1				
13	93210–49046	O-RING JOINT TORIQUE	1	1				
14	93106–09014	OIL SEAL JOINT SPY	1	1				
15	97095–06016	BOLT BOULON	2	2				

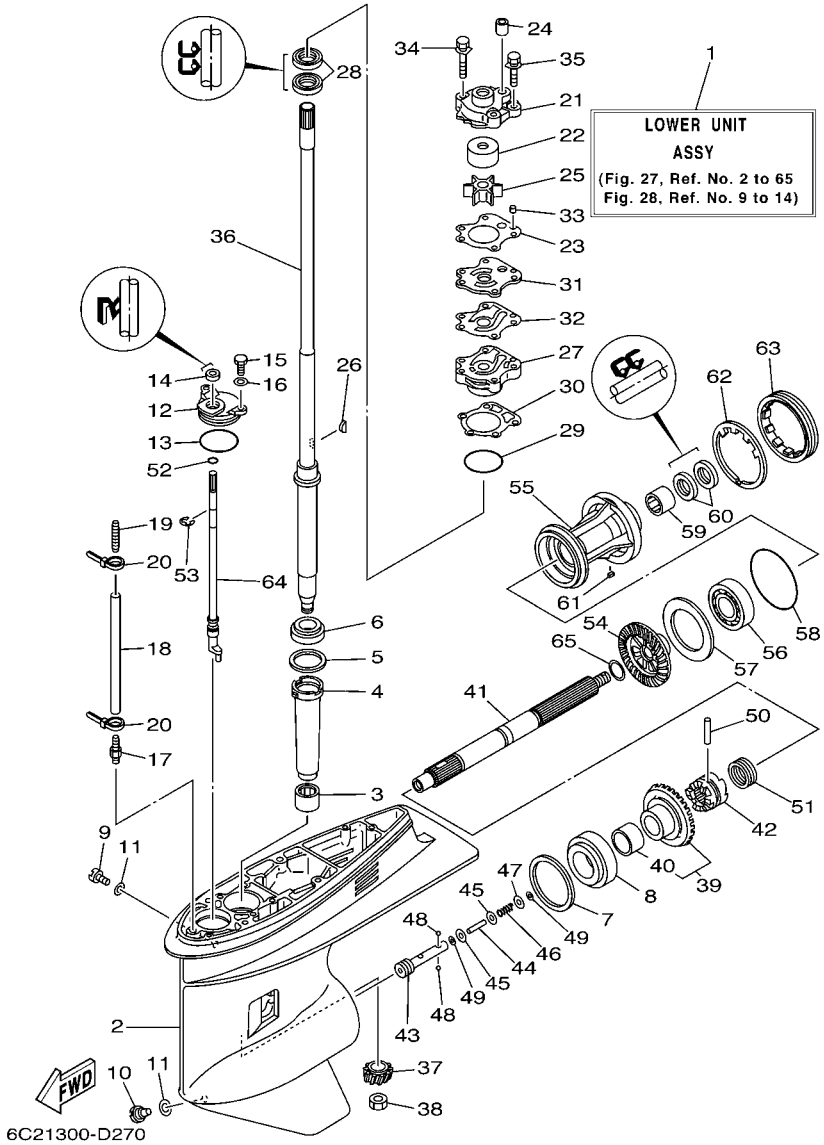

FIG. 27 LOWER CASING & DRIVE 1 BOITIER D'HELICE TRANSMISSION1

REF. NO.	PART NO. N° PIECES	DESCRIPTION DESCRIPTION	6C21	6C61				REMARKS REMARQUES
16	92995–06600	WASHER RONDELLE	2	2				
17	6E5–45378–00	NIPPLE, HOSE RACCORD, TUYAU	1	1				
18	90445–07ME8	HOSE (L80) DURITE (L80)	1	1				L L
19	6E5–83558–10	END, NIPPLE RACCORD DE NIPPLE	1	1				
20	90465–11M10	CLAMP BRIDE	2	2				
21	6H3–44311–00	HOUSING, WATER PUMP CORPS, POMPE A EAU	1	1				
22	663–44322–00	INSERT, CARTRIDGE CUVETTE	1	1				
23	6H3–44315–A0	GASKET, WATER PUMP JOINT, POMPE A EAU	1	1				
24	663–44366–00	DAMPER, WATER SEAL JOINT, TUBE D'EAU	1	1				
25	6H3–44352–00	IMPELLER TURBINE	1	1				
26	90280–03M03	KEY, WOODRUFF CLAVETTE, DEMI-LUNE	1	1				
27	6H3–44341–00–94	HOUSING, WATER PUMP CORPS, POMPE A EAU	1	1				
28	93101–23070	OIL SEAL JOINT SPY	2	2				
29	93210–46044	O-RING JOINT TORIQUE	1	1				
30	688–44316–A0	GASKET, WATER PUMP JOINT, POMPE A EAU	1	1				
31	6H3–44323–00	OUTER PLATE, CARTRIDGE PLAQUE EXTERIEURE	1	1				
32	6H3–44324–A0	GASKET, CARTRIDGE JOINT	1	1				
33	93604–10M03	PIN, DOWEL CLAVETTE	2	2				
34	90119–08M33	BOLT, WITH WASHER BOULON, AVEC RONDELLE	2	2				
35	90119–08M14	BOLT, WITH WASHER BOULON, AVEC RONDELLE	2	2				
36	64J–45501–30	DRIVE SHAFT COMP. ARBRE MOTEUR COMP.	1	1				L L
37	6K5–45551–00	PINION (12T) PIGNON D'ATTAQUE (12D)	1	1				
38	90170–16M01	NUT ECROU	1	1				
39	68S–45560–00	GEAR 1 (28T) PIGNON 1 (28T)	1	1				
40	93317–322V0	.BEARING .ROULEMENT	1	1				
41	67F–45611–01	SHAFT, PROPELLER ARBRE, HELICE	1	1				
42	67F–45631–00	CLUTCH, DOG CRABOT	1	1				

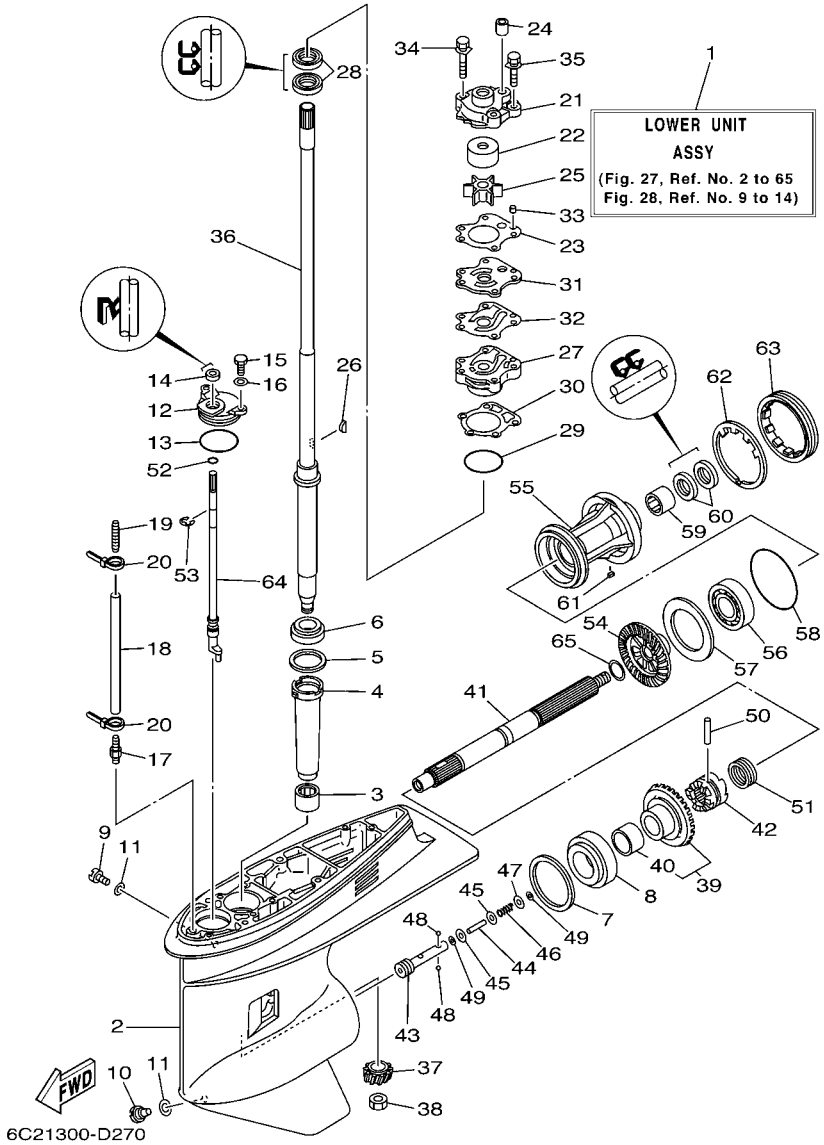

FIG. 27 LOWER CASING & DRIVE 1 BOITIER D'HELICE TRANSMISSION1

REF. NO.	PART NO. N° PIECES	DESCRIPTION DESCRIPTION	6C21	6C61				REMARKS REMARQUES
43	67F–45634–00	SLIDE, SHIFT CONTRE-POUSSOIR	1	1				
44	6H1–45668–00	SHAFT, FREE AXE	1	1				
45	6H1–45635–00	PLUNGER, SHIFT POUSSOIR D'EMBRAYAGE	2	2				
46	90501–12M48	SPRING, COMPRESSION RESSORT, COMPRESSION	1	1				
47	90201–03313	WASHER, PLATE RONDELLE, PLATE	1	1				
48	93503–16003	BALL BILLES	2	2				
49	90183–02M03	NUT, SPRING ECROU, RESSORT	2	2				
50	90250–07M02	PIN, STRAIGHT GOUPILLE, DROITE	1	1				
51	688–45633–00	RING, CROSS PIN JONC, GOUPILLE CRABOT	1	1				
52	93210–07003	O-RING JOINT TORIQUE	1	1				
53	99001–08600	CIRCLIP CIRCLIP	1	1				
54	68S–45571–00	GEAR 2 (28T) PIGNON 2 (28T)	1	1				
55	67F–45331–00–94	HOUSING, BEARING FLASQUE, ROULEMENT	1	1				
56	93306–207U0	BEARING ROULEMENT	1	1				
57	67F–45576–00	WASHER, THRUST RONDELLE DE CALAGE	1	1				
58	93210–86M39	O-RING JOINT TORIQUE	1	1				
59	93317–325U0	BEARING ROULEMENT	1	1				
60	93101–25M03	OIL SEAL JOINT SPY	2	2				
61	90282–04010	KEY, STRAIGHT CLAVETTE, DROITE	1	1				
62	688–45383–02	WASHER, CLAW FREIN D'ECROU	1	1				
63	688–45384–00	NUT ECROU	1	1				
64	64J–44150–00	SHIFT CAM ASSY CAME D'INVERSION	1	1				
65	90201–25M05	WASHER, PLATE RONDELLE, PLATE	1	1				

FIG. 28 LOWER CASING & DRIVE 2 BOITIER D'HELICE TRANSMISSION2

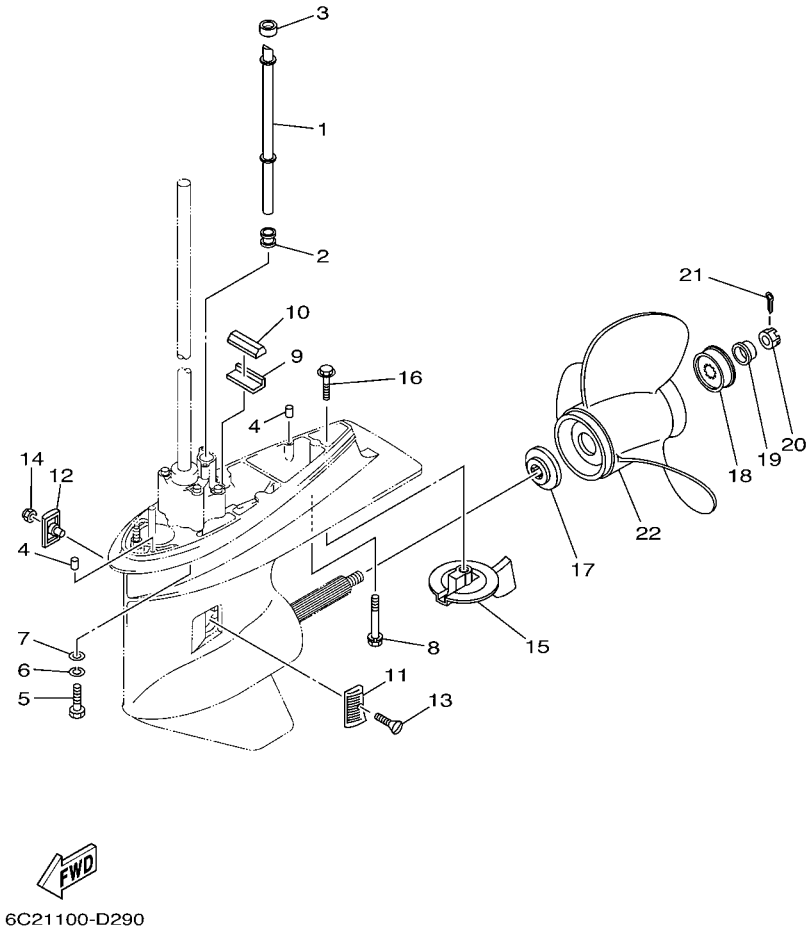

REF. NO.	PART NO. N° PIECES	DESCRIPTION DESCRIPTION	6C21	6C61				REMARKS REMARQUES
1	6C5–44361–00	TUBE, WATER TUBE D'EAU	1	1				L L
2	663–44367–00	DAMPER, WATER SEAL JOINT TUBE D'EAU	1	1				
3	663–44366–00	DAMPER, WATER SEAL JOINT, TUBE D'EAU	1	1				
4	93606–12019	PIN, DOWEL GOUPILLE	2	2				
5	97075–10040	BOLT BOULON	4	4				L L
6	92995–10100	WASHER RONDELLE	4	4				L L
7	92995–10600	WASHER RONDELLE	4	4				L L
8	90119–08M84	BOLT, WITH WASHER BOULON, AVEC RONDELLE	1	1				L L
9	663–45376–00–94	GUIDE, SEAL DAMPER BUTEE, JOINT CAOUTCHOUC	1	1				
10	688–45375–00	DAMPER, SEAL BOURRELET, CAOUTCHOUC	1	1				
11	6H1–45214–00	COVER, WATER INLET GRILLE, ENTREE D'EAU	1	1				
12	6H1–45215–00	COVER, WATER INLET GRILLE, ENTREE D'EAU	1	1				
13	90151–05M00	SCREW, COUNTERSUNK VIS, TETE NOYEE	1	1				
14	90185–05002	NUT, SELF-LOCKING ECROU, AUTO-BLOQUANT	1	1				
15	67F–45371–00	TAB-TRIM ANODE DERIVE	1	1				
16	90105–10M67	BOLT, FLANGE BOULON	1	1				
17	688–45987–01	SPACER ENTRETOISE	1	1				
18	67F–45997–00	SPACER ENTRETOISE	1	1				
19	90389–25M00	BUSH DOUILLE	1	1				
20	90171–16011	NUT, CASTLE ECROU, CRENELE	1	1				
21	91490–40025	PIN, COTTER GOUPILLE	1	1				
22	68S–45941–00–EL	PROPELLER (3X14"X11"-K) HELICE (3X14"X11"-K)	1	1				UR UR
	6E5–45954–00–EL	PROPELLER (3X14"X11"-K) HELICE (3X14"X11"-K)	1	1				UR UR

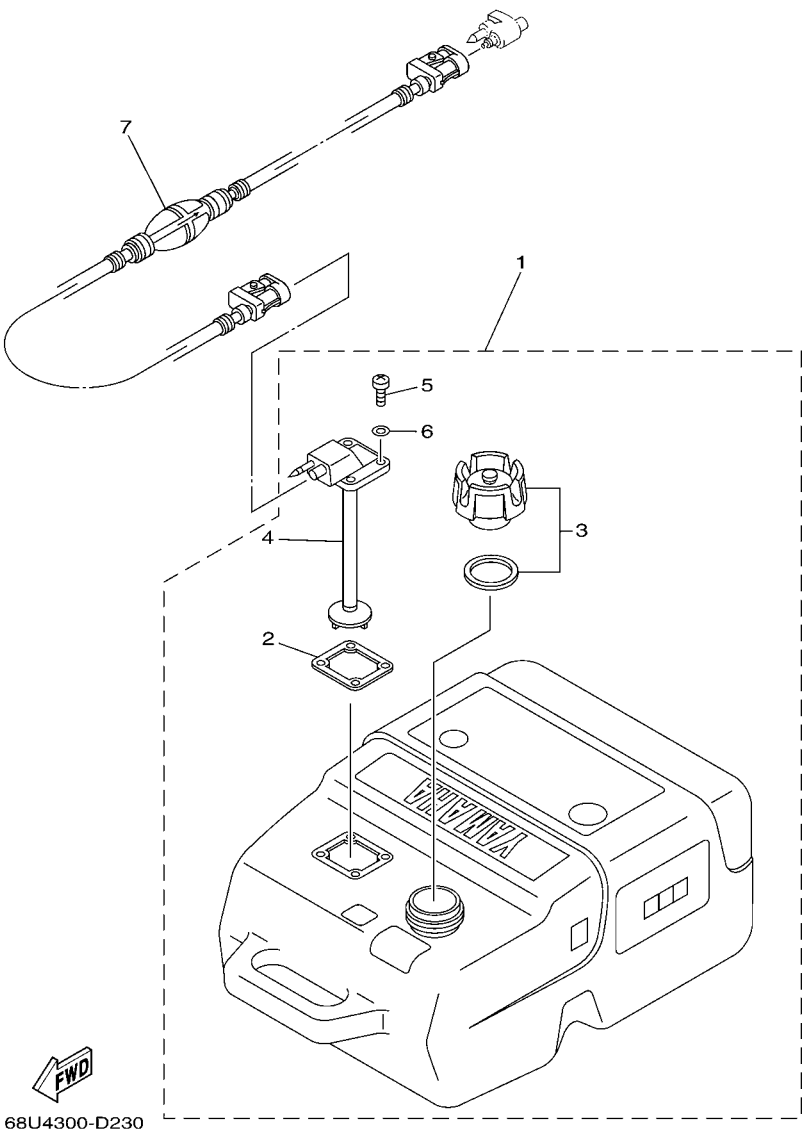

FIG. 29 FUEL TANK — RESERVOIR A CARBURANT

REF. NO.	PART NO. N° PIECES	DESCRIPTION DESCRIPTION	6C21	6C61				REMARKS REMARQUES
1	6YK–24201–02	FUEL TANK ASSY (25L) RESERVOIR A ESSENCE (ENS.) 25L	1	1				AP AP
2	6YL–24268–01	.GASKET, FUEL METER .JOINT, JAUGE A CARBURANT	1	1				
3	6YK–24610–01	.CAP ASSY .BOUCHON	1	1				
4	6YK–24260–01	.FUEL METER ASSY .INDICATEUR DE CARBURANT	1	1				
5	90157–05M16	.SCREW, PAN HEAD .VIS, TETE TRONCONIQUE	4	4				
6	6YL–24329–00	.SEAL .JOINT	4	4				
7	6YL–24306–53	FUEL PIPE COMP. 1 DURITE A ESSENCE 1	1	1				AP AP

FIG. 30 STEERING GUIDE FIXATION DE DIRECTION

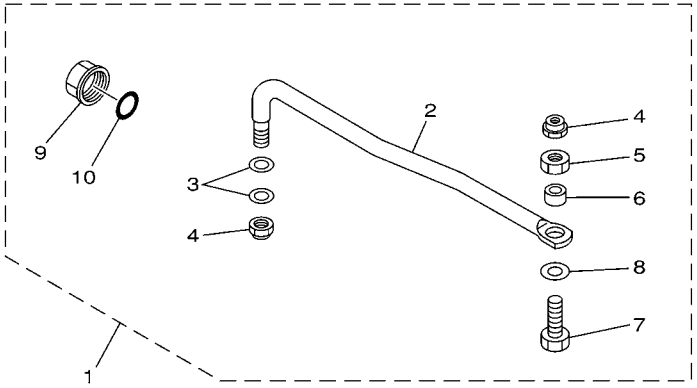

65W0010-8210

REF. NO.	PART NO. N° PIECES	DESCRIPTION DESCRIPTION	6C21	6C61				REMARKS REMARQUES
1	65W–61350–00	STEERING GUIDE ATTACHMENT KIT FIXATIONS DE DIRECTION	1	1				AP AP
2	65W–61351–00	.ROD, STEERING LINK .RENVOI DE DIRECTION	1	1				
3	90201–10M20	.WASHER, PLATE .RONDELLE, PLATE	2	2				
4	90185–09M01	.NUT, SELF-LOCKING .ECROU, AUTO-BLOQUANT	2	2				
5	90170–09M03	.NUT .ECROU	1	1				
6	90387–10M42	.COLLAR .COLLERETTE	1	1				
7	90101–09M01	.BOLT .BOULON	1	1				
8	90201–10M63	.WASHER, PLATE .RONDELLE, PLATE	1	1				
9	6E5–43145–01	.CAP, CLAMP BRACKET .CAPUCHON, PRESSE	1	1				
10	93210–16275	.O-RING .JOINT TORIQUE	1	1				

FIG. 31 REMOTE CONTROL BOX BOITIER DE COMMANDE A DISTANCE

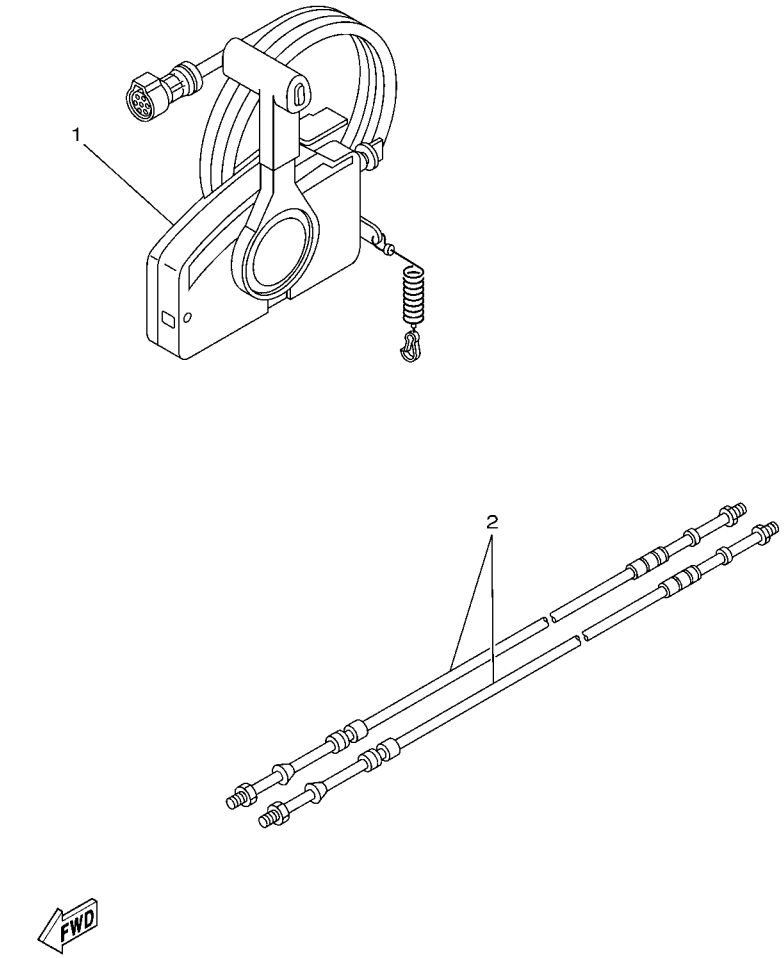

67M0100-8280

REF. NO.	PART NO. N° PIECES	DESCRIPTION DESCRIPTION	6C21	6C61				REMARKS REMARQUES
1	703–48205–17	REMOTE CONTROL ASSY (10P) BOITIER DE COMMANDE A DISTANCE	1	1				AP WITH PT/T SW. AP WITH PT/T SW.
2	701–48310–90	CABLE, REMOTE CONTROL L=11F CABLE, COMMANDE A DISTANCE:11F	2	2				UR UR
	701–48320–00	CABLE, REMOTE CONTROL L=12F CABLE, COMMANDE A DISTANCE:12F	2	2				UR UR
	701–48320–20	CABLE, REMOTE CONTROL L=13F CABLE, COMMANDE A DISTANCE:13F	2	2				UR UR
	701–48320–50	CABLE, REMOTE CONTROL L=15F CABLE, COMMANDE A DISTANCE:15F	2	2				UR UR

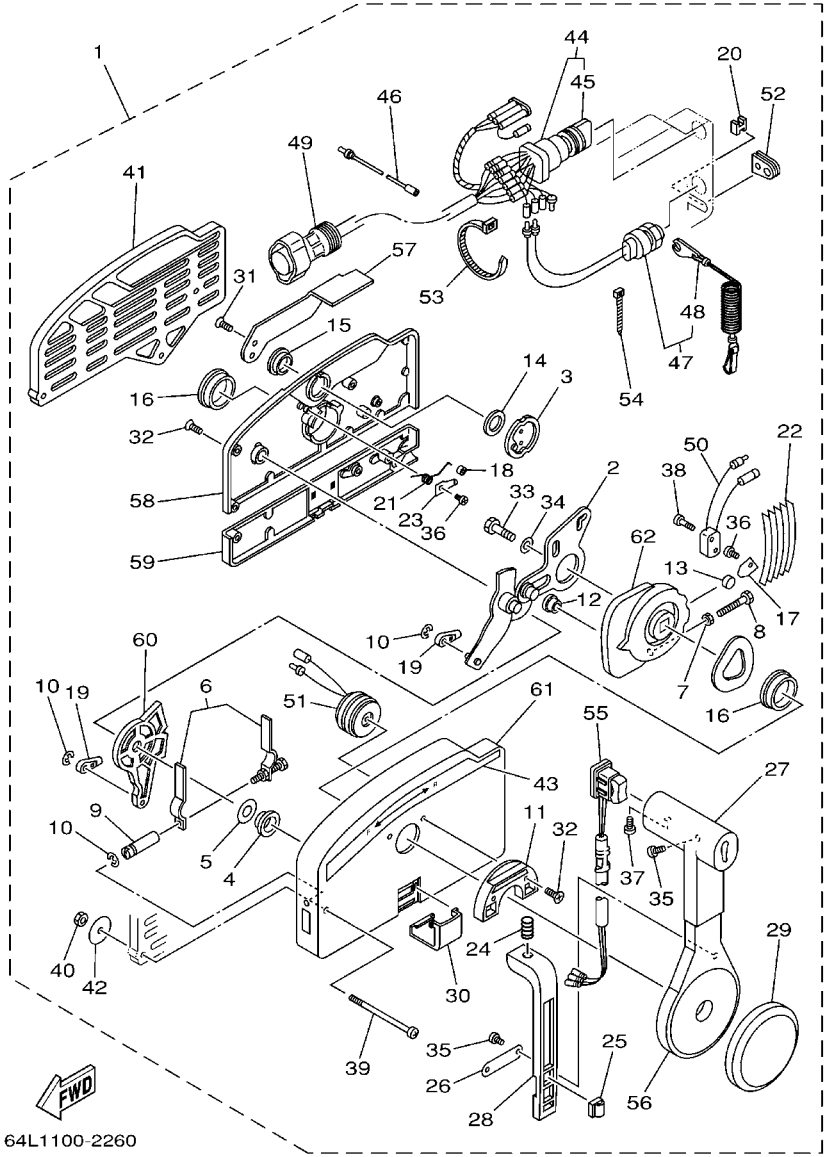

FIG. 32 REMOTE CONTROL ASSY — BOITIER DE COMMANDE A DISTANCE

REF. NO.	PART NO. N° PIECES	DESCRIPTION DESCRIPTION	6C21	6C61				REMARKS REMARQUES
1	703–48205–17	REMOTE CONTROL ASSY (10P) BOITIER DE COMMANDE A DISTANCE	1	1				AP WITH PT/T SW. AP WITH PT/T SW.
2	703–48261–01	.ARM, THROTTLE .BRAS, ACCELERATION	1	1				
3	703–48153–00	.SHAFT, FREE ACCEL. .AXE	1	1				
4	703–48235–00	.BUSHING .COUSSINET	1	1				
5	703–48268–00	.SPACER .ENTRETOISE	1	1				
6	703–48264–00	.FRICTION, THROTTLE .FRICTION, ACCELERATION	1	1				
7	95380–05600	.NUT .ECROU	1	1				
8	97380–05025	.BOLT .BOULON, HEXAGONAL	1	1				
9	703–48265–00	.SHAFT, FRICTION .AXE, COPILOTE	1	1				
10	93430–06024	.CIRCLIP .CLIPS	3	3				
11	703–48245–00	.PLATE, LOCK .PLAQUE, VERROU	1	1				
12	703–48252–00	.ROLLER, CAM .POULIE	1	1				
13	701–48248–00	.ROLLER, FREE ACCEL. .POULIE	1	1				
14	703–48198–00	.WASHER, WAVE .RONDELLE, ELASTIQUE ONDULEE	1	1				
15	703–48243–00	.BUSHING .COUSSINET	1	1				
16	703–48236–00	.BUSHING 1 .POULIE	2	2				
17	703–48189–00	.RETAINER .FLASQUE	1	1				
18	703–48234–00	.ROLLER, DETENT .POULIE	1	1				
19	703–48345–01	.CABLE END, REMOTE CONTROL 2 .CHAPE CABLE	2	2				
20	703–48358–00	.ANCHOR, CABLE .COLLIER	1	1				
21	703–48244–00	.SPRING, FREE ACCEL. .RESSORT	1	1				
22	703–48238–00	.SPRING, DETENT .RESSORT	5	5				
23	703–48246–00	.SPACER .ENTRETOISE	1	1				
24	703–48227–00	.SPRING, NEUTRAL LOCK .RESSORT	1	1				
25	703–82594–00	.CLAMP .BRIDE	1	1				WITH PT/T SW. WITH PT/T SW.
26	703–48226–00	.PLATE, STOPPER .PLAQUETTE	1	1				
27	703–48222–00	.GRIP, CONTROL LEVER .POIGNEE, COMMANDE LEVIER	1	1				SINGLE SINGLE

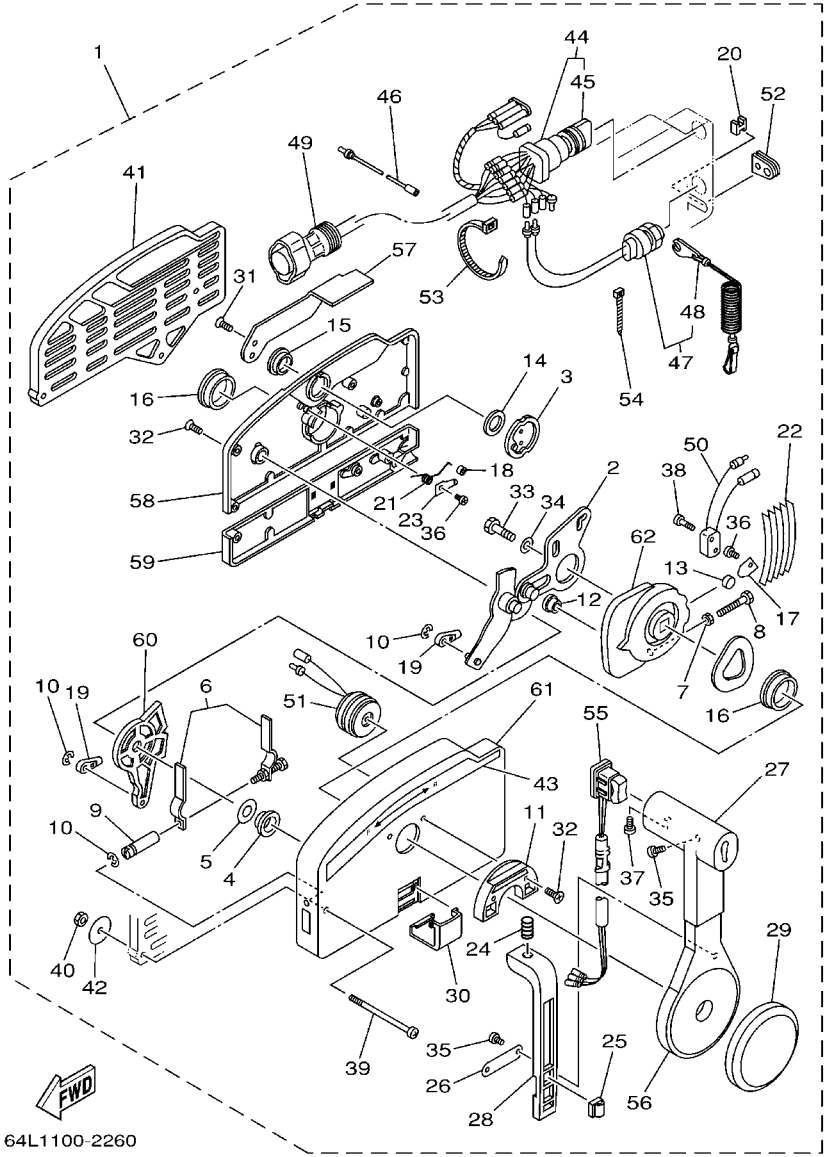

FIG. 32 REMOTE CONTROL ASSY — BOITIER DE COMMANDE A DISTANCE

REF. NO.	PART NO. N° PIECES	DESCRIPTION DESCRIPTION	6C21	6C61				REMARKS REMARQUES
28	703–48223–00	.LOCK, NEUTRAL .VERROU, NEUTRAL	1	1				
29	703–48225–00	.COVER .COUVERCLE	1	1				
30	703–48219–00	.COVER, LEAD .COUVERCLE	1	1				
31	703–48281–00	.SCREW .VIS	2	2				
32	703–48282–00	.SCREW .VIS	7	7				
33	97380–08030	.BOLT .BOULON, HEXAGONAL	1	1				
34	92990–08600	.WASHER, PLATE .RONDELLE, PLATE	1	1				
35	98580–04010	.SCREW, PAN HEAD .VIS	3	3				
36	98580–04006	.SCREW, PAN HEAD .VIS	2	2				
37	98580–05010	.SCREW, PAN HEAD .VIS	1	1				
38	98580–03015	.SCREW, PAN HEAD .VIS	2	2				
39	703–48291–10	.SCREW (M6) .VIS (M6)	3	3				
40	95380–06600	.NUT, HEXAGON .ECROU	3	3				
41	703–48293–10	.SPACER, REMOTE CONTROL .ENTRETOISE	1	1				SINGLE SINGLE
42	701–48287–00	.WASHER .RONDELLE	3	3				
43	703–48215–00	.GRAPHIC .ADHESIF	1	1				
44	703–82510–43	.MAIN SWITCH ASSY .CONTACTEUR A CLEF COMPLET	1	1				
45	703–82577–00	..CAP, KEY ..CABOCHON	1	1				
46	703–82531–00	.WIRE, LEAD .FIL	1	1				
47	688–82575–01	.ENGINE STOP SWITCH ASSY .COUPE CIRCUIT CPLT	1	1				
48	682–82556–00	..STOPPER ..PLAQUETTE	1	1				
49	688–8258A–20	.EXTENSION, WIRE HARNESS .EXTENSION, FAISCEAU DE FILS	1	1				L:5M (10P) L:5M (10P)
50	703–82540–00	.NEUTRAL SWITCH ASSY .CONTACTEUR DE POINT-MORT	1	1				
51	703–83383–02	.BUZZER .RONFLEUR	1	1				
52	703–48284–00	.GROMMET .PASSE-FIL	1	1				
53	703–82591–00	.BAND .COLLIER	1	1				
54	703–82592–00	.BAND .COLLIER	1	1				

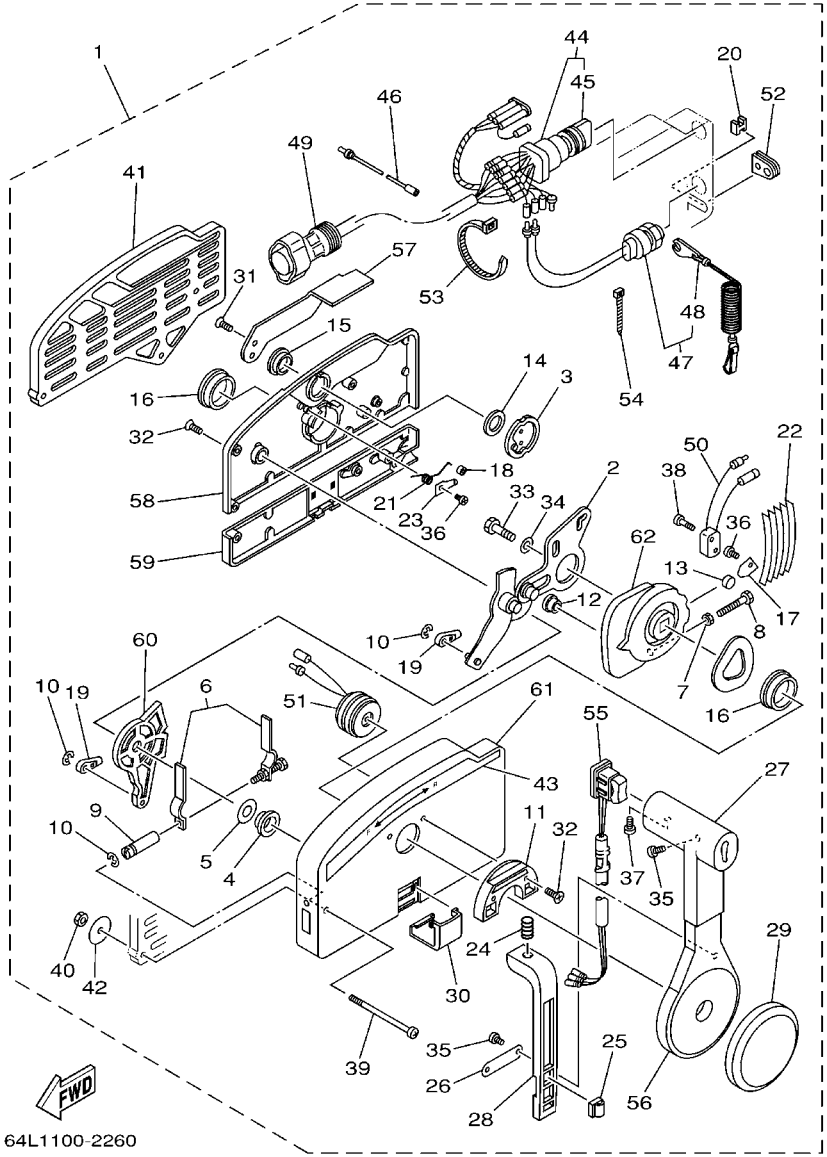

64L1100-2260

FIG. 32 REMOTE CONTROL ASSY BOITIER DE COMMANDE A DISTANCE

REF. NO.	PART NO. N° PIECES	DESCRIPTION DESCRIPTION	6C21	6C61				REMARKS REMARQUES
55	703–82563–02	.TRIM & TILT SWITCH ASSY .INCLINER ET PARER COMMUTATEUR	1	1				WITH PT/T SW. WITH PT/T SW.
56	703–48221–00	.LEVER, CONTROL .LEVIER, COMMANDE	1	1				
57	703–48152–00	.KNOB, FREE ACCEL. .BOUTON	1	1				
58	703–48212–00	.BACK PLATE 1 .PLAQUETTE 1	1	1				
59	703–48213–00	.BACK PLATE 2 .PLAQUETTE 2	1	1				
60	703–48271–00	.ARM, SHIFT .BRAS	1	1				
61	703–48211–01	.HOUSING,1 .CORPS	1	1				
62	703–48232–00	.GEAR .PIGNON	1	1				

FIG. 33 METER COMPTEUR

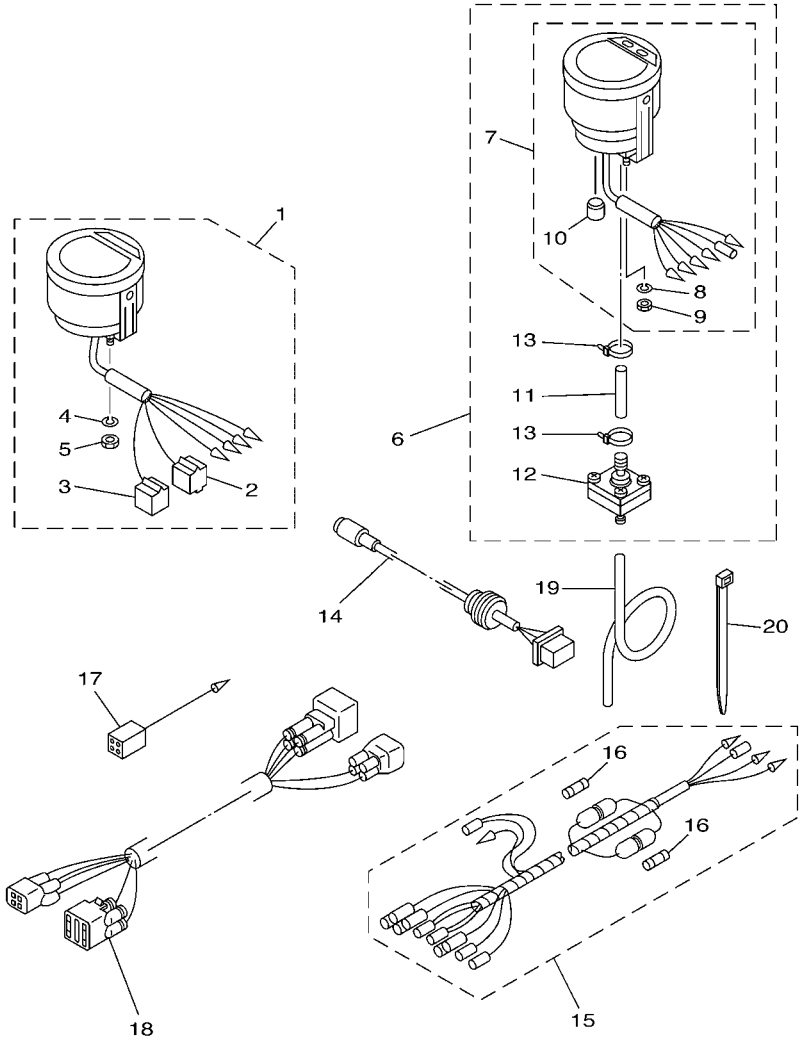

61A1700-2290

REF. NO.	PART NO. N° PIECES	DESCRIPTION DESCRIPTION	6C21	6C61				REMARKS REMARQUES
1	6Y5–8350T–03	TACHOMETER ASSY COMPTE-TOURS CPLT	1	1				AP AP
2	9E450–04433	.CONNECTOR .CONNECTEUR	1	1				M-4-W M-4-W
3	9E450–04533	.CONNECTOR .CONNECTEUR	1	1				F-4-W F-4-W
4	92990–04100	.WASHER, SPRING .RONDELLE, GROWER	2	2				
5	95380–04600	.NUT .ECROU	2	2				
6	6Y5–83500–S5	DIGITAL SPEEDOMETER ASSY TACHYMETRE NUMERIQUE CPLT.	1	1				AP AP
7	6Y5–83570–S5	.SPEEDOMETER ASSY .COMPTEUR DE VITESSE CPLT	1	1				
8	92990–04100	..WASHER, SPRING ..RONDELLE, GROWER	2	2				
9	95380–04600	..NUT ..ECROU	2	2				
10	6Y5–83533–T2	..GROMMET ..RONDELLE CAOUTCHOUC	1	1				
11	6Y5–83557–31	.TUBE .TUBE	1	1				
12	6Y5–83728–00	.CONNECTOR ASSY .CONNEXION COMPLET	1	1				
13	90465–11M10	.CLAMP .BRIDE	2	2				
14	6Y5–87122–S0	CORD ASSY 1 COPDON COMPLET	1	1				AP AP
15	6Y5–83553–M0	WIRE, LEAD FIL	1	1				AP AP
16	1E6–82151–00	.FUSE (10A) .FUSIBLE (10A)	2	2				
17	6Y5–82117–00	WIRE, LEAD (BLACK) FIL (NOIR)	1	1				AP AP
18	68F–82553–80	EXTENSION, WIRE LEAD EXTENSION, FAISCEAU	1	1				AP AP
19	6Y5–83557–10	TUBE (8M) TUBE (8M)	1	1				AP AP
20	90465–11M10	CLAMP BRIDE	2	2				AP AP

FIG. 34 OPTIONAL PARTS PIECES OPTIONNELLES

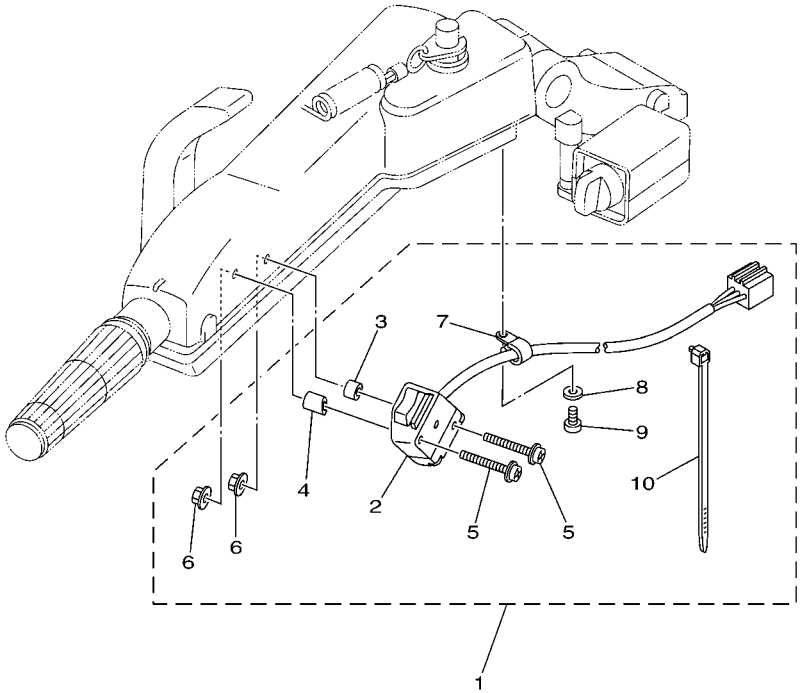

6C11010-D330

REF. NO.	PART NO. N° PIECES	DESCRIPTION DESCRIPTION	6C21	6C61				REMARKS REMARQUES
1	6C5–W8186–00	SPEED CONTROL SWITCH KIT POCHETTE, COMMUTATEUR COMMANDE	1	1				AP AP
2	6C5–81860–00	.SWITCH ASSY .COMMUTATEUR COMPLET	1	1				
3	6C5–23448–00	.SPACER .ENTRETOISE	1	1				
4	6C5–23448–10	.SPACER .ENTRETOISE	1	1				
5	90159–06018	.SCREW, WITH WASHER .VIS, AVEC RONDELLE	2	2				
6	95780–06300	.NUT, FLANGE .ECROU	2	2				
7	90465–06M86	.CLAMP .BRIDE	2	2				
8	90201–06028	.WASHER, PLATE .RONDELLE, PLATE	2	2				
9	97885–06016	.SCREW, PAN HEAD .VIS, A ENCOCHE	2	2				
10	90465–13M24	.CLAMP .BRIDE	4	4				

FIG. 35 REPAIR KIT 1 — KITS DE REPARATION 1

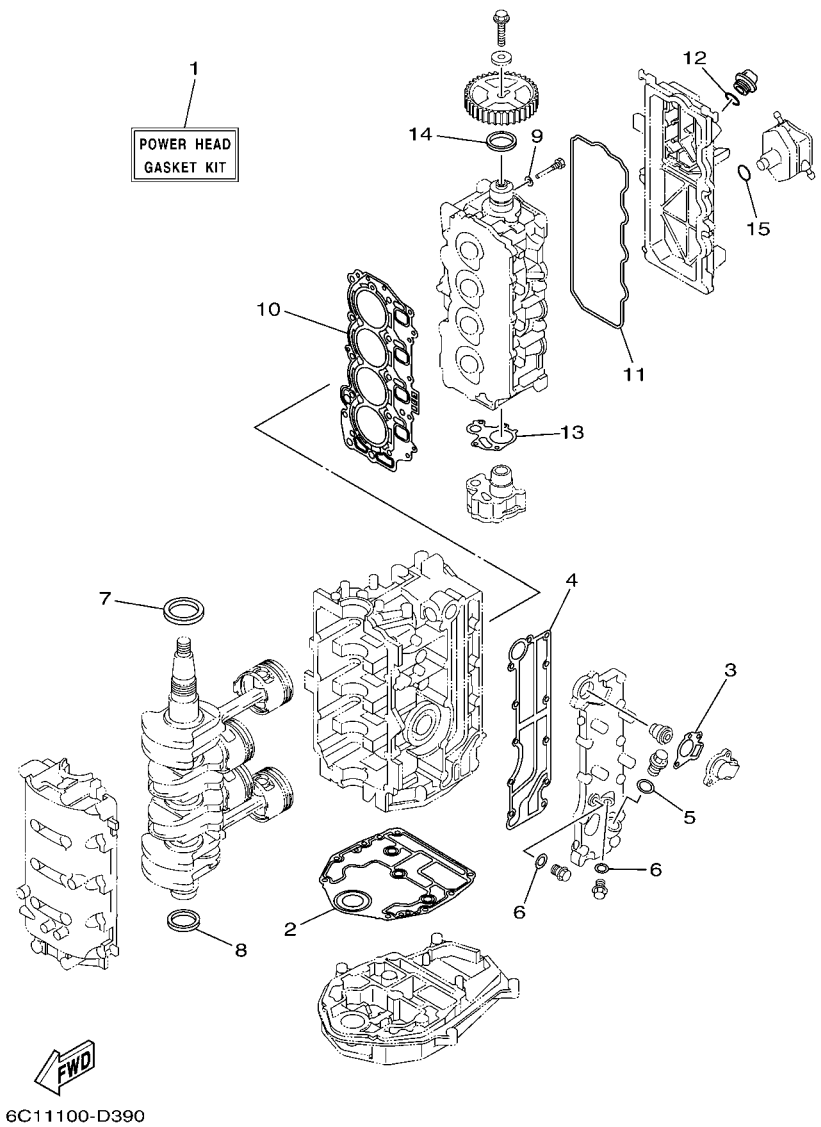

REF. NO.	PART NO. N° PIECES	DESCRIPTION DESCRIPTION	6C21	6C61				REMARKS REMARQUES
1	6C5–W0001–00	POWER HEAD GASKET KIT POCHETTE DE JINTS TETE MOTRICE	1	1				
2	67C–11351–01	.GASKET, CYLINDER .JOINT, D'EMBASE	1	1				
3	62Y–12414–00	.GASKET, COVER .JOINT, COUVERCLE	1	1				
4	6C5–41114–00	.GASKET, EXHAUST OUTER COVER .JOINT, COUVERCLE D'ECHAPPEMEN	1	1				
5	90430–18130	.GASKET .JOINT	1	1				
6	90430–14115	.GASKET .JOINT	2	2				
7	93102–43M42	.OIL SEAL .JOINT SPY	1	1				
8	93101–35002	.OIL SEAL .JOINT SPY	1	1				
9	90430–06014	.GASKET .JOINT	1	1				
10	6C5–11181–01	.GASKET, CYLINDER HEAD 1 .JOINT, DE CULASSE 1	1	1				
11	62Y–11356–00	.SEAL, CYLINDER 2 .JOINT, SPY CYLINDRE	1	1				
12	93210–24M79	.O-RING .JOINT TORIQUE	1	1				
13	6C5–13329–00	.GASKET, PUMP COVER .JOINT, COUVERCLE DE POMPE	1	1				
14	93102–37M40	.OIL SEAL .JOINT SPY	1	1				
15	93210–24M79	.O-RING .JOINT TORIQUE	1	1				

FIG. 36 REPAIR KIT 2 — KITS DE REPARATION 2

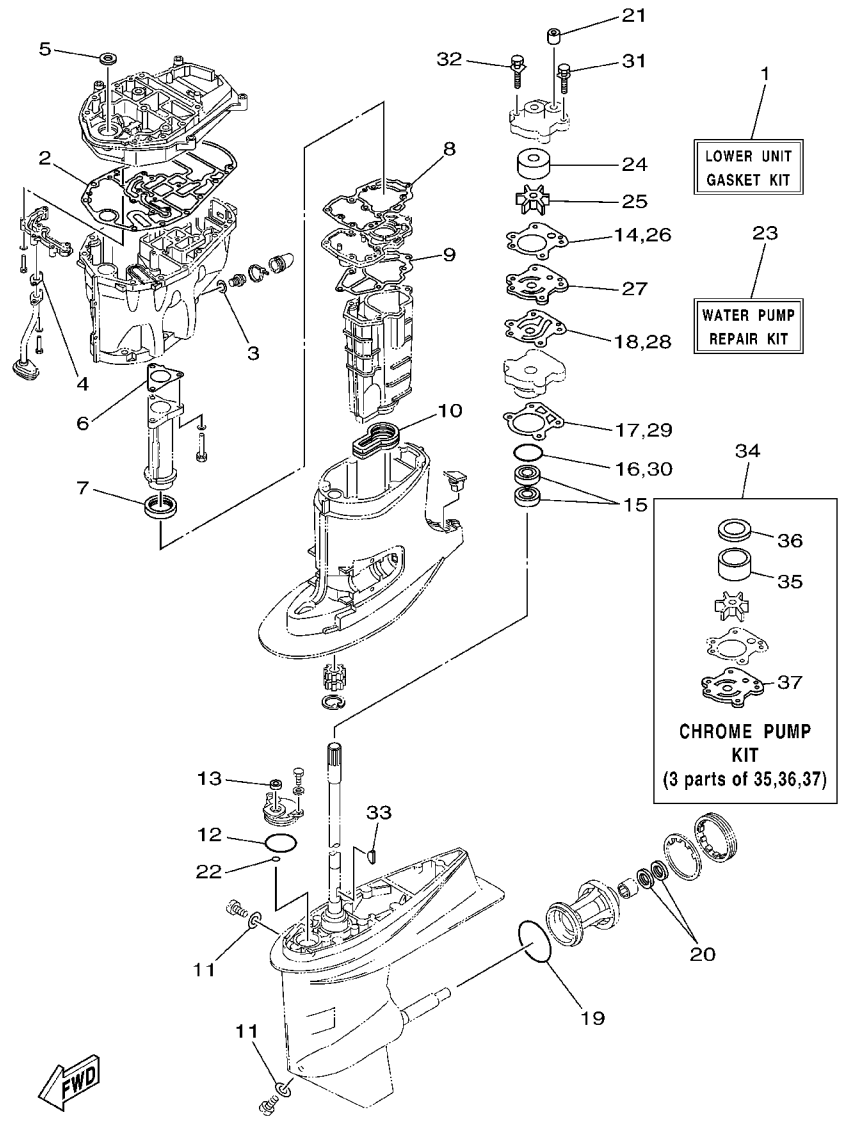

REF. NO.	PART NO. N° PIECES	DESCRIPTION DESCRIPTION	6C21	6C61				REMARKS REMARQUES
1	6C6–W0001–20	LOWER UNIT GASKET KIT POCHETTE DE JOINTS EMBASE	1	1				
2	6C5–15312–00	.GASKET, OIL PAN .JOINT DE VENTILATEUR D'HUILE	1	1				
3	90430–14M09	.GASKET .JOINT	1	1				
4	6C5–13414–00	.GASKET, STRAINER COVER .JOINT, COUVERCLE DE FILTRE	1	1				
5	93103–18011	.OIL SEAL .JOINT SPY	1	1				
6	6C5–41133–00	.GASKET, EXHAUST MANIFOLD 1 .JOINT, PIPE D'ECHAPPEMENT	1	1				
7	6C5–46132–00	.GASKET 1 .JOINT 1	1	1				
8	6C5–41134–00	.GASKET, EXHAUST MANIFOLD .JOINT, PIPE D'ECHAPPEMENT	1	1				
9	6C5–41135–00	.GASKET, EXHAUST MANIFOLD .JOINT, PIPE D'ECHAPPEMENT	1	1				
10	6C5–45123–00	.GASKET, MUFFLER .JOINT, POT DE DETENTE	1	1				
11	90430–08020	.GASKET .JOINT	2	2				
12	93210–49046	.O-RING .JOINT TORIQUE	1	1				
13	93106–09014	.OIL SEAL .JOINT SPY	1	1				
14	6H3–44315–A0	.GASKET, WATER PUMP .JOINT, POMPE A EAU	1	1				
15	93101–23070	.OIL SEAL .JOINT SPY	2	2				
16	93210–46044	.O-RING .JOINT TORIQUE	1	1				
17	688–44316–A0	.GASKET, WATER PUMP .JOINT, POMPE A EAU	1	1				
18	6H3–44324–A0	.GASKET, CARTRIDGE .JOINT	1	1				
19	93210–86M39	.O-RING .JOINT TORIQUE	1	1				
20	93101–25M03	.OIL SEAL .JOINT SPY	2	2				
21	663–44366–00	.DAMPER, WATER SEAL .JOINT, TUBE D'EAU	1	1				
22	93210–07003	.O-RING .JOINT TORIQUE	1	1				
23	6H3–W0078–02	WATER PUMP REPAIR KIT KIT DE REPARATION DE LA POMPE	1	1				
24	663–44322–00	.INSERT, CARTRIDGE .CUVETTE	1	1				
25	6H3–44352–00	.IMPELLER .TURBINE	1	1				
26	6H3–44315–A0	.GASKET, WATER PUMP .JOINT, POMPE A EAU	1	1				
27	6H3–44323–00	.OUTER PLATE, CARTRIDGE .PLAQUE EXTERIEURE	1	1				

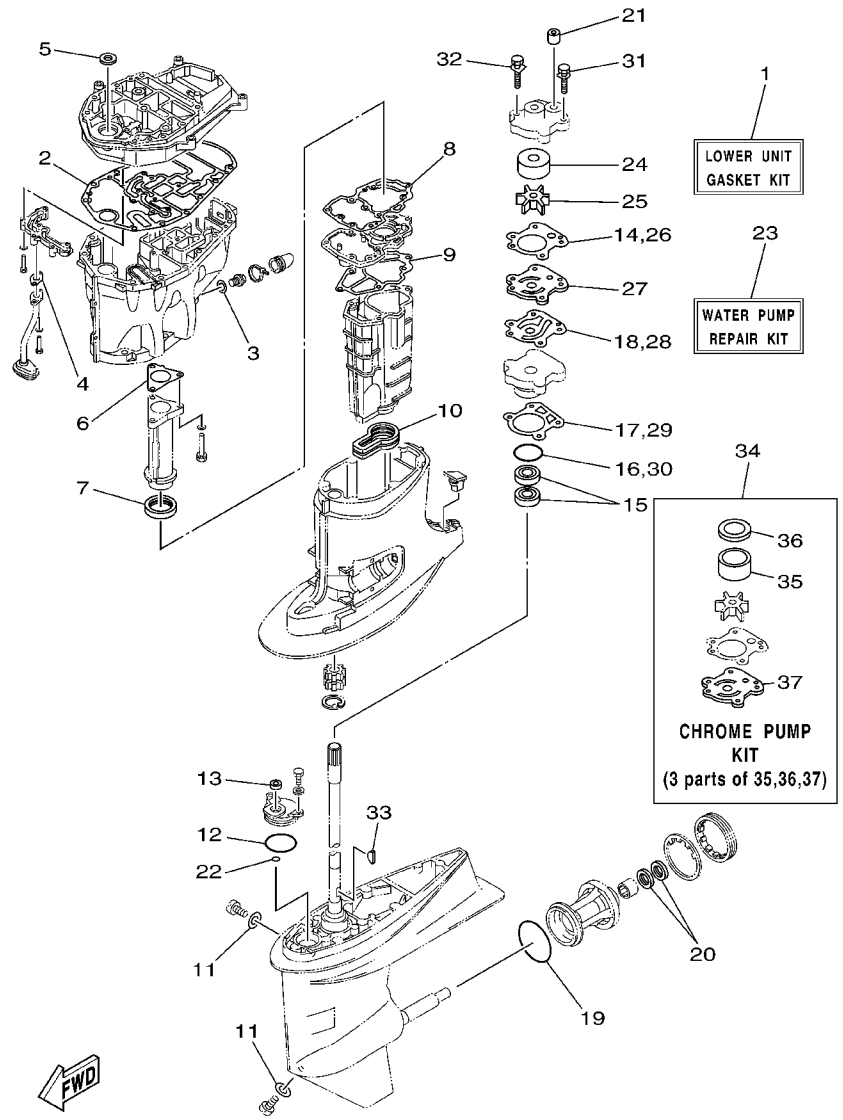

FIG. 36 REPAIR KIT 2 — KITS DE REPARATION 2

REF. NO.	PART NO. N° PIECES	DESCRIPTION DESCRIPTION	6C21	6C61				REMARKS REMARQUES
28	6H3–44324–A0	.GASKET, CARTRIDGE .JOINT	1	1				
29	688–44316–A0	.GASKET, WATER PUMP .JOINT, POMPE A EAU	1	1				
30	93210–46044	.O-RING .JOINT TORIQUE	1	1				
31	90119–08M14	.BOLT, WITH WASHER .BOULON, AVEC RONDELLE	2	2				
32	90119–08M33	.BOLT, WITH WASHER .BOULON, AVEC RONDELLE	2	2				
33	90280–03M03	.KEY, WOODRUFF .CLAVETTE, DEMI-LUNE	1	1				
34	6H3–W0078–0A	CHROME PUMP KIT KIT DE POMPE A EAU CHROMEE	1	1				
35	670–44322–01	.INSERT, CARTRIDGE .CUVETTE	1	1				
36	670–44321–00	.INNER PLATE, CARTRIDGE .CUVETTE	1	1				
37	6H3–44323–40	.OUTER PLATE, CARTRIDGE .PLAQUE EXTERIEURE	1	1				

NUMERICAL INDEX
INDEX NUMERIQUE

PART NO. N° PIECES	REF. NO.
6C5–11111–00–1S	4 – 2
62Y–11119–00	4 – 26
62Y–11133–30	4 – 3
6C5–11168–00	4 – 20
6C5–11181–01	4 – 14
	35 – 10
6C5–11191–00–1S	4 – 18
62Y–11325–00	2 – 18
	4 – 4
66M–11327–00–94	2 – 20
	4 – 6
66M–11328–00	2 – 19
	4 – 5
67C–11351–01	2 – 8
	35 – 2
62Y–11356–00	4 – 23
	35 – 11
6C5–1135A–00	2 – 16
6C5–11411–00	3 – 1
6C5–11416–00	3 – 2
6C5–11416–10	3 – 2
6C5–11416–20	3 – 2
6C5–11416–30	3 – 2
6C5–11536–00	10 – 7
6C5–11537–00	10 – 2
6H4–11545–00	12 – 5
62Y–11557–00	10 – 8
6G8–11577–00	10 – 15
67C–11603–00	3 – 7
67C–11604–00	3 – 7
67C–11605–00	3 – 7
69W–11631–00–97	3 – 6
62Y–11633–00	3 – 8
69W–11635–00	3 – 6
69W–11636–00	3 – 6
6C5–11650–00	3 – 3
6C5–11654–00	3 – 4
6C5–11656–00	3 – 5
6C5–11656–10	3 – 5
6C5–11656–20	3 – 5
6C5–11656–30	3 – 5
69W–12111–00	5 – 1
51Y–12114–00	5 – 4
62Y–12116–00	5 – 3
30X–12117–00	5 – 5
30X–12118–00	5 – 6
51Y–12119–00	5 – 7
69W–12121–00	5 – 2

PART NO. N° PIECES	REF. NO.
62Y–12138–60	4 – 41
6C5–12146–00	5 – 8
62Y–12151–00	5 – 9
6C5–12151–00	5 – 12
62Y–12158–00	5 – 11
6C5–12158–00	5 – 14
64J–12159–00	5 – 10
6C5–12159–00	5 – 13
6C5–12171–00	10 – 1
6C5–12231–00	5 – 15
6C5–12233–00	5 – 16
6C5–12241–00	5 – 17
6C5–12243–00	5 – 18
6G8–12411–03	2 – 11
6H3–12413–00–1S	2 – 12
62Y–12414–00	2 – 13
	35 – 3
62Y–12481–10	2 – 10
66M–12535–00	2 – 21
	4 – 7
69W–12535–00	19 – 3
68T–12572–00	19 – 2
6R3–12580–00	19 – 8
6C5–12858–00	2 – 31
6C5–13105–00	6 – 10
62Y–13131–00	11 – 23
6C5–13142–00	10 – 14
6C5–13161–00	6 – 13
6C5–13300–00	10 – 11
6C5–13329–00	10 – 17
	35 – 13
6C5–13411–00	26 – 8
6C5–13414–00	26 – 9
	36 – 4
6C5–13428–00	7 – 21
67F–13434–02	1 – 16
6C5–13437–60	12 – 16
5GH–13440–10	2 – 30
62Y–13444–50	19 – 19
69W–13448–00	1 – 15
6C5–13542–00	9 – 2
6C5–13545–00	9 – 19
6C5–13546–00	9 – 1
6C5–13547–00	9 – 20
6C5–13548–00	9 – 24
6C5–13557–00	6 – 4
6C5–13577–00	9 – 10
6C5–13593–00	8 – 20

PART NO. N° PIECES	REF. NO.
6C5–13641–00	6 – 2
6C5–13645–00	6 – 3
6C5–13716–00	8 – 22
6C5–13739–00	9 – 25
6C5–13750–00	6 – 5
6C5–13761–00	6 – 16
6C5–13781–00	8 – 21
6C5–13906–00	8 – 9
6C5–13907–00	8 – 17
6C5–13910–00	8 – 16
6C5–13915–00	8 – 19
6C5–13974–00	9 – 16
6C5–1410B–00	6 – 17
6C5–1410F–00	9 – 23
6C5–14127–00	8 – 18
6C5–14148–00	9 – 14
6C5–14149–00	9 – 8
6C5–14180–00	8 – 1
6C5–14182–00	8 – 2
6C5–14191–00	8 – 13
6C5–14200–00	6 – 1
6C5–14225–00	8 – 25
6C5–14251–00	9 – 12
6C5–14386–00	8 – 5
6C5–14397–00	6 – 11
	8 – 14
6C5–14440–00	7 – 4
6C5–14446–00	6 – 15
6C1–14453–00	7 – 5
6C5–14453–00	7 – 5
6C1–14477–00	7 – 6
62Y–14485–00	4 – 19
6C5–14496–00	6 – 9
6C5–14546–00	8 – 4
6C5–14567–00	8 – 15
6C5–14711–00–5B	25 – 14
6C5–14960–00	8 – 12
6C5–14984–00	8 – 23
6C5–14985–00	8 – 3
6C5–15100–00–1S	2 – 2
6C5–15311–00–5B	26 – 1
6C5–15312–00	26 – 2
	36 – 2
6C5–15316–00	26 – 4
6C5–1531A–00	4 – 31
6C5–15333–00	26 – 10
6C5–15362–00	26 – 13
6G8–15363–00	4 – 29

PART NO. N° PIECES	REF. NO.
6C5–15378–00	4 – 32
6C5–15378–10	4 – 35
6C5–21337–00	8 – 24
6C5–21841–00	9 – 11
6C5–22435–00	23 – 15
6C5–22471–00	23 – 8
6C5–23448–00	34 – 3
6C5–23448–10	34 – 4
6C5–2411M–00	9 – 13
6YK–24201–02	29 – 1
6C5–24251–00	9 – 21
6YK–24260–01	29 – 4
6YL–24268–01	29 – 2
6G1–24304–02	11 – 1
6YL–24306–53	29 – 7
6C5–24312–00	19 – 6
6C5–24321–00	9 – 3
6C5–24322–00	9 – 4
6C5–24323–00	9 – 5
6C5–24324–00	9 – 6
6C5–24325–00	9 – 7
61N–24329–00	18 – 28
6YL–24329–00	29 – 6
62Y–24374–01	11 – 28
67F–24377–00	11 – 5
688–24378–00	19 – 10
6C5–24378–00	19 – 14
6C5–24379–00	9 – 18
6C5–24387–00	9 – 15
6C5–24410–00	11 – 19
62Y–24411–02	11 – 21
6C5–24415–00	11 – 20
6C5–2441R–00	8 – 6
6C5–2441T–00	8 – 7
62Y–24423–00	11 – 22
6C5–24444–00	9 – 9
62Y–24444–01	11 – 25
6C5–24453–00	8 – 8
62Y–24454–00	11 – 24
68V–24469–01	11 – 13
6C5–24471–00	11 – 26
6C5–2451B–00	9 – 22
68V–24521–01	11 – 10
68V–24560–01	11 – 9
68V–24563–00	11 – 11
6C5–24566–00	11 – 14
6C5–24592–00	8 – 10
6YK–24610–01	29 – 3

PART NO. N° PIECES	REF. NO.
6C5–28100–00	11 – 35
67F–2812A–00	15 – 31
6A1–28176–00	19 – 20
6C1–28199–70–D0	11 – 36
6C1–28199–70–E0	11 – 36
6C1–28199–70–F0	11 – 36
6C1–28199–70–G0	11 – 36
6C1–28199–70–H0	11 – 36
6C1–28199–70–S0	11 – 36
6C1–28199–80–K0	11 – 37
6C1–28199–80–L0	11 – 37
6C1–28199–80–M0	11 – 37
6C1–28199–80–N0	11 – 37
6C1–28199–80–P0	11 – 37
6C1–28199–80–R0	11 – 37
61H–2819R–31	11 – 34
6C5–41113–00–1S	2 – 9
6C5–41114–00	2 – 14
	35 – 4
6C5–41131–00–5B	25 – 6
6C5–41133–00	25 – 5
	36 – 6
6C5–41134–00	25 – 10
	36 – 8
6C5–41135–00	25 – 13
	36 – 9
6C5–41137–00–94	25 – 1
688–41211–01	20 – 24
6H4–41237–00	20 – 25
62Y–42154–00	20 – 27
6C5–42171–00	20 – 28
6C5–42335–00	20 – 33
69W–42510–01–4D	22 – 1
624–42542–00	7 – 9
	13 – 25
	14 – 24
6C2–42610–00–4D	1 – 1
6C6–42610–00–4D	1 – 1
67C–42613–00–4D	1 – 2
6C5–42615–00	1 – 14
6C5–42651–00	1 – 4
67C–42652–01	1 – 6
69W–42677–00	1 – 9
62Y–42677–30	1 – 9
6C2–42678–00	1 – 10
6C6–42678–00	1 – 10
69W–42681–00	1 – 12
69W–42682–00	1 – 13

PART NO. N° PIECES	REF. NO.
6C5–42710–10–4D	18 – 1
62Y–42715–01	20 – 11
62Y–42716–00	18 – 5
65W–42717–00	18 – 6
6C5–42718–00	18 – 8
6C5–42724–00	18 – 23
65W–42724–10	19 – 1
6C5–42725–30	18 – 9
6C5–42726–00	18 – 43
62Y–42727–00	18 – 10
68U–42727–00	18 – 26
6H3–42727–00	18 – 27
6C5–42738–00–4D	18 – 7
67C–42741–10–4D	18 – 29
6C5–42811–00	15 – 27
67C–42815–00–4D	18 – 12
67C–42816–01	18 – 17
6C5–43111–00–4D	21 – 1
6C5–43112–00–4D	21 – 2
6E5–43126–02	21 – 26
6C6–43127–00	22 – 29
63D–43131–01	21 – 11
66T–43144–00	18 – 19
6G5–43144–00	21 – 23
6E5–43145–01	30 – 9
6G5–43148–00	21 – 19
6C5–43181–00	21 – 14
6C5–43185–00	21 – 15
6C5–43311–00–4D	21 – 9
6C5–43800–00–4D	23 – 1
6C5–43801–00	23 – 3
6C5–43804–00	24 – 5
6C5–43805–00	24 – 4
6C5–4380G–00	23 – 22
6C5–4380K–00	23 – 18
6C5–43810–00	23 – 2
6C5–43816–00	23 – 21
6C5–43817–10	23 – 19
6C5–43818–00	21 – 36
6C5–4381B–00	23 – 10
6C5–4381K–00	23 – 35
6C6–4381K–00	23 – 38
6H1–43829–00	23 – 63
6C6–4382E–00	23 – 28
6C5–4382K–00	23 – 41
6C5–4382L–00	23 – 56
6C5–43830–00	23 – 24
6C5–43831–00	23 – 64

NUMERICAL INDEX
INDEX NUMERIQUE

PART NO. N° PIECES	REF. NO.
6C5–43833–00	21 – 37
6C5–43834–00	21 – 38
6C5–43841–00	23 – 57
6C6–43841–00	23 – 25
6C5–43845–00	23 – 61
62X–4384H–00	23 – 14
6C5–43851–00	23 – 34
6C6–43853–00	23 – 30
6C5–43854–00	23 – 43
6C5–43855–00	23 – 39
6C5–43856–00	23 – 40
6C5–43861–00	23 – 6
6C5–43862–00	23 – 5
62Y–43863–00	23 – 4
6C5–43869–00	24 – 6
6C6–4386E–00	23 – 54
6C6–4386G–00	23 – 53
6C5–4386K–00	24 – 10
6C5–43871–00	23 – 7
6C5–43872–00	23 – 58
6C5–43875–00	23 – 9
6H1–43875–00	23 – 60
6C6–43878–00	23 – 47
6C5–43879–00	24 – 7
62Y–4387G–00	23 – 48
6C6–4387G–00	23 – 31
6C5–43880–00	24 – 1
6C5–43881–00	24 – 11
6C5–43882–00	24 – 8
6H1–43883–00	23 – 26
6C5–43885–00	22 – 18
62X–43888–00	24 – 12
6C6–4388E–00	23 – 51
6C6–4388F–00	23 – 52
6C5–43891–00	24 – 9
6C5–43893–00	23 – 36
6C6–43893–00	23 – 37
6C6–43894–00	23 – 27
6C5–43895–00	23 – 42
6C5–43899–00	23 – 12
69J–4389J–00	23 – 20
62Y–44117–01–4D	20 – 2
62Y–44118–00	20 – 12
6C5–44120–00	20 – 7
69W–44121–00	20 – 1
688–44122–00	20 – 20
6C5–44122–00	20 – 8
62Y–44135–00	20 – 30

PART NO. N° PIECES	REF. NO.
64J–44150–00	27 – 64
6H3–44311–00	27 – 21
6H3–44315–A0	27 – 23
	36 – 14
688–44316–A0	27 – 30
	36 – 17
670–44321–00	36 – 36
663–44322–00	27 – 22
	36 – 24
670–44322–01	36 – 35
6H3–44323–00	27 – 31
	36 – 27
6H3–44323–40	36 – 37
6H3–44324–A0	27 – 32
	36 – 18
6H3–44341–00–94	27 – 27
6H3–44352–00	27 – 25
	36 – 25
6C5–44361–00	28 – 1
663–44366–00	27 – 24
	28 – 3
	36 – 21
663–44367–00	28 – 2
6H3–44391–01	18 – 22
64J–44514–00–4D	22 – 10
69W–44526–01	22 – 12
69W–44551–00–4D	22 – 16
6C5–44552–00–4D	22 – 19
67C–44553–00–4D	22 – 30
69W–44555–00–4D	22 – 20
6C5–44575–00	22 – 23
6C5–45111–00–4D	25 – 27
6C5–45123–00	25 – 17
	36 – 10
6C5–45135–01	26 – 14
6C5–45136–01	26 – 15
6C5–45155–00	25 – 20
6C5–45181–00–5B	25 – 11
6H1–45214–00	28 – 11
6H1–45215–00	28 – 12
65W–45251–00	21 – 5
68S–45300–30–4D	27 – 1
67F–45301–00–4D	27 – 2
69W–45318–00	25 – 21
688–45321–00	27 – 12
67F–45331–00–94	27 – 55
688–45341–10	27 – 10
67F–45371–00	28 – 15

PART NO. N° PIECES	REF. NO.
688–45375–00	28 – 10
663–45376–00–94	28 – 9
6E5–45378–00	27 – 17
688–45383–02	27 – 62
688–45384–00	27 – 63
64J–45501–30	27 – 36
688–45536–01	27 – 4
6K5–45551–00	27 – 37
68S–45560–00	27 – 39
688–45567–01	27 – 7
688–45567–10	27 – 7
688–45567–20	27 – 7
688–45567–30	27 – 7
688–45567–40	27 – 7
688–45567–50	27 – 7
688–45567–60	27 – 7
68S–45571–00	27 – 54
67F–45576–00	27 – 57
688–45587–01	27 – 5
688–45587–10	27 – 5
688–45587–20	27 – 5
688–45587–30	27 – 5
688–45587–40	27 – 5
688–45587–50	27 – 5
688–45587–60	27 – 5
67F–45611–01	27 – 41
67F–45631–00	27 – 42
688–45633–00	27 – 51
67F–45634–00	27 – 43
6H1–45635–00	27 – 45
6H1–45668–00	27 – 44
68S–45941–00–EL	28 – 22
6E5–45954–00–EL	28 – 22
688–45987–01	28 – 17
67F–45997–00	28 – 18
6C5–46132–00	25 – 7
	36 – 7
6C5–46241–00	10 – 6
703–48152–00	32 – 57
703–48153–00	32 – 3
703–48189–00	32 – 17
703–48198–00	32 – 14
703–48205–17	31 – 1
	32 – 1
703–48211–01	32 – 61
703–48212–00	32 – 58
703–48213–00	32 – 59
703–48215–00	32 – 43

PART NO. N° PIECES	REF. NO.
703–48219–00	32 – 30
703–48221–00	32 – 56
703–48222–00	32 – 27
703–48223–00	32 – 28
703–48225–00	32 – 29
703–48226–00	32 – 26
703–48227–00	32 – 24
703–48232–00	32 – 62
703–48234–00	32 – 18
703–48235–00	32 – 4
703–48236–00	32 – 16
703–48238–00	32 – 22
703–48243–00	32 – 15
703–48244–00	32 – 21
703–48245–00	32 – 11
703–48246–00	32 – 23
701–48248–00	32 – 13
703–48252–00	32 – 12
703–48261–01	32 – 2
703–48264–00	32 – 6
703–48265–00	32 – 9
703–48268–00	32 – 5
703–48271–00	32 – 60
703–48281–00	32 – 31
703–48282–00	32 – 32
703–48284–00	32 – 52
701–48287–00	32 – 42
703–48291–10	32 – 39
703–48293–10	32 – 41
701–48310–90	31 – 2
701–48320–00	31 – 2
701–48320–20	31 – 2
701–48320–50	31 – 2
69W–48344–00	20 – 23
703–48345–01	32 – 19
703–48358–00	32 – 20
65W–48511–00	22 – 39
62Y–48538–00	20 – 39
65W–61350–00	30 – 1
65W–61351–00	30 – 2
6C5–81145–00	6 – 7
6C5–81146–00	6 – 12
68V–81315–00	15 – 8
6C5–81336–00	14 – 2
6C5–81337–00	12 – 1
6C5–81410–00	12 – 4
6C5–81450–00	12 – 3
6C5–81800–00	17 – 1

PART NO. N° PIECES	REF. NO.
69J–81801–00	17 – 5
67F–81807–00	17 – 10
67F–81808–00	17 – 8
67F–81809–00	17 – 19
67F–81810–00	17 – 3
67F–81813–00	17 – 6
6C5–81815–00	14 – 17
68F–81820–00	17 – 7
67F–81821–00	17 – 13
6C5–81822–00–94	16 – 3
6K7–81826–10	17 – 24
69J–81828–00	17 – 25
6C5–8182L–00	6 – 8
67F–81830–00	17 – 17
67F–81832–00	17 – 11
67F–81836–00	17 – 12
69J–81839–00	17 – 21
67F–8183R–00	17 – 16
60V–8183T–00	17 – 18
69J–81840–00	17 – 4
67F–81841–00	17 – 14
6C5–81842–00	17 – 20
67F–81846–00	17 – 26
67F–81850–00	17 – 2
67F–81857–00	17 – 9
6C5–81860–00	34 – 2
69J–81869–00	17 – 23
67F–81891–00	17 – 15
6C5–81919–00	15 – 32
60V–81925–00	14 – 14
6C5–81941–00	17 – 22
6C5–81942–00	15 – 22
6C5–81948–00	14 – 21
68V–8194A–00	14 – 34
60E–81950–00	14 – 1
63P–81950–00	14 – 27
6C5–81953–00	14 – 39
68V–81960–00	13 – 15
6C5–81961–00	13 – 16
6C5–82105–00	16 – 1
6Y5–82117–00	33 – 17
6G5–82119–00	14 – 38
703–82119–00	21 – 31
682–82119–01	14 – 28
67C–82127–10	22 – 37
6E5–82148–00	21 – 3
1E6–82151–00	33 – 16
67F–82151–00	15 – 2

PART NO. N° PIECES	REF. NO.
67F–82151–10	15 – 3
67F–8215B–10	15 – 4
67F–8215B–20	15 – 5
6C5–82171–00	13 – 20
6C5–82176–00	15 – 26
63P–82310–01	13 – 5
6C5–82316–00	13 – 12
6C5–82316–10	13 – 13
6A0–82317–00	7 – 8
	14 – 26
6C5–82317–00	13 – 24
6E7–82317–00	18 – 25
6C5–82340–00	13 – 6
67F–82361–00	13 – 8
6C5–82377–00	19 – 18
6C5–82388–00	15 – 12
64J–82504–00	15 – 21
703–82510–43	32 – 44
703–82531–00	32 – 46
703–82540–00	32 – 50
6C5–82553–00	15 – 9
68F–82553–80	33 – 18
6C5–82554–00	15 – 16
682–82556–00	32 – 48
703–82563–02	32 – 55
63D–82563–10	14 – 43
688–82575–01	32 – 47
703–82577–00	32 – 45
6E3–8257H–00	19 – 21
6C5–8257V–00	14 – 4
68F–82582–00	14 – 16
6E5–82587–00	14 – 46
61A–82588–01	15 – 17
688–8258A–20	32 – 49
6C5–82590–10	15 – 1
703–82591–00	32 – 53
703–82592–00	32 – 54
703–82594–00	32 – 25
60V–8259F–00	15 – 15
703–83383–02	32 – 51
6Y5–83500–S5	33 – 6
6Y5–8350T–03	33 – 1
6Y5–83533–T2	33 – 10
6Y5–83553–M0	33 – 15
6Y5–83557–10	33 – 19
6Y5–83557–31	33 – 11
6E5–83558–00	22 – 36
6E5–83558–10	27 – 19

NUMERICAL INDEX
INDEX NUMERIQUE

PART NO. N° PIECES	REF. NO.
6Y5–83570–S5	33 – 7
6C5–83614–00	14 – 44
6A1–83625–41	12 – 17
6A1–83625–51	12 – 18
62Y–83626–00	12 – 19
67F–83627–01	17 – 27
63D–83672–01	21 – 30
68F–83688–00	6 – 18
6Y5–83728–00	33 – 12
6C5–85525–00	13 – 1
6C5–85548–00	14 – 22
6C5–85561–00–94	12 – 9
62Y–85580–00	12 – 12
6C5–85790–00	15 – 10
6C5–85885–00	6 – 6
6C1–8591A–00	13 – 23
6C5–8591A–00	13 – 23
6C5–86112–00	7 – 14
6C5–86120–00	7 – 12
6Y5–87122–S0	33 – 14
6C5–87226–00	8 – 11
6C5–W0001–00	35 – 1
6C6–W0001–20	36 – 1
69W–W0070–00	1 – 11
6H3–W0078–02	36 – 23
6H3–W0078–0A	36 – 34
6C5–W009A–00–1S	4 – 1
6C5–W009B–00–1S	2 – 1
6C5–W8186–00	34 – 1
90101–06020	21 – 6
90101–08M15	22 – 11
90101–09M01	30 – 7
90101–12M65	21 – 41
90105–08060	5 – 20
90105–09005	4 – 16
90105–10M67	28 – 16
90109–06047	1 – 7
90109–06M65	4 – 12
90109–06M80	15 – 29
	18 – 34
	19 – 5
90109–06M81	18 – 11
90109–06M86	14 – 45
	18 – 20
90109–12MA3	22 – 24
90116–10M28	22 – 7
90119–06025	10 – 18
90119–06087	7 – 3

PART NO. N° PIECES	REF. NO.
90119–06106	7 – 10
	20 – 32
90119–06120	25 – 8
90119–06M08	7 – 11
	18 – 2
90119–06M59	13 – 26
	14 – 25
90119–06MA3	4 – 17
90119–06MA5	2 – 15
90119–08069	7 – 2
90119–08M01	2 – 4
90119–08M14	27 – 35
	36 – 31
90119–08M33	27 – 34
	36 – 32
90119–08M79	25 – 18
90119–08M82	25 – 19
90119–08M84	28 – 8
90151–05M00	28 – 13
90157–05M16	29 – 5
90159–04005	14 – 18
90159–06018	34 – 5
90159–06M14	15 – 24
90167–06002	19 – 4
90170–09M03	30 – 5
90170–16M01	27 – 38
90170–20137	12 – 6
90170–35008	10 – 9
90171–16011	28 – 20
90179–06M24	1 – 3
90179–08003	14 – 15
90183–02M03	27 – 49
90185–05002	28 – 14
90185–06M05	1 – 8
90185–08045	22 – 13
90185–09M01	30 – 4
90185–10051	22 – 8
90185–22M11	21 – 13
90201–03313	27 – 47
90201–06015	25 – 9
90201–06028	34 – 8
90201–08M14	21 – 40
90201–10144	10 – 5
90201–10M20	20 – 17
	30 – 3
90201–10M63	30 – 8
90201–12426	21 – 43
90201–12M07	18 – 16

PART NO. N° PIECES	REF. NO.
90201–12M16	22 – 17
90201–13M19	22 – 27
90201–16014	5 – 19
90201–21M18	12 – 7
90201–22M05	22 – 28
90201–25M05	27 – 65
90201–30M00	22 – 2
90202–07M07	20 – 21
90202–21100	22 – 26
90206–08N51	24 – 2
90206–10M04	20 – 35
90206–12052	18 – 15
90249–06M19	21 – 20
90250–07M02	27 – 50
90266–06M02	1 – 5
90280–03M01	10 – 10
90280–03M03	27 – 26
	36 – 33
90282–04010	27 – 61
90340–08002	27 – 9
90340–14M06	2 – 28
	26 – 6
90340–18M09	2 – 26
90344–51003	2 – 7
90386–10025	21 – 17
90386–10M16	21 – 16
90386–12M37	18 – 13
90386–12MA2	18 – 14
90386–18M35	21 – 28
90386–18M92	21 – 27
90386–22MA4	21 – 12
90386–30M60	22 – 6
90386–30M77	22 – 4
90386–30M78	22 – 3
90386–90M90	20 – 16
90387–04001	15 – 18
90387–06060	18 – 4
90387–06M43	18 – 36
90387–06M45	20 – 31
90387–06M69	8 – 26
90387–06M82	20 – 36
90387–10M42	30 – 6
90389–25M00	28 – 19
90430–06014	4 – 13
	35 – 9
90430–08020	27 – 11
	36 – 11
90430–14115	2 – 29

PART NO. N° PIECES	REF. NO.
90430–14115	15 – 11
	35 – 6
90430–14M09	26 – 7
	36 – 3
90430–18130	2 – 27
	35 – 5
90445–07M53	22 – 35
90445–07ME8	27 – 18
90445–09091	19 – 15
90445–09104	19 – 16
90445–09220	19 – 12
90445–09226	19 – 9
90445–10020	11 – 4
90445–115J5	7 – 17
90445–13M14	11 – 6
90445–13M36	11 – 17
90446–14M62	11 – 33
90447–10006	19 – 17
90447–13010	21 – 35
90464–07M41	13 – 7
90464–07M56	6 – 14
	13 – 14
90464–09M13	18 – 24
90464–09M49	18 – 37
90464–12006	7 – 19
90464–15008	7 – 18
90464–18246	2 – 17
	13 – 4
	15 – 28
90464–76001	7 – 7
90465–05M87	14 – 7
90465–06M86	22 – 33
	34 – 7
90465–11M10	7 – 20
	9 – 17
	11 – 7
	14 – 40
	18 – 38
	19 – 7
	21 – 34
	22 – 34
	25 – 2
	27 – 20
	33 – 13
90465–11M59	26 – 5
90465–13M11	15 – 7
90465–13M18	16 – 14
	21 – 33

PART NO. N° PIECES	REF. NO.
90465–13M24	15 – 6
	34 – 10
90465–13M39	15 – 23
90465–13M97	12 – 15
	14 – 42
90467–08M18	19 – 13
90467–09M17	11 – 8
90467–10M04	11 – 18
90468–18008	20 – 19
90480–09M12	8 – 27
	18 – 3
90480–12072	12 – 2
	15 – 30
	16 – 2
90480–13M24	18 – 35
90480–24003	16 – 11
90501–12082	20 – 14
90501–12M48	27 – 46
90501–6C500	10 – 16
90506–14M24	21 – 21
90506–18M40	18 – 21
91317–03005	23 – 55
91317–03016	23 – 50
91317–04030	23 – 49
91317–05025	23 – 46
91317–05030	23 – 33
91317–05045	23 – 23
91317–05050	23 – 66
91490–16010	20 – 29
91490–20015	20 – 18
91490–40025	28 – 21
91690–30020	21 – 18
92903–06600	2 – 6
	14 – 33
	26 – 12
92903–08100	14 – 20
92903–08600	16 – 13
92907–04600	4 – 22
92990–04100	33 – 4
92990–06100	18 – 32
92990–06600	18 – 33
92990–08600	32 – 34
92995–04100	15 – 20
92995–05600	2 – 23
	4 – 9
	12 – 14
	20 – 10
92995–06100	13 – 10

PART NO. N° PIECES	REF. NO.
92995–06100	14 – 9
	18 – 42
92995–06600	2 – 25
	4 – 11
	7 – 16
	11 – 3
	13 – 3
	14 – 6
	15 – 14
	20 – 4
	25 – 16
	27 – 16
92995–08100	22 – 15
92995–08600	16 – 8
	22 – 32
92995–10100	25 – 24
	28 – 6
92995–10600	22 – 40
	25 – 25
	28 – 7
92995–12200	21 – 42
92A08–03110	23 – 44
93101–23070	27 – 28
	36 – 15
93101–25M03	27 – 60
	36 – 20
93101–35002	3 – 11
	35 – 8
93102–37M40	10 – 19
	35 – 14
93102–43M42	3 – 10
	35 – 7
93103–18011	25 – 3
	36 – 5
93106–09014	27 – 14
	36 – 13
93210–07003	27 – 52
	36 – 22
93210–09165	23 – 62
93210–16275	30 – 10
93210–18397	23 – 59
93210–24M79	4 – 30
	11 – 29
	35 – 12
93210–29M94	22 – 5
93210–32738	11 – 12
93210–46044	27 – 29
	36 – 16

NUMERICAL INDEX
INDEX NUMERIQUE

PART NO. N° PIECES	REF. NO.
93210–49046	27 – 13
	36 – 12
93210–64488	23 – 65
93210–86M39	27 – 58
	36 – 19
93306–207U0	27 – 56
93315–52563	27 – 3
93317–322V0	27 – 40
93317–325U0	27 – 59
93332–00095	27 – 8
93332–000U3	27 – 6
93399–999T8	24 – 3
93410–18M02	21 – 29
93410–28M06	22 – 9
93420–36M01	25 – 22
93430–06024	32 – 10
93450–17129	3 – 9
93450–32116	23 – 11
93501–04M02	20 – 15
93503–16003	23 – 13
	27 – 48
93505–32038	23 – 29
93603–17070	10 – 12
93604–10M03	25 – 12
	27 – 33
93605–17002	10 – 3
93606–12019	2 – 3
	25 – 26
	26 – 3
	28 – 4
93608–12M05	7 – 1
	25 – 4
93700–06M03	21 – 10
94702–00418	4 – 42
95023–06030	12 – 8
95307–03600	23 – 45
95333–08600	14 – 19
95380–04600	33 – 5
95380–05600	11 – 27
	32 – 7
95380–05700	20 – 26
95380–06600	7 – 13
	18 – 30
	32 – 40
95380–06800	18 – 40
95380–08600	11 – 16
	16 – 6
95380–12600	21 – 44

PART NO. N° PIECES	REF. NO.
95380–12700	22 – 25
95680–08330	16 – 5
95780–06300	34 – 6
95817–10035	10 – 4
95895–06035	20 – 34
95895–08016	11 – 15
97013–06020	14 – 32
97013–06030	26 – 11
97013–06035	2 – 5
97013–08045	16 – 12
97075–06025	25 – 15
97075–08030	22 – 14
97075–10040	28 – 5
97075–10045	25 – 23
97080–08020	21 – 39
97095–05012	2 – 22
	4 – 8
	12 – 13
97095–05014	20 – 9
97095–06010	14 – 29
	21 – 22
97095–06014	4 – 33
	13 – 2
	14 – 5
	15 – 13
	18 – 18
97095–06016	7 – 15
	27 – 15
97095–06020	2 – 24
	4 – 10
	14 – 8
	18 – 39
	20 – 3
97095–06025	11 – 2
	13 – 17
	20 – 5
97095–06030	11 – 30
	13 – 9
97095–08020	22 – 31
97095–08025	16 – 9
97095–08035	16 – 7
97380–05025	32 – 8
97380–08030	32 – 33
97780–60620	14 – 3
97880–06025	18 – 31
97885–04016	15 – 19
97885–06008	21 – 4
	22 – 38

PART NO. N° PIECES	REF. NO.
97885–06016	21 – 32
	34 – 9
98507–04010	4 – 21
98580–03015	32 – 38
98580–04006	32 – 36
98580–04010	32 – 35
98580–05010	32 – 37
98580–06016	10 – 13
99001–08600	27 – 53
99009–32500	23 – 16
99530–08012	4 – 15
	12 – 11
99590–10114	16 – 4
9E450–04433	33 – 2
9E450–04533	33 – 3

FT50GET/FT60DET
PARTS CATALOGUE
©2004 by Yamaha Motor Co., Ltd.
1st edition, May 2004
All rights reserved.
Any reprinting or unauthorized use
without the written permission of
Yamaha Motor Co., Ltd.
is expressly prohibited.
Printed in Japan.

FT50GET/FT60DET
CATALOGUE DE PIECES DETACHEES
©2004 par Yamaha Motor Co., Ltd.
1re édition, mai 2004
Tous droits réservés
Toute réimpression ou utilisation
non autorisée sans la permission écrite
de la Yamaha Motor Co., Ltd.
est formellement interdite.
Imprimé au Japon