YAMAHA

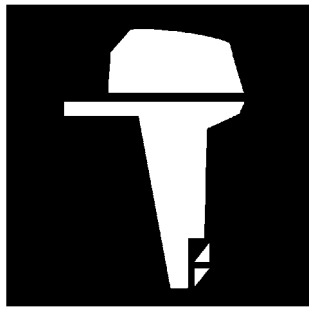

PARTS CATALOGUE
CATALOGUE DE PIECES DETACHEES

Z250DETO'05 (60V3)
LZ250DETO'05 (60W3)

1D60V-300F1

(2D60V-300F1)

YAMAHA GENUINE Parts & Accessories

2007/11/30

NEWS NO.	DATE	COMMENT
PE0-OM-070022	Apr.,26,2007	MOD:FIG.9,10 PACKING KIT LIST REVISION
PE0-OM-070040	Oct.,30,2007	MOD:FIG.18 FUSE BOX ASSY P/No. REVISION

FOREWORD

This Parts Catalogue is related to the parts for the model(s) on the cover page. When you are ordering replacement parts, please refer to this Parts Catalogue and quote both part numbers and part names correctly.

1. Modifications or additions which have been made after the issue of the Parts Catalogue will be announced in the Parts News.
   It is advisable that you make the necessary corrections to the Parts Catalogue according to the Parts News.

2. Abbreviations
   The following abbreviations are used in this Parts Catalogue.

   "UR" Use specified parts number.
   "UN" Use as many as needed.
   "AP" Alternate Parts
   "LM" Locally Made (Parts need to be ordered locally)
   "F#" Frame No. (Applicable machine No.)
   "O/S" Over Size

3. The number of components for assembly
   - Parts, which are to be supplied in an assembly, are listed with a dot (.) in front of the part name as shown below.
   - The numeral appearing to the right of each component part indicates the quantity of parts for each assembly unit.

PART NO.	DESCRIPTION	Q'TY	REMARKS
2F5–83310–60	FRONT FLASHER LIGHT ASSY	2	
115–83311–60	.BULB (6V–18W)	1	

4. Applicable colours of graphics are represented in the "REMARKS" as shown below.

PART NO.	DESCRIPTION	Q'TY	REMARKS
2N4–24110–00–X5	FUEL TANK COMP.	2	MXR
3J1–24240–10	.GRAPHIC, FUEL TANK	1	FOR MXR

5. Note that the illustrations for reference in finding parts numbers are not to be used for assembling. When assembling, please use the applicable service manual.

6. The asterisk (*) before a reference number indicates modified items after the first edition.

7. Applicable Serial No.

   Engine Serial No.

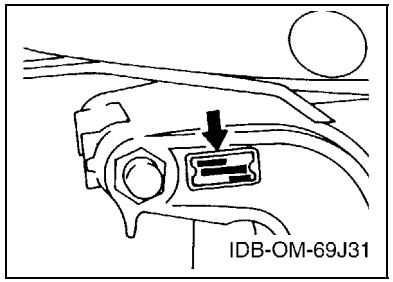

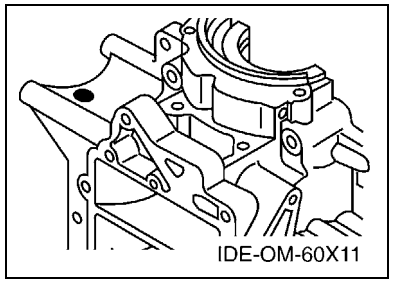

8. Applicable Engine Starting Serial No.

Model	Serial No.	Model	Serial No.
Z250D	60V-1003415	LZ250D	60W-1001347

9. Applicable Colour Code

Abbreviation	Colour Name	Colour Code
DBN1	DARK BLUISH GRAY 1	008D

10. Quantity Column Information

Column No.	Name Of Q'ty Column	Applicable Model
1	60V3	Z250DETO
2	60W3	LZ250DETO

AVANT–PROPOS

Ce catalogue de pièces détachées concerne les pièces pour le(s) modèle(s) indiqué(s) sur la page de couverture. Lorsque vous commandez des pièces de rechange, veuillez vous référer à ce catalogue de pieces détachées et indiquer clairement les numéros et les noms des pièces détachées.

1. Les modifications ou ajouts ayant été effectués après la parution du catalogue de pièces détachées seront décrits dans les Bulletins d'information concernant les pièces détachées.
   Il est recommandé que vous apportiez les corrections nécessaires au catalogue des pièces détachées en vous référant aux Bulletins d'information.

2. Abréviations
   Dans ce catalogue, les abréviations suivantes sont utilisées:

   "UR" Utiliser le numéro de pièces spécifié.
   "UN" Utiliser autant que nécessaire.
   "AP" Pièces de substitution
   "LM" Fabrication locale (les pièces doivent être commandées localement.)
   "F#" N° de cadre (applicable au N° de série)
   "O/S" Surdimensionné

3. Nombre de pièces d'un assemblage
   - Les pièces fournies comme composants d'un assemblage sont précédées d'un point (.) de la manière indiquée ci–dessous.
   - Le chiffre apparaissant à la droite de chaque composant indique la quantité de pièces pour chaque unité d'assemblage.

N° PIECES	DESCRIPTION	QTE	REMARQUES
2F5–83310–60	ENS. CLIGNOTANT AVANT	2	
115–83311–60	.AMPOULE (6V–18W)	1	

4. Les couleurs concernant les graphiques sont indiquées dans la colonne "REMARQUES", comme indiqué ci–dessous.

N° PIECES	DESCRIPTION	QTE	REMARQUES
2N4–24110–00–X5	RESERVOIR A ESSENCE.	2	MXR
3J1–24240–10	.GRAPHIQUE	1	POUR MXR

5. Veuillez noter que les illustrations sont indiquées à titre de référence pour trouver les numéros de pièces, non pour être utilisées lors de l'assemblage. Lors de l'assemblage, veuillez utiliser le manuel d'entretien adéquat.

6. L'astérisque (*) placé devant un numéro de référence indique des éléments qui ont été modifiés après la première édition.

7. N° de série applicable

   N° de Série du moteur

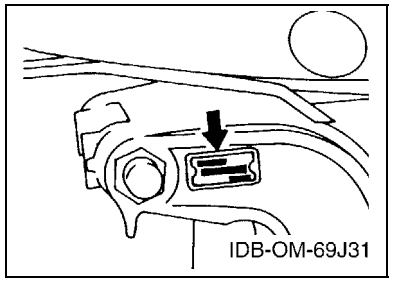

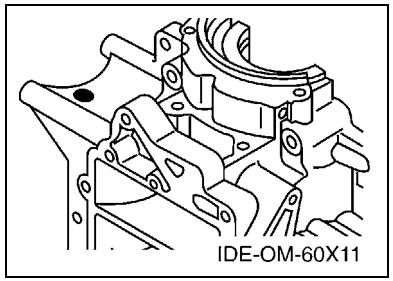

8. N° de série initial du moteur applicable

Modèle	N° de série	Modèle	N° de série
Z250D	60V-1003415	LZ250D	60W-1001347

9. Code couleur applicable

Abréviation	Nom de la couleur	Code couleur
DBN1	DARK BLUISH GRAY 1	008D

10. Informations relatives à la colonne Quantité

N° de la colonne	Nom de la colonne Qté	Modèle applicable
1	60V3	Z250DETO
2	60W3	LZ250DETO

CONTENTS

SHEET1/2
TOP COWLING A4
CYLINDER & CRANKCASE 1 ..... A6
CRANKSHAFT & PISTON B1
CYLINDER & CRANKCASE 2 ..... B3
CYLINDER & CRANKCASE 3 ..... B5
FUEL PUMP DRIVE GEAR B6
VAPOR SEPARATOR 1 ..... B7
VAPOR SEPARATOR 2 ..... C3
FUEL INJECTION PUMP C4
FUEL INJECTION NOZZLE C6
INTAKE D1
OIL PUMP D3
OIL TANK D5
FUEL D7
GENERATOR E3
ELECTRICAL 1 ..... E4
ELECTRICAL 2 ..... E6
ELECTRICAL 3 ..... F1
ELECTRICAL 4 ..... F4
STARTING MOTOR F5
BOTTOM COWLING F7

INDEX

NUMERICAL INDEX G1

SHEET2/2
BOTTOM COWLING A4*
CONTROL A6*
BRACKET 1 ..... B2*
BRACKET 2 ..... B4*
POWER TRIM & TILT ASSY 1 ..... B6*
POWER TRIM & TILT ASSY 2 ..... C2*
UPPER CASING C3*
LOWER CASING & DRIVE 1 ..... C5*
LOWER CASING & DRIVE 2 ..... D2*
LOWER CASING & DRIVE 3 ..... D4*
LOWER CASING & DRIVE 4 ..... E1*
STEERING GUIDE ATTACHMENT 1 ..... E3*
STEERING GUIDE ATTACHMENT 2 ..... E4*
REMOTE CONTROL BOX E5*
METER E6*
SWITCH & PANEL F1*
REPAIR KIT 1 ..... F2*
REPAIR KIT 2 ..... F3*

INDEX

NUMERICAL INDEX G1*

TABLE DES MATIERES

Feuille1/2
CAPOT SUPERIEUR A4
CYLINDRE & CARTER 1 ..... A6
VILEBREQUIN & PISTON B1
CYLINDRE & CARTER 2 ..... B3
CYLINDRE & CARTER 3 ..... B5
ENGRENAGE DE POMPE B6
VAPEUR SEPARATEUR 1 ..... B7
VAPEUR SEPARATEUR 2 ..... C3
FUEL INJECTION PUMP C4
FUEL INJECTION NOZZLE C6
ADMISSION D1
POMPE A HUILE D3
RESERVOIR A PETROLE D5
CARBURANT D7
GENERATRICE E3
PARTIE ELECTRIQUE 1 ..... E4
PARTIE ELECTRIQUE 2 ..... E6
PARTIE ELECTRIQUE 3 ..... F1
PARTIE ELECTRIQUE 4 ..... F4
DEMARREUR ELECTRIQUE F5
CAPOT INFERIEUR F7

INDEX

INDEX NUMERIQUE G1

Feuille2/2
CAPOT INFERIEUR A4*
COMMANDE A6*
SUPPORT 1 ..... B2*
SUPPORT 2 ..... B4*
PUISSANCE PARER ET INCLINER 1 ..... B6*
PUISSANCE PARER ET INCLINER 2 ..... C2*
FOURREAU C3*
BOITIER D'HELICE TRANSMISSION1 ..... C5*
BOITIER D'HELICE TRANSMISSION2 ..... D2*
BOITIER D'HELICE TRANSMISSION3 ..... D4*
BOITIER D'HELICE TRANSMISSION4 ..... E1*
DIRECTION GUIDE ACCESSOIRE 1 ..... E3*
DIRECTION GUIDE ACCESSOIRE 2 ..... E4*
BOITIER DE COMMANDE A DISTANCE E5*
COMPTEUR E6*
TABLEAU DE CONTACTEUR F1*
KITS DE REPARATION 1 ..... F2*
KITS DE REPARATION 2 ..... F3*

INDEX

INDEX NUMERIQUE G1*

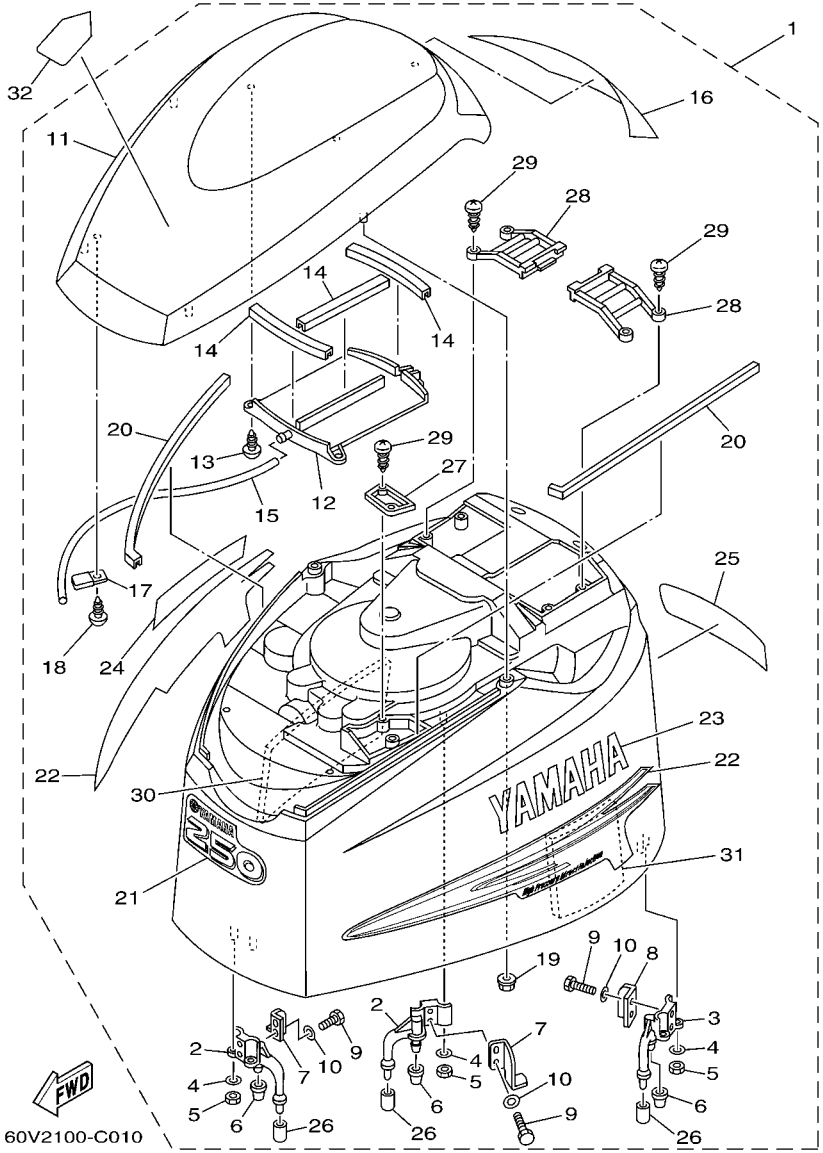

FIG. 1 TOP COWLING — CAPOT SUPERIEUR

REF. NO.	PART NO. N° PIECES	DESCRIPTION DESCRIPTION	60V3	60W3				REMARKS REMARQUES
1	60V–42610–00–8D	TOP COWLING ASSY CAPOT (ENS.)	1	1				
2	68F–42647–01–94	.HOLDER, CLAMP BAND .SUPPORT, SANDOW DE SERRAGE	2	2				
3	68F–42648–01–94	.HOLDER, CLAMP BAND .SUPPORT, SANDOW DE SERRAGE	1	1				
4	92990–06100	.WASHER, SPRING .RONDELLE, GROWER	6	6				
5	95380–06600	.NUT, HEXAGON .ECROU	6	6				
6	68F–42663–00	.DAMPER .AMORTISSEUR	3	3				
7	60V–42651–01	.HOOK .CROCHET	2	2				
8	60V–42652–00	.HOOK .CROCHET	1	1				
9	97095–06016	.BOLT .BOULON	6	6				
10	92995–06600	.WASHER .RONDELLE	6	6				
11	60V–42613–00–8D	.MOLDING, AIR DUCT .MANCHON A AIR	1	1				
12	60V–42621–00	.MLDG, TOP .MANCHON, SUPERIEUR	1	1				
13	97780–50616	.SCREW, TAPPING .VIS, TETE BOMBEE	3	3				
14	60V–42664–00	.DAMPER .AMORTISSEUR	3	3				
15	90445–11M33	.HOSE (L440) .DURITE (L440)	1	1				
16	60V–42687–00	.EMBLEM, REAR .EMBLEME, ARRIERE	1	1				
17	90462–08018	.CLAMP .BRIDE	1	1				
18	97780–50612	.SCREW, TAPPING .VIS, TETE BOMBEE	1	1				
19	90179–06M24	.NUT .ECROU	6	6				
20	60V–42662–00	.DAMPER .AMORTISSEUR	2	2				
21	60V–42677–00	.GRAPHIC, FRONT .ADHESIF, AVANT	1	1				
22	60V–W0070–00	.GRAPHIC SET .JEU DIEMBLEMES	1	1				
23	60V–42681–00	.MARK, COWLING .ADHESIF, CAPOT	1	1				
24	60V–42682–00	.MARK, COWLING .ADHESIF, CAPOT	1	1				
25	60V–42678–00	.GRAPHIC, REAR .ADHESIF, ARRIERE	1	1				
26	67F–13448–00	.CAP .CAPUCHON	3	3				
27	60V–42626–00	.LOUVER, 1 .PLAQUE INSONOR.	1	1				

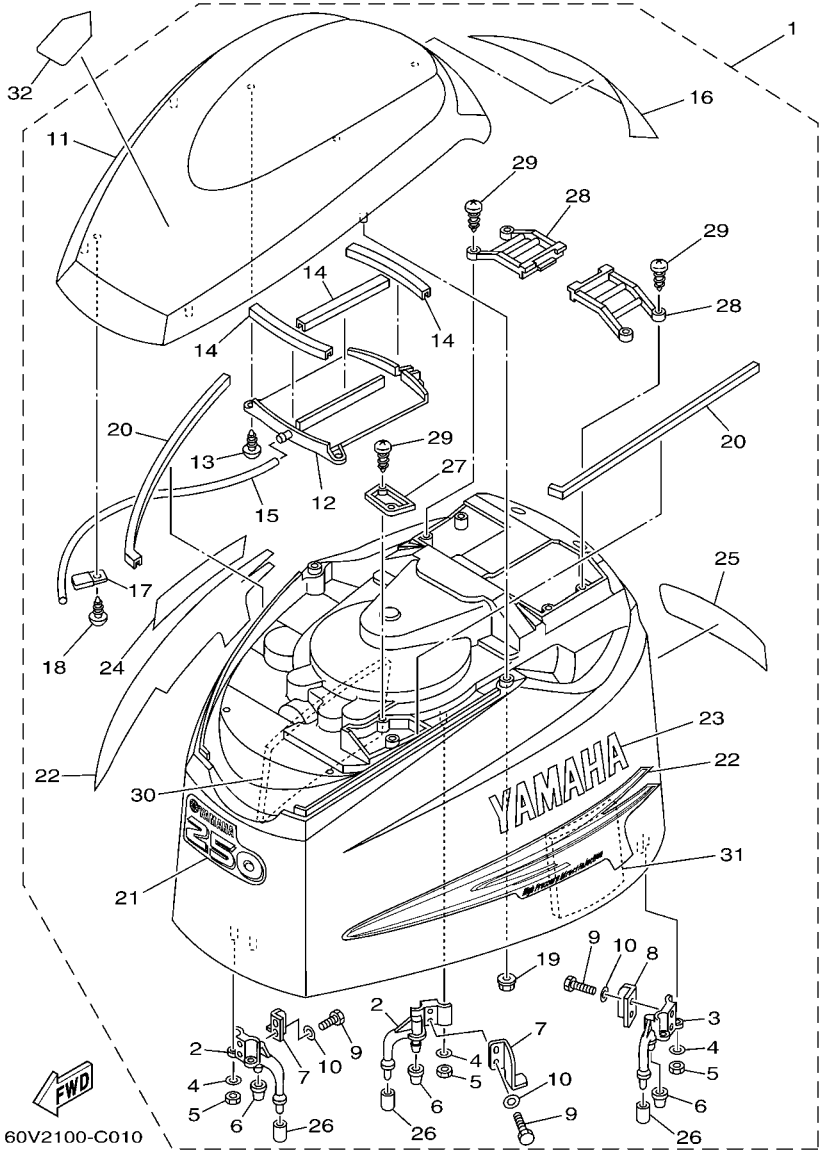

FIG. 1 TOP COWLING — CAPOT SUPERIEUR

REF. NO.	PART NO. N° PIECES	DESCRIPTION DESCRIPTION	60V3	60W3				REMARKS REMARQUES
28	60V–42626–10	.LOUVER, 1 .PLAQUE INSONOR.	2	2				
29	90160–05005	.SCREW, ROUND TAPPING .VIS, TETE RONDE FRAISEE	6	6				
30	60V–42637–00	.DAMPER, FORM .BOURRELET, CAOUTCHOUC	1	1				
31	60V–42637–10	.DAMPER, FORM .BOURRELET, CAOUTCHOUC	1	1				
32	68F–13434–00	LABEL, CAUTION ETIQUETTE, ATTENTION	1	1				

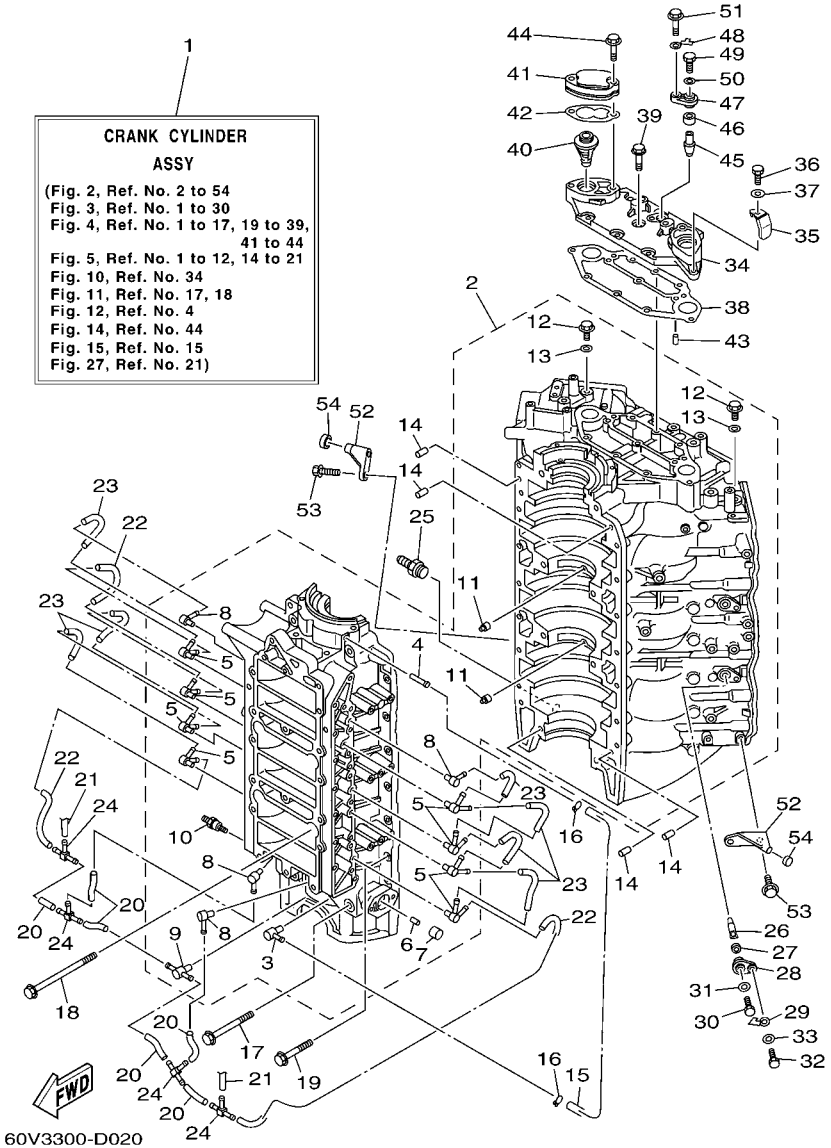

FIG. 2 CYLINDER & CRANKCASE 1 CYLINDRE & CARTER 1

REF. NO.	PART NO. N° PIECES	DESCRIPTION DESCRIPTION	60V3	60W3				REMARKS REMARQUES
1	60Y–W0090–15–1S	CRANK CYLINDER ASSY EMBIELLAGE CYLINDRE (ENS.)	1	1				
2	60V–15100–02–1S	CRANKCASE ASSY CARTER DE MOTEUR COMPLET	1	1				
3	6E5–11372–01	.NIPPLE, HOSE .RACCORD, TUYAU	1	1				
4	624–14485–00	.PIPE, JOINT .DURITE	1	1				
5	60V–11370–00	.CHECK VALVE ASSY .CLAPET (ENS.)	8	8				
6	90384–06M07	.BUSH, BIMETAL FORMED .DOUILLE, BIMETAL MISE EN FORM	1	1				
7	90383–16M01	.BUSH, FORMED .DOUILLE, MISE EN FORME	1	1				
8	650–11370–01	.CHECK VALVE ASSY .CLAPET (ENS.)	4	4				
9	60V–11370–10	.CHECK VALVE ASSY .CLAPET (ENS.)	1	1				
10	90116–08012	.BOLT, STUD .GOUJON	1	1				
11	663–11518–01	.LOCK, BEARING .CENTREUR, ROULEMENT	2	2				
12	90340–14M00	.PLUG, STRAIGHT SCREW .PLOT, FILETE DROIT	2	2				
13	90430–14115	.GASKET .JOINT	2	2				
14	93608–12063	PIN, DOWEL AXE	4	4				
15	90445–07M10	HOSE (L510) DURITE (L510)	1	1				
16	90468–07M02	CLIP JONC	2	2				
17	90119–10022	BOLT, WITH WASHER BOULON, AVEC RONDELLE	4	4				
18	90119–10021	BOLT, WITH WASHER BOULON, AVEC RONDELLE	4	4				
19	90119–06089	BOLT, WITH WASHER BOULON, AVEC RONDELLE	14	14				
20	90445–07M03	HOSE (L34) DURITE (L34)	6	6				
21	90445–07016	HOSE (L60) DURITE (L60)	2	2				
22	90445–07M29	HOSE (L135) DURITE (L135)	3	3				
23	90445–07MA6	HOSE (L90) DURITE (L90)	7	7				
24	6E0–24378–00	PIPE, JOINT 4 DURITE RACCORDEMENT 4	4	4				
25	6G5–12581–00	JOINT, HOSE 1 JOINT DE TUYAU	1	1				
26	60V–11325–01	ANODE ANODE	3	3				
27	66M–11328–00	GROMMET, ANODE PASSE-FIL	3	3				

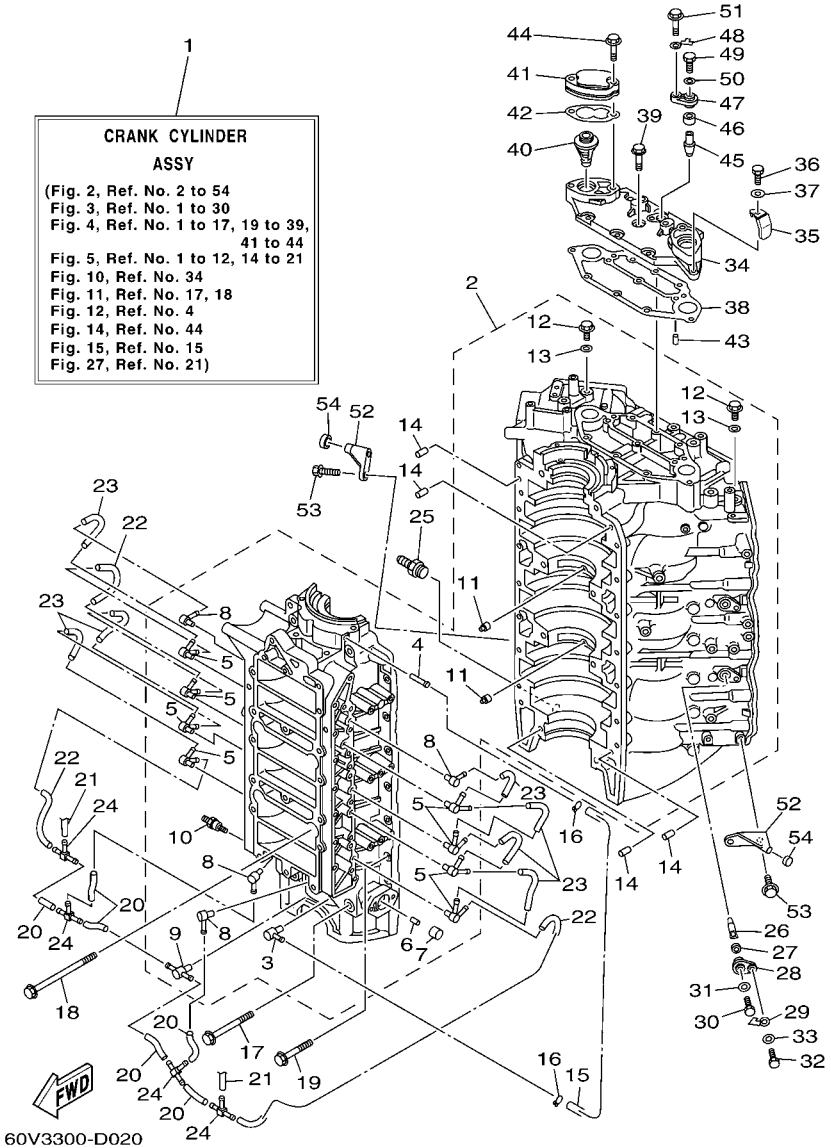

FIG. 2 CYLINDER & CRANKCASE 1 CYLINDRE & CARTER 1

REF. NO.	PART NO. N° PIECES	DESCRIPTION DESCRIPTION	60V3	60W3				REMARKS REMARQUES
28	66M–11327–00–94	COVER, ANODE COUVERCLE	3	3				
29	66M–12535–00	PLATE PLAQUE	3	3				
30	97095–05012	BOLT BOULON	3	3				
31	92995–05600	WASHER RONDELLE	3	3				
32	97013–06020	BOLT BOULON	3	3				
33	92903–06600	WASHER, PLATE RONDELLE, PLATE	3	3				
34	60V–11371–00–94	COVER COUVERCLE	1	1				
35	60V–24135–00	CLAMP 1 COLLIER 1	1	1				
36	97013–05012	BOLT BOULON	1	1				
37	92903–05600	WASHER, PLATE RONDELLE, PLATE	1	1				
38	60V–11381–00	GASKET 1 JOINT 1	1	1				
39	90119–06MA2	BOLT, WITH WASHER BOULON, AVEC RONDELLE	7	7				
40	60V–12411–00	THERMOSTAT THERMOSTAT	2	2				
41	60V–12413–00–1S	COVER, THERMOSTAT COUVERCLE, THERMOSTAT	2	2				
42	60V–12414–A0	GASKET, COVER JOINT, COUVERCLE	2	2				
43	99480–06012	PIN GOUPILLE	2	2				
44	90119–06055	BOLT, WITH WASHER BOULON, AVEC RONDELLE	4	4				
45	66M–11325–00	ANODE ANODE	1	1				
46	66M–11328–00	GROMMET, ANODE PASSE-FIL	1	1				
47	66M–11327–00–94	COVER, ANODE COUVERCLE	1	1				
48	66M–12535–00	PLATE PLAQUE	1	1				
49	97095–05012	BOLT BOULON	1	1				
50	92995–05600	WASHER RONDELLE	1	1				
51	90119–06MA2	BOLT, WITH WASHER BOULON, AVEC RONDELLE	1	1				
52	6E5–42761–00–1S	STOPPER PLAQUETTE	2	2				
53	90119–06MA2	BOLT, WITH WASHER BOULON, AVEC RONDELLE	4	4				
54	68F–44533–00	DAMPER, UPPER MOUNT RUBBER COUVERCLE, SUSPENSION INFERIEU	2	2				

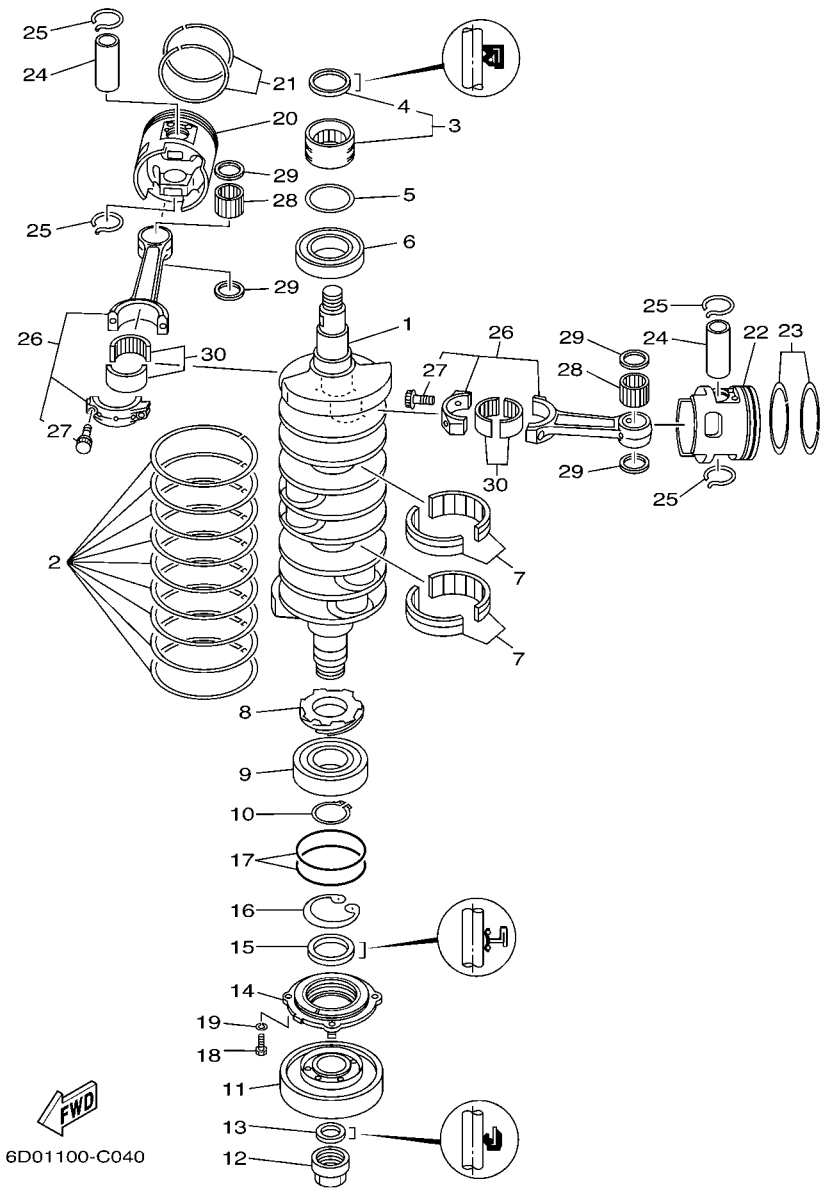

FIG. 3 CRANKSHAFT & PISTON VILEBREQUIN & PISTON

REF. NO.	PART NO. N° PIECES	DESCRIPTION DESCRIPTION	60V3	60W3				REMARKS REMARQUES
1	6D0–11411–00	CRANKSHAFT VILEBREQUIN COMPLET	1	1				
2	61A–11447–00	SEAL, CRANK JOINT, VILEBREQUIN	9	9				
3	93311–940V0	BEARING ROULEMENT	1	1				
4	93102–40M38	.OIL SEAL .JOINT SPY	1	1				
5	60V–11479–00	GASKET JOINT	1	1				
6	93306–209U1	BEARING ROULEMENT	1	1				
7	93310–959U0	BEARING ROULEMENT	2	2				
8	61A–11536–00	GEAR, DRIVE ENGRENAGE, MENANT	1	1				
9	93306–308U0	BEARING ROULEMENT	1	1				
10	93410–40M03	CIRCLIP CLIPS	1	1				
11	61A–11586–01	PULLEY, CRANKSHAFT BALANCE POULIE D'EQUILIB, VILEBREQUIN	1	1				
12	60V–11555–00	NUT, CRANKSHAFT 1 ECROU, VILEBREQUIN 1	1	1				
13	93104–22M07	OIL SEAL JOINT SPY	1	1				
14	6D0–15359–00–94	HOUSING, OIL SEAL LOGEMENT, BAGUE D'ETANCHEITE	1	1				
15	93103–40011	OIL SEAL JOINT SPY	1	1				
16	93420–61M07	CIRCLIP CIRCLIP, TYPE S	1	1				
17	93210–85M32	O-RING JOINT TORIQUE	2	2				
18	97095–06020	BOLT BOULON	4	4				
19	92995–06100	WASHER, SPRING RONDELLE, GROWER	4	4				
20	6D0–11631–02–85	PISTON (STD) PISTON (STD)	3	3				
	6D0–11635–02	PISTON (0.25MM O/S) PISTON (0.25MM O/S)	3	3				AP AP
	6D0–11636–02	PISTON (0.50MM O/S) PISTON (0.50MM O/S)	3	3				AP AP
21	6D0–11603–01	PISTON RING SET (STD) JEU DE SEGMENTS (STD)	3	3				
	6D0–11604–01	PISTON RING SET (0.25MM O/S) JEU DE SEGMENTS (0.25MM O/S)	3	3				AP AP
	6D0–11605–01	PISTON RING SET (0.50MM O/S) JEU DE SEGMENTS (0.50MM O/S)	3	3				AP AP
22	6D0–11642–02–85	PISTON 2 (STD) PISTON 2 (STD)	3	3				
	6D0–11645–02	PISTON 2 (0.25MM O/S) PISTON 2 (0.25MM O/S)	3	3				AP AP

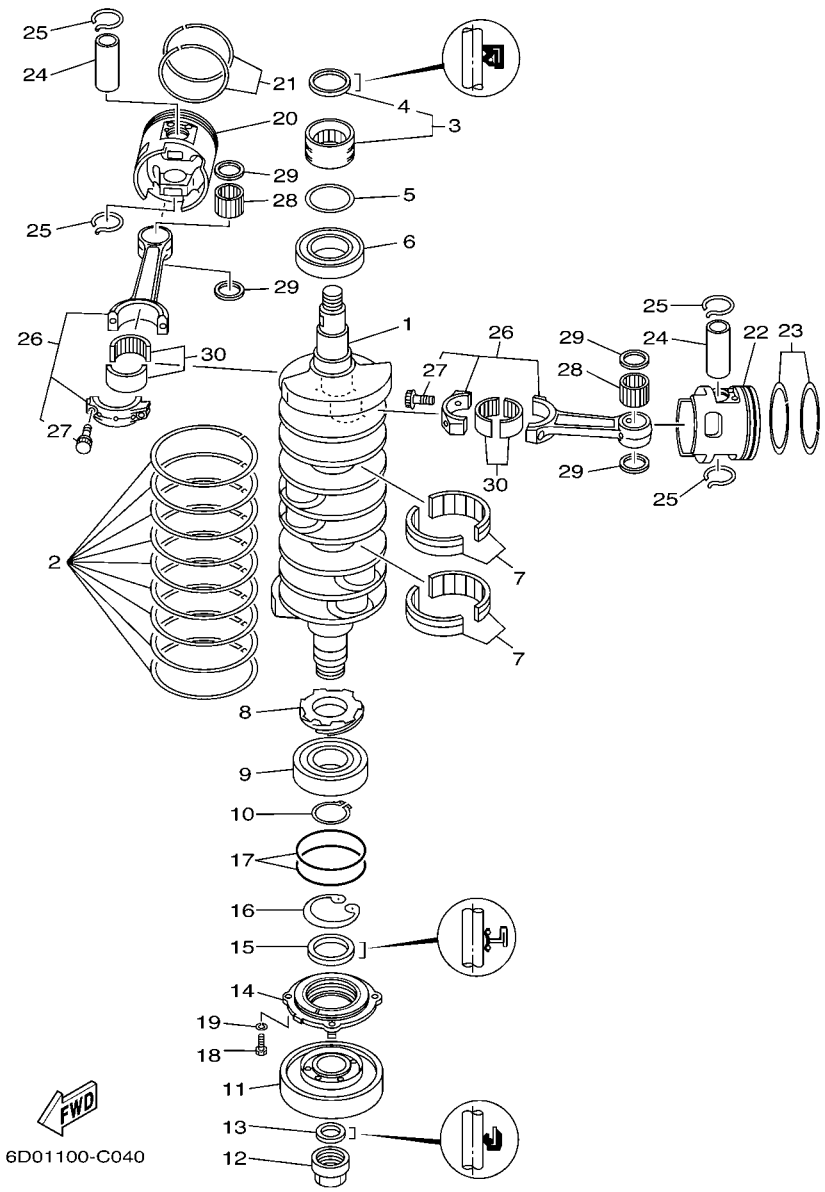

FIG. 3 CRANKSHAFT & PISTON — VILEBREQUIN & PISTON

REF. NO.	PART NO. N° PIECES	DESCRIPTION DESCRIPTION	60V3	60W3				REMARKS REMARQUES
22	6D0–11646–02	PISTON 2 (0.50MM O/S) PISTON 2 (0.50MM O/S)	3	3				AP AP
23	6D0–11603–01	PISTON RING SET (STD) JEU DE SEGMENTS (STD)	3	3				
	6D0–11604–01	PISTON RING SET (0.25MM O/S) JEU DE SEGMENTS (0.25MM O/S)	3	3				AP AP
	6D0–11605–01	PISTON RING SET (0.50MM O/S) JEU DE SEGMENTS (0.50MM O/S)	3	3				AP AP
24	61A–11633–02	PIN, PISTON AXE, PISTON	6	6				
25	60X–11634–00	CLIP, PISTON PIN AGRAFE, AXE DE PISTON	12	12				
26	69L–11650–00	CONNECTING ROD ASSY BIELLE COMPLETTE	6	6				
27	90109–09001	.BOLT .BOULON	2	2				
28	93310–32657	BEARING ROULEMENT	6	6				
29	90201–26M03	WASHER, PLATE RONDELLE, PLATE	12	12				
30	93310–84106	BEARING ROULEMENT	6	6				

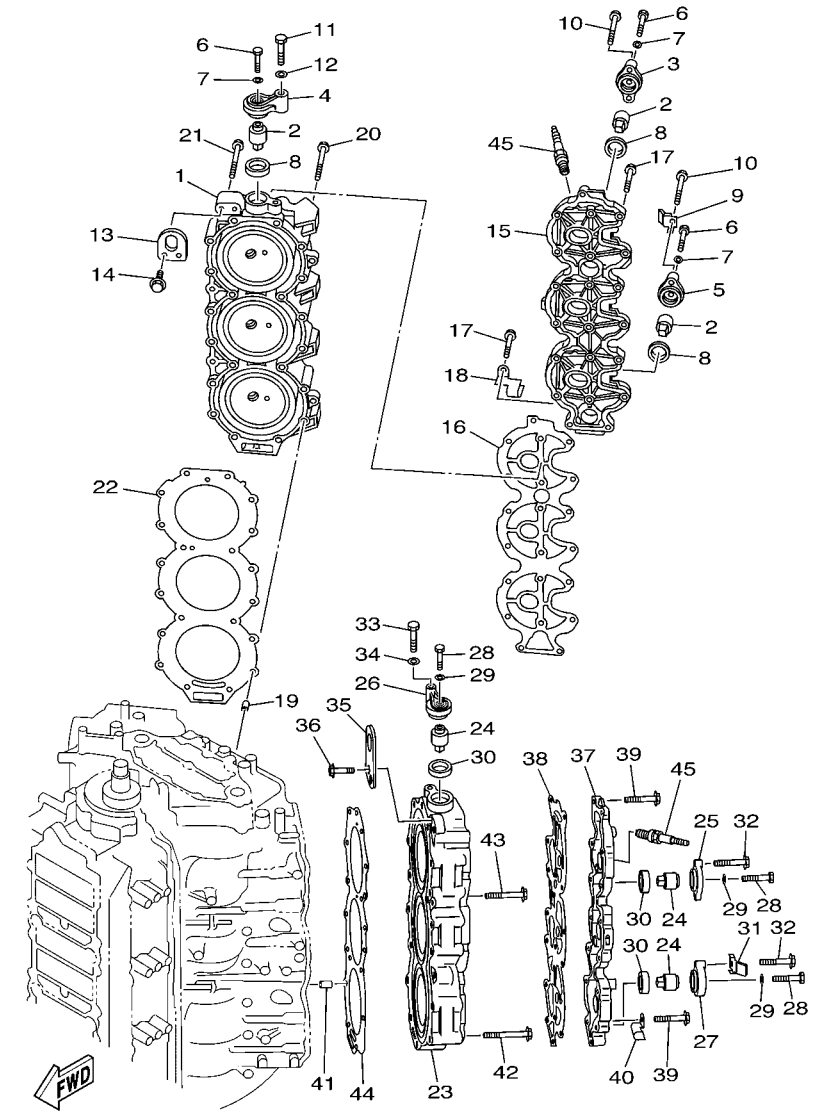

60V1010-3040

FIG. 4 CYLINDER & CRANKCASE 2 CYLINDRE & CARTER 2

REF. NO.	PART NO. N° PIECES	DESCRIPTION DESCRIPTION	60V3	60W3				REMARKS REMARQUES
1	60V–11111–00–1S	HEAD, CYLINDER 1 CULASSE	1	1				
2	67F–11325–00	ANODE ANODE	3	3				
3	67F–11327–00–94	COVER, ANODE COUVERCLE	1	1				
4	69J–11327–00–94	COVER, ANODE COUVERCLE	1	1				
5	60V–11327–00–94	COVER, ANODE COUVERCLE	1	1				
6	97075–06020	BOLT BOULON	3	3				
7	92995–06600	WASHER RONDELLE	3	3				
8	67F–11328–00	GROMMET, ANODE PASSE-FIL	3	3				
9	60V–12535–00	PLATE PLAQUE	1	1				
10	97575–08550	BOLT, WITH WASHER VIS HEXAGONAL AVC RONDELLE	3	3				
11	97075–08035	BOLT BOULON	1	1				
12	92995–08600	WASHER RONDELLE	1	1				
13	68F–11119–00	HANGER, ENGINE ANNEAU, LEVAGE	1	1				
14	90119–06MA2	BOLT, WITH WASHER BOULON, AVEC RONDELLE	2	2				
15	60V–11191–00–1S	COVER, CYLINDER HEAD 1 COUVERCLE, CULASSE 1	1	1				
16	60V–11193–00	GASKET, HEAD COVER 1 JOINT, COUVERCLE DE CULASSE 1	1	1				
17	90119–06MA4	BOLT, WITH WASHER BOULON, AVEC RONDELLE	18	18				
18	68F–83919–00	CLAMP, HARNESS BRIDE	1	1				
19	99590–10114	PIN, DOWEL GOUJON, D'ASSEMBLAGE	2	2				
20	90119–08MA5	BOLT, WITH WASHER BOULON, AVEC RONDELLE	18	18				
21	90119–08MA8	BOLT, WITH WASHER BOULON, AVEC RONDELLE	2	2				
22	60V–11181–00	GASKET, CYLINDER HEAD 1 JOINT, DE CULASSE 1	1	1				
23	60V–11121–00–1S	HEAD, CYLINDER 2 CULASSE	1	1				
24	67F–11325–00	ANODE ANODE	3	3				
25	67F–11327–00–94	COVER, ANODE COUVERCLE	1	1				
26	69J–11327–00–94	COVER, ANODE COUVERCLE	1	1				
27	60V–11327–00–94	COVER, ANODE COUVERCLE	1	1				

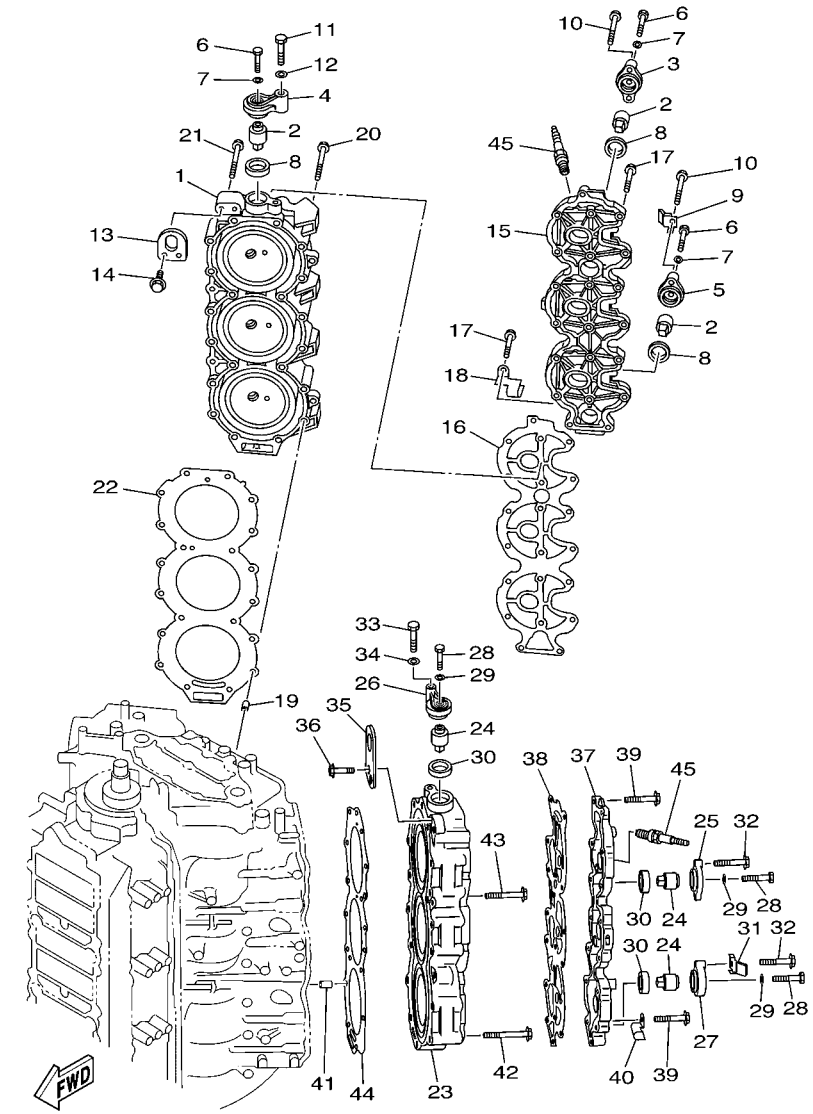

60V1010-3040

FIG. 4 CYLINDER & CRANKCASE 2 CYLINDRE & CARTER 2

REF. NO.	PART NO. N° PIECES	DESCRIPTION DESCRIPTION	60V3	60W3				REMARKS REMARQUES
28	97075–06020	BOLT BOULON	3	3				
29	92995–06600	WASHER RONDELLE	3	3				
30	67F–11328–00	GROMMET, ANODE PASSE-FIL	3	3				
31	60V–12535–00	PLATE PLAQUE	1	1				
32	97575–08550	BOLT, WITH WASHER VIS HEXAGONAL AVC RONDELLE	3	3				
33	97075–08035	BOLT BOULON	1	1				
34	92995–08600	WASHER RONDELLE	1	1				
35	69J–1111E–00	HANGER, ENGINE 2 ANNEAU, LEVAGE 2	1	1				
36	90119–06MA2	BOLT, WITH WASHER BOULON, AVEC RONDELLE	2	2				
37	60V–11192–00–1S	COVER, CYLINDER HEAD 2 COUVERCLE, CULASSE 2	1	1				
38	60V–11193–00	GASKET, HEAD COVER 1 JOINT, COUVERCLE DE CULASSE 1	1	1				
39	90119–06MA4	BOLT, WITH WASHER BOULON, AVEC RONDELLE	18	18				
40	68F–83919–00	CLAMP, HARNESS BRIDE	1	1				
41	99590–10114	PIN, DOWEL GOUJON, D'ASSEMBLAGE	2	2				
42	90119–08MA5	BOLT, WITH WASHER BOULON, AVEC RONDELLE	18	18				
43	90119–08MA8	BOLT, WITH WASHER BOULON, AVEC RONDELLE	2	2				
44	60V–11181–00	GASKET, CYLINDER HEAD 1 JOINT, DE CULASSE 1	1	1				
45	94702–00405	PLUG, SPARK (NGK BKR6EKU) BOUGIE D'ALLUMAGE(NGK BKR6EKU)	6	6				

FIG. 5 CYLINDER & CRANKCASE 3 CYLINDRE & CARTER 3

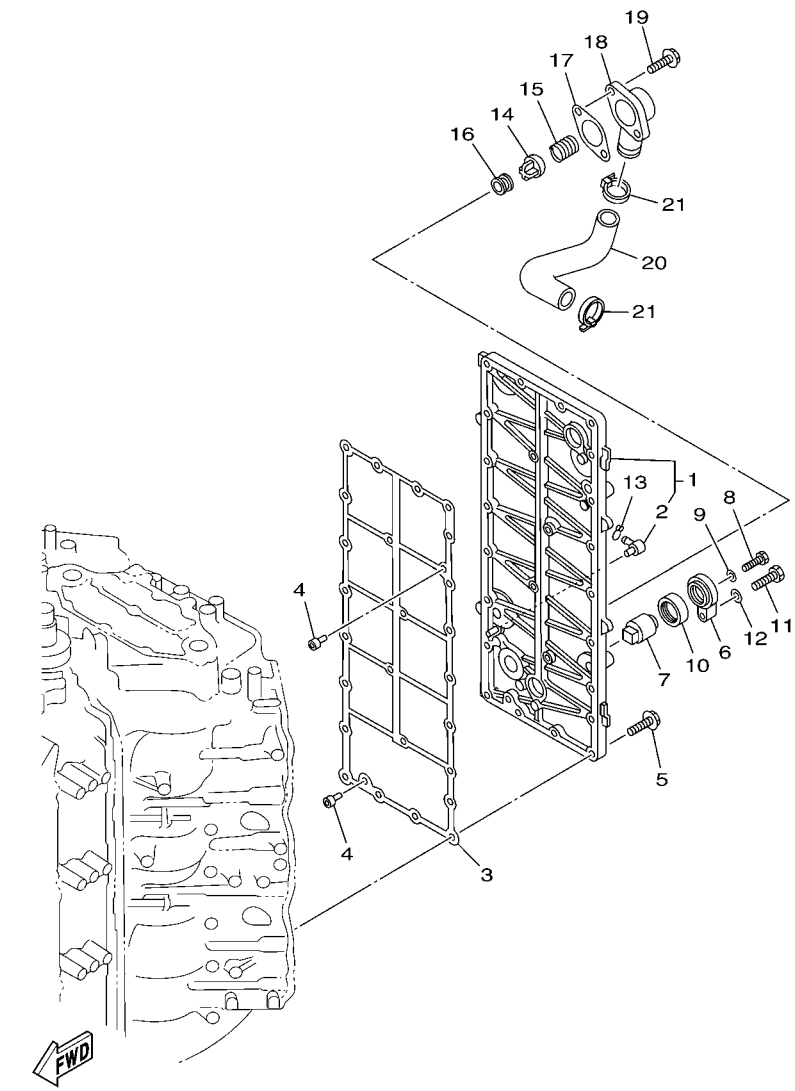

60X3100-D050

REF. NO.	PART NO. N° PIECES	DESCRIPTION DESCRIPTION	60V3	60W3				REMARKS REMARQUES
1	60V–41113–00–94	OUTER COVER, EXHAUST COUVERCLE, ECHAPPEMENT	1	1				
2	676–11372–00	.NIPPLE, HOSE .RACCORD, TUYAU	1	1				
3	60V–41112–00	GASKET, EXHAUST INNER COVER JOINT, PLAQUE D'ECHAPPEMENT	1	1				
4	60V–41267–00	BUSHING, JOINT COUSSINET	2	2				
5	90119–06MA3	BOLT, WITH WASHER BOULON, AVEC RONDELLE	25	25				
6	60V–11327–00–94	COVER, ANODE COUVERCLE	1	1				
7	67F–11325–00	ANODE ANODE	1	1				
8	97075–06020	BOLT BOULON	1	1				
9	92995–06600	WASHER RONDELLE	1	1				
10	67F–11328–00	GROMMET, ANODE PASSE-FIL	1	1				
11	97075–08030	BOLT BOULON	1	1				
12	92995–08600	WASHER RONDELLE	1	1				
13	90467–08M18	CLIP JONC	1	1				
14	60H–12416–00	VALVE, PRESSURE CONTROL SOUPAPE DE CONTROLEUR PRESS	1	1				
15	90501–16M11	SPRING, COMPRESSION RESSORT, COMPRESSION	1	1				
16	90480–20M05	GROMMET PASSE-FIL	1	1				
17	60V–11382–A0	GASKET 2 JOINT 2	1	1				
18	6G5–11372–00–1S	COVER, BYPASS 2 CONVERCLE	1	1				
19	90119–06MA2	BOLT, WITH WASHER BOULON, AVEC RONDELLE	2	2				
20	61A–12576–00	HOSE 1 TUYAU 1	1	1				
21	90465–13M18	CLAMP BRIDE	2	2				

FIG. 6 FUEL PUMP DRIVE GEAR ENGRENAGE DE POMPE

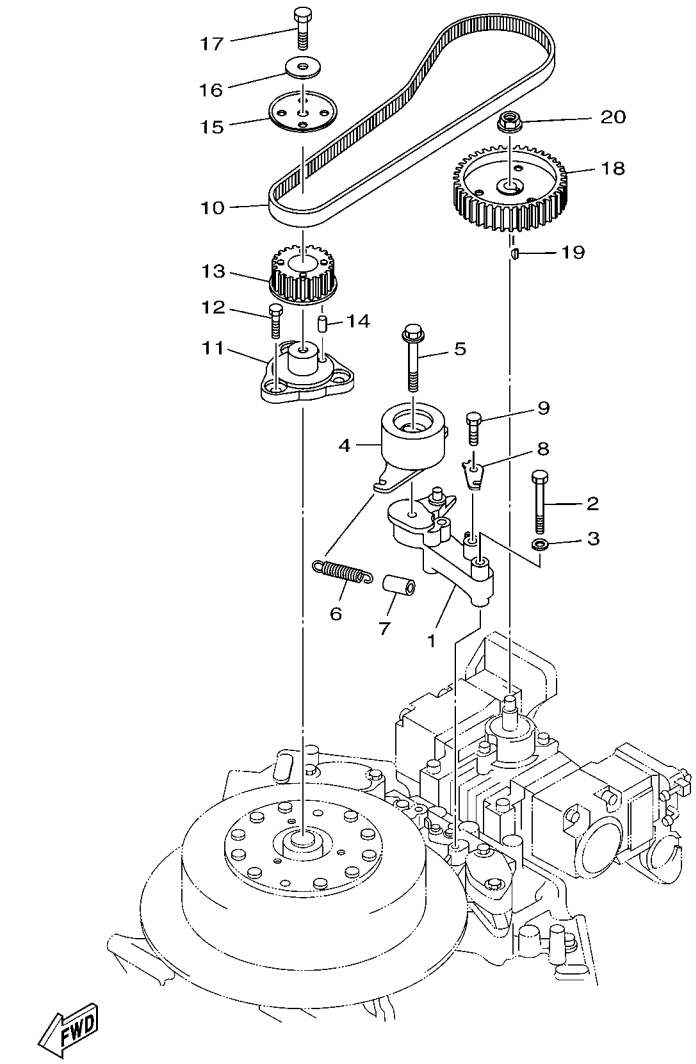

60V2100-C060

REF. NO.	PART NO. N° PIECES	DESCRIPTION DESCRIPTION	60V3	60W3				REMARKS REMARQUES
1	60V–11598–00–94	BRACKET, TENSIONER SUPPORT, TENDEUR	1	1				
2	97013–08055	BOLT BOULON	2	2				
3	92903–08600	WASHER, PLATE RONDELLE, PLATE	2	2				
4	60V–11590–00	TENSIONER ASSY TENDEUR (ENS.)	1	1				
5	90119–10M72	BOLT, WITH WASHER BOULON, AVEC RONDELLE	1	1				
6	60V–12113–00	SPRING, VALVE INNER RESSORT DE SOUPAPE, INTERNE	1	1				
7	90445–15002	HOSE (L30) DURITE (L30)	1	1				
8	60V–11595–00	PLATE,VALVE PLAQUE DE SOUPAPE	1	1				
9	97013–08012	BOLT BOULON	1	1				
10	60V–46241–00	V-BELT COURROIE TRAPEZOIDALE	1	1				
11	68F–11579–01–94	COUPLING, FLYWHEEL ACCOUPLEMENT, VOLANT	1	1				
12	97013–08012	BOLT BOULON	3	3				
13	68F–11536–00–94	GEAR, DRIVE ENGRENAGE, MENANT	1	1				
14	93605–10108	PIN, DOWEL AXE	1	1				
15	60V–11557–00	WASHER 1 RONDELLE 1	1	1				
16	90201–08M00	WASHER, PLATE RONDELLE, PLATE	1	1				
17	97095–08025	BOLT BOULON	1	1				
18	68F–11537–00–94	GEAR, DRIVEN PIGNON SECONDAIRE	1	1				
19	90280–03M01	KEY, WOODRUFF CLAVETTE, DEMI-LUNE	1	1				
20	95707–08600	NUT, FLANGE ECROU, A COLLERETTE	1	1				

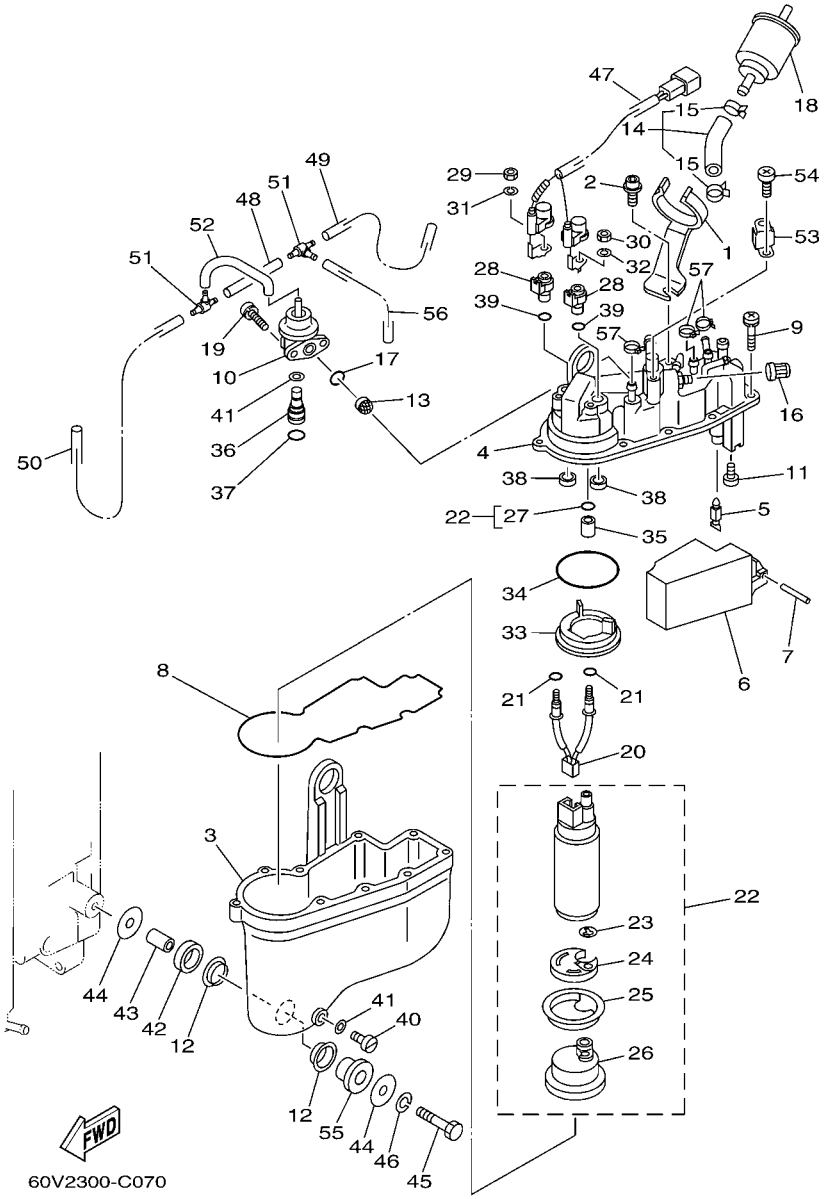

FIG. 7 VAPOR SEPARATOR 1 VAPEUR SEPARATEUR 1

REF. NO.	PART NO. N° PIECES	DESCRIPTION DESCRIPTION	60V3	60W3				REMARKS REMARQUES
1	60V–24216–00	STAY SUPPORT	1	1				
2	6D0–24473–00	SCREW VIS	1	1				
3	60V–14980–00	BODY, FLOAT CHAMBER CORPS, CUVE DE FLOTTEUR	1	1				
4	60V–14182–01	COVER, FLOAT CHAMBER COUVERCLE, CUVE DE FLOTTEUR	1	1				
5	65L–14546–00	VALVE, NEEDLE POINTEAU	1	1				
6	66K–14985–00	FLOAT FLOTTEUR	1	1				
7	66K–14548–01	PIN, FLOAT ARM AXE, BRAS DE FLOTTEUR	1	1				
8	66K–14984–00	GASKET, FLOAT CHAMBER JOINT, CUVE DE FLOTTEUR	1	1				
9	65L–14125–00	SCREW VIS	10	10				
10	68F–13906–00	REGULATOR, PRESSURE REGULATEUR DE PRESSION	1	1				
11	66K–14325–01	SCREW, PAN HEAD VIS TETE CONIQUE	2	2				
12	60V–14163–00	SPACER ENTRETOISE	6	6				
13	65L–13905–00	FILTER COMP ENS FILTRE	1	1				
14	68F–13971–00	PIPE, FUEL 1 TUBE 1, CARBURANT	1	1				
15	65L–24387–00	.CLIP .SANDOW	2	2				
16	65L–14966–00	CAP CAPUCHON	1	1				
17	65L–24486–00	O-RING JOINT TORIQUE	1	1				
18	60V–24251–00	STRAINER 1 FILTRE 1	1	1				
19	66K–14245–00	SCREW, GUIDE GUIDE DE VIS	2	2				
20	68F–82509–00	WIRE, SUB LEAD FIL, SECONDAIRE	1	1				
21	65L–14227–00	O-RING JOINT TORIQUE	2	2				
22	60V–13907–00	FUEL PUMP COMP. POMPE A CARBURANT COMP.	1	1				
23	65L–14159–00	.CLIP .JONC	1	1				
24	68F–13781–00	.DAMPER, PUMP .AMORTISSEUR, POMPE	1	1				
25	68F–13844–00	.PLATE 2 .PLAQUE 2	1	1				
26	68F–13915–00	.FILTER .FILTRE	1	1				
27	65L–1416A–00	.O-RING .JOINT TORIQUE	1	1				

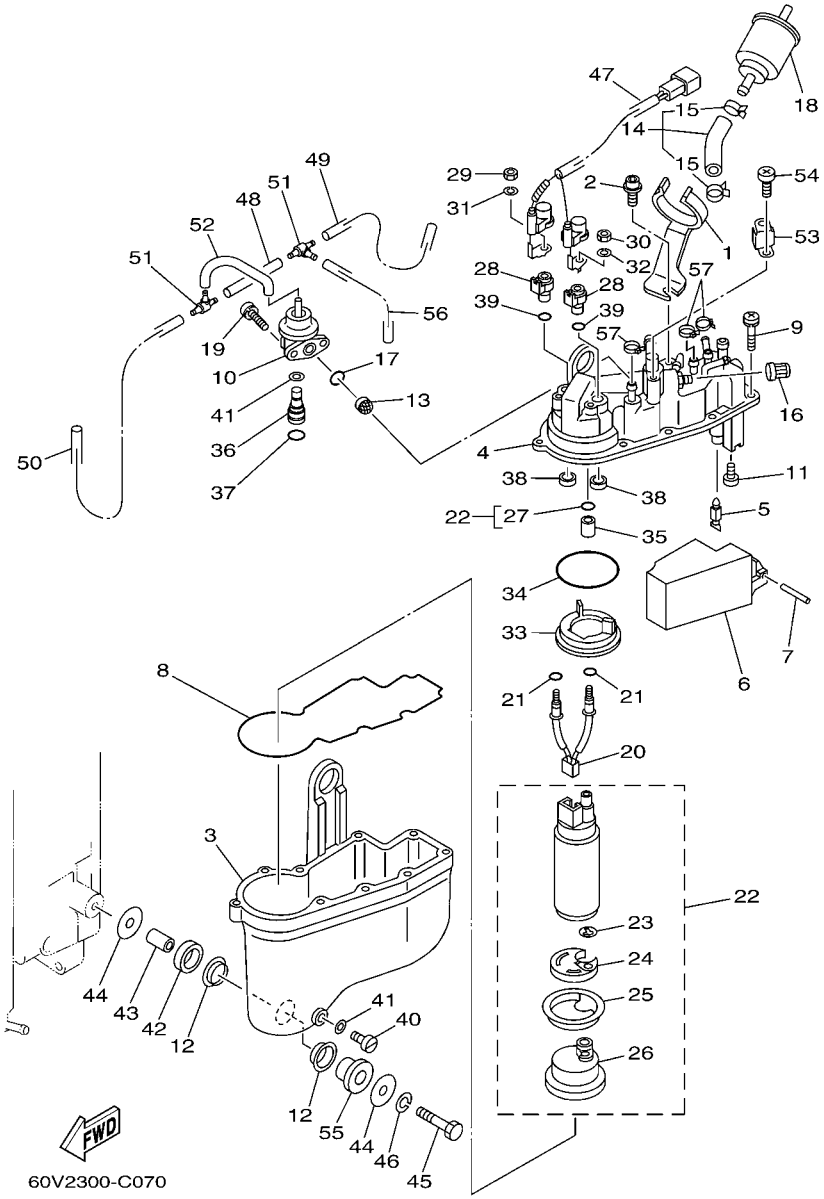

FIG. 7 VAPOR SEPARATOR 1 VAPEUR SEPARATEUR 1

REF. NO.	PART NO. N° PIECES	DESCRIPTION DESCRIPTION	60V3	60W3				REMARKS REMARQUES
28	66K–14271–00	INSULATOR ISOLATEUR	2	2				
29	65L–8182A–00	NUT ECROU	1	1				
30	65L–8182K–00	NUT ECROU	1	1				
31	65L–8182E–00	WASHER RONDELLE	1	1				
32	65L–8182F–00	WASHER RONDELLE	1	1				
33	68F–13843–00	PLATE 1 PLAQUE 1	1	1				
34	65L–14147–00	O-RING JOINT TORIQUE	1	1				
35	68F–14274–00	CONNECTOR CONNECTEUR	1	1				
36	66K–24376–00	PIPE, JOINT 1 DURITE 1, RACCORDEMENT	1	1				
37	66K–24489–00	O-RING JOINT TORIQUE	1	1				
38	68F–14271–00	INSULATOR ISOLATEUR	2	2				
39	65L–14397–00	O-RING JOINT TORIQUE	2	2				
40	65L–14992–00	ROD TRINGLE	1	1				
41	65L–14997–00	SEAL DURITE	2	2				
42	60V–24375–01	GROMMET OEILLET CAOUTCHOUC	3	3				
43	60V–24397–01	COLLAR COLLIER	3	3				
44	66K–24579–00	WASHER 2 RONDELLE 2	6	6				
45	65L–24592–00	BOLT BOLTE	3	3				
46	65L–24169–00	WASHER, LOCK RONDELLE-FREIN	3	3				
47	60V–82507–00	WIRE, LEAD FIL	1	1				
48	66K–13542–00	HOSE, VACUUM SENSING 1 DURITE 1	1	1				
49	66K–13544–00	HOSE, VACUUM SENSING 2 DURITE 2	1	1				
50	66K–13532–00	HOSE, VACUUM SENSING 3 DURITE 3	1	1				
51	65L–24461–00	PIPE, JOINT DURITE, RACCORDEMENT	2	2				
52	66K–13533–00	HOSE, VACUUM SENSING 4 DURITE 4	1	1				
53	65L–13898–00	HOLDER SUPPORT	1	1				
54	65L–14565–00	SCREW VIS	1	1				

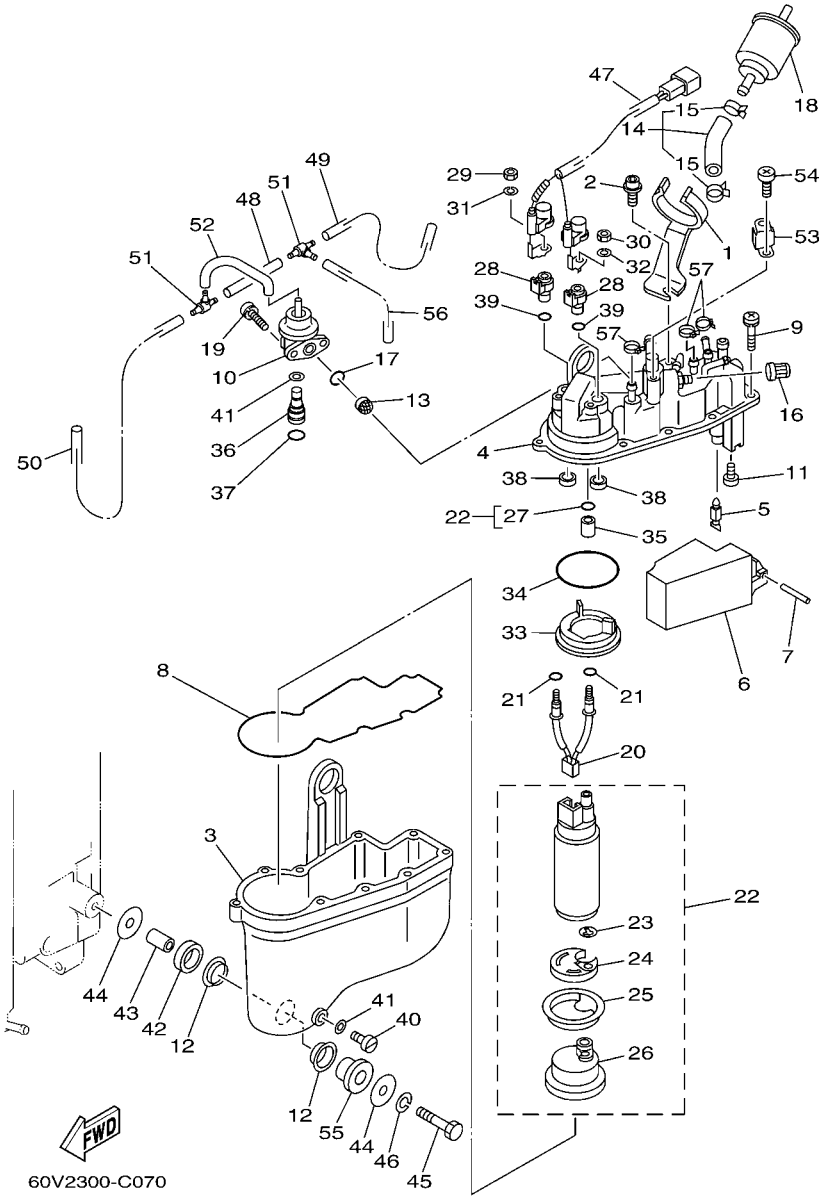

FIG. 7 VAPOR SEPARATOR 1 VAPEUR SEPARATEUR 1

REF. NO.	PART NO. N° PIECES	DESCRIPTION DESCRIPTION	60V3	60W3				REMARKS REMARQUES
55	60V–24339–01	GROMMET RONDELLE CAOUTCHOUC	3	3				
56	60V–13534–00	HOSE, VACUUM SENSING 5 DURITE 5	1	1				
57	90465–11M10	CLAMP BRIDE	3	3				

FIG. 8 VAPOR SEPARATOR 2 VAPEUR SEPARATEUR 2

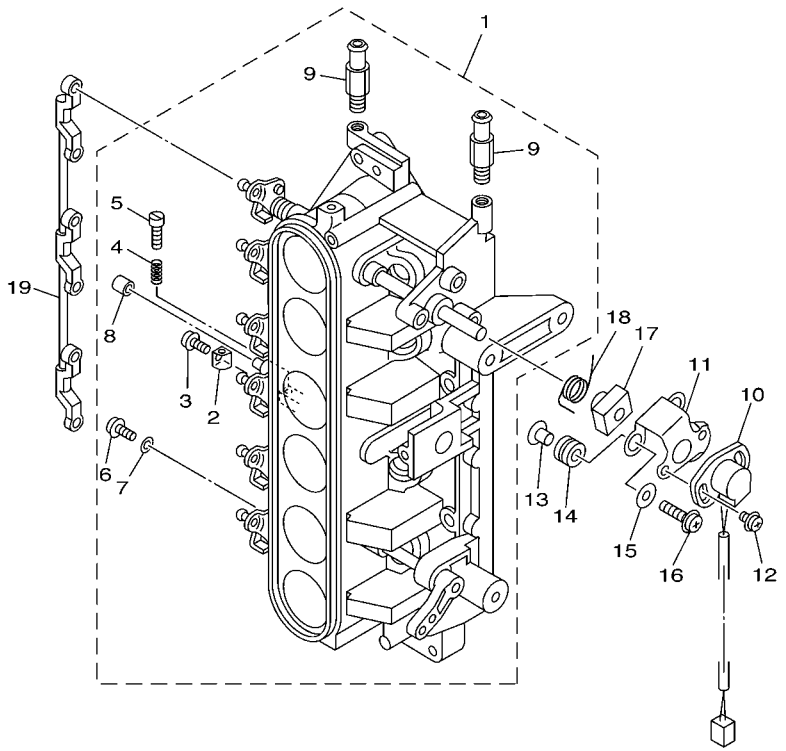

60V1010-3080

REF. NO.	PART NO. N° PIECES	DESCRIPTION DESCRIPTION	60V3	60W3				REMARKS REMARQUES
1	60V–13751–00	BODY, THROTTLE 1 CARTER 1	1	1				
2	65L–14527–00	.PLATE .PLAQUE	1	1				
3	65L–14565–00	.SCREW .VIS	1	1				
4	65L–14334–00	.SPRING, AIR ADJUSTING .RESSORT, VIS DE DOSEUR D'AIR	1	1				
5	65L–14523–00	.SCREW, STOP .VIS, BUTEE	1	1				
6	6K5–14592–00	.SCREW .VIS	6	6				
7	90201–05552	.WASHER, PLATE .RONDELLE, PLATE	6	6				
8	65L–14578–00	.COLLAR .COLLERETTE	1	1				
9	68F–13568–00	.STUD .GOUJON	2	2				
10	61A–85885–00	THROTTLE SENSOR ASSY SENSITOMETRE (ENS.)	1	1				
11	6K7–85886–01	BRACKET SUPPORT	1	1				
12	97985–05212	SCREW, WITH WASHER VIS, AVEC RONDELLE	2	2				
13	90387–05M00	COLLAR COLLERETTE	3	3				
14	60V–85516–00	SPACER ENTRETOISE	3	3				
15	60V–14596–00	WASHER RONDELLE	3	3				
16	97985–05330	SCREW, WITH WASHER VIS, AVEC RONDELLE	3	3				
17	65L–14573–00	LEVER LEVIER	1	1				
18	65L–14579–00	SPRING RESSORT	1	1				
19	65L–41217–00	ROD, ACCEL. LEVER TIGE, LEVIER ACCELERATION	1	1				

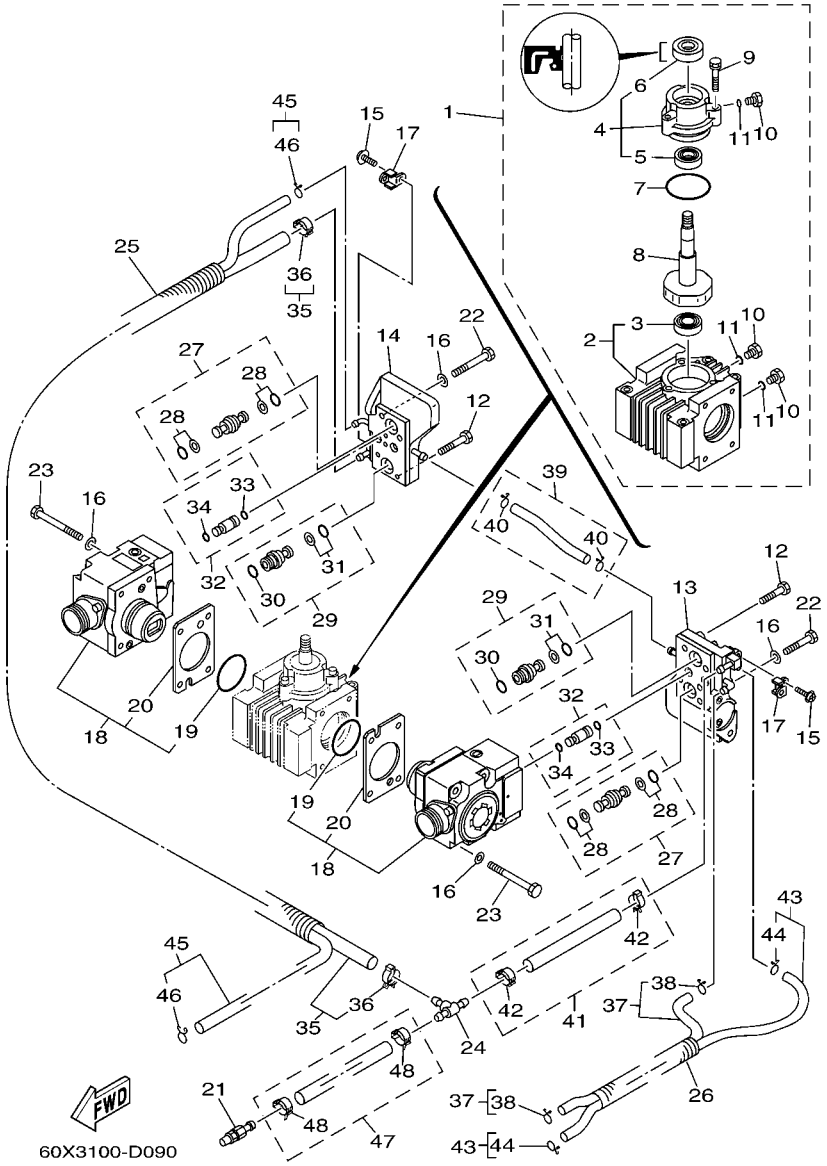

FIG. 9 FUEL INJECTION PUMP FUEL INJECTION PUMP

REF. NO.	PART NO. N° PIECES	DESCRIPTION DESCRIPTION	60V3	60W3				REMARKS REMARQUES
1	60V–12170–00	CAMSHAFT ASSY 1 ENS ARBRE A CAMES 1	1	1				
2	60V–12424–00	.PLATE, CARTRIDGE INNER .PLAQUE DE CARTOUCHE	1	1				
3	93306–00001	..BEARING ..ROULEMENT	1	1				
4	68F–12173–00	.CAP, CAMSHAFT 1 .CAPUCHON, ARBRE A CAMES 1	1	1				
5	93306–001U0	..BEARING ..ROULEMENT	1	1				
6	68F–12223–00	..SEAL ..JOINT	1	1				
7	68F–12439–00	.O-RING .JOINT TORIQUE	1	1				
8	60V–12171–00	.CAMSHAFT 1 .ARBRE A CAMES 1	1	1				
9	68F–12228–00	.BOLT .BOULON	3	3				
10	68F–13455–00	.PLUG .PLOT	3	3				
11	68F–13473–00	.O-RING .JOINT TORIQUE	3	3				
12	68F–12228–00	BOLT BOULON	4	4				
13	60V–13993–00	COVER, CONTROL RACK COUVERCLE, BOITIER DE COMMAND.	1	1				
14	60W–13993–00	COVER, CONTROL RACK COUVERCLE, BOITIER DE COMMAND.	1	1				
15	65L–14565–00	SCREW VIS	2	2				
16	68F–24579–00	WASHER 2 RONDELLE 2	12	12				
17	60V–13854–00	PLATE 4 PLAQUETTE 4	2	2				
18	60V–13910–00	FUEL PUMP ASSY POMPE A ESSENCE COMPLET	2	2				
19	60V–14005–00	.RING, SEAL .JOINTS	1	1				
20	60V–14126–00	.GASKET .JOINT	1	1				
21	68F–24300–00	FUEL PIPE JOINT DURITE RACCORDEMT. A ESSENCE	1	1				
22	60V–24178–00	BOLT 3 BOULON 3	4	4				
23	60V–24176–00	BOLT 1 BOULON 1	8	8				
24	60V–24378–00	PIPE, JOINT 4 DURITE RACCORDEMENT 4	1	1				
25	60V–24864–00	TUBE DURITE	1	1				
26	60V–2510T–00	TUBE CHAMBRE A AIR	1	1				
27	68F–13815–10	JOINT 1 RACCORD 1	2	2				

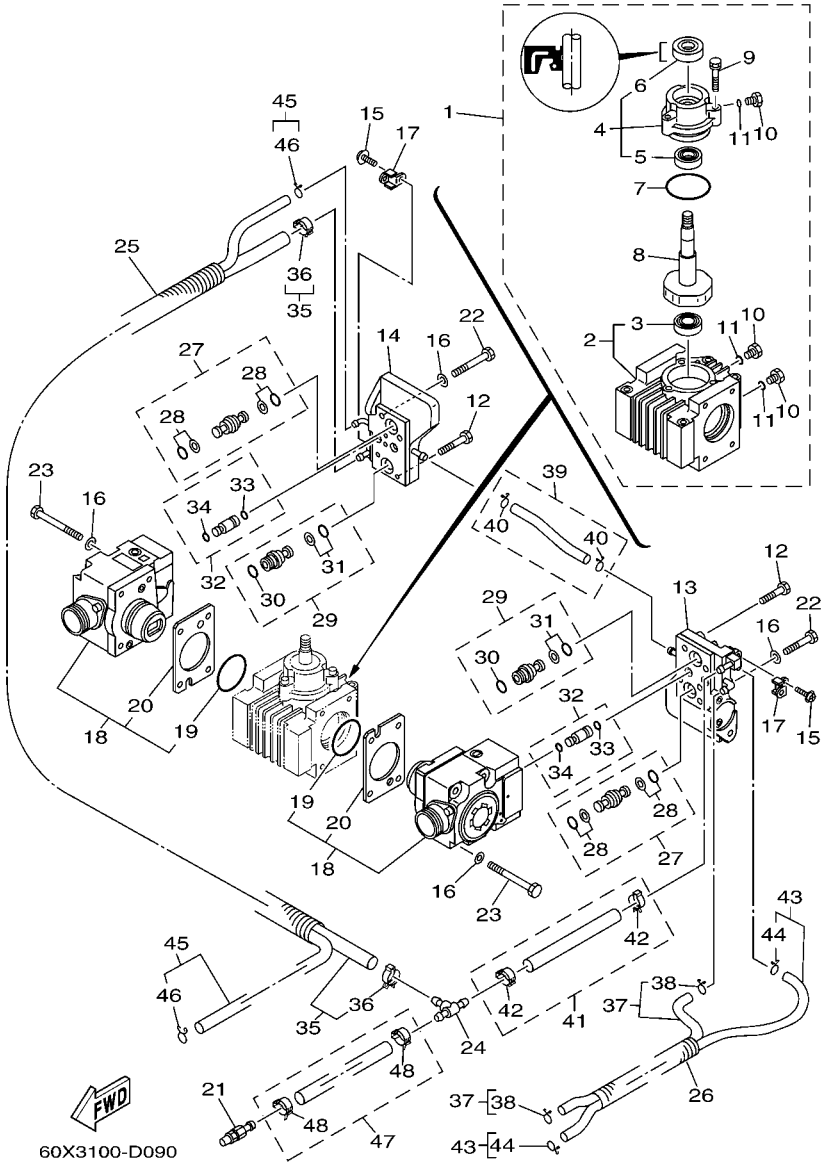

FIG. 9 FUEL INJECTION PUMP FUEL INJECTION PUMP

REF. NO.	PART NO. N° PIECES	DESCRIPTION DESCRIPTION	60V3	60W3				REMARKS REMARQUES
28	68F–2466A–00	.PACKING KIT .POCHETTE DE JOINTS	2	2				
29	68F–13816–10	JOINT 2 RACCORD 2	2	2				
30	68F–24486–00	.O-RING .JOINT TORIQUE	1	1				
31	68F–2466A–00	.PACKING KIT .POCHETTE DE JOINTS	1	1				
32	60V–13505–00	JOINT COMP. JOINT COMPLET	4	4				
33	68F–13473–00	.O-RING .JOINT TORIQUE	1	1				
34	60V–13473–00	.O-RING .JOINT TORIQUE	1	1				
35	60V–14148–00	PIPE DURITE	1	1				
36	65L–24387–00	.CLIP .SANDOW	2	2				
37	60V–24312–00	PIPE 2 DURITE 2	1	1				
38	68F–24356–00	.CLIP, PIPE 1 .JONC, TUBE 1	2	2				
39	60V–24313–00	PIPE 3 DURITE 3	1	1				
40	68F–24356–00	.CLIP, PIPE 1 .JONC, TUBE 1	2	2				
41	60V–14149–00	PIPE DURITE	1	1				
42	65L–24387–00	.CLIP .SANDOW	2	2				
43	60V–24314–00	PIPE 4 DURITE 4	1	1				
44	68F–24356–00	.CLIP, PIPE 1 .JONC, TUBE 1	2	2				
45	60V–24315–00	PIPE 5 DURITE 5	1	1				
46	68F–24356–00	.CLIP, PIPE 1 .JONC, TUBE 1	2	2				
47	60V–13972–00	PIPE, FUEL 2 TUBE 2, CARBURANT	1	1				
48	65L–24387–00	.CLIP .SANDOW	2	2				

FIG. 10 FUEL INJECTION NOZZLE FUEL INJECTION NOZZLE

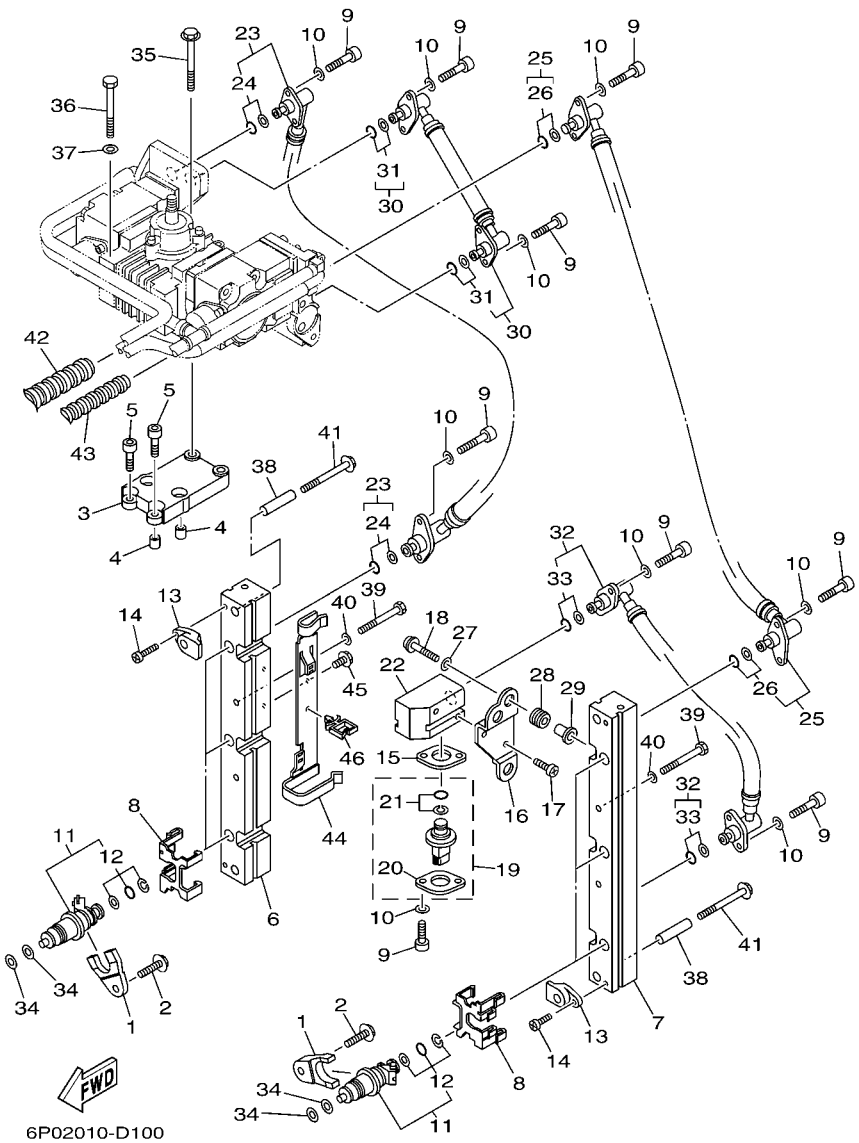

REF. NO.	PART NO. N° PIECES	DESCRIPTION DESCRIPTION	60V3	60W3				REMARKS REMARQUES
1	68F–13767–00	CAP, INJECTOR COUVERCLE	6	6				
2	90119–08M60	BOLT, WITH WASHER BOULON, AVEC RONDELLE	6	6				
3	60V–13782–00	STAY SUPPORT	1	1				
4	90387–08M31	COLLAR COLLERETTE	2	2				
5	90110–08M04	BOLT, HEXAGON SOCKET HEAD BOULON, TETE HEXAGONALE CREUSE	4	4				
6	60V–13161–00	PIPE, DELIVERY 1 DURITE REFOULEMENT 1	1	1				
7	60V–13171–00	PIPE, DELIVERY 2 DURITE REFOULEMENT	1	1				
8	60V–13898–00	HOLDER SUPPORT	6	6				
9	68F–24551–00	BOLT, JOINT BOULON, RACCORDEMENT	18	18				
10	68F–24576–00	WASHER RONDELLE	18	18				
11	60V–13761–00	INJECTOR ASSY INJECTEUR	6	6				
12	68F–1410B–00	.PACKING KIT .POCHETTE DE JOINTS	1	1				
13	60V–14264–00	COLLAR COLLERETTE	4	4				
14	65L–14565–00	SCREW VIS	4	4				
15	60V–82389–00	PLATE 2 PLAQUETTE 2	1	1				
16	60V–82398–00	PLATE 3 PLAQUETTE 3	1	1				
17	60V–81545–00	SCREW 1 VIS 1	2	2				
18	60V–81546–00	SCREW 2 VIS 2	3	3				
19	60V–82380–00	SENSOR, PRESSURE SONDE DE PRESSION	1	1				
20	68F–82388–00	.PLATE .PLAQUETTE	1	1				
21	68F–82384–00	.PACKING KIT .POCHETTE DE JOINTS	1	1				
22	60V–13938–00	PIPE DURITE	1	1				
23	60V–13973–10	PIPE, FUEL 3 TUBE 3, CARBURANT	1	1				
24	68F–2466A–00	.PACKING KIT .POCHETTE DE JOINTS	2	2				
25	60V–13974–10	PIPE, FUEL 4 TUBE 4, CARBURANT	1	1				
26	68F–2466A–00	.PACKING KIT .POCHETTE DE JOINTS	2	2				
27	65L–14596–00	WASHER RONDELLE	3	3				

FIG. 10 FUEL INJECTION NOZZLE FUEL INJECTION NOZZLE

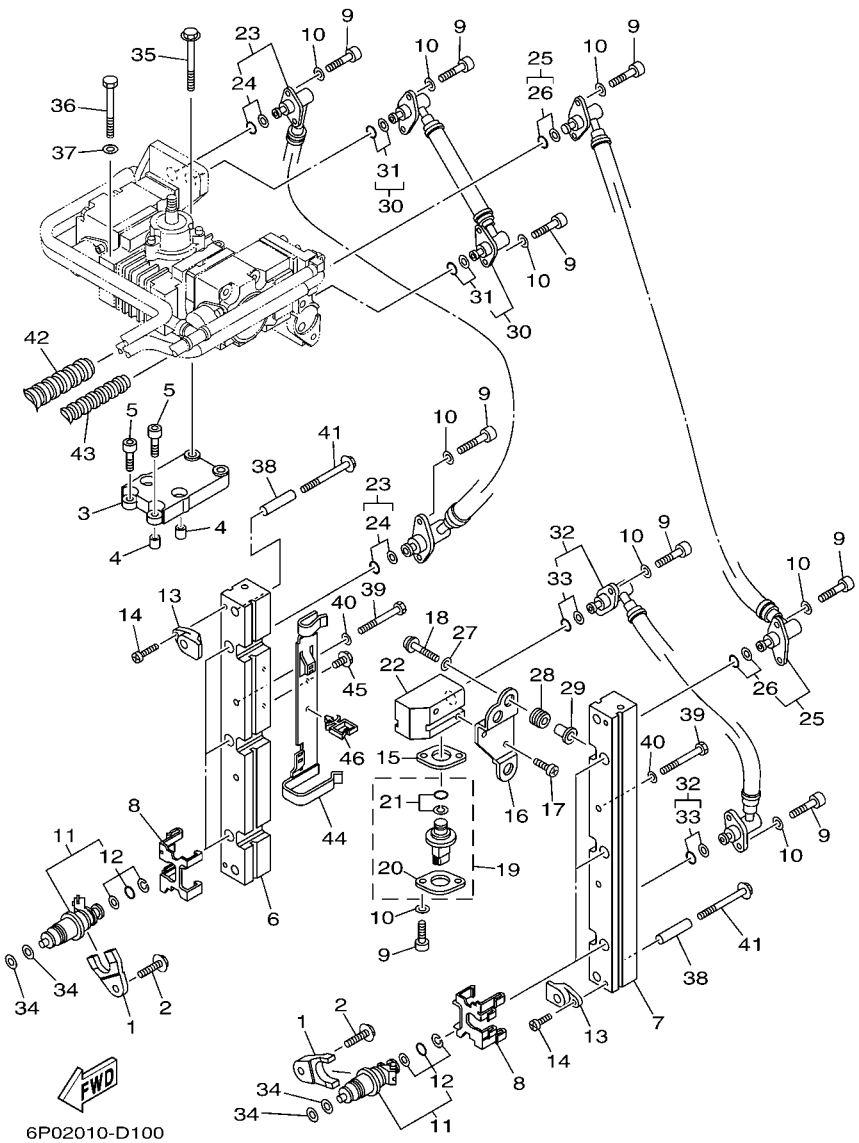

REF. NO.	PART NO. N° PIECES	DESCRIPTION DESCRIPTION	60V3	60W3				REMARKS REMARQUES
28	90480–10M23	GROMMET PASSE-FIL	3	3				
29	90387–05M00	COLLAR COLLERETTE	3	3				
30	60V–13975–10	PIPE, FUEL 5 TUBE 5, CARBURANT	1	1				
31	68F–2466A–00	.PACKING KIT .POCHETTE DE JOINTS	2	2				
32	60V–13976–10	PIPE, FUEL 6 TUBE 6, CARBURANT	1	1				
33	68F–2466A–00	.PACKING KIT .POCHETTE DE JOINTS	2	2				
34	68F–13764–00	GASKET (T=2.2) JOINT (T=2.2)	12	12				
35	97513–08570	BOLT, WITH WASHER VIS HEXAGONAL AVC RONDELLE	2	2				
36	97013–08090	BOLT BOULON	2	2				
37	92903–08600	WASHER, PLATE RONDELLE, PLATE	2	2				
38	60V–13716–00	COLLAR COLLERETTE	4	4				
39	97013–08055	BOLT BOULON	4	4				
40	92903–08600	WASHER, PLATE RONDELLE, PLATE	4	4				
41	97513–08570	BOLT, WITH WASHER VIS HEXAGONAL AVC RONDELLE	4	4				
42	90447–22004	HOSE, WITH SPRING DURITE, AVEC RESSORT	1	1				
43	90447–15001	HOSE, WITH SPRING DURITE, AVEC RESSORT	1	1				
44	6D0–8366P–00	BRACKET 4 SUPPORT 4	1	1				
45	97595–06512	BOLT, WITH WASHER VIS HEXAGONAL AVC RONDELLE	2	2				
46	90464–08004	CLAMP BRIDE	1	1				

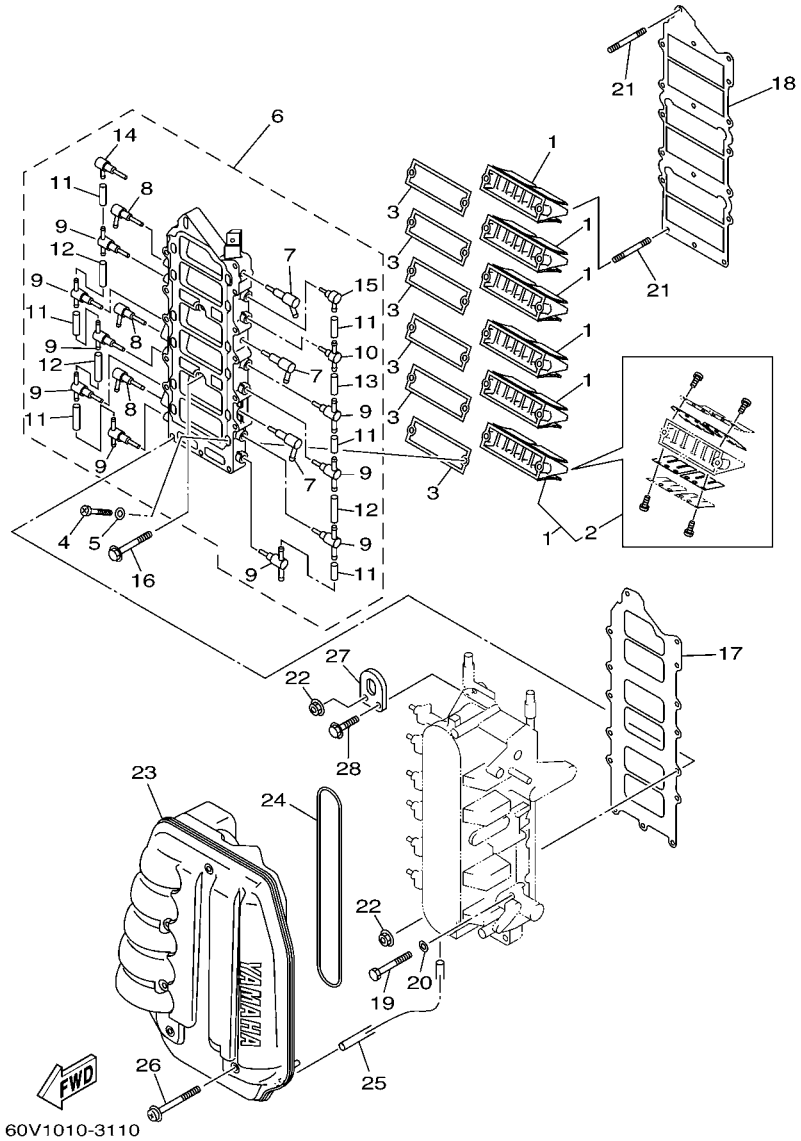

FIG. 11 INTAKE — ADMISSION

REF. NO.	PART NO. N° PIECES	DESCRIPTION DESCRIPTION	60V3	60W3				REMARKS REMARQUES
1	60V–13610–00	REED VALVE ASSY CLAPET COMPLET	6	6				
2	60V–W0004–00	.REED SET .JEU DE CLAPETS	1	1				
3	60V–13621–A0	GASKET, VALVE SEAT JOINT, SIEGE DE CLAPET	6	6				
4	97880–05016	SCREW, PAN HEAD VIS, TETE TRONCONIQUE	12	12				
5	92990–05600	WASHER, PLATE RONDELLE, PLATE	12	12				
6	60V–13624–00–1S	PLATE,REED VALVE PLAQUE DE CLAPET	1	1				
7	60V–13552–00	.NOZZLE .GICLEUR	3	3				
8	60V–13572–00	.NOZZLE .GICLEUR	3	3				
9	60V–11379–00	.VALVE, CHECK .CLAPET	9	9				
10	6F6–11370–01	.CHECK VALVE ASSY .CLAPET (ENS.)	1	1				
11	90445–07M03	.HOSE (L34) .DURITE (L34)	6	6				
12	90445–07016	.HOSE (L60) .DURITE (L60)	3	3				
13	90445–07015	.HOSE (L65) .DURITE (L65)	1	1				
14	60V–11369–00	.VALVE, CHECK .S'OUPAPE DE RATANUE	1	1				
15	650–11370–01	.CHECK VALVE ASSY .CLAPET (ENS.)	1	1				
16	90105–06028	BOLT, FLANGE BOULON	2	2				
17	60V–13646–00	GASKET, MANIFOLD 2 JOINT, TUBULURE 2	1	1				
18	60V–13645–00	GASKET, MANIFOLD 1 JOINT, TUBULURE 1	1	1				
19	97013–06060	BOLT BOULON	12	12				
20	92903–06600	WASHER, PLATE RONDELLE, PLATE	12	12				
21	95670–06660	BOLT, STUD GOUJON	2	2				
22	90179–06M24	NUT ECROU	2	2				
23	60V–14440–00	SILENCER ASSY, INTAKE SIENCIEUX D'ADMISSION	1	1				
24	60V–14476–00	SEAL JOINT SPY	1	1				
25	90445–07M44	HOSE (L250) DURITE (L250)	1	1				
26	90159–06M16	SCREW, WITH WASHER VIS, AVEC RONDELLE	6	6				
27	68F–11119–00	HANGER, ENGINE ANNEAU, LEVAGE	1	1				

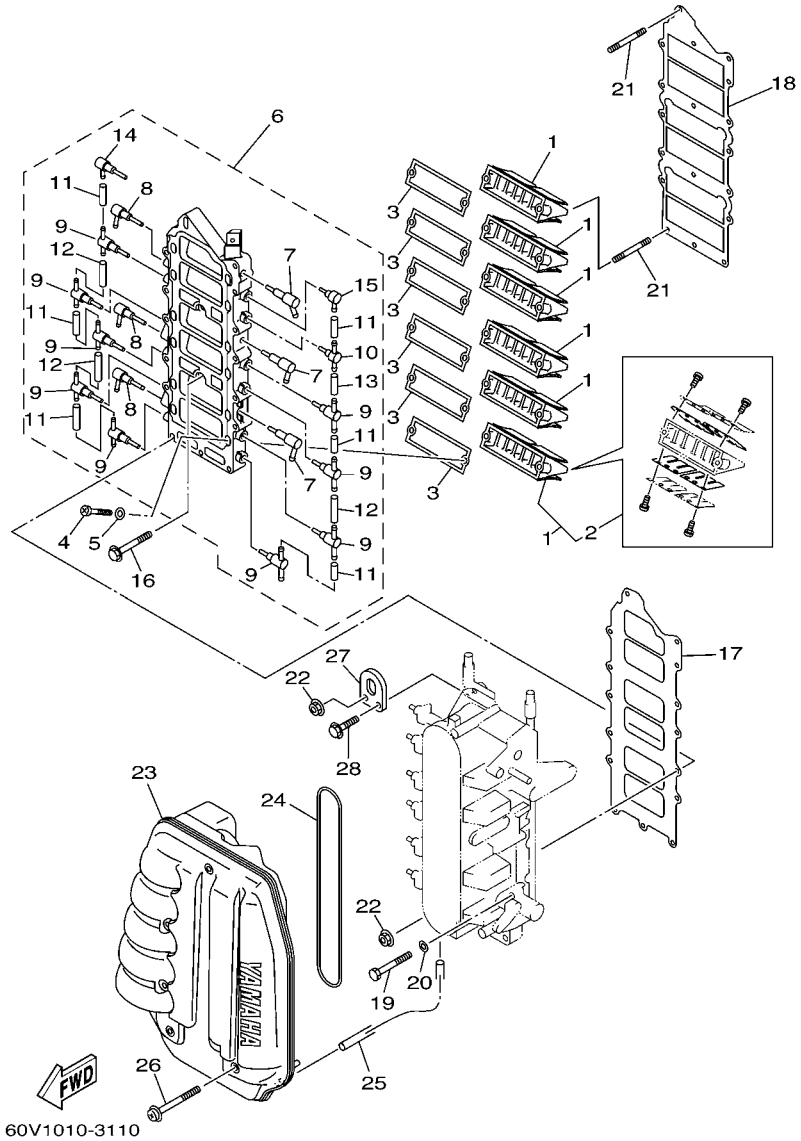

FIG. 11 INTAKE — ADMISSION

REF. NO.	PART NO. N° PIECES	DESCRIPTION DESCRIPTION	60V3	60W3				REMARKS REMARQUES
28	90119–06MA2	BOLT, WITH WASHER BOULON, AVEC RONDELLE	1	1				

FIG. 12 OIL PUMP — POMPE A HUILE

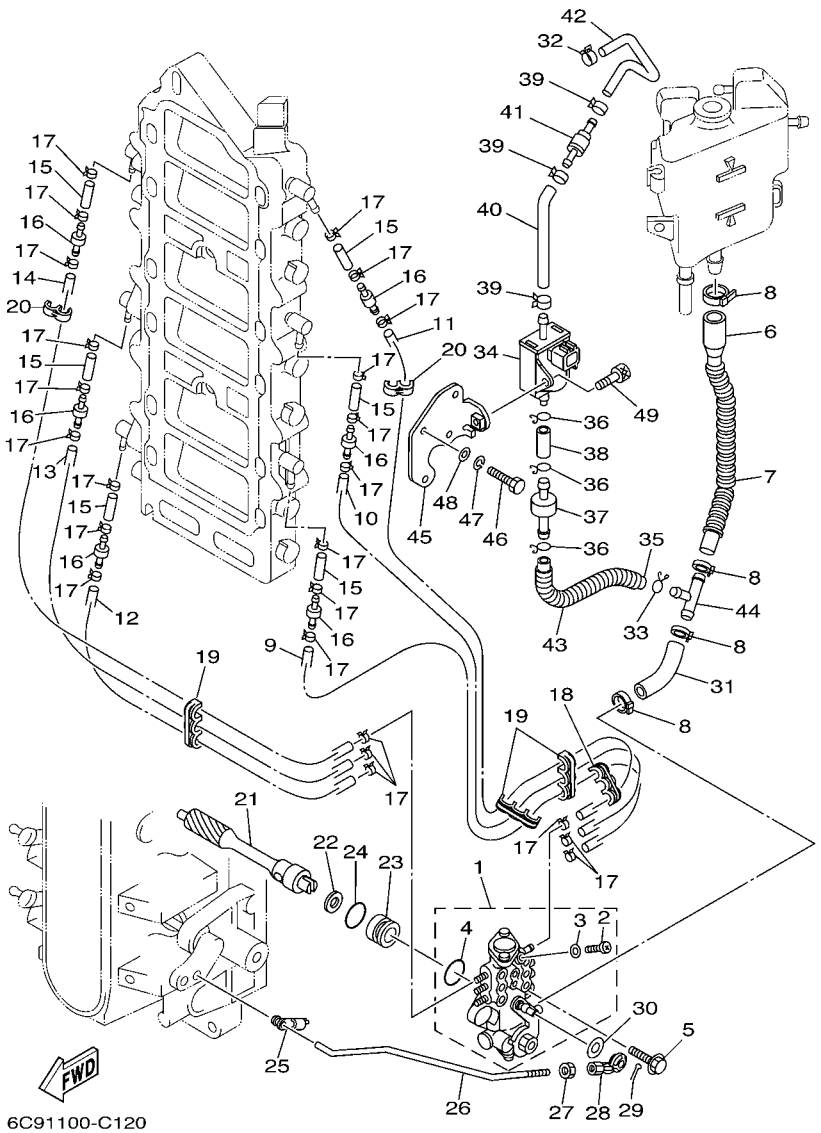

REF. NO.	PART NO. N° PIECES	DESCRIPTION DESCRIPTION	60V3	60W3				REMARKS REMARQUES
1	60V–13200–11	OIL INJECTION PUMP ASSY POMPE A HUILE COMPLET	1	1				
2	6R3–13471–00	.PLUG, DRAIN .PLOT, VIDANGE	1	1				
3	6L2–13475–00	.GASKET .JOINT	1	1				
4	93210–19M82	.O-RING .JOINT TORIQUE	1	1				
5	90109–06M40	BOLT BOULON	2	2				
6	6G5–13416–00	PIPE, OIL 1 DURITE A HUILE	1	1				
7	90446–17MA8	HOSE (L200) DURITE (L200)	1	1				
8	90465–11M10	CLAMP BRIDE	4	4				
9	90446–07M35	HOSE (L260) DURITE (L260)	1	1				
10	90445–07M96	HOSE (L310) DURITE (L310)	1	1				
11	90446–07M48	HOSE (L450) DURITE (L450)	1	1				
12	90445–07M44	HOSE (L250) DURITE (L250)	1	1				
13	90445–07M46	HOSE (L360) DURITE (L360)	1	1				
14	90445–07M10	HOSE (L510) DURITE (L510)	1	1				
15	90445–07M04	HOSE (L50) DURITE (L50)	6	6				
16	6R3–13183–10	VALVE, CHECK S'OUPAPE DE RATANUE	6	6				
17	90468–07M02	CLIP JONC	24	24				
18	90464–07M05	CLAMP BRIDE	1	1				
19	90464–07M05	CLAMP BRIDE	3	3				
20	90464–07M20	CLAMP BRIDE	3	3				
21	61A–11537–00	GEAR, DRIVEN PIGNON SECONDAIRE	1	1				
22	90201–09M01	WASHER, PLATE RONDELLE, PLATE	1	1				
23	61A–13117–00	COLLAR, DISTANCE ENTRETOISE	1	1				
24	93210–18MA9	O-RING JOINT TORIQUE	1	1				
25	6R5–41237–00	JOINT, LINK RACCORD	1	1				
26	65L–41241–10	ROD, LINK BIELLETTE	1	1				
27	95380–05600	NUT ECROU	1	1				

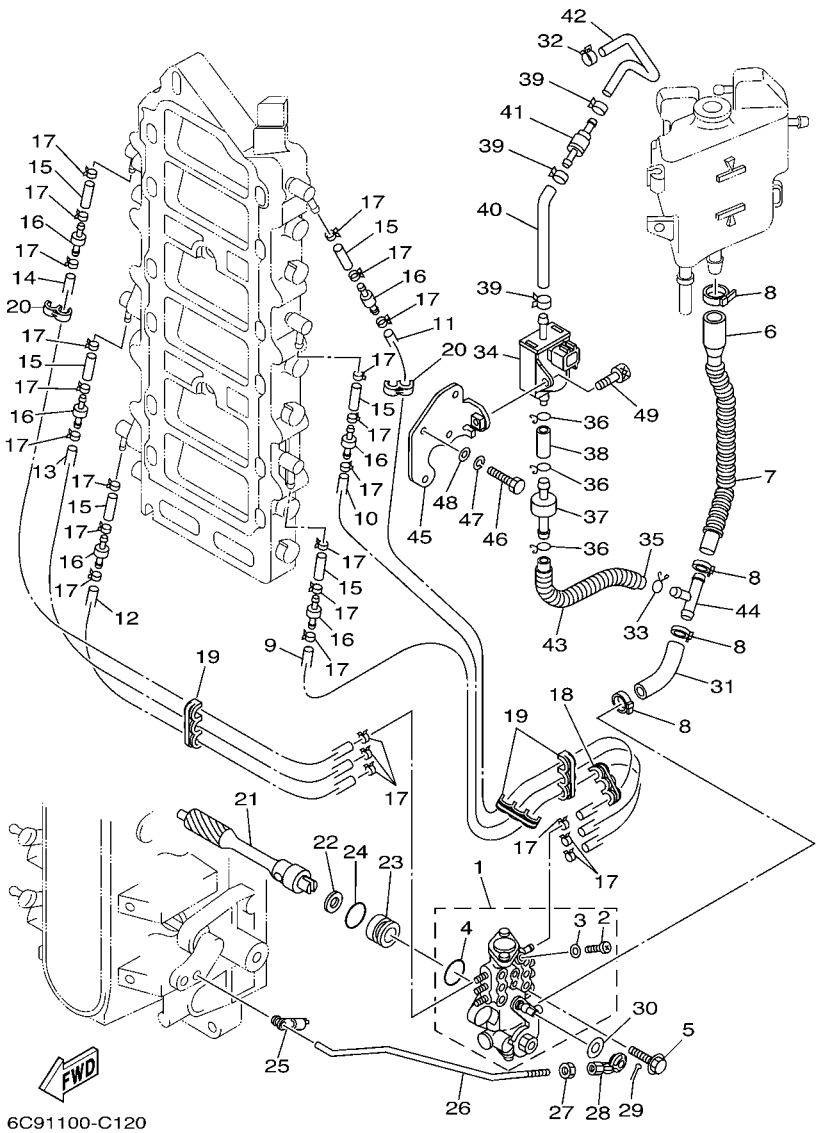

FIG. 12 OIL PUMP — POMPE A HUILE

REF. NO.	PART NO. N° PIECES	DESCRIPTION DESCRIPTION	60V3	60W3				REMARKS REMARQUES
28	6H1–41237–00	JOINT, LINK RACCORD	1	1				
29	91490–12012	PIN, COTTER GOUPILLE	1	1				
30	90202–05088	WASHER, PLATE RONDELLE, PLATE	1	1				
31	60V–24319–00	PIPE, OIL DURITE A HUILE	1	1				
32	90468–07M02	CLIP JONC	1	1				
33	90467–08M18	CLIP JONC	1	1				
34	68F–13100–00	SOLENOID PUMP ASSY SOLENOIDE	1	1				
35	68F–13418–00	HOSE 4 DURITE 4	1	1				
36	68F–13184–00	SPRING, OIL PIPE RESSORT, DURITE A HUILE	3	3				
37	68F–13440–00	FILTER ASSY ENS FILTRE	1	1				
38	68F–1316F–00	HOSE 1 DURITE 1	1	1				
39	68F–13133–00	CLIP JONC	3	3				
40	68F–1316G–00	HOSE 2 DURITE 2	1	1				
41	68F–1316A–00	CHECK VALVE ASSY CLAPET (ENS.)	1	1				
42	68F–13416–00	HOSE 3 DURITE 3	1	1				
43	90448–08001	HOSE, WITH UNION DURITE, AVEC RACCORD	1	1				
44	68F–14485–00	PIPE, JOINT DURITE	1	1				
45	60V–1319K–00	PLATE PLAQUE	1	1				
46	97095–06020	BOLT BOULON	2	2				
47	92995–06100	WASHER, SPRING RONDELLE, GROWER	2	2				
48	92995–06600	WASHER RONDELLE	2	2				
49	90110–06M06	BOLT, HEXAGON SOCKET HEAD BOULON, TETE HEXAGONALE CREUSE	1	1				

FIG. 13 OIL TANK — RESERVOIR A PETROLE

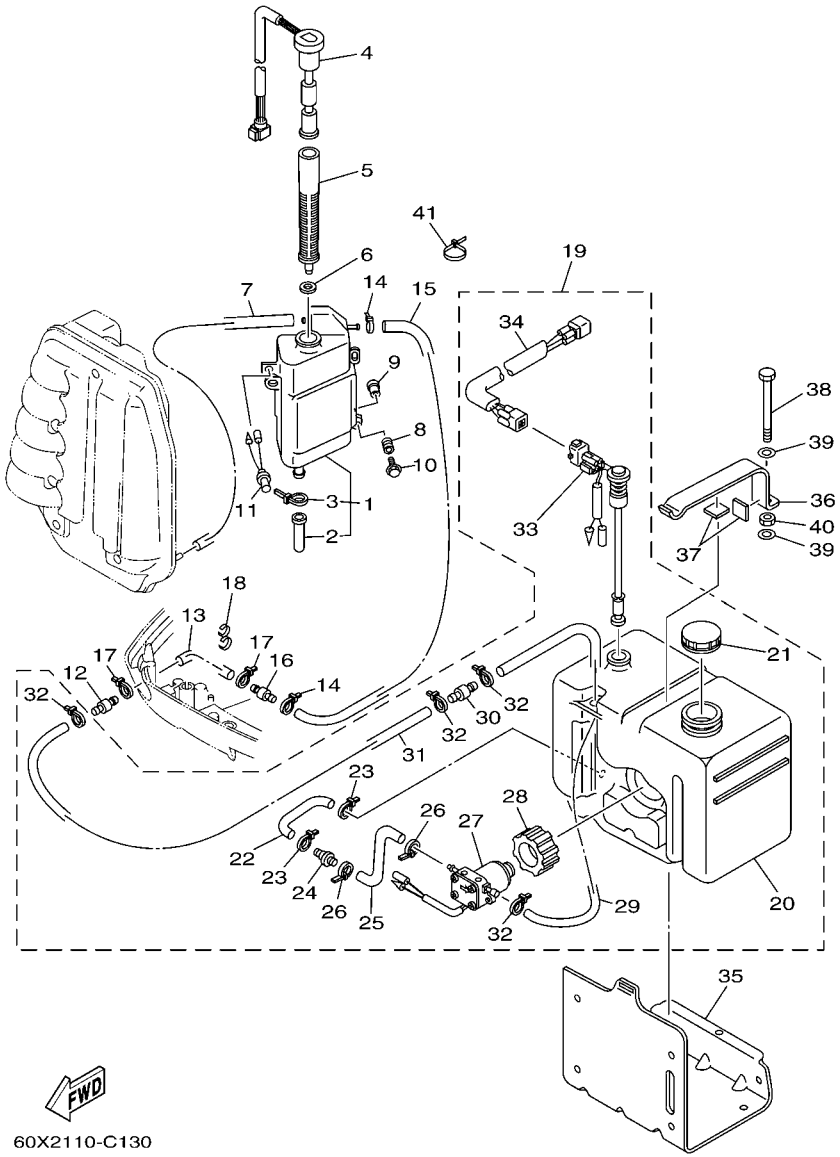

REF. NO.	PART NO. N° PIECES	DESCRIPTION DESCRIPTION	60V3	60W3				REMARKS REMARQUES
1	61A–21750–00	OIL TANK ASSY RESERVOIR A HUILE	1	1				
2	6E5–13448–00	.CAP .CAPUCHON	1	1				
3	90465–13M11	.CLAMP .BRIDE	1	1				
4	61A–85730–01	OIL LEVEL GAUGE ASSY VIEUX	1	1				
5	61A–13411–00	STRAINER, OIL FILTRE, HUILE	1	1				
6	6E5–13414–00	GASKET, STRAINER COVER JOINT, COUVERCLE DE FILTRE	1	1				
7	90445–05M07	HOSE (L700) DURITE (L700)	1	1				
8	6A0–82317–00	DAMPER, IGNITION COIL AMORTISSEUR, BOBINE D'ALLUM	3	3				
9	624–42542–00	PIPE TUYAU	3	3				
10	90119–06M65	BOLT, WITH WASHER BOULON, AVEC RONDELLE	3	3				
11	6R3–8259E–00	SWITCH ASSY COMMUTATEUR	1	1				
12	6E5–24379–00	PIPE, JOINT 4 DURITE RACCORDEMENT 4	1	1				
13	90445–12M04	HOSE (L1900) DURITE (L1900)	1	1				
14	90465–11M10	CLAMP BRIDE	2	2				
15	6E5–24323–00	PIPE 12 DURITE 12	1	1				
16	6E5–24379–00	PIPE, JOINT 4 DURITE RACCORDEMENT 4	1	1				
17	90465–11M10	CLAMP BRIDE	2	2				
18	90464–13M34	CLAMP BRIDE	1	1				
19	61A–21708–20	SUB OIL TANK ASSY RESERVOIR A HUILE SECOURS (ENS	1	1				AP AP
20	6E5–21733–20	.SUB TANK, OIL (10.5L) .RESERVOIR A HUILE SECOURS:10.	1	1				
21	6E5–21770–03	.OIL TANK CAP ASSY .CABOCHON DE RESERVOIR A HUILE	1	1				
22	6E5–24322–00	.PIPE 11 .DURITE 11	1	1				
23	90465–11M10	.CLAMP .BRIDE	2	2				
24	646–24251–02	.STRAINER 1 .FILTRE 1	1	1				
25	6E5–24319–01	.PIPE, OIL .DURITE A HUILE	1	1				
26	90465–11M10	.CLAMP .BRIDE	2	2				
27	6E5–81900–01	.OIL FEED PUMP ASSY .VIEUX	1	1				

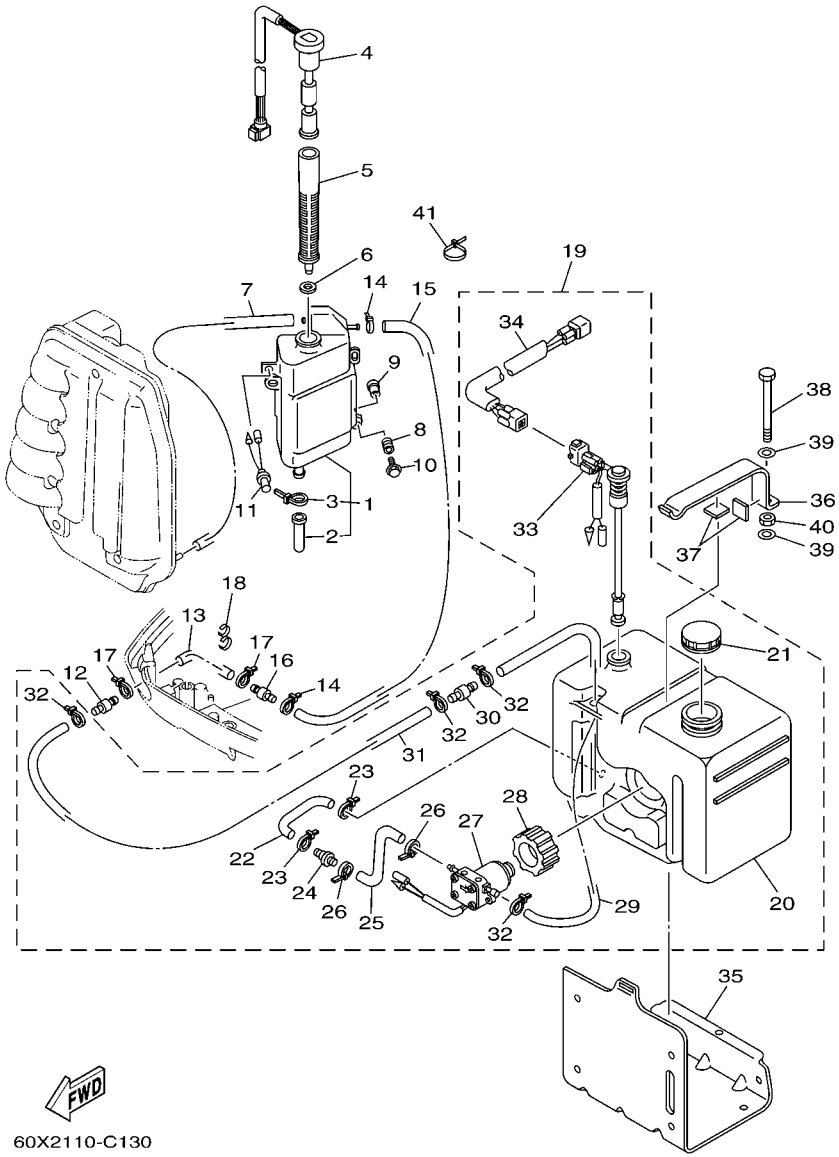

FIG. 13 OIL TANK — RESERVOIR A PETROLE

REF. NO.	PART NO. N° PIECES	DESCRIPTION DESCRIPTION	60V3	60W3				REMARKS REMARQUES
28	6E5–81922–00	.GROMMET .OEILLET CAOUTCHOUC	1	1				
29	6E5–24321–01	.PIPE 10 .DURITE 10	1	1				
30	6E5–24379–00	.PIPE, JOINT 4 .DURITE RACCORDEMENT 4	1	1				
31	90445–11M26	.HOSE (L6500) .DURITE (L6500)	1	1				
32	90465–11M10	.CLAMP .BRIDE	4	4				
33	6E5–85720–05	.OIL LEVEL GAUGE ASSY .JAUGE A HUILE CPLT	1	1				
34	6R3–85721–80	.WIRE, LEAD (8M) .FIL, SECONDAIRE (8M)	1	1				
35	6E5–21734–01–33	HOLDER, OIL SUB TANK SUPPORT, RESERV AUXIL A HUILE	1	1				AP AP
36	6E5–21798–01–33	BRACKET, DAMPER SUPPORT, AMORTISSEUR	1	1				AP AP
37	6E5–21746–00	DAMPER AMORTISSEUR	2	2				AP AP
38	97080–06100	BOLT BOULON	1	1				AP AP
39	92990–06600	WASHER, PLATE RONDELLE, PLATE	2	2				AP AP
40	95380–06600	NUT, HEXAGON ECROU	1	1				AP AP
41	90465–13M11	CLAMP BRIDE	2	2				AP AP

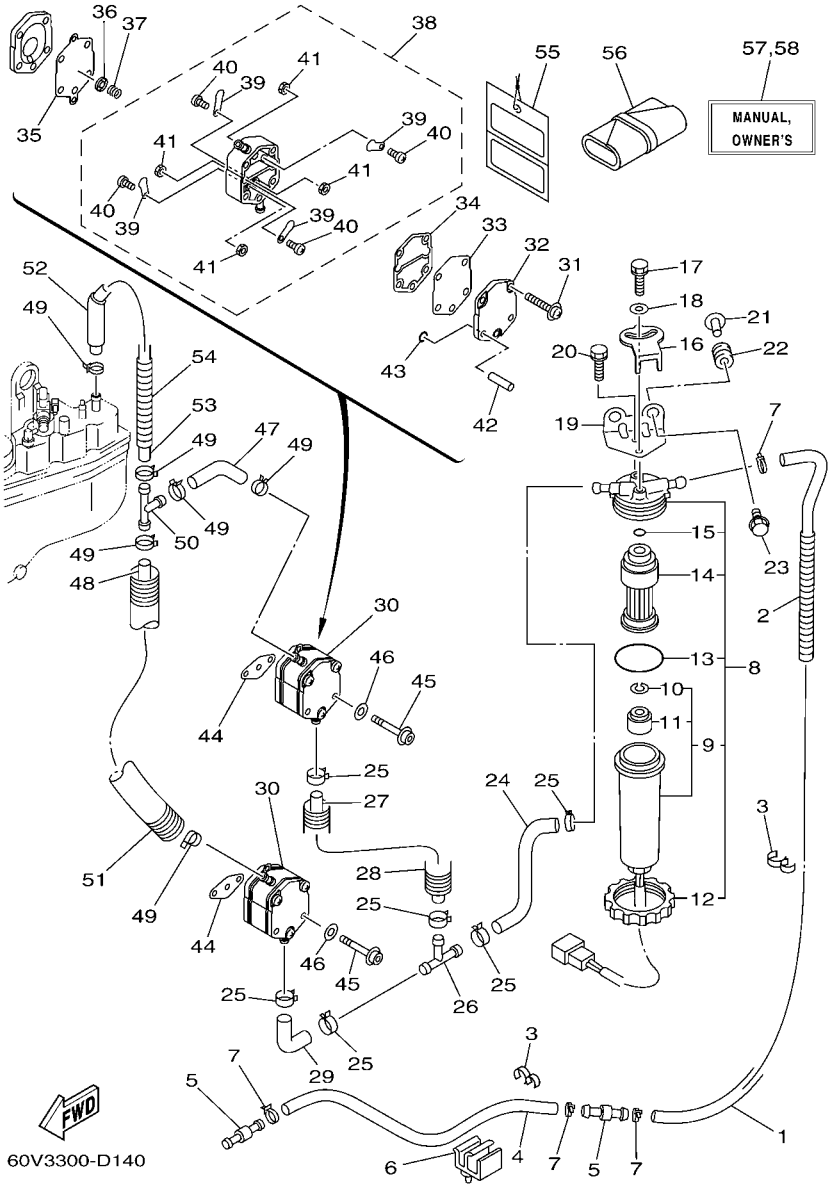

FIG. 14 FUEL CARBURANT

REF. NO.	PART NO. N° PIECES	DESCRIPTION DESCRIPTION	60V3	60W3				REMARKS REMARQUES
1	61A–24313–00	PIPE 3 DURITE 3	1	1				
2	90447–13008	HOSE, WITH SPRING DURITE, AVEC RESSORT	1	1				
3	90464–13M34	CLAMP BRIDE	2	2				
4	90445–13M17	HOSE (L2700) DURITE (L2700)	1	1				
5	6R3–24377–00	PIPE, JOINT 3 DURITE RACCORDEMENT 3	2	2				
6	6E5–82594–00	CLAMP BRIDE	1	1				
7	90465–11M10	CLAMP BRIDE	4	4				
8	68F–24560–10	FILTER ASSY ENS FILTRE	1	1				
9	68F–24562–10	.CUP, FILTER .CUVETTE, FILTRE	1	1				
10	68F–24519–10	..CLIP ..JONC	1	1				
11	68F–24469–10	..FLOAT, WATER LEVEL ..FLOTTEUR	1	1				
12	65L–24531–01	.NUT .ECROU	1	1				
13	61A–24564–00	.O-RING .JOINT TORIQUE	1	1				
14	68F–24563–10	.ELEMENT, FILTER .ELEMENT, FILTRE	1	1				
15	65L–24564–00	.O-RING .JOINT TORIQUE	1	1				
16	60H–24558–00	HOLDER, FILTER SUPPORT, FILTRE	1	1				
17	97595–06416	BOLT, WITH WASHER VIS HEXAGONAL AVC RONDELLE	1	1				
18	90201–06068	WASHER, PLATE RONDELLE, PLATE	1	1				
19	68F–24566–00	BRACKET, FILTER SUPPORT, FILTRE	1	1				
20	97595–06514	BOLT, WITH WASHER VIS HEXAGONAL AVC RONDELLE	1	1				
21	90387–06M60	COLLAR COLLERETTE	2	2				
22	90480–10M23	GROMMET PASSE-FIL	2	2				
23	90119–06M88	BOLT, WITH WASHER BOULON, AVEC RONDELLE	2	2				
24	68F–24311–00	PIPE, FUEL 1 DURITE A ESSENCE	1	1				
25	90465–11M10	CLAMP BRIDE	6	6				
26	6E5–24378–00	PIPE, JOINT 3 DURITE, RACCORDEMENT 3	1	1				
27	6G5–24315–00	PIPE 5 DURITE 5	1	1				

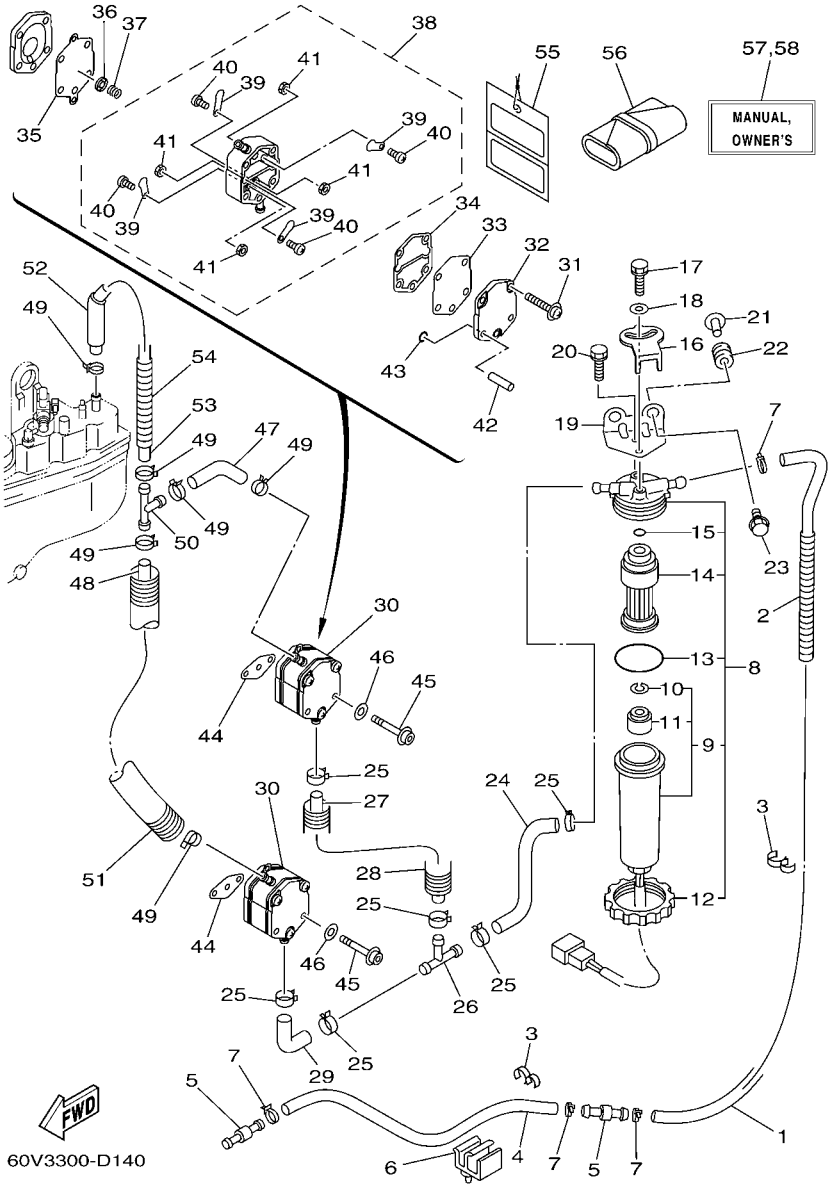

FIG. 14 FUEL CARBURANT

REF. NO.	PART NO. N° PIECES	DESCRIPTION DESCRIPTION	60V3	60W3				REMARKS REMARQUES
28	90447–19004	HOSE, WITH SPRING (L=130) DURITE, AVEC RESSORT	1	1				
29	6E5–24315–00	PIPE 5 DURITE 5	1	1				
30	6E5–24410–04	FUEL PUMP ASSY POMPE A ESSENCE	2	2				
31	6E5–24444–01	.SCREW .VIS	3	3				
32	6E5–24413–01	.BODY 2 .CORPS 2	1	1				
33	6E5–24471–01	.DIAPHRAGM .DIAPHRAGME	1	1				
34	6E5–24435–01	.GASKET, BODY 2 .JOINT, CORPS 2	1	1				
35	6E5–24411–01	.DIAPHRAGM .DIAPHRAGME	1	1				
36	648–24424–00	.SEAT, SPRING .SIEGE, RESSORT	1	1				
37	6E5–24423–00	.SPRING, DIAPHRAGM .RESSORT, DIAPHRAGME	1	1				
38	6E5–24412–11	.BODY 1 .CORPS 1	1	1				
39	6A0–24421–01	..VALVE, CHECK ..SOUPAPE, RETENUE	4	4				
40	6A0–14325–00	..SCREW, PAN HEAD ..VIS TETE CONIQUE	4	4				
41	95380–03600	..NUT ..ECROU	4	4				
42	6E5–24492–00	.BUSH, FULEL PUMP .BAGUE	2	2				
43	6E5–24486–00	.O-RING .JOINT TORIQUE	2	2				
44	650–24431–A0	GASKET, FUEL PUMP 1 JOINT 1 DE POMPE A ESSENCE	2	2				
45	90110–06128	BOLT, HEXAGON SOCKET HEAD BOULON, TETE HEXAGONALE CREUSE	4	4				
46	92995–06600	WASHER RONDELLE	4	4				
47	6G5–24316–10	PIPE 6 DURITE 6	1	1				
48	6E5–24313–00	PIPE 3 DURITE 3	1	1				
49	90465–11M10	CLAMP BRIDE	6	6				
50	6E5–24378–00	PIPE, JOINT 3 DURITE, RACCORDEMENT 3	1	1				
51	90447–15002	HOSE, WITH SPRING DURITE, AVEC RESSORT	1	1				
52	90446–15M07	HOSE (L60) DURITE (L60)	1	1				
53	90445–13M12	HOSE (L235) DURITE (L235)	1	1				
54	90447–13008	HOSE, WITH SPRING DURITE, AVEC RESSORT	1	1				

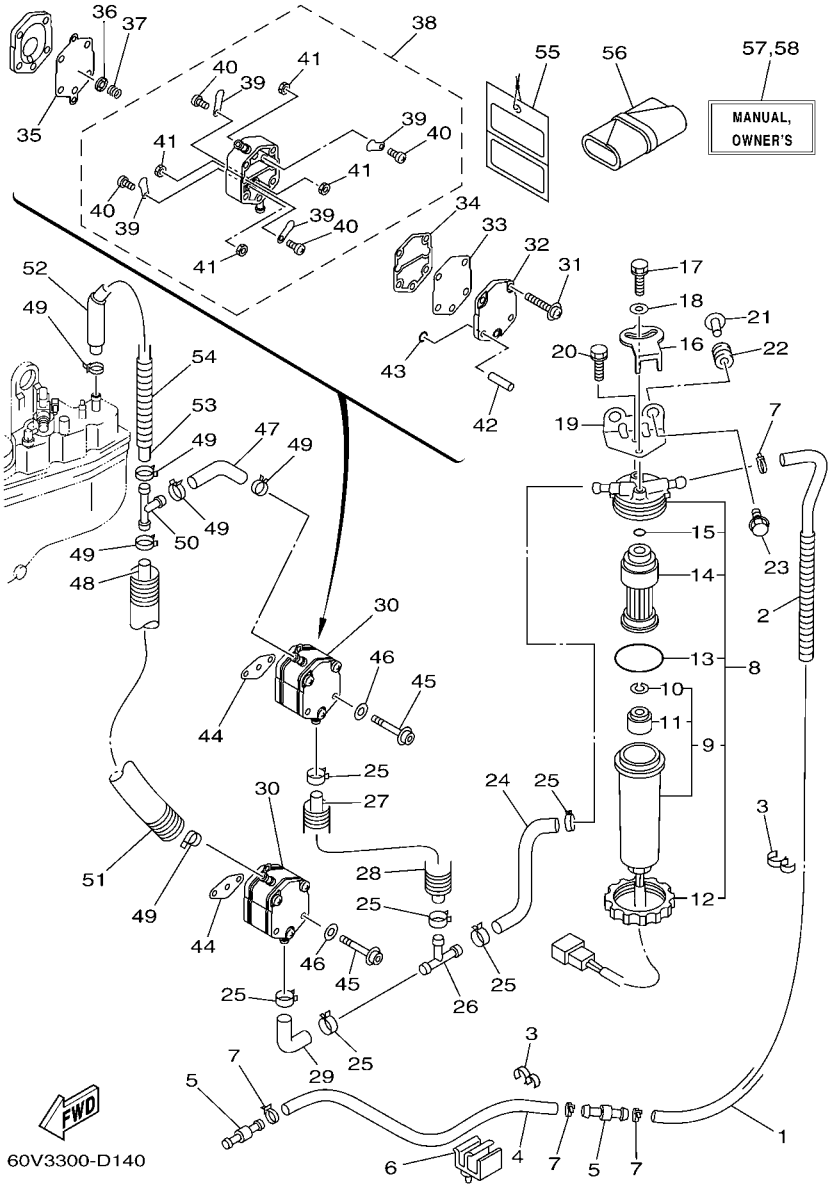

FIG. 14 FUEL CARBURANT

REF. NO.	PART NO. N° PIECES	DESCRIPTION DESCRIPTION	60V3	60W3				REMARKS REMARQUES
55	61H–2819R–31	TAG, WARNING ETIQUETTE, AVERTISSEMENT	1	1				
56	68F–28100–00	TOOL KIT TROUSSE A OUTILS	1	1				
57	6D0–28199–72–E0	MANUAL,OWNER'S MANUEL D'UTILISATION	1	1				UR (E) UR (E)
	6D0–28199–72–F0	MANUAL,OWNER'S MANUEL D'UTILISATION	1	1				UR (F) UR (F)
	6D0–28199–72–S0	MANUAL,OWNER'S MANUEL D'UTILISATION	1	1				UR (ES) UR (ES)
	6D0–28199–72–G0	MANUAL,OWNER'S MANUEL D'UTILISATION	1	1				UR (D) UR (D)
	6D0–28199–72–D0	MANUAL,OWNER'S MANUEL D'UTILISATION	1	1				UR (NL) UR (NL)
	6D0–28199–72–H0	MANUAL,OWNER'S MANUEL D'UTILISATION	1	1				UR (I) UR (I)
58	6D0–28199–82–K0	MANUAL,OWNER'S MANUEL D'UTILISATION	1	1				UR (DK) UR (DK)
	6D0–28199–82–R0	MANUAL,OWNER'S MANUEL D'UTILISATION	1	1				UR (GR) UR (GR)
	6D0–28199–82–P0	MANUAL,OWNER'S MANUEL D'UTILISATION	1	1				UR (P) UR (P)
	6D0–28199–82–N0	MANUAL,OWNER'S MANUEL D'UTILISATION	1	1				UR (N) UR (N)
	6D0–28199–82–M0	MANUAL,OWNER'S MANUEL D'UTILISATION	1	1				UR (S) UR (S)
	6D0–28199–82–L0	MANUAL,OWNER'S MANUEL D'UTILISATION	1	1				UR (SF) UR (SF)

FIG. 15 GENERATOR GENERATRICE

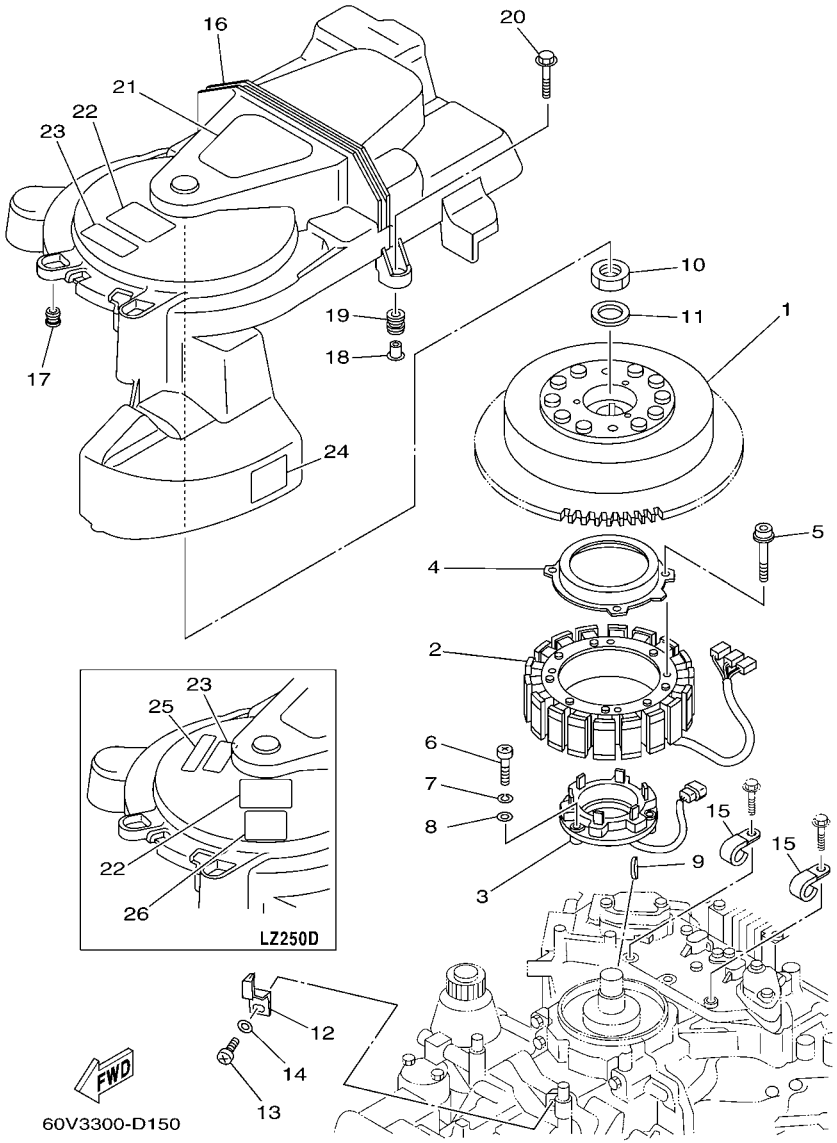

REF. NO.	PART NO. N° PIECES	DESCRIPTION DESCRIPTION	60V3	60W3				REMARKS REMARQUES
1	60V–81450–00	ROTOR ASSY ROTOR COMPLET	1	1				
2	60V–81410–02	STATOR ASSY STATOR COMPLET	1	1				
3	60V–85580–10	COIL, PULSER BOBINE, PULSEUR	1	1				
4	61A–83721–00	COVER COUVERCLE	1	1				
5	90110–06127	BOLT, HEXAGON SOCKET HEAD BOULON, TETE HEXAGONALE CREUSE	4	4				
6	97885–05030	SCREW, PAN HEAD VIS, A ENCOCHE	3	3				
7	92995–05100	WASHER RONDELLE	3	3				
8	92995–05600	WASHER RONDELLE	3	3				
9	90280–05015	KEY, WOODRUFF CLAVETTE, DEMI-LUNE	1	1				
10	90170–24M22	NUT ECROU	1	1				
11	90201–25M02	WASHER, PLATE RONDELLE, PLATE	1	1				
12	60V–81332–00	PLATE, TIMING PLATEAU, ALLUMAGE	1	1				
13	97885–06010	SCREW, PAN HEAD VIS, A ENCOCHE	1	1				
14	92995–06600	WASHER RONDELLE	1	1				
15	90465–06M86	CLAMP BRIDE	2	2				
16	60V–81337–00	COVER, FLYWHEEL COUVERCLE, VOLANT	1	1				
17	663–82317–01	DAMPER, IGNITION COIL AMORTISSEUR, BOBINE D'ALLUM	2	2				
18	624–42542–00	PIPE TUYAU	2	2				
19	6A0–82317–00	DAMPER, IGNITION COIL AMORTISSEUR, BOBINE D'ALLUM	2	2				
20	95895–06030	BOLT, FLANGE BOULON	2	2				
21	60V–14488–00	LABEL, CAUTION ETIQUETTE, RECOMMANDATION	1	1				
22	6A1–83625–51	MARK 5 ETIQUETTE 5	1	1				
23	6A1–83625–41	MARK 5 ETIQUETTE 5	1	1				
24	6E5–85711–60	MARK, CAUTION MAKER	1	1				
25	6K1–83623–41	MARK 3 ETIQUETTE 3		1				
26	6K1–83623–50	MARK 3 ETIQUETTE 3		1				

FIG. 16 ELECTRICAL 1 PARTIE ELECTRIQUE 1

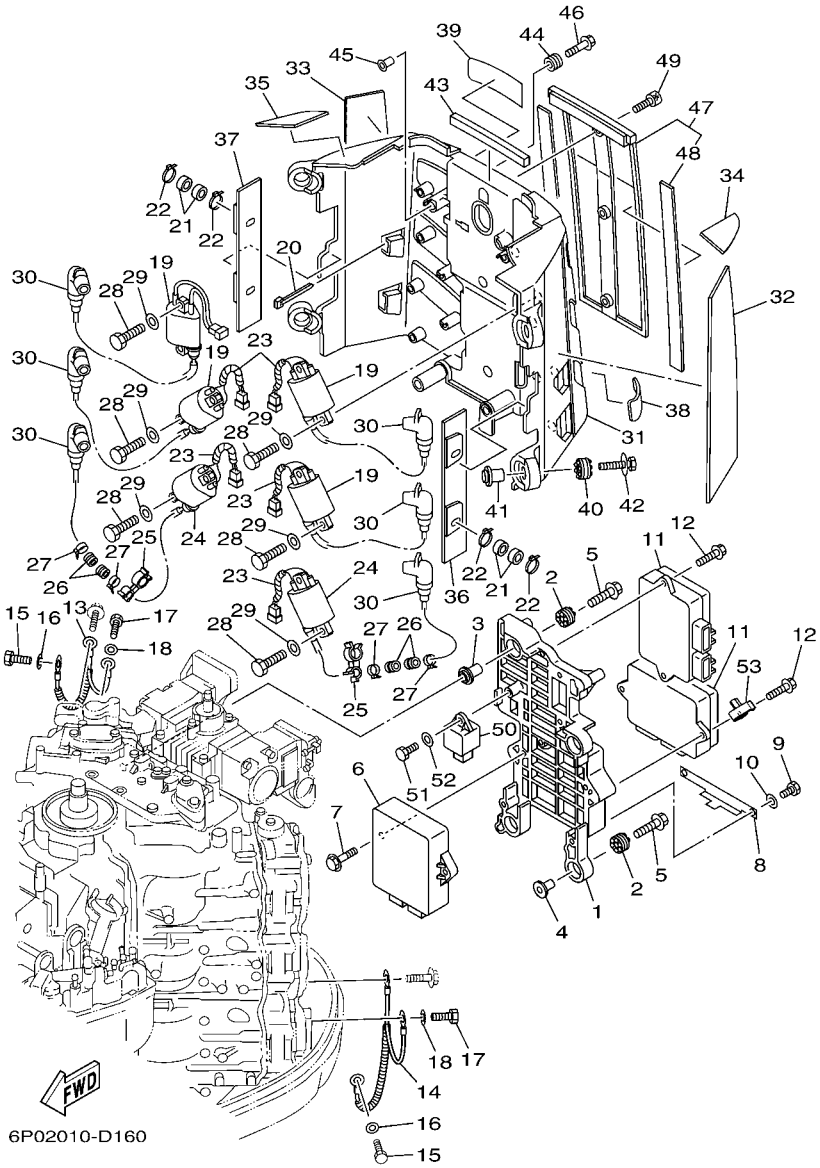

REF. NO.	PART NO. N° PIECES	DESCRIPTION DESCRIPTION	60V3	60W3				REMARKS REMARQUES
1	60V–85542–01–94	BRACKET SUPPORT	1	1				
2	60V–85564–00	GROMMET RONDELLE CAOUTCHOUC	4	4				
3	68F–86129–00	COLLAR COLLERETTE	2	2				
4	68F–86129–10	COLLAR COLLERETTE	2	2				
5	68F–85119–00	BOLT BOULON	4	4				
6	60V–8591A–30	ENGINE CONTROL UNIT ASSY BLOC DE CONTROL	1	1				
7	90119–06MA3	BOLT, WITH WASHER BOULON, AVEC RONDELLE	2	2				
8	60V–85548–00	HOLDER SUPPORT	1	1				
9	97013–06014	BOLT BOULON	2	2				
10	92903–06600	WASHER, PLATE RONDELLE, PLATE	2	2				
11	60V–8591B–00	DRIVER, INJECTOR ASSY OUTIL D'INSERTION,INJECTEUR	2	2				
12	90119–06MA2	BOLT, WITH WASHER BOULON, AVEC RONDELLE	4	4				
13	60V–82519–00	WIRE, EARTH LEAD FIL, MASSE	1	1				
14	60V–82519–10	WIRE, EARTH LEAD FIL, MASSE	1	1				
15	97095–06012	BOLT BOULON	2	2				
16	92995–06600	WASHER RONDELLE	2	2				
17	97095–06012	BOLT BOULON	2	2				
18	92995–06600	WASHER RONDELLE	2	2				
19	60V–82310–01	IGNITION COIL ASSY BOBINE D'ALLUMAGE	4	4				
20	90465–11M52	CLAMP BRIDE	4	4				
21	90480–25161	GROMMET PASSE-FIL	8	8				
22	90465–11M10	CLAMP BRIDE	8	8				
23	90446–10M01	HOSE (L60) DURITE (L60)	5	5				
24	60V–82310–10	IGNITION COIL ASSY BOBINE D'ALLUMAGE	2	2				
25	90464–18003	CLAMP BRIDE	2	2				
26	90480–22M15	GROMMET PASSE-FIL	4	4				
27	90465–11M10	CLAMP BRIDE	4	4				

FIG. 16 ELECTRICAL 1 PARTIE ELECTRIQUE 1

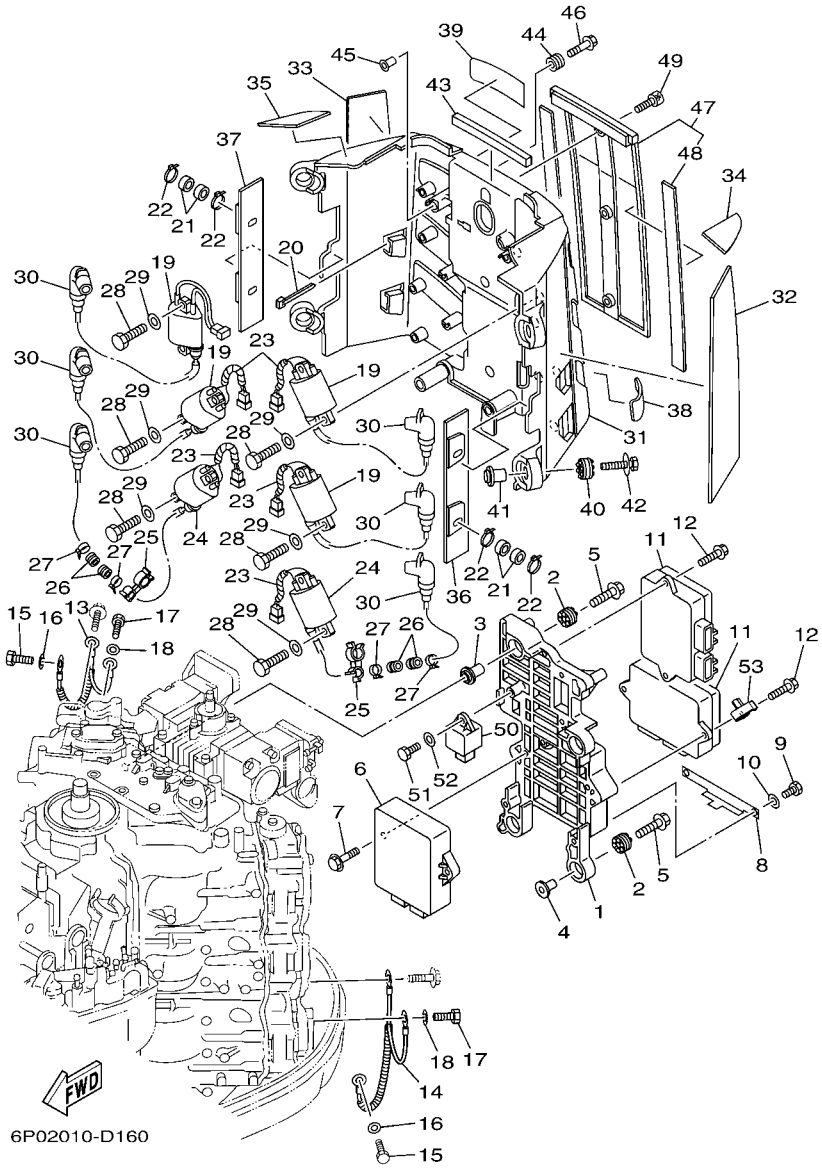

REF. NO.	PART NO. N° PIECES	DESCRIPTION DESCRIPTION	60V3	60W3				REMARKS REMARQUES
28	97013–05020	BOLT BOULON	12	12				
29	92903–05600	WASHER, PLATE RONDELLE, PLATE	12	12				
30	68F–82370–01	PLUG CAP ASSY ANTIPARASITE	6	6				
31	60V–82314–01	COVER, IGNITION COIL COUVERCLE, BOBINE D'ALLUMAGE	1	1				
32	60V–24198–00	SEAT, RUBBER SIEGE, CAOUTCHOUC	1	1				
33	60V–24198–10	SEAT, RUBBER SIEGE, CAOUTCHOUC	1	1				
34	60V–8818D–00	SEAT 1 SIEGE	1	1				
35	60V–8818D–10	SEAT 1 SIEGE	1	1				
36	60V–23116–00	SEAT 2 SEIGE 2	1	1				
37	60V–23116–10	SEAT 2 SEIGE 2	1	1				
38	60V–2318U–00	PLATE, SEAT PLATE, SELLE	3	3				
39	60V–2318U–10	PLATE, SEAT PLATE, SELLE	3	3				
40	68F–85516–01	SPACER ENTRETOISE	4	4				
41	68F–86129–10	COLLAR COLLERETTE	4	4				
42	68F–85119–00	BOLT BOULON	4	4				
43	6D0–8252R–00	DAMPER AMORTISSEUR	1	1				
44	6A0–82317–00	DAMPER, IGNITION COIL AMORTISSEUR, BOBINE D'ALLUM	4	4				
45	624–42542–00	PIPE TUYAU	4	4				
46	90119–06M65	BOLT, WITH WASHER BOULON, AVEC RONDELLE	4	4				
47	60V–8252U–01	COVER COUVERCLE	1	1				
48	60V–23115–00	.SEAT 1 .SEIGE 1	2	2				
49	90111–06034	BOLT BOULON	3	3				
50	68V–81950–00	RELAY ASSY RELAIS COMPLET	1	1				
51	97095–06016	BOLT BOULON	1	1				
52	92995–06600	WASHER RONDELLE	1	1				
53	90462–08028	CLAMP BRIDE	1	1				

FIG. 17 ELECTRICAL 2 — PARTIE ELECTRIQUE 2

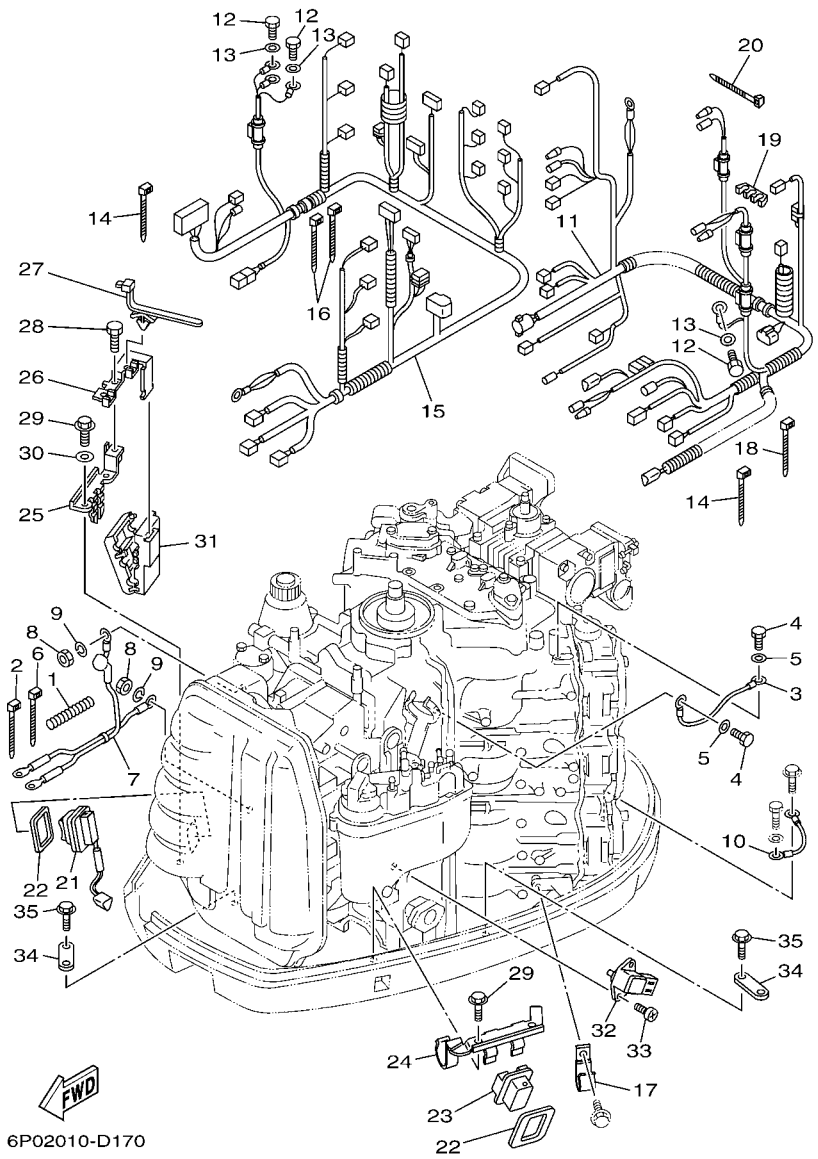

REF. NO.	PART NO. N° PIECES	DESCRIPTION DESCRIPTION	60V3	60W3				REMARKS REMARQUES
1	90447–07011	HOSE, WITH SPRING DURITE, AVEC RESSORT	1	1				
2	90465–11M10	CLAMP BRIDE	1	1				
3	61A–81949–00	WIRE, LEAD FIL	1	1				
4	97095–06012	BOLT BOULON	2	2				
5	92995–06600	WASHER RONDELLE	2	2				
6	90465–11M10	CLAMP BRIDE	1	1				
7	60V–82105–00	WIRE HARNESS FAISCEAU DE FILS	1	1				
8	95333–08600	NUT ECROU	2	2				
9	92903–08100	WASHER, SPRING RONDELLE, GROWER	2	2				
10	6D0–82531–00	WIRE, LEAD FIL	1	1				
11	60V–82590–41	WIRE HARNESS ASSY FAISCEAU DE FILS COMPLET	1	1				
12	97095–06012	BOLT BOULON	4	4				
13	92995–06600	WASHER RONDELLE	4	4				
14	90465–11M52	CLAMP BRIDE	2	2				
15	60V–8259M–10	WIRE HARNESS ASSY 2 FAISCEAU DE FILS	1	1				
16	90465–11M52	CLAMP BRIDE	2	2				
17	90462–08029	CLAMP BRIDE	1	1				
18	90465–11M10	CLAMP BRIDE	1	1				
19	90464–11008	CLAMP BRIDE	1	1				
20	90465–11M10	CLAMP BRIDE	1	1				
21	69J–82563–00	TRIM & TILT SWITCH ASSY INCLINER ET PARER COMMUTATEUR	1	1				
22	69J–82587–00	GASKET JOINT	2	2				
23	69J–42723–00	COVER, BOTTOM COUVERCLE	1	1				
24	60V–83614–20	BRACKET SUPPORT	1	1				
25	60V–83614–10	BRACKET SUPPORT	1	1				
26	60V–83635–10	BRACKET SUPPORT	1	1				
27	90464–20213	CLAMP BRIDE	2	2				

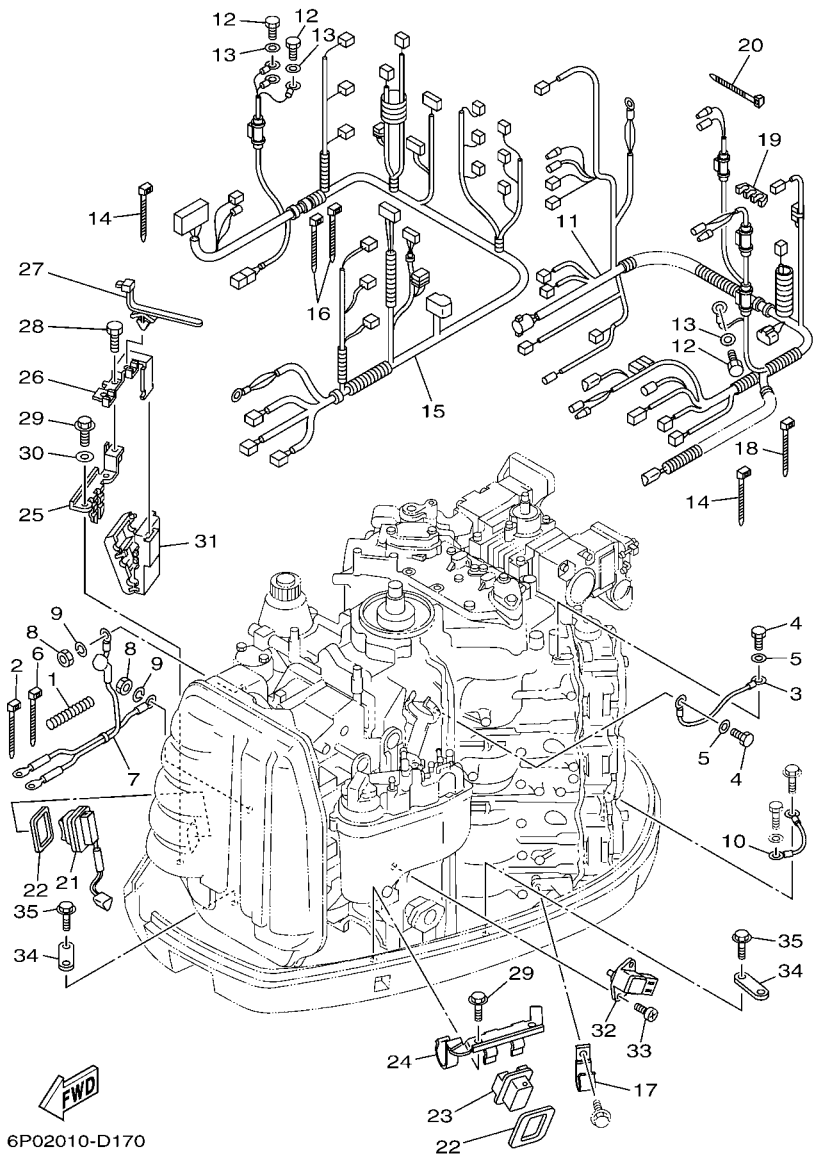

FIG. 17 ELECTRICAL 2 — PARTIE ELECTRIQUE 2

REF. NO.	PART NO. N° PIECES	DESCRIPTION DESCRIPTION	60V3	60W3				REMARKS REMARQUES
28	97095–06014	BOLT BOULON	1	1				
29	90109–06M86	BOLT BOULON	4	4				
30	60V–83618–00	PLATE PLAQUE	1	1				
31	68F–83634–00	GROMMET JOINT	1	1				
32	67H–82380–00	SENSOR, PRESSURE SONDE DE PRESSION	1	1				
33	98580–06520	SCREW, PAN HEAD VIS	2	2				
34	6E5–82588–00	PLATE PLAQUE	2	2				
35	95895–06020	BOLT, FLANGE BOULON	2	2				

FIG. 18 ELECTRICAL 3 PARTIE ELECTRIQUE 3

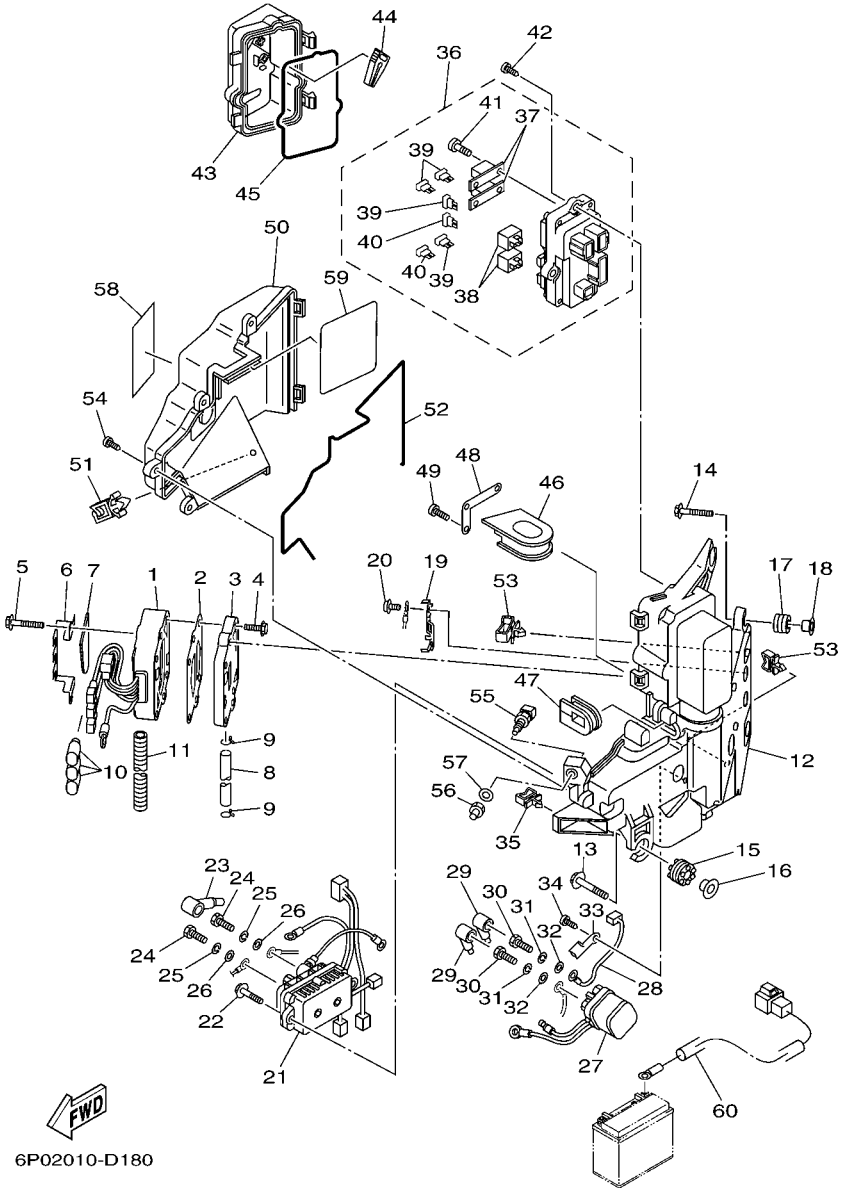

REF. NO.	PART NO. N° PIECES	DESCRIPTION DESCRIPTION	60V3	60W3				REMARKS REMARQUES
1	60V–81960–01	RECTIFIER & REGULATOR ASSY REDRESSEUR REGULATEUR CPLT	1	1				
2	60V–81975–A0	PLATE, RECTIFIER FITTING PLAQUE, FIXATION DU REDRESSEUR	1	1				
3	60V–81972–00–1S	COVER, RECTIFIER COUVERCLE, REDRESSEUR	1	1				
4	90119–06MA3	BOLT, WITH WASHER BOULON, AVEC RONDELLE	4	4				
5	90119–06MA4	BOLT, WITH WASHER BOULON, AVEC RONDELLE	2	2				
6	6D0–8366G–00	BRACKET 3 SUPPORT 3	1	1				
7	60V–8818D–10	SEAT 1 SIEGE	1	1				
8	90445–09M25	HOSE (L600) DURITE (L600)	2	2				
9	90467–08M18	CLIP JONC	2	2				
10	6L2–82599–01	COVER, CONNECTER COUVERCLE, CONNECTEUR	3	3				
11	90447–10004	HOSE, WITH SPRING DURITE, AVEC RESSORT	1	1				
12	60V–81948–00	BRACKET JOINT TORIQUE	1	1				
13	68F–85119–00	BOLT BOULON	3	3				
14	90119–06M65	BOLT, WITH WASHER BOULON, AVEC RONDELLE	1	1				
15	68F–85516–01	SPACER ENTRETOISE	3	3				
16	68F–86129–00	COLLAR COLLERETTE	3	3				
17	6A0–82317–00	DAMPER, IGNITION COIL AMORTISSEUR, BOBINE D'ALLUM	1	1				
18	624–42542–00	PIPE TUYAU	1	1				
19	60V–87149–00	CONNECTOR RACCORD	1	1				
20	90110–06139	BOLT, HEXAGON SOCKET HEAD BOULON, TETE HEXAGONALE CREUSE	2	2				
21	60V–81950–00	RELAY ASSY RELAIS COMPLET	1	1				
22	90119–06MA4	BOLT, WITH WASHER BOULON, AVEC RONDELLE	2	2				
23	682–82119–01	COVER, LEAD WIRE GARNITURE, FIL	1	1				
24	97095–06010	BOLT BOULON	2	2				
25	92995–06100	WASHER, SPRING RONDELLE, GROWER	2	2				
26	92995–06600	WASHER RONDELLE	2	2				
27	68V–8194A–00	RELAY RELAIS	1	1				

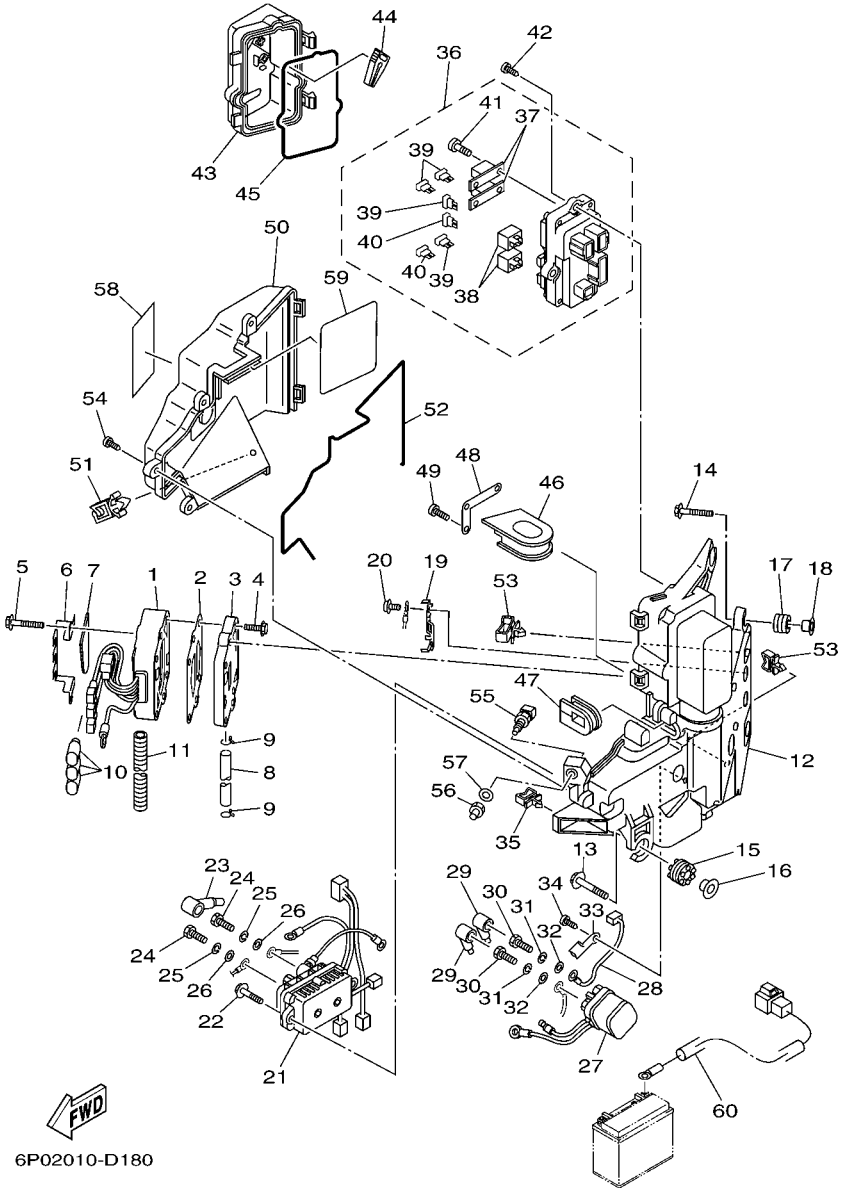

FIG. 18 ELECTRICAL 3 — PARTIE ELECTRIQUE 3

REF. NO.	PART NO. N° PIECES	DESCRIPTION DESCRIPTION	60V3	60W3				REMARKS REMARQUES
28	68F–82117–00	WIRE, LEAD FIL	1	1				
29	682–82119–01	COVER, LEAD WIRE GARNITURE, FIL	2	2				
30	97095–06010	BOLT BOULON	2	2				
31	92995–06100	WASHER, SPRING RONDELLE, GROWER	2	2				
32	92995–06600	WASHER RONDELLE	2	2				
33	68V–81953–00	STAY, RELAY SUPPORT, RELAIS	1	1				
34	97780–60620	SCREW, TAPPING VIS, TETE BOMBEE	1	1				
35	90464–23199	CLAMP BRIDE	2	2				
36	60V–82170–00	FUSE BOX ASSY BOITE A FUSIBLES	1	1				Go to P/N : PE0-OM-070040
37	60V–82151–00	.FUSE (100A) .FUSIBLE (100A)	2	2				Go to P/N : PE0-OM-070040
38	68F–8195A–00	.RELAY ASSY .RELAIS COMPLET	2	2				
39	67F–82151–00	.FUSE (20A) .FUSIBLE (20A)	4	4				
40	67F–82151–10	.FUSE (30A) .FUSIBLE (30A)	2	2				
41	68F–82846–00	.SCREW, PAN HEAD (M5) .VIS, TETE TRONCONIQUE (M5)	4	4				
42	97780–50620	SCREW, TAPPING VIS, TETE BOMBEE	3	3				
43	60V–85544–00	CASE BOITIER	1	1				
44	67F–2812A–00	PULLER, FUSE TENDEUR, FUSIBLE	1	1				
45	60V–82157–00	DAMPER AMORTISSEUR	1	1				
46	60V–81336–00	GROMMET OEILLET CAOUTCHOUC	1	1				
47	60V–81336–10	GROMMET OEILLET CAOUTCHOUC	1	1				
48	60V–81128–00	CLAMP BRIDE	1	1				
49	97780–50620	SCREW, TAPPING VIS, TETE BOMBEE	3	3				
50	60V–81942–10	COVER COUVERCLE	1	1				
51	90464–08004	CLAMP BRIDE	1	1				
52	60V–82176–00	DAMPER AMORTISSEUR	1	1				
53	90464–23199	CLAMP BRIDE	2	2				
54	90169–05M00	SCREW, TRUSS HEAD TAPPING VIS, TETE FRAISEE	4	4				

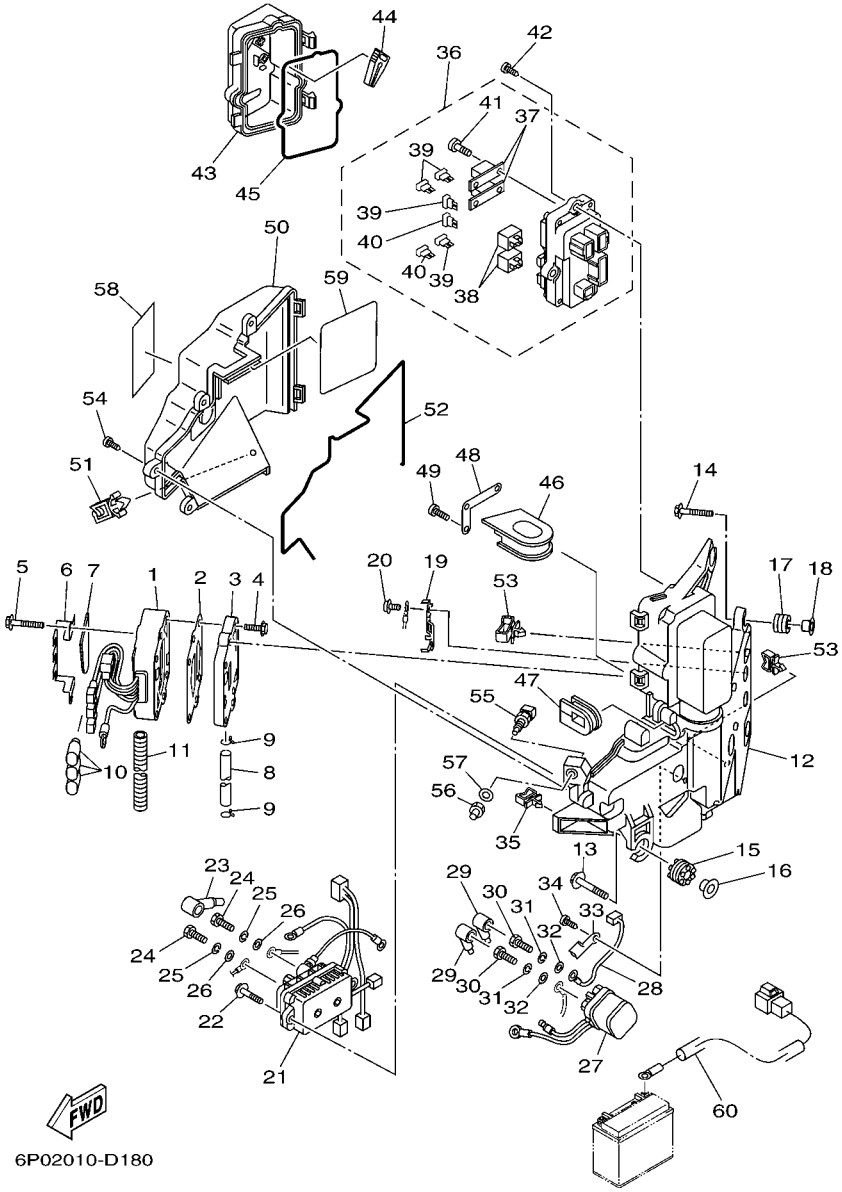

FIG. 18 ELECTRICAL 3 — PARTIE ELECTRIQUE 3

REF. NO.	PART NO. N° PIECES	DESCRIPTION DESCRIPTION	60V3	60W3				REMARKS REMARQUES
55	65L–85886–00	THERMOSENSOR SENSITOMETRE	1	1				
56	60V–85553–00	NUT, ROTOR ECROU, ROTOR	1	1				
57	90201–12M34	WASHER, PLATE RONDELLE, PLATE	1	1				
58	60V–81919–00	GRAPHIC, REGULATOR ADHESIF, REGULATEUR	1	1				Go to P/N : PE0-OM-070040
59	60V–81919–10	GRAPHIC, REGULATOR ADHESIF, REGULATEUR	1	1				
60	69J–81949–00	WIRE, LEAD (ISOLATOR CABLE) FIL (ISOLATOR CABLE)	1	1				AP AP

PARTS NEWS

YAMAHA
YAMAHA MOTOR CO., LTD.
2500 SHINGAI IWATA SHIZUOKA JAPAN

News No. PE0-OM-070040(1/2)

Date:October 30, 2007

Signature: K . Otsuka

Cause ☑ Revision Notice ☐ Correction ☐ Sales Unit Change ☐ Others

Model	Z250TR, Z250DETO / LZ250TR, LZ250DETO
Subject	PARTS CATALOGUE CORRECTIONS
CATALOGUE NO.	See the"List of Models and CATALOGUE No's below."

Time of YPEC Revision Text, Illustration --> Nov./30/2007 PDF Replace --> Nov./30/2007

(YPEC = Yamaha Parts Electrical Catalogue = Website parts catalogue)

1.LIST CORRECTION

ELECTRICAL 3

Fig.No-Ref.No.	PART NO.		PART NAME	Q'TY	APPLICABLE SERIAL NO.	REMARKS
*1	OLD	60V-82170-00	FUSE BOX ASSY	1	60V:1000001- 60W:1000001-	**Please use New part from now on.**
	NEW	**60V-82170-01**			**N/A (FROM 2007/JULY PRODUCTION)**	***Part number revision**
*2	OLD	60V-82151-00	. FUSE (100A)	2	60V:1000001- 60W:1000001-	**Please use New part from now on.**
	NEW	**6P2-82151-00**	. FUSE **(60A)**		**N/A (FROM 2007/JULY PRODUCTION)**	***Part number revision**
*3	OLD	60V-81919-00	GRAPHIC, REGULATOR (100A)	1	60V:1000001- 60W:1000001-	**Please use New part from now on.**
	NEW	**60V-81919-01**	GRAPHIC, REGULATOR **(60A)**		**N/A (FROM 2007/JULY PRODUCTION)**	***Part number revision**

2.LIST of Models and CATALOGUE No's.

The applicable MODELS, MODEL CODES, and CATALOGUE No's are as follows.

MODEL NAME	MODEL CODE	MODEL YEAR	CATALOGUE NO.	Fig.No.-Ref.No.		
				*1	*2	*3
Z250TRB,Z250DETO LZ250TRB,LZ250DETO	60V1 60W1	2003	1B60V-100E1	19-34	19-35	19-55
Z250DETO LZ250DETO	60V1 60W1	2003	1B60V-300F1	19-34	19-35	19-55
Z250TRC,Z250DETO LZ250TRC,LZ250DETO	60V2 60W2	2004	1C60V-100E1	19-35	19-36	19-57
Z250DETO LZ250DETO	60V2 60W2	2004	1C60V-700E1	19-35	19-36	19-57
Z250DETO LZ250DETO	60V2 60W2	2004	1C60V-300F1	19-35	19-36	19-57
Z250TRD,Z250DETO LZ250TRD,LZ250DETO	60V3 60W3	2005	1D60V-100E1	20-35	20-36	20-57

Parts Manager Check	Service Manager Check	Parts Manager File

YAMAHA MOTOR CO.,LTD
2500 Shingai Iwata Shizuoka 438-8501.Japan
Technical Publication Dept.

YAMAHA GENUINE Parts & Accessories

PARTS NEWS

YAMAHA
YAMAHA MOTOR CO., LTD.
2500 SHINGAI IWATA SHIZUOKA JAPAN

News No. PE0-OM-070040(2/2)

Date: October 30 , 2007

Signature: K . Otsuka

Cause ☑ Revision Notice ☐ Correction ☐ Sales Unit Change ☐ Others

Model	Z250TR, Z250DETO / LZ250TR, LZ250DETO
Subject	PARTS CATALOGUE CORRECTIONS
CATALOGUE NO.	See the"List of Models and CATALOGUE No's below."

Time of YPEC Revision Text, Illustration --> Nov./30/2007 PDF Replace --> Nov./30/2007

(YPEC = Yamaha Parts Electrical Catalogue = Website parts catalogue)

2.LIST of Models and CATALOGUE No's.

The applicable MODELS, MODEL CODES, and CATALOGUE No's are as follows.

MODEL NAME	MODEL CODE	MODEL YEAR	CATALOGUE NO.	Fig.No.-Ref.No.		
				*1	*2	*3
Z250DETO LZ250DETO	60V3 60W3	2005	1D60V-300F1	18-36	18-37	18-58
Z250TR,Z250DETO LZ250TR,LZ250DETO	60V4 60W4	2006	1E60V-100E1	20-35	20-36	20-57
Z250DETO LZ250DETO	60V4 60W4	2006	1E60V-300F1	18-35	18-36	18-57
Z250DETO LZ250DETO	60V5 60W5	2007	1F60V-100E1	20-35	20-36	20-57
Z250DETO LZ250DETO	60V5 60W5	2007	1F60V-300F1	18-35	18-36	18-57

Thank you very much for your cooperation.

Parts Manager Check	Service Manager Check	Parts Manager File

YAMAHA MOTOR CO.,LTD
2500 Shingai Iwata Shizuoka 438-8501.Japan
Technical Publication Dept.

YAMAHA GENUINE Parts & Accessories

FIG. 19 ELECTRICAL 4 — PARTIE ELECTRIQUE 4

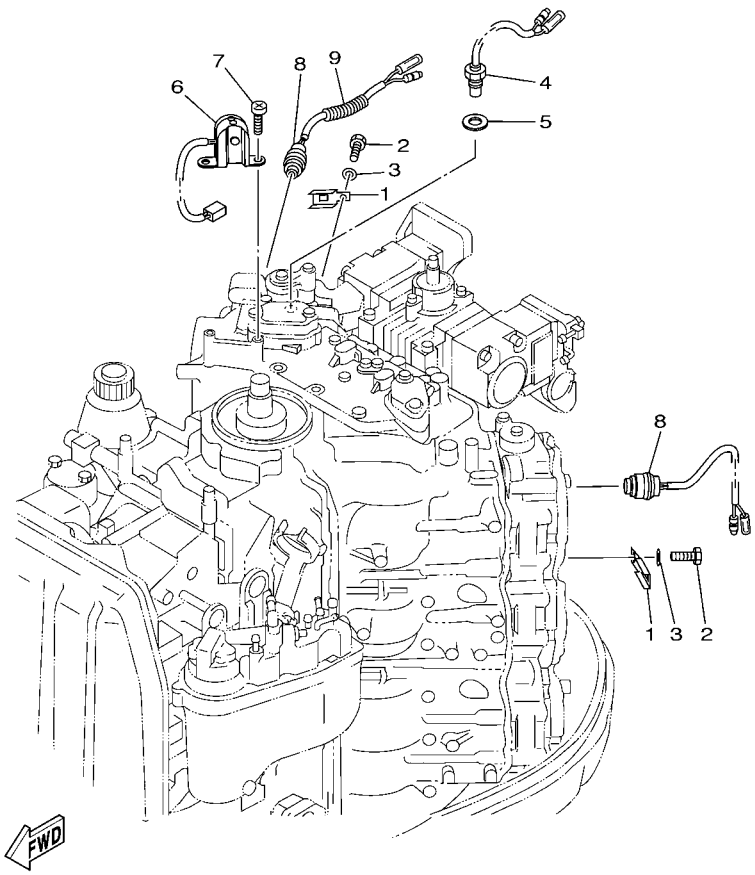

60V1010-3190

REF. NO.	PART NO. N° PIECES	DESCRIPTION DESCRIPTION	60V3	60W3				REMARKS REMARQUES
1	60V–82588–00	PLATE PLAQUE	4	4				
2	97095–06012	BOLT BOULON	4	4				
3	92995–06600	WASHER RONDELLE	4	4				
4	61A–85790–00	THERMOSENSOR ASSY SENSITOMETRE	1	1				
5	92990–10600	WASHER, PLATE RONDELLE, PLATE	1	1				
6	61A–85895–00	CRANK POSITION SENDER SONDE, REGLAGE DE VILEBREQUIN	1	1				
7	97885–05012	SCREW, PAN HEAD VIS, A ENCOCHE	2	2				
8	688–82560–10	THERMO SWITCH ASSY THERMO-CONTACT COMPLET	2	2				
9	90446–10M87	HOSE (L75) DURITE (L75)	1	1				

FIG. 20 STARTING MOTOR DEMARREUR ELECTRIQUE

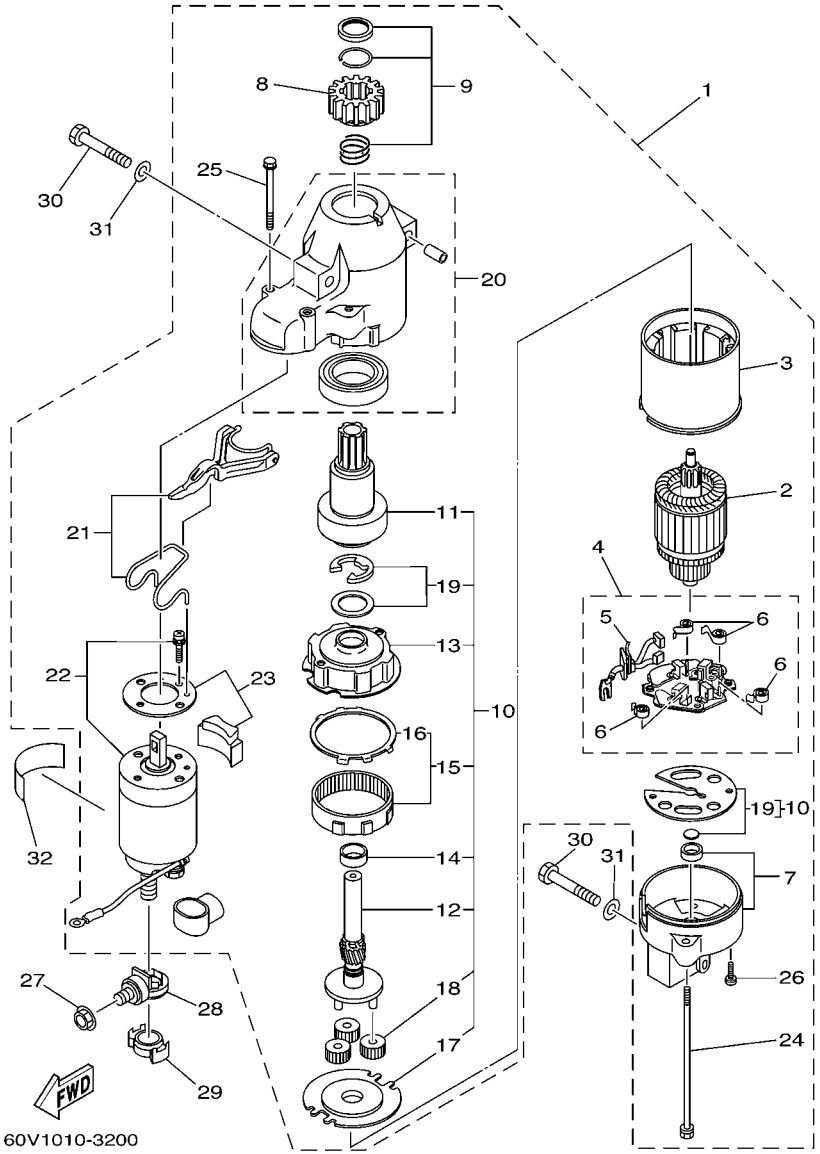

REF. NO.	PART NO. N° PIECES	DESCRIPTION DESCRIPTION	60V3	60W3				REMARKS REMARQUES
1	60X–81800–00	STARTING MOTOR ASSY DEMARREUR ELECTRIQUE COMPLET	1	1				
2	67F–81850–00	.ARMATURE ASSY .INDUIT	1	1				
3	67F–81810–00	.STATOR ASSY .STATOR COMPLET	1	1				
4	69J–81840–00	.BRUSH HOLDER ASSY .SUPPORT DE CHARBON	1	1				
5	69J–81801–00	..BRUSH SET ..CHARBON	1	1				
6	67F–81813–00	..SPRING, BRUSH ..RESSORT, DE CHARBON	4	4				
7	68F–81820–00	.REAR BRACKET ASSY .SUPPORT ARRIERE COMPLET	1	1				
8	67F–81808–00	.PINION ASSY .PIGNON	1	1				
9	67F–81857–00	.PINION STOPPER SET .BUTEE PIGNON	1	1				
10	67F–81807–00	.GEAR ASSY, STARTING MOTOR .PIGNON, DEMARREUR ELECTRIQUE	1	1				
11	67F–81832–00	..CLUTCH, OVER RUN ..EMBRAYAGE, ROUE LIBRE	1	1				
12	67F–81836–00	..SHAFT, PINION ..AXE, PIGNON	1	1				
13	67F–81821–00	..BRACKET, CENTER 1 ..SUPPORT, CENTRE 1	1	1				
14	67F–81841–00	..BEARING ..ROULEMENT	1	1				
15	67F–81891–00	..GEAR, RING ..ROUE DENTEE	1	1				
16	67F–8183R–00	...GASKET ...JOINT	1	1				
17	67F–81830–00	..BRACKET, CENTER 2 ..SUPPORT, CENTRE 2	1	1				
18	60V–8183T–00	..GEAR, IDLER ..PIGNON, INTERMEDIAIRE	3	3				
19	67F–81809–00	..WASHER KIT ..JEU DE RONDELLES	1	1				
20	60X–81842–00	.COVER .COUVERCLE	1	1				
21	69J–81839–00	.LEVER ASSY .LEVIER COMPLET	1	1				
22	69J–81941–00	.STARTER RELAY ASSY .LANCEUR RELAIS (ENS.)	1	1				
23	69J–81869–00	.COVER, DUST .COUVERCLE, POUSSIERE	1	1				
24	6K7–81826–10	.BOLT .BOULON	2	2				
25	69J–81828–00	.BOLT 2 .RONDELLE, BUTEE 2	2	2				
26	67F–81846–00	.SCREW .VIS	2	2				
27	90179–08003	NUT ECROU	1	1				

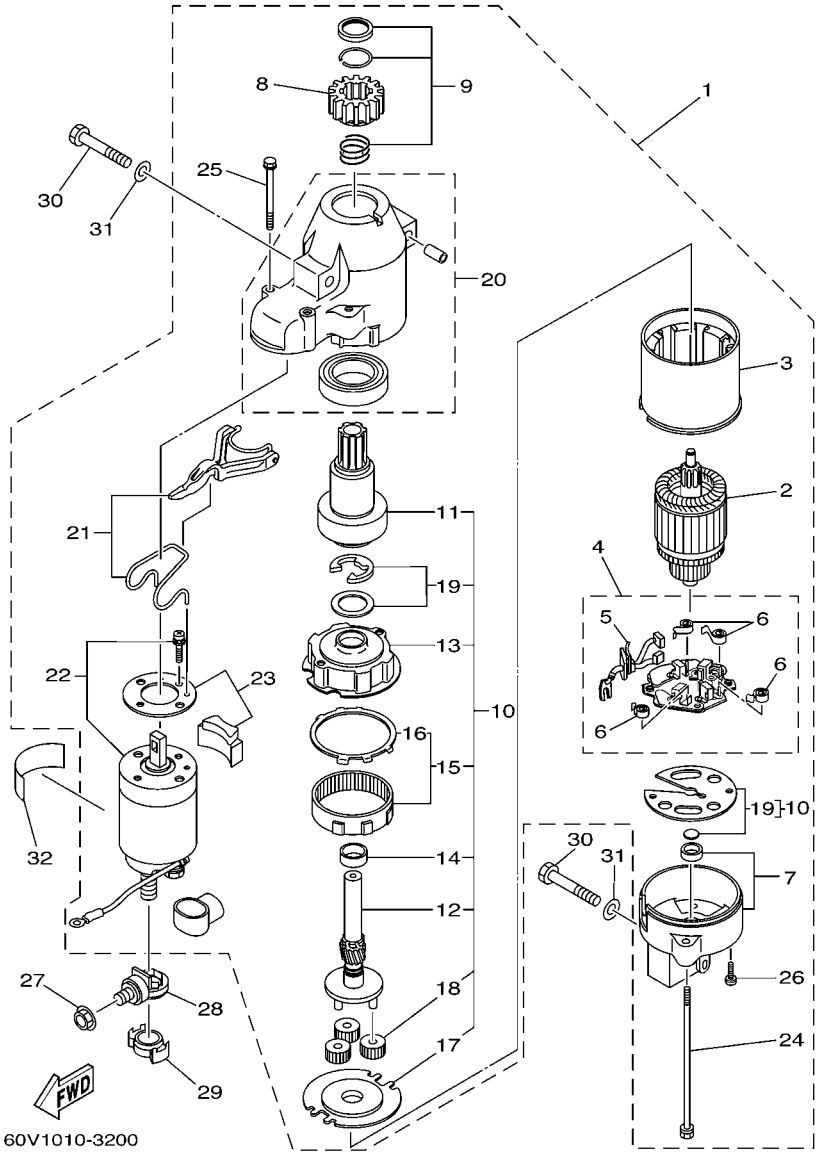

FIG. 20 STARTING MOTOR DEMARREUR ELECTRIQUE

REF. NO.	PART NO. N° PIECES	DESCRIPTION DESCRIPTION	60V3	60W3				REMARKS REMARQUES
28	60V–81925–00	TERMINAL BORNE	1	1				
29	68F–82582–00	COVER, WIRE HARNESS COUVERCLE, FAISCEAU DE FILS	1	1				
30	97013–08045	BOLT BOULON	3	3				
31	92903–08600	WASHER, PLATE RONDELLE, PLATE	3	3				
32	67F–83627–01	LABEL, CAUTION 7 ETIQUETTE, RECOMMANDATION 7	1	1				

FIG. 21 BOTTOM COWLING CAPOT INFERIEUR

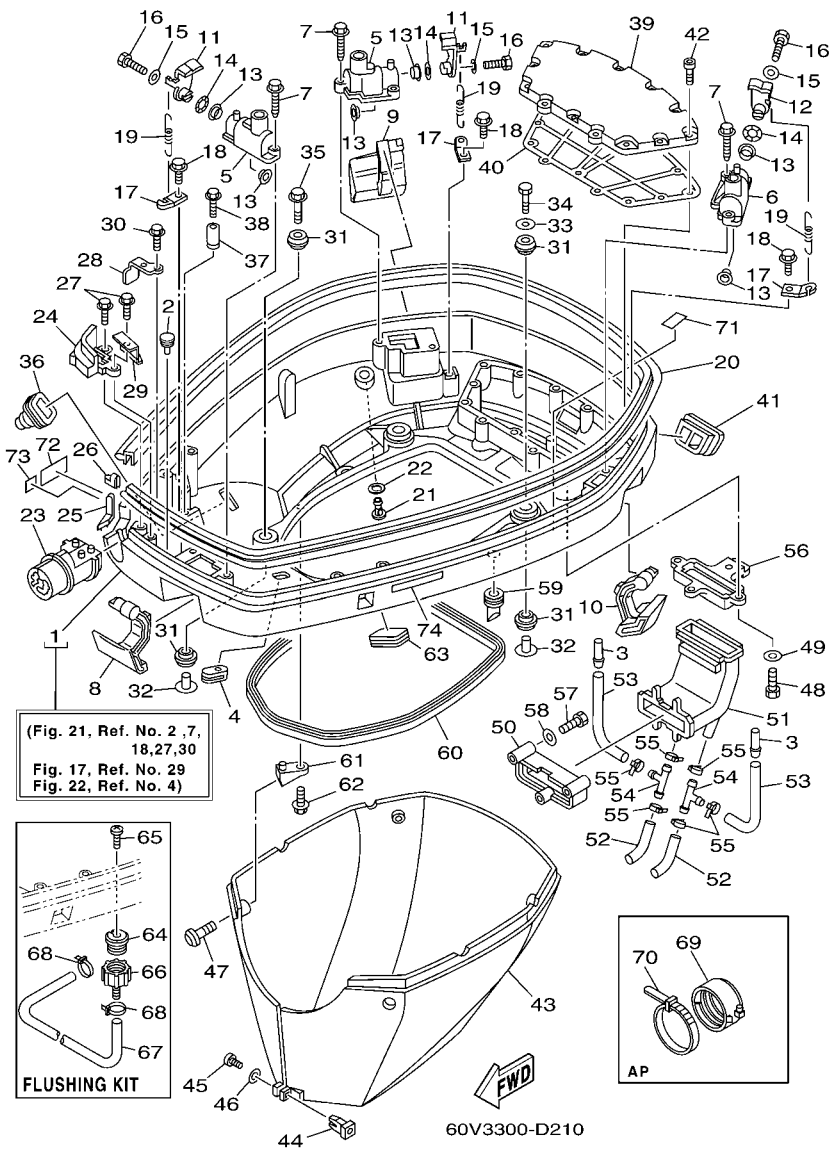

REF. NO.	PART NO. N° PIECES	DESCRIPTION DESCRIPTION	60V3	60W3				REMARKS REMARQUES
1	60V–42710–01–8D	BOTTOM COWLING ASSY ENS. EMBASE	1	1				
2	6H4–42748–00	GROMMET PASSE-FIL	2	2				
3	6E5–24377–00	PIPE, JOINT 3 DURITE RACCORDEMENT 3	2	2				
4	61A–42727–00	GROMMET PASSE-FIL	1	1				
5	68F–42828–01–94	PLATE, CLAMP PLAQUE, PRESSE	2	2				
6	68F–42828–10–94	PLATE, CLAMP PLAQUE, PRESSE	1	1				
7	90109–06M82	BOLT BOULON	6	6				
8	60V–42815–00–8D	LEVER, CLAMP LEVIER, PRESSE	1	1				
9	60V–42816–00–8D	LEVER, CLAMP LEVIER, PRESSE	1	1				
10	60V–42817–00–8D	LEVER, CLAMP LEVIER, PRESSE	1	1				
11	68F–42818–01	LEVER, CLAMP LEVIER, PRESSE	2	2				
12	6D8–42818–00	LEVER, CLAMP LEVIER, PRESSE	1	1				
13	90386–15M73	BUSH DOUILLE	6	6				
14	90206–15M18	WASHER, WAVE RONDELLE, ONDULEE	3	3				
15	90201–06068	WASHER, PLATE RONDELLE, PLATE	3	3				
16	97095–06016	BOLT BOULON	3	3				
17	64D–43144–00	HOOK, SPRING CROCHET	3	3				
18	90109–06M80	BOLT BOULON	3	3				
19	90506–16M34	SPRING, TENSION RESSORT, TENSION	3	3				
20	60V–42615–01	SEAL JOINT	1	1				
21	60V–44391–00	NIPPLE, HOSE RACCORD D'ESSENCE	1	1				
22	60V–42747–00	PAD PASTILLE	1	1				
23	60V–42725–00	GROMMET PASSE-FIL	1	1				
24	60V–42738–02–8D	PLATE, FITTING ETRIER	1	1				
25	60V–42716–01	RUBBER, SEAL 1 JOINT EN CAOUTCHOUC 1	1	1				
26	60V–42717–00	RUBBER, SEAL 2 JOINT EN CAOUTCHOUC 2	1	1				
27	90109–06M81	BOLT BOULON	2	2				

FIG. 21 BOTTOM COWLING CAPOT INFERIEUR

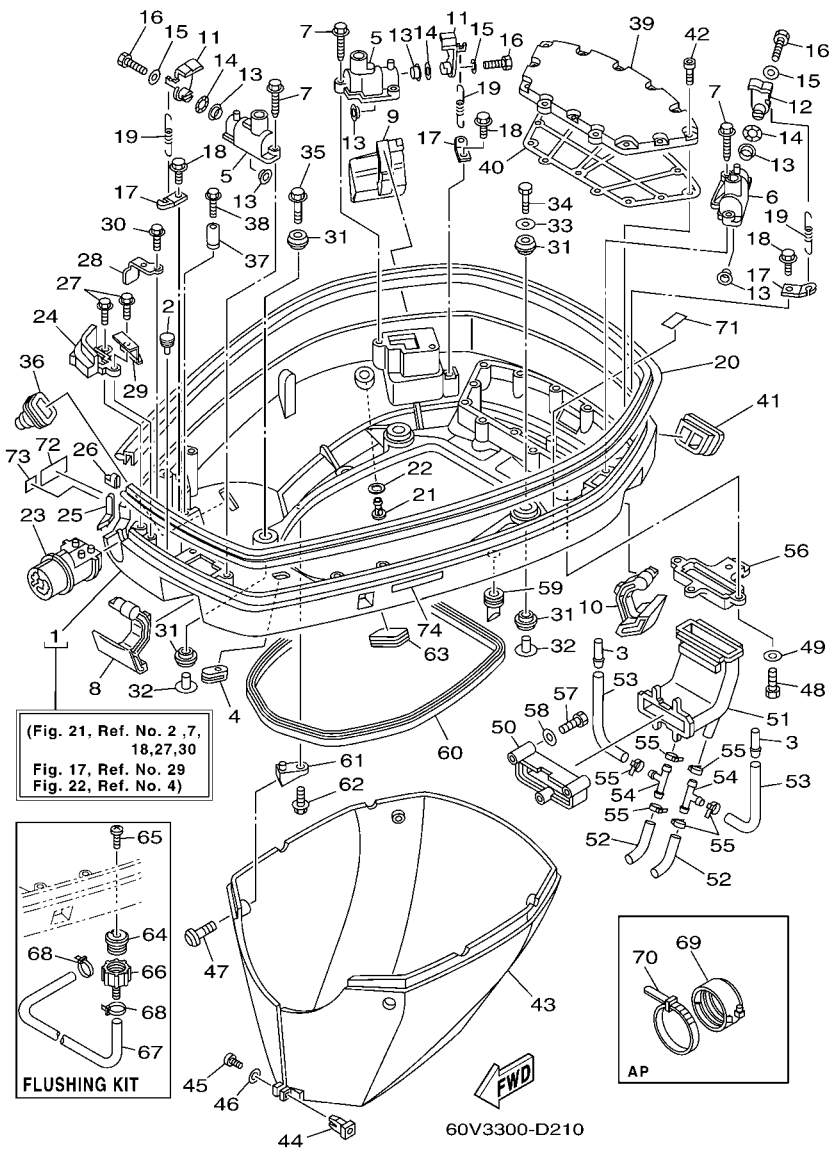

REF. NO.	PART NO. N° PIECES	DESCRIPTION DESCRIPTION	60V3	60W3				REMARKS REMARQUES
28	64D–42738–10–5B	PLATE, FITTING ETRIER	1	1				
29	60V–42738–10	PLATE, FITTING ETRIER	1	1				
30	90109–06M81	BOLT BOULON	1	1				
31	90480–22M81	GROMMET PASSE-FIL	8	8				
32	90387–08M37	COLLAR COLLERETTE	4	4				
33	90201–08M54	WASHER, PLATE RONDELLE, PLATE	1	1				
34	97075–08035	BOLT BOULON	1	1				
35	90119–08M22	BOLT, WITH WASHER BOULON, AVEC RONDELLE	3	3				
36	688–42726–10	GROMMET PASSE-FIL	1	1				
37	6E5–82588–00	PLATE PLAQUE	1	1				
38	95895–06020	BOLT, FLANGE BOULON	1	1				
39	60V–42723–00–5B	COVER, BOTTOM COUVERCLE	1	1				
40	60V–42721–A0	GASKET 1 JOINT 1	1	1				
41	60V–42718–00	RUBBER, SEAL 3 JOINT	1	1				
42	90110–06038	BOLT, HEXAGON SOCKET HEAD BOULON, TETE HEXAGONALE CREUSE	13	13				
43	60V–42741–00–8D	APRON CAPOT LATERAL	1	1				
44	60V–42756–00	STAY, CLAMP SUPPORT, COLLIER	1	1				
45	97880–04016	SCREW, PAN HEAD VIS, TETE TRONCONIQUE	1	1				
46	92990–04600	WASHER, PLATE RONDELLE, PLATE	1	1				
47	90111–06034	BOLT BOULON	4	4				
48	97095–06020	BOLT BOULON	4	4				
49	92995–06600	WASHER RONDELLE	4	4				
50	60V–12581–00	JOINT, HOSE 1 JOINT DE TUYAU	1	1				
51	60V–12576–00	HOSE 1 TUYAU 1	1	1				
52	60V–12578–00	HOSE 3 UYAU 3	2	2				
53	60V–12588–00	HOSE 5 TUYAU 5	2	2				
54	6E5–24378–00	PIPE, JOINT 3 DURITE, RACCORDEMENT 3	2	2				

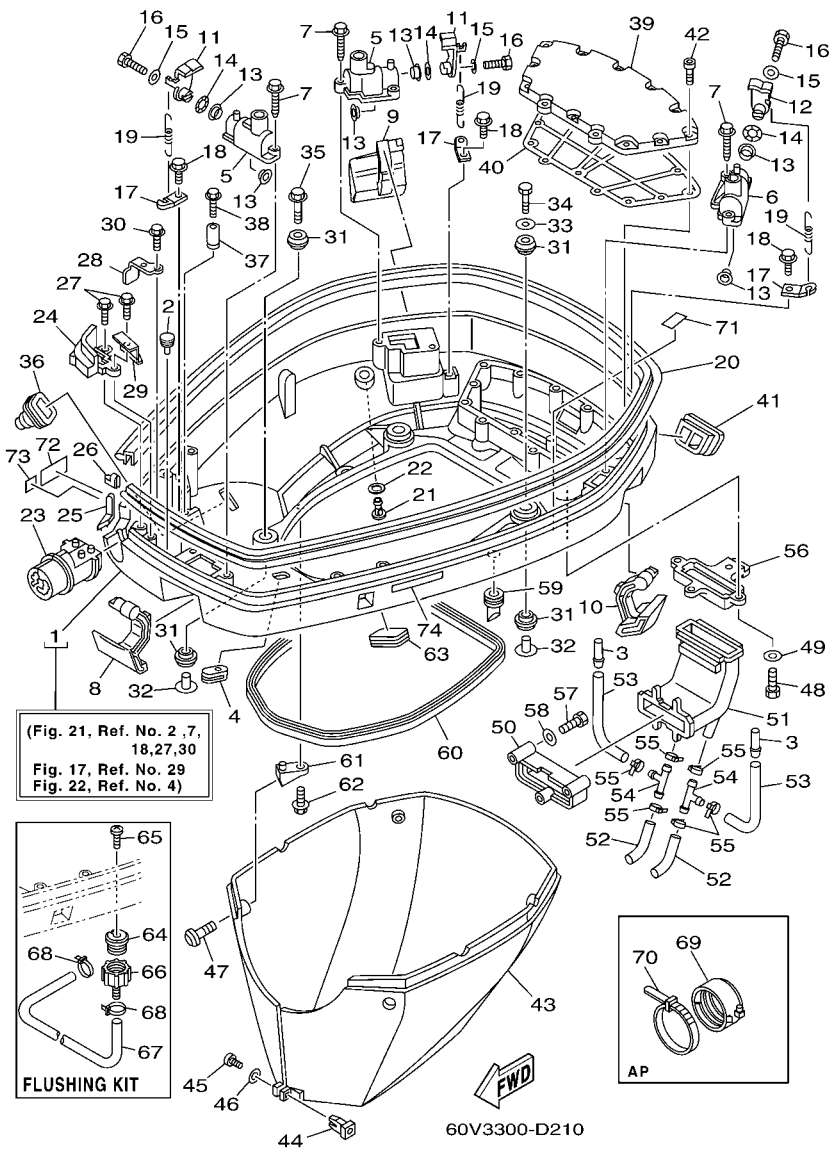

FIG. 21 BOTTOM COWLING CAPOT INFERIEUR

REF. NO.	PART NO. N° PIECES	DESCRIPTION DESCRIPTION	60V3	60W3				REMARKS REMARQUES
55	90465–11M10	CLAMP BRIDE	6	6				
56	60V–42771–00	APRON CAPOT LATERAL	1	1				
57	97075–08055	BOLT BOULON	3	3				
58	92995–08600	WASHER RONDELLE	3	3				
59	61A–42717–00	RUBBER, SEAL 2 JOINT EN CAOUTCHOUC 2	4	4				
60	61A–42716–00	RUBBER, SEAL 1 JOINT EN CAOUTCHOUC 1	1	1				
61	60V–42774–00	STAY, APRON 1 COUSSINET	4	4				
62	95895–06016	BOLT, FLANGE BOULON	4	4				
63	6H4–42726–00	GROMMET PASSE-FIL	1	1				
64	6R3–12572–00	ADAPTER ADAPTATEUR	1	1				FLUSHING KIT FLUSHING KIT
65	90169–05M00	SCREW, TRUSS HEAD TAPPING VIS, TETE FRAISEE	1	1				FLUSHING KIT FLUSHING KIT
66	6R3–12580–00	JOINT ASSY ARTICULER (ENS.)	1	1				FLUSHING KIT FLUSHING KIT
67	90445–11M36	HOSE (L540) DURITE (L540)	1	1				FLUSHING KIT FLUSHING KIT
68	90465–11M10	CLAMP BRIDE	2	2				FLUSHING KIT FLUSHING KIT
69	68F–42753–00	FASTNER ATTACHE	1	1				AP AP
70	90464–20258	CLAMP BRIDE	1	1				AP AP
71	68H–42791–01	MARK 1 ETIQUETTE 1	1	1				
72	60V–2415E–60	LABEL, CAUTION ETIQUETTE, RECOMMANDATION	1	1				
73	6A1–28176–00	LABEL, CAUTION ETIQUETTE, RECOMMANDATION	1	1				
74	6E3–8257H–00	PLATE, MARK PLAQUE, ADHESIF	1	1				

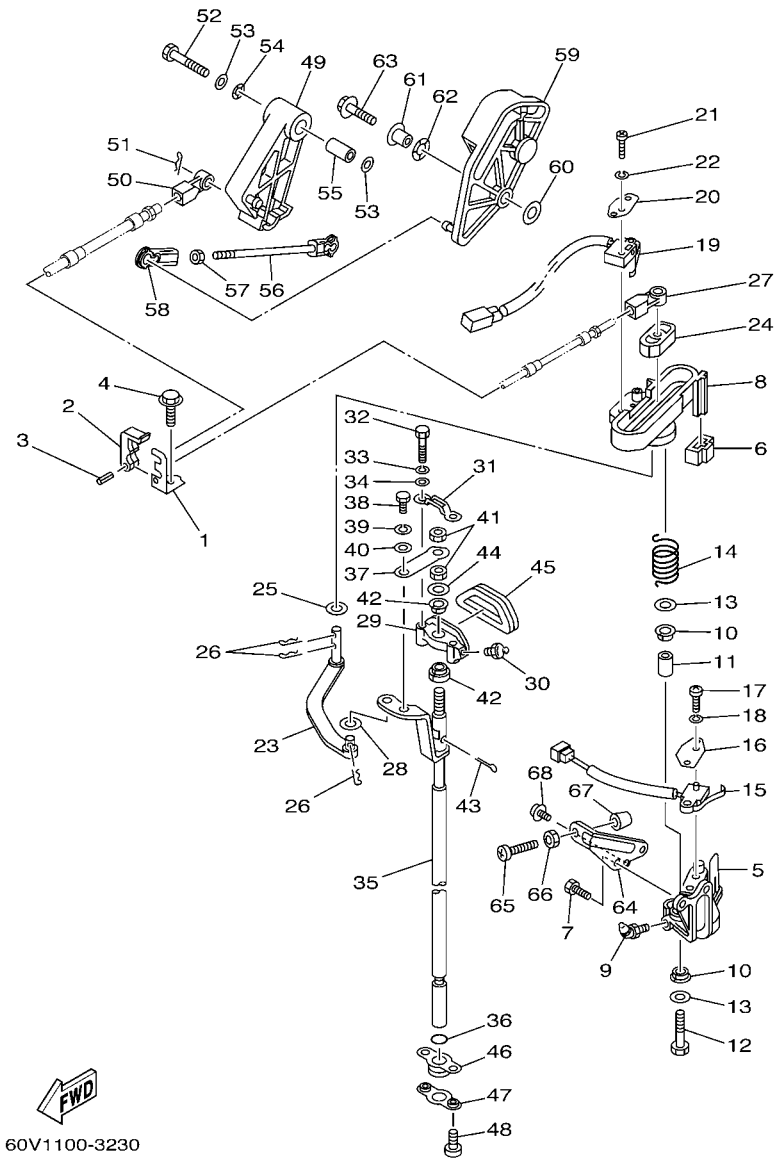

FIG. 22 CONTROL COMMANDE

REF. NO.	PART NO. N° PIECES	DESCRIPTION DESCRIPTION	60V3	60W3				REMARKS REMARQUES
1	60V–48531–10	BRACKET, REMOTE CONTROL 1 ETRIER 1, COMMANDE A DISTANCE	1	1				
2	663–48538–00	CLAMP, CABLE 1 COLLIER	1	1				
3	91690–30010	PIN, SPRING AGRAFFE	1	1				
4	90109–06M80	BOLT BOULON	1	1				
5	60V–44117–00–1S	BRACKET SUPPORT	1	1				
6	60V–44194–00	CAP CAPUCHON	1	1				
7	97095–06020	BOLT BOULON	2	2				
8	60V–44176–00–1S	BRACKET SUPPORT	1	1				
9	93700–06M01	NIPPLE, GREASE PION	1	1				
10	90386–12069	BUSH DOUILLE	2	2				
11	90387–08M09	COLLAR COLLERETTE	1	1				
12	97095–08035	BOLT BOULON	1	1				
13	92995–08200	WASHER RONDELLE	2	2				
14	90508–20M31	SPRING, TORSION RESSORT, TORSION	1	1				
15	61A–8259F–00	SWITCH ASSY COMMUTATEUR	1	1				
16	61A–82588–01	PLATE PLAQUE	1	1				
17	97885–04016	SCREW, PAN HEAD VIS, A ENCOCHE	2	2				
18	92995–04100	WASHER RONDELLE	2	2				
19	60V–8259F–00	SWITCH ASSY COMMUTATEUR	1	1				
20	61A–82588–01	PLATE PLAQUE	1	1				
21	97885–04016	SCREW, PAN HEAD VIS, A ENCOCHE	2	2				
22	92995–04100	WASHER RONDELLE	2	2				
23	61A–44121–00	LEVER, SHIFT ROD LEVIER, TIGE D'INVERSION	1	1				
24	68J–44122–01	BUSHING, SHIFT ROD LEVER DOUILLE, LEVIER D'EMBRAYAGE	1	1				
25	90202–08M20	WASHER, PLATE RONDELLE, PLATE	1	1				
26	90468–18008	CLIP JONC	3	3				
27	6E5–48344–00	CABLE END, REMOTE CONTROL CHAPE CABLE	1	1				

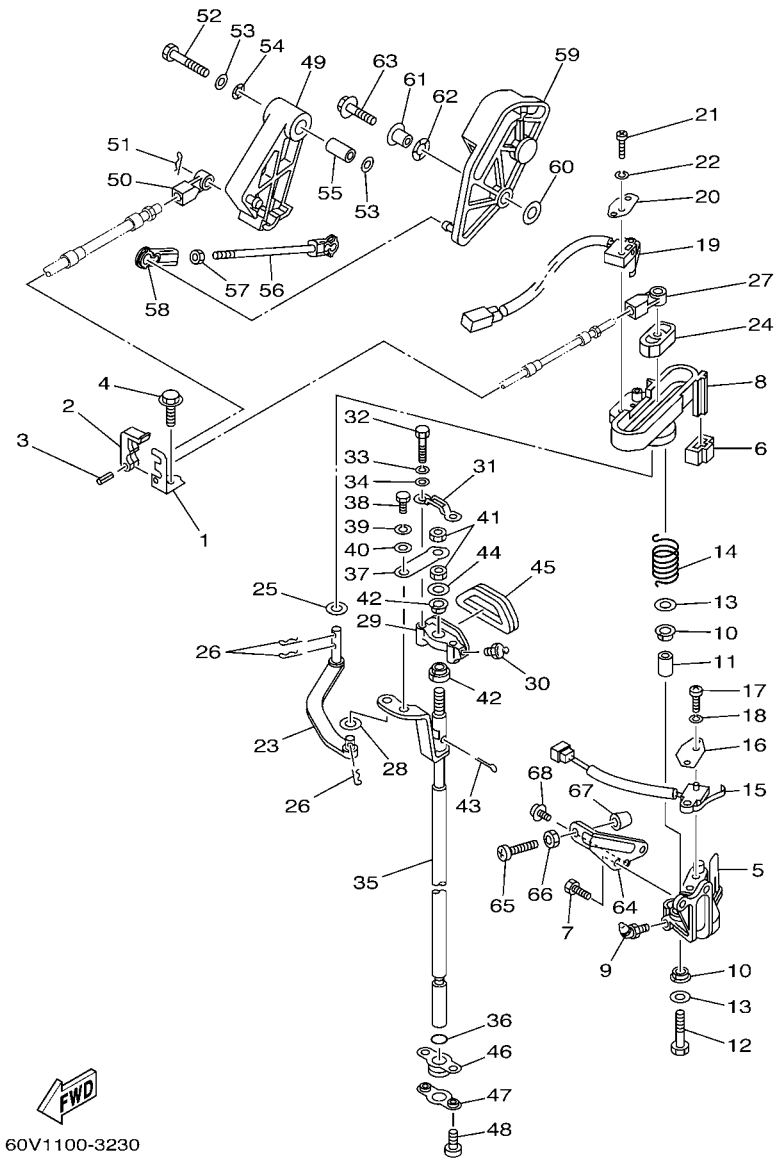

FIG. 22 CONTROL COMMANDE

REF. NO.	PART NO. N° PIECES	DESCRIPTION DESCRIPTION	60V3	60W3				REMARKS REMARQUES
28	90202–06007	WASHER, PLATE RONDELLE, PLATE	1	1				
29	61A–44118–00–8D	BRACKET SUPPORT	1	1				
30	93700–06M03	NIPPLE, GREASE PION	1	1				
31	61A–44116–00	SPRING RESSORT	1	1				
32	97095–06030	BOLT BOULON	2	2				
33	92995–06100	WASHER, SPRING RONDELLE, GROWER	2	2				
34	92995–06600	WASHER RONDELLE	2	2				
35	61A–44120–22	HANDLE GEAR SHIFT ASSY LEVIER D'EMBRAYAGE	1	1				X X
36	93210–09165	O-RING JOINT TORIQUE	1	1				
37	61A–44112–00	STAY, HANDLE GEAR SHIFT PLAQUE	1	1				
38	97013–06012	BOLT BOULON	1	1				
39	92903–06100	WASHER, SPRING RONDELLE, GROWER	1	1				
40	92903–06600	WASHER, PLATE RONDELLE, PLATE	1	1				
41	95313–08600	NUT ECROU, HEXAGONAL	2	2				
42	90386–90M90	BUSH DOUILLE	2	2				
43	91490–20012	PIN, COTTER GOUPILLE	1	1				
44	90201–09M02	WASHER, PLATE RONDELLE, PLATE	1	1				
45	61A–15315–00	SEAL, CRANKCASE JOINT SPY CARTER DE MOTEUR	1	1				
46	61A–42724–00	GROMMET PASSE-FIL	1	1				
47	61A–44138–00	WASHER RONDELLE	1	1				
48	97885–06008	SCREW, PAN HEAD VIS, A ENCOCHE	2	2				
49	65L–41632–01	LEVER, MAGNETO CONTROL LEVIER, COMMANDE D'AVANCE	1	1				
50	6E5–48344–00	CABLE END, REMOTE CONTROL CHAPE CABLE	1	1				
51	90468–18008	CLIP JONC	1	1				
52	97013–08045	BOLT BOULON	1	1				
53	92990–08200	WASHER, PLAIN RONDELLE, PLATE	2	2				
54	90206–12M00	WASHER, WAVE RONDELLE, ONDULEE	1	1				

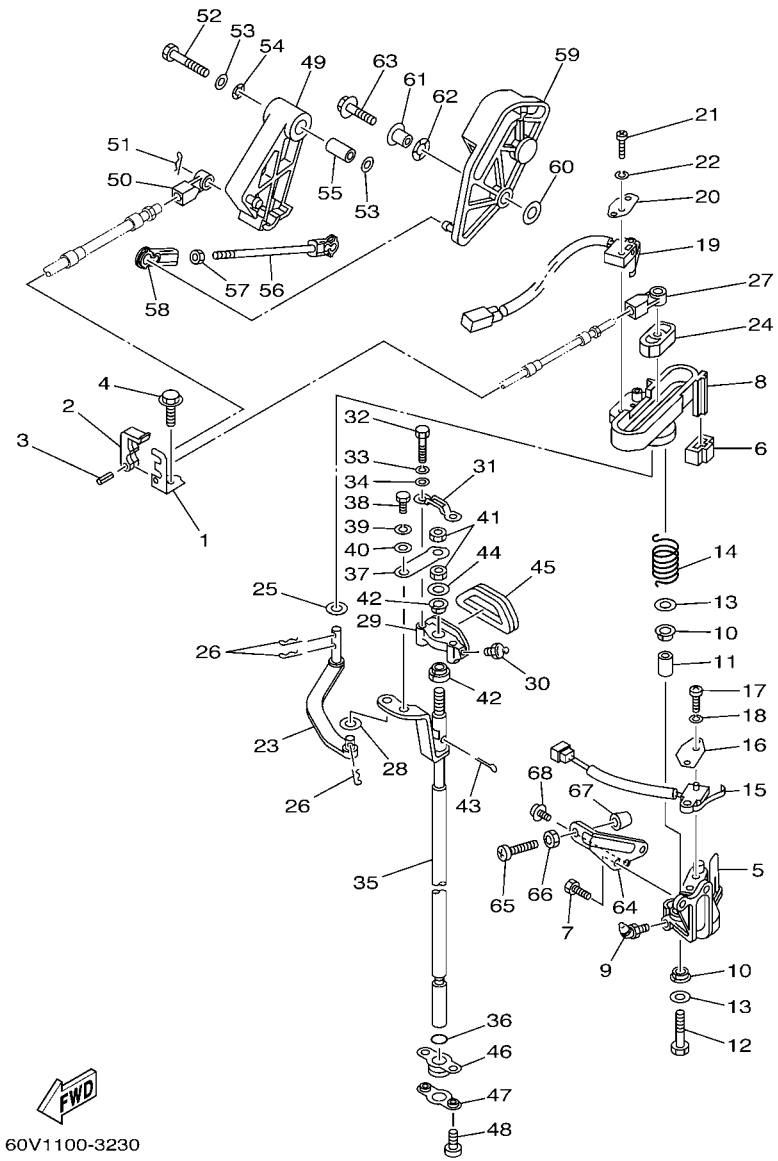

FIG. 22 CONTROL COMMANDE

REF. NO.	PART NO. N° PIECES	DESCRIPTION DESCRIPTION	60V3	60W3				REMARKS REMARQUES
55	90387–08M16	COLLAR COLLERETTE	1	1				
56	61A–41237–00	JOINT, LINK RACCORD	1	1				
57	95380–05600	NUT ECROU	1	1				
58	6H4–41237–00	JOINT, LINK RACCORD	1	1				
59	60V–41230–00	CAM ACCELERATOR COMP ACCELERATION CAME COMP	1	1				
60	90201–06M31	WASHER, PLATE RONDELLE, PLATE	1	1				
61	90387–06M29	COLLAR COLLERETTE	1	1				
62	90206–10M04	WASHER, WAVE RONDELLE, ONDULEE	1	1				
63	90119–06MA4	BOLT, WITH WASHER BOULON, AVEC RONDELLE	1	1				
64	69L–42744–00	STAY SUPPORT	1	1				
65	90157–06006	SCREW, PAN HEAD VIS, TETE TRONCONIQUE	1	1				
66	95380–06600	NUT, HEXAGON ECROU	1	1				
67	688–44194–00	CAP CAPUCHON	1	1				
68	90159–05M25	SCREW, WITH WASHER VIS, AVEC RONDELLE	1	1				

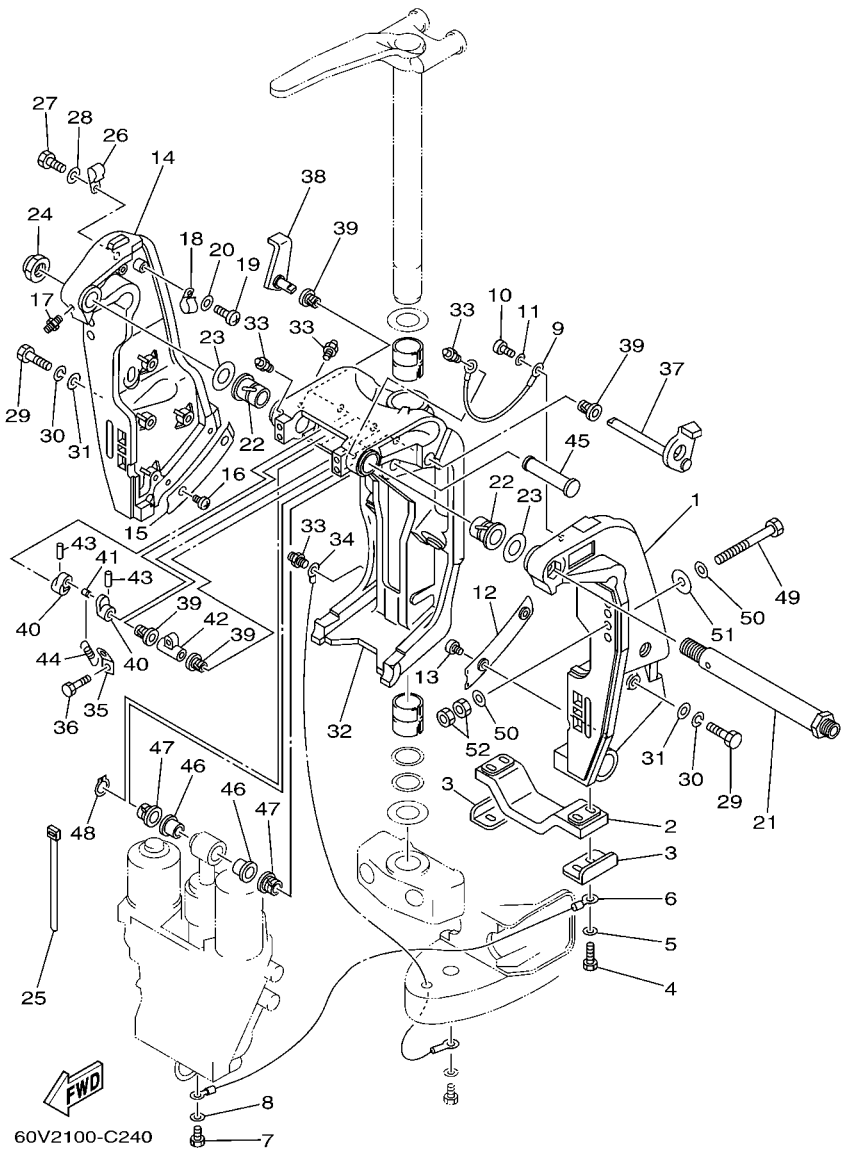

FIG. 23 BRACKET 1 SUPPORT 1

REF. NO.	PART NO. N° PIECES	DESCRIPTION DESCRIPTION	60V3	60W3				REMARKS REMARQUES
1	69J–43111–01–8D	BRACKET, CLAMP PRESSE	1	1				
2	6G5–45251–02	ANODE ANODE	1	1				
3	6G5–44526–00	PLATE PLAQUE	2	2				
4	97095–06025	BOLT BOULON	4	4				
5	92995–06600	WASHER RONDELLE	4	4				
6	6H1–82148–00	WIRE, LEAD 4 FIL 4	1	1				
7	97095–06010	BOLT BOULON	1	1				
8	92995–06600	WASHER RONDELLE	1	1				
9	6E5–82148–00	WIRE, LEAD 4 FIL 4	1	1				
10	97885–06012	SCREW, PAN HEAD VIS, A ENCOCHE	1	1				
11	92995–06600	WASHER RONDELLE	1	1				
12	61A–43132–00	WASHER, FRICTION RONDELLE, FRICTION	1	1				
13	97885–06010	SCREW, PAN HEAD VIS, A ENCOCHE	2	2				
14	69J–43112–01–8D	BRACKET, CLAMP PRESSE	1	1				
15	61A–43133–00	WASHER,FRICTION RONDELLE	1	1				
16	97885–06010	SCREW, PAN HEAD VIS, A ENCOCHE	2	2				
17	93700–06M03	NIPPLE, GREASE PION	1	1				
18	90465–08M83	CLAMP BRIDE	1	1				
19	97885–06012	SCREW, PAN HEAD VIS, A ENCOCHE	1	1				
20	92995–06600	WASHER RONDELLE	1	1				
21	6R3–43131–00	BOLT, CLAMP BRACKET BOULON, PRESSE	1	1				
22	90386–25M31	BUSH DOUILLE	2	2				
23	90201–26M59	WASHER, PLATE RONDELLE, PLATE	2	2				
24	90185–22M11	NUT, SELF-LOCKING ECROU, AUTO-BLOQUANT	1	1				
25	90465–11M10	CLAMP BRIDE	4	4				
26	90465–08M83	CLAMP BRIDE	1	1				
27	97095–06014	BOLT BOULON	1	1				

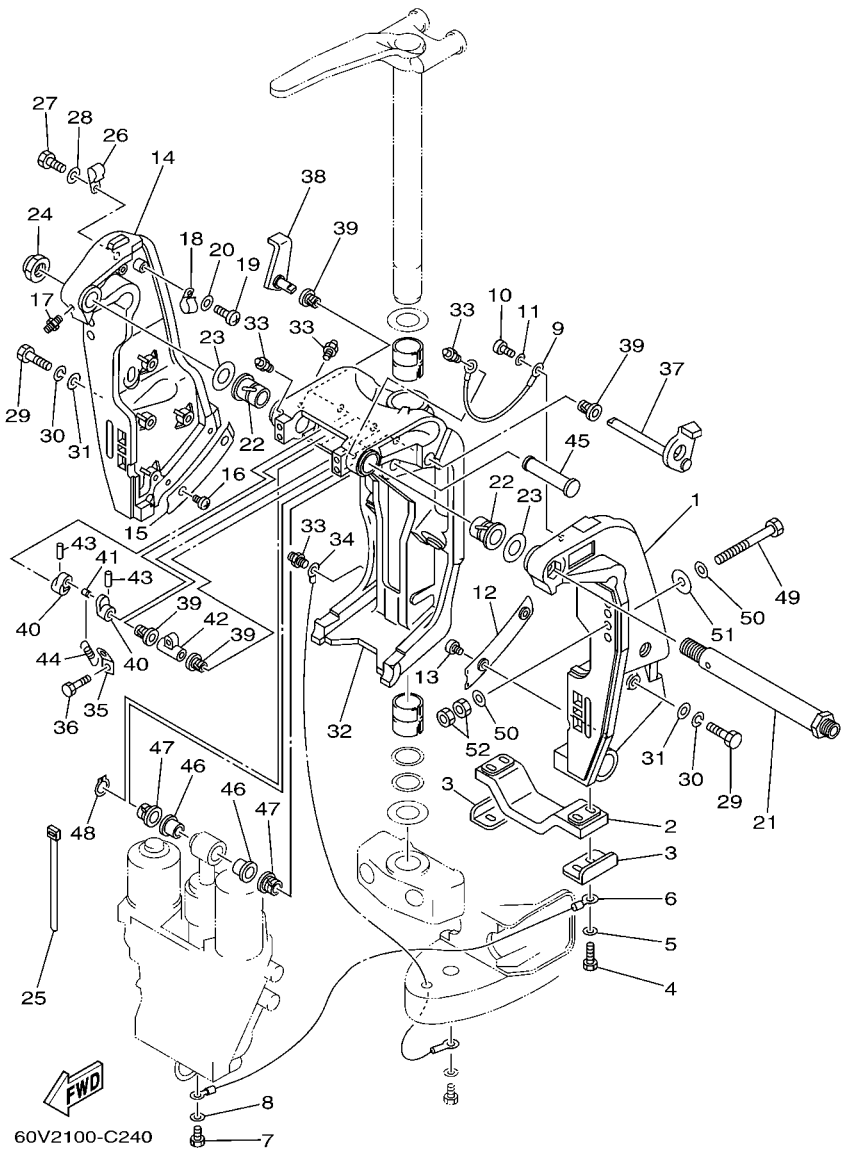

FIG. 23 BRACKET 1 SUPPORT 1

REF. NO.	PART NO. N° PIECES	DESCRIPTION DESCRIPTION	60V3	60W3				REMARKS REMARQUES
28	92995–06600	WASHER RONDELLE	1	1				
29	97095–10045	BOLT BOULON	8	8				
30	92995–10100	WASHER RONDELLE	8	8				
31	92995–10600	WASHER RONDELLE	8	8				
32	61A–43311–21–8D	BRACKET, SWIVEL 1 SUPPORT, PIVOT 1	1	1				X X
33	93700–06M03	NIPPLE, GREASE PION	5	5				
34	61A–82147–20	WIRE, LEAD 4 FIL 4	1	1				X X
35	6G5–43144–00	HOOK, SPRING CROCHET	1	1				
36	97095–06010	BOLT BOULON	1	1				
37	61A–43181–01	LEVER, TILT STOP LEVIER, VERROUILLAGE RELEVAGE	1	1				
38	6G5–43185–02	LEVER, TILT STOP LEVIER, VERROUILLAGE RELEVAGE	1	1				
39	90386–10M16	BUSH DOUILLE	4	4				
40	6G5–43148–00	COLLAR, DISTANCE ENTRETOISE	2	2				
41	90249–06M19	PIN GOUPILLE	1	1				
42	90387–10M02	COLLAR COLLERETTE	1	1				
43	91690–30020	PIN, SPRING AGRAFFE	2	2				
44	90506–16003	SPRING, TENSION RESSORT, TENSION	1	1				
45	6E5–43126–02	PIN, UPPER SHOCK MOUNT AXE, SUPERIEUR AMORTISSEUR	1	1				
46	90386–18M63	BUSH DOUILLE	2	2				
47	90386–18M14	BUSH DOUILLE	2	2				
48	93410–18M02	CIRCLIP CLIPS	1	1				
49	90101–12M05	BOLT (L:130MM) BOULON (L:130MM)	4	4				
50	90201–13M01	WASHER, PLATE RONDELLE, PLATE	8	8				
51	90201–12M05	WASHER, PLATE RONDELLE, PLATE	4	4				
52	95380–12600	NUT ECROU	8	8				

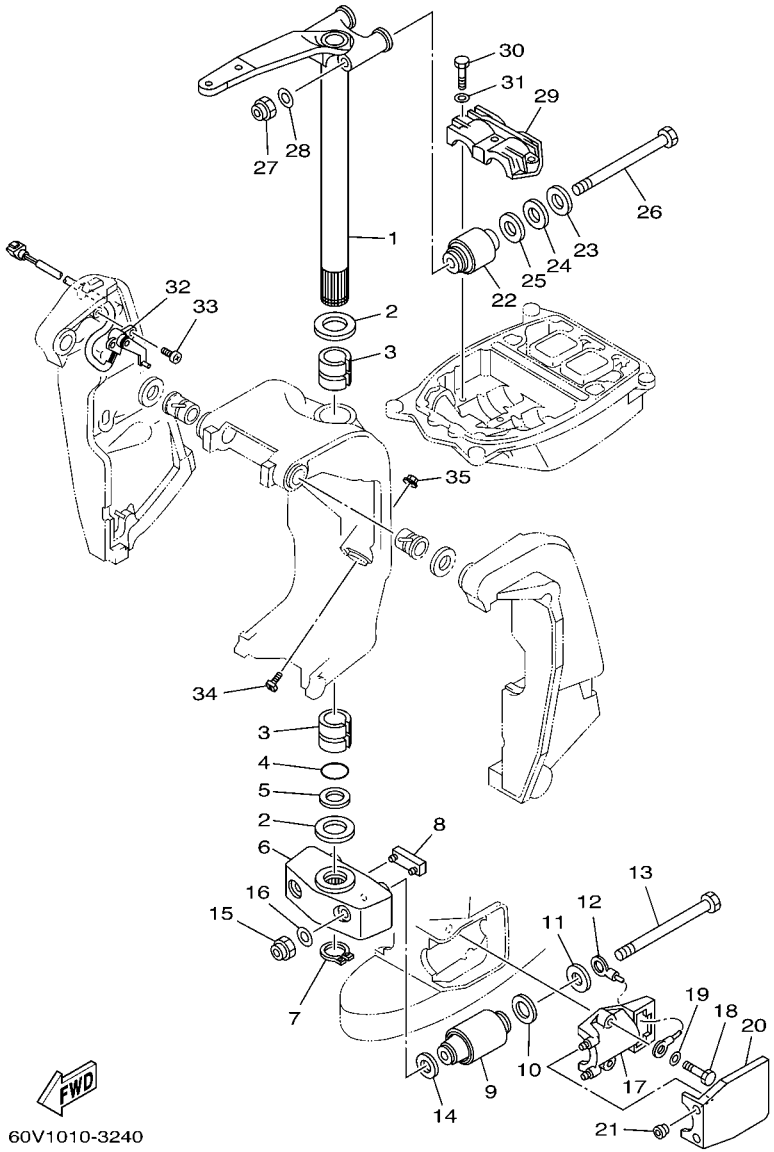

FIG. 24 BRACKET 2 SUPPORT 2

REF. NO.	PART NO. N° PIECES	DESCRIPTION DESCRIPTION	60V3	60W3				REMARKS REMARQUES
1	60V–42510–20–8D	STEERING BRACKET ASSY DIRECTION SUPPORT (ENS.)	1	1				X X
2	90201–40M00	WASHER, PLATE RONDELLE, PLATE	2	2				
3	90386–39M89	BUSH DOUILLE	2	2				
4	93210–35321	O-RING JOINT TORIQUE	1	1				
5	90202–40M47	WASHER, PLATE RONDELLE, PLATE	1	1				
6	61A–44551–01–8D	HOUSING, LOWER MOUNT RUBBER BOITIER, SILENT-BLOC INFERIEUR	1	1				
7	93410–37M04	CIRCLIP CLIPS	1	1				
8	61A–44575–00	DAMPER, LOWER MOUNT RUBBER SILENT-BLOC, INFERIEUR	1	1				
9	60V–44555–00–94	MOUNT DAMPER, LOWER SIDE SILENT-BLOC, INFERIEUR LATERAL	2	2				
10	90202–32M19	WASHER, PLATE RONDELLE, PLATE	2	2				
11	90201–16M55	WASHER, PLATE RONDELLE, PLATE	2	2				
12	6E5–82149–00	WIRE, LEAD 3 FIL 3	1	1				
13	90109–14005	BOLT BOULON	2	2				
14	90201–15M58	WASHER, PLATE RONDELLE, PLATE	2	2				
15	95380–14800	NUT ECROU	2	2				
16	92995–14600	WASHER RONDELLE	2	2				
17	61A–44552–01–94	HOUSING, LOWER MOUNT RUBBER BOITIER, SILENT-BLOC INFERIEUR	2	2				
18	97095–10045	BOLT BOULON	4	4				
19	92995–10600	WASHER RONDELLE	4	4				
20	61A–44553–00–8D	COVER, LOWER MOUNT COUVERCLE, SUSPENSION INFERIEU	2	2				
21	6A0–15789–00	DAMPER AMORTISSEUR	4	4				
22	60V–44514–00–94	MOUNT DAMPER, UPPER SIDE SILENT-BLOC, SUPERIEUR LATERAL	2	2				
23	90201–16M01	WASHER, PLATE RONDELLE, PLATE	2	2				
24	90202–28M46	WASHER, PLATE RONDELLE, PLATE	2	2				
25	90201–28M01	WASHER, PLATE RONDELLE, PLATE	2	2				
26	90109–14003	BOLT BOULON	2	2				
27	90185–14M00	NUT, SELF-LOCKING ECROU, AUTO-BLOQUANT	2	2				

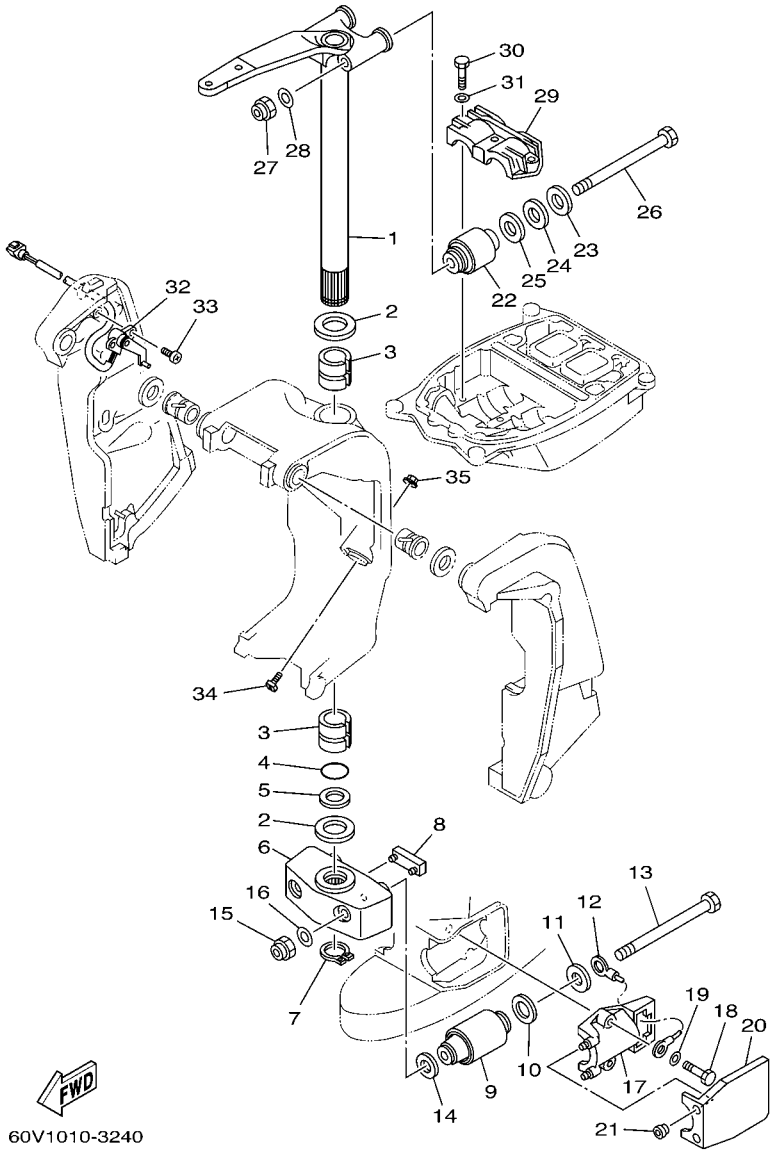

FIG. 24 BRACKET 2 SUPPORT 2

REF. NO.	PART NO. N° PIECES	DESCRIPTION DESCRIPTION	60V3	60W3				REMARKS REMARQUES
28	92995–14600	WASHER RONDELLE	2	2				
29	61A–44511–00–94	COVER, UPPER MOUNT COUVERCLE, SUSPENSION SUPERIEU	1	1				
30	97095–10045	BOLT BOULON	3	3				
31	92995–10600	WASHER RONDELLE	3	3				
32	69J–83672–00	TRIM SENDER INCLINER RACCORD	1	1				
33	97885–06016	SCREW, PAN HEAD VIS, A ENCOCHE	2	2				
34	61A–43376–00	BOLT, THRUST RECEIVER BOULON	2	2				
35	95780–10300	NUT, FLANGE ECROU	2	2				

FIG. 25 POWER TRIM & TILT ASSY 1 PUISSANCE PARER ET INCLINER 1

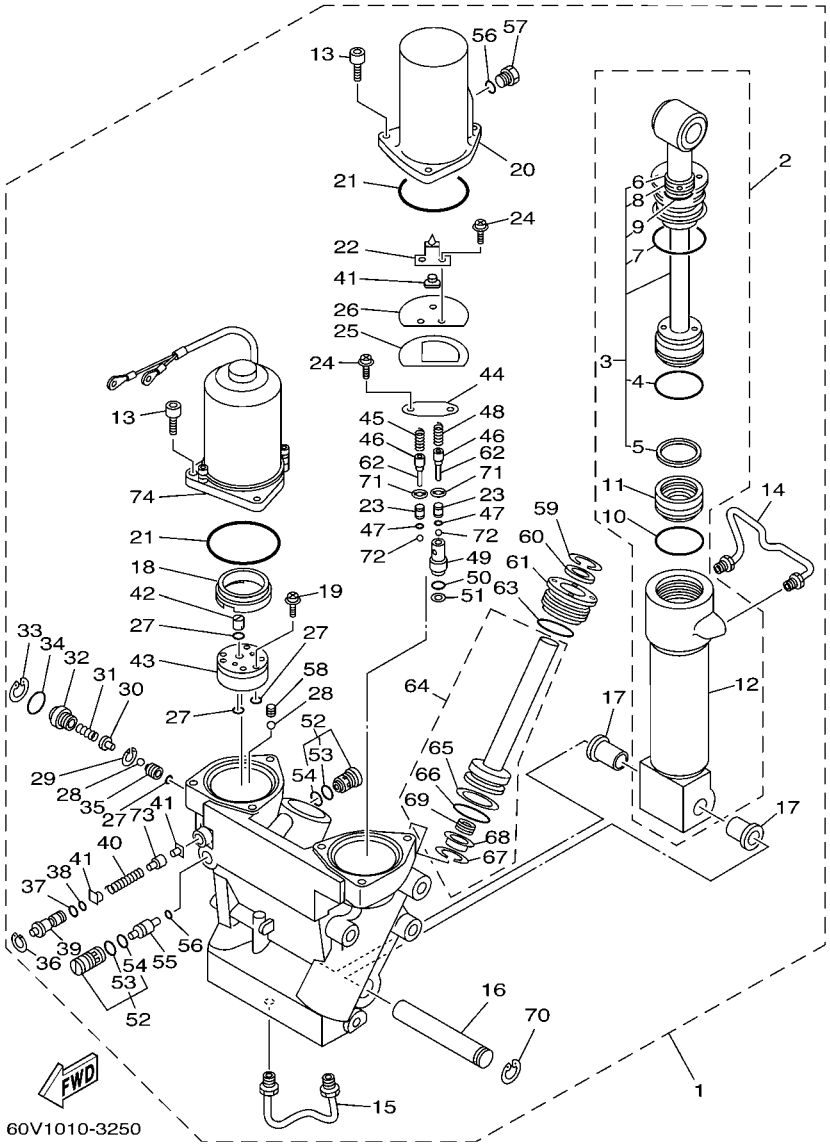

REF. NO.	PART NO. N° PIECES	DESCRIPTION DESCRIPTION	60V3	60W3				REMARKS REMARQUES
1	60V–43800–00–4D	POWER TRIM & TILT ASSY PUISSANCE PARER ET INCLINER (E	1	1				
2	61A–43840–01	.POWER TILT ASSY .PUISSANCE INCLINER (ENS.)	1	1				
3	61A–43810–00	..TILT PISTON SUB ASSY ..INCLINER PISTON AUXILIAIRE(E	1	1				
4	61A–43861–00	...O-RING ...JOINT TORIQUE	1	1				
5	61A–43871–00	...RING, BACK UP ...SEGMENT	1	1				
6	93106–19N50	...OIL SEAL ...JOINT SPY	1	1				
7	6H1–43861–00	...O-RING ...JOINT TORIQUE	1	1				
8	6H1–43872–00	...RING, BACK UP ...RESSORT	1	1				
9	61A–4389H–00	...O-RING ...JOINT TORIQUE	1	1				
10	61A–43861–00	..O-RING ..JOINT TORIQUE	1	1				
11	6H1–43814–00	..PISTON, FREE ..PISTON	1	1				
12	61A–43813–01	..CYLINDER, TILT ..CYLINDRE	1	1				
13	69J–43888–00	.BOLT, SOCKET .BOULON	6	6				
14	61A–43835–01	.PIPE .TUYAU	1	1				
15	61A–43833–01	.PIPE .TUYAU	1	1				
16	61A–43818–00	.PIN, LOWER SHOCK MOUNT .AXE, INFERIEUR AMORTISSEUR	1	1				
17	90386–18M14	.BUSH .DOUILLE	2	2				
18	6H1–43817–00	.FILTER 2 .FILTRE 2	1	1				
19	97607–04230	.SCREW,WITH WASHER .VIS HEXAGONAL	3	3				
20	69J–43828–00	.BODY, RESERVOIR .CORPS	1	1				
21	6H1–43869–00	.O-RING .JOINT TORIQUE	2	2				
22	61A–4384L–00	.SPRING, TRIM DOWN .RESSORT	1	1				
23	6T4–43851–00	.SEAT, RELIEF VALVE .SIEGE	2	2				
24	97607–05210	.SCREW,WITH WASHER .VIS HEXAGONAL	4	4				
25	61A–4384K–00	.PLATE, TRIM DOWN .PLAQUE	1	1				
26	61A–4384J–00	.SEAL, TRIM DOWN .JOINT	1	1				
27	93210–064A5	.O-RING .JOINT TORIQUE	4	4				

FIG. 25 POWER TRIM & TILT ASSY 1 PUISSANCE PARER ET INCLINER 1

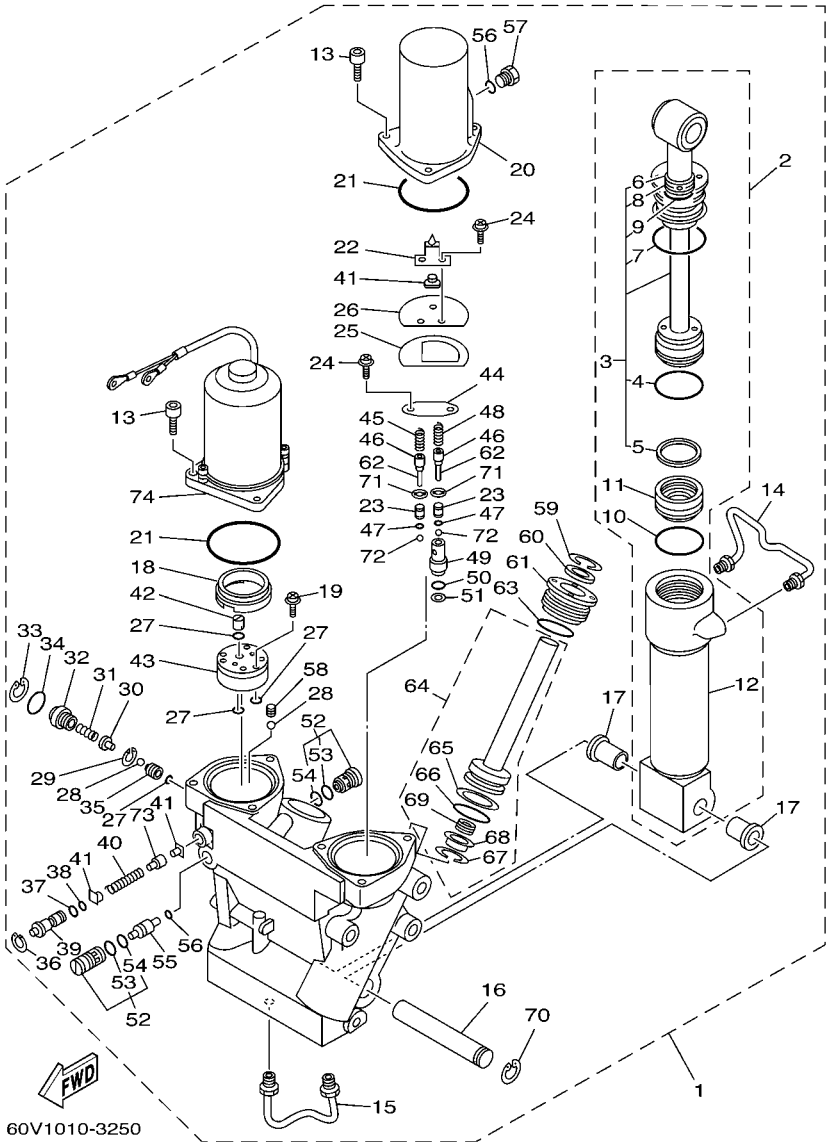

REF. NO.	PART NO. N° PIECES	DESCRIPTION DESCRIPTION	60V3	60W3				REMARKS REMARQUES
28	93505–32038	.BALL .BILLE	2	2				
29	61A–43875–00	.RING, SNAP .RESSORT	1	1				
30	61A–43848–00	.ROD, MANUAL RELEASE .TIGE	1	1				
31	61A–43854–00	.SPRING, MANUAL RELEASE .RESSORT	1	1				
32	61A–43845–00	.SCREW, MANUAL RELEASE .VIS	1	1				
33	6H1–43875–00	.RING, SNAP .RESSORT	1	1				
34	93210–18397	.O-RING .JOINT TORIQUE	1	1				
35	61A–43847–00	.SEAT, MANUAL VALVE .SIEGE	1	1				
36	6T4–43876–00	.RING, SNAP .RESSORT	1	1				
37	93210–07003	.O-RING .JOINT TORIQUE	1	1				
38	93210–06001	.O-RING .JOINT TORIQUE	1	1				
39	6T4–43849–00	.PIN, VALVE SUPPORT .GOUPILLE	1	1				
40	61A–4385H–00	.SPRING, SEAL .RESSORT	1	1				
41	61A–4384F–00	.SEAL, MAIN VALVE .JOINT	3	3				
42	6H1–43831–00	.CONNECTOR, SHAFT .RACCORD	1	1				
43	6T4–43830–00	.GEAR PUMP ASSY .POMPE A PIGNON (ENS.)	1	1				
44	61A–4382K–00	.CAP, RELIEF VALVE .CHAPEAU	1	1				
45	6H1–43856–10	.SPRING, DOWN RELIEF .RESSORT	1	1				
46	6T4–43844–00	.PIN, VALVE SUPPORT .GOUPILLE	2	2				
47	6T4–4384G–00	.SEAL, RELIEF VALVE .JOINT	2	2				
48	6T4–43855–00	.SPRING, UP RELIEF .RESSORT	1	1				
49	6T4–43895–00	.SEAT, RELIEF VALVE .SIEGE	1	1				
50	93210–10M74	.O-RING .JOINT TORIQUE	1	1				
51	6H1–43816–00	.FILTER 1 .FILTRE 1	1	1				
52	6T4–43802–03	.VALVE SUB ASSY .CLAPET AUXILIAIRE (ENS.)	2	2				
53	6H1–43866–00	..O-RING ..JOINT TORIQUE	1	1				
54	6H1–43867–00	..O-RING ..JOINT TORIQUE	1	1				

FIG. 25 POWER TRIM & TILT ASSY 1 PUISSANCE PARER ET INCLINER 1

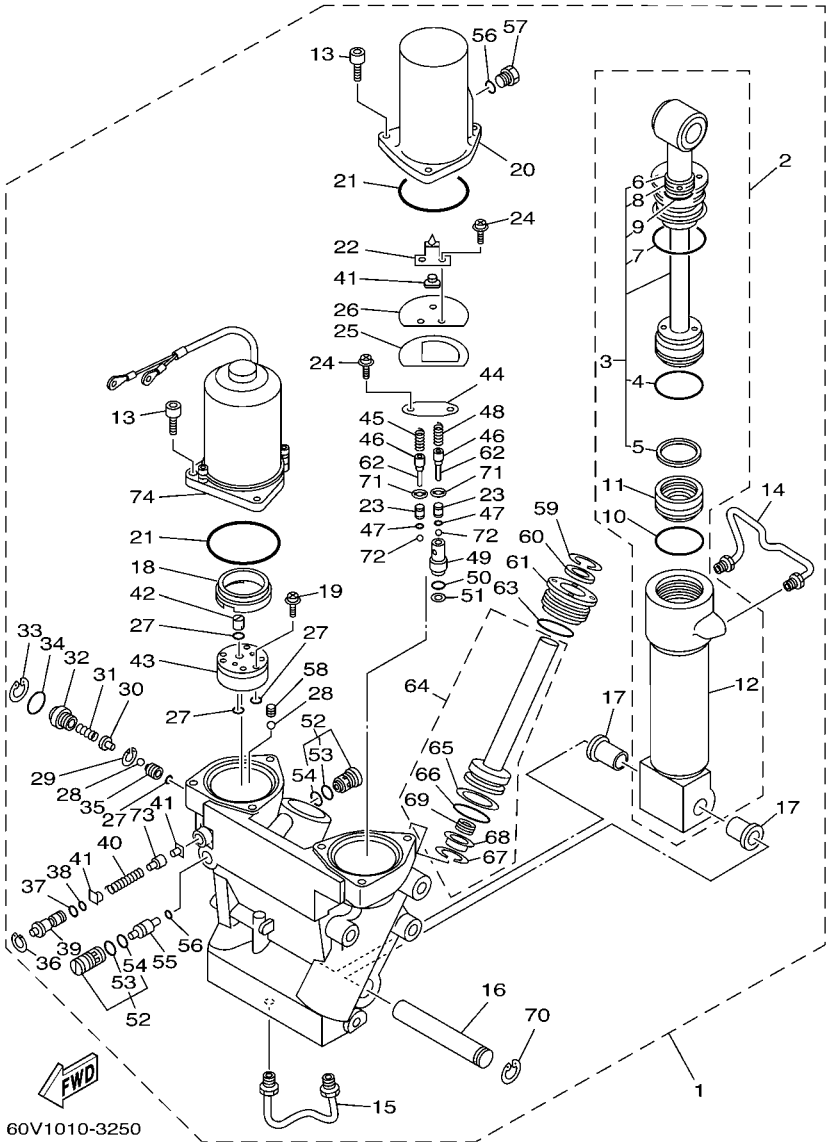

REF. NO.	PART NO. N° PIECES	DESCRIPTION DESCRIPTION	60V3	60W3				REMARKS REMARQUES
55	6T4–43841–00	.PISTON, SHUTTLE .PISTON	1	1				
56	93210–09165	.O-RING .JOINT TORIQUE	2	2				
57	6H1–43829–00	.PLUG, RESERVOIR .BOUCHON	1	1				
58	61A–43878–00	.BOLT, SOCKET .BOULON	1	1				
59	6T4–43875–01	.RING, SNAP .RESSORT	2	2				
60	61A–43822–00	.SEAL, TRIM DUST .JOINT	2	2				
61	61A–43821–00	.SCREW, TRIM CYLINDER END .VIS	2	2				
62	91609–10014	.PIN, SPRING .AXE DE RESSORT	2	2				
63	61A–43861–00	.O-RING .JOINT TORIQUE	2	2				
64	61A–43820–10	.TRIM PISTON SUB ASSY .PARER PISTON AUXILIAIRE (ENS.	2	2				
65	61A–43874–00	..RING, BACK UP ..RESSORT	1	1				
66	61A–43864–00	..O-RING ..JOINT TORIQUE	1	1				
67	61A–43875–10	..RING, SNAP ..RESSORT	1	1				
68	61A–4383H–11	..HOSE, OIL 5 ..DRITE HUILE	1	1				
69	61A–4384H–10	..SPRING ..RESSORT	1	1				
70	61A–43876–00	.RING, SNAP .RESSORT	1	1				
71	6T4–43893–00	.WASHER .RONDELLE	2	2				
72	93501–08001	.BALL .BILLE	2	2				
73	61A–4382A–00	.ADAPTOR 1 .ADAPTEUR 1	1	1				
74	69J–43880–00	.MOTOR ASSY .MOTEUR (ENS.)	1	1				REFER TO FIG.26 REFER TO FIG.26

FIG. 26 POWER TRIM & TILT ASSY 2 PUISSANCE PARER ET INCLINER 2

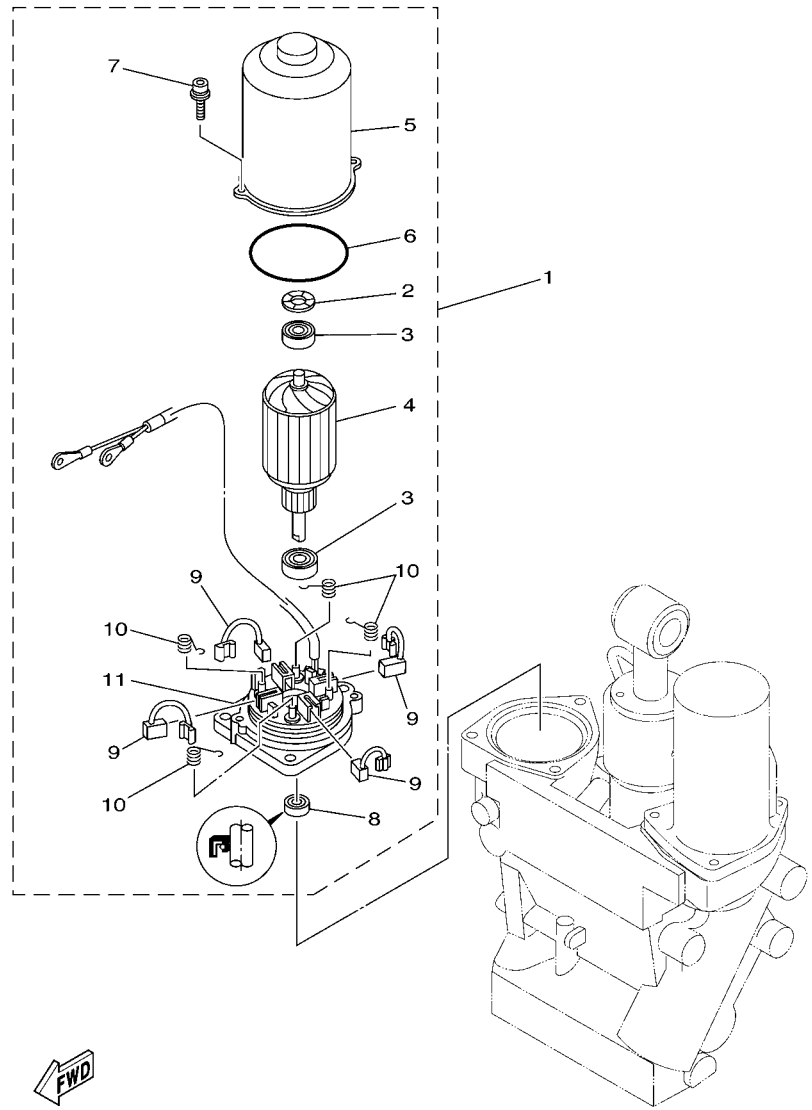

60V1010-3260

REF. NO.	PART NO. N° PIECES	DESCRIPTION DESCRIPTION	60V3	60W3				REMARKS REMARQUES
1	69J–43880–00	MOTOR ASSY MOTEUR (ENS.)	1	1				
2	90206–14N50	.WASHER, WAVE .RONDELLE, ONDULEE	1	1				
3	93399–999T6	.BEARING .ROULEMENT	2	2				
4	69J–43805–00	.ARMATURE ASSY .INDUIT (ENS.)	1	1				
5	69J–43804–00	.STATOR ASSY .STATOR (ENS.)	1	1				
6	69J–43861–00	.O-RING .JOINT TORIQUE	1	1				
7	69J–43886–00	.BOLT .BOULON	2	2				
8	69J–43882–00	.OIL SEAL .JOINT SPI	1	1				
9	69J–43891–00	.BRUSH 1 .BALAI 1	4	4				
10	69J–4386K–00	.SPRING, BRUSH .RESSORT, BALAI	4	4				
11	69J–43881–00	.FRAME, END .BATI	1	1				

FIG. 27 UPPER CASING FOURREAU

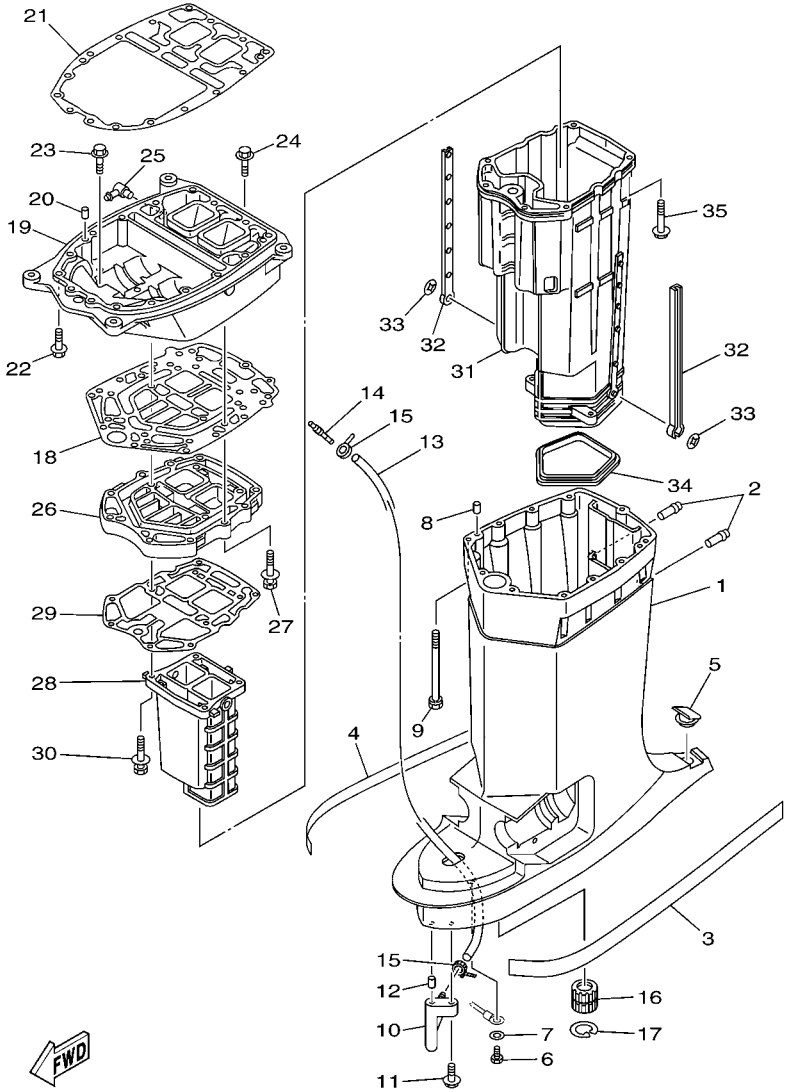

REF. NO.	PART NO. N° PIECES	DESCRIPTION DESCRIPTION	60V3	60W3				REMARKS REMARQUES
1	60V–45111–20–8D	CASING, UPPER FOURREAU	1	1				X X
2	6E5–24377–00	PIPE, JOINT 3 DURITE RACCORDEMENT 3	2	2				
3	61A–42791–S0	MARK 1 ETIQUETTE 1	1	1				
4	61A–42792–S0	MARK ETIQUETTE	1	1				
5	61A–45155–00	CAP CAPUCHON	1	1				
6	97095–06010	BOLT BOULON	1	1				
7	92995–06600	WASHER RONDELLE	1	1				
8	93608–12M05	PIN, DOWEL AXE	2	2				
9	90119–08052	BOLT, WITH WASHER BOULON, AVEC RONDELLE	8	8				
10	61A–45378–00	NIPPLE, HOSE RACCORD, TUYAU	1	1				
11	90119–06M17	BOLT, WITH WASHER BOULON, AVEC RONDELLE	1	1				
12	93606–12019	PIN, DOWEL GOUPILLE	1	1				
13	90445–07MF0	HOSE (L1030) DURITE (L1030)	1	1				X X
14	6E5–83558–00	END, NIPPLE RACCORD DE NIPPLE	1	1				
15	90465–11M10	CLAMP BRIDE	2	2				
16	6E5–45318–00	BUSHING, DRIVE SHAFT DOUILLE, ARBRE MOTEUR	1	1				
17	93420–36M01	CIRCLIP CIRCLIP, TYPE S	1	1				
18	60V–45114–00	GASKET, UPPER CASING JOINT, TUBE D'ARBRE	1	1				
19	60V–41137–20–94	GUIDE, EXHAUST COLLECTEUR D'ECHAPPEMENT	1	1				
20	93608–12M05	PIN, DOWEL AXE	2	2				
21	60V–45113–01	GASKET, UPPER CASING JOINT, TUBE D'ARBRE	1	1				
22	90119–08079	BOLT, WITH WASHER BOULON, AVEC RONDELLE	4	4				
23	90119–08072	BOLT, WITH WASHER BOULON, AVEC RONDELLE	4	4				
24	90119–08060	BOLT, WITH WASHER BOULON, AVEC RONDELLE	1	1				
25	6H1–11372–00	NIPPLE, HOSE RACCORD, TUYAU	1	1				
26	60V–41131–02–5B	MANIFOLD, EXT. 1 PIPE D'ECHAPPEMENT	1	1				
27	90119–08056	BOLT, WITH WASHER BOULON, AVEC RONDELLE	4	4				

FIG. 27 UPPER CASING FOURREAU

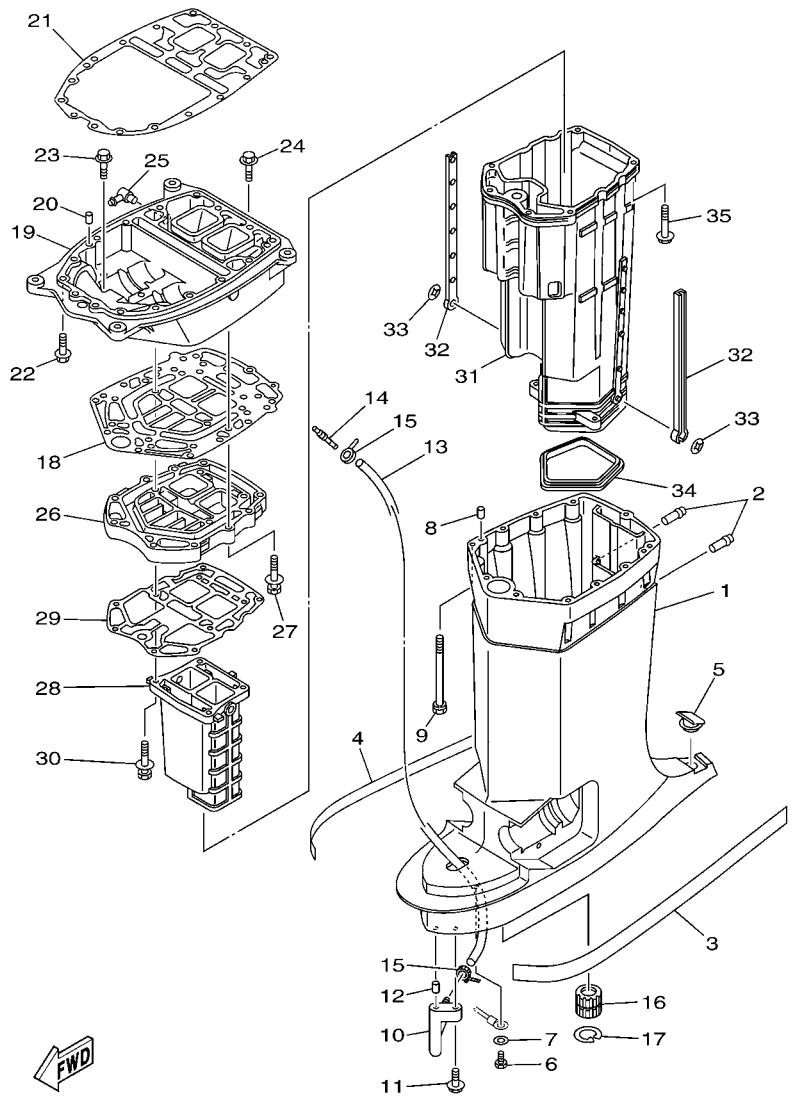

6P02010-D270

REF. NO.	PART NO. N° PIECES	DESCRIPTION DESCRIPTION	60V3	60W3				REMARKS REMARQUES
28	6D0–41132–00–5B	MANIFOLD, EXHAUST PIPE D'ECHAPPEMENT	1	1				
29	61A–41134–A0	GASKET, EXHAUST MANIFOLD JOINT, PIPE D'ECHAPPEMENT	1	1				
30	90119–08059	BOLT, WITH WASHER BOULON, AVEC RONDELLE	4	4				
31	60V–14711–20–5B	MUFFLER 1 POT D'ECHAPPEMENT 1	1	1				
32	6E5–14737–00	DAMPER, MUFFLER AMORTISSEUR DE POT D'ECHAPPT	2	2				
33	90183–05M02	NUT, SPRING ECROU, RESSORT	2	2				
34	61A–45123–01	GASKET, MUFFLER JOINT, POT DE DETENTE	1	1				
35	90119–08059	BOLT, WITH WASHER BOULON, AVEC RONDELLE	6	6				

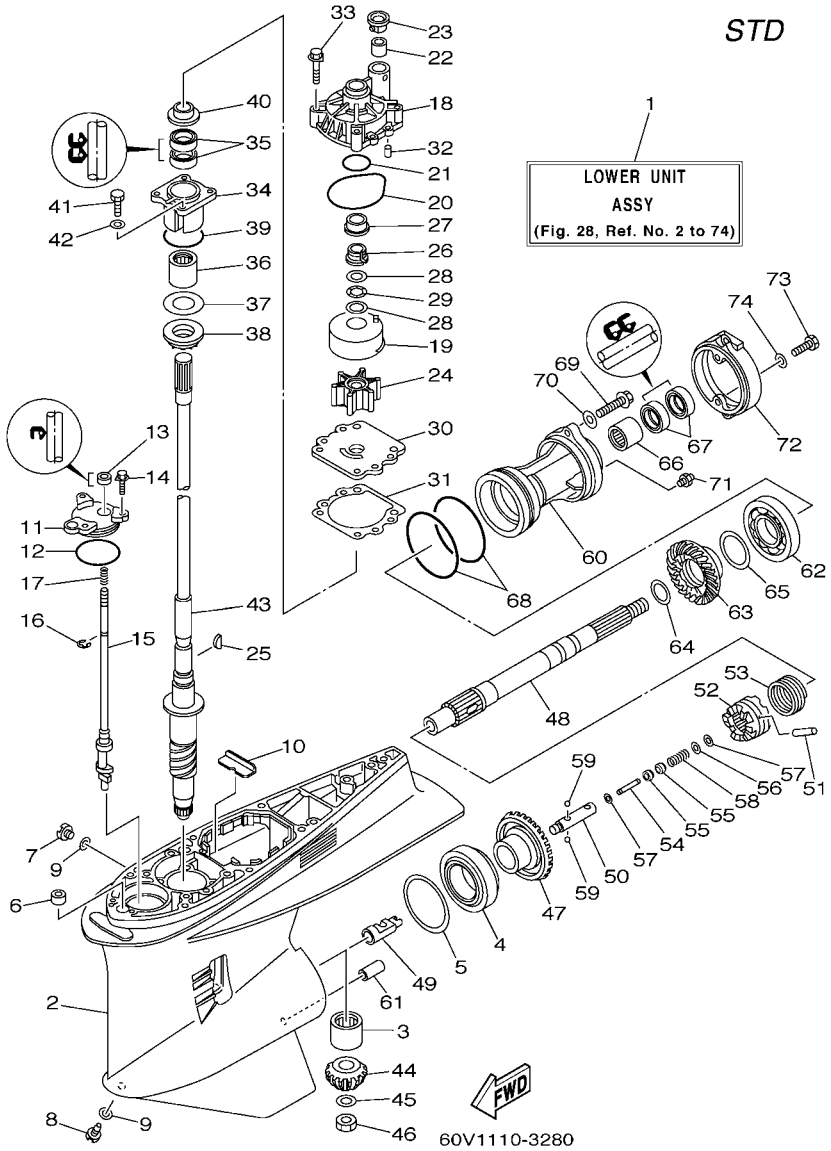

FIG. 28 LOWER CASING & DRIVE 1 BOITIER D'HELICE TRANSMISSION1

REF. NO.	PART NO. N° PIECES	DESCRIPTION DESCRIPTION	60V3	60W3				REMARKS REMARQUES
1	60V–45300–20–8D	LOWER UNIT ASSY UNITE INFERIEURE (ENS.)	1					X X
2	60V–45301–00–8D	CASING, LOWER BEQUILLE	1					
3	93311–83280	BEARING ROULEMENT	1					
4	93332–000W1	BEARING ROULEMENT	1					
5	61A–45567–00	SHIM (T:0.10MM) CALE (T:0.10MM)	1					UR UR
	61A–45567–10	SHIM (T:0.12MM) CALE (T:0.12MM)	1					UR UR
	61A–45567–20	SHIM (T:0.15MM) CALE (T:0.15MM)	1					UR UR
	61A–45567–30	SHIM (T:0.18MM) CALE (T:0.18MM)	1					UR UR
	61A–45567–40	SHIM (T:0.30MM) CALE (T:0.30MM)	1					UR UR
	61A–45567–50	SHIM (T:0.40MM) CALE (T:0.40MM)	1					UR UR
	61A–45567–60	SHIM (T:0.50MM) CALE (T:0.50MM)	1					UR UR
6	663–44366–00	DAMPER, WATER SEAL JOINT, TUBE D'EAU	1					
7	90340–08002	PLUG, STRAIGHT SCREW PLOT, FILETE DROIT	1					
8	688–45341–10	PLUG, DRAIN BOUCHON DE VIDANGE	1					
9	90430–08020	GASKET JOINT	2					
10	61A–45376–00–94	GUIDE, SEAL DAMPER BUTEE, JOINT CAOUTCHOUC	1					
11	61A–45321–01	PLATE PLAQUETTE	1					
12	93210–64488	O-RING JOINT TORIQUE	1					
13	93106–09014	OIL SEAL JOINT SPY	1					
14	90119–06M10	BOLT, WITH WASHER BOULON, AVEC RONDELLE	3					
15	60V–44150–00	SHIFT CAM ASSY CAME D'INVERSION	1					
16	99001–08600	CIRCLIP CIRCLIP	1					
17	90501–11M10	SPRING, COMPRESSION RESSORT, COMPRESSION	1					
18	61A–44311–01	HOUSING, WATER PUMP CORPS, POMPE A EAU	1					
19	61A–44322–02	INSERT, CARTRIDGE CUVETTE	1					
20	93210–86M38	O-RING JOINT TORIQUE	1					
21	93210–37160	O-RING JOINT TORIQUE	1					

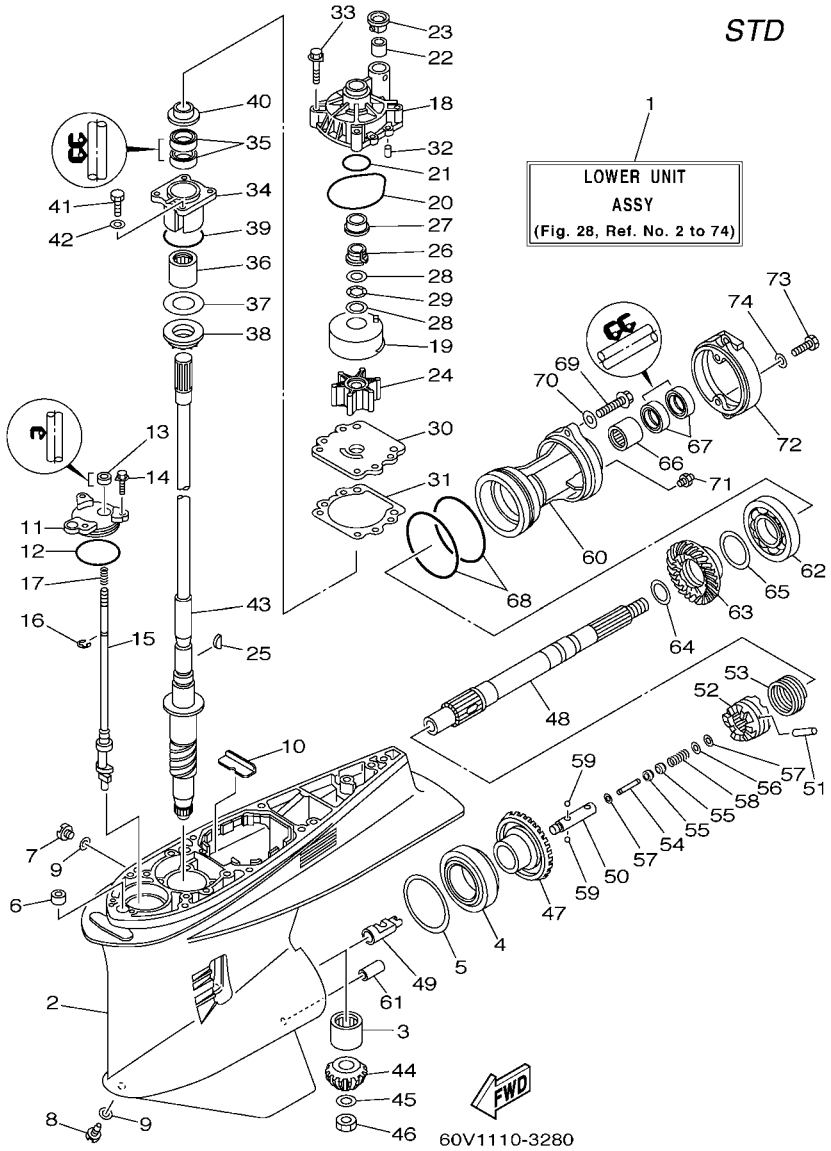

FIG. 28 LOWER CASING & DRIVE 1 BOITIER D'HELICE TRANSMISSION1

REF. NO.	PART NO. N° PIECES	DESCRIPTION DESCRIPTION	60V3	60W3				REMARKS REMARQUES
22	6E5–44365–00	DAMPER, WATER SEAL JOINT, TUBE D'EAU	1					
23	6E5–44312–00	COVER, WATER PUMP HOUSING COUVERCLE	1					
24	6E5–44352–01	IMPELLER TURBINE	1					
25	90280–04M05	KEY, WOODRUFF CLAVETTE, DEMI-LUNE	1					
26	61A–45538–00	SPACER 1 ENTRETOISE	1					
27	61A–45527–00	COLLAR, DRIVE SHAFT ENTRETOISE	1					
28	90201–22M01	WASHER, PLATE RONDELLE, PLATE	2					
29	90206–22M19	WASHER, WAVE RONDELLE, ONDULEE	1					
30	6G5–44323–00	OUTER PLATE, CARTRIDGE PLAQUE EXTERIEURE	1					
31	6E5–44315–A0	GASKET, WATER PUMP JOINT, POMPE A EAU	1					
32	93606–12019	PIN, DOWEL GOUPILLE	2					
33	90119–08M14	BOLT, WITH WASHER BOULON, AVEC RONDELLE	4					
34	61A–45331–00–94	HOUSING, BEARING FLASQUE, ROULEMENT	1					
35	93101–28M16	OIL SEAL JOINT SPY	2					
36	93317–330U2	BEARING ROULEMENT	1					
37	61A–45587–00	SHIM (T:0.10MM) CALE (T:0.10MM)	1					UR UR
	61A–45587–10	SHIM (T:0.12MM) CALE (T:0.12MM)	1					UR UR
	61A–45587–20	SHIM (T:0.15MM) CALE (T:0.15MM)	1					UR UR
	61A–45587–30	SHIM (T:0.18MM) CALE (T:0.18MM)	1					UR UR
	61A–45587–40	SHIM (T:0.30MM) CALE (T:0.30MM)	1					UR UR
	61A–45587–50	SHIM (T:0.40MM) CALE (T:0.40MM)	1					UR UR
	61A–45587–60	SHIM (T:0.50MM) CALE (T:0.50MM)	1					UR UR
38	93341–930U9	BEARING CERVEAUX DE DIRECTION	1					
39	93210–55M14	O-RING JOINT TORIQUE	1					
40	6E5–45344–00	COVER, OIL SEAL FLASQE, JOINT D'HUILE	1					
41	97095–08025	BOLT BOULON	4					
42	92995–08600	WASHER RONDELLE	4					

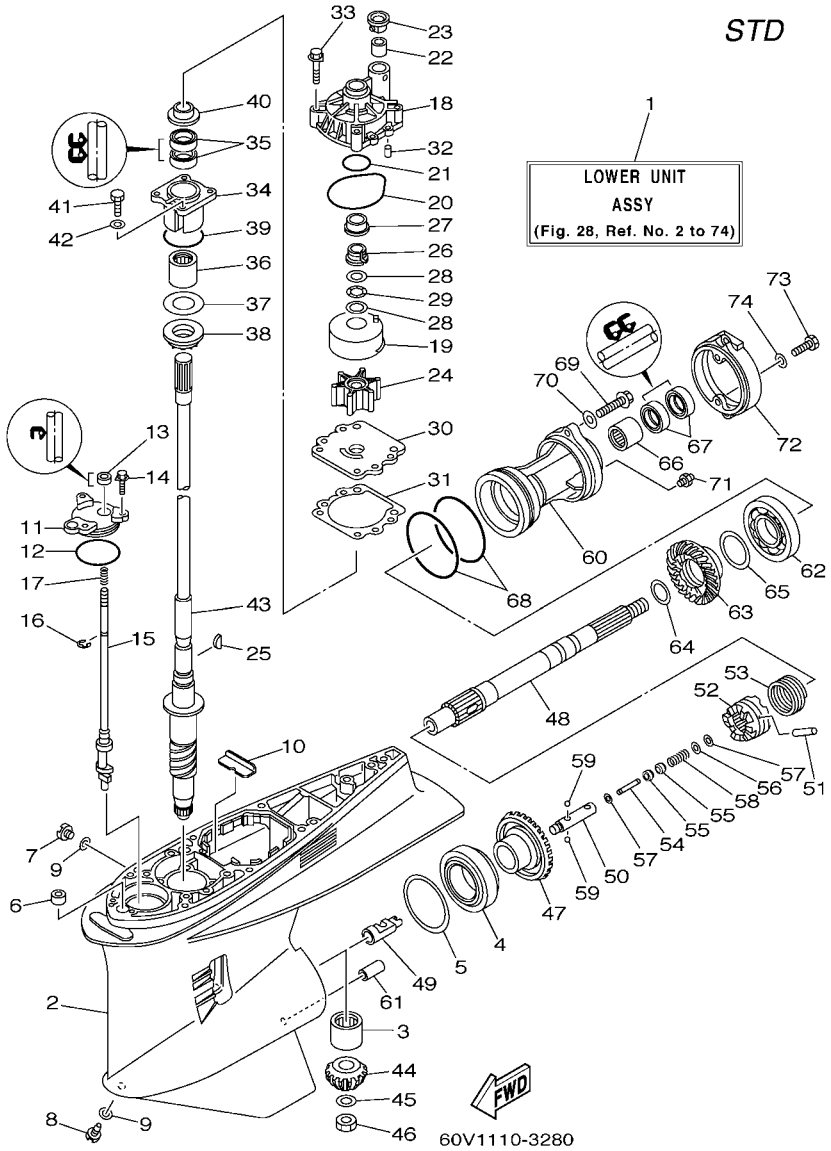

FIG. 28 LOWER CASING & DRIVE 1 BOITIER D'HELICE TRANSMISSION1

REF. NO.	PART NO. N° PIECES	DESCRIPTION DESCRIPTION	60V3	60W3				REMARKS REMARQUES
43	60V–45501–20	DRIVE SHAFT COMP. ARBRE MOTEUR COMP.	1					X X
44	60V–45551–00	PINION (16T) PIGNON D'ATTAQUE (16D)	1					
45	90201–16M00	WASHER, PLATE RONDELLE, PLATE	1					
46	90170–16M19	NUT ECROU	1					
47	60V–45560–00	GEAR 1 (29T) PIGNON 1 (29T)	1					
48	60V–45611–00	SHAFT, PROPELLER ARBRE, HELICE	1					
49	61A–45641–02	SHIFTER EMBRAYAGE	1					
50	61A–45634–01	SLIDE, SHIFT CONTRE-POUSSOIR	1					
51	61A–45632–00	PIN, CROSS GOUPILLE DE CRABOT	1					
52	60V–45631–00	CLUTCH, DOG CRABOT	1					
53	61A–45633–00	RING, CROSS PIN JONC, GOUPILLE CRABOT	1					
54	6H1–45668–00	SHAFT, FREE AXE	1					
55	61A–45635–00	PLUNGER, SHIFT POUSSOIR D'EMBRAYAGE	2					
56	90201–02M00	WASHER, PLATE RONDELLE, PLATE	1					
57	90183–02M03	NUT, SPRING ECROU, RESSORT	2					
58	90501–10M77	SPRING, COMPRESSION RESSORT, COMPRESSION	1					
59	93501–04011	BALL BILLE	2					
60	60V–45332–00–94	HOUSING, BEARING FLASQUE, ROULEMENT	1					
61	99590–10114	PIN, DOWEL GOUJON, D'ASSEMBLAGE	1					
62	93306–210U0	BEARING ROULEMENT	1					
63	61A–45571–00	GEAR 2 (29T) PIGNON 2 (29T)	1					
64	90201–31M00	WASHER, PLATE RONDELLE, PLATE	1					
65	61A–45577–00	SHIM (T:0.10MM) CALE (T:0.10MM)	1					UR UR
	61A–45577–10	SHIM (T:0.12MM) CALE (T:0.12MM)	1					UR UR
	61A–45577–20	SHIM (T:0.15MM) CALE (T:0.15MM)	1					UR UR
	61A–45577–30	SHIM (T:0.18MM) CALE (T:0.18MM)	1					UR UR
	61A–45577–40	SHIM (T:0.30MM) CALE (T:0.30MM)	1					UR UR

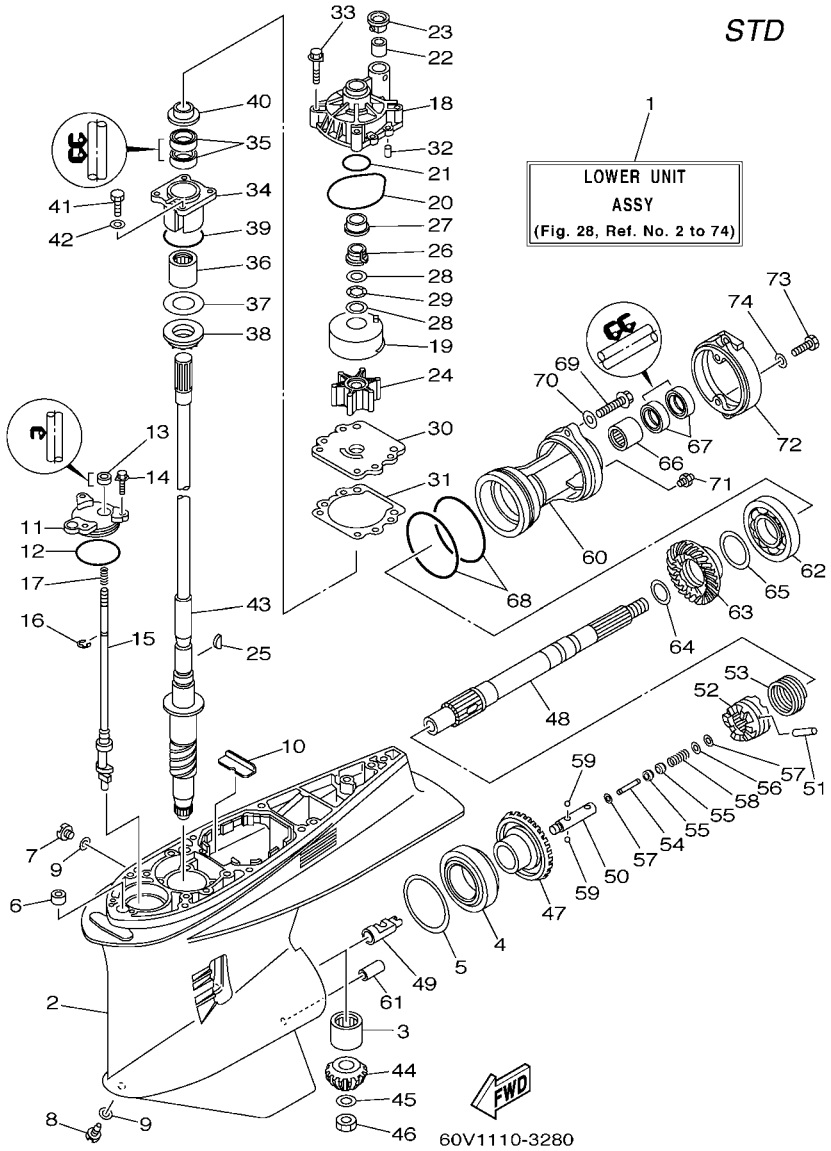

FIG. 28 LOWER CASING & DRIVE 1 BOITIER D'HELICE TRANSMISSION1

REF. NO.	PART NO. N° PIECES	DESCRIPTION DESCRIPTION	60V3	60W3				REMARKS REMARQUES
65	61A–45577–50	SHIM (T:0.40MM) CALE (T:0.40MM)	1					UR UR
	61A–45577–60	SHIM (T:0.50MM) CALE (T:0.50MM)	1					UR UR
66	93315–43061	BEARING ROULEMENT	1					
67	93101–30M17	OIL SEAL JOINT SPY	2					
68	93211–04384	O-RING JOINT TORIQUE	2					
69	90105–08049	BOLT, FLANGE BOULON	2					
70	90201–08023	WASHER, PLATE RONDELLE, PLATE	2					
71	93700–09M00	NIPPLE, GREASE PION	1					
72	69J–45361–00–8D	CAP, LOWER CASING COUVERCLE, BOITIER D'HELICE	1					
73	97095–08020	BOLT BOULON	2					
74	92995–08600	WASHER RONDELLE	2					

FIG. 29 LOWER CASING & DRIVE 2 BOITIER D'HELICE TRANSMISSION2

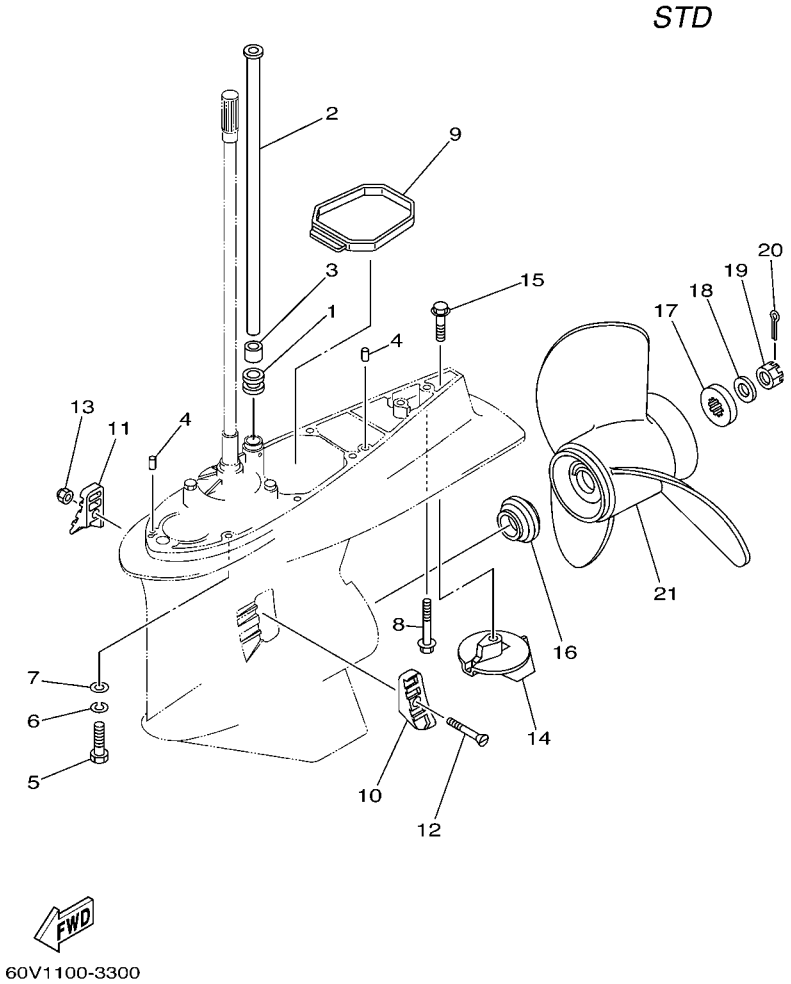

REF. NO.	PART NO. N° PIECES	DESCRIPTION DESCRIPTION	60V3	60W3				REMARKS REMARQUES
1	6E5–44366–00	DAMPER, WATER SEAL JOINT, TUBE D'EAU	1					
2	61A–44361–20	TUBE, WATER TUBE D'EAU	1					X X
3	6E5–44365–00	DAMPER, WATER SEAL JOINT, TUBE D'EAU	1					
4	93608–12M05	PIN, DOWEL AXE	2					
5	97095–10045	BOLT BOULON	7					
6	92995–10100	WASHER RONDELLE	7					
7	92995–10600	WASHER RONDELLE	7					
8	90119–10MA2	BOLT, WITH WASHER BOULON, AVEC RONDELLE	1					
9	61A–45375–00	DAMPER, SEAL BOURRELET, CAOUTCHOUC	1					
10	61A–45214–10	COVER, WATER INLET GRILLE, ENTREE D'EAU	1					
11	61A–45215–10	COVER, WATER INLET GRILLE, ENTREE D'EAU	1					
12	90152–05003	SCREW, COUNTERSUNK VIS, TETE NOYEE	1					
13	90185–05002	NUT, SELF-LOCKING ECROU, AUTO-BLOQUANT	1					
14	69L–45371–00	TAB-TRIM ANODE DERIVE	1					
15	90105–10M00	BOLT, FLANGE BOULON	1					
16	69J–45987–00	SPACER ENTRETOISE	1					
17	688–45997–01	SPACER ENTRETOISE	1					
18	92990–18200	WASHER RONDELLE, PLATE	1					
19	90171–18M04	NUT, CASTLE ECROU, CRENELE	1					
20	91490–40030	PIN, COTTER GOUPILLE	1					
21	6G5–45970–02–98	PROPELLER (3X15-1/4"X15"-M) HELICE (3X15-1/4"X15"-M)	1					UR UR
	6G5–45972–02–98	PROPELLER (3X13-3/4"X21"-M) HELICE (3X13-3/4"X21"-M)	1					UR UR
	6G5–45974–03–98	PROPELLER (3X13-3/4"X19"-M2) HELICE (3X13-3/4"X19"-M2)	1					UR UR
	6G5–45978–03–98	PROPELLER (3X13-3/4"X17"-M2) HELICE (3X13-3/4"X17"-M2)	1					UR UR
	61A–45972–00–98	PROPELLER (3X14-1/2"X21"-T) HELICE (3X14-1/2"X21"-T)	1					UR UR
	61A–45974–00–98	PROPELLER (3X14-1/2"X19"-T) HELICE (3X14-1/2"X19"-T)	1					UR UR
	61A–45978–00–98	PROPELLER (3X15"X17"-T) HELICE (3X15"X17"-T)	1					UR UR

FIG. 29 LOWER CASING & DRIVE 2 BOITIER D'HELICE TRANSMISSION2

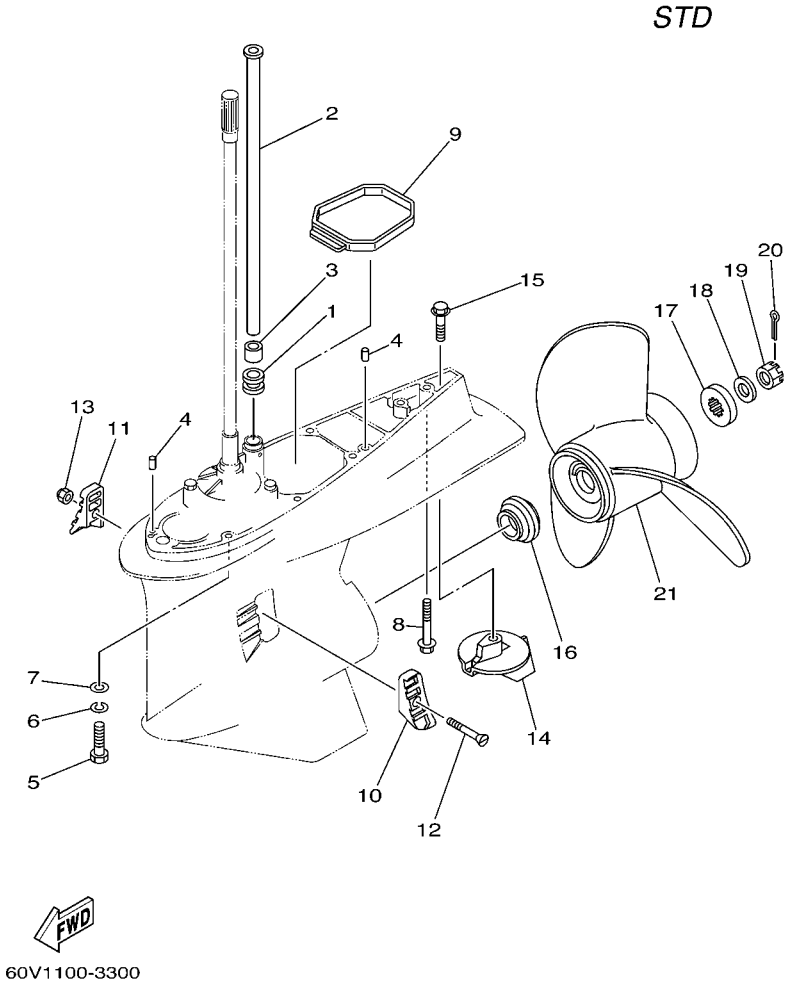

REF. NO.	PART NO. N° PIECES	DESCRIPTION DESCRIPTION	60V3	60W3				REMARKS REMARQUES
21	6R4–45970–A0	PROPELLER (3X15-1/4"X19"-M) HELICE (3X15-1/4"X19"-M)	1					UR UR
	6R4–45972–A0	PROPELLER (3X14-7/8"X21"-M) HELICE (3X14-7/8"X21"-M)	1					UR UR
	6R4–45974–A0	PROPELLER (3X14-1/2"X23"-M) HELICE (3X14-1/2"X23"-M)	1					UR UR
	6R4–45976–A0	PROPELLER (3X14-1/2"X15"-M) HELICE (3X14-1/2"X15"-M)	1					UR UR
	6R4–45978–A0	PROPELLER (3X15-1/4"X17"-M) HELICE (3X15-1/4"X17"-M)	1					UR UR

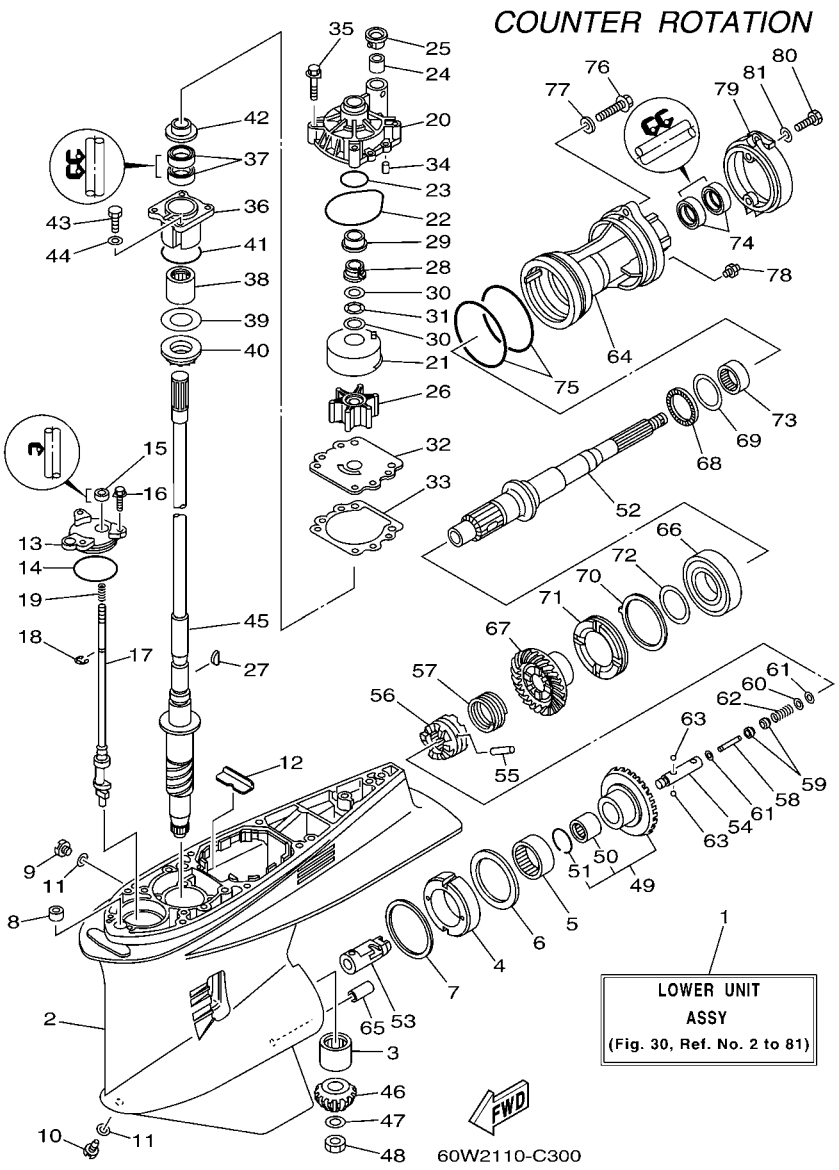

FIG. 30 LOWER CASING & DRIVE 3 BOITIER D'HELICE TRANSMISSION3

REF. NO.	PART NO. N° PIECES	DESCRIPTION DESCRIPTION	60V3	60W3				REMARKS REMARQUES
1	60W–45300–20–8D	LOWER UNIT ASSY UNITE INFERIEURE (ENS.)		1				X X
2	60V–45301–00–8D	CASING, LOWER BEQUILLE		1				
3	93311–83280	BEARING ROULEMENT		1				
4	61B–45538–01	SPACER 1 ENTRETOISE		1				
5	93315–660W3	BEARING ROULEMENT		1				
6	93341–670V0	BEARING CERVEAUX DE DIRECTION		1				
7	61A–45567–00	SHIM (T:0.10MM) CALE (T:0.10MM)		1				UR UR
	61A–45567–10	SHIM (T:0.12MM) CALE (T:0.12MM)		1				UR UR
	61A–45567–20	SHIM (T:0.15MM) CALE (T:0.15MM)		1				UR UR
	61A–45567–30	SHIM (T:0.18MM) CALE (T:0.18MM)		1				UR UR
	61A–45567–40	SHIM (T:0.30MM) CALE (T:0.30MM)		1				UR UR
	61A–45567–50	SHIM (T:0.40MM) CALE (T:0.40MM)		1				UR UR
	61A–45567–60	SHIM (T:0.50MM) CALE (T:0.50MM)		1				UR UR
8	663–44366–00	DAMPER, WATER SEAL JOINT, TUBE D'EAU		1				
9	90340–08002	PLUG, STRAIGHT SCREW PLOT, FILETE DROIT		1				
10	688–45341–10	PLUG, DRAIN BOUCHON DE VIDANGE		1				
11	90430–08020	GASKET JOINT		2				
12	61A–45376–00–94	GUIDE, SEAL DAMPER BUTEE, JOINT CAOUTCHOUC		1				
13	61A–45321–01	PLATE PLAQUETTE		1				
14	93210–64488	O-RING JOINT TORIQUE		1				
15	93106–09014	OIL SEAL JOINT SPY		1				
16	90119–06M10	BOLT, WITH WASHER BOULON, AVEC RONDELLE		3				
17	60W–44150–00	SHIFT CAM ASSY CAME D'INVERSION		1				
18	99001–08600	CIRCLIP CIRCLIP		1				
19	90501–11M10	SPRING, COMPRESSION RESSORT, COMPRESSION		1				
20	61A–44311–01	HOUSING, WATER PUMP CORPS, POMPE A EAU		1				
21	61A–44322–02	INSERT, CARTRIDGE CUVETTE		1				

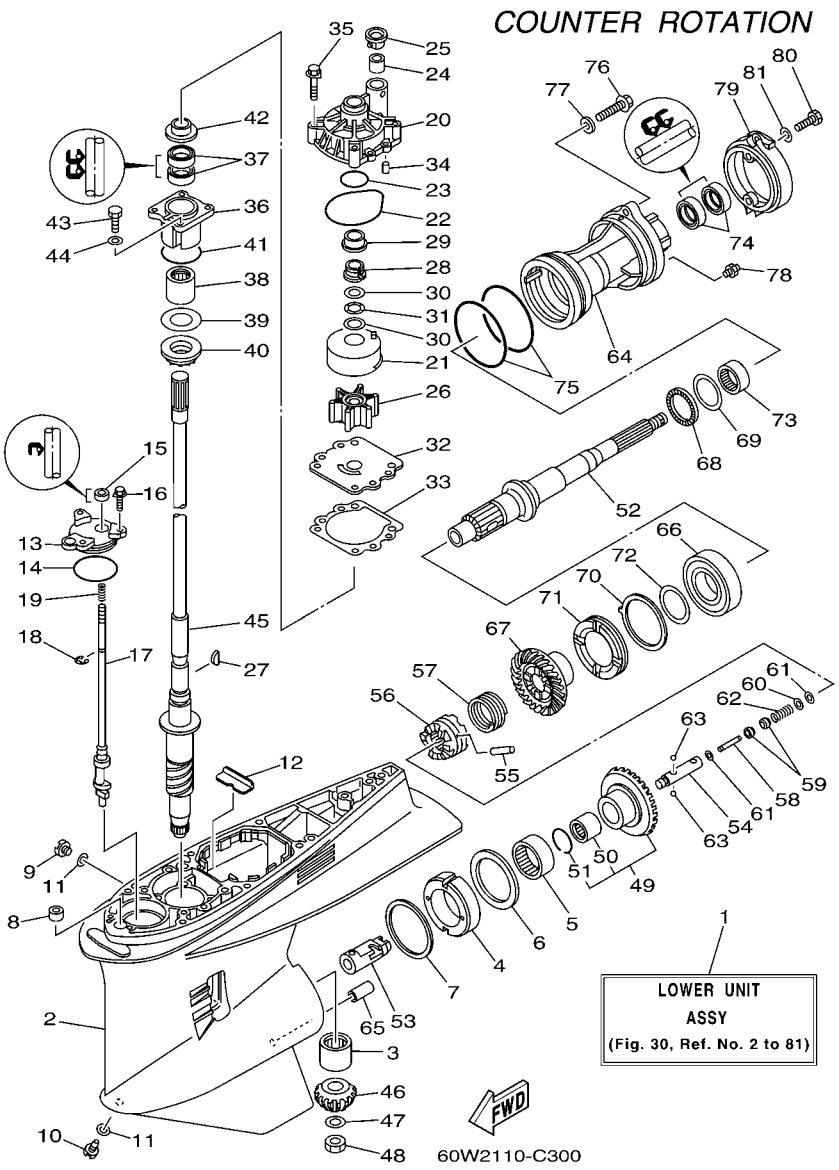

FIG. 30 LOWER CASING & DRIVE 3 BOITIER D'HELICE TRANSMISSION3

REF. NO.	PART NO. N° PIECES	DESCRIPTION DESCRIPTION	60V3	60W3				REMARKS REMARQUES
22	93210–86M38	O-RING JOINT TORIQUE		1				
23	93210–37160	O-RING JOINT TORIQUE		1				
24	6E5–44365–00	DAMPER, WATER SEAL JOINT, TUBE D'EAU		1				
25	6E5–44312–00	COVER, WATER PUMP HOUSING COUVERCLE		1				
26	6E5–44352–01	IMPELLER TURBINE		1				
27	90280–04M05	KEY, WOODRUFF CLAVETTE, DEMI-LUNE		1				
28	61A–45538–00	SPACER 1 ENTRETOISE		1				
29	61A–45527–00	COLLAR, DRIVE SHAFT ENTRETOISE		1				
30	90201–22M01	WASHER, PLATE RONDELLE, PLATE		2				
31	90206–22M19	WASHER, WAVE RONDELLE, ONDULEE		1				
32	6G5–44323–00	OUTER PLATE, CARTRIDGE PLAQUE EXTERIEURE		1				
33	6E5–44315–A0	GASKET, WATER PUMP JOINT, POMPE A EAU		1				
34	93606–12019	PIN, DOWEL GOUPILLE		2				
35	90119–08M14	BOLT, WITH WASHER BOULON, AVEC RONDELLE		4				
36	61A–45331–00–94	HOUSING, BEARING FLASQUE, ROULEMENT		1				
37	93101–28M16	OIL SEAL JOINT SPY		2				
38	93317–330U2	BEARING ROULEMENT		1				
39	61A–45587–00	SHIM (T:0.10MM) CALE (T:0.10MM)		1				UR UR
	61A–45587–10	SHIM (T:0.12MM) CALE (T:0.12MM)		1				UR UR
	61A–45587–20	SHIM (T:0.15MM) CALE (T:0.15MM)		1				UR UR
	61A–45587–30	SHIM (T:0.18MM) CALE (T:0.18MM)		1				UR UR
	61A–45587–40	SHIM (T:0.30MM) CALE (T:0.30MM)		1				UR UR
	61A–45587–50	SHIM (T:0.40MM) CALE (T:0.40MM)		1				UR UR
	61A–45587–60	SHIM (T:0.50MM) CALE (T:0.50MM)		1				UR UR
40	93341–930U9	BEARING CERVEAUX DE DIRECTION		1				
41	93210–55M14	O-RING JOINT TORIQUE		1				
42	6E5–45344–00	COVER, OIL SEAL FLASQE, JOINT D'HUILE		1				

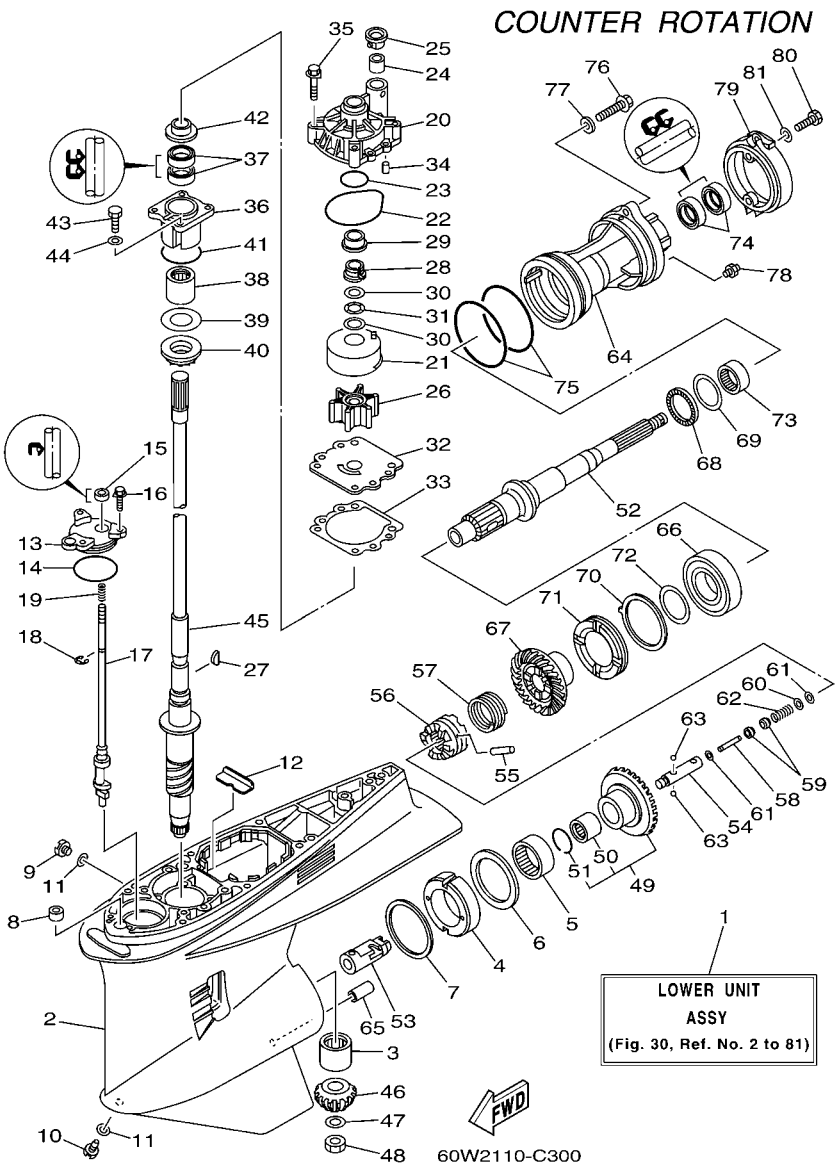

FIG. 30 LOWER CASING & DRIVE 3 BOITIER D'HELICE TRANSMISSION3

REF. NO.	PART NO. N° PIECES	DESCRIPTION DESCRIPTION	60V3	60W3				REMARKS REMARQUES
43	97095–08025	BOLT BOULON		4				
44	92995–08600	WASHER RONDELLE		4				
45	60V–45501–20	DRIVE SHAFT COMP. ARBRE MOTEUR COMP.		1				X X
46	60V–45551–00	PINION (16T) PIGNON D'ATTAQUE (16D)		1				
47	90201–16M00	WASHER, PLATE RONDELLE, PLATE		1				
48	90170–16M19	NUT ECROU		1				
49	60W–45560–01	GEAR 1 (29T) PIGNON 1 (29T)		1				
50	93317–62891	.BEARING .ROULEMENT		1				
51	93450–37097	.CIRCLIP .CIRCLIP, TYPE S		1				
52	69K–45611–00	SHAFT, PROPELLER ARBRE, HELICE		1				
53	61B–45641–01	SHIFTER EMBRAYAGE		1				
54	61A–45634–01	SLIDE, SHIFT CONTRE-POUSSOIR		1				
55	61A–45632–00	PIN, CROSS GOUPILLE DE CRABOT		1				
56	60V–45631–00	CLUTCH, DOG CRABOT		1				
57	61A–45633–00	RING, CROSS PIN JONC, GOUPILLE CRABOT		1				
58	6H1–45668–00	SHAFT, FREE AXE		1				
59	61A–45635–00	PLUNGER, SHIFT POUSSOIR D'EMBRAYAGE		2				
60	90201–02M00	WASHER, PLATE RONDELLE, PLATE		1				
61	90183–02M03	NUT, SPRING ECROU, RESSORT		2				
62	90501–10M77	SPRING, COMPRESSION RESSORT, COMPRESSION		1				
63	93501–04011	BALL BILLE		2				
64	60W–45332–00–94	HOUSING, BEARING FLASQUE, ROULEMENT		1				
65	99590–10114	PIN, DOWEL GOUJON, D'ASSEMBLAGE		1				
66	93332–00048	BEARING ROULEMENT		1				
67	60W–45571–00	GEAR 2 (29T) PIGNON 2 (29T)		1				
68	93341–440U5	BEARING CERVEAUX DE DIRECTION		1				
69	6K1–45578–01	SHIM (T:0.10MM) CALE (T:0.10MM)		1				UR UR

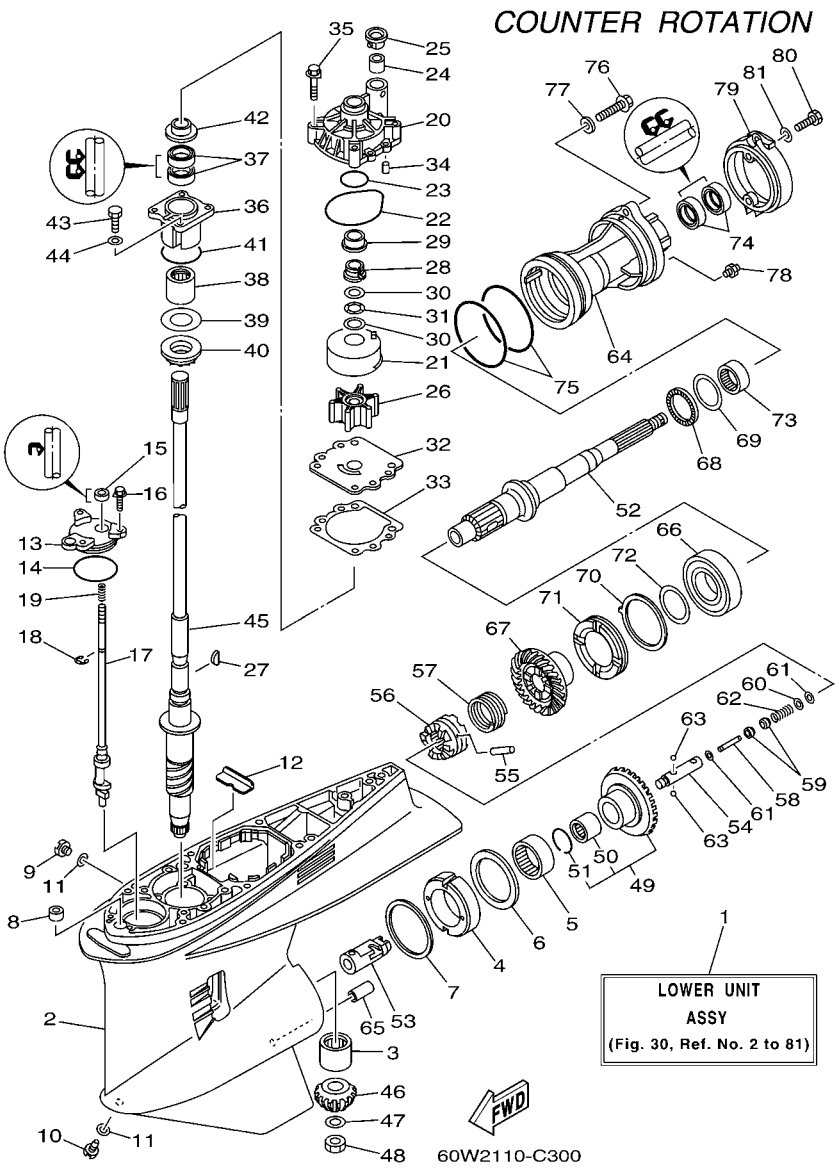

FIG. 30 LOWER CASING & DRIVE 3 BOITIER D'HELICE TRANSMISSION3

REF. NO.	PART NO. N° PIECES	DESCRIPTION DESCRIPTION	60V3	60W3				REMARKS REMARQUES
69	6K1–45578–10	SHIM (T:0.12MM) CALE (T:0.12MM)		1				UR UR
	6K1–45578–20	SHIM (T:0.15MM) CALE (T:0.15MM)		1				UR UR
	6K1–45578–30	SHIM (T:0.18MM) CALE (T:0.18MM)		1				UR UR
	6K1–45578–40	SHIM (T:0.30MM) CALE (T:0.30MM)		1				UR UR
	6K1–45578–50	SHIM (T:0.40MM) CALE (T:0.40MM)		1				UR UR
	6K1–45578–60	SHIM (T:0.50MM) CALE (T:0.50MM)		1				UR UR
70	61B–45383–00	WASHER, CLAW FREIN D'ECROU		1				
71	69K–45384–00	NUT ECROU		1				
72	69K–45577–00	SHIM (T:0.10MM) CALE (T:0.10MM)		1				UR UR
	69K–45577–10	SHIM (T:0.12MM) CALE (T:0.12MM)		1				UR UR
	69K–45577–20	SHIM (T:0.15MM) CALE (T:0.15MM)		1				UR UR
	69K–45577–30	SHIM (T:0.18MM) CALE (T:0.18MM)		1				UR UR
	69K–45577–40	SHIM (T:0.30MM) CALE (T:0.30MM)		1				UR UR
	69K–45577–50	SHIM (T:0.40MM) CALE (T:0.40MM)		1				UR UR
	69K–45577–60	SHIM (T:0.50MM) CALE (T:0.50MM)		1				UR UR
73	93315–43061	BEARING ROULEMENT		1				
74	93101–30M17	OIL SEAL JOINT SPY		2				
75	93211–04384	O-RING JOINT TORIQUE		2				
76	90105–08049	BOLT, FLANGE BOULON		2				
77	90201–08023	WASHER, PLATE RONDELLE, PLATE		2				
78	93700–09M00	NIPPLE, GREASE PION		1				
79	69J–45361–00–8D	CAP, LOWER CASING COUVERCLE, BOITIER D'HELICE		1				
80	97095–08020	BOLT BOULON		2				
81	92995–08600	WASHER RONDELLE		2				

FIG. 31 LOWER CASING & DRIVE 4 BOITIER D'HELICE TRANSMISSION4

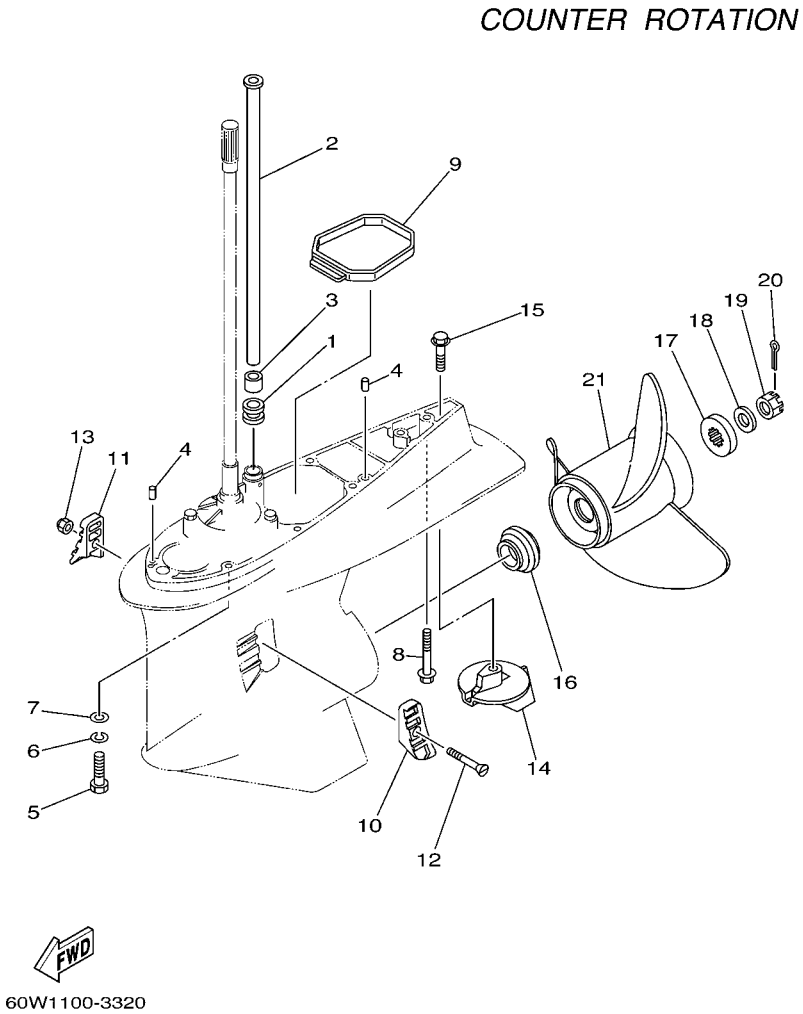

REF. NO.	PART NO. N° PIECES	DESCRIPTION DESCRIPTION	60V3	60W3				REMARKS REMARQUES
1	6E5–44366–00	DAMPER, WATER SEAL JOINT, TUBE D'EAU		1				
2	61A–44361–20	TUBE, WATER TUBE D'EAU		1				X X
3	6E5–44365–00	DAMPER, WATER SEAL JOINT, TUBE D'EAU		1				
4	93608–12M05	PIN, DOWEL AXE		2				
5	97095–10045	BOLT BOULON		7				
6	92995–10100	WASHER RONDELLE		7				
7	92995–10600	WASHER RONDELLE		7				
8	90119–10MA2	BOLT, WITH WASHER BOULON, AVEC RONDELLE		1				
9	61A–45375–00	DAMPER, SEAL BOURRELET, CAOUTCHOUC		1				
10	61A–45214–10	COVER, WATER INLET GRILLE, ENTREE D'EAU		1				
11	61A–45215–10	COVER, WATER INLET GRILLE, ENTREE D'EAU		1				
12	90152–05003	SCREW, COUNTERSUNK VIS, TETE NOYEE		1				
13	90185–05002	NUT, SELF-LOCKING ECROU, AUTO-BLOQUANT		1				
14	69L–45371–00	TAB-TRIM ANODE DERIVE		1				
15	90105–10M00	BOLT, FLANGE BOULON		1				
16	69J–45987–00	SPACER ENTRETOISE		1				
17	688–45997–01	SPACER ENTRETOISE		1				
18	92990–18200	WASHER RONDELLE, PLATE		1				
19	90171–18M04	NUT, CASTLE ECROU, CRENELE		1				
20	91490–40030	PIN, COTTER GOUPILLE		1				
21	6K1–45970–01–98	PROPELLER (3X15-1/4"X15"-ML) HELICE (3X15-1/4"X15"-ML)		1				UR UR
	6K1–45972–01–98	PROPELLER (3X13-3/4"X21"-ML) HELICE (3X13-3/4"X21"-ML)		1				UR UR
	6K1–45974–02–98	PROPELLER (3X13-3/4"X19"-ML1) HELICE (3X13-3/4"X19"-ML1)		1				UR UR
	6K1–45978–02–98	PROPELLER (3X13-3/4"X17"-ML1) HELICE (3X13-3/4"X17"-ML1)		1				UR UR
	61B–45972–00–98	PROPELLER (3X14-1/2"X21"-TL) HELICE (3X14-1/2"X21"-TL)		1				UR UR
	61B–45974–00–98	PROPELLER (3X14-1/2"X19"-TL) HELICE (3X14-1/2"X19"-TL)		1				UR UR
	61B–45978–00–98	PROPELLER (3X15"X17"-TL) HELICE (3X15"X17"-TL)		1				UR UR

FIG. 31 LOWER CASING & DRIVE 4 BOITIER D'HELICE TRANSMISSION4

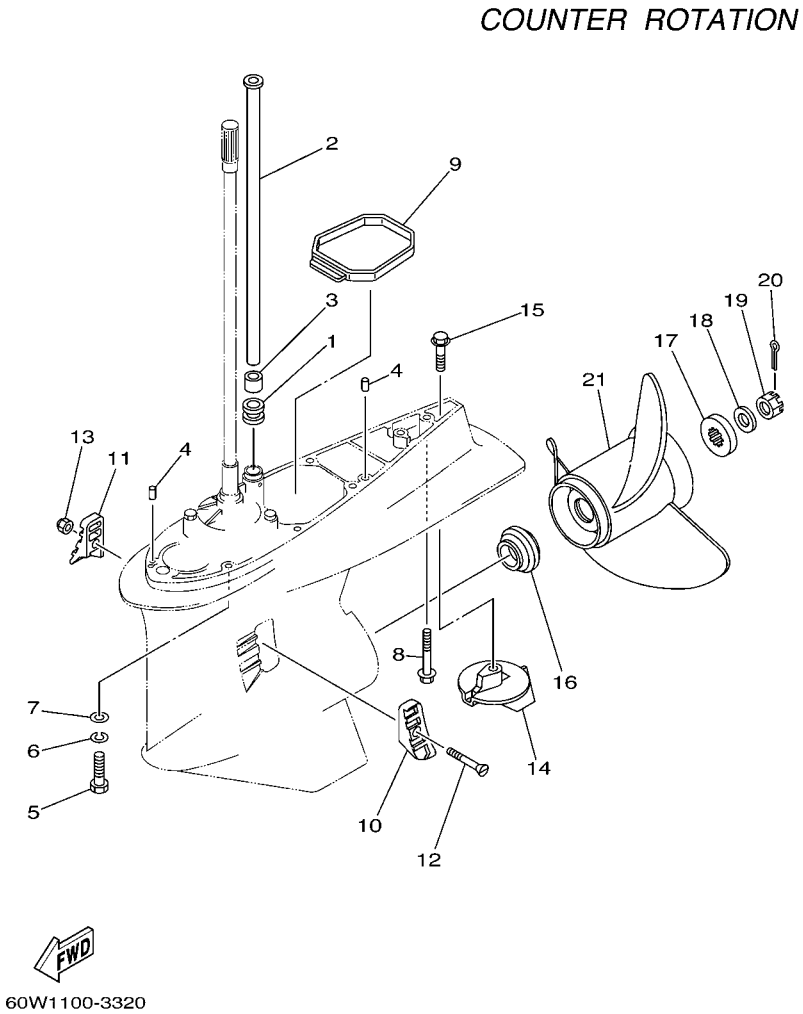

REF. NO.	PART NO. N° PIECES	DESCRIPTION DESCRIPTION	60V3	60W3				REMARKS REMARQUES
21	6R1–45970–A0	PROPELLER (3X15-1/4"X19"-ML) HELICE (3X15-1/4"X19"-ML)		1				UR UR
	6R1–45972–A0	PROPELLER (3X14-7/8"X21"-ML) HELICE (3X14-7/8"X21"-ML)		1				UR UR
	6R1–45974–A0	PROPELLER (3X14-1/2"X23"-ML) HELICE (3X14-1/2"X23"-ML)		1				UR UR
	6R1–45976–A0	PROPELLER (3X15-1/4"X15"-ML) HELICE (3X15-1/4"X15"-ML)		1				UR UR
	6R1–45978–A0	PROPELLER (3X15-1/4"X17"-ML) HELICE (3X15-1/4"X17"-ML)		1				UR UR

FIG. 32 STEERING GUIDE ATTACHMENT 1 DIRECTION GUIDE ACCESSOIRE 1

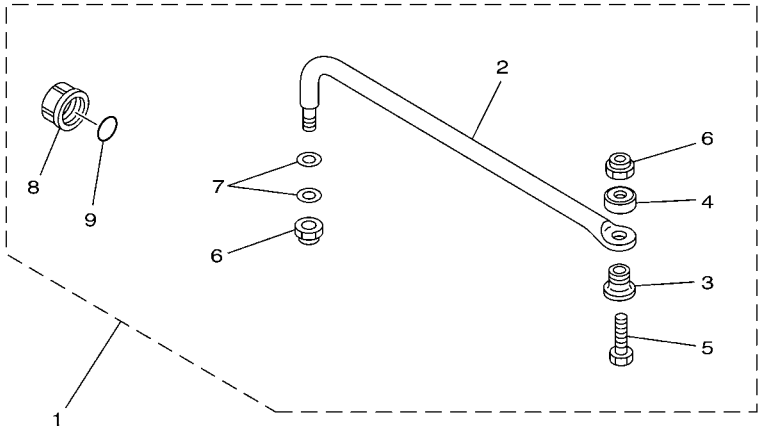

67H0100-9290

REF. NO.	PART NO. N° PIECES	DESCRIPTION DESCRIPTION	60V3	60W3				REMARKS REMARQUES
1	6E5–61350–02	STEERING GUIDE ATTACHMENT KIT FIXATIONS DE DIRECTION	1					AP AP
2	6E5–61351–01	.ROD, STEERING LINK .RENVOI DE DIRECTION	1					
3	90387–10M61	.COLLAR .COLLERETTE	1					
4	90560–12M01	.SPACER .ENTRETOISE	1					
5	6E5–61355–00	.BOLT .BOULON	1					
6	90185–09M01	.NUT, SELF-LOCKING .ECROU, AUTO-BLOQUANT	2					
7	90201–10M20	.WASHER, PLATE .RONDELLE, PLATE	2					
8	6E5–43145–01	.CAP, CLAMP BRACKET .CAPUCHON, PRESSE	1					
9	93210–16275	.O-RING .JOINT TORIQUE	1					

FIG. 33 STEERING GUIDE ATTACHMENT 2 DIRECTION GUIDE ACCESSOIRE 2

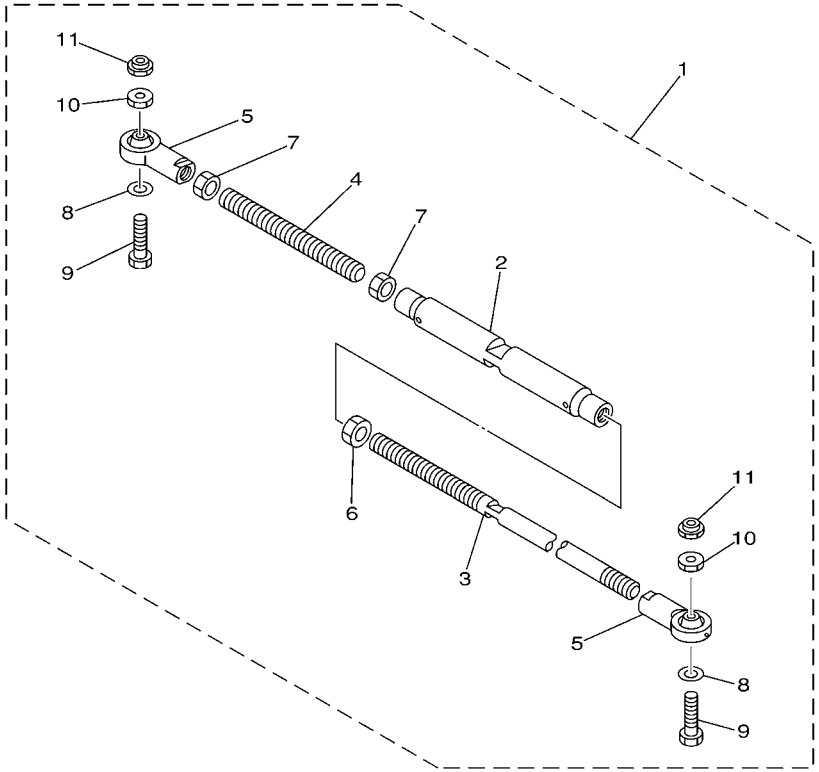

67H0100-0300

REF. NO.	PART NO. N° PIECES	DESCRIPTION DESCRIPTION	60V3	60W3				REMARKS REMARQUES
1	6E5–61301–01	TWIN KIT (L:600-800MM) JUMELE KIT (L:600-800MM)		1				AP AP
2	6E5–61313–00	.ADJUSTER .TENDEUR		1				
3	6E5–61311–11	.TIE BAR .BARRE D'ACCOUPLEMENT		1				
4	6E5–61315–00	.TIE BAR .BARRE D'ACCOUPLEMENT		1				
5	6E5–61303–00	.STEERING EYE COMP. .AXE COMP.		2				
6	90170–14M06	.NUT .ECROU		1				
7	95380–14700	.NUT .ECROU		2				
8	90201–10M76	.WASHER, PLATE .RONDELLE, PLATE		2				
9	90101–09M70	.BOLT .BOULON		2				
10	90170–09M05	.NUT .ECROU		2				
11	90185–09M01	.NUT, SELF-LOCKING .ECROU, AUTO-BLOQUANT		2				

FIG. 34 REMOTE CONTROL BOX BOITIER DE COMMANDE A DISTANCE

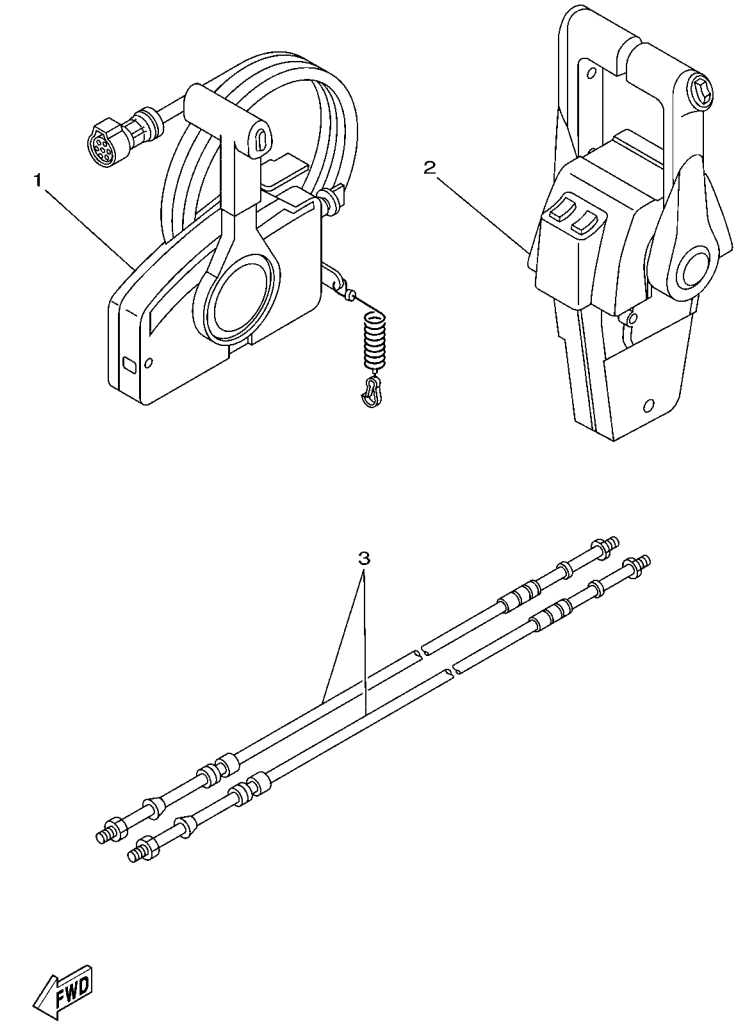

REF. NO.	PART NO. N° PIECES	DESCRIPTION DESCRIPTION	60V3	60W3				REMARKS REMARQUES
1	703–48205–17	REMOTE CONTROL ASSY (10P) BOITIER DE COMMANDE A DISTANCE	1					AP WITH PT/T SW. AP WITH PT/T SW.
2	704–48207–P0	REMOTE CONTROL ASSY BOITIER DE COMMANDE A DISTANCE		1				AP WITH PT/T SW. AP WITH PT/T SW.
3	701–48320–50	CABLE, REMOTE CONTROL L=15F CABLE, COMMANDE A DISTANCE:15F	2	2				UR UR
	701–48320–60	CABLE, REMOTE CONTROL L=16F CABLE, COMMANDE A DISTANCE:16F	2	2				UR UR
	701–48320–80	CABLE, REMOTE CONTROL L=17F CABLE, COMMANDE A DISTANCE:17F	2	2				UR UR
	701–48350–00	CABLE, REMOTE CONTROL L=21F CABLE, COMMANDE A DISTANCE:21F	2	2				UR UR
	701–48350–20	CABLE, REMOTE CONTROL L=23F CABLE, COMMANDE A DISTANCE:23F	2	2				UR UR

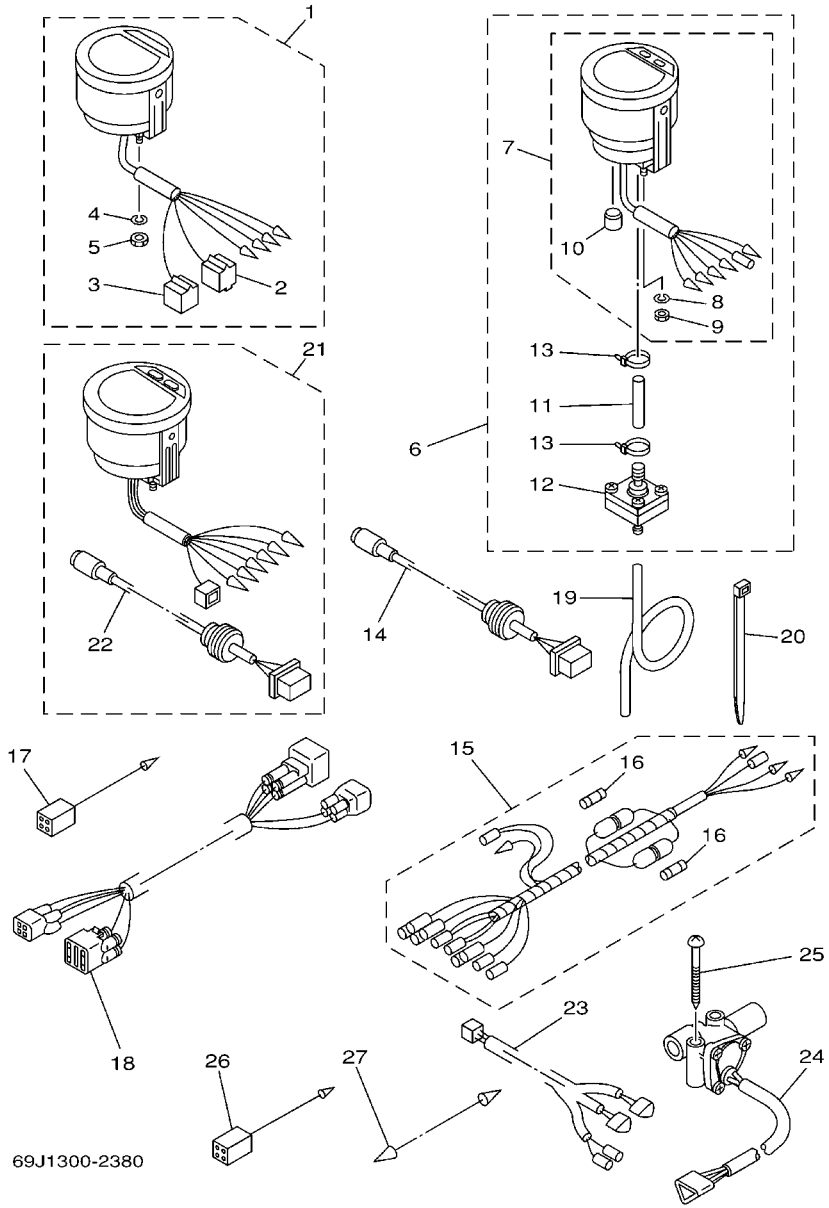

FIG. 35 METER COMPTEUR

REF. NO.	PART NO. N° PIECES	DESCRIPTION DESCRIPTION	60V3	60W3				REMARKS REMARQUES
1	6Y5–8350T–03	TACHOMETER ASSY COMPTE-TOURS CPLT	1	1				AP AP
2	9E450–04433	.CONNECTOR .CONNECTEUR	1	1				M-4-W M-4-W
3	9E450–04533	.CONNECTOR .CONNECTEUR	1	1				F-4-W F-4-W
4	92990–04100	.WASHER, SPRING .RONDELLE, GROWER	2	2				
5	95380–04600	.NUT .ECROU	2	2				
6	6Y5–83500–S5	DIGITAL SPEEDOMETER ASSY TACHYMETRE NUMERIQUE CPLT.	1					AP AP
7	6Y5–83570–S5	.SPEEDOMETER ASSY .COMPTEUR DE VITESSE CPLT	1					
8	92990–04100	..WASHER, SPRING ..RONDELLE, GROWER	2					
9	95380–04600	..NUT ..ECROU	2					
10	6Y5–83533–T2	..GROMMET ..RONDELLE CAOUTCHOUC	1					
11	6Y5–83557–31	.TUBE .TUBE	1					
12	6Y5–83728–00	.CONNECTOR ASSY .CONNEXION COMPLET	1					
13	90465–11M10	.CLAMP .BRIDE	2					
14	6Y5–87122–S0	CORD ASSY 1 COPDON COMPLET	1					AP AP
15	6Y5–83553–M0	WIRE, LEAD FIL	1					AP AP
	6Y5–83553–00	WIRE, LEAD FIL		1				AP AP
16	1E6–82151–00	.FUSE (10A) .FUSIBLE (10A)	2					FOR 6Y5-83553-M0 FOR 6Y5-83553-M0
	1E6–82151–00	.FUSE (10A) .FUSIBLE (10A)		1				FOR 6Y5-83553-00 FOR 6Y5-83553-00
17	6Y5–82117–00	WIRE, LEAD (BLACK) FIL (NOIR)	1					AP AP
18	68F–82553–80	EXTENSION, WIRE LEAD EXTENSION, FAISCEAU	1					AP AP
	68F–82553–90	EXTENSION, WIRE LEAD EXTENSION, FAISCEAU		1				AP AP
19	6Y5–83557–10	TUBE (8M) TUBE (8M)	1					AP AP
20	90465–11M10	CLAMP BRIDE	2					AP AP
21	6Y5–8350F–00	FUEL MANAGEMENT METER COMPT. DE GESTION DU CARBURANT		1				AP AP
22	6Y5–87122–S0	.CORD ASSY 1 .COPDON COMPLET		1				
23	6Y5–83553–F1	WIRE, LEAD FIL		1				AP AP
24	6Y5–85752–01	SENDER UNIT ASSY, FUEL METER PERCEPTION DE JAUGE A ESSENCE		2				AP AP

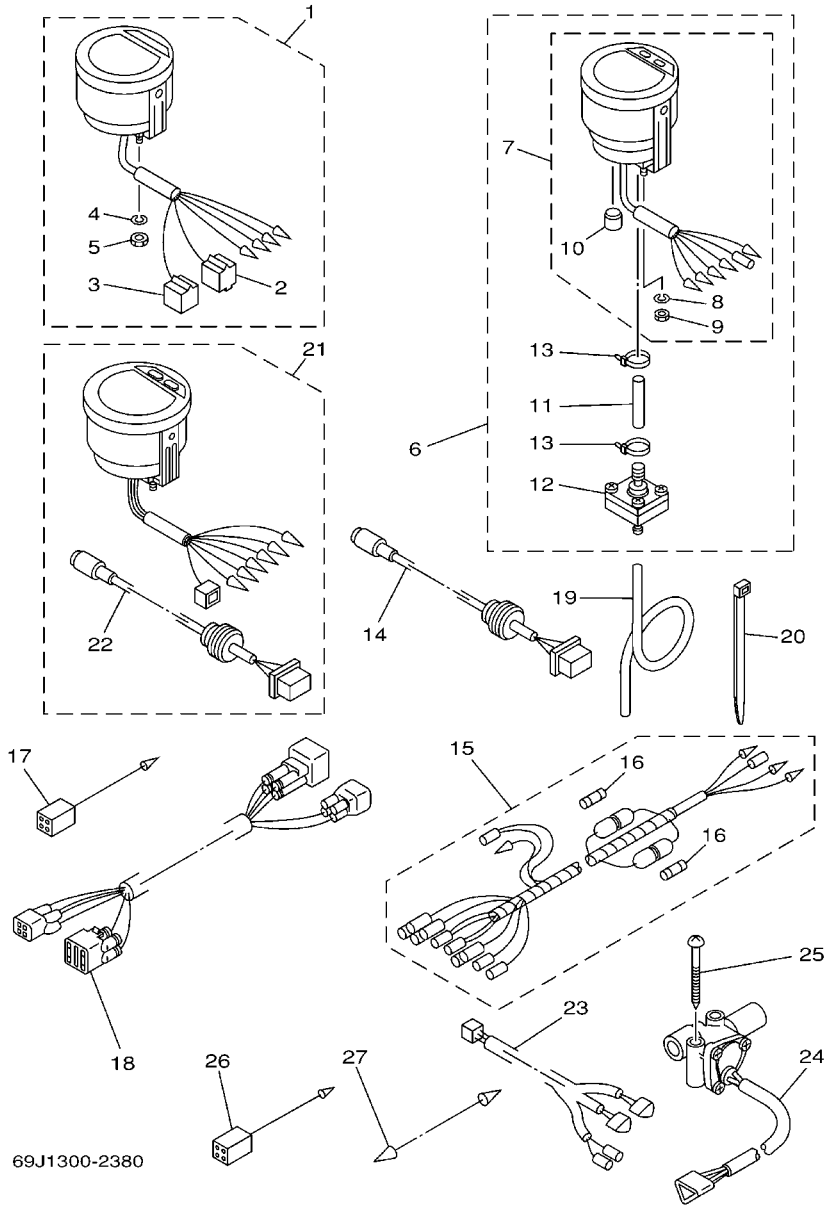

FIG. 35 METER COMPTEUR

REF. NO.	PART NO. N° PIECES	DESCRIPTION DESCRIPTION	60V3	60W3				REMARKS REMARQUES
25	90158–06002	SCREW, WOOD VIS, A BOIS		4				AP AP
26	6Y5–82117–00	WIRE, LEAD (BLACK) FIL (NOIR)		1				AP AP
27	703–82531–00	WIRE, LEAD FIL		1				AP AP

FIG. 36 SWITCH & PANEL — TABLEAU DE CONTACTEUR

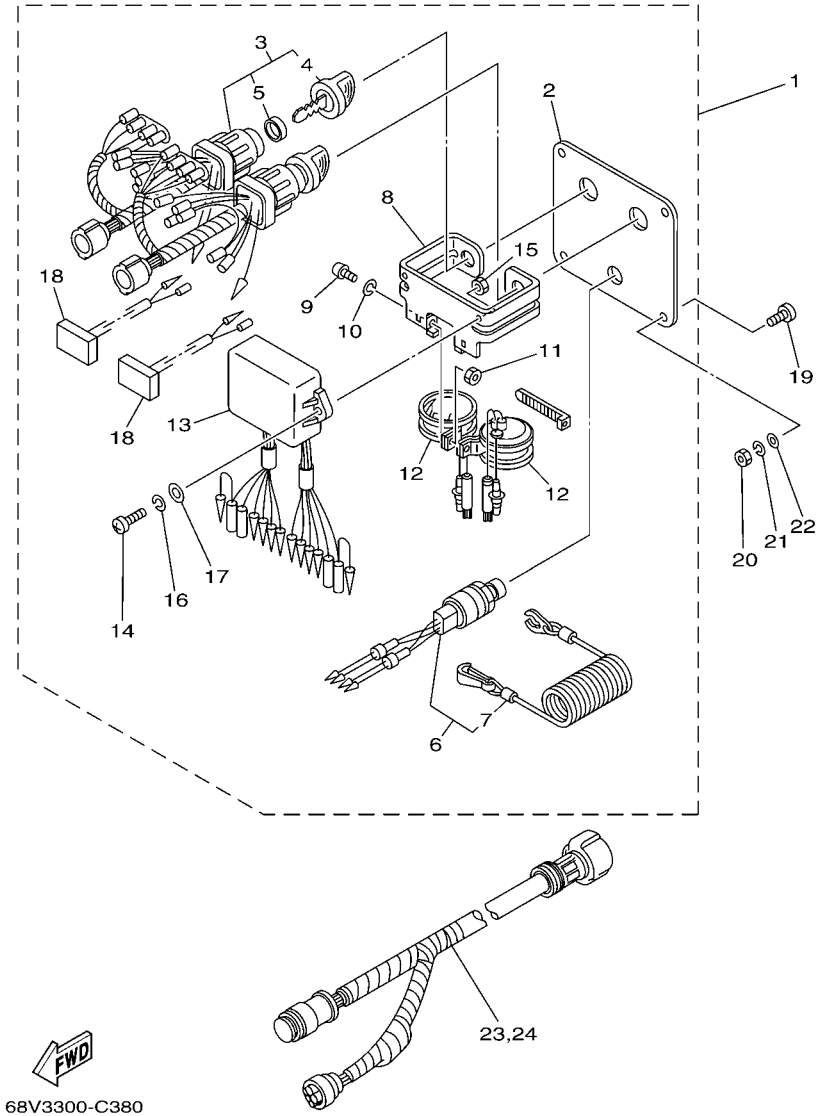

REF. NO.	PART NO. N° PIECES	DESCRIPTION DESCRIPTION	60V3	60W3				REMARKS REMARQUES
1	6K1–82570–08	PANEL SWITCH ASSY PLATINE D'INTERRUPEUR CPLT		1				AP AP
2	6K1–82571–02	.PANEL, SWITCH .TABLEAU, CONTACTEUR		1				
3	6K1–82510–06	.MAIN SWITCH ASSY .CONTACTEUR A CLEF COMPLET		2				
4	703–82577–00	..CAP, KEY ..CABOCHON		1				
5	6K1–82532–00	..CAP ..COUVERCLE		1				
6	6K1–82575–00	.ENGINE STOP SWITCH ASSY .COUPE CIRCUIT CPLT		1				
7	682–82556–00	..STOPPER ..PLAQUETTE		1				
8	6K1–83614–01	.BRACKET .SUPPORT		1				
9	98980–05010	.SCREW, BIND .VIS, DE PRESSION		2				
10	92990–05100	.WASHER, SPRING .RONDELLE, GROWER		2				
11	95380–05600	.NUT .ECROU		2				
12	688–83383–11	.BUZZER .RONFLEUR		2				
13	6K1–85830–01	.CONTROL UNIT ASSY .BLOC DE CONTROLE		1				
14	98980–06020	.SCREW, BIND .VIS, DE PRESSION		2				
15	95380–06600	.NUT, HEXAGON .ECROU		2				
16	92990–06100	.WASHER, SPRING .RONDELLE, GROWER		2				
17	92990–06600	.WASHER, PLATE .RONDELLE, PLATE		2				
18	6K1–81980–00	.DIODE ASSY .REDRESSEUR 2		2				
19	90149–05M05	SCREW VIS		4				AP AP
20	95380–05600	NUT ECROU		4				AP AP
21	92990–05100	WASHER, SPRING RONDELLE, GROWER		4				AP AP
22	92990–05600	WASHER, PLATE RONDELLE, PLATE		4				AP AP
23	6K1–8258A–40	EXTENSION, WIRE HARNESS EXTENSION, FAISCEAU DE FILS		1				AP AP
24	61B–8258A–01	EXTENSION, WIRE HARNESS EXTENSION, FAISCEAU DE FILS		1				AP AP

FIG. 37 REPAIR KIT 1 — KITS DE REPARATION 1

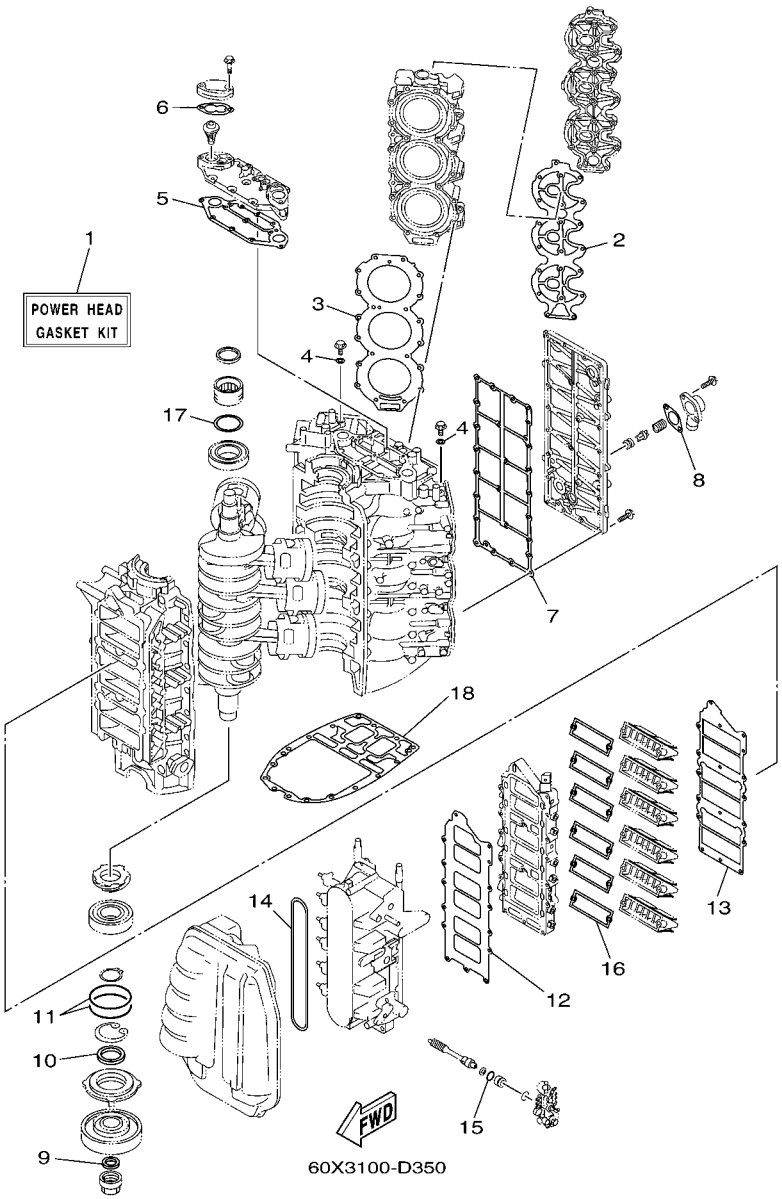

REF. NO.	PART NO. N° PIECES	DESCRIPTION DESCRIPTION	60V3	60W3				REMARKS REMARQUES
1	60V–W0001–01	POWER HEAD GASKET KIT POCHETTE DE JINTS TETE MOTRICE	1	1				
2	60V–11193–00	.GASKET, HEAD COVER 1 .JOINT, COUVERCLE DE CULASSE 1	2	2				
3	60V–11181–00	.GASKET, CYLINDER HEAD 1 .JOINT, DE CULASSE 1	2	2				
4	90430–14115	.GASKET .JOINT	2	2				
5	60V–11381–00	.GASKET 1 .JOINT 1	1	1				
6	60V–12414–A0	.GASKET, COVER .JOINT, COUVERCLE	2	2				
7	60V–41112–00	.GASKET, EXHAUST INNER COVER .JOINT, PLAQUE D'ECHAPPEMENT	1	1				
8	60V–11382–A0	.GASKET 2 .JOINT 2	1	1				
9	93104–22M07	.OIL SEAL .JOINT SPY	1	1				
10	93103–40011	.OIL SEAL .JOINT SPY	1	1				
11	93210–85M32	.O-RING .JOINT TORIQUE	2	2				
12	60V–13646–00	.GASKET, MANIFOLD 2 .JOINT, TUBULURE 2	1	1				
13	60V–13645–00	.GASKET, MANIFOLD 1 .JOINT, TUBULURE 1	1	1				
14	60V–14476–00	.SEAL .JOINT SPY	1	1				
15	93210–18MA9	.O-RING .JOINT TORIQUE	1	1				
16	60V–13621–A0	.GASKET, VALVE SEAT .JOINT, SIEGE DE CLAPET	6	6				
17	60V–11479–00	.GASKET .JOINT	1	1				
18	60V–45113–01	.GASKET, UPPER CASING .JOINT, TUBE D'ARBRE	1	1				

FIG. 38 REPAIR KIT 2 — KITS DE REPARATION 2

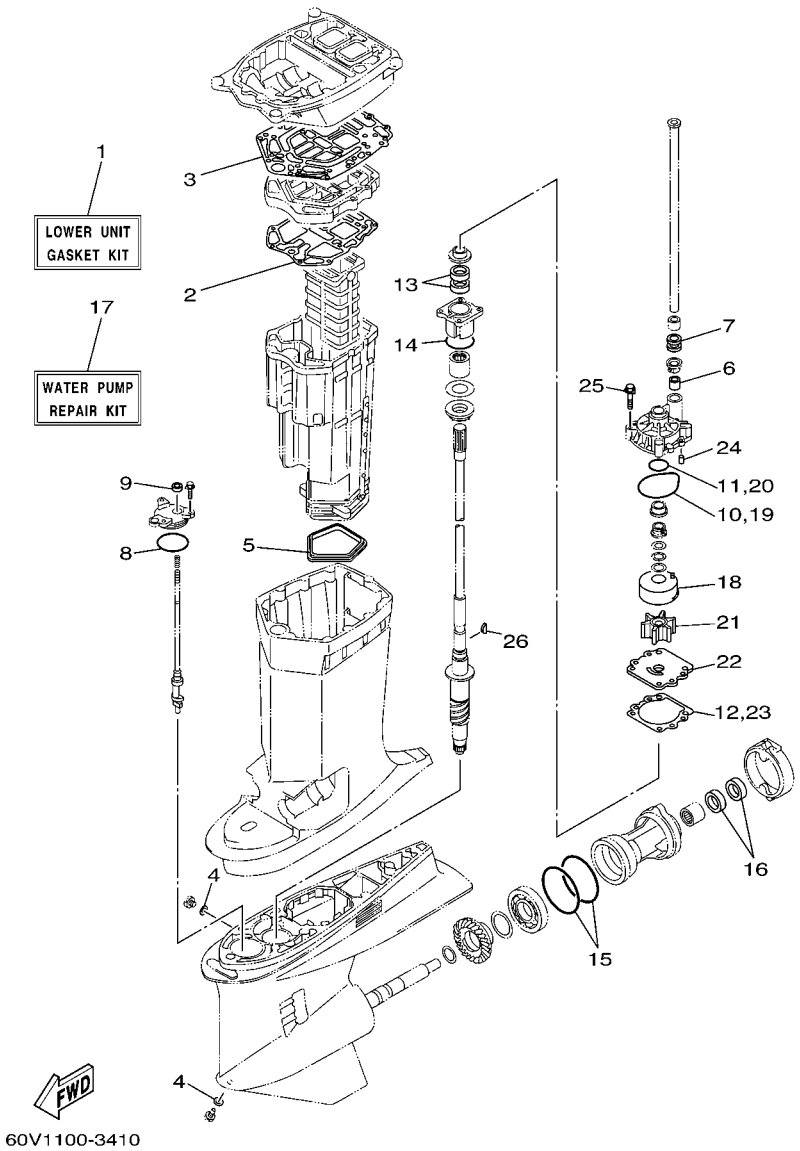

REF. NO.	PART NO. N° PIECES	DESCRIPTION DESCRIPTION	60V3	60W3				REMARKS REMARQUES
1	60V–W0001–20	LOWER UNIT GASKET KIT POCHETTE DE JOINTS EMBASE	1	1				
2	61A–41134–A0	.GASKET, EXHAUST MANIFOLD .JOINT, PIPE D'ECHAPPEMENT	1	1				
3	60V–45114–00	.GASKET, UPPER CASING .JOINT, TUBE D'ARBRE	1	1				
4	90430–08020	.GASKET .JOINT	2	2				
5	61A–45123–01	.GASKET, MUFFLER .JOINT, POT DE DETENTE	1	1				
6	6E5–44365–00	.DAMPER, WATER SEAL .JOINT, TUBE D'EAU	1	1				
7	6E5–44366–00	.DAMPER, WATER SEAL .JOINT, TUBE D'EAU	1	1				
8	93210–64488	.O-RING .JOINT TORIQUE	1	1				
9	93106–09014	.OIL SEAL .JOINT SPY	1	1				
10	93210–86M38	.O-RING .JOINT TORIQUE	1	1				
11	93210–37160	.O-RING .JOINT TORIQUE	1	1				
12	6E5–44315–A0	.GASKET, WATER PUMP .JOINT, POMPE A EAU	1	1				
13	93101–28M16	.OIL SEAL .JOINT SPY	2	2				
14	93210–55M14	.O-RING .JOINT TORIQUE	1	1				
15	93211–04384	.O-RING .JOINT TORIQUE	2	2				
16	93101–30M17	.OIL SEAL .JOINT SPY	2	2				
17	61A–W0078–A3	WATER PUMP REPAIR KIT KIT DE REPARATION DE LA POMPE	1	1				
18	61A–44322–02	.INSERT, CARTRIDGE .CUVETTE	1	1				
19	93210–86M38	.O-RING .JOINT TORIQUE	1	1				
20	93210–37160	.O-RING .JOINT TORIQUE	1	1				
21	6E5–44352–01	.IMPELLER .TURBINE	1	1				
22	6G5–44323–00	.OUTER PLATE, CARTRIDGE .PLAQUE EXTERIEURE	1	1				
23	6E5–44315–A0	.GASKET, WATER PUMP .JOINT, POMPE A EAU	1	1				
24	93606–12019	.PIN, DOWEL .GOUPILLE	2	2				
25	90119–08M14	.BOLT, WITH WASHER .BOULON, AVEC RONDELLE	4	4				
26	90280–04M05	.KEY, WOODRUFF .CLAVETTE, DEMI-LUNE	1	1				

NUMERICAL INDEX
INDEX NUMERIQUE

PART NO. N° PIECES	REF. NO.
60V–11111–00–1S	4 – 1
68F–11119–00	4 – 13
	11 – 27
69J–1111E–00	4 – 35
60V–11121–00–1S	4 – 23
60V–11181–00	4 – 22
	37 – 3
60V–11191–00–1S	4 – 15
60V–11192–00–1S	4 – 37
60V–11193–00	4 – 16
	37 – 2
66M–11325–00	2 – 45
67F–11325–00	4 – 2
	5 – 7
60V–11325–01	2 – 26
60V–11327–00–94	4 – 5
	5 – 6
66M–11327–00–94	2 – 28
67F–11327–00–94	4 – 3
69J–11327–00–94	4 – 4
66M–11328–00	2 – 27
67F–11328–00	4 – 8
	5 – 10
60V–11369–00	11 – 14
60V–11370–00	2 – 5
650–11370–01	2 – 8
	11 – 15
6F6–11370–01	11 – 10
60V–11370–10	2 – 9
60V–11371–00–94	2 – 34
676–11372–00	5 – 2
6H1–11372–00	27 – 25
6G5–11372–00–1S	5 – 18
6E5–11372–01	2 – 3
60V–11379–00	11 – 9
60V–11381–00	2 – 38
	37 – 5
60V–11382–A0	5 – 17
	37 – 8
6D0–11411–00	3 – 1
61A–11447–00	3 – 2
60V–11479–00	3 – 5
	37 – 17
663–11518–01	2 – 11
61A–11536–00	3 – 8
68F–11536–00–94	6 – 13
61A–11537–00	12 – 21
68F–11537–00–94	6 – 18

PART NO. N° PIECES	REF. NO.
60V–11555–00	3 – 12
60V–11557–00	6 – 15
68F–11579–01–94	6 – 11
61A–11586–01	3 – 11
60V–11590–00	6 – 4
60V–11595–00	6 – 8
60V–11598–00–94	6 – 1
6D0–11603–01	3 – 21
6D0–11604–01	3 – 21
6D0–11605–01	3 – 21
6D0–11631–02–85	3 – 20
61A–11633–02	3 – 24
60X–11634–00	3 – 25
6D0–11635–02	3 – 20
6D0–11636–02	3 – 20
6D0–11642–02–85	3 – 22
6D0–11645–02	3 – 22
6D0–11646–02	3 – 22
69L–11650–00	3 – 26
60V–12113–00	6 – 6
60V–12170–00	9 – 1
60V–12171–00	9 – 8
68F–12173–00	9 – 4
68F–12223–00	9 – 6
68F–12228–00	9 – 9
60V–12411–00	2 – 40
60V–12413–00–1S	2 – 41
60V–12414–A0	2 – 42
	37 – 6
60H–12416–00	5 – 14
60V–12424–00	9 – 2
68F–12439–00	9 – 7
60V–12535–00	4 – 9
66M–12535–00	2 – 29
6R3–12572–00	21 – 64
60V–12576–00	21 – 51
61A–12576–00	5 – 20
60V–12578–00	21 – 52
6R3–12580–00	21 – 66
60V–12581–00	21 – 50
6G5–12581–00	2 – 25
60V–12588–00	21 – 53
68F–13100–00	12 – 34
61A–13117–00	12 – 23
68F–13133–00	12 – 39
60V–13161–00	10 – 6
68F–1316A–00	12 – 41
68F–1316F–00	12 – 38

PART NO. N° PIECES	REF. NO.
68F–1316G–00	12 – 40
60V–13171–00	10 – 7
6R3–13183–10	12 – 16
68F–13184–00	12 – 36
60V–1319K–00	12 – 45
60V–13200–11	12 – 1
61A–13411–00	13 – 5
6E5–13414–00	13 – 6
68F–13416–00	12 – 42
6G5–13416–00	12 – 6
68F–13418–00	12 – 35
68F–13434–00	1 – 32
68F–13440–00	12 – 37
67F–13448–00	1 – 26
6E5–13448–00	13 – 2
68F–13455–00	9 – 10
6R3–13471–00	12 – 2
60V–13473–00	9 – 34
68F–13473–00	9 – 11
6L2–13475–00	12 – 3
60V–13505–00	9 – 32
66K–13532–00	7 – 50
66K–13533–00	7 – 52
60V–13534–00	7 – 56
66K–13542–00	7 – 48
66K–13544–00	7 – 49
60V–13552–00	11 – 7
68F–13568–00	8 – 9
60V–13572–00	11 – 8
60V–13610–00	11 – 1
60V–13621–A0	11 – 3
	37 – 16
60V–13624–00–1S	11 – 6
60V–13645–00	11 – 18
	37 – 13
60V–13646–00	11 – 17
	37 – 12
60V–13716–00	10 – 38
60V–13751–00	8 – 1
60V–13761–00	10 – 11
68F–13764–00	10 – 34
68F–13767–00	10 – 1
68F–13781–00	7 – 24
60V–13782–00	10 – 3
68F–13815–10	9 – 27
68F–13816–10	9 – 29
68F–13843–00	7 – 33
68F–13844–00	7 – 25

PART NO. N° PIECES	REF. NO.
60V–13854–00	9 – 17
60V–13898–00	10 – 8
65L–13898–00	7 – 53
65L–13905–00	7 – 13
68F–13906–00	7 – 10
60V–13907–00	7 – 22
60V–13910–00	9 – 18
68F–13915–00	7 – 26
60V–13938–00	10 – 22
68F–13971–00	7 – 14
60V–13972–00	9 – 47
60V–13973–10	10 – 23
60V–13974–10	10 – 25
60V–13975–10	10 – 30
60V–13976–10	10 – 32
60V–13993–00	9 – 13
60W–13993–00	9 – 14
60V–14005–00	9 – 19
68F–1410B–00	10 – 12
65L–14125–00	7 – 9
60V–14126–00	9 – 20
65L–14147–00	7 – 34
60V–14148–00	9 – 35
60V–14149–00	9 – 41
65L–14159–00	7 – 23
60V–14163–00	7 – 12
65L–1416A–00	7 – 27
60V–14182–01	7 – 4
65L–14227–00	7 – 21
66K–14245–00	7 – 19
60V–14264–00	10 – 13
66K–14271–00	7 – 28
68F–14271–00	7 – 38
68F–14274–00	7 – 35
6A0–14325–00	14 – 40
66K–14325–01	7 – 11
65L–14334–00	8 – 4
65L–14397–00	7 – 39
60V–14440–00	11 – 23
60V–14476–00	11 – 24
	37 – 14
624–14485–00	2 – 4
68F–14485–00	12 – 44
60V–14488–00	15 – 21
65L–14523–00	8 – 5
65L–14527–00	8 – 2
65L–14546–00	7 – 5
66K–14548–01	7 – 7

PART NO. N° PIECES	REF. NO.
65L–14565–00	7 – 54
	8 – 3
	9 – 15
	10 – 14
65L–14573–00	8 – 17
65L–14578–00	8 – 8
65L–14579–00	8 – 18
6K5–14592–00	8 – 6
60V–14596–00	8 – 15
65L–14596–00	10 – 27
60V–14711–20–5B	27 – 31
6E5–14737–00	27 – 32
65L–14966–00	7 – 16
60V–14980–00	7 – 3
66K–14984–00	7 – 8
66K–14985–00	7 – 6
65L–14992–00	7 – 40
65L–14997–00	7 – 41
60V–15100–02–1S	2 – 2
61A–15315–00	22 – 45
6D0–15359–00–94	3 – 14
6A0–15789–00	24 – 21
61A–21708–20	13 – 19
6E5–21733–20	13 – 20
6E5–21734–01–33	13 – 35
6E5–21746–00	13 – 37
61A–21750–00	13 – 1
6E5–21770–03	13 – 21
6E5–21798–01–33	13 – 36
60V–23115–00	16 – 48
60V–23116–00	16 – 36
60V–23116–10	16 – 37
60V–2318U–00	16 – 38
60V–2318U–10	16 – 39
60V–24135–00	2 – 35
60V–2415E–60	21 – 72
65L–24169–00	7 – 46
60V–24176–00	9 – 23
60V–24178–00	9 – 22
60V–24198–00	16 – 32
60V–24198–10	16 – 33
60V–24216–00	7 – 1
60V–24251–00	7 – 18
646–24251–02	13 – 24
68F–24300–00	9 – 21
68F–24311–00	14 – 24
60V–24312–00	9 – 37
60V–24313–00	9 – 39

PART NO. N° PIECES	REF. NO.
61A–24313–00	14 – 1
6E5–24313–00	14 – 48
60V–24314–00	9 – 43
60V–24315–00	9 – 45
6E5–24315–00	14 – 29
6G5–24315–00	14 – 27
6G5–24316–10	14 – 47
60V–24319–00	12 – 31
6E5–24319–01	13 – 25
6E5–24321–01	13 – 29
6E5–24322–00	13 – 22
6E5–24323–00	13 – 15
60V–24339–01	7 – 55
68F–24356–00	9 – 38
60V–24375–01	7 – 42
66K–24376–00	7 – 36
6E5–24377–00	21 – 3
	27 – 2
6R3–24377–00	14 – 5
60V–24378–00	9 – 24
6E0–24378–00	2 – 24
6E5–24378–00	14 – 26
	21 – 54
6E5–24379–00	13 – 12
65L–24387–00	7 – 15
	9 – 36
60V–24397–01	7 – 43
6E5–24410–04	14 – 30
6E5–24411–01	14 – 35
6E5–24412–11	14 – 38
6E5–24413–01	14 – 32
6A0–24421–01	14 – 39
6E5–24423–00	14 – 37
648–24424–00	14 – 36
650–24431–A0	14 – 44
6E5–24435–01	14 – 34
6E5–24444–01	14 – 31
65L–24461–00	7 – 51
68F–24469–10	14 – 11
6E5–24471–01	14 – 33
6D0–24473–00	7 – 2
65L–24486–00	7 – 17
68F–24486–00	9 – 30
6E5–24486–00	14 – 43
66K–24489–00	7 – 37
6E5–24492–00	14 – 42
68F–24519–10	14 – 10
65L–24531–01	14 – 12

NUMERICAL INDEX
INDEX NUMERIQUE

PART NO. N° PIECES	REF. NO.
68F–24551–00	10 – 9
60H–24558–00	14 – 16
68F–24560–10	14 – 8
68F–24562–10	14 – 9
68F–24563–10	14 – 14
61A–24564–00	14 – 13
65L–24564–00	14 – 15
68F–24566–00	14 – 19
68F–24576–00	10 – 10
66K–24579–00	7 – 44
68F–24579–00	9 – 16
65L–24592–00	7 – 45
68F–2466A–10	9 – 28
	10 – 24
60V–24864–00	9 – 25
60V–2510T–00	9 – 26
68F–28100–00	14 – 56
67F–2812A–00	18 – 44
6A1–28176–00	21 – 73
6D0–28199–72–D0	14 – 57
6D0–28199–72–E0	14 – 57
6D0–28199–72–F0	14 – 57
6D0–28199–72–G0	14 – 57
6D0–28199–72–H0	14 – 57
6D0–28199–72–S0	14 – 57
6D0–28199–82–K0	14 – 58
6D0–28199–82–L0	14 – 58
6D0–28199–82–M0	14 – 58
6D0–28199–82–N0	14 – 58
6D0–28199–82–P0	14 – 58
6D0–28199–82–R0	14 – 58
61H–2819R–31	14 – 55
60V–41112–00	5 – 3
	37 – 7
60V–41113–00–94	5 – 1
60V–41131–02–5B	27 – 26
6D0–41132–00–5B	27 – 28
61A–41134–A0	27 – 29
	38 – 2
60V–41137–20–94	27 – 19
65L–41217–00	8 – 19
60V–41230–00	22 – 59
61A–41237–00	22 – 56
6H1–41237–00	12 – 28
6H4–41237–00	22 – 58
6R5–41237–00	12 – 25
65L–41241–10	12 – 26
60V–41267–00	5 – 4

PART NO. N° PIECES	REF. NO.
65L–41632–01	22 – 49
60V–42510–20–8D	24 – 1
624–42542–00	13 – 9
	15 – 18
	16 – 45
	18 – 18
60V–42610–00–8D	1 – 1
60V–42613–00–8D	1 – 11
60V–42615–01	21 – 20
60V–42621–00	1 – 12
60V–42626–00	1 – 27
60V–42626–10	1 – 28
60V–42637–00	1 – 30
60V–42637–10	1 – 31
68F–42647–01–94	1 – 2
68F–42648–01–94	1 – 3
60V–42651–01	1 – 7
60V–42652–00	1 – 8
60V–42662–00	1 – 20
68F–42663–00	1 – 6
60V–42664–00	1 – 14
60V–42677–00	1 – 21
60V–42678–00	1 – 25
60V–42681–00	1 – 23
60V–42682–00	1 – 24
60V–42687–00	1 – 16
60V–42710–01–8D	21 – 1
61A–42716–00	21 – 60
60V–42716–01	21 – 25
60V–42717–00	21 – 26
61A–42717–00	21 – 59
60V–42718–00	21 – 41
60V–42721–A0	21 – 40
69J–42723–00	17 – 23
60V–42723–00–5B	21 – 39
61A–42724–00	22 – 46
60V–42725–00	21 – 23
6H4–42726–00	21 – 63
688–42726–10	21 – 36
61A–42727–00	21 – 4
60V–42738–02–8D	21 – 24
60V–42738–10	21 – 29
64D–42738–10–5B	21 – 28
60V–42741–00–8D	21 – 43
69L–42744–00	22 – 64
60V–42747–00	21 – 22
6H4–42748–00	21 – 2
68F–42753–00	21 – 69

PART NO. N° PIECES	REF. NO.
60V–42756–00	21 – 44
6E5–42761–00–1S	2 – 52
60V–42771–00	21 – 56
60V–42774–00	21 – 61
68H–42791–01	21 – 71
61A–42791–S0	27 – 3
61A–42792–S0	27 – 4
60V–42815–00–8D	21 – 8
60V–42816–00–8D	21 – 9
60V–42817–00–8D	21 – 10
6D8–42818–00	21 – 12
68F–42818–01	21 – 11
68F–42828–01–94	21 – 5
68F–42828–10–94	21 – 6
69J–43111–01–8D	23 – 1
69J–43112–01–8D	23 – 14
6E5–43126–02	23 – 45
6R3–43131–00	23 – 21
61A–43132–00	23 – 12
61A–43133–00	23 – 15
64D–43144–00	21 – 17
6G5–43144–00	23 – 35
6E5–43145–01	32 – 8
6G5–43148–00	23 – 40
61A–43181–01	23 – 37
6G5–43185–02	23 – 38
61A–43311–21–8D	23 – 32
61A–43376–00	24 – 34
60V–43800–00–4D	25 – 1
6T4–43802–03	25 – 52
69J–43804–00	26 – 5
69J–43805–00	26 – 4
61A–43810–00	25 – 3
61A–43813–01	25 – 12
6H1–43814–00	25 – 11
6H1–43816–00	25 – 51
6H1–43817–00	25 – 18
61A–43818–00	25 – 16
61A–43820–10	25 – 64
61A–43821–00	25 – 61
61A–43822–00	25 – 60
69J–43828–00	25 – 20
6H1–43829–00	25 – 57
61A–4382A–00	25 – 73
61A–4382K–00	25 – 44
6T4–43830–00	25 – 43
6H1–43831–00	25 – 42
61A–43833–01	25 – 15

PART NO. N° PIECES	REF. NO.
61A–43835–01	25 – 14
61A–4383H–11	25 – 68
61A–43840–01	25 – 2
6T4–43841–00	25 – 55
6T4–43844–00	25 – 46
61A–43845–00	25 – 32
61A–43847–00	25 – 35
61A–43848–00	25 – 30
6T4–43849–00	25 – 39
61A–4384F–00	25 – 41
6T4–4384G–00	25 – 47
61A–4384H–10	25 – 69
61A–4384J–00	25 – 26
61A–4384K–00	25 – 25
61A–4384L–00	25 – 22
6T4–43851–00	25 – 23
61A–43854–00	25 – 31
6T4–43855–00	25 – 48
6H1–43856–10	25 – 45
61A–4385H–00	25 – 40
61A–43861–00	25 – 4
69J–43861–00	26 – 6
6H1–43861–00	25 – 7
61A–43864–00	25 – 66
6H1–43866–00	25 – 53
6H1–43867–00	25 – 54
6H1–43869–00	25 – 21
69J–4386K–00	26 – 10
61A–43871–00	25 – 5
6H1–43872–00	25 – 8
61A–43874–00	25 – 65
61A–43875–00	25 – 29
6H1–43875–00	25 – 33
6T4–43875–01	25 – 59
61A–43875–10	25 – 67
61A–43876–00	25 – 70
6T4–43876–00	25 – 36
61A–43878–00	25 – 58
69J–43880–00	25 – 74
	26 – 1
69J–43881–00	26 – 11
69J–43882–00	26 – 8
69J–43886–00	26 – 7
69J–43888–00	25 – 13
69J–43891–00	26 – 9
6T4–43893–00	25 – 71
6T4–43895–00	25 – 49
61A–4389H–00	25 – 9

PART NO. N° PIECES	REF. NO.
61A–44112–00	22 – 37
61A–44116–00	22 – 31
60V–44117–00–1S	22 – 5
61A–44118–00–8D	22 – 29
61A–44120–22	22 – 35
61A–44121–00	22 – 23
68J–44122–01	22 – 24
61A–44138–00	22 – 47
60V–44150–00	28 – 15
60W–44150–00	30 – 17
60V–44176–00–1S	22 – 8
60V–44194–00	22 – 6
688–44194–00	22 – 67
61A–44311–01	28 – 18
	30 – 20
6E5–44312–00	28 – 23
	30 – 25
6E5–44315–A0	28 – 31
	30 – 33
	38 – 12
61A–44322–02	28 – 19
	30 – 21
	38 – 18
6G5–44323–00	28 – 30
	30 – 32
	38 – 22
6E5–44352–01	28 – 24
	30 – 26
	38 – 21
61A–44361–20	29 – 2
	31 – 2
6E5–44365–00	28 – 22
	29 – 3
	30 – 24
	31 – 3
	38 – 6
663–44366–00	28 – 6
	30 – 8
6E5–44366–00	29 – 1
	31 – 1
	38 – 7
60V–44391–00	21 – 21
61A–44511–00–94	24 – 29
60V–44514–00–94	24 – 22
6G5–44526–00	23 – 3
68F–44533–00	2 – 54
61A–44551–01–8D	24 – 6
61A–44552–01–94	24 – 17

PART NO. N° PIECES	REF. NO.
61A–44553–00–8D	24 – 20
60V–44555–00–94	24 – 9
61A–44575–00	24 – 8
60V–45111–20–8D	27 – 1
60V–45113–01	27 – 21
	37 – 18
60V–45114–00	27 – 18
	38 – 3
61A–45123–01	27 – 34
	38 – 5
61A–45155–00	27 – 5
61A–45214–10	29 – 10
	31 – 10
61A–45215–10	29 – 11
	31 – 11
6G5–45251–02	23 – 2
60V–45300–20–8D	28 – 1
60W–45300–20–8D	30 – 1
60V–45301–00–8D	28 – 2
	30 – 2
6E5–45318–00	27 – 16
61A–45321–01	28 – 11
	30 – 13
61A–45331–00–94	28 – 34
	30 – 36
60V–45332–00–94	28 – 60
60W–45332–00–94	30 – 64
688–45341–10	28 – 8
	30 – 10
6E5–45344–00	28 – 40
	30 – 42
69J–45361–00–8D	28 – 72
	30 – 79
69L–45371–00	29 – 14
	31 – 14
61A–45375–00	29 – 9
	31 – 9
61A–45376–00–94	28 – 10
	30 – 12
61A–45378–00	27 – 10
61B–45383–00	30 – 70
69K–45384–00	30 – 71
60V–45501–20	28 – 43
	30 – 45
61A–45527–00	28 – 27
	30 – 29
61A–45538–00	28 – 26
	30 – 28

NUMERICAL INDEX
INDEX NUMERIQUE

PART NO. N° PIECES	REF. NO.
61B–45538–01	30 – 4
60V–45551–00	28 – 44
	30 – 46
60V–45560–00	28 – 47
60W–45560–01	30 – 49
61A–45567–00	28 – 5
	30 – 7
61A–45567–10	28 – 5
	30 – 7
61A–45567–20	28 – 5
	30 – 7
61A–45567–30	28 – 5
	30 – 7
61A–45567–40	28 – 5
	30 – 7
61A–45567–50	28 – 5
	30 – 7
61A–45567–60	28 – 5
	30 – 7
60W–45571–00	30 – 67
61A–45571–00	28 – 63
61A–45577–00	28 – 65
69K–45577–00	30 – 72
61A–45577–10	28 – 65
69K–45577–10	30 – 72
61A–45577–20	28 – 65
69K–45577–20	30 – 72
61A–45577–30	28 – 65
69K–45577–30	30 – 72
61A–45577–40	28 – 65
69K–45577–40	30 – 72
61A–45577–50	28 – 65
69K–45577–50	30 – 72
61A–45577–60	28 – 65
69K–45577–60	30 – 72
6K1–45578–01	30 – 69
6K1–45578–10	30 – 69
6K1–45578–20	30 – 69
6K1–45578–30	30 – 69
6K1–45578–40	30 – 69
6K1–45578–50	30 – 69
6K1–45578–60	30 – 69
61A–45587–00	28 – 37
	30 – 39
61A–45587–10	28 – 37
	30 – 39
61A–45587–20	28 – 37
	30 – 39

PART NO. N° PIECES	REF. NO.
61A–45587–30	28 – 37
	30 – 39
61A–45587–40	28 – 37
	30 – 39
61A–45587–50	28 – 37
	30 – 39
61A–45587–60	28 – 37
	30 – 39
60V–45611–00	28 – 48
69K–45611–00	30 – 52
60V–45631–00	28 – 52
	30 – 56
61A–45632–00	28 – 51
	30 – 55
61A–45633–00	28 – 53
	30 – 57
61A–45634–01	28 – 50
	30 – 54
61A–45635–00	28 – 55
	30 – 59
61B–45641–01	30 – 53
61A–45641–02	28 – 49
6H1–45668–00	28 – 54
	30 – 58
6K1–45970–01–98	31 – 21
6G5–45970–02–98	29 – 21
6R1–45970–A0	31 – 21
6R4–45970–A0	29 – 21
61A–45972–00–98	29 – 21
61B–45972–00–98	31 – 21
6K1–45972–01–98	31 – 21
6G5–45972–02–98	29 – 21
6R1–45972–A0	31 – 21
6R4–45972–A0	29 – 21
61A–45974–00–98	29 – 21
61B–45974–00–98	31 – 21
6K1–45974–02–98	31 – 21
6G5–45974–03–98	29 – 21
6R1–45974–A0	31 – 21
6R4–45974–A0	29 – 21
6R1–45976–A0	31 – 21
6R4–45976–A0	29 – 21
61A–45978–00–98	29 – 21
61B–45978–00–98	31 – 21
6K1–45978–02–98	31 – 21
6G5–45978–03–98	29 – 21
6R1–45978–A0	31 – 21
6R4–45978–A0	29 – 21

PART NO. N° PIECES	REF. NO.
69J–45987–00	29 – 16
	31 – 16
688–45997–01	29 – 17
	31 – 17
60V–46241–00	6 – 10
703–48205–17	34 – 1
704–48207–P0	34 – 2
701–48320–50	34 – 3
701–48320–60	34 – 3
701–48320–80	34 – 3
6E5–48344–00	22 – 27
701–48350–00	34 – 3
701–48350–20	34 – 3
60V–48531–10	22 – 1
663–48538–00	22 – 2
6E5–61301–01	33 – 1
6E5–61303–00	33 – 5
6E5–61311–11	33 – 3
6E5–61313–00	33 – 2
6E5–61315–00	33 – 4
6E5–61350–02	32 – 1
6E5–61351–01	32 – 2
6E5–61355–00	32 – 5
60V–81128–00	18 – 48
60V–81332–00	15 – 12
60V–81336–00	18 – 46
60V–81336–10	18 – 47
60V–81337–00	15 – 16
60V–81410–02	15 – 2
60V–81450–00	15 – 1
60V–81545–00	10 – 17
60V–81546–00	10 – 18
60X–81800–00	20 – 1
69J–81801–00	20 – 5
67F–81807–00	20 – 10
67F–81808–00	20 – 8
67F–81809–00	20 – 19
67F–81810–00	20 – 3
67F–81813–00	20 – 6
68F–81820–00	20 – 7
67F–81821–00	20 – 13
6K7–81826–10	20 – 24
69J–81828–00	20 – 25
65L–8182A–00	7 – 29
65L–8182E–00	7 – 31
65L–8182F–00	7 – 32
65L–8182K–00	7 – 30
67F–81830–00	20 – 17

PART NO. N° PIECES	REF. NO.
67F–81832–00	20 – 11
67F–81836–00	20 – 12
69J–81839–00	20 – 21
67F–8183R–00	20 – 16
60V–8183T–00	20 – 18
69J–81840–00	20 – 4
67F–81841–00	20 – 14
60X–81842–00	20 – 20
67F–81846–00	20 – 26
67F–81850–00	20 – 2
67F–81857–00	20 – 9
69J–81869–00	20 – 23
67F–81891–00	20 – 15
6E5–81900–01	13 – 27
60V–81919–00	18 – 58
60V–81919–10	18 – 59
6E5–81922–00	13 – 28
60V–81925–00	20 – 28
69J–81941–00	20 – 22
60V–81942–10	18 – 50
60V–81948–00	18 – 12
61A–81949–00	17 – 3
69J–81949–00	18 – 60
68V–8194A–00	18 – 27
60V–81950–00	18 – 21
68V–81950–00	16 – 50
68V–81953–00	18 – 33
68F–8195A–00	18 – 38
60V–81960–01	18 – 1
60V–81972–00–1S	18 – 3
60V–81975–A0	18 – 2
6K1–81980–00	36 – 18
60V–82105–00	17 – 7
68F–82117–00	18 – 28
6Y5–82117–00	35 – 17
682–82119–01	18 – 23
61A–82147–20	23 – 34
6E5–82148–00	23 – 9
6H1–82148–00	23 – 6
6E5–82149–00	24 – 12
1E6–82151–00	35 – 16
60V–82151–00	18 – 37
67F–82151–00	18 – 39
67F–82151–10	18 – 40
60V–82157–00	18 – 45
60V–82170–00	18 – 36
60V–82176–00	18 – 52
60V–82310–01	16 – 19

PART NO. N° PIECES	REF. NO.
60V–82310–10	16 – 24
60V–82314–01	16 – 31
6A0–82317–00	13 – 8
	15 – 19
	16 – 44
	18 – 17
663–82317–01	15 – 17
68F–82370–01	16 – 30
60V–82380–00	10 – 19
67H–82380–00	17 – 32
68F–82384–00	10 – 21
68F–82388–00	10 – 20
60V–82389–00	10 – 15
60V–82398–00	10 – 16
60V–82507–00	7 – 47
68F–82509–00	7 – 20
6K1–82510–06	36 – 3
60V–82519–00	16 – 13
60V–82519–10	16 – 14
6D0–8252R–00	16 – 43
60V–8252U–01	16 – 47
6D0–82531–00	17 – 10
703–82531–00	35 – 27
6K1–82532–00	36 – 5
68F–82553–80	35 – 18
68F–82553–90	35 – 18
682–82556–00	36 – 7
688–82560–10	19 – 8
69J–82563–00	17 – 21
6K1–82570–08	36 – 1
6K1–82571–02	36 – 2
6K1–82575–00	36 – 6
703–82577–00	36 – 4
6E3–8257H–00	21 – 74
68F–82582–00	20 – 29
69J–82587–00	17 – 22
60V–82588–00	19 – 1
6E5–82588–00	17 – 34
	21 – 37
61A–82588–01	22 – 16
61B–8258A–01	36 – 24
6K1–8258A–40	36 – 23
60V–82590–41	17 – 11
6E5–82594–00	14 – 6
6L2–82599–01	18 – 10
6R3–8259E–00	13 – 11
60V–8259F–00	22 – 19
61A–8259F–00	22 – 15

PART NO. N° PIECES	REF. NO.
60V–8259M–10	17 – 15
68F–82846–00	18 – 41
688–83383–11	36 – 12
6Y5–83500–S5	35 – 6
6Y5–8350F–00	35 – 21
6Y5–8350T–03	35 – 1
6Y5–83533–T2	35 – 10
6Y5–83553–00	35 – 15
6Y5–83553–F1	35 – 23
6Y5–83553–M0	35 – 15
6Y5–83557–10	35 – 19
6Y5–83557–31	35 – 11
6E5–83558–00	27 – 14
6Y5–83570–S5	35 – 7
6K1–83614–01	36 – 8
60V–83614–10	17 – 25
60V–83614–20	17 – 24
60V–83618–00	17 – 30
6K1–83623–41	15 – 25
6K1–83623–50	15 – 26
6A1–83625–41	15 – 23
6A1–83625–51	15 – 22
67F–83627–01	20 – 32
68F–83634–00	17 – 31
60V–83635–10	17 – 26
6D0–8366G–00	18 – 6
6D0–8366P–00	10 – 44
69J–83672–00	24 – 32
61A–83721–00	15 – 4
6Y5–83728–00	35 – 12
68F–83919–00	4 – 18
68F–85119–00	16 – 5
	18 – 13
60V–85516–00	8 – 14
68F–85516–01	16 – 40
	18 – 15
60V–85542–01–94	16 – 1
60V–85544–00	18 – 43
60V–85548–00	16 – 8
60V–85553–00	18 – 56
60V–85564–00	16 – 2
60V–85580–10	15 – 3
6E5–85711–60	15 – 24
6E5–85720–05	13 – 33
6R3–85721–80	13 – 34
61A–85730–01	13 – 4
6Y5–85752–01	35 – 24
61A–85790–00	19 – 4

NUMERICAL INDEX
INDEX NUMERIQUE

PART NO. N° PIECES	REF. NO.
6K1–85830–01	36 – 13
61A–85885–00	8 – 10
65L–85886–00	18 – 55
6K7–85886–01	8 – 11
61A–85895–00	19 – 6
60V–8591A–30	16 – 6
60V–8591B–00	16 – 11
68F–86129–00	16 – 3
	18 – 16
68F–86129–10	16 – 4
6Y5–87122–S0	35 – 14
60V–87149–00	18 – 19
60V–8818D–00	16 – 34
60V–8818D–10	16 – 35
	18 – 7
60V–W0001–01	37 – 1
60V–W0001–20	38 – 1
60V–W0004–00	11 – 2
60V–W0070–00	1 – 22
61A–W0078–A3	38 – 17
60Y–W0090–15–1S	2 – 1
90101–09M70	33 – 9
90101–12M05	23 – 49
90105–06028	11 – 16
90105–08049	28 – 69
	30 – 76
90105–10M00	29 – 15
	31 – 15
90109–06M40	12 – 5
90109–06M80	21 – 18
	22 – 4
90109–06M81	21 – 27
90109–06M82	21 – 7
90109–06M86	17 – 29
90109–09001	3 – 27
90109–14003	24 – 26
90109–14005	24 – 13
90110–06038	21 – 42
90110–06127	15 – 5
90110–06128	14 – 45
90110–06139	18 – 20
90110–06M06	12 – 49
90110–08M04	10 – 5
90111–06034	16 – 49
	21 – 47
90116–08012	2 – 10
90119–06055	2 – 44
90119–06089	2 – 19

PART NO. N° PIECES	REF. NO.
90119–06M10	28 – 14
	30 – 16
90119–06M17	27 – 11
90119–06M65	13 – 10
	16 – 46
	18 – 14
90119–06M88	14 – 23
90119–06MA2	2 – 39
	4 – 14
	5 – 19
	11 – 28
	16 – 12
90119–06MA3	5 – 5
	16 – 7
	18 – 4
90119–06MA4	4 – 17
	18 – 5
	22 – 63
90119–08052	27 – 9
90119–08056	27 – 27
90119–08059	27 – 30
90119–08060	27 – 24
90119–08072	27 – 23
90119–08079	27 – 22
90119–08M14	28 – 33
	30 – 35
	38 – 25
90119–08M22	21 – 35
90119–08M60	10 – 2
90119–08MA5	4 – 20
90119–08MA8	4 – 21
90119–10021	2 – 18
90119–10022	2 – 17
90119–10M72	6 – 5
90119–10MA2	29 – 8
	31 – 8
90149–05M05	36 – 19
90152–05003	29 – 12
	31 – 12
90157–06006	22 – 65
90158–06002	35 – 25
90159–05M25	22 – 68
90159–06M16	11 – 26
90160–05005	1 – 29
90169–05M00	18 – 54
	21 – 65
90170–09M05	33 – 10
90170–14M06	33 – 6

PART NO. N° PIECES	REF. NO.
90170–16M19	28 – 46
	30 – 48
90170–24M22	15 – 10
90171–18M04	29 – 19
	31 – 19
90179–06M24	1 – 19
	11 – 22
90179–08003	20 – 27
90183–02M03	28 – 57
	30 – 61
90183–05M02	27 – 33
90185–05002	29 – 13
	31 – 13
90185–09M01	32 – 6
	33 – 11
90185–14M00	24 – 27
90185–22M11	23 – 24
90201–02M00	28 – 56
	30 – 60
90201–05552	8 – 7
90201–06068	14 – 18
	21 – 15
90201–06M31	22 – 60
90201–08023	28 – 70
	30 – 77
90201–08M00	6 – 16
90201–08M54	21 – 33
90201–09M01	12 – 22
90201–09M02	22 – 44
90201–10M20	32 – 7
90201–10M76	33 – 8
90201–12M05	23 – 51
90201–12M34	18 – 57
90201–13M01	23 – 50
90201–15M58	24 – 14
90201–16M00	28 – 45
	30 – 47
90201–16M01	24 – 23
90201–16M55	24 – 11
90201–22M01	28 – 28
	30 – 30
90201–25M02	15 – 11
90201–26M03	3 – 29
90201–26M59	23 – 23
90201–28M01	24 – 25
90201–31M00	28 – 64
90201–40M00	24 – 2
90202–05088	12 – 30

PART NO. N° PIECES	REF. NO.
90202–06007	22 – 28
90202–08M20	22 – 25
90202–28M46	24 – 24
90202–32M19	24 – 10
90202–40M47	24 – 5
90206–10M04	22 – 62
90206–12M00	22 – 54
90206–14N50	26 – 2
90206–15M18	21 – 14
90206–22M19	28 – 29
	30 – 31
90249–06M19	23 – 41
90280–03M01	6 – 19
90280–04M05	28 – 25
	30 – 27
	38 – 26
90280–05015	15 – 9
90340–08002	28 – 7
	30 – 9
90340–14M00	2 – 12
90383–16M01	2 – 7
90384–06M07	2 – 6
90386–10M16	23 – 39
90386–12069	22 – 10
90386–15M73	21 – 13
90386–18M14	23 – 47
	25 – 17
90386–18M63	23 – 46
90386–25M31	23 – 22
90386–39M89	24 – 3
90386–90M90	22 – 42
90387–05M00	8 – 13
	10 – 29
90387–06M29	22 – 61
90387–06M60	14 – 21
90387–08M09	22 – 11
90387–08M16	22 – 55
90387–08M31	10 – 4
90387–08M37	21 – 32
90387–10M02	23 – 42
90387–10M61	32 – 3
90430–08020	28 – 9
	30 – 11
	38 – 4
90430–14115	2 – 13
	37 – 4
90445–05M07	13 – 7
90445–07015	11 – 13

PART NO. N° PIECES	REF. NO.
90445–07016	2 – 21
	11 – 12
90445–07M03	2 – 20
	11 – 11
90445–07M04	12 – 15
90445–07M10	2 – 15
	12 – 14
90445–07M29	2 – 22
90445–07M44	11 – 25
	12 – 12
90445–07M46	12 – 13
90445–07M96	12 – 10
90445–07MA6	2 – 23
90445–07MF0	27 – 13
90445–09M25	18 – 8
90445–11M26	13 – 31
90445–11M33	1 – 15
90445–11M36	21 – 67
90445–12M04	13 – 13
90445–13M12	14 – 53
90445–13M17	14 – 4
90445–15002	6 – 7
90446–07M35	12 – 9
90446–07M48	12 – 11
90446–10M01	16 – 23
90446–10M87	19 – 9
90446–15M07	14 – 52
90446–17MA8	12 – 7
90447–07011	17 – 1
90447–10004	18 – 11
90447–13008	14 – 2
90447–15001	10 – 43
90447–15002	14 – 51
90447–19004	14 – 28
90447–22004	10 – 42
90448–08001	12 – 43
90462–08018	1 – 17
90462–08028	16 – 53
90462–08029	17 – 17
90464–07M05	12 – 18
90464–07M20	12 – 20
90464–08004	10 – 46
	18 – 51
90464–11008	17 – 19
90464–13M34	13 – 18
	14 – 3
90464–18003	16 – 25
90464–20213	17 – 27

PART NO. N° PIECES	REF. NO.
90464–20258	21 – 70
90464–23199	18 – 35
90465–06M86	15 – 15
90465–08M83	23 – 18
90465–11M10	7 – 57
	12 – 8
	13 – 14
	14 – 7
	16 – 22
	17 – 2
	21 – 55
	23 – 25
	27 – 15
	35 – 13
90465–11M52	16 – 20
	17 – 14
90465–13M11	13 – 3
90465–13M18	5 – 21
90467–08M18	5 – 13
	12 – 33
	18 – 9
90468–07M02	2 – 16
	12 – 17
90468–18008	22 – 26
90480–10M23	10 – 28
	14 – 22
90480–20M05	5 – 16
90480–22M15	16 – 26
90480–22M81	21 – 31
90480–25161	16 – 21
90501–10M77	28 – 58
	30 – 62
90501–11M10	28 – 17
	30 – 19
90501–16M11	5 – 15
90506–16003	23 – 44
90506–16M34	21 – 19
90508–20M31	22 – 14
90560–12M01	32 – 4
91490–12012	12 – 29
91490–20012	22 – 43
91490–40030	29 – 20
	31 – 20
91609–10014	25 – 62
91690–30010	22 – 3
91690–30020	23 – 43
92903–05600	2 – 37
	16 – 29

NUMERICAL INDEX
INDEX NUMERIQUE

PART NO. N° PIECES	REF. NO.
92903–06100	22 – 39
92903–06600	2 – 33
	11 – 20
	16 – 10
	22 – 40
92903–08100	17 – 9
92903–08600	6 – 3
	10 – 37
	20 – 31
92990–04100	35 – 4
92990–04600	21 – 46
92990–05100	36 – 10
92990–05600	11 – 5
	36 – 22
92990–06100	1 – 4
	36 – 16
92990–06600	13 – 39
	36 – 17
92990–08200	22 – 53
92990–10600	19 – 5
92990–18200	29 – 18
	31 – 18
92995–04100	22 – 18
92995–05100	15 – 7
92995–05600	2 – 31
	15 – 8
92995–06100	3 – 19
	12 – 47
	18 – 25
	22 – 33
92995–06600	1 – 10
	4 – 7
	5 – 9
	12 – 48
	14 – 46
	15 – 14
	16 – 16
	17 – 5
	18 – 26
	19 – 3
	21 – 49
	22 – 34
	23 – 5
	27 – 7
92995–08200	22 – 13
92995–08600	4 – 12
	5 – 12
	21 – 58

PART NO. N° PIECES	REF. NO.
92995–08600	28 – 42
	30 – 44
92995–10100	23 – 30
	29 – 6
	31 – 6
92995–10600	23 – 31
	24 – 19
	29 – 7
	31 – 7
92995–14600	24 – 16
93101–28M16	28 – 35
	30 – 37
	38 – 13
93101–30M17	28 – 67
	30 – 74
	38 – 16
93102–40M38	3 – 4
93103–40011	3 – 15
	37 – 10
93104–22M07	3 – 13
	37 – 9
93106–09014	28 – 13
	30 – 15
	38 – 9
93106–19N50	25 – 6
93210–06001	25 – 38
93210–064A5	25 – 27
93210–07003	25 – 37
93210–09165	22 – 36
	25 – 56
93210–10M74	25 – 50
93210–16275	32 – 9
93210–18397	25 – 34
93210–18MA9	12 – 24
	37 – 15
93210–19M82	12 – 4
93210–35321	24 – 4
93210–37160	28 – 21
	30 – 23
	38 – 11
93210–55M14	28 – 39
	30 – 41
	38 – 14
93210–64488	28 – 12
	30 – 14
	38 – 8
93210–85M32	3 – 17
	37 – 11

PART NO. N° PIECES	REF. NO.
93210–86M38	28 – 20
	30 – 22
	38 – 10
93211–04384	28 – 68
	30 – 75
	38 – 15
93306–00001	9 – 3
93306–001U0	9 – 5
93306–209U1	3 – 6
93306–210U0	28 – 62
93306–308U0	3 – 9
93310–32657	3 – 28
93310–84106	3 – 30
93310–959U0	3 – 7
93311–83280	28 – 3
	30 – 3
93311–940V0	3 – 3
93315–43061	28 – 66
	30 – 73
93315–660W3	30 – 5
93317–330U2	28 – 36
	30 – 38
93317–62891	30 – 50
93332–00048	30 – 66
93332–000W1	28 – 4
93341–440U5	30 – 68
93341–670V0	30 – 6
93341–930U9	28 – 38
	30 – 40
93399–999T6	26 – 3
93410–18M02	23 – 48
93410–37M04	24 – 7
93410–40M03	3 – 10
93420–36M01	27 – 17
93420–61M07	3 – 16
93450–37097	30 – 51
93501–04011	28 – 59
	30 – 63
93501–08001	25 – 72
93505–32038	25 – 28
93605–10108	6 – 14
93606–12019	27 – 12
	28 – 32
	30 – 34
	38 – 24
93608–12063	2 – 14
93608–12M05	27 – 8
	29 – 4

PART NO. N° PIECES	REF. NO.
93608–12M05	31 – 4
93700–06M01	22 – 9
93700–06M03	22 – 30
	23 – 17
93700–09M00	28 – 71
	30 – 78
94702–00405	4 – 45
95313–08600	22 – 41
95333–08600	17 – 8
95380–03600	14 – 41
95380–04600	35 – 5
95380–05600	12 – 27
	22 – 57
	36 – 11
95380–06600	1 – 5
	13 – 40
	22 – 66
	36 – 15
95380–12600	23 – 52
95380–14700	33 – 7
95380–14800	24 – 15
95670–06660	11 – 21
95707–08600	6 – 20
95780–10300	24 – 35
95895–06016	21 – 62
95895–06020	17 – 35
	21 – 38
95895–06030	15 – 20
97013–05012	2 – 36
97013–05020	16 – 28
97013–06012	22 – 38
97013–06014	16 – 9
97013–06020	2 – 32
97013–06060	11 – 19
97013–08012	6 – 9
97013–08045	20 – 30
	22 – 52
97013–08055	6 – 2
	10 – 39
97013–08090	10 – 36
97075–06020	4 – 6
	5 – 8
97075–08030	5 – 11
97075–08035	4 – 11
	21 – 34
97075–08055	21 – 57
97080–06100	13 – 38
97095–05012	2 – 30

PART NO. N° PIECES	REF. NO.
97095–06010	18 – 24
	23 – 7
	27 – 6
97095–06012	16 – 15
	17 – 4
	19 – 2
97095–06014	17 – 28
	23 – 27
97095–06016	1 – 9
	16 – 51
	21 – 16
97095–06020	3 – 18
	12 – 46
	21 – 48
	22 – 7
97095–06025	23 – 4
97095–06030	22 – 32
97095–08020	28 – 73
	30 – 80
97095–08025	6 – 17
	28 – 41
	30 – 43
97095–08035	22 – 12
97095–10045	23 – 29
	24 – 18
	29 – 5
	31 – 5
97513–08570	10 – 35
97575–08550	4 – 10
97595–06416	14 – 17
97595–06512	10 – 45
97595–06514	14 – 20
97607–04230	25 – 19
97607–05210	25 – 24
97780–50612	1 – 18
97780–50616	1 – 13
97780–50620	18 – 42
97780–60620	18 – 34
97880–04016	21 – 45
97880–05016	11 – 4
97885–04016	22 – 17
97885–05012	19 – 7
97885–05030	15 – 6
97885–06008	22 – 48
97885–06010	15 – 13
	23 – 13
97885–06012	23 – 10
97885–06016	24 – 33

PART NO. N° PIECES	REF. NO.
97985–05212	8 – 12
97985–05330	8 – 16
98580–06520	17 – 33
98980–05010	36 – 9
98980–06020	36 – 14
99001–08600	28 – 16
	30 – 18
99480–06012	2 – 43
99590–10114	4 – 19
	28 – 61
	30 – 65
9E450–04433	35 – 2
9E450–04533	35 – 3

Z250DETO/LZ250DETO
PARTS CATALOGUE
©2004 by Yamaha Motor Co., Ltd.
1st edition, July 2004
All rights reserved.
Any reprinting or unauthorized use
without the written permission of
Yamaha Motor Co., Ltd.
is expressly prohibited.
Printed in Japan.

Z250DETO/LZ250DETO
CATALOGUE DE PIECES DETACHEES
©2004 par Yamaha Motor Co., Ltd.
1re édition, juillet 2004
Tous droits réservés
Toute réimpression ou utilisation
non autorisée sans la permission écrite
de la Yamaha Motor Co., Ltd.
est formellement interdite.
Imprimé au Japon