YAMAHA

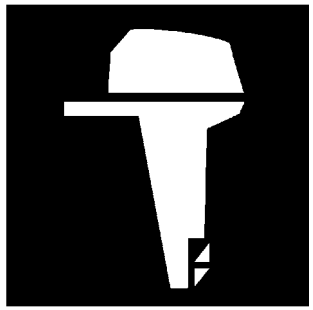

PARTS CATALOGUE
CATALOGUE DE PIECES DETACHEES

F13.5AEP'06 (6P72)
F15AEP'06 (69A5)

1E69A-300F1

(2E69A-300F1)

YAMAHA GENUINE Parts & Accessories

2017/8/17

NEWS NO.	DATE	COMMENT
PE0-OM-120046	Jul.,2,2012	MOD:FIG.7 CARBURETOR LIST/ILLUSTRATION REVISION
PE0-OM-150012	Jun.,26,2015	MOD:FIG.7 CARBURETOR LIST REVISION
PE0-OM-160028	Nov.,8,2016	COR:FIG.19 POWER TILT ASSY LIST/ILLUSTRATION CORRECTION
PE0-OM-170032	Aug.,10,2017	COR:FIG.7 CARBURETOR ILLUSTRATION CORRECTION

FOREWORD

This Parts Catalogue is related to the parts for the model(s) on the cover page. When you are ordering replacement parts, please refer to this Parts Catalogue and quote both part numbers and part names correctly.

1. Modifications or additions which have been made after the issue of the Parts Catalogue will be announced in the Parts News.
   It is advisable that you make the necessary corrections to the Parts Catalogue according to the Parts News.

2. Abbreviations
   The following abbreviations are used in this Parts Catalogue.

   "UR" Use specified parts number.
   "UN" Use as many as needed.
   "AP" Alternate Parts
   "LM" Locally Made (Parts need to be ordered locally)
   "F#" Frame No. (Applicable machine No.)
   "O/S" Over Size

3. The number of components for assembly
   - Parts, which are to be supplied in an assembly, are listed with a dot (.) in front of the part name as shown below.
   - The numeral appearing to the right of each component part indicates the quantity of parts for each assembly unit.

PART NO.	DESCRIPTION	Q'TY	REMARKS
2F5–83310–60	FRONT FLASHER LIGHT ASSY	2	
115–83311–60	.BULB (6V–18W)	1	

4. Applicable colours of graphics are represented in the "REMARKS" as shown below.

PART NO.	DESCRIPTION	Q'TY	REMARKS
2N4–24110–00–X5	FUEL TANK COMP.	2	MXR
3J1–24240–10	.GRAPHIC, FUEL TANK	1	FOR MXR

5. Note that the illustrations for reference in finding parts numbers are not to be used for assembling. When assembling, please use the applicable service manual.

6. The asterisk (*) before a reference number indicates modified items after the first edition.

7. Applicable Serial No.

   Engine Serial No.

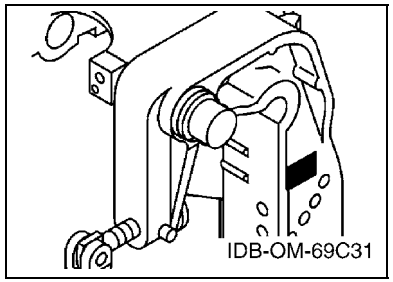

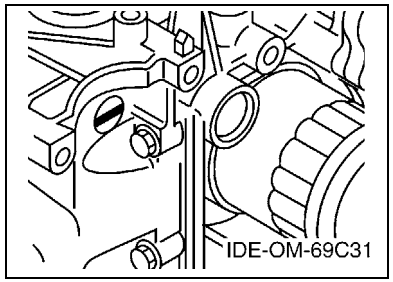

8. Applicable Engine Starting Serial No.

Model	Serial No.	Model	Serial No.
F15A	66M-1019465	F13.5A	69V-1000690

9. Applicable Colour Code

Abbreviation	Colour Name	Colour Code
DBNM2	DARK BLUISH GRAY METALLIC 2	004D

10. Quantity Column Information

Column No.	Name Of Q'ty Column	Applicable Model
1	69A5	F15AEP
2	6P72	F13.5AEP

AVANT–PROPOS

Ce catalogue de pièces détachées concerne les pièces pour le(s) modèle(s) indiqué(s) sur la page de couverture. Lorsque vous commandez des pièces de rechange, veuillez vous référer à ce catalogue de pieces détachées et indiquer clairement les numéros et les noms des pièces détachées.

1. Les modifications ou ajouts ayant été effectués après la parution du catalogue de pièces détachées seront décrits dans les Bulletins d'information concernant les pièces détachées.
   Il est recommandé que vous apportiez les corrections nécessaires au catalogue des pièces détachées en vous référant aux Bulletins d'information.

2. Abréviations
   Dans ce catalogue, les abréviations suivantes sont utilisées:

   "UR" Utiliser le numéro de pièces spécifié.
   "UN" Utiliser autant que nécessaire.
   "AP" Pièces de substitution
   "LM" Fabrication locale (les pièces doivent être commandées localement.)
   "F#" N° de cadre (applicable au N° de série)
   "O/S" Surdimensionné

3. Nombre de pièces d'un assemblage
   - Les pièces fournies comme composants d'un assemblage sont précédées d'un point (.) de la manière indiquée ci–dessous.
   - Le chiffre apparaissant à la droite de chaque composant indique la quantité de pièces pour chaque unité d'assemblage.

N° PIECES	DESCRIPTION	QTE	REMARQUES
2F5–83310–60	ENS. CLIGNOTANT AVANT	2	
115–83311–60	.AMPOULE (6V–18W)	1	

4. Les couleurs concernant les graphiques sont indiquées dans la colonne "REMARQUES", comme indiqué ci–dessous.

N° PIECES	DESCRIPTION	QTE	REMARQUES
2N4–24110–00–X5	RESERVOIR A ESSENCE.	2	MXR
3J1–24240–10	.GRAPHIQUE	1	POUR MXR

5. Veuillez noter que les illustrations sont indiquées à titre de référence pour trouver les numéros de pièces, non pour être utilisées lors de l'assemblage. Lors de l'assemblage, veuillez utiliser le manuel d'entretien adéquat.

6. L'astérisque (*) placé devant un numéro de référence indique des éléments qui ont été modifiés après la première édition.

7. N° de série applicable

   N° de Série du moteur

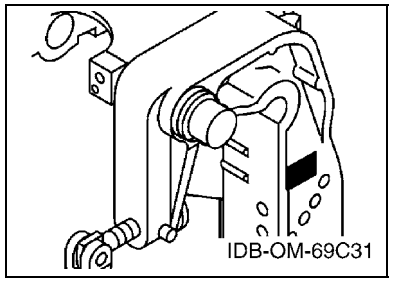

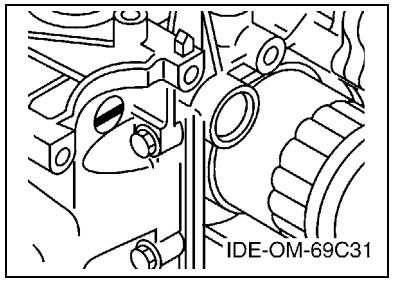

8. N° de série initial du moteur applicable

Modèle	N° de série	Modèle	N° de série
F15A	66M-1019465	F13.5A	69V-1000690

9. Code couleur applicable

Abréviation	Nom de la couleur	Code couleur
DBNM2	DARK BLUISH GRAY METALLIC 2	004D

10. Informations relatives à la colonne Quantité

N° de la colonne	Nom de la colonne Qté	Modèle applicable
1	69A5	F15AEP
2	6P72	F13.5AEP

CONTENTS

SHEET1/2
TOP COWLING A4
CYLINDER & CRANKCASE 1 ..... A5
CRANKSHAFT & PISTON A7
CYLINDER & CRANKCASE 2 ..... B1
VALVE B2
INTAKE B3
CARBURETOR B5
OIL PUMP B7
FUEL C1
STARTER C3
GENERATOR C4
ELECTRICAL 1 ..... C5
ELECTRICAL 2 ..... C7
STARTING MOTOR D2
BOTTOM COWLING D3
CONTROL D5
BRACKET 1 ..... D7
BRACKET 2 ..... E2
POWER TILT ASSY E4
UPPER CASING E7
OIL PAN F1
LOWER CASING & DRIVE 1 ..... F2
LOWER CASING & DRIVE 2 ..... F5
FUEL TANK F7

INDEX

NUMERICAL INDEX G1

SHEET2/2
STEERING GUIDE A4*
REMOTE CONTROL BOX A5*
REMOTE CONTROL ASSY A6*
REPAIR KIT 1 ..... B2*
REPAIR KIT 2 ..... B3*
REPAIR KIT 3 ..... B4*

INDEX

NUMERICAL INDEX G1*

TABLE DES MATIERES

Feuille1/2
CAPOT SUPERIEUR A4
CYLINDRE & CARTER 1 ..... A5
VILEBREQUIN & PISTON A7
CYLINDRE & CARTER 2 ..... B1
SOUPAPE B2
ADMISSION B3
CARBURATEUR B5
POMPE A HUILE B7
CARBURANT C1
DEMARREUR C3
GENERATRICE C4
PARTIE ELECTRIQUE 1 ..... C5
PARTIE ELECTRIQUE 2 ..... C7
DEMARREUR ELECTRIQUE D2
CAPOT INFERIEUR D3
COMMANDE D5
SUPPORT 1 ..... D7
SUPPORT 2 ..... E2
PUISSANCE PARER ET INCLINER E4
FOURREAU E7
VENTILATEUR D'HUILE F1
BOITIER D'HELICE TRANSMISSION1 ..... F2
BOITIER D'HELICE TRANSMISSION2 ..... F5
RESERVOIR A CARBURANT F7

INDEX

INDEX NUMERIQUE G1

Feuille2/2
FIXATION DE DIRECTION A4*
BOITIER DE COMMANDE A DISTANCE A5*
BOITIER DE COMMANDE A DISTANCE A6*
KITS DE REPARATION 1 ..... B2*
KITS DE REPARATION 2 ..... B3*
KITS DE PEPARATION 3 ..... B4*

INDEX

INDEX NUMERIQUE G1*

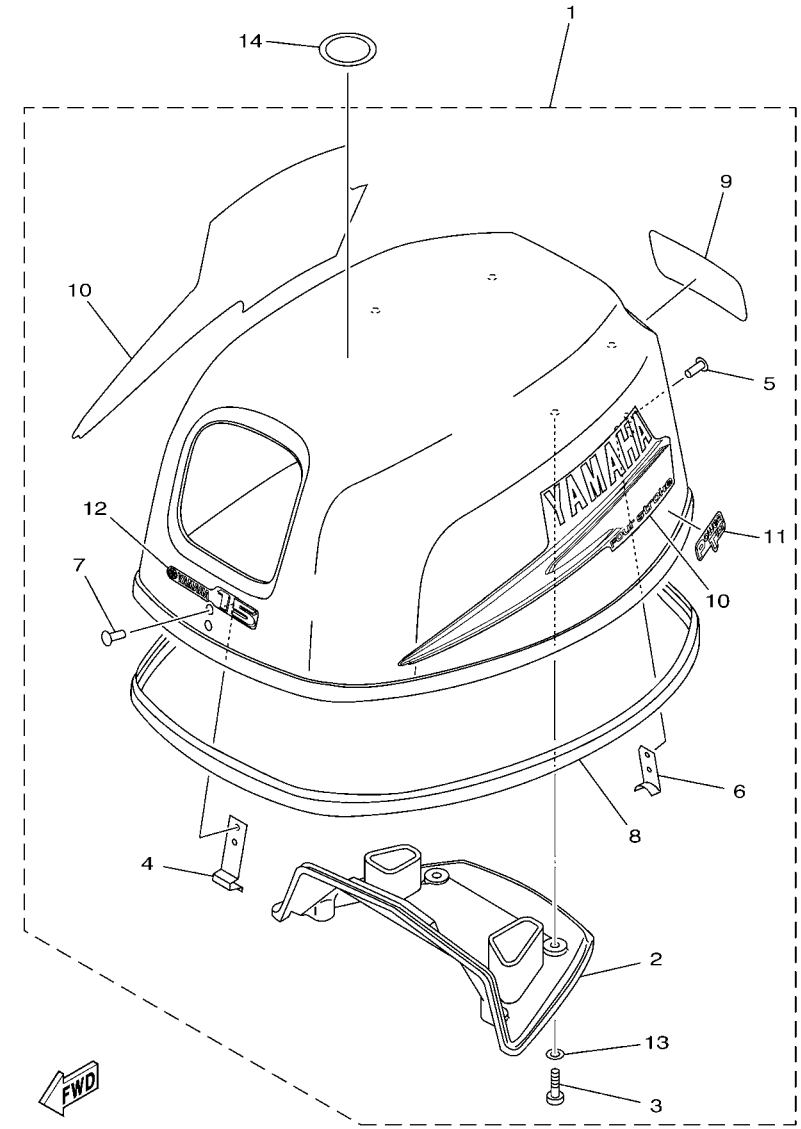

FIG. 1 TOP COWLING — CAPOT SUPERIEUR

REF. NO.	PART NO. N° PIECES	DESCRIPTION DESCRIPTION	69A5	6P72				REMARKS REMARQUES
1	69A–42610–12–4D	TOP COWLING ASSY CAPOT (ENS.)	1					
	6P7–42610–00–4D	TOP COWLING ASSY CAPOT (ENS.)		1				
2	66M–42613–00	.MOLDING, AIR DUCT .MANCHON A AIR	1	1				
3	97780–60520	.SCREW, TAPPING .VIS, TETE BOMBEE	4	4				
4	65W–42651–01	.HOOK .CROCHET	1	1				
5	90266–06M02	.RIVET .RIVET	2	2				
6	66M–42652–00	.HOOK .CROCHET	1	1				
7	90266–06M02	.RIVET .RIVET	2	2				
8	6D4–42615–00	.SEAL .JOINT	1	1				
9	66M–42678–20	.GRAPHIC, REAR .ADHESIF, ARRIERE	1					
	69V–42678–20	.GRAPHIC, REAR .ADHESIF, ARRIERE		1				
10	66M–W0070–20	.GRAPHIC SET .JEU DIEMBLEMES	1	1				
11	69A–42675–00	.GRAPHIC, SIDE 1 .EMBLEME	1	1				
12	66M–42677–00	.GRAPHIC, FRONT .ADHESIF, AVANT	1					
	69V–42677–00	.GRAPHIC, FRONT .ADHESIF, AVANT		1				
13	90202–05M38	.WASHER, PLATE .RONDELLE, PLATE	4	4				
14	67F–13434–03	LABEL, CAUTION ETIQUETTE, ATTENTION	1	1				

FIG. 2 CYLINDER & CRANKCASE 1 CYLINDRE & CARTER 1

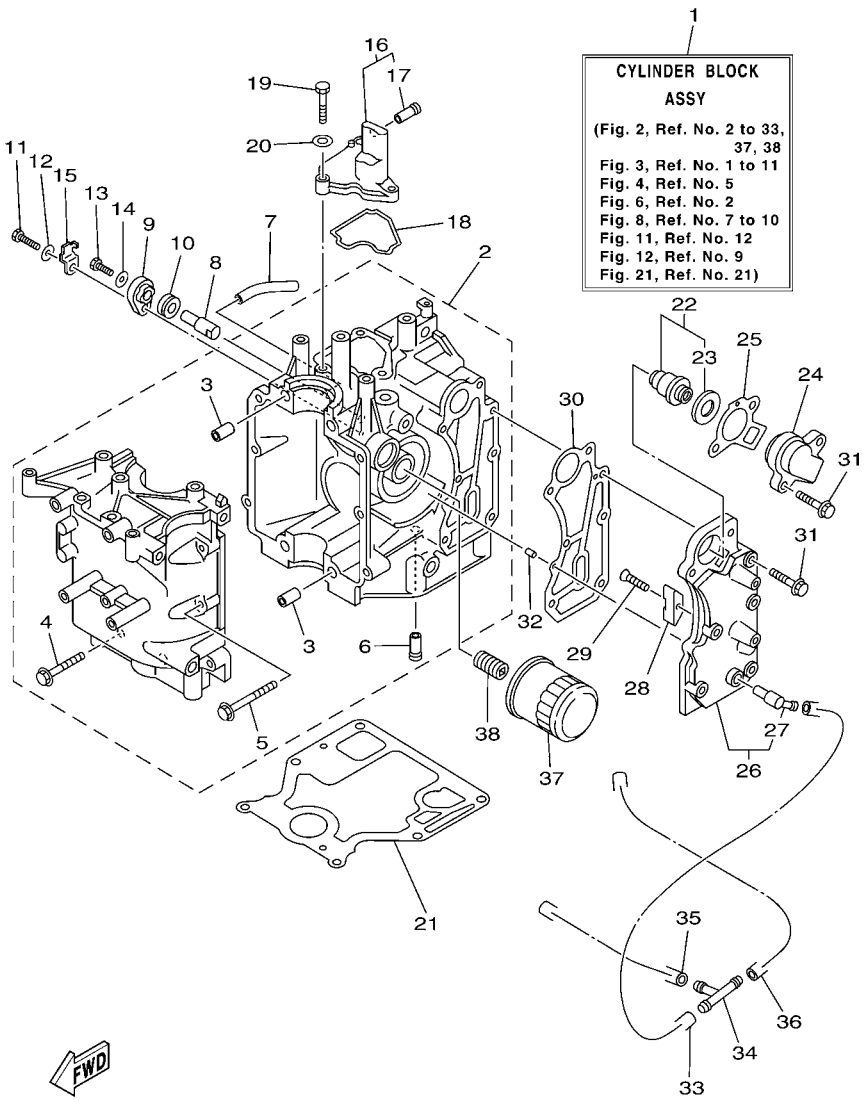

69A5300-E020

REF. NO.	PART NO. N° PIECES	DESCRIPTION DESCRIPTION	69A5	6P72				REMARKS REMARQUES
1	66M–W009B–12–1S	CYLINDER BLOCK ASSY CYLINDRE GROUPE (ENS.)	1	1				FLUSHING KIT FLUSHING KIT
2	66M–15100–02–1S	CRANKCASE ASSY CARTER DE MOTEUR COMPLET	1	1				
3	99510–10114	.PIN, DOWEL .GOUJON, D'ASSEMBLAGE	2	2				
4	90119–08M66	.BOLT, WITH WASHER .BOULON, AVEC RONDELLE	4	4				
5	90119–06M14	.BOLT, WITH WASHER .BOULON, AVEC RONDELLE	6	6				
6	6E5–24377–00	.PIPE, JOINT 3 .DURITE RACCORDEMENT 3	1	1				
7	90445–10M46	HOSE (L65) DURITE (L65)	1	1				
8	66M–11325–00	ANODE ANODE	1	1				
9	66M–11327–00–94	COVER, ANODE COUVERCLE	1	1				
10	66M–11328–00	GROMMET, ANODE PASSE-FIL	1	1				
11	97095–06020	BOLT BOULON	1	1				
12	92995–06600	WASHER RONDELLE	1	1				
13	97095–05012	BOLT BOULON	1	1				
14	92995–05600	WASHER RONDELLE	1	1				
15	66M–12535–00	PLATE PLAQUE	1	1				
16	66M–11168–00–1S	COVER, BREATHER COUVERCLE, RENIFLARD	1	1				
17	6E5–24377–00	.PIPE, JOINT 3 .DURITE RACCORDEMENT 3	1	1				
18	66M–11357–00	SEAL, CYLINDER 3 JOINT, SPY CYLINDRE	1	1				
19	97095–06020	BOLT BOULON	3	3				
20	92995–06600	WASHER RONDELLE	3	3				
21	66M–11351–10	GASKET, CYLINDER JOINT, D'EMBASE	1	1				
22	66M–12411–01	THERMOSTAT THERMOSTAT	1	1				
23	688–12412–00	.SEAL, THERMOSTAT .JOINT, THERMOSTAT	1	1				
24	6H3–12413–00–1S	COVER, THERMOSTAT COUVERCLE, THERMOSTAT	1	1				
25	62Y–12414–00	GASKET, COVER JOINT, COUVERCLE	1	1				
26	66M–41113–30–1S	OUTER COVER, EXHAUST COUVERCLE, ECHAPPEMENT	1	1				FLUSHING KIT FLUSHING KIT
27	676–11372–00	.NIPPLE, HOSE .RACCORD, TUYAU	1	1				

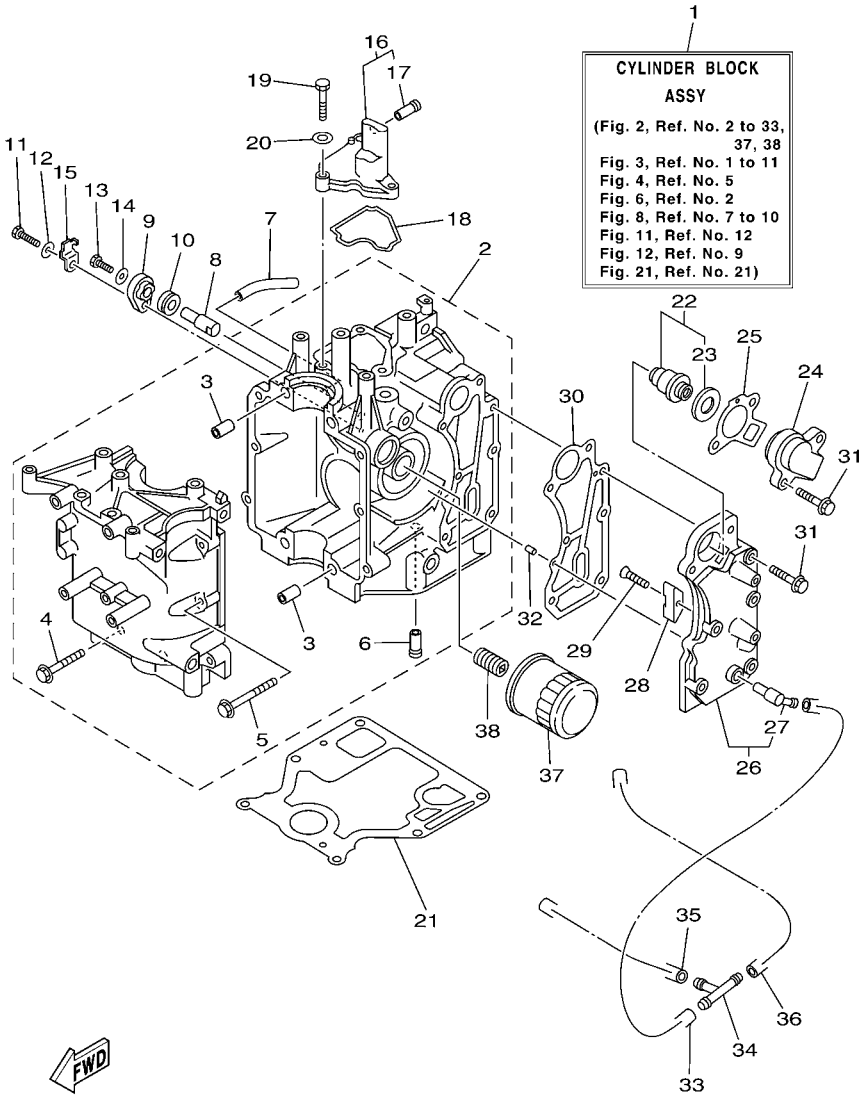

69A5300-E020

FIG. 2 CYLINDER & CRANKCASE 1 CYLINDRE & CARTER 1

REF. NO.	PART NO. N° PIECES	DESCRIPTION DESCRIPTION	69A5	6P72				REMARKS REMARQUES
28	6E5–11325–00	ANODE ANODE	1	1				
29	98780–04015	SCREW, FLAT HEAD VIS A TETE FRAISEE	1	1				
30	66M–41114–01	GASKET, EXHAUST OUTER COVER JOINT, COUVERCLE D'ECHAPPEMENT	1	1				
31	90119–06MA4	BOLT, WITH WASHER BOULON, AVEC RONDELLE	7	7				
32	93604–12M07	PIN, DOWEL CLAVETTE	2	2				
33	90445–09061	HOSE (L65) DURITE (L65)	1	1				
34	688–24378–00	PIPE, JOINT 4 DURITE RACCORDEMENT 4	1	1				
35	90445–09086	HOSE (L170) DURITE (L170)	1	1				
36	90445–09104	HOSE (L300) DURITE (L300)	1	1				
37	5GH–13440–00	ELEMENT ASSY, OIL CLEANER ELEMENT, FILTRE A HUILE	1	1				
38	90401–20M00	BOLT, UNION BOULON, RACCORD	1	1				

FIG. 3 CRANKSHAFT & PISTON VILEBREQUIN & PISTON

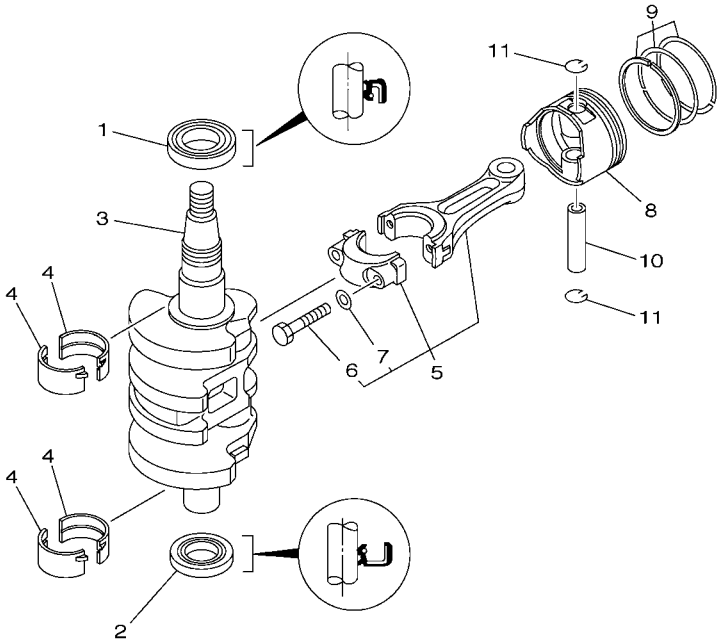

66M0010-8031

REF. NO.	PART NO. N° PIECES	DESCRIPTION DESCRIPTION	69A5	6P72				REMARKS REMARQUES
1	93102–35M51	OIL SEAL JOINT SPY	1	1				
2	93102–25M52	OIL SEAL JOINT SPY	1	1				
3	66M–11411–00	CRANKSHAFT VILEBREQUIN COMPLET	1	1				
4	66M–11416–00	PLANE BEARING, CRANKSHAFT 1 COUSSINET DE VILEBREQUIN 1	4	4				UR BROWN UR BROWN
	66M–11416–10	PLANE BEARING, CRANKSHAFT 1 COUSSINET DE VILEBREQUIN 1	4	4				UR BLACK UR BLACK
	66M–11416–20	PLANE BEARING, CRANKSHAFT 1 COUSSINET DE VILEBREQUIN 1	4	4				UR BLUE UR BLUE
5	66M–11650–00	CONNECTING ROD ASSY BIELLE COMPLETTE	2	2				
6	66M–11654–00	.BOLT, CONNECTING ROD .BOULON, BIELLE	2	2				
7	90201–07M01	.WASHER, PLATE .RONDELLE, PLATE	2	2				
8	66M–11631–00–96	PISTON (STD) PISTON (STD)	2	2				
	66M–11635–00	PISTON (0.25MM O/S) PISTON (0.25MM O/S)	2	2				AP AP
	66M–11636–00	PISTON (0.50MM O/S) PISTON (0.50MM O/S)	2	2				AP AP
9	66N–11603–00	PISTON RING SET (STD) JEU DE SEGMENTS (STD)	2	2				
	66N–11604–00	PISTON RING SET (0.25MM O/S) JEU DE SEGMENTS (0.25MM O/S)	2	2				AP AP
	66N–11605–00	PISTON RING SET (0.50MM O/S) JEU DE SEGMENTS (0.50MM O/S)	2	2				AP AP
10	634–11633–00	PIN, PISTON AXE, PISTON	2	2				
11	93450–15023	CIRCLIP CIRCLIP, TYPE S	4	4				

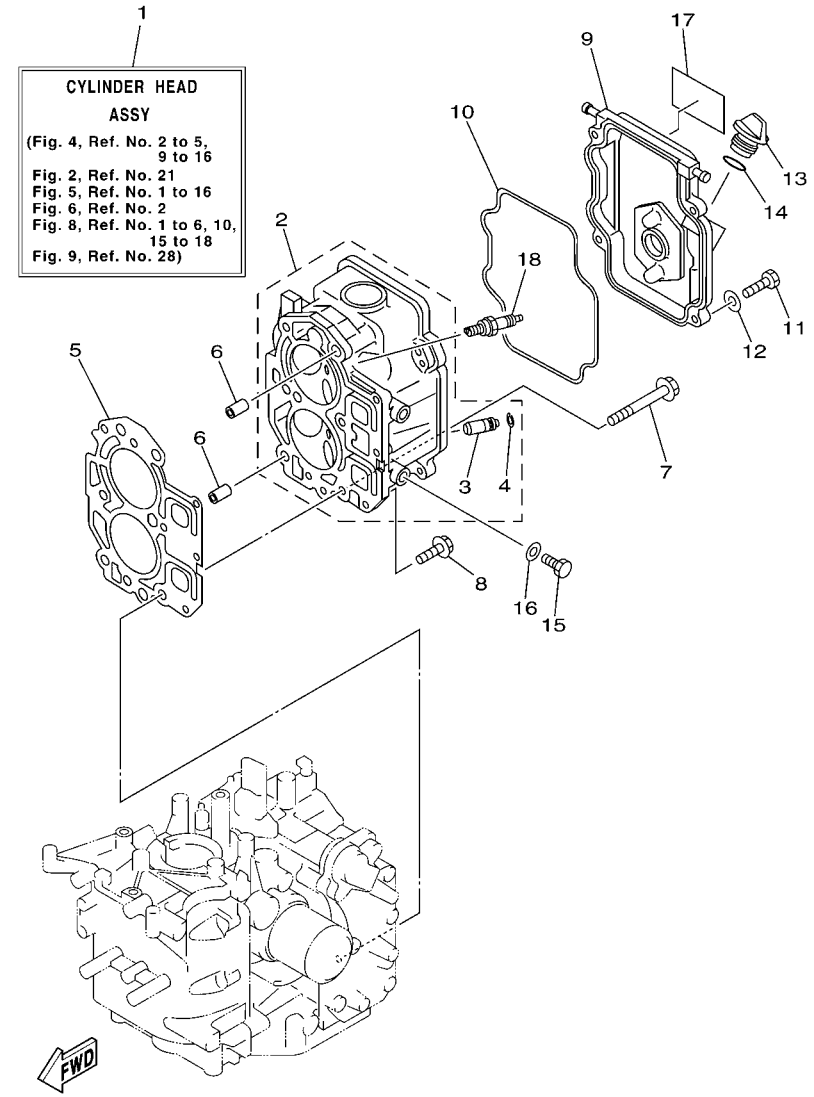

69A5300-E040

FIG. 4 CYLINDER & CRANKCASE 2 CYLINDRE & CARTER 2

REF. NO.	PART NO. N° PIECES	DESCRIPTION DESCRIPTION	69A5	6P72				REMARKS REMARQUES
1	66M–W009A–12–1S	CYLINDER HEAD ASSY CULASSE (ENS.)	1					FOR SAV FOR SAV
	66M–W009A–02–1S	CYLINDER HEAD ASSY CULASSE (ENS.)		1				FOR STD FOR STD
2	66M–11111–11–1S	HEAD, CYLINDER 1 CULASSE	1					FOR SAV FOR SAV
	66M–11111–01–1S	HEAD, CYLINDER 1 CULASSE		1				FOR STD FOR STD
3	66M–11133–29	.GUIDE, VALVE 1 .GUIDE, SOUPAPE 1	4	4				
4	93450–09M01	.CIRCLIP .CIRCLIP, TYPE S	4	4				
5	66M–11181–10	GASKET, CYLINDER HEAD 1 JOINT, DE CULASSE 1	1	1				
6	99510–10114	PIN, DOWEL GOUJON, D'ASSEMBLAGE	2	2				
7	90105–08M78	BOLT, FLANGE BOULON	6	6				
8	90119–06MA3	BOLT, WITH WASHER BOULON, AVEC RONDELLE	3	3				
9	66M–11191–00–1S	COVER, CYLINDER HEAD 1 COUVERCLE, CULASSE 1	1	1				
10	66M–11356–00	SEAL, CYLINDER 2 JOINT, SPY CYLINDRE	1	1				
11	97095–06020	BOLT BOULON	4	4				
12	92995–06600	WASHER RONDELLE	4	4				
13	6G8–15363–00	PLUG, OIL PLOT, HUILE	1	1				
14	93210–24M79	O-RING JOINT TORIQUE	1	1				
15	97095–08014	BOLT BOULON	2					FOR SAV FOR SAV
16	90430–08143	GASKET JOINT	2					FOR SAV FOR SAV
17	66M–12138–60	MARK, CAUTION MAKER	1	1				
18	94701–00375	PLUG, SPARK (NGK DPR6EA-9) BOUGIE D'ALLUMAGE(NGK DPR6EA-9	2	2				

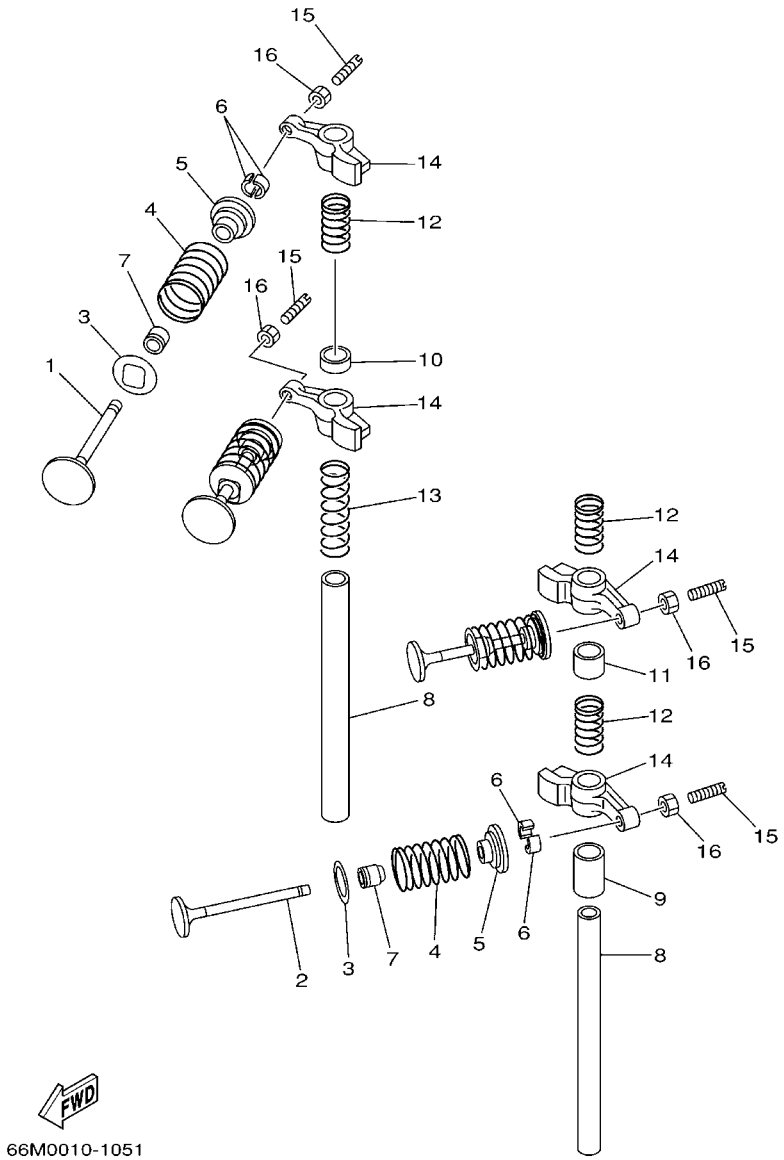

FIG. 5 VALVE SOUPAPE

REF. NO.	PART NO. N° PIECES	DESCRIPTION DESCRIPTION	69A5	6P72				REMARKS REMARQUES
1	66M–12111–00	VALVE, INTAKE SOUPAPE, ADMISSION	2	2				
2	66M–12121–00	VALVE, EXHAUST SOUPAPE, ECHAPPEMENT	2	2				
3	66M–12116–00	SEAT, VALVE SPRING SIEGE, RESSORT DE SOUPAPE	4	4				
4	66M–12113–00	SPRING, VALVE INNER RESSORT DE SOUPAPE, INTERNE	4	4				
5	30X–12117–00	RETAINER, VALVE SPRING BUTEE DE RESSORT DE SOUPAPE	4	4				
6	30X–12118–00	COTTER, VALVE FRAISE, SOUPAPE	8	8				
7	51Y–12119–00	SEAL, VALVE STEM JOINT, QUEUE DE SOUPAPE	4	4				
8	66M–12146–00	SHAFT, ROCKER AXE, CULBUTEUR	2	2				
9	90387–13M56	COLLAR COLLERETTE	1	1				
10	90387–13001	COLLAR COLLERETTE	1	1				
11	90387–13002	COLLAR COLLERETTE	1	1				
12	90501–12M40	SPRING, COMPRESSION RESSORT, COMPRESSION	3	3				
13	90501–12M41	SPRING, COMPRESSION RESSORT, COMPRESSION	1	1				
14	66M–12151–10	ARM, VALVE ROCKER CULBUTEUR	4	4				
15	62Y–12159–00	SCREW, VALVE ADJUSTING VIS, REGLAGE DE SOUPAPE	4	4				
16	62Y–12158–00	NUT, LOCK CONTRE-ECROU	4	4				

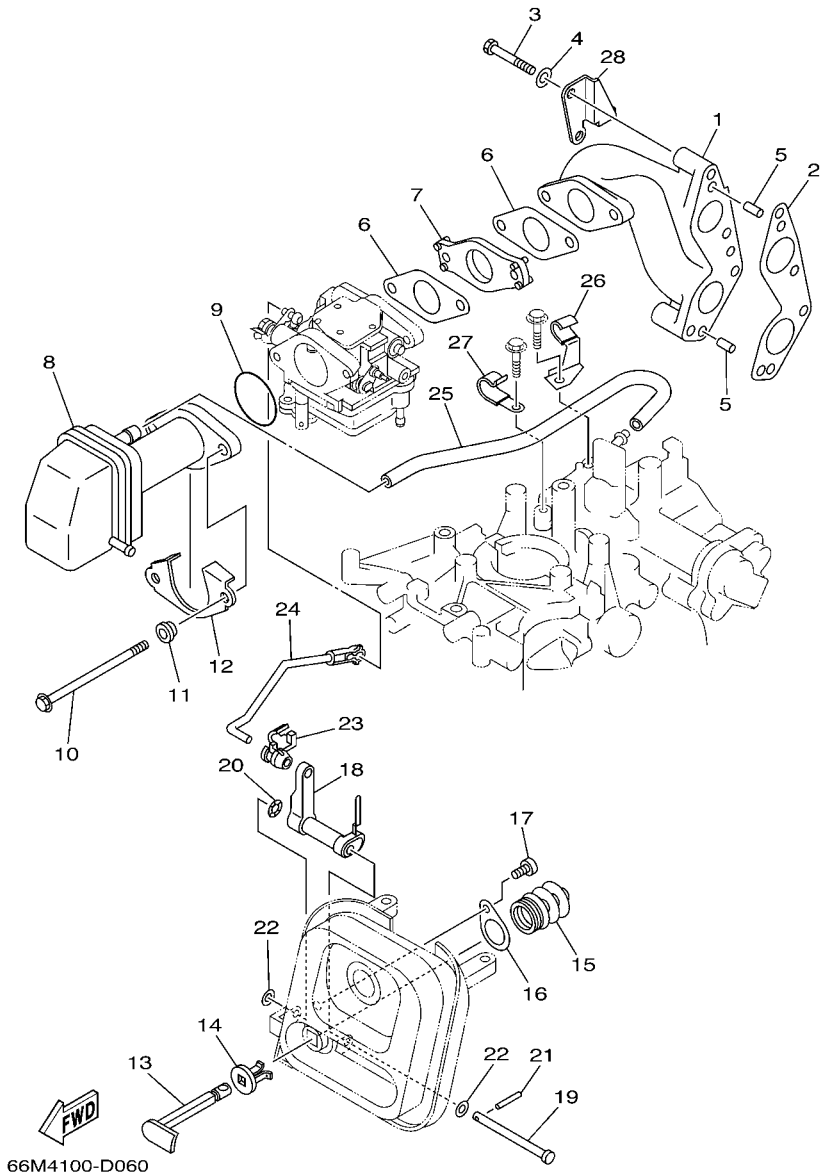

FIG. 6 INTAKE — ADMISSION

REF. NO.	PART NO. N° PIECES	DESCRIPTION DESCRIPTION	69A5	6P72				REMARKS REMARQUES
1	66M–13641–10–94	MANIFOLD 1 TUBULURE 1	1	1				
2	66M–13645–00	GASKET, MANIFOLD 1 JOINT, TUBULURE 1	1	1				
3	97095–06040	BOLT BOULON	4	4				
4	92995–06600	WASHER RONDELLE	4	4				
5	93606–12019	PIN, DOWEL GOUPILLE	2	2				
6	66M–13646–00	GASKET, MANIFOLD 2 JOINT, TUBULURE 2	2	2				
7	66M–14271–00	INSULATOR ISOLATEUR	1					
	69V–14271–00	INSULATOR ISOLATEUR		1				
8	66M–14440–00	SILENCER ASSY, INTAKE SIENCIEUX D'ADMISSION	1	1				
9	93210–35M86	O-RING JOINT TORIQUE	1	1				
10	90119–06M76	BOLT, WITH WASHER BOULON, AVEC RONDELLE	2	2				
11	90387–06M79	COLLAR COLLERETTE	2	2				
12	66M–14477–00	PLATE PLAQUE	1	1				
13	66M–41271–00	KNOB, CHOKE BOUTON DE STARTER	1	1				
14	689–41273–00	GROMMET PASSE-FIL	1	1				
15	66M–41292–00	BUSH 2 BAGUE 2	1	1				
16	66M–41298–00	WASHER 2 RONDELLE 2	1	1				
17	97780–50510	SCREW, TAPPING VIS, TETE BOMBEE	1	1				
18	66M–41252–00	LEVER, CHOKE 1 LEVIER 1	1	1				
19	90240–05M20	PIN, CLEVIS BOULON, A GOUPILLE	1	1				
20	90206–05005	WASHER, WAVE RONDELLE, ONDULEE	1	1				
21	91690–20016	PIN, SPRING AGRAFFE	1	1				
22	90202–05088	WASHER, PLATE RONDELLE, PLATE	2	2				
23	6R5–41237–00	JOINT, LINK RACCORD	1	1				
24	66M–41256–00	ROD, CHOKE 1 TRINGLE 1, STARTER	1	1				
25	66M–15373–00	PIPE, BREATHER DURITE DE RENIFLARD	1	1				
26	90465–08M82	CLAMP BRIDE	1	1				

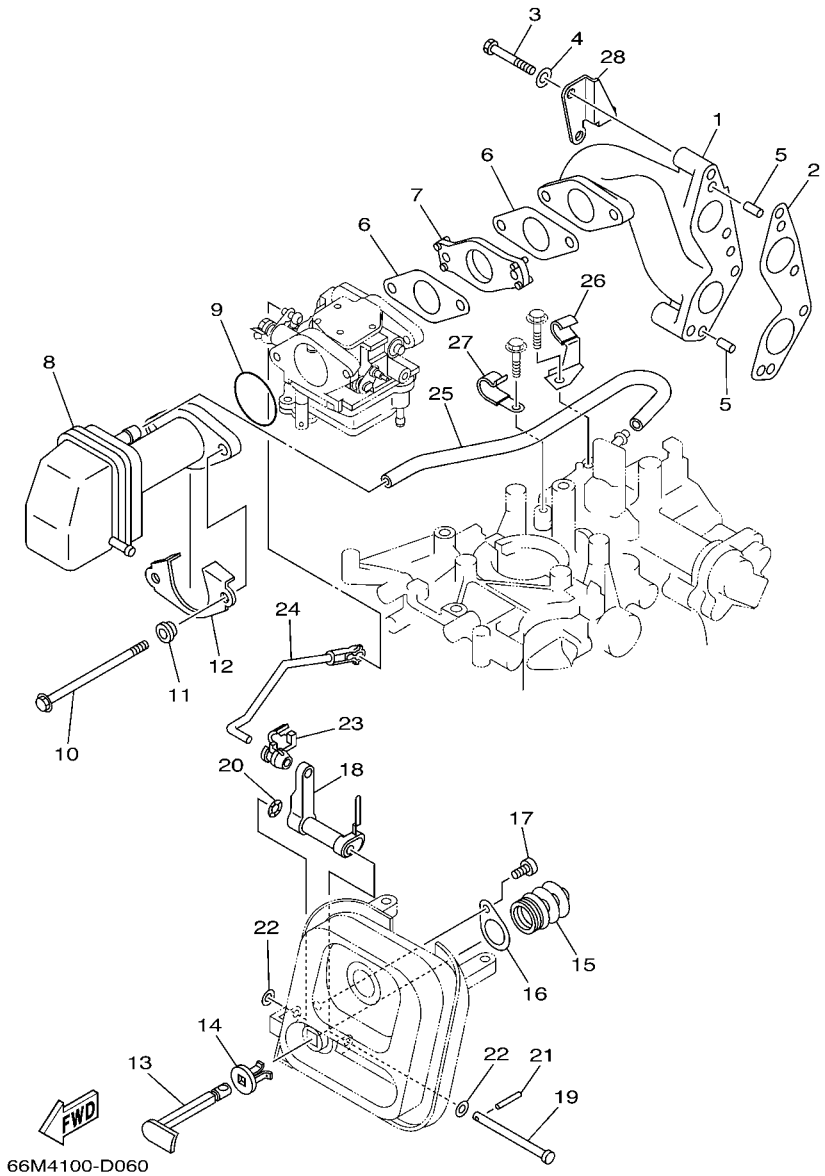

FIG. 6 INTAKE — ADMISSION

REF. NO.	PART NO. N° PIECES	DESCRIPTION DESCRIPTION	69A5	6P72				REMARKS REMARQUES
27	90465–08M83	CLAMP BRIDE	1	1				
28	6D4–24566–00	BRACKET, FILTER SUPPORT, FILTRE	1	1				

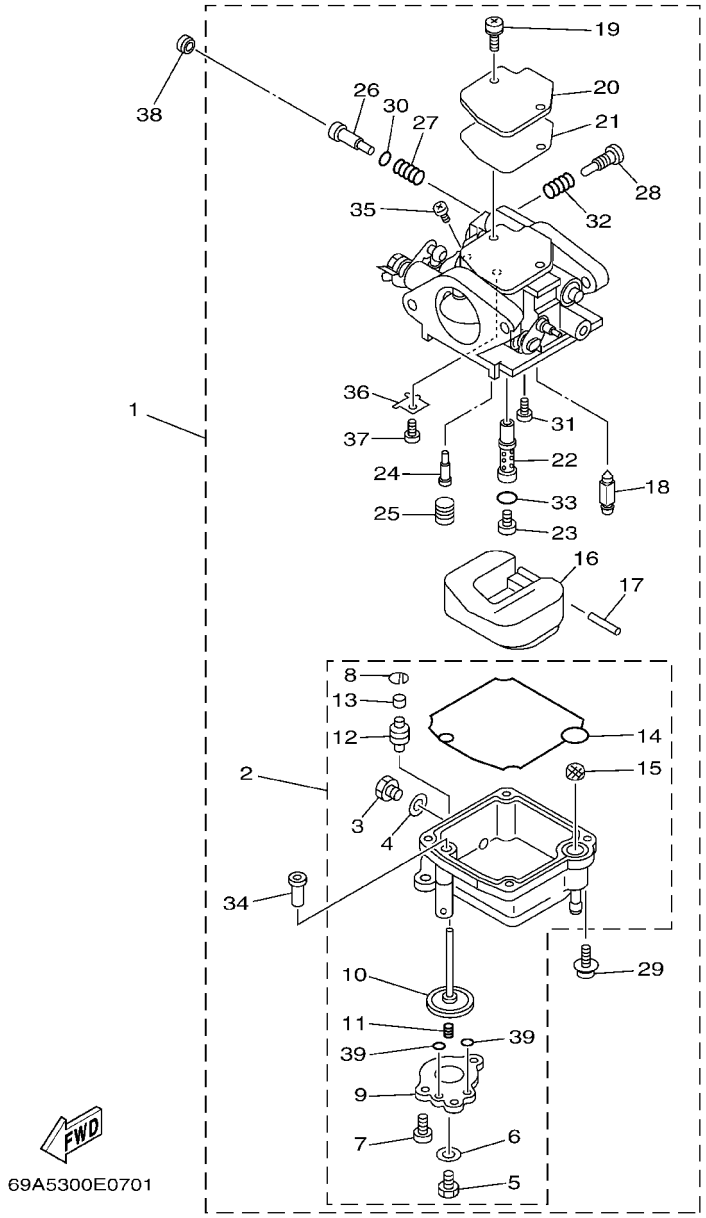

FIG. 7 CARBURETOR CARBURATEUR

REF. NO.	PART NO. N° PIECES	DESCRIPTION DESCRIPTION	69A5	6P72				REMARKS REMARQUES
1	66M–14301–21	CARBURETOR ASSY 1 CARBURATEUR COMPLET 1	1					FOR SAV FOR SAV
	66M–14301–00	CARBURETOR ASSY 1 CARBURATEUR COMPLET 1		1				FOR STD FOR STD
2	66M–14381–10	.BODY, FLOAT CHAMBER .CORPS, CUVE DE FLOTTEUR	1					FOR SAV FOR SAV
	66M–14381–02	.BODY, FLOAT CHAMBER .CORPS, CUVE DE FLOTTEUR		1				FOR STD FOR STD
3	62Y–14383–00	..SCREW, DRAIN ..BOUCHON, PURGE	1	1				
4	66M–14398–00	..GASKET ..JOINT	1	1				
5	677–14383–01	..SCREW, DRAIN ..BOUCHON, PURGE	1	1				
6	6L2–14398–00	..GASKET ..JOINT	1	1				
7	66M–14325–00	..SCREW, PAN HEAD ..VIS TETE CONIQUE	3	3				
8	66M–14377–00	..STOPPER ..BUTEE	1	1				
9	66M–14958–00	..COVER, DIAPHRAGM ..COUVERCLE, DIAPHRAGME	1	1				
10	66M–14368–01	..DIAPHRAGM ASSY 1 ..DIAPHRAGME 1	1	1				
11	6G8–14275–02	..SPRING ..RESSORT	1	1				
12	66M–14239–00	..SEAL ..JOINT	1	1				
13	66M–14225–00	..CAP ..COUVERCLE	1	1				
14	66M–14384–00	..GASKET, FLOAT CHAMBER ..JOINT, CUVE DE FLOTTEUR	1	1				
15	66M–14827–00	..FILTER ..FILTRE	1	1				
16	6L2–14385–00	.FLOAT .FLOTTEUR	1	1				
17	6E5–14386–01	.PIN, FLOAT .AXE, FLOTTEUR	1	1				
18	6L2–14392–00	.VALVE, NEEDLE .POINTEAU	1	1				
19	97980–04110	.SCREW, WITH WASHER .VIS, AVEC RONDELLE	2	2				
20	6L2–14157–00	.COVER, MIXING .COUVERCLE DE CHAMBRE	1	1				
21	62Y–14399–00	.GASKET .JOINT	1	1				
22	66M–14341–10	.NOZZLE, MAIN .PUITS D'AIGUILLE	1					FOR SAV FOR SAV
	66M–14341–00	.NOZZLE, MAIN .PUITS D'AIGUILLE		1				FOR STD FOR STD
23	66M–14343–51	.JET, MAIN (#103) .GICLEUR, PRINCIPAL (#103)	1					FOR SAV FOR SAV
	66M–14343–52	.JET, MAIN (#104) .GICLEUR, PRINCIPAL (#104)		1				FOR STD FOR STD

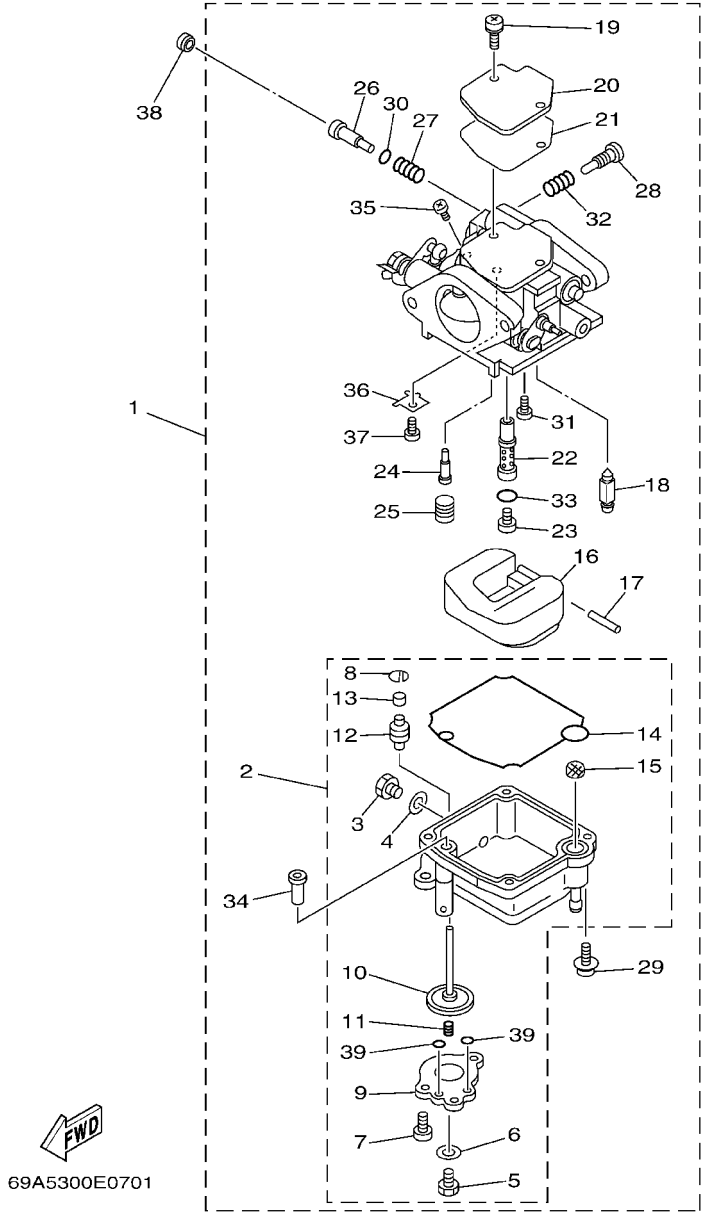

FIG. 7 CARBURETOR CARBURATEUR

REF. NO.	PART NO. N° PIECES	DESCRIPTION DESCRIPTION	69A5	6P72				REMARKS REMARQUES
24	66M–14342–23	.JET, PILOT (#45) .GICLEUR, RALENTI (#45)	1	1				
25	66M–14355–00	.PLUG .PLOT	1	1				
26	62Y–14323–10	.SCREW, AIR ADJUSTING .VIS DE DOSEUR D'AIR	1					FOR SAV FOR SAV
	5H0–14323–00	.SCREW, AIR ADJUSTING .VIS DE DOSEUR D'AIR		1				FOR STD FOR STD
27	30X–14334–00	.SPRING, AIR ADJUSTING .RESSORT, VIS DE DOSEUR D'AIR	1	1				
28	62Y–14521–00	.SCREW, THROTTLE .VIS, ACCELERATEUR	1	1				
29	97980–04112	.SCREW, WITH WASHER .VIS, AVEC RONDELLE	4	4				
30	62Y–14397–00	.O-RING .JOINT TORIQUE	1	1				
31	98980–04006	.SCREW, BIND .VIS, DE PRESSION	1	1				
32	646–14212–01	.SPRING, PILOT ADJUSTING .RESSORT, VIS DE RALENTI	1	1				
33	6F5–14397–00	.O-RING .JOINT TORIQUE	1	1				
34	66M–14272–00	.CHECK VALVE ASSY .CLAPET (ENS.)	1	1				
35	97890–04005	.SCREW, PAN HEAD .VIS, CRUCIFORME	1	1				
36	66M–14157–00	.PLATE .PLAQUE	1	1				
37	98580–03005	.SCREW, PAN HEAD .VIS	1	1				
38	6G8–14457–00	SEAL JOINT	1					FOR SAV FOR SAV
39	69M–24533–00	..O-RING ..JOINT TORIQUE	2	2				

FIG. 8 OIL PUMP — POMPE A HUILE

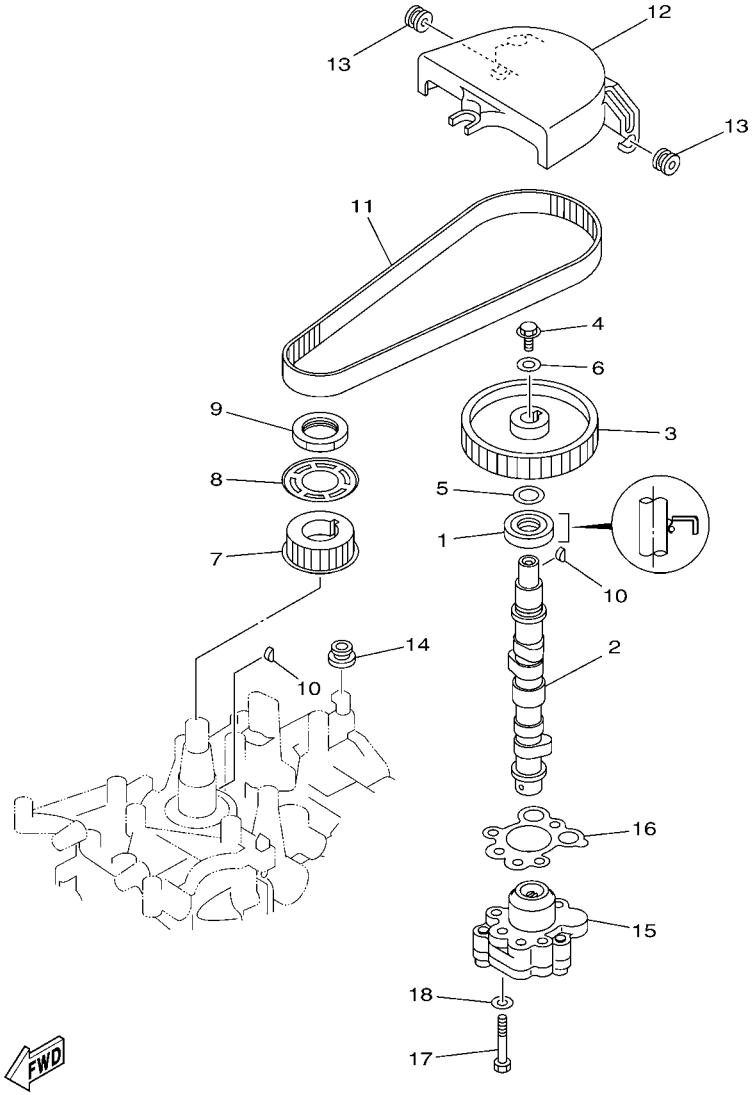

66R4300-D080

REF. NO.	PART NO. N° PIECES	DESCRIPTION DESCRIPTION	69A5	6P72				REMARKS REMARQUES
1	93102–18M21	OIL SEAL JOINT SPY	1	1				
2	66M–12171–10	CAMSHAFT 1 ARBRE A CAMES 1	1	1				
3	66M–11537–00–94	GEAR, DRIVEN PIGNON SECONDAIRE	1	1				
4	90105–06M14	BOLT FLANGE BOULON	1	1				
5	90201–13201	WASHER, PLATE RONDELLE, PLATE	1	1				
6	90201–06M94	WASHER, PLATE RONDELLE, PLATE	1	1				
7	66M–11536–10	GEAR, DRIVE ENGRENAGE, MENANT	1	1				
8	66M–11557–00	WASHER 1 RONDELLE 1	1	1				
9	90170–28M37	NUT ECROU	1	1				
10	90280–03M01	KEY, WOODRUFF CLAVETTE, DEMI-LUNE	2	2				
11	66M–46241–00	V-BELT COURROIE TRAPEZOIDALE	1	1				
12	66M–46297–00	COVER, DUST COUVERCLE, POUSSIERE	1	1				
13	90480–10M16	GROMMET PASSE-FIL	2	2				
14	90480–12072	GROMMET PASSE-FIL	1	1				
15	66M–13300–10	OIL PUMP ASSY POMPE A HUILE COMPLETE	1	1				
16	66M–13329–10	GASKET, PUMP COVER JOINT, COUVERCLE DE POMPE	1	1				
17	97095–06035	BOLT BOULON	3	3				
18	92995–06600	WASHER RONDELLE	3	3				

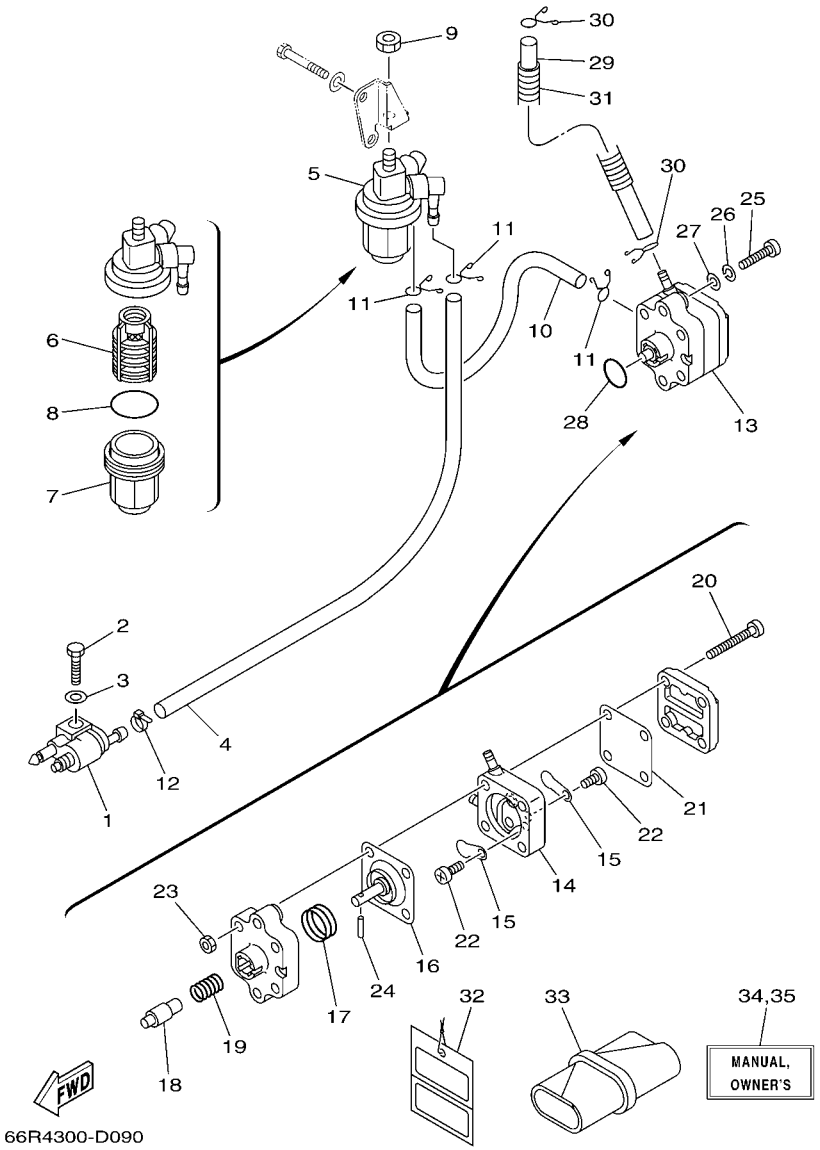

FIG. 9 FUEL CARBURANT

REF. NO.	PART NO. N° PIECES	DESCRIPTION DESCRIPTION	69A5	6P72				REMARKS REMARQUES
1	6G1–24304–02	FUEL PIPE JOINT COMP. 1 DURITE RACCORDEMT. A ESSENCE	1	1				
2	97095–06020	BOLT BOULON	1	1				
3	92995–06600	WASHER RONDELLE	1	1				
4	90445–10M19	HOSE (L500) DURITE (L500)	1	1				
5	61N–24560–00	FILTER ASSY ENS FILTRE	1	1				
6	61N–24563–00	.ELEMENT, FILTER .ELEMENT, FILTRE	1	1				
7	61N–24521–00	.CUP, FILTER .CUVETTE, FILTRE	1	1				
8	93210–32738	.O-RING .JOINT TORIQUE	1	1				
9	95380–08600	NUT ECROU	1	1				
10	90445–10M15	HOSE (L140) DURITE (L140)	1	1				
11	90467–09M17	CLIP JONC	3	3				
12	90465–11M10	CLAMP BRIDE	1	1				
13	66M–24410–10	FUEL PUMP ASSY POMPE A ESSENCE	1	1				
14	66M–24413–01	.BODY 2 .CORPS 2	1	1				
15	6A0–24421–01	.VALVE, CHECK .SOUPAPE, RETENUE	2	2				
16	66M–24411–10	.DIAPHRAGM .DIAPHRAGME	1	1				
17	66M–24423–00	.SPRING, DIAPHRAGM .RESSORT, DIAPHRAGME	1	1				
18	66M–13131–10	.PLUNGER .PLONGEUR	1	1				
19	66M–24454–00	.SPRING .RESSORT	1	1				
20	66M–24444–00	.SCREW .VIS	4	4				
21	66M–24471–00	.DIAPHRAGM .DIAPHRAGME	1	1				
22	6E7–14325–00	.SCREW, PAN HEAD .VIS TETE CONIQUE	2	2				
23	95380–04600	.NUT .ECROU	4	4				
24	66M–24374–00	.PIN .GOUPILLE	1	1				
25	97880–06030	SCREW, PAN HEAD VIS, TETE TRONCONIQUE	2	2				
26	92990–06100	WASHER, SPRING RONDELLE, GROWER	2	2				
27	92990–06600	WASHER, PLATE RONDELLE, PLATE	2	2				

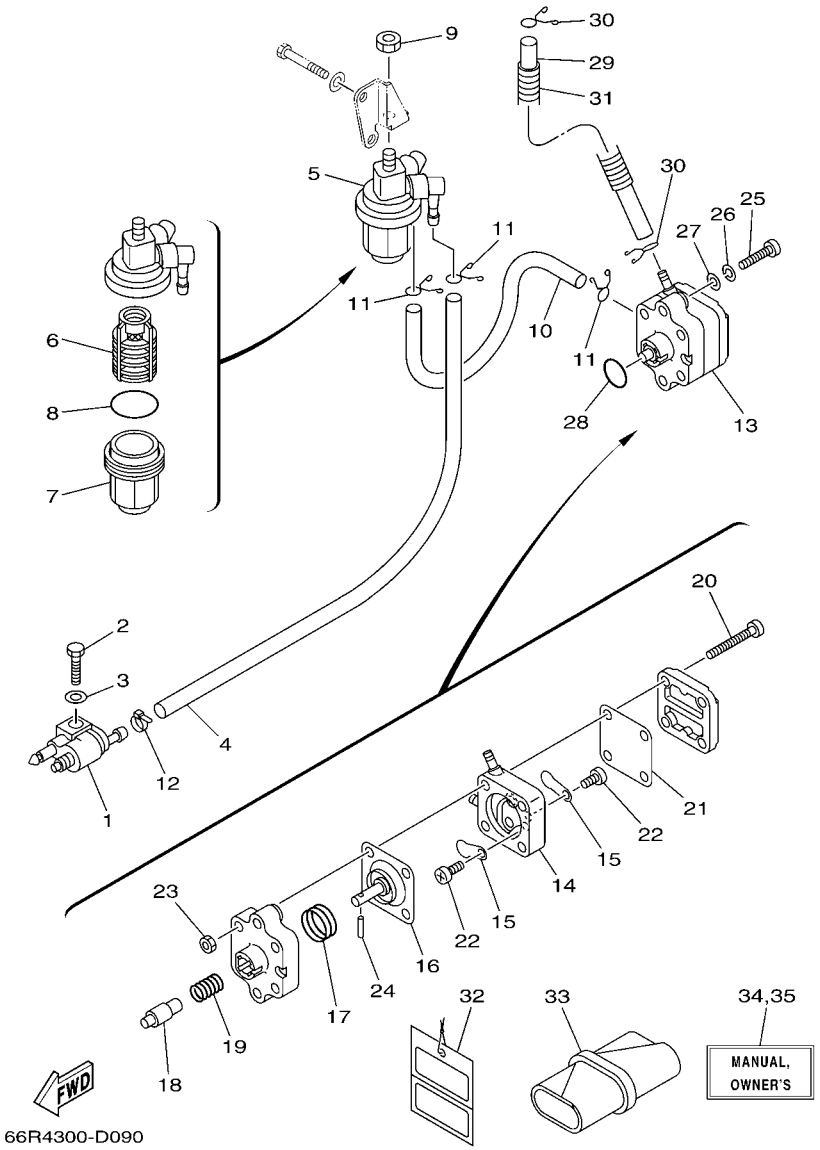

FIG. 9 FUEL CARBURANT

REF. NO.	PART NO. N° PIECES	DESCRIPTION DESCRIPTION	69A5	6P72				REMARKS REMARQUES
28	93210–20M65	O-RING JOINT TORIQUE	1	1				
29	90445–10M93	HOSE (L370) DURITE (L370)	1	1				
30	90467–09M17	CLIP JONC	2	2				
31	90446–14M51	HOSE DURITE	1	1				
32	61H–2819R–31	TAG, WARNING ETIQUETTE, AVERTISSEMENT	1	1				
33	62Y–28100–00	TOOL KIT TROUSSE A OUTILS	1	1				
34	66M–28199–7A–E0	MANUAL,OWNER'S MANUEL D'UTILISATION	1	1				UR (E) UR (E)
	66M–28199–7A–F0	MANUAL,OWNER'S MANUEL D'UTILISATION	1	1				UR (F) UR (F)
	66M–28199–7A–S0	MANUAL,OWNER'S MANUEL D'UTILISATION	1	1				UR (ES) UR (ES)
	66M–28199–7A–G0	MANUAL,OWNER'S MANUEL D'UTILISATION	1	1				UR (D) UR (D)
	66M–28199–7A–D0	MANUAL,OWNER'S MANUEL D'UTILISATION	1	1				UR (NL) UR (NL)
	66M–28199–7A–H0	MANUAL,OWNER'S MANUEL D'UTILISATION	1	1				UR (I) UR (I)
35	66M–28199–8B–K0	MANUAL,OWNER'S MANUEL D'UTILISATION	1	1				UR (DK) UR (DK)
	66M–28199–8B–R0	MANUAL,OWNER'S MANUEL D'UTILISATION	1	1				UR (GR) UR (GR)
	66M–28199–8B–P0	MANUAL,OWNER'S MANUEL D'UTILISATION	1	1				UR (P) UR (P)
	66M–28199–8B–N0	MANUAL,OWNER'S MANUEL D'UTILISATION	1	1				UR (N) UR (N)
	66M–28199–8B–M0	MANUAL,OWNER'S MANUEL D'UTILISATION	1	1				UR (S) UR (S)
	66M–28199–8B–L0	MANUAL,OWNER'S MANUEL D'UTILISATION	1	1				UR (SF) UR (SF)

FIG. 10 STARTER DEMARREUR

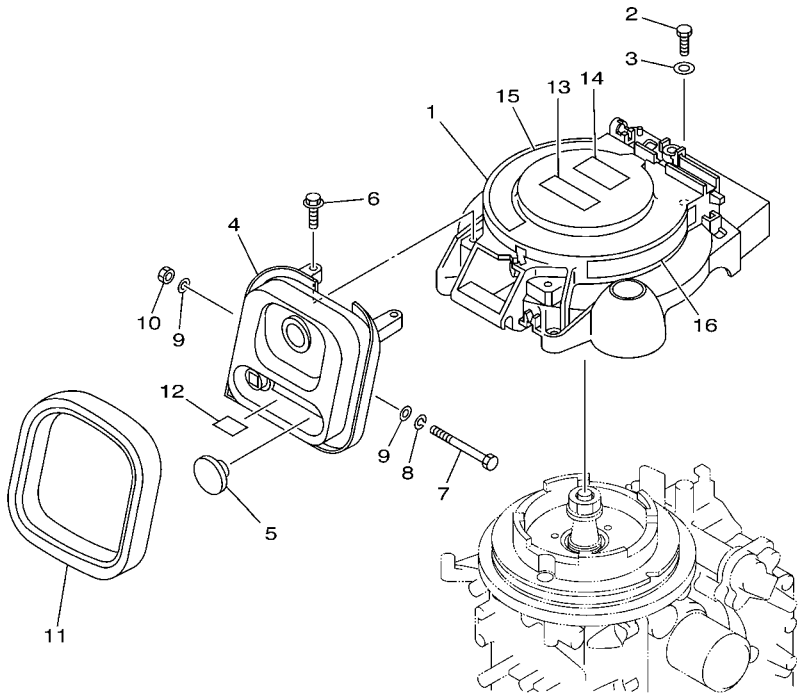

69A1300-2100

REF. NO.	PART NO. N° PIECES	DESCRIPTION DESCRIPTION	69A5	6P72				REMARKS REMARQUES
1	66M–15711–10	CASE, STARTER CARTER DE DEMARREUR	1	1				
2	97095–06020	BOLT BOULON	3	3				
3	92995–06600	WASHER RONDELLE	3	3				
4	66M–15758–10	GUIDE, ROPE GUIDE DE CABLE	1	1				
5	6G1–42725–00	GROMMET PASSE-FIL	1	1				
6	90119–06M59	BOLT, WITH WASHER BOULON, AVEC RONDELLE	2	2				
7	97095–06090	BOLT BOULON	1	1				
8	92995–06100	WASHER, SPRING RONDELLE, GROWER	1	1				
9	90201–06M05	WASHER, PLATE RONDELLE, PLATE	2	2				
10	95380–06700	NUT ECROU	1	1				
11	66M–15762–00	SEAL, RUBBER 2 JOINT CAOUTCHOUC 2	1	1				
12	66M–84342–00	SEAT, EMBLEM SIEGE, EMBLEME	1	1				
13	6A1–83625–41	MARK 5 ETIQUETTE 5	1	1				
14	6A1–83625–51	MARK 5 ETIQUETTE 5	1	1				
15	66M–14427–60	LABEL, INSTRUCTION ETIQUETTE, INSTRUCTION	1	1				
16	6G8–13437–65	MARK, CAUTION MAKER	1	1				

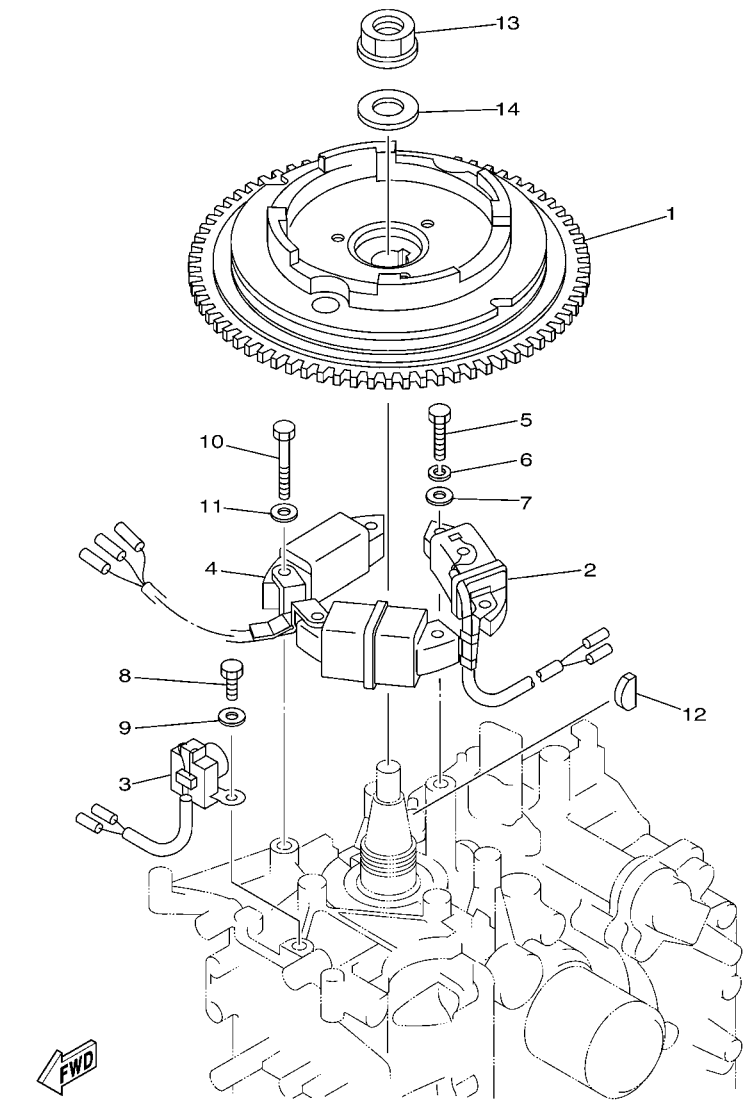

FIG. 11 GENERATOR GENERATRICE

REF. NO.	PART NO. N° PIECES	DESCRIPTION DESCRIPTION	69A5	6P72				REMARKS REMARQUES
1	66M–85550–10	ROTOR ASSY (WITH RING GEAR) ROTOR CPLT	1	1				
2	66M–85520–00	COIL, CHARGE BOBINE, CHARGE	1	1				
3	66M–85580–00	COIL, PULSER BOBINE, PULSEUR	1	1				
4	66M–85533–10	COIL, LIGHTING BOBINE, ECLAIRAGE	1	1				10A 10A
5	97095–06025	BOLT BOULON	2	2				
6	92995–06100	WASHER, SPRING RONDELLE, GROWER	2	2				
7	92995–06600	WASHER RONDELLE	2	2				
8	97095–06016	BOLT BOULON	2	2				
9	92995–06600	WASHER RONDELLE	2	2				
10	97095–06040	BOLT BOULON	4	4				
11	92995–06600	WASHER RONDELLE	4	4				
12	90280–05013	KEY, WOODRUFF CLAVETTE, DEMI-LUNE	1	1				
13	90179–16M05	NUT ECROU	1	1				
14	90201–16M44	WASHER, PLATE RONDELLE, PLATE	1	1				

FIG. 12 ELECTRICAL 1 — PARTIE ELECTRIQUE 1

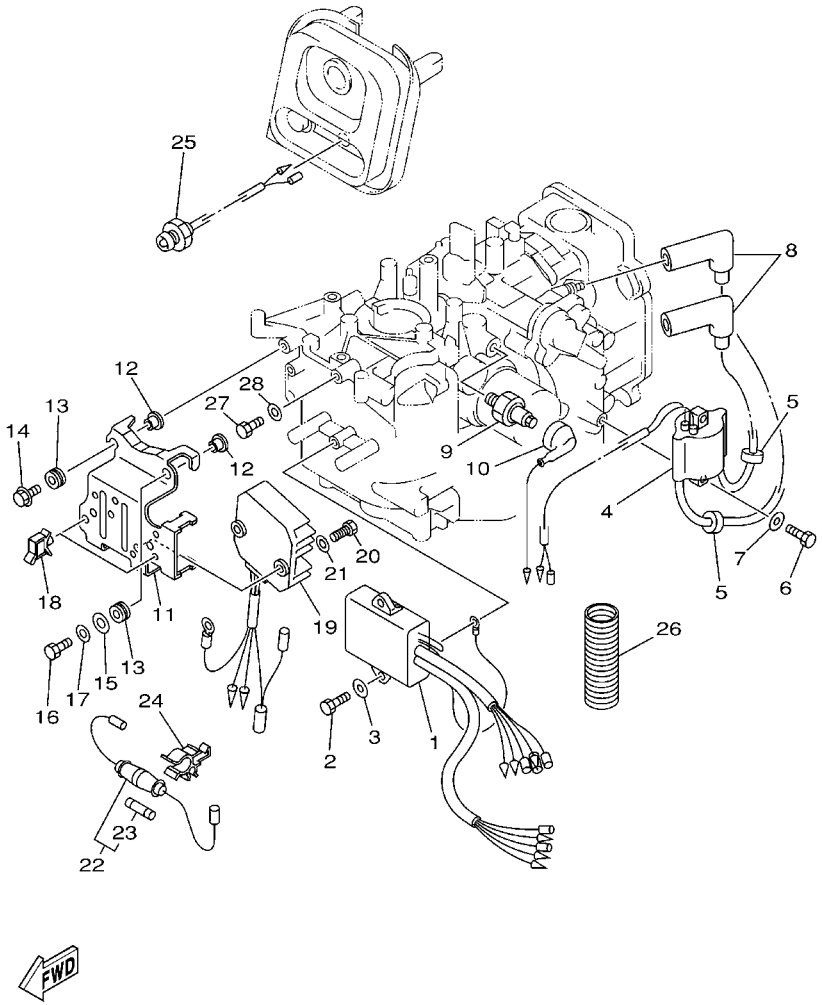

69B0010-1120

REF. NO.	PART NO. N° PIECES	DESCRIPTION DESCRIPTION	69A5	6P72				REMARKS REMARQUES
1	66M–85540–10	C.D.I. UNIT ASSY BLOC C.D.I.	1					
	66M–85540–01	C.D.I. UNIT ASSY BLOC C.D.I.		1				
2	97095–06020	BOLT BOULON	2	2				
3	92995–06600	WASHER RONDELLE	2	2				
4	66M–85570–00	IGNITION COIL ASSY BOBINE D'ALLUMAGE (ENS.)	1	1				
5	90480–25161	GROMMET PASSE-FIL	2	2				
6	97095–06020	BOLT BOULON	2	2				
7	92995–06600	WASHER RONDELLE	2	2				
8	6G8–82370–30	PLUG CAP ASSY ANTIPARASITE	2	2				
9	62Y–82504–10	OIL PRESSURE SWITCH ASSY CONTACTEUR DE PRESSION D'HUILE	1	1				
10	66M–82127–10	WIRE, LEAD 2 FIL 2	1	1				
11	69A–85542–10	BRACKET SUPPORT	1	1				
12	90387–06M05	COLLAR COLLERETTE	4	4				
13	90480–13M24	GROMMET PASSE-FIL	4	4				
14	95895–06020	BOLT, FLANGE BOULON	3	3				
15	90201–06M05	WASHER, PLATE RONDELLE, PLATE	1	1				
16	97095–06025	BOLT BOULON	1	1				
17	92995–06600	WASHER RONDELLE	1	1				
18	90464–09M13	CLAMP BRIDE	2	2				
19	6G8–81960–A1	RECTIFIER & REGULATOR ASSY REDRESSEUR REGULATEUR CPLT	1	1				
20	97095–06016	BOLT BOULON	2	2				
21	92995–06600	WASHER RONDELLE	2	2				
22	6G8–82150–00	FUSE HOLDER ASSY SUPPORT DE FUSIBLE	1	1				
23	663–82151–00	.FUSE (12V-20A) .FUSIBLE (12V-20A)	1	1				
24	6G5–82152–00	HOLDER, FUSE SUPPORT, FUSIBLE	1	1				
25	65W–85410–01	EMERGENCY SIGNAL LIGHT ASSY FEU DE DETRESSE	1	1				
26	6H1–83557–00	TUBE TUBE	1	1				

FIG. 12 ELECTRICAL 1 — PARTIE ELECTRIQUE 1

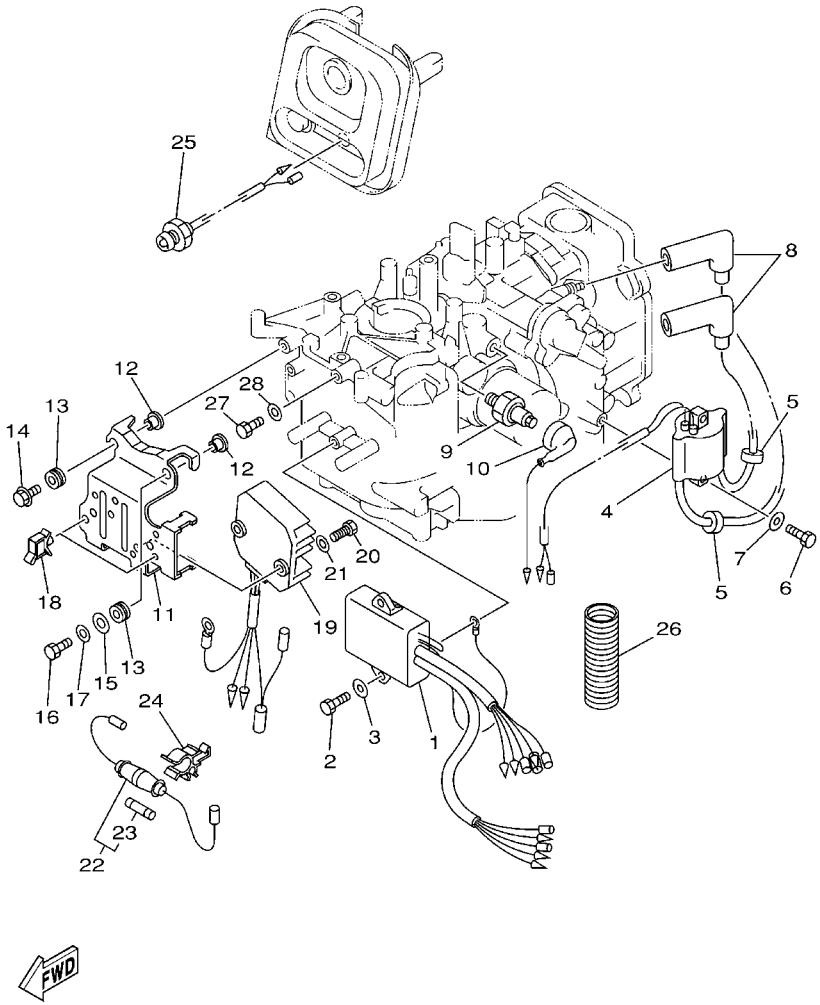

69B0010-1120

REF. NO.	PART NO. N° PIECES	DESCRIPTION DESCRIPTION	69A5	6P72				REMARKS REMARQUES
27	97095–06016	BOLT BOULON	1	1				
28	92995–06600	WASHER RONDELLE	1	1				

FIG. 13 ELECTRICAL 2 PARTIE ELECTRIQUE 2

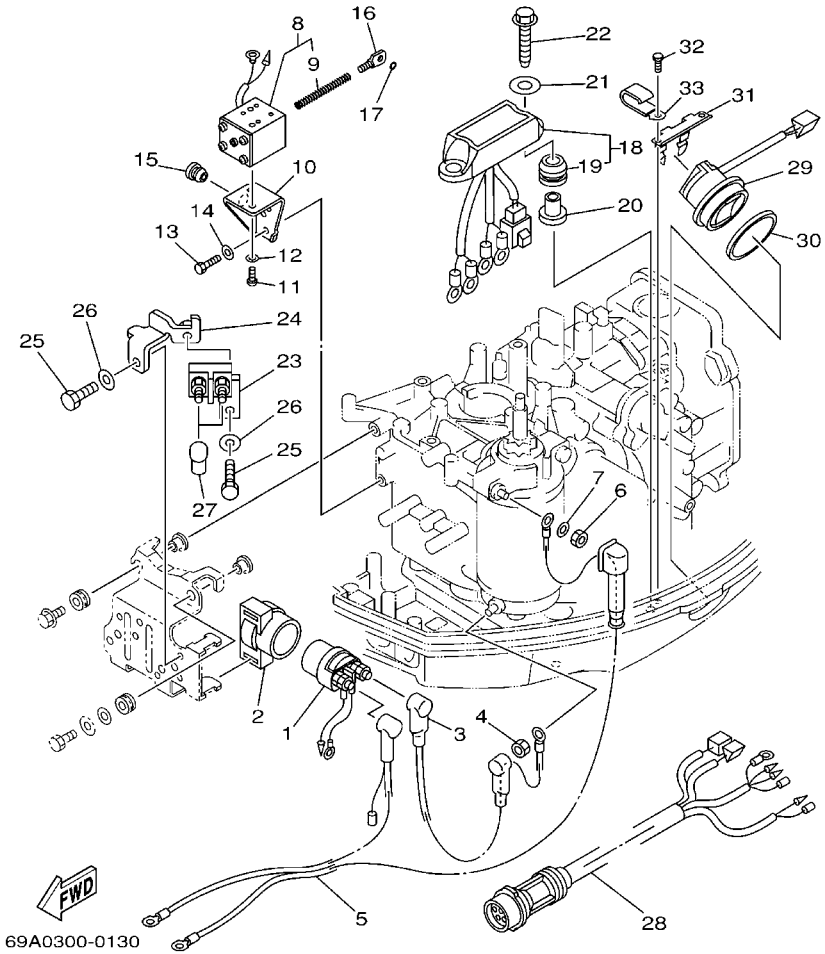

REF. NO.	PART NO. N° PIECES	DESCRIPTION DESCRIPTION	69A5	6P72				REMARKS REMARQUES
1	6G1–81941–10	STARTER RELAY ASSY LANCEUR RELAIS (ENS.)	1	1				
2	6G1–81952–00	HOLDER, RELAY SUPPORT, RELAIS	1	1				
3	66M–82117–00	WIRE, LEAD FIL	1	1				
4	65W–8182B–00	NUT, SPECIAL ECROU, SPECIAL	1	1				
5	66M–82105–00	WIRE HARNESS FAISCEAU DE FILS	1	1				
6	95380–08700	NUT ECROU	1	1				
7	92990–08600	WASHER, PLATE RONDELLE, PLATE	1	1				
8	66M–86111–00	COIL, SOLENOID BOBINE	1	1				
9	66M–86116–00	.WIRE, PULL .CABLE, TENSION	1	1				
10	66M–86112–00	STAY, SOLENOID SUPPORT, SOLENOIDE	1	1				
11	97880–05008	SCREW, PAN HEAD VIS, TETE TRONCONIQUE	2	2				
12	92990–05600	WASHER, PLATE RONDELLE, PLATE	2	2				
13	97095–06016	BOLT BOULON	2	2				
14	92995–06600	WASHER RONDELLE	2	2				
15	90480–10M13	GROMMET PASSE-FIL	1	1				
16	66M–86117–00	HOOK, WIRE PULL CROCHET, TENSION DE CABLE	1	1				
17	93210–03261	O-RING JOINT TORIQUE	1	1				
18	69A–81950–00	RELAY ASSY RELAIS COMPLET	1	1				
19	90480–09M12	.GROMMET .PASSE-FIL	2	2				
20	90387–06M03	COLLAR COLLERETTE	2	2				
21	90201–06416	WASHER, PLATE RONDELLE, PLATE	2	2				
22	90109–06MA2	BOLT BOULON	2	2				
23	6H5–81920–00	TERMINAL ASSY BORNE	1	1				
24	69A–81929–00	BRACKET, TERMINAL SUPPORT	1	1				
25	97095–06012	BOLT BOULON	2	2				
26	92995–06600	WASHER RONDELLE	2	2				
27	6G5–82119–00	COVER, LEAD WIRE GARNITURE, FIL	2	2				

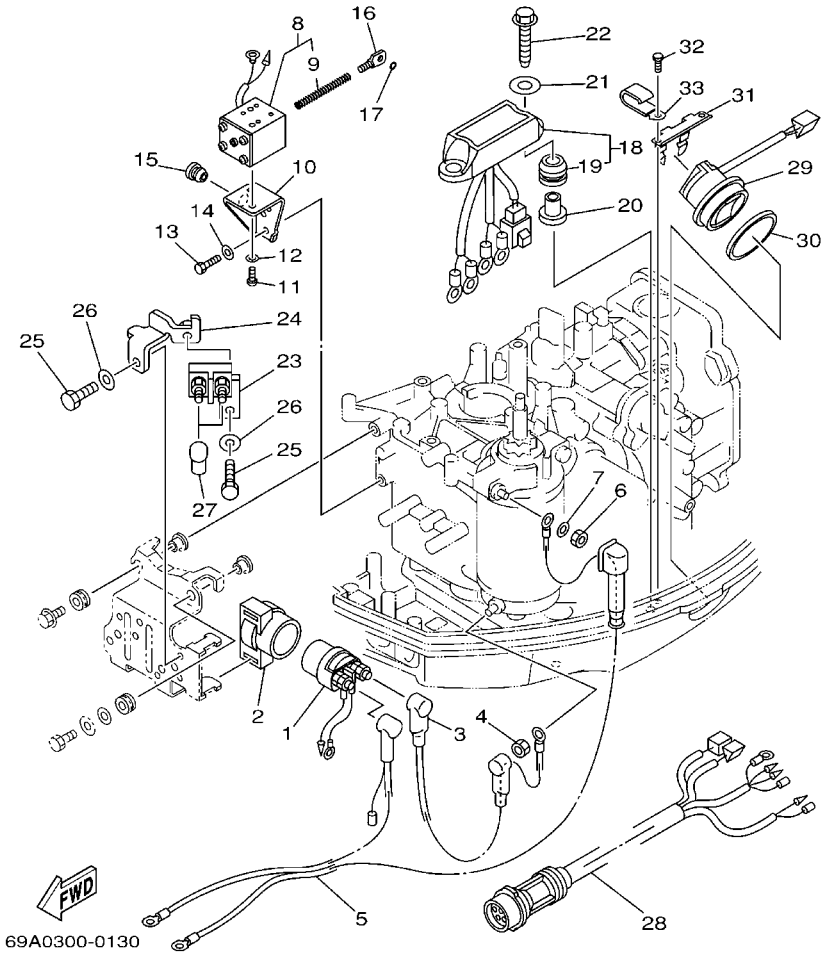

FIG. 13 ELECTRICAL 2 — PARTIE ELECTRIQUE 2

REF. NO.	PART NO. N° PIECES	DESCRIPTION DESCRIPTION	69A5	6P72				REMARKS REMARQUES
28	69A–82590–00	WIRE HARNESS ASSY (10P) FAISCEAU DE FILS COMPLET (10P)	1	1				
29	63D–82563–10	TRIM & TILT SWITCH ASSY INCLINER ET PARER COMMUTATEUR	1	1				
30	6E5–82587–00	GASKET JOINT	1	1				
31	69A–83614–00	BRACKET SUPPORT	1	1				
32	90109–06M86	BOLT BOULON	2	2				
33	90465–06M88	CLAMP BRIDE	1	1				

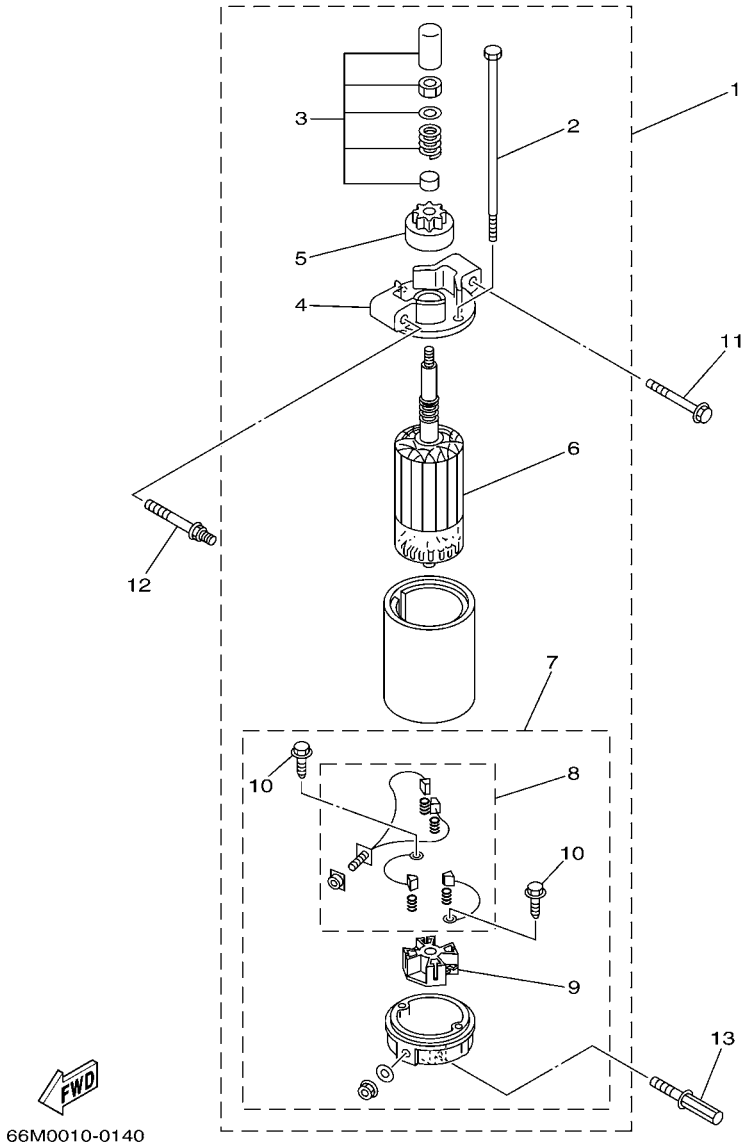

FIG. 14 STARTING MOTOR DEMARREUR ELECTRIQUE

REF. NO.	PART NO. N° PIECES	DESCRIPTION DESCRIPTION	69A5	6P72				REMARKS REMARQUES
1	66M–81800–01	STARTING MOTOR ASSY DEMARREUR ELECTRIQUE COMPLET	1	1				
2	65W–81826–00	.BOLT .BOULON	2	2				
3	65W–81857–01	.RETAINER .ARRETOIR	1	1				
4	66M–81830–00	.FRONT BRACKET ASSY .SUPPORT AVANT	1	1				
5	65W–81807–00	.GEAR ASSY, STARTING MOTOR .PIGNON, DEMARREUR ELECTRIQUE	1	1				
6	65W–81850–01	.ARMATURE ASSY .INDUIT	1	1				
7	66M–81820–00	.REAR BRACKET ASSY .SUPPORT ARRIERE COMPLET	1	1				
8	65W–81801–00	..BRUSH SET ..CHARBON	1	1				
9	65W–81840–00	..BRUSH HOLDER ASSY ..SUPPORT DE CHARBON	1	1				
10	65W–8182S–00	..SCREW ..VIS	2	2				
11	90119–08M39	BOLT, WITH WASHER BOULON, AVEC RONDELLE	1	1				
12	90109–08M78	BOLT BOULON	1	1				
13	90109–08M85	BOLT BOULON	1	1				

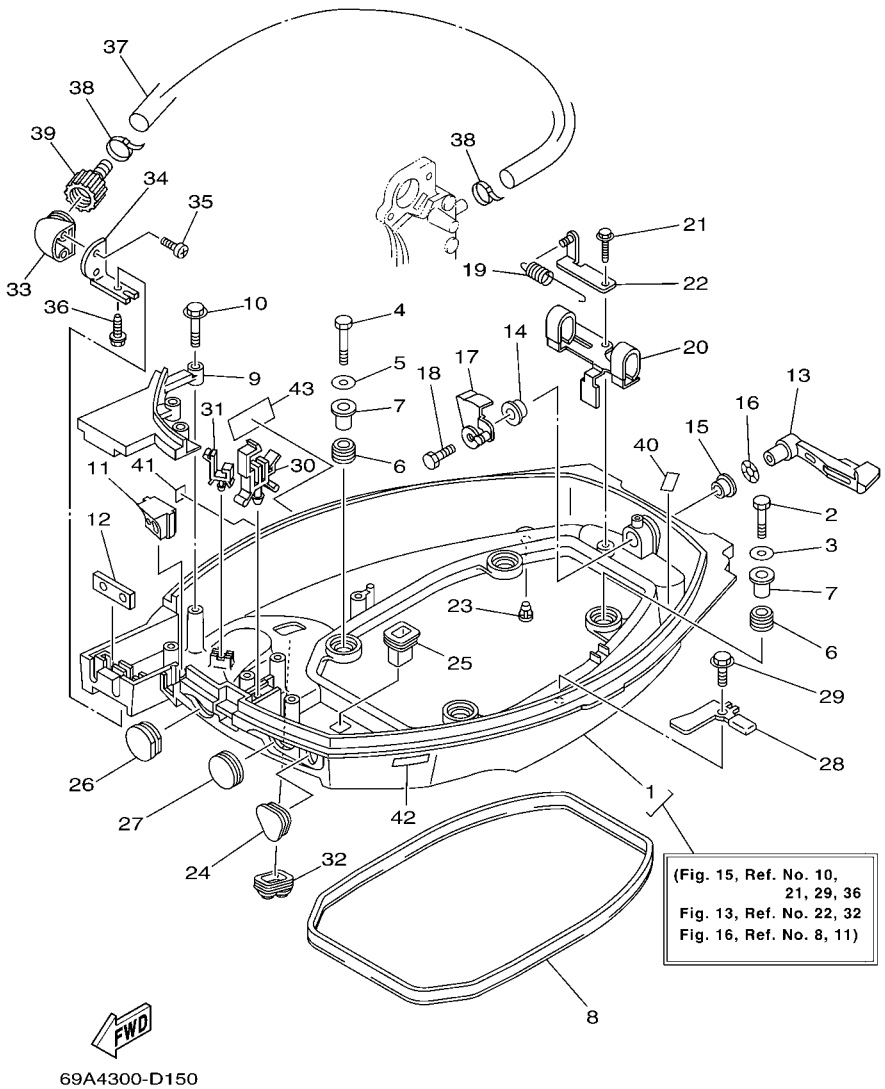

FIG. 15 BOTTOM COWLING CAPOT INFERIEUR

REF. NO.	PART NO. N° PIECES	DESCRIPTION DESCRIPTION	69A5	6P72				REMARKS REMARQUES
1	69A–42710–13–4D	BOTTOM COWLING ASSY ENS. EMBASE	1	1				WITH TAPPING BOLT WITH TAPPING BOLT
2	97095–06035	BOLT BOULON	2	2				
3	92995–06600	WASHER RONDELLE	2	2				
4	97095–06025	BOLT BOULON	2	2				
5	92995–06600	WASHER RONDELLE	2	2				
6	90480–15M31	GROMMET PASSE-FIL	4	4				
7	90387–06034	COLLAR COLLERETTE	4	4				
8	66M–42716–00	RUBBER, SEAL 1 JOINT EN CAOUTCHOUC 1	1	1				
9	66M–42738–00–4D	PLATE, FITTING ETRIER	1	1				
10	90109–06M82	BOLT BOULON	3	3				
11	66M–42725–20	GROMMET PASSE-FIL	1	1				
12	62Y–42727–00	GROMMET PASSE-FIL	1	1				
13	6D4–42815–00–4D	LEVER, CLAMP LEVIER, PRESSE	1	1				
14	90386–12M37	BUSH DOUILLE	1	1				
15	90386–12MA2	BUSH DOUILLE	1	1				
16	90206–12052	WASHER, WAVE RONDELLE, ONDULEE	1	1				
17	6D4–42816–00	LEVER, CLAMP LEVIER, PRESSE	1	1				
18	97095–06012	BOLT BOULON	1	1				
19	90506–18010	SPRING, TENSION RESSORT, TENSION	1	1				
20	6D4–42766–00	BRACKET 2 SUPPORT 2	1	1				
21	90109–06M81	BOLT BOULON	1	1				
22	6D4–43144–00	HOOK, SPRING CROCHET	1	1				
23	6H3–44391–01	NIPPLE, HOSE RACCORD D'ESSENCE	1	1				
24	65W–26326–10	GROMMET RONDELLE CAOUTCHOUC	1	1				
25	682–42727–00	GROMMET PASSE-FIL	1	1				
26	682–42724–00	GROMMET PASSE-FIL	1	1				
27	65W–42726–10	GROMMET PASSE-FIL	1	1				

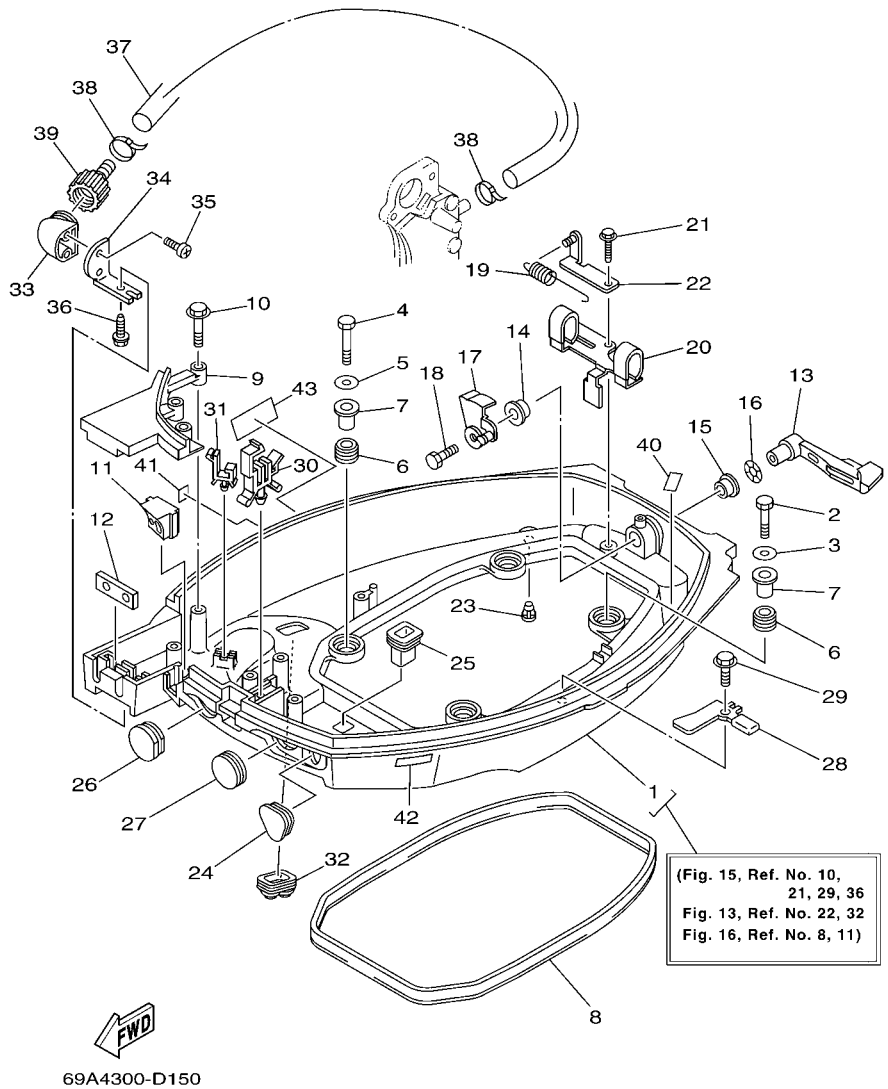

FIG. 15 BOTTOM COWLING CAPOT INFERIEUR

REF. NO.	PART NO. N° PIECES	DESCRIPTION DESCRIPTION	69A5	6P72				REMARKS REMARQUES
28	66M–42743–00	BRACKET SUPPORT	2	2				
29	90109–06M86	BOLT BOULON	2	2				
30	90465–25M95	CLAMP BRIDE	1	1				
31	90464–09M13	CLAMP BRIDE	1	1				
32	6H1–42726–21	GROMMET PASSE-FIL	1	1				FLUSHING KIT FLUSHING KIT
33	68T–12572–00	ADAPTER ADAPTATEUR	1	1				FLUSHING KIT FLUSHING KIT
34	69W–12535–00	PLATE PLAQUE	1	1				FLUSHING KIT FLUSHING KIT
35	90167–06002	SCREW, TAPPING VIS, TETE FRAISEE	2	2				FLUSHING KIT FLUSHING KIT
36	90109–06M86	BOLT BOULON	1	1				FLUSHING KIT FLUSHING KIT
37	66M–12481–00	PIPE 1 DURITE 1	1	1				FLUSHING KIT FLUSHING KIT
38	90465–11M10	CLAMP BRIDE	2	2				FLUSHING KIT FLUSHING KIT
39	6R3–12580–00	JOINT ASSY ARTICULER (ENS.)	1	1				FLUSHING KIT FLUSHING KIT
40	62Y–82377–00	LABEL ETIQUETTE	1	1				
41	6A1–28176–00	LABEL, CAUTION ETIQUETTE, RECOMMANDATION	1	1				
42	6E3–8257H–00	PLATE, MARK PLAQUE, ADHESIF	1	1				
43	6G8–13444–51	MARK MAKER	1	1				

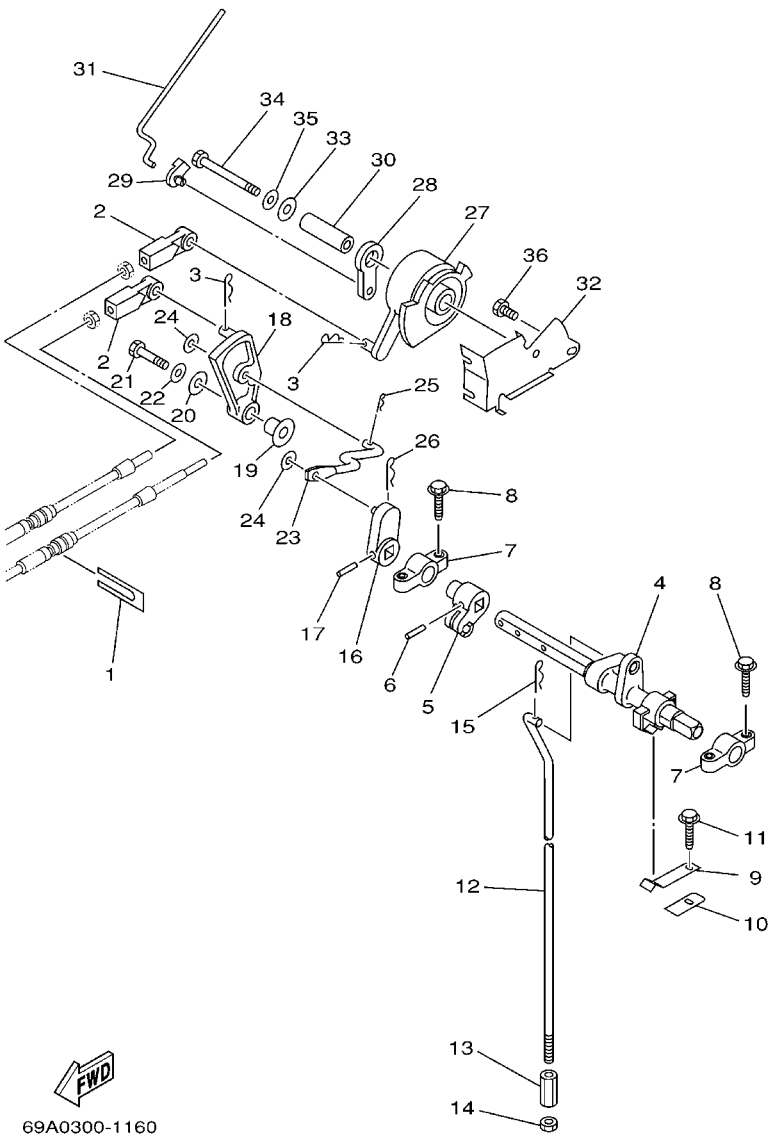

FIG. 16 CONTROL COMMANDE

REF. NO.	PART NO. N° PIECES	DESCRIPTION DESCRIPTION	69A5	6P72				REMARKS REMARQUES
1	6H3–48538–00	CLAMP, CABLE 1 COLLIER	1	1				
2	663–48344–00	CABLE END, REMOTE CONTROL CHAPE CABLE	2	2				
3	90468–18008	CLIP JONC	2	2				
4	65W–44121–00	LEVER, SHIFT ROD LEVIER, TIGE D'INVERSION	1	1				
5	66M–44122–00	BUSHING, SHIFT ROD LEVER DOUILLE, LEVIER D'EMBRAYAGE	1	1				
6	90254–03M05	PIN, SPRING RIVET, TETE TRONCONIQUE	1	1				
7	6F5–41662–00	BRACKET SUPPORT	2	2				
8	90109–06M81	BOLT BOULON	4	4				
9	65W–44116–00	SPRING RESSORT	1	1				
10	66R–44114–00	STOPPER PLAQUETTE	1	1				
11	90109–06M86	BOLT BOULON	1	1				
12	66M–44143–00	ROD, SHIFT TIGE D'EMBRAYAGE	1	1				S (17.4") S (17.4")
	66M–44143–10	ROD, SHIFT TIGE D'EMBRAYAGE	1	1				L (22.4") L (22.4")
13	90170–06015	NUT ECROU	1	1				
14	95380–06700	NUT ECROU	1	1				
15	90468–18008	CLIP JONC	1	1				
16	65W–44142–00	JOINT AXE	1	1				
17	90254–03M05	PIN, SPRING RIVET, TETE TRONCONIQUE	1	1				
18	65W–44125–00	LEVER, SHIFT ROD LEVIER, TIGE D'INVERSION	1	1				
19	90387–06M29	COLLAR COLLERETTE	1	1				
20	90201–06M31	WASHER, PLATE RONDELLE, PLATE	1	1				
21	97095–06025	BOLT BOULON	1	1				
22	92995–06600	WASHER RONDELLE	1	1				
23	66M–44192–00	JOINT, ROD 1 RACCORD 1, BIELLETTE	1	1				
24	90201–05M06	WASHER, PLATE RONDELLE, PLATE	2	2				
25	90468–10005	CLIP JONC	1	1				
26	90468–18008	CLIP JONC	1	1				

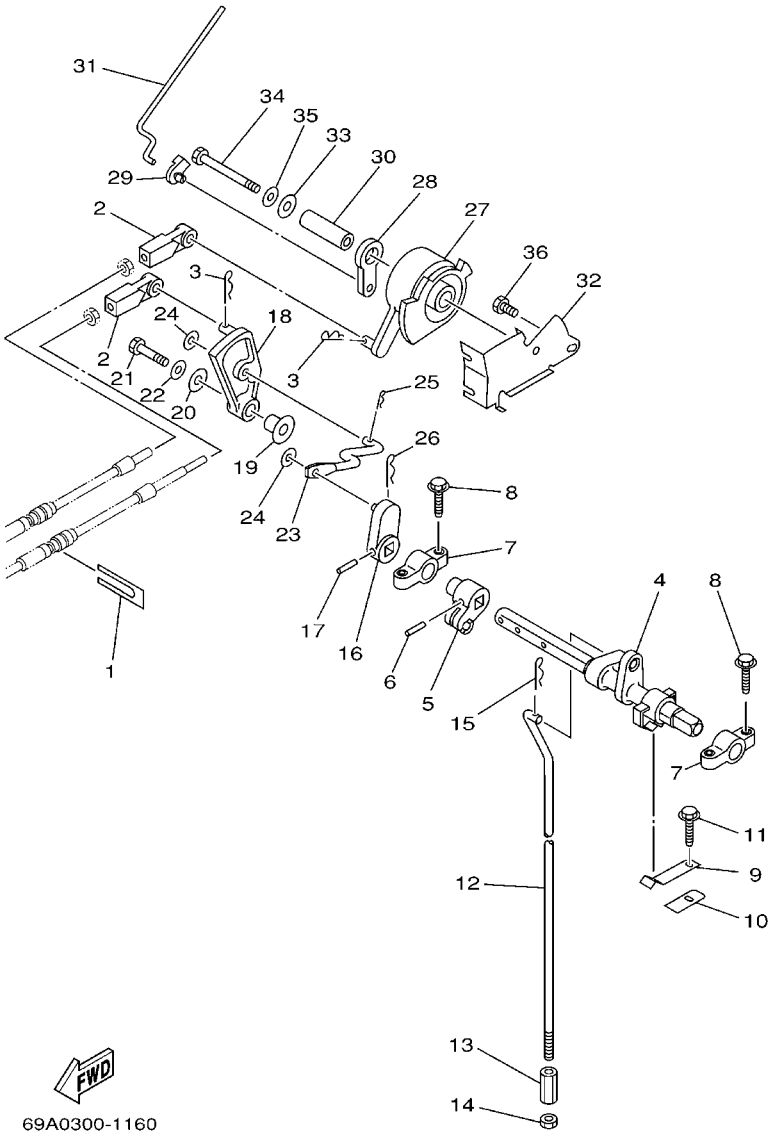

FIG. 16 CONTROL COMMANDE

REF. NO.	PART NO. N° PIECES	DESCRIPTION DESCRIPTION	69A5	6P72				REMARKS REMARQUES
27	65W–41638–00	PULLEY POULIE	1	1				
28	65W–41283–00	LEVER, FREE ACCEL. LEVIER	1	1				
29	661–41262–02	JOINT, CHOKE LEVER RACCORD, LEVIER DE STARTER	1	1				
30	90387–06064	COLLAR COLLERETTE	1	1				
31	66M–41211–00	LINK, ACCEL. BIELLETTE, ACCELERATION	1	1				
32	65W–14497–01	STAY, THROTTLE WIRE SUPPORT DE BOISSEAU	1	1				
33	90201–06M31	WASHER, PLATE RONDELLE, PLATE	1	1				
34	97095–06055	BOLT BOULON	1	1				
35	92995–06600	WASHER RONDELLE	1	1				
36	97095–06010	BOLT BOULON	1	1				

FIG. 17 BRACKET 1 SUPPORT 1

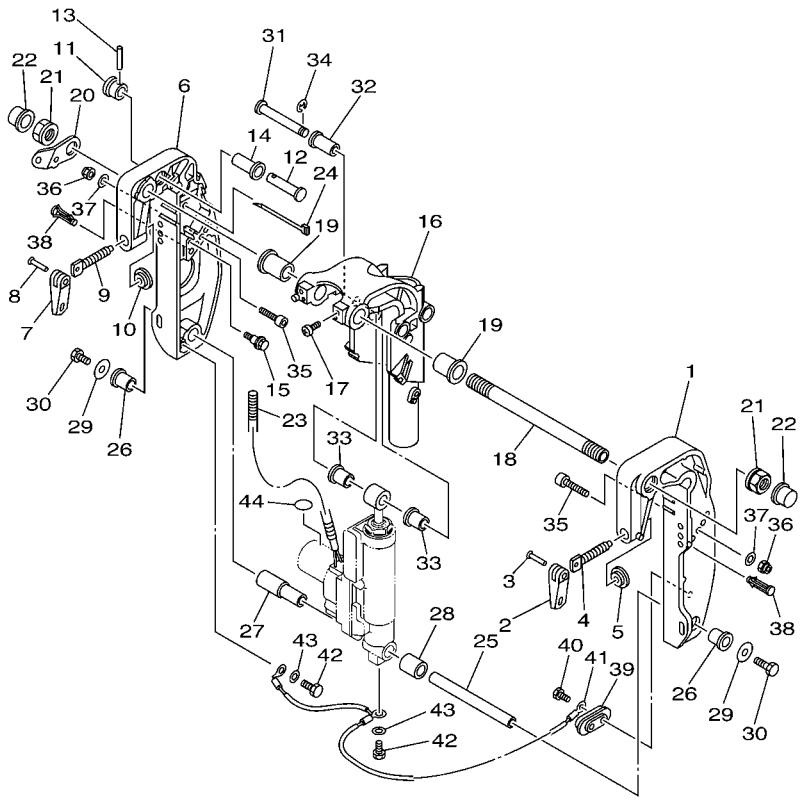

69A1300-2170

REF. NO.	PART NO. N° PIECES	DESCRIPTION DESCRIPTION	69A5	6P72				REMARKS REMARQUES
1	69A–43111–00–4D	BRACKET, CLAMP 1 PRESSE 1	1	1				
2	6E0–43118–01	HANDLE, TRANSOM CLAMP POIGNEE DE VIS DE PRESSE	1	1				
3	90243–04M01	PIN GOUPILLE	1	1				
4	6E7–43116–00	SCREW, TRANSOM CLAMP VIS DE PRESSE	1	1				
5	648–43114–01	PAD, TRANSOM CLAMP RONDELLE D'APPUI	1	1				
6	69A–43112–00–4D	BRACKET, CLAMP 2 PRESSE 2	1	1				
7	6E0–43118–01	HANDLE, TRANSOM CLAMP POIGNEE DE VIS DE PRESSE	1	1				
8	90243–04M01	PIN GOUPILLE	1	1				
9	6E7–43116–00	SCREW, TRANSOM CLAMP VIS DE PRESSE	1	1				
10	648–43114–01	PAD, TRANSOM CLAMP RONDELLE D'APPUI	1	1				
11	65W–43192–00	KNOB, STOPPER BOUTON, BUTEE DE RELEVAGE	1	1				
12	65W–43191–00	SHAFT, STOPPER AXE, BUTEE	1	1				
13	91690–30018	PIN, SPRING AGRAFFE	1	1				
14	90386–14MA1	BUSH DOUILLE	1	1				
15	90109–06M04	BOLT BOULON	1	1				
16	69A–43311–00–4D	BRACKET, SWIVEL 1 SUPPORT, PIVOT 1	1	1				S (17.4") S (17.4")
	69A–43311–10–4D	BRACKET, SWIVEL 1 SUPPORT, PIVOT 1	1	1				L (22.4") L (22.4")
17	97885–08010	SCREW, PAN HEAD VIS, A ENCOCHE	2	2				
18	69A–43131–00	BOLT, CLAMP BRACKET BOULON, PRESSE	1	1				
19	90386–22MA4	BUSH DOUILLE	2	2				
20	69A–43113–00	PLATE, CLAMP BRACKET PLAQUETTE, PRESSE	1	1				
21	90185–22043	NUT, SELF-LOCKING ECROU,AUTO-BLOQUANT	2	2				
22	6G5–43145–01	CAP, CLAMP BRACKET CAPUCHON, PRESSE	2	2				
23	90446–14MH7	HOSE (L560) DURITE (L560)	1	1				
24	90465–13M97	CLAMP BRIDE	1	1				
25	69G–43818–00	PIN, LOWER SHOCK MOUNT AXE, INFERIEUR AMORTISSEUR	1	1				
26	90386–16MA7	BUSH DOUILLE	2	2				

FIG. 17 BRACKET 1 SUPPORT 1

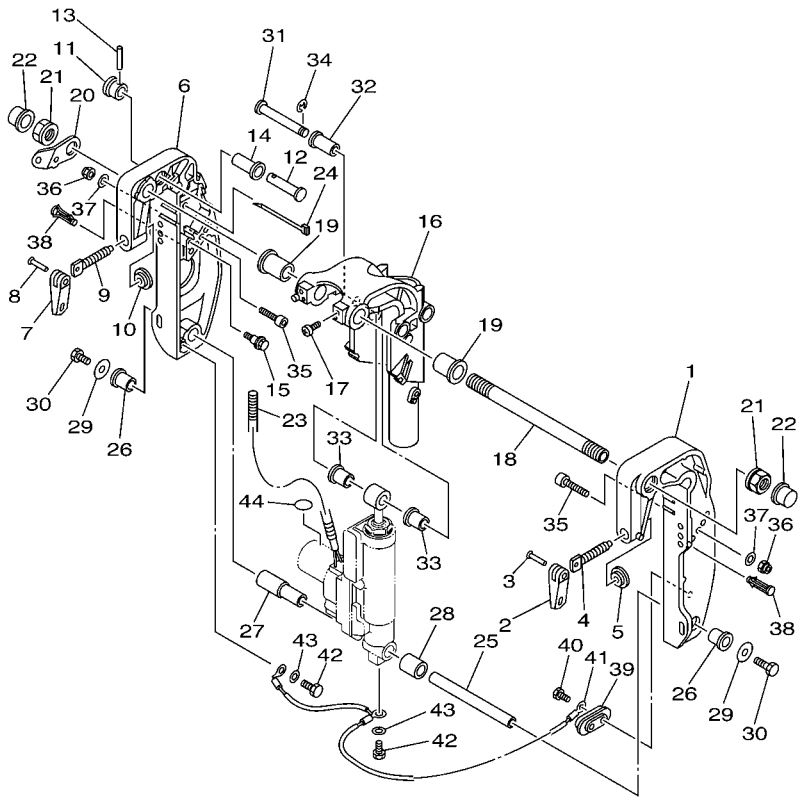

REF. NO.	PART NO. N° PIECES	DESCRIPTION DESCRIPTION	69A5	6P72				REMARKS REMARQUES
27	90386–16MA8	BUSH DOUILLE	1	1				
28	90387–16M02	COLLAR COLLERETTE	1	1				
29	90201–08M00	WASHER, PLATE RONDELLE, PLATE	2	2				
30	97080–08016	BOLT BOULON	2	2				
31	90249–12M36	PIN GOUPILLE	1	1				
32	90381–12M10	BUSH, SOLID DOUILLE, SOLIDE	1	1				
33	90381–12M11	BUSH, SOLID DOUILLE, SOLIDE	2	2				
34	93430–10M00	CIRCLIP CLIPS	1	1				
35	90110–08M05	BOLT, HEXAGON SOCKET HEAD BOULON, TETE HEXAGONALE CREUSE	2	2				
36	90185–08057	NUT, SELF-LOCKING ECROU,AUTO-BLOQUANT	2	2				
37	92990–08600	WASHER, PLATE RONDELLE, PLATE	2	2				
38	90338–08M19	PLUG PLOT	4	4				S (17.4") S (17.4")
	90338–08M19	PLUG PLOT	2	2				L (22.4") L (22.4")
39	65W–45251–00	ANODE ANODE	1	1				
40	90101–06020	BOLT BOULON	2	2				
41	63V–82127–00	WIRE, LEAD 2 FIL 2	1	1				
42	97095–06010	BOLT BOULON	2	2				
43	92995–06600	WASHER RONDELLE	2	2				
44	69A–43155–00	MARK 1 ETIQUETTE 1	1	1				

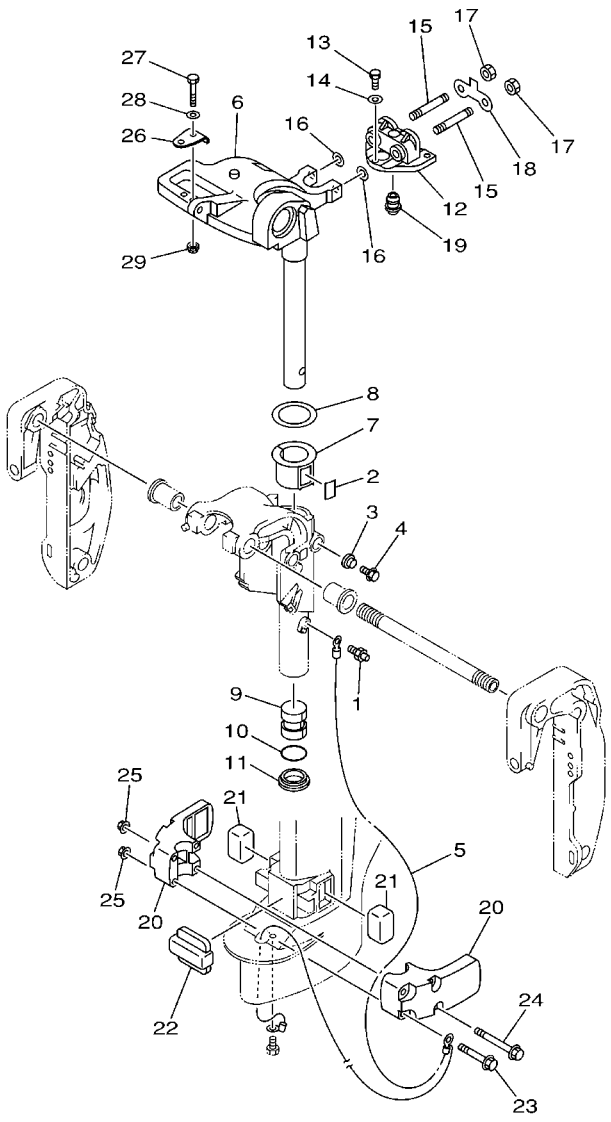

69A0100-0220

FIG. 18 BRACKET 2 SUPPORT 2

REF. NO.	PART NO. N° PIECES	DESCRIPTION DESCRIPTION	69A5	6P72				REMARKS REMARQUES
1	93700–06M03	NIPPLE, GREASE PION	1	1				
2	63V–42528–00	PLATE, FRICTION PLAQUE, FRICTION	1	1				
3	689–43373–01	SEAL, DAMPER JOINT	1	1				
4	90105–06M07	BOLT, FLANGE BOULON	1	1				
5	66M–82127–00	WIRE, LEAD 2 FIL 2	1	1				S (17.4") S (17.4")
	69A–82127–00	WIRE, LEAD 2 FIL 2	1	1				L (22.4") L (22.4")
6	66M–42511–01–4D	BRACKET, STEERING CADRE, DIRECTION	1	1				S (17.4") S (17.4")
	66M–42511–11–4D	BRACKET, STEERING CADRE, DIRECTION	1	1				L (22.4") L (22.4")
7	63V–42537–00	BUSHING, PIVOT SHAFT COUSSINET	1	1				
8	90201–45M28	WASHER, PLATE RONDELLE, PLATE	1	1				
9	90386–30048	BUSH DOUILLE	1	1				
10	93210–29M94	O-RING JOINT TORIQUE	1	1				
11	90386–30M60	BUSH DOUILLE	1	1				
12	66M–44514–00–4D	MOUNT DAMPER, UPPER SIDE SILENT-BLOC, SUPERIEUR LATERAL	1	1				
13	97075–06025	BOLT BOULON	3	3				
14	92995–06600	WASHER RONDELLE	3	3				
15	90116–08M54	BOLT, STUD GOUJON	2	2				
16	90201–08M06	WASHER, PLATE RONDELLE, PLATE	2	2				
17	95380–08600	NUT ECROU	2	2				
18	66M–44526–00	PLATE PLAQUE	1	1				
19	66M–44366–00	DAMPER, WATER SEAL JOINT, TUBE D'EAU	1	1				
20	66M–44551–00–4D	HOUSING, LOWER MOUNT RUBBER BOITIER, SILENT-BLOC INFERIEUR	2	2				
21	682–44555–30	MOUNT DAMPER, LOWER SIDE SILENT-BLOC, INFERIEUR LATERAL	2	2				
22	66M–44557–00	MOUNT DAMPER, LOWER FRONT SILENT-BLOC, INFERIEUR AVANT	1	1				
23	90119–08M45	BOLT, WITH WASHER BOULON, AVEC RONDELLE	2	2				
24	90119–08M46	BOLT, WITH WASHER BOULON, AVEC RONDELLE	2	2				
25	90179–08M34	NUT ECROU	4	4				

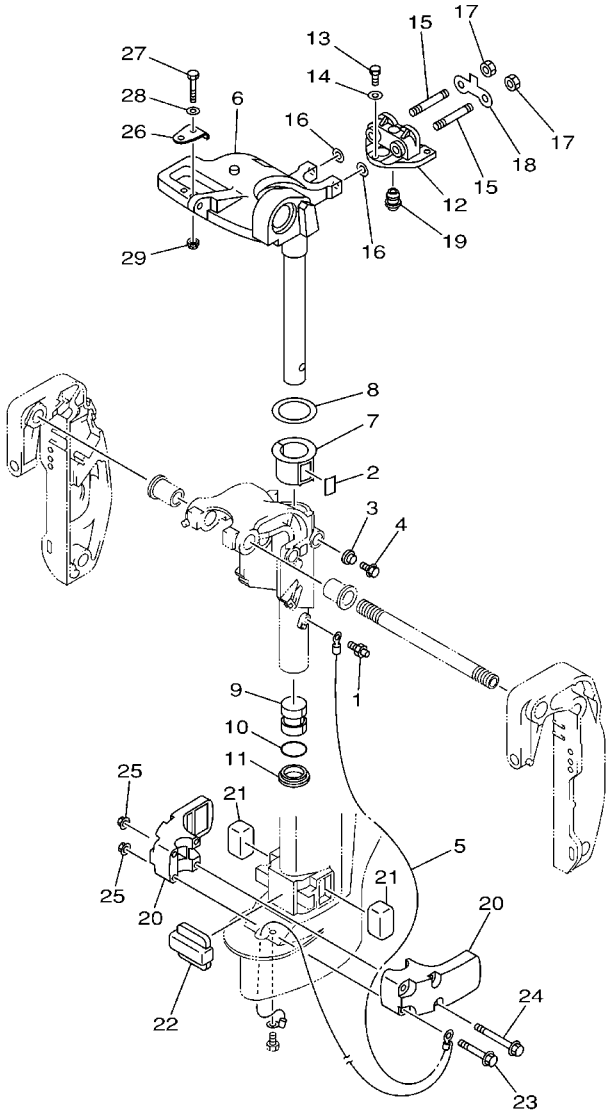

69A0100-0220

FIG. 18 BRACKET 2 SUPPORT 2

REF. NO.	PART NO. N° PIECES	DESCRIPTION DESCRIPTION	69A5	6P72				REMARKS REMARQUES
26	63V–48511–01	HOOK, STEERING ATTACHE, DIRECTION	1	1				
27	97075–08035	BOLT BOULON	1	1				
28	92995–08600	WASHER RONDELLE	1	1				
29	90185–08057	NUT, SELF-LOCKING ECROU,AUTO-BLOQUANT	1	1				

FIG. 19 POWER TILT ASSY — PUISSANCE PARER ET INCLINER

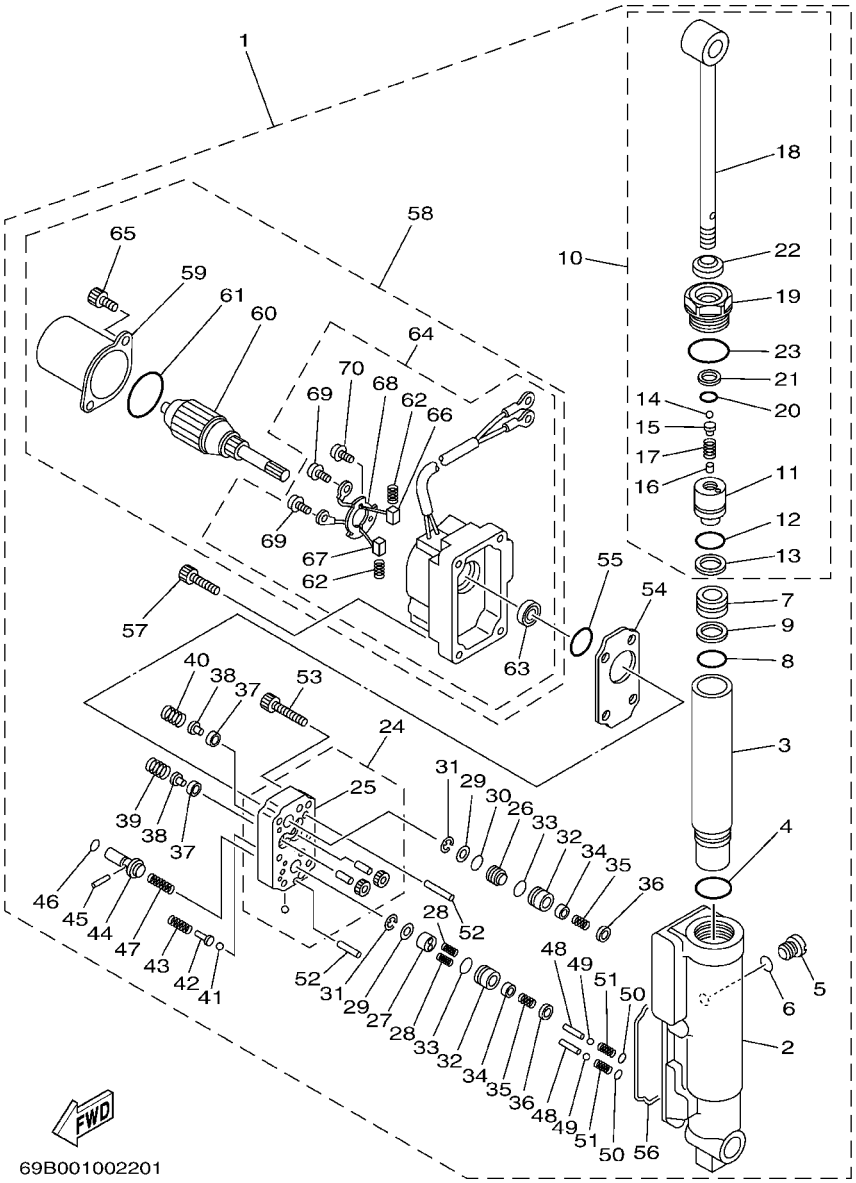

REF. NO.	PART NO. N° PIECES	DESCRIPTION DESCRIPTION	69A5	6P72				REMARKS REMARQUES
1	69A–43840–00–4D	POWER TILT ASSY PUISSANCE INCLINER (ENS.)	1	1				
2	69A–4380K–00	.CYLINDER, TILT SUB ASSY .CYLINDRE	1	1				
3	69A–22471–00	.CASE, CYLINDER .BOITIER, CYLINDRE	1	1				
4	93210–27666	.O-RING .JOINT TORIQUE	1	1				
5	6H1–4388E–11	.PLUG, TAPER SCREW .BOUCHON	1	1				
6	93210–07003	.O-RING .JOINT TORIQUE	1	1				
7	69A–43814–00	.PISTON, FREE .PISTON	1	1				
8	93210–21276	.O-RING .JOINT TORIQUE	1	1				
9	69A–43872–00	.RING, BACK UP .RESSORT	1	1				
10	69A–43810–00	.TILT PISTON SUB ASSY .INCLINER PISTON AUXILIAIRE(EN	1	1				
11	69A–4380D–00	..PISTON COMP. ..PISTON COMP.	1	1				
12	93210–21276	..O-RING ..JOINT TORIQUE	1	1				
13	69A–43872–00	..RING, BACK UP ..RESSORT	1	1				
14	93505–32038	..BALL ..BILLE	1	1				
15	65W–4386A–00	..PIN, ABSORBER VALVE ..GOUPILLE, SOUPAPE	1	1				
16	93604–06136	..PIN, DOWEL ..CLAVETTE	1	1				
17	69A–43857–00	..SPRING, ABSORBER VALVE ..RESSORT	1	1				
18	69A–43801–00	..ROD ..TIGE	1	1				
19	69A–43811–01	..SCREW, CYLINDER END ..VIS, CYLINDRE RACCORD	1	1				
20	6H1–43866–00	..O-RING ..JOINT TORIQUE	1	1				
21	69A–43871–00	..RING, BACK UP ..SEGMENT	1	1				
22	69A–43812–00	..SEAL, DUST ..JOINT	1	1				
23	69A–43869–00	..O-RING ..JOINT TORIQUE	1	1				
24	69A–43830–00	.GEAR PUMP ASSY .POMPE A PIGNON (ENS.)	1	1				
25	69A–4380C–00	..GEAR HOUSING ASSY ..CARTER COMP,ENGRENAGE	1	1				
26	69A–43841–00	.PISTON, SHUTTLE .PISTON	1	1				
27	69A–4384M–00	.PISTON, SHUTTLE 2 .PISTON 2	1	1				

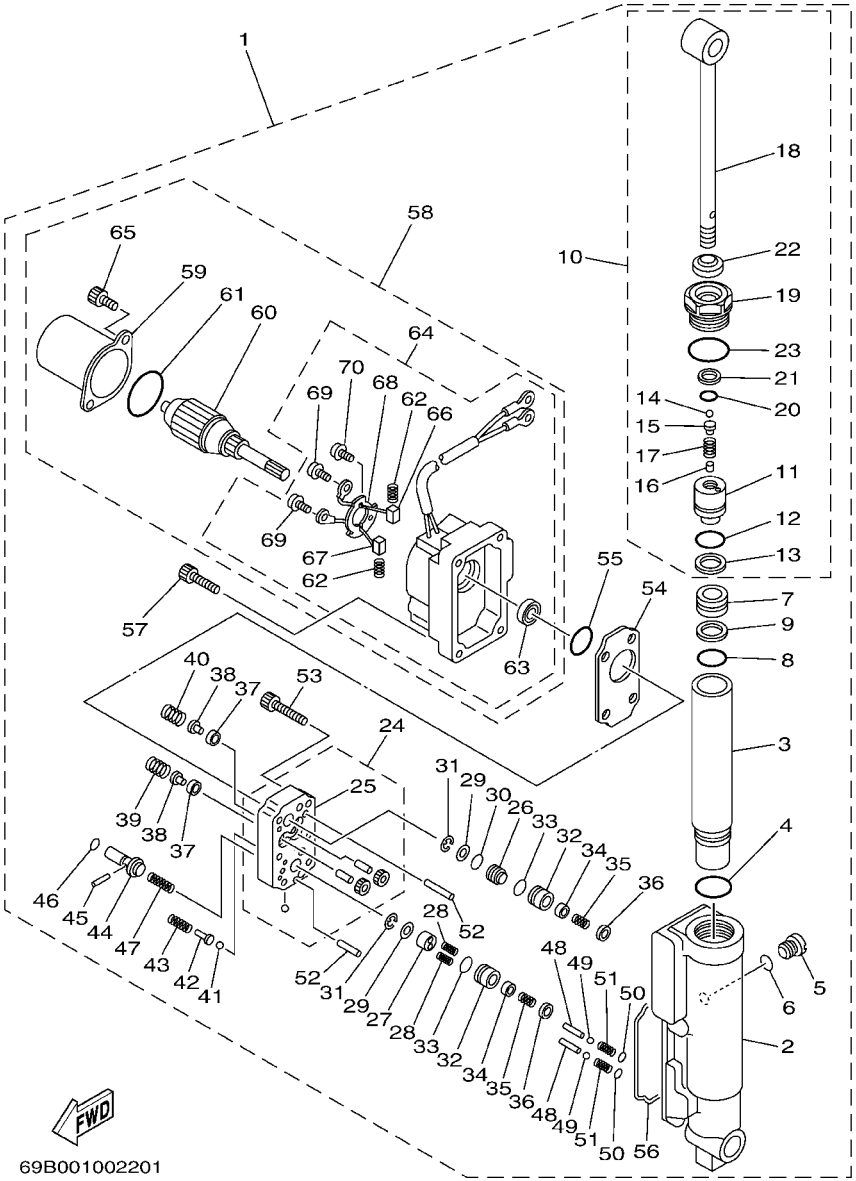

FIG. 19 POWER TILT ASSY — PUISSANCE PARER ET INCLINER

REF. NO.	PART NO. N° PIECES	DESCRIPTION DESCRIPTION	69A5	6P72				REMARKS REMARQUES
28	62Y–43894–00	.SPRING, SHUTTLE RETURN .RESSORT	2	2				
29	69A–4384F–00	.SEAL, MAIN VALVE .JOINT	2	2				
30	6H1–43883–00	.O-RING .JOINT TORIQUE	1	1				
31	99001–03600	.CIRCLIP .CIRCLIP	2	2				
32	69A–4382G–00	.VALVE SEAT .JEU DE POINTEAUX	2	2				
33	93210–12N52	.O-RING .JOINT TORIQUE	2	2				
34	6T4–43808–00	.SEAT VALVE COMP. 1 .SIEGE VALVE COMP. 1	2	2				
35	6T4–43853–00	.SPRING, MAIN VALVE .RESSORT	2	2				
36	6H1–43816–00	.FILTER 1 .FILTRE 1	2	2				
37	6H1–4384G–11	.SEAL, RELIEF VALVE .JOINT	2	2				
38	6H1–43844–10	.PIN, VALVE SUPPORT .GOUPILLE	2	2				
39	69A–43855–00	.SPRING, UP RELIEF .RESSORT	1	1				
40	6H1–43856–10	.SPRING, DOWN RELIEF .RESSORT	1	1				
41	93501–08001	.BALL .BILLE	2	2				
42	69A–4386A–00	.PIN, ABSORBER VALVE .GOUPILLE, SOUPAPE	2	2				
43	69A–43824–00	.SPRING, DOWN RELIEF 2 .RESSORT 2	2	2				
44	69A–43848–00	.ROD, MANUAL RELEASE .TIGE	1	1				
45	93602–15250	.PIN, DOWEL .GOUJON	1	1				
46	93210–06001	.O-RING .JOINT TORIQUE	1	1				
47	69A–43854–00	.SPRING, MANUAL RELEASE .RESSORT	1	1				
48	69A–4381G–00	.PIN 1 .GOUPILLE 1	2	2				
49	93501–08001	.BALL .BILLE	2	2				
50	6H1–43883–00	.O-RING .JOINT TORIQUE	2	2				
51	69A–4384H–00	.SPRING .RESSORT	2	2				
52	93606–14081	.PIN, DOWEL .GOUPILLE	2	2				
53	91317–05025	.BOLT .BOULON	6	6				
54	69A–43816–01	.FILTER 1 .FILTRE 1	1	1				

FIG. 19 POWER TILT ASSY — PUISSANCE PARER ET INCLINER

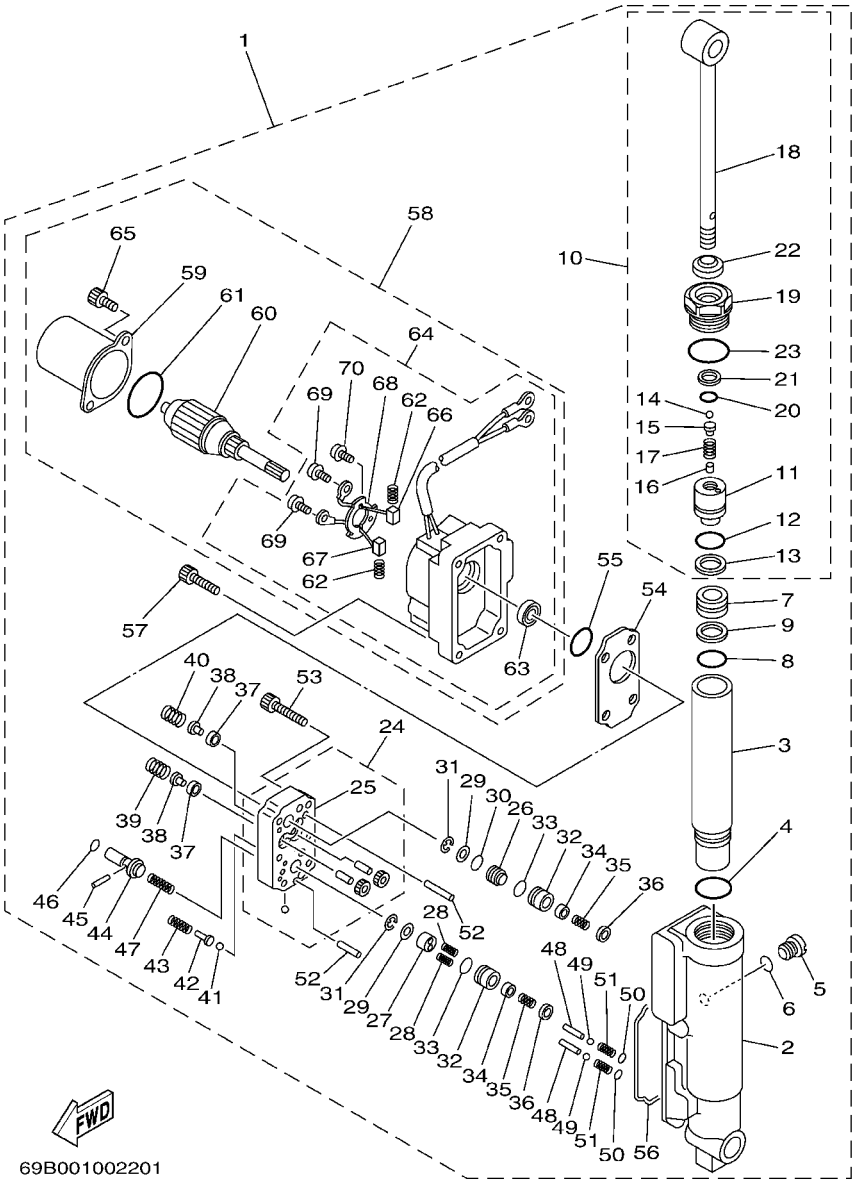

REF. NO.	PART NO. N° PIECES	DESCRIPTION DESCRIPTION	69A5	6P72				REMARKS REMARQUES
55	N35–43862–10	.O-RING .JOINT TORIQUE	1	1				
56	69A–23129–00	.GASKET, DRAIN PLUG .JOINT, PLOT DE VIDANGE	1	1				
57	69A–43878–00	.BOLT, SOCKET .BOULON	4	4				
58	69A–43880–00	.MOTOR ASSY .MOTEUR (ENS.)	1	1				
59	65W–43804–00	..STATOR ASSY ..STATOR (ENS.)	1	1				
60	65W–43805–00	..ARMATURE ASSY ..INDUIT (ENS.)	1	1				
61	65W–43869–00	..O-RING ..JOINT TORIQUE	1	1				
62	65W–4386K–00	...SPRING, BRUSH ...RESSORT, BALAI	2	2				
63	65W–43882–00	...OIL SEAL ...JOINT SPI	1	1				
64	69A–43881–00	..FRAME, END ..BATI	1	1				
65	65W–43887–00	..BOLT, THROUGH ..BOULON	2	2				
66	65W–43892–00	...BRUSH 2 ...BALAI 2	1	1				
67	65W–43891–00	...BRUSH 1 ...BALAI 1	1	1				
68	65W–4380F–00	...PLATE, BRUSH HOLDER ...PLAQUE	1	1				
69	65W–43879–00	...SCREW, WITH WASHER ...VIS, AVEC RONDELLE	2	2				
70	65W–4388E–00	...BOLT ...BOULON	1	1				

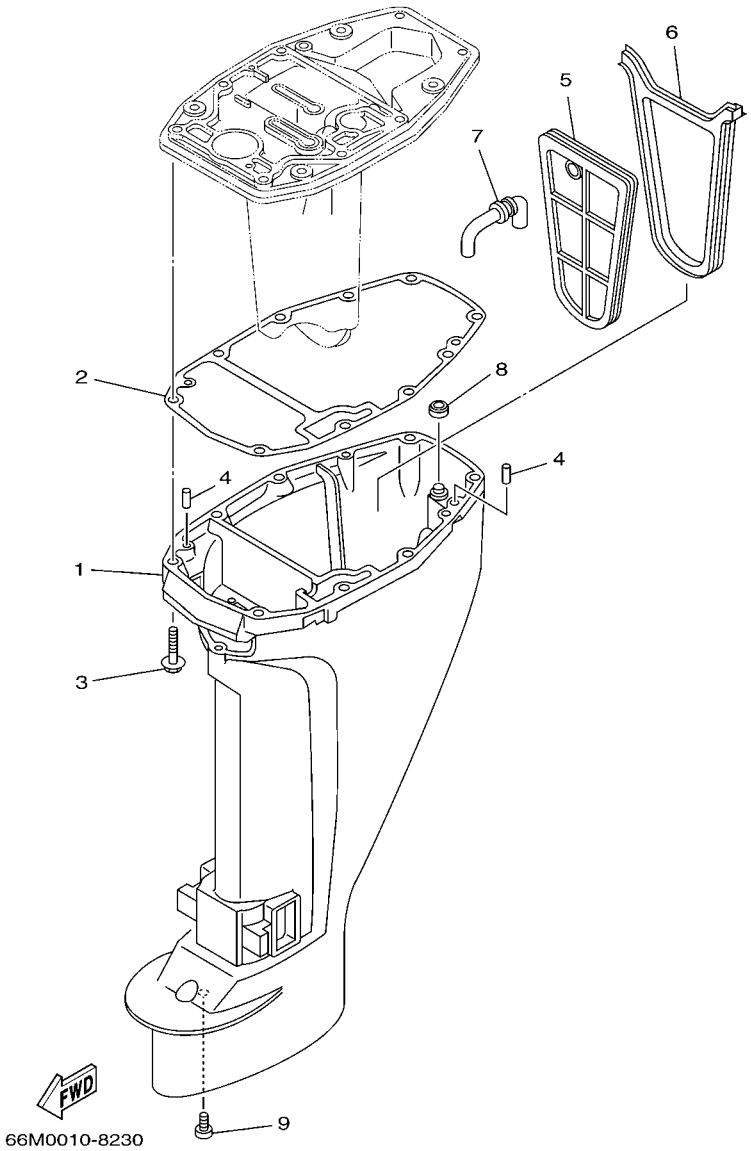

FIG. 20 UPPER CASING FOURREAU

REF. NO.	PART NO. N° PIECES	DESCRIPTION DESCRIPTION	69A5	6P72				REMARKS REMARQUES
1	66M–45111–00–4D	CASING, UPPER FOURREAU	1	1				S (17.4") S (17.4")
	66M–45111–10–4D	CASING, UPPER FOURREAU	1	1				L (22.4") L (22.4")
2	66M–45113–00	GASKET, UPPER CASING JOINT, TUBE D'ARBRE	1	1				
3	97575–08545	BOLT, WITH WASHER VIS HEXAGONAL AVC RONDELLE	6	6				
4	93606–12019	PIN, DOWEL GOUPILLE	2	2				
5	66M–45126–00	PLATE, SEAL DAMPER PLAQUETTE	1	1				
6	66M–45115–00	GASKET, UPPER CASING JOINT, TUBE D'ARBRE	1	1				
7	66M–45136–00	PIPE DURITE	1	1				
8	66M–45128–00	SEAL 2 JOINT 2	1	1				
9	90157–06M06	SCREW, PAN HEAD VIS, TETE TRONCONIQUE	1	1				

FIG. 21 OIL PAN — VENTILATEUR D'HUILE

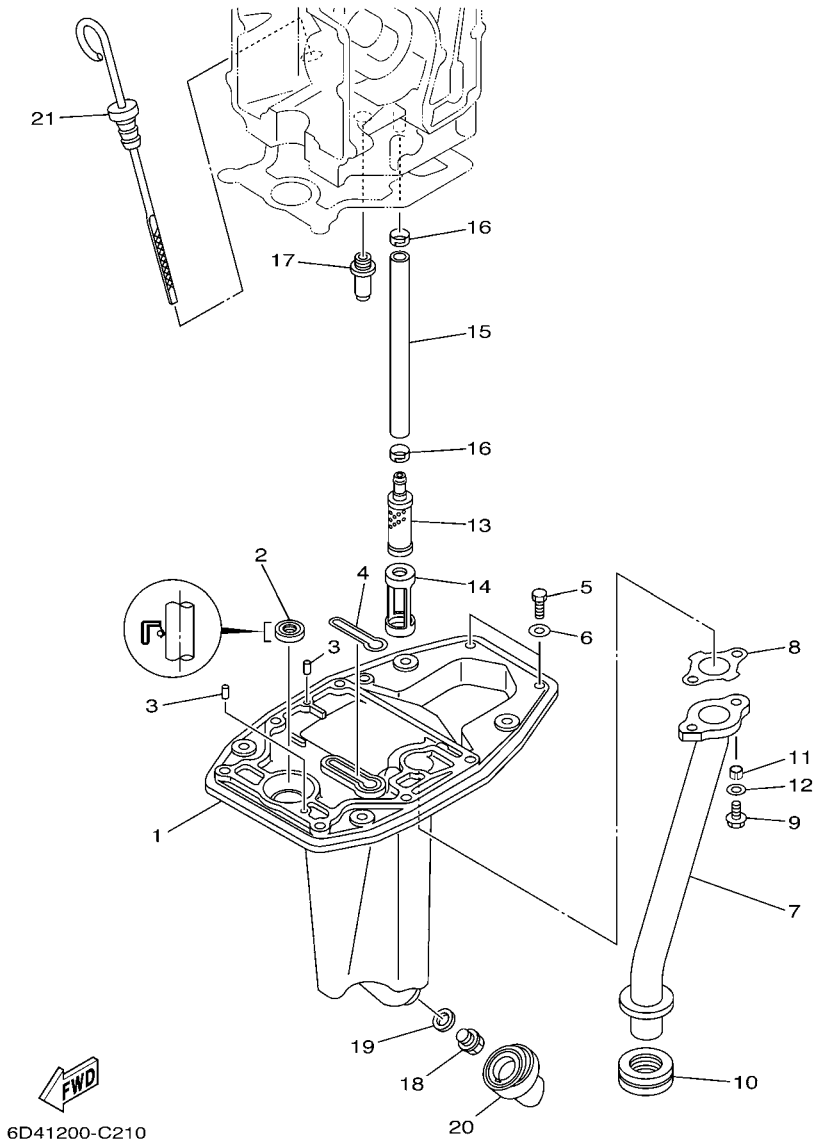

REF. NO.	PART NO. N° PIECES	DESCRIPTION DESCRIPTION	69A5	6P72				REMARKS REMARQUES
1	66M–41137–00–5B	GUIDE, EXHAUST COLLECTEUR D'ECHAPPEMENT	1	1				
2	93101–12M63	OIL SEAL JOINT SPY	1	1				
3	93606–12019	PIN, DOWEL GOUPILLE	2	2				
4	66M–11355–00	SEAL, CYLINDER 1 JOINT, SPY CYLINDRE	1	1				
5	97095–06020	BOLT BOULON	2	2				
6	92995–06600	WASHER RONDELLE	2	2				
7	6D4–41131–00–94	MANIFOLD, EXT. 1 PIPE D'ECHAPPEMENT	1	1				
8	66M–41133–01	GASKET, EXHAUST MANIFOLD 1 JOINT, PIPE D'ECHAPPEMENT	1	1				
9	90119–06090	BOLT, WITH WASHER BOULON, AVEC RONDELLE	2	2				
10	6D4–41138–00	SEAL, EXT. 1 JOINT DE GROUPE 1	1	1				
11	90387–05008	COLLAR COLLERETTE	2	2				
12	90201–06015	WASHER, PLATE RONDELLE, PLATE	2	2				
13	66M–13421–00	STRAINER 2 FILTRE 2	1	1				
14	66M–13417–00	COVER, STRAINER COUVERCLE, FILTRE	1	1				
15	66M–13416–00	PIPE, OIL 1 DURITE A HUILE	1	1				
16	66M–24351–00	BAND 1 COLLIER 1	2	2				
17	6G8–11575–00	RELIEF VALVE ASSY SOUPAPE DE RENTREE D'AIR	1	1				
18	90340–14M06	PLUG, STRAIGHT SCREW PLOT, FILETE DROIT	1	1				
19	90430–14M09	GASKET JOINT	1	1				
20	66M–15316–00	DAMPER, ENGINE MOUNT 1 AMORTISSEUR DE SUPPORT	1	1				
21	66M–15362–00	PLUG, OIL LEVEL PLOT, NIVEAU D'HUILE	1	1				

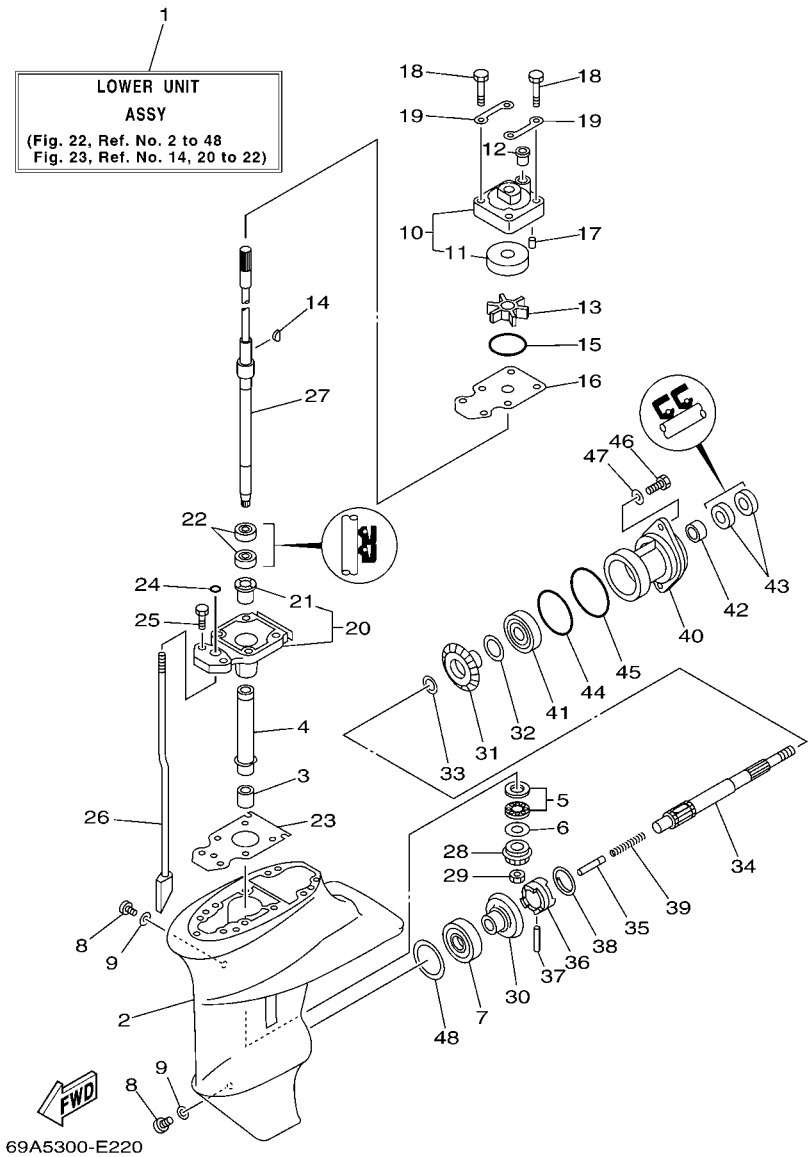

FIG. 22 LOWER CASING & DRIVE 1 BOITIER D'HELICE TRANSMISSION1

REF. NO.	PART NO. N° PIECES	DESCRIPTION DESCRIPTION	69A5	6P72				REMARKS REMARQUES
1	69A–45300–02–4D	LOWER UNIT ASSY UNITE INFERIEURE (ENS.)	1	1				S (17.4") S (17.4")
	69A–45300–11–4D	LOWER UNIT ASSY UNITE INFERIEURE (ENS.)	1	1				L (22.4") L (22.4")
2	66M–45311–01–4D	CASING, LOWER BOITIER D'HELICE	1	1				S (17.4") S (17.4")
	63V–45311–01–4D	CASING, LOWER BOITIER D'HELICE	1	1				L (22.4") L (22.4")
3	93315–314V8	BEARING ROULEMENT	1	1				
4	63V–45536–00	SLEEVE, DRIVE SHAFT MANCHON, ARBRE MOTEUR	1	1				
5	93341–41414	BEARING CERVEAUX DE DIRECTION	1	1				
6	6E8–45587–10	SHIM (T:1.13MM) CALE (T:1.13MM)	1	1				UR UR
	6E8–45587–30	SHIM (T:1.20MM) CALE (T:1.20MM)	1	1				UR UR
7	93332–00005	BEARING ROULEMENT	1	1				
8	90340–08002	PLUG, STRAIGHT SCREW PLOT, FILETE DROIT	2	2				
9	90430–08020	GASKET JOINT	2	2				
10	63V–44301–00	WATER PUMP HOUSING COMP. CARTER, POMPE A EAU (ENS)	1	1				
11	63V–44322–00	.INSERT, CARTRIDGE .CUVETTE	1	1				
12	647–44366–00	DAMPER, WATER SEAL JOINT, TUBE D'EAU	1	1				
13	63V–44352–01	IMPELLER TURBINE	1	1				
14	664–44338–00	KEY, WOODRUFF CLAVETTE, VOLANT	1	1				
15	93210–44398	O-RING JOINT TORIQUE	1	1				
16	63V–44323–00	OUTER PLATE, CARTRIDGE PLAQUE EXTERIEURE	1	1				
17	93604–12M07	PIN, DOWEL CLAVETTE	2	2				
18	97080–08045	BOLT BOULON	4	4				
19	63V–44328–00	PLATE PLAQUETTE	2	2				
20	63V–45331–00–5B	HOUSING, BEARING FLASQUE, ROULEMENT	1	1				
21	626–45316–09	.BUSHING, DRIVE SHAFT .DOUILLE, ARBRE MOTEUR	1	1				
22	93101–20001	OIL SEAL JOINT SPY	2	2				
23	63V–45315–A0	PACKING, LOWER CASING JOINT, BOITIER D'HELICE	1	1				
24	93210–06ME6	O-RING JOINT TORIQUE	1	1				

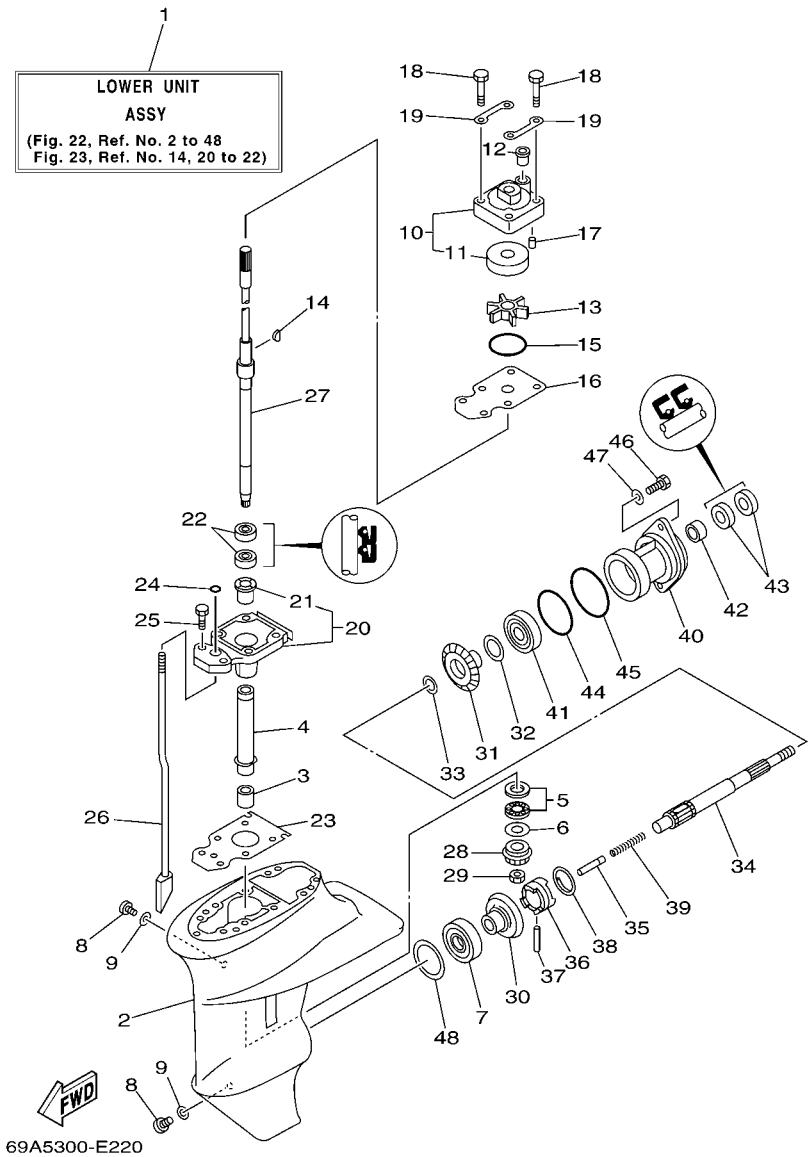

FIG. 22 LOWER CASING & DRIVE 1 BOITIER D'HELICE TRANSMISSION1

REF. NO.	PART NO. N° PIECES	DESCRIPTION DESCRIPTION	69A5	6P72				REMARKS REMARQUES
25	97080–08025	BOLT BOULON	2	2				
26	63V–44150–00	SHIFT CAM ASSY CAME D'INVERSION	1	1				S (17.4") S (17.4")
	66M–44150–10	SHIFT CAM ASSY CAME D'INVERSION	1	1				L (22.4") L (22.4")
27	69A–45510–00	DRIVE SHAFT ASSY ARBRE MOTEUR (ENS.)	1	1				S (17.4") S (17.4")
	69A–45510–10	DRIVE SHAFT ASSY ARBRE MOTEUR (ENS.)	1	1				L (22.4") L (22.4")
28	63V–45551–00	PINION (13T) PIGNON D'ATTAQUE (13D)	1	1				
29	90179–08M06	NUT ECROU	1	1				
30	6E7–45560–01	GEAR 1 (27T) PIGNON 1 (27T)	1	1				
31	6E7–45571–00	GEAR 2 (27T) PIGNON 2 (27T)	1	1				
32	626–45577–00	SHIM (T:0.10MM) CALE (T:0.10MM)	1	1				UR UR
	626–45577–10	SHIM (T:0.20MM) CALE (T:0.20MM)	1	1				UR UR
	626–45577–20	SHIM (T:0.30MM) CALE (T:0.30MM)	1	1				UR UR
	626–45577–30	SHIM (T:0.40MM) CALE (T:0.40MM)	1	1				UR UR
	626–45577–40	SHIM (T:0.50MM) CALE (T:0.50MM)	1	1				UR UR
33	90201–17682	WASHER, PLATE RONDELLE, PLATE	1	1				
34	683–45611–00	SHAFT, PROPELLER ARBRE, HELICE	1	1				
35	650–45635–00	PLUNGER, SHIFT POUSSOIR D'EMBRAYAGE	1	1				
36	682–45631–00	CLUTCH, DOG CRABOT	1	1				
37	90250–05010	PIN, STRAIGHT GOUPILLE, DROITE	1	1				
38	648–45633–00	RING, CROSS PIN JONC, GOUPILLE CRABOT	1	1				
39	90501–14M06	SPRING, COMPRESSION RESSORT, COMPRESSION	1	1				
40	683–45361–02–4D	CAP, LOWER CASING COUVERCLE, BOITIER D'HELICE	1	1				
41	93306–00501	BEARING ROULEMENT	1	1				
42	93315–317U2	BEARING ROULEMENT	1	1				
43	93101–17054	OIL SEAL JOINT SPY	2	2				
44	93210–57M09	O-RING JOINT TORIQUE	1	1				
45	93210–56M80	O-RING JOINT TORIQUE	1	1				

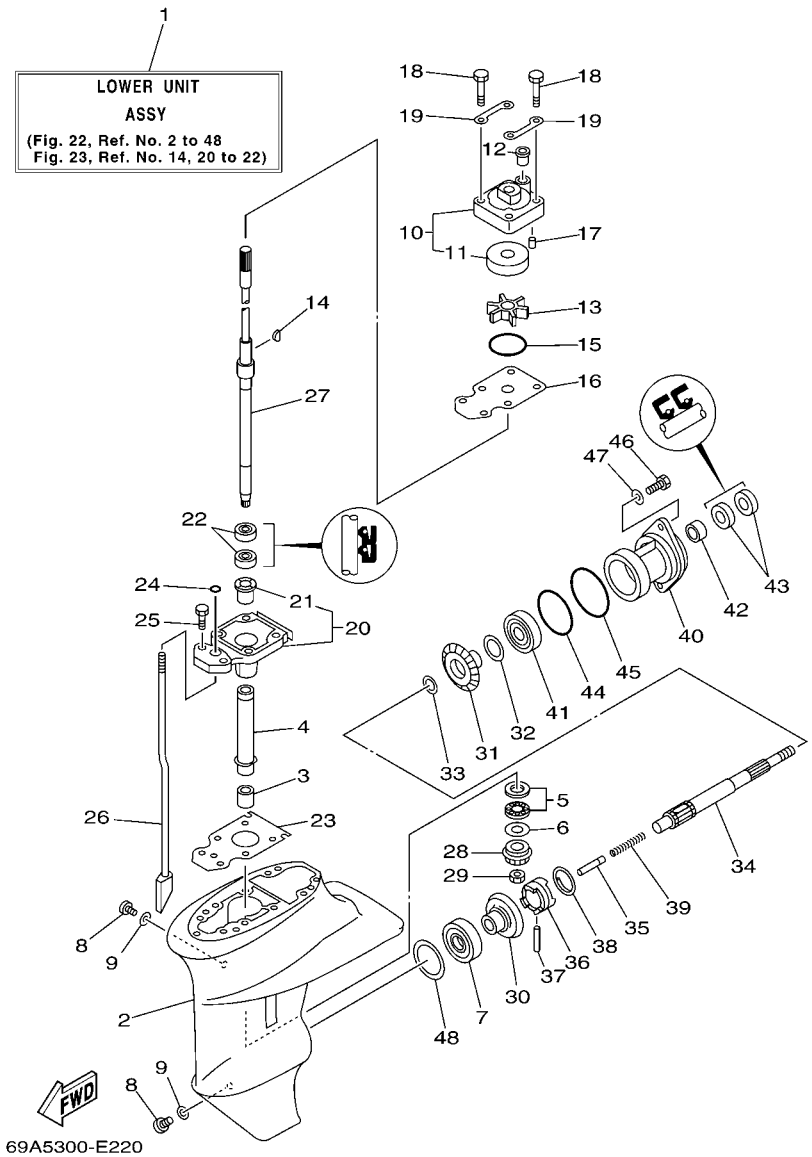

FIG. 22 LOWER CASING & DRIVE 1 BOITIER D'HELICE TRANSMISSION1

REF. NO.	PART NO. N° PIECES	DESCRIPTION DESCRIPTION	69A5	6P72				REMARKS REMARQUES
46	97095–06020	BOLT BOULON	2	2				
47	92995–06600	WASHER RONDELLE	2	2				
48	664–45567–01	SHIM (T:0.10MM) CALE (T:0.10MM)	1	1				UR UR
	664–45567–10	SHIM (T:0.12MM) CALE (T:0.12MM)	1	1				UR UR
	664–45567–20	SHIM (T:0.15MM) CALE (T:0.15MM)	1	1				UR UR
	664–45567–30	SHIM (T:0.18MM) CALE (T:0.18MM)	1	1				UR UR
	664–45567–40	SHIM (T:0.30MM) CALE (T:0.30MM)	1	1				UR UR
	664–45567–50	SHIM (T:0.40MM) CALE (T:0.40MM)	1	1				UR UR
	664–45567–60	SHIM (T:0.50MM) CALE (T:0.50MM)	1	1				UR UR

FIG. 23 LOWER CASING & DRIVE 2 BOITIER D'HELICE TRANSMISSION2

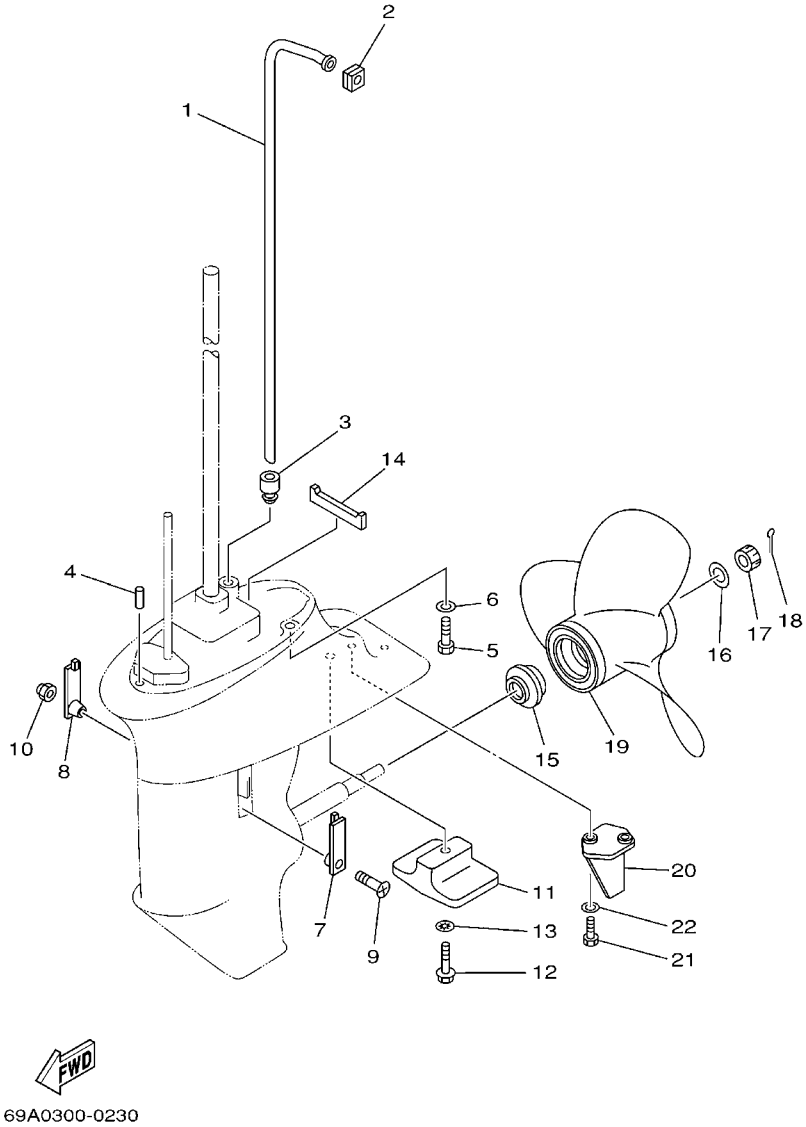

REF. NO.	PART NO. N° PIECES	DESCRIPTION DESCRIPTION	69A5	6P72				REMARKS REMARQUES
1	66M–44361–00	TUBE, WATER TUBE D'EAU	1	1				S (17.4") S (17.4")
	66M–44361–10	TUBE, WATER TUBE D'EAU	1	1				L (22.4") L (22.4")
2	63V–44365–10	DAMPER, WATER SEAL JOINT, TUBE D'EAU	1	1				
3	63V–44368–00	RUBBER, WATER SEAL 4 CAOUTCHOUC EAU JUNTA 4	1	1				
4	93604–12M07	PIN, DOWEL CLAVETTE	2	2				
5	97075–08030	BOLT BOULON	4	4				
6	92995–08600	WASHER RONDELLE	4	4				
7	6G1–45214–00	COVER, WATER INLET 1 GRILLE, ENTREE D'EAU 1	1	1				
8	63V–45215–00	COVER, WATER INLET 2 GRILLE, ENTREE D'EAU 2	1	1				
9	90152–05M04	SCREW, COUNTERSUNK VIS, TETE NOYEE	1	1				
10	90185–05002	NUT, SELF-LOCKING ECROU,AUTO-BLOQUANT	1	1				
11	61N–45251–01	ANODE ANODE	1	1				
12	95895–06030	BOLT, FLANGE BOULON	1	1				
13	92990–06300	WASHER, INTERNAL TOOTH RONDELLE, DENTURE INTERNE	1	1				
14	63V–45375–00	DAMPER, SEAL BOURRELET, CAOUTCHOUC	1	1				
15	6E7–45987–01	SPACER ENTRETOISE	1	1				
16	90201–10M01	WASHER, PLATE RONDELLE, PLATE	1	1				
17	90171–10M01	NUT, CASTLE ECROU, CRENELE	1	1				
18	91490–30020	PIN, COTTER GOUPILLE	1	1				
19	683–45941–00–EL	PROPELLER (3X9-1/4"X12"-J) HELICE (3X9-1/4"X12"-J)	1	1				UR UR
	683–45945–00–EL	PROPELLER (3X9-1/4"X9"-J) HELICE (3X9-1/4"X9"-J)	1	1				UR UR
	683–45952–00–EL	PROPELLER (3X9-1/4"X9-3/4"-J) HELICE (3X9-1/4"X9-3/4"-J)	1	1				UR UR
	63V–45943–00–EL	PROPELLER (3X9-1/4"X11"-J) HELICE (3X9-1/4"X11"-J)	1	1				UR UR
	63V–45945–00–EL	PROPELLER (3X9-1/4"X9"-J) HELICE (3X9-1/4"X9"-J)	1	1				UR UR
	63V–45947–00–EL	PROPELLER (3X9-1/4"X8"-J) HELICE (3X9-1/4"X8"-J)	1	1				UR UR
	63V–45952–00–EL	PROPELLER (3X9-1/4"X10"-J) HELICE (3X9-1/4"X10"-J)	1	1				UR UR
20	66M–45371–00	TAB-TRIM ANODE DERIVE	1	1				S (17.4") S (17.4")

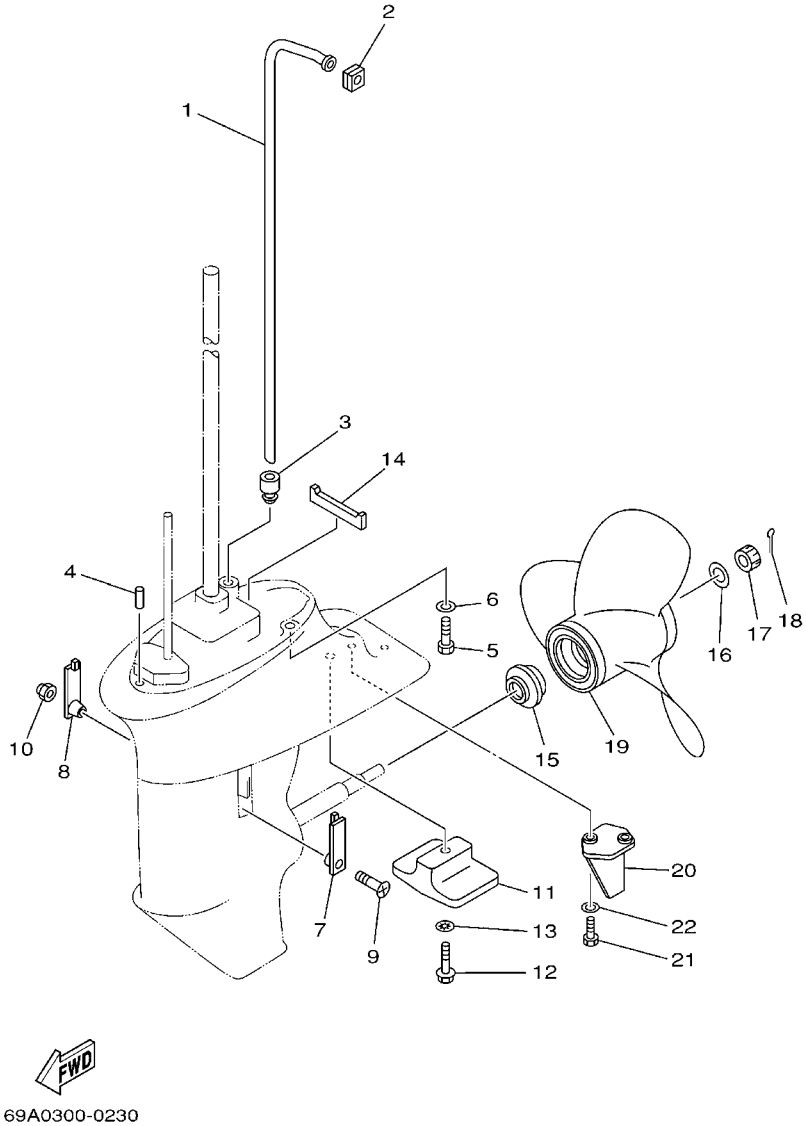

FIG. 23 LOWER CASING & DRIVE 2 BOITIER D'HELICE TRANSMISSION2

REF. NO.	PART NO. N° PIECES	DESCRIPTION DESCRIPTION	69A5	6P72				REMARKS REMARQUES
21	97095–06016	BOLT BOULON	2	2				S (17.4") S (17.4")
22	92995–06600	WASHER RONDELLE	2	2				S (17.4") S (17.4")

FIG. 24 FUEL TANK — RESERVOIR A CARBURANT

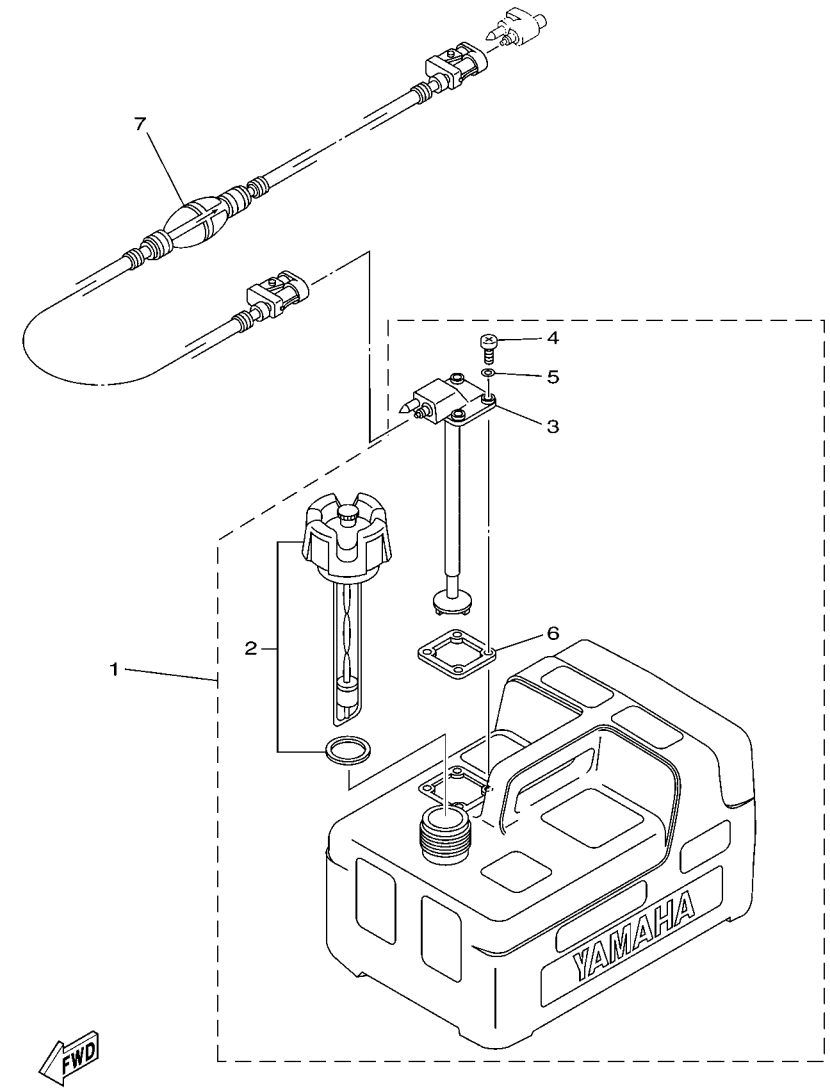

66M4100-D270

REF. NO.	PART NO. N° PIECES	DESCRIPTION DESCRIPTION	69A5	6P72				REMARKS REMARQUES
1	6YL–24201–04	FUEL TANK ASSY (12L) RESERVOIR A ESSENCE (ENS.) 12L	1	1				AP AP
2	6YL–24610–01	.CAP ASSY .BOUCHON	1	1				
3	6YL–24260–01	.FUEL METER ASSY .INDICATEUR DE CARBURANT	1	1				
4	90157–05M16	.SCREW, PAN HEAD .VIS, TETE TRONCONIQUE	4	4				
5	6YL–24329–00	.SEAL .JOINT	4	4				
6	6YL–24268–01	.GASKET, FUEL METER .JOINT, JAUGE A CARBURANT	1	1				
7	6YL–24306–54	FUEL PIPE COMP. 1 DURITE A ESSENCE 1	1	1				AP AP

FIG. 25 STEERING GUIDE FIXATION DE DIRECTION

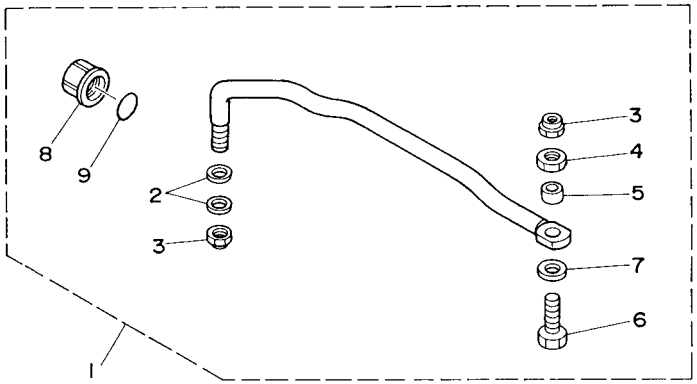

63V0100-5210

REF. NO.	PART NO. N° PIECES	DESCRIPTION DESCRIPTION	69A5	6P72				REMARKS REMARQUES
1	63V–61350–00	STEERING GUIDE ATTACHMENT KIT FIXATIONS DE DIRECTION	1	1				AP AP
2	90201–10M20	.WASHER, PLATE .RONDELLE, PLATE	2	2				
3	90185–09M01	.NUT, SELF-LOCKING .ECROU,AUTO-BLOQUANT	2	2				
4	90170–09M03	.NUT .ECROU	1	1				
5	90387–10M42	.COLLAR .COLLERETTE	1	1				
6	6E5–61355–00	.BOLT .BOULON	1	1				
7	90201–10M63	.WASHER, PLATE .RONDELLE, PLATE	1	1				
8	6E5–43145–01	.CAP, CLAMP BRACKET .CAPUCHON, PRESSE	1	1				
9	93210–16275	.O-RING .JOINT TORIQUE	1	1				

FIG. 26 REMOTE CONTROL BOX BOITIER DE COMMANDE A DISTANCE

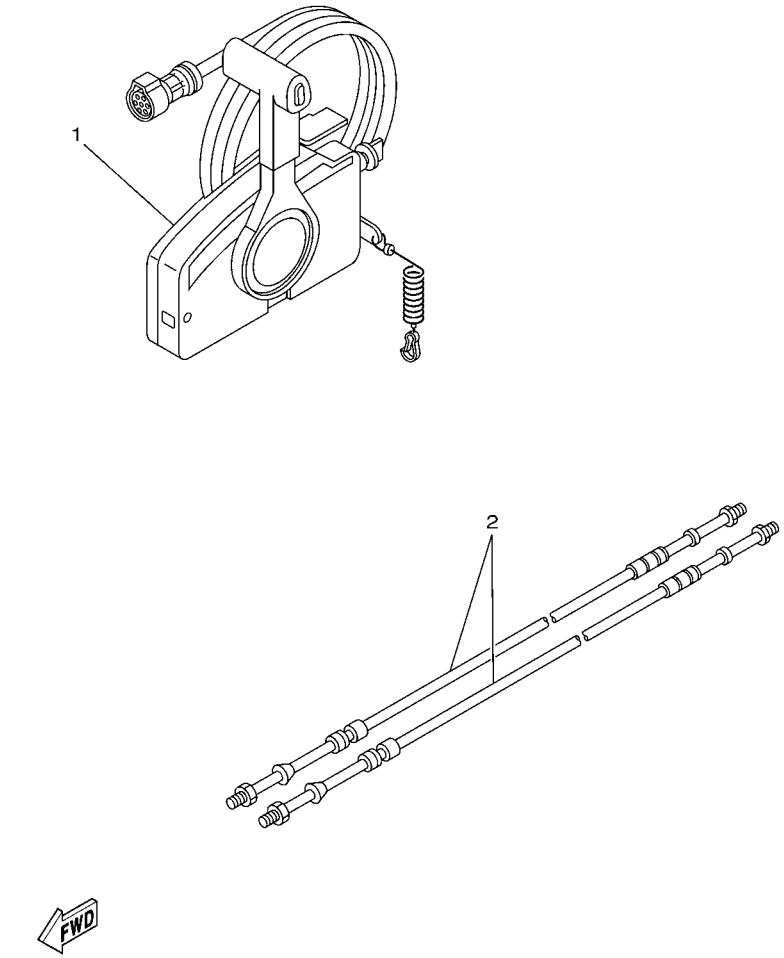

67M0100-8280

REF. NO.	PART NO. N° PIECES	DESCRIPTION DESCRIPTION	69A5	6P72				REMARKS REMARQUES
1	703–48205–17	REMOTE CONTROL ASSY (10P) BOITIER DE COMMANDE A DISTANCE	1	1				AP WITH PT/T SW. AP WITH PT/T SW.
2	701–48310–80	CABLE, REMOTE CONTROL L=10F CABLE, COMMANDE A DISTANCE:10F	2	2				UR UR
	701–48310–90	CABLE, REMOTE CONTROL L=11F CABLE, COMMANDE A DISTANCE:11F	2	2				UR UR
	701–48320–00	CABLE, REMOTE CONTROL L=12F CABLE, COMMANDE A DISTANCE:12F	2	2				UR UR

FIG. 27 REMOTE CONTROL ASSY BOITIER DE COMMANDE A DISTANCE

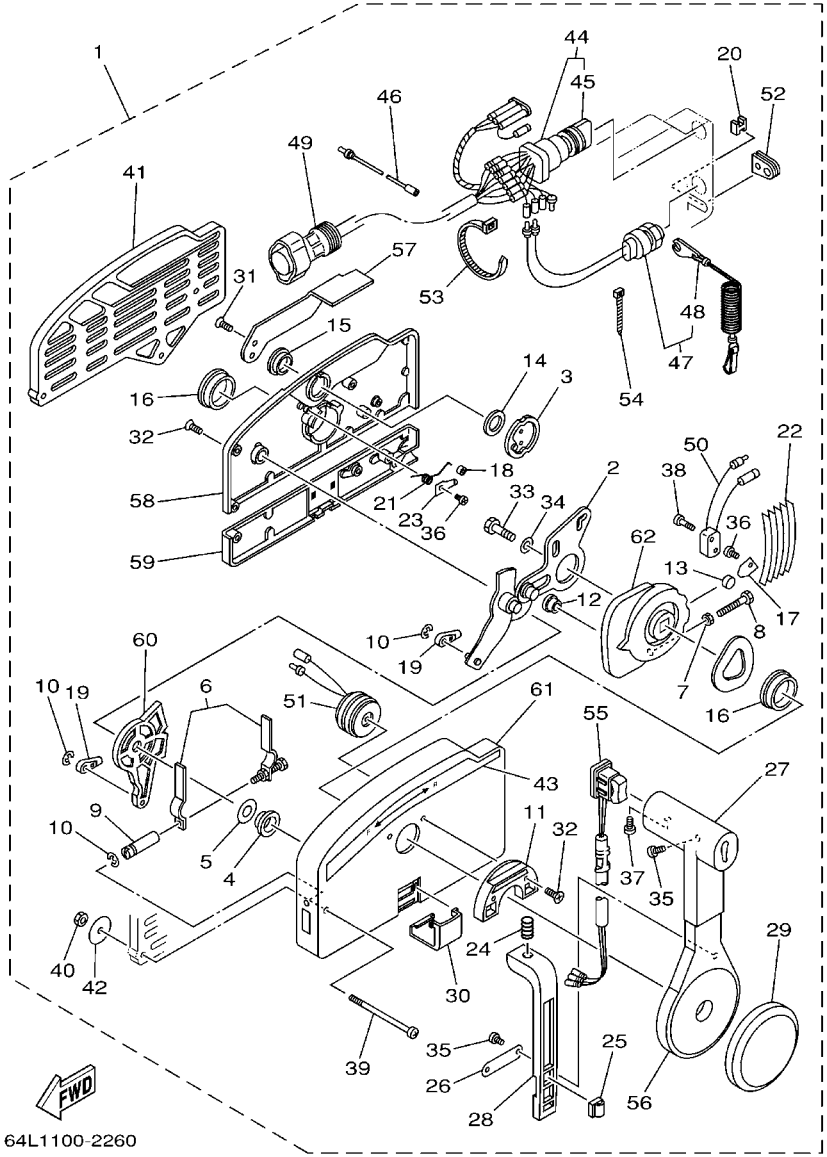

64L1100-2260

REF. NO.	PART NO. N° PIECES	DESCRIPTION DESCRIPTION	69A5	6P72				REMARKS REMARQUES
1	703–48205–17	REMOTE CONTROL ASSY (10P) BOITIER DE COMMANDE A DISTANCE	1	1				AP WITH PT/T SW. AP WITH PT/T SW.
2	703–48261–01	.ARM, THROTTLE .BRAS, ACCELERATION	1	1				
3	703–48153–00	.SHAFT, FREE ACCEL. .AXE	1	1				
4	703–48235–00	.BUSHING .COUSSINET	1	1				
5	703–48268–00	.SPACER .ENTRETOISE	1	1				
6	703–48264–00	.FRICTION, THROTTLE .FRICTION, ACCELERATION	1	1				
7	95380–05600	.NUT .ECROU	1	1				
8	97380–05025	.BOLT .BOULON, HEXAGONAL	1	1				
9	703–48265–00	.SHAFT, FRICTION .AXE, COPILOTE	1	1				
10	93430–06024	.CIRCLIP .CLIPS	3	3				
11	703–48245–00	.PLATE, LOCK .PLAQUE, VERROU	1	1				
12	703–48252–00	.ROLLER, CAM .POULIE	1	1				
13	701–48248–00	.ROLLER, FREE ACCEL. .POULIE	1	1				
14	703–48198–00	.WASHER, WAVE .RONDELLE, ELASTIQUE ONDULEE	1	1				
15	703–48243–00	.BUSHING .COUSSINET	1	1				
16	703–48236–00	.BUSHING 1 .POULIE	2	2				
17	703–48189–00	.RETAINER .FLASQUE	1	1				
18	703–48234–00	.ROLLER, DETENT .POULIE	1	1				
19	703–48345–01	.CABLE END, REMOTE CONTROL 2 .CHAPE CABLE	2	2				
20	703–48358–00	.ANCHOR, CABLE .COLLIER	1	1				
21	703–48244–00	.SPRING, FREE ACCEL. .RESSORT	1	1				
22	703–48238–00	.SPRING, DETENT .RESSORT	5	5				
23	703–48246–00	.SPACER .ENTRETOISE	1	1				
24	703–48227–00	.SPRING, NEUTRAL LOCK .RESSORT	1	1				
25	703–82594–00	.CLAMP .BRIDE	1	1				WITH PT/T SW. WITH PT/T SW.
26	703–48226–00	.PLATE, STOPPER .PLAQUETTE	1	1				
27	703–48222–00	.GRIP, CONTROL LEVER .POIGNEE, COMMANDE LEVIER	1	1				SINGLE SINGLE

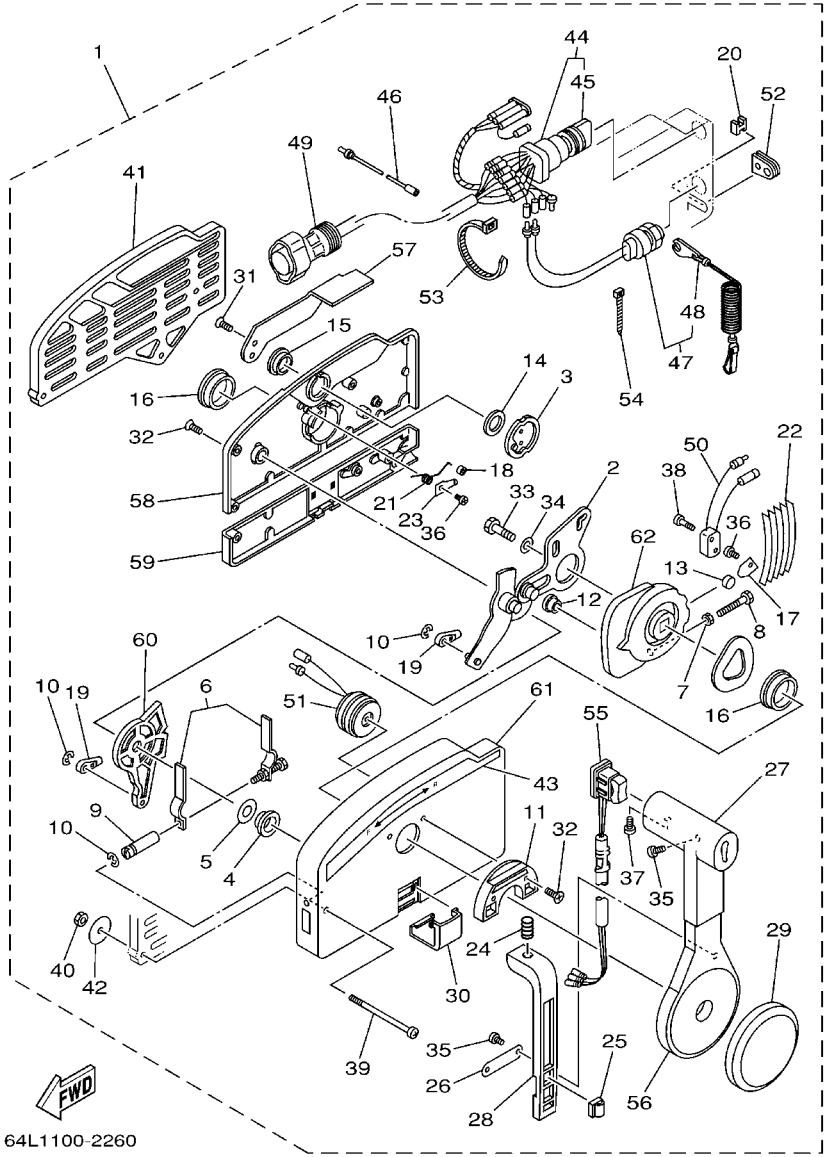

64L1100-2260

FIG. 27 REMOTE CONTROL ASSY BOITIER DE COMMANDE A DISTANCE

REF. NO.	PART NO. N° PIECES	DESCRIPTION DESCRIPTION	69A5	6P72				REMARKS REMARQUES
28	703–48223–00	.LOCK, NEUTRAL .VERROU, NEUTRAL	1	1				
29	703–48225–00	.COVER .COUVERCLE	1	1				
30	703–48219–00	.COVER, LEAD .COUVERCLE	1	1				
31	703–48281–00	.SCREW .VIS	2	2				
32	703–48282–00	.SCREW .VIS	7	7				
33	97380–08030	.BOLT .BOULON, HEXAGONAL	1	1				
34	92990–08600	.WASHER, PLATE .RONDELLE, PLATE	1	1				
35	98580–04010	.SCREW, PAN HEAD .VIS	3	3				
36	98580–04006	.SCREW, PAN HEAD .VIS	2	2				
37	98580–05010	.SCREW, PAN HEAD .VIS	1	1				
38	98580–03015	.SCREW, PAN HEAD .VIS	2	2				
39	703–48291–10	.SCREW (M6) .VIS (M6)	3	3				
40	95380–06600	.NUT, HEXAGON .ECROU	3	3				
41	703–48293–10	.SPACER, REMOTE CONTROL .ENTRETOISE	1	1				SINGLE SINGLE
42	701–48287–00	.WASHER .RONDELLE	3	3				
43	703–48215–00	.GRAPHIC .ADHESIF	1	1				
44	703–82510–43	.MAIN SWITCH ASSY .CONTACTEUR A CLEF COMPLET	1	1				
45	703–82577–00	..CAP, KEY ..CABOCHON	1	1				
46	703–82531–00	.WIRE, LEAD .FIL	1	1				
47	688–82575–01	.ENGINE STOP SWITCH ASSY .COUPE CIRCUIT CPLT	1	1				
48	682–82556–00	..STOPPER ..PLAQUETTE	1	1				
49	688–8258A–20	.EXTENSION, WIRE HARNESS .EXTENSION, FAISCEAU DE FILS	1	1				L:5M (10P) L:5M (10P)
50	703–82540–00	.NEUTRAL SWITCH ASSY .CONTACTEUR DE POINT-MORT	1	1				
51	703–83383–02	.BUZZER .RONFLEUR	1	1				
52	703–48284–00	.GROMMET .PASSE-FIL	1	1				
53	703–82591–00	.BAND .COLLIER	1	1				
54	703–82592–00	.BAND .COLLIER	1	1				

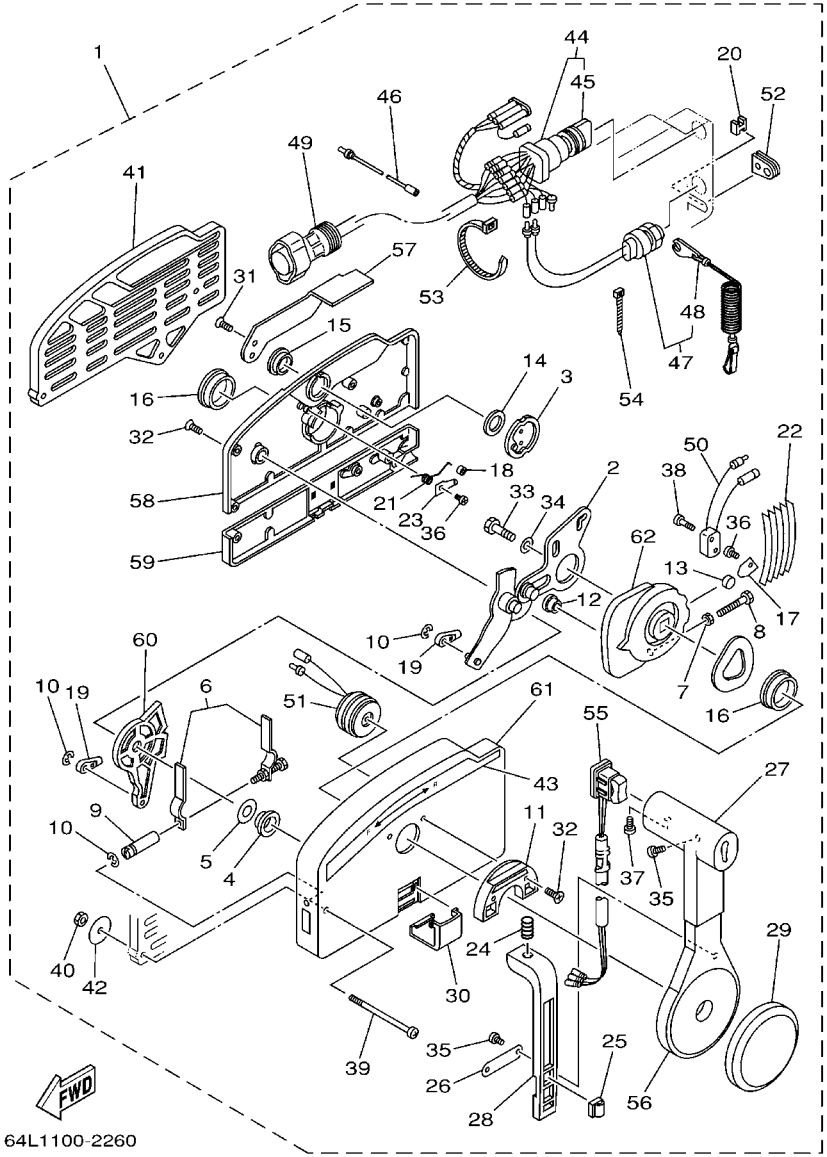

64L1100-2260

FIG. 27 REMOTE CONTROL ASSY BOITIER DE COMMANDE A DISTANCE

REF. NO.	PART NO. N° PIECES	DESCRIPTION DESCRIPTION	69A5	6P72				REMARKS REMARQUES
55	703–82563–02	.TRIM & TILT SWITCH ASSY .INCLINER ET PARER COMMUTATEUR	1	1				WITH PT/T SW. WITH PT/T SW.
56	703–48221–00	.LEVER, CONTROL .LEVIER, COMMANDE	1	1				
57	703–48152–00	.KNOB, FREE ACCEL. .BOUTON	1	1				
58	703–48212–00	.BACK PLATE 1 .PLAQUETTE 1	1	1				
59	703–48213–00	.BACK PLATE 2 .PLAQUETTE 2	1	1				
60	703–48271–00	.ARM, SHIFT .BRAS	1	1				
61	703–48211–01	.HOUSING,1 .CORPS	1	1				
62	703–48232–00	.GEAR .PIGNON	1	1				

FIG. 28 REPAIR KIT 1 — KITS DE REPARATION 1

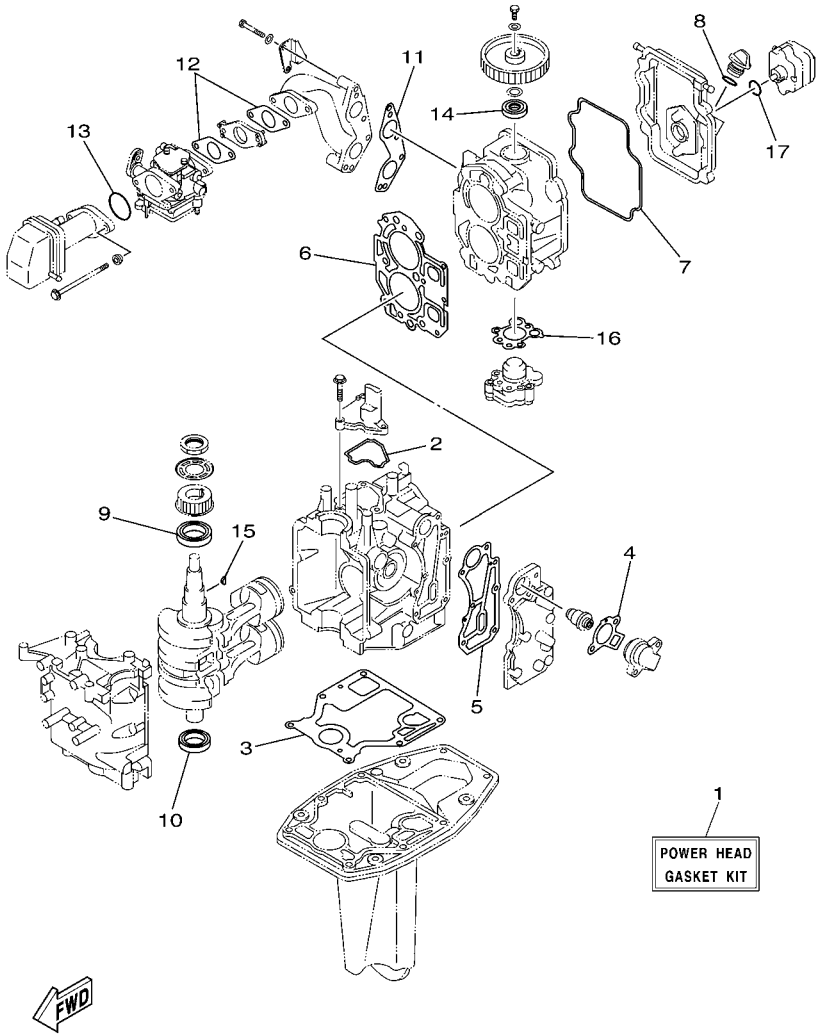

6D41200-C280

REF. NO.	PART NO. N° PIECES	DESCRIPTION DESCRIPTION	69A5	6P72				REMARKS REMARQUES
1	66M–W0001–02	POWER HEAD GASKET KIT POCHETTE DE JINTS TETE MOTRICE	1	1				
2	66M–11357–00	.SEAL, CYLINDER 3 .JOINT, SPY CYLINDRE	1	1				
3	66M–11351–10	.GASKET, CYLINDER .JOINT, D'EMBASE	1	1				
4	62Y–12414–00	.GASKET, COVER .JOINT, COUVERCLE	1	1				
5	66M–41114–01	.GASKET, EXHAUST OUTER COVER .JOINT, COUVERCLE D'ECHAPPEMEN	1	1				
6	66M–11181–10	.GASKET, CYLINDER HEAD 1 .JOINT, DE CULASSE 1	1	1				
7	66M–11356–00	.SEAL, CYLINDER 2 .JOINT, SPY CYLINDRE	1	1				
8	93210–24M79	.O-RING .JOINT TORIQUE	1	1				
9	93102–35M51	.OIL SEAL .JOINT SPY	1	1				
10	93102–25M52	.OIL SEAL .JOINT SPY	1	1				
11	66M–13645–00	.GASKET, MANIFOLD 1 .JOINT, TUBULURE 1	1	1				
12	66M–13646–00	.GASKET, MANIFOLD 2 .JOINT, TUBULURE 2	2	2				
13	93210–35M86	.O-RING .JOINT TORIQUE	1	1				
14	93102–18M21	.OIL SEAL .JOINT SPY	1	1				
15	90280–03M01	.KEY, WOODRUFF .CLAVETTE, DEMI-LUNE	1	1				
16	66M–13329–10	.GASKET, PUMP COVER .JOINT, COUVERCLE DE POMPE	1	1				
17	93210–20M65	.O-RING .JOINT TORIQUE	1	1				

FIG. 29 REPAIR KIT 2 — KITS DE REPARATION 2

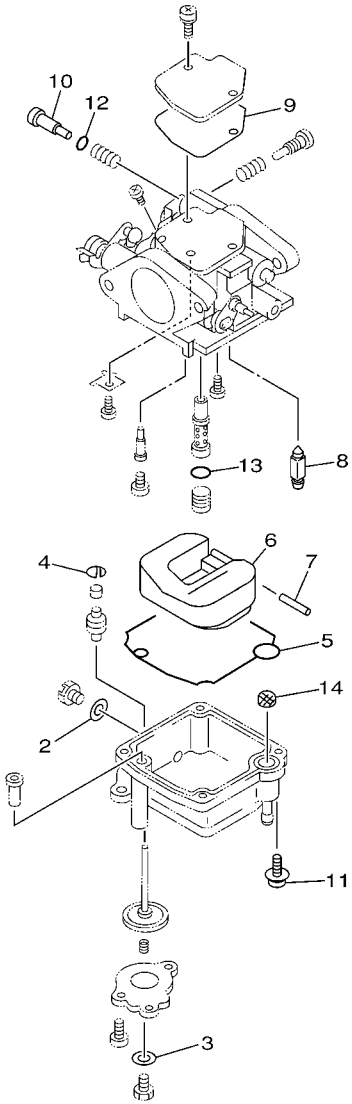

66M0100-8280

REF. NO.	PART NO. N° PIECES	DESCRIPTION DESCRIPTION	69A5	6P72				REMARKS REMARQUES
1	66M–W0093–01	CARBURETOR REPAIR KIT KIT DE REPARATION CARBURATEUR	1	1				
2	66M–14398–00	.GASKET .JOINT	1	1				
3	6L2–14398–00	.GASKET .JOINT	1	1				
4	66M–14377–00	.STOPPER .BUTEE	1	1				
5	66M–14384–00	.GASKET, FLOAT CHAMBER .JOINT, CUVE DE FLOTTEUR	1	1				
6	6L2–14385–00	.FLOAT .FLOTTEUR	1	1				
7	6E5–14386–01	.PIN, FLOAT .AXE, FLOTTEUR	1	1				
8	6L2–14392–00	.VALVE, NEEDLE .POINTEAU	1	1				
9	62Y–14399–00	.GASKET .JOINT	1	1				
10	5H0–14323–00	.SCREW, AIR ADJUSTING .VIS DE DOSEUR D'AIR	1	1				
11	97980–04112	.SCREW, WITH WASHER .VIS, AVEC RONDELLE	4	4				
12	62Y–14397–00	.O-RING .JOINT TORIQUE	1	1				
13	6F5–14397–00	.O-RING .JOINT TORIQUE	1	1				
14	66M–14827–00	.FILTER .FILTRE	1	1				

FIG. 30 REPAIR KIT 3 — KITS DE PEPARATION 3

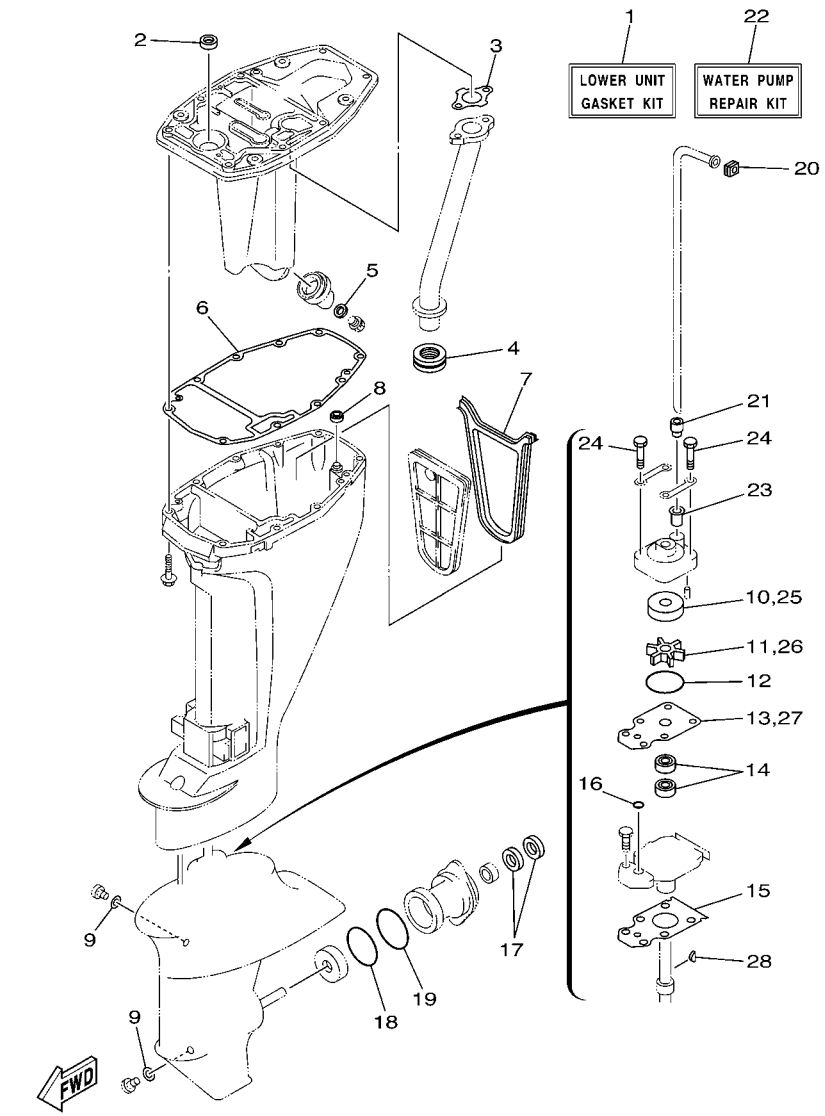

REF. NO.	PART NO. N° PIECES	DESCRIPTION DESCRIPTION	69A5	6P72				REMARKS REMARQUES
1	66M–W0001–21	LOWER UNIT GASKET KIT POCHETTE DE JOINTS EMBASE	1	1				
2	93101–12M63	.OIL SEAL .JOINT SPY	1	1				
3	66M–41133–01	.GASKET, EXHAUST MANIFOLD 1 .JOINT, PIPE D'ECHAPPEMENT	1	1				
4	6D4–41138–00	.SEAL, EXT. 1 .JOINT DE GROUPE 1	1	1				
5	90430–14M09	.GASKET .JOINT	1	1				
6	66M–45113–00	.GASKET, UPPER CASING .JOINT, TUBE D'ARBRE	1	1				
7	66M–45115–00	.GASKET, UPPER CASING .JOINT, TUBE D'ARBRE	1	1				
8	66M–45128–00	.SEAL 2 .JOINT 2	1	1				
9	90430–08020	.GASKET .JOINT	2	2				
10	63V–44322–00	.INSERT, CARTRIDGE .CUVETTE	1	1				
11	63V–44352–01	.IMPELLER .TURBINE	1	1				
12	93210–44398	.O-RING .JOINT TORIQUE	1	1				
13	63V–44323–00	.OUTER PLATE, CARTRIDGE .PLAQUE EXTERIEURE	1	1				
14	93101–20001	.OIL SEAL .JOINT SPY	2	2				
15	63V–45315–A0	.PACKING, LOWER CASING .JOINT, BOITIER D'HELICE	1	1				
16	93210–06ME6	.O-RING .JOINT TORIQUE	1	1				
17	93101–17054	.OIL SEAL .JOINT SPY	2	2				
18	93210–57M09	.O-RING .JOINT TORIQUE	1	1				
19	93210–56M80	.O-RING .JOINT TORIQUE	1	1				
20	63V–44365–10	.DAMPER, WATER SEAL .JOINT, TUBE D'EAU	1	1				
21	63V–44368–00	.RUBBER, WATER SEAL 4 .CAOUTCHOUC EAU JUNTA 4	1	1				
22	63V–W0078–00	WATER PUMP REPAIR KIT KIT DE REPARATION DE LA POMPE	1	1				
23	647–44366–00	.DAMPER, WATER SEAL .JOINT, TUBE D'EAU	1	1				
24	97080–08045	.BOLT .BOULON	4	4				
25	63V–44322–00	.INSERT, CARTRIDGE .CUVETTE	1	1				
26	63V–44352–01	.IMPELLER .TURBINE	1	1				
27	63V–44323–00	.OUTER PLATE, CARTRIDGE .PLAQUE EXTERIEURE	1	1				

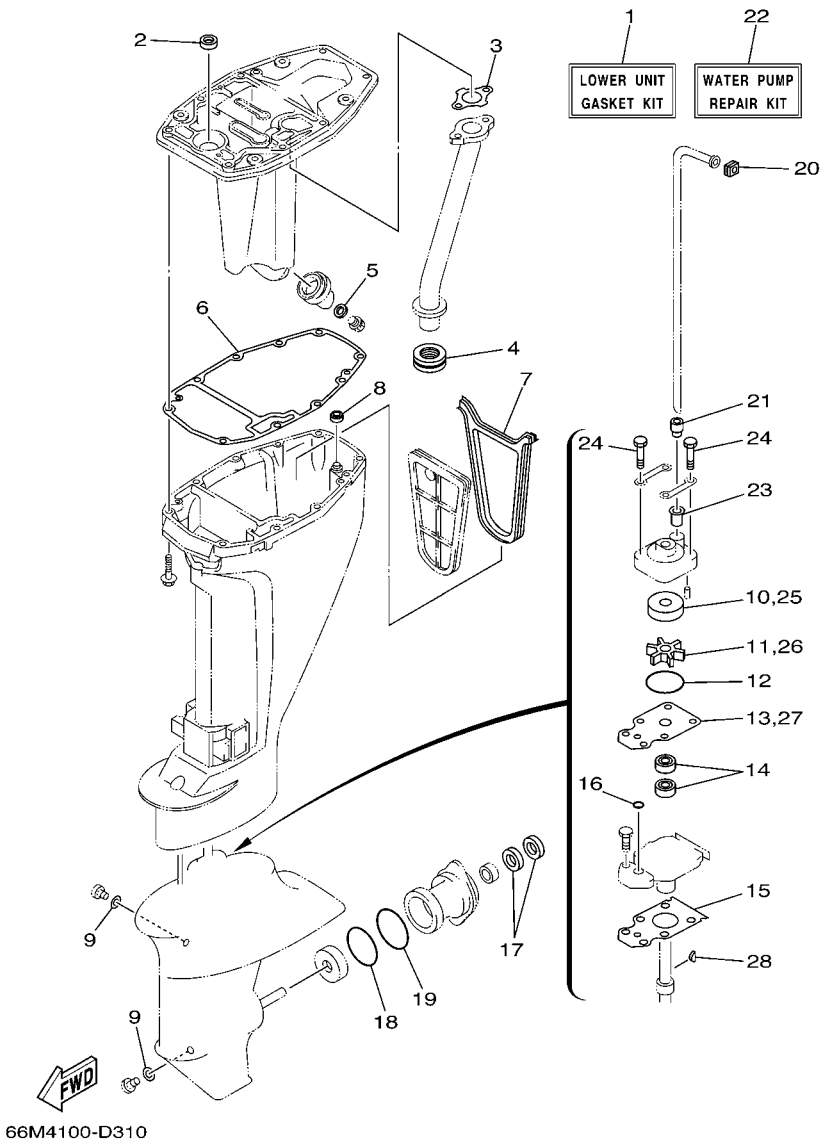

FIG. 30 REPAIR KIT 3 — KITS DE PEPARATION 3

REF. NO.	PART NO. N° PIECES	DESCRIPTION DESCRIPTION	69A5	6P72				REMARKS REMARQUES
28	664–44338–00	.KEY, WOODRUFF .CLAVETTE, VOLANT	1	1				

NUMERICAL INDEX
INDEX NUMERIQUE

PART NO. N° PIECES	REF. NO.
66M–11111–01–1S	4 – 2
66M–11111–11–1S	4 – 2
66M–11133–29	4 – 3
66M–11168–00–1S	2 – 16
66M–11181–10	4 – 5
	28 – 6
66M–11191–00–1S	4 – 9
66M–11325–00	2 – 8
6E5–11325–00	2 – 28
66M–11327–00–94	2 – 9
66M–11328–00	2 – 10
66M–11351–10	2 – 21
	28 – 3
66M–11355–00	21 – 4
66M–11356–00	4 – 10
	28 – 7
66M–11357–00	2 – 18
	28 – 2
676–11372–00	2 – 27
66M–11411–00	3 – 3
66M–11416–00	3 – 4
66M–11416–10	3 – 4
66M–11416–20	3 – 4
66M–11536–10	8 – 7
66M–11537–00–94	8 – 3
66M–11557–00	8 – 8
6G8–11575–00	21 – 17
66N–11603–00	3 – 9
66N–11604–00	3 – 9
66N–11605–00	3 – 9
66M–11631–00–96	3 – 8
634–11633–00	3 – 10
66M–11635–00	3 – 8
66M–11636–00	3 – 8
66M–11650–00	3 – 5
66M–11654–00	3 – 6
66M–12111–00	5 – 1
66M–12113–00	5 – 4
66M–12116–00	5 – 3
30X–12117–00	5 – 5
30X–12118–00	5 – 6
51Y–12119–00	5 – 7
66M–12121–00	5 – 2
66M–12138–60	4 – 17
66M–12146–00	5 – 8
66M–12151–10	5 – 14
62Y–12158–00	5 – 16
62Y–12159–00	5 – 15

PART NO. N° PIECES	REF. NO.
66M–12171–10	8 – 2
66M–12411–01	2 – 22
688–12412–00	2 – 23
6H3–12413–00–1S	2 – 24
62Y–12414–00	2 – 25
	28 – 4
66M–12481–00	15 – 37
66M–12535–00	2 – 15
69W–12535–00	15 – 34
68T–12572–00	15 – 33
6R3–12580–00	15 – 39
66M–13131–10	9 – 18
66M–13300–10	8 – 15
66M–13329–10	8 – 16
	28 – 16
66M–13416–00	21 – 15
66M–13417–00	21 – 14
66M–13421–00	21 – 13
67F–13434–03	1 – 14
6G8–13437–65	10 – 16
5GH–13440–00	2 – 37
6G8–13444–51	15 – 43
66M–13641–10–94	6 – 1
66M–13645–00	6 – 2
	28 – 11
66M–13646–00	6 – 6
	28 – 12
66M–14157–00	7 – 36
6L2–14157–00	7 – 20
646–14212–01	7 – 32
66M–14225–00	7 – 13
66M–14239–00	7 – 12
66M–14271–00	6 – 7
69V–14271–00	6 – 7
66M–14272–00	7 – 34
6G8–14275–02	7 – 11
66M–14301–00	7 – 1
66M–14301–21	7 – 1
62Y–14321–00	7 – 28
5H0–14323–00	7 – 26
	29 – 10
62Y–14323–10	7 – 26
66M–14325–00	7 – 7
6E7–14325–00	9 – 22
30X–14334–00	7 – 27
66M–14341–00	7 – 22
66M–14341–10	7 – 22
66M–14342–23	7 – 24

PART NO. N° PIECES	REF. NO.
66M–14343–51	7 – 23
66M–14343–52	7 – 23
66M–14355–00	7 – 25
66M–14368–01	7 – 10
66M–14377–00	7 – 8
	29 – 4
66M–14381–02	7 – 2
66M–14381–10	7 – 2
62Y–14383–00	7 – 3
677–14383–01	7 – 5
66M–14384–00	7 – 14
	29 – 5
6L2–14385–00	7 – 16
	29 – 6
6E5–14386–01	7 – 17
	29 – 7
6L2–14392–00	7 – 18
	29 – 8
62Y–14397–00	7 – 30
	29 – 12
6F5–14397–00	7 – 33
	29 – 13
66M–14398–00	7 – 4
	29 – 2
6L2–14398–00	7 – 6
	29 – 3
62Y–14399–00	7 – 21
	29 – 9
66M–14427–60	10 – 15
66M–14440–00	6 – 8
6G8–14457–00	7 – 38
66M–14477–00	6 – 12
65W–14497–01	16 – 32
66M–14827–00	7 – 15
	29 – 14
66M–14958–00	7 – 9
66M–15100–02–1S	2 – 2
66M–15316–00	21 – 20
66M–15362–00	21 – 21
6G8–15363–00	4 – 13
66M–15373–00	6 – 25
66M–15711–10	10 – 1
66M–15758–10	10 – 4
66M–15762–00	10 – 11
69A–22471–00	19 – 3
69A–23129–00	19 – 56
6YL–24201–04	24 – 1
6YL–24260–01	24 – 3

PART NO. N° PIECES	REF. NO.
6YL–24268–01	24 – 6
6G1–24304–02	9 – 1
6YL–24306–54	24 – 7
6YL–24329–00	24 – 5
66M–24351–00	21 – 16
66M–24374–00	9 – 24
6E5–24377–00	2 – 6
688–24378–00	2 – 34
66M–24410–10	9 – 13
66M–24411–10	9 – 16
66M–24413–01	9 – 14
6A0–24421–01	9 – 15
66M–24423–00	9 – 17
66M–24444–00	9 – 20
66M–24454–00	9 – 19
66M–24471–00	9 – 21
61N–24521–00	9 – 7
61N–24560–00	9 – 5
61N–24563–00	9 – 6
6D4–24566–00	6 – 28
6YL–24610–01	24 – 2
65W–26326–10	15 – 24
62Y–28100–00	9 – 33
6A1–28176–00	15 – 41
66M–28199–7A–D0	9 – 34
66M–28199–7A–E0	9 – 34
66M–28199–7A–F0	9 – 34
66M–28199–7A–G0	9 – 34
66M–28199–7A–H0	9 – 34
66M–28199–7A–S0	9 – 34
66M–28199–8B–K0	9 – 35
66M–28199–8B–L0	9 – 35
66M–28199–8B–M0	9 – 35
66M–28199–8B–N0	9 – 35
66M–28199–8B–P0	9 – 35
66M–28199–8B–R0	9 – 35
61H–2819R–31	9 – 32
66M–41113–30–1S	2 – 26
66M–41114–01	2 – 30
	28 – 5
6D4–41131–00–94	21 – 7
66M–41133–01	21 – 8
	30 – 3
66M–41137–00–5B	21 – 1
6D4–41138–00	21 – 10
	30 – 4
66M–41211–00	16 – 31
6R5–41237–00	6 – 23

PART NO. N° PIECES	REF. NO.
66M–41252–00	6 – 18
66M–41256–00	6 – 24
661–41262–02	16 – 29
66M–41271–00	6 – 13
689–41273–00	6 – 14
65W–41283–00	16 – 28
66M–41292–00	6 – 15
66M–41298–00	6 – 16
65W–41638–00	16 – 27
6F5–41662–00	16 – 7
66M–42511–01–4D	18 – 6
66M–42511–11–4D	18 – 6
63V–42528–00	18 – 2
63V–42537–00	18 – 7
6P7–42610–00–4D	1 – 1
69A–42610–12–4D	1 – 1
66M–42613–00	1 – 2
6D4–42615–00	1 – 8
65W–42651–01	1 – 4
66M–42652–00	1 – 6
69A–42675–00	1 – 11
66M–42677–00	1 – 12
69V–42677–00	1 – 12
66M–42678–20	1 – 9
69V–42678–20	1 – 9
69A–42710–13–4D	15 – 1
66M–42716–00	15 – 8
682–42724–00	15 – 26
6G1–42725–00	10 – 5
66M–42725–20	15 – 11
65W–42726–10	15 – 27
6H1–42726–21	15 – 32
62Y–42727–00	15 – 12
682–42727–00	15 – 25
66M–42738–00–4D	15 – 9
66M–42743–00	15 – 28
6D4–42766–00	15 – 20
6D4–42815–00–4D	15 – 13
6D4–42816–00	15 – 17
69A–43111–00–4D	17 – 1
69A–43112–00–4D	17 – 6
69A–43113–00	17 – 20
648–43114–01	17 – 5
6E7–43116–00	17 – 4
6E0–43118–01	17 – 2
69A–43131–00	17 – 18
6D4–43144–00	15 – 22
6E5–43145–01	25 – 8

PART NO. N° PIECES	REF. NO.
6G5–43145–01	17 – 22
69A–43155–00	17 – 44
65W–43191–00	17 – 12
65W–43192–00	17 – 11
69A–43311–00–4D	17 – 16
69A–43311–10–4D	17 – 16
689–43373–01	18 – 3
69A–43801–00	19 – 18
65W–43804–00	19 – 59
65W–43805–00	19 – 60
6T4–43808–00	19 – 34
69A–4380C–00	19 – 25
69A–4380D–00	19 – 11
65W–4380F–00	19 – 68
69A–4380K–00	19 – 2
69A–43810–00	19 – 10
69A–43811–01	19 – 19
69A–43812–00	19 – 22
69A–43814–00	19 – 7
6H1–43816–00	19 – 36
69A–43816–01	19 – 54
69G–43818–00	17 – 25
69A–4381G–00	19 – 48
69A–43824–00	19 – 43
69A–4382G–00	19 – 32
69A–43830–00	19 – 24
69A–43840–00–4D	19 – 1
69A–43841–00	19 – 26
6H1–43844–10	19 – 38
69A–43848–00	19 – 44
69A–4384F–00	19 – 29
6H1–4384G–11	19 – 37
69A–4384H–00	19 – 51
69A–4384M–00	19 – 27
6T4–43853–00	19 – 35
69A–43854–00	19 – 47
69A–43855–00	19 – 39
6H1–43856–10	19 – 40
69A–43857–00	19 – 17
N35–43862–10	19 – 55
6H1–43866–00	19 – 20
65W–43869–00	19 – 61
69A–43869–00	19 – 23
65W–4386A–00	19 – 15
69A–4386A–00	19 – 42
65W–4386K–00	19 – 62
69A–43871–00	19 – 21
69A–43872–00	19 – 9

NUMERICAL INDEX
INDEX NUMERIQUE

PART NO. N° PIECES	REF. NO.
69A–43878–00	19 – 57
65W–43879–00	19 – 69
69A–43880–00	19 – 58
69A–43881–00	19 – 64
65W–43882–00	19 – 63
6H1–43883–00	19 – 30
65W–43887–00	19 – 65
65W–4388E–00	19 – 70
6H1–4388E–11	19 – 5
65W–43891–00	19 – 67
65W–43892–00	19 – 66
62Y–43894–00	19 – 28
66R–44114–00	16 – 10
65W–44116–00	16 – 9
65W–44121–00	16 – 4
66M–44122–00	16 – 5
65W–44125–00	16 – 18
65W–44142–00	16 – 16
66M–44143–00	16 – 12
66M–44143–10	16 – 12
63V–44150–00	22 – 26
66M–44150–10	22 – 26
66M–44192–00	16 – 23
63V–44301–00	22 – 10
63V–44322–00	22 – 11
	30 – 10
63V–44323–00	22 – 16
	30 – 13
63V–44328–00	22 – 19
664–44338–00	22 – 14
	30 – 28
63V–44352–01	22 – 13
	30 – 11
66M–44361–00	23 – 1
66M–44361–10	23 – 1
63V–44365–10	23 – 2
	30 – 20
647–44366–00	22 – 12
	30 – 23
66M–44366–00	18 – 19
63V–44368–00	23 – 3
	30 – 21
6H3–44391–01	15 – 23
66M–44514–00–4D	18 – 12
66M–44526–00	18 – 18
66M–44551–00–4D	18 – 20
682–44555–30	18 – 21
66M–44557–00	18 – 22

PART NO. N° PIECES	REF. NO.
66M–45111–00–4D	20 – 1
66M–45111–10–4D	20 – 1
66M–45113–00	20 – 2
	30 – 6
66M–45115–00	20 – 6
	30 – 7
66M–45126–00	20 – 5
66M–45128–00	20 – 8
	30 – 8
66M–45136–00	20 – 7
6G1–45214–00	23 – 7
63V–45215–00	23 – 8
65W–45251–00	17 – 39
61N–45251–01	23 – 11
69A–45300–02–4D	22 – 1
69A–45300–11–4D	22 – 1
63V–45311–01–4D	22 – 2
66M–45311–01–4D	22 – 2
63V–45315–A0	22 – 23
	30 – 15
626–45316–09	22 – 21
63V–45331–00–5B	22 – 20
683–45361–02–4D	22 – 40
66M–45371–00	23 – 20
63V–45375–00	23 – 14
69A–45510–00	22 – 27
69A–45510–10	22 – 27
63V–45536–00	22 – 4
63V–45551–00	22 – 28
6E7–45560–01	22 – 30
664–45567–01	22 – 48
664–45567–10	22 – 48
664–45567–20	22 – 48
664–45567–30	22 – 48
664–45567–40	22 – 48
664–45567–50	22 – 48
664–45567–60	22 – 48
6E7–45571–00	22 – 31
626–45577–00	22 – 32
626–45577–10	22 – 32
626–45577–20	22 – 32
626–45577–30	22 – 32
626–45577–40	22 – 32
6E8–45587–10	22 – 6
6E8–45587–30	22 – 6
683–45611–00	22 – 34
682–45631–00	22 – 36
648–45633–00	22 – 38

PART NO. N° PIECES	REF. NO.
650–45635–00	22 – 35
683–45941–00–EL	23 – 19
63V–45943–00–EL	23 – 19
63V–45945–00–EL	23 – 19
683–45945–00–EL	23 – 19
63V–45947–00–EL	23 – 19
63V–45952–00–EL	23 – 19
683–45952–00–EL	23 – 19
6E7–45987–01	23 – 15
66M–46241–00	8 – 11
66M–46297–00	8 – 12
703–48152–00	27 – 57
703–48153–00	27 – 3
703–48189–00	27 – 17
703–48198–00	27 – 14
703–48205–17	26 – 1
	27 – 1
703–48211–01	27 – 61
703–48212–00	27 – 58
703–48213–00	27 – 59
703–48215–00	27 – 43
703–48219–00	27 – 30
703–48221–00	27 – 56
703–48222–00	27 – 27
703–48223–00	27 – 28
703–48225–00	27 – 29
703–48226–00	27 – 26
703–48227–00	27 – 24
703–48232–00	27 – 62
703–48234–00	27 – 18
703–48235–00	27 – 4
703–48236–00	27 – 16
703–48238–00	27 – 22
703–48243–00	27 – 15
703–48244–00	27 – 21
703–48245–00	27 – 11
703–48246–00	27 – 23
701–48248–00	27 – 13
703–48252–00	27 – 12
703–48261–01	27 – 2
703–48264–00	27 – 6
703–48265–00	27 – 9
703–48268–00	27 – 5
703–48271–00	27 – 60
703–48281–00	27 – 31
703–48282–00	27 – 32
703–48284–00	27 – 52
701–48287–00	27 – 42

PART NO. N° PIECES	REF. NO.
703–48291–10	27 – 39
703–48293–10	27 – 41
701–48310–80	26 – 2
701–48310–90	26 – 2
701–48320–00	26 – 2
663–48344–00	16 – 2
703–48345–01	27 – 19
703–48358–00	27 – 20
63V–48511–01	18 – 26
6H3–48538–00	16 – 1
63V–61350–00	25 – 1
6E5–61355–00	25 – 6
66M–81800–01	14 – 1
65W–81801–00	14 – 8
65W–81807–00	14 – 5
66M–81820–00	14 – 7
65W–81826–00	14 – 2
65W–8182B–00	13 – 4
65W–8182S–00	14 – 10
66M–81830–00	14 – 4
65W–81840–00	14 – 9
65W–81850–01	14 – 6
65W–81857–01	14 – 3
6H5–81920–00	13 – 23
69A–81929–00	13 – 24
6G1–81941–10	13 – 1
69A–81950–00	13 – 18
6G1–81952–00	13 – 2
6G8–81960–A1	12 – 19
66M–82105–00	13 – 5
66M–82117–00	13 – 3
6G5–82119–00	13 – 27
63V–82127–00	17 – 41
66M–82127–00	18 – 5
69A–82127–00	18 – 5
66M–82127–10	12 – 10
6G8–82150–00	12 – 22
663–82151–00	12 – 23
6G5–82152–00	12 – 24
6G8–82370–30	12 – 8
62Y–82377–00	15 – 40
62Y–82504–10	12 – 9
703–82510–43	27 – 44
703–82531–00	27 – 46
703–82540–00	27 – 50
682–82556–00	27 – 48
703–82563–02	27 – 55
63D–82563–10	13 – 29

PART NO. N° PIECES	REF. NO.
688–82575–01	27 – 47
703–82577–00	27 – 45
6E3–8257H–00	15 – 42
6E5–82587–00	13 – 30
688–8258A–20	27 – 49
69A–82590–00	13 – 28
703–82591–00	27 – 53
703–82592–00	27 – 54
703–82594–00	27 – 25
703–83383–02	27 – 51
6H1–83557–00	12 – 26
69A–83614–00	13 – 31
6A1–83625–41	10 – 13
6A1–83625–51	10 – 14
66M–84342–00	10 – 12
65W–85410–01	12 – 25
66M–85520–00	11 – 2
66M–85533–10	11 – 4
66M–85540–01	12 – 1
66M–85540–10	12 – 1
69A–85542–10	12 – 11
66M–85550–10	11 – 1
66M–85570–00	12 – 4
66M–85580–00	11 – 3
66M–86111–00	13 – 8
66M–86112–00	13 – 10
66M–86116–00	13 – 9
66M–86117–00	13 – 16
66M–W0001–02	28 – 1
66M–W0001–21	30 – 1
66M–W0070–20	1 – 10
63V–W0078–00	30 – 22
66M–W0093–01	29 – 1
66M–W009A–02–1S	4 – 1
66M–W009A–12–1S	4 – 1
66M–W009B–12–1S	2 – 1
90101–06020	17 – 40
90105–06M07	18 – 4
90105–06M14	8 – 4
90105–08M78	4 – 7
90109–06M04	17 – 15
90109–06M81	15 – 21
	16 – 8
90109–06M82	15 – 10
90109–06M86	13 – 32
	15 – 29
	16 – 11
90109–06MA2	13 – 22

PART NO. N° PIECES	REF. NO.
90109–08M78	14 – 12
90109–08M85	14 – 13
90110–08M05	17 – 35
90116–08M54	18 – 15
90119–06090	21 – 9
90119–06M14	2 – 5
90119–06M59	10 – 6
90119–06M76	6 – 10
90119–06MA3	4 – 8
90119–06MA4	2 – 31
90119–08M39	14 – 11
90119–08M45	18 – 23
90119–08M46	18 – 24
90119–08M66	2 – 4
90152–05M04	23 – 9
90157–05M16	24 – 4
90157–06M06	20 – 9
90167–06002	15 – 35
90170–06015	16 – 13
90170–09M03	25 – 4
90170–28M37	8 – 9
90171–10M01	23 – 17
90179–08M06	22 – 29
90179–08M34	18 – 25
90179–16M05	11 – 13
90185–05002	23 – 10
90185–08057	17 – 36
	18 – 29
90185–09M01	25 – 3
90185–22043	17 – 21
90201–05M06	16 – 24
90201–06015	21 – 12
90201–06416	13 – 21
90201–06M05	10 – 9
	12 – 15
90201–06M31	16 – 20
90201–06M94	8 – 6
90201–07M01	3 – 7
90201–08M00	17 – 29
90201–08M06	18 – 16
90201–10M01	23 – 16
90201–10M20	25 – 2
90201–10M63	25 – 7
90201–13201	8 – 5
90201–16M44	11 – 14
90201–17682	22 – 33
90201–45M28	18 – 8
90202–05088	6 – 22

NUMERICAL INDEX
INDEX NUMERIQUE

PART NO. N° PIECES	REF. NO.
90202–05M38	1 – 13
90206–05005	6 – 20
90206–12052	15 – 16
90240–05M20	6 – 19
90243–04M01	17 – 3
90249–12M36	17 – 31
90250–05010	22 – 37
90254–03M05	16 – 6
90266–06M02	1 – 5
90280–03M01	8 – 10
	28 – 15
90280–05013	11 – 12
90338–08M19	17 – 38
90340–08002	22 – 8
90340–14M06	21 – 18
90381–12M10	17 – 32
90381–12M11	17 – 33
90386–12M37	15 – 14
90386–12MA2	15 – 15
90386–14MA1	17 – 14
90386–16MA7	17 – 26
90386–16MA8	17 – 27
90386–22MA4	17 – 19
90386–30048	18 – 9
90386–30M60	18 – 11
90387–05008	21 – 11
90387–06034	15 – 7
90387–06064	16 – 30
90387–06M03	13 – 20
90387–06M05	12 – 12
90387–06M29	16 – 19
90387–06M79	6 – 11
90387–10M42	25 – 5
90387–13001	5 – 10
90387–13002	5 – 11
90387–13M56	5 – 9
90387–16M02	17 – 28
90401–20M00	2 – 38
90430–08020	22 – 9
	30 – 9
90430–08143	4 – 16
90430–14M09	21 – 19
	30 – 5
90445–09061	2 – 33
90445–09086	2 – 35
90445–09104	2 – 36
90445–10M15	9 – 10
90445–10M19	9 – 4

PART NO. N° PIECES	REF. NO.
90445–10M46	2 – 7
90445–10M93	9 – 29
90446–14M51	9 – 31
90446–14MH7	17 – 23
90464–09M13	12 – 18
	15 – 31
90465–06M88	13 – 33
90465–08M82	6 – 26
90465–08M83	6 – 27
90465–11M10	9 – 12
	15 – 38
90465–13M97	17 – 24
90465–25M95	15 – 30
90467–09M17	9 – 11
90468–10005	16 – 25
90468–18008	16 – 3
90480–09M12	13 – 19
90480–10M13	13 – 15
90480–10M16	8 – 13
90480–12072	8 – 14
90480–13M24	12 – 13
90480–15M31	15 – 6
90480–25161	12 – 5
90501–12M40	5 – 12
90501–12M41	5 – 13
90501–14M06	22 – 39
90506–18010	15 – 19
91317–05025	19 – 53
91490–30020	23 – 18
91690–20016	6 – 21
91690–30018	17 – 13
92990–05600	13 – 12
92990–06100	9 – 26
92990–06300	23 – 13
92990–06600	9 – 27
92990–08600	13 – 7
	17 – 37
	27 – 34
92995–05600	2 – 14
92995–06100	10 – 8
	11 – 6
92995–06600	2 – 12
	4 – 12
	6 – 4
	8 – 18
	9 – 3
	10 – 3
	11 – 7

PART NO. N° PIECES	REF. NO.
92995–06600	12 – 3
	13 – 14
	15 – 3
	16 – 22
	17 – 43
	18 – 14
	21 – 6
	22 – 47
	23 – 22
92995–08600	18 – 28
	23 – 6
93101–12M63	21 – 2
	30 – 2
93101–17054	22 – 43
	30 – 17
93101–20001	22 – 22
	30 – 14
93102–18M21	8 – 1
	28 – 14
93102–25M52	3 – 2
	28 – 10
93102–35M51	3 – 1
	28 – 9
93210–03261	13 – 17
93210–06001	19 – 46
93210–06ME6	22 – 24
	30 – 16
93210–07003	19 – 6
93210–12N52	19 – 33
93210–16275	25 – 9
93210–20M65	9 – 28
	28 – 17
93210–21276	19 – 8
93210–24M79	4 – 14
	28 – 8
93210–27666	19 – 4
93210–29M94	18 – 10
93210–32738	9 – 8
93210–35M86	6 – 9
	28 – 13
93210–44398	22 – 15
	30 – 12
93210–56M80	22 – 45
	30 – 19
93210–57M09	22 – 44
	30 – 18
93306–00501	22 – 41
93315–314V8	22 – 3

PART NO. N° PIECES	REF. NO.
93315–317U2	22 – 42
93332–00005	22 – 7
93341–41414	22 – 5
93430–06024	27 – 10
93430–10M00	17 – 34
93450–09M01	4 – 4
93450–15023	3 – 11
93501–08001	19 – 41
93505–32038	19 – 14
93602–15250	19 – 45
93604–06136	19 – 16
93604–12M07	2 – 32
	22 – 17
	23 – 4
93606–12019	6 – 5
	20 – 4
	21 – 3
93606–14081	19 – 52
93700–06M03	18 – 1
94701–00375	4 – 18
95380–04600	9 – 23
95380–05600	27 – 7
95380–06600	27 – 40
95380–06700	10 – 10
	16 – 14
95380–08600	9 – 9
	18 – 17
95380–08700	13 – 6
95895–06020	12 – 14
95895–06030	23 – 12
97075–06025	18 – 13
97075–08030	23 – 5
97075–08035	18 – 27
97080–08016	17 – 30
97080–08025	22 – 25
97080–08045	22 – 18
	30 – 24
97095–05012	2 – 13
97095–06010	16 – 36
	17 – 42
97095–06012	13 – 25
	15 – 18
97095–06016	11 – 8
	12 – 20
	13 – 13
	23 – 21
97095–06020	2 – 11
	4 – 11

PART NO. N° PIECES	REF. NO.
97095–06020	9 – 2
	10 – 2
	12 – 2
	21 – 5
	22 – 46
97095–06025	11 – 5
	12 – 16
	15 – 4
	16 – 21
97095–06035	8 – 17
	15 – 2
97095–06040	6 – 3
	11 – 10
97095–06055	16 – 34
97095–06090	10 – 7
97095–08014	4 – 15
97380–05025	27 – 8
97380–08030	27 – 33
97575–08545	20 – 3
97780–50510	6 – 17
97780–60520	1 – 3
97880–05008	13 – 11
97880–06030	9 – 25
97885–08010	17 – 17
97890–04005	7 – 35
97980–04110	7 – 19
97980–04112	7 – 29
	29 – 11
98580–03005	7 – 37
98580–03015	27 – 38
98580–04006	27 – 36
98580–04010	27 – 35
98580–05010	27 – 37
98780–04015	2 – 29
98980–04006	7 – 31
99001–03600	19 – 31
99510–10114	2 – 3
	4 – 6

PART NO. N° PIECES	REF. NO.

F13.5AEP/F15AEP
PARTS CATALOGUE
©2005 by Yamaha Motor Co., Ltd.
1st edition, May 2005
All rights reserved.
Any reprinting or unauthorized use
without the written permission of
Yamaha Motor Co., Ltd.
is expressly prohibited.
Printed in Japan.

F13.5AEP/F15AEP
CATALOGUE DE PIECES DETACHEES
©2005 par Yamaha Motor Co., Ltd.
1re édition, mai 2005
Tous droits réservés
Toute réimpression ou utilisation
non autorisée sans la permission écrite
de la Yamaha Motor Co., Ltd.
est formellement interdite.
Imprimé au Japon