YAMAHA

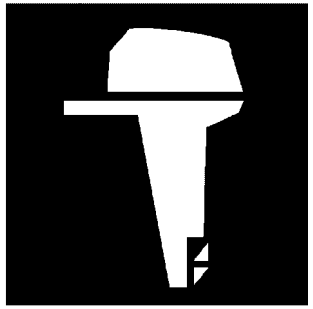

# PARTS CATALOGUE
# CATALOGUE DE PIECES DETACHEES

# F150AET'06 ( 63P3 )
# FL150AET'06 ( 64P3 )

YAMAHA GENUINE Parts & Accessories

1E63P-300F1

( 2E63P-300F1 )

A1

F150AET/FL150AET
PARTS CATALOGUE
©2023 by Yamaha Motor Co., Ltd.
1st edition, April 2023
All rights reserved.
Any reprinting or unauthorized use
without the written permission of
Yamaha Motor Co., Ltd.
is expressly prohibited.
Printed in Japan.

F150AET/FL150AET
CATALOGUE DE PIECES DETACHEES
©2023 par Yamaha Motor Co., Ltd.
1re édition, avril 2023
Tous droits réservés
Toute réimpression ou utilisation
non autorisée sans la permission écrite
de la Yamaha Motor Co., Ltd.
est formellement interdite.
Imprimé au Japon

# FOREWORD

This Parts Catalogue is related to the parts for the model(s) on the cover page. When you are ordering replacement parts, please refer to this Parts Catalogue and quote both part numbers and part names correctly.

1. Modifications or additions which have been made after the issue of the Parts Catalogue will be announced in the Parts News.
   It is advisable that you make the necessary corrections to the Parts Catalogue according to the Parts News.

2. Abbreviations
   The following abbreviations are used in this Parts Catalogue.
   "UR" Use specified parts number.
   "UN" Use as many as needed.
   "AP" Alternate Parts
   "LM" Locally Made (Parts need to be ordered locally)
   "F#" Frame No. (Applicable machine No.)
   "O/S" Over Size

3. The number of components for assembly
   - Parts, which are to be supplied in an assembly, are listed with a dot (.) in front of the part name as shown below.
   - The numeral appearing to the right of each component part indicates the quantity of parts for each assembly unit.

| PART NO. | DESCRIPTION | Q'TY | REMARKS |
|---|---|---|---|
| 2F5–83310–60 | FRONT FLASHER LIGHT ASSY | 2 | |
| 115–83311–60 | .BULB (6V–18W) | 1 | |

4. Applicable colours of graphics are represented in the "REMARKS" as shown below.

| PART NO. | DESCRIPTION | Q'TY | REMARKS |
|---|---|---|---|
| 2N4–24110–00–X5 | FUEL TANK COMP. | 2 | MXR |
| 3J1–24240–10 | .GRAPHIC, FUEL TANK | 1 | FOR MXR |

5. Note that the illustrations for reference in finding parts numbers are not to be used for assembling. When assembling, please use the applicable service manual.

6. The asterisk (*) before a reference number indicates modified items after the first edition.

7. Applicable Serial No.
   Engine Serial No.

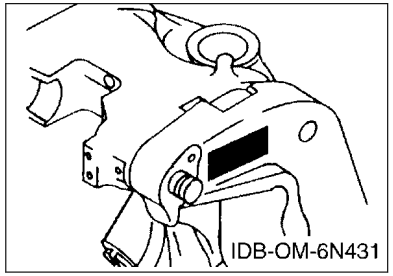


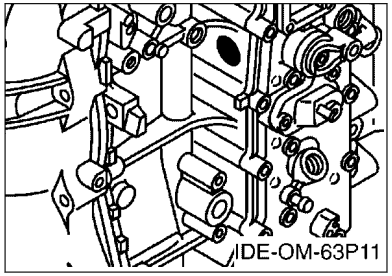


8. Applicable Engine Starting Serial No.

| Model | Serial No. | Model | Serial No. |
|---|---|---|---|
| F150A | 63P-1029405 | FL150A | 64P-1003507 |
| | | | |
| | | | |
| | | | |
| | | | |

9. Applicable Colour Code

| Abbreviation | Colour Name | Colour Code |
|---|---|---|
| DBN1 | DARK BLUISH GRAY 1 | 008D |

10. Quantity Column Information

| Column No. | Name Of Q'ty Column | Applicable Model |
|---|---|---|
| 1 | 63P3 | F150AET |
| 2 | 64P3 | FL150AET |
| | | |
| | | |
| | | |

# AVANT–PROPOS

Ce catalogue de pièces détachées concerne les pièces pour le(s) modèle(s) indiqué(s) sur la page de couverture. Lorsque vous commandez des pièces de rechange, veuillez vous référer à ce catalogue de pieces détachées et indiquer clairement les numéros et les noms des pièces détachées.

1. Les modifications ou ajouts ayant été effectués après la parution du catalogue de pièces détachées seront décrits dans les Bulletins d'information concernant les pièces détachées.
   Il est recommandé que vous apportiez les corrections nécessaires au catalogue des pièces détachées en vous référant aux Bulletins d'information.

2. Abréviations
   Dans ce catalogue, les abréviations suivantes sont utilisées:
   "UR" Utiliser le numéro de pièces spécifié.
   "UN" Utiliser autant que nécessaire.
   "AP" Pièces de substitution
   "LM" Fabrication locale (les pièces doivent être commandées localement.)
   "F#" N° de cadre (applicable au N° de série)
   "O/S" Surdimensionné

3. Nombre de pièces d'un assemblage
   - Les pièces fournies comme composants d'un assemblage sont précédées d'un point (.) de la manière indiquée ci–dessous.
   - Le chiffre apparaissant à la droite de chaque composant indique la quantité de pièces pour chaque unité d'assemblage.

| N° PIECES | DESCRIPTION | QTE | REMARQUES |
|---|---|---|---|
| 2F5–83310–60 | ENS. CLIGNOTANT AVANT | 2 | |
| 115–83311–60 | .AMPOULE (6V–18W) | 1 | |

4. Les couleurs concernant les graphiques sont indiquées dans la colonne "REMARQUES", comme indiqué ci–dessous.

| N° PIECES | DESCRIPTION | QTE | REMARQUES |
|---|---|---|---|
| 2N4–24110–00–X5 | RESERVOIR A ESSENCE. | 2 | MXR |
| 3J1–24240–10 | .GRAPHIQUE | 1 | POUR MXR |

5. Veuillez noter que les illustrations sont indiquées à titre de référence pour trouver les numéros de pièces, non pour être utilisées lors de l'assemblage. Lors de l'assemblage, veuillez utiliser le manuel d'entretien adéquat.

6. L'astérisque (*) placé devant un numéro de référence indique des éléments qui ont été modifiés après la première édition.

7. N° de série applicable
   N° de Série du moteur

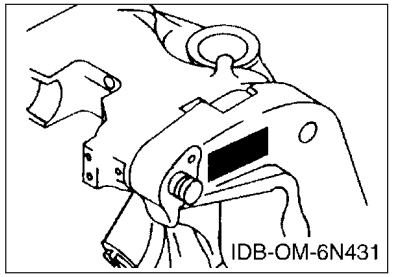


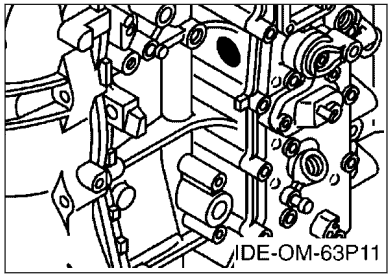


8. N° de série initial du moteur applicable

| Modèle | N° de série | Modèle | N° de série |
|---|---|---|---|
| F150A | 63P-1029405 | FL150A | 64P-1003507 |
| | | | |
| | | | |
| | | | |
| | | | |

9. Code couleur applicable

| Abréviation | Nom de la couleur | Code couleur |
|---|---|---|
| DBN1 | DARK BLUISH GRAY 1 | 008D |

10. Informations relatives à la colonne Quantité

| N° de la colonne | Nom de la colonne Qté | Modèle applicable |
|---|---|---|
| 1 | 63P3 | F150AET |
| 2 | 64P3 | FL150AET |
| | | |
| | | |
| | | |

# CONTENTS

SHEET1/2
TOP COWLING.....A4
CYLINDER & CRANKCASE 1.....A5
CRANKSHAFT & PISTON.....A7
CYLINDER & CRANKCASE 2.....B1
CYLINDER & CRANKCASE 3.....B3
VALVE.....B5
INTAKE 1.....B7
INTAKE 2.....C1
INTAKE 3.....C2
FUEL INJECTION PUMP 1.....C4
FUEL INJECTION PUMP 2.....C6
FUEL 1.....C7
FUEL 2.....D3
GENERATOR.....D4
ELECTRICAL 1.....D5
ELECTRICAL 2.....D6
ELECTRICAL 3.....E1
STARTING MOTOR.....E2
BOTTOM COWLING.....E4
CONTROL.....E6
BRACKET 1.....F2
BRACKET 2.....F4
POWER TRIM & TILT ASSY 1.....F6

## INDEX

NUMERICAL INDEX.....G1

SHEET2/2
POWER TRIM & TILT ASSY 2.....A4*
UPPER CASING.....A6*
OIL PAN.....B1*
LOWER CASING & DRIVE 1.....B3*
LOWER CASING & DRIVE 2.....B7*
LOWER CASING & DRIVE 3.....C2*
LOWER CASING & DRIVE 4.....C6*
STEERING GUIDE.....D1*
REMOTE CONTROL BOX.....D2*
REMOTE CONTROL ASSY 1.....D3*
REMOTE CONTROL ASSY 2.....D6*
METER.....E2*
SWITCH & PANEL.....E4*
REPAIR KIT 1.....E5*
REPAIR KIT 2.....E6*

## INDEX

NUMERICAL INDEX.....G1*

# TABLE DES MATIERES

Feuille1/2
CAPOT SUPERIEUR..... A4
CYLINDRE & CARTER 1..... A5
VILEBREQUIN & PISTON.....A7
CYLINDRE & CARTER 2..... B1
CYLINDRE & CARTER 3..... B3
SOUPAPE..... B5
ADMISSION 1.....B7
ADMISSION 2.....C1
ADMISSION 3.....C2
POMPE A INJECTEUR 1..... C4
POMPE A INJECTEUR 2..... C6
CARBURANT 1..... C7
CARBURANT 2..... D3
GENERATRICE.....D4
PARTIE ELECTRIQUE 1.....D5
PARTIE ELECTRIQUE 2.....D6
PARTIE ELECTRIQUE 3.....E1
DEMARREUR ELECTRIQUE.....E2
CAPOT INFERIEUR..... E4
COMMANDE..... E6
SUPPORT 1..... F2
SUPPORT 2..... F4
PUISSANCE PARER ET INCLINER 1..... F6

## INDEX

INDEX NUMERIQUE.....G1

Feuille2/2
PUISSANCE PARER ET INCLINER 2..... A4*
FOURREAU.....A6*
VENTILATEUR D'HUILE..... B1*
BOITIER D'HELICE TRANSMISSION1.....B3*
BOITIER D'HELICE TRANSMISSION2.....B7*
BOITIER D'HELICE TRANSMISSION3.....C2*
BOITIER D'HELICE TRANSMISSION4.....C6*
FIXATION DE DIRECTION..... D1*
BOITIER DE COMMANDE A DISTANCE..... D2*
BOITIER DE COMMANDE A DISTANCE..... D3*
BOITIER DE COMMANDE A DISTANCE..... D6*
COMPTEUR..... E2*
TABLEAU DE CONTACTEUR..... E4*
KITS DE REPARATION 1..... E5*
KITS DE REPARATION 2..... E6*

## INDEX

INDEX NUMERIQUE.....G1*

## FIG. 1 TOP COWLING — CAPOT SUPERIEUR

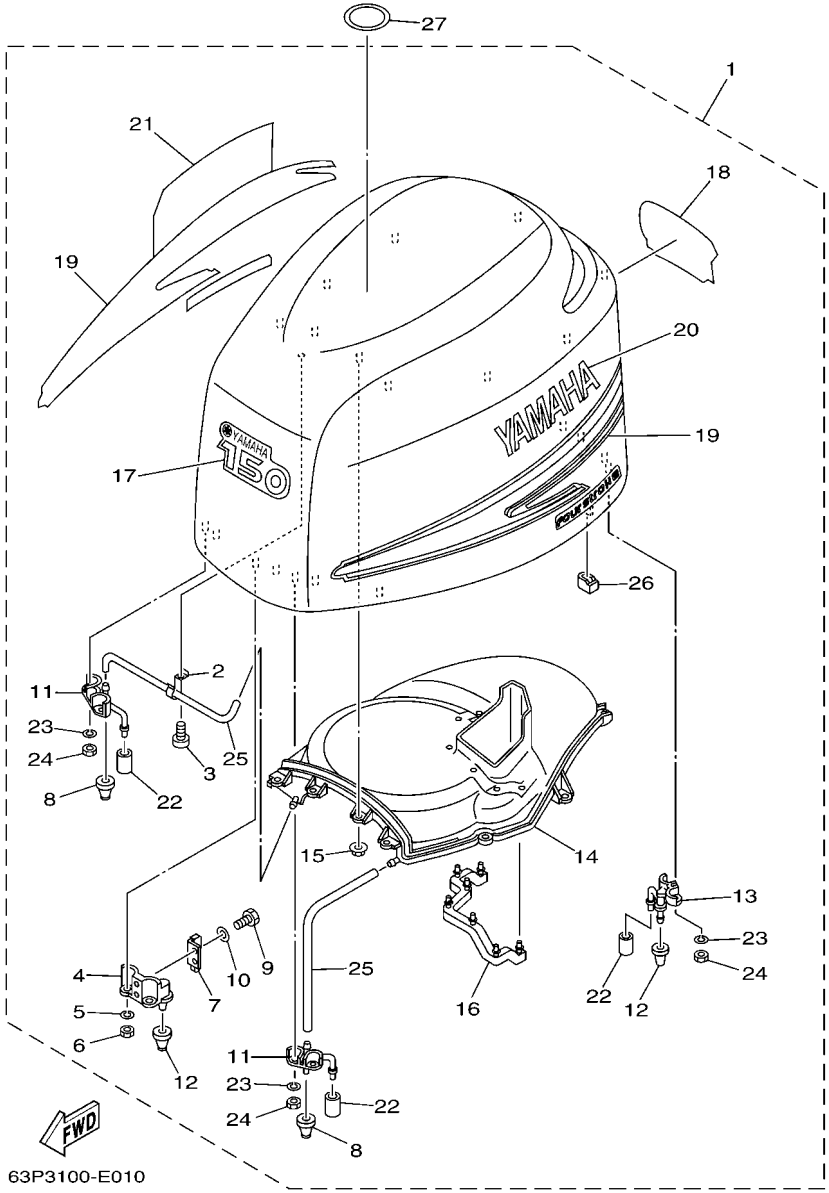


| REF. NO. | PART NO. N° PIECES | DESCRIPTION DESCRIPTION | 63P3 | 64P3 | | | | REMARKS REMARQUES |
|---|---|---|---|---|---|---|---|---|
| 1 | 63P–42610–01–8D | TOP COWLING ASSY<br>CAPOT (ENS.) | 1 | 1 | | | | |
| 2 | 90465–10032 | .CLAMP<br>.BRIDE | 1 | 1 | | | | |
| 3 | 97780–50620 | .SCREW, TAPPING<br>.VIS, TETE BOMBEE | 1 | 1 | | | | |
| 4 | 63P–42647–00–94 | .HOLDER, CLAMP BAND<br>.SUPPORT, SANDOW DE SERRAGE | 2 | 2 | | | | |
| 5 | 92990–06100 | .WASHER, SPRING<br>.RONDELLE, GROWER | 4 | 4 | | | | |
| 6 | 95380–06600 | .NUT, HEXAGON<br>.ECROU | 4 | 4 | | | | |
| 7 | 60V–42651–01 | .HOOK<br>.CROCHET | 2 | 2 | | | | |
| 8 | 69J–42663–00 | .DAMPER<br>.AMORTISSEUR | 2 | 2 | | | | |
| 9 | 97095–06016 | .BOLT<br>.BOULON | 4 | 4 | | | | |
| 10 | 92995–06600 | .WASHER<br>.RONDELLE | 4 | 4 | | | | |
| 11 | 63P–42643–00–94 | .PLATE, CLAMP<br>.PLAQUE, PRESSE | 2 | 2 | | | | |
| 12 | 68F–42663–00 | .DAMPER<br>.AMORTISSEUR | 4 | 4 | | | | |
| 13 | 63P–42644–00–94 | .PLATE, CLAMP 2<br>.PLAQUE, PRESSE 2 | 2 | 2 | | | | |
| 14 | 63P–42613–00 | .MOLDING, AIR DUCT<br>.MANCHON A AIR | 1 | 1 | | | | |
| 15 | 90179–06M24 | .NUT<br>.ECROU | 10 | 10 | | | | |
| 16 | 63P–42617–00 | .DAMPER, FORM<br>.BOURRELET, CAOUTCHOUC | 1 | 1 | | | | |
| 17 | 63P–42677–00 | .GRAPHIC, FRONT<br>.ADHESIF, AVANT | 1 | 1 | | | | |
| 18 | 63P–42678–00 | .GRAPHIC, REAR<br>.ADHESIF, ARRIERE | 1 | 1 | | | | |
| 19 | 63P–W0070–00 | .GRAPHIC SET<br>.JEU DIEMBLEMES | 1 | 1 | | | | |
| 20 | 63P–42681–00 | .MARK, COWLING<br>.ADHESIF, CAPOT | 1 | 1 | | | | |
| 21 | 63P–42682–00 | .MARK, COWLING<br>.ADHESIF, CAPOT | 1 | 1 | | | | |
| 22 | 67F–13448–00 | .CAP<br>.CAPUCHON | 4 | 4 | | | | |
| 23 | 92990–06100 | .WASHER, SPRING<br>.RONDELLE, GROWER | 8 | 8 | | | | |
| 24 | 95380–06600 | .NUT, HEXAGON<br>.ECROU | 8 | 8 | | | | |
| 25 | 90445–11020 | .HOSE (L400)<br>.DURITE (L400) | 2 | 2 | | | | |
| 26 | 63P–42662–00 | .DAMPER<br>.AMORTISSEUR | 4 | 4 | | | | |
| 27 | 67F–13434–03 | LABEL, CAUTION<br>ETIQUETTE, ATTENTION | 1 | 1 | | | | |

## FIG. 2 CYLINDER & CRANKCASE 1 — CYLINDRE & CARTER 1

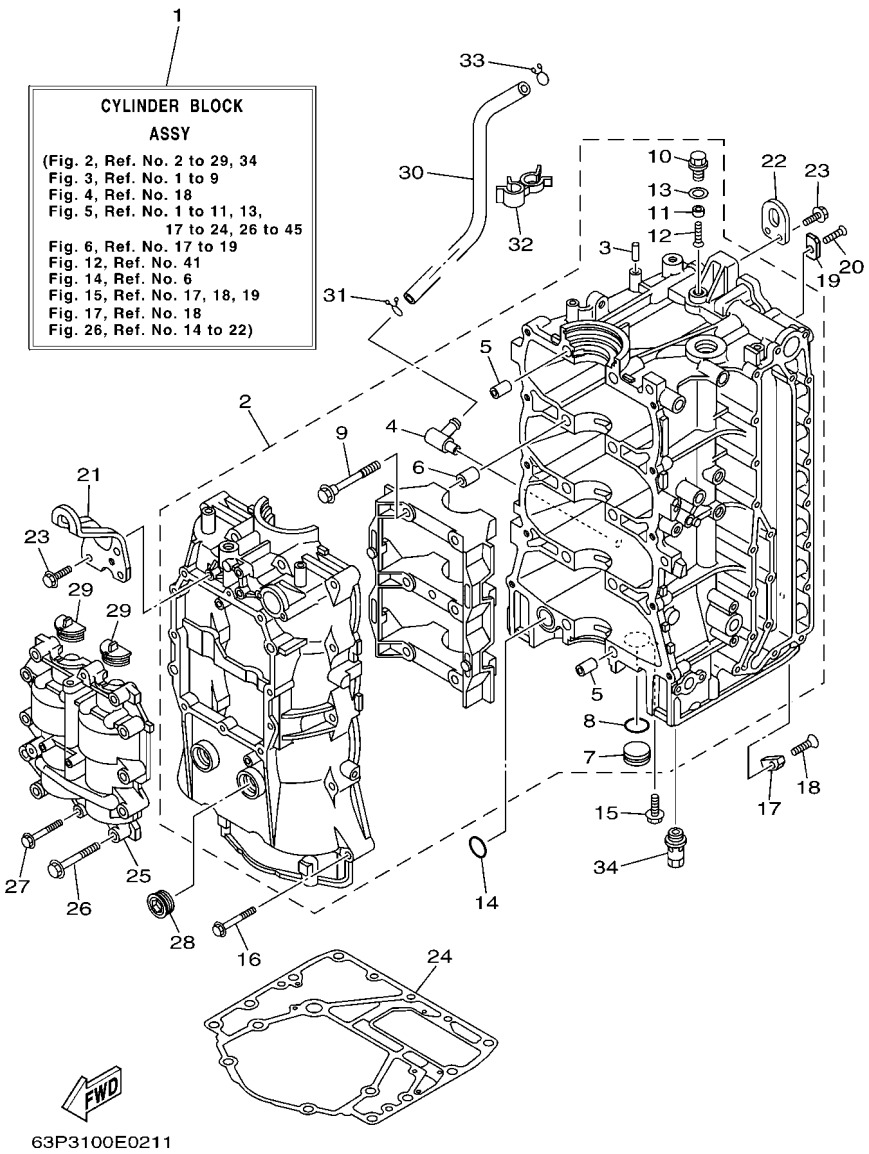


| REF. NO. | PART NO. N° PIECES | DESCRIPTION DESCRIPTION | 63P3 | 64P3 | | | | REMARKS REMARQUES |
|---|---|---|---|---|---|---|---|---|
| 1 | 63P–W009B–03–1S | CYLINDER BLOCK ASSY<br>CYLINDRE GROUPE (ENS.) | 1 | 1 | | | | |
| 2 | 63P–W1510–02–1S | CRANKCASE ASSY<br>CARTER DE MOTEUR COMPLET | 1 | 1 | | | | |
| 3 | 93606–12019 | .PIN, DOWEL<br>.GOUPILLE | 1 | 1 | | | | |
| 4 | 63P–11372–00 | .NIPPLE, HOSE<br>.RACCORD, TUYAU | 1 | 1 | | | | |
| 5 | 91814–18001 | .PIN, DOWEL<br>.GOUJON, D'ASSEMBLAGE | 4 | 4 | | | | |
| 6 | 91814–18001 | .PIN, DOWEL<br>.GOUJON, D'ASSEMBLAGE | 6 | 6 | | | | |
| 7 | 90338–25004 | .PLUG<br>.PLOT | 1 | 1 | | | | |
| 8 | 93210–25647 | .O-RING<br>.JOINT TORIQUE | 1 | 1 | | | | |
| 9 | 90105–10071 | .BOLT, FLANGE<br>.BOULON | 10 | 10 | | | | |
| 10 | 63P–11197–00 | .PLUG, BLIND<br>.PLOT, BORGNE | 1 | 1 | | | | |
| 11 | 63P–11325–21 | .ANODE<br>.ANODE | 1 | 1 | | | | |
| 12 | 98780–05016 | .SCREW, FLAT HEAD<br>.VIS A TETE FRAISEE | 1 | 1 | | | | |
| 13 | 90430–14115 | .GASKET<br>.JOINT | 1 | 1 | | | | |
| 14 | 93210–25552 | O-RING<br>JOINT TORIQUE | 1 | 1 | | | | |
| 15 | 90119–06M81 | BOLT, WITH WASHER<br>BOULON, AVEC RONDELLE | 1 | 1 | | | | |
| 16 | 90119–08M66 | BOLT, WITH WASHER<br>BOULON, AVEC RONDELLE | 10 | 10 | | | | |
| 17 | 63P–11325–01 | ANODE<br>ANODE | 1 | 1 | | | | |
| 18 | 90151–06M02 | SCREW, COUNTERSUNK<br>VIS, TETE NOYEE | 1 | 1 | | | | |
| 19 | 63P–11325–11 | ANODE<br>ANODE | 4 | 4 | | | | |
| 20 | 90151–06M02 | SCREW, COUNTERSUNK<br>VIS, TETE NOYEE | 4 | 4 | | | | |
| 21 | 63P–11119–00 | HANGER, ENGINE<br>ANNEAU, LEVAGE | 1 | 1 | | | | |
| 22 | 68F–11119–00 | HANGER, ENGINE<br>ANNEAU, LEVAGE | 1 | 1 | | | | |
| 23 | 90119–06MA2 | BOLT, WITH WASHER<br>BOULON, AVEC RONDELLE | 5 | 5 | | | | |
| 24 | 63P–11351–00 | GASKET, CYLINDER<br>JOINT, D'EMBASE | 1 | 1 | | | | |
| 25 | 63P–11500–01 | BALANCER ASSY<br>ARBRE D'EQUILIBRAGE COMPLET | 1 | 1 | | | | |
| 26 | 90119–08M66 | BOLT, WITH WASHER<br>BOULON, AVEC RONDELLE | 10 | 10 | | | | |
| 27 | 90119–06MA6 | BOLT, WITH WASHER<br>BOULON, AVEC RONDELLE | 2 | 2 | | | | |

## FIG. 2 CYLINDER & CRANKCASE 1 — CYLINDRE & CARTER 1

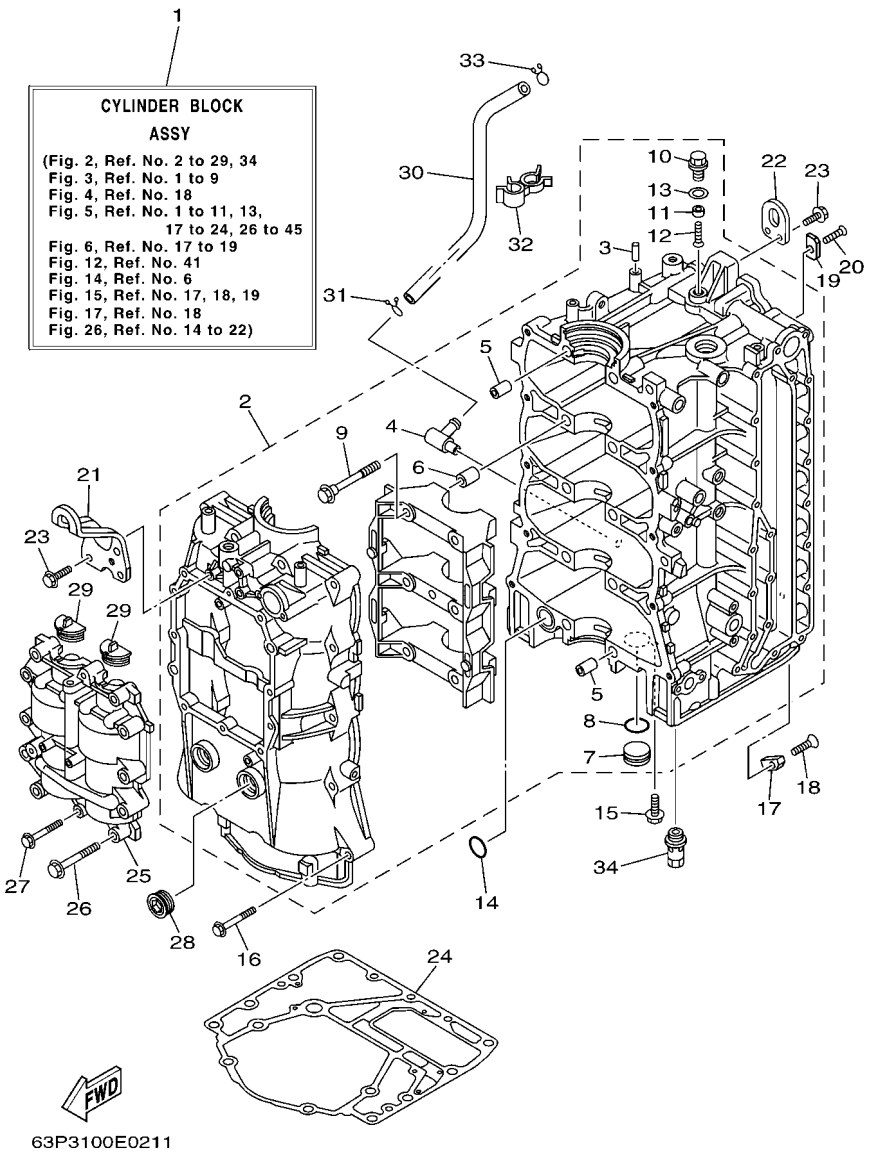


| REF. NO. | PART NO. N° PIECES | DESCRIPTION DESCRIPTION | 63P3 | 64P3 | | | | REMARKS REMARQUES |
|---|---|---|---|---|---|---|---|---|
| 28 | 90340–27129 | PLUG, STRAIGHT SCREW<br>PLOT, FILETE DROIT | 2 | 2 | | | | |
| 29 | 63P–11512–00 | SEAL, CRANK COVER<br>JOINT, COUV DE VILEBREQUIN | 2 | 2 | | | | |
| 30 | 63P–11377–00 | HOSE<br>DURITE | 1 | 1 | | | | |
| 31 | 90467–15M14 | CLIP<br>JONC | 1 | 1 | | | | |
| 32 | 90464–16013 | CLAMP<br>BRIDE | 1 | 1 | | | | |
| 33 | 90467–15M14 | CLIP<br>JONC | 1 | 1 | | | | |
| 34 | 63P–13490–00 | RELIEF VALVE ASSY<br>SOUPAPE DE SECURITE COMPLET | 1 | 1 | | | | |

## FIG. 3 CRANKSHAFT & PISTON — VILEBREQUIN & PISTON

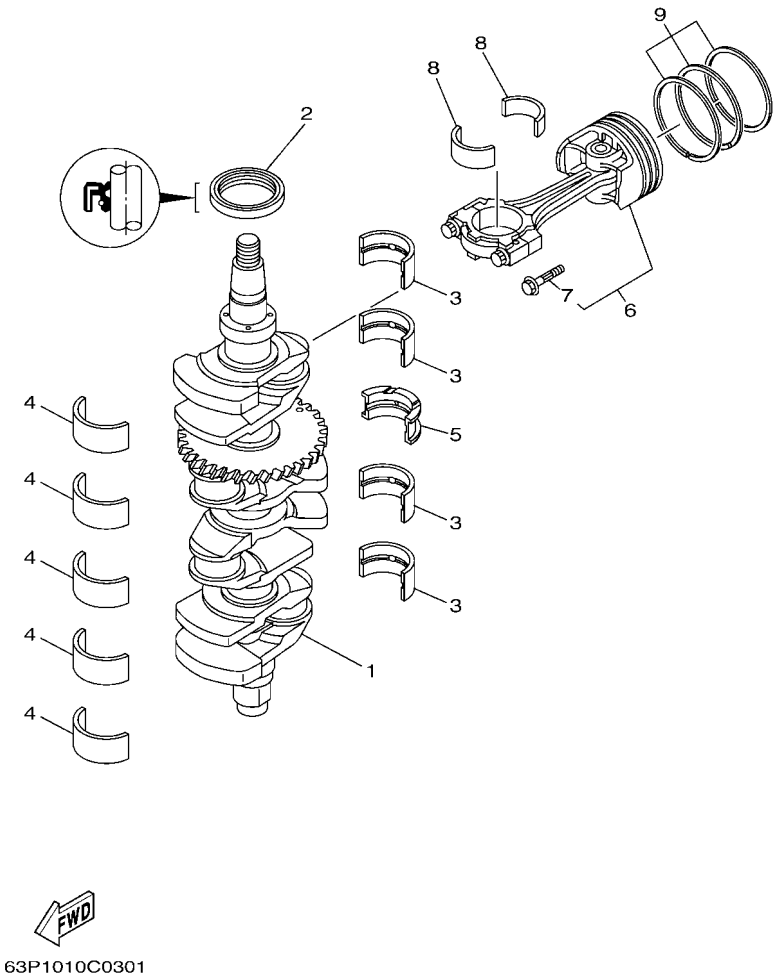


| REF. NO. | PART NO. N° PIECES | DESCRIPTION DESCRIPTION | 63P3 | 64P3 | | | | REMARKS REMARQUES |
|---|---|---|---|---|---|---|---|---|
| 1 | 63P–11410–00 | CRANKSHAFT<br>VILEBREQUIN COMPLET | 1 | 1 | | | | |
| 2 | 93102–60004 | OIL SEAL<br>JOINT SPY | 1 | 1 | | | | |
| 3 | 63P–11416–31 | PLANE BEARING, CRANKSHAFT 1<br>COUSSINET DE VILEBREQUIN 1 | 4 | 4 | | | | UR GREEN<br>UR GREEN |
| | 63P–11416–41 | PLANE BEARING, CRANKSHAFT 1<br>COUSSINET DE VILEBREQUIN 1 | 4 | 4 | | | | UR RED<br>UR RED |
| | 63P–11416–51 | PLANE BEARING, CRANKSHAFT 1<br>COUSSINET DE VILEBREQUIN 1 | 4 | 4 | | | | UR YELLOW<br>UR YELLOW |
| 4 | 63P–11417–41 | PLANE BEARING, CRANKSHAFT 2<br>COUSSINET DE VILEBREQUIN 2 | 5 | 5 | | | | UR BROWN<br>UR BROWN |
| | 63P–11417–51 | PLANE BEARING, CRANKSHAFT 2<br>COUSSINET DE VILEBREQUIN 2 | 5 | 5 | | | | UR GREEN<br>UR GREEN |
| | 63P–11417–61 | PLANE BEARING, CRANKSHAFT 2<br>COUSSINET DE VILEBREQUIN 2 | 5 | 5 | | | | UR RED<br>UR RED |
| | 63P–11417–71 | PLANE BEARING, CRANKSHAFT 2<br>COUSSINET DE VILEBREQUIN 2 | 5 | 5 | | | | UR YELLOW<br>UR YELLOW |
| | 63P–11417–81 | PLANE BEARING, CRANKSHAFT 2<br>COUSSINET DE VILEBREQUIN 2 | 5 | 5 | | | | UR BLUE<br>UR BLUE |
| 5 | 63P–11426–31 | BEARING, THRUST 1<br>ROULEMENT DE BUTEE 1 | 1 | 1 | | | | UR GREEN<br>UR GREEN |
| | 63P–11426–41 | BEARING, THRUST 1<br>ROULEMENT DE BUTEE 1 | 1 | 1 | | | | UR RED<br>UR RED |
| | 63P–11426–51 | BEARING, THRUST 1<br>ROULEMENT DE BUTEE 1 | 1 | 1 | | | | UR YELLOW<br>UR YELLOW |
| 6 | 63P–W1164–01 | PISTON/CONROD ASSY(STD)<br>PISTON/BIELLE COMPLETTE(STD) | 4 | 4 | | | | |
| | 63P–W1164–10 | PISTON/CON-ROD ASSY(0.25MM OS)<br>PISTON/BIELLE COMPLETTE:0.25MM | 4 | 4 | | | | AP<br>AP |
| 7 | 63P–11654–00 | .BOLT, CONNECTING ROD<br>.BOULON, BIELLE | 2 | 2 | | | | |
| 8 | 63P–11656–00 | PLANE BEARING, CONNECTING ROD<br>ROULEMENT DE BIELLE | 8 | 8 | | | | UR GREEN<br>UR GREEN |
| | 63P–11656–10 | PLANE BEARING, CONNECTING ROD<br>ROULEMENT DE BIELLE | 8 | 8 | | | | UR BLUE<br>UR BLUE |
| | 63P–11656–20 | PLANE BEARING, CONNECTING ROD<br>ROULEMENT DE BIELLE | 8 | 8 | | | | UR RED<br>UR RED |
| 9 | 63P–11603–01 | PISTON RING SET (STD)<br>JEU DE SEGMENTS (STD) | 4 | 4 | | | | |
| | 63P–11604–00 | PISTON RING SET (0.25MM O/S)<br>JEU DE SEGMENTS (0.25MM O/S) | 4 | 4 | | | | AP<br>AP |

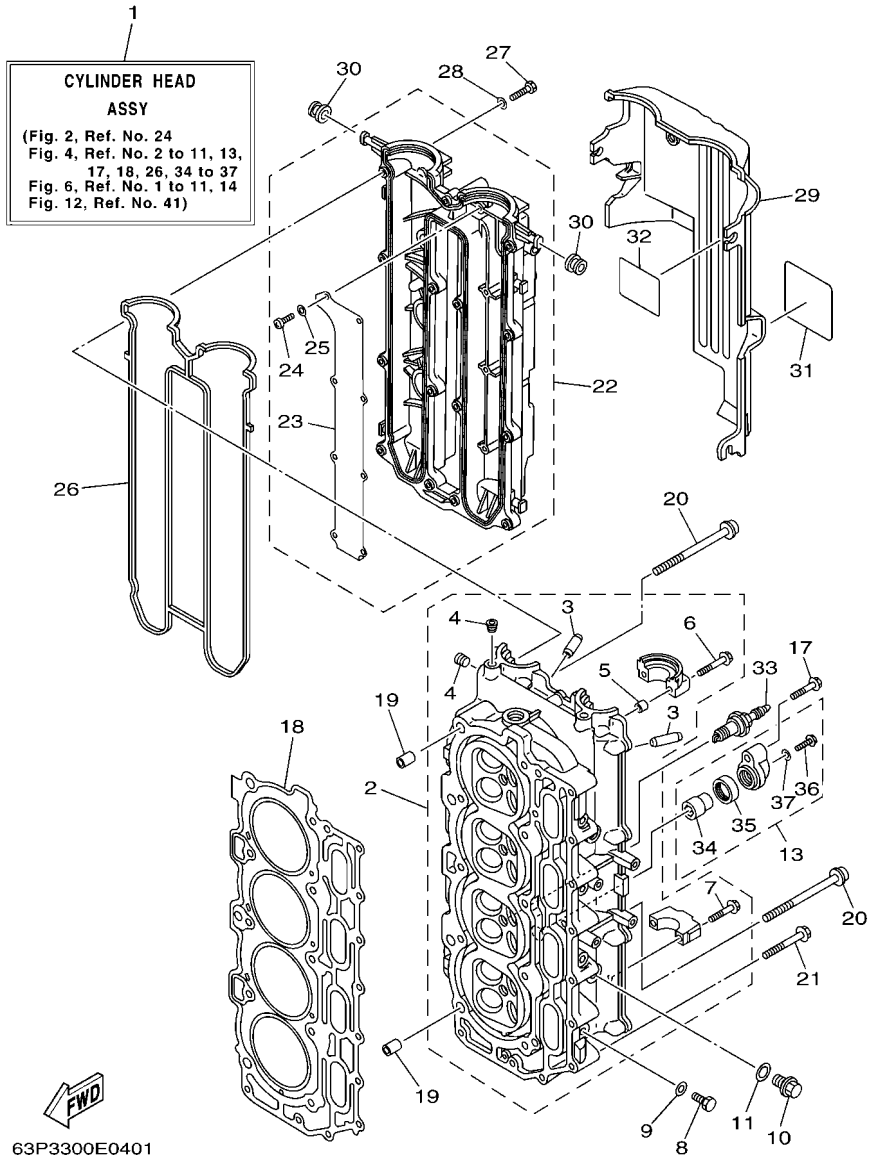


## FIG. 4 CYLINDER & CRANKCASE 2 — CYLINDRE & CARTER 2

| REF. NO. | PART NO. N° PIECES | DESCRIPTION DESCRIPTION | 63P3 | 64P3 | | | | REMARKS REMARQUES |
|---|---|---|---|---|---|---|---|---|
| 1 | 63P–W009A–02–1S | CYLINDER HEAD ASSY<br>CULASSE (ENS.) | 1 | 1 | | | | |
| 2 | 63P–11110–00–94 | CYLINDER HEAD ASSY<br>JEU DE CULASSE | 1 | 1 | | | | |
| 3 | 69J–11133–10 | .GUIDE, VALVE 1<br>.GUIDE, SOUPAPE 1 | 16 | 16 | | | | |
| 4 | 90344–51019 | .PLUG, TAPER SCREW<br>.PLOT, FILETE CONIQUE | 3 | 3 | | | | |
| 5 | 91809–08006 | .SLEEVE GUIDE-DOWEL<br>.GOUJON, D'ASSEMBLAGE | 4 | 4 | | | | |
| 6 | 90119–07235 | .BOLT/WASHER-CAM CAPS<br>.BOULON, AVEC RONDELLE | 4 | 4 | | | | |
| 7 | 90119–07234 | .BOLT, WITH WASHER<br>.BOULON, AVEC RONDELLE | 16 | 16 | | | | |
| 8 | 97095–08014 | BOLT<br>BOULON | 4 | 4 | | | | |
| 9 | 90430–08143 | GASKET<br>JOINT | 4 | 4 | | | | |
| 10 | 90340–14M06 | PLUG, STRAIGHT SCREW<br>PLOT, FILETE DROIT | 2 | 2 | | | | |
| 11 | 90430–14115 | GASKET<br>JOINT | 2 | 2 | | | | |
| 13 | 69J–11301–10 | ANODE COVER ASSY<br>COUVERCLE ANODE (ENS.) | 2 | 2 | | | | |
| 17 | 97575–08540 | BOLT, WITH WASHER<br>VIS HEXAGONAL AVC RONDELLE | 2 | 2 | | | | |
| 18 | 63P–11181–00 | GASKET, CYLINDER HEAD 1<br>JOINT, DE CULASSE 1 | 1 | 1 | | | | |
| 19 | 90387–10M08 | COLLAR<br>COLLERETTE | 2 | 2 | | | | |
| 20 | 90155–10001 | SCREW, FLAT FILLISTER<br>VIS, TETE OVALE PLATE | 10 | 10 | | | | |
| 21 | 90119–08M91 | BOLT, WITH WASHER<br>BOULON, AVEC RONDELLE | 10 | 10 | | | | |
| 22 | 63P–11191–00–1S | COVER, CYLINDER HEAD 1<br>COUVERCLE, CULASSE 1 | 1 | 1 | | | | |
| 23 | 63P–11135–00 | .PLATE, BREATHER 3<br>.PLAQUE, RENIFLARD 3 | 1 | 1 | | | | |
| 24 | 98507–04008 | .SCREW, PAN HEAD<br>.VIS, TETE TRONCONIQUE | 8 | 8 | | | | |
| 25 | 92907–04600 | .WASHER<br>.RONDELLE | 8 | 8 | | | | |
| 26 | 63P–11193–00 | GASKET, HEAD COVER 1<br>JOINT, COUVERCLE DE CULASSE 1 | 1 | 1 | | | | |
| 27 | 97095–06030 | BOLT<br>BOULON | 13 | 13 | | | | |
| 28 | 92995–06600 | WASHER<br>RONDELLE | 13 | 13 | | | | |
| 29 | 63P–11192–01 | COVER, CYLINDER HEAD 2<br>COUVERCLE, CULASSE 2 | 1 | 1 | | | | |
| 30 | 90480–12072 | GROMMET<br>PASSE-FIL | 5 | 5 | | | | |
| 31 | 63P–83626–00 | MARK 6<br>MARK 6 | 1 | 1 | | | | |

## FIG. 4 CYLINDER & CRANKCASE 2 — CYLINDRE & CARTER 2

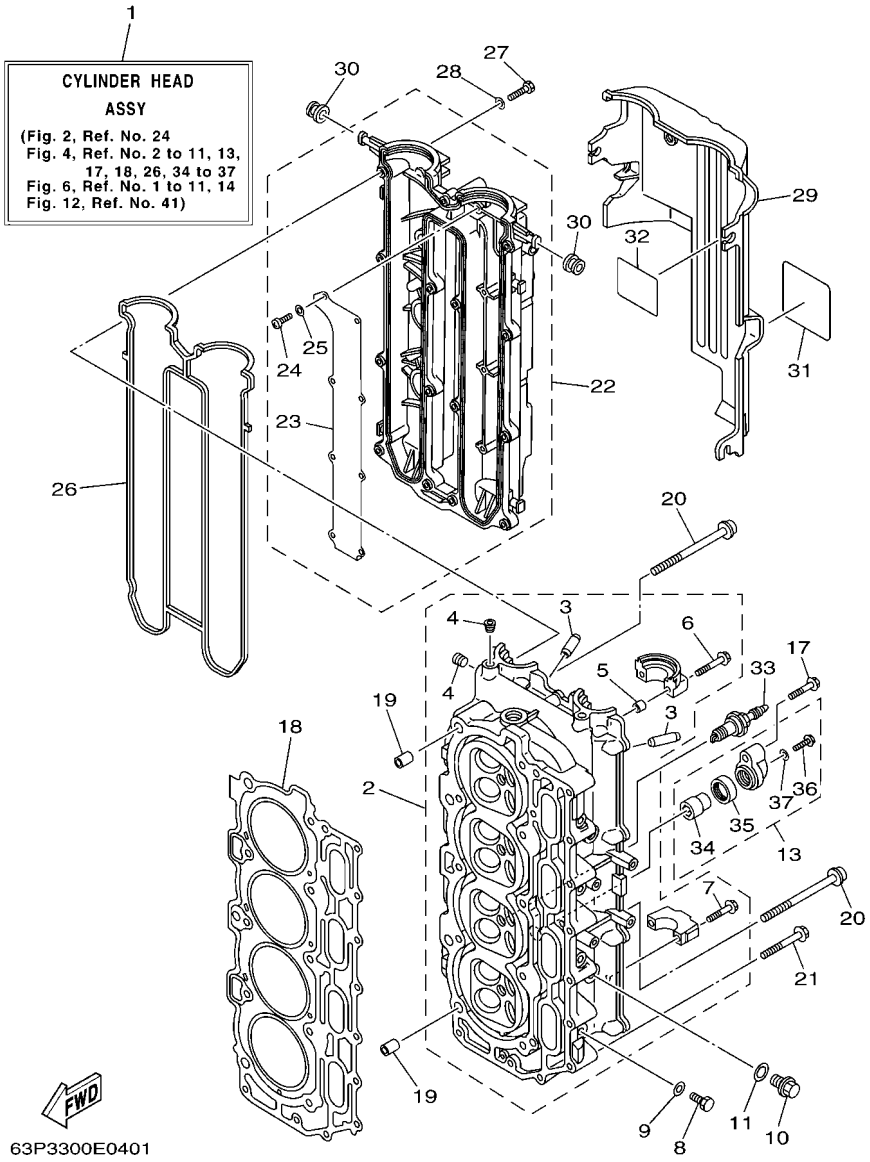


| REF. NO. | PART NO. N° PIECES | DESCRIPTION DESCRIPTION | 63P3 | 64P3 | | | | REMARKS REMARQUES |
|---|---|---|---|---|---|---|---|---|
| 32 | 67F–12138–60 | MARK, CAUTION<br>MAKER | 1 | 1 | | | | |
| 33 | 94702–00391 | PLUG, SPARK (NGK LFR5A-11)<br>BOUGIE D'ALLUMAGE(NGK LFR5A-11 | 4 | 4 | | | | |
| 34 | 68V–11325–02 | .ANODE<br>.ANODE | 1 | 1 | | | | |
| 35 | 67F–11328–00 | GROMMET, ANODE<br>PASSE-FIL | 1 | 1 | | | | |
| 36 | 90105–06M07 | .BOLT,FLANGE<br>.BOULON | 1 | 1 | | | | |
| 37 | 90430–06M03 | .GASKET<br>.JOINT | 1 | 1 | | | | |

## FIG. 5 CYLINDER & CRANKCASE 3 — CYLINDRE & CARTER 3

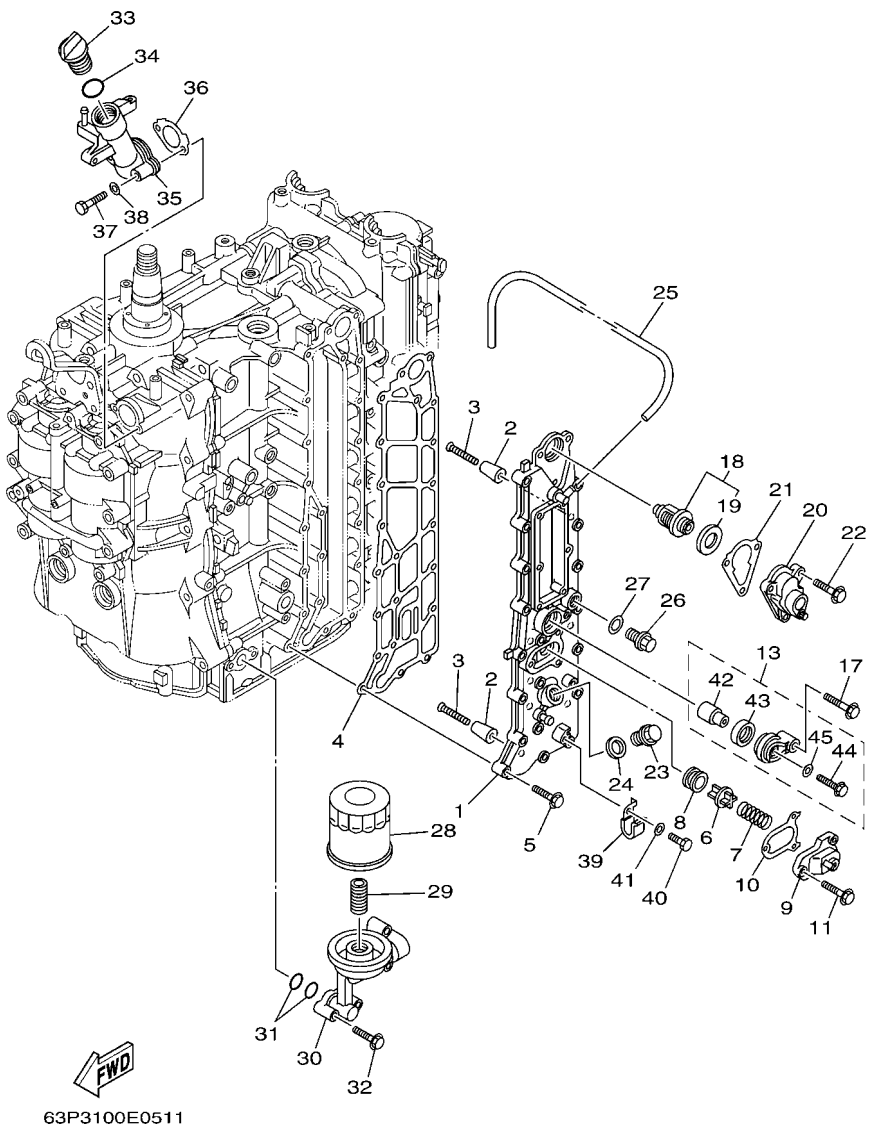


| REF. NO. | PART NO. N° PIECES | DESCRIPTION DESCRIPTION | 63P3 | 64P3 | | | | REMARKS REMARQUES |
|---|---|---|---|---|---|---|---|---|
| 1 | 63P–41113–02–1S | OUTER COVER, EXHAUST<br>COUVERCLE, ECHAPPEMENT | 1 | 1 | | | | |
| 2 | 68T–11325–00 | ANODE<br>ANODE | 8 | 8 | | | | |
| 3 | 90151–05M05 | SCREW, COUNTERSUNK<br>VIS, TETE NOYEE | 8 | 8 | | | | |
| 4 | 63P–41114–A1 | GASKET, EXHAUST OUTER COVER<br>JOINT, COUVERCLE D'ECHAPPEMENT | 1 | 1 | | | | |
| 5 | 90119–06MA4 | BOLT, WITH WASHER<br>BOULON, AVEC RONDELLE | 19 | 19 | | | | |
| 6 | 6G5–12416–00 | VALVE, PRESSURE CONTROL<br>SOUPAPE DE CONTROLEUR PRESS | 1 | 1 | | | | |
| 7 | 90501–16M11 | SPRING, COMPRESSION<br>RESSORT, COMPRESSION | 1 | 1 | | | | |
| 8 | 90480–20M05 | GROMMET<br>PASSE-FIL | 1 | 1 | | | | |
| 9 | 67F–1246A–01–1S | COVER 1<br>COUVERCLE 1 | 1 | 1 | | | | |
| 10 | 67F–12435–A0 | GASKET<br>JOINT | 1 | 1 | | | | |
| 11 | 90119–06MA2 | BOLT, WITH WASHER<br>BOULON, AVEC RONDELLE | 3 | 3 | | | | |
| 13 | 69J–11301–10 | ANODE COVER ASSY<br>COUVERCLE ANODE (ENS.) | 1 | 1 | | | | |
| 17 | 97575–08540 | BOLT, WITH WASHER<br>VIS HEXAGONAL AVC RONDELLE | 1 | 1 | | | | |
| 18 | 67F–12411–01 | THERMOSTAT<br>THERMOSTAT | 1 | 1 | | | | |
| 19 | 67F–12412–00 | .SEAL, THERMOSTAT<br>.JOINT, THERMOSTAT | 1 | 1 | | | | |
| 20 | 63P–1240H–00–1S | COVER ASSEMBLY<br>BOITIER DISTRIBUTEUR COMPLET | 1 | 1 | | | | |
| 21 | 63P–12414–00 | GASKET, COVER<br>JOINT, COUVERCLE | 1 | 1 | | | | |
| 22 | 90119–06MA4 | BOLT, WITH WASHER<br>BOULON, AVEC RONDELLE | 3 | 3 | | | | |
| 23 | 90340–18M09 | PLUG, STRAIGHT SCREW<br>PLOT, FILETE DROIT | 1 | 1 | | | | |
| 24 | 90430–18130 | GASKET<br>JOINT | 1 | 1 | | | | |
| 25 | 90445–10027 | HOSE (L670)<br>DURITE (L670) | 1 | 1 | | | | |
| 26 | 90340–14M06 | PLUG, STRAIGHT SCREW<br>PLOT, FILETE DROIT | 1 | 1 | | | | |
| 27 | 90430–14115 | GASKET<br>JOINT | 1 | 1 | | | | |
| 28 | 69J–13440–00 | ELEMENT ASSY, OIL CLEANER<br>ELEMENT, FILTRE A HUILE | 1 | 1 | | | | |
| 29 | 69J–12858–00 | BOLT, UNION<br>BOULON, RACCORD | 1 | 1 | | | | |
| 30 | 63P–13446–00–94 | CONNECTOR<br>CONNECTEUR | 1 | 1 | | | | |
| 31 | 93210–19MJ1 | O-RING<br>JOINT TORIQUE | 2 | 2 | | | | |

## FIG. 5 CYLINDER & CRANKCASE 3 — CYLINDRE & CARTER 3

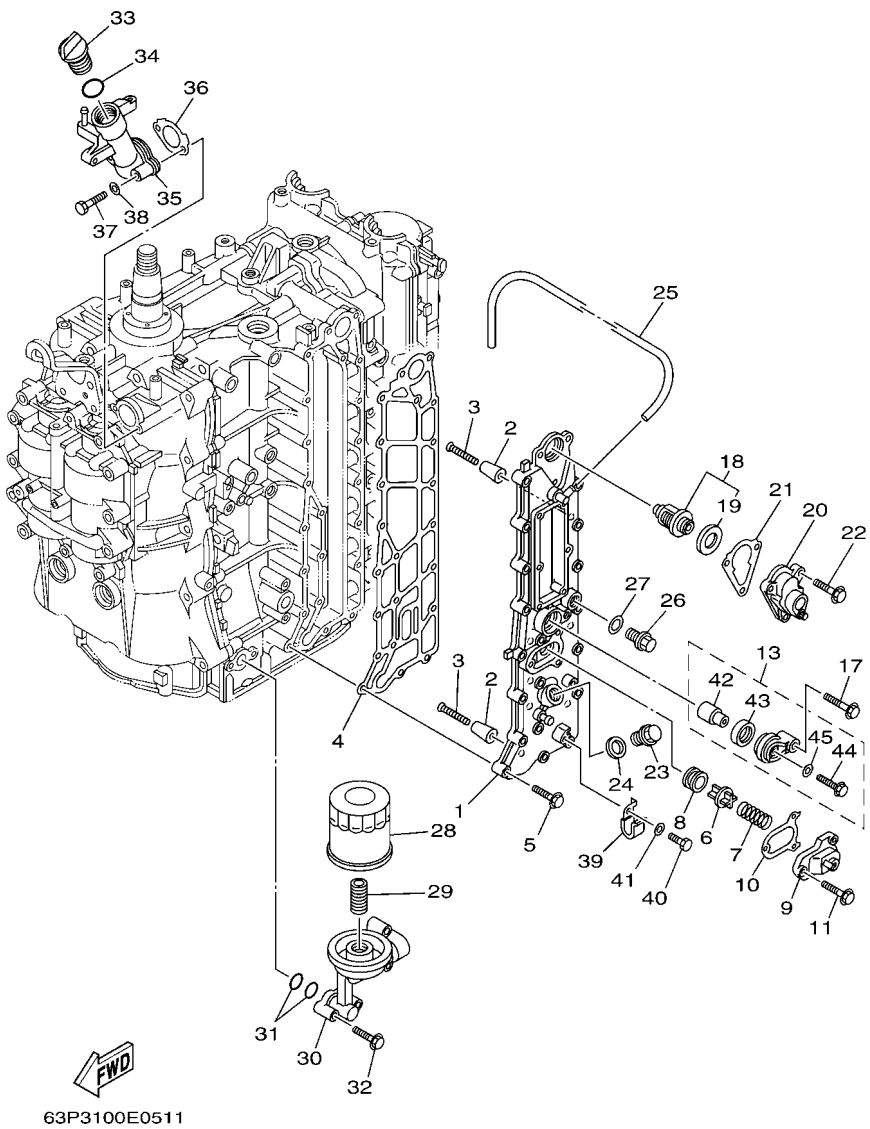


| REF. NO. | PART NO. N° PIECES | DESCRIPTION DESCRIPTION | 63P3 | 64P3 | | | | REMARKS REMARQUES |
|---|---|---|---|---|---|---|---|---|
| 32 | 97575–06540 | BOLT, WITH WASHER<br>VIS HEXAGONAL AVC RONDELLE | 4 | 4 | | | | |
| 33 | 6G8–15363–00 | PLUG, OIL<br>PLOT, HUILE | 1 | 1 | | | | |
| 34 | 93210–24M79 | O-RING<br>JOINT TORIQUE | 1 | 1 | | | | |
| 35 | 63P–15319–00–1S | JOINT<br>JOINT | 1 | 1 | | | | |
| 36 | 63P–15364–A0 | GASKET, OIL PLUG<br>JOINT, PLOT D'HUILE | 1 | 1 | | | | |
| 37 | 97095–06045 | BOLT<br>BOULON | 2 | 2 | | | | |
| 38 | 92995–06600 | WASHER<br>RONDELLE | 2 | 2 | | | | |
| 39 | 90462–06013 | CLAMP<br>BRIDE | 1 | 1 | | | | |
| 40 | 97095–06012 | BOLT<br>BOULON | 1 | 1 | | | | |
| 41 | 92995–06600 | WASHER<br>RONDELLE | 1 | 1 | | | | |
| 42 | 68V–11325–02 | .ANODE<br>.ANODE | 1 | 1 | | | | |
| 43 | 67F–11328–00 | GROMMET, ANODE<br>PASSE-FIL | 1 | 1 | | | | |
| 44 | 90105–06M07 | .BOLT,FLANGE<br>.BOULON | 1 | 1 | | | | |
| 45 | 90430–06M03 | .GASKET<br>.JOINT | 1 | 1 | | | | |

## FIG. 6 VALVE SOUPAPE

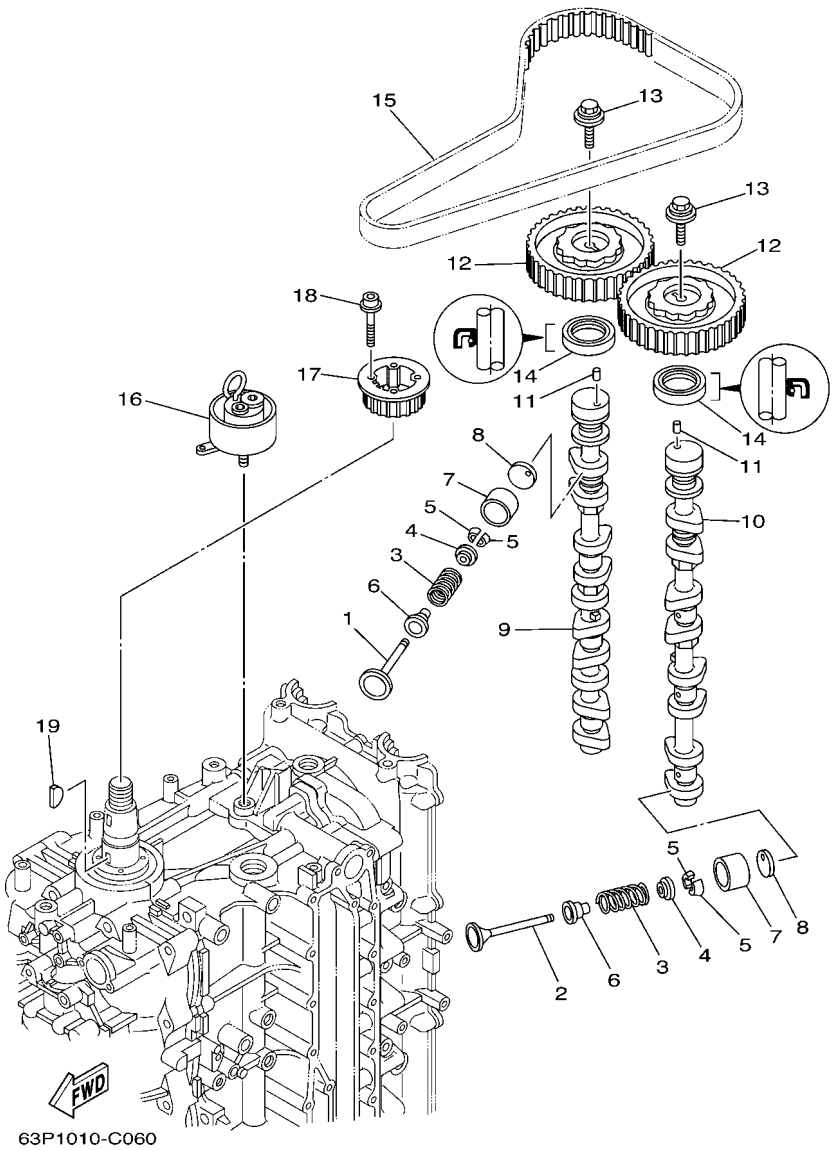


| REF. NO. | PART NO. N° PIECES | DESCRIPTION DESCRIPTION | 63P3 | 64P3 | | | | REMARKS REMARQUES |
|---|---|---|---|---|---|---|---|---|
| 1 | 69J–12111–00 | VALVE, INTAKE<br>SOUPAPE, ADMISSION | 8 | 8 | | | | |
| 2 | 69J–12121–00 | VALVE, EXHAUST<br>SOUPAPE, ECHAPPEMENT | 8 | 8 | | | | |
| 3 | 69J–12113–01 | SPRING, VALVE INNER<br>RESSORT DE SOUPAPE, INTERNE | 16 | 16 | | | | |
| 4 | 69J–12117–01 | RETAINER, VALVE SPRING<br>BUTEE DE RESSORT DE SOUPAPE | 16 | 16 | | | | |
| 5 | 69J–12118–00 | COTTER, VALVE<br>FRAISE, SOUPAPE | 32 | 32 | | | | |
| 6 | 69J–12119–00 | SEAL, VALVE STEM<br>JOINT, QUEUE DE SOUPAPE | 16 | 16 | | | | |
| 7 | 69J–12153–00 | LIFTER, VALVE<br>LEVE-SOUPAPE | 16 | 16 | | | | |
| 8 | 69J–12168–00 | PAD, ADJUSTING (2.320)<br>PASTILLE, DE REGLAGE (2.320) | 16 | 16 | | | | UR<br>UR |
| | 69J–12168–10 | PAD, ADJUSTING (2.340)<br>PASTILLE, DE REGLAGE (2.340) | 16 | 16 | | | | UR<br>UR |
| | 69J–12168–20 | PAD, ADJUSTING (2.360)<br>PASTILLE, DE REGLAGE (2.360) | 16 | 16 | | | | UR<br>UR |
| | 69J–12168–30 | PAD, ADJUSTING (2.380)<br>PASTILLE, DE REGLAGE (2.380) | 16 | 16 | | | | UR<br>UR |
| | 69J–12168–40 | PAD, ADJUSTING (2.400)<br>PASTILLE, DE REGLAGE (2.400) | 16 | 16 | | | | UR<br>UR |
| | 69J–12168–50 | PAD, ADJUSTING (2.420)<br>PASTILLE, DE REGLAGE (2.420) | 16 | 16 | | | | UR<br>UR |
| | 69J–12168–60 | PAD, ADJUSTING (2.440)<br>PASTILLE, DE REGLAGE (2.440) | 16 | 16 | | | | UR<br>UR |
| | 69J–12168–70 | PAD, ADJUSTING (2.460)<br>PASTILLE, DE REGLAGE (2.460) | 16 | 16 | | | | UR<br>UR |
| | 69J–12168–80 | PAD, ADJUSTING (2.480)<br>PASTILLE, DE REGLAGE (2.480) | 16 | 16 | | | | UR<br>UR |
| | 69J–12168–90 | PAD, ADJUSTING (2.500)<br>PASTILLE, DE REGLAGE (2.500) | 16 | 16 | | | | UR<br>UR |
| | 69J–12168–A0 | PAD, ADJUSTING (2.520)<br>PASTILLE, DE REGLAGE (2.520) | 16 | 16 | | | | UR<br>UR |
| | 69J–12168–B0 | PAD, ADJUSTING (2.540)<br>PASTILLE, DE REGLAGE (2.540) | 16 | 16 | | | | UR<br>UR |
| | 69J–12168–C0 | PAD, ADJUSTING (2.560)<br>PASTILLE, DE REGLAGE (2.560) | 16 | 16 | | | | UR<br>UR |
| | 69J–12168–D0 | PAD, ADJUSTING (2.580)<br>PASTILLE, DE REGLAGE (2.580) | 16 | 16 | | | | UR<br>UR |
| | 69J–12168–E0 | PAD, ADJUSTING (2.600)<br>PASTILLE, DE REGLAGE (2.600) | 16 | 16 | | | | UR<br>UR |
| | 69J–12168–F0 | PAD, ADJUSTING (2.620)<br>PASTILLE, DE REGLAGE (2.620) | 16 | 16 | | | | UR<br>UR |
| | 69J–12168–G0 | PAD, ADJUSTING (2.640)<br>PASTILLE, DE REGLAGE (2.640) | 16 | 16 | | | | UR<br>UR |
| | 69J–12168–H0 | PAD, ADJUSTING (2.660)<br>PASTILLE, DE REGLAGE (2.660) | 16 | 16 | | | | UR<br>UR |
| | 69J–12168–J0 | PAD, ADJUSTING (2.680)<br>PASTILLE, DE REGLAGE (2.680) | 16 | 16 | | | | UR<br>UR |
| | 69J–12168–K0 | PAD, ADJUSTING (2.700)<br>PASTILLE, DE REGLAGE (2.700) | 16 | 16 | | | | UR<br>UR |

## FIG. 6 VALVE SOUPAPE

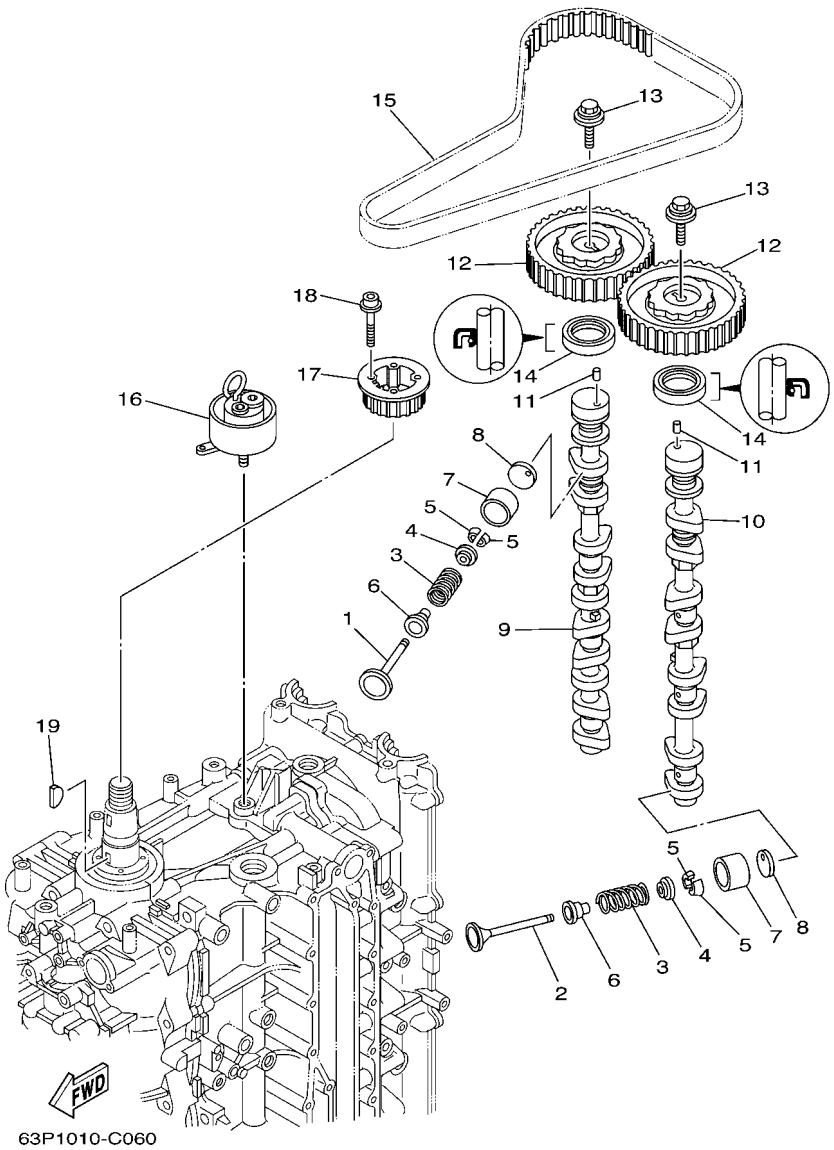


| REF. NO. | PART NO. N° PIECES | DESCRIPTION DESCRIPTION | 63P3 | 64P3 | | | | REMARKS REMARQUES |
|---|---|---|---|---|---|---|---|---|
| 8 | 69J–12168–L0 | PAD, ADJUSTING (2.720)<br>PASTILLE, DE REGLAGE (2.720) | 16 | 16 | | | | UR<br>UR |
| | 69J–12168–M0 | PAD, ADJUSTING (2.740)<br>PASTILLE, DE REGLAGE (2.740) | 16 | 16 | | | | UR<br>UR |
| | 69J–12168–N0 | PAD, ADJUSTING (2.760)<br>PASTILLE, DE REGLAGE (2.760) | 16 | 16 | | | | UR<br>UR |
| | 69J–12168–P0 | PAD, ADJUSTING (2.780)<br>PASTILLE, DE REGLAGE (2.780) | 16 | 16 | | | | UR<br>UR |
| | 69J–12168–R0 | PAD, ADJUSTING (2.800)<br>PASTILLE, DE REGLAGE (2.800) | 16 | 16 | | | | UR<br>UR |
| | 69J–12168–S0 | PAD, ADJUSTING (2.820)<br>PASTILLE, DE REGLAGE (2.820) | 16 | 16 | | | | UR<br>UR |
| | 69J–12168–T0 | PAD, ADJUSTING (2.840)<br>PASTILLE, DE REGLAGE (2.840) | 16 | 16 | | | | UR<br>UR |
| | 69J–12168–U0 | PAD, ADJUSTING (2.860)<br>PASTILLE, DE REGLAGE (2.860) | 16 | 16 | | | | UR<br>UR |
| | 69J–12168–V0 | PAD, ADJUSTING (2.880)<br>PASTILLE, DE REGLAGE (2.880) | 16 | 16 | | | | UR<br>UR |
| | 69J–12168–W0 | PAD, ADJUSTING (2.900)<br>PASTILLE, DE REGLAGE (2.900) | 16 | 16 | | | | UR<br>UR |
| | 69J–12168–X0 | PAD, ADJUSTING (2.920)<br>PASTILLE, DE REGLAGE (2.920) | 16 | 16 | | | | UR<br>UR |
| | 69J–12168–Y0 | PAD, ADJUSTING (2.940)<br>PASTILLE, DE REGLAGE (2.940) | 16 | 16 | | | | UR<br>UR |
| | 69J–12169–00 | PAD, ADJUSTING (2.960)<br>PASTILLE, DE REGLAGE (2.960) | 16 | 16 | | | | UR<br>UR |
| 9 | 63P–12171–00 | CAMSHAFT 1<br>ARBRE A CAMES 1 | 1 | 1 | | | | |
| 10 | 63P–12181–00 | CAMSHAFT 2<br>ARBRE A CAMES 2 | 1 | 1 | | | | |
| 11 | 93605–10108 | PIN, DOWEL<br>AXE | 2 | 2 | | | | |
| 12 | 63P–11537–00 | GEAR, DRIVEN<br>PIGNON SECONDAIRE | 2 | 2 | | | | |
| 13 | 90119–10M06 | BOLT, WITH WASHER<br>BOULON, AVEC RONDELLE | 2 | 2 | | | | |
| 14 | 93102–38M59 | OIL SEAL<br>JOINT SPY | 2 | 2 | | | | |
| 15 | 63P–46241–00 | V-BELT<br>COURROIE TRAPEZOIDALE | 1 | 1 | | | | |
| 16 | 63P–11590–00 | TENSIONER ASSY<br>TENDEUR (ENS.) | 1 | 1 | | | | |
| 17 | 63P–11536–00 | GEAR, DRIVE<br>ENGRENAGE, MENANT | 1 | 1 | | | | |
| 18 | 90110–05020 | BOLT, HEXAGON SOCKET HEAD<br>BOULON, TETE HEXAGONALE CREUSE | 4 | 4 | | | | |
| 19 | 90280–04008 | KEY, WOODRUFF<br>CLAVETTE, DEMI-LUNE | 1 | 1 | | | | |

## FIG. 7 INTAKE 1 — ADMISSION 1

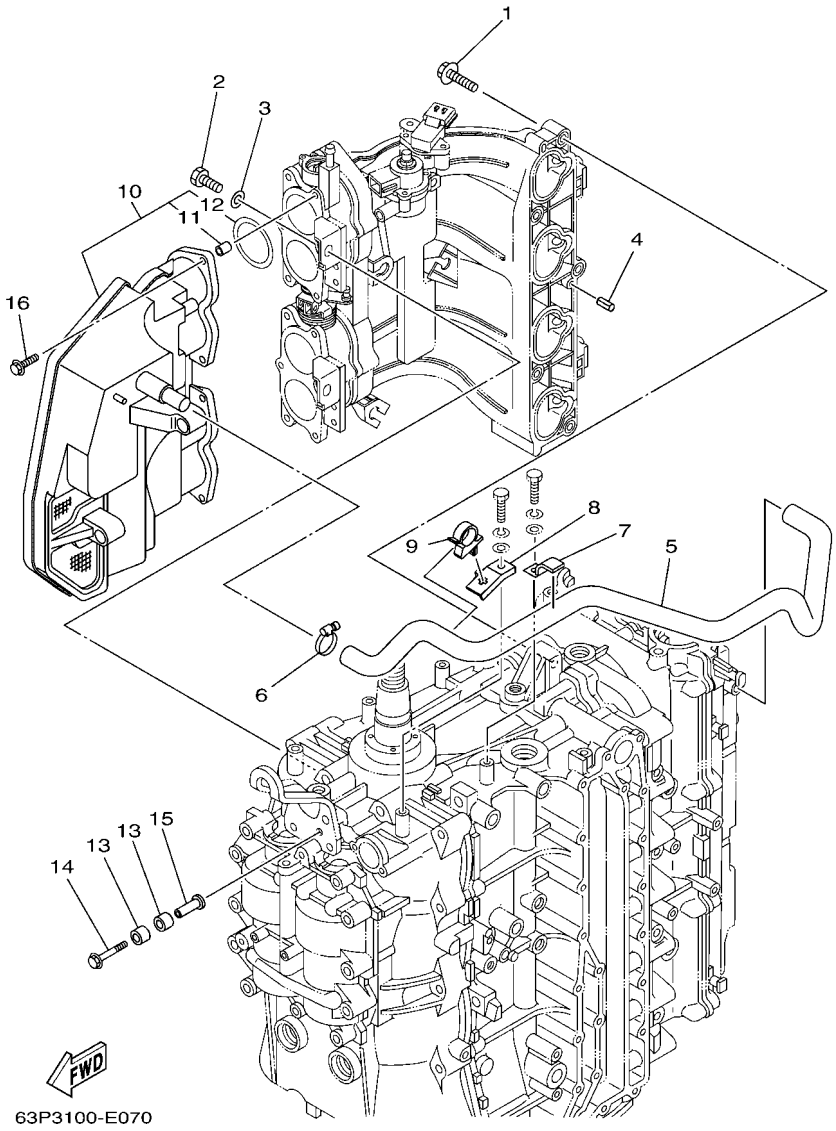


| REF. NO. | PART NO. N° PIECES | DESCRIPTION DESCRIPTION | 63P3 | 64P3 | | | | REMARKS REMARQUES |
|---|---|---|---|---|---|---|---|---|
| 1 | 97575–08540 | BOLT, WITH WASHER<br>VIS HEXAGONAL AVC RONDELLE | 5 | 5 | | | | |
| 2 | 97013–08020 | BOLT<br>BOULON | 2 | 2 | | | | |
| 3 | 92903–08600 | WASHER, PLATE<br>RONDELLE, PLATE | 2 | 2 | | | | |
| 4 | 91690–50014 | PIN, SPRING<br>AGRAFFE | 2 | 2 | | | | |
| 5 | 63P–15373–00 | PIPE, BREATHER<br>DURITE DE RENIFLARD | 1 | 1 | | | | |
| 6 | 90450–22M14 | HOSE CLAMP ASSY<br>BRIDE, DE DURITE | 1 | 1 | | | | |
| 7 | 90462–10023 | CLAMP<br>BRIDE | 1 | 1 | | | | |
| 8 | 63P–15378–00 | HOLDER<br>SUPPORT | 1 | 1 | | | | |
| 9 | 90464–20006 | CLAMP<br>BRIDE | 1 | 1 | | | | |
| 10 | 63P–14440–00 | SILENCER ASSY, INTAKE<br>SIENCIEUX D'ADMISSION | 1 | 1 | | | | |
| 11 | 63P–14449–00 | .COLLAR<br>.COLLERETTE | 6 | 6 | | | | |
| 12 | 63P–14457–00 | .SEAL<br>.JOINT | 4 | 4 | | | | |
| 13 | 90386–08001 | BUSH<br>DOUILLE | 4 | 4 | | | | |
| 14 | 90119–06076 | BOLT, WITH WASHER<br>BOULON, AVEC RONDELLE | 2 | 2 | | | | |
| 15 | 90387–06038 | COLLAR<br>COLLERETTE | 2 | 2 | | | | |
| 16 | 90119–06M82 | BOLT, WITH WASHER<br>BOULON, AVEC RONDELLE | 6 | 6 | | | | |

## FIG. 8 INTAKE 2 — ADMISSION 2

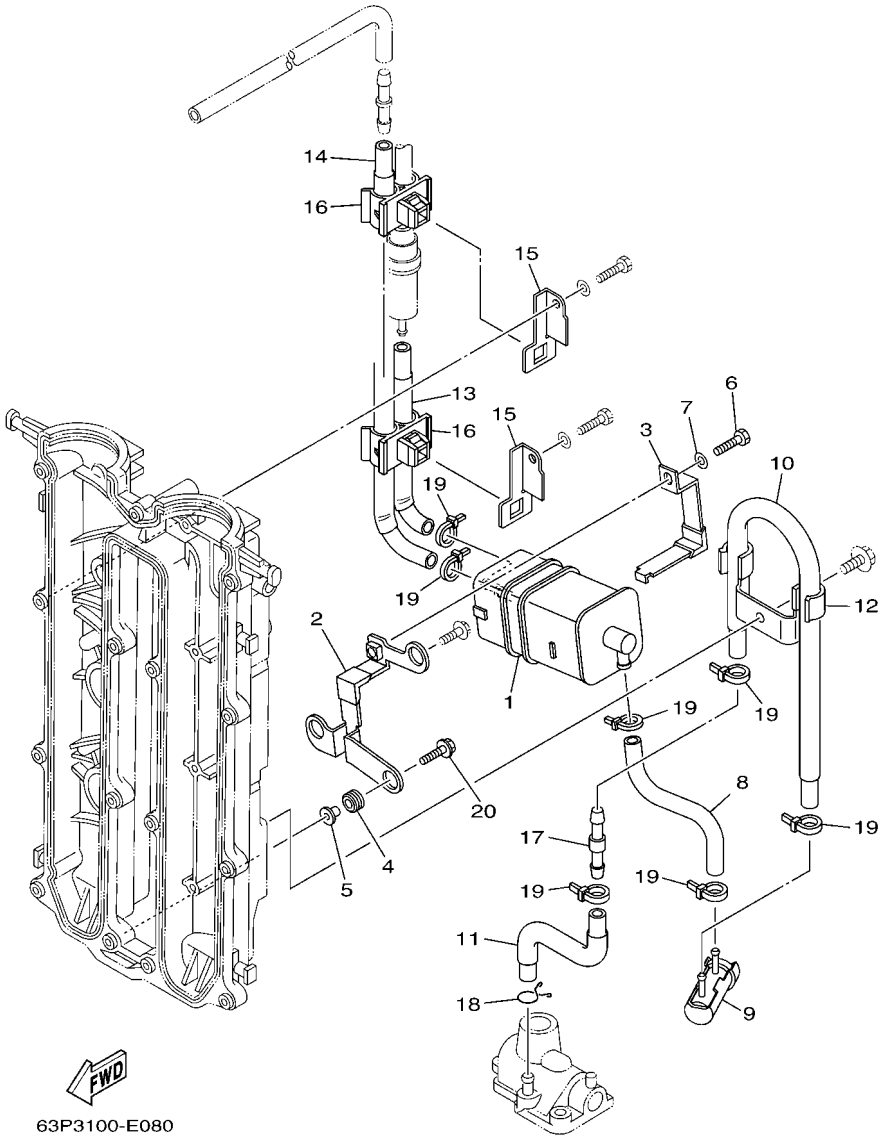


| REF. NO. | PART NO. N° PIECES | DESCRIPTION DESCRIPTION | 63P3 | 64P3 | | | | REMARKS REMARQUES |
|---|---|---|---|---|---|---|---|---|
| 1 | 6P2–24170–00 | CANISTER ASSY<br>BANDE, RASERVOIR A ESSENCE | 1 | 1 | | | | |
| 2 | 63P–2134X–00 | BRACKET, CANISTER<br>SUPPORT | 1 | 1 | | | | |
| 3 | 63P–2419A–00 | HOLDER<br>SUPPORT | 1 | 1 | | | | |
| 4 | 90480–10M23 | GROMMET<br>PASSE-FIL | 3 | 3 | | | | |
| 5 | 90387–06M60 | COLLAR<br>COLLERETTE | 3 | 3 | | | | |
| 6 | 97095–06016 | BOLT<br>BOULON | 1 | 1 | | | | |
| 7 | 92995–06600 | WASHER<br>RONDELLE | 1 | 1 | | | | |
| 8 | 64P–24313–00 | PIPE 3<br>DURITE 3 | 1 | 1 | | | | |
| 9 | 69J–24502–00 | FILTER, FUEL<br>FILTRE | 1 | 1 | | | | |
| 10 | 64P–24312–00 | PIPE 2<br>DURITE 2 | 1 | 1 | | | | |
| 11 | 64P–24311–00 | PIPE, FUEL 1<br>DURITE A ESSENCE | 1 | 1 | | | | |
| 12 | 63P–24367–00 | CLAMP, FUEL PIPE 2<br>COLLIER DE DURITE A ESSENCE | 1 | 1 | | | | |
| 13 | 64P–24315–00 | PIPE 5<br>DURITE 5 | 1 | 1 | | | | |
| 14 | 64P–24314–00 | PIPE 4<br>DURITE 4 | 1 | 1 | | | | |
| 15 | 63P–24364–00 | STAY<br>SUPPORT | 2 | 2 | | | | |
| 16 | 90464–11012 | CLAMP<br>BRIDE | 2 | 2 | | | | |
| 17 | 6E5–24379–00 | PIPE, JOINT 4<br>DURITE RACCORDEMENT 4 | 1 | 1 | | | | |
| 18 | 90467–09M09 | CLIP<br>JONC | 1 | 1 | | | | |
| 19 | 90465–11M10 | CLAMP<br>BRIDE | 7 | 7 | | | | |
| 20 | 90119–06135 | BOLT, WITH WASHER<br>BOULON, AVEC RONDELLE | 2 | 2 | | | | |

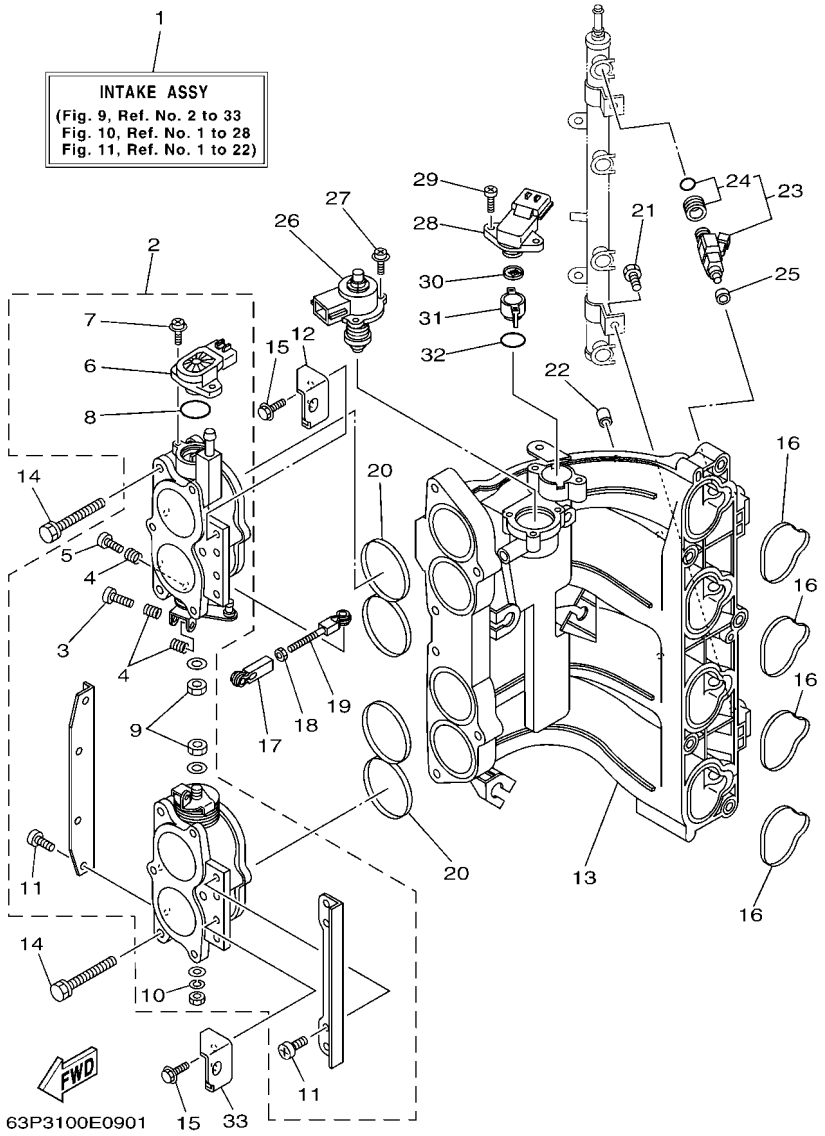


## FIG. 9 INTAKE 3 — ADMISSION 3

| REF. NO. | PART NO. N° PIECES | DESCRIPTION DESCRIPTION | 63P3 | 64P3 | | | | REMARKS REMARQUES |
|---|---|---|---|---|---|---|---|---|
| 1 | 63P–14200–21 | INTAKE ASSY<br>ADMISSION (ENS.) | 1 | 1 | | | | |
| 2 | 63P–13751–01 | BODY, THROTTLE 1<br>CARTER 1 | 1 | 1 | | | | |
| 3 | 69J–14321–00 | .SCREW, THROTTLE<br>.VIS, ACCELERATEUR | 1 | 1 | | | | |
| 4 | 68V–14331–00 | .SPRING, THROTTLE VALVE<br>.RESSORT, BOISSEAU | 3 | 3 | | | | |
| 5 | 68V–14323–00 | .SCREW, AIR ADJUSTING<br>.VIS DE DOSEUR D'AIR | 1 | 1 | | | | |
| 6 | 6S1–85885–00 | .THROTTLE SENSOR ASSY<br>.SENSITOMETRE (ENS.) | 1 | 1 | | | | |
| 7 | 68V–81145–01 | .SCREW 1<br>.VIS 1 | 2 | 2 | | | | |
| 8 | 68V–8182L–00 | .O-RING 1<br>.JOINT TORIQUE 1 | 1 | 1 | | | | |
| 9 | 3CF–14594–00 | .NUT<br>.ECROU | 2 | 2 | | | | |
| 10 | 68V–14356–00 | .WASHER, SPRING<br>.RONDELLE | 1 | 1 | | | | |
| 11 | 68V–14565–00 | .SCREW<br>.VIS | 8 | 8 | | | | |
| 12 | 63P–14291–00 | BRACKET 1<br>SUPPORT 1 | 1 | 1 | | | | |
| 13 | 63P–13641–00 | MANIFOLD 1<br>TUBULURE 1 | 1 | 1 | | | | |
| 14 | 63P–14496–00 | BOLT<br>BOULON | 6 | 6 | | | | |
| 15 | 97595–06516 | BOLT, WITH WASHER<br>VIS HEXAGONAL AVC RONDELLE | 4 | 4 | | | | |
| 16 | 63P–13645–00 | GASKET, MANIFOLD 1<br>JOINT, TUBULURE 1 | 4 | 4 | | | | |
| 17 | 6H4–41237–00 | JOINT, LINK<br>RACCORD | 1 | 1 | | | | |
| 18 | 95380–05700 | NUT<br>ECROU | 1 | 1 | | | | |
| 19 | 682–41238–01 | JOINT, LINK<br>RACCORD | 1 | 1 | | | | |
| 20 | 63P–13557–00 | GASKET<br>JOINT | 2 | 2 | | | | |
| 21 | 63P–14446–00 | BOLT<br>BOULON | 2 | 2 | | | | |
| 22 | 63P–13643–00 | COVER, MANIFOLD<br>COUVERCLE, TUBULURE | 4 | 4 | | | | |
| 23 | 63P–13761–00 | INJECTOR ASSY<br>INJECTEUR | 4 | 4 | | | | |
| 24 | 68V–1410B–00 | .PACKING KIT<br>.POCHETTE DE JOINTS | 1 | 1 | | | | |
| 25 | 68V–13766–00 | RUBBER, INJECTOR<br>RONDELLE CAOUTCHOUC | 4 | 4 | | | | |
| 26 | 63P–1312A–01 | VALVE, CONTROL<br>SOUPAPE,CONTROLE | 1 | 1 | | | | |
| 27 | 68V–81146–01 | SCREW 2<br>VIS 2 | 3 | 3 | | | | |

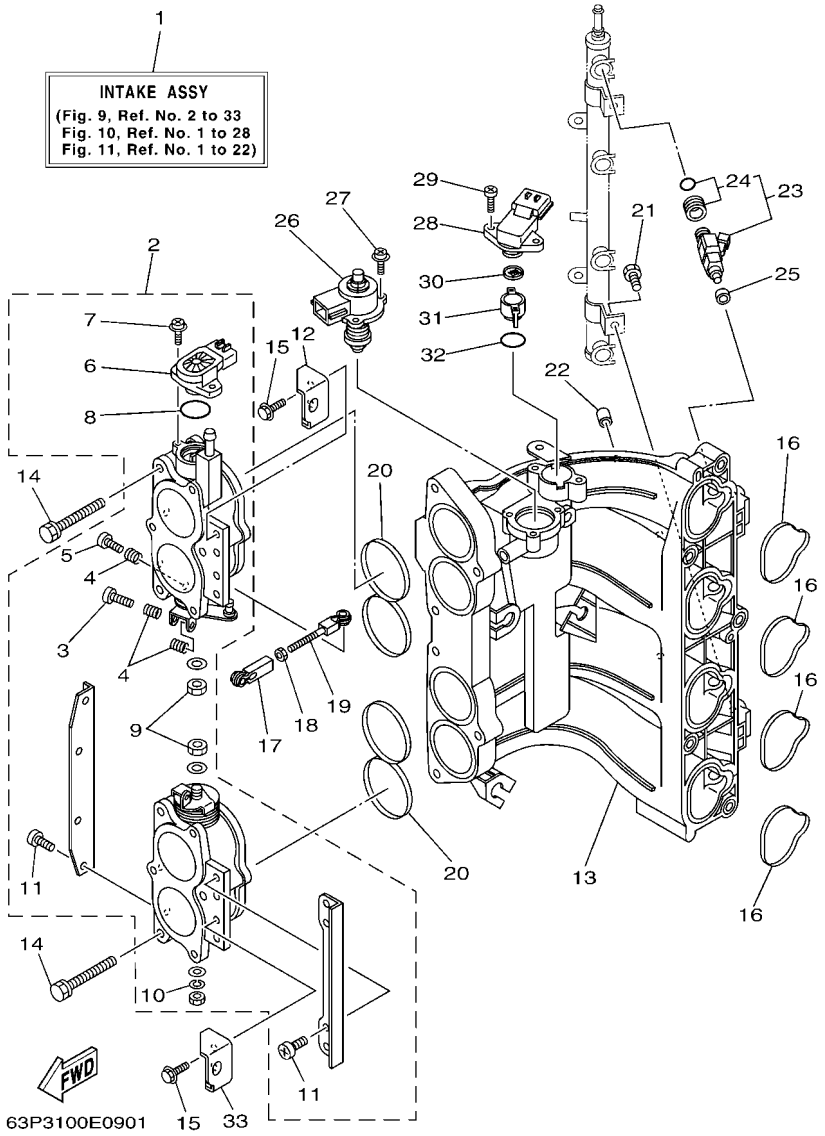


## FIG. 9 INTAKE 3 — ADMISSION 3

| REF. NO. | PART NO. N° PIECES | DESCRIPTION DESCRIPTION | 63P3 | 64P3 | | | | REMARKS REMARQUES |
|---|---|---|---|---|---|---|---|---|
| 28 | 63P–82380–00 | SENSOR, PRESSURE<br>SONDE DE PRESSION | 1 | 1 | | | | |
| 29 | 68V–81147–00 | SCREW 3<br>VIS 3 | 2 | 2 | | | | |
| 30 | 63P–13905–00 | FILTER COMP.<br>ENS FILTRE | 1 | 1 | | | | |
| 31 | 63P–13898–00 | HOLDER<br>SUPPORT | 1 | 1 | | | | |
| 32 | 63P–13769–00 | O-RING<br>JOINT TORIQUE | 1 | 1 | | | | |
| 33 | 63P–14292–00 | BRACKET 2<br>SUPPORT 2 | 1 | 1 | | | | |

## FIG. 10 FUEL INJECTION PUMP 1 — POMPE A INJECTEUR 1

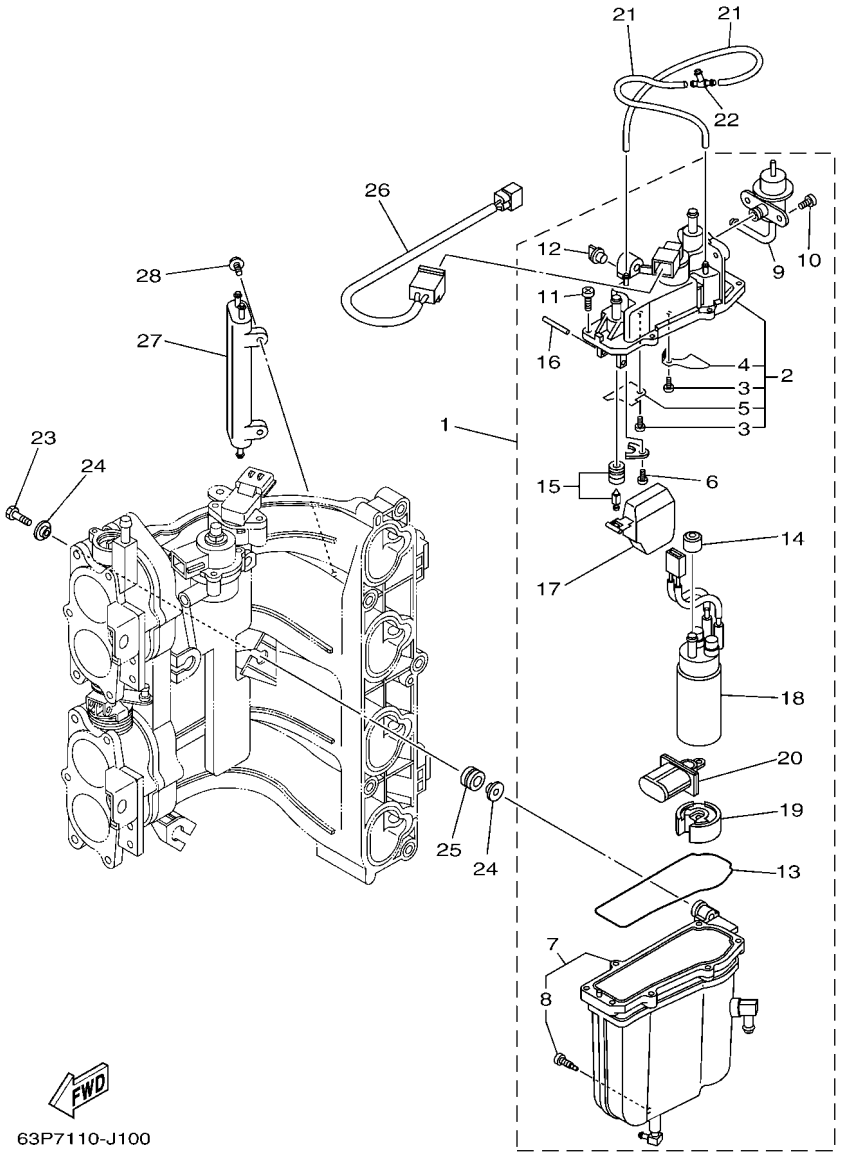


| REF. NO. | PART NO. N° PIECES | DESCRIPTION DESCRIPTION | 63P3 | 64P3 | | | | REMARKS REMARQUES |
|---|---|---|---|---|---|---|---|---|
| 1 | 63P–14180–01 | FLOAT CHAMBER ASSY<br>CUVE DE FLOTTEUR | 1 | 1 | | | | |
| 2 | 63P–14182–00 | .COVER, FLOAT CHAMBER<br>.COUVERCLE, CUVE DE FLOTTEUR | 1 | 1 | | | | |
| 3 | 4SV–24453–00 | .SCREW<br>.VIS | 2 | 2 | | | | |
| 4 | 63P–2411R–00 | PLATE 1<br>PLAQUE 1 | 1 | 1 | | | | |
| 5 | 63P–2411T–00 | PLATE 2<br>PLAQUE 2 | 1 | 1 | | | | |
| 6 | 4SV–24453–00 | .SCREW<br>.VIS | 1 | 1 | | | | |
| 7 | 63P–14181–00 | .BODY, FLOAT CHAMBER<br>.CORPS, CUVE DE FLOTTEUR 1 | 1 | 1 | | | | |
| 8 | 63P–14191–00 | PLUG, DRAIN<br>PLOT, VIDANGE | 1 | 1 | | | | |
| 9 | 63P–13906–00 | .REGULATOR, PRESSURE<br>.REGULATEUR DE PRESSION | 1 | 1 | | | | |
| 10 | 63P–14565–00 | .SCREW<br>.VIS | 2 | 2 | | | | |
| 11 | 63P–14567–00 | .SCREW<br>.VIS | 7 | 7 | | | | |
| 12 | 69J–14225–01 | .CAP<br>.COUVERCLE | 1 | 1 | | | | |
| 13 | 63P–14984–00 | .GASKET, FLOAT CHAMBER<br>.JOINT, CUVE DE FLOTTEUR | 1 | 1 | | | | |
| 14 | 68V–13781–10 | .DAMPER, PUMP<br>.AMORTISSEUR, POMPE | 1 | 1 | | | | |
| 15 | 63P–14546–00 | .VALVE, NEEDLE<br>.POINTEAU | 1 | 1 | | | | |
| 16 | 68V–14386–00 | .PIN, FLOAT<br>.AXE, FLOTTEUR | 1 | 1 | | | | |
| 17 | 63P–14985–00 | .FLOAT<br>.FLOTTEUR | 1 | 1 | | | | |
| 18 | 63P–13907–02 | .FUEL PUMP COMP.<br>.POMPE A CARBURANT COMP. | 1 | 1 | | | | |
| 19 | 63P–13784–00 | .COVER, PUMP<br>.COUVERCLE, POMPE | 1 | 1 | | | | |
| 20 | 63P–13915–00 | .FILTER<br>.FILTRE | 1 | 1 | | | | |
| 21 | 63P–14148–00 | PIPE<br>DURITE | 2 | 2 | | | | |
| 22 | 69J–24379–00 | PIPE, JOINT 4<br>DURITE RACCORDEMENT 4 | 1 | 1 | | | | |
| 23 | 63P–14777–00 | BOLT<br>BOULON | 3 | 3 | | | | |
| 24 | 69J–13716–00 | COLLAR<br>COLLERETTE | 6 | 6 | | | | |
| 25 | 6BM–13593–00 | DAMPER<br>AMORTISSEUR | 3 | 3 | | | | |
| 26 | 63P–8259L–00 | WIRE HARNESS ASSY 1<br>FAISCEAU DE FILS COMPLET 1 | 1 | 1 | | | | |
| 27 | 69J–21841–02 | COOLER<br>RADIATEUR | 1 | 1 | | | | |

## FIG. 10 FUEL INJECTION PUMP 1 — POMPE A INJECTEUR 1

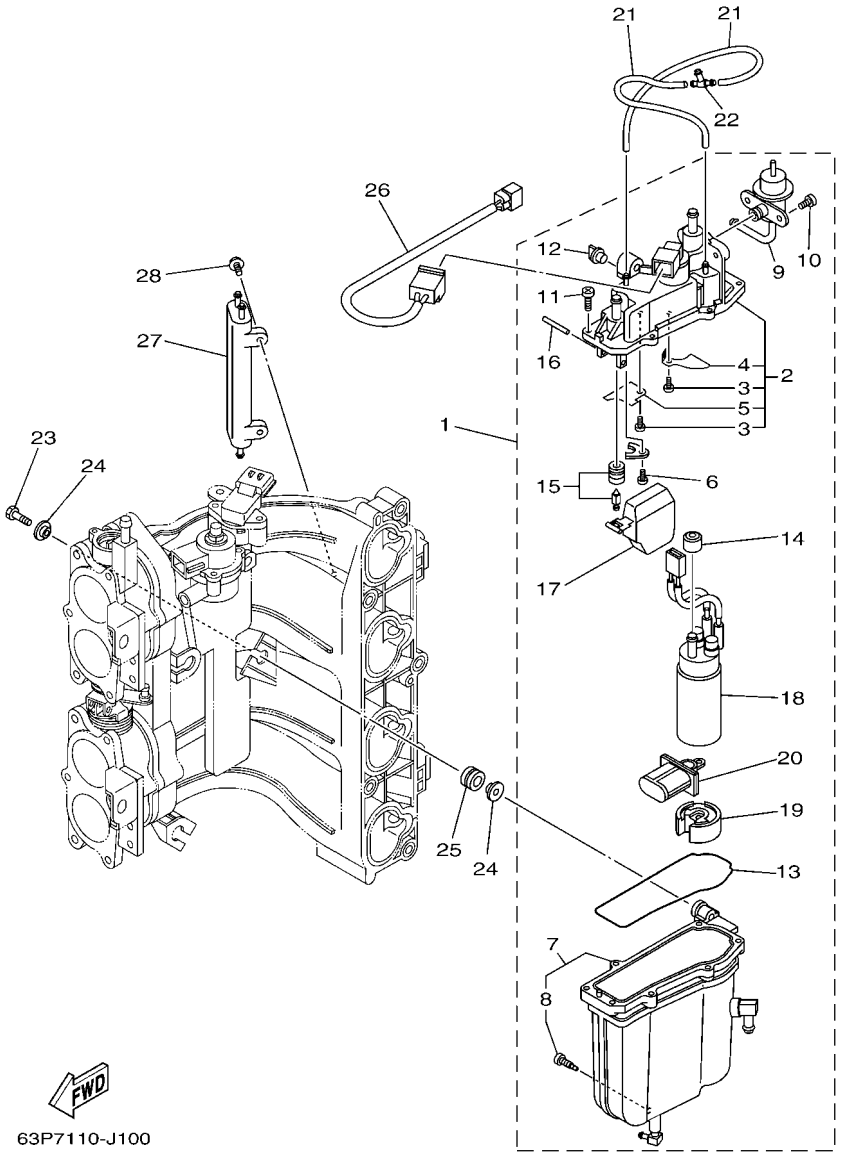


| REF. NO. | PART NO. N° PIECES | DESCRIPTION DESCRIPTION | 63P3 | 64P3 | | | | REMARKS REMARQUES |
|---|---|---|---|---|---|---|---|---|
| 28 | 68V–14446–00 | BOLT<br>BOULON | 2 | 2 | | | | |

## FIG. 11 FUEL INJECTION PUMP 2 — POMPE A INJECTEUR 2

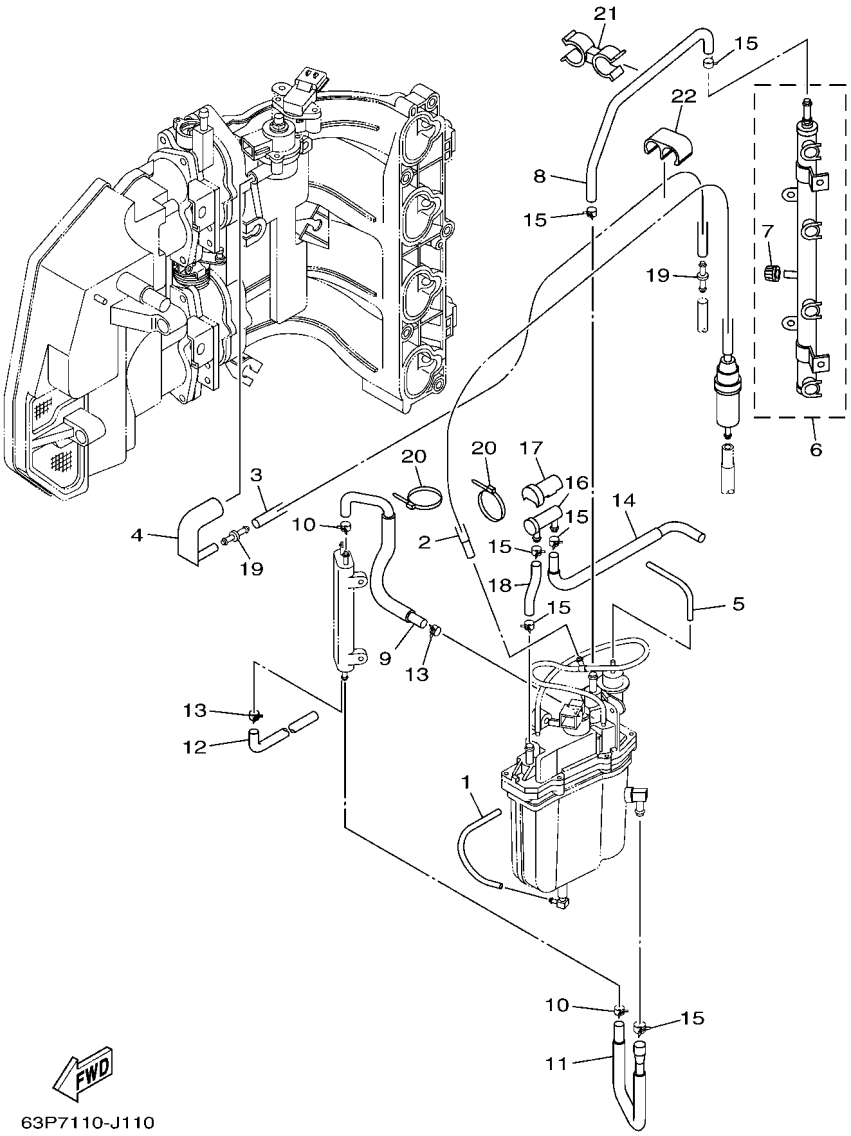


| REF. NO. | PART NO. N° PIECES | DESCRIPTION DESCRIPTION | 63P3 | 64P3 | | | | REMARKS REMARQUES |
|---|---|---|---|---|---|---|---|---|
| 1 | 63P–14149–00 | PIPE<br>DURITE | 1 | 1 | | | | |
| 2 | 63P–13971–00 | PIPE, FUEL 1<br>TUBE 1, CARBURANT | 1 | 1 | | | | |
| 3 | 63P–13546–00 | HOSE 2<br>DURITE 2 | 1 | 1 | | | | |
| 4 | 63P–13545–00 | HOSE 1<br>DURITE 1 | 1 | 1 | | | | |
| 5 | 63P–13532–10 | HOSE, VACUUM SENSING 3<br>DURITE 3 | 1 | 1 | | | | |
| 6 | 63P–13160–00 | DELIVERY PIPE ASSY 1<br>ENS. TUBE DE REFOULEMENT 1 | 1 | 1 | | | | |
| 7 | 63P–14225–00 | CAP<br>COUVERCLE | 1 | 1 | | | | |
| 8 | 63P–13974–20 | PIPE, FUEL 4<br>TUBE 4, CARBURANT | 1 | 1 | | | | |
| 9 | 63P–13976–00 | PIPE, FUEL 6<br>TUBE 6, CARBURANT | 1 | 1 | | | | |
| 10 | 68V–2411M–00 | CLIP<br>JONC | 2 | 2 | | | | |
| 11 | 63P–24317–00 | PIPE 7<br>DURITE 7 | 1 | 1 | | | | |
| 12 | 63P–2247B–00 | HOSE 2<br>DURITE 2 | 1 | 1 | | | | |
| 13 | 68V–24519–00 | CLIP<br>JONC | 2 | 2 | | | | |
| 14 | 63P–24325–00 | PIPE 14<br>DURITE 14 | 1 | 1 | | | | |
| 15 | 68V–13577–00 | CLIP<br>AGRAFE | 6 | 6 | | | | |
| 16 | 69J–24501–10 | FILTER, FUEL<br>FILTRE | 1 | 1 | | | | |
| 17 | 69J–24599–10 | CAP<br>CAPUCHON | 1 | 1 | | | | |
| 18 | 63P–13975–00 | PIPE, FUEL 5<br>TUBE 5, CARBURANT | 1 | 1 | | | | |
| 19 | 6P2–13758–00 | PIPE, JOINT<br>DURITE | 2 | 2 | | | | |
| 20 | 68V–2481H–00 | CLAMP<br>BRIDE | 2 | 2 | | | | |
| 21 | 63P–2417H–00 | CLAMP 1<br>COLLIER 1 | 1 | 1 | | | | |
| 22 | 63P–2417J–00 | CLAMP 2<br>COLLIER 2 | 1 | 1 | | | | |

## FIG. 12 FUEL 1 — CARBURANT 1

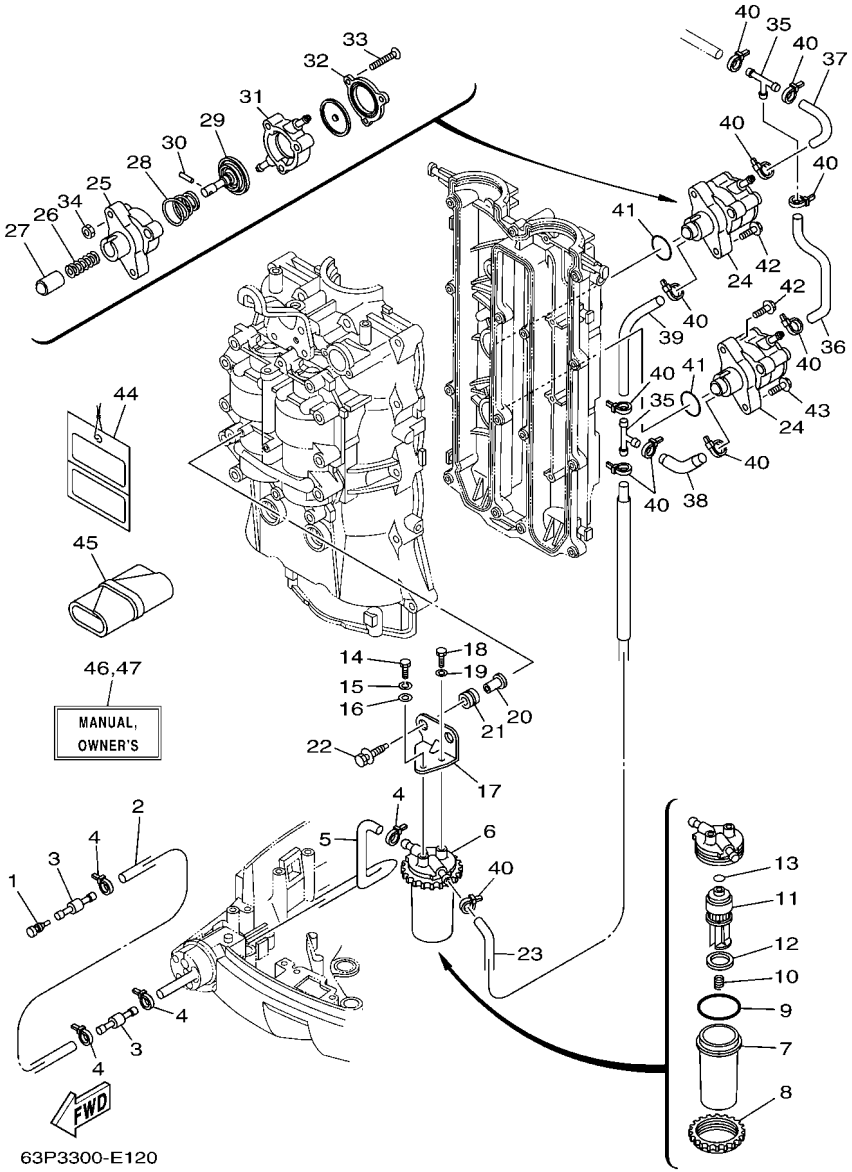


| REF. NO. | PART NO. N° PIECES | DESCRIPTION DESCRIPTION | 63P3 | 64P3 | | | | REMARKS REMARQUES |
|---|---|---|---|---|---|---|---|---|
| 1 | 689–85547–00 | DAMPER<br>AMORTISSEUR | 1 | 1 | | | | |
| 2 | 90445–13511 | HOSE (L2000)<br>DURITE (L2000) | 1 | 1 | | | | |
| 3 | 6R3–24377–10 | PIPE, JOINT 3<br>DURITE RACCORDEMENT 3 | 2 | 2 | | | | |
| 4 | 90465–11M10 | CLAMP<br>BRIDE | 4 | 4 | | | | |
| 5 | 63P–24316–00 | PIPE 6<br>DURITE 6 | 1 | 1 | | | | |
| 6 | 65L–24560–00 | FILTER ASSY<br>ENS FILTRE | 1 | 1 | | | | |
| 7 | 61A–24521–00 | .CUP, FILTER<br>.CUVETTE, FILTRE | 1 | 1 | | | | |
| 8 | 65L–24531–01 | .NUT<br>.ECROU | 1 | 1 | | | | |
| 9 | 61A–24564–00 | .O-RING<br>.JOINT TORIQUE | 1 | 1 | | | | |
| 10 | 65L–24577–00 | .SPRING<br>.RESSORT | 1 | 1 | | | | |
| 11 | 65L–24563–00 | .ELEMENT, FILTER<br>.ELEMENT, FILTRE | 1 | 1 | | | | |
| 12 | 61A–24469–00 | .FLOAT, WATER LEVEL<br>.FLOTTEUR | 1 | 1 | | | | |
| 13 | 65L–24564–00 | .O-RING<br>.JOINT TORIQUE | 1 | 1 | | | | |
| 14 | 97095–06016 | BOLT<br>BOULON | 1 | 1 | | | | |
| 15 | 92995–06100 | WASHER, SPRING<br>RONDELLE, GROWER | 1 | 1 | | | | |
| 16 | 90201–06068 | WASHER, PLATE<br>RONDELLE, PLATE | 1 | 1 | | | | |
| 17 | 63P–24566–00 | BRACKET, FILTER<br>SUPPORT, FILTRE | 1 | 1 | | | | |
| 18 | 97095–06014 | BOLT<br>BOULON | 1 | 1 | | | | |
| 19 | 92995–06600 | WASHER<br>RONDELLE | 1 | 1 | | | | |
| 20 | 90387–06M60 | COLLAR<br>COLLERETTE | 2 | 2 | | | | |
| 21 | 90480–10M23 | GROMMET<br>PASSE-FIL | 2 | 2 | | | | |
| 22 | 90119–06071 | BOLT, WITH WASHER<br>BOULON, AVEC RONDELLE | 2 | 2 | | | | |
| 23 | 63P–24311–10 | PIPE, FUEL 1<br>DURITE A ESSENCE | 1 | 1 | | | | |
| 24 | 63P–24410–00 | FUEL PUMP ASSY<br>POMPE A ESSENCE | 2 | 2 | | | | |
| 25 | 68V–24412–00 | .BODY 1<br>.CORPS 1 | 1 | 1 | | | | |
| 26 | 68V–24454–00 | .SPRING<br>.RESSORT | 1 | 1 | | | | |
| 27 | 63P–13131–00 | .PLUNGER<br>.PLONGEUR | 1 | 1 | | | | |

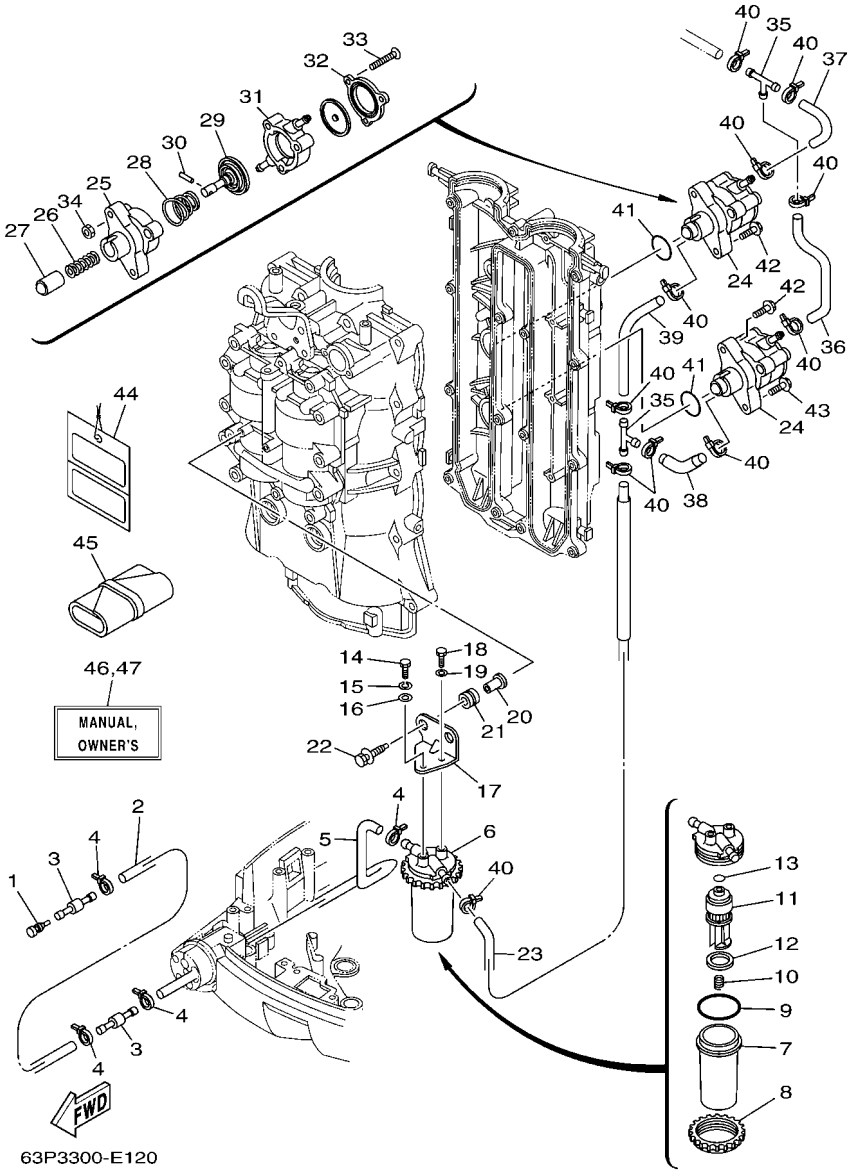


## FIG. 12 FUEL 1 — CARBURANT 1

| REF. NO. | PART NO. N° PIECES | DESCRIPTION DESCRIPTION | 63P3 | 64P3 | | | | REMARKS REMARQUES |
|---|---|---|---|---|---|---|---|---|
| 28 | 63P–24423–00 | .SPRING, DIAPHRAGM<br>.RESSORT, DIAPHRAGME | 1 | 1 | | | | |
| 29 | 68V–24411–00 | .DIAPHRAGM<br>.DIAPHRAGME | 1 | 1 | | | | |
| 30 | 68V–24374–00 | .PIN<br>.GOUPILLE | 1 | 1 | | | | |
| 31 | 68V–24413–00 | .BODY 2<br>.CORPS 2 | 1 | 1 | | | | |
| 32 | 63P–24414–00 | .BODY 3<br>.CORPS 3 | 1 | 1 | | | | |
| 33 | 68V–24444–00 | .SCREW<br>.VIS | 3 | 3 | | | | |
| 34 | 68V–24149–00 | .NUT<br>.ECROU | 3 | 3 | | | | |
| 35 | 6E5–24378–00 | PIPE, JOINT 3<br>DURITE, RACCORDEMENT 3 | 2 | 2 | | | | |
| 36 | 63P–24314–00 | PIPE 4<br>DURITE 4 | 1 | 1 | | | | |
| 37 | 63P–24315–00 | PIPE 5<br>DURITE 5 | 1 | 1 | | | | |
| 38 | 63P–24312–10 | PIPE 2<br>DURITE 2 | 1 | 1 | | | | |
| 39 | 63P–24313–10 | PIPE 3<br>DURITE 3 | 1 | 1 | | | | |
| 40 | 90465–11M10 | CLAMP<br>BRIDE | 11 | 11 | | | | |
| 41 | 93210–30682 | O-RING<br>JOINT TORIQUE | 2 | 2 | | | | |
| 42 | 90119–06M83 | BOLT, WITH WASHER<br>BOULON, AVEC RONDELLE | 3 | 3 | | | | |
| 43 | 90119–06135 | BOLT, WITH WASHER<br>BOULON, AVEC RONDELLE | 1 | 1 | | | | |
| 44 | 61H–2819R–31 | TAG, WARNING<br>ETIQUETTE, AVERTISSEMENT | 1 | 1 | | | | |
| 45 | 67F–28100–01 | TOOL KIT<br>TROUSSE A OUTILS | 1 | 1 | | | | |
| 46 | 63P–28199–73–E0 | MANUAL,OWNER'S<br>MANUEL D'UTILISATION | 1 | 1 | | | | UR (E)<br>UR (E) |
| | 63P–28199–73–F0 | MANUAL,OWNER'S<br>MANUEL D'UTILISATION | 1 | 1 | | | | UR (F)<br>UR (F) |
| | 63P–28199–73–S0 | MANUAL,OWNER'S<br>MANUEL D'UTILISATION | 1 | 1 | | | | UR (ES)<br>UR (ES) |
| | 63P–28199–73–G0 | MANUAL,OWNER'S<br>MANUEL D'UTILISATION | 1 | 1 | | | | UR (D)<br>UR (D) |
| | 63P–28199–73–D0 | MANUAL,OWNER'S<br>MANUEL D'UTILISATION | 1 | 1 | | | | UR (NL)<br>UR (NL) |
| | 63P–28199–73–H0 | MANUAL,OWNER'S<br>MANUEL D'UTILISATION | 1 | 1 | | | | UR (I)<br>UR (I) |
| 47 | 63P–28199–83–K0 | MANUAL,OWNER'S<br>MANUEL D'UTILISATION | 1 | 1 | | | | UR (DK)<br>UR (DK) |
| | 63P–28199–83–R0 | MANUAL,OWNER'S<br>MANUEL D'UTILISATION | 1 | 1 | | | | UR (GR)<br>UR (GR) |
| | 63P–28199–83–P0 | MANUAL,OWNER'S<br>MANUEL D'UTILISATION | 1 | 1 | | | | UR (P)<br>UR (P) |

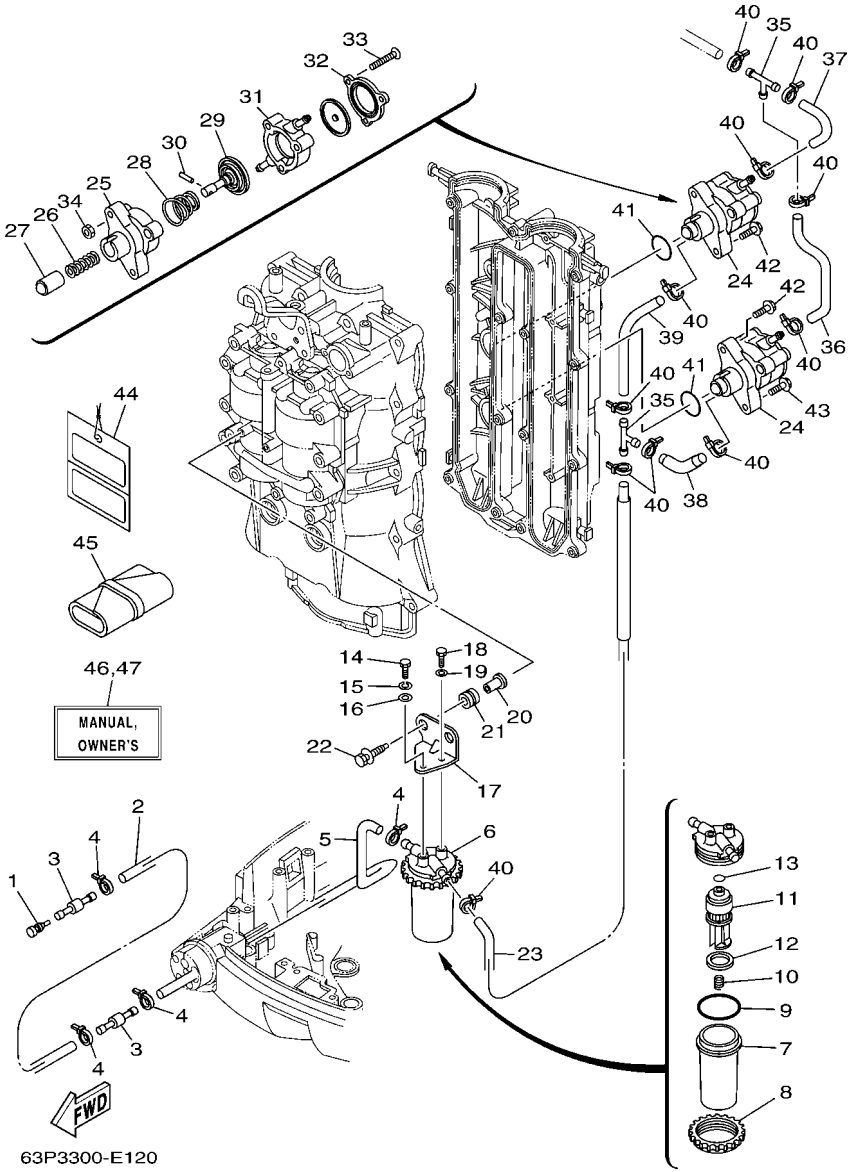


## FIG. 12 FUEL 1 — CARBURANT 1

| REF. NO. | PART NO. N° PIECES | DESCRIPTION DESCRIPTION | 63P3 | 64P3 | | | | REMARKS REMARQUES |
|---|---|---|---|---|---|---|---|---|
| 47 | 63P–28199–83–N0 | MANUAL,OWNER'S<br>MANUEL D'UTILISATION | 1 | 1 | | | | UR (N)<br>UR (N) |
| | 63P–28199–83–M0 | MANUAL,OWNER'S<br>MANUEL D'UTILISATION | 1 | 1 | | | | UR (S)<br>UR (S) |
| | 63P–28199–83–L0 | MANUAL,OWNER'S<br>MANUEL D'UTILISATION | 1 | 1 | | | | UR (SF)<br>UR (SF) |

## FIG. 13 FUEL 2 — CARBURANT 2

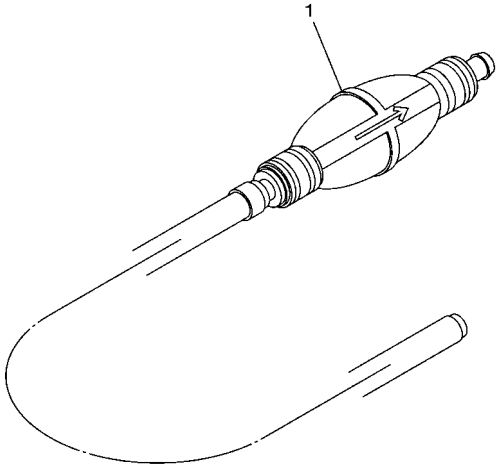

63P1300-C120

| REF. NO. | PART NO. N° PIECES | DESCRIPTION DESCRIPTION | 63P3 | 64P3 | | | | REMARKS REMARQUES |
|---|---|---|---|---|---|---|---|---|
| 1 | 6YK–24307–42 | FUEL PIPE COMP. 2<br>DURITE A ESSENCE 2 | 1 | 1 | | | | AP<br>AP |

## FIG. 14 GENERATOR GENERATRICE

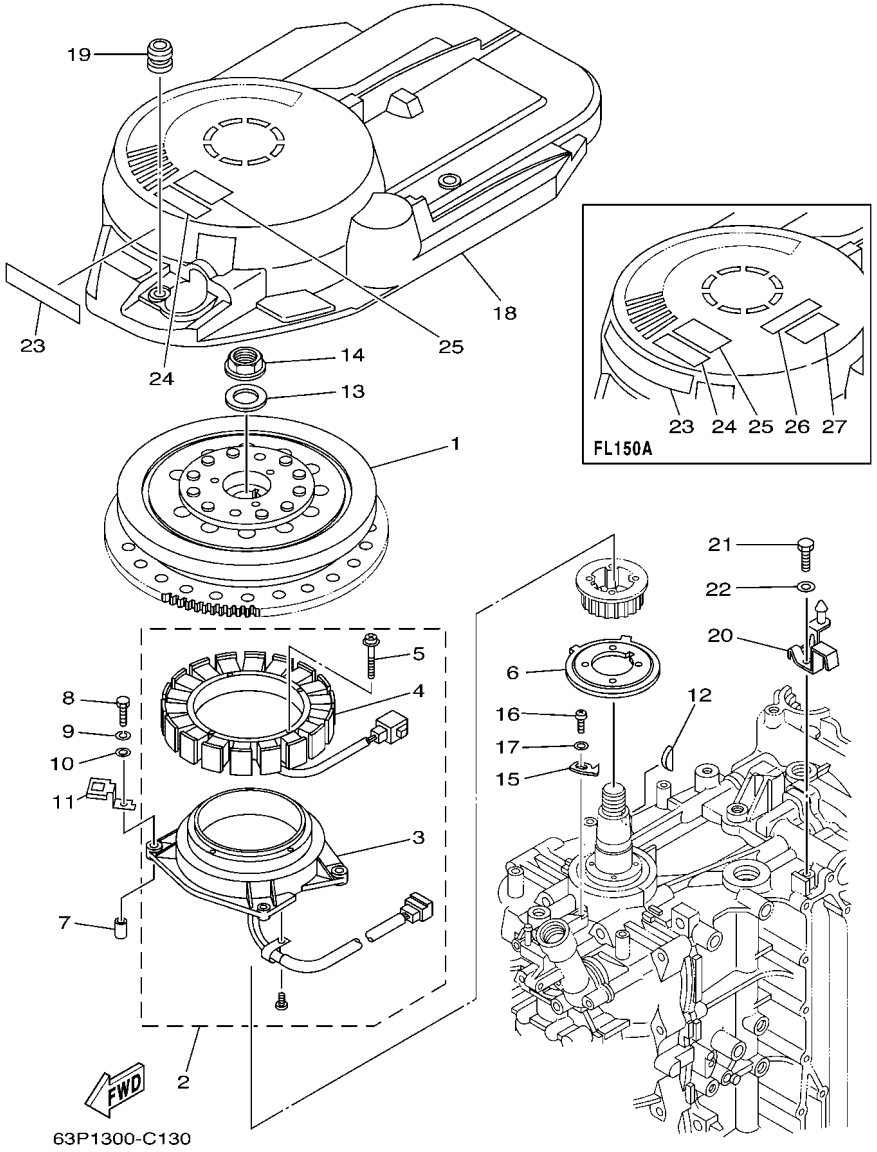


| REF. NO. | PART NO. N° PIECES | DESCRIPTION DESCRIPTION | 63P3 | 64P3 | | | | REMARKS REMARQUES |
|---|---|---|---|---|---|---|---|---|
| 1 | 63P–81450–00 | ROTOR ASSY<br>ROTOR COMPLET | 1 | 1 | | | | |
| 2 | 63P–81460–00 | BASE ASSY<br>ENS. FLASQUE | 1 | 1 | | | | |
| 3 | 63P–85580–00 | .COIL, PULSER<br>.BOBINE, PULSEUR | 1 | 1 | | | | |
| 4 | 63P–81410–00 | .STATOR ASSY<br>.STATOR COMPLET | 1 | 1 | | | | |
| 5 | 63D–81345–20 | .SCREW, WITH WASHER (M6X30)<br>.VIS, AVEC RONDELLE (M6X30) | 4 | 4 | | | | |
| 6 | 63P–81673–00 | ROTOR<br>ROTOR | 1 | 1 | | | | |
| 7 | 99530–08012 | PIN, DOWEL<br>GOUJON, D'ASSEMBLAGE | 2 | 2 | | | | |
| 8 | 97095–06035 | BOLT<br>BOULON | 4 | 4 | | | | |
| 9 | 92995–06100 | WASHER, SPRING<br>RONDELLE, GROWER | 4 | 4 | | | | |
| 10 | 92995–06600 | WASHER<br>RONDELLE | 4 | 4 | | | | |
| 11 | 63P–81845–00 | PLATE<br>PLAQUE | 2 | 2 | | | | |
| 12 | 90280–05015 | KEY, WOODRUFF<br>CLAVETTE, DEMI-LUNE | 1 | 1 | | | | |
| 13 | 90201–24014 | WASHER, PLATE<br>RONDELLE, PLATE | 1 | 1 | | | | |
| 14 | 90179–24002 | NUT<br>ECROU | 1 | 1 | | | | |
| 15 | 6P2–81332–00 | PLATE, TIMING<br>PLATEAU, ALLUMAGE | 1 | 1 | | | | |
| 16 | 97885–06010 | SCREW, PAN HEAD<br>VIS, A ENCOCHE | 1 | 1 | | | | |
| 17 | 92995–06600 | WASHER<br>RONDELLE | 1 | 1 | | | | |
| 18 | 63P–81337–00 | COVER, FLYWHEEL<br>COUVERCLE, VOLANT | 1 | 1 | | | | |
| 19 | 663–82317–01 | DAMPER, IGNITION COIL<br>AMORTISSEUR, BOBINE D'ALLUM | 3 | 3 | | | | |
| 20 | 63P–8132G–00 | PLATE<br>PLAQUE | 1 | 1 | | | | |
| 21 | 97095–06016 | BOLT<br>BOULON | 1 | 1 | | | | |
| 22 | 92995–06600 | WASHER<br>RONDELLE | 1 | 1 | | | | |
| 23 | 63P–13437–61 | MARK, CAUTION<br>MAKER | 1 | 1 | | | | |
| 24 | 6A1–83625–41 | MARK 5<br>ETIQUETTE 5 | 1 | 1 | | | | |
| 25 | 6A1–83625–51 | MARK 5<br>ETIQUETTE 5 | 1 | 1 | | | | |
| 26 | 6K1–83623–41 | MARK 3<br>ETIQUETTE 3 | | 1 | | | | |
| 27 | 6K1–83623–50 | MARK 3<br>ETIQUETTE 3 | | 1 | | | | |

## FIG. 15 ELECTRICAL 1 — PARTIE ELECTRIQUE 1

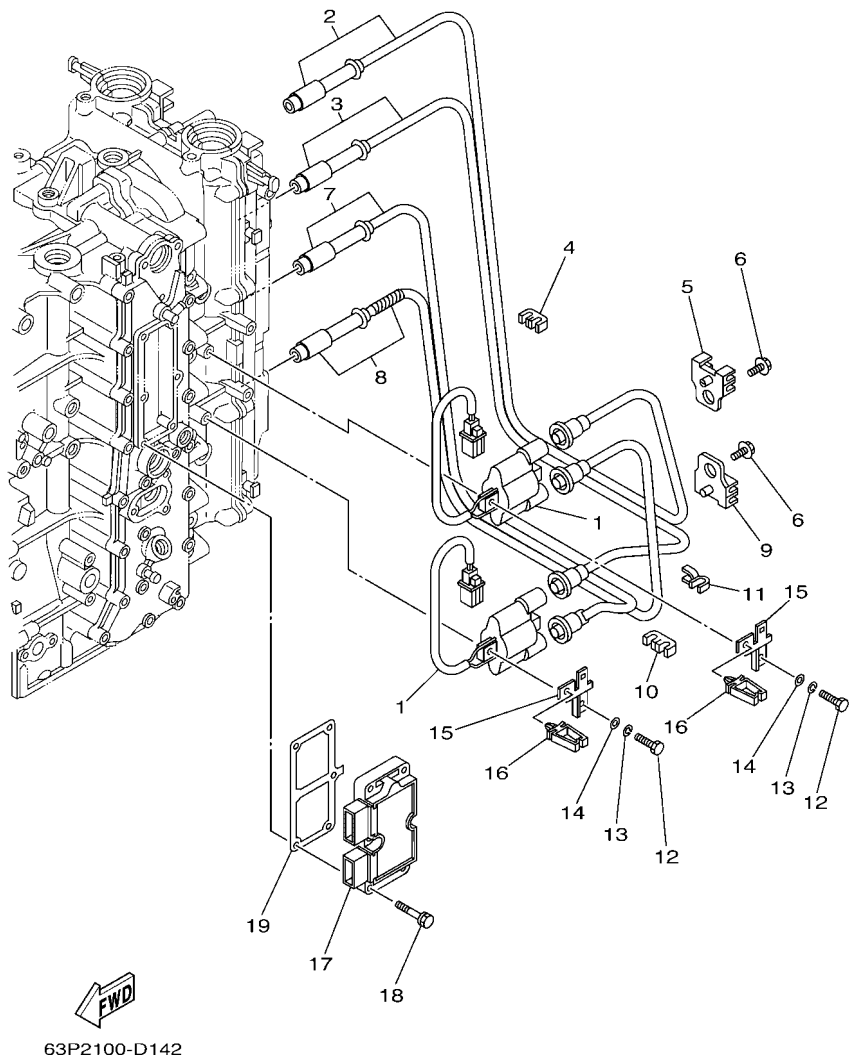


| REF. NO. | PART NO. N° PIECES | DESCRIPTION DESCRIPTION | 63P3 | 64P3 | | | | REMARKS REMARQUES |
|---|---|---|---|---|---|---|---|---|
| 1 | 63P–82310–01 | IGNITION COIL ASSY<br>BOBINE D'ALLUMAGE | 2 | 2 | | | | |
| 2 | 63P–W823A–00 | CORD, HIGH TENSION 1<br>CORDON, HAUTE-TENSION 1 | 1 | 1 | | | | |
| 3 | 63P–W823B–00 | CORD, HIGH TENSION 2<br>CORDON, HAUTE-TENSION 2 | 1 | 1 | | | | |
| 4 | 67F–82361–00 | CLAMP, CORD<br>COLLIER, CORDON | 1 | 1 | | | | |
| 5 | 67F–82362–00 | CLAMP, CORD 2<br>COLLIER, CABLE 2 | 1 | 1 | | | | |
| 6 | 90119–06134 | BOLT, WITH WASHER<br>BOULON, AVEC RONDELLE | 2 | 2 | | | | |
| 7 | 63P–W823C–00 | CORD, HIGH TENSION 3<br>CORDON, HAUTE-TENSION 3 | 1 | 1 | | | | |
| 8 | 63P–W823D–00 | CORD, HIGH TENSION 4<br>CORDON, HAUTE TENSION 4 | 1 | 1 | | | | |
| 9 | 67F–82362–00 | CLAMP, CORD 2<br>COLLIER, CABLE 2 | 1 | 1 | | | | |
| 10 | 67F–82361–00 | CLAMP, CORD<br>COLLIER, CORDON | 1 | 1 | | | | |
| 11 | 90464–07M41 | CLAMP<br>BRIDE | 1 | 1 | | | | |
| 12 | 97095–06025 | BOLT<br>BOULON | 4 | 4 | | | | |
| 13 | 92995–06100 | WASHER, SPRING<br>RONDELLE, GROWER | 4 | 4 | | | | |
| 14 | 92995–06600 | WASHER<br>RONDELLE | 4 | 4 | | | | |
| 15 | 63P–82388–00 | PLATE<br>PLAQUETTE | 2 | 2 | | | | |
| 16 | 90464–05141 | CLAMP<br>BRIDE | 2 | 2 | | | | |
| 17 | 63P–81960–00 | RECTIFIER & REGULATOR ASSY<br>REDRESSEUR REGULATEUR CPLT | 1 | 1 | | | | |
| 18 | 90119–06MA4 | BOLT, WITH WASHER<br>BOULON, AVEC RONDELLE | 6 | 6 | | | | |
| 19 | 63P–81975–00 | PLATE, RECTIFIER FITTING<br>PLAQUE, FIXATION DU REDRESSEUR | 1 | 1 | | | | |

## FIG. 16 ELECTRICAL 2 — PARTIE ELECTRIQUE 2

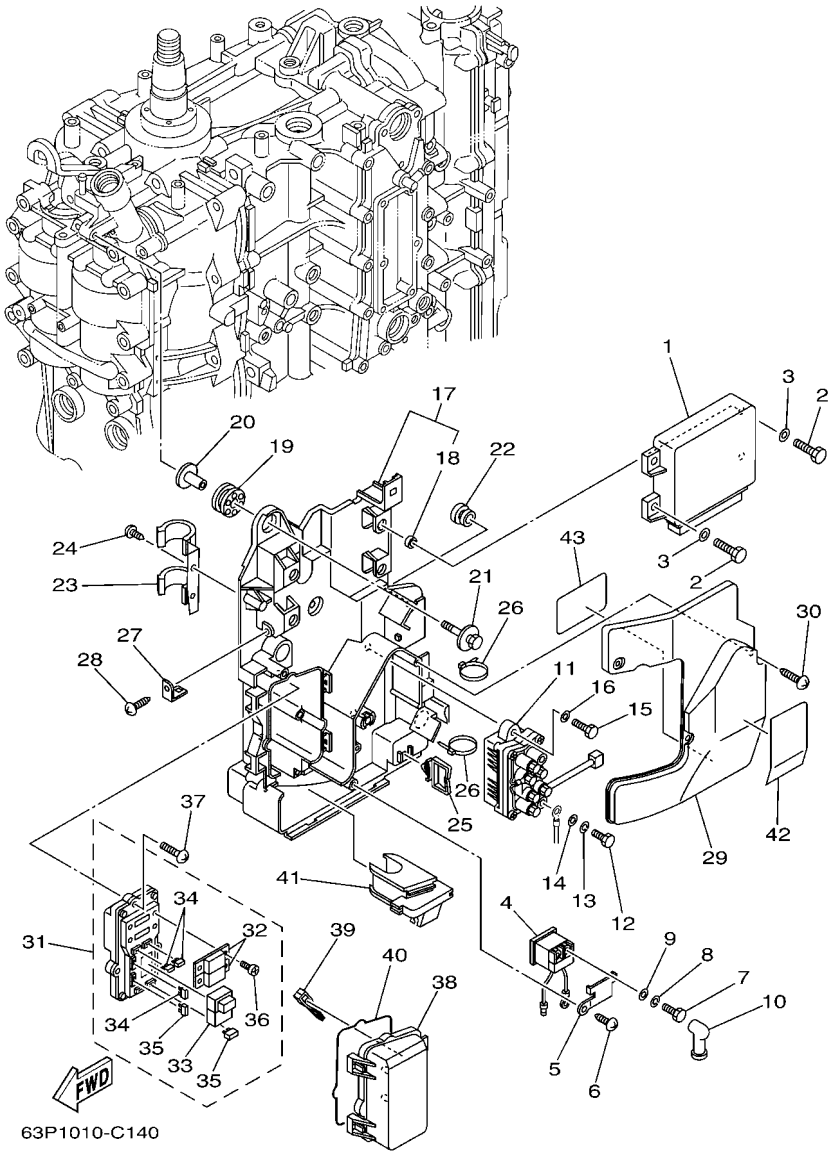


| REF. NO. | PART NO. N° PIECES | DESCRIPTION DESCRIPTION | 63P3 | 64P3 | | | | REMARKS REMARQUES |
|---|---|---|---|---|---|---|---|---|
| 1 | 63P–8591A–01 | ENGINE CONTROL UNIT ASSY<br>BLOC DE CONTROL | 1 | 1 | | | | |
| 2 | 97095–06016 | BOLT<br>BOULON | 4 | 4 | | | | |
| 3 | 92995–06600 | WASHER<br>RONDELLE | 4 | 4 | | | | |
| 4 | 68V–8194A–00 | RELAY<br>RELAIS | 1 | 1 | | | | |
| 5 | 68V–81953–00 | STAY, RELAY<br>SUPPORT, RELAIS | 1 | 1 | | | | |
| 6 | 97780–60620 | SCREW, TAPPING<br>VIS, TETE BOMBEE | 1 | 1 | | | | |
| 7 | 97095–06010 | BOLT<br>BOULON | 2 | 2 | | | | |
| 8 | 92995–06100 | WASHER, SPRING<br>RONDELLE, GROWER | 2 | 2 | | | | |
| 9 | 92995–06600 | WASHER<br>RONDELLE | 2 | 2 | | | | |
| 10 | 6G5–82119–00 | COVER, LEAD WIRE<br>GARNITURE, FIL | 2 | 2 | | | | |
| 11 | 63P–81950–00 | RELAY ASSY<br>RELAIS COMPLET | 1 | 1 | | | | |
| 12 | 97095–06010 | BOLT<br>BOULON | 2 | 2 | | | | |
| 13 | 92995–06100 | WASHER, SPRING<br>RONDELLE, GROWER | 2 | 2 | | | | |
| 14 | 92995–06600 | WASHER<br>RONDELLE | 2 | 2 | | | | |
| 15 | 97013–06020 | BOLT<br>BOULON | 2 | 2 | | | | |
| 16 | 92903–06600 | WASHER, PLATE<br>RONDELLE, PLATE | 2 | 2 | | | | |
| 17 | 63P–81948–00 | BRACKET<br>JOINT TORIQUE | 1 | 1 | | | | |
| 18 | 90387–06010 | .COLLAR<br>.COLLERETTE | 4 | 4 | | | | |
| 19 | 68F–85516–01 | SPACER<br>ENTRETOISE | 3 | 3 | | | | |
| 20 | 68F–86129–00 | COLLAR<br>COLLERETTE | 3 | 3 | | | | |
| 21 | 68F–85119–00 | BOLT<br>BOULON | 3 | 3 | | | | |
| 22 | 90480–10627 | GROMMET<br>PASSE-FIL | 1 | 1 | | | | |
| 23 | 63P–82594–00 | CLAMP<br>BRIDE | 1 | 1 | | | | |
| 24 | 97780–60620 | SCREW, TAPPING<br>VIS, TETE BOMBEE | 1 | 1 | | | | |
| 25 | 90464–23199 | CLAMP<br>BRIDE | 1 | 1 | | | | |
| 26 | 90465–13M18 | CLAMP<br>BRIDE | 3 | 3 | | | | |
| 27 | 68V–85548–00 | HOLDER<br>SUPPORT | 1 | 1 | | | | |

## FIG. 16 ELECTRICAL 2 — PARTIE ELECTRIQUE 2

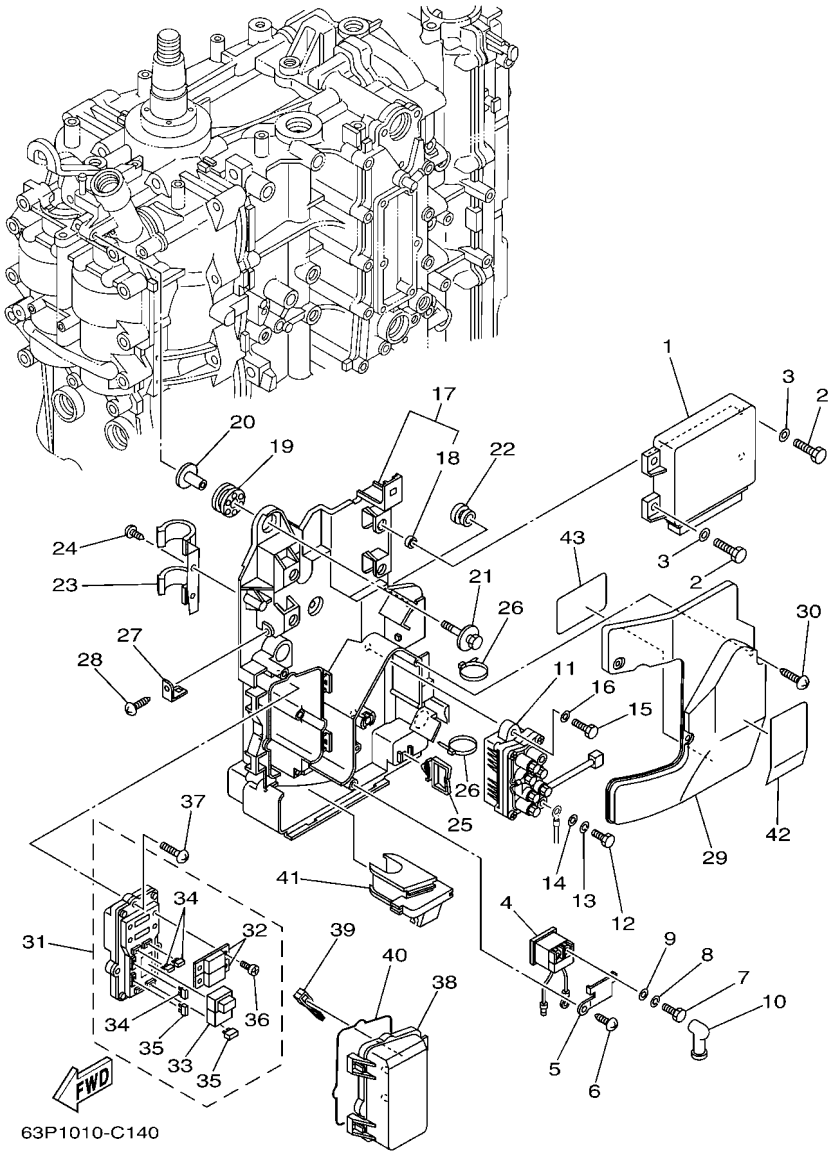


| REF. NO. | PART NO. N° PIECES | DESCRIPTION DESCRIPTION | 63P3 | 64P3 | | | | REMARKS REMARQUES |
|---|---|---|---|---|---|---|---|---|
| 28 | 97780–60620 | SCREW, TAPPING<br>VIS, TETE BOMBEE | 1 | 1 | | | | |
| 29 | 63P–81942–00 | COVER<br>COUVERCLE | 1 | 1 | | | | |
| 30 | 90169–05M00 | SCREW, TRUSS HEAD TAPPING<br>VIS, TETE FRAISEE | 3 | 3 | | | | |
| 31 | 63P–82170–00 | FUSE BOX ASSY<br>BOITE A FUSIBLES | 1 | 1 | | | | |
| 32 | 63P–82151–00 | .FUSE (50A)<br>.FUSIBLE (50A) | 2 | 2 | | | | |
| 33 | 68F–8195A–00 | .RELAY ASSY<br>.RELAIS COMPLET | 1 | 1 | | | | |
| 34 | 67F–82151–00 | .FUSE (20A)<br>.FUSIBLE (20A) | 3 | 3 | | | | |
| 35 | 67F–82151–10 | .FUSE (30A)<br>.FUSIBLE (30A) | 2 | 2 | | | | |
| 36 | 68F–82846–00 | .SCREW, PAN HEAD (M5)<br>.VIS, TETE TRONCONIQUE (M5) | 4 | 4 | | | | |
| 37 | 97780–50620 | SCREW, TAPPING<br>VIS, TETE BOMBEE | 3 | 3 | | | | |
| 38 | 60V–85544–00 | CASE<br>BOITIER | 1 | 1 | | | | |
| 39 | 67F–2812A–00 | PULLER, FUSE<br>TENDEUR, FUSIBLE | 1 | 1 | | | | |
| 40 | 60V–82157–00 | DAMPER<br>AMORTISSEUR | 1 | 1 | | | | |
| 41 | 63P–81336–00 | GROMMET<br>OEILLET CAOUTCHOUC | 1 | 1 | | | | |
| 42 | 63P–81919–00 | GRAPHIC, REGULATOR<br>ADHESIF, REGULATEUR | 1 | 1 | | | | |
| 43 | 63P–81919–10 | GRAPHIC, REGULATOR<br>ADHESIF, REGULATEUR | 1 | 1 | | | | |

## FIG. 17 ELECTRICAL 3 — PARTIE ELECTRIQUE 3

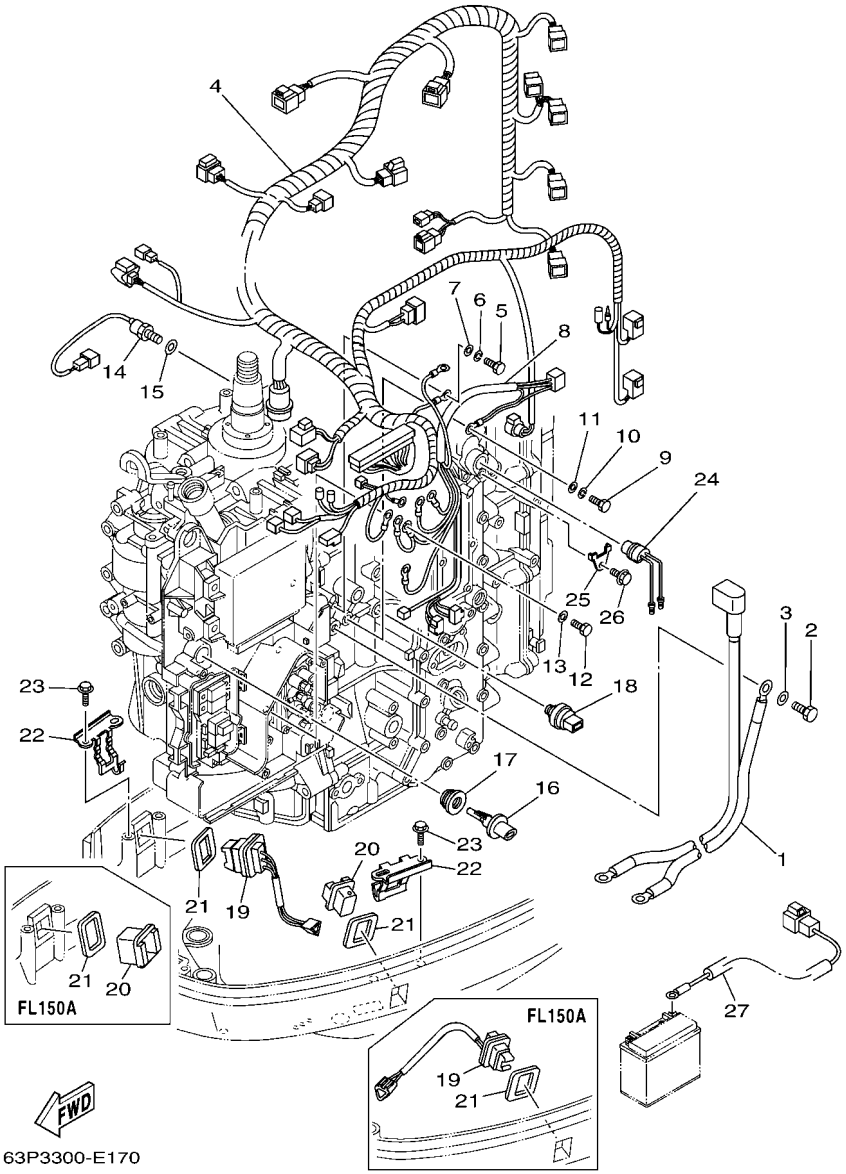


| REF. NO. | PART NO. N° PIECES | DESCRIPTION DESCRIPTION | 63P3 | 64P3 | | | | REMARKS REMARQUES |
|---|---|---|---|---|---|---|---|---|
| 1 | 63P–82105–00 | WIRE HARNESS<br>FAISCEAU DE FILS | 1 | 1 | | | | |
| 2 | 97095–08016 | BOLT<br>BOULON | 1 | 1 | | | | |
| 3 | 92995–08600 | WASHER<br>RONDELLE | 1 | 1 | | | | |
| 4 | 63P–82590–01 | WIRE HARNESS ASSY<br>FAISCEAU DE FILS COMPLET | 1 | 1 | | | | |
| 5 | 97095–06020 | BOLT<br>BOULON | 1 | 1 | | | | |
| 6 | 92995–06100 | WASHER, SPRING<br>RONDELLE, GROWER | 1 | 1 | | | | |
| 7 | 92995–06600 | WASHER<br>RONDELLE | 1 | 1 | | | | |
| 8 | 63P–8259M–00 | WIRE HARNESS ASSY 2<br>FAISCEAU DE FILS | 1 | 1 | | | | |
| 9 | 97095–06020 | BOLT<br>BOULON | 1 | 1 | | | | |
| 10 | 92995–06100 | WASHER, SPRING<br>RONDELLE, GROWER | 1 | 1 | | | | |
| 11 | 92995–06600 | WASHER<br>RONDELLE | 1 | 1 | | | | |
| 12 | 97095–06012 | BOLT<br>BOULON | 1 | 1 | | | | |
| 13 | 92995–06600 | WASHER<br>RONDELLE | 1 | 1 | | | | |
| 14 | 61A–85790–00 | THERMOSENSOR ASSY<br>SENSITOMETRE | 1 | 1 | | | | |
| 15 | 92990–10600 | WASHER, PLATE<br>RONDELLE, PLATE | 1 | 1 | | | | |
| 16 | 63P–85886–00 | SENSOR, AIR TEMPERATURE<br>SONDE | 1 | 1 | | | | |
| 17 | 63P–14435–00 | GROMMET<br>RONDELLE CAOUTCHOUC | 1 | 1 | | | | |
| 18 | 69J–83651–00 | SENDER, OIL PRESSURE<br>RACCORD, PRESSION D'HUILE | 1 | 1 | | | | |
| 19 | 69J–82563–00 | TRIM & TILT SWITCH ASSY<br>INCLINER ET PARER COMMUTATEUR | 1 | 1 | | | | |
| 20 | 69J–42723–00–8D | COVER, BOTTOM<br>COUVERCLE | 1 | 1 | | | | |
| 21 | 69J–82587–00 | GASKET<br>JOINT | 2 | 2 | | | | |
| 22 | 63P–83614–00 | BRACKET<br>SUPPORT | 2 | 2 | | | | |
| 23 | 90109–06M86 | BOLT<br>BOULON | 4 | 4 | | | | |
| 24 | 69J–82560–00 | THERMO SWITCH ASSY<br>THERMO-CONTACT COMPLET | 1 | 1 | | | | |
| 25 | 6E9–82588–00 | PLATE<br>PLAQUE | 1 | 1 | | | | |
| 26 | 90109–06M86 | BOLT<br>BOULON | 1 | 1 | | | | |
| 27 | 68F–81949–00 | WIRE, LEAD (ISOLATOR CABLE)<br>FIL (ISOLATOR CABLE) | 1 | 1 | | | | AP<br>AP |

## FIG. 18 STARTING MOTOR — DEMARREUR ELECTRIQUE

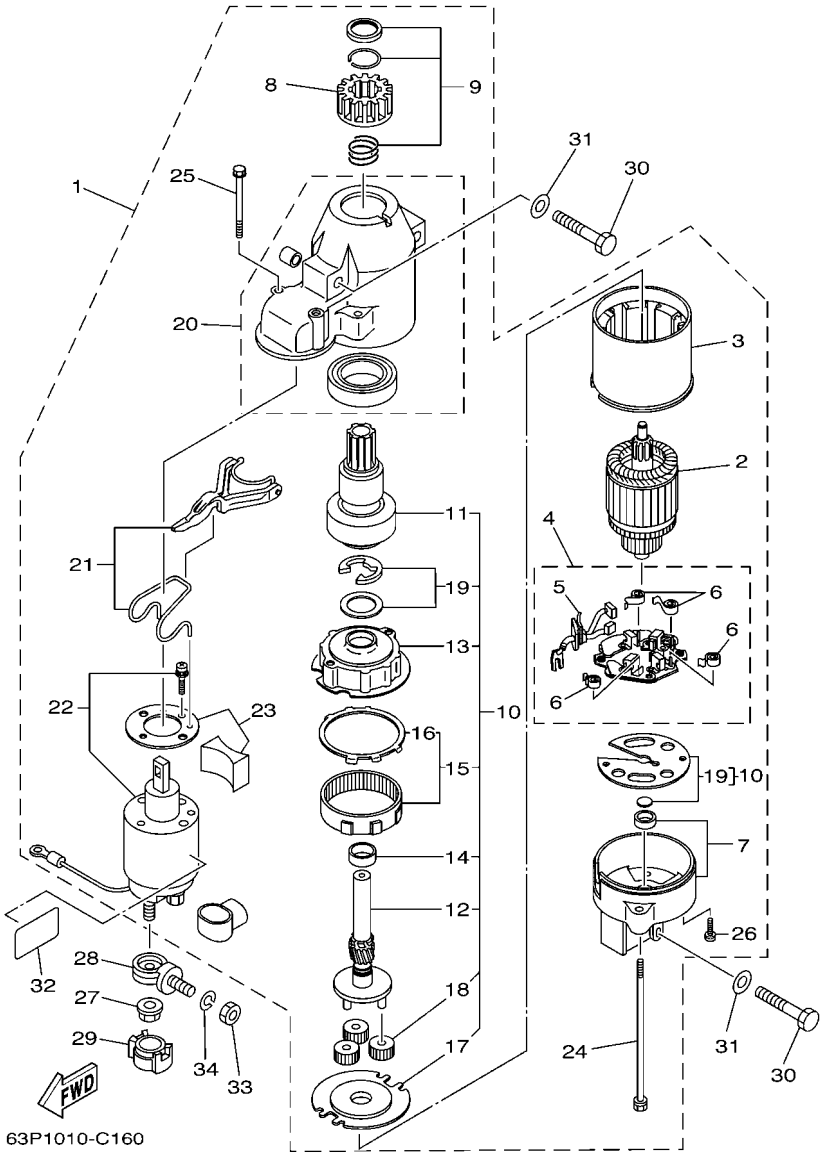


| REF. NO. | PART NO. N° PIECES | DESCRIPTION DESCRIPTION | 63P3 | 64P3 | | | | REMARKS REMARQUES |
|---|---|---|---|---|---|---|---|---|
| 1 | 63P–81800–00 | STARTING MOTOR ASSY<br>DEMARREUR ELECTRIQUE COMPLET | 1 | 1 | | | | |
| 2 | 67F–81850–00 | .ARMATURE ASSY<br>.INDUIT | 1 | 1 | | | | |
| 3 | 67F–81810–00 | .STATOR ASSY<br>.STATOR COMPLET | 1 | 1 | | | | |
| 4 | 69J–81840–00 | .BRUSH HOLDER ASSY<br>.SUPPORT DE CHARBON | 1 | 1 | | | | |
| 5 | 69J–81801–00 | ..BRUSH SET<br>..CHARBON | 1 | 1 | | | | |
| 6 | 67F–81813–00 | ..SPRING, BRUSH<br>..RESSORT, DE CHARBON | 4 | 4 | | | | |
| 7 | 68F–81820–00 | .REAR BRACKET ASSY<br>.SUPPORT ARRIERE COMPLET | 1 | 1 | | | | |
| 8 | 67F–81808–00 | .PINION ASSY<br>.PIGNON | 1 | 1 | | | | |
| 9 | 67F–81857–00 | .PINION STOPPER SET<br>.BUTEE PIGNON | 1 | 1 | | | | |
| 10 | 67F–81807–00 | .GEAR ASSY, STARTING MOTOR<br>.PIGNON, DEMARREUR ELECTRIQUE | 1 | 1 | | | | |
| 11 | 67F–81832–00 | ..CLUTCH, OVER RUN<br>..EMBRAYAGE, ROUE LIBRE | 1 | 1 | | | | |
| 12 | 67F–81836–00 | ..SHAFT, PINION<br>..AXE, PIGNON | 1 | 1 | | | | |
| 13 | 67F–81821–00 | ..BRACKET, CENTER 1<br>..SUPPORT, CENTRE 1 | 1 | 1 | | | | |
| 14 | 67F–81841–00 | ..BEARING<br>..ROULEMENT | 1 | 1 | | | | |
| 15 | 67F–81891–00 | ..GEAR, RING<br>..ROUE DENTEE | 1 | 1 | | | | |
| 16 | 67F–8183R–00 | ...GASKET<br>...JOINT | 1 | 1 | | | | |
| 17 | 67F–81830–00 | ..BRACKET, CENTER 2<br>..SUPPORT, CENTRE 2 | 1 | 1 | | | | |
| 18 | 60V–8183T–00 | ..GEAR, IDLER<br>..PIGNON, INTERMEDIAIRE | 3 | 3 | | | | |
| 19 | 67F–81809–00 | ..WASHER KIT<br>..JEU DE RONDELLES | 1 | 1 | | | | |
| 20 | 69J–81842–00 | .COVER<br>.COUVERCLE | 1 | 1 | | | | |
| 21 | 69J–81839–00 | .LEVER ASSY<br>.LEVIER COMPLET | 1 | 1 | | | | |
| 22 | 63P–81941–00 | .STARTER RELAY ASSY<br>.LANCEUR RELAIS (ENS.) | 1 | 1 | | | | |
| 23 | 69J–81869–00 | .COVER, DUST<br>.COUVERCLE, POUSSIERE | 1 | 1 | | | | |
| 24 | 6K7–81826–10 | .BOLT<br>.BOULON | 2 | 2 | | | | |
| 25 | 69J–81828–00 | .BOLT 2<br>.RONDELLE, BUTEE 2 | 2 | 2 | | | | |
| 26 | 67F–81846–00 | .SCREW<br>.VIS | 2 | 2 | | | | |
| 27 | 90179–08003 | NUT<br>ECROU | 1 | 1 | | | | |

## FIG. 18 STARTING MOTOR — DEMARREUR ELECTRIQUE

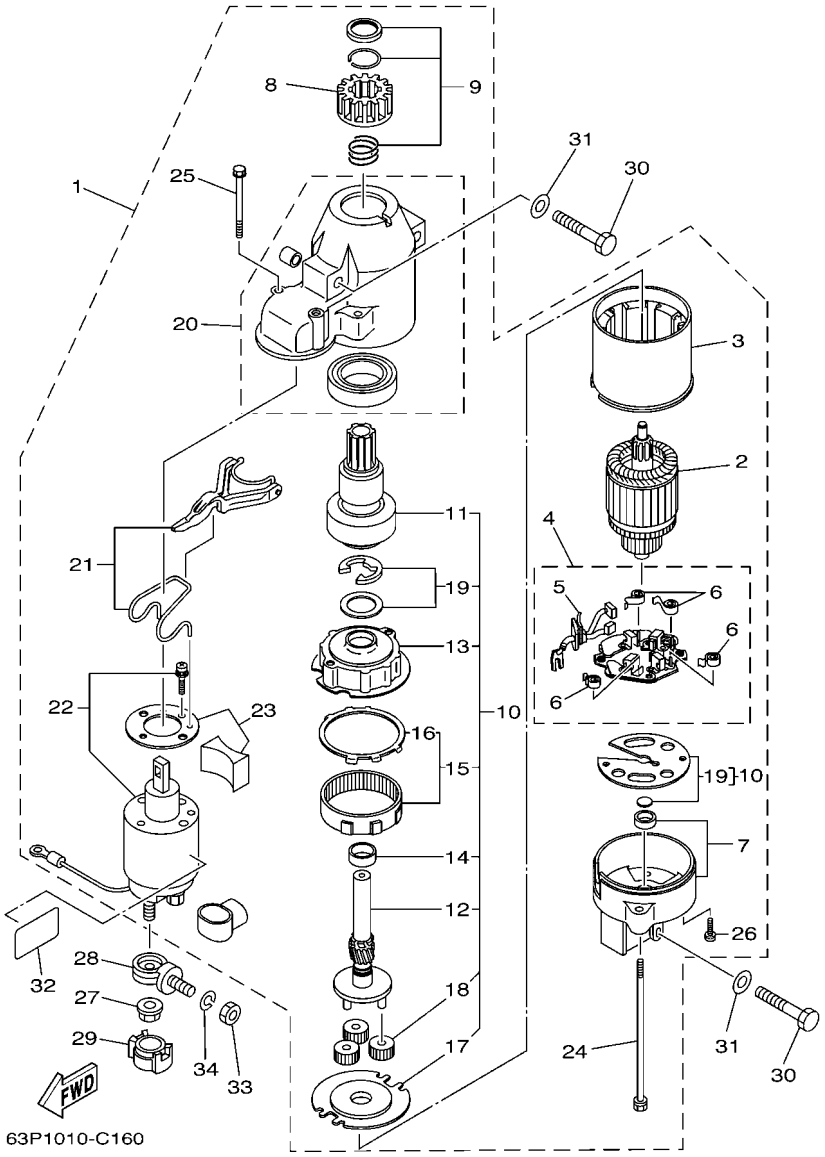


| REF. NO. | PART NO. N° PIECES | DESCRIPTION DESCRIPTION | 63P3 | 64P3 | | | | REMARKS REMARQUES |
|---|---|---|---|---|---|---|---|---|
| 28 | 60V–81925–00 | TERMINAL<br>BORNE | 1 | 1 | | | | |
| 29 | 68F–82582–00 | COVER, WIRE HARNESS<br>COUVERCLE, FAISCEAU DE FILS | 1 | 1 | | | | |
| 30 | 97013–08045 | BOLT<br>BOULON | 3 | 3 | | | | |
| 31 | 92903–08600 | WASHER, PLATE<br>RONDELLE, PLATE | 3 | 3 | | | | |
| 32 | 67F–83627–01 | LABEL, CAUTION 7<br>ETIQUETTE, RECOMMANDATION 7 | 1 | 1 | | | | |
| 33 | 95333–08600 | NUT<br>ECROU | 1 | 1 | | | | |
| 34 | 92903–08100 | WASHER, SPRING<br>RONDELLE, GROWER | 1 | 1 | | | | |

## FIG. 19 BOTTOM COWLING — CAPOT INFERIEUR

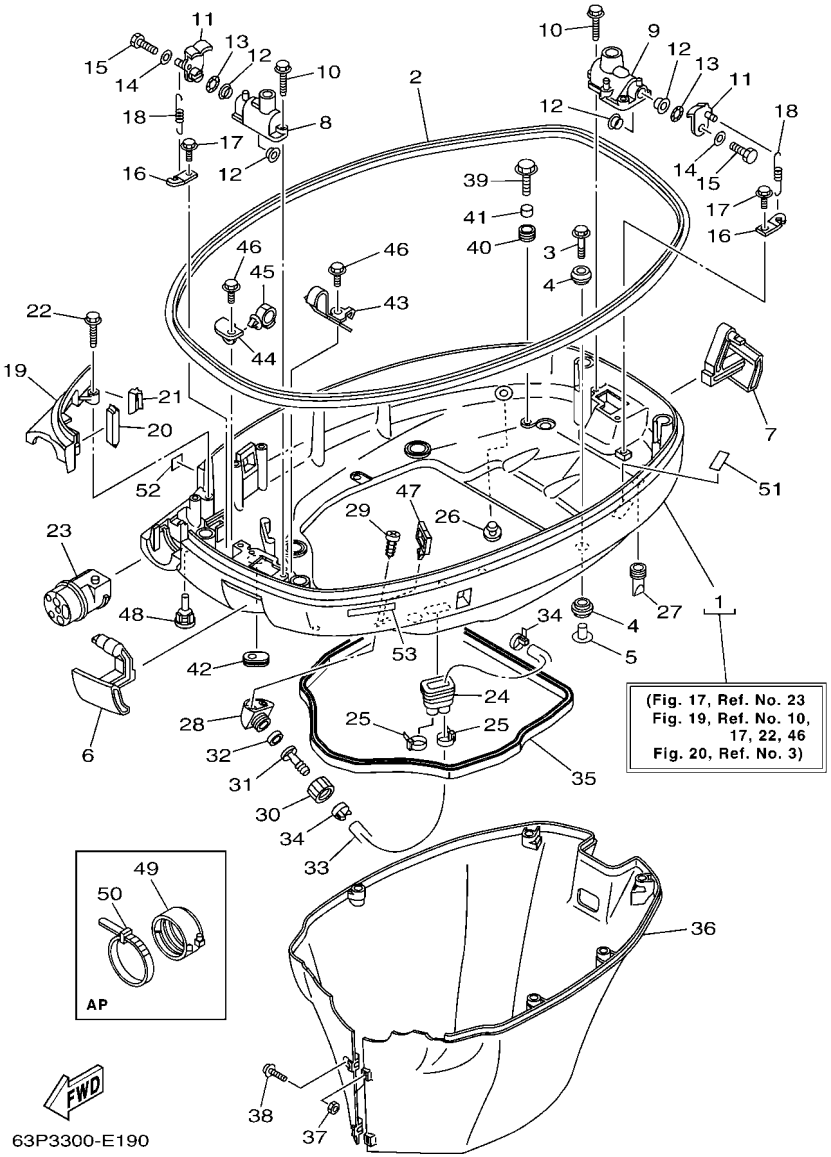


| REF. NO. | PART NO. N° PIECES | DESCRIPTION DESCRIPTION | 63P3 | 64P3 | | | | REMARKS REMARQUES |
|---|---|---|---|---|---|---|---|---|
| 1 | 63P–42710–00–8D | BOTTOM COWLING ASSY<br>ENS. EMBASE | 1 | 1 | | | | |
| 2 | 63P–42615–00 | SEAL<br>JOINT | 1 | 1 | | | | |
| 3 | 90119–08M22 | BOLT, WITH WASHER<br>BOULON, AVEC RONDELLE | 4 | 4 | | | | |
| 4 | 90480–22M81 | GROMMET<br>PASSE-FIL | 8 | 8 | | | | |
| 5 | 90387–08M37 | COLLAR<br>COLLERETTE | 4 | 4 | | | | |
| 6 | 63P–42815–00–8D | LEVER, CLAMP<br>LEVIER, PRESSE | 1 | 1 | | | | |
| 7 | 63P–42816–00–8D | LEVER, CLAMP<br>LEVIER, PRESSE | 1 | 1 | | | | |
| 8 | 68F–42828–03–94 | PLATE, CLAMP<br>PLAQUE, PRESSE | 1 | 1 | | | | |
| 9 | 63P–42828–00–94 | PLATE, CLAMP<br>PLAQUE, PRESSE | 1 | 1 | | | | |
| 10 | 90109–06M82 | BOLT<br>BOULON | 4 | 4 | | | | |
| 11 | 63P–42818–01 | LEVER, CLAMP<br>LEVIER, PRESSE | 2 | 2 | | | | |
| 12 | 90386–15M73 | BUSH<br>DOUILLE | 4 | 4 | | | | |
| 13 | 90206–15M18 | WASHER, WAVE<br>RONDELLE, ONDULEE | 2 | 2 | | | | |
| 14 | 90201–06068 | WASHER, PLATE<br>RONDELLE, PLATE | 2 | 2 | | | | |
| 15 | 97095–06020 | BOLT<br>BOULON | 2 | 2 | | | | |
| 16 | 64D–43144–00 | HOOK, SPRING<br>CROCHET | 2 | 2 | | | | |
| 17 | 90109–06M86 | BOLT<br>BOULON | 2 | 2 | | | | |
| 18 | 90506–16M34 | SPRING, TENSION<br>RESSORT, TENSION | 2 | 2 | | | | |
| 19 | 63P–42738–00–8D | PLATE, FITTING<br>ETRIER | 1 | 1 | | | | |
| 20 | 63P–42717–00 | RUBBER, SEAL 2<br>JOINT EN CAOUTCHOUC 2 | 1 | 1 | | | | |
| 21 | 63P–42718–00 | RUBBER, SEAL 3<br>JOINT | 1 | 1 | | | | |
| 22 | 90109–06M82 | BOLT<br>BOULON | 2 | 2 | | | | |
| 23 | 63P–42725–00 | GROMMET<br>PASSE-FIL | 1 | 1 | | | | |
| 24 | 6H1–42726–21 | GROMMET<br>PASSE-FIL | 1 | 1 | | | | |
| 25 | 90465–11M10 | CLAMP<br>BRIDE | 2 | 2 | | | | |
| 26 | 6P2–44391–00 | NIPPLE, HOSE<br>RACCORD D'ESSENCE | 1 | 1 | | | | |
| 27 | 61A–42717–00 | RUBBER, SEAL 2<br>JOINT EN CAOUTCHOUC 2 | 4 | 4 | | | | |

## FIG. 19 BOTTOM COWLING — CAPOT INFERIEUR

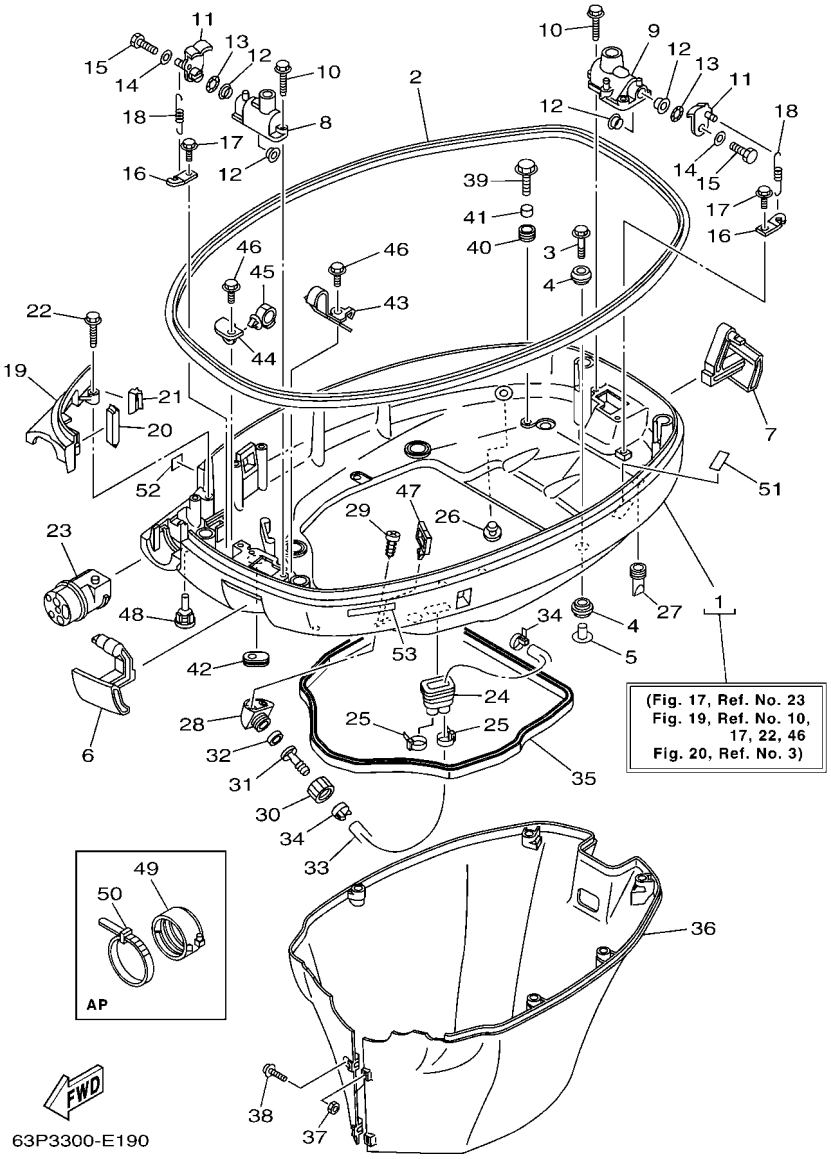


| REF. NO. | PART NO. N° PIECES | DESCRIPTION DESCRIPTION | 63P3 | 64P3 | | | | REMARKS REMARQUES |
|---|---|---|---|---|---|---|---|---|
| 28 | 68T–12572–00 | ADAPTER<br>ADAPTATEUR | 1 | 1 | | | | |
| 29 | 97780–60520 | SCREW, TAPPING<br>VIS, TETE BOMBEE | 2 | 2 | | | | |
| 30 | 6R3–12581–00 | JOINT, HOSE 1<br>JOINT DE TUYAU | 1 | 1 | | | | |
| 31 | 6R3–12582–00 | JOINT, HOSE 2<br>RACCORD DE TUYAU 1 | 1 | 1 | | | | |
| 32 | 6R3–12583–00 | GASKET, HOSE JOINT<br>JOINT | 1 | 1 | | | | |
| 33 | 63P–42541–00 | PIPE 1<br>DURITE 1 | 1 | 1 | | | | |
| 34 | 90465–11M10 | CLAMP<br>BRIDE | 2 | 2 | | | | |
| 35 | 63P–42716–00 | RUBBER, SEAL 1<br>JOINT EN CAOUTCHOUC 1 | 1 | 1 | | | | |
| 36 | 63P–42741–01–8D | APRON<br>CAPOT LATERAL | 1 | 1 | | | | |
| 37 | 95380–06600 | NUT, HEXAGON<br>ECROU | 2 | 2 | | | | |
| 38 | 90159–06M28 | SCREW, WITH WASHER<br>VIS, AVEC RONDELLE | 2 | 2 | | | | |
| 39 | 90109–06M80 | BOLT<br>BOULON | 4 | 4 | | | | |
| 40 | 90480–13M24 | GROMMET<br>PASSE-FIL | 4 | 4 | | | | |
| 41 | 90387–06M43 | COLLAR<br>COLLERETTE | 4 | 4 | | | | |
| 42 | 61A–42727–00 | GROMMET<br>PASSE-FIL | 1 | 1 | | | | |
| 43 | 63P–42811–01 | STAY<br>SUPPORT | 1 | 1 | | | | |
| 44 | 63P–42756–00 | STAY, CLAMP<br>SUPPORT, COLLIER | 1 | 1 | | | | |
| 45 | 90464–20181 | CLAMP<br>BRIDE | 1 | 1 | | | | |
| 46 | 90109–06M86 | BOLT<br>BOULON | 2 | 2 | | | | |
| 47 | 90464–23199 | CLAMP<br>BRIDE | 1 | 1 | | | | |
| 48 | 6H4–42748–00 | GROMMET<br>PASSE-FIL | 2 | 2 | | | | |
| 49 | 68F–42753–00 | FASTNER<br>ATTACHE | 1 | 1 | | | | AP<br>AP |
| 50 | 90464–20258 | CLAMP<br>BRIDE | 1 | 1 | | | | AP<br>AP |
| 51 | 67F–82377–00 | LABEL<br>ETIQUETTE | 1 | 1 | | | | |
| 52 | 6A1–28176–00 | LABEL, CAUTION<br>ETIQUETTE, RECOMMANDATION | 1 | 1 | | | | |
| 53 | 6E3–8257H–00 | PLATE, MARK<br>PLAQUE, ADHESIF | 1 | 1 | | | | |

## FIG. 20 CONTROL — COMMANDE

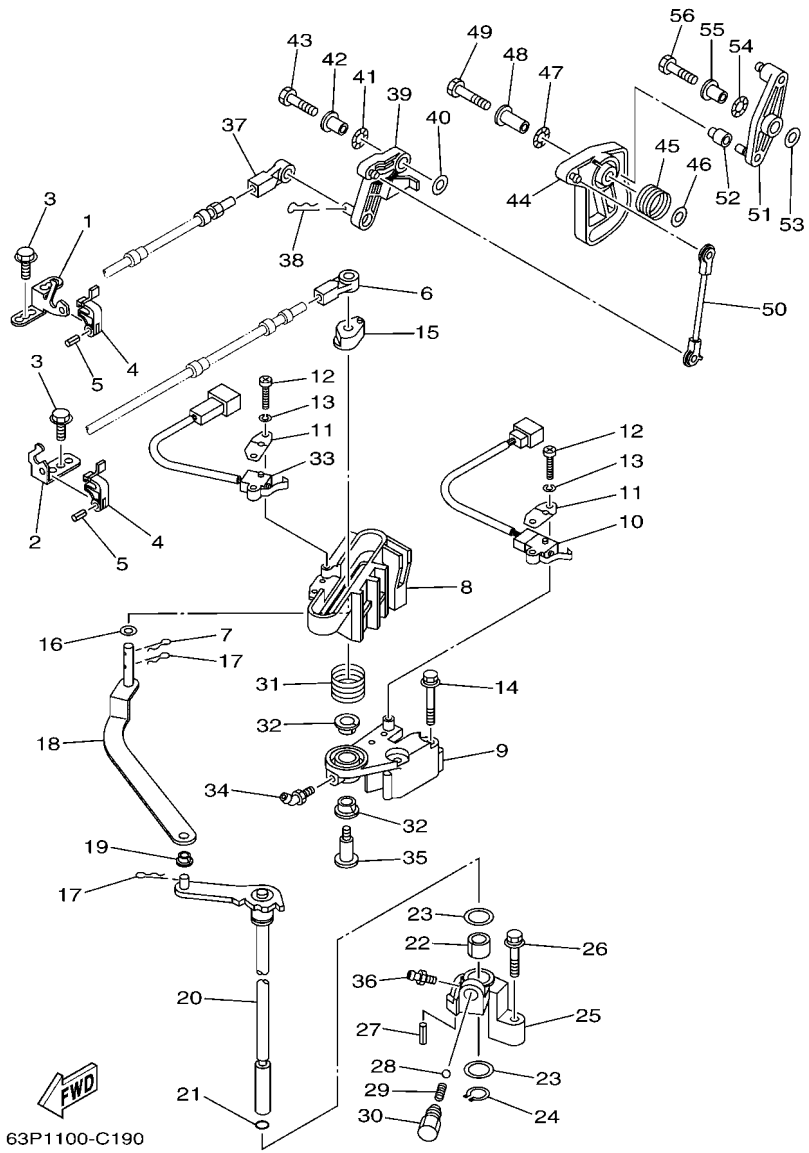


| REF. NO. | PART NO. N° PIECES | DESCRIPTION DESCRIPTION | 63P3 | 64P3 | | | | REMARKS REMARQUES |
|---|---|---|---|---|---|---|---|---|
| 1 | 63P–48531–00 | BRACKET, REMOTE CONTROL 1<br>ETRIER 1, COMMANDE A DISTANCE | 1 | 1 | | | | |
| 2 | 63P–48532–00 | BRACKET, REMOTE CONTROL 2<br>ETRIER 2, COMMANDE A DISTANCE | 1 | 1 | | | | |
| 3 | 90109–06M86 | BOLT<br>BOULON | 3 | 3 | | | | |
| 4 | 63P–48538–00 | CLAMP, CABLE 1<br>COLLIER | 2 | 2 | | | | |
| 5 | 91690–30010 | PIN, SPRING<br>AGRAFFE | 2 | 2 | | | | |
| 6 | 6E5–48344–00 | CABLE END, REMOTE CONTROL<br>CHAPE CABLE | 1 | 1 | | | | |
| 7 | 90468–18008 | CLIP<br>JONC | 1 | 1 | | | | |
| 8 | 63P–44176–00–1S | BRACKET<br>SUPPORT | 1 | 1 | | | | |
| 9 | 63P–44117–00–1S | BRACKET<br>SUPPORT | 1 | 1 | | | | |
| 10 | 69J–8259F–00 | SWITCH ASSY<br>COMMUTATEUR | 1 | 1 | | | | |
| 11 | 61A–82588–01 | PLATE<br>PLAQUE | 2 | 2 | | | | |
| 12 | 97885–04016 | SCREW, PAN HEAD<br>VIS, A ENCOCHE | 4 | 4 | | | | |
| 13 | 92995–04100 | WASHER<br>RONDELLE | 4 | 4 | | | | |
| 14 | 97595–06550 | BOLT, WITH WASHER<br>VIS HEXAGONAL AVC RONDELLE | 2 | 2 | | | | |
| 15 | 63P–44122–00 | BUSHING, SHIFT ROD LEVER<br>DOUILLE, LEVIER D'EMBRAYAGE | 1 | 1 | | | | |
| 16 | 90202–08M20 | WASHER, PLATE<br>RONDELLE, PLATE | 1 | 1 | | | | |
| 17 | 90468–18008 | CLIP<br>JONC | 2 | 2 | | | | |
| 18 | 63P–44121–00 | LEVER, SHIFT ROD<br>LEVIER, TIGE D'INVERSION | 1 | 1 | | | | |
| 19 | 90386–06M12 | BUSH<br>DOUILLE | 1 | 1 | | | | |
| 20 | 63P–44120–00 | HANDLE GEAR SHIFT ASSY<br>LEVIER D'EMBRAYAGE | 1 | 1 | | | | |
| 21 | 93210–09165 | O-RING<br>JOINT TORIQUE | 1 | 1 | | | | |
| 22 | 90386–16M66 | BUSH<br>DOUILLE | 1 | 1 | | | | |
| 23 | 90202–16061 | WASHER, PLATE<br>RONDELLE, PLATE | 2 | 2 | | | | |
| 24 | 93410–16006 | CIRCLIP<br>CLIPS | 1 | 1 | | | | |
| 25 | 63P–44118–00–8D | BRACKET<br>SUPPORT | 1 | 1 | | | | |
| 26 | 97575–06535 | BOLT, WITH WASHER<br>VIS HEXAGONAL AVC RONDELLE | 1 | 1 | | | | |
| 27 | 91690–30010 | PIN, SPRING<br>AGRAFFE | 1 | 1 | | | | |

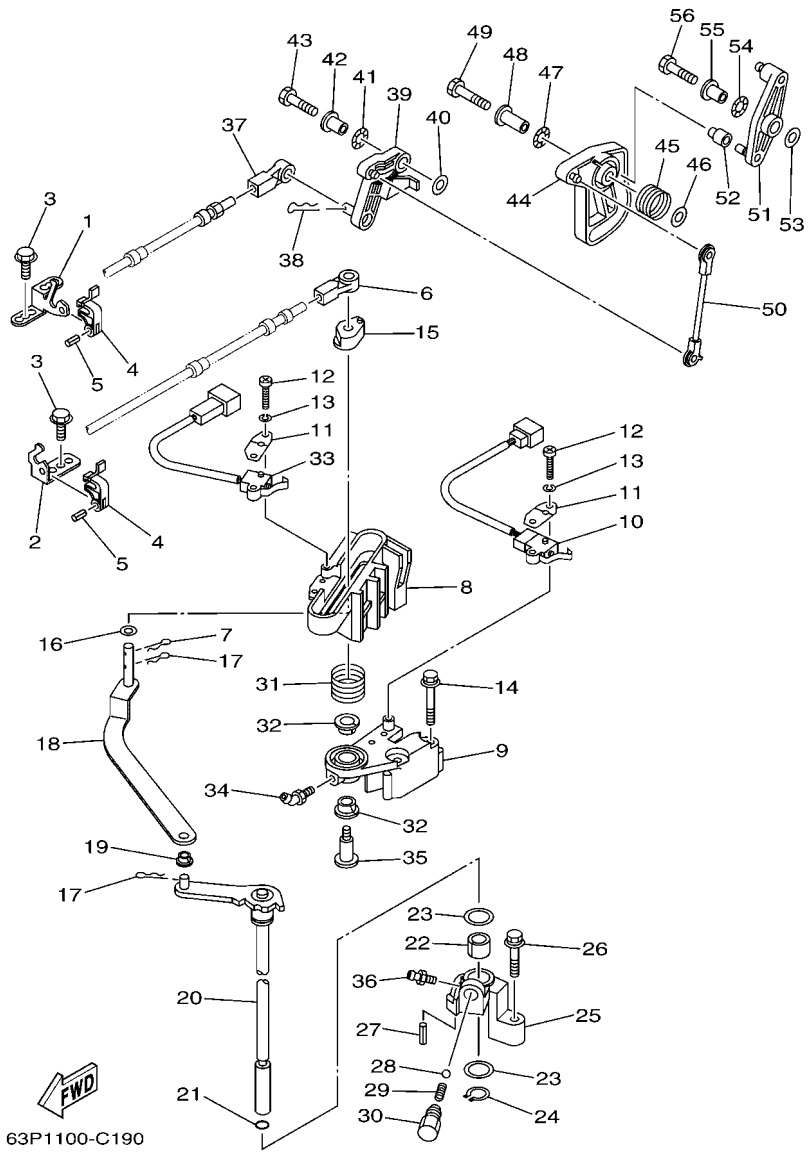


## FIG. 20 CONTROL — COMMANDE

| REF. NO. | PART NO. N° PIECES | DESCRIPTION DESCRIPTION | 63P3 | 64P3 | | | | REMARKS REMARQUES |
|---|---|---|---|---|---|---|---|---|
| 28 | 93501–04M02 | BALL<br>BILLE | 1 | 1 | | | | |
| 29 | 90501–12082 | SPRING, COMPRESSION<br>RESSORT, COMPRESSION | 1 | 1 | | | | |
| 30 | 648–42715–00 | BUSHING<br>COUSSINET | 1 | 1 | | | | |
| 31 | 90508–20M31 | SPRING, TORSION<br>RESSORT, TORSION | 1 | 1 | | | | |
| 32 | 90386–12069 | BUSH<br>DOUILLE | 2 | 2 | | | | |
| 33 | 60V–8259F–00 | SWITCH ASSY<br>COMMUTATEUR | 1 | 1 | | | | |
| 34 | 93700–06M01 | NIPPLE, GREASE<br>PION | 1 | 1 | | | | |
| 35 | 90109–08019 | BOLT<br>BOULON | 1 | 1 | | | | |
| 36 | 93700–06M03 | NIPPLE, GREASE<br>PION | 1 | 1 | | | | |
| 37 | 6E5–48344–00 | CABLE END, REMOTE CONTROL<br>CHAPE CABLE | 1 | 1 | | | | |
| 38 | 90468–18008 | CLIP<br>JONC | 1 | 1 | | | | |
| 39 | 63P–42154–00 | LEVER, THROTTLE CONTROL<br>LEVIER DE COMMANDE D'AVANCE | 1 | 1 | | | | |
| 40 | 90201–06M31 | WASHER, PLATE<br>RONDELLE, PLATE | 1 | 1 | | | | |
| 41 | 90206–10M04 | WASHER, WAVE<br>RONDELLE, ONDULEE | 1 | 1 | | | | |
| 42 | 90387–06M29 | COLLAR<br>COLLERETTE | 1 | 1 | | | | |
| 43 | 97095–06025 | BOLT<br>BOULON | 1 | 1 | | | | |
| 44 | 63P–41213–00 | CAM, ACCEL.<br>CAME, ACCELERATION | 1 | 1 | | | | |
| 45 | 69J–44135–00 | SPRING<br>RESSORT | 1 | 1 | | | | |
| 46 | 90201–06M31 | WASHER, PLATE<br>RONDELLE, PLATE | 1 | 1 | | | | |
| 47 | 90206–10M04 | WASHER, WAVE<br>RONDELLE, ONDULEE | 1 | 1 | | | | |
| 48 | 90387–06M82 | COLLAR<br>COLLERETTE | 1 | 1 | | | | |
| 49 | 97095–06035 | BOLT<br>BOULON | 1 | 1 | | | | |
| 50 | 63P–41237–00 | JOINT, LINK<br>RACCORD | 1 | 1 | | | | |
| 51 | 63P–42157–00 | LEVER, THROTTLE<br>LEVIER DE AVANCE | 1 | 1 | | | | |
| 52 | 68V–42171–00 | BUSHING<br>COUSSINET | 1 | 1 | | | | |
| 53 | 90201–06M31 | WASHER, PLATE<br>RONDELLE, PLATE | 1 | 1 | | | | |
| 54 | 90206–10M04 | WASHER, WAVE<br>RONDELLE, ONDULEE | 1 | 1 | | | | |

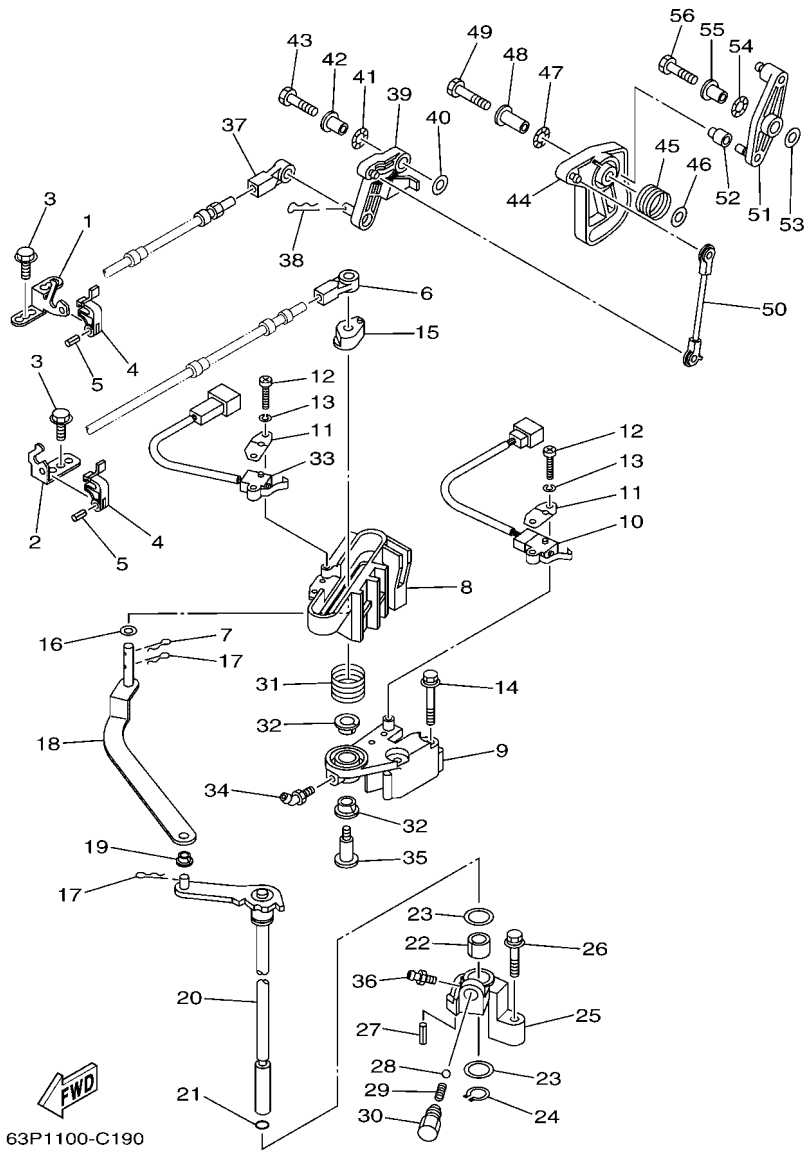


## FIG. 20 CONTROL — COMMANDE

| REF. NO. | PART NO. N° PIECES | DESCRIPTION DESCRIPTION | 63P3 | 64P3 | | | | REMARKS REMARQUES |
|---|---|---|---|---|---|---|---|---|
| 55 | 90387–06M29 | COLLAR COLLERETTE | 1 | 1 | | | | |
| 56 | 97095–06025 | BOLT BOULON | 1 | 1 | | | | |

## FIG. 21 BRACKET 1 SUPPORT 1

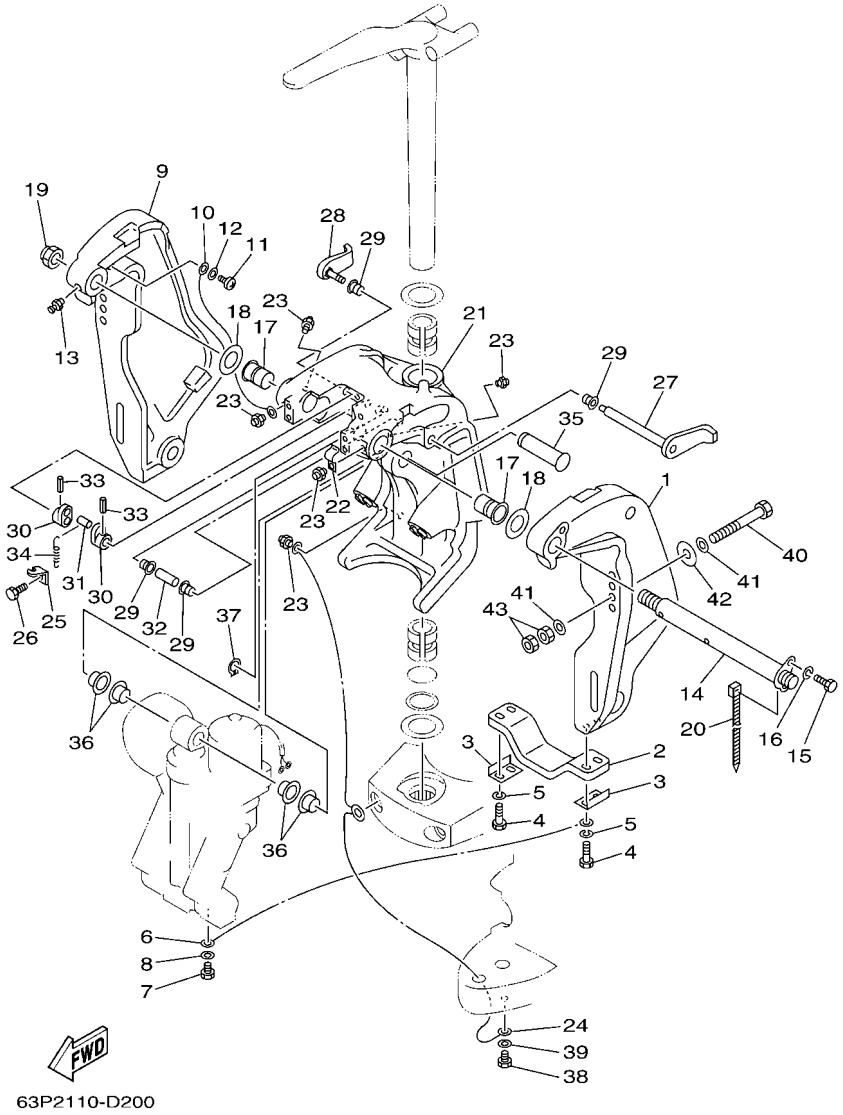


| REF. NO. | PART NO. N° PIECES | DESCRIPTION DESCRIPTION | 63P3 | 64P3 | | | | REMARKS REMARQUES |
|---|---|---|---|---|---|---|---|---|
| 1 | 64E–43111–02–8D | BRACKET, CLAMP 1<br>PRESSE 1 | 1 | 1 | | | | |
| 2 | 6G5–45251–02 | ANODE<br>ANODE | 1 | 1 | | | | |
| 3 | 6G5–44526–00 | PLATE<br>PLAQUE | 2 | 2 | | | | |
| 4 | 97095–06030 | BOLT<br>BOULON | 4 | 4 | | | | |
| 5 | 92995–06100 | WASHER, SPRING<br>RONDELLE, GROWER | 4 | 4 | | | | |
| 6 | 6E5–82148–00 | WIRE, LEAD 4<br>FIL 4 | 1 | 1 | | | | |
| 7 | 97095–06010 | BOLT<br>BOULON | 1 | 1 | | | | |
| 8 | 92995–06600 | WASHER<br>RONDELLE | 1 | 1 | | | | |
| 9 | 64E–43112–02–8D | BRACKET, CLAMP 2<br>PRESSE 2 | 1 | 1 | | | | |
| 10 | 6E5–82148–00 | WIRE, LEAD 4<br>FIL 4 | 1 | 1 | | | | |
| 11 | 97880–06012 | SCREW, PAN HEAD<br>VIS, TETE TRONCONIQUE | 1 | 1 | | | | |
| 12 | 92990–06600 | WASHER, PLATE<br>RONDELLE, PLATE | 1 | 1 | | | | |
| 13 | 93700–06M03 | NIPPLE, GREASE<br>PION | 1 | 1 | | | | |
| 14 | 64E–43131–01 | BOLT, CLAMP BRACKET<br>BOULON, PRESSE | 1 | 1 | | | | |
| 15 | 97095–08020 | BOLT<br>BOULON | 1 | 1 | | | | |
| 16 | 92995–08100 | WASHER<br>RONDELLE | 1 | 1 | | | | |
| 17 | 90386–25M31 | BUSH<br>DOUILLE | 2 | 2 | | | | |
| 18 | 90201–26M59 | WASHER, PLATE<br>RONDELLE, PLATE | 2 | 2 | | | | |
| 19 | 90185–22M11 | NUT, SELF-LOCKING<br>ECROU,AUTO-BLOQUANT | 1 | 1 | | | | |
| 20 | 90465–11M10 | CLAMP<br>BRIDE | 1 | 1 | | | | |
| 21 | 64E–43311–10–8D | BRACKET, SWIVEL 1<br>SUPPORT, PIVOT 1 | 1 | 1 | | | | |
| 22 | 90465–08M63 | CLAMP<br>BRIDE | 1 | 1 | | | | |
| 23 | 93700–06M03 | NIPPLE, GREASE<br>PION | 5 | 5 | | | | |
| 24 | 66K–82149–00 | WIRE, LEAD 3<br>FIL 3 | 1 | 1 | | | | |
| 25 | 6G5–43144–00 | HOOK, SPRING<br>CROCHET | 1 | 1 | | | | |
| 26 | 97095–06010 | BOLT<br>BOULON | 1 | 1 | | | | |
| 27 | 6G5–43181–02 | LEVER, TILT STOP<br>LEVIER, VERROUILLAGE RELEVAGE | 1 | 1 | | | | |

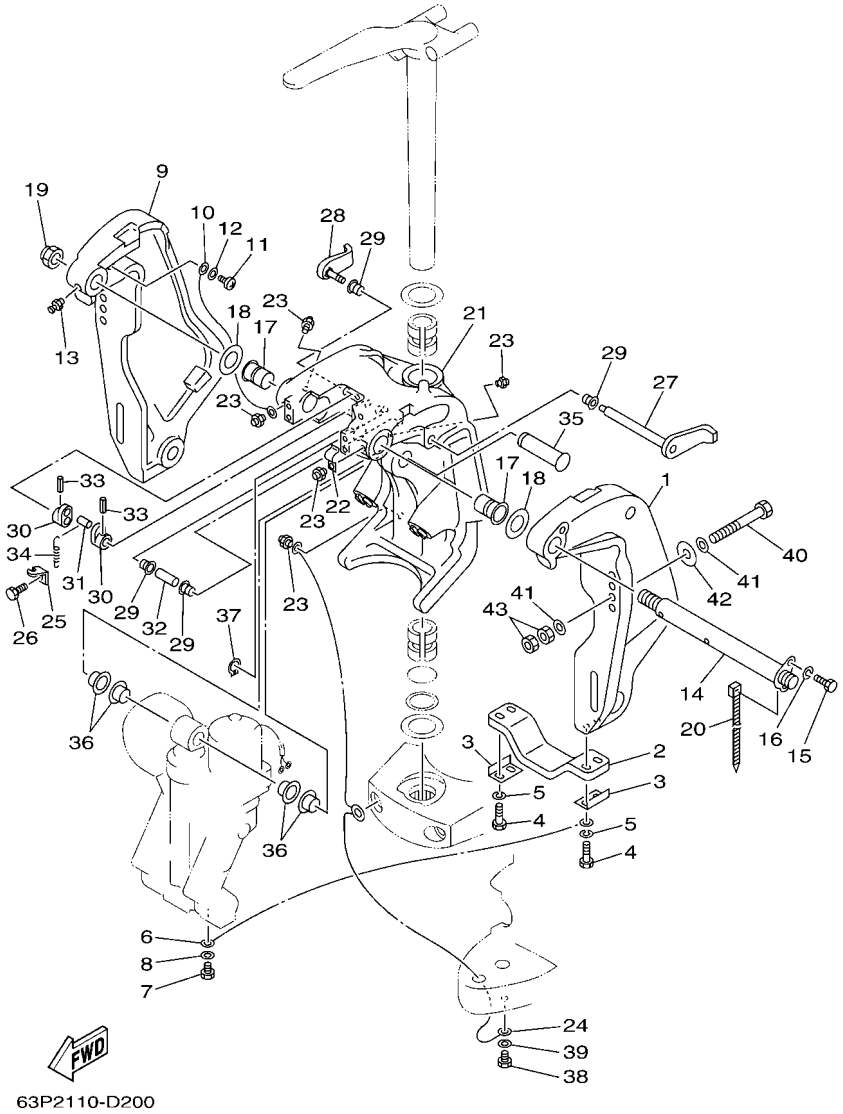


## FIG. 21 BRACKET 1 — SUPPORT 1

| REF. NO. | PART NO. N° PIECES | DESCRIPTION DESCRIPTION | 63P3 | 64P3 | | | | REMARKS REMARQUES |
|---|---|---|---|---|---|---|---|---|
| 28 | 6G5–43185–02 | LEVER, TILT STOP<br>LEVIER, VERROUILLAGE RELEVAGE | 1 | 1 | | | | |
| 29 | 90386–10M16 | BUSH<br>DOUILLE | 4 | 4 | | | | |
| 30 | 6G5–43148–00 | COLLAR, DISTANCE<br>ENTRETOISE | 2 | 2 | | | | |
| 31 | 90249–06M19 | PIN<br>GOUPILLE | 1 | 1 | | | | |
| 32 | 90387–10M05 | COLLAR<br>COLLERETTE | 1 | 1 | | | | |
| 33 | 91690–30020 | PIN, SPRING<br>AGRAFFE | 2 | 2 | | | | |
| 34 | 90506–16003 | SPRING, TENSION<br>RESSORT, TENSION | 1 | 1 | | | | |
| 35 | 64E–43126–00 | PIN, UPPER SHOCK MOUNT<br>AXE, SUPERIEUR AMORTISSEUR | 1 | 1 | | | | |
| 36 | 90386–22M98 | BUSH<br>DOUILLE | 4 | 4 | | | | |
| 37 | 93410–22M11 | CIRCLIP<br>CLIPS | 1 | 1 | | | | |
| 38 | 97095–06010 | BOLT<br>BOULON | 1 | 1 | | | | |
| 39 | 92995–06600 | WASHER<br>RONDELLE | 1 | 1 | | | | |
| 40 | 90101–12M05 | BOLT (L:130MM)<br>BOULON (L:130MM) | 4 | 4 | | | | |
| 41 | 90201–13M01 | WASHER, PLATE<br>RONDELLE, PLATE | 8 | 8 | | | | |
| 42 | 90201–12M05 | WASHER, PLATE<br>RONDELLE, PLATE | 4 | 4 | | | | |
| 43 | 95380–12600 | NUT<br>ECROU | 8 | 8 | | | | |

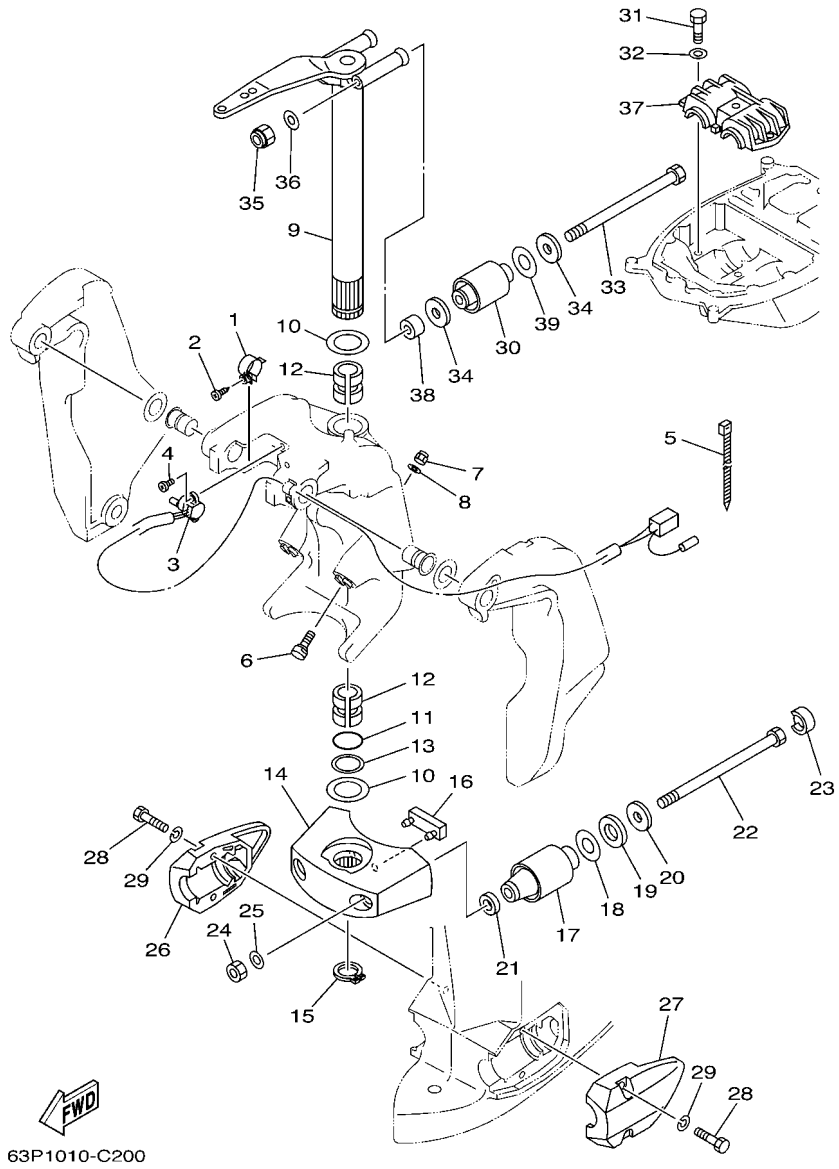


## FIG. 22 BRACKET 2 — SUPPORT 2

| REF. NO. | PART NO. N° PIECES | DESCRIPTION DESCRIPTION | 63P3 | 64P3 | | | | REMARKS REMARQUES |
|---|---|---|---|---|---|---|---|---|
| 1 | 64E–43139–02 | CAM, TRIM SENDER<br>VILEBREQUIN TRUM | 1 | 1 | | | | |
| 2 | 97780–60525 | SCREW, TAPPING<br>VIS, TETE BOMBEE | 1 | 1 | | | | |
| 3 | 64E–83672–02 | TRIM SENDER<br>INCLINER RACCORD | 1 | 1 | | | | |
| 4 | 97885–06016 | SCREW, PAN HEAD<br>VIS, A ENCOCHE | 2 | 2 | | | | |
| 5 | 90465–11M10 | CLAMP<br>BRIDE | 3 | 3 | | | | |
| 6 | 63P–43376–00 | BOLT, THRUST RECEIVER<br>BOULON | 2 | 2 | | | | |
| 7 | 95780–10300 | NUT, FLANGE<br>ECROU | 2 | 2 | | | | |
| 8 | 92995–10600 | WASHER<br>RONDELLE | 2 | 2 | | | | |
| 9 | 66K–42510–01–8D | STEERING BRACKET ASSY<br>DIRECTION SUPPORT (ENS.) | 1 | 1 | | | | |
| 10 | 90201–38M60 | WASHER, PLATE<br>RONDELLE, PLATE | 2 | 2 | | | | |
| 11 | 93210–37MH7 | O-RING<br>JOINT TORIQUE | 1 | 1 | | | | |
| 12 | 90386–38M32 | BUSH<br>DOUILLE | 2 | 2 | | | | |
| 13 | 90202–40M47 | WASHER, PLATE<br>RONDELLE, PLATE | 1 | 1 | | | | |
| 14 | 68V–44551–00–8D | HOUSING, LOWER MOUNT RUBBER<br>BOITIER, SILENT-BLOC INFERIEUR | 1 | 1 | | | | |
| 15 | 93410–37M04 | CIRCLIP<br>CLIPS | 1 | 1 | | | | |
| 16 | 61A–44575–00 | DAMPER, LOWER MOUNT RUBBER<br>SILENT-BLOC, INFERIEUR | 1 | 1 | | | | |
| 17 | 60V–44555–00–94 | MOUNT DAMPER, LOWER SIDE<br>SILENT-BLOC, INFERIEUR LATERAL | 2 | 2 | | | | L (20.3")<br>L (20.3") |
| | 63P–44555–00–94 | MOUNT DAMPER, LOWER SIDE<br>SILENT-BLOC, INFERIEUR LATERAL | 2 | 2 | | | | X (25.3")<br>X (25.3") |
| 18 | 90201–35008 | WASHER, PLATE<br>RONDELLE, PLATE | 2 | 2 | | | | |
| 19 | 90202–32M19 | WASHER, PLATE<br>RONDELLE, PLATE | 2 | 2 | | | | |
| 20 | 90201–16M55 | WASHER, PLATE<br>RONDELLE, PLATE | 2 | 2 | | | | |
| 21 | 90201–15M58 | WASHER, PLATE<br>RONDELLE, PLATE | 2 | 2 | | | | |
| 22 | 90109–14007 | BOLT<br>BOULON | 2 | 2 | | | | |
| 23 | 69J–44533–00 | DAMPER, UPPER MOUNT RUBBER<br>COUVERCLE, SUSPENSION INFERIEU | 2 | 2 | | | | |
| 24 | 95380–14600 | NUT<br>ECROU | 2 | 2 | | | | |
| 25 | 92995–14600 | WASHER<br>RONDELLE | 2 | 2 | | | | |
| 26 | 63P–44553–00–8D | COVER, LOWER MOUNT<br>COUVERCLE, SUSPENSION INFERIEU | 1 | 1 | | | | |

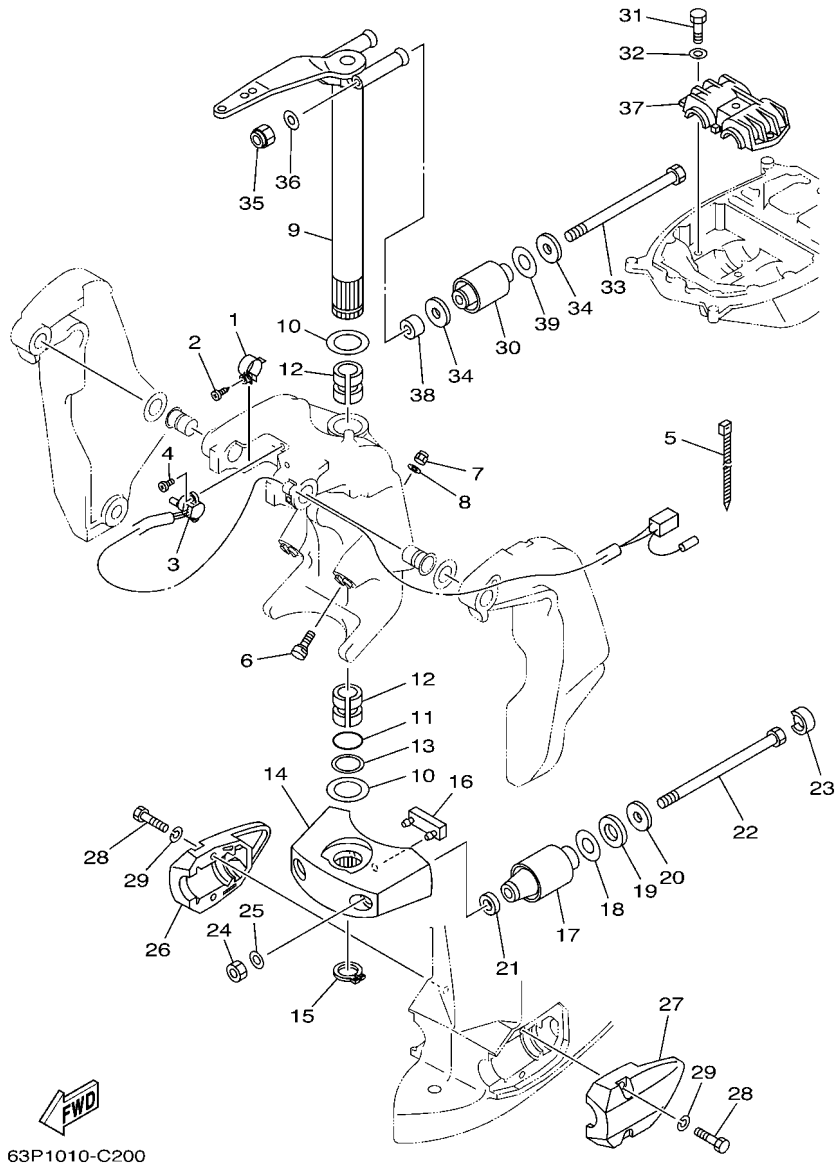


## FIG. 22 BRACKET 2 — SUPPORT 2

| REF. NO. | PART NO. N° PIECES | DESCRIPTION DESCRIPTION | 63P3 | 64P3 | | | | REMARKS REMARQUES |
|---|---|---|---|---|---|---|---|---|
| 27 | 63P–44556–00–8D | COVER, LOWER MOUNT 2<br>COUVERCLE,SUSPENSION INFERIEU | 1 | 1 | | | | |
| 28 | 97075–10040 | BOLT<br>BOULON | 4 | 4 | | | | |
| 29 | 92995–10100 | WASHER<br>RONDELLE | 4 | 4 | | | | |
| 30 | 63P–44514–00–94 | MOUNT DAMPER, UPPER SIDE<br>SILENT-BLOC, SUPERIEUR LATERAL | 2 | 2 | | | | |
| 31 | 97075–10045 | BOLT<br>BOULON | 3 | 3 | | | | |
| 32 | 92995–10600 | WASHER<br>RONDELLE | 3 | 3 | | | | |
| 33 | 90109–14005 | BOLT<br>BOULON | 2 | 2 | | | | |
| 34 | 90201–16M01 | WASHER, PLATE<br>RONDELLE, PLATE | 4 | 4 | | | | |
| 35 | 90185–14M00 | NUT, SELF-LOCKING<br>ECROU,AUTO-BLOQUANT | 2 | 2 | | | | |
| 36 | 92995–14600 | WASHER<br>RONDELLE | 2 | 2 | | | | |
| 37 | 63P–44511–00–94 | COVER, UPPER MOUNT<br>COUVERCLE, SUSPENSION SUPERIEU | 1 | 1 | | | | |
| 38 | 90387–14004 | COLLAR<br>COLLERETTE | 2 | 2 | | | | |
| 39 | 90202–28001 | WASHER, PLATE<br>RONDELLE, PLATE | 2 | 2 | | | | |

## FIG. 23 POWER TRIM & TILT ASSY 1 — PUISSANCE PARER ET INCLINER 1

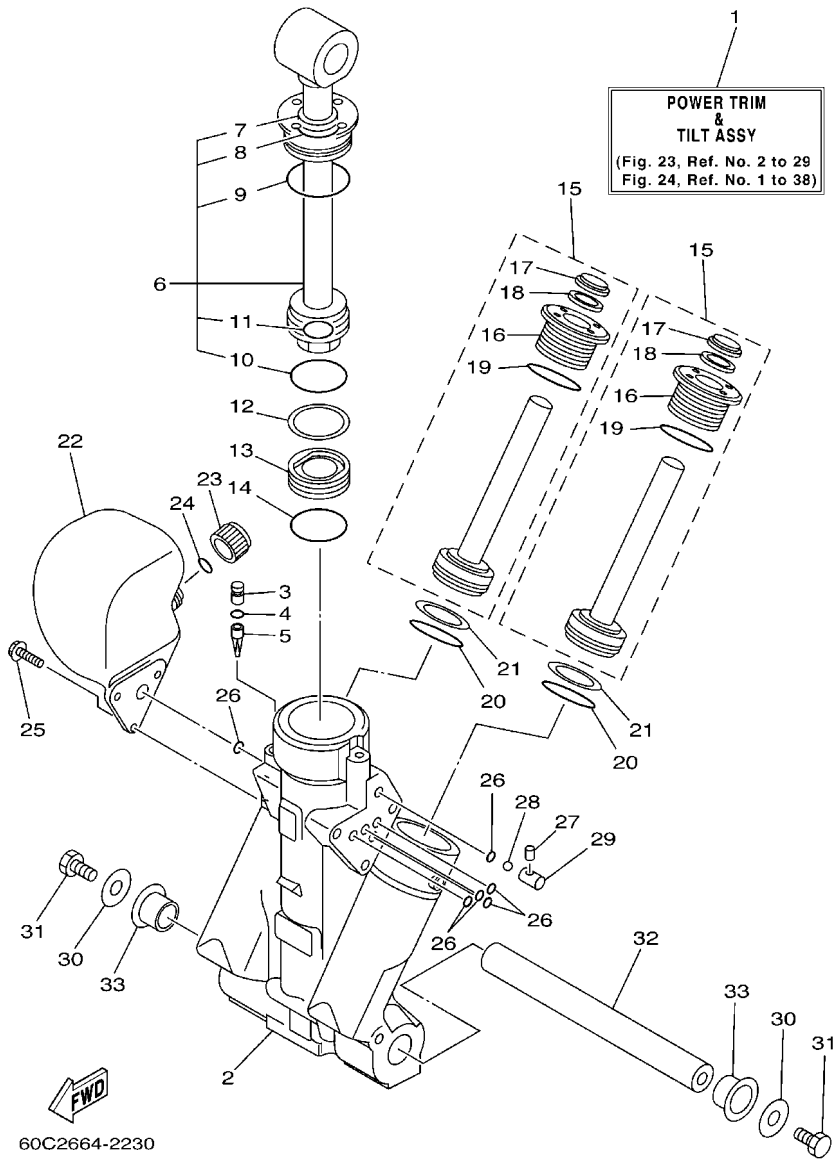


| REF. NO. | PART NO. N° PIECES | DESCRIPTION DESCRIPTION | 63P3 | 64P3 | | | | REMARKS REMARQUES |
|---|---|---|---|---|---|---|---|---|
| 1 | 63P–43800–00–4D | POWER TRIM & TILT ASSY<br>PUISSANCE PARER ET INCLINER (E | 1 | 1 | | | | |
| 2 | 64E–43825–01 | HOUSING, TRIM & TILT<br>CARTER | 1 | 1 | | | | |
| 3 | 64E–4388J–00 | PLUG 2<br>BOUCHON 2 | 1 | 1 | | | | |
| 4 | 93210–10M74 | O-RING<br>JOINT TORIQUE | 1 | 1 | | | | |
| 5 | 64E–43817–00 | FILTER 2<br>FILTRE 2 | 1 | 1 | | | | |
| 6 | 63P–43810–00 | TILT PISTON SUB ASSY<br>INCLINER PISTON AUXILIAIRE(ENS | 1 | 1 | | | | |
| 7 | 64E–43898–00 | .SEAL ,DUST 2<br>.JOINT ANTI-PUSSIERE | 1 | 1 | | | | |
| 8 | 64E–43867–00 | .O-RING<br>.JOINT TORIQUE | 1 | 1 | | | | |
| 9 | 64E–43866–00 | .O-RING<br>.JOINT TORIQUE | 1 | 1 | | | | |
| 10 | 6E5–43862–00 | .O-RING<br>.JOINT TORIQUE | 1 | 1 | | | | |
| 11 | 64E–43883–00 | .O-RING<br>.JOINT TORIQUE | 1 | 1 | | | | |
| 12 | 6E5–43872–00 | RING, BACK UP<br>RESSORT | 1 | 1 | | | | |
| 13 | 6E5–43814–02 | PISTON, FREE<br>PISTON | 1 | 1 | | | | |
| 14 | 6E5–43862–00 | O-RING<br>JOINT TORIQUE | 1 | 1 | | | | |
| 15 | 64E–43820–00 | TRIM PISTON SUB ASSY<br>PARER PISTON AUXILIAIRE (ENS.) | 2 | 2 | | | | |
| 16 | 64E–43821–00 | .SCREW, TRIM CYLINDER END<br>.VIS | 1 | 1 | | | | |
| 17 | 64E–43822–00 | .SEAL, TRIM DUST<br>.JOINT | 1 | 1 | | | | |
| 18 | 64E–4384J–00 | .SEAL, TRIM DOWN<br>.JOINT | 1 | 1 | | | | |
| 19 | 6G5–43864–00 | .O-RING<br>.JOINT TORIQUE | 1 | 1 | | | | |
| 20 | 6E5–43864–00 | O-RING<br>JOINT TORIQUE | 2 | 2 | | | | |
| 21 | 6E5–43874–01 | RING, BACK UP<br>RESSORT | 2 | 2 | | | | |
| 22 | 64E–43828–00 | BODY, RESERVOIR<br>CORPS | 1 | 1 | | | | |
| 23 | 64E–43829–00 | PLUG, RESERVOIR<br>BOUCHON | 1 | 1 | | | | |
| 24 | 64E–43897–00 | O-RING<br>JOINT TORIQUE | 1 | 1 | | | | |
| 25 | 64E–4388E–00 | BOLT ,SCREW (L:14MM)<br>VIS (L:14MM) | 3 | 3 | | | | |
| 26 | 64E–43869–00 | O-RING<br>JOINT TORIQUE | 6 | 6 | | | | |
| 27 | 64E–4381G–00 | PIN<br>COUPILL | 1 | 1 | | | | |

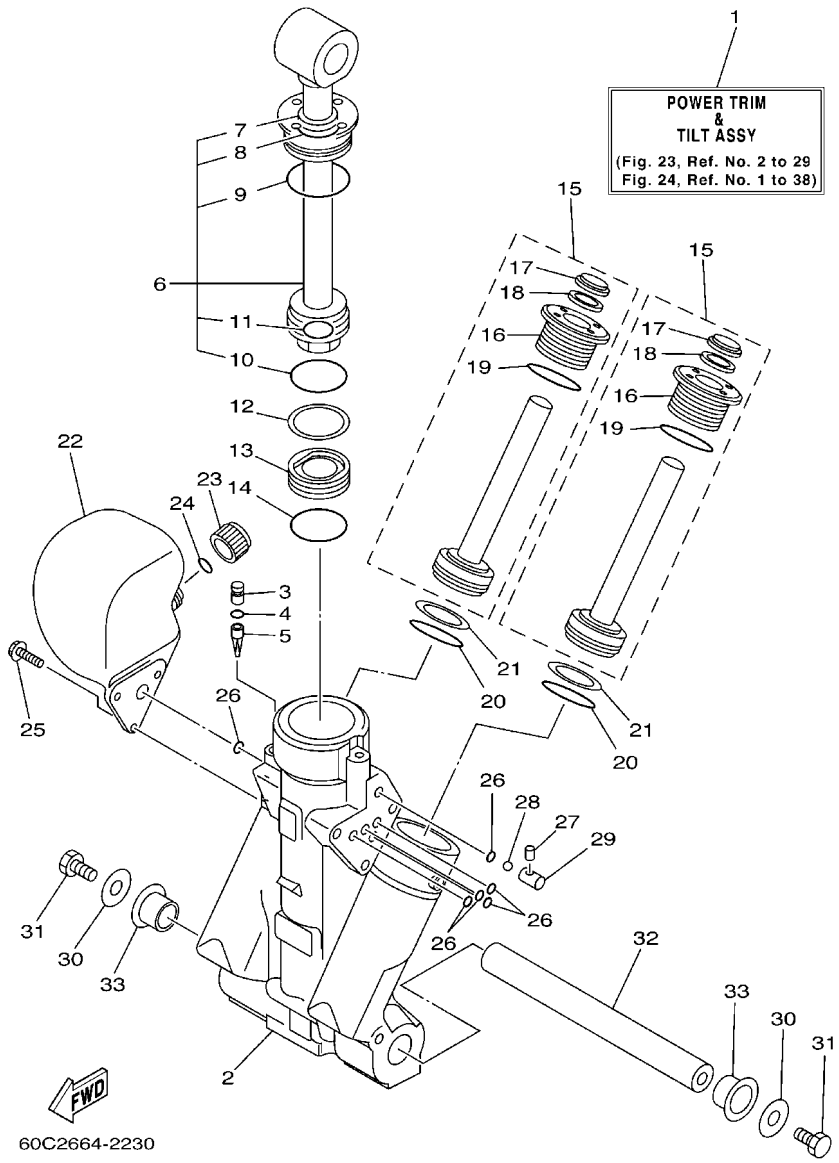


## FIG. 23 POWER TRIM & TILT ASSY 1 — PUISSANCE PARER ET INCLINER 1

| REF. NO. | PART NO. N° PIECES | DESCRIPTION DESCRIPTION | 63P3 | 64P3 | | | | REMARKS REMARQUES |
|---|---|---|---|---|---|---|---|---|
| 28 | 6E5–43858–00 | BALL<br>BILLE | 1 | 1 | | | | |
| 29 | 64E–4382G–00 | VALVE, SEAT<br>JEU DE POINTEAUX | 1 | 1 | | | | |
| 30 | 90201–08M14 | WASHER, PLATE<br>RONDELLE, PLATE | 2 | 2 | | | | |
| 31 | 97080–08016 | BOLT<br>BOULON | 2 | 2 | | | | |
| 32 | 64E–43818–01 | PIN, LOWER SHOCK MOUNT<br>AXE, INFERIEUR AMORTISSEUR | 1 | 1 | | | | |
| 33 | 90386–22M98 | BUSH<br>DOUILLE | 2 | 2 | | | | |

## FIG. 24 POWER TRIM & TILT ASSY 2 — PUISSANCE PARER ET INCLINER 2

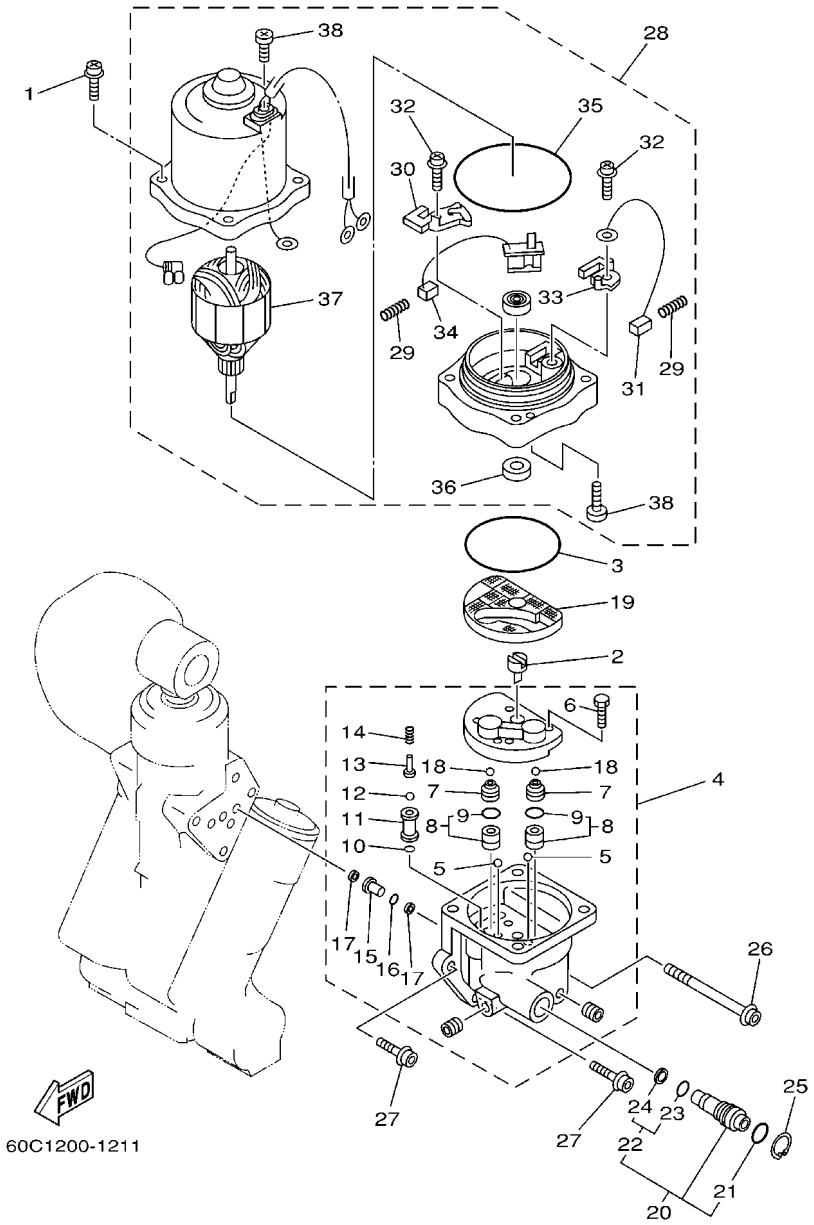


| REF. NO. | PART NO. N° PIECES | DESCRIPTION DESCRIPTION | 63P3 | 64P3 | | | | REMARKS REMARQUES |
|---|---|---|---|---|---|---|---|---|
| 1 | 64E–4388E–10 | BOLT ,SCREW (L:34.7MM)<br>VIS (L:34.7MM) | 4 | 4 | | | | |
| 2 | 64E–43831–00 | CONNECTOR, SHAFT<br>RACCORD | 1 | 1 | | | | |
| 3 | 64E–43868–00 | O-RING<br>JOINT TORIQUE | 1 | 1 | | | | |
| 4 | 64E–43830–00 | GEAR PUMP ASSY<br>POMPE A PIGNON (ENS.) | 1 | 1 | | | | |
| 5 | 72X–43858–00 | .BALL<br>.BILLE | 2 | 2 | | | | |
| 6 | 64E–43843–00 | .SCREW, VALVE LOCK<br>.VIS | 4 | 4 | | | | |
| 7 | 64E–43841–00 | .PISTON, SHUTTLE<br>.PISTON | 2 | 2 | | | | |
| 8 | 64E–43802–00 | .VALVE SUB ASSY<br>.CLAPET AUXILIAIRE (ENS.) | 2 | 2 | | | | |
| 9 | 6E5–43896–00 | ..O-RING<br>..JOINT TORIQUE | 1 | 1 | | | | |
| 10 | 6G5–43863–00 | .O-RING<br>.JOINT TORIQUE | 1 | 1 | | | | |
| 11 | 64E–43851–00 | .SEAT, RELIEF VALVE<br>.SIEGE | 1 | 1 | | | | |
| 12 | 64E–43858–00 | .BALL<br>.BILLE | 1 | 1 | | | | |
| 13 | 64E–43859–00 | .PIN, VALVE SUPPORT<br>.GOUPILLE | 1 | 1 | | | | |
| 14 | 64E–43855–00 | .SPRING, UP RELIEF<br>.RESSORT | 1 | 1 | | | | |
| 15 | 64E–43850–00 | .VALVE SUB ASSY<br>.CLAPET AUXILIAIRE (ENS.) | 1 | 1 | | | | |
| 16 | 64E–43865–00 | .O-RING<br>.JOINT TORIQUE | 1 | 1 | | | | |
| 17 | 64E–43816–00 | .FILTER 1<br>.FILTRE 1 | 2 | 2 | | | | |
| 18 | 64E–43858–00 | .BALL<br>.BILLE | 2 | 2 | | | | |
| 19 | 64E–43817–10 | FILTER 2<br>FILTRE 2 | 1 | 1 | | | | |
| 20 | 64E–43860–00 | MANUAL VALVE SUB-ASSY<br>SOUPAPE, MANUEL (ENS.) | 1 | 1 | | | | |
| 21 | 72X–85075–L0 | .O-RING<br>.JOINT TORIQUE | 1 | 1 | | | | |
| 22 | 64E–43827–00 | .RING SET<br>.BILLE | 1 | 1 | | | | |
| 23 | 64E–4387A–00 | ..O-RING<br>..JOINT TORIQUE | 1 | 1 | | | | |
| 24 | 64E–43873–00 | ..RING, BACK UP<br>..RESSORT | 1 | 1 | | | | |
| 25 | 64E–43875–00 | RING, SNAP<br>RESSORT | 1 | 1 | | | | |
| 26 | 64E–43879–10 | SCREW, WITH WASHER<br>VIS, AVEC RONDELLE | 1 | 1 | | | | |
| 27 | 64E–43879–00 | SCREW, WITH WASHER<br>VIS, AVEC RONDELLE | 2 | 2 | | | | |

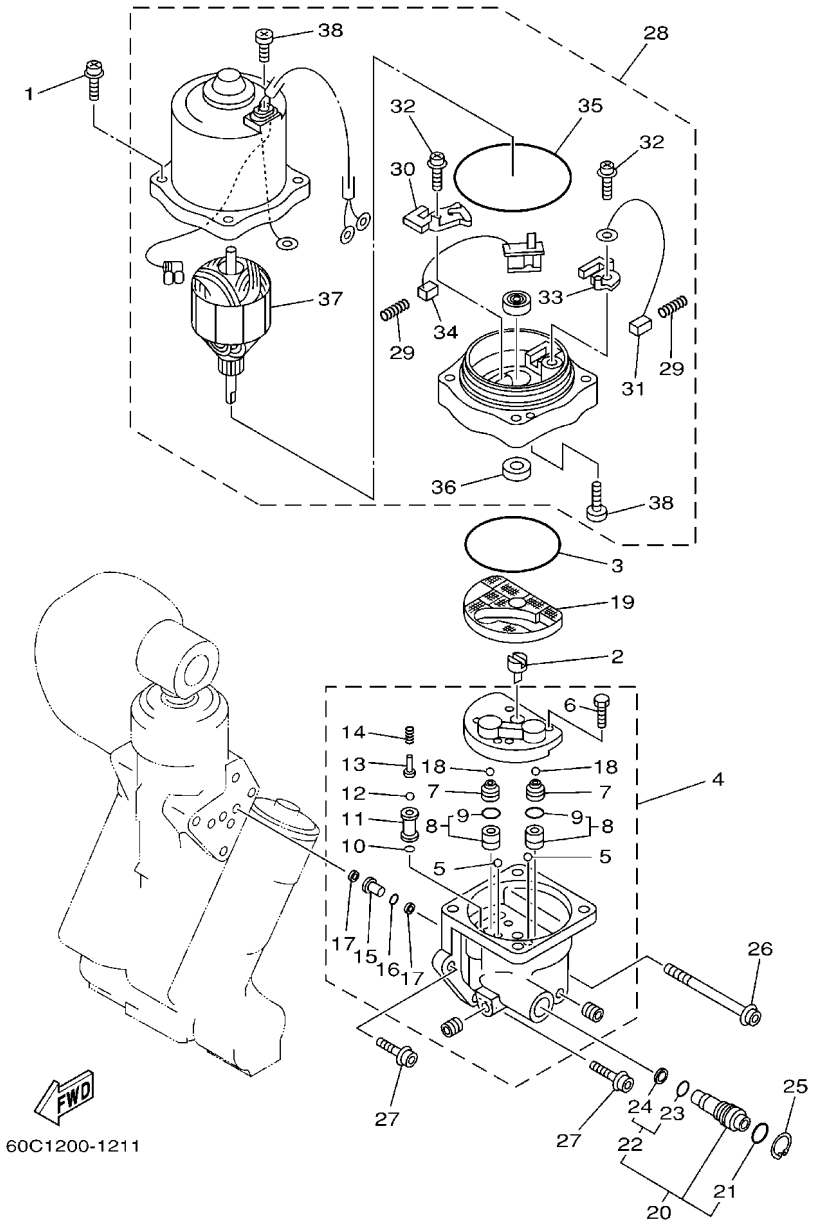


## FIG. 24 POWER TRIM & TILT ASSY 2 — PUISSANCE PARER ET INCLINER 2

| REF. NO. | PART NO. N° PIECES | DESCRIPTION DESCRIPTION | 63P3 | 64P3 | | | | REMARKS REMARQUES |
|---|---|---|---|---|---|---|---|---|
| 28 | 67H–43880–01 | MOTOR ASSY<br>MOTEUR (ENS.) | 1 | 1 | | | | |
| 29 | 6H1–4386K–10 | .SPRING, BRUSH<br>.RESSORT, BALAI | 2 | 2 | | | | |
| 30 | 64E–4380J–00 | .HOLDER, BRUSH<br>.PORTE-BALAI | 1 | 1 | | | | |
| 31 | 64E–43891–00 | .BRUSH 1<br>.BALAI 1 | 1 | 1 | | | | |
| 32 | 97607–04310 | .SCREW,WITH WASHER<br>.VIS HEXAGONAL | 2 | 2 | | | | |
| 33 | 64E–4380F–00 | .HOLDER, BRUSH 2<br>.PORTE-BALAI 2 | 1 | 1 | | | | |
| 34 | 64E–43892–00 | .BRUSH 2<br>.BALAI 2 | 1 | 1 | | | | |
| 35 | 6G5–43865–00 | .O-RING<br>.JOINT TORIQUE | 1 | 1 | | | | |
| 36 | 93102–08M43 | .OIL SEAL<br>.JOINT SPY | 1 | 1 | | | | |
| 37 | 64E–43805–00 | .ARMATURE ASSY<br>.INDUIT (ENS.) | 1 | 1 | | | | |
| 38 | 64E–43843–10 | .SCREW, VALVE LOCK<br>.VIS | 3 | 3 | | | | |

## FIG. 25 UPPER CASING FOURREAU

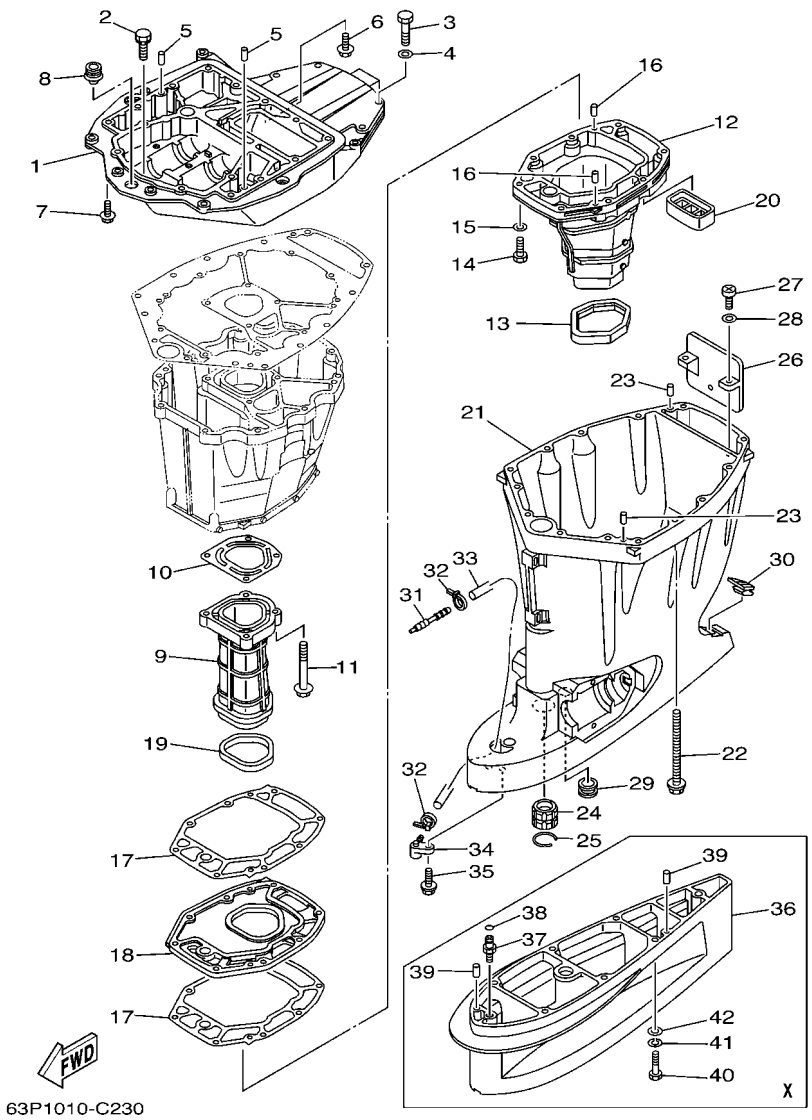


63P1010-C230

| REF. NO. | PART NO. N° PIECES | DESCRIPTION DESCRIPTION | 63P3 | 64P3 | | | | REMARKS REMARQUES |
|---|---|---|---|---|---|---|---|---|
| 1 | 63P–41137–00 | GUIDE, EXHAUST<br>COLLECTEUR D'ECHAPPEMENT | 1 | 1 | | | | |
| 2 | 90119–08M79 | BOLT, WITH WASHER<br>BOULON, AVEC RONDELLE | 2 | 2 | | | | |
| 3 | 97075–10045 | BOLT<br>BOULON | 4 | 4 | | | | |
| 4 | 92995–10600 | WASHER<br>RONDELLE | 4 | 4 | | | | |
| 5 | 93608–16M16 | PIN, DOWEL<br>AXE | 2 | 2 | | | | |
| 6 | 90119–08M58 | BOLT, WITH WASHER<br>BOULON, AVEC RONDELLE | 3 | 3 | | | | |
| 7 | 97575–10535 | BOLT, WITH WASHER<br>VIS HEXAGONAL AVC RONDELLE | 4 | 4 | | | | |
| 8 | 6E5–42724–00 | GROMMET<br>PASSE-FIL | 1 | 1 | | | | |
| 9 | 63P–41131–00–5B | MANIFOLD, EXT. 1<br>PIPE D'ECHAPPEMENT | 1 | 1 | | | | |
| 10 | 63P–41133–A0 | GASKET, EXHAUST MANIFOLD 1<br>JOINT, PIPE D'ECHAPPEMENT | 1 | 1 | | | | |
| 11 | 97575–08560 | BOLT, WITH WASHER<br>VIS HEXAGONAL AVC RONDELLE | 4 | 4 | | | | |
| 12 | 63P–14711–00–5B | MUFFLER 1<br>POT D'ECHAPPEMENT 1 | 1 | 1 | | | | |
| 13 | 69J–45123–00 | GASKET, MUFFLER<br>JOINT, POT DE DETENTE | 1 | 1 | | | | |
| 14 | 97075–08035 | BOLT<br>BOULON | 8 | 8 | | | | |
| 15 | 92995–08600 | WASHER<br>RONDELLE | 8 | 8 | | | | |
| 16 | 93606–19M23 | PIN, DOWEL<br>GOUPILLE | 2 | 2 | | | | |
| 17 | 63P–41134–A0 | GASKET, EXHAUST MANIFOLD<br>JOINT, PIPE D'ECHAPPEMENT | 2 | 2 | | | | |
| 18 | 63P–45181–00–5B | PLATE<br>PLAQUETTE | 1 | 1 | | | | |
| 19 | 63P–41138–00 | SEAL, EXT. 1<br>JOINT DE GROUPE 1 | 1 | 1 | | | | |
| 20 | 69J–45127–00 | SEAL<br>JOINT | 1 | 1 | | | | |
| 21 | 63P–45111–00–8D | CASING, UPPER<br>FOURREAU | 1 | 1 | | | | |
| 22 | 90119–10007 | BOLT, WITH WASHER<br>BOULON, AVEC RONDELLE | 8 | 8 | | | | |
| 23 | 93608–16M16 | PIN, DOWEL<br>AXE | 2 | 2 | | | | |
| 24 | 6E5–45318–00 | BUSHING, DRIVE SHAFT<br>DOUILLE, ARBRE MOTEUR | 1 | 1 | | | | |
| 25 | 93420–36M01 | CIRCLIP<br>CIRCLIP, TYPE S | 1 | 1 | | | | |
| 26 | 69J–14624–01 | COVER, EXHAUST<br>CACHE D'ECHAPPEMENT | 1 | 1 | | | | |
| 27 | 97880–06016 | SCREW, PAN HEAD<br>VIS, TETE TRONCONIQUE | 2 | 2 | | | | |

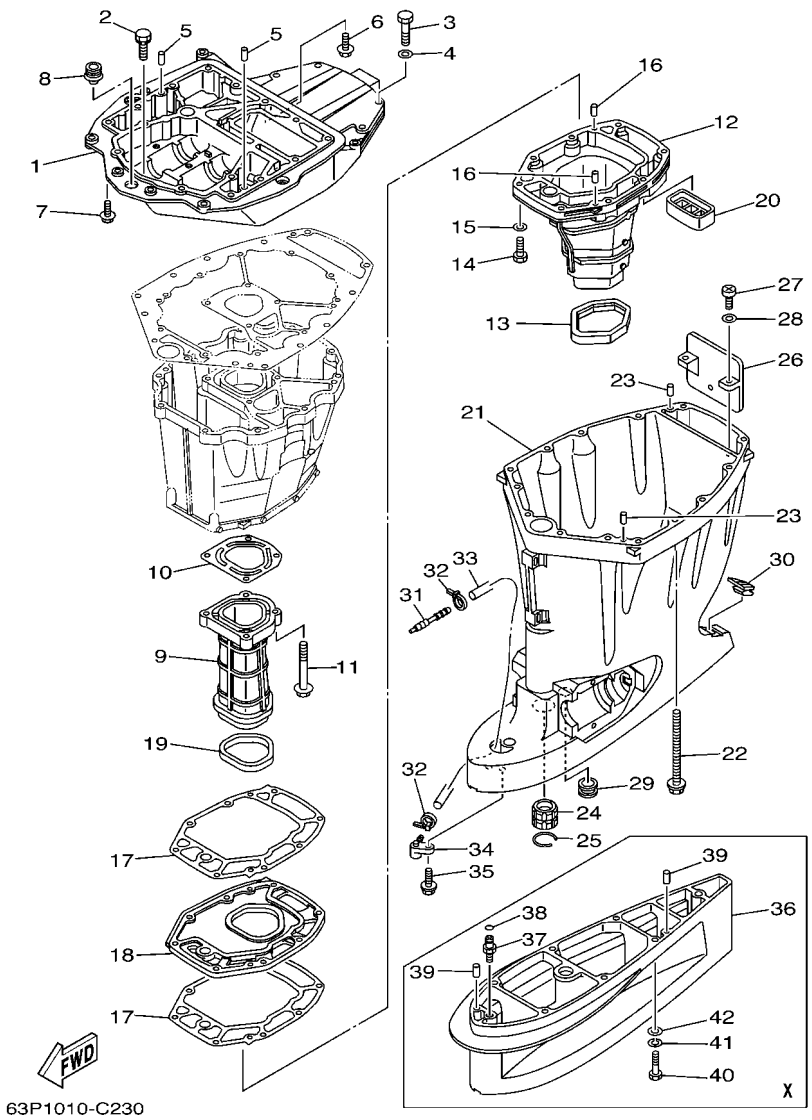


## FIG. 25 UPPER CASING FOURREAU

| REF. NO. | PART NO. N° PIECES | DESCRIPTION DESCRIPTION | 63P3 | 64P3 | | | | REMARKS REMARQUES |
|---|---|---|---|---|---|---|---|---|
| 28 | 92990–06600 | WASHER, PLATE<br>RONDELLE, PLATE | 2 | 2 | | | | |
| 29 | 6E5–44366–00 | DAMPER, WATER SEAL<br>JOINT, TUBE D'EAU | 1 | 1 | | | | |
| 30 | 6H3–45155–00 | CAP<br>CAPUCHON | 1 | 1 | | | | |
| 31 | 6E5–83558–00 | END, NIPPLE<br>RACCORD DE NIPPLE | 1 | 1 | | | | |
| 32 | 90465–11M10 | CLAMP<br>BRIDE | 2 | 2 | | | | |
| 33 | 90445–070F1 | HOSE (L950)<br>DURITE (L950) | 1 | 1 | | | | |
| 34 | 63P–45379–00 | NIPPLE, HOSE<br>RACCORD D'ESSENCE | 1 | 1 | | | | |
| 35 | 90119–06M18 | BOLT, WITH WASHER<br>BOULON, AVEC RONDELLE | 1 | 1 | | | | |
| 36 | 63P–45211–00–8D | EXTENSION<br>EXTENSION | 1 | 1 | | | | X (25.3")<br>X (25.3") |
| 37 | 63P–45378–00 | NIPPLE, HOSE<br>RACCORD, TUYAU | 1 | 1 | | | | X (25.3")<br>X (25.3") |
| 38 | 93210–07003 | O-RING<br>JOINT TORIQUE | 1 | 1 | | | | X (25.3")<br>X (25.3") |
| 39 | 93608–16M16 | PIN, DOWEL<br>AXE | 2 | 2 | | | | X (25.3")<br>X (25.3") |
| 40 | 97095–10045 | BOLT<br>BOULON | 6 | 6 | | | | X (25.3")<br>X (25.3") |
| 41 | 92995–10100 | WASHER<br>RONDELLE | 6 | 6 | | | | X (25.3")<br>X (25.3") |
| 42 | 92995–10600 | WASHER<br>RONDELLE | 6 | 6 | | | | X (25.3")<br>X (25.3") |

## FIG. 26 OIL PAN — VENTILATEUR D'HUILE

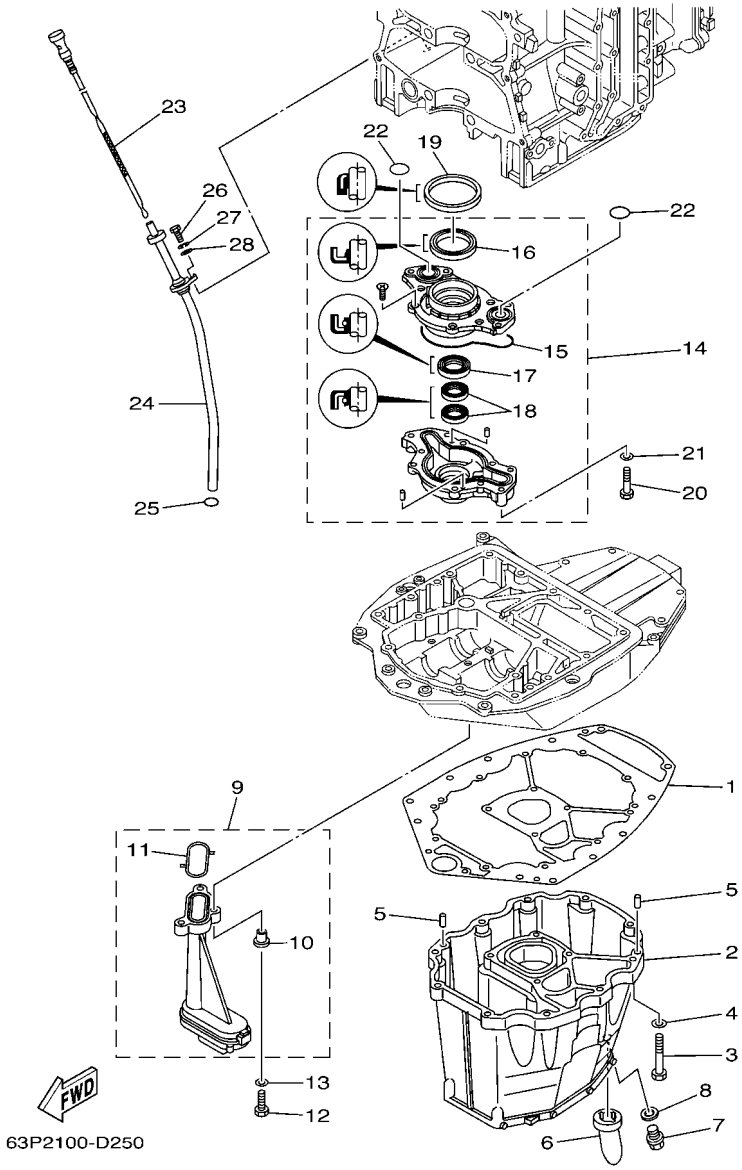


| REF. NO. | PART NO. N° PIECES | DESCRIPTION DESCRIPTION | 63P3 | 64P3 | | | | REMARKS REMARQUES |
|---|---|---|---|---|---|---|---|---|
| 1 | 63P–15312–00 | GASKET, OIL PAN<br>JOINT DE VENTILATEUR D'HUILE | 1 | 1 | | | | |
| 2 | 63P–15311–00–5B | OIL PAN<br>VENTILATEUR D'HUILE | 1 | 1 | | | | |
| 3 | 97075–08035 | BOLT<br>BOULON | 10 | 10 | | | | |
| 4 | 92995–08600 | WASHER<br>RONDELLE | 10 | 10 | | | | |
| 5 | 93608–16M16 | PIN, DOWEL<br>AXE | 2 | 2 | | | | |
| 6 | 63P–15316–00 | DAMPER, ENGINE MOUNT 1<br>AMORTISSEUR DE SUPPORT | 1 | 1 | | | | |
| 7 | 90340–14M06 | PLUG, STRAIGHT SCREW<br>PLOT, FILETE DROIT | 1 | 1 | | | | |
| 8 | 90430–14M09 | GASKET<br>JOINT | 1 | 1 | | | | |
| 9 | 63P–13411–00 | STRAINER, OIL<br>FILTRE, HUILE | 1 | 1 | | | | |
| 10 | 90387–06M64 | .COLLAR<br>.COLLERETTE | 3 | 3 | | | | |
| 11 | 63P–13415–00 | .SEAL, OIL STRAINER<br>.JOINT, FILTRE A HUILE | 1 | 1 | | | | |
| 12 | 97027–06025 | BOLT<br>BOULON | 3 | 3 | | | | |
| 13 | 92907–06600 | WASHER, PLATE<br>RONDELLE | 3 | 3 | | | | |
| 14 | 63P–13300–00 | OIL PUMP ASSY<br>POMPE A HUILE COMPLETE | 1 | 1 | | | | |
| 15 | 63P–13329–00 | .GASKET, PUMP COVER<br>.JOINT, COUVERCLE DE POMPE | 1 | 1 | | | | |
| 16 | 69J–13338–00 | .OIL SEAL<br>.JOINT SPY | 1 | 1 | | | | |
| 17 | 69J–13119–00 | .OIL SEAL<br>.JOINT SPY | 1 | 1 | | | | |
| 18 | 69J–13631–00 | .OIL SEAL<br>.JOINT SPY | 2 | 2 | | | | |
| 19 | 69J–11355–00 | SEAL, CYLINDER 1<br>JOINT, SPY CYLINDRE | 1 | 1 | | | | |
| 20 | 97095–06040 | BOLT<br>BOULON | 4 | 4 | | | | |
| 21 | 92995–06600 | WASHER<br>RONDELLE | 4 | 4 | | | | |
| 22 | 93210–25552 | O-RING<br>JOINT TORIQUE | 2 | 2 | | | | |
| 23 | 63P–15362–00 | PLUG, OIL LEVEL<br>PLOT, NIVEAU D'HUILE | 1 | 1 | | | | |
| 24 | 63P–15377–00 | GUIDE, INLET<br>GUIDE D'ADMISSION | 1 | 1 | | | | |
| 25 | 93210–19MJ3 | O-RING<br>JOINT TORIQUE | 1 | 1 | | | | |
| 26 | 97095–06020 | BOLT<br>BOULON | 1 | 1 | | | | |
| 27 | 92995–06100 | WASHER, SPRING<br>RONDELLE, GROWER | 1 | 1 | | | | |

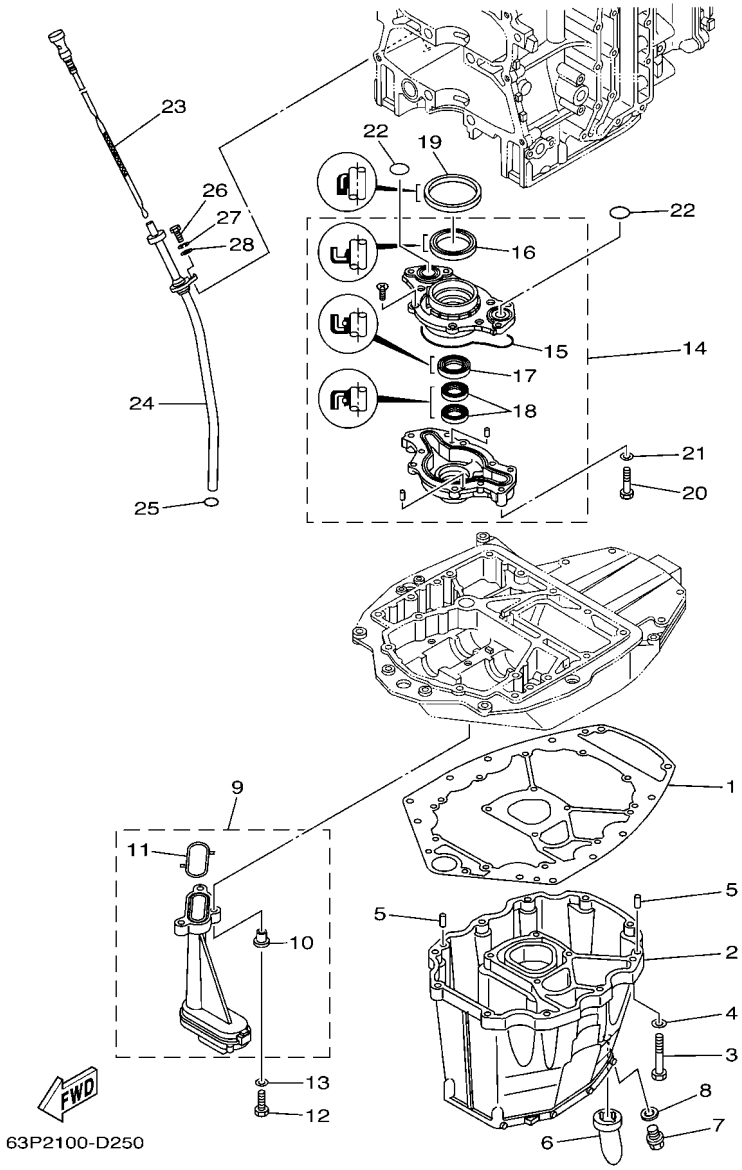


## FIG. 26 OIL PAN — VENTILATEUR D'HUILE

| REF. NO. | PART NO. N° PIECES | DESCRIPTION DESCRIPTION | 63P3 | 64P3 | | | | REMARKS REMARQUES |
|---|---|---|---|---|---|---|---|---|
| 28 | 92995–06600 | WASHER RONDELLE | 1 | 1 | | | | |

## FIG. 27 LOWER CASING & DRIVE 1 — BOITIER D'HELICE TRANSMISSION1

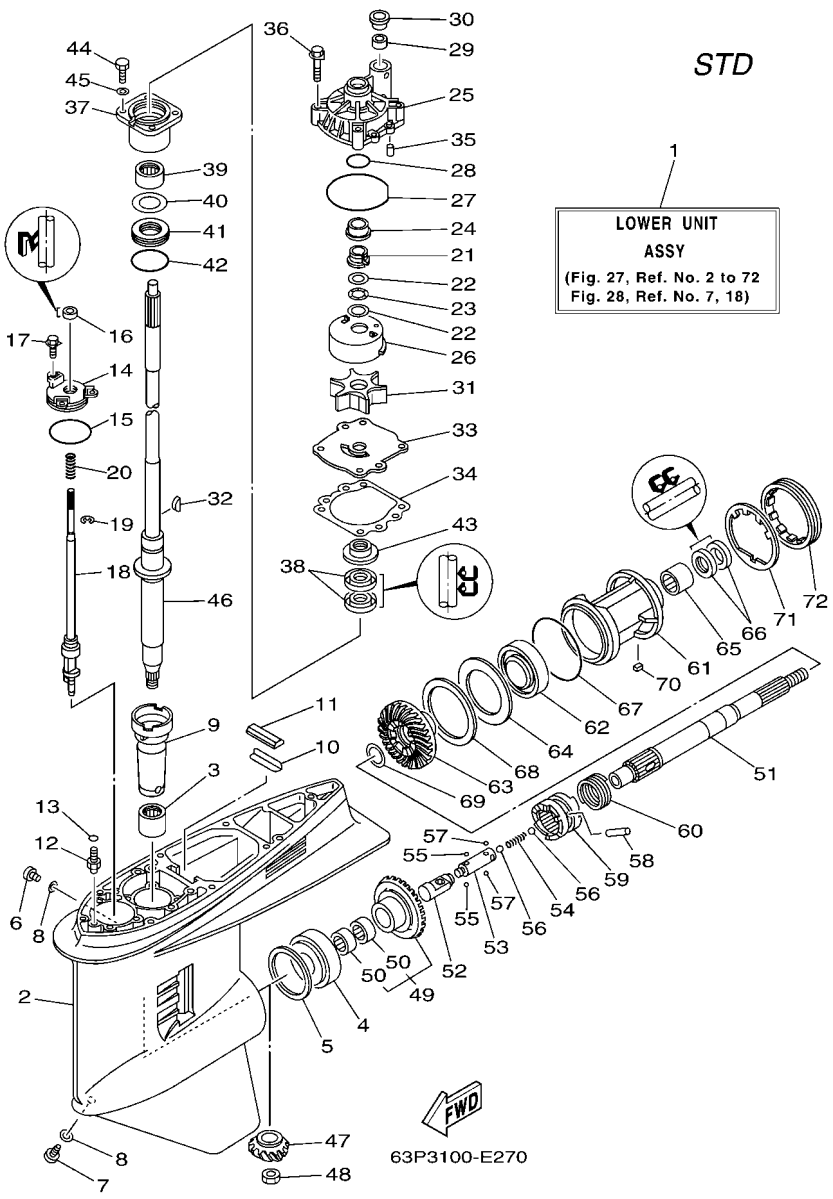


| REF. NO. | PART NO. N° PIECES | DESCRIPTION DESCRIPTION | 63P3 | 64P3 | | | | REMARKS REMARQUES |
|---|---|---|---|---|---|---|---|---|
| 1 | 63P–45300–01–8D | LOWER UNIT ASSY<br>UNITE INFERIEURE (ENS.) | 1 | | | | | L (20.3"),RH<br>L (20.3"),RH |
| | 63P–45300–11–8D | LOWER UNIT ASSY<br>UNITE INFERIEURE (ENS.) | 1 | | | | | X (25.3"),RH<br>X (25.3"),RH |
| 2 | 6J9–45301–05–8D | CASING, LOWER<br>BEQUILLE | 1 | | | | | |
| 3 | 93311–928U5 | BEARING<br>ROULEMENT | 1 | | | | | |
| 4 | 93332–000V3 | BEARING<br>ROULEMENT | 1 | | | | | |
| 5 | 6G5–45567–01 | SHIM (T:0.10MM)<br>CALE (T:0.10MM) | 1 | | | | | UR<br>UR |
| | 6G5–45567–10 | SHIM (T:0.12MM)<br>CALE (T:0.12MM) | 1 | | | | | UR<br>UR |
| | 6G5–45567–20 | SHIM (T:0.15MM)<br>CALE (T:0.15MM) | 1 | | | | | UR<br>UR |
| | 6G5–45567–30 | SHIM (T:0.18MM)<br>CALE (T:0.18MM) | 1 | | | | | UR<br>UR |
| | 6G5–45567–40 | SHIM (T:0.30MM)<br>CALE (T:0.30MM) | 1 | | | | | UR<br>UR |
| | 6G5–45567–50 | SHIM (T:0.40MM)<br>CALE (T:0.40MM) | 1 | | | | | UR<br>UR |
| | 6G5–45567–60 | SHIM (T:0.50MM)<br>CALE (T:0.50MM) | 1 | | | | | UR<br>UR |
| 6 | 90340–08002 | PLUG, STRAIGHT SCREW<br>PLOT, FILETE DROIT | 1 | | | | | |
| 7 | 688–45341–10 | PLUG, DRAIN<br>BOUCHON DE VIDANGE | 1 | | | | | |
| 8 | 90430–08020 | GASKET<br>JOINT | 2 | | | | | |
| 9 | 6G5–45536–01 | SLEEVE, DRIVE SHAFT<br>MANCHON, ARBRE MOTEUR | 1 | | | | | |
| 10 | 663–45376–00–94 | GUIDE, SEAL DAMPER<br>BUTEE, JOINT CAOUTCHOUC | 1 | | | | | |
| 11 | 688–45375–00 | DAMPER, SEAL<br>BOURRELET, CAOUTCHOUC | 1 | | | | | |
| 12 | 63P–45378–00 | NIPPLE, HOSE<br>RACCORD, TUYAU | 1 | | | | | |
| 13 | 93210–07003 | O-RING<br>JOINT TORIQUE | 1 | | | | | |
| 14 | 6E5–45321–00 | PLATE<br>PLAQUETTE | 1 | | | | | |
| 15 | 93210–58144 | O-RING<br>JOINT TORIQUE | 1 | | | | | |
| 16 | 93106–09014 | OIL SEAL<br>JOINT SPY | 1 | | | | | |
| 17 | 90119–06M10 | BOLT, WITH WASHER<br>BOULON, AVEC RONDELLE | 3 | | | | | |
| 18 | 63P–44150–00 | SHIFT CAM ASSY<br>CAME D'INVERSION | 1 | | | | | L (20.3"),RH<br>L (20.3"),RH |
| | 63P–44150–10 | SHIFT CAM ASSY<br>CAME D'INVERSION | 1 | | | | | X (25.3"),RH<br>X (25.3"),RH |
| 19 | 99001–08600 | CIRCLIP<br>CIRCLIP | 1 | | | | | |

## FIG. 27 LOWER CASING & DRIVE 1 — BOITIER D'HELICE TRANSMISSION1

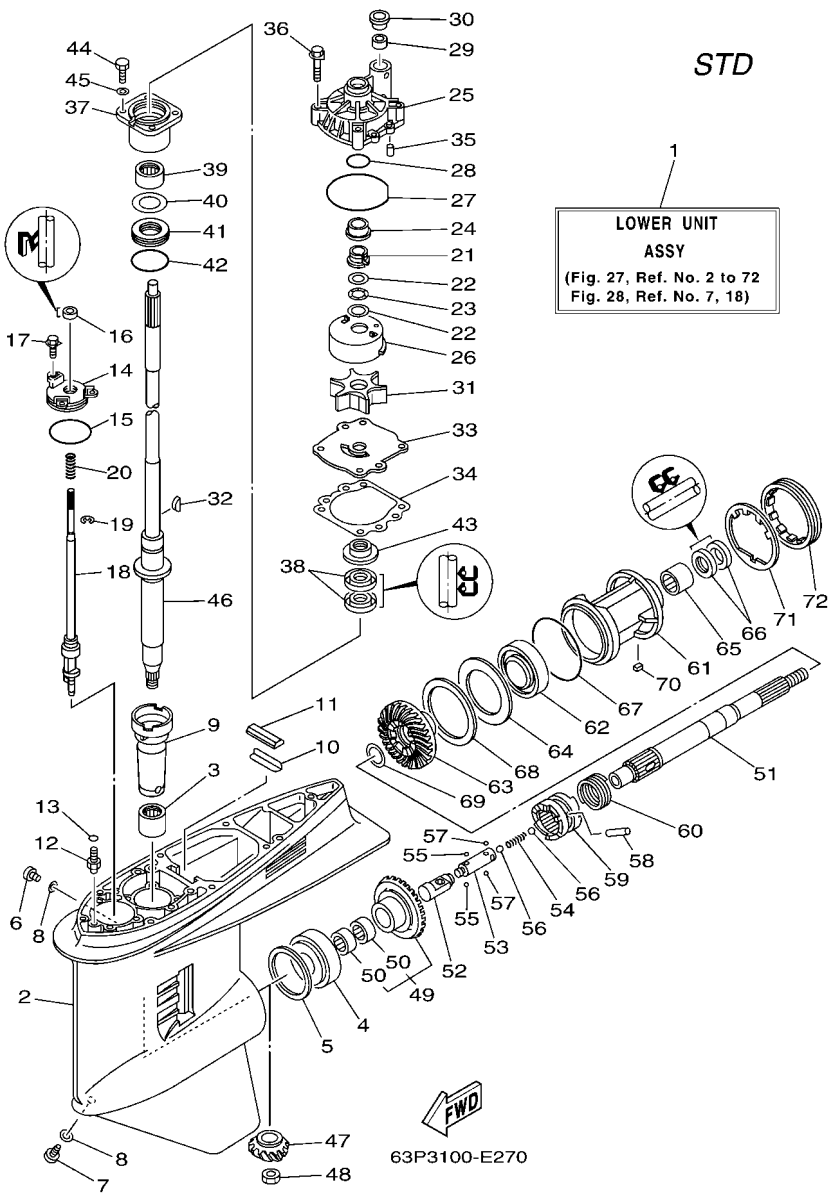


| REF. NO. | PART NO. N° PIECES | DESCRIPTION DESCRIPTION | 63P3 | 64P3 | | | | REMARKS REMARQUES |
|---|---|---|---|---|---|---|---|---|
| 20 | 90501–11M10 | SPRING, COMPRESSION<br>RESSORT, COMPRESSION | 1 | | | | | |
| 21 | 61A–45538–00 | SPACER 1<br>ENTRETOISE | 1 | | | | | |
| 22 | 90201–22M01 | WASHER, PLATE<br>RONDELLE, PLATE | 2 | | | | | |
| 23 | 90206–22M19 | WASHER, WAVE<br>RONDELLE, ONDULEE | 1 | | | | | |
| 24 | 61A–45527–00 | COLLAR, DRIVE SHAFT<br>ENTRETOISE | 1 | | | | | |
| 25 | 61A–44311–01 | HOUSING, WATER PUMP<br>CORPS, POMPE A EAU | 1 | | | | | |
| 26 | 61A–44322–02 | INSERT, CARTRIDGE<br>CUVETTE | 1 | | | | | |
| 27 | 93210–86M38 | O-RING<br>JOINT TORIQUE | 1 | | | | | |
| 28 | 93210–37160 | O-RING<br>JOINT TORIQUE | 1 | | | | | |
| 29 | 6E5–44365–00 | DAMPER, WATER SEAL<br>JOINT, TUBE D'EAU | 1 | | | | | |
| 30 | 6E5–44312–00 | COVER, WATER PUMP HOUSING<br>COUVERCLE | 1 | | | | | |
| 31 | 6E5–44352–01 | IMPELLER<br>TURBINE | 1 | | | | | |
| 32 | 90280–04M05 | KEY, WOODRUFF<br>CLAVETTE, DEMI-LUNE | 1 | | | | | |
| 33 | 6G5–44323–00 | OUTER PLATE, CARTRIDGE<br>PLAQUE EXTERIEURE | 1 | | | | | |
| 34 | 6E5–44315–A0 | GASKET, WATER PUMP<br>JOINT, POMPE A EAU | 1 | | | | | |
| 35 | 93606–12019 | PIN, DOWEL<br>GOUPILLE | 2 | | | | | |
| 36 | 90119–08M14 | BOLT, WITH WASHER<br>BOULON, AVEC RONDELLE | 4 | | | | | |
| 37 | 6E5–45331–00–94 | HOUSING, BEARING<br>FLASQUE, ROULEMENT | 1 | | | | | |
| 38 | 93101–28M16 | OIL SEAL<br>JOINT SPY | 2 | | | | | |
| 39 | 93317–330U2 | BEARING<br>ROULEMENT | 1 | | | | | |
| 40 | 6E5–45587–01 | SHIM (T:0.10MM)<br>CALE (T:0.10MM) | 1 | | | | | UR<br>UR |
| | 6E5–45587–10 | SHIM (T:0.12MM)<br>CALE (T:0.12MM) | 1 | | | | | UR<br>UR |
| | 6E5–45587–20 | SHIM (T:0.15MM)<br>CALE (T:0.15MM) | 1 | | | | | UR<br>UR |
| | 6E5–45587–30 | SHIM (T:0.18MM)<br>CALE (T:0.18MM) | 1 | | | | | UR<br>UR |
| | 6E5–45587–40 | SHIM (T:0.30MM)<br>CALE (T:0.30MM) | 1 | | | | | UR<br>UR |
| | 6E5–45587–50 | SHIM (T:0.40MM)<br>CALE (T:0.40MM) | 1 | | | | | UR<br>UR |
| | 6E5–45587–60 | SHIM (T:0.50MM)<br>CALE (T:0.50MM) | 1 | | | | | UR<br>UR |

## FIG. 27 LOWER CASING & DRIVE 1 — BOITIER D'HELICE TRANSMISSION1

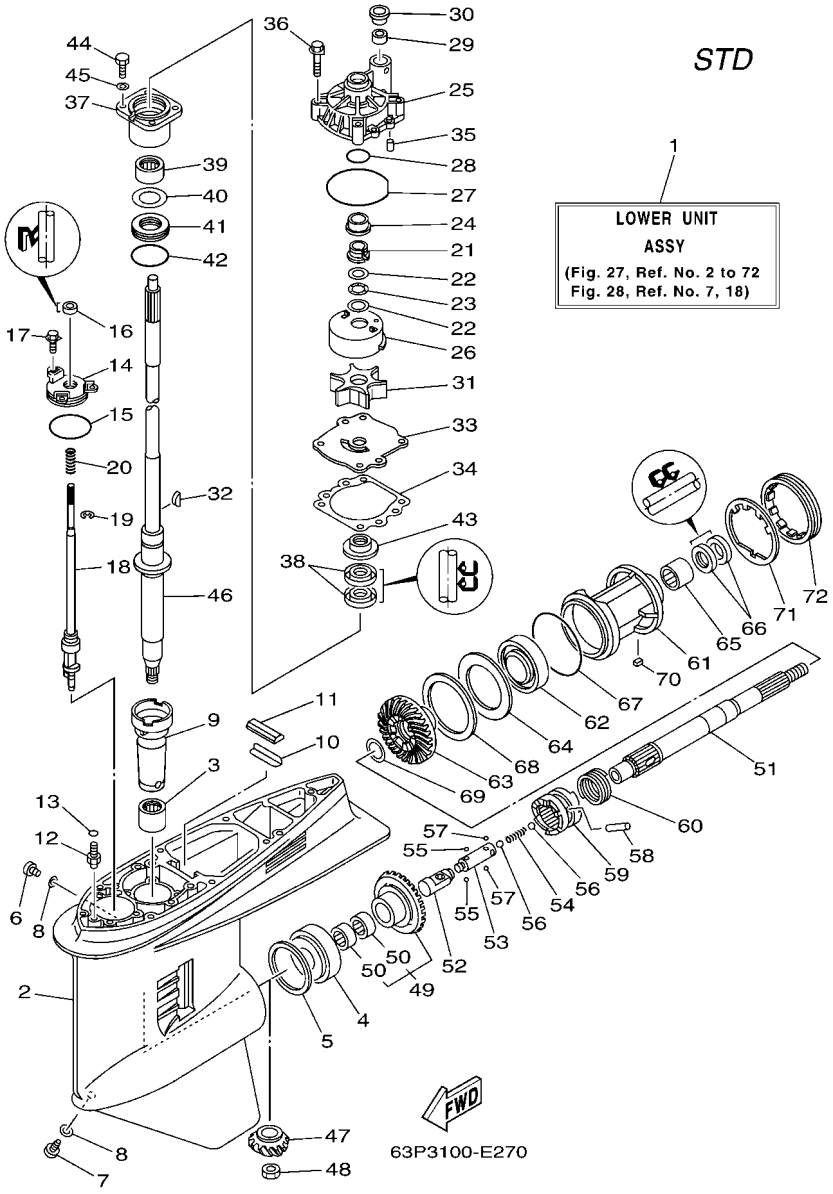


| REF. NO. | PART NO. N° PIECES | DESCRIPTION DESCRIPTION | 63P3 | 64P3 | | | | REMARKS REMARQUES |
|---|---|---|---|---|---|---|---|---|
| 41 | 93341–930V2 | BEARING<br>CERVEAUX DE DIRECTION | 1 | | | | | |
| 42 | 93210–55M14 | O-RING<br>JOINT TORIQUE | 1 | | | | | |
| 43 | 6E5–45344–00 | COVER, OIL SEAL<br>FLASQE, JOINT D'HUILE | 1 | | | | | |
| 44 | 97095–08025 | BOLT<br>BOULON | 4 | | | | | |
| 45 | 92995–08600 | WASHER<br>RONDELLE | 4 | | | | | |
| 46 | 63P–45501–00 | DRIVE SHAFT COMP.<br>ARBRE MOTEUR COMP. | 1 | | | | | L (20.3")<br>L (20.3") |
| | 63P–45501–10 | DRIVE SHAFT COMP.<br>ARBRE MOTEUR COMP. | 1 | | | | | X (25.3")<br>X (25.3") |
| 47 | 63P–45551–00 | PINION (14T)<br>PIGNON D'ATTAQUE (14D) | 1 | | | | | |
| 48 | 90170–16M01 | NUT<br>ECROU | 1 | | | | | |
| 49 | 63P–45560–01 | GEAR 1 (28T)<br>PIGNON 1 (28T) | 1 | | | | | |
| 50 | 93315–425V3 | .BEARING<br>.ROULEMENT | 2 | | | | | |
| 51 | 6J9–45611–01 | SHAFT, PROPELLER<br>ARBRE, HELICE | 1 | | | | | |
| 52 | 6E5–45641–03 | SHIFTER<br>EMBRAYAGE | 1 | | | | | |
| 53 | 6E5–45634–01 | SLIDE, SHIFT<br>CONTRE-POUSSOIR | 1 | | | | | |
| 54 | 90501–16M37 | SPRING, COMPRESSION<br>RESSORT, COMPRESSION | 1 | | | | | |
| 55 | 93507–32009 | BALL<br>BILLE | 2 | | | | | |
| 56 | 93511–32017 | BALL<br>BILLES | 2 | | | | | |
| 57 | 93503–16003 | BALL<br>BILLES | 2 | | | | | |
| 58 | 90250–08M07 | PIN, STRAIGHT<br>GOUPILLE, DROITE | 1 | | | | | |
| 59 | 63P–45631–01 | CLUTCH, DOG<br>CRABOT | 1 | | | | | |
| 60 | 6E5–45633–01 | RING, CROSS PIN<br>JONC, GOUPILLE CRABOT | 1 | | | | | |
| 61 | 6J9–45332–00–8D | HOUSING, BEARING<br>FLASQUE, ROULEMENT | 1 | | | | | |
| 62 | 93306–209U0 | BEARING<br>ROULEMENT | 1 | | | | | |
| 63 | 63P–45571–01 | GEAR 2 (28T)<br>PIGNON 2 (28T) | 1 | | | | | |
| 64 | 6G5–45576–10 | WASHER, THRUST<br>RONDELLE DE CALAGE | 1 | | | | | |
| 65 | 93315–43061 | BEARING<br>ROULEMENT | 1 | | | | | |
| 66 | 93101–30M17 | OIL SEAL<br>JOINT SPY | 2 | | | | | |

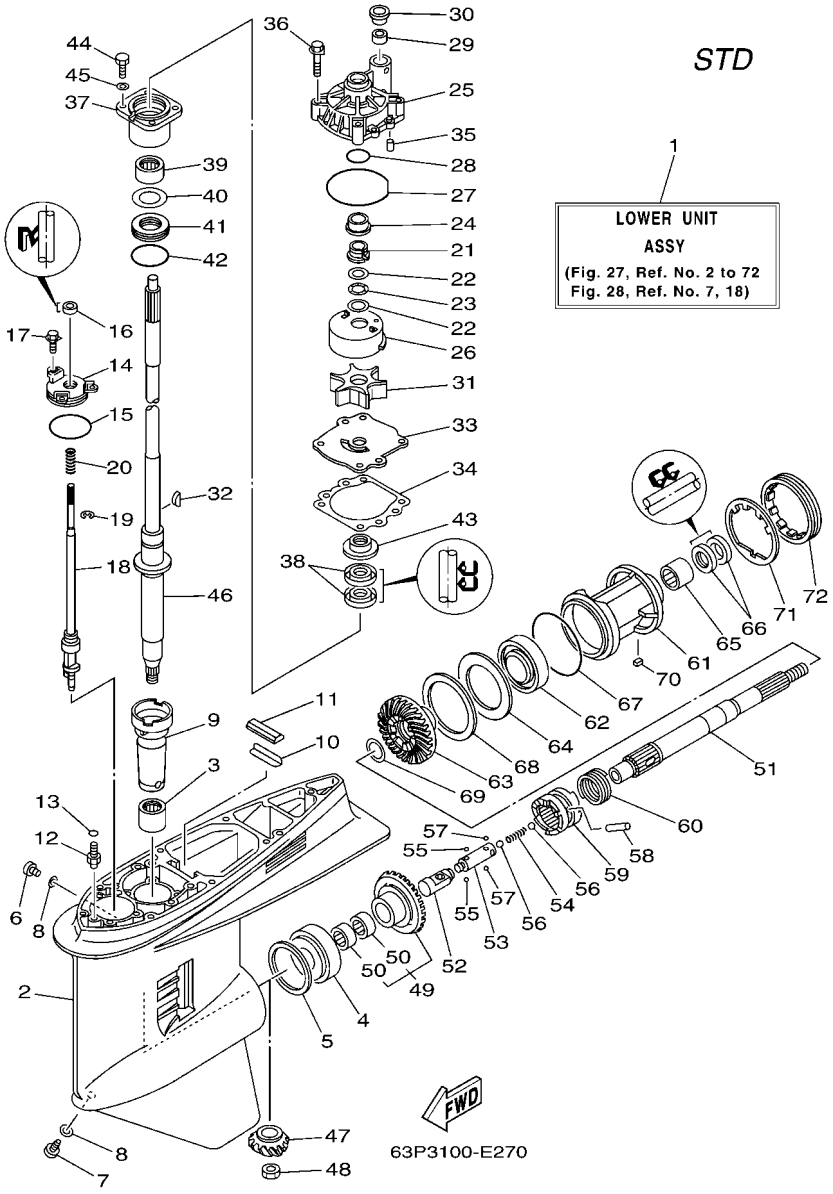


## FIG. 27 LOWER CASING & DRIVE 1 — BOITIER D'HELICE TRANSMISSION1

| REF. NO. | PART NO. N° PIECES | DESCRIPTION DESCRIPTION | 63P3 | 64P3 | | | | REMARKS REMARQUES |
|---|---|---|---|---|---|---|---|---|
| 67 | 93210–97M55 | O-RING<br>JOINT TORIQUE | 1 | | | | | |
| 68 | 6G5–45577–02 | SHIM (T:0.10MM)<br>CALE (T:0.10MM) | 1 | | | | | UR<br>UR |
| | 6G5–45577–10 | SHIM (T:0.12MM)<br>CALE (T:0.12MM) | 1 | | | | | UR<br>UR |
| | 6G5–45577–20 | SHIM (T:0.15MM)<br>CALE (T:0.15MM) | 1 | | | | | UR<br>UR |
| | 6G5–45577–30 | SHIM (T:0.18MM)<br>CALE (T:0.18MM) | 1 | | | | | UR<br>UR |
| | 6G5–45577–40 | SHIM (T:0.30MM)<br>CALE (T:0.30MM) | 1 | | | | | UR<br>UR |
| | 6G5–45577–50 | SHIM (T:0.40MM)<br>CALE (T:0.40MM) | 1 | | | | | UR<br>UR |
| | 6G5–45577–60 | SHIM (T:0.50MM)<br>CALE (T:0.50MM) | 1 | | | | | UR<br>UR |
| 69 | 90201–30M92 | WASHER, PLATE<br>RONDELLE, PLATE | 1 | | | | | |
| 70 | 90282–04M00 | KEY, STRAIGHT<br>CLAVETTE, DROITE | 1 | | | | | |
| 71 | 6G5–45383–01 | WASHER, CLAW<br>FREIN D'ECROU | 1 | | | | | |
| 72 | 6G5–45384–02 | NUT<br>ECROU | 1 | | | | | |

## FIG. 28 LOWER CASING & DRIVE 2 — BOITIER D'HELICE TRANSMISSION2

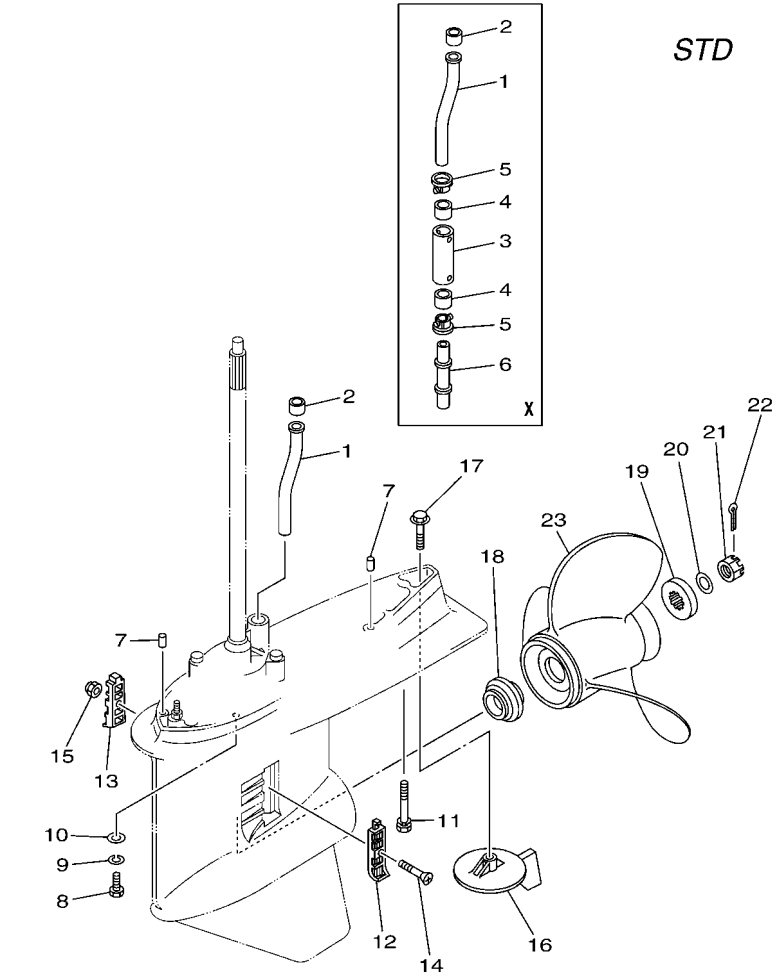


63P1010-C260

| REF. NO. | PART NO. N° PIECES | DESCRIPTION DESCRIPTION | 63P3 | 64P3 | | | | REMARKS REMARQUES |
|---|---|---|---|---|---|---|---|---|
| 1 | 63P–44361–00 | TUBE, WATER<br>TUBE D'EAU | 1 | | | | | |
| 2 | 6E5–44365–00 | DAMPER, WATER SEAL<br>JOINT, TUBE D'EAU | 1 | | | | | |
| 3 | 63P–44362–00 | TUBE, WATER<br>TUBE D'EAU | 1 | | | | | X (25.3")<br>X (25.3") |
| 4 | 6E5–44365–00 | DAMPER, WATER SEAL<br>JOINT, TUBE D'EAU | 2 | | | | | X (25.3")<br>X (25.3") |
| 5 | 6E5–44312–00 | COVER, WATER PUMP HOUSING<br>COUVERCLE | 2 | | | | | X (25.3")<br>X (25.3") |
| 6 | 63P–44363–00 | TUBE, WATER 3<br>TUBE D'EAU 3 | 1 | | | | | X (25.3")<br>X (25.3") |
| 7 | 93608–16M16 | PIN, DOWEL<br>AXE | 2 | | | | | |
| 8 | 97095–10045 | BOLT<br>BOULON | 6 | | | | | |
| 9 | 92995–10100 | WASHER<br>RONDELLE | 6 | | | | | |
| 10 | 92995–10600 | WASHER<br>RONDELLE | 6 | | | | | |
| 11 | 90119–10MA2 | BOLT, WITH WASHER<br>BOULON, AVEC RONDELLE | 1 | | | | | L (20.3")<br>L (20.3") |
| | 90119–10008 | BOLT, WITH WASHER<br>BOULON, AVEC RONDELLE | 1 | | | | | X (25.3")<br>X (25.3") |
| 12 | 6J9–45214–00 | COVER, WATER INLET 1<br>GRILLE, ENTREE D'EAU 1 | 1 | | | | | |
| 13 | 6J9–45215–00 | COVER, WATER INLET 2<br>GRILLE, ENTREE D'EAU 2 | 1 | | | | | |
| 14 | 90152–05M08 | SCREW, COUNTERSUNK<br>VIS, TETE NOYEE | 1 | | | | | |
| 15 | 90185–05002 | NUT, SELF-LOCKING<br>ECROU,AUTO-BLOQUANT | 1 | | | | | |
| 16 | 6J9–45371–01 | TAB-TRIM<br>ANODE DERIVE | 1 | | | | | |
| 17 | 90105–10M00 | BOLT, FLANGE<br>BOULON | 1 | | | | | |
| 18 | 63P–45987–00 | SPACER<br>ENTRETOISE | 1 | | | | | |
| 19 | 688–45997–01 | SPACER<br>ENTRETOISE | 1 | | | | | |
| 20 | 92990–18200 | WASHER<br>RONDELLE, PLATE | 1 | | | | | |
| 21 | 90171–18M04 | NUT, CASTLE<br>ECROU, CRENELE | 1 | | | | | |
| 22 | 91490–40030 | PIN, COTTER<br>GOUPILLE | 1 | | | | | |
| 23 | 6G5–45941–00–98 | PROPELLER (3X15-1/4"X15"-M)<br>HELICE (3X15-1/4"X15"-M) | 1 | | | | | UR<br>UR |
| | 6G5–45943–01–98 | PROPELLER (3X13-3/4"X21"-M)<br>HELICE (3X13-3/4"X21"-M) | 1 | | | | | UR<br>UR |
| | 6G5–45945–01–98 | PROPELLER (3X14"X19"-M)<br>HELICE (3X14"X19"-M) | 1 | | | | | UR<br>UR |
| | 6G5–45947–01–98 | PROPELLER (3X14-1/2"X17"-M)<br>HELICE (3X14-1/2"X17"-M) | 1 | | | | | UR<br>UR |

## FIG. 28 LOWER CASING & DRIVE 2 — BOITIER D'HELICE TRANSMISSION2

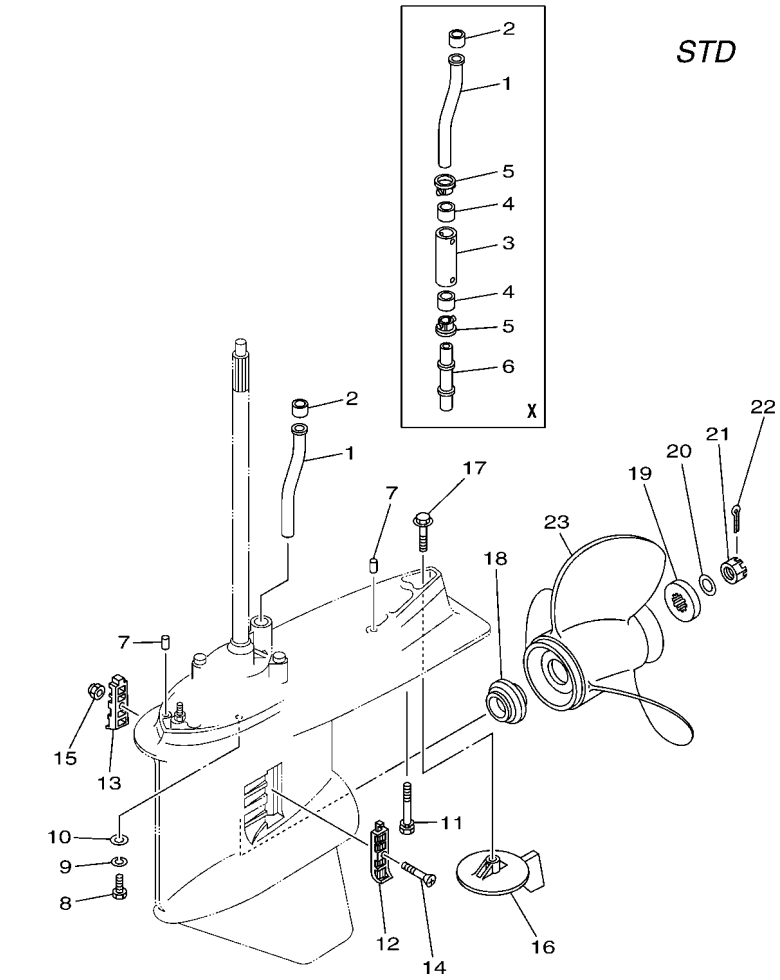


63P1010-C260

| REF. NO. | PART NO. N° PIECES | DESCRIPTION DESCRIPTION | 63P3 | 64P3 | | | | REMARKS REMARQUES |
|---|---|---|---|---|---|---|---|---|
| 23 | 6G5–45949–00–98 | PROPELLER (3X13-1/2"X23"-M) | 1 | | | | | UR |
| | | HELICE (3X13-1/2"X23"-M) | | | | | | UR |
| | 6G5–45930–00–98 | PROPELLER (3X13-3/8"X25"-M) | 1 | | | | | UR |
| | | HELICE (3X13-3/8"X25"-M) | | | | | | UR |
| | 6G5–45932–00–98 | PROPELLER (3X15-3/4"X13"-M) | 1 | | | | | UR |
| | | HELICE (3X15-3/4"X13"-M) | | | | | | UR |
| | 6G5–45970–02–98 | PROPELLER (3X15-1/4"X15"-M) | 1 | | | | | UR |
| | | HELICE (3X15-1/4"X15"-M) | | | | | | UR |
| | 6G5–45972–02–98 | PROPELLER (3X13-3/4"X21"-M) | 1 | | | | | UR |
| | | HELICE (3X13-3/4"X21"-M) | | | | | | UR |
| | 6G5–45974–03–98 | PROPELLER (3X13-3/4"X19"-M2) | 1 | | | | | UR |
| | | HELICE (3X13-3/4"X19"-M2) | | | | | | UR |
| | 6G5–45976–01–98 | PROPELLER (3X13-3/8"X23"-M) | 1 | | | | | UR |
| | | HELICE (3X13-3/8"X23"-M) | | | | | | UR |
| | 6G5–45978–03–98 | PROPELLER (3X13-3/4"X17"-M2) | 1 | | | | | UR |
| | | HELICE (3X13-3/4"X17"-M2) | | | | | | UR |
| | 6R4–45970–A1 | PROPELLER (3X15-1/4"X19"-M) | 1 | | | | | UR |
| | | HELICE (3X15-1/4"X19"-M) | | | | | | UR |
| | 6R4–45972–A0 | PROPELLER (3X14-7/8"X21"-M) | 1 | | | | | UR |
| | | HELICE (3X14-7/8"X21"-M) | | | | | | UR |
| | 6R4–45974–A0 | PROPELLER (3X14-1/2"X23"-M) | 1 | | | | | UR |
| | | HELICE (3X14-1/2"X23"-M) | | | | | | UR |
| | 6R4–45976–A0 | PROPELLER (3X14-1/2"X15"-M) | 1 | | | | | UR |
| | | HELICE (3X14-1/2"X15"-M) | | | | | | UR |
| | 6R4–45978–A0 | PROPELLER (3X15-1/4"X17"-M) | 1 | | | | | UR |
| | | HELICE (3X15-1/4"X17"-M) | | | | | | UR |
| | 6J9–45970–10 | PROPELLER (3X14-1/2"X25"-M) | 1 | | | | | UR |
| | | HELICE (3X14-1/2"X25"-M) | | | | | | UR |
| | 6J9–45972–10 | PROPELLER (3X14-1/2"X23"-M) | 1 | | | | | UR |
| | | HELICE (3X14-1/2"X23"-M) | | | | | | UR |
| | 6J9–45974–10 | PROPELLER (3X14-1/2"X27"-M) | 1 | | | | | UR |
| | | HELICE (3X14-1/2"X27"-M) | | | | | | UR |
| | 6J9–45976–10 | PROPELLER (3X14-1/2"X21"-M) | 1 | | | | | UR |
| | | HELICE (3X14-1/2"X21"-M) | | | | | | UR |

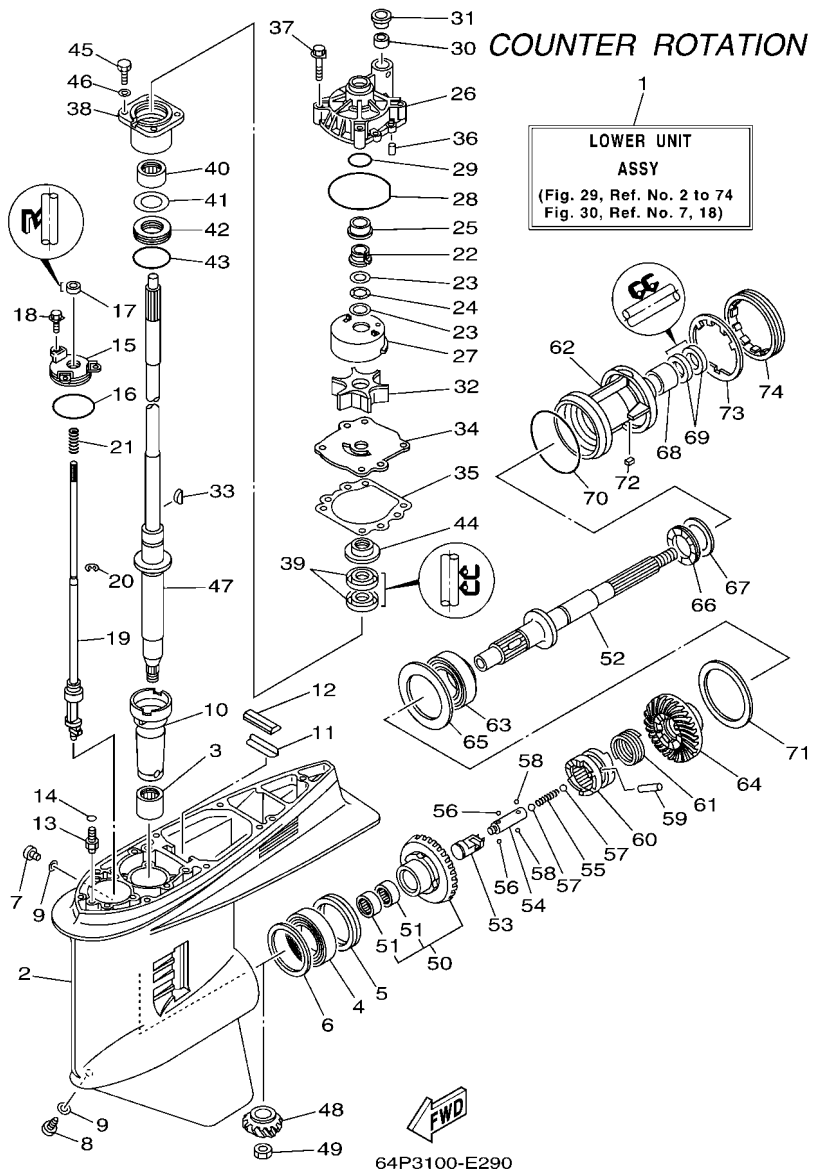


## FIG. 29 LOWER CASING & DRIVE 3 — BOITIER D'HELICE TRANSMISSION3

| REF. NO. | PART NO. N° PIECES | DESCRIPTION DESCRIPTION | 63P3 | 64P3 | | | | REMARKS REMARQUES |
|---|---|---|---|---|---|---|---|---|
| 1 | 64P–45300–01–8D | LOWER UNIT ASSY<br>UNITE INFERIEURE (ENS.) | | 1 | | | | L (20.3"),LH<br>L (20.3"),LH |
| | 64P–45300–11–8D | LOWER UNIT ASSY<br>UNITE INFERIEURE (ENS.) | | 1 | | | | X (25.3"),LH<br>X (25.3"),LH |
| 2 | 6J9–45301–05–8D | CASING, LOWER<br>BEQUILLE | | 1 | | | | |
| 3 | 93311–928U5 | BEARING<br>ROULEMENT | | 1 | | | | |
| 4 | 93390–000U2 | BEARING<br>ROULEMENT | | 1 | | | | |
| 5 | 93341–465U4 | BEARING<br>CERVEAUX DE DIRECTION | | 1 | | | | |
| 6 | 6G5–45567–01 | SHIM (T:0.10MM)<br>CALE (T:0.10MM) | | 1 | | | | UR<br>UR |
| | 6G5–45567–10 | SHIM (T:0.12MM)<br>CALE (T:0.12MM) | | 1 | | | | UR<br>UR |
| | 6G5–45567–20 | SHIM (T:0.15MM)<br>CALE (T:0.15MM) | | 1 | | | | UR<br>UR |
| | 6G5–45567–30 | SHIM (T:0.18MM)<br>CALE (T:0.18MM) | | 1 | | | | UR<br>UR |
| | 6G5–45567–40 | SHIM (T:0.30MM)<br>CALE (T:0.30MM) | | 1 | | | | UR<br>UR |
| | 6G5–45567–50 | SHIM (T:0.40MM)<br>CALE (T:0.40MM) | | 1 | | | | UR<br>UR |
| | 6G5–45567–60 | SHIM (T:0.50MM)<br>CALE (T:0.50MM) | | 1 | | | | UR<br>UR |
| 7 | 90340–08002 | PLUG, STRAIGHT SCREW<br>PLOT, FILETE DROIT | | 1 | | | | |
| 8 | 688–45341–10 | PLUG, DRAIN<br>BOUCHON DE VIDANGE | | 1 | | | | |
| 9 | 90430–08020 | GASKET<br>JOINT | | 2 | | | | |
| 10 | 6G5–45536–01 | SLEEVE, DRIVE SHAFT<br>MANCHON, ARBRE MOTEUR | | 1 | | | | |
| 11 | 663–45376–00–94 | GUIDE, SEAL DAMPER<br>BUTEE, JOINT CAOUTCHOUC | | 1 | | | | |
| 12 | 688–45375–00 | DAMPER, SEAL<br>BOURRELET, CAOUTCHOUC | | 1 | | | | |
| 13 | 63P–45378–00 | NIPPLE, HOSE<br>RACCORD, TUYAU | | 1 | | | | |
| 14 | 93210–07003 | O-RING<br>JOINT TORIQUE | | 1 | | | | |
| 15 | 6E5–45321–00 | PLATE<br>PLAQUETTE | | 1 | | | | |
| 16 | 93210–58144 | O-RING<br>JOINT TORIQUE | | 1 | | | | |
| 17 | 93106–09014 | OIL SEAL<br>JOINT SPY | | 1 | | | | |
| 18 | 90119–06M10 | BOLT, WITH WASHER<br>BOULON, AVEC RONDELLE | | 3 | | | | |
| 19 | 64P–44150–00 | SHIFT CAM ASSY<br>CAME D'INVERSION | | 1 | | | | L (20.3"),LH<br>L (20.3"),LH |
| | 64P–44150–10 | SHIFT CAM ASSY<br>CAME D'INVERSION | | 1 | | | | X (25.3"),LH<br>X (25.3"),LH |

## FIG. 29 LOWER CASING & DRIVE 3 — BOITIER D'HELICE TRANSMISSION3

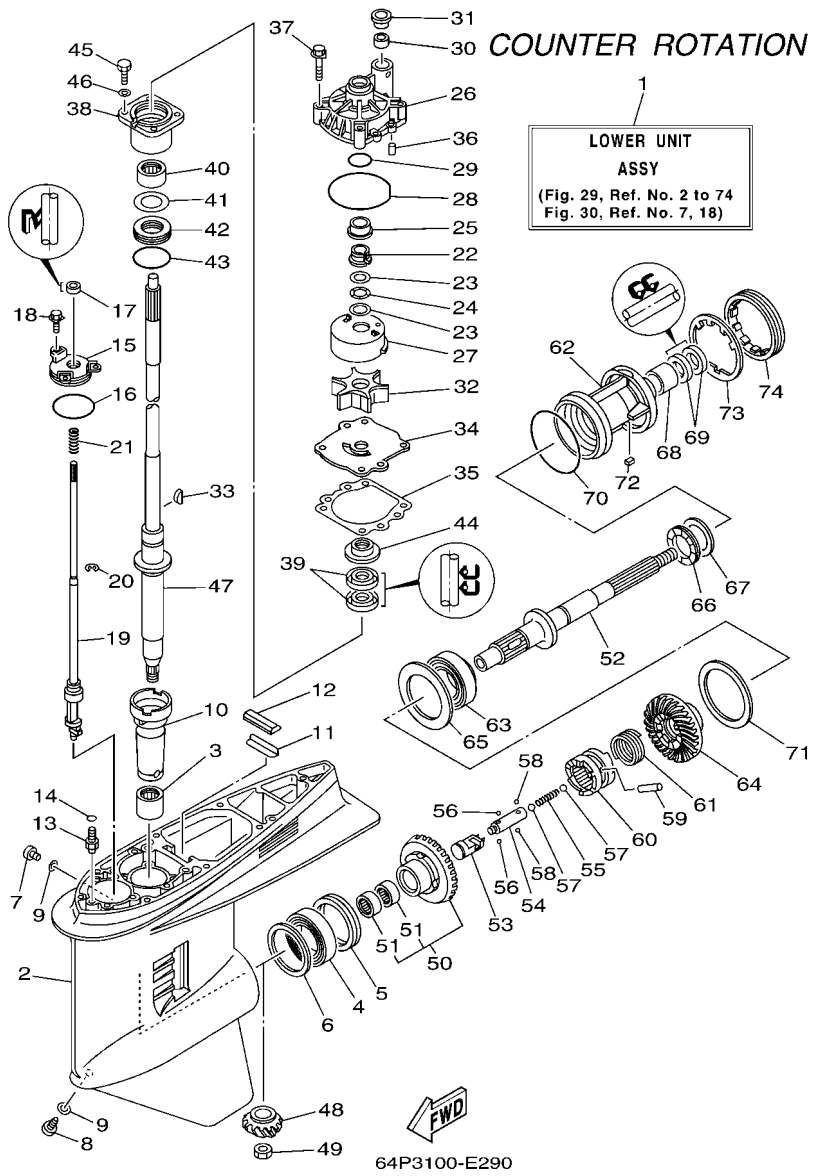


| REF. NO. | PART NO. N° PIECES | DESCRIPTION DESCRIPTION | 63P3 | 64P3 | | | | REMARKS REMARQUES |
|---|---|---|---|---|---|---|---|---|
| 20 | 99001–08600 | CIRCLIP<br>CIRCLIP | | 1 | | | | |
| 21 | 90501–11M10 | SPRING, COMPRESSION<br>RESSORT, COMPRESSION | | 1 | | | | |
| 22 | 61A–45538–00 | SPACER 1<br>ENTRETOISE | | 1 | | | | |
| 23 | 90201–22M01 | WASHER, PLATE<br>RONDELLE, PLATE | | 2 | | | | |
| 24 | 90206–22M19 | WASHER, WAVE<br>RONDELLE, ONDULEE | | 1 | | | | |
| 25 | 61A–45527–00 | COLLAR, DRIVE SHAFT<br>ENTRETOISE | | 1 | | | | |
| 26 | 61A–44311–01 | HOUSING, WATER PUMP<br>CORPS, POMPE A EAU | | 1 | | | | |
| 27 | 61A–44322–02 | INSERT, CARTRIDGE<br>CUVETTE | | 1 | | | | |
| 28 | 93210–86M38 | O-RING<br>JOINT TORIQUE | | 1 | | | | |
| 29 | 93210–37160 | O-RING<br>JOINT TORIQUE | | 1 | | | | |
| 30 | 6E5–44365–00 | DAMPER, WATER SEAL<br>JOINT, TUBE D'EAU | | 1 | | | | |
| 31 | 6E5–44312–00 | COVER, WATER PUMP HOUSING<br>COUVERCLE | | 1 | | | | |
| 32 | 6E5–44352–01 | IMPELLER<br>TURBINE | | 1 | | | | |
| 33 | 90280–04M05 | KEY, WOODRUFF<br>CLAVETTE, DEMI-LUNE | | 1 | | | | |
| 34 | 6G5–44323–00 | OUTER PLATE, CARTRIDGE<br>PLAQUE EXTERIEURE | | 1 | | | | |
| 35 | 6E5–44315–A0 | GASKET, WATER PUMP<br>JOINT, POMPE A EAU | | 1 | | | | |
| 36 | 93606–12019 | PIN, DOWEL<br>GOUPILLE | | 2 | | | | |
| 37 | 90119–08M14 | BOLT, WITH WASHER<br>BOULON, AVEC RONDELLE | | 4 | | | | |
| 38 | 6E5–45331–00–94 | HOUSING, BEARING<br>FLASQUE, ROULEMENT | | 1 | | | | |
| 39 | 93101–28M16 | OIL SEAL<br>JOINT SPY | | 2 | | | | |
| 40 | 93317–330U2 | BEARING<br>ROULEMENT | | 1 | | | | |
| 41 | 6E5–45587–01 | SHIM (T:0.10MM)<br>CALE (T:0.10MM) | | 1 | | | | UR<br>UR |
| | 6E5–45587–10 | SHIM (T:0.12MM)<br>CALE (T:0.12MM) | | 1 | | | | UR<br>UR |
| | 6E5–45587–20 | SHIM (T:0.15MM)<br>CALE (T:0.15MM) | | 1 | | | | UR<br>UR |
| | 6E5–45587–30 | SHIM (T:0.18MM)<br>CALE (T:0.18MM) | | 1 | | | | UR<br>UR |
| | 6E5–45587–40 | SHIM (T:0.30MM)<br>CALE (T:0.30MM) | | 1 | | | | UR<br>UR |
| | 6E5–45587–50 | SHIM (T:0.40MM)<br>CALE (T:0.40MM) | | 1 | | | | UR<br>UR |

## FIG. 29 LOWER CASING & DRIVE 3 — BOITIER D'HELICE TRANSMISSION3

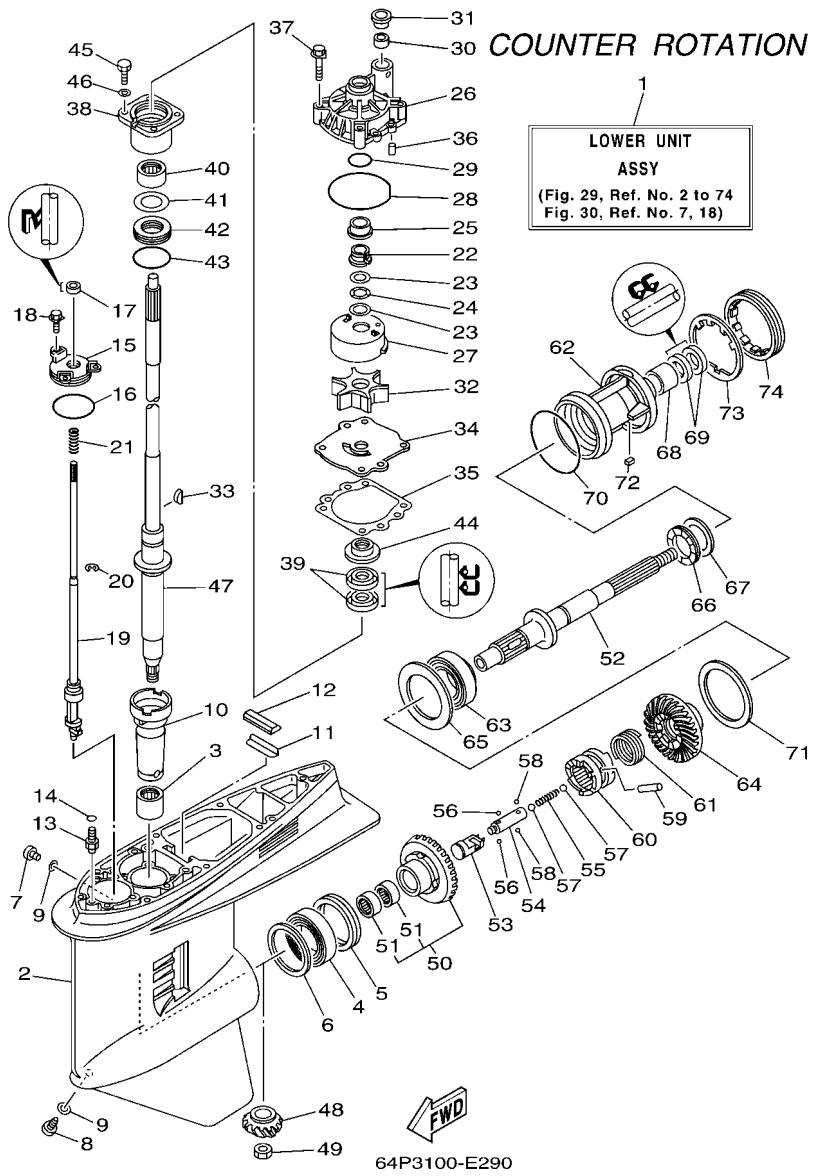


| REF. NO. | PART NO. N° PIECES | DESCRIPTION DESCRIPTION | 63P3 | 64P3 | | | | REMARKS REMARQUES |
|---|---|---|---|---|---|---|---|---|
| 41 | 6E5–45587–60 | SHIM (T:0.50MM)<br>CALE (T:0.50MM) | | 1 | | | | UR<br>UR |
| 42 | 93341–930V2 | BEARING<br>CERVEAUX DE DIRECTION | | 1 | | | | |
| 43 | 93210–55M14 | O-RING<br>JOINT TORIQUE | | 1 | | | | |
| 44 | 6E5–45344–00 | COVER, OIL SEAL<br>FLASQE, JOINT D'HUILE | | 1 | | | | |
| 45 | 97095–08025 | BOLT<br>BOULON | | 4 | | | | |
| 46 | 92995–08600 | WASHER<br>RONDELLE | | 4 | | | | |
| 47 | 63P–45501–00 | DRIVE SHAFT COMP.<br>ARBRE MOTEUR COMP. | | 1 | | | | L (20.3")<br>L (20.3") |
| | 63P–45501–10 | DRIVE SHAFT COMP.<br>ARBRE MOTEUR COMP. | | 1 | | | | X (25.3")<br>X (25.3") |
| 48 | 63P–45551–00 | PINION (14T)<br>PIGNON D'ATTAQUE (14D) | | 1 | | | | |
| 49 | 90170–16M01 | NUT<br>ECROU | | 1 | | | | |
| 50 | 64P–45560–01 | GEAR 1 (28T)<br>PIGNON 1 (28T) | | 1 | | | | |
| 51 | 93315–425V3 | .BEARING<br>.ROULEMENT | | 2 | | | | |
| 52 | 6K1–45611–10 | SHAFT, PROPELLER<br>ARBRE, HELICE | | 1 | | | | |
| 53 | 6K1–45641–01 | SHIFTER<br>EMBRAYAGE | | 1 | | | | |
| 54 | 6E5–45634–01 | SLIDE, SHIFT<br>CONTRE-POUSSOIR | | 1 | | | | |
| 55 | 90501–16M37 | SPRING, COMPRESSION<br>RESSORT, COMPRESSION | | 1 | | | | |
| 56 | 93507–32009 | BALL<br>BILLE | | 2 | | | | |
| 57 | 93511–32017 | BALL<br>BILLES | | 2 | | | | |
| 58 | 93503–16003 | BALL<br>BILLES | | 2 | | | | |
| 59 | 90250–08M07 | PIN, STRAIGHT<br>GOUPILLE, DROITE | | 1 | | | | |
| 60 | 63P–45631–01 | CLUTCH, DOG<br>CRABOT | | 1 | | | | |
| 61 | 6E5–45633–01 | RING, CROSS PIN<br>JONC, GOUPILLE CRABOT | | 1 | | | | |
| 62 | 6K1–45332–01–8D | HOUSING, BEARING<br>FLASQUE, ROULEMENT | | 1 | | | | |
| 63 | 93332–00048 | BEARING<br>ROULEMENT | | 1 | | | | |
| 64 | 64P–45570–01 | GEAR 2 (28T)<br>PIGNON 2 (28T) | | 1 | | | | |
| 65 | 6K1–45576–00 | WASHER, THRUST<br>RONDELLE DE CALAGE | | 1 | | | | |
| 66 | 93341–440U5 | BEARING<br>CERVEAUX DE DIRECTION | | 1 | | | | |

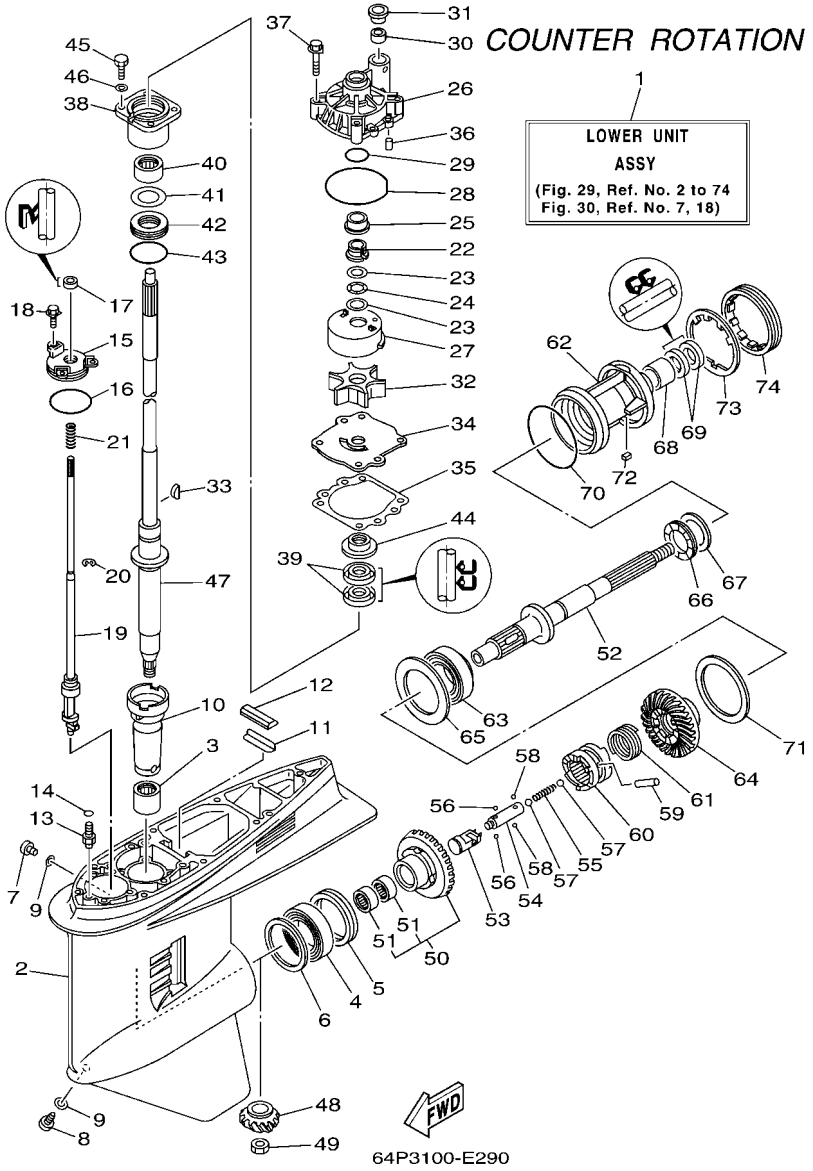


## FIG. 29 LOWER CASING & DRIVE 3 — BOITIER D'HELICE TRANSMISSION3

| REF. NO. | PART NO. N° PIECES | DESCRIPTION DESCRIPTION | 63P3 | 64P3 | | | | REMARKS REMARQUES |
|---|---|---|---|---|---|---|---|---|
| 67 | 6K1–45578–01 | SHIM (T:0.10MM)<br>CALE (T:0.10MM) | | 1 | | | | UR<br>UR |
| | 6K1–45578–10 | SHIM (T:0.12MM)<br>CALE (T:0.12MM) | | 1 | | | | UR<br>UR |
| | 6K1–45578–20 | SHIM (T:0.15MM)<br>CALE (T:0.15MM) | | 1 | | | | UR<br>UR |
| | 6K1–45578–30 | SHIM (T:0.18MM)<br>CALE (T:0.18MM) | | 1 | | | | UR<br>UR |
| | 6K1–45578–40 | SHIM (T:0.30MM)<br>CALE (T:0.30MM) | | 1 | | | | UR<br>UR |
| | 6K1–45578–50 | SHIM (T:0.40MM)<br>CALE (T:0.40MM) | | 1 | | | | UR<br>UR |
| | 6K1–45578–60 | SHIM (T:0.50MM)<br>CALE (T:0.50MM) | | 1 | | | | UR<br>UR |
| 68 | 93315–43061 | BEARING<br>ROULEMENT | | 1 | | | | |
| 69 | 93101–30M17 | OIL SEAL<br>JOINT SPY | | 2 | | | | |
| 70 | 93210–97M55 | O-RING<br>JOINT TORIQUE | | 1 | | | | |
| 71 | 6G5–45577–02 | SHIM (T:0.10MM)<br>CALE (T:0.10MM) | | 1 | | | | UR<br>UR |
| | 6G5–45577–10 | SHIM (T:0.12MM)<br>CALE (T:0.12MM) | | 1 | | | | UR<br>UR |
| | 6G5–45577–20 | SHIM (T:0.15MM)<br>CALE (T:0.15MM) | | 1 | | | | UR<br>UR |
| | 6G5–45577–30 | SHIM (T:0.18MM)<br>CALE (T:0.18MM) | | 1 | | | | UR<br>UR |
| | 6G5–45577–40 | SHIM (T:0.30MM)<br>CALE (T:0.30MM) | | 1 | | | | UR<br>UR |
| | 6G5–45577–50 | SHIM (T:0.40MM)<br>CALE (T:0.40MM) | | 1 | | | | UR<br>UR |
| | 6G5–45577–60 | SHIM (T:0.50MM)<br>CALE (T:0.50MM) | | 1 | | | | UR<br>UR |
| 72 | 90282–04M00 | KEY, STRAIGHT<br>CLAVETTE, DROITE | | 1 | | | | |
| 73 | 6G5–45383–01 | WASHER, CLAW<br>FREIN D'ECROU | | 1 | | | | |
| 74 | 6G5–45384–02 | NUT<br>ECROU | | 1 | | | | |

## FIG. 30 LOWER CASING & DRIVE 4 — BOITIER D'HELICE TRANSMISSION4

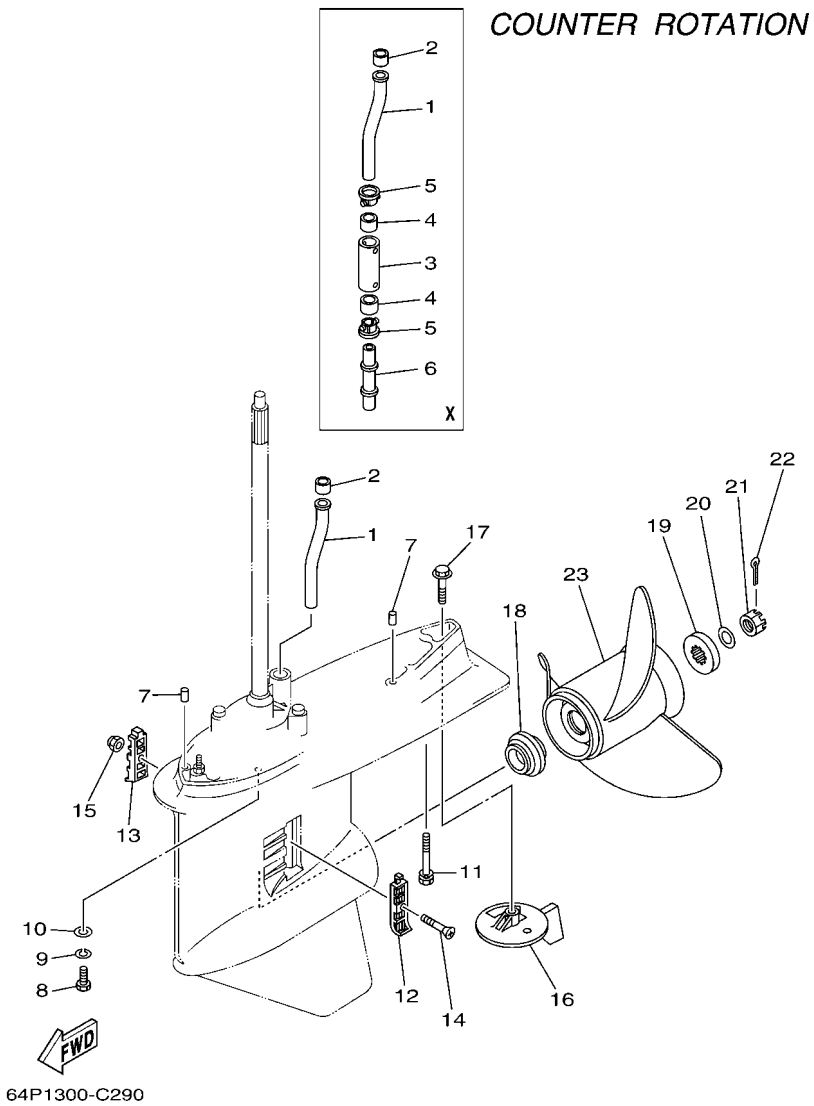


| REF. NO. | PART NO. N° PIECES | DESCRIPTION DESCRIPTION | 63P3 | 64P3 | | | | REMARKS REMARQUES |
|---|---|---|---|---|---|---|---|---|
| 1 | 63P–44361–00 | TUBE, WATER<br>TUBE D'EAU | | 1 | | | | |
| 2 | 6E5–44365–00 | DAMPER, WATER SEAL<br>JOINT, TUBE D'EAU | | 1 | | | | |
| 3 | 63P–44362–00 | TUBE, WATER<br>TUBE D'EAU | | 1 | | | | X (25.3")<br>X (25.3") |
| 4 | 6E5–44365–00 | DAMPER, WATER SEAL<br>JOINT, TUBE D'EAU | | 2 | | | | X (25.3")<br>X (25.3") |
| 5 | 6E5–44312–00 | COVER, WATER PUMP HOUSING<br>COUVERCLE | | 2 | | | | X (25.3")<br>X (25.3") |
| 6 | 63P–44363–00 | TUBE, WATER 3<br>TUBE D'EAU 3 | | 1 | | | | X (25.3")<br>X (25.3") |
| 7 | 93608–16M16 | PIN, DOWEL<br>AXE | | 2 | | | | |
| 8 | 97095–10045 | BOLT<br>BOULON | | 6 | | | | |
| 9 | 92995–10100 | WASHER<br>RONDELLE | | 6 | | | | |
| 10 | 92995–10600 | WASHER<br>RONDELLE | | 6 | | | | |
| 11 | 90119–10MA2 | BOLT, WITH WASHER<br>BOULON, AVEC RONDELLE | | 1 | | | | L (20.3")<br>L (20.3") |
| | 90119–10008 | BOLT, WITH WASHER<br>BOULON, AVEC RONDELLE | | 1 | | | | X (25.3")<br>X (25.3") |
| 12 | 6J9–45214–00 | COVER, WATER INLET 1<br>GRILLE, ENTREE D'EAU 1 | | 1 | | | | |
| 13 | 6J9–45215–00 | COVER, WATER INLET 2<br>GRILLE, ENTREE D'EAU 2 | | 1 | | | | |
| 14 | 90152–05M08 | SCREW, COUNTERSUNK<br>VIS, TETE NOYEE | | 1 | | | | |
| 15 | 90185–05002 | NUT, SELF-LOCKING<br>ECROU,AUTO-BLOQUANT | | 1 | | | | |
| 16 | 6K1–45371–02 | TAB-TRIM<br>ANODE DERIVE | | 1 | | | | |
| 17 | 90105–10M00 | BOLT, FLANGE<br>BOULON | | 1 | | | | |
| 18 | 63P–45987–00 | SPACER<br>ENTRETOISE | | 1 | | | | |
| 19 | 688–45997–01 | SPACER<br>ENTRETOISE | | 1 | | | | |
| 20 | 92990–18200 | WASHER<br>RONDELLE, PLATE | | 1 | | | | |
| 21 | 90171–18M04 | NUT, CASTLE<br>ECROU, CRENELE | | 1 | | | | |
| 22 | 91490–40030 | PIN, COTTER<br>GOUPILLE | | 1 | | | | |
| 23 | 6K1–45970–01–98 | PROPELLER (3X15-1/4"X15"-ML)<br>HELICE (3X15-1/4"X15"-ML) | | 1 | | | | UR<br>UR |
| | 6K1–45972–01–98 | PROPELLER (3X13-3/4"X21"-ML)<br>HELICE (3X13-3/4"X21"-ML) | | 1 | | | | UR<br>UR |
| | 6K1–45974–02–98 | PROPELLER (3X13-3/4"X19"-ML1)<br>HELICE (3X13-3/4"X19"-ML1) | | 1 | | | | UR<br>UR |
| | 6K1–45976–00–98 | PROPELLER (3X13-3/8"X23"-ML)<br>HELICE (3X13-3/8"X23"-ML) | | 1 | | | | UR<br>UR |

## FIG. 30 LOWER CASING & DRIVE 4 — BOITIER D'HELICE TRANSMISSION4

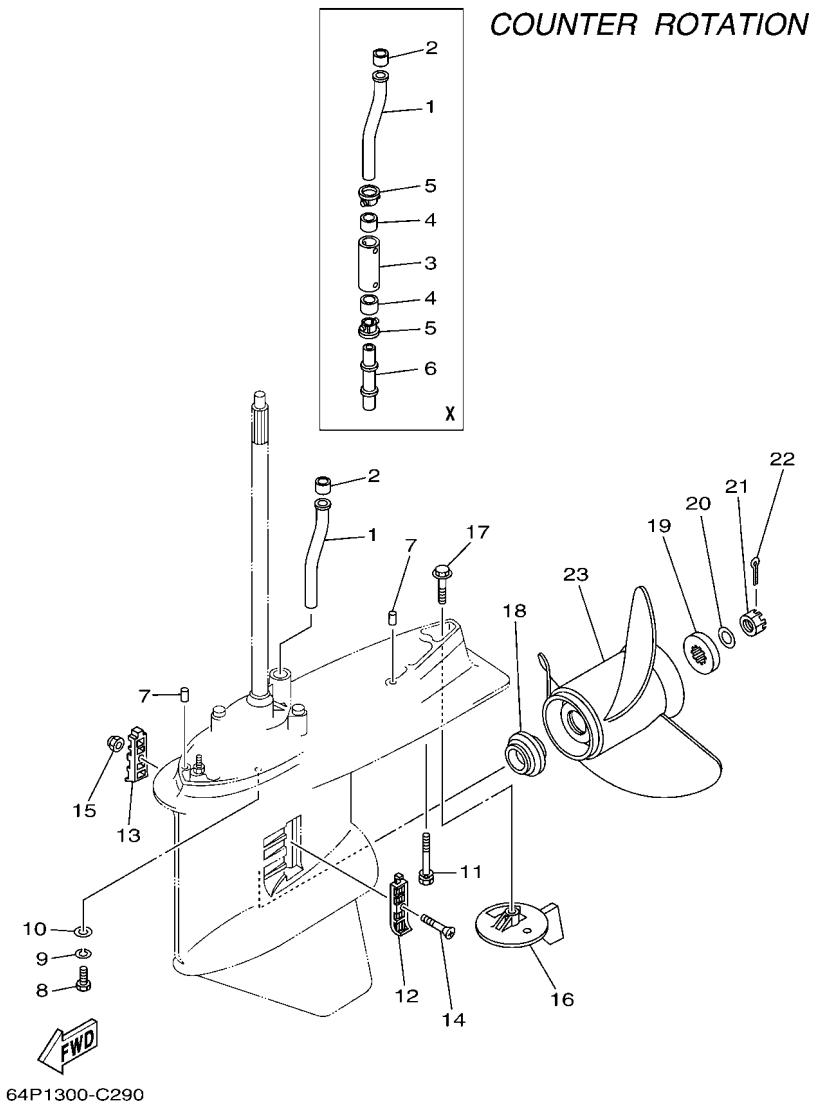


| REF. NO. | PART NO. N° PIECES | DESCRIPTION DESCRIPTION | 63P3 | 64P3 | | | | REMARKS REMARQUES |
|---|---|---|---|---|---|---|---|---|
| 23 | 6K1–45978–02–98 | PROPELLER (3X13-3/4"X17"-ML1)<br>HELICE (3X13-3/4"X17"-ML1) | | 1 | | | | UR<br>UR |
| | 6K1–45945–00–98 | PROPELLER (3X14"X19"-ML)<br>HELICE (3X14"X19"-ML) | | 1 | | | | UR<br>UR |
| | 6K1–45947–00–98 | PROPELLER (3X14-1/2"X17"-ML)<br>HELICE (3X14-1/2"X17"-ML) | | 1 | | | | UR<br>UR |
| | 6R1–45970–A1 | PROPELLER (3X15-1/4"X19"-ML)<br>HELICE (3X15-1/4"X19"-ML) | | 1 | | | | UR<br>UR |
| | 6R1–45972–A0 | PROPELLER (3X14-7/8"X21"-ML)<br>HELICE (3X14-7/8"X21"-ML) | | 1 | | | | UR<br>UR |
| | 6R1–45974–A0 | PROPELLER (3X14-1/2"X23"-ML)<br>HELICE (3X14-1/2"X23"-ML) | | 1 | | | | UR<br>UR |
| | 6R1–45976–A0 | PROPELLER (3X15-1/4"X15"-ML)<br>HELICE (3X15-1/4"X15"-ML) | | 1 | | | | UR<br>UR |
| | 6R1–45978–A0 | PROPELLER (3X15-1/4"X17"-ML)<br>HELICE (3X15-1/4"X17"-ML) | | 1 | | | | UR<br>UR |

## FIG. 31 STEERING GUIDE — FIXATION DE DIRECTION

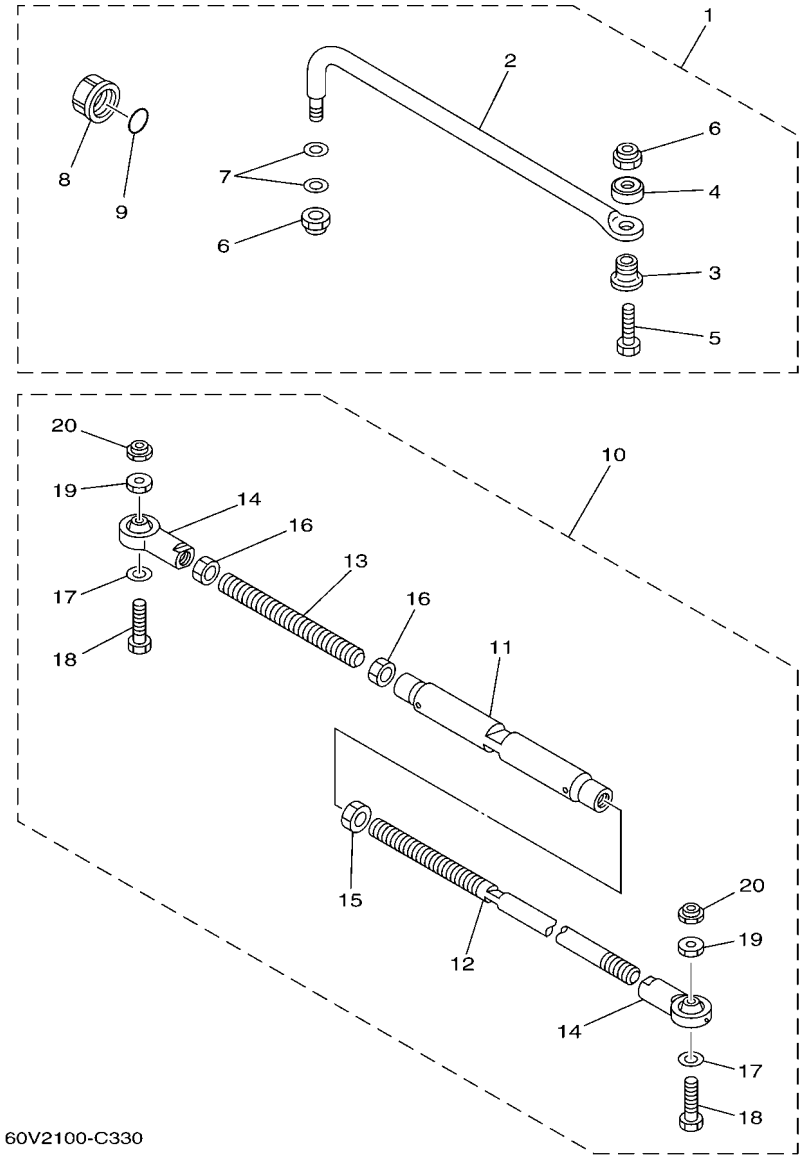


| REF. NO. | PART NO. N° PIECES | DESCRIPTION DESCRIPTION | 63P3 | 64P3 | | | | REMARKS REMARQUES |
|---|---|---|---|---|---|---|---|---|
| 1 | 6E5–61350–02 | STEERING GUIDE ATTACHMENT KIT<br>FIXATIONS DE DIRECTION | 1 | | | | | AP<br>AP |
| 2 | 6E5–61351–01 | .ROD, STEERING LINK<br>.RENVOI DE DIRECTION | 1 | | | | | |
| 3 | 90387–10M61 | .COLLAR<br>.COLLERETTE | 1 | | | | | |
| 4 | 90560–12M01 | .SPACER<br>.ENTRETOISE | 1 | | | | | |
| 5 | 6E5–61355–00 | .BOLT<br>.BOULON | 1 | | | | | |
| 6 | 90185–09M01 | .NUT, SELF-LOCKING<br>.ECROU,AUTO-BLOQUANT | 2 | | | | | |
| 7 | 90201–10M20 | .WASHER, PLATE<br>.RONDELLE, PLATE | 2 | | | | | |
| 8 | 6E5–43145–01 | .CAP, CLAMP BRACKET<br>.CAPUCHON, PRESSE | 1 | | | | | |
| 9 | 93210–16275 | .O-RING<br>.JOINT TORIQUE | 1 | | | | | |
| 10 | 6E5–61301–01 | TWIN KIT (L:600-800MM)<br>JUMELE KIT (L:600-800MM) | | 1 | | | | AP<br>AP |
| 11 | 6E5–61313–00 | .ADJUSTER<br>.TENDEUR | | 1 | | | | |
| 12 | 6E5–61311–11 | .TIE BAR<br>.BARRE D'ACCOUPLEMENT | | 1 | | | | |
| 13 | 6E5–61315–00 | .TIE BAR<br>.BARRE D'ACCOUPLEMENT | | 1 | | | | |
| 14 | 6E5–61303–00 | .STEERING EYE COMP.<br>.AXE COMP. | | 2 | | | | |
| 15 | 90170–14M06 | .NUT<br>.ECROU | | 1 | | | | |
| 16 | 95380–14700 | .NUT<br>.ECROU | | 2 | | | | |
| 17 | 90201–10M76 | .WASHER, PLATE<br>.RONDELLE, PLATE | | 2 | | | | |
| 18 | 90101–09M70 | .BOLT<br>.BOULON | | 2 | | | | |
| 19 | 90170–09M05 | .NUT<br>.ECROU | | 2 | | | | |
| 20 | 90185–09M01 | .NUT, SELF-LOCKING<br>.ECROU,AUTO-BLOQUANT | | 2 | | | | |

## FIG. 32 REMOTE CONTROL BOX — BOITIER DE COMMANDE A DISTANCE

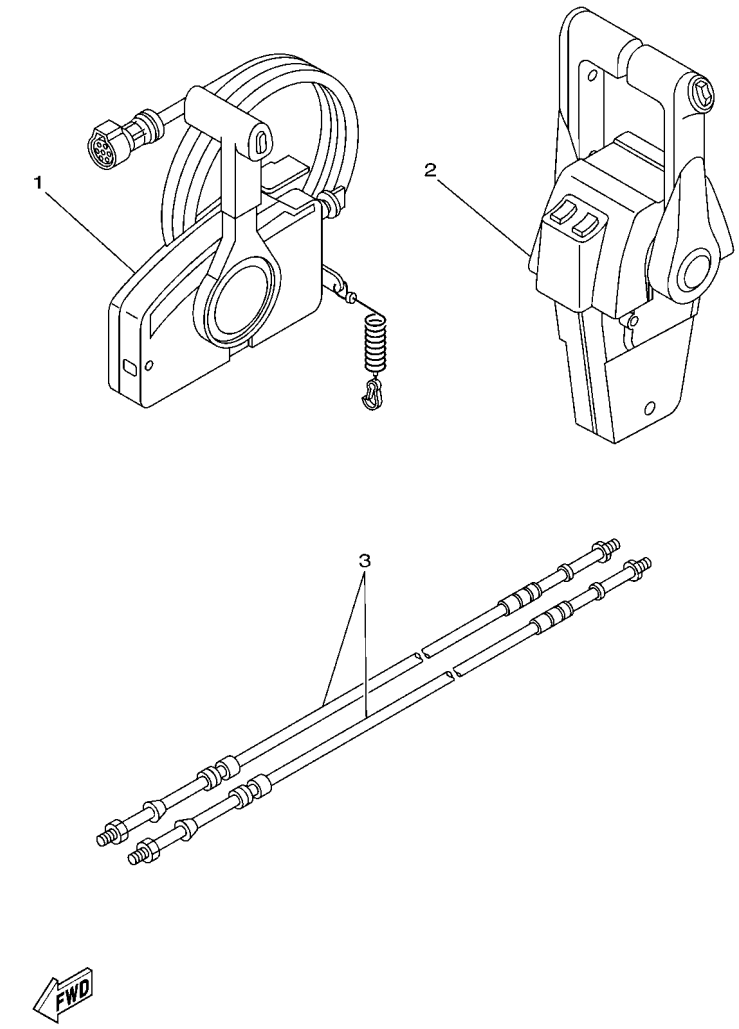


| REF. NO. | PART NO. N° PIECES | DESCRIPTION DESCRIPTION | 63P3 | 64P3 | | | | REMARKS REMARQUES |
|---|---|---|---|---|---|---|---|---|
| 1 | 703–48205–17 | REMOTE CONTROL ASSY (10P)<br>BOITIER DE COMMANDE A DISTANCE | 1 | | | | | AP WITH PT/T SW.<br>AP WITH PT/T SW. |
| 2 | 704–48207–P0 | REMOTE CONTROL ASSY<br>BOITIER DE COMMANDE A DISTANCE | | 1 | | | | AP WITH PT/T SW.<br>AP WITH PT/T SW. |
| 3 | 701–48320–50 | CABLE, REMOTE CONTROL L=15F<br>CABLE, COMMANDE A DISTANCE:15F | 2 | 2 | | | | UR<br>UR |
| | 701–48320–60 | CABLE, REMOTE CONTROL L=16F<br>CABLE, COMMANDE A DISTANCE:16F | 2 | 2 | | | | UR<br>UR |
| | 701–48320–80 | CABLE, REMOTE CONTROL L=17F<br>CABLE, COMMANDE A DISTANCE:17F | 2 | 2 | | | | UR<br>UR |
| | 701–48350–00 | CABLE, REMOTE CONTROL L=21F<br>CABLE, COMMANDE A DISTANCE:21F | 2 | 2 | | | | UR<br>UR |
| | 701–48350–20 | CABLE, REMOTE CONTROL L=23F<br>CABLE, COMMANDE A DISTANCE:23F | 2 | 2 | | | | UR<br>UR |

## FIG. 33 REMOTE CONTROL ASSY 1 — BOITIER DE COMMANDE A DISTANCE

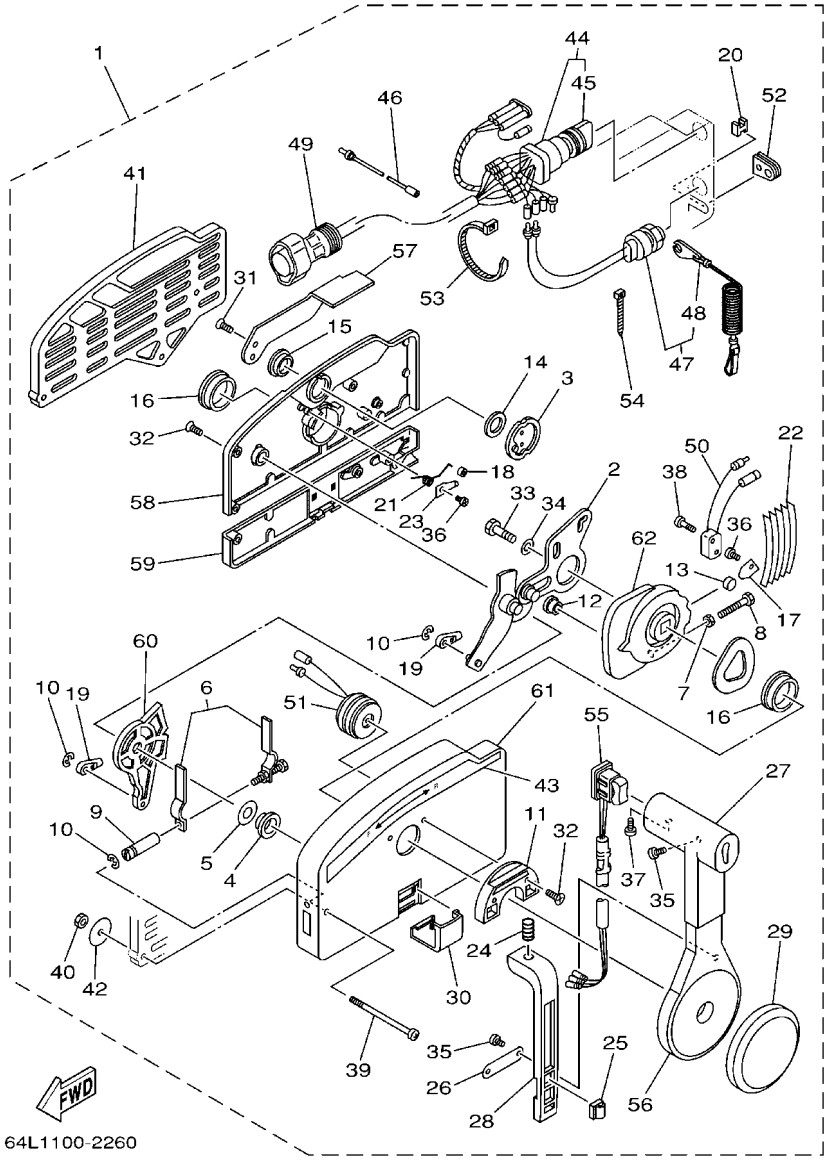


| REF. NO. | PART NO. N° PIECES | DESCRIPTION DESCRIPTION | 63P3 | 64P3 | | | | REMARKS REMARQUES |
|---|---|---|---|---|---|---|---|---|
| 1 | 703–48205–17 | REMOTE CONTROL ASSY (10P)<br>BOITIER DE COMMANDE A DISTANCE | 1 | | | | | AP WITH PT/T SW.<br>AP WITH PT/T SW. |
| 2 | 703–48261–01 | .ARM, THROTTLE<br>.BRAS, ACCELERATION | 1 | | | | | |
| 3 | 703–48153–00 | .SHAFT, FREE ACCEL.<br>.AXE | 1 | | | | | |
| 4 | 703–48235–00 | .BUSHING<br>.COUSSINET | 1 | | | | | |
| 5 | 703–48268–00 | .SPACER<br>.ENTRETOISE | 1 | | | | | |
| 6 | 703–48264–00 | .FRICTION, THROTTLE<br>.FRICTION, ACCELERATION | 1 | | | | | |
| 7 | 95380–05600 | .NUT<br>.ECROU | 1 | | | | | |
| 8 | 97380–05025 | .BOLT<br>.BOULON, HEXAGONAL | 1 | | | | | |
| 9 | 703–48265–00 | .SHAFT, FRICTION<br>.AXE, COPILOTE | 1 | | | | | |
| 10 | 93430–06024 | .CIRCLIP<br>.CLIPS | 3 | | | | | |
| 11 | 703–48245–00 | .PLATE, LOCK<br>.PLAQUE, VERROU | 1 | | | | | |
| 12 | 703–48252–00 | .ROLLER, CAM<br>.POULIE | 1 | | | | | |
| 13 | 701–48248–00 | .ROLLER, FREE ACCEL.<br>.POULIE | 1 | | | | | |
| 14 | 703–48198–00 | .WASHER, WAVE<br>.RONDELLE, ELASTIQUE ONDULEE | 1 | | | | | |
| 15 | 703–48243–00 | .BUSHING<br>.COUSSINET | 1 | | | | | |
| 16 | 703–48236–00 | .BUSHING 1<br>.POULIE | 2 | | | | | |
| 17 | 703–48189–00 | .RETAINER<br>.FLASQUE | 1 | | | | | |
| 18 | 703–48234–00 | .ROLLER, DETENT<br>.POULIE | 1 | | | | | |
| 19 | 703–48345–01 | .CABLE END, REMOTE CONTROL 2<br>.CHAPE CABLE | 2 | | | | | |
| 20 | 703–48358–00 | .ANCHOR, CABLE<br>.COLLIER | 1 | | | | | |
| 21 | 703–48244–00 | .SPRING, FREE ACCEL.<br>.RESSORT | 1 | | | | | |
| 22 | 703–48238–00 | .SPRING, DETENT<br>.RESSORT | 5 | | | | | |
| 23 | 703–48246–00 | .SPACER<br>.ENTRETOISE | 1 | | | | | |
| 24 | 703–48227–00 | .SPRING, NEUTRAL LOCK<br>.RESSORT | 1 | | | | | |
| 25 | 703–82594–00 | .CLAMP<br>.BRIDE | 1 | | | | | WITH PT/T SW.<br>WITH PT/T SW. |
| 26 | 703–48226–00 | .PLATE, STOPPER<br>.PLAQUETTE | 1 | | | | | |
| 27 | 703–48222–00 | .GRIP, CONTROL LEVER<br>.POIGNEE, COMMANDE LEVIER | 1 | | | | | SINGLE<br>SINGLE |

## FIG. 33 REMOTE CONTROL ASSY 1 — BOITIER DE COMMANDE A DISTANCE

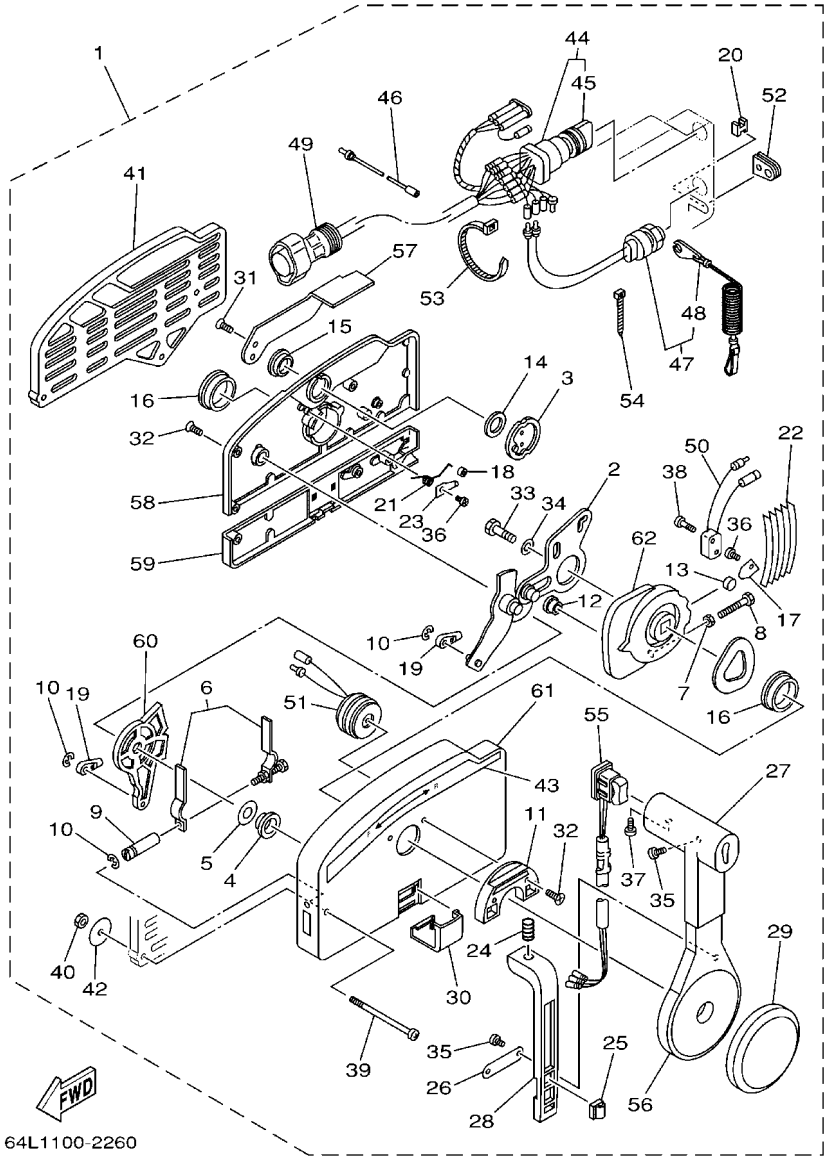


| REF. NO. | PART NO. N° PIECES | DESCRIPTION DESCRIPTION | 63P3 | 64P3 | | | | REMARKS REMARQUES |
|---|---|---|---|---|---|---|---|---|
| 28 | 703–48223–00 | .LOCK, NEUTRAL<br>.VERROU, NEUTRAL | 1 | | | | | |
| 29 | 703–48225–00 | .COVER<br>.COUVERCLE | 1 | | | | | |
| 30 | 703–48219–00 | .COVER, LEAD<br>.COUVERCLE | 1 | | | | | |
| 31 | 703–48281–00 | .SCREW<br>.VIS | 2 | | | | | |
| 32 | 703–48282–00 | .SCREW<br>.VIS | 7 | | | | | |
| 33 | 97380–08030 | .BOLT<br>.BOULON, HEXAGONAL | 1 | | | | | |
| 34 | 92990–08600 | .WASHER, PLATE<br>.RONDELLE, PLATE | 1 | | | | | |
| 35 | 98580–04010 | .SCREW, PAN HEAD<br>.VIS | 3 | | | | | |
| 36 | 98580–04006 | .SCREW, PAN HEAD<br>.VIS | 2 | | | | | |
| 37 | 98580–05010 | .SCREW, PAN HEAD<br>.VIS | 1 | | | | | |
| 38 | 98580–03015 | .SCREW, PAN HEAD<br>.VIS | 2 | | | | | |
| 39 | 703–48291–10 | .SCREW (M6)<br>.VIS (M6) | 3 | | | | | |
| 40 | 95380–06600 | .NUT, HEXAGON<br>.ECROU | 3 | | | | | |
| 41 | 703–48293–10 | .SPACER, REMOTE CONTROL<br>.ENTRETOISE | 1 | | | | | SINGLE<br>SINGLE |
| 42 | 701–48287–00 | .WASHER<br>.RONDELLE | 3 | | | | | |
| 43 | 703–48215–00 | .GRAPHIC<br>.ADHESIF | 1 | | | | | |
| 44 | 703–82510–43 | .MAIN SWITCH ASSY<br>.CONTACTEUR A CLEF COMPLET | 1 | | | | | |
| 45 | 703–82577–00 | ..CAP, KEY<br>..CABOCHON | 1 | | | | | |
| 46 | 703–82531–00 | .WIRE, LEAD<br>.FIL | 1 | | | | | |
| 47 | 688–82575–01 | .ENGINE STOP SWITCH ASSY<br>.COUPE CIRCUIT CPLT | 1 | | | | | |
| 48 | 682–82556–00 | ..LANYARD, STOP SWITCH<br>..PLAQUETTE | 1 | | | | | |
| 49 | 688–8258A–20 | .EXTENSION, WIRE HARNESS<br>.EXTENSION, FAISCEAU DE FILS | 1 | | | | | L:5M (10P)<br>L:5M (10P) |
| 50 | 703–82540–00 | .NEUTRAL SWITCH ASSY<br>.CONTACTEUR DE POINT-MORT | 1 | | | | | |
| 51 | 703–83383–02 | .BUZZER<br>.RONFLEUR | 1 | | | | | |
| 52 | 703–48284–00 | .GROMMET<br>.PASSE-FIL | 1 | | | | | |
| 53 | 703–82591–00 | .BAND<br>.COLLIER | 1 | | | | | |
| 54 | 703–82592–00 | .BAND<br>.COLLIER | 1 | | | | | |

## FIG. 33 REMOTE CONTROL ASSY 1 — BOITIER DE COMMANDE A DISTANCE

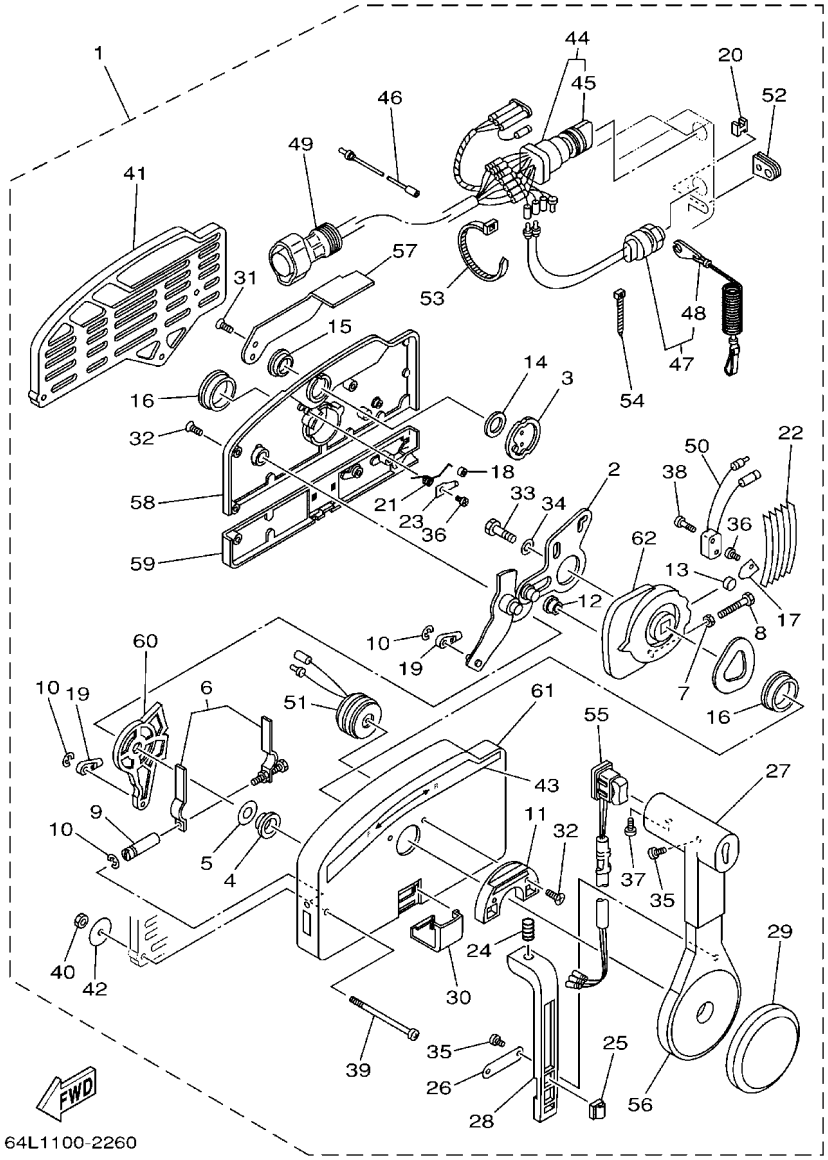


| REF. NO. | PART NO. N° PIECES | DESCRIPTION DESCRIPTION | 63P3 | 64P3 | | | | REMARKS REMARQUES |
|---|---|---|---|---|---|---|---|---|
| 55 | 703–82563–02 | .TRIM & TILT SWITCH ASSY<br>.INCLINER ET PARER COMMUTATEUR | 1 | | | | | WITH PT/T SW.<br>WITH PT/T SW. |
| 56 | 703–48221–00 | .LEVER, CONTROL<br>.LEVIER, COMMANDE | 1 | | | | | |
| 57 | 703–48152–00 | .KNOB, FREE ACCEL.<br>.BOUTON | 1 | | | | | |
| 58 | 703–48212–00 | .BACK PLATE 1<br>.PLAQUETTE 1 | 1 | | | | | |
| 59 | 703–48213–00 | .BACK PLATE 2<br>.PLAQUETTE 2 | 1 | | | | | |
| 60 | 703–48271–00 | .ARM, SHIFT<br>.BRAS | 1 | | | | | |
| 61 | 703–48211–01 | .HOUSING,1<br>.CORPS | 1 | | | | | |
| 62 | 703–48232–00 | .GEAR<br>.PIGNON | 1 | | | | | |

## FIG. 34 REMOTE CONTROL ASSY 2 — BOITIER DE COMMANDE A DISTANCE

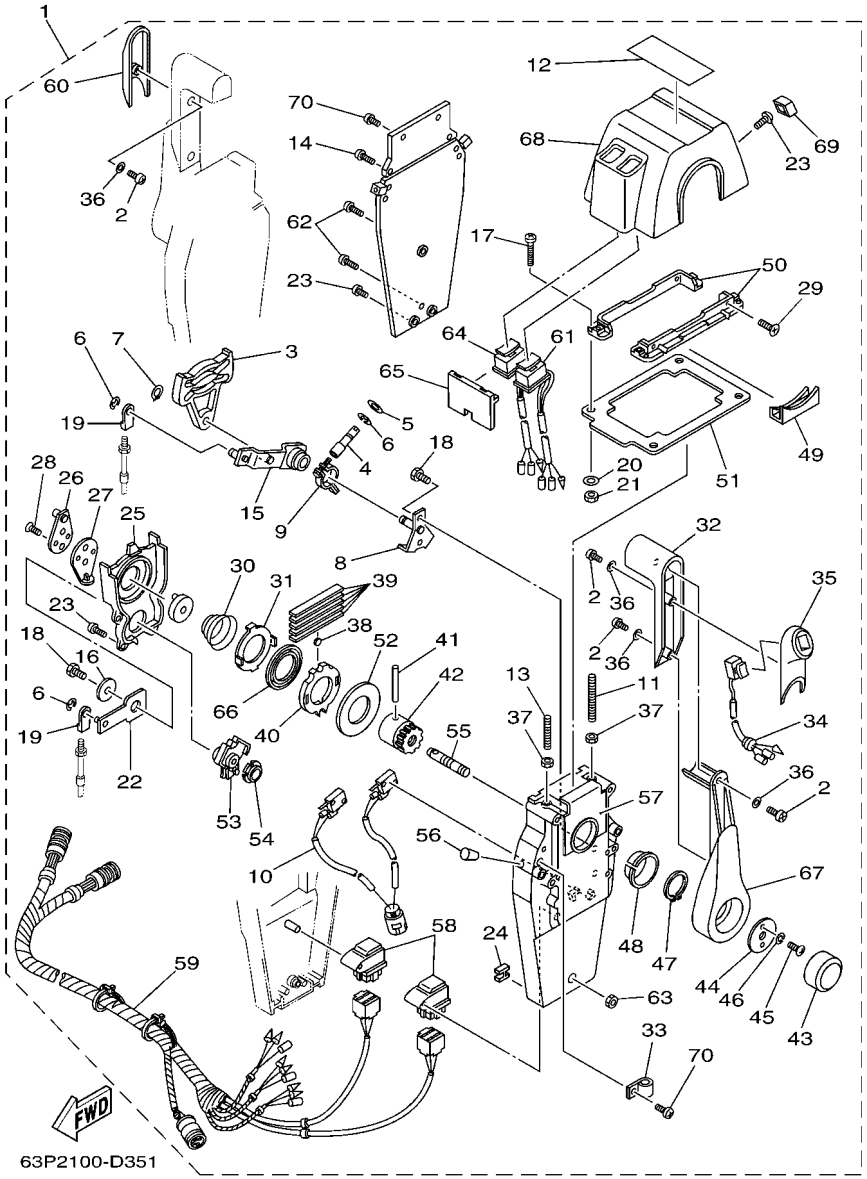


| REF. NO. | PART NO. N° PIECES | DESCRIPTION DESCRIPTION | 63P3 | 64P3 | | | | REMARKS REMARQUES |
|---|---|---|---|---|---|---|---|---|
| 1 | 704–48207–P0 | REMOTE CONTROL ASSY<br>BOITIER DE COMMANDE A DISTANCE | | 1 | | | | AP WITH PT/T SW.<br>AP WITH PT/T SW. |
| 2 | 704–48129–00 | .SCREW 3<br>.VIS 3 | | 6 | | | | |
| 3 | EL8–48251–00 | .PLATE, CAM<br>.PLAQUE, CAME | | 2 | | | | |
| 4 | 704–48265–00 | .SHAFT, FRICTION<br>.AXE, COPILOTE | | 2 | | | | |
| 5 | 701–48246–00 | .SPACER<br>.ENTRETOISE | | 2 | | | | |
| 6 | 93430–06024 | .CIRCLIP<br>.CLIPS | | 8 | | | | |
| 7 | EL8–48259–00 | .CIRCLIP 1<br>.CIRCLIP | | 2 | | | | |
| 8 | 704–48262–00 | .SHAFT, THROTTLE<br>.AXE, ACCELERATION | | 2 | | | | |
| 9 | 704–48264–00 | .THROTTLE, FRICTION<br>.FRICTION, ACCELERATION | | 2 | | | | |
| 10 | 704–82540–30 | .NEUTRAL SWITCH ASSY<br>.CONTACTEUR DE POINT-MORT | | 1 | | | | |
| 11 | EL8–48281–00 | .SCREW<br>.VIS | | 2 | | | | |
| 12 | 704–48215–30 | .GRAPHIC<br>.ADHESIF | | 1 | | | | |
| 13 | 704–48281–00 | .SCREW<br>.VIS | | 2 | | | | |
| 14 | 97890–05025 | .SCREW, PAN HEAD<br>.VIS, CRUCIFORME | | 4 | | | | |
| 15 | 704–48261–00 | .ARM, THROTTLE<br>.BRAS, ACCELERATION | | 2 | | | | |
| 16 | EL8–48191–00 | .WASHER 1<br>.RONDELLE | | 2 | | | | |
| 17 | 704–48283–00 | .SCREW<br>.VIS | | 4 | | | | |
| 18 | 97380–06018 | .BOLT<br>.BOULON, HEXAGONAL | | 6 | | | | |
| 19 | 703–48345–01 | .CABLE END, REMOTE CONTROL 2<br>.CHAPE CABLE | | 4 | | | | |
| 20 | 704–48287–00 | .WASHER<br>.RONDELLE | | 4 | | | | |
| 21 | 95380–05600 | .NUT<br>.ECROU | | 4 | | | | |
| 22 | 704–48271–00 | .ARM, SHIFT<br>.BRAS | | 2 | | | | |
| 23 | EL8–48127–00 | .SCREW 1<br>.VIS 1 | | 18 | | | | |
| 24 | 703–48358–00 | .ANCHOR, CABLE<br>.COLLIER | | 2 | | | | |
| 25 | 704–48231–00 | .HOUSING, GEAR<br>.CARTER, ENGRENAGE | | 2 | | | | |
| 26 | EL8–48241–00 | .ARM, DRIVE<br>.BRAS, COMMANDE | | 2 | | | | |
| 27 | EL8–48254–00 | .STOPPER, THROTTLE ADJUSTING<br>.BUTEE | | 2 | | | | |

## FIG. 34 REMOTE CONTROL ASSY 2 — BOITIER DE COMMANDE A DISTANCE

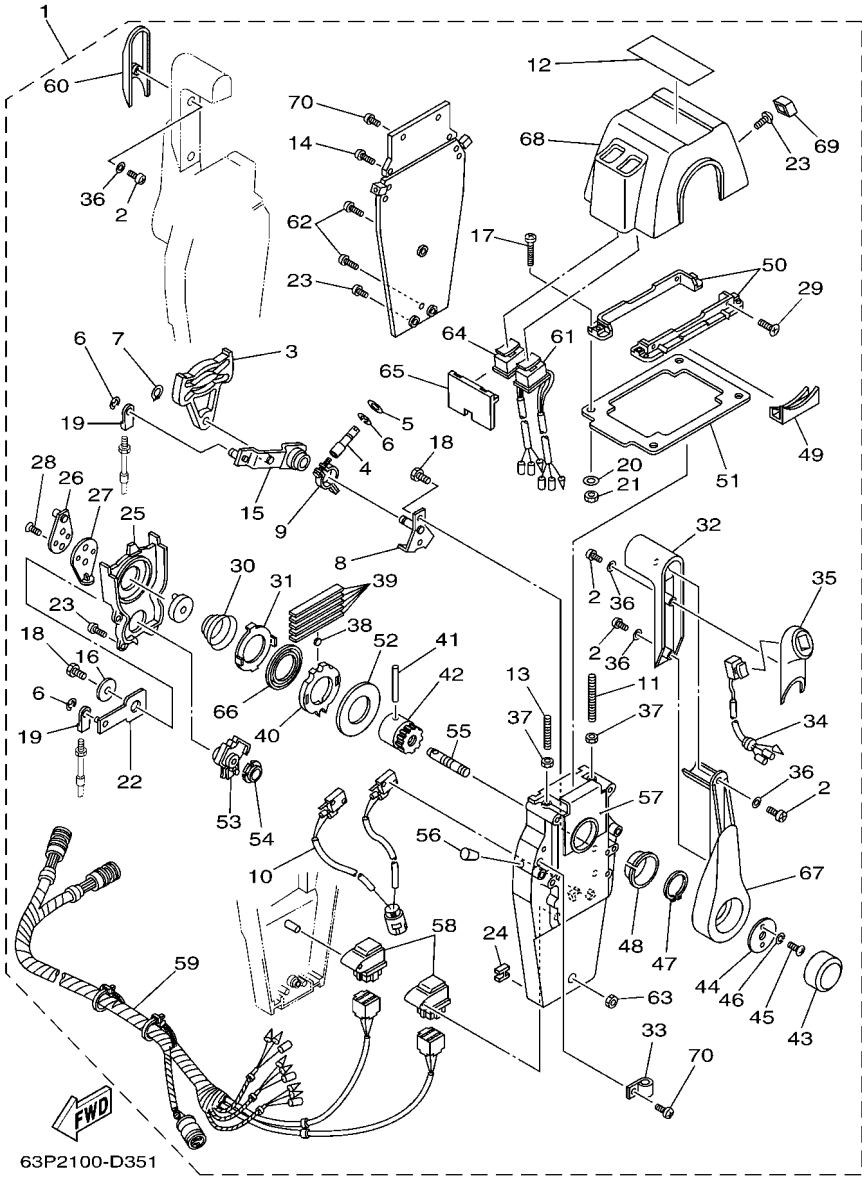


| REF. NO. | PART NO. N° PIECES | DESCRIPTION DESCRIPTION | 63P3 | 64P3 | | | | REMARKS REMARQUES |
|---|---|---|---|---|---|---|---|---|
| 28 | 92780–06020 | .SCREW, FLAT HEAD<br>.VIS A TETE FRAISEE | | 4 | | | | |
| 29 | 98780–05018 | .SCREW, FLAT HEAD<br>.VIS A TETE FRAISEE | | 4 | | | | |
| 30 | EL8–48244–00 | .SPRING, FREE ACCEL.<br>.RESSORT | | 2 | | | | |
| 31 | EL8–48245–00 | .PLATE, LOCK<br>.PLAQUE, VERROU | | 2 | | | | |
| 32 | 704–48222–P0 | .GRIP, CONTROL LEVER<br>.POIGNEE, COMMANDE LEVIER | | 2 | | | | |
| 33 | 704–82594–00 | .CLAMP<br>.BRIDE | | 1 | | | | |
| 34 | 704–82563–50 | .TRIM & TILT SWITCH ASSY<br>.INCLINER ET PARER COMMUTATEUR | | 1 | | | | |
| 35 | 704–48229–P1 | .GRIP, CONTROL LEVER<br>.POIGNEE, COMMANDE LEVIER | | 1 | | | | |
| 36 | 92990–05300 | .WASHER, INTERNAL TOOTH<br>.RONDELLE, DENTURE INTERNE | | 6 | | | | |
| 37 | 95380–06600 | .NUT, HEXAGON<br>.ECROU | | 4 | | | | |
| 38 | 701–48248–00 | .ROLLER, FREE ACCEL.<br>.POULIE | | 2 | | | | |
| 39 | 704–48238–00 | .SPRING, DETENT<br>.RESSORT | | 10 | | | | |
| 40 | 704–48232–P1 | .GEAR<br>.PIGNON | | 2 | | | | |
| 41 | EL8–48164–00 | .PIN 2<br>.PION 2 | | 2 | | | | |
| 42 | 704–48242–10 | .SHAFT, DRIVE<br>.ARBRE, MOTEUR | | 2 | | | | |
| 43 | 6X3–48225–20 | .COVER<br>.COUVERCLE | | 2 | | | | |
| 44 | 704–48192–00 | .WASHER 2<br>.RONDELLE 2 | | 2 | | | | |
| 45 | 97890–06018 | .SCREW, PAN HEAD<br>.VIS, CRUCIFORME | | 4 | | | | |
| 46 | 92990–06300 | .WASHER, INTERNAL TOOTH<br>.RONDELLE, DENTURE INTERNE | | 4 | | | | |
| 47 | EL8–48279–00 | .CIRCLIP 2<br>.CIRCLIP 2 | | 2 | | | | |
| 48 | 704–48234–00 | .BUSHING 1<br>.POULIE | | 2 | | | | |
| 49 | 704–48219–P0 | .COVER, LEAD<br>.COUVERCLE | | 2 | | | | |
| 50 | 704–48144–20 | .PLATE, STOPPER 2<br>.PLAQUETTE 2 | | 2 | | | | |
| 51 | 704–48176–10 | .GROMMET<br>.PASSE-FIL | | 1 | | | | |
| 52 | 704–48192–P0 | .WASHER 2<br>.RONDELLE 2 | | 2 | | | | |
| 53 | 704–48233–00 | .GEAR 2<br>.PIGNON 2 | | 2 | | | | |
| 54 | 704–48235–00 | .BUSHING<br>.COUSSINET | | 2 | | | | |

## FIG. 34 REMOTE CONTROL ASSY 2 — BOITIER DE COMMANDE A DISTANCE

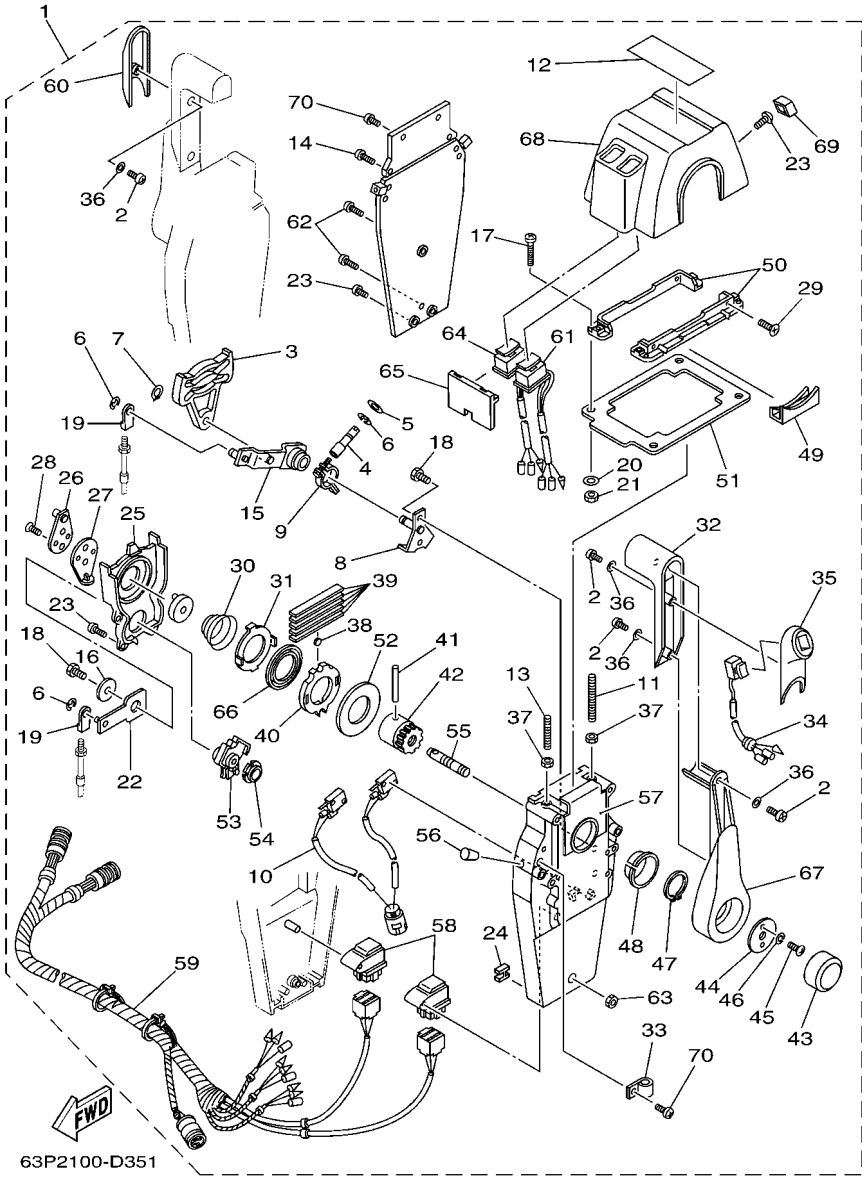


| REF. NO. | PART NO. N° PIECES | DESCRIPTION DESCRIPTION | 63P3 | 64P3 | | | | REMARKS REMARQUES |
|---|---|---|---|---|---|---|---|---|
| 55 | 704–48153–00 | .SHAFT, FREE ACCEL.<br>.AXE | | 2 | | | | |
| 56 | 704–48166–00 | .PLUG<br>.BOUCHON | | 2 | | | | |
| 57 | 704–48284–P0 | .GROMMET<br>.PASSE-FIL | | 2 | | | | |
| 58 | 704–81950–10 | .RELAY ASSY<br>.RELAIS COMPLET | | 2 | | | | |
| 59 | 704–82590–10 | .WIRE HARNESS ASSY<br>.FAISCEAU DE FILS COMPLET | | 1 | | | | |
| 60 | 704–48229–00 | .GRIP, CONTROL LEVER<br>.POIGNEE, COMMANDE LEVIER | | 1 | | | | |
| 61 | 704–82563–H0 | .TRIM & TILT SWITCH ASSY<br>.INCLINER ET PARER COMMUTATEUR | | 1 | | | | |
| 62 | 704–48128–00 | .SCREW 2<br>.VIS 2 | | 3 | | | | |
| 63 | 704–48156–00 | .NUT 1<br>.ECROU 1 | | 1 | | | | |
| 64 | 704–82563–J0 | .TRIM & TILT SWITCH ASSY<br>.INCLINER ET PARER COMMUTATEUR | | 1 | | | | |
| 65 | 704–48285–10 | .GROMMET 2<br>.PASSE-FIL 2 | | 1 | | | | |
| 66 | 704–48178–00 | .PLATE, SHIFT<br>.PLAQUETTE | | 2 | | | | |
| 67 | 704–48221–P0 | .LEVER, CONTROL<br>.LEVIER, COMMANDE | | 2 | | | | |
| 68 | 704–48119–40 | .COVER<br>.COQUILLE | | 1 | | | | |
| 69 | 704–48167–10 | .PLUG<br>.BOUCHON | | 1 | | | | |
| 70 | 97890–05016 | .SCREW, PAN HEAD<br>.VIS, CRUCIFORME | | 5 | | | | |

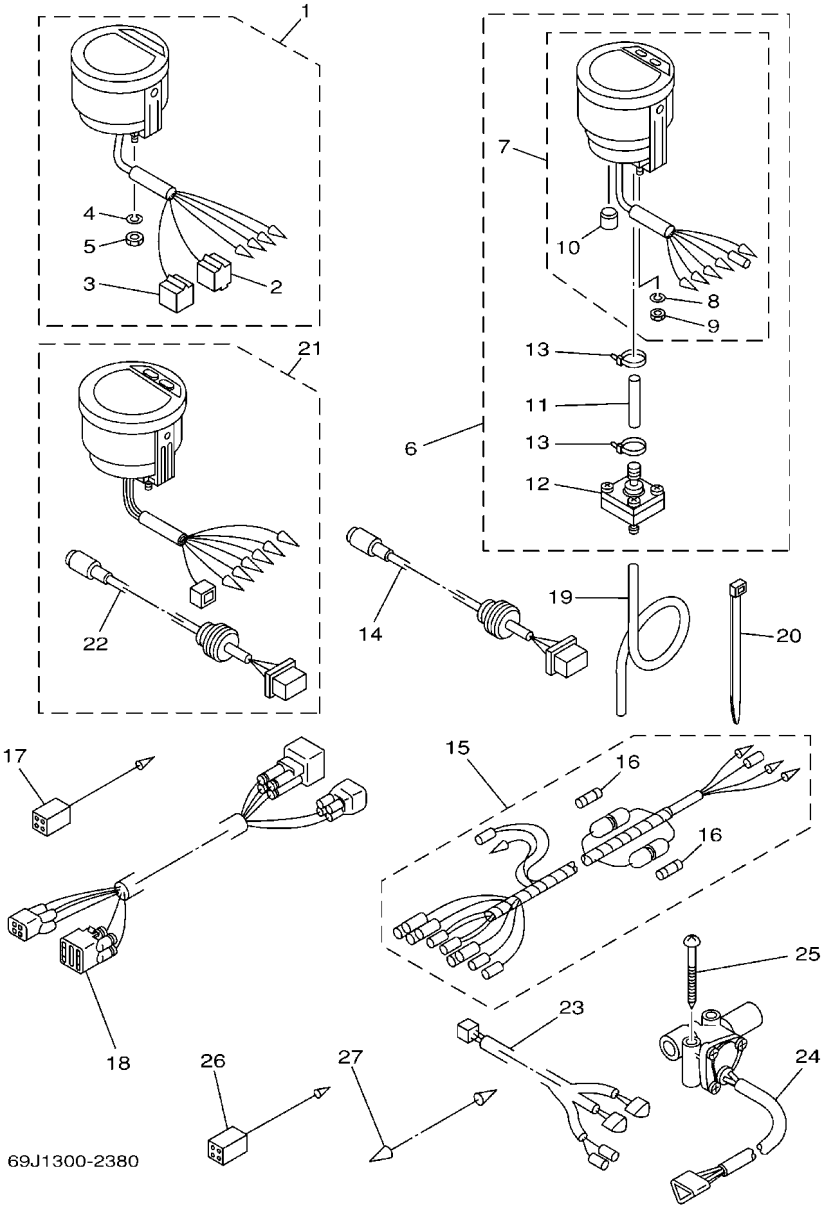


## FIG. 35 METER COMPTEUR

| REF. NO. | PART NO. N° PIECES | DESCRIPTION DESCRIPTION | 63P3 | 64P3 | | | | REMARKS REMARQUES |
|---|---|---|---|---|---|---|---|---|
| 1 | 6Y5–8350T–03 | DIGITAL TACHOMETER ASSY<br>COMPTE-TOURS NUMERIQUE CPLT | 1 | 1 | | | | AP<br>AP |
| 2 | 9E450–04433 | .CONNECTOR<br>.CONNECTEUR | 1 | 1 | | | | M-4-W<br>M-4-W |
| 3 | 9E450–04533 | .CONNECTOR<br>.CONNECTEUR | 1 | 1 | | | | F-4-W<br>F-4-W |
| 4 | 92990–04100 | .WASHER, SPRING<br>.RONDELLE, GROWER | 2 | 2 | | | | |
| 5 | 95380–04600 | .NUT<br>.ECROU | 2 | 2 | | | | |
| 6 | 6Y5–83500–S5 | DIGITAL SPEEDOMETER ASSY<br>TACHYMETRE NUMERIQUE CPLT. | 1 | | | | | AP<br>AP |
| 7 | 6Y5–83570–S5 | .SPEEDOMETER ASSY<br>.COMPTEUR DE VITESSE CPLT | 1 | | | | | |
| 8 | 92990–04100 | ..WASHER, SPRING<br>..RONDELLE, GROWER | 2 | | | | | |
| 9 | 95380–04600 | ..NUT<br>..ECROU | 2 | | | | | |
| 10 | 6Y5–83533–T2 | ..GROMMET<br>..RONDELLE CAOUTCHOUC | 1 | | | | | |
| 11 | 6Y5–83557–31 | .TUBE<br>.TUBE | 1 | | | | | |
| 12 | 6Y5–83728–00 | .CONNECTOR ASSY<br>.CONNEXION COMPLET | 1 | | | | | |
| 13 | 90465–11M10 | .CLAMP<br>.BRIDE | 2 | | | | | |
| 14 | 6Y5–87122–S0 | CORD ASSY 1<br>CORDON COMPLET 1 | 1 | | | | | AP<br>AP |
| 15 | 6Y5–83553–M0 | WIRE, LEAD (L=2.5M)<br>FIL (L=2.5M) | 1 | | | | | AP<br>AP |
| | 6Y5–83553–00 | WIRE, LEAD (L=2.5M)<br>FIL (L=2.5M) | | 1 | | | | AP<br>AP |
| 16 | 1E6–82151–00 | .FUSE (10A)<br>.FUSIBLE (10A) | 2 | | | | | FOR 6Y5-83553-M0<br>FOR 6Y5-83553-M0 |
| | 1E6–82151–00 | .FUSE (10A)<br>.FUSIBLE (10A) | | 1 | | | | FOR 6Y5-83553-00<br>FOR 6Y5-83553-00 |
| 17 | 6Y5–82117–00 | WIRE, LEAD (BLACK)<br>FIL (NOIR) | 1 | | | | | AP<br>AP |
| 18 | 68F–82553–80 | EXTENSION, WIRE LEAD (L=8.0M)<br>EXTENSION, FAISCEAU (L=8.0M) | 1 | | | | | AP<br>AP |
| | 68F–82553–90 | EXTENSION, WIRE LEAD (L=9.5M)<br>EXTENSION, FAISCEAU (L=9.5M) | | 1 | | | | AP<br>AP |
| 19 | 6Y5–83557–10 | TUBE (8M)<br>TUBE (8M) | 1 | | | | | AP<br>AP |
| 20 | 90465–11M10 | CLAMP<br>BRIDE | 2 | | | | | AP<br>AP |
| 21 | 6Y5–8350F–00 | FUEL MANAGEMENT METER<br>COMPT. DE GESTION DU CARBURANT | | 1 | | | | AP<br>AP |
| 22 | 6Y5–87122–S0 | .CORD ASSY 1<br>.CORDON COMPLET 1 | | 1 | | | | |
| 23 | 6Y5–83553–F1 | WIRE, LEAD (L=8.0M)<br>FIL (L=8.0M) | | 1 | | | | AP<br>AP |
| 24 | 6Y5–85752–01 | SENDER UNIT ASSY, FUEL METER<br>PERCEPTION DE JAUGE A ESSENCE | | 2 | | | | AP<br>AP |

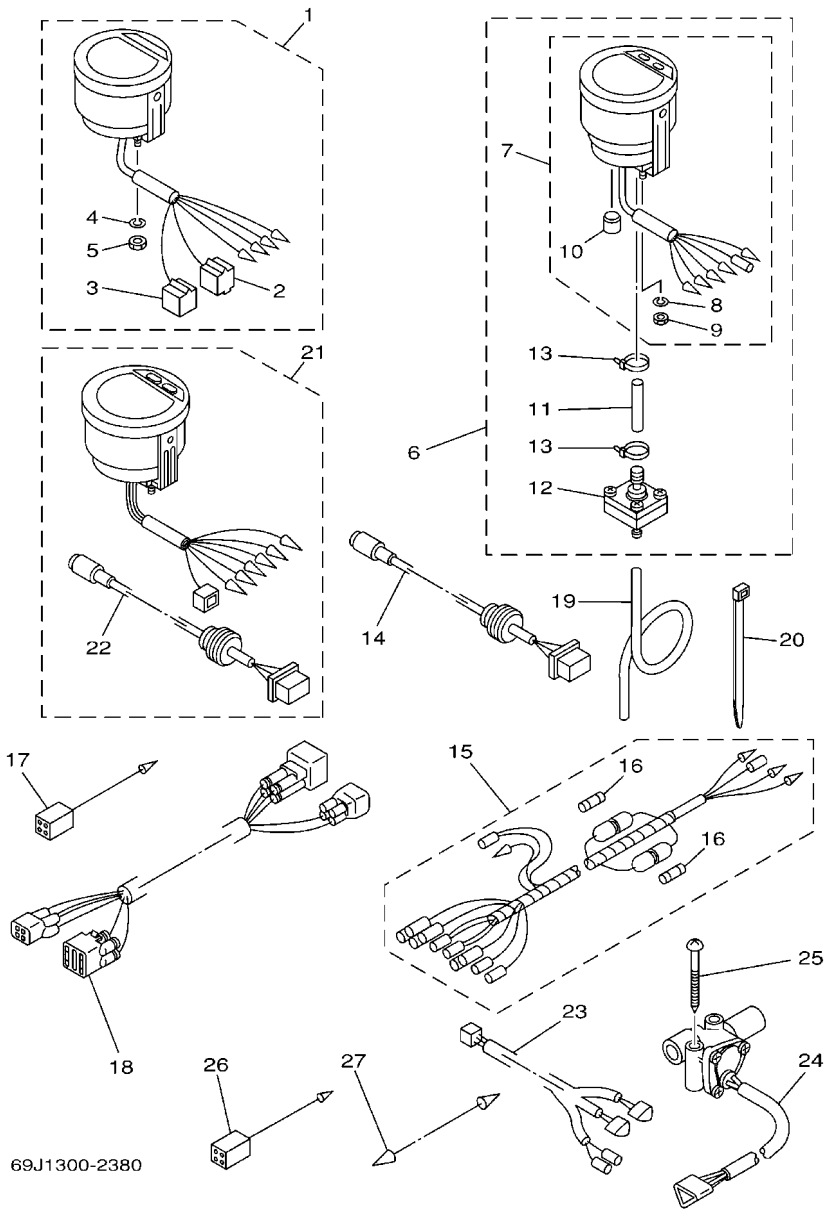


## FIG. 35 METER COMPTEUR

| REF. NO. | PART NO. N° PIECES | DESCRIPTION DESCRIPTION | 63P3 | 64P3 | | | | REMARKS REMARQUES |
|---|---|---|---|---|---|---|---|---|
| 25 | 90158–06002 | SCREW, WOOD<br>VIS, A BOIS | | 4 | | | | AP<br>AP |
| 26 | 6Y5–82117–00 | WIRE, LEAD (BLACK)<br>FIL (NOIR) | | 1 | | | | AP<br>AP |
| 27 | 703–82531–00 | WIRE, LEAD<br>FIL | | 1 | | | | AP<br>AP |

## FIG. 36 SWITCH & PANEL — TABLEAU DE CONTACTEUR

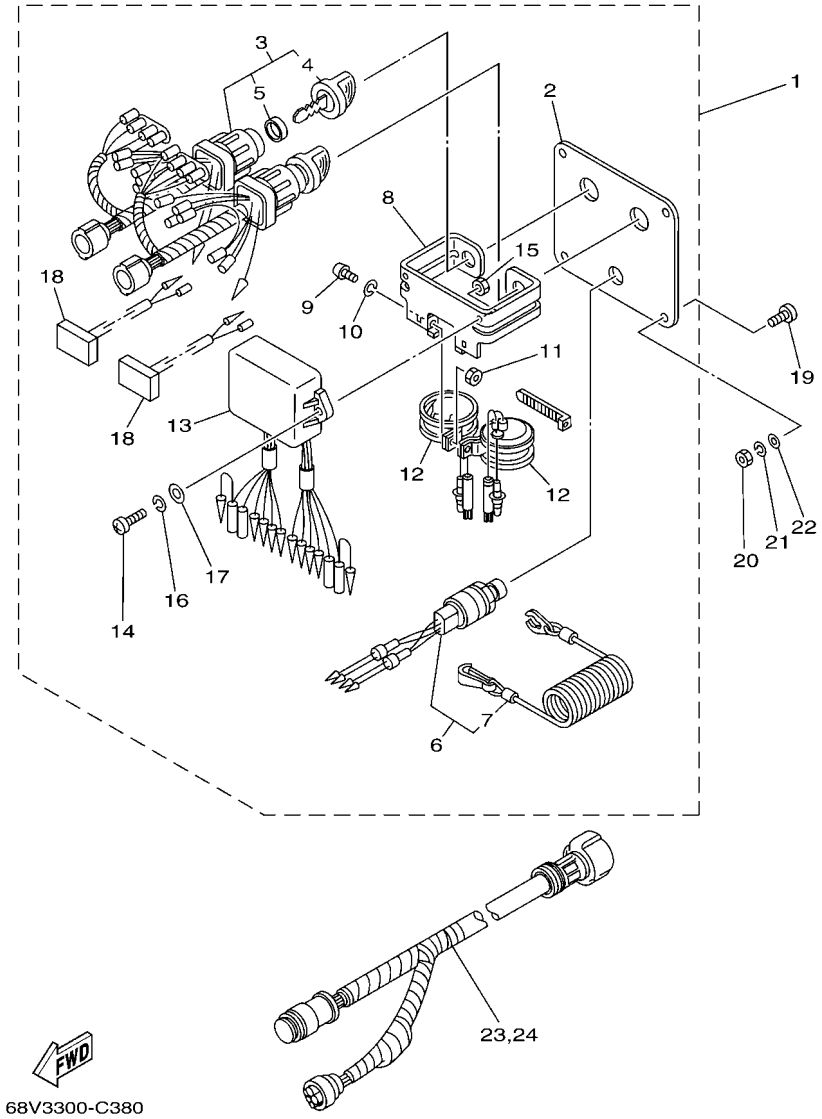


| REF. NO. | PART NO. N° PIECES | DESCRIPTION DESCRIPTION | 63P3 | 64P3 | | | | REMARKS REMARQUES |
|---|---|---|---|---|---|---|---|---|
| 1 | 6K1–82570–08 | PANEL SWITCH ASSY<br>PLATINE D'INTERRUPEUR CPLT | | 1 | | | | AP<br>AP |
| 2 | 6K1–82571–02 | .PLATE, PANEL SWITCH<br>.TABLEAU, CONTACTEUR | | 1 | | | | |
| 3 | 6K1–82510–06 | .MAIN SWITCH ASSY<br>.CONTACTEUR A CLEF COMPLET | | 2 | | | | |
| 4 | 703–82577–00 | ..CAP, KEY<br>..CABOCHON | | 1 | | | | |
| 5 | 6K1–82532–00 | ..CAP<br>..COUVERCLE | | 1 | | | | |
| 6 | 6K1–82575–00 | .ENGINE STOP SWITCH ASSY<br>.COUPE CIRCUIT CPLT | | 1 | | | | |
| 7 | 682–82556–00 | ..LANYARD, STOP SWITCH<br>..PLAQUETTE | | 1 | | | | |
| 8 | 6K1–83614–01 | .BRACKET<br>.SUPPORT | | 1 | | | | |
| 9 | 98980–05010 | .SCREW, BIND<br>.VIS, DE PRESSION | | 2 | | | | |
| 10 | 92990–05100 | .WASHER, SPRING<br>.RONDELLE, GROWER | | 2 | | | | |
| 11 | 95380–05600 | .NUT<br>.ECROU | | 2 | | | | |
| 12 | 688–83383–11 | .BUZZER<br>.RONFLEUR | | 2 | | | | |
| 13 | 6K1–85830–01 | .CONTROL UNIT ASSY<br>.BLOC DE CONTROLE | | 1 | | | | |
| 14 | 98980–06020 | .SCREW, BIND<br>.VIS, DE PRESSION | | 2 | | | | |
| 15 | 95380–06600 | .NUT, HEXAGON<br>.ECROU | | 2 | | | | |
| 16 | 92990–06100 | .WASHER, SPRING<br>.RONDELLE, GROWER | | 2 | | | | |
| 17 | 92990–06600 | .WASHER, PLATE<br>.RONDELLE, PLATE | | 2 | | | | |
| 18 | 6K1–81980–00 | .DIODE ASSY<br>.REDRESSEUR 2 | | 2 | | | | |
| 19 | 90149–05M05 | SCREW<br>VIS | | 4 | | | | AP<br>AP |
| 20 | 95380–05600 | NUT<br>ECROU | | 4 | | | | AP<br>AP |
| 21 | 92990–05100 | WASHER, SPRING<br>RONDELLE, GROWER | | 4 | | | | AP<br>AP |
| 22 | 92990–05600 | WASHER, PLATE<br>RONDELLE, PLATE | | 4 | | | | AP<br>AP |
| 23 | 6K1–8258A–40 | EXTENSION, WIRE HARNESS (8M)<br>EXTENSION, FAISCEAU DE FILS(8M | | 1 | | | | AP (10P)<br>AP (10P) |
| 24 | 61B–8258A–01 | EXTENSION, WIRE HARNESS (9.5M)<br>EXTENSION, FAISCEAU DE FILS(9. | | 1 | | | | AP (10P)<br>AP (10P) |

## FIG. 37 REPAIR KIT 1 — KITS DE REPARATION 1

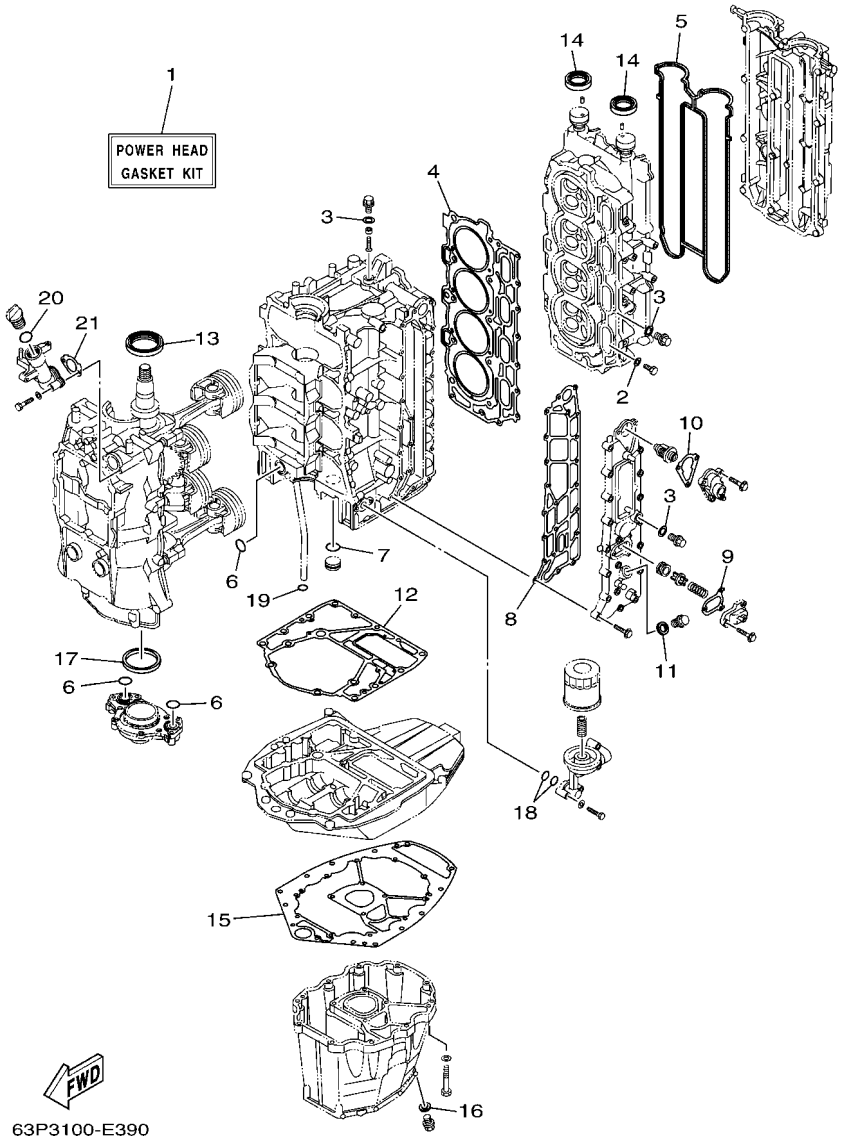


| REF. NO. | PART NO. N° PIECES | DESCRIPTION DESCRIPTION | 63P3 | 64P3 | | | | REMARKS REMARQUES |
|---|---|---|---|---|---|---|---|---|
| 1 | 63P–W0001–01 | POWER HEAD GASKET KIT<br>POCHETTE DE JINTS TETE MOTRICE | 1 | 1 | | | | |
| 2 | 90430–08143 | .GASKET<br>.JOINT | 4 | 4 | | | | |
| 3 | 90430–14115 | .GASKET<br>.JOINT | 4 | 4 | | | | |
| 4 | 63P–11181–00 | .GASKET, CYLINDER HEAD 1<br>.JOINT, DE CULASSE 1 | 1 | 1 | | | | |
| 5 | 63P–11193–00 | .GASKET, HEAD COVER 1<br>.JOINT, COUVERCLE DE CULASSE 1 | 1 | 1 | | | | |
| 6 | 93210–25552 | .O-RING<br>.JOINT TORIQUE | 3 | 3 | | | | |
| 7 | 93210–25647 | .O-RING<br>.JOINT TORIQUE | 1 | 1 | | | | |
| 8 | 63P–41114–A1 | .GASKET, EXHAUST OUTER COVER<br>.JOINT, COUVERCLE D'ECHAPPEMENT | 1 | 1 | | | | |
| 9 | 67F–12435–A0 | .GASKET<br>.JOINT | 1 | 1 | | | | |
| 10 | 63P–12414–00 | .GASKET, COVER<br>.JOINT, COUVERCLE | 1 | 1 | | | | |
| 11 | 90430–18130 | .GASKET<br>.JOINT | 1 | 1 | | | | |
| 12 | 63P–11351–00 | .GASKET, CYLINDER<br>.JOINT, D'EMBASE | 1 | 1 | | | | |
| 13 | 93102–60004 | .OIL SEAL<br>.JOINT SPY | 1 | 1 | | | | |
| 14 | 93102–38M59 | .OIL SEAL<br>.JOINT SPY | 2 | 2 | | | | |
| 15 | 63P–15312–00 | .GASKET, OIL PAN<br>.JOINT DE VENTILATEUR D'HUILE | 1 | 1 | | | | |
| 16 | 90430–14M09 | .GASKET<br>.JOINT | 1 | 1 | | | | |
| 17 | 69J–11355–00 | .SEAL, CYLINDER 1<br>.JOINT, SPY CYLINDRE | 1 | 1 | | | | |
| 18 | 93210–19MJ1 | .O-RING<br>.JOINT TORIQUE | 2 | 2 | | | | |
| 19 | 93210–19MJ3 | .O-RING<br>.JOINT TORIQUE | 1 | 1 | | | | |
| 20 | 93210–24M79 | .O-RING<br>.JOINT TORIQUE | 1 | 1 | | | | |
| 21 | 63P–15364–A0 | .GASKET, OIL PLUG<br>.JOINT, PLOT D'HUILE | 1 | 1 | | | | |

## FIG. 38 REPAIR KIT 2 — KITS DE REPARATION 2

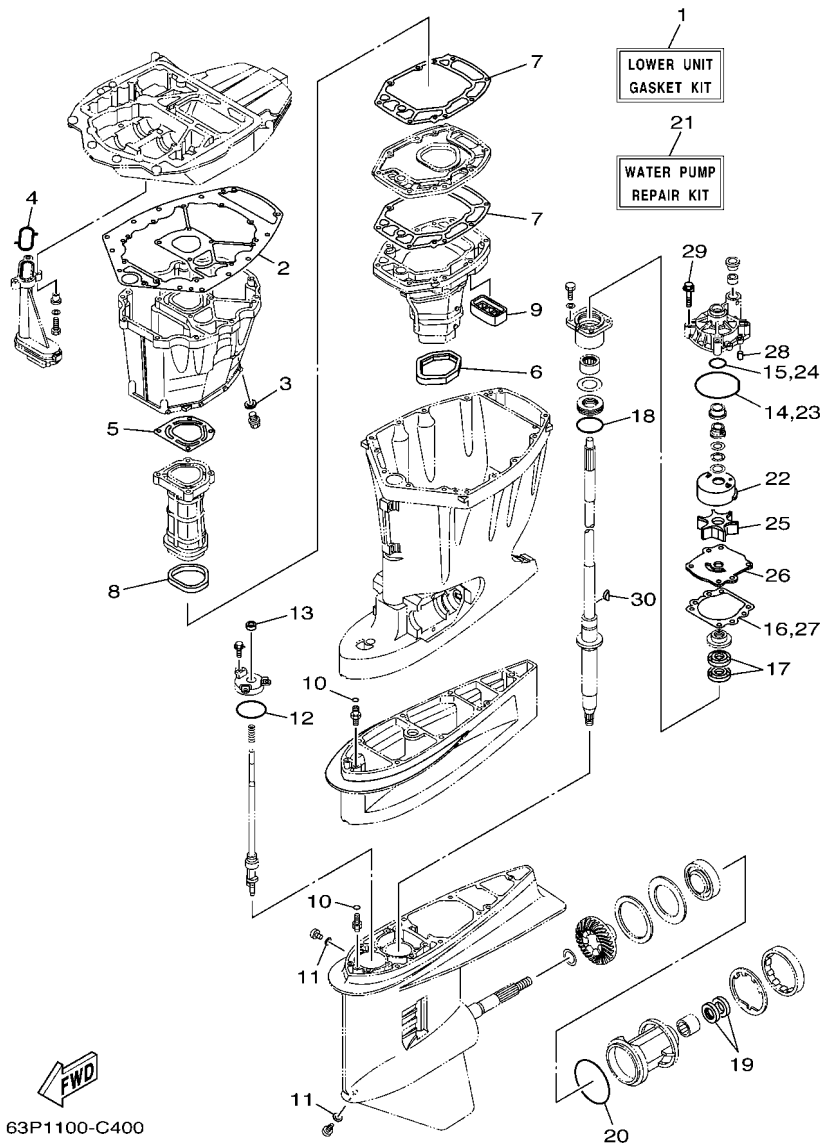


| REF. NO. | PART NO. N° PIECES | DESCRIPTION DESCRIPTION | 63P3 | 64P3 | | | | REMARKS REMARQUES |
|---|---|---|---|---|---|---|---|---|
| 1 | 63P–W0001–20 | LOWER UNIT GASKET KIT<br>POCHETTE DE JOINTS EMBASE | 1 | 1 | | | | |
| 2 | 63P–15312–00 | .GASKET, OIL PAN<br>.JOINT DE VENTILATEUR D'HUILE | 1 | 1 | | | | |
| 3 | 90430–14M09 | .GASKET<br>.JOINT | 1 | 1 | | | | |
| 4 | 63P–13415–00 | .SEAL, OIL STRAINER<br>.JOINT, FILTRE A HUILE | 1 | 1 | | | | |
| 5 | 63P–41133–A0 | .GASKET, EXHAUST MANIFOLD 1<br>.JOINT, PIPE D'ECHAPPEMENT | 1 | 1 | | | | |
| 6 | 69J–45123–00 | .GASKET, MUFFLER<br>.JOINT, POT DE DETENTE | 1 | 1 | | | | |
| 7 | 63P–41134–A0 | .GASKET, EXHAUST MANIFOLD<br>.JOINT, PIPE D'ECHAPPEMENT | 2 | 2 | | | | |
| 8 | 63P–41138–00 | .SEAL, EXT. 1<br>.JOINT DE GROUPE 1 | 1 | 1 | | | | |
| 9 | 69J–45127–00 | .SEAL<br>.JOINT | 1 | 1 | | | | |
| 10 | 93210–07003 | .O-RING<br>.JOINT TORIQUE | 2 | 2 | | | | |
| 11 | 90430–08020 | .GASKET<br>.JOINT | 2 | 2 | | | | |
| 12 | 93210–58144 | .O-RING<br>.JOINT TORIQUE | 1 | 1 | | | | |
| 13 | 93106–09014 | .OIL SEAL<br>.JOINT SPY | 1 | 1 | | | | |
| 14 | 93210–86M38 | .O-RING<br>.JOINT TORIQUE | 1 | 1 | | | | |
| 15 | 93210–37160 | .O-RING<br>.JOINT TORIQUE | 1 | 1 | | | | |
| 16 | 6E5–44315–A0 | .GASKET, WATER PUMP<br>.JOINT, POMPE A EAU | 1 | 1 | | | | |
| 17 | 93101–28M16 | .OIL SEAL<br>.JOINT SPY | 2 | 2 | | | | |
| 18 | 93210–55M14 | .O-RING<br>.JOINT TORIQUE | 1 | 1 | | | | |
| 19 | 93101–30M17 | .OIL SEAL<br>.JOINT SPY | 2 | 2 | | | | |
| 20 | 93210–97M55 | .O-RING<br>.JOINT TORIQUE | 1 | 1 | | | | |
| 21 | 61A–W0078–A3 | WATER PUMP REPAIR KIT<br>KIT DE REPARATION DE LA POMPE | 1 | 1 | | | | |
| 22 | 61A–44322–02 | .INSERT, CARTRIDGE<br>.CUVETTE | 1 | 1 | | | | |
| 23 | 93210–86M38 | .O-RING<br>.JOINT TORIQUE | 1 | 1 | | | | |
| 24 | 93210–37160 | .O-RING<br>.JOINT TORIQUE | 1 | 1 | | | | |
| 25 | 6E5–44352–01 | .IMPELLER<br>.TURBINE | 1 | 1 | | | | |
| 26 | 6G5–44323–00 | .OUTER PLATE, CARTRIDGE<br>.PLAQUE EXTERIEURE | 1 | 1 | | | | |
| 27 | 6E5–44315–A0 | .GASKET, WATER PUMP<br>.JOINT, POMPE A EAU | 1 | 1 | | | | |

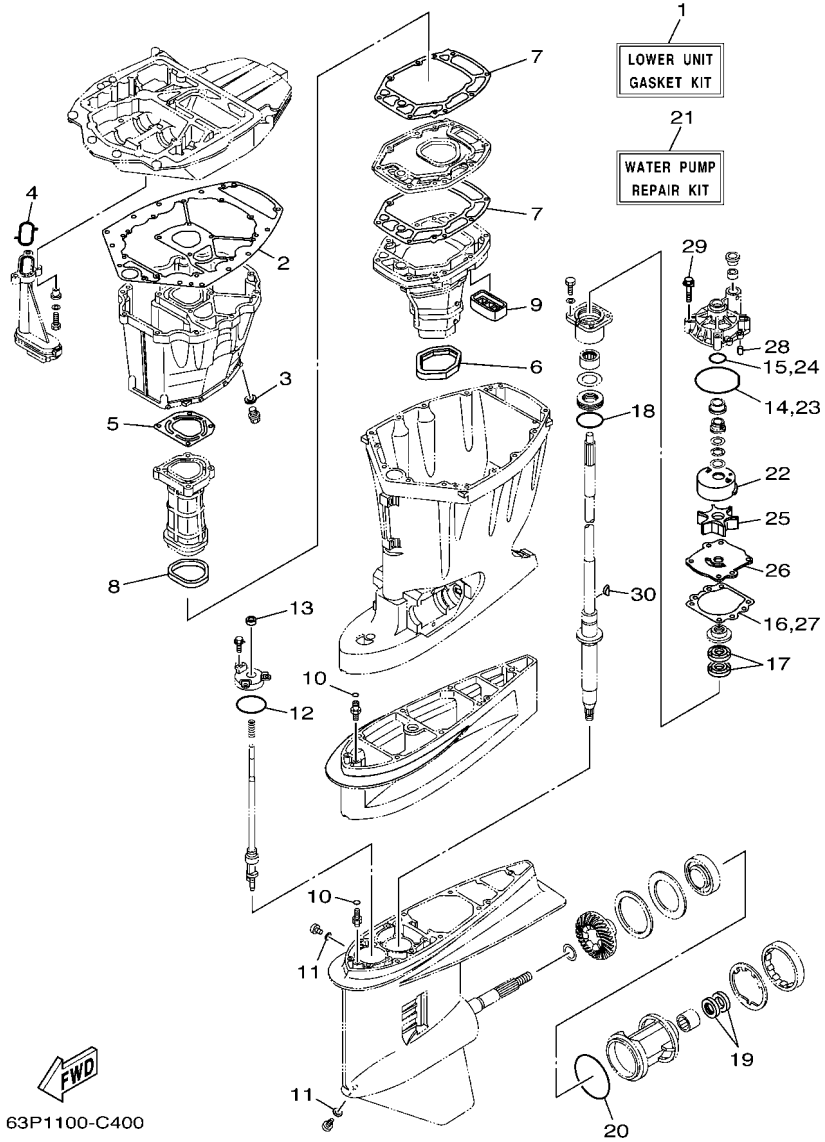


## FIG. 38 REPAIR KIT 2 — KITS DE REPARATION 2

| REF. NO. | PART NO. N° PIECES | DESCRIPTION DESCRIPTION | 63P3 | 64P3 | | | | REMARKS REMARQUES |
|---|---|---|---|---|---|---|---|---|
| 28 | 93606–12019 | .PIN, DOWEL<br>.GOUPILLE | 2 | 2 | | | | |
| 29 | 90119–08M14 | .BOLT, WITH WASHER<br>.BOULON, AVEC RONDELLE | 4 | 4 | | | | |
| 30 | 90280–04M05 | .KEY, WOODRUFF<br>.CLAVETTE, DEMI-LUNE | 1 | 1 | | | | |

NUMERICAL INDEX
INDEX NUMERIQUE

| PART NO. N° PIECES | REF. NO. |
|---|---|
| 63P–11110–00–94 | 4 – 2 |
| 63P–11119–00 | 2 – 21 |
| 68F–11119–00 | 2 – 22 |
| 69J–11133–10 | 4 – 3 |
| 63P–11135–00 | 4 – 23 |
| 63P–11181–00 | 4 – 18 |
| | 37 – 4 |
| 63P–11191–00–1S | 4 – 22 |
| 63P–11192–01 | 4 – 29 |
| 63P–11193–00 | 4 – 26 |
| | 37 – 5 |
| 63P–11197–00 | 2 – 10 |
| 69J–11301–10 | 4 – 13 |
| | 5 – 13 |
| 68T–11325–00 | 5 – 2 |
| 63P–11325–01 | 2 – 17 |
| 68V–11325–02 | 4 – 34 |
| | 5 – 42 |
| 63P–11325–11 | 2 – 19 |
| 63P–11325–21 | 2 – 11 |
| 67F–11328–00 | 4 – 35 |
| | 5 – 43 |
| 63P–11351–00 | 2 – 24 |
| | 37 – 12 |
| 69J–11355–00 | 26 – 19 |
| | 37 – 17 |
| 63P–11372–00 | 2 – 4 |
| 63P–11377–00 | 2 – 30 |
| 63P–11410–00 | 3 – 1 |
| 63P–11416–31 | 3 – 3 |
| 63P–11416–41 | 3 – 3 |
| 63P–11416–51 | 3 – 3 |
| 63P–11417–41 | 3 – 4 |
| 63P–11417–51 | 3 – 4 |
| 63P–11417–61 | 3 – 4 |
| 63P–11417–71 | 3 – 4 |
| 63P–11417–81 | 3 – 4 |
| 63P–11426–31 | 3 – 5 |
| 63P–11426–41 | 3 – 5 |
| 63P–11426–51 | 3 – 5 |
| 63P–11500–01 | 2 – 25 |
| 63P–11512–00 | 2 – 29 |
| 63P–11536–00 | 6 – 17 |
| 63P–11537–00 | 6 – 12 |
| 63P–11590–00 | 6 – 16 |
| 63P–11603–01 | 3 – 9 |
| 63P–11604–00 | 3 – 9 |
| 63P–11654–00 | 3 – 7 |

| PART NO. N° PIECES | REF. NO. |
|---|---|
| 63P–11656–00 | 3 – 8 |
| 63P–11656–10 | 3 – 8 |
| 63P–11656–20 | 3 – 8 |
| 69J–12111–00 | 6 – 1 |
| 69J–12113–01 | 6 – 3 |
| 69J–12117–01 | 6 – 4 |
| 69J–12118–00 | 6 – 5 |
| 69J–12119–00 | 6 – 6 |
| 69J–12121–00 | 6 – 2 |
| 67F–12138–60 | 4 – 32 |
| 69J–12153–00 | 6 – 7 |
| 69J–12168–00 | 6 – 8 |
| 69J–12168–10 | 6 – 8 |
| 69J–12168–20 | 6 – 8 |
| 69J–12168–30 | 6 – 8 |
| 69J–12168–40 | 6 – 8 |
| 69J–12168–50 | 6 – 8 |
| 69J–12168–60 | 6 – 8 |
| 69J–12168–70 | 6 – 8 |
| 69J–12168–80 | 6 – 8 |
| 69J–12168–90 | 6 – 8 |
| 69J–12168–A0 | 6 – 8 |
| 69J–12168–B0 | 6 – 8 |
| 69J–12168–C0 | 6 – 8 |
| 69J–12168–D0 | 6 – 8 |
| 69J–12168–E0 | 6 – 8 |
| 69J–12168–F0 | 6 – 8 |
| 69J–12168–G0 | 6 – 8 |
| 69J–12168–H0 | 6 – 8 |
| 69J–12168–J0 | 6 – 8 |
| 69J–12168–K0 | 6 – 8 |
| 69J–12168–L0 | 6 – 8 |
| 69J–12168–M0 | 6 – 8 |
| 69J–12168–N0 | 6 – 8 |
| 69J–12168–P0 | 6 – 8 |
| 69J–12168–R0 | 6 – 8 |
| 69J–12168–S0 | 6 – 8 |
| 69J–12168–T0 | 6 – 8 |
| 69J–12168–U0 | 6 – 8 |
| 69J–12168–V0 | 6 – 8 |
| 69J–12168–W0 | 6 – 8 |
| 69J–12168–X0 | 6 – 8 |
| 69J–12168–Y0 | 6 – 8 |
| 69J–12169–00 | 6 – 8 |
| 63P–12171–00 | 6 – 9 |
| 63P–12181–00 | 6 – 10 |
| 63P–1240H–00–1S | 5 – 20 |
| 67F–12411–01 | 5 – 18 |

| PART NO. N° PIECES | REF. NO. |
|---|---|
| 67F–12412–00 | 5 – 19 |
| 63P–12414–00 | 5 – 21 |
| | 37 – 10 |
| 6G5–12416–00 | 5 – 6 |
| 67F–12435–A0 | 5 – 10 |
| | 37 – 9 |
| 67F–1246A–01–1S | 5 – 9 |
| 68T–12572–00 | 19 – 28 |
| 6R3–12581–00 | 19 – 30 |
| 6R3–12582–00 | 19 – 31 |
| 6R3–12583–00 | 19 – 32 |
| 69J–12858–00 | 5 – 29 |
| 69J–13119–00 | 26 – 17 |
| 63P–1312A–01 | 9 – 26 |
| 63P–13131–00 | 12 – 27 |
| 63P–13160–00 | 11 – 6 |
| 63P–13300–00 | 26 – 14 |
| 63P–13329–00 | 26 – 15 |
| 69J–13338–00 | 26 – 16 |
| 63P–13411–00 | 26 – 9 |
| 63P–13415–00 | 26 – 11 |
| | 38 – 4 |
| 67F–13434–03 | 1 – 27 |
| 63P–13437–61 | 14 – 23 |
| 69J–13440–00 | 5 – 28 |
| 63P–13446–00–94 | 5 – 30 |
| 67F–13448–00 | 1 – 22 |
| 63P–13490–00 | 2 – 34 |
| 63P–13532–10 | 11 – 5 |
| 63P–13545–00 | 11 – 4 |
| 63P–13546–00 | 11 – 3 |
| 63P–13557–00 | 9 – 20 |
| 68V–13577–00 | 11 – 15 |
| 6BM–13593–00 | 10 – 25 |
| 69J–13631–00 | 26 – 18 |
| 63P–13641–00 | 9 – 13 |
| 63P–13643–00 | 9 – 22 |
| 63P–13645–00 | 9 – 16 |
| 69J–13716–00 | 10 – 24 |
| 63P–13751–01 | 9 – 2 |
| 6P2–13758–00 | 11 – 19 |
| 63P–13761–00 | 9 – 23 |
| 68V–13766–00 | 9 – 25 |
| 63P–13769–00 | 9 – 32 |
| 68V–13781–10 | 10 – 14 |
| 63P–13784–00 | 10 – 19 |
| 63P–13898–00 | 9 – 31 |
| 63P–13905–00 | 9 – 30 |

| PART NO. N° PIECES | REF. NO. |
|---|---|
| 63P–13906–00 | 10 – 9 |
| 63P–13907–02 | 10 – 18 |
| 63P–13915–00 | 10 – 20 |
| 63P–13971–00 | 11 – 2 |
| 63P–13974–20 | 11 – 8 |
| 63P–13975–00 | 11 – 18 |
| 63P–13976–00 | 11 – 9 |
| 68V–1410B–00 | 9 – 24 |
| 63P–14148–00 | 10 – 21 |
| 63P–14149–00 | 11 – 1 |
| 63P–14180–01 | 10 – 1 |
| 63P–14181–00 | 10 – 7 |
| 63P–14182–00 | 10 – 2 |
| 63P–14191–00 | 10 – 8 |
| 63P–14200–21 | 9 – 1 |
| 63P–14225–00 | 11 – 7 |
| 69J–14225–01 | 10 – 12 |
| 63P–14291–00 | 9 – 12 |
| 63P–14292–00 | 9 – 33 |
| 69J–14321–00 | 9 – 3 |
| 68V–14323–00 | 9 – 5 |
| 68V–14331–00 | 9 – 4 |
| 68V–14356–00 | 9 – 10 |
| 68V–14386–00 | 10 – 16 |
| 63P–14435–00 | 17 – 17 |
| 63P–14440–00 | 7 – 10 |
| 63P–14446–00 | 9 – 21 |
| 68V–14446–00 | 10 – 28 |
| 63P–14449–00 | 7 – 11 |
| 63P–14457–00 | 7 – 12 |
| 63P–14496–00 | 9 – 14 |
| 63P–14546–00 | 10 – 15 |
| 63P–14565–00 | 10 – 10 |
| 68V–14565–00 | 9 – 11 |
| 63P–14567–00 | 10 – 11 |
| 3CF–14594–00 | 9 – 9 |
| 69J–14624–01 | 25 – 26 |
| 63P–14711–00–5B | 25 – 12 |
| 63P–14777–00 | 10 – 23 |
| 63P–14984–00 | 10 – 13 |
| 63P–14985–00 | 10 – 17 |
| 63P–15311–00–5B | 26 – 2 |
| 63P–15312–00 | 26 – 1 |
| | 37 – 15 |
| | 38 – 2 |
| 63P–15316–00 | 26 – 6 |
| 63P–15319–00–1S | 5 – 35 |
| 63P–15362–00 | 26 – 23 |

| PART NO. N° PIECES | REF. NO. |
|---|---|
| 6G8–15363–00 | 5 – 33 |
| 63P–15364–A0 | 5 – 36 |
| | 37 – 21 |
| 63P–15373–00 | 7 – 5 |
| 63P–15377–00 | 26 – 24 |
| 63P–15378–00 | 7 – 8 |
| 63P–2134X–00 | 8 – 2 |
| 69J–21841–02 | 10 – 27 |
| 63P–2247B–00 | 11 – 12 |
| 68V–2411M–00 | 11 – 10 |
| 63P–2411R–00 | 10 – 4 |
| 63P–2411T–00 | 10 – 5 |
| 68V–24149–00 | 12 – 34 |
| 6P2–24170–00 | 8 – 1 |
| 63P–2417H–00 | 11 – 21 |
| 63P–2417J–00 | 11 – 22 |
| 63P–2419A–00 | 8 – 3 |
| 6YK–24307–42 | 13 – 1 |
| 64P–24311–00 | 8 – 11 |
| 63P–24311–10 | 12 – 23 |
| 64P–24312–00 | 8 – 10 |
| 63P–24312–10 | 12 – 38 |
| 64P–24313–00 | 8 – 8 |
| 63P–24313–10 | 12 – 39 |
| 63P–24314–00 | 12 – 36 |
| 64P–24314–00 | 8 – 14 |
| 63P–24315–00 | 12 – 37 |
| 64P–24315–00 | 8 – 13 |
| 63P–24316–00 | 12 – 5 |
| 63P–24317–00 | 11 – 11 |
| 63P–24325–00 | 11 – 14 |
| 63P–24364–00 | 8 – 15 |
| 63P–24367–00 | 8 – 12 |
| 68V–24374–00 | 12 – 30 |
| 6R3–24377–10 | 12 – 3 |
| 6E5–24378–00 | 12 – 35 |
| 69J–24379–00 | 10 – 22 |
| 6E5–24379–00 | 8 – 17 |
| 63P–24410–00 | 12 – 24 |
| 68V–24411–00 | 12 – 29 |
| 68V–24412–00 | 12 – 25 |
| 68V–24413–00 | 12 – 31 |
| 63P–24414–00 | 12 – 32 |
| 63P–24423–00 | 12 – 28 |
| 68V–24444–00 | 12 – 33 |
| 4SV–24453–00 | 10 – 3 |
| 68V–24454–00 | 12 – 26 |
| 61A–24469–00 | 12 – 12 |

| PART NO. N° PIECES | REF. NO. |
|---|---|
| 69J–24501–10 | 11 – 16 |
| 69J–24502–00 | 8 – 9 |
| 68V–24519–00 | 11 – 13 |
| 61A–24521–00 | 12 – 7 |
| 65L–24531–01 | 12 – 8 |
| 65L–24560–00 | 12 – 6 |
| 65L–24563–00 | 12 – 11 |
| 61A–24564–00 | 12 – 9 |
| 65L–24564–00 | 12 – 13 |
| 63P–24566–00 | 12 – 17 |
| 65L–24577–00 | 12 – 10 |
| 69J–24599–10 | 11 – 17 |
| 68V–2481H–00 | 11 – 20 |
| 67F–28100–01 | 12 – 45 |
| 67F–2812A–00 | 16 – 39 |
| 6A1–28176–00 | 19 – 52 |
| 63P–28199–73–D0 | 12 – 46 |
| 63P–28199–73–E0 | 12 – 46 |
| 63P–28199–73–F0 | 12 – 46 |
| 63P–28199–73–G0 | 12 – 46 |
| 63P–28199–73–H0 | 12 – 46 |
| 63P–28199–73–S0 | 12 – 46 |
| 63P–28199–83–K0 | 12 – 47 |
| 63P–28199–83–L0 | 12 – 47 |
| 63P–28199–83–M0 | 12 – 47 |
| 63P–28199–83–N0 | 12 – 47 |
| 63P–28199–83–P0 | 12 – 47 |
| 63P–28199–83–R0 | 12 – 47 |
| 61H–2819R–31 | 12 – 44 |
| 63P–41113–02–1S | 5 – 1 |
| 63P–41114–A1 | 5 – 4 |
| | 37 – 8 |
| 63P–41131–00–5B | 25 – 9 |
| 63P–41133–A0 | 25 – 10 |
| | 38 – 5 |
| 63P–41134–A0 | 25 – 17 |
| | 38 – 7 |
| 63P–41137–00 | 25 – 1 |
| 63P–41138–00 | 25 – 19 |
| | 38 – 8 |
| 63P–41213–00 | 20 – 44 |
| 63P–41237–00 | 20 – 50 |
| 6H4–41237–00 | 9 – 17 |
| 682–41238–01 | 9 – 19 |
| 63P–42154–00 | 20 – 39 |
| 63P–42157–00 | 20 – 51 |
| 68V–42171–00 | 20 – 52 |
| 66K–42510–01–8D | 22 – 9 |

NUMERICAL INDEX
INDEX NUMERIQUE


| PART NO. N° PIECES | REF. NO. |
|---|---|
| 63P–42541–00 | 19 – 33 |
| 63P–42610–01–8D | 1 – 1 |
| 63P–42613–00 | 1 – 14 |
| 63P–42615–00 | 19 – 2 |
| 63P–42617–00 | 1 – 16 |
| 63P–42643–00–94 | 1 – 11 |
| 63P–42644–00–94 | 1 – 13 |
| 63P–42647–00–94 | 1 – 4 |
| 60V–42651–01 | 1 – 7 |
| 63P–42662–00 | 1 – 26 |
| 68F–42663–00 | 1 – 12 |
| 69J–42663–00 | 1 – 8 |
| 63P–42677–00 | 1 – 17 |
| 63P–42678–00 | 1 – 18 |
| 63P–42681–00 | 1 – 20 |
| 63P–42682–00 | 1 – 21 |
| 63P–42710–00–8D | 19 – 1 |
| 648–42715–00 | 20 – 30 |
| 63P–42716–00 | 19 – 35 |
| 61A–42717–00 | 19 – 27 |
| 63P–42717–00 | 19 – 20 |
| 63P–42718–00 | 19 – 21 |
| 69J–42723–00–8D | 17 – 20 |
| 6E5–42724–00 | 25 – 8 |
| 63P–42725–00 | 19 – 23 |
| 6H1–42726–21 | 19 – 24 |
| 61A–42727–00 | 19 – 42 |
| 63P–42738–00–8D | 19 – 19 |
| 63P–42741–01–8D | 19 – 36 |
| 6H4–42748–00 | 19 – 48 |
| 68F–42753–00 | 19 – 49 |
| 63P–42756–00 | 19 – 44 |
| 63P–42811–01 | 19 – 43 |
| 63P–42815–00–8D | 19 – 6 |
| 63P–42816–00–8D | 19 – 7 |
| 63P–42818–01 | 19 – 11 |
| 63P–42828–00–94 | 19 – 9 |
| 68F–42828–03–94 | 19 – 8 |
| 64E–43111–02–8D | 21 – 1 |
| 64E–43112–02–8D | 21 – 9 |
| 64E–43126–00 | 21 – 35 |
| 64E–43131–01 | 21 – 14 |
| 64E–43139–02 | 22 – 1 |
| 64D–43144–00 | 19 – 16 |
| 6G5–43144–00 | 21 – 25 |
| 6E5–43145–01 | 31 – 8 |
| 6G5–43148–00 | 21 – 30 |
| 6G5–43181–02 | 21 – 27 |

| PART NO. N° PIECES | REF. NO. |
|---|---|
| 6G5–43185–02 | 21 – 28 |
| 64E–43311–10–8D | 21 – 21 |
| 63P–43376–00 | 22 – 6 |
| 63P–43800–00–4D | 23 – 1 |
| 64E–43802–00 | 24 – 8 |
| 64E–43805–00 | 24 – 37 |
| 64E–4380F–00 | 24 – 33 |
| 64E–4380J–00 | 24 – 30 |
| 63P–43810–00 | 23 – 6 |
| 6E5–43814–02 | 23 – 13 |
| 64E–43816–00 | 24 – 17 |
| 64E–43817–00 | 23 – 5 |
| 64E–43817–10 | 24 – 19 |
| 64E–43818–01 | 23 – 32 |
| 64E–4381G–00 | 23 – 27 |
| 64E–43820–00 | 23 – 15 |
| 64E–43821–00 | 23 – 16 |
| 64E–43822–00 | 23 – 17 |
| 64E–43825–01 | 23 – 2 |
| 64E–43827–00 | 24 – 22 |
| 64E–43828–00 | 23 – 22 |
| 64E–43829–00 | 23 – 23 |
| 64E–4382G–00 | 23 – 29 |
| 64E–43830–00 | 24 – 4 |
| 64E–43831–00 | 24 – 2 |
| 64E–43841–00 | 24 – 7 |
| 64E–43843–00 | 24 – 6 |
| 64E–43843–10 | 24 – 38 |
| 64E–4384J–00 | 23 – 18 |
| 64E–43850–00 | 24 – 15 |
| 64E–43851–00 | 24 – 11 |
| 64E–43855–00 | 24 – 14 |
| 64E–43858–00 | 24 – 12 |
| 6E5–43858–00 | 23 – 28 |
| 72X–43858–00 | 24 – 5 |
| 64E–43859–00 | 24 – 13 |
| 64E–43860–00 | 24 – 20 |
| 6E5–43862–00 | 23 – 10 |
| 6G5–43863–00 | 24 – 10 |
| 6E5–43864–00 | 23 – 20 |
| 6G5–43864–00 | 23 – 19 |
| 64E–43865–00 | 24 – 16 |
| 6G5–43865–00 | 24 – 35 |
| 64E–43866–00 | 23 – 9 |
| 64E–43867–00 | 23 – 8 |
| 64E–43868–00 | 24 – 3 |
| 64E–43869–00 | 23 – 26 |
| 6H1–4386K–10 | 24 – 29 |

| PART NO. N° PIECES | REF. NO. |
|---|---|
| 6E5–43872–00 | 23 – 12 |
| 64E–43873–00 | 24 – 24 |
| 6E5–43874–01 | 23 – 21 |
| 64E–43875–00 | 24 – 25 |
| 64E–43879–00 | 24 – 27 |
| 64E–43879–10 | 24 – 26 |
| 64E–4387A–00 | 24 – 23 |
| 67H–43880–01 | 24 – 28 |
| 64E–43883–00 | 23 – 11 |
| 64E–4388E–00 | 23 – 25 |
| 64E–4388E–10 | 24 – 1 |
| 64E–4388J–00 | 23 – 3 |
| 64E–43891–00 | 24 – 31 |
| 64E–43892–00 | 24 – 34 |
| 6E5–43896–00 | 24 – 9 |
| 64E–43897–00 | 23 – 24 |
| 64E–43898–00 | 23 – 7 |
| 63P–44117–00–1S | 20 – 9 |
| 63P–44118–00–8D | 20 – 25 |
| 63P–44120–00 | 20 – 20 |
| 63P–44121–00 | 20 – 18 |
| 63P–44122–00 | 20 – 15 |
| 69J–44135–00 | 20 – 45 |
| 63P–44150–00 | 27 – 18 |
| 64P–44150–00 | 29 – 19 |
| 63P–44150–10 | 27 – 18 |
| 64P–44150–10 | 29 – 19 |
| 63P–44176–00–1S | 20 – 8 |
| 61A–44311–01 | 27 – 25 |
| | 29 – 26 |
| 6E5–44312–00 | 27 – 30 |
| | 28 – 5 |
| | 29 – 31 |
| | 30 – 5 |
| 6E5–44315–A0 | 27 – 34 |
| | 29 – 35 |
| | 38 – 16 |
| 61A–44322–02 | 27 – 26 |
| | 29 – 27 |
| | 38 – 22 |
| 6G5–44323–00 | 27 – 33 |
| | 29 – 34 |
| | 38 – 26 |
| 6E5–44352–01 | 27 – 31 |
| | 29 – 32 |
| | 38 – 25 |
| 63P–44361–00 | 28 – 1 |
| | 30 – 1 |

| PART NO. N° PIECES | REF. NO. |
|---|---|
| 63P–44362–00 | 28 – 3 |
| | 30 – 3 |
| 63P–44363–00 | 28 – 6 |
| | 30 – 6 |
| 6E5–44365–00 | 27 – 29 |
| | 28 – 2 |
| | 29 – 30 |
| | 30 – 2 |
| 6E5–44366–00 | 25 – 29 |
| 6P2–44391–00 | 19 – 26 |
| 63P–44511–00–94 | 22 – 37 |
| 63P–44514–00–94 | 22 – 30 |
| 6G5–44526–00 | 21 – 3 |
| 69J–44533–00 | 22 – 23 |
| 68V–44551–00–8D | 22 – 14 |
| 63P–44553–00–8D | 22 – 26 |
| 60V–44555–00–94 | 22 – 17 |
| 63P–44555–00–94 | 22 – 17 |
| 63P–44556–00–8D | 22 – 27 |
| 61A–44575–00 | 22 – 16 |
| 63P–45111–00–8D | 25 – 21 |
| 69J–45123–00 | 25 – 13 |
| | 38 – 6 |
| 69J–45127–00 | 25 – 20 |
| | 38 – 9 |
| 6H3–45155–00 | 25 – 30 |
| 63P–45181–00–5B | 25 – 18 |
| 63P–45211–00–8D | 25 – 36 |
| 6J9–45214–00 | 28 – 12 |
| | 30 – 12 |
| 6J9–45215–00 | 28 – 13 |
| | 30 – 13 |
| 6G5–45251–02 | 21 – 2 |
| 63P–45300–01–8D | 27 – 1 |
| 64P–45300–01–8D | 29 – 1 |
| 63P–45300–11–8D | 27 – 1 |
| 64P–45300–11–8D | 29 – 1 |
| 6J9–45301–05–8D | 27 – 2 |
| | 29 – 2 |
| 6E5–45318–00 | 25 – 24 |
| 6E5–45321–00 | 27 – 14 |
| | 29 – 15 |
| 6E5–45331–00–94 | 27 – 37 |
| | 29 – 38 |
| 6J9–45332–00–8D | 27 – 61 |
| 6K1–45332–01–8D | 29 – 62 |
| 688–45341–10 | 27 – 7 |
| | 29 – 8 |

| PART NO. N° PIECES | REF. NO. |
|---|---|
| 6E5–45344–00 | 27 – 43 |
| | 29 – 44 |
| 6J9–45371–01 | 28 – 16 |
| 6K1–45371–02 | 30 – 16 |
| 688–45375–00 | 27 – 11 |
| | 29 – 12 |
| 663–45376–00–94 | 27 – 10 |
| | 29 – 11 |
| 63P–45378–00 | 25 – 37 |
| | 27 – 12 |
| | 29 – 13 |
| 63P–45379–00 | 25 – 34 |
| 6G5–45383–01 | 27 – 71 |
| | 29 – 73 |
| 6G5–45384–02 | 27 – 72 |
| | 29 – 74 |
| 63P–45501–00 | 27 – 46 |
| | 29 – 47 |
| 63P–45501–10 | 27 – 46 |
| | 29 – 47 |
| 61A–45527–00 | 27 – 24 |
| | 29 – 25 |
| 6G5–45536–01 | 27 – 9 |
| | 29 – 10 |
| 61A–45538–00 | 27 – 21 |
| | 29 – 22 |
| 63P–45551–00 | 27 – 47 |
| | 29 – 48 |
| 63P–45560–01 | 27 – 49 |
| 64P–45560–01 | 29 – 50 |
| 6G5–45567–01 | 27 – 5 |
| | 29 – 6 |
| 6G5–45567–10 | 27 – 5 |
| | 29 – 6 |
| 6G5–45567–20 | 27 – 5 |
| | 29 – 6 |
| 6G5–45567–30 | 27 – 5 |
| | 29 – 6 |
| 6G5–45567–40 | 27 – 5 |
| | 29 – 6 |
| 6G5–45567–50 | 27 – 5 |
| | 29 – 6 |
| 6G5–45567–60 | 27 – 5 |
| | 29 – 6 |
| 64P–45570–01 | 29 – 64 |
| 63P–45571–01 | 27 – 63 |
| 6K1–45576–00 | 29 – 65 |
| 6G5–45576–10 | 27 – 64 |

| PART NO. N° PIECES | REF. NO. |
|---|---|
| 6G5–45577–02 | 27 – 68 |
| | 29 – 71 |
| 6G5–45577–10 | 27 – 68 |
| | 29 – 71 |
| 6G5–45577–20 | 27 – 68 |
| | 29 – 71 |
| 6G5–45577–30 | 27 – 68 |
| | 29 – 71 |
| 6G5–45577–40 | 27 – 68 |
| | 29 – 71 |
| 6G5–45577–50 | 27 – 68 |
| | 29 – 71 |
| 6G5–45577–60 | 27 – 68 |
| | 29 – 71 |
| 6K1–45578–01 | 29 – 67 |
| 6K1–45578–10 | 29 – 67 |
| 6K1–45578–20 | 29 – 67 |
| 6K1–45578–30 | 29 – 67 |
| 6K1–45578–40 | 29 – 67 |
| 6K1–45578–50 | 29 – 67 |
| 6K1–45578–60 | 29 – 67 |
| 6E5–45587–01 | 27 – 40 |
| | 29 – 41 |
| 6E5–45587–10 | 27 – 40 |
| | 29 – 41 |
| 6E5–45587–20 | 27 – 40 |
| | 29 – 41 |
| 6E5–45587–30 | 27 – 40 |
| | 29 – 41 |
| 6E5–45587–40 | 27 – 40 |
| | 29 – 41 |
| 6E5–45587–50 | 27 – 40 |
| | 29 – 41 |
| 6E5–45587–60 | 27 – 40 |
| | 29 – 41 |
| 6J9–45611–01 | 27 – 51 |
| 6K1–45611–10 | 29 – 52 |
| 63P–45631–01 | 27 – 59 |
| | 29 – 60 |
| 6E5–45633–01 | 27 – 60 |
| | 29 – 61 |
| 6E5–45634–01 | 27 – 53 |
| | 29 – 54 |
| 6K1–45641–01 | 29 – 53 |
| 6E5–45641–03 | 27 – 52 |
| 6G5–45930–00–98 | 28 – 23 |
| 6G5–45932–00–98 | 28 – 23 |
| 6G5–45941–00–98 | 28 – 23 |

NUMERICAL INDEX
INDEX NUMERIQUE


| PART NO. N° PIECES | REF. NO. |
|---|---|
| 6G5–45943–01–98 | 28 – 23 |
| 6K1–45945–00–98 | 30 – 23 |
| 6G5–45945–01–98 | 28 – 23 |
| 6K1–45947–00–98 | 30 – 23 |
| 6G5–45947–01–98 | 28 – 23 |
| 6G5–45949–00–98 | 28 – 23 |
| 6K1–45970–01–98 | 30 – 23 |
| 6G5–45970–02–98 | 28 – 23 |
| 6J9–45970–10 | 28 – 23 |
| 6R1–45970–A1 | 30 – 23 |
| 6R4–45970–A1 | 28 – 23 |
| 6K1–45972–01–98 | 30 – 23 |
| 6G5–45972–02–98 | 28 – 23 |
| 6J9–45972–10 | 28 – 23 |
| 6R1–45972–A0 | 30 – 23 |
| 6R4–45972–A0 | 28 – 23 |
| 6K1–45974–02–98 | 30 – 23 |
| 6G5–45974–03–98 | 28 – 23 |
| 6J9–45974–10 | 28 – 23 |
| 6R1–45974–A0 | 30 – 23 |
| 6R4–45974–A0 | 28 – 23 |
| 6K1–45976–00–98 | 30 – 23 |
| 6G5–45976–01–98 | 28 – 23 |
| 6J9–45976–10 | 28 – 23 |
| 6R1–45976–A0 | 30 – 23 |
| 6R4–45976–A0 | 28 – 23 |
| 6K1–45978–02–98 | 30 – 23 |
| 6G5–45978–03–98 | 28 – 23 |
| 6R1–45978–A0 | 30 – 23 |
| 6R4–45978–A0 | 28 – 23 |
| 63P–45987–00 | 28 – 18 |
| | 30 – 18 |
| 688–45997–01 | 28 – 19 |
| | 30 – 19 |
| 63P–46241–00 | 6 – 15 |
| 704–48119–40 | 34 – 68 |
| EL8–48127–00 | 34 – 23 |
| 704–48128–00 | 34 – 62 |
| 704–48129–00 | 34 – 2 |
| 704–48144–20 | 34 – 50 |
| 703–48152–00 | 33 – 57 |
| 703–48153–00 | 33 – 3 |
| 704–48153–00 | 34 – 55 |
| 704–48156–00 | 34 – 63 |
| EL8–48164–00 | 34 – 41 |
| 704–48166–00 | 34 – 56 |
| 704–48167–10 | 34 – 69 |
| 704–48176–10 | 34 – 51 |

| PART NO. N° PIECES | REF. NO. |
|---|---|
| 704–48178–00 | 34 – 66 |
| 703–48189–00 | 33 – 17 |
| EL8–48191–00 | 34 – 16 |
| 704–48192–00 | 34 – 44 |
| 704–48192–P0 | 34 – 52 |
| 703–48198–00 | 33 – 14 |
| 703–48205–17 | 32 – 1 |
| | 33 – 1 |
| 704–48207–P0 | 32 – 2 |
| | 34 – 1 |
| 703–48211–01 | 33 – 61 |
| 703–48212–00 | 33 – 58 |
| 703–48213–00 | 33 – 59 |
| 703–48215–00 | 33 – 43 |
| 704–48215–30 | 34 – 12 |
| 703–48219–00 | 33 – 30 |
| 704–48219–P0 | 34 – 49 |
| 703–48221–00 | 33 – 56 |
| 704–48221–P0 | 34 – 67 |
| 703–48222–00 | 33 – 27 |
| 704–48222–P0 | 34 – 32 |
| 703–48223–00 | 33 – 28 |
| 703–48225–00 | 33 – 29 |
| 6X3–48225–20 | 34 – 43 |
| 703–48226–00 | 33 – 26 |
| 703–48227–00 | 33 – 24 |
| 704–48229–00 | 34 – 60 |
| 704–48229–P1 | 34 – 35 |
| 704–48231–00 | 34 – 25 |
| 703–48232–00 | 33 – 62 |
| 704–48232–P1 | 34 – 40 |
| 704–48233–00 | 34 – 53 |
| 703–48234–00 | 33 – 18 |
| 704–48234–00 | 34 – 48 |
| 703–48235–00 | 33 – 4 |
| 704–48235–00 | 34 – 54 |
| 703–48236–00 | 33 – 16 |
| 703–48238–00 | 33 – 22 |
| 704–48238–00 | 34 – 39 |
| EL8–48241–00 | 34 – 26 |
| 704–48242–10 | 34 – 42 |
| 703–48243–00 | 33 – 15 |
| 703–48244–00 | 33 – 21 |
| EL8–48244–00 | 34 – 30 |
| 703–48245–00 | 33 – 11 |
| EL8–48245–00 | 34 – 31 |
| 701–48246–00 | 34 – 5 |
| 703–48246–00 | 33 – 23 |

| PART NO. N° PIECES | REF. NO. |
|---|---|
| 701–48248–00 | 33 – 13 |
| | 34 – 38 |
| EL8–48251–00 | 34 – 3 |
| 703–48252–00 | 33 – 12 |
| EL8–48254–00 | 34 – 27 |
| EL8–48259–00 | 34 – 7 |
| 704–48261–00 | 34 – 15 |
| 703–48261–01 | 33 – 2 |
| 704–48262–00 | 34 – 8 |
| 703–48264–00 | 33 – 6 |
| 704–48264–00 | 34 – 9 |
| 703–48265–00 | 33 – 9 |
| 704–48265–00 | 34 – 4 |
| 703–48268–00 | 33 – 5 |
| 703–48271–00 | 33 – 60 |
| 704–48271–00 | 34 – 22 |
| EL8–48279–00 | 34 – 47 |
| 703–48281–00 | 33 – 31 |
| 704–48281–00 | 34 – 13 |
| EL8–48281–00 | 34 – 11 |
| 703–48282–00 | 33 – 32 |
| 704–48283–00 | 34 – 17 |
| 703–48284–00 | 33 – 52 |
| 704–48284–P0 | 34 – 57 |
| 704–48285–10 | 34 – 65 |
| 701–48287–00 | 33 – 42 |
| 704–48287–00 | 34 – 20 |
| 703–48291–10 | 33 – 39 |
| 703–48293–10 | 33 – 41 |
| 701–48320–50 | 32 – 3 |
| 701–48320–60 | 32 – 3 |
| 701–48320–80 | 32 – 3 |
| 6E5–48344–00 | 20 – 6 |
| 703–48345–01 | 33 – 19 |
| | 34 – 19 |
| 701–48350–00 | 32 – 3 |
| 701–48350–20 | 32 – 3 |
| 703–48358–00 | 33 – 20 |
| | 34 – 24 |
| 63P–48531–00 | 20 – 1 |
| 63P–48532–00 | 20 – 2 |
| 63P–48538–00 | 20 – 4 |
| 6E5–61301–01 | 31 – 10 |
| 6E5–61303–00 | 31 – 14 |
| 6E5–61311–11 | 31 – 12 |
| 6E5–61313–00 | 31 – 11 |
| 6E5–61315–00 | 31 – 13 |
| 6E5–61350–02 | 31 – 1 |

| PART NO. N° PIECES | REF. NO. |
|---|---|
| 6E5–61351–01 | 31 – 2 |
| 6E5–61355–00 | 31 – 5 |
| 68V–81145–01 | 9 – 7 |
| 68V–81146–01 | 9 – 27 |
| 68V–81147–00 | 9 – 29 |
| 63P–8132G–00 | 14 – 20 |
| 6P2–81332–00 | 14 – 15 |
| 63P–81336–00 | 16 – 41 |
| 63P–81337–00 | 14 – 18 |
| 63D–81345–20 | 14 – 5 |
| 63P–81410–00 | 14 – 4 |
| 63P–81450–00 | 14 – 1 |
| 63P–81460–00 | 14 – 2 |
| 63P–81673–00 | 14 – 6 |
| 63P–81800–00 | 18 – 1 |
| 69J–81801–00 | 18 – 5 |
| 67F–81807–00 | 18 – 10 |
| 67F–81808–00 | 18 – 8 |
| 67F–81809–00 | 18 – 19 |
| 67F–81810–00 | 18 – 3 |
| 67F–81813–00 | 18 – 6 |
| 68F–81820–00 | 18 – 7 |
| 67F–81821–00 | 18 – 13 |
| 6K7–81826–10 | 18 – 24 |
| 69J–81828–00 | 18 – 25 |
| 68V–8182L–00 | 9 – 8 |
| 67F–81830–00 | 18 – 17 |
| 67F–81832–00 | 18 – 11 |
| 67F–81836–00 | 18 – 12 |
| 69J–81839–00 | 18 – 21 |
| 67F–8183R–00 | 18 – 16 |
| 60V–8183T–00 | 18 – 18 |
| 69J–81840–00 | 18 – 4 |
| 67F–81841–00 | 18 – 14 |
| 69J–81842–00 | 18 – 20 |
| 63P–81845–00 | 14 – 11 |
| 67F–81846–00 | 18 – 26 |
| 67F–81850–00 | 18 – 2 |
| 67F–81857–00 | 18 – 9 |
| 69J–81869–00 | 18 – 23 |
| 67F–81891–00 | 18 – 15 |
| 63P–81919–00 | 16 – 42 |
| 63P–81919–10 | 16 – 43 |
| 60V–81925–00 | 18 – 28 |
| 63P–81941–00 | 18 – 22 |
| 63P–81942–00 | 16 – 29 |
| 63P–81948–00 | 16 – 17 |
| 68F–81949–00 | 17 – 27 |

| PART NO. N° PIECES | REF. NO. |
|---|---|
| 68V–8194A–00 | 16 – 4 |
| 63P–81950–00 | 16 – 11 |
| 704–81950–10 | 34 – 58 |
| 68V–81953–00 | 16 – 5 |
| 68F–8195A–00 | 16 – 33 |
| 63P–81960–00 | 15 – 17 |
| 63P–81975–00 | 15 – 19 |
| 6K1–81980–00 | 36 – 18 |
| 63P–82105–00 | 17 – 1 |
| 6Y5–82117–00 | 35 – 17 |
| 6G5–82119–00 | 16 – 10 |
| 6E5–82148–00 | 21 – 6 |
| 66K–82149–00 | 21 – 24 |
| 1E6–82151–00 | 35 – 16 |
| 63P–82151–00 | 16 – 32 |
| 67F–82151–00 | 16 – 34 |
| 67F–82151–10 | 16 – 35 |
| 60V–82157–00 | 16 – 40 |
| 63P–82170–00 | 16 – 31 |
| 63P–82310–01 | 15 – 1 |
| 663–82317–01 | 14 – 19 |
| 67F–82361–00 | 15 – 4 |
| 67F–82362–00 | 15 – 5 |
| 67F–82377–00 | 19 – 51 |
| 63P–82380–00 | 9 – 28 |
| 63P–82388–00 | 15 – 15 |
| 6K1–82510–06 | 36 – 3 |
| 703–82510–43 | 33 – 44 |
| 703–82531–00 | 33 – 46 |
| | 35 – 27 |
| 6K1–82532–00 | 36 – 5 |
| 703–82540–00 | 33 – 50 |
| 704–82540–30 | 34 – 10 |
| 68F–82553–80 | 35 – 18 |
| 68F–82553–90 | 35 – 18 |
| 682–82556–00 | 33 – 48 |
| | 36 – 7 |
| 69J–82560–00 | 17 – 24 |
| 69J–82563–00 | 17 – 19 |
| 703–82563–02 | 33 – 55 |
| 704–82563–50 | 34 – 34 |
| 704–82563–H0 | 34 – 61 |
| 704–82563–J0 | 34 – 64 |
| 6K1–82570–08 | 36 – 1 |
| 6K1–82571–02 | 36 – 2 |
| 6K1–82575–00 | 36 – 6 |
| 688–82575–01 | 33 – 47 |
| 703–82577–00 | 33 – 45 |

| PART NO. N° PIECES | REF. NO. |
|---|---|
| 703–82577–00 | 36 – 4 |
| 6E3–8257H–00 | 19 – 53 |
| 68F–82582–00 | 18 – 29 |
| 69J–82587–00 | 17 – 21 |
| 6E9–82588–00 | 17 – 25 |
| 61A–82588–01 | 20 – 11 |
| 61B–8258A–01 | 36 – 24 |
| 688–8258A–20 | 33 – 49 |
| 6K1–8258A–40 | 36 – 23 |
| 63P–82590–01 | 17 – 4 |
| 704–82590–10 | 34 – 59 |
| 703–82591–00 | 33 – 53 |
| 703–82592–00 | 33 – 54 |
| 63P–82594–00 | 16 – 23 |
| 703–82594–00 | 33 – 25 |
| 704–82594–00 | 34 – 33 |
| 60V–8259F–00 | 20 – 33 |
| 69J–8259F–00 | 20 – 10 |
| 63P–8259L–00 | 10 – 26 |
| 63P–8259M–00 | 17 – 8 |
| 68F–82846–00 | 16 – 36 |
| 703–83383–02 | 33 – 51 |
| 688–83383–11 | 36 – 12 |
| 6Y5–83500–S5 | 35 – 6 |
| 6Y5–8350F–00 | 35 – 21 |
| 6Y5–8350T–03 | 35 – 1 |
| 6Y5–83533–T2 | 35 – 10 |
| 6Y5–83553–00 | 35 – 15 |
| 6Y5–83553–F1 | 35 – 23 |
| 6Y5–83553–M0 | 35 – 15 |
| 6Y5–83557–10 | 35 – 19 |
| 6Y5–83557–31 | 35 – 11 |
| 6E5–83558–00 | 25 – 31 |
| 6Y5–83570–S5 | 35 – 7 |
| 63P–83614–00 | 17 – 22 |
| 6K1–83614–01 | 36 – 8 |
| 6K1–83623–41 | 14 – 26 |
| 6K1–83623–50 | 14 – 27 |
| 6A1–83625–41 | 14 – 24 |
| 6A1–83625–51 | 14 – 25 |
| 63P–83626–00 | 4 – 31 |
| 67F–83627–01 | 18 – 32 |
| 69J–83651–00 | 17 – 18 |
| 64E–83672–02 | 22 – 3 |
| 6Y5–83728–00 | 35 – 12 |
| 72X–85075–L0 | 24 – 21 |
| 68F–85119–00 | 16 – 21 |
| 68F–85516–01 | 16 – 19 |

NUMERICAL INDEX
INDEX NUMERIQUE

| PART NO. N° PIECES | REF. NO. |
|---|---|
| 60V–85544–00 | 16 – 38 |
| 689–85547–00 | 12 – 1 |
| 68V–85548–00 | 16 – 27 |
| 63P–85580–00 | 14 – 3 |
| 6Y5–85752–01 | 35 – 24 |
| 61A–85790–00 | 17 – 14 |
| 6K1–85830–01 | 36 – 13 |
| 6S1–85885–00 | 9 – 6 |
| 63P–85886–00 | 17 – 16 |
| 63P–8591A–01 | 16 – 1 |
| 68F–86129–00 | 16 – 20 |
| 6Y5–87122–S0 | 35 – 14 |
| 63P–W0001–01 | 37 – 1 |
| 63P–W0001–20 | 38 – 1 |
| 63P–W0070–00 | 1 – 19 |
| 61A–W0078–A3 | 38 – 21 |
| 63P–W009A–02–1S | 4 – 1 |
| 63P–W009B–03–1S | 2 – 1 |
| 63P–W1164–01 | 3 – 6 |
| 63P–W1164–10 | 3 – 6 |
| 63P–W1510–02–1S | 2 – 2 |
| 63P–W823A–00 | 15 – 2 |
| 63P–W823B–00 | 15 – 3 |
| 63P–W823C–00 | 15 – 7 |
| 63P–W823D–00 | 15 – 8 |
| 90101–09M70 | 31 – 18 |
| 90101–12M05 | 21 – 40 |
| 90105–06M07 | 4 – 36 |
| | 5 – 44 |
| 90105–10071 | 2 – 9 |
| 90105–10M00 | 28 – 17 |
| | 30 – 17 |
| 90109–06M80 | 19 – 39 |
| 90109–06M82 | 19 – 10 |
| 90109–06M86 | 17 – 23 |
| | 19 – 17 |
| | 20 – 3 |
| 90109–08019 | 20 – 35 |
| 90109–14005 | 22 – 33 |
| 90109–14007 | 22 – 22 |
| 90110–05020 | 6 – 18 |
| 90119–06071 | 12 – 22 |
| 90119–06076 | 7 – 14 |
| 90119–06134 | 15 – 6 |
| 90119–06135 | 8 – 20 |
| | 12 – 43 |
| 90119–06M10 | 27 – 17 |
| | 29 – 18 |

| PART NO. N° PIECES | REF. NO. |
|---|---|
| 90119–06M18 | 25 – 35 |
| 90119–06M81 | 2 – 15 |
| 90119–06M82 | 7 – 16 |
| 90119–06M83 | 12 – 42 |
| 90119–06MA2 | 2 – 23 |
| | 5 – 11 |
| 90119–06MA4 | 5 – 5 |
| | 15 – 18 |
| 90119–06MA6 | 2 – 27 |
| 90119–07234 | 4 – 7 |
| 90119–07235 | 4 – 6 |
| 90119–08M14 | 27 – 36 |
| | 29 – 37 |
| | 38 – 29 |
| 90119–08M22 | 19 – 3 |
| 90119–08M58 | 25 – 6 |
| 90119–08M66 | 2 – 16 |
| 90119–08M79 | 25 – 2 |
| 90119–08M91 | 4 – 21 |
| 90119–10007 | 25 – 22 |
| 90119–10008 | 28 – 11 |
| | 30 – 11 |
| 90119–10M06 | 6 – 13 |
| 90119–10MA2 | 28 – 11 |
| | 30 – 11 |
| 90149–05M05 | 36 – 19 |
| 90151–05M05 | 5 – 3 |
| 90151–06M02 | 2 – 18 |
| 90152–05M08 | 28 – 14 |
| | 30 – 14 |
| 90155–10001 | 4 – 20 |
| 90158–06002 | 35 – 25 |
| 90159–06M28 | 19 – 38 |
| 90169–05M00 | 16 – 30 |
| 90170–09M05 | 31 – 19 |
| 90170–14M06 | 31 – 15 |
| 90170–16M01 | 27 – 48 |
| | 29 – 49 |
| 90171–18M04 | 28 – 21 |
| | 30 – 21 |
| 90179–06M24 | 1 – 15 |
| 90179–08003 | 18 – 27 |
| 90179–24002 | 14 – 14 |
| 90185–05002 | 28 – 15 |
| | 30 – 15 |
| 90185–09M01 | 31 – 6 |
| 90185–14M00 | 22 – 35 |
| 90185–22M11 | 21 – 19 |

| PART NO. N° PIECES | REF. NO. |
|---|---|
| 90201–06068 | 12 – 16 |
| | 19 – 14 |
| 90201–06M31 | 20 – 40 |
| 90201–08M14 | 23 – 30 |
| 90201–10M20 | 31 – 7 |
| 90201–10M76 | 31 – 17 |
| 90201–12M05 | 21 – 42 |
| 90201–13M01 | 21 – 41 |
| 90201–15M58 | 22 – 21 |
| 90201–16M01 | 22 – 34 |
| 90201–16M55 | 22 – 20 |
| 90201–22M01 | 27 – 22 |
| | 29 – 23 |
| 90201–24014 | 14 – 13 |
| 90201–26M59 | 21 – 18 |
| 90201–30M92 | 27 – 69 |
| 90201–35008 | 22 – 18 |
| 90201–38M60 | 22 – 10 |
| 90202–08M20 | 20 – 16 |
| 90202–16061 | 20 – 23 |
| 90202–28001 | 22 – 39 |
| 90202–32M19 | 22 – 19 |
| 90202–40M47 | 22 – 13 |
| 90206–10M04 | 20 – 41 |
| 90206–15M18 | 19 – 13 |
| 90206–22M19 | 27 – 23 |
| | 29 – 24 |
| 90249–06M19 | 21 – 31 |
| 90250–08M07 | 27 – 58 |
| | 29 – 59 |
| 90280–04008 | 6 – 19 |
| 90280–04M05 | 27 – 32 |
| | 29 – 33 |
| | 38 – 30 |
| 90280–05015 | 14 – 12 |
| 90282–04M00 | 27 – 70 |
| | 29 – 72 |
| 90338–25004 | 2 – 7 |
| 90340–08002 | 27 – 6 |
| | 29 – 7 |
| 90340–14M06 | 4 – 10 |
| | 5 – 26 |
| | 26 – 7 |
| 90340–18M09 | 5 – 23 |
| 90340–27129 | 2 – 28 |
| 90344–51019 | 4 – 4 |
| 90386–06M12 | 20 – 19 |
| 90386–08001 | 7 – 13 |

| PART NO. N° PIECES | REF. NO. |
|---|---|
| 90386–10M16 | 21 – 29 |
| 90386–12069 | 20 – 32 |
| 90386–15M73 | 19 – 12 |
| 90386–16M66 | 20 – 22 |
| 90386–22M98 | 21 – 36 |
| | 23 – 33 |
| 90386–25M31 | 21 – 17 |
| 90386–38M32 | 22 – 12 |
| 90387–06010 | 16 – 18 |
| 90387–06038 | 7 – 15 |
| 90387–06M29 | 20 – 42 |
| 90387–06M43 | 19 – 41 |
| 90387–06M60 | 8 – 5 |
| | 12 – 20 |
| 90387–06M64 | 26 – 10 |
| 90387–06M82 | 20 – 48 |
| 90387–08M37 | 19 – 5 |
| 90387–10M05 | 21 – 32 |
| 90387–10M08 | 4 – 19 |
| 90387–10M61 | 31 – 3 |
| 90387–14004 | 22 – 38 |
| 90430–06M03 | 4 – 37 |
| | 5 – 45 |
| 90430–08020 | 27 – 8 |
| | 29 – 9 |
| | 38 – 11 |
| 90430–08143 | 4 – 9 |
| | 37 – 2 |
| 90430–14115 | 2 – 13 |
| | 4 – 11 |
| | 5 – 27 |
| | 37 – 3 |
| 90430–14M09 | 26 – 8 |
| | 37 – 16 |
| | 38 – 3 |
| 90430–18130 | 5 – 24 |
| | 37 – 11 |
| 90445–070F1 | 25 – 33 |
| 90445–10027 | 5 – 25 |
| 90445–11020 | 1 – 25 |
| 90445–13511 | 12 – 2 |
| 90450–22M14 | 7 – 6 |
| 90462–06013 | 5 – 39 |
| 90462–10023 | 7 – 7 |
| 90464–05141 | 15 – 16 |
| 90464–07M41 | 15 – 11 |
| 90464–11012 | 8 – 16 |
| 90464–16013 | 2 – 32 |

| PART NO. N° PIECES | REF. NO. |
|---|---|
| 90464–20006 | 7 – 9 |
| 90464–20181 | 19 – 45 |
| 90464–20258 | 19 – 50 |
| 90464–23199 | 16 – 25 |
| | 19 – 47 |
| 90465–08M63 | 21 – 22 |
| 90465–10032 | 1 – 2 |
| 90465–11M10 | 8 – 19 |
| | 12 – 4 |
| | 19 – 25 |
| | 21 – 20 |
| | 22 – 5 |
| | 25 – 32 |
| | 35 – 13 |
| 90465–13M18 | 16 – 26 |
| 90467–09M09 | 8 – 18 |
| 90467–15M14 | 2 – 31 |
| 90468–18008 | 20 – 7 |
| 90480–10627 | 16 – 22 |
| 90480–10M23 | 8 – 4 |
| | 12 – 21 |
| 90480–12072 | 4 – 30 |
| 90480–13M24 | 19 – 40 |
| 90480–20M05 | 5 – 8 |
| 90480–22M81 | 19 – 4 |
| 90501–11M10 | 27 – 20 |
| | 29 – 21 |
| 90501–12082 | 20 – 29 |
| 90501–16M11 | 5 – 7 |
| 90501–16M37 | 27 – 54 |
| | 29 – 55 |
| 90506–16003 | 21 – 34 |
| 90506–16M34 | 19 – 18 |
| 90508–20M31 | 20 – 31 |
| 90560–12M01 | 31 – 4 |
| 91490–40030 | 28 – 22 |
| | 30 – 22 |
| 91690–30010 | 20 – 5 |
| 91690–30020 | 21 – 33 |
| 91690–50014 | 7 – 4 |
| 91809–08006 | 4 – 5 |
| 91814–18001 | 2 – 5 |
| 92780–06020 | 34 – 28 |
| 92903–06600 | 16 – 16 |
| 92903–08100 | 18 – 34 |
| 92903–08600 | 7 – 3 |
| | 18 – 31 |
| 92907–04600 | 4 – 25 |

| PART NO. N° PIECES | REF. NO. |
|---|---|
| 92907–06600 | 26 – 13 |
| 92990–04100 | 35 – 4 |
| 92990–05100 | 36 – 10 |
| 92990–05300 | 34 – 36 |
| 92990–05600 | 36 – 22 |
| 92990–06100 | 1 – 5 |
| | 36 – 16 |
| 92990–06300 | 34 – 46 |
| 92990–06600 | 21 – 12 |
| | 25 – 28 |
| | 36 – 17 |
| 92990–08600 | 33 – 34 |
| 92990–10600 | 17 – 15 |
| 92990–18200 | 28 – 20 |
| | 30 – 20 |
| 92995–04100 | 20 – 13 |
| 92995–06100 | 12 – 15 |
| | 14 – 9 |
| | 15 – 13 |
| | 16 – 8 |
| | 17 – 6 |
| | 21 – 5 |
| | 26 – 27 |
| 92995–06600 | 1 – 10 |
| | 4 – 28 |
| | 5 – 38 |
| | 8 – 7 |
| | 12 – 19 |
| | 14 – 10 |
| | 15 – 14 |
| | 16 – 3 |
| | 17 – 7 |
| | 21 – 8 |
| | 26 – 21 |
| 92995–08100 | 21 – 16 |
| 92995–08600 | 17 – 3 |
| | 25 – 15 |
| | 26 – 4 |
| | 27 – 45 |
| | 29 – 46 |
| 92995–10100 | 22 – 29 |
| | 25 – 41 |
| | 28 – 9 |
| | 30 – 9 |
| 92995–10600 | 22 – 8 |
| | 25 – 4 |
| | 28 – 10 |
| | 30 – 10 |

NUMERICAL INDEX
INDEX NUMERIQUE

| PART NO. N° PIECES | REF. NO. |
|---|---|
| 92995–14600 | 22 – 25 |
| 93101–28M16 | 27 – 38 |
| | 29 – 39 |
| | 38 – 17 |
| 93101–30M17 | 27 – 66 |
| | 29 – 69 |
| | 38 – 19 |
| 93102–08M43 | 24 – 36 |
| 93102–38M59 | 6 – 14 |
| | 37 – 14 |
| 93102–60004 | 3 – 2 |
| | 37 – 13 |
| 93106–09014 | 27 – 16 |
| | 29 – 17 |
| | 38 – 13 |
| 93210–07003 | 25 – 38 |
| | 27 – 13 |
| | 29 – 14 |
| | 38 – 10 |
| 93210–09165 | 20 – 21 |
| 93210–10M74 | 23 – 4 |
| 93210–16275 | 31 – 9 |
| 93210–19MJ1 | 5 – 31 |
| | 37 – 18 |
| 93210–19MJ3 | 26 – 25 |
| | 37 – 19 |
| 93210–24M79 | 5 – 34 |
| | 37 – 20 |
| 93210–25552 | 2 – 14 |
| | 26 – 22 |
| | 37 – 6 |
| 93210–25647 | 2 – 8 |
| | 37 – 7 |
| 93210–30682 | 12 – 41 |
| 93210–37160 | 27 – 28 |
| | 29 – 29 |
| | 38 – 15 |
| 93210–37MH7 | 22 – 11 |
| 93210–55M14 | 27 – 42 |
| | 29 – 43 |
| | 38 – 18 |
| 93210–58144 | 27 – 15 |
| | 29 – 16 |
| | 38 – 12 |
| 93210–86M38 | 27 – 27 |
| | 29 – 28 |
| | 38 – 14 |
| 93210–97M55 | 27 – 67 |

| PART NO. N° PIECES | REF. NO. |
|---|---|
| 93210–97M55 | 29 – 70 |
| | 38 – 20 |
| 93306–209U0 | 27 – 62 |
| 93311–928U5 | 27 – 3 |
| | 29 – 3 |
| 93315–425V3 | 27 – 50 |
| | 29 – 51 |
| 93315–43061 | 27 – 65 |
| | 29 – 68 |
| 93317–330U2 | 27 – 39 |
| | 29 – 40 |
| 93332–00048 | 29 – 63 |
| 93332–000V3 | 27 – 4 |
| 93341–440U5 | 29 – 66 |
| 93341–465U4 | 29 – 5 |
| 93341–930V2 | 27 – 41 |
| | 29 – 42 |
| 93390–000U2 | 29 – 4 |
| 93410–16006 | 20 – 24 |
| 93410–22M11 | 21 – 37 |
| 93410–37M04 | 22 – 15 |
| 93420–36M01 | 25 – 25 |
| 93430–06024 | 33 – 10 |
| | 34 – 6 |
| 93501–04M02 | 20 – 28 |
| 93503–16003 | 27 – 57 |
| | 29 – 58 |
| 93507–32009 | 27 – 55 |
| | 29 – 56 |
| 93511–32017 | 27 – 56 |
| | 29 – 57 |
| 93605–10108 | 6 – 11 |
| 93606–12019 | 2 – 3 |
| | 27 – 35 |
| | 29 – 36 |
| | 38 – 28 |
| 93606–19M23 | 25 – 16 |
| 93608–16M16 | 25 – 5 |
| | 26 – 5 |
| | 28 – 7 |
| | 30 – 7 |
| 93700–06M01 | 20 – 34 |
| 93700–06M03 | 20 – 36 |
| | 21 – 13 |
| 94702–00391 | 4 – 33 |
| 95333–08600 | 18 – 33 |
| 95380–04600 | 35 – 5 |
| 95380–05600 | 33 – 7 |

| PART NO. N° PIECES | REF. NO. |
|---|---|
| 95380–05600 | 34 – 21 |
| | 36 – 11 |
| 95380–05700 | 9 – 18 |
| 95380–06600 | 1 – 6 |
| | 19 – 37 |
| | 33 – 40 |
| | 34 – 37 |
| | 36 – 15 |
| 95380–12600 | 21 – 43 |
| 95380–14600 | 22 – 24 |
| 95380–14700 | 31 – 16 |
| 95780–10300 | 22 – 7 |
| 97013–06020 | 16 – 15 |
| 97013–08020 | 7 – 2 |
| 97013–08045 | 18 – 30 |
| 97027–06025 | 26 – 12 |
| 97075–08035 | 25 – 14 |
| | 26 – 3 |
| 97075–10040 | 22 – 28 |
| 97075–10045 | 22 – 31 |
| | 25 – 3 |
| 97080–08016 | 23 – 31 |
| 97095–06010 | 16 – 7 |
| | 21 – 7 |
| 97095–06012 | 5 – 40 |
| | 17 – 12 |
| 97095–06014 | 12 – 18 |
| 97095–06016 | 1 – 9 |
| | 8 – 6 |
| | 12 – 14 |
| | 14 – 21 |
| | 16 – 2 |
| 97095–06020 | 17 – 5 |
| | 19 – 15 |
| | 26 – 26 |
| 97095–06025 | 15 – 12 |
| | 20 – 43 |
| 97095–06030 | 4 – 27 |
| | 21 – 4 |
| 97095–06035 | 14 – 8 |
| | 20 – 49 |
| 97095–06040 | 26 – 20 |
| 97095–06045 | 5 – 37 |
| 97095–08014 | 4 – 8 |
| 97095–08016 | 17 – 2 |
| 97095–08020 | 21 – 15 |
| 97095–08025 | 27 – 44 |
| | 29 – 45 |

| PART NO. N° PIECES | REF. NO. |
|---|---|
| 97095–10045 | 25 – 40 |
| | 28 – 8 |
| | 30 – 8 |
| 97380–05025 | 33 – 8 |
| 97380–06018 | 34 – 18 |
| 97380–08030 | 33 – 33 |
| 97575–06535 | 20 – 26 |
| 97575–06540 | 5 – 32 |
| 97575–08540 | 4 – 17 |
| | 5 – 17 |
| | 7 – 1 |
| 97575–08560 | 25 – 11 |
| 97575–10535 | 25 – 7 |
| 97595–06516 | 9 – 15 |
| 97595–06550 | 20 – 14 |
| 97607–04310 | 24 – 32 |
| 97780–50620 | 1 – 3 |
| | 16 – 37 |
| 97780–60520 | 19 – 29 |
| 97780–60525 | 22 – 2 |
| 97780–60620 | 16 – 6 |
| 97880–06012 | 21 – 11 |
| 97880–06016 | 25 – 27 |
| 97885–04016 | 20 – 12 |
| 97885–06010 | 14 – 16 |
| 97885–06016 | 22 – 4 |
| 97890–05016 | 34 – 70 |
| 97890–05025 | 34 – 14 |
| 97890–06018 | 34 – 45 |
| 98507–04008 | 4 – 24 |
| 98580–03015 | 33 – 38 |
| 98580–04006 | 33 – 36 |
| 98580–04010 | 33 – 35 |
| 98580–05010 | 33 – 37 |
| 98780–05016 | 2 – 12 |
| 98780–05018 | 34 – 29 |
| 98980–05010 | 36 – 9 |
| 98980–06020 | 36 – 14 |
| 99001–08600 | 27 – 19 |
| | 29 – 20 |
| 99530–08012 | 14 – 7 |
| 9E450–04433 | 35 – 2 |
| 9E450–04533 | 35 – 3 |

| PART NO. N° PIECES | REF. NO. |
|---|---|

| PART NO. N° PIECES | REF. NO. |
|---|---|