YAMAHA

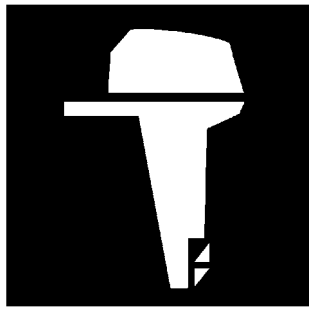

PARTS CATALOGUE
CATALOGUE DE PIECES DETACHEES

30DETO'07 (6J8L)
30DEO'07 (6J8M)
30DMHO'07 (6J8N)

1F6J8-300F1

(2F6J8-300F1)

YAMAHA GENUINE Parts & Accessories

2014/7/23

NEWS NO.	DATE	COMMENT
PE0-OM-060020	Oct./25/2006	MOD:POWER TRIM & TILT ASSY LIST/ILLUSTRATION REVISION
PE0-OM-140008	July,10,2014	COR:FIG.14 BOTTOM COWLING LIST CORRECTION

30DETO
30DEO/30DMHO
PARTS CATALOGUE
©2006 by Yamaha Motor Co., Ltd.
1st edition, August 2006
All rights reserved.
Any reprinting or unauthorized use
without the written permission of
Yamaha Motor Co., Ltd.
is expressly prohibited.
Printed in Japan.

30DETO
30DEO/30DMHO
CATALOGUE DE PIECES DETACHEES
©2006 par Yamaha Motor Co., Ltd.
1re édition, août 2006
Tous droits réservés
Toute réimpression ou utilisation
non autorisée sans la permission écrite
de la Yamaha Motor Co., Ltd.
est formellement interdite.
Imprimé au Japon

FOREWORD

This Parts Catalogue is related to the parts for the model(s) on the cover page. When you are ordering replacement parts, please refer to this Parts Catalogue and quote both part numbers and part names correctly.

1. Modifications or additions which have been made after the issue of the Parts Catalogue will be announced in the Parts News.
   It is advisable that you make the necessary corrections to the Parts Catalogue according to the Parts News.

2. Abbreviations
   The following abbreviations are used in this Parts Catalogue.

   "UR" Use specified parts number.
   "UN" Use as many as needed.
   "AP" Alternate Parts
   "LM" Locally Made (Parts need to be ordered locally)
   "F#" Frame No. (Applicable machine No.)
   "O/S" Over Size

3. The number of components for assembly
   - Parts, which are to be supplied in an assembly, are listed with a dot (.) in front of the part name as shown below.
   - The numeral appearing to the right of each component part indicates the quantity of parts for each assembly unit.

PART NO.	DESCRIPTION	Q'TY	REMARKS
2F5–83310–60	FRONT FLASHER LIGHT ASSY	2	
115–83311–60	.BULB (6V–18W)	1	

4. Applicable colours of graphics are represented in the "REMARKS" as shown below.

PART NO.	DESCRIPTION	Q'TY	REMARKS
2N4–24110–00–X5	FUEL TANK COMP.	2	MXR
3J1–24240–10	.GRAPHIC, FUEL TANK	1	FOR MXR

5. Note that the illustrations for reference in finding parts numbers are not to be used for assembling. When assembling, please use the applicable service manual.

6. The asterisk (*) before a reference number indicates modified items after the first edition.

7. Applicable Serial No.

   Engine Serial No.

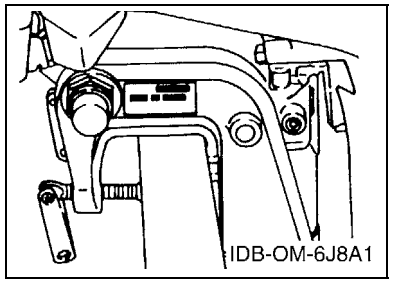

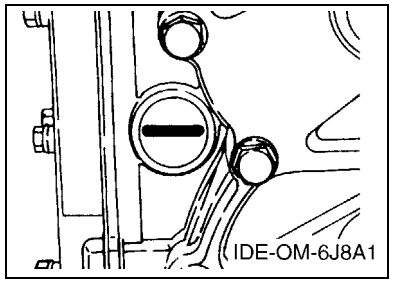

8. Applicable Engine Starting Serial No.

Model	Serial No.	Model	Serial No.
30D	6J8K-1007501		

9. Applicable Colour Code

Abbreviation	Colour Name	Colour Code
DBNM2	DARK BLUISH GRAY METALLIC 2	004D

10. Quantity Column Information

Column No.	Name Of Q'ty Column	Applicable Model
1	MHO	30DMHO
2	EO	30DEO
3	ETO	30DETO

AVANT–PROPOS

Ce catalogue de pièces détachées concerne les pièces pour le(s) modèle(s) indiqué(s) sur la page de couverture. Lorsque vous commandez des pièces de rechange, veuillez vous référer à ce catalogue de pieces détachées et indiquer clairement les numéros et les noms des pièces détachées.

1. Les modifications ou ajouts ayant été effectués après la parution du catalogue de pièces détachées seront décrits dans les Bulletins d'information concernant les pièces détachées.
   Il est recommandé que vous apportiez les corrections nécessaires au catalogue des pièces détachées en vous référant aux Bulletins d'information.

2. Abréviations
   Dans ce catalogue, les abréviations suivantes sont utilisées:

   "UR" Utiliser le numéro de pièces spécifié.
   "UN" Utiliser autant que nécessaire.
   "AP" Pièces de substitution
   "LM" Fabrication locale (les pièces doivent être commandées localement.)
   "F#" N° de cadre (applicable au N° de série)
   "O/S" Surdimensionné

3. Nombre de pièces d'un assemblage
   - Les pièces fournies comme composants d'un assemblage sont précédées d'un point (.) de la manière indiquée ci–dessous.
   - Le chiffre apparaissant à la droite de chaque composant indique la quantité de pièces pour chaque unité d'assemblage.

N° PIECES	DESCRIPTION	QTE	REMARQUES
2F5–83310–60	ENS. CLIGNOTANT AVANT	2	
115–83311–60	.AMPOULE (6V–18W)	1	

4. Les couleurs concernant les graphiques sont indiquées dans la colonne "REMARQUES", comme indiqué ci–dessous.

N° PIECES	DESCRIPTION	QTE	REMARQUES
2N4–24110–00–X5	RESERVOIR A ESSENCE.	2	MXR
3J1–24240–10	.GRAPHIQUE	1	POUR MXR

5. Veuillez noter que les illustrations sont indiquées à titre de référence pour trouver les numéros de pièces, non pour être utilisées lors de l'assemblage. Lors de l'assemblage, veuillez utiliser le manuel d'entretien adéquat.

6. L'astérisque (*) placé devant un numéro de référence indique des éléments qui ont été modifiés après la première édition.

7. N° de série applicable

   N° de Série du moteur

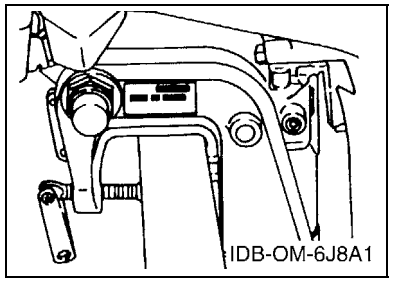

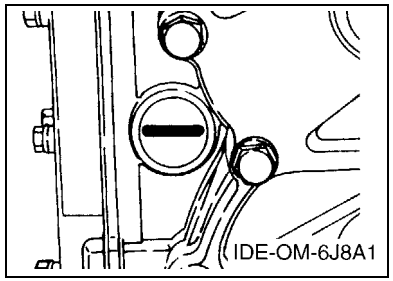

8. N° de série initial du moteur applicable

Modèle	N° de série	Modèle	N° de série
30D	6J8K-1007501		

9. Code couleur applicable

Abréviation	Nom de la couleur	Code couleur
DBNM2	DARK BLUISH GRAY METALLIC 2	004D

10. Informations relatives à la colonne Quantité

N° de la colonne	Nom de la colonne Qté	Modèle applicable
1	MHO	30DMHO
2	EO	30DEO
3	ETO	30DETO

CONTENTS

SHEET1/2
TOP COWLING A4
CYLINDER & CRANKCASE A5
CRANKSHAFT & PISTON A7
INTAKE B1
CARBURETOR B2
OIL PUMP B4
FUEL B6
STARTER C1
GENERATOR C3
ELECTRICAL 1 ..... C4
ELECTRICAL 2 ..... C5
ELECTRICAL 3 ..... C6
STARTING MOTOR D1
BOTTOM COWLING D3
STEERING D5
CONTROL 1 ..... D7
CONTROL 2 ..... E2
REMO CON ATTACHMENT E3
BRACKET 1 ..... E4
BRACKET 2 ..... E7
BRACKET 3 ..... F2
BRACKET 4 ..... F4
POWER TRIM & TILT ASSY F6

INDEX

NUMERICAL INDEX G1

SHEET2/2
POWER TRIM & TILT ASSY A4*
UPPER CASING A5*
LOWER CASING & DRIVE 1 ..... A6*
LOWER CASING & DRIVE 2 ..... B2*
FUEL TANK B4*
STEERING GUIDE B5*
REMOTE CONTROL BOX B6*
REMOTE CONTROL ASSY B7*
REPAIR KIT 1 ..... C3*
REPAIR KIT 2 ..... C4*

INDEX

NUMERICAL INDEX G1*

TABLE DES MATIERES

Feuille1/2
CAPOT SUPERIEUR A4
CYLINDRE & CARTER A5
VILEBREQUIN & PISTON A7
ADMISSION B1
CARBURATEUR B2
POMPE A HUILE B4
CARBURANT B6
DEMARREUR C1
GENERATRICE C3
PARTIE ELECTRIQUE 1 ..... C4
PARTIE ELECTRIQUE 2 ..... C5
PARTIE ELECTRIQUE 3 ..... C6
DEMARREUR ELECTRIQUE D1
CAPOT INFERIEUR D3
DIRECTION D5
COMMANDE 1 ..... D7
COMMANDE 2 ..... E2
COMMANDE A DISTANCE E3
SUPPORT 1 ..... E4
SUPPORT 2 ..... E7
SUPPORT 3 ..... F2
SUPPORT 4 ..... F4
PUISSANCE PARER ET INCLINER F6

INDEX

INDEX NUMERIQUE G1

Feuille2/2
PUISSANCE PARER ET INCLINER A4*
FOURREAU A5*
BOITIER D'HELICE TRANSMISSION1 ..... A6*
BOITIER D'HELICE TRANSMISSION2 ..... B2*
RESERVOIR A CARBURANT B4*
FIXATION DE DIRECTION B5*
BOITIER DE COMMANDE A DISTANCE B6*
BOITIER DE COMMANDE A DISTANCE B7*
KITS DE REPARATION 1 ..... C3*
KITS DE REPARATION 2 ..... C4*

INDEX

INDEX NUMERIQUE G1*

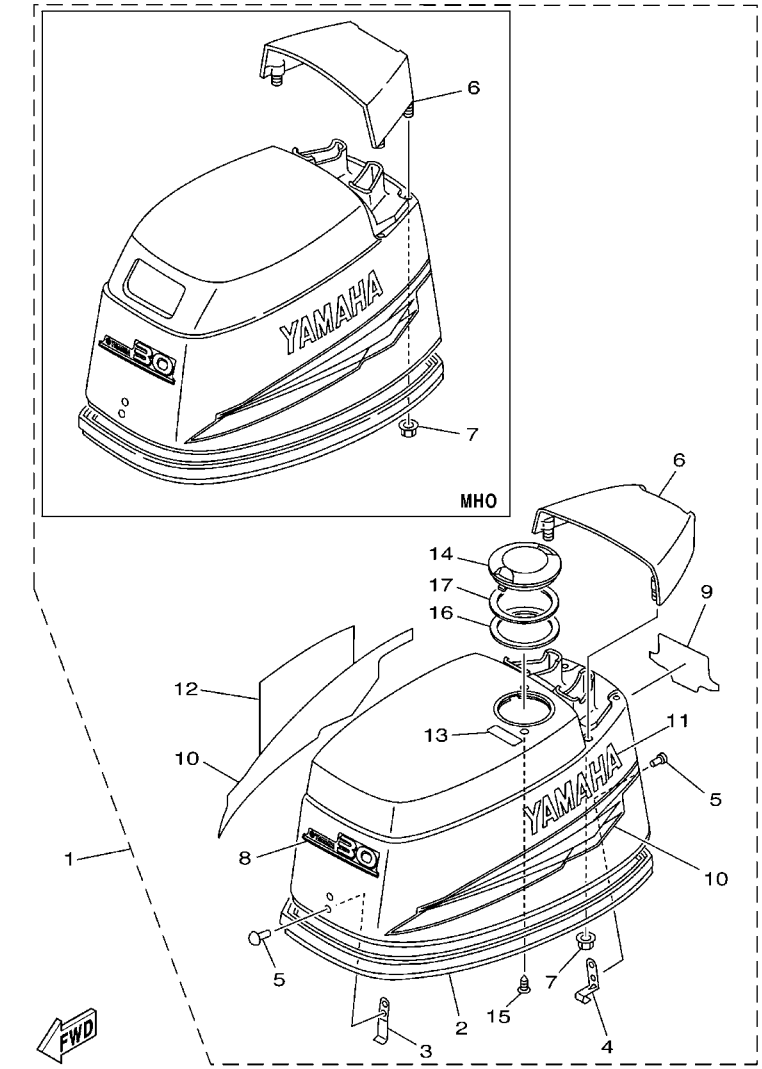

6J83300-2010

FIG. 1 TOP COWLING — CAPOT SUPERIEUR

REF. NO.	PART NO. N° PIECES	DESCRIPTION DESCRIPTION	MHO	EO	ETO			REMARKS REMARQUES
1	6J8–42610–D0–4D	TOP COWLING ASSY CAPOT (ENS.)	1					
	6J8–42610–B0–4D	TOP COWLING ASSY CAPOT (ENS.)		1	1			
2	6J8–42615–00	.SEAL .JOINT	1	1	1			
3	6J8–42651–03	.HOOK .CROCHET	1	1	1			
4	6J8–42652–00	.HOOK .CROCHET	1	1	1			
5	90266–04M00	.RIVET .RIVET	4	4	4			
6	6J8–42613–00–4D	.MOLDING, AIR DUCT .MANCHON A AIR	1					
	6J8–42613–10–4D	.MOLDING, AIR DUCT .MANCHON A AIR		1	1			
7	90179–06M24	.NUT .ECROU	4	4	4			
8	6J8–42677–40	.GRAPHIC, FRONT .ADHESIF, AVANT	1	1	1			
9	6J8–42678–10	.GRAPHIC, REAR .ADHESIF, ARRIERE	1	1	1			
10	6J8–W0070–14	.GRAPHIC SET .JEU DIEMBLEMES	1	1	1			
11	6J8–42681–11	.MARK, COWLING .ADHESIF, CAPOT	1	1	1			
12	6J8–42682–12	.MARK, COWLING .ADHESIF, CAPOT	1	1	1			
13	6J8–13436–40	.MARK .ADHESIF		1	1			
14	6J8–2177H–00	.DISK CAP 2 .BOUCHON DE DISQUE 2		1	1			
15	90161–03M01	.SCREW, TAPPING .VIS, TETE FRAISEE		2	2			
16	6J8–21732–00	.SEAL 1 .JOINT 1		1	1			
17	6J8–21735–00	.SEAL 2 .JOINT 2		1	1			

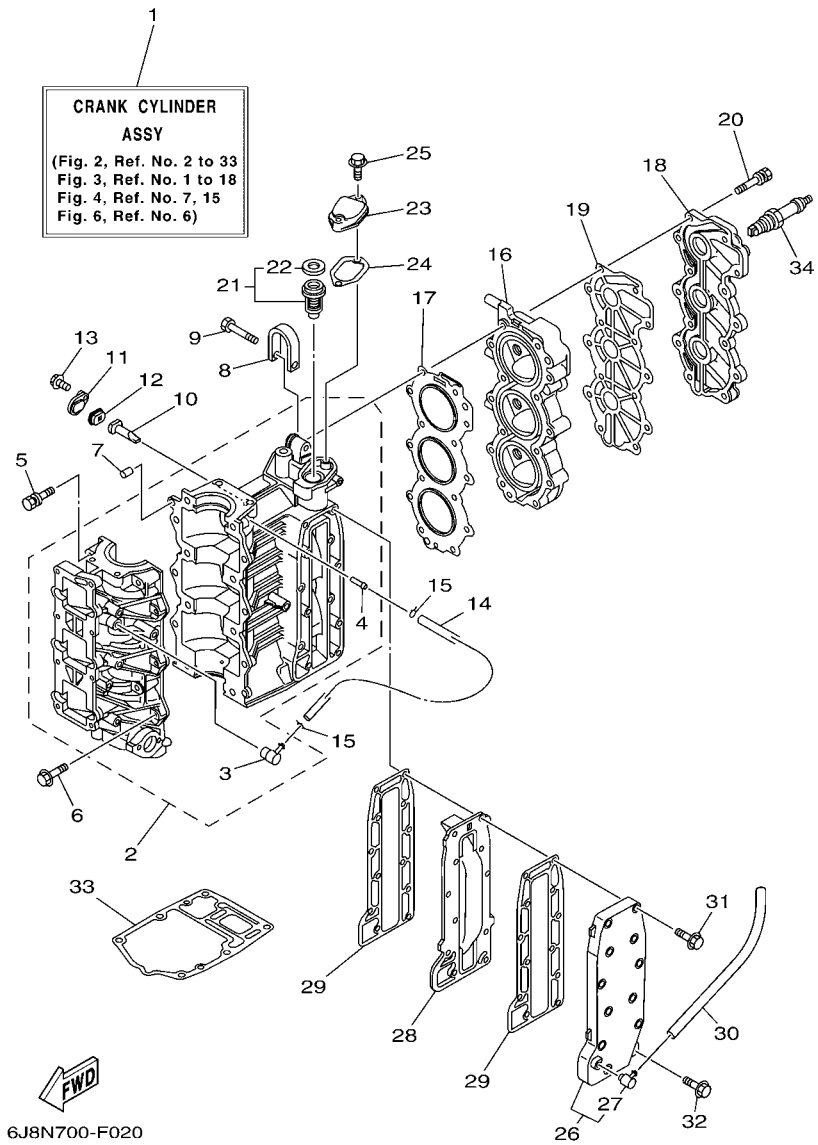

FIG. 2 CYLINDER & CRANKCASE CYLINDRE & CARTER

REF. NO.	PART NO. N° PIECES	DESCRIPTION DESCRIPTION	MHO	EO	ETO			REMARKS REMARQUES
1	6J8–W0090–43–1S	CRANK CYLINDER ASSY EMBIELLAGE CYLINDRE (ENS.)	1	1	1			
2	6J8–15100–11–1S	CRANKCASE ASSY CARTER DE MOTEUR COMPLET	1	1	1			
3	650–11370–01	.CHECK VALVE ASSY .CLAPET (ENS.)	1	1	1			
4	624–14485–00	.PIPE, JOINT .DURITE	1	1	1			
5	90119–08019	BOLT, WITH WASHER BOULON, AVEC RONDELLE	8	8	8			
6	90119–06MA4	BOLT, WITH WASHER BOULON, AVEC RONDELLE	6	6	6			
7	93606–12019	PIN, DOWEL GOUPILLE	2	2	2			
8	6F5–11119–00	HANGER, ENGINE ANNEAU, LEVAGE	1	1	1			
9	90101–08001	BOLT BOULON	1	1	1			
10	6J8–11325–00	ANODE ANODE	2	2	2			
11	6H3–11327–00–1S	COVER, ANODE COUVERCLE ANODE	2	2	2			
12	6H3–11328–00	GROMMET, ANODE PASSE-FIL	2	2	2			
13	90119–06023	BOLT, WITH WASHER BOULON, AVEC RONDELLE	2	2	2			
14	90445–07M29	HOSE (L135) DURITE (L135)	1	1	1			
15	90467–06016	CLIP JONC	2	2	2			
16	6J8–11111–00–1S	HEAD, CYLINDER 1 CULASSE	1	1	1			
17	6J8–11181–A1	GASKET, CYLINDER HEAD 1 JOINT, DE CULASSE 1	1	1	1			
18	6J8–11191–00–1S	COVER, CYLINDER HEAD 1 COUVERCLE, CULASSE 1	1	1	1			
19	6J8–11193–A1	GASKET, HEAD COVER 1 JOINT, COUVERCLE DE CULASSE 1	1	1	1			
20	90119–08MA8	BOLT, WITH WASHER BOULON, AVEC RONDELLE	14	14	14			
21	688–12411–11	THERMOSTAT THERMOSTAT	1	1	1			
22	688–12412–00	.SEAL, THERMOSTAT .JOINT, THERMOSTAT	1	1	1			
23	6H4–12413–00–1S	COVER, THERMOSTAT COUVERCLE, THERMOSTAT	1	1	1			
24	6J8–12414–A0	GASKET, COVER JOINT, COUVERCLE	1	1	1			
25	90119–06MA3	BOLT, WITH WASHER BOULON, AVEC RONDELLE	2	2	2			
26	6J8–41113–00–1S	OUTER COVER, EXHAUST COUVERCLE, ECHAPPEMENT	1	1	1			
27	676–11372–00	.NIPPLE, HOSE .RACCORD, TUYAU	1	1	1			

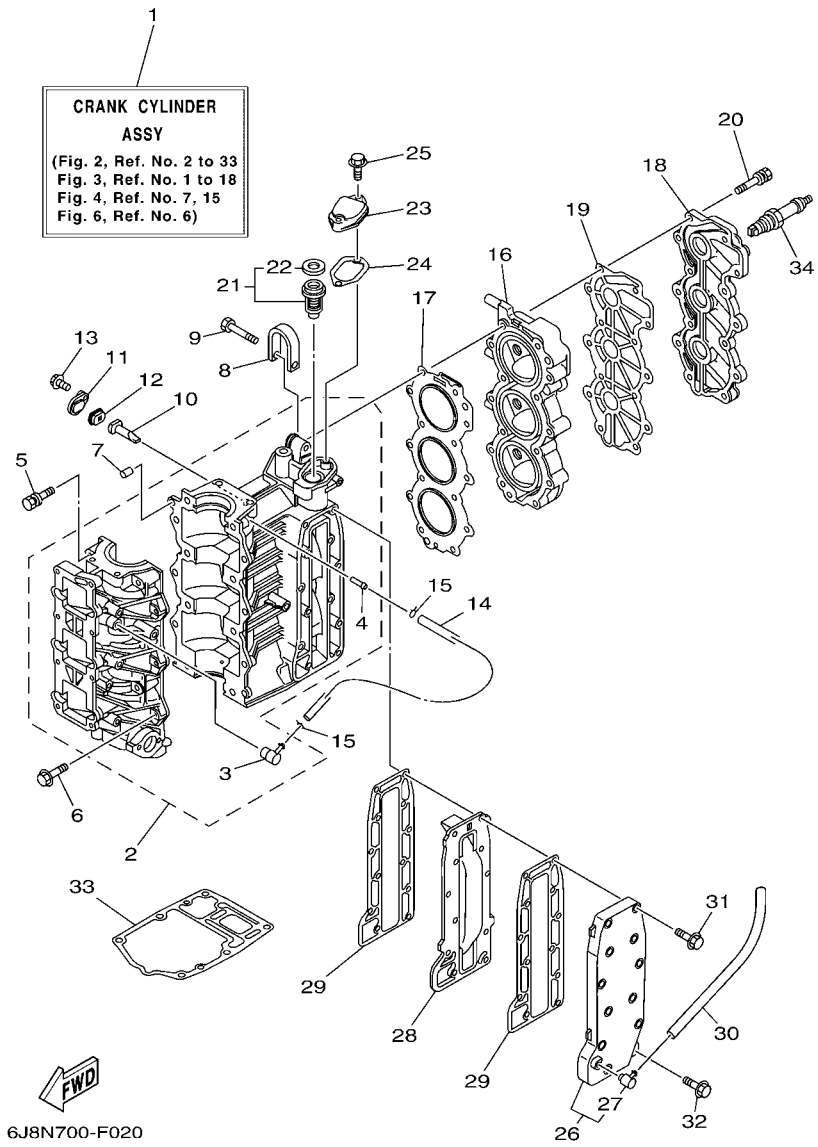

FIG. 2 CYLINDER & CRANKCASE CYLINDRE & CARTER

REF. NO.	PART NO. N° PIECES	DESCRIPTION DESCRIPTION	MHO	EO	ETO			REMARKS REMARQUES
28	6J8–41111–00–1S	INNER COVER, EXHAUST PLAQUE, ECHAPPEMENT	1	1	1			
29	6J8–41114–A0	GASKET, EXHAUST OUTER COVER JOINT, COUVERCLE D'ECHAPPEMENT	2	2	2			
30	6J8–1111J–00	PIPE 1 DURITE 1	1	1	1			
31	90119–06MA5	BOLT, WITH WASHER BOULON, AVEC RONDELLE	11	11	11			
32	90119–06MA3	BOLT, WITH WASHER BOULON, AVEC RONDELLE	1	1	1			
33	6J8–45113–A0	GASKET, UPPER CASING JOINT, TUBE D'ARBRE	1	1	1			
34	94702–00271	PLUG, SPARK (NGK BR7HS-10) BOUGIE D'ALLUMAGE(NGK BR7HS-10	3	3	3			

FIG. 3 CRANKSHAFT & PISTON VILEBREQUIN & PISTON

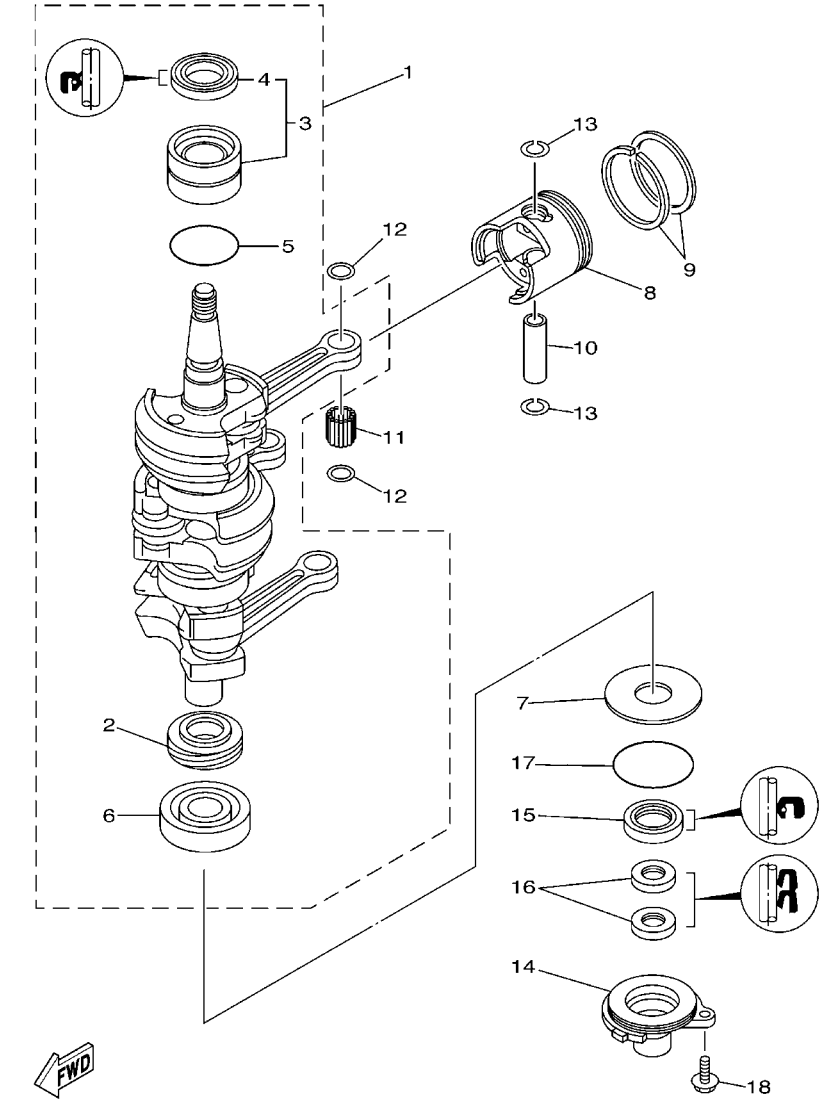

6J83300-2030

REF. NO.	PART NO. N° PIECES	DESCRIPTION DESCRIPTION	MHO	EO	ETO			REMARKS REMARQUES
1	6J8–11400–11	CRANKSHAFT ASSY VILEBREQUIN COMPLET	1	1	1			
2	6J8–11536–00	.GEAR, DRIVE .ENGRENAGE, MENANT	1	1	1			
3	93311–632U7	.BEARING .ROULEMENT	1	1	1			
4	93102–26M27	..OIL SEAL ..JOINT SPY	1	1	1			
5	93210–42159	.O-RING .JOINT TORIQUE	1	1	1			
6	93306–305U3	.BEARING .ROULEMENT	1	1	1			
7	90201–50306	WASHER, PLATE RONDELLE, PLATE	1	1	1			
8	6J8–11631–02–97	PISTON (STD) PISTON (STD)	3	3	3			
	6J8–11635–02	PISTON (0.25MM O/S) PISTON (0.25MM O/S)	3	3	3			AP AP
	6J8–11636–02	PISTON (0.50MM O/S) PISTON (0.50MM O/S)	3	3	3			AP AP
9	6J8–11601–01	PISTON RING SET (STD) JEU DE SEGMENTS (STD)	3	3	3			
	6J8–11601–11	PISTON RING SET (0.25MM O/S) JEU DE SEGMENTS (0.25MM O/S)	3	3	3			AP AP
	6J8–11601–21	PISTON RING SET (0.50MM O/S) JEU DE SEGMENTS (0.50MM O/S)	3	3	3			AP AP
10	6J8–11633–00	PIN, PISTON AXE, PISTON	3	3	3			
11	93602–16M10	PIN, DOWEL GOUJON	84	84	84			
12	90201–16379	WASHER, PLATE RONDELLE, PLATE	6	6	6			
13	93450–17129	CIRCLIP CIRCLIP, TYPE S	6	6	6			
14	6J8–15396–00–5B	HOUSING, OIL SEAL LOGEMENT DE JOINT SPY	1	1	1			
15	93101–25M28	OIL SEAL JOINT SPY	1	1	1			
16	93104–16M04	OIL SEAL JOINT SPY	2	2	2			
17	93210–56M80	O-RING JOINT TORIQUE	1	1	1			
18	90119–06023	BOLT, WITH WASHER BOULON, AVEC RONDELLE	2	2	2			

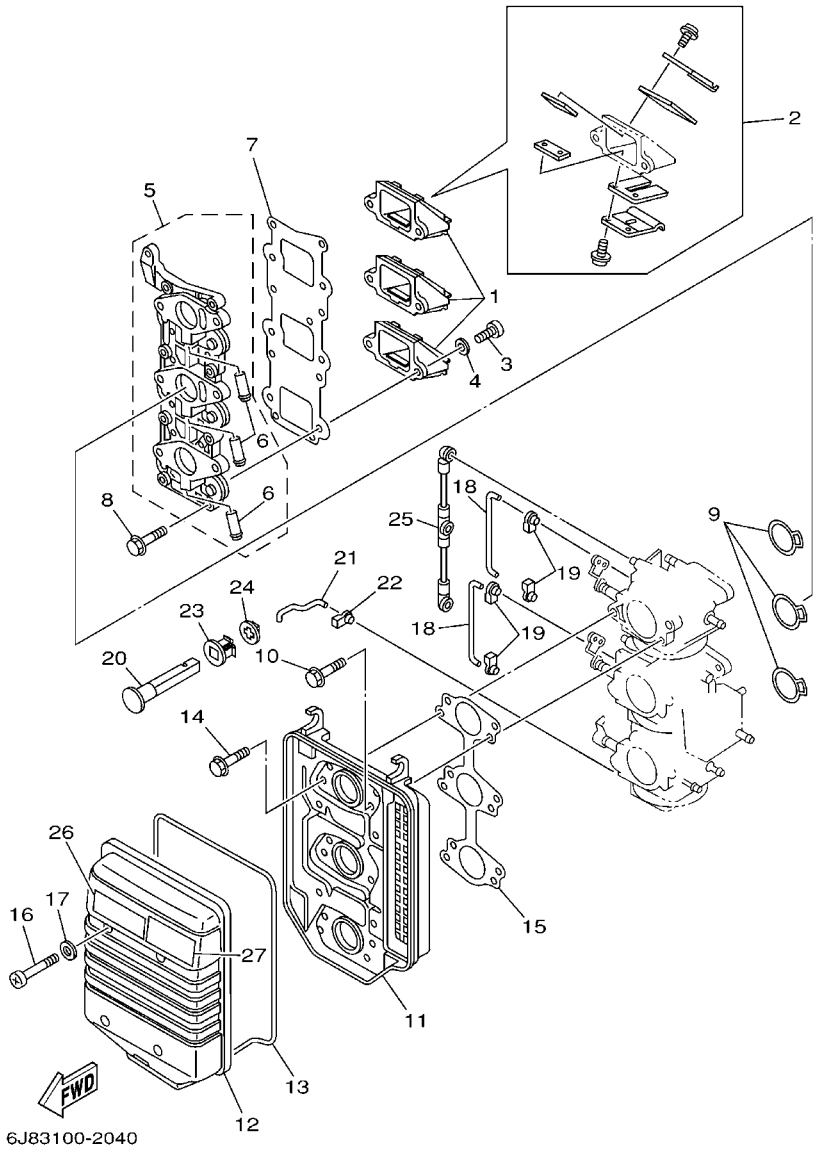

FIG. 4 INTAKE — ADMISSION

REF. NO.	PART NO. N° PIECES	DESCRIPTION DESCRIPTION	MHO	EO	ETO			REMARKS REMARQUES
1	6J8–13610–00	REED VALVE ASSY CLAPET COMPLET	3	3	3			
2	6J8–W0004–00	.REED SET .JEU DE CLAPETS	1	1	1			
3	97880–05016	SCREW, PAN HEAD VIS, TETE TRONCONIQUE	6	6	6			
4	92990–05600	WASHER, PLATE RONDELLE, PLATE	6	6	6			
5	6J8–13641–10–94	MANIFOLD 1 TUBULURE 1	1	1	1			
6	676–14485–00	.PIPE, JOINT .DURITE	3	3	3			
7	6J8–13621–00	GASKET, VALVE SEAT JOINT, SIEGE DE CLAPET	1	1	1			
8	90119–06MA3	BOLT, WITH WASHER BOULON, AVEC RONDELLE	8	8	8			
9	6J8–14198–00	GASKET JOINT	3	3	3			
10	90119–06M32	BOLT, WITH WASHER BOULON, AVEC RONDELLE	6	6	6			
11	6J8–14417–00	COVER 1 COUVERCLE 1	1	1	1			
12	6J8–14418–00	COVER 2 COUVERCLE 2	1	1	1			
13	6J8–14476–00	SEAL JOINT SPY	1	1	1			
14	90119–05M31	BOLT, WITH WASHER BOULON, AVEC RONDELLE	6	6	6			
15	6J8–14483–A1	GASKET JOINT	1	1	1			
16	97880–05040	SCREW, PAN HEAD VIS, TETE TRONCONIQUE	4	4	4			
17	92990–05600	WASHER, PLATE RONDELLE, PLATE	4	4	4			
18	6J8–41259–00	ROD, CHOKE 3 TRINGLE 3, STARTER	2	2	2			
19	661–41262–02	JOINT, CHOKE LEVER RACCORD, LEVIER DE STARTER	4	4	4			
20	6J8–41271–01	KNOB, CHOKE BOUTON DE STARTER	1	1	1			
21	6J8–41257–00	ROD, CHOKE 2 TRINGLE 2, STARTER	1	1	1			
22	6J8–41262–00	JOINT, CHOKE LEVER RACCORD, LEVIER DE STARTER	1	1	1			
23	689–41273–00	GROMMET PASSE-FIL	1	1	1			
24	6J8–41274–00	GROMMET 2 PASSE-FIL 2	1	1	1			
25	6J8–41217–00	ROD, ACCEL. LEVER TIGE, LEVIER ACCELERATION	1	1	1			
26	6A1–83625–41	MARK 5 ETIQUETTE 5	1	1	1			
27	6A1–83625–51	MARK 5 ETIQUETTE 5	1	1	1			

FIG. 5 CARBURETOR CARBURATEUR

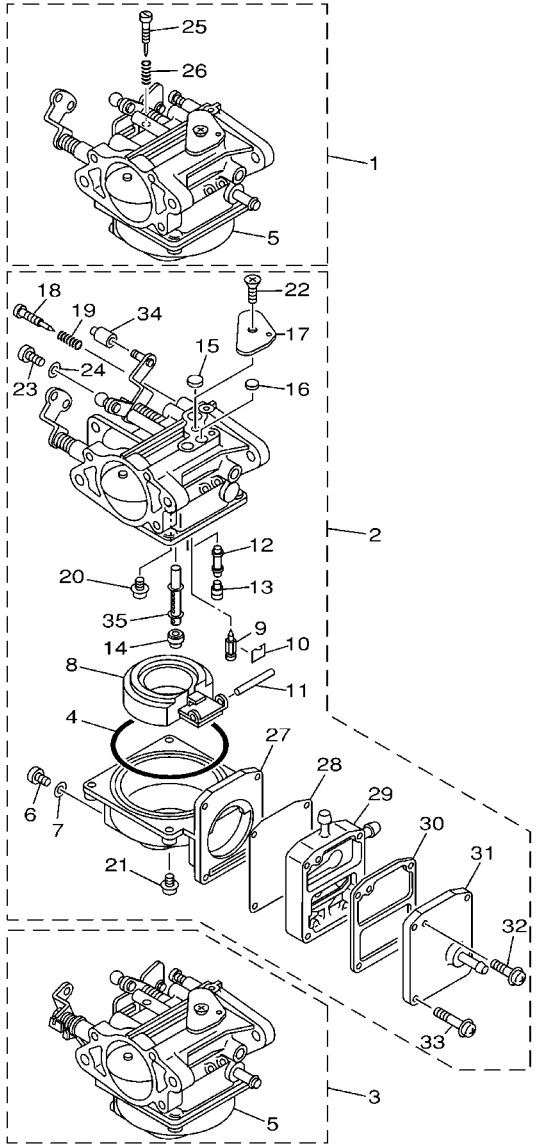

REF. NO.	PART NO. N° PIECES	DESCRIPTION DESCRIPTION	MHO	EO	ETO			REMARKS REMARQUES
1	6J8–14301–11	CARBURETOR ASSY 1 CARBURATEUR COMPLET 1	1	1	1			
2	6J8–14302–01	CARBURETOR ASSY 2 CARBURATEUR COMPLET 2	1	1	1			
3	6J8–14303–01	CARBURETOR ASSY 3 CARBURATEUR COMPLET 3	1	1	1			
4	6J8–14984–00	.GASKET, FLOAT CHAMBER .JOINT, CUVE DE FLOTTEUR	3	3	3			
5	6J8–14980–00	.BODY, FLOAT CHAMBER .CORPS, CUVE DE FLOTTEUR	2	2	2			#1,3 #1,3
6	6J8–14991–00	.SCREW .VIS	3	3	3			
7	6J8–14995–00	.GASKET .JOINT	3	3	3			
8	6J8–14985–00	.FLOAT .FLOTTEUR	3	3	3			
9	6J8–14546–00	.VALVE, NEEDLE .POINTEAU	3	3	3			
10	6J8–14159–00	.CLIP .JONC	3	3	3			
11	6J8–14548–00	.PIN, FLOAT ARM .AXE, BRAS DE FLOTTEUR	3	3	3			
12	6J8–1492F–26	.JET, AIR SLOW (#50) .GICLEUR (#50)	3	3	3			
13	6J8–14966–00	.PLUG .BOUCHON	3	3	3			
14	6J8–1492E–51	.JET, MAIN (#102) .GICLEUR, PRINCIPAL (#102)	3	3	3			
15	6J8–14126–00	.PLUG .BOUCHON	3	3	3			
16	6J8–14118–00	.PLUG .BOUCHON	3	3	3			
17	6J8–14527–01	.PLATE .PLAQUE	3	3	3			
18	6J8–14923–00	.SCREW, PILOT .VIS, RALENTI	3	3	3			
19	6J8–14555–00	.SPRING .RESSORT	3	3	3			
20	97980–04110	.SCREW, WITH WASHER .VIS, AVEC RONDELLE	3	3	3			
21	97980–04112	.SCREW, WITH WASHER .VIS, AVEC RONDELLE	12	12	12			
22	98780–05008	.SCREW, FLAT HEAD .VIS A TETE FRAISEE	3	3	3			
23	6J8–14592–01	.SCREW .VIS	3	3	3			
24	92990–05600	.WASHER, PLATE .RONDELLE, PLATE	3	3	3			
25	6J8–14523–00	.SCREW, STOP .VIS, BUTEE	1	1	1			#1 #1
26	6J8–14334–00	.SPRING, THROTTLE .RESSORT, ACCELERATEUR	1	1	1			#1 #1
27	6J8–14981–00	.BODY, FLOAT CHAMBER .CORPS, CUVE DE FLOTTEUR	1	1	1			#2 #2

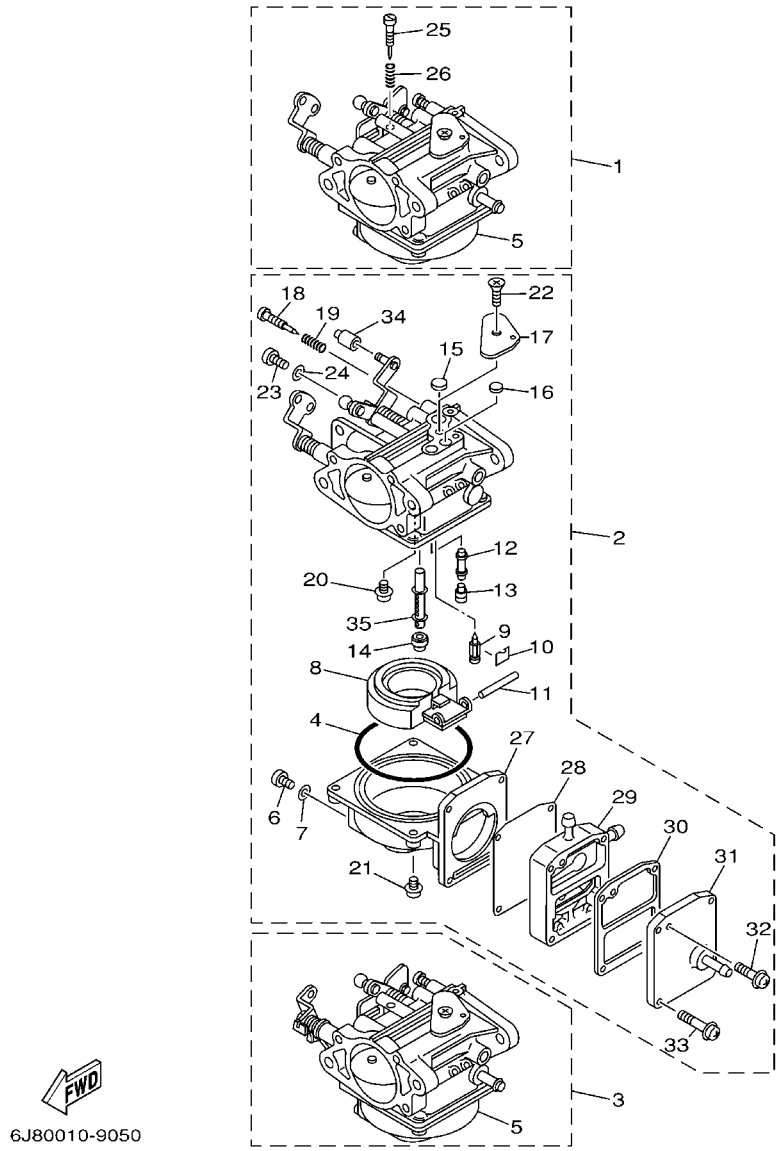

FIG. 5 CARBURETOR CARBURATEUR

REF. NO.	PART NO. N° PIECES	DESCRIPTION DESCRIPTION	MHO	EO	ETO			REMARKS REMARQUES
28	6J8–24471–00	.DIAPHRAGM .DIAPHRAGME	1	1	1			#2 #2
29	6J8–24415–00	.BODY 4 .CORPS 4	1	1	1			#2 #2
30	6J8–24432–00	.GASKET, FUEL PUMP 2 .JOINT 2 DE POMPE A ESSENCE	1	1	1			#2 #2
31	6J8–24452–00	.COVER .COUVERCLE	1	1	1			#2 #2
32	97980–03122	.SCREW, WITH WASHER .VIS, AVEC RONDELLE	1	1	1			#2 #2
33	97980–04124	.SCREW, WITH WASHER .VIS, AVEC RONDELLE	4	4	4			#2 #2
34	6J8–14578–00	.COLLAR .COLLERETTE	1	1	1			#2 #2
35	6J8–1492A–00	.NOZZLE, MAIN .PUITS D'AIGUILLE	3	3	3			

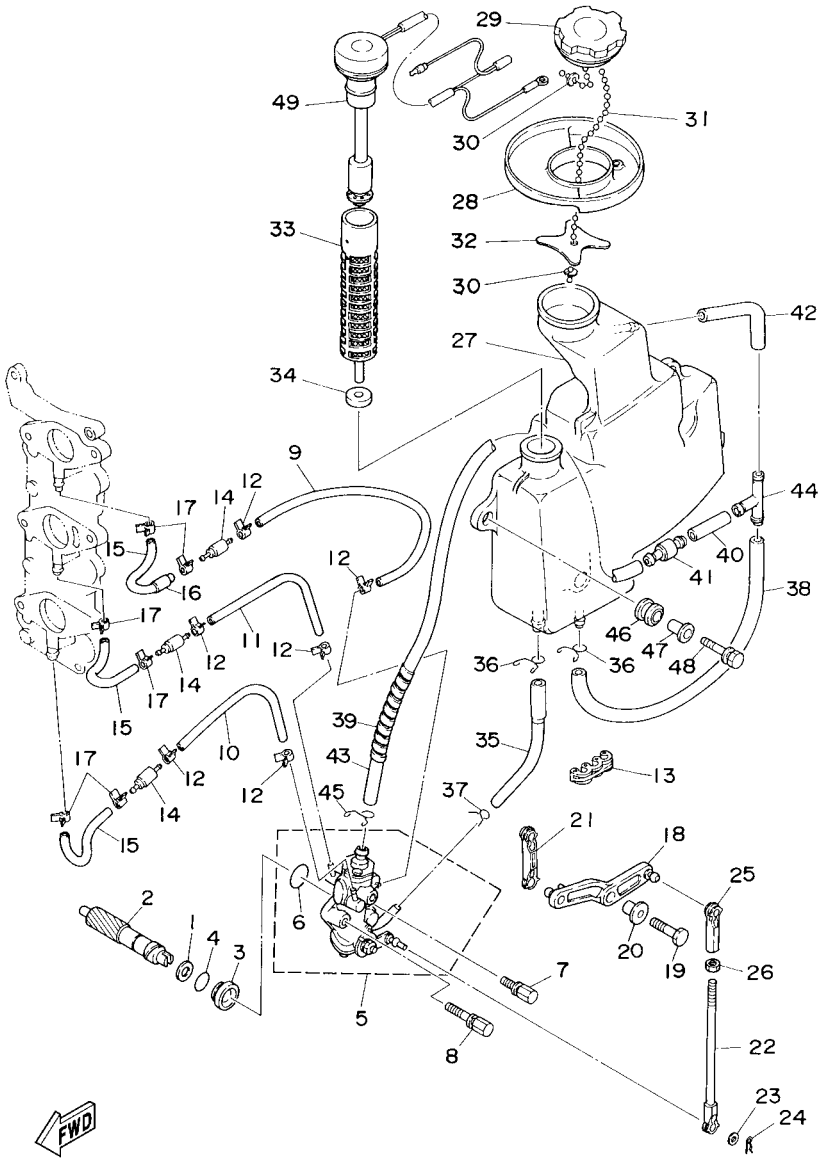

FIG. 6 OIL PUMP — POMPE A HUILE

REF. NO.	PART NO. N° PIECES	DESCRIPTION DESCRIPTION	MHO	EO	ETO			REMARKS REMARQUES
1	90201–08M93	WASHER, PLATE RONDELLE, PLATE	1	1	1			
2	6J8–11537–00	GEAR, DRIVEN PIGNON SECONDAIRE	1	1	1			
3	6J8–13117–00	COLLAR, DISTANCE ENTRETOISE	1	1	1			
4	93210–13M04	O-RING JOINT TORIQUE	1	1	1			
5	6J8–13200–01	OIL INJECTION PUMP ASSY POMPE A HUILE COMPLET	1	1	1			
6	93210–19MA7	.O-RING .JOINT TORIQUE	1	1	1			
7	90109–05M32	BOLT BOULON	1	1	1			
8	90109–05M33	BOLT BOULON	1	1	1			
9	90445–07M08	HOSE (L220) DURITE (L220)	1	1	1			
10	90445–07M32	HOSE (L120) DURITE (L120)	1	1	1			
11	90445–07M32	HOSE (L120) DURITE (L120)	1	1	1			
12	90468–07M02	CLIP JONC	6	6	6			
13	90464–07M05	CLAMP BRIDE	1	1	1			
14	6E9–13183–70	VALVE, CHECK CLAPET ANTI RETOUR	3	3	3			
15	90445–07M04	HOSE (L50) DURITE (L50)	3	3	3			
16	90445–11M08	HOSE (L10) DURITE (L10)	1	1	1			
17	90468–07M02	CLIP JONC	6	6	6			
18	6J8–13155–00	LEVER, CONTROL LEVIER, CPMMANDE	1	1	1			
19	97095–06025	BOLT BOULON	1	1	1			
20	90387–06M60	COLLAR COLLERETTE	1	1	1			
21	6J8–41238–00	JOINT, LINK RACCORD	1	1	1			
22	6J8–41237–00	JOINT, LINK RACCORD	1	1	1			
23	90202–05088	WASHER, PLATE RONDELLE, PLATE	1	1	1			
24	90468–05M03	CLIP JONC	1	1	1			
25	682–41237–00	JOINT, LINK RACCORD	1	1	1			
26	95380–05700	NUT ECROU	1	1	1			
27	6J8–21707–11	OIL TANK COMP. RESERVOIR A PETROLE COMP.	1					

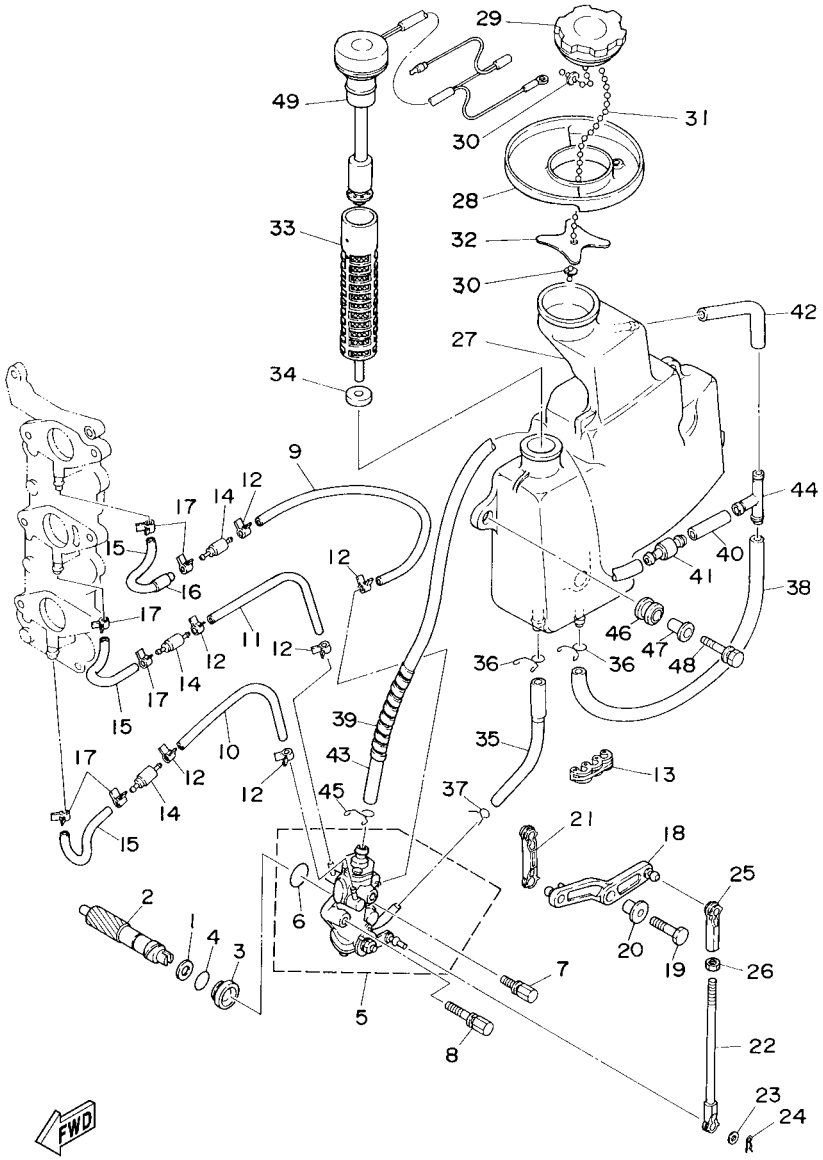

FIG. 6 OIL PUMP — POMPE A HUILE

REF. NO.	PART NO. N° PIECES	DESCRIPTION DESCRIPTION	MHO	EO	ETO			REMARKS REMARQUES
27	6J8–21707–01	OIL TANK COMP. RESERVOIR A PETROLE COMP.		1	1			
28	6J8–2173M–00	SEAL 3 JOINT 3		1	1			
29	6H4–21770–00	OIL TANK CAP ASSY CABOCHON DE RESERVOIR A HUILE	1	1	1			
30	6H1–21757–00	WASHER, SPECIAL 1 RONDELLE, SPECIALE 1	2	2	2			
31	6H1–24633–00	CHAIN, BALL CHANE DE BALLE	1	1	1			
32	6J8–21758–00	WASHER, SPECIAL 2 RONDELLE, SPECIALE 2	1	1	1			
33	6J8–13411–00	STRAINER, OIL FILTRE, HUILE	1	1	1			
34	6J8–13414–00	GASKET, STRAINER COVER JOINT, COUVERCLE DE FILTRE	1	1	1			
35	6J8–13416–00	PIPE, OIL 1 DURITE A HUILE	1	1	1			
36	90467–11M08	CLIP JONC	2	2	2			
37	90467–08004	CLIP JONC	1	1	1			
38	90445–11M03	HOSE (L330) DURITE (L330)	1	1	1			
39	90446–10M01	HOSE (L60) DURITE (L60)	1	1	1			
40	90445–11M07	HOSE (L30) DURITE (L30)	1	1	1			
41	63D–21744–00	BREATHER RENIFLARD	1	1	1			
42	90445–11M02	HOSE (L100) DURITE (L100)	1	1	1			
43	90445–11M04	HOSE (L400) DURITE (L400)	1	1	1			
44	6E5–24378–00	PIPE, JOINT 3 DURITE, RACCORDEMENT 3	1	1	1			
45	90467–10M04	CLIP JONC	1	1	1			
46	6A0–82317–00	DAMPER, IGNITION COIL AMORTISSEUR, BOBINE D'ALLUM	3	3	3			
47	90387–06119	COLLAR COLLERETTE	3	3	3			
48	90119–06M65	BOLT, WITH WASHER BOULON, AVEC RONDELLE	3	3	3			
49	6J8–85720–01	OIL LEVEL GAUGE ASSY JAUGE A HUILE CPLT	1	1	1			

FIG. 7 FUEL CARBURANT

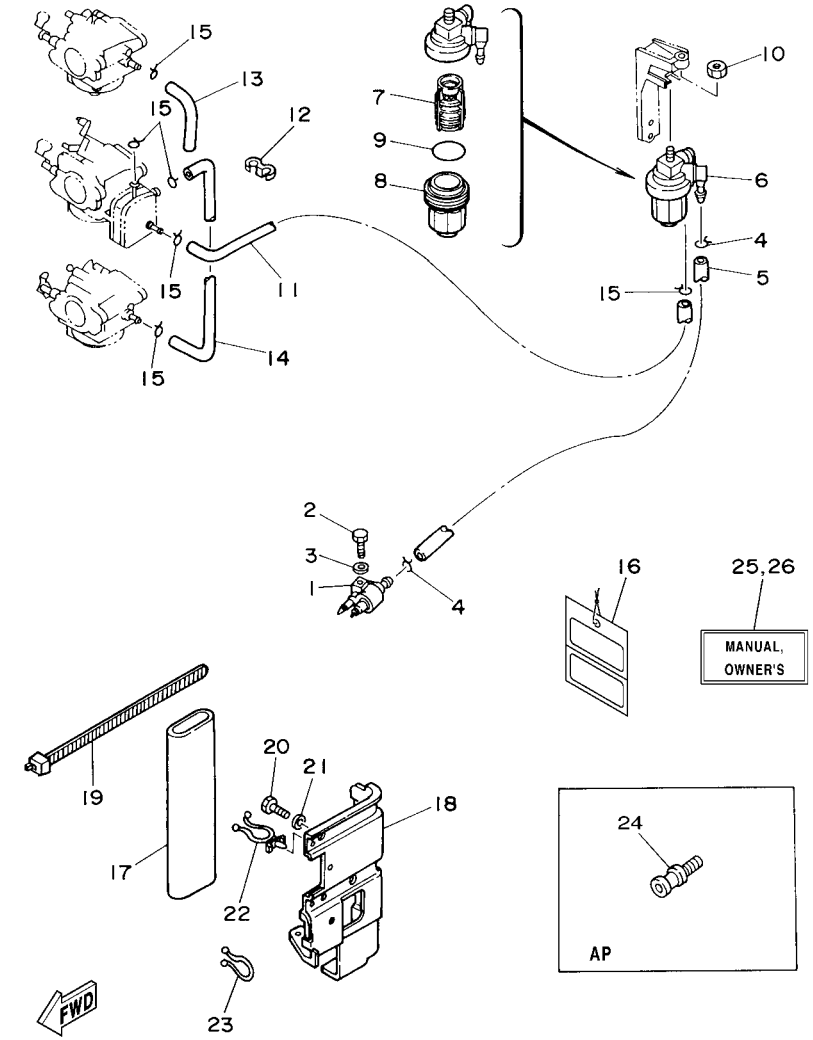

REF. NO.	PART NO. N° PIECES	DESCRIPTION DESCRIPTION	MHO	EO	ETO			REMARKS REMARQUES
1	6G1–24304–02	FUEL PIPE JOINT COMP. 1 DURITE RACCORDEMT. A ESSENCE	1	1	1			
2	97095–06025	BOLT BOULON	1	1	1			
3	92995–06600	WASHER RONDELLE	1	1	1			
4	90467–08004	CLIP JONC	2	2	2			
5	90445–09M00	HOSE (L180) DURITE (L180)	1	1	1			
6	61N–24560–00	FILTER ASSY ENS FILTRE	1	1	1			
7	61N–24563–00	.ELEMENT, FILTER .ELEMENT, FILTRE	1	1	1			
8	61N–24521–00	.CUP, FILTER .CUVETTE, FILTRE	1	1	1			
9	93210–32738	.O-RING .JOINT TORIQUE	1	1	1			
10	90179–08M15	NUT ECROU	1	1	1			
11	6E5–24312–00	PIPE 2 DURITE 2	1	1	1			
12	90464–09M21	CLAMP BRIDE	1	1	1			
13	688–24313–00	PIPE 3 DURITE 3	1	1	1			
14	6J8–24311–00	PIPE, FUEL 1 DURITE A ESSENCE	1	1	1			
15	90467–08004	CLIP JONC	6	6	6			
16	61H–2819R–31	TAG, WARNING ETIQUETTE, AVERTISSEMENT	1	1	1			
17	656–W2810–02	TOOL KIT TROUSSE A OUTILS	1	1	1			
18	6J8–28170–00	TOOL, HOLDER OUTIL	1					
19	6G1–2811G–00	BAND COLLIER	1					
20	97095–08016	BOLT BOULON	2					
21	92995–08600	WASHER RONDELLE	2					
22	90464–12M17	CLAMP BRIDE	5					
23	90465–18147	CLAMP BRIDE	1					
24	6E0–28193–00–94	PLUG, WATER CHECK BOUCHON, CONTROLE D'EAU	1	1	1			AP D:12.5MM AP D:12.5MM
25	6J8–28199–72–E0	MANUAL,OWNER'S MANUEL D'UTILISATION	1	1	1			UR (E) UR (E)
	6J8–28199–72–F0	MANUAL,OWNER'S MANUEL D'UTILISATION	1	1	1			UR (F) UR (F)
	6J8–28199–72–S0	MANUAL,OWNER'S MANUEL D'UTILISATION	1	1	1			UR (ES) UR (ES)

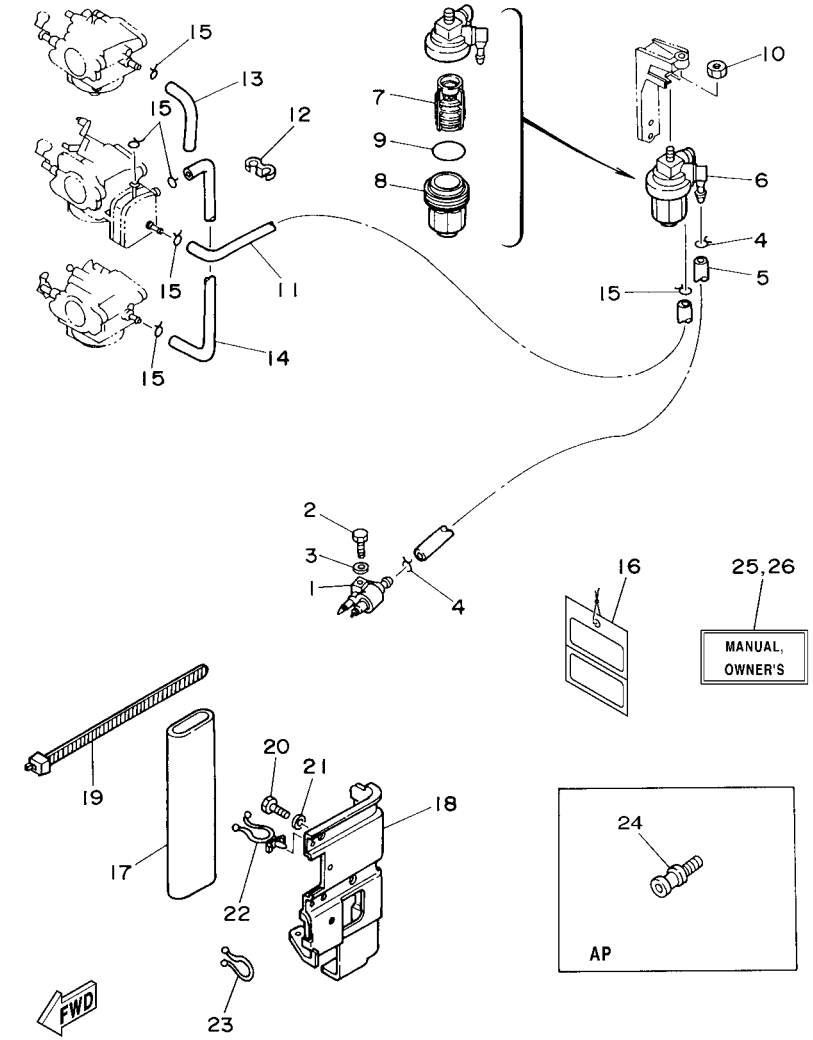

6J8A300-C070

FIG. 7 FUEL CARBURANT

REF. NO.	PART NO. N° PIECES	DESCRIPTION DESCRIPTION	MHO	EO	ETO			REMARKS REMARQUES
25	6J8–28199–72–G0	MANUAL,OWNER'S MANUEL D'UTILISATION	1	1	1			UR (D) UR (D)
	6J8–28199–72–D0	MANUAL,OWNER'S MANUEL D'UTILISATION	1	1	1			UR (NL) UR (NL)
	6J8–28199–72–H0	MANUAL,OWNER'S MANUEL D'UTILISATION	1	1	1			UR (I) UR (I)
26	6J8–28199–8D–K0	MANUAL,OWNER'S MANUEL D'UTILISATION	1	1	1			UR (DK) UR (DK)
	6J8–28199–8D–R0	MANUAL,OWNER'S MANUEL D'UTILISATION	1	1	1			UR (GR) UR (GR)
	6J8–28199–8D–P0	MANUAL,OWNER'S MANUEL D'UTILISATION	1	1	1			UR (P) UR (P)
	6J8–28199–8D–N0	MANUAL,OWNER'S MANUEL D'UTILISATION	1	1	1			UR (N) UR (N)
	6J8–28199–8D–M0	MANUAL,OWNER'S MANUEL D'UTILISATION	1	1	1			UR (S) UR (S)
	6J8–28199–8D–L0	MANUAL,OWNER'S MANUEL D'UTILISATION	1	1	1			UR (SF) UR (SF)

FIG. 8 STARTER DEMARREUR

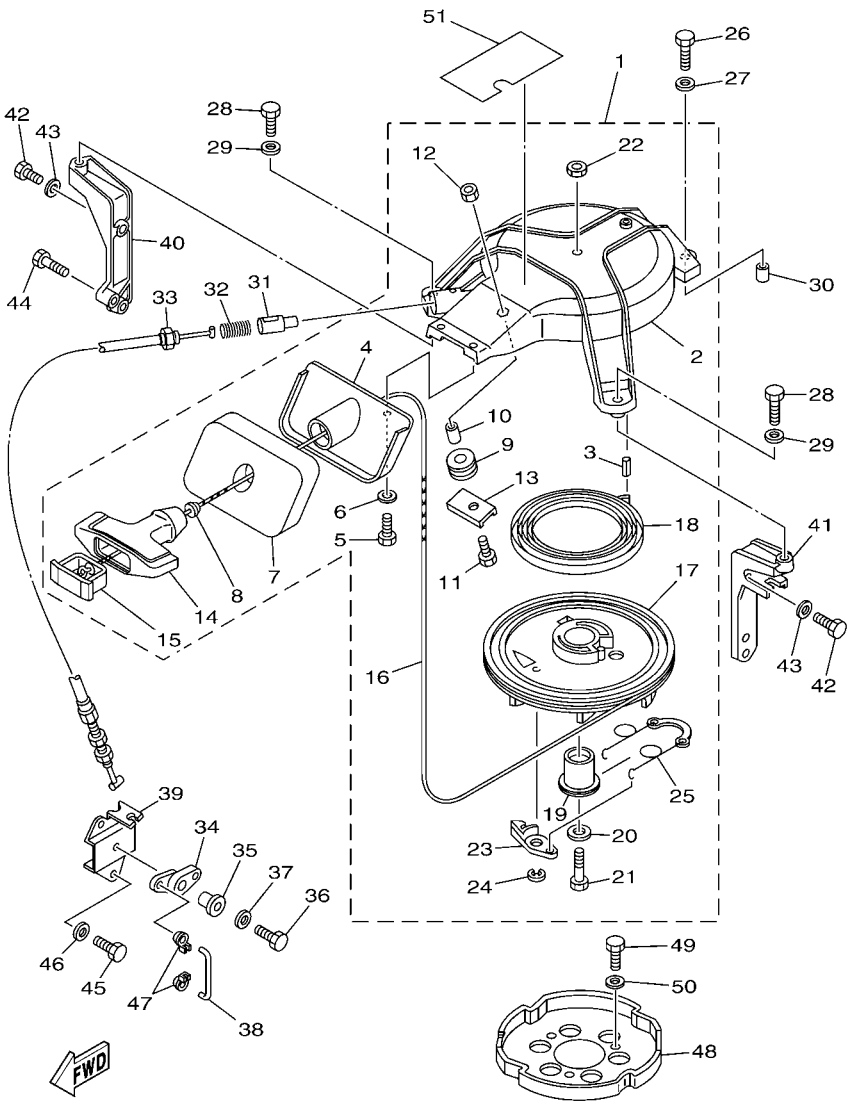

6J8A300-C080

*1:CUT FROM 50M ROLLS,PART NO.90890-44373,CUTTING LENGTH 1.95M

*1:A PRELEVER SUR BOBINE 50M ,REFERENCE 90890-44373,
LONGUEUR DE COUPE 1.95M

REF. NO.	PART NO. N° PIECES	DESCRIPTION DESCRIPTION	MHO	EO	ETO			REMARKS REMARQUES
1	6J8–15710–02–4D	STARTER ASSY DEMARREUR COMPLET	1					
2	6J8–15711–00–94	.CASE, STARTER .CARTER DE DEMARREUR	1					
3	91690–40014	.PIN, SPRING .AGRAFFE	1					
4	6J8–15758–01–94	.GUIDE, ROPE .GUIDE DE CABLE	1					
5	97095–06016	.BOLT .BOULON	2					
6	92995–06600	.WASHER .RONDELLE	2					
7	6J8–15762–00	.SEAL, RUBBER 2 .JOINT CAOUTCHOUC 2	1					
8	6A0–15789–00	.DAMPER .AMORTISSEUR	1					
9	6F5–15752–00	.ROLLER, WIRE .GALET, CABLE	1					
10	6F5–15753–00	.BUSH .CHARBON	1					
11	97095–06025	.BOLT .BOULON	1					
12	95380–06600	.NUT, HEXAGON .ECROU	1					
13	6J8–15787–00	.ADAPTOR .ADAPTATEUR	1					
14	689–15755–01	.HANDLE, STARTER .POIGNEE, DE DEMARREUR	1					
15	6F5–15779–02	.COVER .COUVERCLE	1					
16	*	.WIRE (L:1,950MM) .FIL (L:1,950MM)	1					*1 *1
17	6J8–15714–00	.DRUM, SHEAVE .TAMBOUR, POULIE	1					
18	90510–08M04	.SPRING, SPIRAL .RESSORT, HELICOIDAL	1					
19	677–15717–01	.SHAFT, STARTER .AXE DE DEMARREUR	1					
20	90201–06060	.WASHER, PLATE .RONDELLE, PLATE	1					
21	97095–06025	.BOLT .BOULON	1					
22	95380–06700	.NUT .ECROU	1					
23	676–15741–03	.PAWL, DRIVE .CLIQUET, ENTRAINEMENT	1					
24	93430–06M02	.CIRCLIP .CLIPS	1					
25	6J8–15705–00	.SPRING, DRIVE PAWL .RESSORT DE CLIQUET	1					
26	97095–06035	BOLT BOULON	1					
27	92995–06600	WASHER RONDELLE	1					

FIG. 8 STARTER DEMARREUR

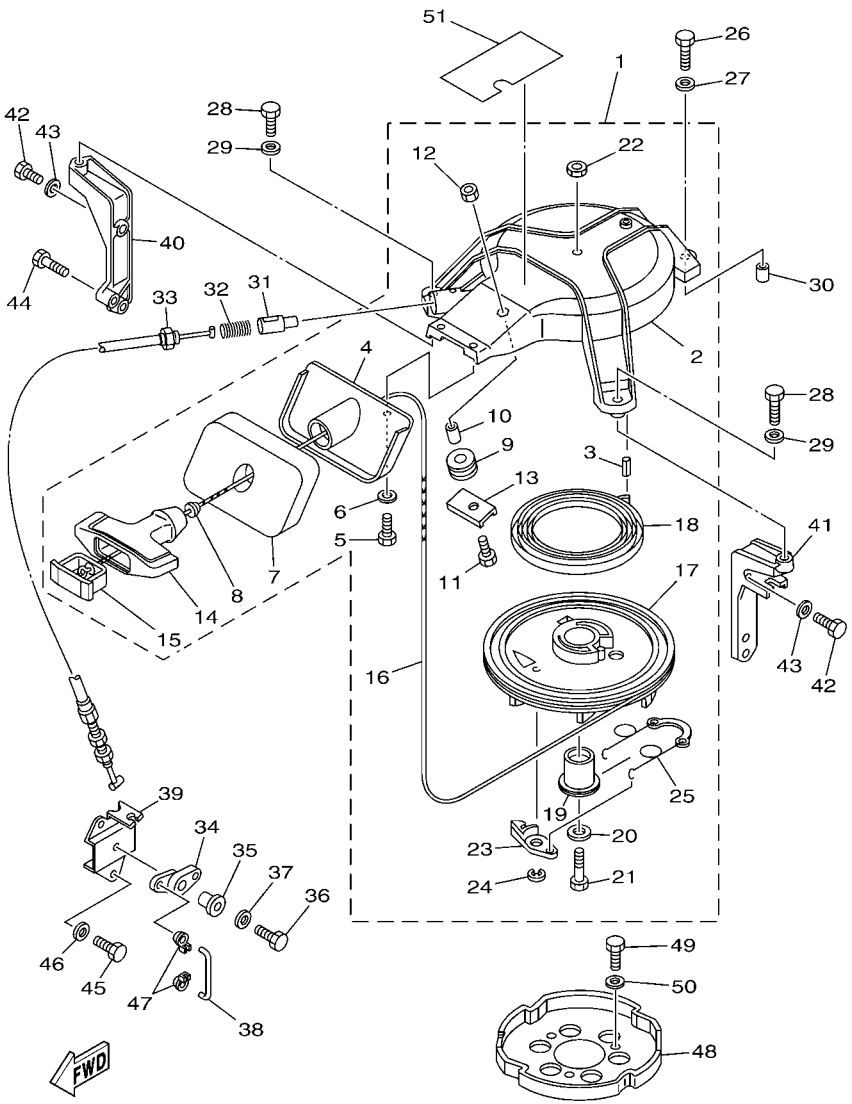

*1:CUT FROM 50M ROLLS,PART NO.90890-44373,CUTTING LENGTH 1.95M

*1:A PRELEVER SUR BOBINE 50M ,REFERENCE 90890-44373,
LONGUEUR DE COUPE 1.95M

REF. NO.	PART NO. N° PIECES	DESCRIPTION DESCRIPTION	MHO	EO	ETO			REMARKS REMARQUES
28	97095–06025	BOLT BOULON	2					
29	92995–06600	WASHER RONDELLE	2					
30	99530–10014	PIN, DOWEL GOUJON, D'ASSEMBLAGE	1					
31	656–15748–00	PLUNGER, STARTER STOP PLONGEUR, BOUTE DE DEMAR	1					
32	90501–10227	SPRING, COMPRESSION RESSORT, COMPRESSION	1					
33	6J8–15770–00	CABLE COMP., STARTER STOP CABLE, BUTEE DE DEMAR	1					
34	6J8–15746–01	ARM BRAS	1					
35	90387–06M29	COLLAR COLLERETTE	1					
36	97095–06025	BOLT BOULON	1					
37	92995–06600	WASHER RONDELLE	1					
38	6J8–15747–00	LINK BIELLETTE	1					
39	6J8–15774–01	STAY 4 SUPPORT 4	1					
40	6J8–15771–00–94	STAY 1 SUPPORT 1	1	1	1			
41	6J8–15772–00–94	STAY 2 SUPPORT 2	1	1	1			
42	97013–06020	BOLT BOULON	3	3	3			
43	92903–06600	WASHER, PLATE RONDELLE, PLATE	3	3	3			
44	90101–06024	BOLT BOULON	1	1	1			
45	97095–06016	BOLT BOULON	2					
46	92995–06600	WASHER RONDELLE	2					
47	661–41262–02	JOINT, CHOKE LEVER RACCORD, LEVIER DE STARTER	2					
48	6J8–15723–00	PULLEY, STARTER POULIE DE DEMARREUR	1					
49	97013–08014	BOLT BOULON	3					
50	92903–08600	WASHER, PLATE RONDELLE, PLATE	3					
51	6J8–13437–91	MARK, CAUTION MAKER	1					

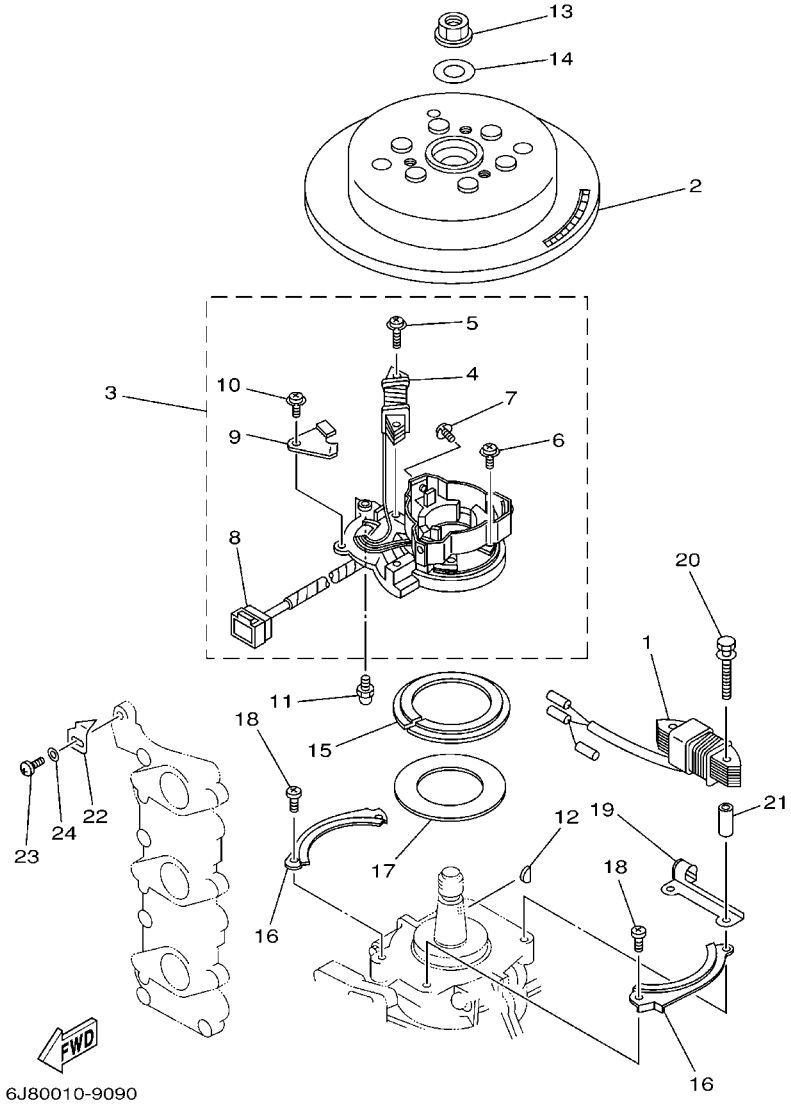

FIG. 9 GENERATOR GENERATRICE

REF. NO.	PART NO. N° PIECES	DESCRIPTION DESCRIPTION	MHO	EO	ETO			REMARKS REMARQUES
1	6H4–85533–A1	COIL, LIGHTING BOBINE, ECLAIRAGE	1	1	1			
2	6J8–85550–F1	ROTOR ASSY ROTOR CPLT	1					
	6J8–85550–A1	ROTOR ASSY ROTOR CPLT		1	1			
3	6H4–85510–F1	STATOR ASSY STATOR CPLT	1					
	6J8–85510–A1	STATOR ASSY STATOR CPLT		1	1			
4	6H4–85520–01	.COIL, CHARGE .BOBINE, CHARGE	1					
	6J8–85520–01	.COIL, CHARGE .BOBINE, CHARGE		1	1			
5	97902–06120	.SCREW, WITH WASHER .VIS, AVEC RONDELLE	2	2	2			
6	97902–04112	.SCREW, WITH WASHER .VIS, AVEC RONDELLE	6	6	6			
7	97902–04106	.SCREW, WITH WASHER .VIS, AVEC RONDELLE	3	3	3			
8	9E471–09205	.CONNECTOR (6P,M) .CONNECTEUR (6P,M)	1	1	1			
9	6H4–85548–00	.HOLDER .SUPPORT	1	1	1			
10	97902–05408	.SCREW, WITH WASHER .VIS, AVEC RONDELLE	1	1	1			
11	663–85518–00	JOINT, BALL JOINT SPHERIQUE	1	1	1			
12	90280–05013	KEY, WOODRUFF CLAVETTE, DEMI-LUNE	1	1	1			
13	90179–16M05	NUT ECROU	1	1	1			
14	90201–16M44	WASHER, PLATE RONDELLE, PLATE	1	1	1			
15	6H4–41611–10	RETAINER, MAGNETO BASE FLASQUE, PLATEAU D'AVANCE	1	1	1			
16	6J8–41615–00	STOPPER, MAGNETO BASE BUTEE, PLATEAU D'AVANCE	2	2	2			
17	6J8–41618–00	WASHER, MAGNETO RONDELLE, MAGNETO	1	1	1			
18	97880–06012	SCREW, PAN HEAD VIS, TETE TRONCONIQUE	2	2	2			
19	6J8–85548–00	HOLDER SUPPORT	1	1	1			
20	90101–06M00	BOLT BOULON	2	2	2			
21	90387–06M81	COLLAR COLLERETTE	2	2	2			
22	6J8–81332–00	PLATE, TIMING PLATEAU, ALLUMAGE	1	1	1			
23	97885–05010	SCREW, PAN HEAD VIS, A ENCOCHE	1	1	1			
24	92995–05600	WASHER RONDELLE	1	1	1			

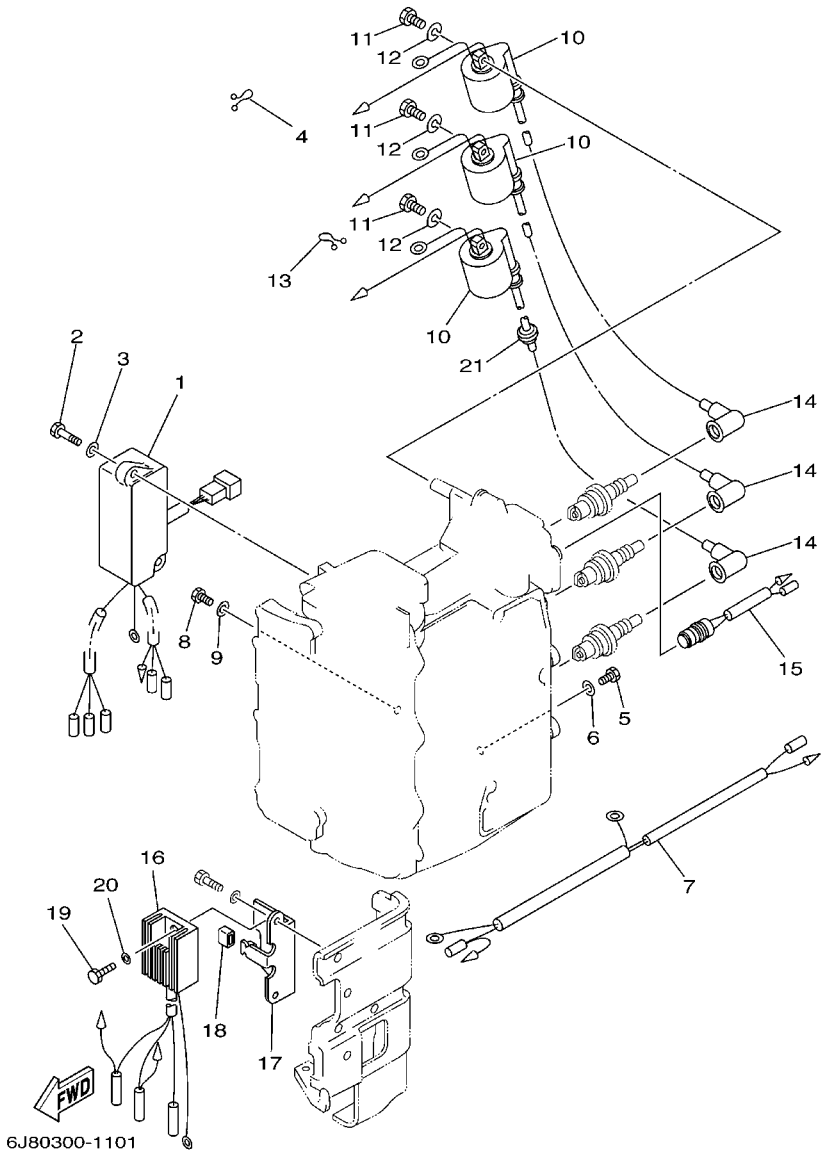

FIG. 10 ELECTRICAL 1 — PARTIE ELECTRIQUE 1

REF. NO.	PART NO. N° PIECES	DESCRIPTION DESCRIPTION	MHO	EO	ETO			REMARKS REMARQUES
1	6J8–85540–H2	C.D.I. UNIT ASSY BLOC C.D.I.	1	1	1			
2	97095–06025	BOLT BOULON	2	2	2			
3	92995–06600	WASHER RONDELLE	2	2	2			
4	90464–15M11	CLAMP BRIDE	1					
5	97095–06012	BOLT BOULON	1	1	1			
6	92995–06600	WASHER RONDELLE	1	1	1			
7	6J8–82531–00	WIRE, LEAD FIL	1					
8	97095–06012	BOLT BOULON	1	1	1			
9	92995–06600	WASHER RONDELLE	1	1	1			
10	6J8–85570–21	IGNITION COIL ASSY BOBINE D'ALLUMAGE (ENS.)	3	3	3			
11	97095–06020	BOLT BOULON	6	6	6			
12	92995–06100	WASHER, SPRING RONDELLE, GROWER	6	6	6			
13	90464–05M16	CLAMP BRIDE		1	1			
14	6G1–82370–21	PLUG CAP ASSY ANTIPARASITE	3	3	3			
15	689–82560–00	THERMO SWITCH ASSY THERMO-CONTACT COMPLET	1	1	1			
16	6J8–81960–00	RECTIFIER & REGULATOR ASSY REDRESSEUR REGULATEUR CPLT	1					
17	6J8–81975–00	PLATE, RECTIFIER FITTING PLAQUE, FIXATION DU REDRESSEUR	1					
18	689–44194–00	CAP CAPUCHON	1					
19	97095–06012	BOLT BOULON	1					
20	92995–06600	WASHER RONDELLE	1					
21	90480–25161	GROMMET PASSE-FIL	1	1	1			

FIG. 11 ELECTRICAL 2 PARTIE ELECTRIQUE 2

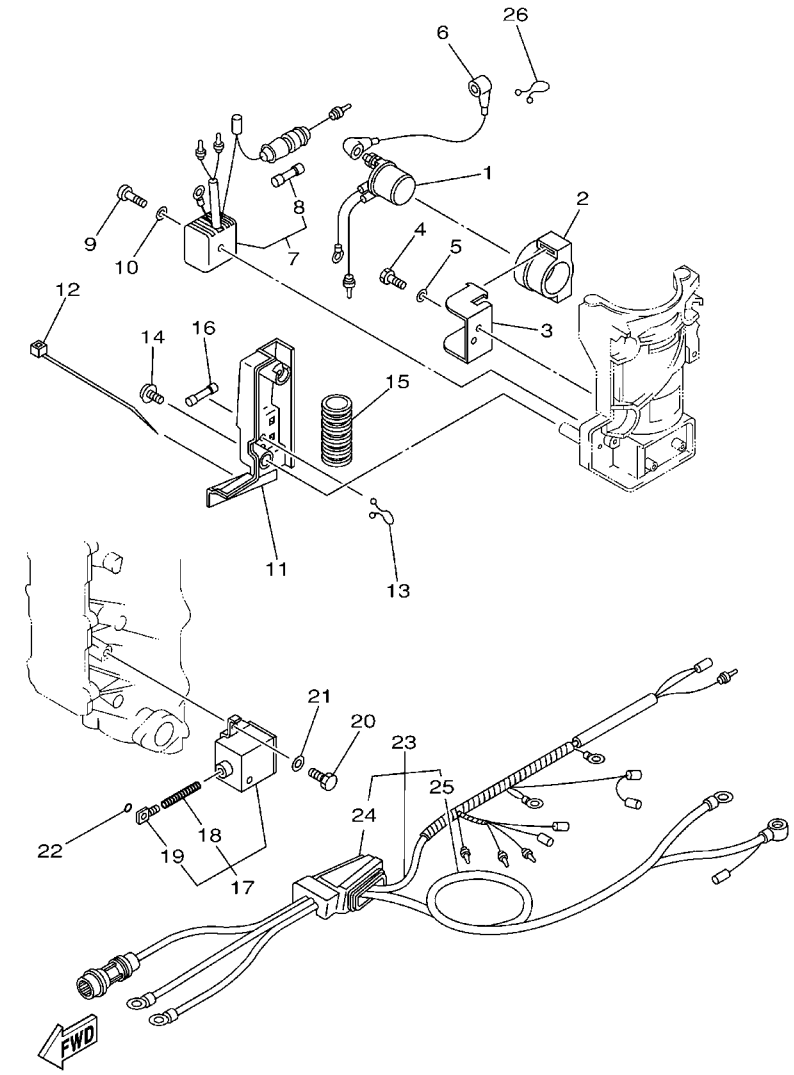

REF. NO.	PART NO. N° PIECES	DESCRIPTION DESCRIPTION	MHO	EO	ETO			REMARKS REMARQUES
1	6G1–81941–10	STARTER RELAY ASSY LANCEUR RELAIS (ENS.)		1				
2	6G1–81952–00	HOLDER, RELAY SUPPORT, RELAIS		1				
3	6J8–81945–00	PLATE, SWITCH FITTING PLAQUE, FIXATION DU RELAIS		1				
4	97013–06016	BOLT BOULON		1				
5	92903–06600	WASHER, PLATE RONDELLE, PLATE		1				
6	6F5–82117–00	WIRE, LEAD FIL		1				
7	6G1–81970–61	RECTIFIER ASSY REDRESSEUR COMPLET		1				
8	6G1–82151–00	.FUSE (10A) .FUSIBLE (10A)		1				
9	97880–05025	SCREW, PAN HEAD VIS, TETE TRONCONIQUE		1				
10	92990–05600	WASHER, PLATE RONDELLE, PLATE		1				
11	6J8–81916–10	COVER, TERMINAL COUVERCLE, BORNE		1				
12	90465–13M18	CLAMP BRIDE		1				
13	90465–18147	CLAMP BRIDE		1				
14	90159–05M26	SCREW, WITH WASHER VIS, AVEC RONDELLE		2				
15	6E9–83557–70	TUBE TUBE		1				
16	6H3–82151–00	FUSE FUSIBLE		1				
17	6J8–86110–00	SOLENOID SOLENOID		1				
18	6J8–86116–00	.WIRE, PULL .CABLE, TENSION		1				
19	682–86117–00	.HOOK, WIRE PULL .CROCHET, TENSION DE CABLE		1				
20	97013–06016	BOLT BOULON		2				
21	92903–06600	WASHER, PLATE RONDELLE, PLATE		2				
22	93210–03261	O-RING JOINT TORIQUE		1				
23	6J8–82580–00	WIRE HARNESS ASSY 2 FAISCEAU DE FILS 2 CPLT		1				
24	6J8–42724–50	.GROMMET .PASSE-FIL		1				
25	689–82105–13	.WIRE HARNESS .FAISCEAU DE FILS		1				
26	90464–15M11	CLAMP BRIDE		1				

FIG. 12 ELECTRICAL 3 PARTIE ELECTRIQUE 3

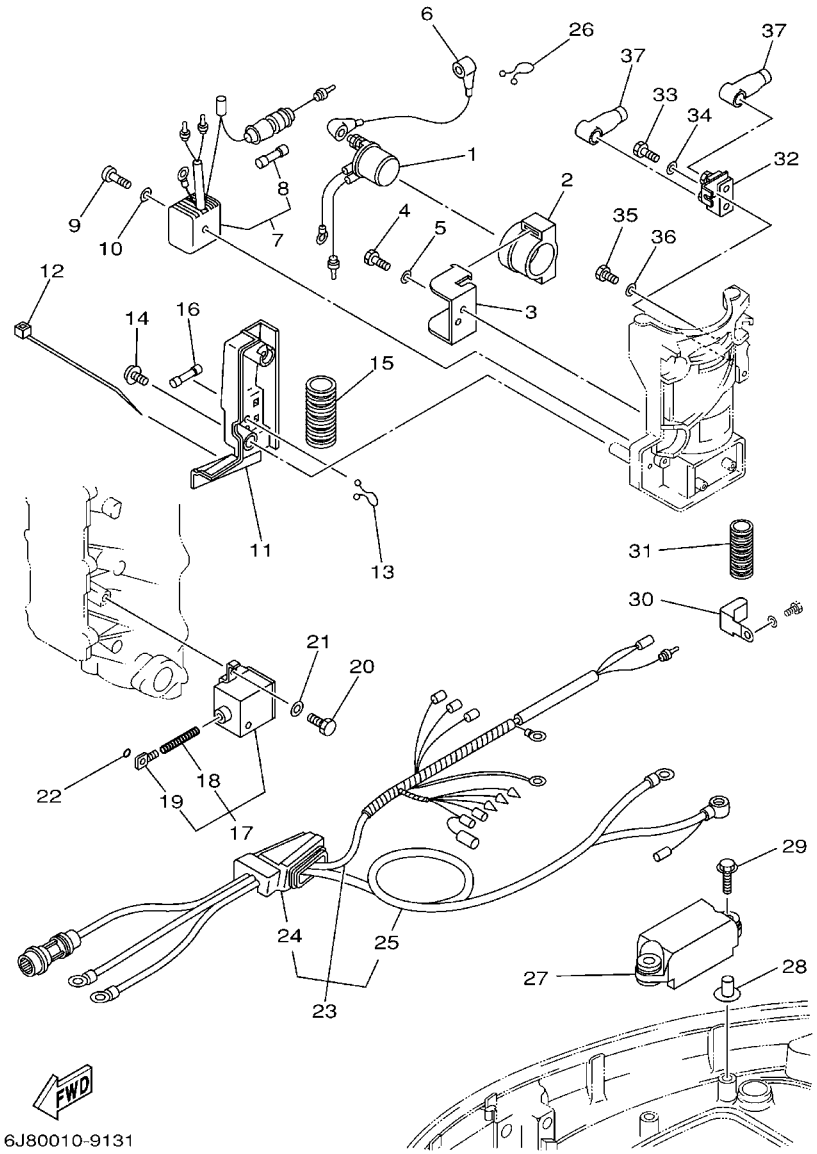

REF. NO.	PART NO. N° PIECES	DESCRIPTION DESCRIPTION	MHO	EO	ETO			REMARKS REMARQUES
1	6G1–81941–10	STARTER RELAY ASSY LANCEUR RELAIS (ENS.)			1			
2	6G1–81952–00	HOLDER, RELAY SUPPORT, RELAIS			1			
3	6J8–81945–00	PLATE, SWITCH FITTING PLAQUE, FIXATION DU RELAIS			1			
4	97013–06016	BOLT BOULON			1			
5	92903–06600	WASHER, PLATE RONDELLE, PLATE			1			
6	6F5–82117–00	WIRE, LEAD FIL			1			
7	6G1–81970–61	RECTIFIER ASSY REDRESSEUR COMPLET			1			
8	6G1–82151–00	.FUSE (10A) .FUSIBLE (10A)			1			
9	97880–05025	SCREW, PAN HEAD VIS, TETE TRONCONIQUE			1			
10	92990–05600	WASHER, PLATE RONDELLE, PLATE			1			
11	6J8–81916–10	COVER, TERMINAL COUVERCLE, BORNE			1			
12	90465–13M18	CLAMP BRIDE			1			
13	90465–18147	CLAMP BRIDE			1			
14	90159–05M26	SCREW, WITH WASHER VIS, AVEC RONDELLE			2			
15	6E9–83557–70	TUBE TUBE			1			
16	6H3–82151–00	FUSE FUSIBLE			1			
17	6J8–86110–00	SOLENOID SOLENOID			1			
18	6J8–86116–00	.WIRE, PULL .CABLE, TENSION			1			
19	682–86117–00	.HOOK, WIRE PULL .CROCHET, TENSION DE CABLE			1			
20	97013–06016	BOLT BOULON			2			
21	92903–06600	WASHER, PLATE RONDELLE, PLATE			2			
22	93210–03261	O-RING JOINT TORIQUE			1			
23	6J8–82580–10	WIRE HARNESS ASSY 2 FAISCEAU DE FILS 2 CPLT			1			
24	6J8–42724–60	.GROMMET .PASSE-FIL			1			
25	689–82105–13	.WIRE HARNESS .FAISCEAU DE FILS			1			
26	90464–15M11	CLAMP BRIDE			1			
27	6J8–81950–00	RELAY ASSY RELAIS COMPLET			1			

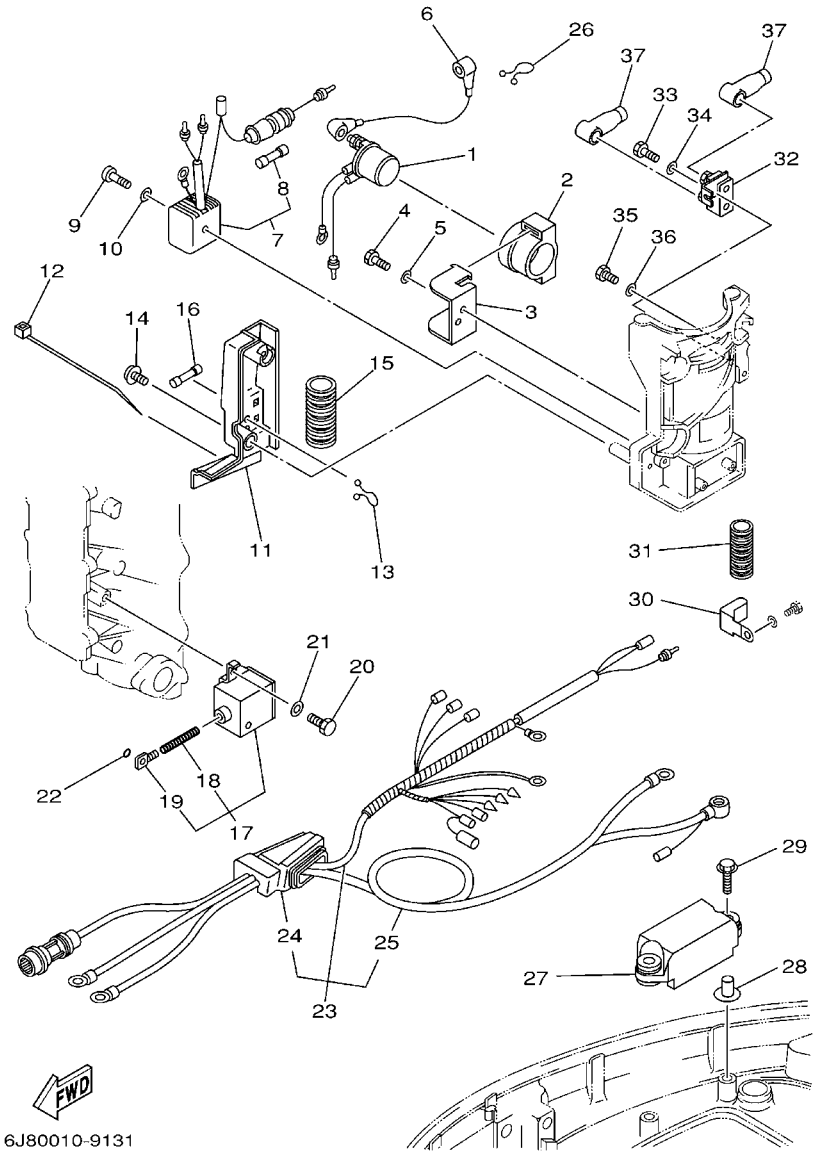

FIG. 12 ELECTRICAL 3 — PARTIE ELECTRIQUE 3

REF. NO.	PART NO. N° PIECES	DESCRIPTION DESCRIPTION	MHO	EO	ETO			REMARKS REMARQUES
28	90387–06M03	COLLAR COLLERETTE			2			
29	90119–06M17	BOLT, WITH WASHER BOULON, AVEC RONDELLE			2			
30	90465–08M12	CLAMP BRIDE			1			
31	90446–14M88	HOSE DURITE			1			
32	6H5–81920–00	TERMINAL ASSY BORNE			1			
33	97095–06014	BOLT BOULON			1			
34	92995–06600	WASHER RONDELLE			1			
35	97095–06012	BOLT BOULON			1			
36	92995–06600	WASHER RONDELLE			1			
37	682–82119–01	COVER, LEAD WIRE GARNITURE, FIL			2			

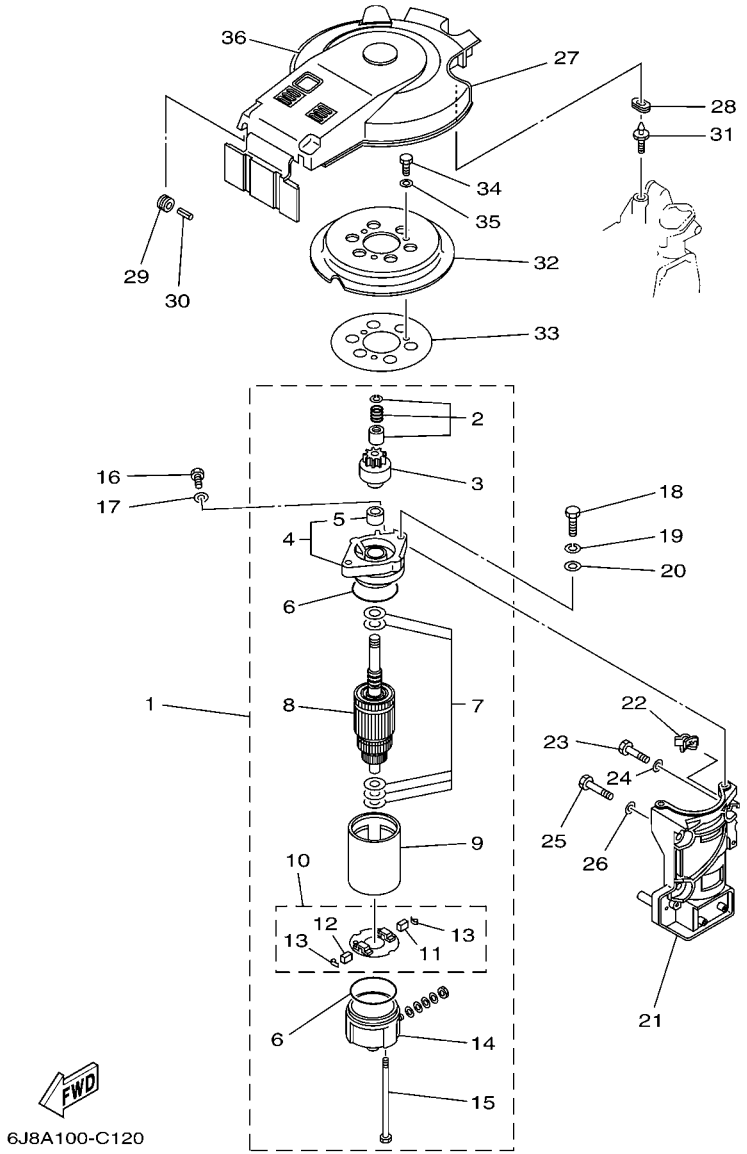

FIG. 13 STARTING MOTOR DEMARREUR ELECTRIQUE

REF. NO.	PART NO. N° PIECES	DESCRIPTION DESCRIPTION	MHO	EO	ETO			REMARKS REMARQUES
1	6F5–81800–11	STARTING MOTOR ASSY DEMARREUR ELECTRIQUE COMPLET		1	1			
2	689–81857–11	.PINION STOPPER SET .BUTEE PIGNON		1	1			
3	689–81807–12	.GEAR ASSY, STARTING MOTOR .PIGNON, DEMARREUR ELECTRIQUE		1	1			
4	6F5–81830–11	.FRONT BRACKET ASSY .SUPPORT AVANT		1	1			
5	689–81831–00	..METAL, FRONT ..METAL, AVANT		1	1			
6	689–81847–11	.O-RING .JOINT TORIQUE		2	2			
7	689–81809–11	.WASHER KIT .JEU DE RONDELLES		1	1			
8	689–81850–12	.ARMATURE ASSY .INDUIT		1	1			
9	689–81810–11	.STATOR ASSY .STATOR COMPLET		1	1			
10	689–81840–11	.BRUSH HOLDER ASSY .SUPPORT DE CHARBON		1	1			
11	689–81811–11	..BRUSH 1 ..CHARBON 1		1	1			
12	689–81812–11	..BRUSH 2 ..CHARBON 2		1	1			
13	689–81813–10	..SPRING, BRUSH ..RESSORT, DE CHARBON		2	2			
14	689–81820–11	.REAR BRACKET ASSY .SUPPORT ARRIERE COMPLET		1	1			
15	689–81826–10	.BOLT .BOULON		2	2			
16	97013–08016	BOLT BOULON		1	1			
17	92903–08600	WASHER, PLATE RONDELLE, PLATE		1	1			
18	97013–08030	BOLT BOULON		2	2			
19	92903–08100	WASHER, SPRING RONDELLE, GROWER		2	2			
20	92903–08600	WASHER, PLATE RONDELLE, PLATE		2	2			
21	6J8–81822–01–94	BRACKET, STARTING MOTOR SUPPORT, DEMARREUR ELECTRIQUE		1	1			
22	90464–03M15	CLAMP BRIDE		1	1			
23	97013–08035	BOLT BOULON		2	2			
24	92903–08600	WASHER, PLATE RONDELLE, PLATE		2	2			
25	97013–08055	BOLT BOULON		1	1			
26	92903–08600	WASHER, PLATE RONDELLE, PLATE		1	1			
27	6J8–81337–10	COVER, FLYWHEEL COUVERCLE, VOLANT		1	1			

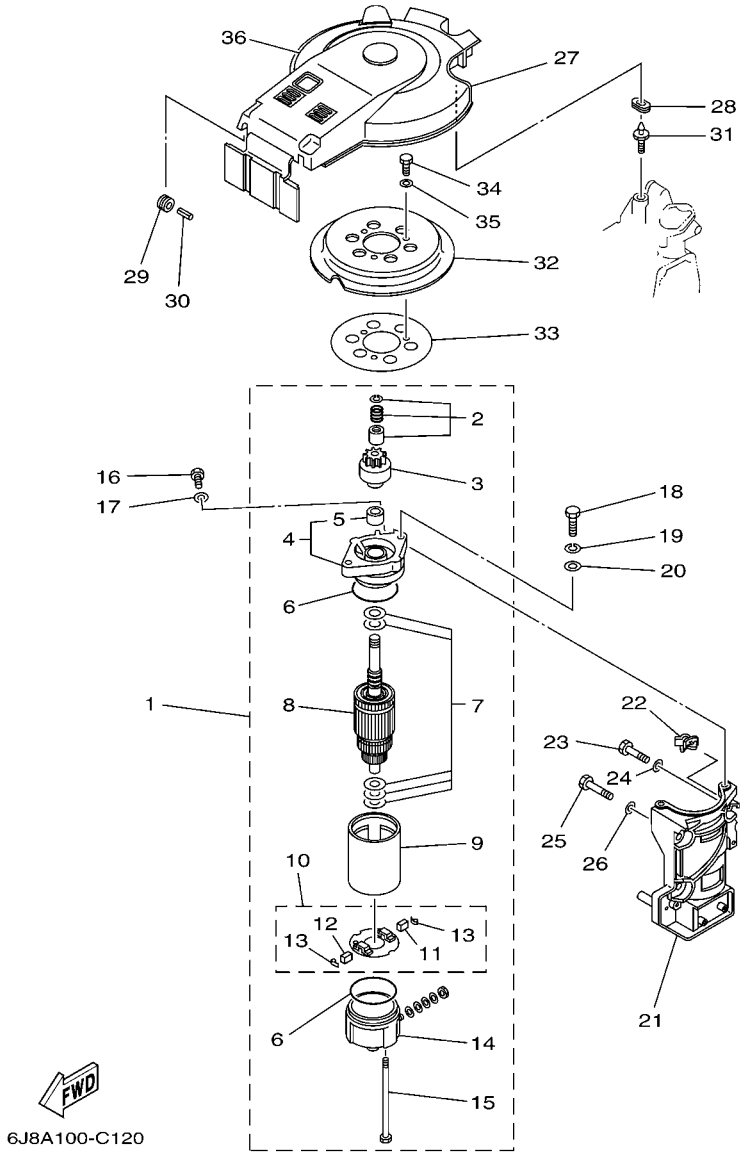

FIG. 13 STARTING MOTOR DEMARREUR ELECTRIQUE

REF. NO.	PART NO. N° PIECES	DESCRIPTION DESCRIPTION	MHO	EO	ETO			REMARKS REMARQUES
28	90480–14M17	GROMMET PASSE-FIL		1	1			
29	90480–10M16	GROMMET PASSE-FIL		2	2			
30	91690–50022	PIN, SPRING AGRAFFE		2	2			
31	6J8–81338–00	STAY SUPPORT		1	1			
32	6J8–15723–E1	PULLEY, STARTER POULIE DE DEMARREUR		1	1			
33	6J8–81365–A0	GASKET, HOLE COVER JOINT, COUVERCLE DE TROU		1	1			
34	97013–08014	BOLT BOULON		3	3			
35	92903–08600	WASHER, PLATE RONDELLE, PLATE		3	3			
36	6J8–13437–81	MARK, CAUTION MAKER		1	1			

FIG. 14 BOTTOM COWLING CAPOT INFERIEUR

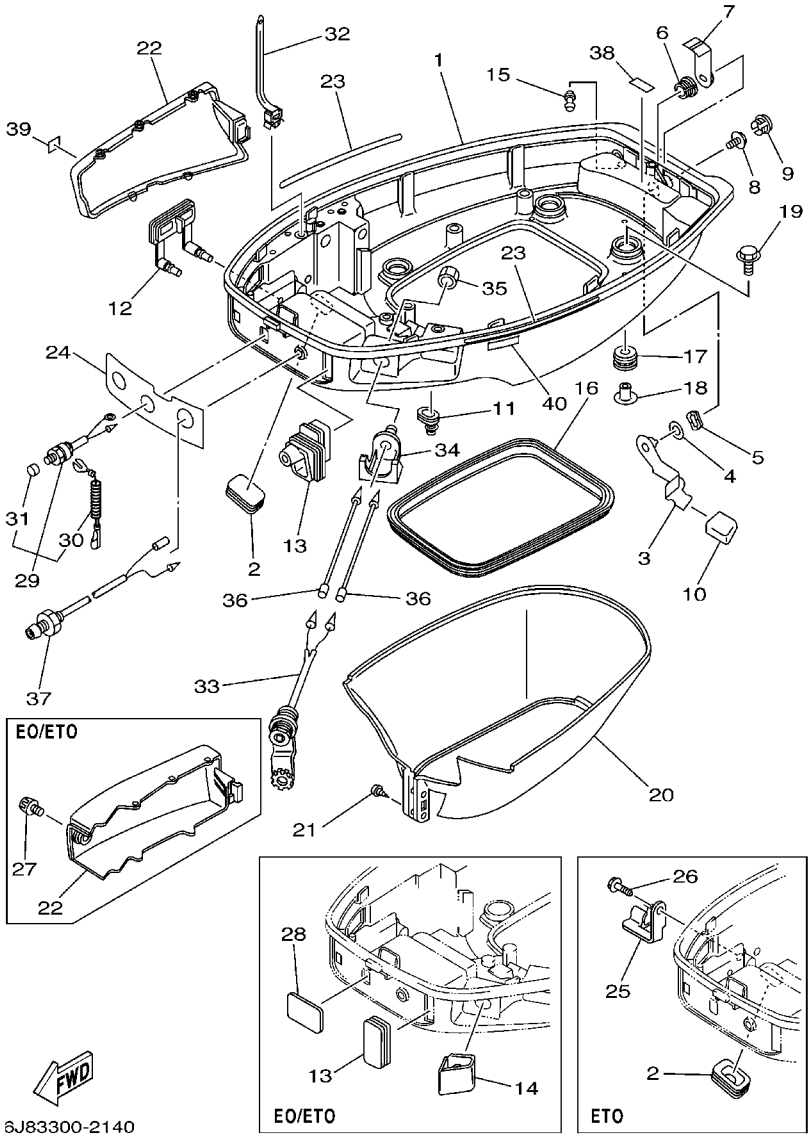

REF. NO.	PART NO. N° PIECES	DESCRIPTION DESCRIPTION	MHO	EO	ETO			REMARKS REMARQUES
1	6J8–42711–03–4D	COWLING, BOTTOM 1 CUVETTE 1	1	1	1			
2	6H4–42726–00	GROMMET PASSE-FIL	1	1				
	688–42726–10	GROMMET PASSE-FIL			1			
3	6J8–42815–00–4D	LEVER, CLAMP LEVIER, PRESSE	1	1	1			
4	90202–12M25	WASHER, PLATE RONDELLE, PLATE	1	1	1			
5	90206–12052	WASHER, WAVE RONDELLE, ONDULEE	1	1	1			
6	90386–12M61	BUSH DOUILLE	1	1	1			
7	6J8–42816–00	LEVER, CLAMP LEVIER, PRESSE	1	1	1			
8	95895–06012	BOLT, FLANGE BOULON	1	1	1			
9	6J8–42728–01	CAP CAPUCHON	1	1	1			
10	6J8–42831–00	BUSHING POULIE	1	1	1			
11	6G1–42727–00	GROMMET PASSE-FIL	1	1	1			
12	6J8–42724–00	GROMMET PASSE-FIL	1					
13	6J8–42726–00	GROMMET PASSE-FIL	1					
	6J8–42726–10	GROMMET PASSE-FIL		1	1			
14	6J8–42725–01	GROMMET PASSE-FIL		1	1			
15	6H3–44391–01	NIPPLE, HOSE RACCORD D'ESSENCE	1	1	1			
16	6J8–42716–00	RUBBER, SEAL 1 JOINT EN CAOUTCHOUC 1	1	1	1			
17	90480–09M21	GROMMET PASSE-FIL	4	4	4			
18	90387–06M41	COLLAR COLLERETTE	4	4	4			
19	90119–06M61	BOLT, WITH WASHER BOULON, AVEC RONDELLE	4	4	4			
20	6J8–42741–01	APRON CAPOT LATERAL	1	1	1			
21	90164–06M01	SCREW, TAPPING VIS, TETE FRAISEE	2	2	2			
22	6J8–42723–01	COVER, BOTTOM COUVERCLE	1					
	6J8–42723–51	COVER, BOTTOM COUVERCLE		1	1			
23	6J8–42735–00	PROTECTOR PROTECTEUR	2	2	2			
24	6J8–42719–20	PANEL, FRONT LOWER PANNEAU, AVANT INFERIEUR	1	1	1			

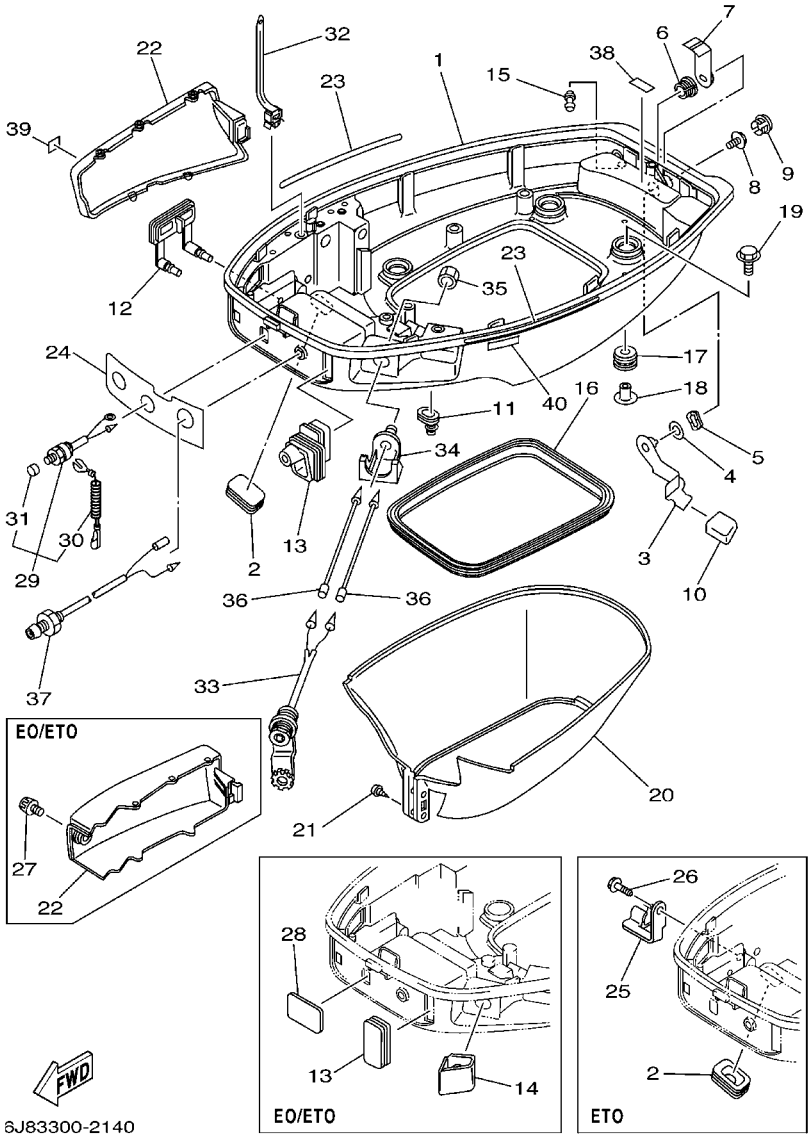

FIG. 14 BOTTOM COWLING CAPOT INFERIEUR

REF. NO.	PART NO. N° PIECES	DESCRIPTION DESCRIPTION	MHO	EO	ETO			REMARKS REMARQUES
25	90464–09M51	CLAMP BRIDE			1			
26	90109–06M86	BOLT BOULON			1			
27	6J8–42846–00	SCREW VIS		1	1			
28	6J8–42726–20	GROMMET PASSE-FIL		1	1			
29	689–82575–04	ENGINE STOP SWITCH ASSY COUPE CIRCUIT CPLT	1					
30	682–82556–00	.LANYARD, STOP SWITCH .PLAQUETTE	1					
31	689–8257Y–00	.CAP .CHAPEAU	1					
32	90465–13M76	CLAMP BRIDE		1	1			
33	682–84381–00	2P CONCENT RALLONGE 2 FILS	1					
34	6J8–84387–00	HOLDER SUPPORT	1					
35	663–82557–00	NUT ECROU	1					
36	6J8–82553–00	EXTENSION, WIRE LEAD EXTENSION, FAISCEAU	2					
37	6J8–85410–00	EMERGENCY SIGNAL LIGHT ASSY FEU DE DETRESSE	1	1	1			
38	6E7–42791–10	MARK 1 ETIQUETTE 1	1	1	1			
39	6A1–28176–00	LABEL, CAUTION ETIQUETTE, RECOMMANDATION	1	1	1			
40	6E3–8257H–00	PLATE, MARK PLAQUE, ADHESIF	1	1	1			

FIG. 15 STEERING DIRECTION

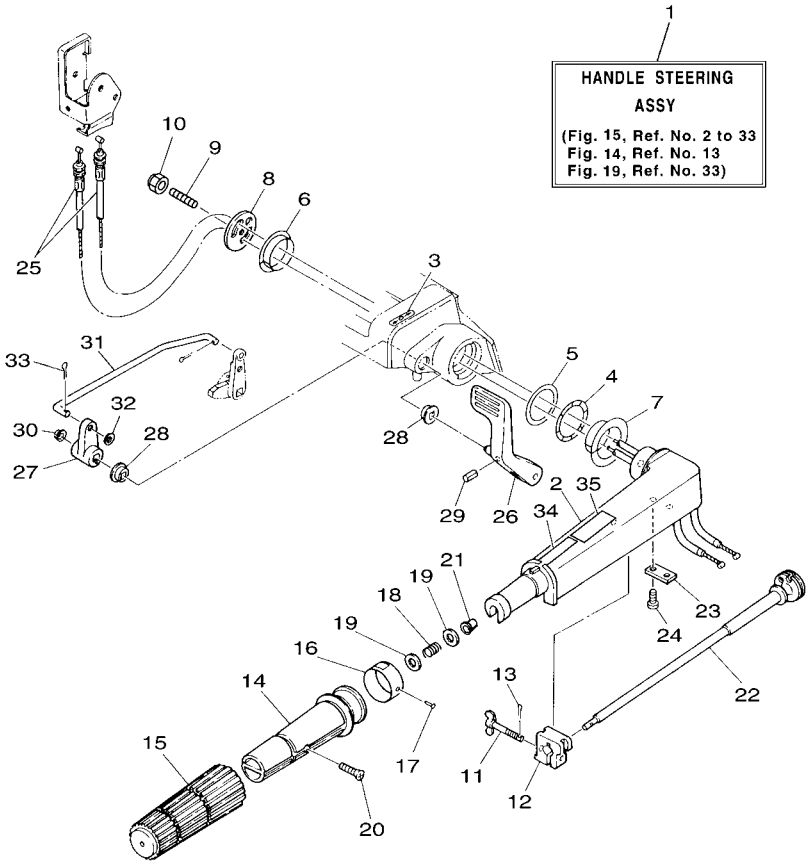

REF. NO.	PART NO. N° PIECES	DESCRIPTION DESCRIPTION	MHO	EO	ETO			REMARKS REMARQUES
1	6J8–W0084–11–4D	HANDLE STEERING ASSY BARRE FRANCHE (ENS.)	1					
2	6G1–42111–12–4D	HANDLE, STEERING POIGNEE	1					
3	6E0–44191–11	INDICATOR, SHIFT ETIQUETTE, EMBRAYAGE	1					
4	90206–36M21	WASHER, WAVE RONDELLE, ONDULEE	1					
5	90202–36M55	WASHER, PLATE RONDELLE, PLATE	1					
6	90386–33M96	BUSH DOUILLE	1					
7	90386–34M97	BUSH DOUILLE	1					
8	6G1–42131–02	COVER, HANDLE STEERING COUVERCLE	1					
9	90116–08016	BOLT, STUD GOUJON	1					
10	90185–08057	NUT, SELF-LOCKING ECROU,AUTO-BLOQUANT	1					
11	6G1–42125–01	BOLT, FRICTION ADJUSTING BOULON	1					
12	6G1–42126–00	FRICTION, STEERING HANDLE GRIP CUVETTE, POIGNEE DE DIRECTION	1					
13	91490–16010	PIN, COTTER GOUPILLE	1					
14	664–42119–00	GRIP, STEERING HANDLE POIGNEE, BARRE FRANCHE	1					
15	6F6–42177–A0	RUBBER, HANDLE CAOUTCHOUC, POIGNEE	1					
16	6J8–42137–00	INDICATOR, THROTTLE INDICATEUR, ACCELERATION	1					
17	90269–02M09	RIVET RIVET	1					
18	90501–23215	SPRING, COMPRESSION RESSORT, COMPRESSION	1					
19	90201–10M02	WASHER, PLATE RONDELLE, PLATE	2					
20	90149–05M13	SCREW VIS	1					
21	90386–08032	BUSH DOUILLE	1					
22	6G1–42138–01	LEVER, THROTTLE LEVIER, ACCELERATEUR	1					
23	6E0–42159–02	STAY SUPPORT	1					
24	97885–05012	SCREW, PAN HEAD VIS, A ENCOCHE	2					
25	6J8–26301–00	THROTTLE CABLE ASSY CABLE D'ACCELERATEUR	2					
26	6J8–44111–01–4D	HANDLE, GEAR SHIFT POIGNEE, LEVIER D'EMBRAYAGE	1					
27	6J8–44125–00	LEVER, SHIFT ROD LEVIER, TIGE D'INVERSION	1					

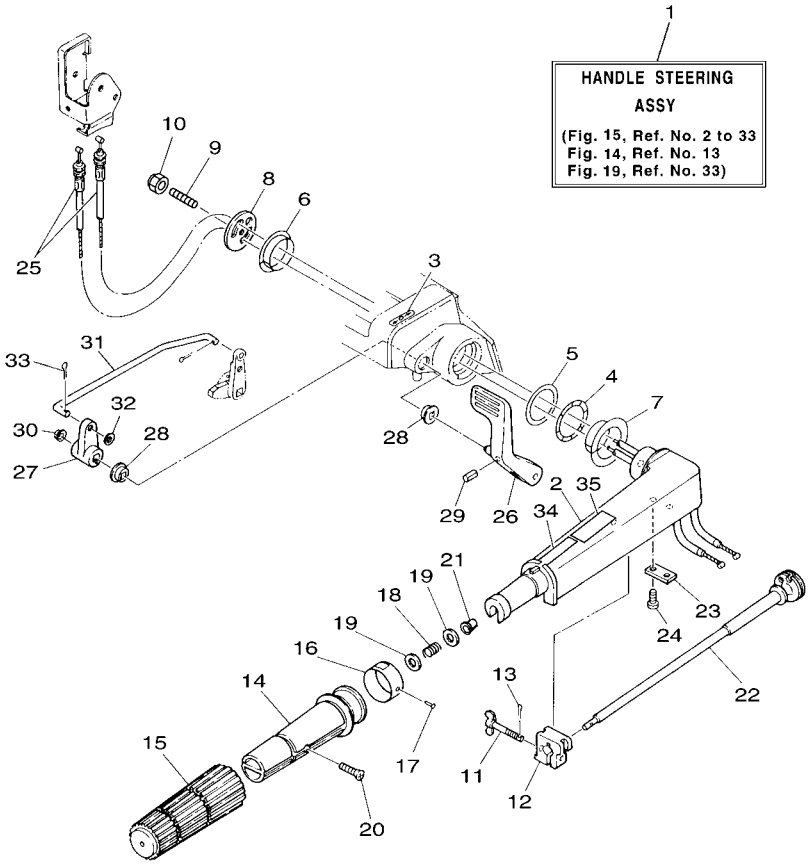

FIG. 15 STEERING — DIRECTION

REF. NO.	PART NO. N° PIECES	DESCRIPTION DESCRIPTION	MHO	EO	ETO			REMARKS REMARQUES
28	682–44132–00	BUSHING COUSSINET	2					
29	90254–03M04	PIN, SPRING RIVET, TETE TRONCONIQUE	1					
30	90386–06M12	BUSH DOUILLE	1					
31	6J8–44124–00	LINK, SHIFT ROD BIELLETTE	1					
32	92990–06200	WASHER, PLAIN RONDELLE, PLATE	1					
33	91490–20012	PIN, COTTER GOUPILLE	1					
34	6E0–83627–41	LABEL, CAUTION 7 ETIQUETTE, RECOMMANDATION 7	1					
35	6E0–83627–51	LABEL, CAUTION 7 ETIQUETTE, RECOMMANDATION 7	1					

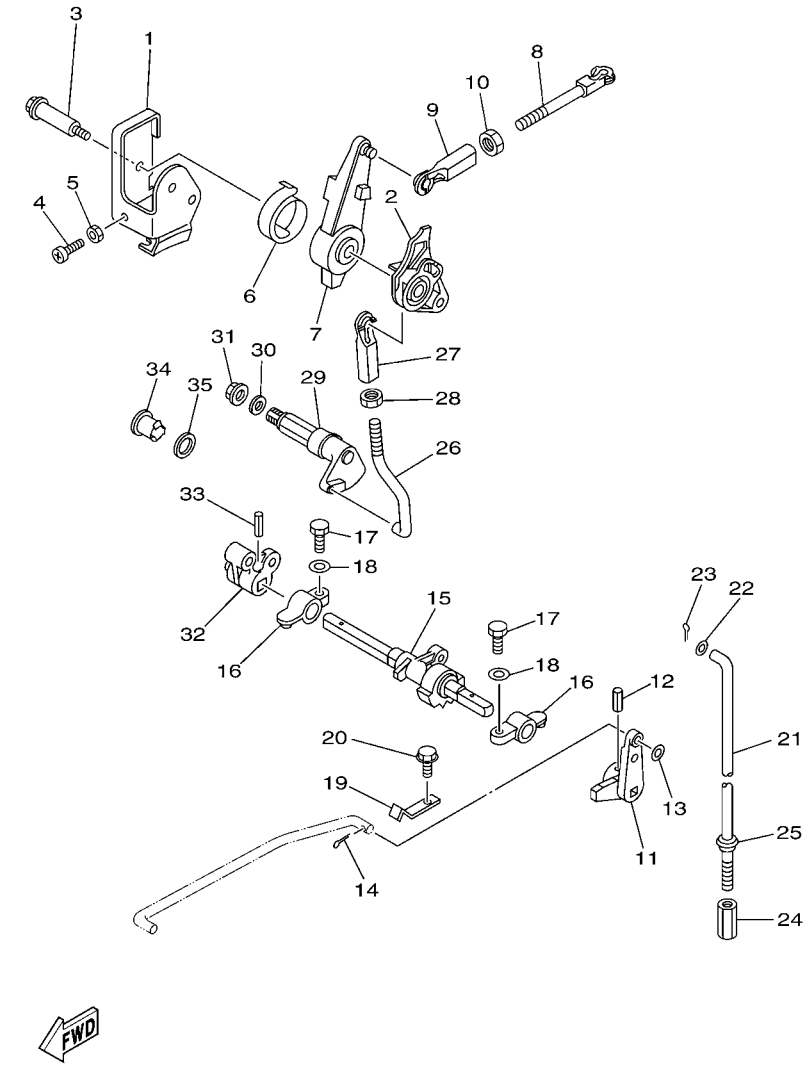

6J8L300-F160

FIG. 16 CONTROL 1 COMMANDE 1

REF. NO.	PART NO. N° PIECES	DESCRIPTION DESCRIPTION	MHO	EO	ETO			REMARKS REMARQUES
1	6J8–14497–00	STAY, THROTTLE WIRE SUPPORT DE BOISSEAU	1	1	1			
2	6J8–41213–00	CAM, ACCEL. CAME, ACCELERATION	1	1	1			
3	90109–06M28	BOLT BOULON	1	1	1			
4	97880–06025	SCREW, PAN HEAD VIS, TETE TRONCONIQUE	1	1	1			
5	95303–06600	NUT ECROU	1	1	1			
6	6J8–42167–00	SPRING 1 RESSORT1	1	1	1			
7	6J8–41631–02	LEVER, MAGNETO CONTROL LEVIER, COMMANDE D'AVANCE	1	1	1			
8	689–42169–01	JOINT AXE	1	1	1			
9	682–41237–00	JOINT, LINK RACCORD	1	1	1			
10	95380–05600	NUT ECROU	1	1	1			
11	6J8–44123–00	ARM, SHIFT ROD BRAS, TIGE D'INVERSION	1	1	1			
12	90254–03M04	PIN, SPRING RIVET, TETE TRONCONIQUE	1	1	1			
13	92990–06200	WASHER, PLAIN RONDELLE, PLATE	1					
14	91490–20012	PIN, COTTER GOUPILLE	1					
15	6J8–44121–00	LEVER, SHIFT ROD LEVIER, TIGE D'INVERSION	1	1	1			
16	6G1–41662–01–94	BRACKET SUPPORT	2	2	2			
17	97013–06020	BOLT BOULON	2	2	2			
18	92903–06600	WASHER, PLATE RONDELLE, PLATE	2	2	2			
19	6J8–44116–00	SPRING RESSORT	1	1	1			
20	95895–06012	BOLT, FLANGE BOULON	1	1	1			
21	6J8–44143–00	ROD, SHIFT TIGE D'EMBRAYAGE	1	1	1			
22	92990–05600	WASHER, PLATE RONDELLE, PLATE	1	1	1			
23	91490–16010	PIN, COTTER GOUPILLE	1	1	1			
24	90170–06015	NUT ECROU	1	1	1			
25	689–43373–01	SEAL, DAMPER JOINT	1	1	1			
26	6J8–42192–00	ROD 2 TRINGLE 2	1	1	1			
27	682–41237–00	JOINT, LINK RACCORD	1	1	1			

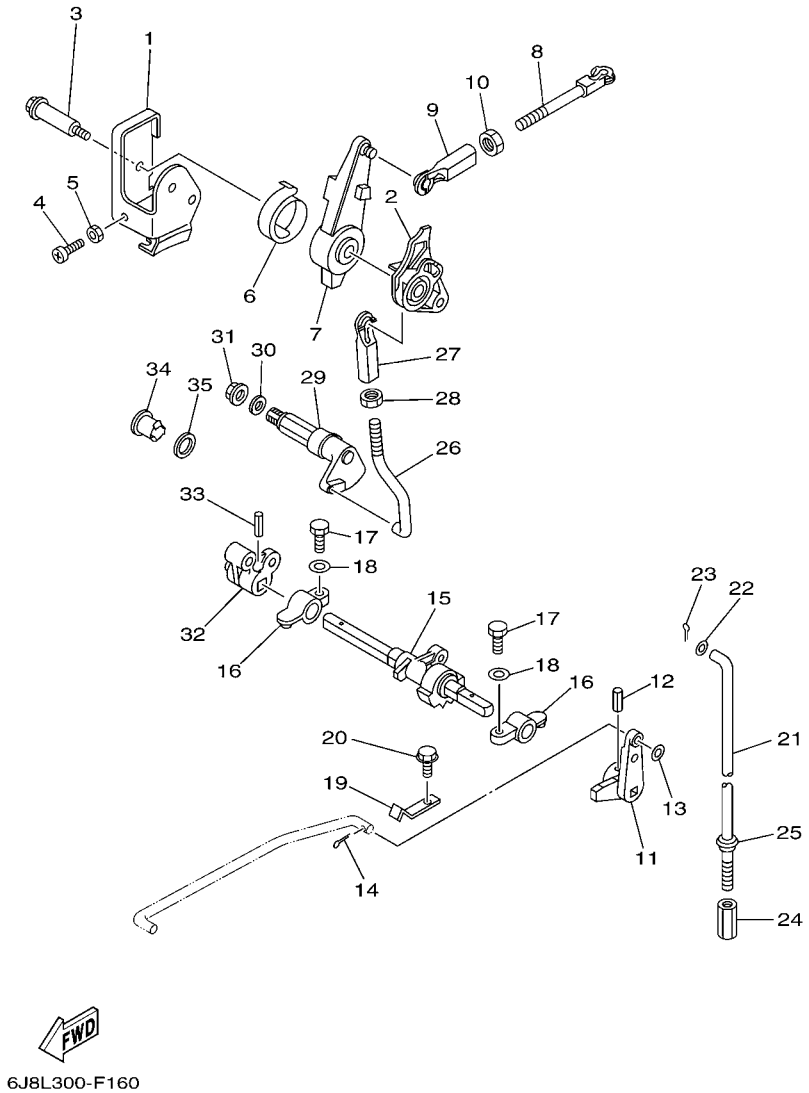

FIG. 16 CONTROL 1 COMMANDE 1

REF. NO.	PART NO. N° PIECES	DESCRIPTION DESCRIPTION	MHO	EO	ETO			REMARKS REMARQUES
28	95380–05600	NUT ECROU	1	1	1			
29	6J8–42154–01	LEVER, THROTTLE CONTROL LEVIER DE COMMANDE D'AVANCE	1	1	1			
30	90202–10024	WASHER, PLATE RONDELLE, PLATE	1	1	1			
31	95780–08300	NUT, FLANGE ECROU	1	1	1			
32	6J8–44142–00	JOINT AXE	1	1	1			
33	90254–03M04	PIN, SPRING RIVET, TETE TRONCONIQUE	1	1	1			
34	682–42726–00	GROMMET PASSE-FIL	1					
35	90202–12M17	WASHER, PLATE RONDELLE, PLATE	1					

FIG. 17 CONTROL 2 COMMANDE 2

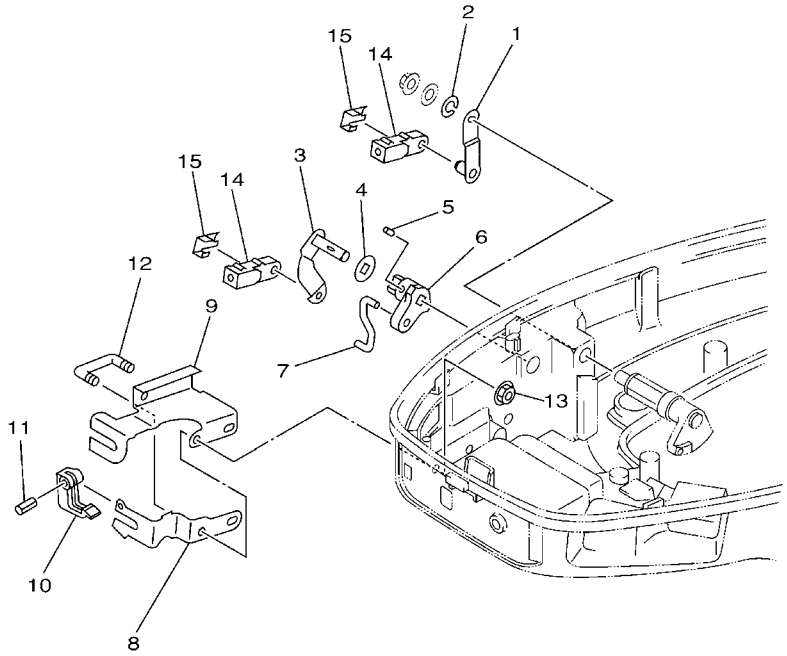

6J80010-9180

REF. NO.	PART NO. N° PIECES	DESCRIPTION DESCRIPTION	MHO	EO	ETO			REMARKS REMARQUES
1	6J8–48534–00	THROTTLE LEVER, CONTROL LEVIER D'ACCELERATION		1	1			
2	92990–08100	WASHER, SPRING RONDELLE, GROWER		1	1			
3	6J8–48544–01	LEVER, SHIFTCONTROL POIGNEE, INVERSION		1	1			
4	6J8–44177–00	WASHER RONDELLE		1	1			
5	90254–03M03	PIN, SPRING RIVET, TETE TRONCONIQUE		1	1			
6	6J8–44173–02	LEVER, SHIFT CONTROL POIGNEE, INVERSION		1	1			
7	6J8–42169–01	JOINT AXE		1	1			
8	6J8–48531–00	BRACKET, REMOTE CONTROL 1 ETRIER 1, COMMANDE A DISTANCE		1	1			
9	6J8–48532–00	BRACKET, REMOTE CONTROL 2 ETRIER 2, COMMANDE A DISTANCE		1	1			
10	682–48538–50	CLAMP, CABLE 1 COLLIER		1	1			
11	91690–30012	PIN, SPRING AGRAFFE		1	1			
12	90109–06M29	BOLT BOULON		1	1			
13	90179–06M24	NUT ECROU		2	2			
14	6G8–26363–00	END, WIRE 1 EMBOUT DE CABLE		2	2			
15	6G8–26364–00	END, CABLE EMBOUT, DE CABLE		2	2			

FIG. 18 REMO CON ATTACHMENT COMMANDE A DISTANCE

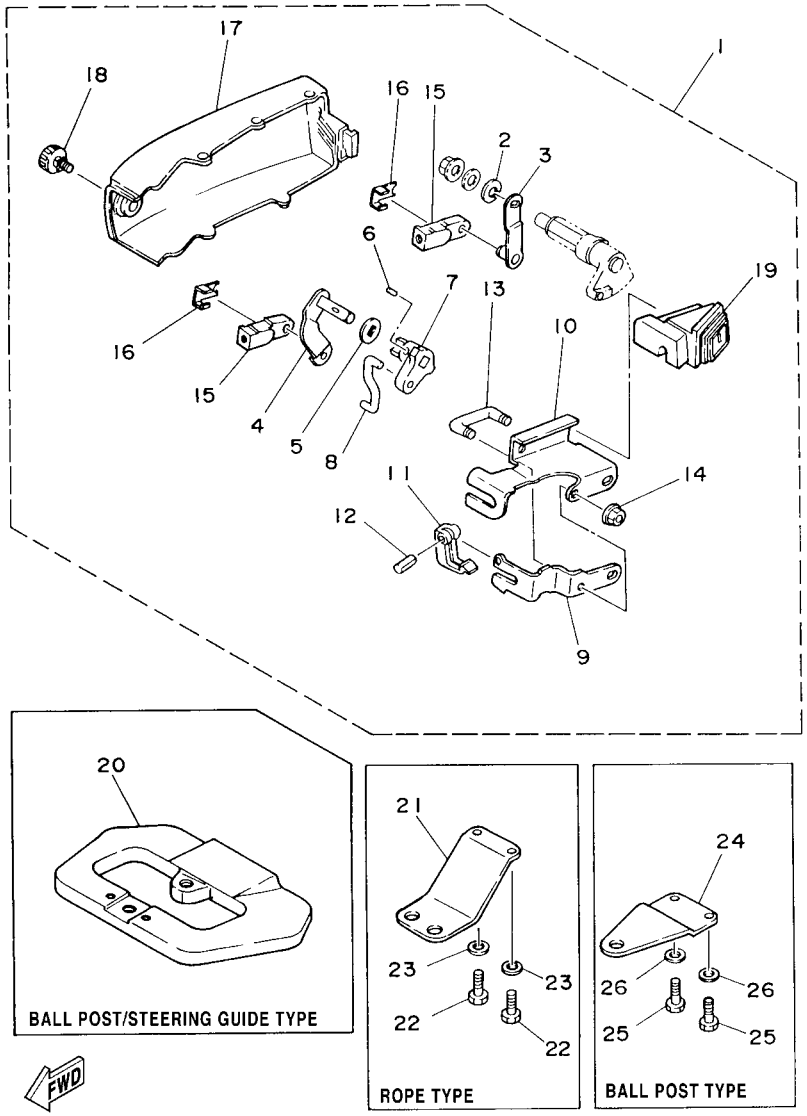

REF. NO.	PART NO. N° PIECES	DESCRIPTION DESCRIPTION	MHO	EO	ETO			REMARKS REMARQUES
1	6J8–48501–03–4D	REMOTE CONT. ATTACHMENT ASSY. COMMANDE A DISTANCE (KIT)	1					AP AP
	6J8–48501–11	REMOTE CONT. ATTACHMENT ASSY. COMMANDE A DISTANCE (KIT)	1					AP AP
2	92990–08100	.WASHER, SPRING .RONDELLE, GROWER	1					
3	6J8–48534–00	.THROTTLE LEVER, CONTROL .LEVIER D'ACCELERATION	1					
4	6J8–48544–01	.LEVER, SHIFTCONTROL .POIGNEE, INVERSION	1					
5	6J8–44177–00	.WASHER .RONDELLE	1					
6	90254–03M03	.PIN, SPRING .RIVET, TETE TRONCONIQUE	1					
7	6J8–44173–02	.LEVER, SHIFT CONTROL .POIGNEE, INVERSION	1					
8	6J8–42169–01	.JOINT .AXE	1					
9	6J8–48531–00	.BRACKET, REMOTE CONTROL 1 .ETRIER 1, COMMANDE A DISTANCE	1					
10	6J8–48532–00	.BRACKET, REMOTE CONTROL 2 .ETRIER 2, COMMANDE A DISTANCE	1					
11	682–48538–50	.CLAMP, CABLE 1 .COLLIER	1					
12	91690–30012	.PIN, SPRING .AGRAFFE	1					
13	90109–06M29	.BOLT .BOULON	1					
14	90179–06M24	.NUT .ECROU	2					
15	6G8–26363–00	.END, WIRE 1 .EMBOUT DE CABLE	2					
16	6G8–26364–00	.END, CABLE .EMBOUT, DE CABLE	2					
17	6J8–42723–51	.COVER, BOTTOM .COUVERCLE	1					
18	6J8–42846–00	.SCREW .VIS	1					
19	6J8–42724–10	.GROMMET .PASSE-FIL	1					
20	6J8–48511–01–4D	HOOK, STEERING ATTACHE, DIRECTION	1					AP AP
21	6G8–48511–00	HOOK, STEERING ATTACHE, DIRECTION	1					AP ROPE TYPE AP ROPE TYPE
22	97095–06016	BOLT BOULON	2					AP AP
23	92995–06600	WASHER RONDELLE	2					AP AP
24	6G8–48511–10	HOOK, STEERING ATTACHE, DIRECTION	1					AP BALL POST TYPE AP BALL POST TYPE
25	97095–06016	BOLT BOULON	2					AP AP
26	92995–06600	WASHER RONDELLE	2					AP AP

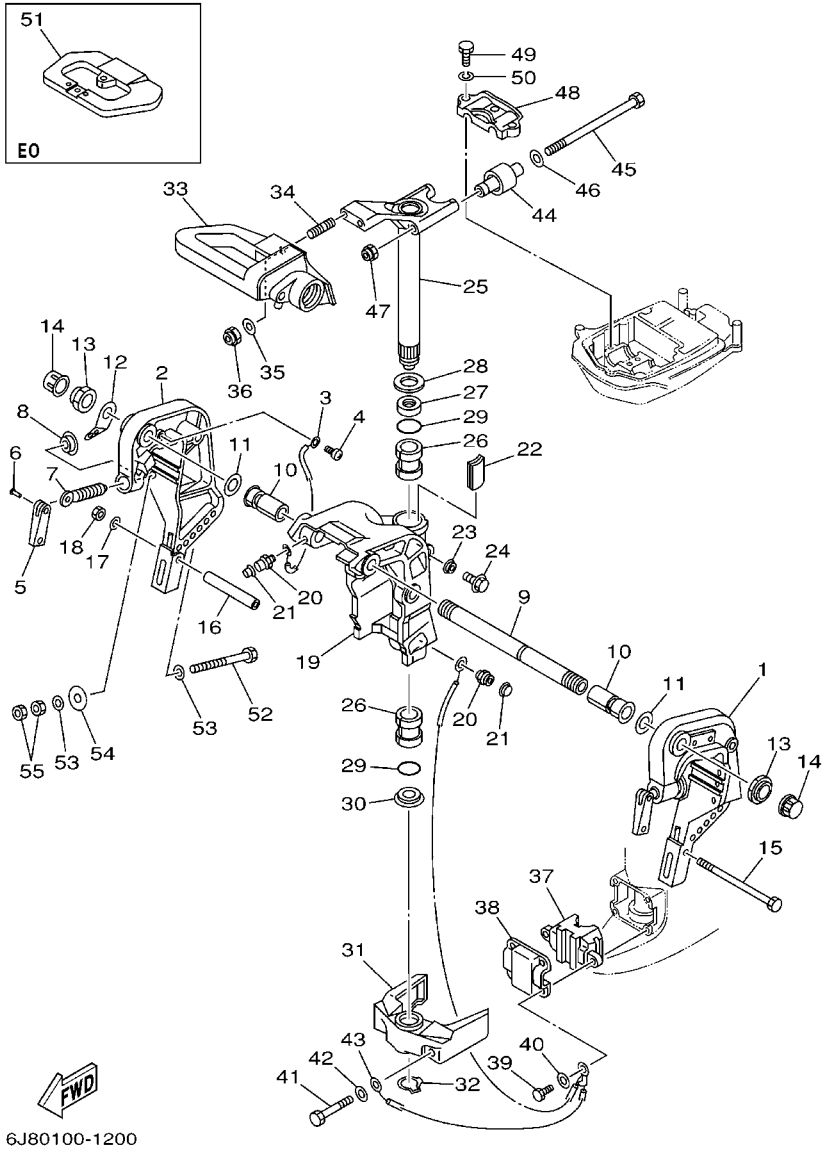

FIG. 19 BRACKET 1 SUPPORT 1

REF. NO.	PART NO. N° PIECES	DESCRIPTION DESCRIPTION	MHO	EO	ETO			REMARKS REMARQUES
1	6H4–43111–05–4D	BRACKET, CLAMP 1 PRESSE 1	1	1				
2	6H4–43112–04–4D	BRACKET, CLAMP 2 PRESSE 2	1	1				
3	6E5–82148–00	WIRE, LEAD 4 FIL 4	1	1				
4	97885–06008	SCREW, PAN HEAD VIS, A ENCOCHE	1	1				
5	6E0–43118–01	HANDLE, TRANSOM CLAMP POIGNEE DE VIS DE PRESSE	2	2				
6	90243–04M01	PIN GOUPILLE	2	2				
7	90149–14M12	SCREW VIS	2	2				
8	648–43114–01	PAD, TRANSOM CLAMP RONDELLE D'APPUI	2	2				
9	6J8–43131–01	BOLT, CLAMP BRACKET BOULON, PRESSE	1	1				
10	90386–22M69	BUSH DOUILLE	2	2				
11	90201–22M03	WASHER, PLATE RONDELLE, PLATE	2	2				
12	6J8–43113–01	PLATE, CLAMP BRACKET PLAQUETTE, PRESSE	1	1				
13	90185–22043	NUT, SELF-LOCKING ECROU,AUTO-BLOQUANT	2	2				
14	6G5–43145–01	CAP, CLAMP BRACKET CAPUCHON, PRESSE	2	2				
15	90101–08339	BOLT BOULON	1	1				
16	90387–08M03	COLLAR COLLERETTE	1	1				
17	92990–08600	WASHER, PLATE RONDELLE, PLATE	1	1				
18	95380–08600	NUT ECROU	1	1				
19	6J8–43311–04–4D	BRACKET, SWIVEL 1 SUPPORT, PIVOT 1	1	1				
20	93700–06M03	NIPPLE, GREASE PION	3	3				
21	663–45119–00	CAP, GREASE NIPPLE CAPUCHON, GRAISSEUR	3	3				AP AP
22	6J8–42528–00	PLATE, FRICTION PLAQUE, FRICTION	1	1				
23	689–43373–01	SEAL, DAMPER JOINT	1	1				
24	90105–06M18	BOLT, FLANGE BOULON	1	1				
25	6J8–42510–03–4D	STEERING BRACKET ASSY DIRECTION SUPPORT (ENS.)	1	1				
26	90386–30M77	BUSH DOUILLE	2	2				
27	90386–30M78	BUSH DOUILLE	1	1				

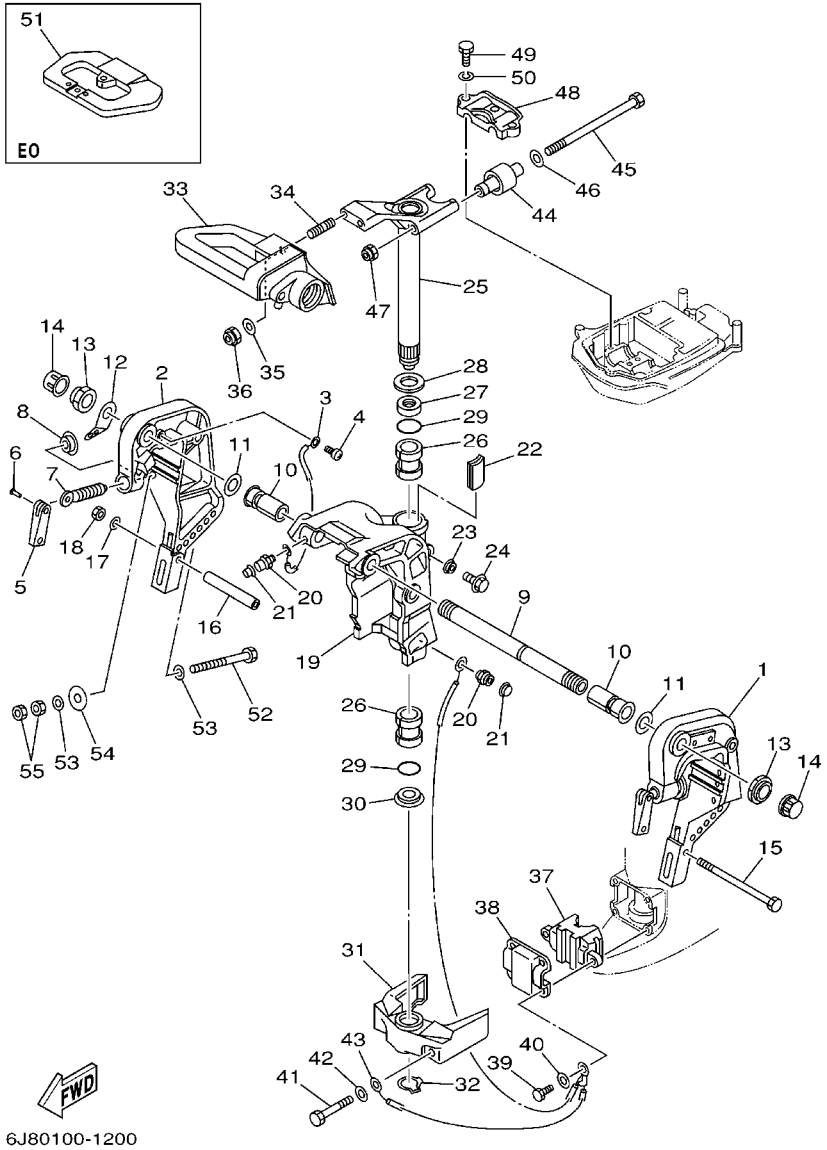

FIG. 19 BRACKET 1 SUPPORT 1

REF. NO.	PART NO. N° PIECES	DESCRIPTION DESCRIPTION	MHO	EO	ETO			REMARKS REMARQUES
28	90201–30M00	WASHER, PLATE RONDELLE, PLATE	1	1				
29	93210–29M94	O-RING JOINT TORIQUE	2	2				
30	90386–30M60	BUSH DOUILLE	1	1				
31	6H4–44551–02–4D	HOUSING, LOWER MOUNT RUBBER BOITIER, SILENT-BLOC INFERIEUR	1	1				
32	93410–28M06	CIRCLIP CLIPS	1	1				
33	6J8–42121–03–4D	BRACKET SUPPORT	1					
34	90116–10M28	BOLT, STUD GOUJON	2	2				
35	92995–10600	WASHER RONDELLE	2	2				
36	90185–10051	NUT, SELF-LOCKING ECROU,AUTO-BLOQUANT	2	2				
37	6H4–44557–00	MOUNT DAMPER, LOWER FRONT SILENT-BLOC, INFERIEUR AVANT	1	1				S(16.7") S(16.7")
	6H4–44557–10	MOUNT DAMPER, LOWER FRONT SILENT-BLOC, INFERIEUR AVANT	1	1				L(21.5") L(21.5")
38	6H4–44553–01	COVER, LOWER MOUNT COUVERCLE, SUSPENSION INFERIEU	1	1				
39	97095–08025	BOLT BOULON	4	4				
40	92995–08600	WASHER RONDELLE	4	4				
41	97095–10060	BOLT BOULON	2	2				
42	92995–10600	WASHER RONDELLE	2	2				
43	6H4–82127–00	WIRE, LEAD 2 FIL 2	1	1				
44	6H4–44514–00	MOUNT DAMPER, UPPER SIDE SILENT-BLOC, SUPERIEUR LATERAL	2	2				
45	90109–08M26	BOLT BOULON	2	2				
46	90201–09425	WASHER, PLATE RONDELLE, PLATE	2	2				
47	90185–08045	NUT, SELF-LOCKING ECROU,AUTO-BLOQUANT	2	2				
48	6J8–44511–00–4D	COVER, UPPER MOUNT COUVERCLE, SUSPENSION SUPERIEU	1	1				
49	97075–08035	BOLT BOULON	3	3				
50	92995–08100	WASHER RONDELLE	3	3				
51	6J8–48511–01–4D	HOOK, STEERING ATTACHE, DIRECTION		1				
52	90101–10M58	BOLT BOULON		4				
53	92995–10600	WASHER RONDELLE		8				

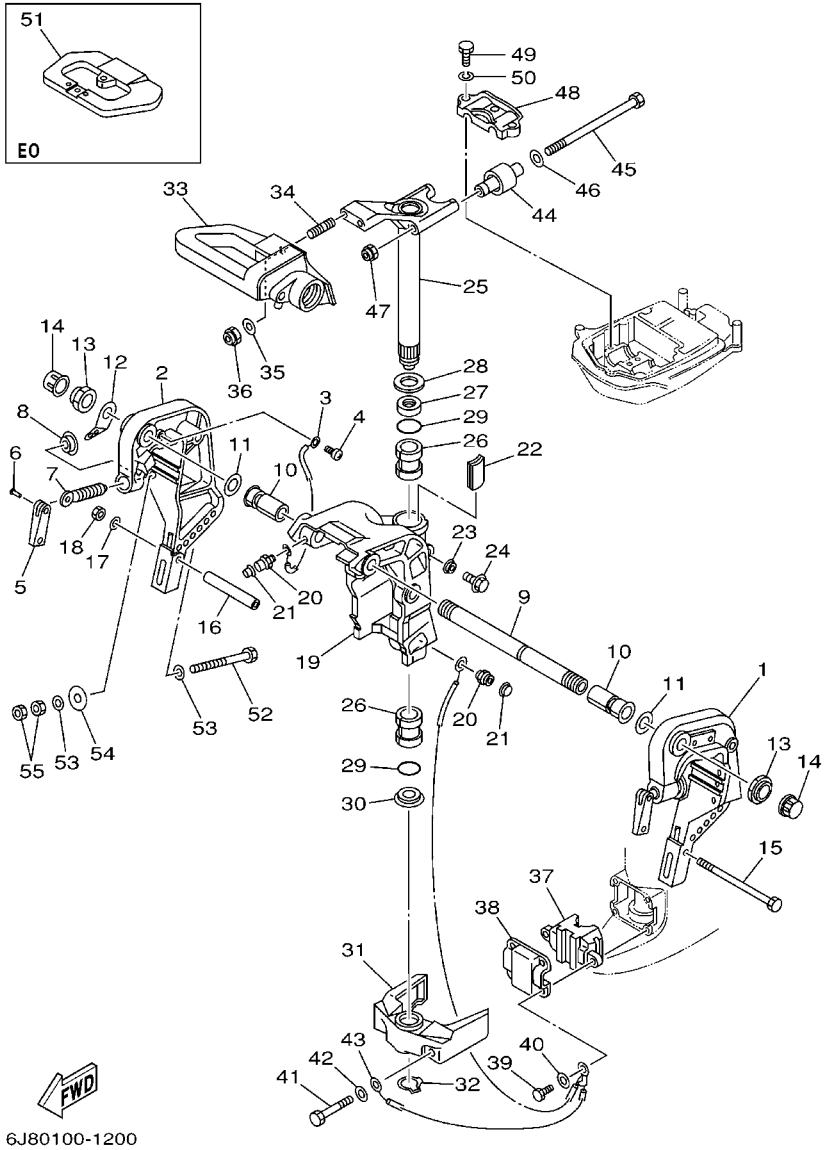

FIG. 19 BRACKET 1 SUPPORT 1

REF. NO.	PART NO. N° PIECES	DESCRIPTION DESCRIPTION	MHO	EO	ETO			REMARKS REMARQUES
54	90201–12426	WASHER, PLATE RONDELLE, PLATE		4				
55	95380–10600	NUT ECROU		8				

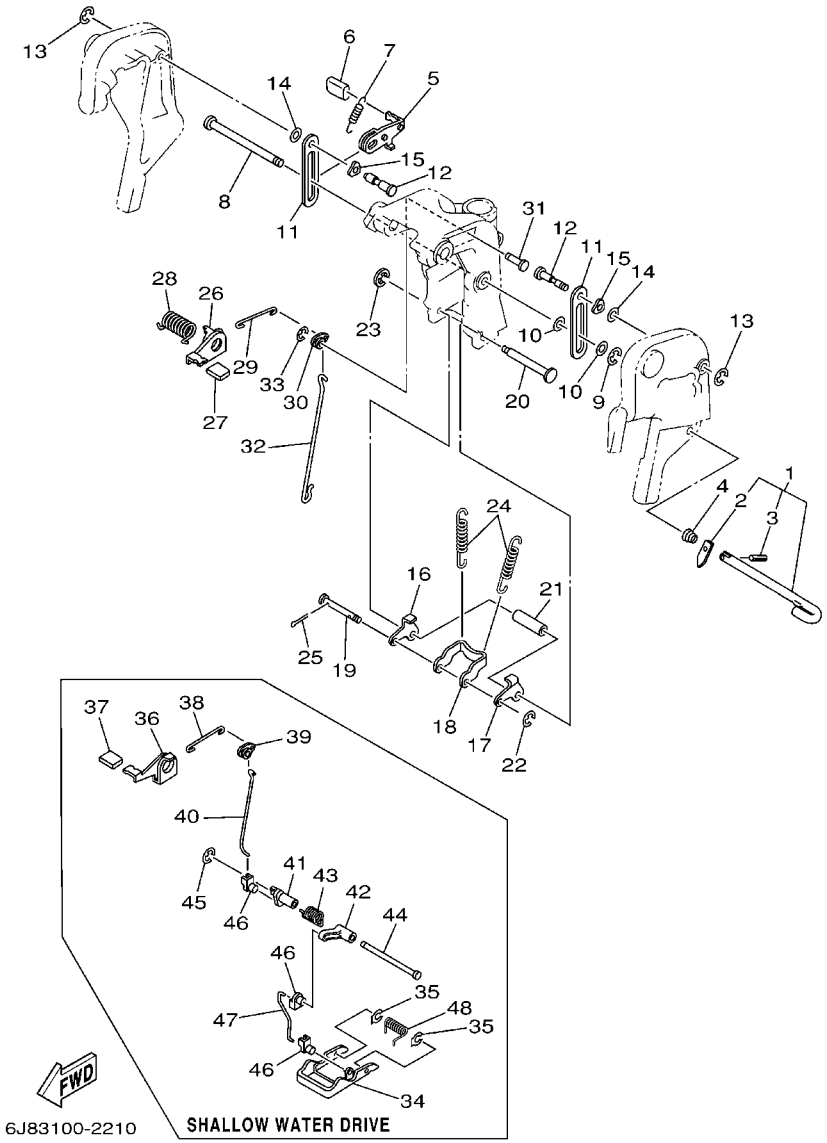

6J83100-2210

FIG. 20 BRACKET 2 — SUPPORT 2

REF. NO.	PART NO. N° PIECES	DESCRIPTION DESCRIPTION	MHO	EO	ETO			REMARKS REMARQUES
1	6H4–43160–01	TILT ROD ASSY BROCHE D'INCLINAISON (ENS.)	1	1				
2	676–43165–00	.PLATE, TILT LOCK .TAQUET, BROCHE INCLINAISON	1	1				
3	91690–30010	.PIN, SPRING .AGRAFFE	1	1				
4	90502–10M04	SPRING, CONICAL RESSORT, CONIQUE	1	1				
5	6J8–43181–01	LEVER, TILT STOP LEVIER, VERROUILLAGE RELEVAGE	1	1				
6	682–43318–01	COVER CAPUCHON	1	1				
7	90506–12M25	SPRING, TENSION RESSORT, TENSION	1	1				
8	90249–12M28	PIN GOUPILLE	1	1				
9	93430–10M00	CIRCLIP CLIPS	1	1				
10	90202–12031	WASHER, PLATE RONDELLE, PLATE	2	2				
11	6J8–43627–00	STOPPER PLAQUETTE	2	2				
12	90249–12M27	PIN GOUPILLE	2	2				
13	93430–10M00	CIRCLIP CLIPS	2	2				
14	90202–12031	WASHER, PLATE RONDELLE, PLATE	2	2				
15	90206–12M16	WASHER, WAVE RONDELLE, ONDULEE	2	2				
16	6J8–43614–00	PLATE, TILT LOCK ETRIER, VERROUILLAGE MARCHE AR	1	1				
17	6J8–43615–00	PLATE, TILT LOCK ETRIER, VERROUILLAGE MARCHE AR	1	1				
18	6J8–43613–01	ARM, TILT LOCK GUIDE	1	1				
19	6H4–43659–00	SHAFT, REVERSE LOCK AXE, VERROUILLAGE MARCHE AR	1	1				
20	6J8–43611–01	SHAFT, TILT LOCK AXE, VERROUILLAGE MARCHE AR	1	1				
21	90387–07M64	COLLAR COLLERETTE	1	1				
22	93430–06M02	CIRCLIP CLIPS	1	1				
23	99080–05600	CIRCLIP CIRCLIP	1	1				
24	90506–32M22	SPRING, TENSION RESSORT, TENSION	2	2				
25	91490–20010	PIN, COTTER GOUPILLE	2	2				
26	6J8–43631–00	LEVER, TILT LEVIER, INCLINAISON	1	1				
27	6J8–43633–00	COVER, TILT LEVER COUVERCLE	1	1				

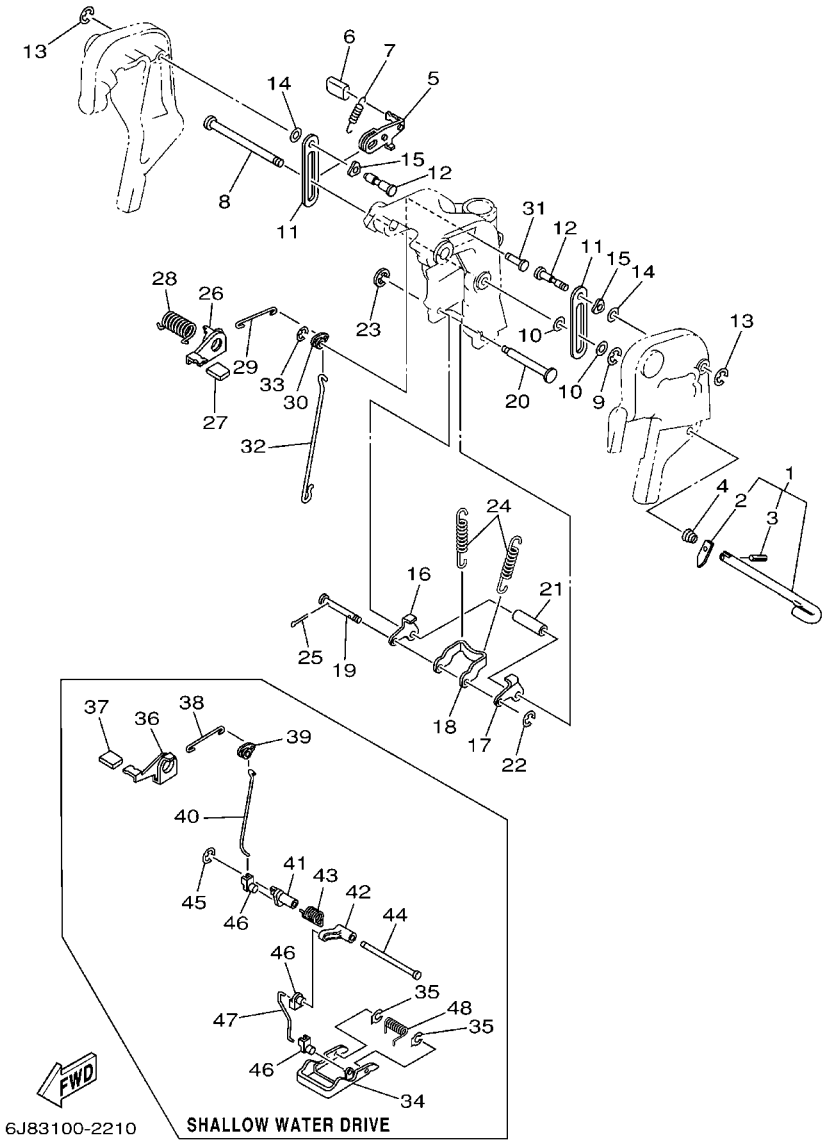

FIG. 20 BRACKET 2 SUPPORT 2

REF. NO.	PART NO. N° PIECES	DESCRIPTION DESCRIPTION	MHO	EO	ETO			REMARKS REMARQUES
28	90508–18M23	SPRING, TORSION RESSORT, TORSION	1	1				
29	6H4–43616–00	ROD, TILT LOCK TIGE	1	1				
30	6J8–43641–00	LEVER, TILT LEVIER, INCLINAISON	1	1				
31	90249–06M24	PIN GOUPILLE	1	1				
32	6J8–43617–00	ROD, TILT LOCK TIGE	1	1				
33	99080–05600	CIRCLIP CIRCLIP	1	1				
34	6J8–43681–01	LEVER, SHALLOW WATER DRIVE 1 LEVIER, PEU PROFOND D'EAU 1	1	1				
35	6J8–43673–00	WASHER 1 RONDELLE	2	2				
36	6J8–43631–10	LEVER, TILT LEVIER, INCLINAISON	1	1				
37	6J8–43633–00	COVER, TILT LEVER COUVERCLE	1	1				
38	6H4–43616–00	ROD, TILT LOCK TIGE	1	1				
39	6J8–43641–00	LEVER, TILT LEVIER, INCLINAISON	1	1				
40	6J8–43617–10	ROD, TILT LOCK TIGE	1	1				
41	6J8–43186–00	LEVER LEVIER	1	1				
42	6J8–43187–00	LEVER 2 LEVIER	1	1				
43	90508–25M21	SPRING, TORSION RESSORT, TORSION	1	1				
44	90249–07M25	PIN GOUPILLE	1	1				
45	99080–05600	CIRCLIP CIRCLIP	1	1				
46	6J8–41262–00	JOINT, CHOKE LEVER RACCORD, LEVIER DE STARTER	3	3				
47	6J8–43616–10	ROD, TILT LOCK TIGE	1	1				
48	90508–20M22	SPRING, TORSION RESSORT, TORSION	1	1				

FIG. 21 BRACKET 3 SUPPORT 3

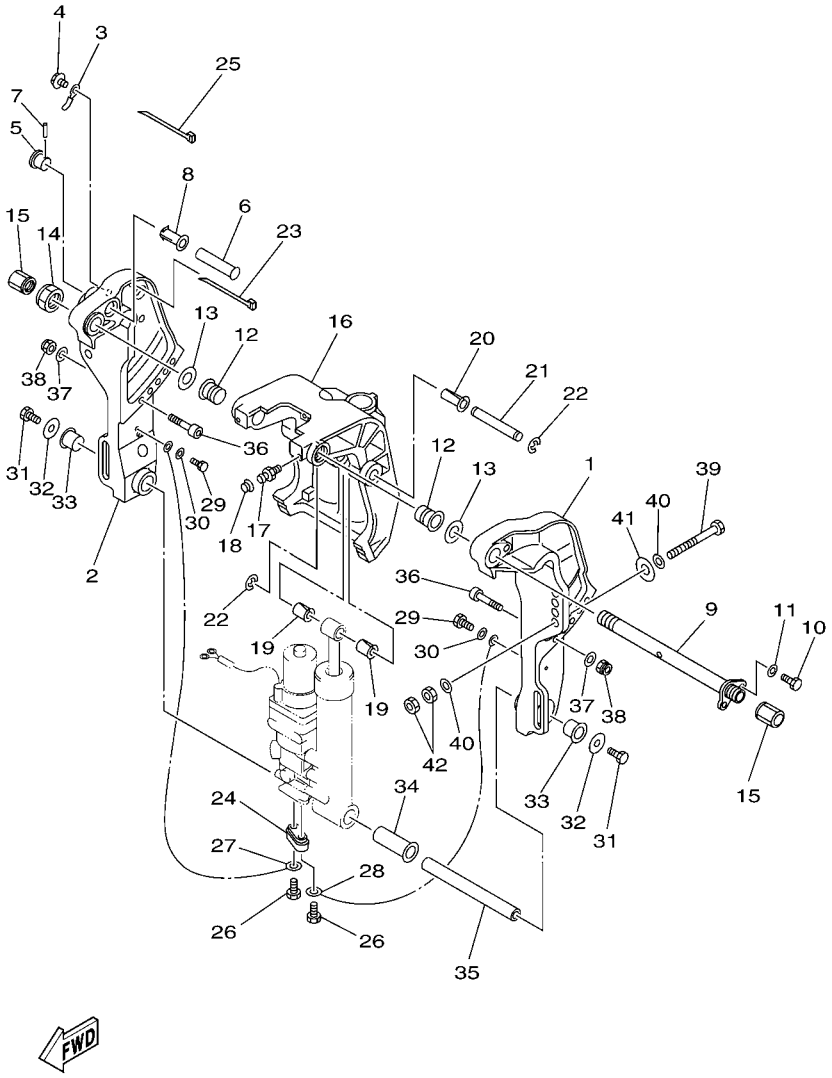

REF. NO.	PART NO. N° PIECES	DESCRIPTION DESCRIPTION	MHO	EO	ETO			REMARKS REMARQUES
1	6K9–43111–10–4D	BRACKET, CLAMP 1 PRESSE 1			1			
2	6K9–43112–10–4D	BRACKET, CLAMP 2 PRESSE 2			1			
3	90465–10M77	CLAMP BRIDE			1			
4	97595–06510	BOLT, WITH WASHER VIS HEXAGONAL AVC RONDELLE			1			
5	65W–43192–00	KNOB, STOPPER BOUTON, BUTEE DE RELEVAGE			1			
6	65W–43191–00	SHAFT, STOPPER AXE, BUTEE			1			
7	91690–30018	PIN, SPRING AGRAFFE			1			
8	90386–14MA1	BUSH DOUILLE			1			
9	6K9–43131–01	BOLT, CLAMP BRACKET BOULON, PRESSE			1			
10	97095–08020	BOLT BOULON			1			
11	92995–08100	WASHER RONDELLE			1			
12	90386–22M15	BUSH DOUILLE			2			
13	90201–22M03	WASHER, PLATE RONDELLE, PLATE			2			
14	90185–22M11	NUT, SELF-LOCKING ECROU,AUTO-BLOQUANT			1			
15	6G5–43145–01	CAP, CLAMP BRACKET CAPUCHON, PRESSE			2			
16	6K9–43311–01–4D	BRACKET, SWIVEL 1 SUPPORT, PIVOT 1			1			
17	93700–06M03	NIPPLE, GREASE PION			3			
18	663–45119–00	CAP, GREASE NIPPLE CAPUCHON, GRAISSEUR			3			AP AP
19	90386–12MA0	BUSH DOUILLE			2			
20	90386–12M98	BUSH DOUILLE			1			
21	90249–12M38	PIN GOUPILLE			1			
22	93430–10M00	CIRCLIP CLIPS			2			
23	90465–13M11	CLAMP BRIDE			2			
24	65W–45251–00	ANODE ANODE			1			
25	90465–11M10	CLAMP BRIDE			4			
26	90101–06020	BOLT BOULON			2			
27	6H1–82148–00	WIRE, LEAD 4 FIL 4			1			

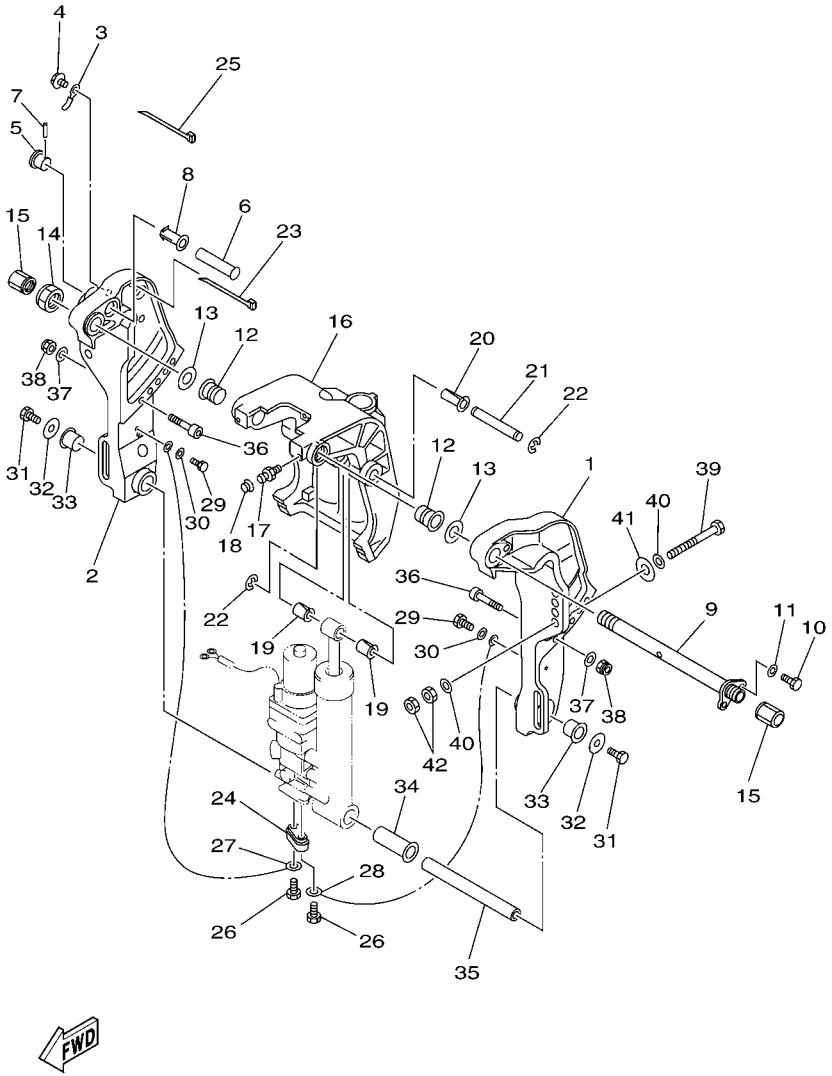

FIG. 21 BRACKET 3 SUPPORT 3

REF. NO.	PART NO. N° PIECES	DESCRIPTION DESCRIPTION	MHO	EO	ETO			REMARKS REMARQUES
28	6U0–82127–00	WIRE, LEAD 2 FIL 2			1			
29	97095–06014	BOLT BOULON			2			
30	92995–06600	WASHER RONDELLE			2			
31	97080–08016	BOLT BOULON			2			
32	90201–08M00	WASHER, PLATE RONDELLE, PLATE			2			
33	90386–18M44	BUSH DOUILLE			2			
34	90386–18MA0	BUSH DOUILLE			1			
35	90249–18M35	PIN GOUPILLE			1			
36	90110–10M02	BOLT, HEXAGON SOCKET HEAD BOULON, TETE HEXAGONALE CREUSE			2			
37	92995–10600	WASHER RONDELLE			2			
38	90185–10M13	NUT, SELF-LOCKING ECROU,AUTO-BLOQUANT			2			
39	90101–12M65	BOLT BOULON			4			
40	92995–12200	WASHER RONDELLE			8			
41	90201–12426	WASHER, PLATE RONDELLE, PLATE			4			
42	95380–12600	NUT ECROU			8			

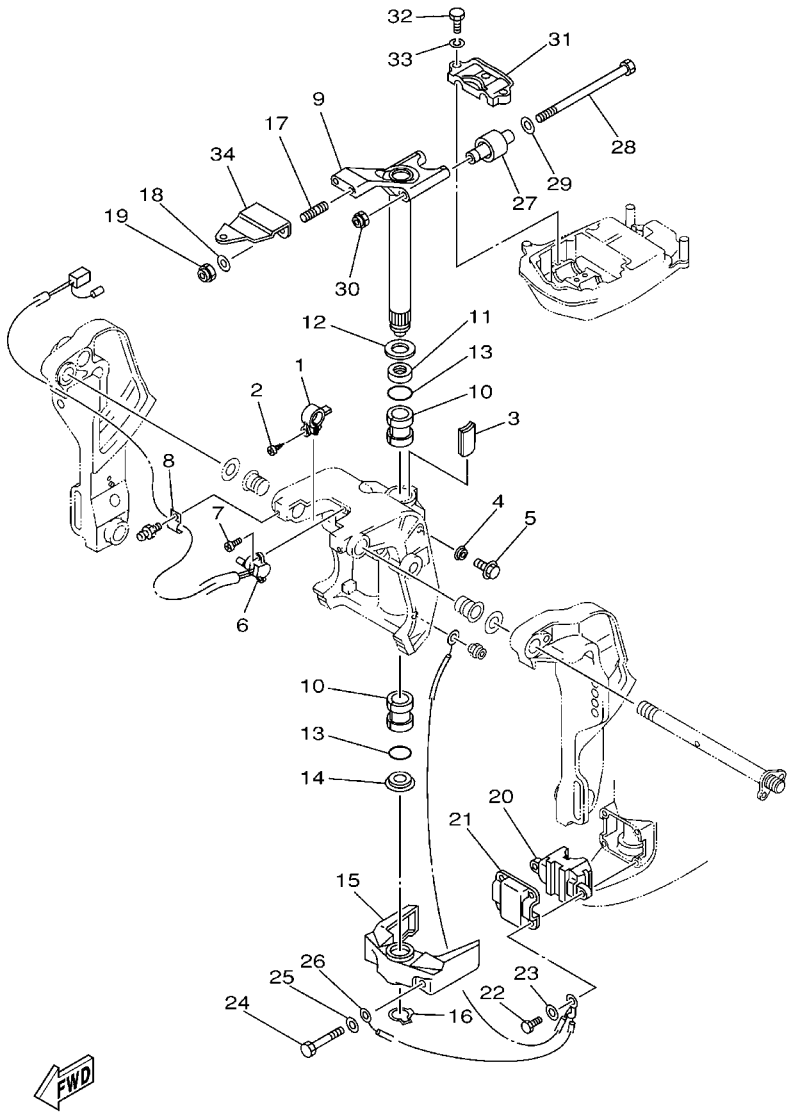

6J80010-9220

FIG. 22 BRACKET 4 — SUPPORT 4

REF. NO.	PART NO. N° PIECES	DESCRIPTION DESCRIPTION	MHO	EO	ETO			REMARKS REMARQUES
1	6K9–43139–01	CAM, TRIM SENDER VILEBREQUIN TRUM			1			
2	97780–60525	SCREW, TAPPING VIS, TETE BOMBEE			1			
3	6J8–42528–00	PLATE, FRICTION PLAQUE, FRICTION			1			
4	689–43373–01	SEAL, DAMPER JOINT			1			
5	90105–06M18	BOLT, FLANGE BOULON			1			
6	64E–83672–02	TRIM SENDER INCLINER RACCORD			1			
7	97885–06016	SCREW, PAN HEAD VIS, A ENCOCHE			2			
8	90465–08M63	CLAMP BRIDE			1			
9	6J8–42510–03–4D	STEERING BRACKET ASSY DIRECTION SUPPORT (ENS.)			1			
10	90386–30M77	BUSH DOUILLE			2			
11	90386–30M78	BUSH DOUILLE			1			
12	90201–30M00	WASHER, PLATE RONDELLE, PLATE			1			
13	93210–29M94	O-RING JOINT TORIQUE			2			
14	90386–30M60	BUSH DOUILLE			1			
15	6H4–44551–02–4D	HOUSING, LOWER MOUNT RUBBER BOITIER, SILENT-BLOC INFERIEUR			1			
16	93410–28M06	CIRCLIP CLIPS			1			
17	90116–10M28	BOLT, STUD GOUJON			2			
18	92995–10600	WASHER RONDELLE			2			
19	90185–10051	NUT, SELF-LOCKING ECROU,AUTO-BLOQUANT			2			
20	6H4–44557–10	MOUNT DAMPER, LOWER FRONT SILENT-BLOC, INFERIEUR AVANT			1			L(21.5") L(21.5")
21	6H4–44553–01	COVER, LOWER MOUNT COUVERCLE, SUSPENSION INFERIEU			1			
22	97095–08025	BOLT BOULON			4			
23	92995–08600	WASHER RONDELLE			4			
24	97095–10060	BOLT BOULON			2			
25	92995–10600	WASHER RONDELLE			2			
26	6H4–82127–00	WIRE, LEAD 2 FIL 2			1			
27	6H4–44514–00	MOUNT DAMPER, UPPER SIDE SILENT-BLOC, SUPERIEUR LATERAL			2			

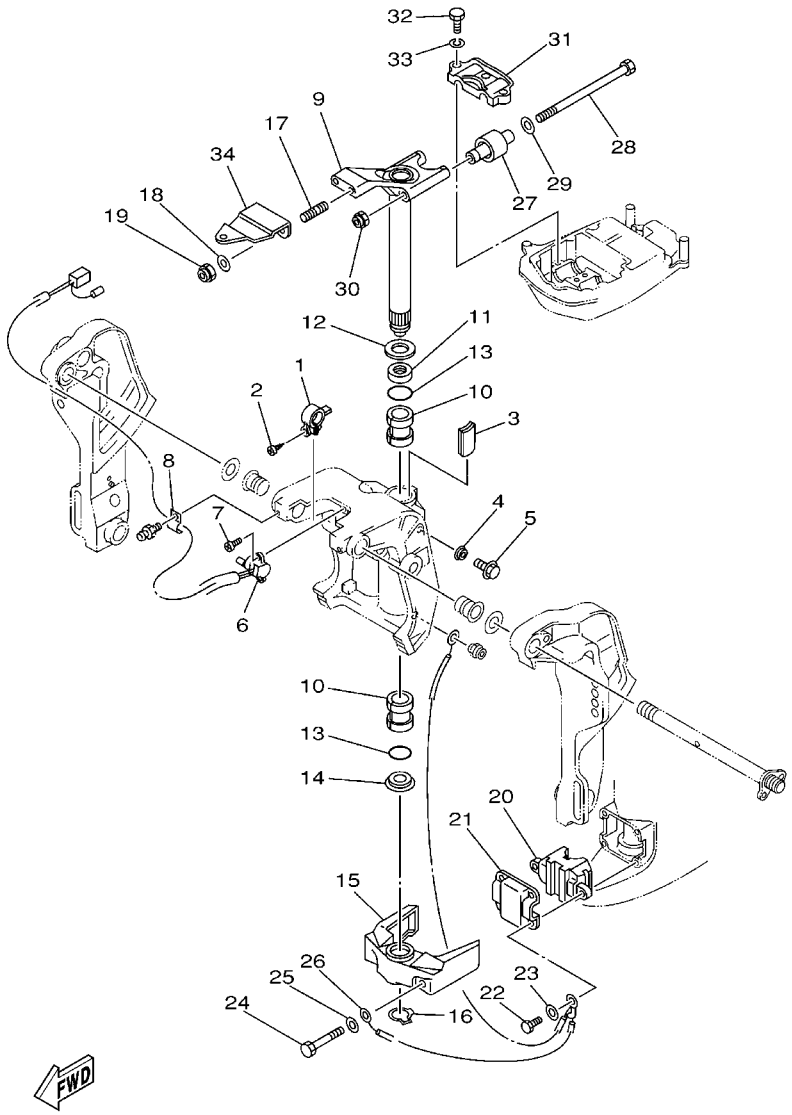

FIG. 22 BRACKET 4 SUPPORT 4

REF. NO.	PART NO. N° PIECES	DESCRIPTION DESCRIPTION	MHO	EO	ETO			REMARKS REMARQUES
28	90109–08M26	BOLT BOULON			2			
29	90201–09425	WASHER, PLATE RONDELLE, PLATE			2			
30	90185–08045	NUT, SELF-LOCKING ECROU,AUTO-BLOQUANT			2			
31	6J8–44511–00–4D	COVER, UPPER MOUNT COUVERCLE, SUSPENSION SUPERIEU			1			
32	97075–08035	BOLT BOULON			3			
33	92995–08100	WASHER RONDELLE			3			
34	6J8–48511–51–4D	HOOK, STEERING ATTACHE, DIRECTION			1			

FIG. 23 POWER TRIM & TILT ASSY PUISSANCE PARER ET INCLINER

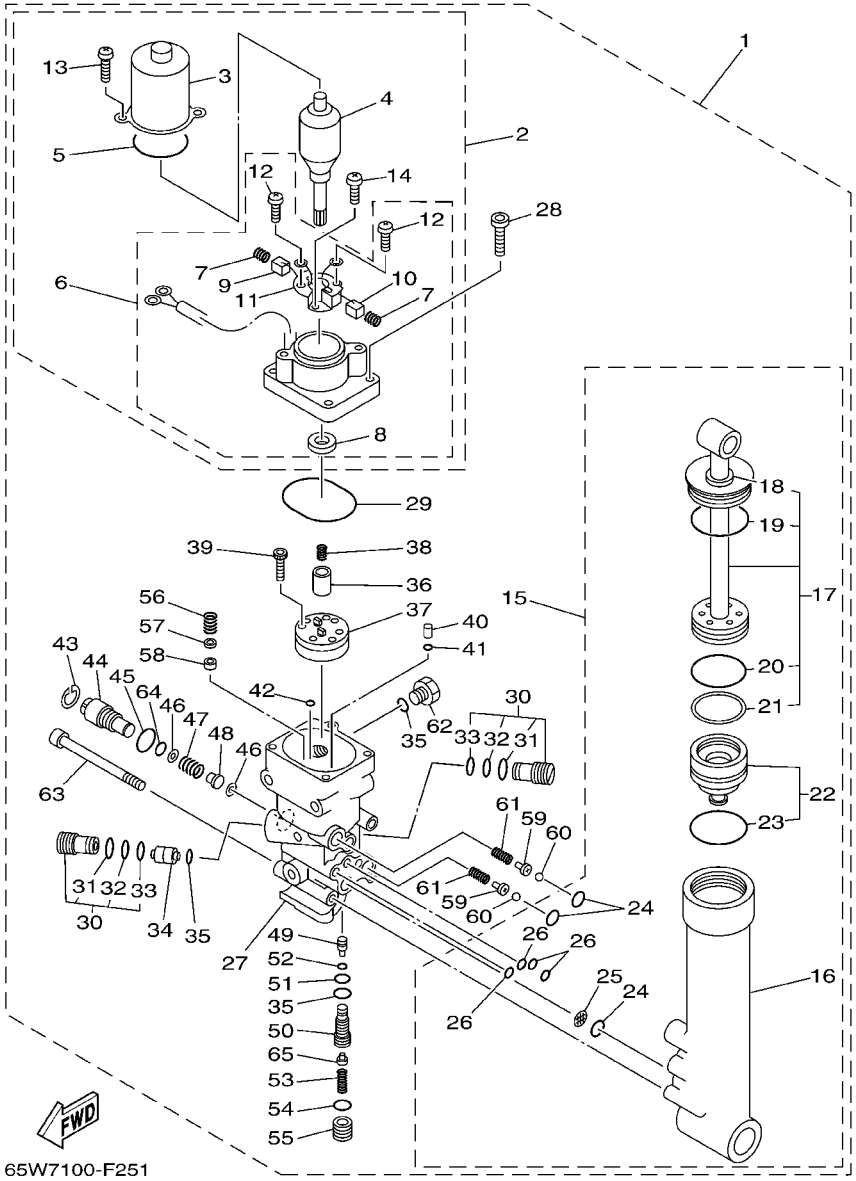

REF. NO.	PART NO. N° PIECES	DESCRIPTION DESCRIPTION	MHO	EO	ETO			REMARKS REMARQUES
1	65W–43800–02–4D	POWER TRIM & TILT ASSY PUISSANCE PARER ET INCLINER (E			1			
2	65W–43880–00	.MOTOR ASSY .MOTEUR (ENS.)			1			
3	65W–43804–00	..STATOR ASSY ..STATOR (ENS.)			1			
4	65W–43805–00	..ARMATURE ASSY ..INDUIT (ENS.)			1			
5	65W–43869–00	..O-RING ..JOINT TORIQUE			1			
6	65W–43881–00	..FRAME, END ..BATI			1			
7	65W–4386K–00	...SPRING, BRUSH ...RESSORT, BALAI			2			
8	65W–43882–00	...OIL SEAL ...JOINT SPI			1			
9	65W–43892–00	...BRUSH 2 ...BALAI 2			1			
10	65W–43891–00	...BRUSH 1 ...BALAI 1			1			
11	65W–4380F–00	...PLATE, BRUSH HOLDER ...PLAQUE			1			
12	65W–43879–00	...SCREW, WITH WASHER ...VIS, AVEC RONDELLE			2			
13	65W–43887–00	..BOLT, THROUGH ..BOULON			2			
14	65W–4388E–00	..BOLT ..BOULON			1			
15	65W–43840–00	.POWER TILT ASSY .PUISSANCE INCLINER (ENS.)			1			
16	65W–4380K–00	..CYLINDER, TILT SUB ASSY ..CYLINDRE			1			
17	65W–43810–00	..TILT PISTON SUB ASSY ..INCLINER PISTON AUXILIAIRE(E			1			
18	65W–43812–00	...SEAL, DUST ...JOINT			1			
19	65W–43865–00	...O-RING ...JOINT TORIQUE			1			
20	6H1–43861–10	...O-RING ...JOINT TORIQUE			1			
21	65W–43871–00	...RING, BACK UP ...SEGMENT			1			
22	65W–4381B–00	..FREE PISTON SUB ASSY ..PISTON AUXILIAIRE (ENS.)			1			
23	6H1–43861–10	...O-RING ...JOINT TORIQUE			1			
24	93210–11368	..O-RING ..JOINT TORIQUE			3			
25	6H1–43816–00	..FILTER 1 ..FILTRE 1			1			
26	93210–064A5	..O-RING ..JOINT TORIQUE			4			
27	65W–4380L–00	.HOUSING, TRIM & TILT SUB ASSY .CARTER			1			

FIG. 23 POWER TRIM & TILT ASSY PUISSANCE PARER ET INCLINER

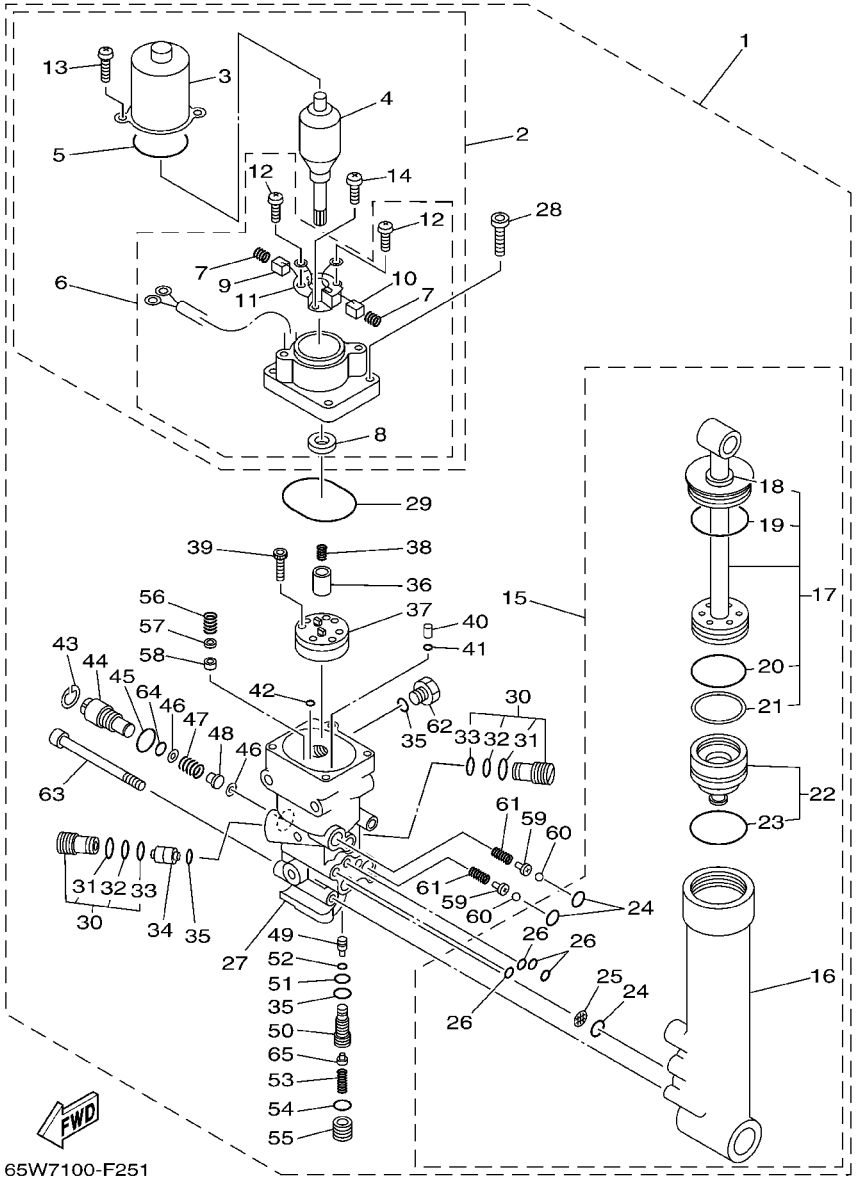

REF. NO.	PART NO. N° PIECES	DESCRIPTION DESCRIPTION	MHO	EO	ETO			REMARKS REMARQUES
28	65W–43888–00	.BOLT, SOCKET .BOULON			4			
29	93210–50768	.O-RING .JOINT TORIQUE			1			
30	6T4–43802–03	.VALVE SUB ASSY .CLAPET AUXILIAIRE (ENS.)			2			
31	6H1–43866–00	..O-RING ..JOINT TORIQUE			1			
32	93210–10M74	..O-RING ..JOINT TORIQUE			1			
33	6H1–43867–00	..O-RING ..JOINT TORIQUE			1			
34	62X–43841–00	.PISTON, SHUTTLE .PISTON			1			
35	93210–09165	.O-RING .JOINT TORIQUE			3			
36	65W–43831–00	.CONNECTOR, SHAFT .RACCORD			1			
37	65W–43830–00	.GEAR PUMP ASSY .POMPE A PIGNON (ENS.)			1			
38	6T4–43853–00	.SPRING, MAIN VALVE .RESSORT			1			
39	91318–04025	.BOLT .BOULON			4			
40	65W–43817–00	.FILTER 2 .FILTRE 2			2			
41	65W–43861–00	.O-RING .JOINT TORIQUE			2			
42	65W–43862–00	.O-RING .JOINT TORIQUE			2			
43	6H1–43875–00	.RING, SNAP .RESSORT			1			
44	6H1–43845–00	.SCREW, MANUAL RELEASE .VIS			1			
45	93210–18397	.O-RING .JOINT TORIQUE			1			
46	6H1–43847–00	.SEAT, MANUAL VALVE .SIEGE			2			
47	65W–43854–00	.SPRING, MANUAL RELEASE .RESSORT			1			
48	65W–4382A–00	.ADAPTOR 1 .ADAPTEUR 1			1			
49	65W–43844–00	.PIN, VALVE SUPPORT .GOUPILLE			1			
50	65W–43851–00	.SEAT, RELIEF VALVE .SIEGE			1			
51	93210–08006	.O-RING .JOINT TORIQUE			1			
52	93210–03478	.O-RING .JOINT TORIQUE			1			
53	65W–43855–00	.SPRING, UP RELIEF .RESSORT			1			
54	93210–11073	.O-RING .JOINT TORIQUE			1			

FIG. 23 POWER TRIM & TILT ASSY PUISSANCE PARER ET INCLINER

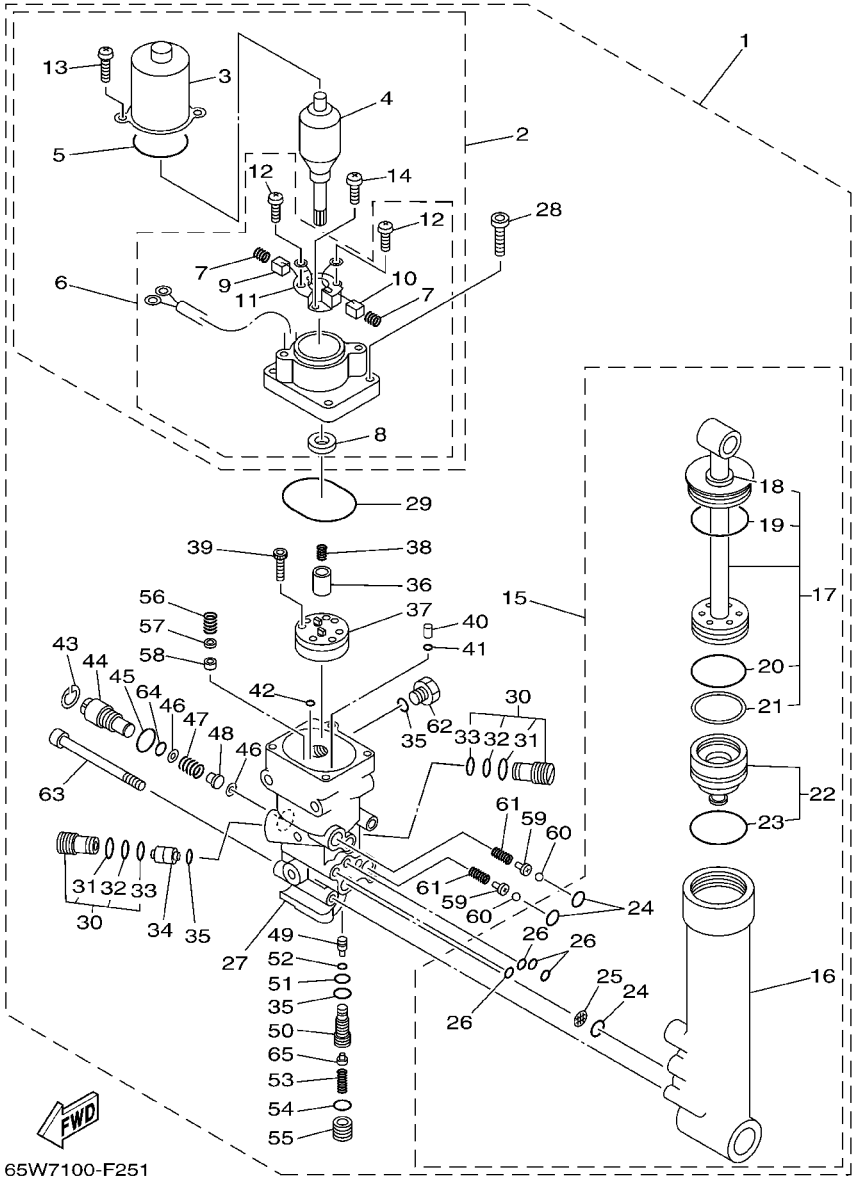

REF. NO.	PART NO. N° PIECES	DESCRIPTION DESCRIPTION	MHO	EO	ETO			REMARKS REMARQUES
55	65W–43843–00	.SCREW, VALVE LOCK .VIS			1			
56	6H1–43856–10	.SPRING, DOWN RELIEF .RESSORT			1			
57	6H1–43844–10	.PIN, VALVE SUPPORT .GOUPILLE			1			
58	6H1–4384F–10	.SEAL, MAIN VALVE .JOINT			1			
59	65W–4386A–00	.PIN, ABSORBER VALVE .GOUPILLE, SOUPAPE			2			
60	93501–08001	.BALL .BILLE			2			
61	65W–43853–00	.SPRING, MAIN VALVE .RESSORT			2			
62	6H1–43829–00	.PLUG, RESERVOIR .BOUCHON			1			
63	62X–43878–00	.BOLT, SOCKET .BOULON			3			
64	93210–10M74	.O-RING .JOINT TORIQUE			1			
65	6T4–43808–00	.SEAT, VALVE COMP. 1 .SIEGE VALVE COMP. 1			1			

FIG. 24 UPPER CASING FOURREAU

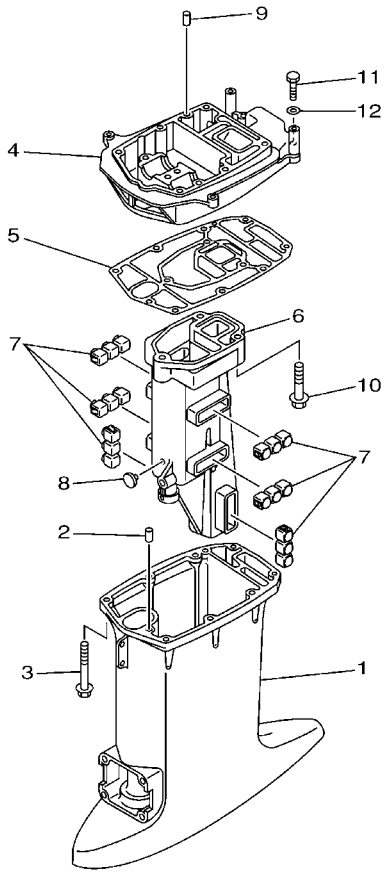

6J80100-9250

REF. NO.	PART NO. N° PIECES	DESCRIPTION DESCRIPTION	MHO	EO	ETO			REMARKS REMARQUES
1	6J8–45111–01–4D	CASING, UPPER FOURREAU	1	1				S(16.7") S(16.7")
	6J8–45111–11–4D	CASING, UPPER FOURREAU	1	1	1			L(21.5") L(21.5")
2	93606–12019	PIN, DOWEL GOUPILLE	2	2	2			
3	90119–08M31	BOLT, WITH WASHER BOULON, AVEC RONDELLE	6	6	6			
4	6J8–41137–01–94	GUIDE, EXHAUST COLLECTEUR D'ECHAPPEMENT	1	1	1			
5	6J8–45114–A1	GASKET, UPPER CASING JOINT, TUBE D'ARBRE	1	1	1			
6	6J8–41131–00–5B	MANIFOLD, EXT. 1 PIPE D'ECHAPPEMENT	1	1	1			
7	6J8–14737–00	DAMPER, MUFFLER AMORTISSEUR DE POT D'ECHAPPT	6	6	6			
8	90338–07M00	PLUG PLOT	1	1	1			
9	93606–12019	PIN, DOWEL GOUPILLE	2	2	2			
10	97575–08550	BOLT, WITH WASHER VIS HEXAGONAL AVC RONDELLE	3	3	3			
11	97075–08030	BOLT BOULON	2	2	2			
12	92995–08600	WASHER RONDELLE	2	2	2			

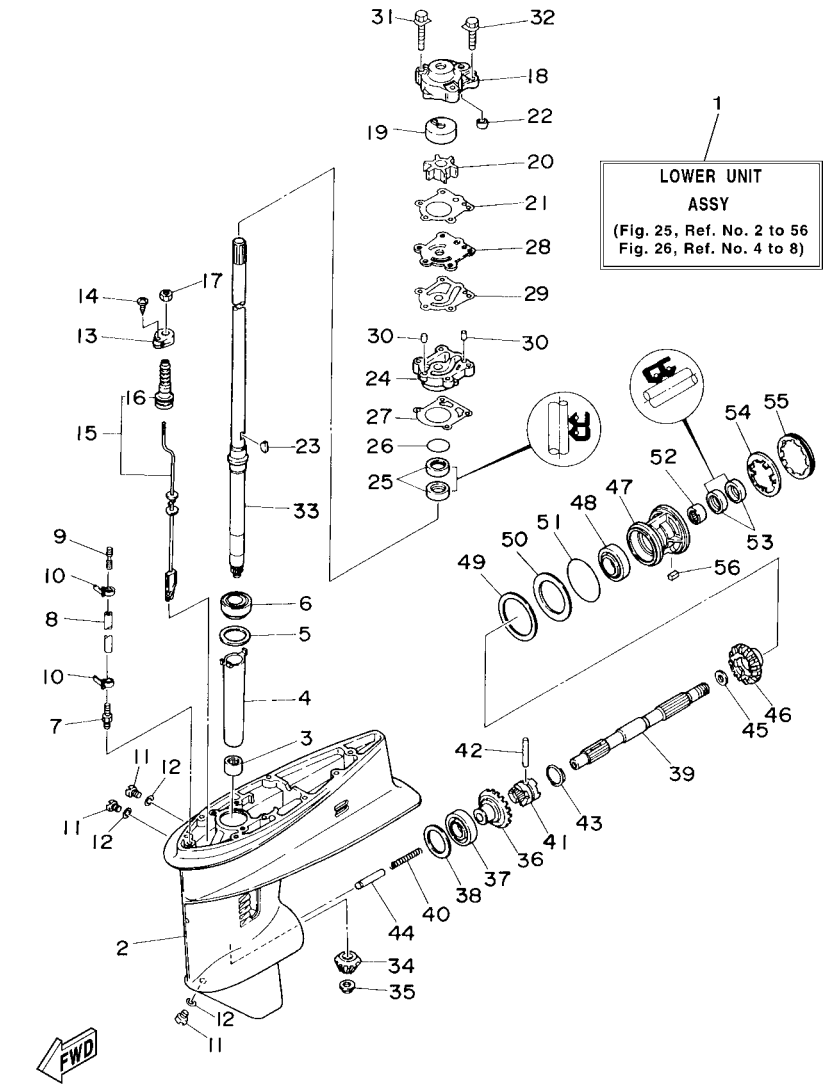

FIG. 25 LOWER CASING & DRIVE 1 BOITIER D'HELICE TRANSMISSION1

REF. NO.	PART NO. N° PIECES	DESCRIPTION DESCRIPTION	MHO	EO	ETO			REMARKS REMARQUES
1	6J8–45300–04–4D	LOWER UNIT ASSY UNITE INFERIEURE (ENS.)	1	1				S(16.7") S(16.7")
	6J8–45300–14–4D	LOWER UNIT ASSY UNITE INFERIEURE (ENS.)	1	1	1			L(21.5") L(21.5")
2	6J8–45301–02–4D	CASING, LOWER BEQUILLE	1	1	1			
3	93315–220V7	BEARING ROULEMENT	1	1	1			
4	6J8–45536–00	SLEEVE, DRIVE SHAFT MANCHON, ARBRE MOTEUR	1	1	1			
5	663–45587–01	SHIM (T:0.10MM) CALE (T:0.10MM)	1	1	1			UR UR
	663–45587–10	SHIM (T:0.12MM) CALE (T:0.12MM)	1	1	1			UR UR
	663–45587–20	SHIM (T:0.15MM) CALE (T:0.15MM)	1	1	1			UR UR
	663–45587–30	SHIM (T:0.18MM) CALE (T:0.18MM)	1	1	1			UR UR
	663–45587–40	SHIM (T:0.30MM) CALE (T:0.30MM)	1	1	1			UR UR
	663–45587–50	SHIM (T:0.40MM) CALE (T:0.40MM)	1	1	1			UR UR
	663–45587–60	SHIM (T:0.50MM) CALE (T:0.50MM)	1	1	1			UR UR
6	93332–00001	BEARING ROULEMENT	1	1	1			
7	6E5–45378–00	NIPPLE, HOSE RACCORD, TUYAU	1	1	1			
8	90445–07ME9	HOSE (L120) DURITE (L120)	1	1				S(16.7") S(16.7")
	90445–07M31	HOSE (L200) DURITE (L200)	1	1	1			L(21.5") L(21.5")
9	6E5–83558–00	END, NIPPLE RACCORD DE NIPPLE	1	1	1			
10	90465–11M10	CLAMP BRIDE	2	2	2			
11	90340–08002	PLUG, STRAIGHT SCREW PLOT, FILETE DROIT	3	3	3			
12	90430–08020	GASKET JOINT	3	3	3			
13	682–44176–00	BRACKET SUPPORT	1	1	1			
14	97780–50510	SCREW, TAPPING VIS, TETE BOMBEE	1	1	1			
15	6J8–44150–00	SHIFT CAM ASSY CAME D'INVERSION	1	1				S(16.7") S(16.7")
	6J8–44150–10	SHIFT CAM ASSY CAME D'INVERSION	1	1	1			L(21.5") L(21.5")
16	682–44147–00	.BOOT, SHIFT ROD .SOUFFLET, TIGE D'INVERSION	1	1	1			
17	95380–06700	NUT ECROU	1	1	1			
18	6J8–44311–00	HOUSING, WATER PUMP CORPS, POMPE A EAU	1	1	1			

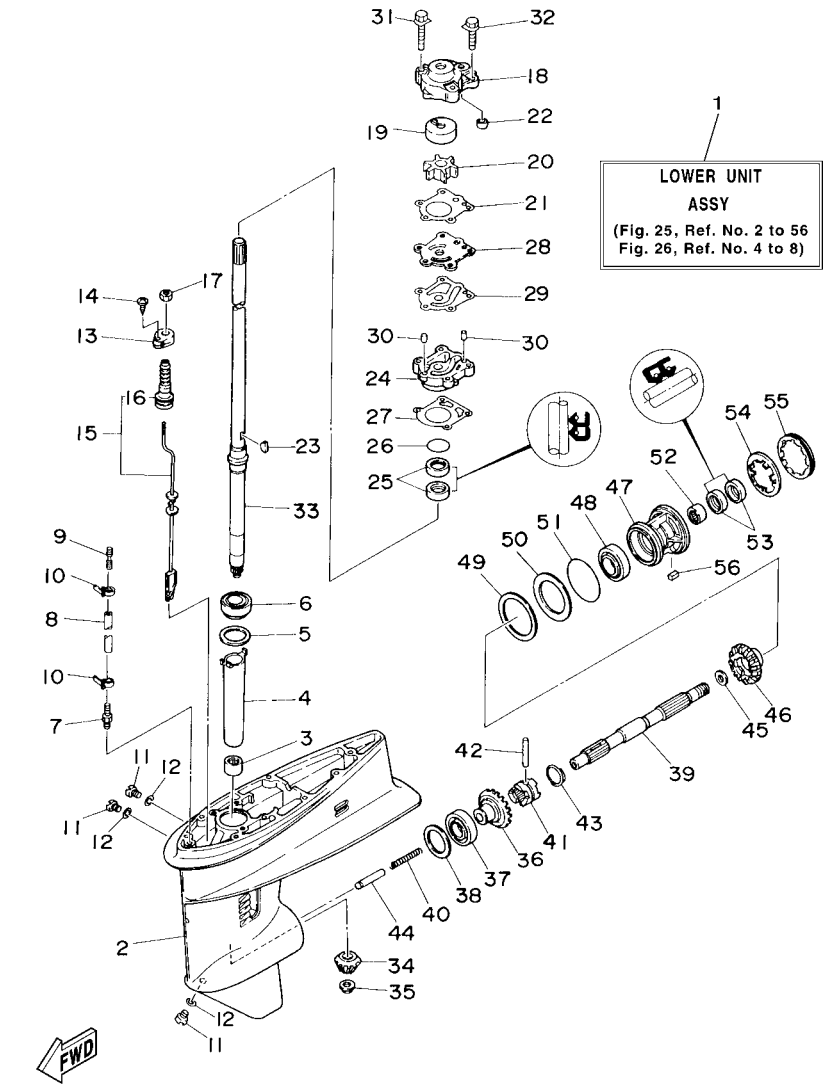

FIG. 25 LOWER CASING & DRIVE 1 BOITIER D'HELICE TRANSMISSION1

REF. NO.	PART NO. N° PIECES	DESCRIPTION DESCRIPTION	MHO	EO	ETO			REMARKS REMARQUES
19	663–44322–00	INSERT, CARTRIDGE CUVETTE	1	1	1			
20	6H4–44352–02	IMPELLER TURBINE	1	1	1			
21	663–44315–A0	GASKET, WATER PUMP JOINT, POMPE A EAU	1	1	1			
22	663–44366–00	DAMPER, WATER SEAL JOINT, TUBE D'EAU	1	1	1			
23	90280–03024	KEY, WOODRUFF CLAVETTE, DEMI-LUNE	1	1	1			
24	663–44341–00–94	HOUSING, WATER PUMP CORPS, POMPE A EAU	1	1	1			
25	93101–23070	OIL SEAL JOINT SPY	2	2	2			
26	93210–41042	O-RING JOINT TORIQUE	1	1	1			
27	663–44316–A0	GASKET, WATER PUMP JOINT, POMPE A EAU	1	1	1			
28	663–44323–00	OUTER PLATE, CARTRIDGE PLAQUE EXTERIEURE	1	1	1			
29	663–44324–A0	GASKET, CARTRIDGE JOINT	1	1	1			
30	93604–08062	PIN, DOWEL CLAVETTE	2	2	2			
31	90119–08M13	BOLT, WITH WASHER BOULON, AVEC RONDELLE	2	2	2			
32	90119–08M34	BOLT, WITH WASHER BOULON, AVEC RONDELLE	2	2	2			
33	6J8–45501–00	DRIVE SHAFT COMP. ARBRE MOTEUR COMP.	1	1				S(16.7") S(16.7")
	6J8–45501–10	DRIVE SHAFT COMP. ARBRE MOTEUR COMP.	1	1	1			L(21.5") L(21.5")
34	6J8–45551–00	PINION (13T) PIGNON D'ATTAQUE (13D)	1	1	1			
35	90179–10M14	NUT ECROU	1	1	1			
36	6J8–45560–00	GEAR 1 (24T) PIGNON 1 (24T)	1	1	1			
37	93332–000V6	BEARING ROULEMENT	1	1	1			
38	6J8–45567–01	SHIM (T:0.10MM) CALE (T:0.10MM)	1	1	1			UR UR
	6J8–45567–10	SHIM (T:0.12MM) CALE (T:0.12MM)	1	1	1			UR UR
	6J8–45567–20	SHIM (T:0.15MM) CALE (T:0.15MM)	1	1	1			UR UR
	6J8–45567–30	SHIM (T:0.18MM) CALE (T:0.18MM)	1	1	1			UR UR
	6J8–45567–40	SHIM (T:0.30MM) CALE (T:0.30MM)	1	1	1			UR UR
	6J8–45567–50	SHIM (T:0.40MM) CALE (T:0.40MM)	1	1	1			UR UR
	6J8–45567–60	SHIM (T:0.50MM) CALE (T:0.50MM)	1	1	1			UR UR

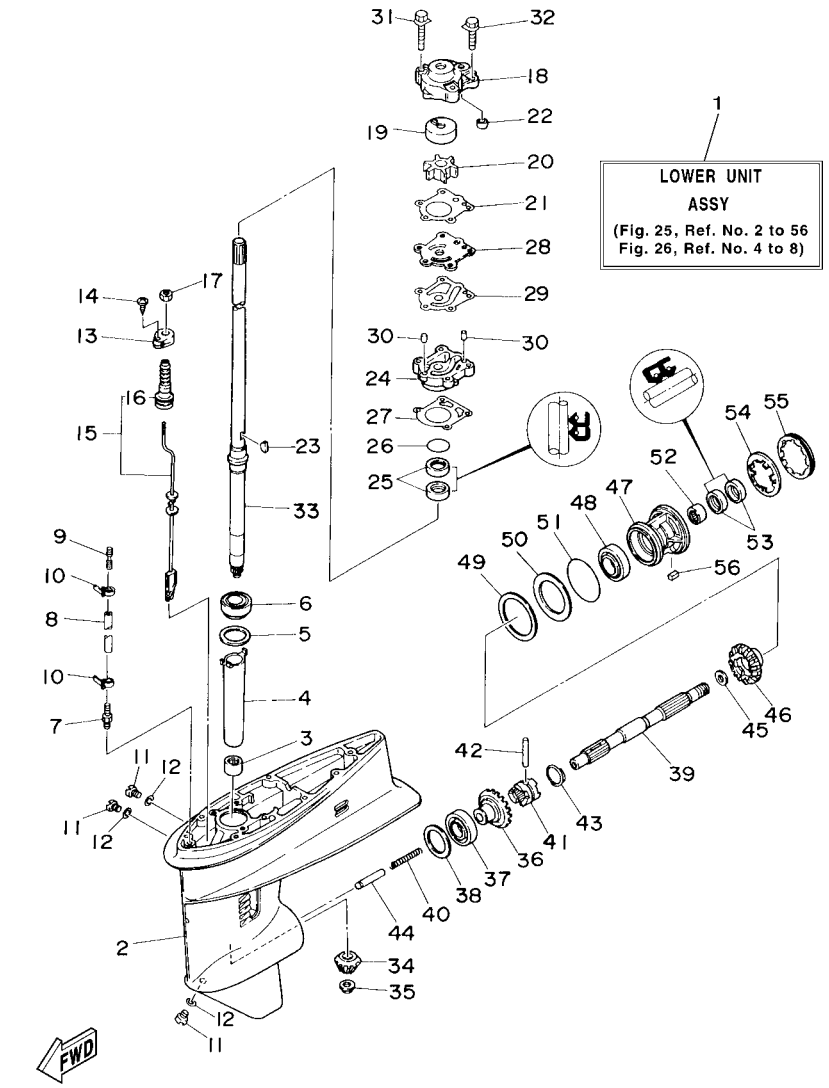

FIG. 25 LOWER CASING & DRIVE 1 BOITIER D'HELICE TRANSMISSION1

REF. NO.	PART NO. N° PIECES	DESCRIPTION DESCRIPTION	MHO	EO	ETO			REMARKS REMARQUES
39	6J8–45611–00	SHAFT, PROPELLER ARBRE, HELICE	1	1	1			
40	90501–10065	SPRING, COMPRESSION RESSORT, COMPRESSION	1	1	1			
41	6J8–45631–00	CLUTCH, DOG CRABOT	1	1	1			
42	90250–05010	PIN, STRAIGHT GOUPILLE, DROITE	1	1	1			
43	648–45633–00	RING, CROSS PIN JONC, GOUPILLE CRABOT	1	1	1			
44	6J8–45635–00	PLUNGER, SHIFT POUSSOIR D'EMBRAYAGE	1	1	1			
45	90201–20417	WASHER, PLATE RONDELLE, PLATE	1	1	1			
46	6J8–45571–00	GEAR 2 (24T) PIGNON 2 (24T)	1	1	1			
47	689–45331–01–94	HOUSING, BEARING FLASQUE, ROULEMENT	1	1	1			
48	93306–00612	BEARING ROULEMENT	1	1	1			
49	664–45577–01	SHIM (T:0.10MM) CALE (T:0.10MM)	1	1	1			UR UR
	664–45577–10	SHIM (T:0.12MM) CALE (T:0.12MM)	1	1	1			UR UR
	664–45577–20	SHIM (T:0.15MM) CALE (T:0.15MM)	1	1	1			UR UR
	664–45577–30	SHIM (T:0.18MM) CALE (T:0.18MM)	1	1	1			UR UR
	664–45577–40	SHIM (T:0.30MM) CALE (T:0.30MM)	1	1	1			UR UR
	664–45577–50	SHIM (T:0.40MM) CALE (T:0.40MM)	1	1	1			UR UR
	664–45577–60	SHIM (T:0.50MM) CALE (T:0.50MM)	1	1	1			UR UR
50	664–45576–00	WASHER, THRUST RONDELLE DE CALAGE	1	1	1			
51	93210–60MA3	O-RING JOINT TORIQUE	1	1	1			
52	93315–22004	BEARING ROULEMENT	1	1	1			
53	93101–20M07	OIL SEAL JOINT SPY	2	2	2			
54	90214–45M02	WASHER, CLAW RONDELLE, A GRIFFES	1	1	1			
55	664–45384–00	NUT ECROU	1	1	1			
56	90282–04010	KEY, STRAIGHT CLAVETTE, DROITE	1	1	1			

FIG. 26 LOWER CASING & DRIVE 2 BOITIER D'HELICE TRANSMISSION2

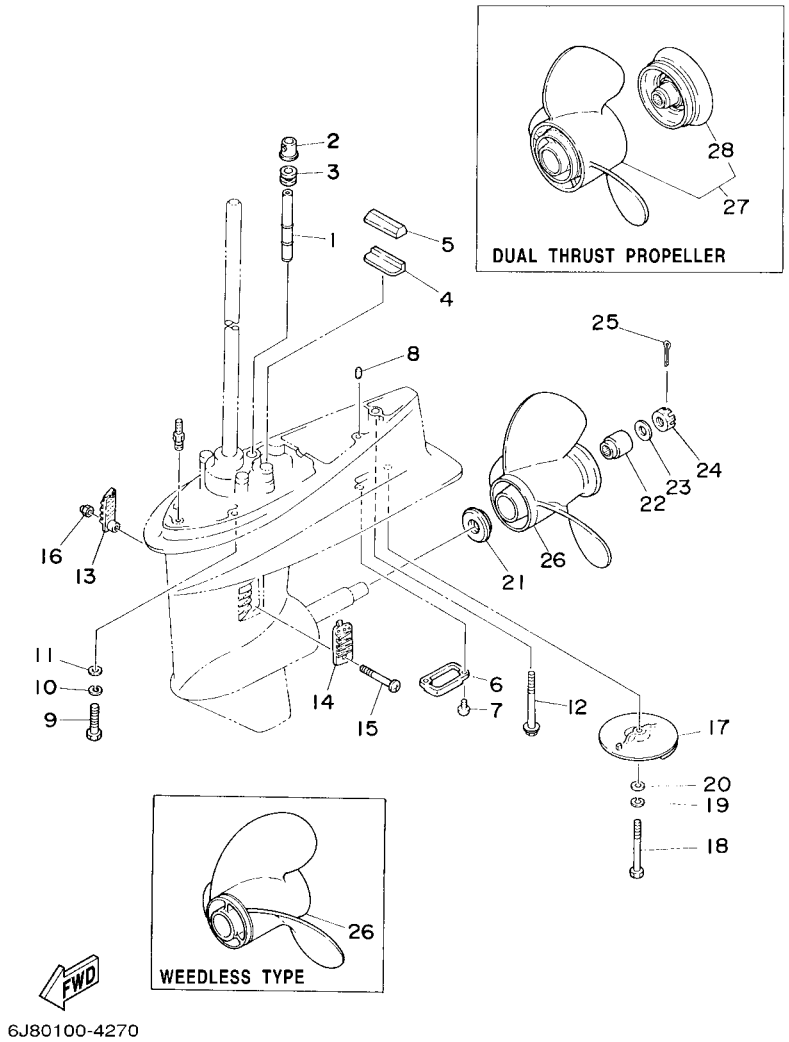

REF. NO.	PART NO. N° PIECES	DESCRIPTION DESCRIPTION	MHO	EO	ETO			REMARKS REMARQUES
1	6J8–44361–00	TUBE, WATER TUBE D'EAU	1	1				S(16.7") S(16.7")
	6J8–44361–10	TUBE, WATER TUBE D'EAU	1	1	1			L(21.5") L(21.5")
2	6J8–44366–00	DAMPER, WATER SEAL JOINT, TUBE D'EAU	1	1	1			
3	663–44367–00	DAMPER, WATER SEAL JOINT TUBE D'EAU	1	1	1			
4	663–45376–00–94	GUIDE, SEAL DAMPER BUTEE, JOINT CAOUTCHOUC	1	1	1			
5	688–45375–00	DAMPER, SEAL BOURRELET, CAOUTCHOUC	1	1	1			
6	6J8–45224–10	COVER, WATER INLET 3 GRILLE, ENTREE D'EAU 3	1	1	1			
7	97880–06012	SCREW, PAN HEAD VIS, TETE TRONCONIQUE	2	2	2			
8	93606–12019	PIN, DOWEL GOUPILLE	2	2	2			
9	97075–10040	BOLT BOULON	4	4	4			
10	92995–10100	WASHER RONDELLE	4	4	4			
11	92995–10600	WASHER RONDELLE	4	4	4			
12	90119–08M92	BOLT, WITH WASHER BOULON, AVEC RONDELLE	1	1	1			
13	689–45214–01	COVER, WATER INLET 1 GRILLE, ENTREE D'EAU 1	1	1	1			
14	6J8–45215–00	COVER, WATER INLET 2 GRILLE, ENTREE D'EAU 2	1	1	1			
15	90152–05M04	SCREW, COUNTERSUNK VIS, TETE NOYEE	1	1	1			
16	90185–05002	NUT, SELF-LOCKING ECROU,AUTO-BLOQUANT	1	1	1			
17	664–45371–01	TAB-TRIM ANODE DERIVE	1	1	1			
18	97075–08020	BOLT BOULON	1	1	1			
19	92995–08100	WASHER RONDELLE	1	1	1			
20	92995–08600	WASHER RONDELLE	1	1	1			
21	6L2–45987–01	SPACER ENTRETOISE	1	1	1			
22	689–45997–00	SPACER ENTRETOISE	1	1	1			
23	92990–14200	WASHER, PLAIN RONDELLE, PLATE	1	1	1			
24	90171–14013	NUT, CASTLE ECROU, CRENELE	1	1	1			
25	91490–30022	PIN, COTTER GOUPILLE	1	1	1			
26	664–45941–01–EL	PROPELLER (3X9-7/8"X9"-F) HELICE (3X9-7/8"X9"-F)	1	1	1			UR UR

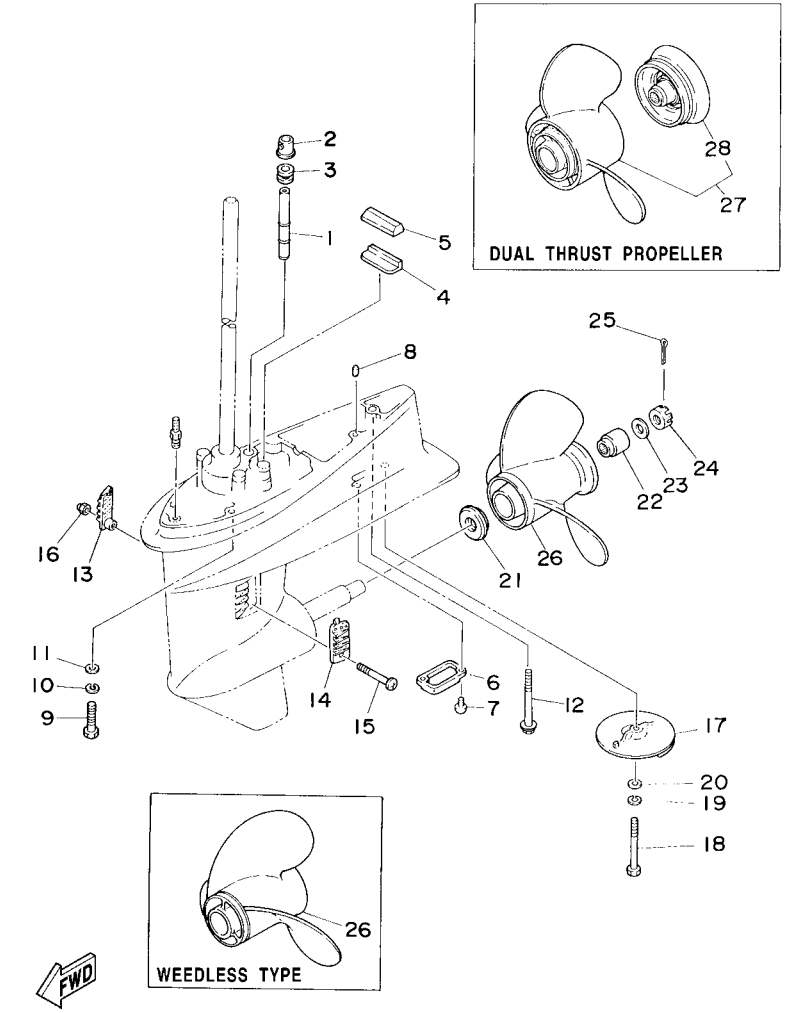

FIG. 26 LOWER CASING & DRIVE 2 BOITIER D'HELICE TRANSMISSION2

REF. NO.	PART NO. N° PIECES	DESCRIPTION DESCRIPTION	MHO	EO	ETO			REMARKS REMARQUES
26	664–45943–01–EL	PROPELLER (3X9-7/8"X8"-F) HELICE (3X9-7/8"X8"-F)	1	1	1			UR UR
	664–45945–00–EL	PROPELLER (3X9-7/8"X10-1/2"-F) HELICE (3X9-7/8"X10-1/2"-F)	1	1	1			UR UR
	664–45947–01–EL	PROPELLER (3X9-7/8"X11-1/4"-F) HELICE (3X9-7/8"X11-1/4"-F)	1	1	1			UR UR
	664–45949–02–EL	PROPELLER (3X9-7/8"X13"-F) HELICE (3X9-7/8"X13"-F)	1	1	1			UR UR
	664–45952–00–EL	PROPELLER (3X9-7/8"X14"-F) HELICE (3X9-7/8"X14"-F)	1	1	1			UR UR
	664–45954–01–EL	PROPELLER (3X9-7/8"X12"-F) HELICE (3X9-7/8"X12"-F)	1	1	1			UR UR
	664–45970–00–98	PROPELLER (3X9-1/8"X13"-F) HELICE (3X9-1/8"X13"-F)	1	1	1			UR WEEDLESS UR WEEDLESS
27	6J8–W4591–00–EL	PROPELLER (3X10-5/8X8-1/4-F) HELICE (3X10-5/8X8-1/4-F)	1	1	1			
28	6J8–45986–10–98	.RING, DEFLECTOR .DEFLECTEUR DE CERCLE	1	1	1			

FIG. 27 FUEL TANK — RESERVOIR A CARBURANT

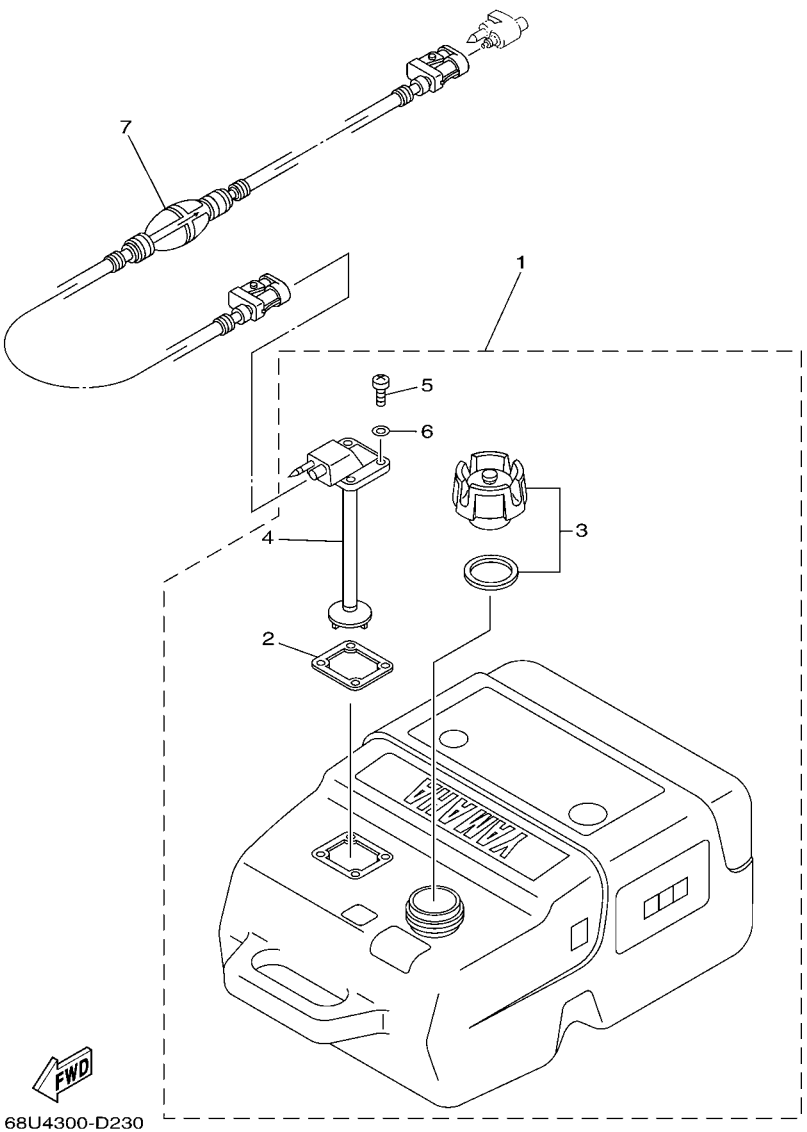

REF. NO.	PART NO. N° PIECES	DESCRIPTION DESCRIPTION	MHO	EO	ETO			REMARKS REMARQUES
1	6YK–24201–02	FUEL TANK ASSY (25L) RESERVOIR A ESSENCE (ENS.) 25L	1	1	1			AP AP
2	6YL–24268–01	.GASKET, FUEL METER .JOINT, JAUGE A CARBURANT	1	1	1			
3	6YK–24610–01	.CAP ASSY .BOUCHON	1	1	1			
4	6YK–24260–01	.FUEL METER ASSY .INDICATEUR DE CARBURANT	1	1	1			
5	90157–05M16	.SCREW, PAN HEAD .VIS, TETE TRONCONIQUE	4	4	4			
6	6YL–24329–00	.SEAL .JOINT	4	4	4			
7	6YL–24306–54	FUEL PIPE COMP. 1 DURITE A ESSENCE 1	1	1	1			AP AP

FIG. 28 STEERING GUIDE FIXATION DE DIRECTION

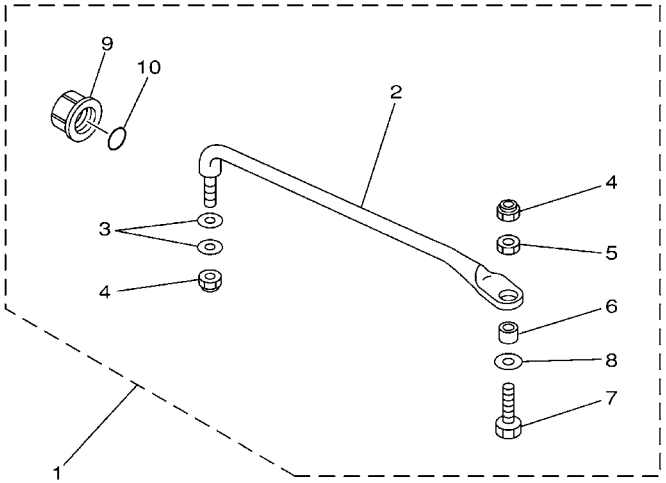

6J83100-2290

REF. NO.	PART NO. N° PIECES	DESCRIPTION DESCRIPTION	MHO	EO	ETO			REMARKS REMARQUES
1	689–61350–02	STEERING GUIDE ATTACHMENT KIT FIXATIONS DE DIRECTION		1	1			AP AP
2	689–61351–01	.ROD, STEERING LINK .RENVOI DE DIRECTION		1	1			
3	90201–10M20	.WASHER, PLATE .RONDELLE, PLATE		2	2			
4	90185–09M01	.NUT, SELF-LOCKING .ECROU,AUTO-BLOQUANT		2	2			
5	90170–09M03	.NUT .ECROU		1	1			
6	90387–10M42	.COLLAR .COLLERETTE		1	1			
7	6E5–61355–00	.BOLT .BOULON		1	1			
8	90201–10M63	.WASHER, PLATE .RONDELLE, PLATE		1	1			
9	6E5–43145–01	.CAP, CLAMP BRACKET .CAPUCHON, PRESSE		1	1			
10	93210–16275	.O-RING .JOINT TORIQUE		1	1			

FIG. 29 REMOTE CONTROL BOX BOITIER DE COMMANDE A DISTANCE

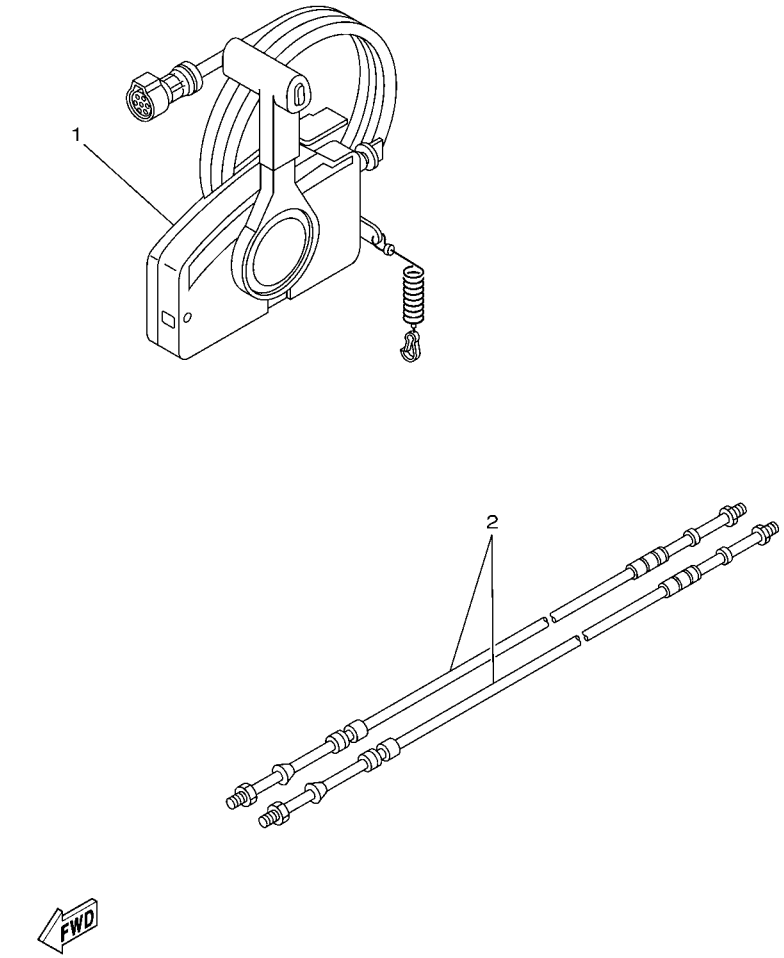

REF. NO.	PART NO. N° PIECES	DESCRIPTION DESCRIPTION	MHO	EO	ETO			REMARKS REMARQUES
1	703–48250–17	REMOTE CONTROL ASSY (10P) BOITIER DE COMMANDE A DISTANCE			1			AP WITH PT/T SW. AP WITH PT/T SW.
	703–48230–15	REMOTE CONTROL ASSY (7P) BOITIER DE COMMANDE A DISTANCE		1				AP WITHOUT PT/T SW. AP WITHOUT PT/T SW.
2	701–48310–80	CABLE, REMOTE CONTROL L=10F CABLE, COMMANDE A DISTANCE:10F		2	2			UR UR
	701–48310–90	CABLE, REMOTE CONTROL L=11F CABLE, COMMANDE A DISTANCE:11F		2	2			UR UR
	701–48320–00	CABLE, REMOTE CONTROL L=12F CABLE, COMMANDE A DISTANCE:12F		2	2			UR UR

FIG. 30 REMOTE CONTROL ASSY BOITIER DE COMMANDE A DISTANCE

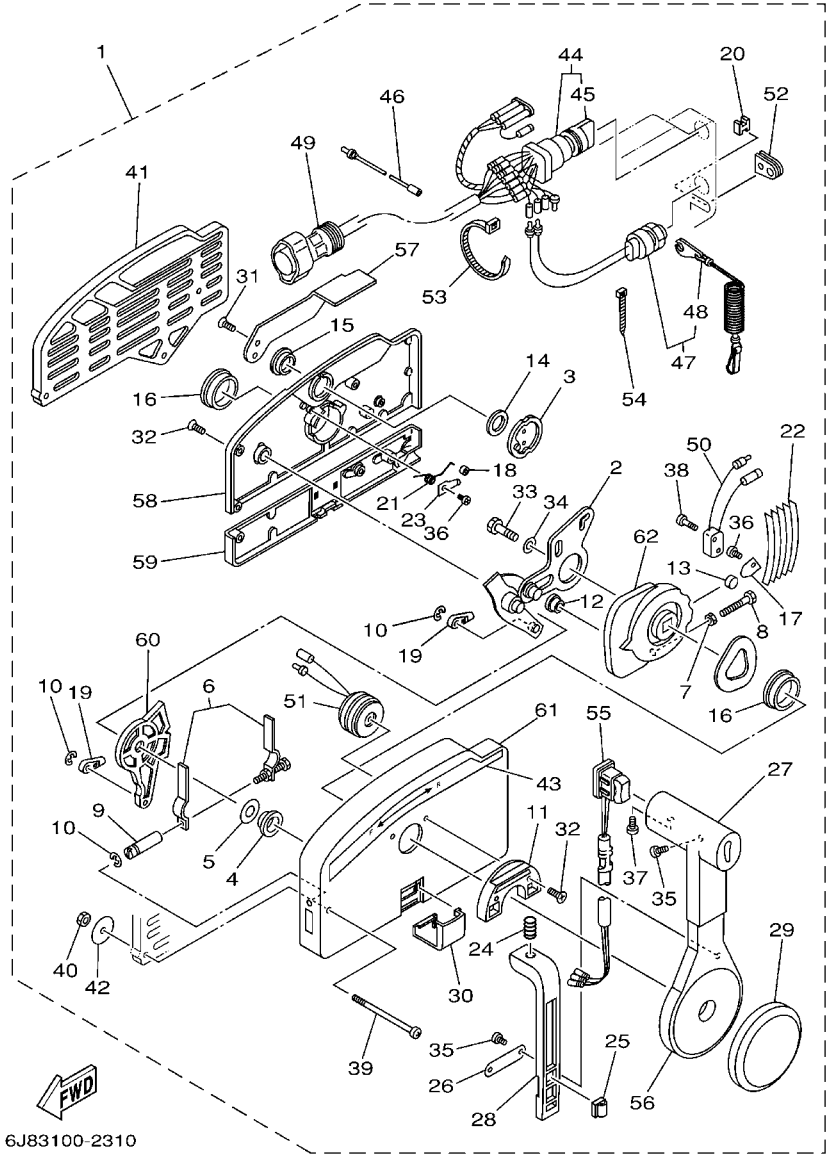

REF. NO.	PART NO. N° PIECES	DESCRIPTION DESCRIPTION	MHO	EO	ETO			REMARKS REMARQUES
1	703–48250–17	REMOTE CONTROL ASSY (10P) BOITIER DE COMMANDE A DISTANCE			1			AP WITH PT/T SW. AP WITH PT/T SW.
	703–48230–15	REMOTE CONTROL ASSY (7P) BOITIER DE COMMANDE A DISTANCE		1				AP WITHOUT PT/T SW. AP WITHOUT PT/T SW.
2	703–48261–11	.ARM, THROTTLE .BRAS, ACCELERATION		1	1			
3	703–48153–00	.SHAFT, FREE ACCEL. .AXE		1	1			
4	703–48235–00	.BUSHING .COUSSINET		1	1			
5	703–48268–00	.SPACER .ENTRETOISE		1	1			
6	703–48264–00	.FRICTION, THROTTLE .FRICTION, ACCELERATION		1	1			
7	95380–05600	.NUT .ECROU		1	1			
8	97380–05025	.BOLT .BOULON, HEXAGONAL		1	1			
9	703–48265–00	.SHAFT, FRICTION .AXE, COPILOTE		1	1			
10	93430–06024	.CIRCLIP .CLIPS		3	3			
11	703–48245–00	.PLATE, LOCK .PLAQUE, VERROU		1	1			
12	703–48252–00	.ROLLER, CAM .POULIE		1	1			
13	701–48248–00	.ROLLER, FREE ACCEL. .POULIE		1	1			
14	703–48198–00	.WASHER, WAVE .RONDELLE, ELASTIQUE ONDULEE		1	1			
15	703–48243–00	.BUSHING .COUSSINET		1	1			
16	703–48236–00	.BUSHING 1 .POULIE		2	2			
17	703–48189–00	.RETAINER .FLASQUE		1	1			
18	703–48234–00	.ROLLER, DETENT .POULIE		1	1			
19	703–48345–01	.CABLE END, REMOTE CONTROL 2 .CHAPE CABLE		2	2			
20	703–48358–00	.ANCHOR, CABLE .COLLIER		1	1			
21	703–48244–00	.SPRING, FREE ACCEL. .RESSORT		1	1			
22	703–48238–00	.SPRING, DETENT .RESSORT		5	5			
23	703–48246–00	.SPACER .ENTRETOISE		1	1			
24	703–48227–00	.SPRING, NEUTRAL LOCK .RESSORT		1	1			
25	703–82594–00	.CLAMP .BRIDE			1			WITH PT/T SW. WITH PT/T SW.
26	703–48226–00	.PLATE, STOPPER .PLAQUETTE		1	1			

FIG. 30 REMOTE CONTROL ASSY BOITIER DE COMMANDE A DISTANCE

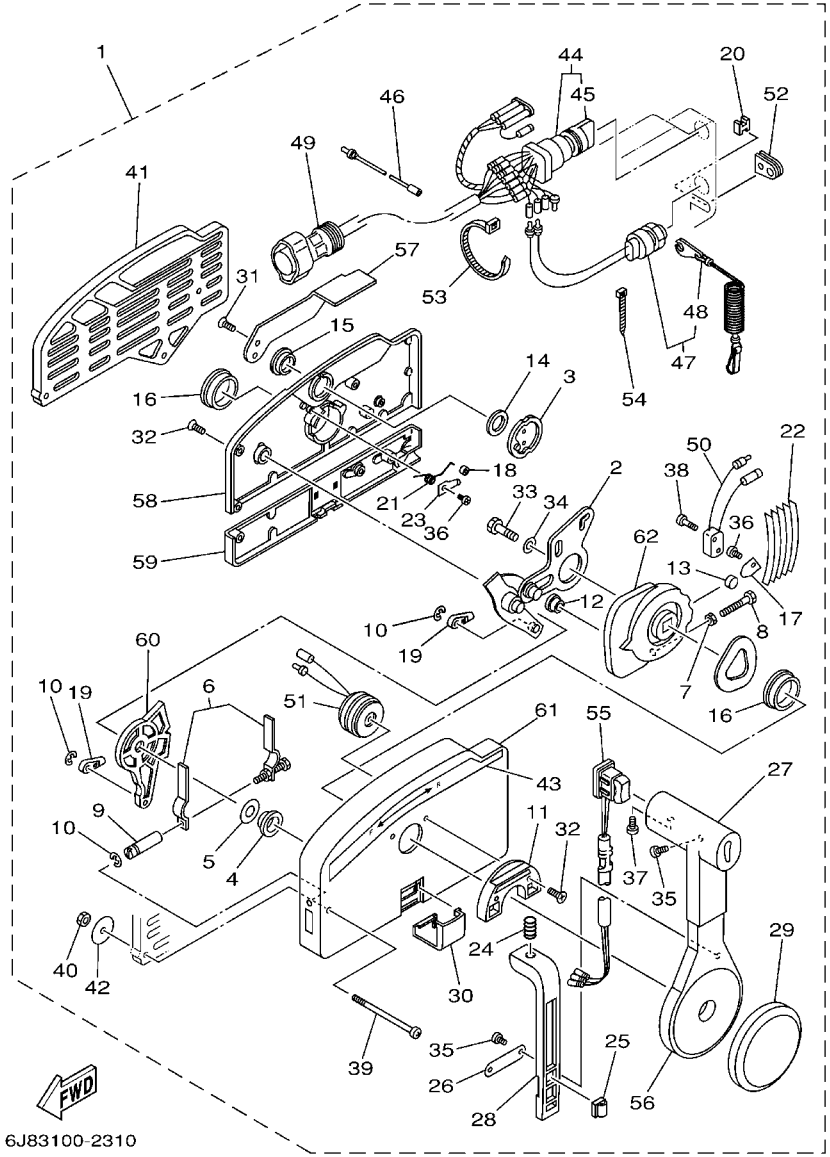

REF. NO.	PART NO. N° PIECES	DESCRIPTION DESCRIPTION	MHO	EO	ETO			REMARKS REMARQUES
27	703–48222–00	.GRIP, CONTROL LEVER .POIGNEE, COMMANDE LEVIER		1	1			SINGLE SINGLE
28	703–48223–00	.LOCK, NEUTRAL .VERROU, NEUTRAL		1	1			
29	703–48225–00	.COVER .COUVERCLE		1	1			
30	703–48219–00	.COVER, LEAD .COUVERCLE		1	1			
31	703–48281–00	.SCREW .VIS		2	2			
32	703–48282–00	.SCREW .VIS		7	7			
33	97380–08030	.BOLT .BOULON, HEXAGONAL		1	1			
34	92990–08600	.WASHER, PLATE .RONDELLE, PLATE		1	1			
35	98580–04010	.SCREW, PAN HEAD .VIS		3	3			
36	98580–04006	.SCREW, PAN HEAD .VIS		2	2			
37	98580–05010	.SCREW, PAN HEAD .VIS		1	1			
38	98580–03015	.SCREW, PAN HEAD .VIS		2	2			
39	703–48291–10	.SCREW (M6) .VIS (M6)		3	3			
40	95380–06600	.NUT, HEXAGON .ECROU		3	3			
41	703–48293–10	.SPACER, REMOTE CONTROL .ENTRETOISE		1	1			SINGLE SINGLE
42	701–48287–00	.WASHER .RONDELLE		3	3			
43	703–48215–00	.GRAPHIC .ADHESIF		1	1			
44	703–82510–43	.MAIN SWITCH ASSY .CONTACTEUR A CLEF COMPLET			1			
	703–82510–33	.MAIN SWITCH ASSY .CONTACTEUR A CLEF COMPLET		1				
45	703–82577–00	..CAP, KEY ..CABOCHON		1	1			
46	703–82531–00	.WIRE, LEAD (L70) .FIL (L70)		1	1			
47	688–82575–01	.ENGINE STOP SWITCH ASSY .COUPE CIRCUIT CPLT		1	1			
48	682–82556–00	..LANYARD, STOP SWITCH ..PLAQUETTE		1	1			
49	688–8258A–20	.EXTENSION, WIRE HARNESS (4.9M .EXTENSION, FAISCEAU DE FILS (			1			(10P) (10P)
	688–82586–21	.EXTENSION, WIRE HARNESS (4.9M .EXTENSION, FAISCEAU DE FILS (		1				(7P) (7P)
50	703–82540–00	.NEUTRAL SWITCH ASSY .CONTACTEUR DE POINT-MORT		1	1			
51	703–83383–02	.BUZZER .RONFLEUR		1	1			

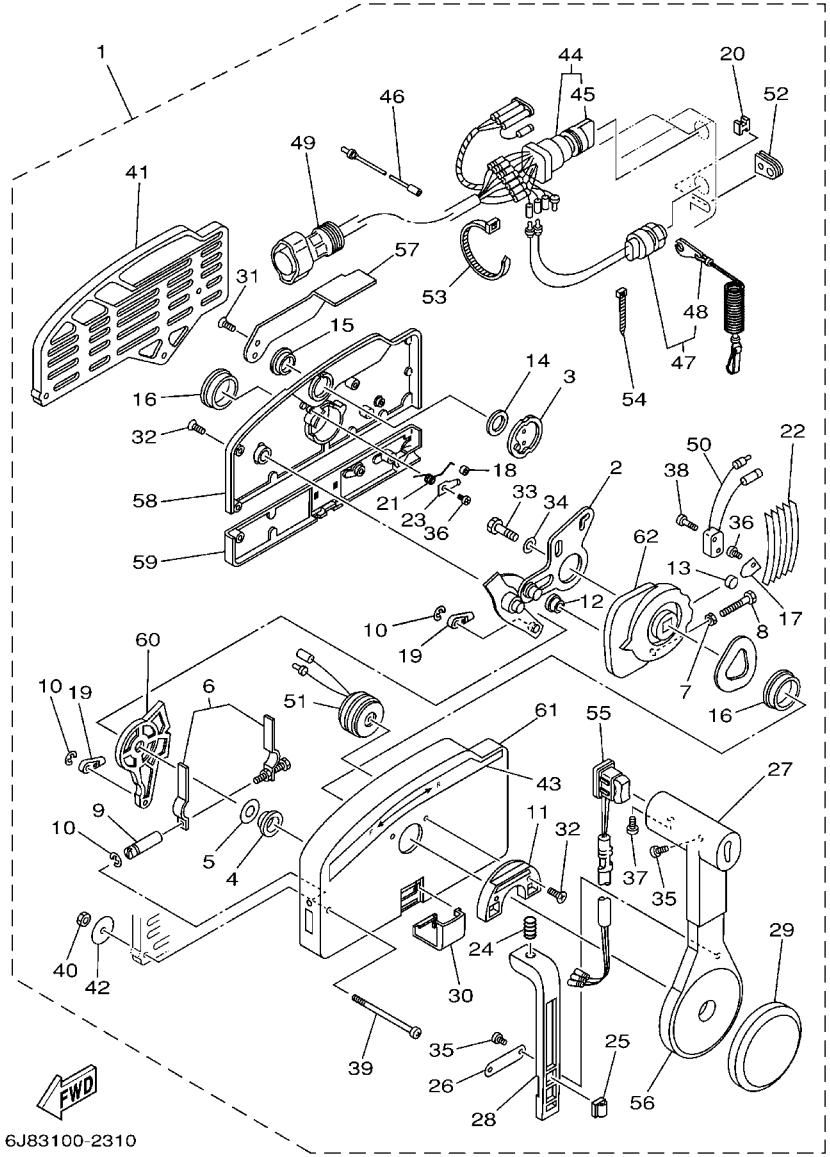

FIG. 30 REMOTE CONTROL ASSY — BOITIER DE COMMANDE A DISTANCE

REF. NO.	PART NO. N° PIECES	DESCRIPTION DESCRIPTION	MHO	EO	ETO			REMARKS REMARQUES
52	703–48284–00	.GROMMET .PASSE-FIL		1	1			
53	703–82591–00	.BAND .COLLIER		1	1			
54	703–82592–00	.BAND .COLLIER		1	1			
55	703–82563–02	.TRIM & TILT SWITCH ASSY .INCLINER ET PARER COMMUTATEUR			1			WITH PT/T SW. WITH PT/T SW.
	703–48224–00	.COVER, CONTROL LEVER .COUVERCLE		1				WITHOUT PT/T SW. WITHOUT PT/T SW.
56	703–48221–00	.LEVER, CONTROL .LEVIER, COMMANDE		1	1			
57	703–48152–00	.KNOB, FREE ACCEL. .BOUTON		1	1			
58	703–48212–00	.BACK PLATE 1 .PLAQUETTE 1		1	1			
59	703–48213–00	.BACK PLATE 2 .PLAQUETTE 2		1	1			
60	703–48271–00	.ARM, SHIFT .BRAS		1	1			
61	703–48211–01	.HOUSING,1 .CORPS		1	1			
62	703–48232–00	.GEAR .PIGNON		1	1			

FIG. 31 REPAIR KIT 1 — KITS DE REPARATION 1

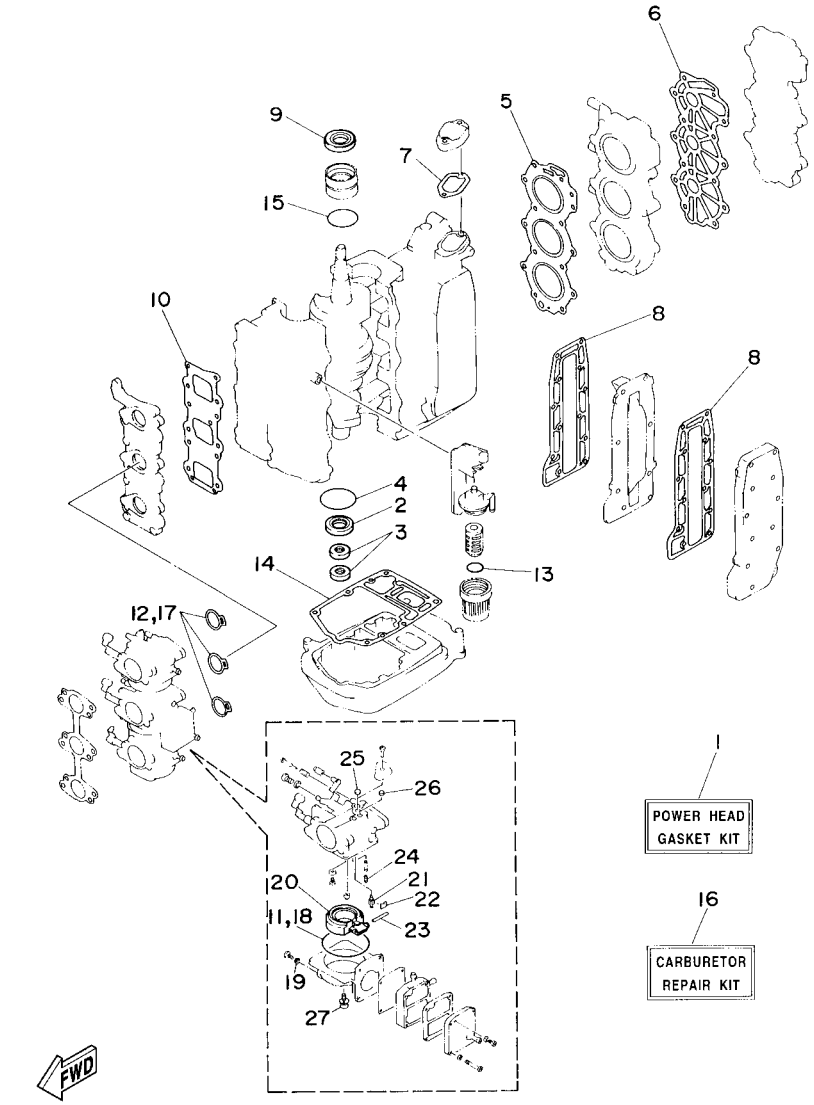

REF. NO.	PART NO. N° PIECES	DESCRIPTION DESCRIPTION	MHO	EO	ETO			REMARKS REMARQUES
1	6J8–W0001–03	POWER HEAD GASKET KIT POCHETTE DE JINTS TETE MOTRICE	1	1	1			
2	93101–25M28	.OIL SEAL .JOINT SPY	1	1	1			
3	93104–16M04	.OIL SEAL .JOINT SPY	2	2	2			
4	93210–56M80	.O-RING .JOINT TORIQUE	1	1	1			
5	6J8–11181–A1	.GASKET, CYLINDER HEAD 1 .JOINT, DE CULASSE 1	1	1	1			
6	6J8–11193–A1	.GASKET, HEAD COVER 1 .JOINT, COUVERCLE DE CULASSE 1	1	1	1			
7	6J8–12414–A0	.GASKET, COVER .JOINT, COUVERCLE	1	1	1			
8	6J8–41114–A0	.GASKET, EXHAUST OUTER COVER .JOINT, COUVERCLE D'ECHAPPEMEN	2	2	2			
9	93102–26M27	.OIL SEAL .JOINT SPY	1	1	1			
10	6J8–13621–00	.GASKET, VALVE SEAT .JOINT, SIEGE DE CLAPET	1	1	1			
11	6J8–14984–00	.GASKET, FLOAT CHAMBER .JOINT, CUVE DE FLOTTEUR	3	3	3			
12	6J8–14198–00	.GASKET .JOINT	3	3	3			
13	93210–32738	.O-RING .JOINT TORIQUE	1	1	1			
14	6J8–45113–A0	.GASKET, UPPER CASING .JOINT, TUBE D'ARBRE	1	1	1			
15	93210–42159	.O-RING .JOINT TORIQUE	1	1	1			
16	6J8–W0093–00	CARBURETOR REPAIR KIT KIT DE REPARATION CARBURATEUR	1	1	1			
17	6J8–14198–00	.GASKET .JOINT	3	3	3			
18	6J8–14984–00	.GASKET, FLOAT CHAMBER .JOINT, CUVE DE FLOTTEUR	3	3	3			
19	6J8–14995–00	.GASKET .JOINT	3	3	3			
20	6J8–14985–00	.FLOAT .FLOTTEUR	3	3	3			
21	6J8–14546–00	.VALVE, NEEDLE .POINTEAU	3	3	3			
22	6J8–14159–00	.CLIP .JONC	3	3	3			
23	6J8–14548–00	.PIN, FLOAT ARM .AXE, BRAS DE FLOTTEUR	3	3	3			
24	6J8–14966–00	.PLUG .BOUCHON	3	3	3			
25	6J8–14126–00	.PLUG .BOUCHON	3	3	3			
26	6J8–14118–00	.PLUG .BOUCHON	3	3	3			
27	97980–04112	.SCREW, WITH WASHER .VIS, AVEC RONDELLE	3	3	3			

FIG. 32 REPAIR KIT 2 — KITS DE REPARATION 2

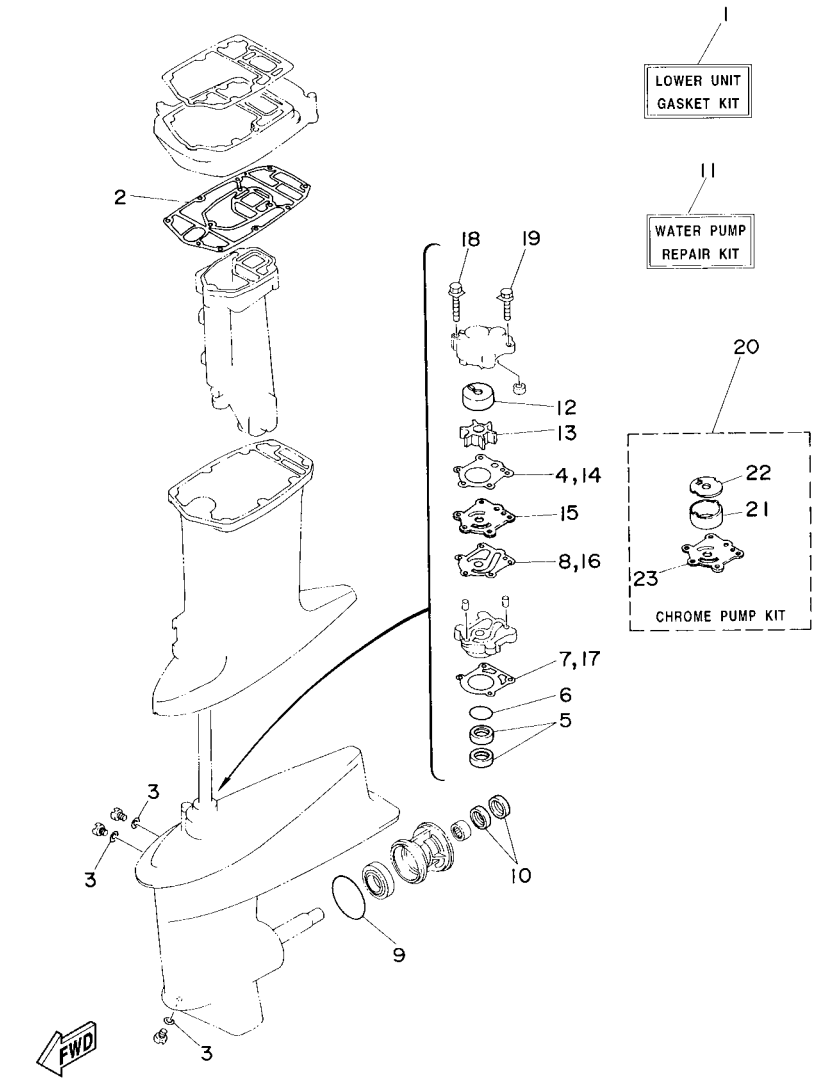

REF. NO.	PART NO. N° PIECES	DESCRIPTION DESCRIPTION	MHO	EO	ETO			REMARKS REMARQUES
1	6J8–W0001–C2	LOWER UNIT GASKET KIT POCHETTE DE JOINTS EMBASE	1	1	1			
2	6J8–45114–A1	.GASKET, UPPER CASING .JOINT, TUBE D'ARBRE	1	1	1			
3	90430–08020	.GASKET .JOINT	3	3	3			
4	663–44315–A0	.GASKET, WATER PUMP .JOINT, POMPE A EAU	1	1	1			
5	93101–23070	.OIL SEAL .JOINT SPY	2	2	2			
6	93210–41042	.O-RING .JOINT TORIQUE	1	1	1			
7	663–44316–A0	.GASKET, WATER PUMP .JOINT, POMPE A EAU	1	1	1			
8	663–44324–A0	.GASKET, CARTRIDGE .JOINT	1	1	1			
9	93210–60MA3	.O-RING .JOINT TORIQUE	1	1	1			
10	93101–20M07	.OIL SEAL .JOINT SPY	2	2	2			
11	6J8–W0078–A2	WATER PUMP REPAIR KIT KIT DE REPARATION DE LA POMPE	1	1	1			
12	663–44322–00	.INSERT, CARTRIDGE .CUVETTE	1	1	1			
13	6H4–44352–02	.IMPELLER .TURBINE	1	1	1			
14	663–44315–A0	.GASKET, WATER PUMP .JOINT, POMPE A EAU	1	1	1			
15	663–44323–00	.OUTER PLATE, CARTRIDGE .PLAQUE EXTERIEURE	1	1	1			
16	663–44324–A0	.GASKET, CARTRIDGE .JOINT	1	1	1			
17	663–44316–A0	.GASKET, WATER PUMP .JOINT, POMPE A EAU	1	1	1			
18	90119–08M13	.BOLT, WITH WASHER .BOULON, AVEC RONDELLE	2	2	2			
19	90119–08M34	.BOLT, WITH WASHER .BOULON, AVEC RONDELLE	2	2	2			
20	6H4–W0078–0A	CHROME PUMP KIT KIT DE POMPE A EAU CHROMEE	1	1	1			
21	670–44322–01	.INSERT, CARTRIDGE .CUVETTE	1	1	1			
22	670–44321–00	.INNER PLATE, CARTRIDGE .CUVETTE	1	1	1			
23	670–44323–00	.OUTER PLATE, CARTRIDGE .PLAQUE EXTERIEURE	1	1	1			

NUMERICAL INDEX
INDEX NUMERIQUE

PART NO. N° PIECES	REF. NO.
6J8–11111–00–1S	2 – 16
6F5–11119–00	2 – 8
6J8–1111J–00	2 – 30
6J8–11181–A1	2 – 17
	31 – 5
6J8–11191–00–1S	2 – 18
6J8–11193–A1	2 – 19
	31 – 6
6J8–11325–00	2 – 10
6H3–11327–00–1S	2 – 11
6H3–11328–00	2 – 12
650–11370–01	2 – 3
676–11372–00	2 – 27
6J8–11400–11	3 – 1
6J8–11536–00	3 – 2
6J8–11537–00	6 – 2
6J8–11601–01	3 – 9
6J8–11601–11	3 – 9
6J8–11601–21	3 – 9
6J8–11631–02–97	3 – 8
6J8–11633–00	3 – 10
6J8–11635–02	3 – 8
6J8–11636–02	3 – 8
688–12411–11	2 – 21
688–12412–00	2 – 22
6H4–12413–00–1S	2 – 23
6J8–12414–A0	2 – 24
	31 – 7
6J8–13117–00	6 – 3
6J8–13155–00	6 – 18
6E9–13183–70	6 – 14
6J8–13200–01	6 – 5
6J8–13411–00	6 – 33
6J8–13414–00	6 – 34
6J8–13416–00	6 – 35
6J8–13436–40	1 – 13
6J8–13437–81	13 – 36
6J8–13437–91	8 – 51
6J8–13610–00	4 – 1
6J8–13621–00	4 – 7
	31 – 10
6J8–13641–10–94	4 – 5
6J8–14118–00	5 – 16
	31 – 26
6J8–14126–00	5 – 15
	31 – 25
6J8–14159–00	5 – 10
	31 – 22

PART NO. N° PIECES	REF. NO.
6J8–14198–00	4 – 9
	31 – 12
6J8–14301–11	5 – 1
6J8–14302–01	5 – 2
6J8–14303–01	5 – 3
6J8–14334–00	5 – 26
6J8–14417–00	4 – 11
6J8–14418–00	4 – 12
6J8–14476–00	4 – 13
6J8–14483–A1	4 – 15
624–14485–00	2 – 4
676–14485–00	4 – 6
6J8–14497–00	16 – 1
6J8–14523–00	5 – 25
6J8–14527–01	5 – 17
6J8–14546–00	5 – 9
	31 – 21
6J8–14548–00	5 – 11
	31 – 23
6J8–14555–00	5 – 19
6J8–14578–00	5 – 34
6J8–14592–01	5 – 23
6J8–14737–00	24 – 7
6J8–14923–00	5 – 18
6J8–1492A–00	5 – 35
6J8–1492E–51	5 – 14
6J8–1492F–26	5 – 12
6J8–14966–00	5 – 13
	31 – 24
6J8–14980–00	5 – 5
6J8–14981–00	5 – 27
6J8–14984–00	5 – 4
	31 – 11
6J8–14985–00	5 – 8
	31 – 20
6J8–14991–00	5 – 6
6J8–14995–00	5 – 7
	31 – 19
6J8–15100–11–1S	2 – 2
6J8–15396–00–5B	3 – 14
6J8–15705–00	8 – 25
6J8–15710–02–4D	8 – 1
6J8–15711–00–94	8 – 2
6J8–15714–00	8 – 17
677–15717–01	8 – 19
6J8–15723–00	8 – 48
6J8–15723–E1	13 – 32
676–15741–03	8 – 23

PART NO. N° PIECES	REF. NO.
6J8–15746–01	8 – 34
6J8–15747–00	8 – 38
656–15748–00	8 – 31
6F5–15752–00	8 – 9
6F5–15753–00	8 – 10
689–15755–01	8 – 14
6J8–15758–01–94	8 – 4
6J8–15762–00	8 – 7
6J8–15770–00	8 – 33
6J8–15771–00–94	8 – 40
6J8–15772–00–94	8 – 41
6J8–15774–01	8 – 39
6F5–15779–02	8 – 15
6J8–15787–00	8 – 13
6A0–15789–00	8 – 8
6J8–21707–01	6 – 27
6J8–21707–11	6 – 27
6J8–21732–00	1 – 16
6J8–21735–00	1 – 17
6J8–2173M–00	6 – 28
63D–21744–00	6 – 41
6H1–21757–00	6 – 30
6J8–21758–00	6 – 32
6H4–21770–00	6 – 29
6J8–2177H–00	1 – 14
6YK–24201–02	27 – 1
6YK–24260–01	27 – 4
6YL–24268–01	27 – 2
6G1–24304–02	7 – 1
6YL–24306–54	27 – 7
6J8–24311–00	7 – 14
6E5–24312–00	7 – 11
688–24313–00	7 – 13
6YL–24329–00	27 – 6
6E5–24378–00	6 – 44
6J8–24415–00	5 – 29
6J8–24432–00	5 – 30
6J8–24452–00	5 – 31
6J8–24471–00	5 – 28
61N–24521–00	7 – 8
61N–24560–00	7 – 6
61N–24563–00	7 – 7
6YK–24610–01	27 – 3
6H1–24633–00	6 – 31
6J8–26301–00	15 – 25
6G8–26363–00	17 – 14
	18 – 15
6G8–26364–00	17 – 15

PART NO. N° PIECES	REF. NO.
6G8–26364–00	18 – 16
6G1–2811G–00	7 – 19
6J8–28170–00	7 – 18
6A1–28176–00	14 – 39
6E0–28193–00–94	7 – 24
6J8–28199–72–D0	7 – 25
6J8–28199–72–E0	7 – 25
6J8–28199–72–F0	7 – 25
6J8–28199–72–G0	7 – 25
6J8–28199–72–H0	7 – 25
6J8–28199–72–S0	7 – 25
6J8–28199–8D–K0	7 – 26
6J8–28199–8D–L0	7 – 26
6J8–28199–8D–M0	7 – 26
6J8–28199–8D–N0	7 – 26
6J8–28199–8D–P0	7 – 26
6J8–28199–8D–R0	7 – 26
61H–2819R–31	7 – 16
6J8–41111–00–1S	2 – 28
6J8–41113–00–1S	2 – 26
6J8–41114–A0	2 – 29
	31 – 8
6J8–41131–00–5B	24 – 6
6J8–41137–01–94	24 – 4
6J8–41213–00	16 – 2
6J8–41217–00	4 – 25
682–41237–00	6 – 25
	16 – 9
6J8–41237–00	6 – 22
6J8–41238–00	6 – 21
6J8–41257–00	4 – 21
6J8–41259–00	4 – 18
6J8–41262–00	4 – 22
	20 – 46
661–41262–02	4 – 19
	8 – 47
6J8–41271–01	4 – 20
689–41273–00	4 – 23
6J8–41274–00	4 – 24
6H4–41611–10	9 – 15
6J8–41615–00	9 – 16
6J8–41618–00	9 – 17
6J8–41631–02	16 – 7
6G1–41662–01–94	16 – 16
6G1–42111–12–4D	15 – 2
664–42119–00	15 – 14
6J8–42121–03–4D	19 – 33
6G1–42125–01	15 – 11

PART NO. N° PIECES	REF. NO.
6G1–42126–00	15 – 12
6G1–42131–02	15 – 8
6J8–42137–00	15 – 16
6G1–42138–01	15 – 22
6J8–42154–01	16 – 29
6E0–42159–02	15 – 23
6J8–42167–00	16 – 6
689–42169–01	16 – 8
6J8–42169–01	17 – 7
	18 – 8
6F6–42177–A0	15 – 15
6J8–42192–00	16 – 26
6J8–42510–03–4D	19 – 25
	22 – 9
6J8–42528–00	19 – 22
	22 – 3
6J8–42610–B0–4D	1 – 1
6J8–42610–D0–4D	1 – 1
6J8–42613–00–4D	1 – 6
6J8–42613–10–4D	1 – 6
6J8–42615–00	1 – 2
6J8–42651–03	1 – 3
6J8–42652–00	1 – 4
6J8–42677–40	1 – 8
6J8–42678–10	1 – 9
6J8–42681–11	1 – 11
6J8–42682–12	1 – 12
6J8–42711–03–4D	14 – 1
6J8–42716–00	14 – 16
6J8–42719–20	14 – 24
6J8–42723–01	14 – 22
6J8–42723–51	14 – 22
	18 – 17
6J8–42724–00	14 – 12
6J8–42724–10	18 – 19
6J8–42724–50	11 – 24
6J8–42724–60	12 – 24
6J8–42725–01	14 – 14
682–42726–00	16 – 34
6H4–42726–00	14 – 2
6J8–42726–00	14 – 13
688–42726–10	14 – 2
6J8–42726–10	14 – 13
6J8–42726–20	14 – 28
6G1–42727–00	14 – 11
6J8–42728–01	14 – 10
6J8–42735–00	14 – 23
6J8–42741–01	14 – 20

PART NO. N° PIECES	REF. NO.
6E7–42791–10	14 – 38
6J8–42815–00–4D	14 – 3
6J8–42816–00	14 – 7
6J8–42831–00	14 – 9
6J8–42846–00	14 – 27
	18 – 18
6H4–43111–05–4D	19 – 1
6K9–43111–10–4D	21 – 1
6H4–43112–04–4D	19 – 2
6K9–43112–10–4D	21 – 2
6J8–43113–01	19 – 12
648–43114–01	19 – 8
6E0–43118–01	19 – 5
6J8–43131–01	19 – 9
6K9–43131–01	21 – 9
6K9–43139–01	22 – 1
6E5–43145–01	28 – 9
6G5–43145–01	19 – 14
	21 – 15
6H4–43160–01	20 – 1
676–43165–00	20 – 2
6J8–43181–01	20 – 5
6J8–43186–00	20 – 41
6J8–43187–00	20 – 42
65W–43191–00	21 – 6
65W–43192–00	21 – 5
6K9–43311–01–4D	21 – 16
6J8–43311–04–4D	19 – 19
682–43318–01	20 – 6
689–43373–01	16 – 25
	19 – 23
	22 – 4
6J8–43611–01	20 – 20
6J8–43613–01	20 – 18
6J8–43614–00	20 – 16
6J8–43615–00	20 – 17
6H4–43616–00	20 – 29
6J8–43616–10	20 – 47
6J8–43617–00	20 – 32
6J8–43617–10	20 – 40
6J8–43627–00	20 – 11
6J8–43631–00	20 – 26
6J8–43631–10	20 – 36
6J8–43633–00	20 – 27
6J8–43641–00	20 – 30
6H4–43659–00	20 – 19
6J8–43673–00	20 – 35
6J8–43681–01	20 – 34

NUMERICAL INDEX
INDEX NUMERIQUE

PART NO. N° PIECES	REF. NO.
65W–43800–02–4D	23 – 1
6T4–43802–03	23 – 30
65W–43804–00	23 – 3
65W–43805–00	23 – 4
65W–4380F–00	23 – 11
65W–4380K–00	23 – 16
65W–4380L–00	23 – 27
65W–43810–00	23 – 17
65W–43812–00	23 – 18
6H1–43816–00	23 – 25
65W–43817–00	23 – 40
65W–4381B–00	23 – 22
6H1–43829–00	23 – 62
65W–4382A–00	23 – 48
65W–43830–00	23 – 37
65W–43831–00	23 – 36
65W–43840–00	23 – 15
62X–43841–00	23 – 34
65W–43843–00	23 – 55
65W–43844–00	23 – 49
6H1–43844–10	23 – 57
6H1–43845–00	23 – 44
6H1–43847–00	23 – 46
6H1–4384F–10	23 – 58
65W–43851–00	23 – 50
65W–43853–00	23 – 61
6T4–43853–00	23 – 38
65W–43854–00	23 – 47
65W–43855–00	23 – 53
6H1–43856–10	23 – 56
65W–43861–00	23 – 41
6H1–43861–10	23 – 20
65W–43862–00	23 – 42
65W–43865–00	23 – 19
6H1–43866–00	23 – 31
6H1–43867–00	23 – 33
65W–43869–00	23 – 5
65W–4386A–00	23 – 59
65W–4386K–00	23 – 7
65W–43871–00	23 – 21
6H1–43875–00	23 – 43
62X–43878–00	23 – 63
65W–43879–00	23 – 12
65W–43880–00	23 – 2
65W–43881–00	23 – 6
65W–43882–00	23 – 8
65W–43887–00	23 – 13
65W–43888–00	23 – 28

PART NO. N° PIECES	REF. NO.
65W–4388E–00	23 – 14
65W–43891–00	23 – 10
65W–43892–00	23 – 9
6J8–44111–01–4D	15 – 26
6J8–44116–00	16 – 19
6J8–44121–00	16 – 15
6J8–44123–00	16 – 11
6J8–44124–00	15 – 31
6J8–44125–00	15 – 27
682–44132–00	15 – 28
6J8–44142–00	16 – 32
6J8–44143–00	16 – 21
682–44147–00	25 – 16
6J8–44150–00	25 – 15
6J8–44150–10	25 – 15
6J8–44173–02	17 – 6
	18 – 7
682–44176–00	25 – 13
6J8–44177–00	17 – 4
	18 – 5
6E0–44191–11	15 – 3
689–44194–00	10 – 18
6J8–44311–00	25 – 18
663–44315–A0	25 – 21
	32 – 4
663–44316–A0	25 – 27
	32 – 7
670–44321–00	32 – 22
663–44322–00	25 – 19
	32 – 12
670–44322–01	32 – 21
663–44323–00	25 – 28
	32 – 15
670–44323–00	32 – 23
663–44324–A0	25 – 29
	32 – 8
663–44341–00–94	25 – 24
6H4–44352–02	25 – 20
	32 – 13
6J8–44361–00	26 – 1
6J8–44361–10	26 – 1
663–44366–00	25 – 22
6J8–44366–00	26 – 2
663–44367–00	26 – 3
6H3–44391–01	14 – 15
6J8–44511–00–4D	19 – 48
	22 – 31
6H4–44514–00	19 – 44

PART NO. N° PIECES	REF. NO.
6H4–44514–00	22 – 27
6H4–44551–02–4D	19 – 31
	22 – 15
6H4–44553–01	19 – 38
	22 – 21
6H4–44557–00	19 – 37
6H4–44557–10	19 – 37
	22 – 20
6J8–45111–01–4D	24 – 1
6J8–45111–11–4D	24 – 1
6J8–45113–A0	2 – 33
	31 – 14
6J8–45114–A1	24 – 5
	32 – 2
663–45119–00	19 – 21
	21 – 18
689–45214–01	26 – 13
6J8–45215–00	26 – 14
6J8–45224–10	26 – 6
65W–45251–00	21 – 24
6J8–45300–04–4D	25 – 1
6J8–45300–14–4D	25 – 1
6J8–45301–02–4D	25 – 2
689–45331–01–94	25 – 47
664–45371–01	26 – 17
688–45375–00	26 – 5
663–45376–00–94	26 – 4
6E5–45378–00	25 – 7
664–45384–00	25 – 55
6J8–45501–00	25 – 33
6J8–45501–10	25 – 33
6J8–45536–00	25 – 4
6J8–45551–00	25 – 34
6J8–45560–00	25 – 36
6J8–45567–01	25 – 38
6J8–45567–10	25 – 38
6J8–45567–20	25 – 38
6J8–45567–30	25 – 38
6J8–45567–40	25 – 38
6J8–45567–50	25 – 38
6J8–45567–60	25 – 38
6J8–45571–00	25 – 46
664–45576–00	25 – 50
664–45577–01	25 – 49
664–45577–10	25 – 49
664–45577–20	25 – 49
664–45577–30	25 – 49
664–45577–40	25 – 49

PART NO. N° PIECES	REF. NO.
664–45577–50	25 – 49
664–45577–60	25 – 49
663–45587–01	25 – 5
663–45587–10	25 – 5
663–45587–20	25 – 5
663–45587–30	25 – 5
663–45587–40	25 – 5
663–45587–50	25 – 5
663–45587–60	25 – 5
6J8–45611–00	25 – 39
6J8–45631–00	25 – 41
648–45633–00	25 – 43
6J8–45635–00	25 – 44
664–45941–01–EL	26 – 26
664–45943–01–EL	26 – 26
664–45945–00–EL	26 – 26
664–45947–01–EL	26 – 26
664–45949–02–EL	26 – 26
664–45952–00–EL	26 – 26
664–45954–01–EL	26 – 26
664–45970–00–98	26 – 26
6J8–45986–10–98	26 – 28
6L2–45987–01	26 – 21
689–45997–00	26 – 22
703–48152–00	30 – 57
703–48153–00	30 – 3
703–48189–00	30 – 17
703–48198–00	30 – 14
703–48211–01	30 – 61
703–48212–00	30 – 58
703–48213–00	30 – 59
703–48215–00	30 – 43
703–48219–00	30 – 30
703–48221–00	30 – 56
703–48222–00	30 – 27
703–48223–00	30 – 28
703–48224–00	30 – 55
703–48225–00	30 – 29
703–48226–00	30 – 26
703–48227–00	30 – 24
703–48230–15	29 – 1
	30 – 1
703–48232–00	30 – 62
703–48234–00	30 – 18
703–48235–00	30 – 4
703–48236–00	30 – 16
703–48238–00	30 – 22
703–48243–00	30 – 15

PART NO. N° PIECES	REF. NO.
703–48244–00	30 – 21
703–48245–00	30 – 11
703–48246–00	30 – 23
701–48248–00	30 – 13
703–48250–17	29 – 1
	30 – 1
703–48252–00	30 – 12
703–48261–11	30 – 2
703–48264–00	30 – 6
703–48265–00	30 – 9
703–48268–00	30 – 5
703–48271–00	30 – 60
703–48281–00	30 – 31
703–48282–00	30 – 32
703–48284–00	30 – 52
701–48287–00	30 – 42
703–48291–10	30 – 39
703–48293–10	30 – 41
701–48310–80	29 – 2
701–48310–90	29 – 2
701–48320–00	29 – 2
703–48345–01	30 – 19
703–48358–00	30 – 20
6J8–48501–03–4D	18 – 1
6J8–48501–11	18 – 1
6G8–48511–00	18 – 21
6J8–48511–01–4D	18 – 20
	19 – 51
6G8–48511–10	18 – 24
6J8–48511–51–4D	22 – 34
6J8–48531–00	17 – 8
	18 – 9
6J8–48532–00	17 – 9
	18 – 10
6J8–48534–00	17 – 1
	18 – 3
682–48538–50	17 – 10
	18 – 11
6J8–48544–01	17 – 3
	18 – 4
689–61350–02	28 – 1
689–61351–01	28 – 2
6E5–61355–00	28 – 7
6J8–81332–00	9 – 22
6J8–81337–10	13 – 27
6J8–81338–00	13 – 31
6J8–81365–A0	13 – 33
6F5–81800–11	13 – 1

PART NO. N° PIECES	REF. NO.
689–81807–12	13 – 3
689–81809–11	13 – 7
689–81810–11	13 – 9
689–81811–11	13 – 11
689–81812–11	13 – 12
689–81813–10	13 – 13
689–81820–11	13 – 14
6J8–81822–01–94	13 – 21
689–81826–10	13 – 15
6F5–81830–11	13 – 4
689–81831–00	13 – 5
689–81840–11	13 – 10
689–81847–11	13 – 6
689–81850–12	13 – 8
689–81857–11	13 – 2
6J8–81916–10	11 – 11
	12 – 11
6H5–81920–00	12 – 32
6G1–81941–10	11 – 1
	12 – 1
6J8–81945–00	11 – 3
	12 – 3
6J8–81950–00	12 – 27
6G1–81952–00	11 – 2
	12 – 2
6J8–81960–00	10 – 16
6G1–81970–61	11 – 7
	12 – 7
6J8–81975–00	10 – 17
689–82105–13	11 – 25
	12 – 25
6F5–82117–00	11 – 6
	12 – 6
682–82119–01	12 – 37
6H4–82127–00	19 – 43
	22 – 26
6U0–82127–00	21 – 28
6E5–82148–00	19 – 3
6H1–82148–00	21 – 27
6G1–82151–00	11 – 8
	12 – 8
6H3–82151–00	11 – 16
	12 – 16
6A0–82317–00	6 – 46
6G1–82370–21	10 – 14
703–82510–33	30 – 44
703–82510–43	30 – 44
6J8–82531–00	10 – 7

NUMERICAL INDEX
INDEX NUMERIQUE

PART NO. N° PIECES	REF. NO.
703–82531–00	30 – 46
703–82540–00	30 – 50
6J8–82553–00	14 – 36
682–82556–00	14 – 30
	30 – 48
663–82557–00	14 – 35
689–82560–00	10 – 15
703–82563–02	30 – 55
688–82575–01	30 – 47
689–82575–04	14 – 29
703–82577–00	30 – 45
6E3–8257H–00	14 – 40
689–8257Y–00	14 – 31
6J8–82580–00	11 – 23
6J8–82580–10	12 – 23
688–82586–21	30 – 49
688–8258A–20	30 – 49
703–82591–00	30 – 53
703–82592–00	30 – 54
703–82594–00	30 – 25
703–83383–02	30 – 51
6E9–83557–70	11 – 15
	12 – 15
6E5–83558–00	25 – 9
6A1–83625–41	4 – 26
6A1–83625–51	4 – 27
6E0–83627–41	15 – 34
6E0–83627–51	15 – 35
64E–83672–02	22 – 6
682–84381–00	14 – 33
6J8–84387–00	14 – 34
6J8–85410–00	14 – 37
6J8–85510–A1	9 – 3
6H4–85510–F1	9 – 3
663–85518–00	9 – 11
6H4–85520–01	9 – 4
6J8–85520–01	9 – 4
6H4–85533–A1	9 – 1
6J8–85540–H2	10 – 1
6H4–85548–00	9 – 9
6J8–85548–00	9 – 19
6J8–85550–A1	9 – 2
6J8–85550–F1	9 – 2
6J8–85570–21	10 – 10
6J8–85720–01	6 – 49
6J8–86110–00	11 – 17
	12 – 17
6J8–86116–00	11 – 18

PART NO. N° PIECES	REF. NO.
6J8–86116–00	12 – 18
682–86117–00	11 – 19
	12 – 19
6J8–W0001–03	31 – 1
6J8–W0001–C2	32 – 1
6J8–W0004–00	4 – 2
6J8–W0070–14	1 – 10
6H4–W0078–0A	32 – 20
6J8–W0078–A2	32 – 11
6J8–W0084–11–4D	15 – 1
6J8–W0090–43–1S	2 – 1
6J8–W0093–00	31 – 16
656–W2810–02	7 – 17
6J8–W4591–00–EL	26 – 27
90101–06020	21 – 26
90101–06024	8 – 44
90101–06M00	9 – 20
90101–08001	2 – 9
90101–08339	19 – 15
90101–10M58	19 – 52
90101–12M65	21 – 39
90105–06M18	19 – 24
	22 – 5
90109–05M32	6 – 7
90109–05M33	6 – 8
90109–06M28	16 – 3
90109–06M29	17 – 12
	18 – 13
90109–06M86	14 – 26
90109–08M26	19 – 45
	22 – 28
90110–10M02	21 – 36
90116–08016	15 – 9
90116–10M28	19 – 34
	22 – 17
90119–05M31	4 – 14
90119–06023	2 – 13
	3 – 18
90119–06M17	12 – 29
90119–06M32	4 – 10
90119–06M61	14 – 19
90119–06M65	6 – 48
90119–06MA3	2 – 25
	4 – 8
90119–06MA4	2 – 6
90119–06MA5	2 – 31
90119–08019	2 – 5
90119–08M13	25 – 31

PART NO. N° PIECES	REF. NO.
90119–08M13	32 – 18
90119–08M31	24 – 3
90119–08M34	25 – 32
	32 – 19
90119–08M92	26 – 12
90119–08MA8	2 – 20
90149–05M13	15 – 20
90149–14M12	19 – 7
90152–05M04	26 – 15
90157–05M16	27 – 5
90159–05M26	11 – 14
	12 – 14
90161–03M01	1 – 15
90164–06M01	14 – 21
90170–06015	16 – 24
90170–09M03	28 – 5
90171–14013	26 – 24
90179–06M24	1 – 7
	17 – 13
	18 – 14
90179–08M15	7 – 10
90179–10M14	25 – 35
90179–16M05	9 – 13
90185–05002	26 – 16
90185–08045	19 – 47
	22 – 30
90185–08057	15 – 10
90185–09M01	28 – 4
90185–10051	19 – 36
	22 – 19
90185–10M13	21 – 38
90185–22043	19 – 13
90185–22M11	21 – 14
90201–06060	8 – 20
90201–08M00	21 – 32
90201–08M93	6 – 1
90201–09425	19 – 46
	22 – 29
90201–10M02	15 – 19
90201–10M20	28 – 3
90201–10M63	28 – 8
90201–12426	19 – 54
	21 – 41
90201–16379	3 – 12
90201–16M44	9 – 14
90201–20417	25 – 45
90201–22M03	19 – 11
	21 – 13

PART NO. N° PIECES	REF. NO.
90201–30M00	19 – 28
	22 – 12
90201–50306	3 – 7
90202–05088	6 – 23
90202–10024	16 – 30
90202–12031	20 – 10
90202–12M17	16 – 35
90202–12M25	14 – 4
90202–36M55	15 – 5
90206–12052	14 – 5
90206–12M16	20 – 15
90206–36M21	15 – 4
90214–45M02	25 – 54
90243–04M01	19 – 6
90249–06M24	20 – 31
90249–07M25	20 – 44
90249–12M27	20 – 12
90249–12M28	20 – 8
90249–12M38	21 – 21
90249–18M35	21 – 35
90250–05010	25 – 42
90254–03M03	17 – 5
	18 – 6
90254–03M04	15 – 29
	16 – 12
90266–04M00	1 – 5
90269–02M09	15 – 17
90280–03024	25 – 23
90280–05013	9 – 12
90282–04010	25 – 56
90338–07M00	24 – 8
90340–08002	25 – 11
90386–06M12	15 – 30
90386–08032	15 – 21
90386–12M61	14 – 6
90386–12M98	21 – 20
90386–12MA0	21 – 19
90386–14MA1	21 – 8
90386–18M44	21 – 33
90386–18MA0	21 – 34
90386–22M15	21 – 12
90386–22M69	19 – 10
90386–30M60	19 – 30
	22 – 14
90386–30M77	19 – 26
	22 – 10
90386–30M78	19 – 27
	22 – 11

PART NO. N° PIECES	REF. NO.
90386–33M96	15 – 6
90386–34M97	15 – 7
90387–06119	6 – 47
90387–06M03	12 – 28
90387–06M29	8 – 35
90387–06M41	14 – 18
90387–06M60	6 – 20
90387–06M81	9 – 21
90387–07M64	20 – 21
90387–08M03	19 – 16
90387–10M42	28 – 6
90430–08020	25 – 12
	32 – 3
90445–07M04	6 – 15
90445–07M08	6 – 9
90445–07M29	2 – 14
90445–07M31	25 – 8
90445–07M32	6 – 10
90445–07ME9	25 – 8
90445–09M00	7 – 5
90445–11M02	6 – 42
90445–11M03	6 – 38
90445–11M04	6 – 43
90445–11M07	6 – 40
90445–11M08	6 – 16
90446–10M01	6 – 39
90446–14M88	12 – 31
90464–03M15	13 – 22
90464–05M16	10 – 13
90464–07M05	6 – 13
90464–09M21	7 – 12
90464–09M51	14 – 25
90464–12M17	7 – 22
90464–15M11	10 – 4
	11 – 26
	12 – 26
90465–08M12	12 – 30
90465–08M63	22 – 8
90465–10M77	21 – 3
90465–11M10	21 – 25
	25 – 10
90465–13M11	21 – 23
90465–13M18	11 – 12
	12 – 12
90465–13M76	14 – 32
90465–18147	7 – 23
	11 – 13
	12 – 13

PART NO. N° PIECES	REF. NO.
90467–06016	2 – 15
90467–08004	6 – 37
	7 – 4
90467–10M04	6 – 45
90467–11M08	6 – 36
90468–05M03	6 – 24
90468–07M02	6 – 12
90480–09M21	14 – 17
90480–10M16	13 – 29
90480–14M17	13 – 28
90480–25161	10 – 21
90501–10065	25 – 40
90501–10227	8 – 32
90501–23215	15 – 18
90502–10M04	20 – 4
90506–12M25	20 – 7
90506–32M22	20 – 24
90508–18M23	20 – 28
90508–20M22	20 – 48
90508–25M21	20 – 43
90510–08M04	8 – 18
91318–04025	23 – 39
91490–16010	15 – 13
	16 – 23
91490–20010	20 – 25
91490–20012	15 – 33
	16 – 14
91490–30022	26 – 25
91690–30010	20 – 3
91690–30012	17 – 11
	18 – 12
91690–30018	21 – 7
91690–40014	8 – 3
91690–50022	13 – 30
92903–06600	8 – 43
	11 – 5
	12 – 5
	16 – 18
92903–08100	13 – 19
92903–08600	8 – 50
	13 – 17
92990–05600	4 – 4
	5 – 24
	11 – 10
	12 – 10
	16 – 22
92990–06200	15 – 32
	16 – 13

NUMERICAL INDEX
INDEX NUMERIQUE

PART NO. N° PIECES	REF. NO.
92990–08100	17 – 2
	18 – 2
92990–08600	19 – 17
	30 – 34
92990–14200	26 – 23
92995–05600	9 – 24
92995–06100	10 – 12
92995–06600	7 – 3
	8 – 6
	10 – 3
	12 – 34
	18 – 23
	21 – 30
92995–08100	19 – 50
	21 – 11
	22 – 33
	26 – 19
92995–08600	7 – 21
	19 – 40
	22 – 23
	24 – 12
	26 – 20
92995–10100	26 – 10
92995–10600	19 – 35
	21 – 37
	22 – 18
	26 – 11
92995–12200	21 – 40
93101–20M07	25 – 53
	32 – 10
93101–23070	25 – 25
	32 – 5
93101–25M28	3 – 15
	31 – 2
93102–26M27	3 – 4
	31 – 9
93104–16M04	3 – 16
	31 – 3
93210–03261	11 – 22
	12 – 22
93210–03478	23 – 52
93210–064A5	23 – 26
93210–08006	23 – 51
93210–09165	23 – 35
93210–10M74	23 – 32
93210–11073	23 – 54
93210–11368	23 – 24
93210–13M04	6 – 4

PART NO. N° PIECES	REF. NO.
93210–16275	28 – 10
93210–18397	23 – 45
93210–19MA7	6 – 6
93210–29M94	19 – 29
	22 – 13
93210–32738	7 – 9
	31 – 13
93210–41042	25 – 26
	32 – 6
93210–42159	3 – 5
	31 – 15
93210–50768	23 – 29
93210–56M80	3 – 17
	31 – 4
93210–60MA3	25 – 51
	32 – 9
93306–00612	25 – 48
93306–305U3	3 – 6
93311–632U7	3 – 3
93315–22004	25 – 52
93315–220V7	25 – 3
93332–00001	25 – 6
93332–000V6	25 – 37
93410–28M06	19 – 32
	22 – 16
93430–06024	30 – 10
93430–06M02	8 – 24
	20 – 22
93430–10M00	20 – 9
	21 – 22
93450–17129	3 – 13
93501–08001	23 – 60
93602–16M10	3 – 11
93604–08062	25 – 30
93606–12019	2 – 7
	24 – 2
	26 – 8
93700–06M03	19 – 20
	21 – 17
94702–00271	2 – 34
95303–06600	16 – 5
95380–05600	16 – 10
	30 – 7
95380–05700	6 – 26
95380–06600	8 – 12
	30 – 40
95380–06700	8 – 22
	25 – 17

PART NO. N° PIECES	REF. NO.
95380–08600	19 – 18
95380–10600	19 – 55
95380–12600	21 – 42
95780–08300	16 – 31
95895–06012	14 – 8
	16 – 20
97013–06016	11 – 4
	12 – 4
97013–06020	8 – 42
	16 – 17
97013–08014	8 – 49
	13 – 34
97013–08016	13 – 16
97013–08030	13 – 18
97013–08035	13 – 23
97013–08055	13 – 25
97075–08020	26 – 18
97075–08030	24 – 11
97075–08035	19 – 49
	22 – 32
97075–10040	26 – 9
97080–08016	21 – 31
97095–06012	10 – 5
	12 – 35
97095–06014	12 – 33
	21 – 29
97095–06016	8 – 5
	18 – 22
97095–06020	10 – 11
97095–06025	6 – 19
	7 – 2
	8 – 11
	10 – 2
97095–06035	8 – 26
97095–08016	7 – 20
97095–08020	21 – 10
97095–08025	19 – 39
	22 – 22
97095–10060	19 – 41
	22 – 24
97380–05025	30 – 8
97380–08030	30 – 33
97575–08550	24 – 10
97595–06510	21 – 4
97780–50510	25 – 14
97780–60525	22 – 2
97880–05016	4 – 3
97880–05025	11 – 9

PART NO. N° PIECES	REF. NO.
97880–05025	12 – 9
97880–05040	4 – 16
97880–06012	9 – 18
	26 – 7
97880–06025	16 – 4
97885–05010	9 – 23
97885–05012	15 – 24
97885–06008	19 – 4
97885–06016	22 – 7
97902–04106	9 – 7
97902–04112	9 – 6
97902–05408	9 – 10
97902–06120	9 – 5
97980–03122	5 – 32
97980–04110	5 – 20
97980–04112	5 – 21
	31 – 27
97980–04124	5 – 33
98580–03015	30 – 38
98580–04006	30 – 36
98580–04010	30 – 35
98580–05010	30 – 37
98780–05008	5 – 22
99080–05600	20 – 23
99530–10014	8 – 30
9E471–09205	9 – 8

PART NO. N° PIECES	REF. NO.

PART NO. N° PIECES	REF. NO.