YAMAHA

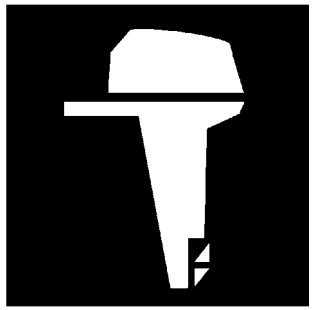

# PARTS CATALOGUE
# CATALOGUE DE PIECES DETACHEES

# 75CETO'07 (67P5)
# 90AETO'07 (6H19)

1F6H1-300F1

(2F6H1-300F1)

YAMAHA
GENUINE
Parts & Accessories

A1

75CETO/90AETO
PARTS CATALOGUE
©2006 by Yamaha Motor Co., Ltd.
1st edition, August 2006
All rights reserved.
Any reprinting or unauthorized use
without the written permission of
Yamaha Motor Co., Ltd.
is expressly prohibited.
Printed in Japan.

75CETO/90AETO
CATALOGUE DE PIECES DETACHEES
©2006 par Yamaha Motor Co., Ltd.
1re édition, août 2006
Tous droits réservés
Toute réimpression ou utilisation
non autorisée sans la permission écrite
de la Yamaha Motor Co., Ltd.
est formellement interdite.
Imprimé au Japon

# FOREWORD

This Parts Catalogue is related to the parts for the model(s) on the cover page. When you are ordering replacement parts, please refer to this Parts Catalogue and quote both part numbers and part names correctly.

1. Modifications or additions which have been made after the issue of the Parts Catalogue will be announced in the Parts News.
   It is advisable that you make the necessary corrections to the Parts Catalogue according to the Parts News.

2. Abbreviations
   The following abbreviations are used in this Parts Catalogue.

   "UR" Use specified parts number.
   "UN" Use as many as needed.
   "AP" Alternate Parts
   "LM" Locally Made (Parts need to be ordered locally)
   "F#" Frame No. (Applicable machine No.)
   "O/S" Over Size

3. The number of components for assembly
   - Parts, which are to be supplied in an assembly, are listed with a dot (.) in front of the part name as shown below.
   - The numeral appearing to the right of each component part indicates the quantity of parts for each assembly unit.

| PART NO. | DESCRIPTION | Q'TY | REMARKS |
|---|---|---|---|
| 2F5–83310–60 | FRONT FLASHER LIGHT ASSY | 2 | |
| 115–83311–60 | .BULB (6V–18W) | 1 | |

4. Applicable colours of graphics are represented in the "REMARKS" as shown below.

| PART NO. | DESCRIPTION | Q'TY | REMARKS |
|---|---|---|---|
| 2N4–24110–00–X5 | FUEL TANK COMP. | 2 | MXR |
| 3J1–24240–10 | .GRAPHIC, FUEL TANK | 1 | FOR MXR |

5. Note that the illustrations for reference in finding parts numbers are not to be used for assembling. When assembling, please use the applicable service manual.

6. The asterisk (*) before a reference number indicates modified items after the first edition.

7. Applicable Serial No.

   Engine Serial No.

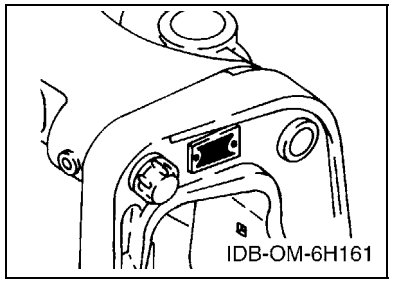


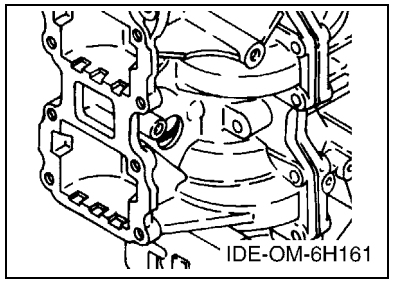


8. Applicable Engine Starting Serial No.

| Model | Serial No. | Model | Serial No. |
|---|---|---|---|
| 75C | 692-1020817 | 90A | 6H1-1028291 |
| | | | |
| | | | |
| | | | |
| | | | |

9. Applicable Colour Code

| Abbreviation | Colour Name | Colour Code |
|---|---|---|
| DBNM2 | DARK BLUISH GRAY METALLIC 2 | 004D |

10. Quantity Column Information

| Column No. | Name Of Q'ty Column | Applicable Model |
|---|---|---|
| 1 | 67P5 | 75CETO |
| 2 | 6H19 | 90AETO |
| | | |
| | | |
| | | |

# AVANT–PROPOS

Ce catalogue de pièces détachées concerne les pièces pour le(s) modèle(s) indiqué(s) sur la page de couverture. Lorsque vous commandez des pièces de rechange, veuillez vous référer à ce catalogue de pieces détachées et indiquer clairement les numéros et les noms des pièces détachées.

1. Les modifications ou ajouts ayant été effectués après la parution du catalogue de pièces détachées seront décrits dans les Bulletins d'information concernant les pièces détachées.
   Il est recommandé que vous apportiez les corrections nécessaires au catalogue des pièces détachées en vous référant aux Bulletins d'information.

2. Abréviations
   Dans ce catalogue, les abréviations suivantes sont utilisées:

   "UR" Utiliser le numéro de pièces spécifié.
   "UN" Utiliser autant que nécessaire.
   "AP" Pièces de substitution
   "LM" Fabrication locale (les pièces doivent être commandées localement.)
   "F#" N° de cadre (applicable au N° de série)
   "O/S" Surdimensionné

3. Nombre de pièces d'un assemblage
   - Les pièces fournies comme composants d'un assemblage sont précédées d'un point (.) de la manière indiquée ci–dessous.
   - Le chiffre apparaissant à la droite de chaque composant indique la quantité de pièces pour chaque unité d'assemblage.

| N° PIECES | DESCRIPTION | QTE | REMARQUES |
|---|---|---|---|
| 2F5–83310–60 | ENS. CLIGNOTANT AVANT | 2 | |
| 115–83311–60 | .AMPOULE (6V–18W) | 1 | |

4. Les couleurs concernant les graphiques sont indiquées dans la colonne "REMARQUES", comme indiqué ci–dessous.

| N° PIECES | DESCRIPTION | QTE | REMARQUES |
|---|---|---|---|
| 2N4–24110–00–X5 | RESERVOIR A ESSENCE. | 2 | MXR |
| 3J1–24240–10 | .GRAPHIQUE | 1 | POUR MXR |

5. Veuillez noter que les illustrations sont indiquées à titre de référence pour trouver les numéros de pièces, non pour être utilisées lors de l'assemblage. Lors de l'assemblage, veuillez utiliser le manuel d'entretien adéquat.

6. L'astérisque (*) placé devant un numéro de référence indique des éléments qui ont été modifiés après la première édition.

7. N° de série applicable

   N° de Série du moteur

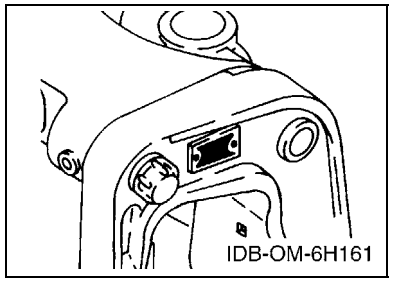


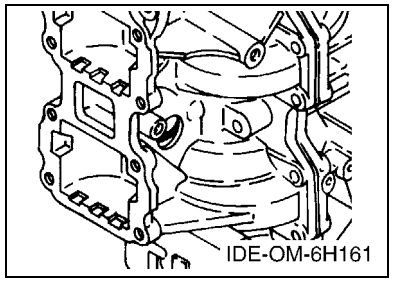


8. N° de série initial du moteur applicable

| Modèle | N° de série | Modèle | N° de série |
|---|---|---|---|
| 75C | 692-1020817 | 90A | 6H1-1028291 |
| | | | |
| | | | |
| | | | |
| | | | |

9. Code couleur applicable

| Abréviation | Nom de la couleur | Code couleur |
|---|---|---|
| DBNM2 | DARK BLUISH GRAY METALLIC 2 | 004D |

10. Informations relatives à la colonne Quantité

| N° de la colonne | Nom de la colonne Qté | Modèle applicable |
|---|---|---|
| 1 | 67P5 | 75CETO |
| 2 | 6H19 | 90AETO |
| | | |
| | | |
| | | |

# CONTENTS

SHEET1/2
TOP COWLING ..... A4
CYLINDER & CRANKCASE ..... A6
CRANKSHAFT & PISTON ..... B2
INTAKE ..... B4
CARBURETOR ..... B5
OIL PUMP ..... B7
FUEL ..... C2
GENERATOR ..... C4
ELECTRICAL ..... C5
STARTING MOTOR ..... C7
BOTTOM COWLING ..... D1
CONTROL ..... D3
BRACKET 1 ..... D5
BRACKET 2 ..... D7
POWER TRIM & TILT ASSY ..... E2
UPPER CASING ..... E5
LOWER CASING & DRIVE 1 ..... E6
LOWER CASING & DRIVE 2 ..... F3
FUEL TANK ..... F5
STEERING GUIDE ..... F6
REMOTE CONTROL BOX ..... F7

INDEX

NUMERICAL INDEX ..... G1

SHEET2/2
REMOTE CONTROL ASSY ..... A4*
METER ..... A7*
OPTIONAL PARTS ..... B1*
REPAIR KIT 1 ..... B2*
REPAIR KIT 2 ..... B4*

INDEX

NUMERICAL INDEX ..... G1*

# TABLE DES MATIERES

Feuille1/2
CAPOT SUPERIEUR ..... A4
CYLINDRE & CARTER ..... A6
VILEBREQUIN & PISTON ..... B2
ADMISSION ..... B4
CARBURATEUR ..... B5
POMPE A HUILE ..... B7
CARBURANT ..... C2
GENERATRICE ..... C4
ELECTRIQUE ..... C5
DEMARREUR ELECTRIQUE ..... C7
CAPOT INFERIEUR ..... D1
COMMANDE ..... D3
SUPPORT 1 ..... D5
SUPPORT 2 ..... D7
PUISSANCE PARER ET INCLINER ..... E2
FOURREAU ..... E5
BOITIER D'HELICE TRANSMISSION1 ..... E6
BOITIER D'HELICE TRANSMISSION2 ..... F3
RESERVOIR A CARBURANT ..... F5
FIXATION DE DIRECTION ..... F6
BOITIER DE COMMANDE A DISTANCE ..... F7

## INDEX

INDEX NUMERIQUE ..... G1

Feuille2/2
BOITIER DE COMMANDE A DISTANCE ..... A4*
COMPTEUR ..... A7*
PIECES OPTIONNELLES ..... B1*
KITS DE REPARATION 1 ..... B2*
KITS DE REPARATION 2 ..... B4*

## INDEX

INDEX NUMERIQUE ..... G1*

## FIG. 1 TOP COWLING — CAPOT SUPERIEUR

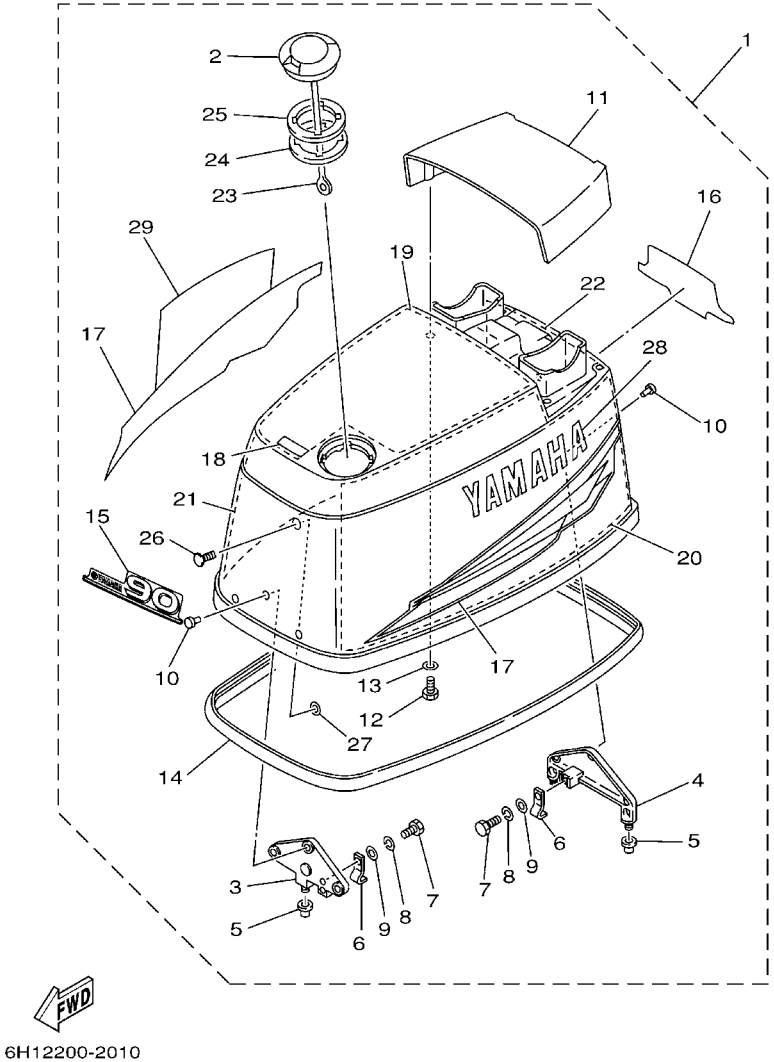


| REF. NO. | PART NO. N° PIECES | DESCRIPTION DESCRIPTION | 67P5 | 6H19 | | | | REMARKS REMARQUES |
|---|---|---|---|---|---|---|---|---|
| 1 | 6H1–42610–60–4D | TOP COWLING ASSY<br>CAPOT (ENS.) | | 1 | | | | |
| | 6H0–42610–B0–4D | TOP COWLING ASSY<br>CAPOT (ENS.) | 1 | | | | | |
| 2 | 63D–2177H–00 | .DISK CAP 2<br>.BOUCHON DE DISQUE 2 | 1 | 1 | | | | |
| 3 | 6H1–42647–00–94 | .HOLDER, CLAMP BAND<br>.SUPPORT, SANDOW DE SERRAGE | 1 | 1 | | | | |
| 4 | 6H1–42649–00–94 | .HOLDER, CLAMP BAND<br>.SUPPORT, SANDOW DE SERRAGE | 1 | 1 | | | | |
| 5 | 663–42662–00 | .DAMPER<br>.AMORTISSEUR | 3 | 3 | | | | |
| 6 | 688–42652–10 | .HOOK<br>.CROCHET | 2 | 2 | | | | |
| 7 | 97095–06016 | .BOLT<br>.BOULON | 2 | 2 | | | | |
| 8 | 92995–06100 | .WASHER, SPRING<br>.RONDELLE, GROWER | 2 | 2 | | | | |
| 9 | 92995–06600 | .WASHER<br>.RONDELLE | 2 | 2 | | | | |
| 10 | 90266–06009 | .RIVET<br>.RIVET | 6 | 6 | | | | |
| 11 | 6H1–42613–01–4D | .MOLDING, AIR DUCT<br>.MANCHON A AIR | 1 | 1 | | | | |
| 12 | 97095–06016 | .BOLT<br>.BOULON | 4 | 4 | | | | |
| 13 | 92995–06600 | .WASHER<br>.RONDELLE | 4 | 4 | | | | |
| 14 | 688–42615–00 | .SEAL<br>.JOINT | 1 | 1 | | | | |
| 15 | 6H1–42677–60 | .GRAPHIC, FRONT<br>.ADHESIF, AVANT | | 1 | | | | |
| | 6H0–42677–A0 | .GRAPHIC, FRONT<br>.ADHESIF, AVANT | 1 | | | | | |
| 16 | 6H1–42678–30 | .GRAPHIC, REAR<br>.ADHESIF, ARRIERE | | 1 | | | | |
| | 6H0–42678–90 | .GRAPHIC, REAR<br>.ADHESIF, ARRIERE | 1 | | | | | |
| 17 | 6H1–W0070–30 | .GRAPHIC SET<br>.JEU DIEMBLEMES | 1 | 1 | | | | |
| 18 | 6H1–13436–00 | .MARK<br>.ADHESIF | | 1 | | | | |
| | 6H1–13436–41 | .MARK<br>.ADHESIF | 1 | | | | | |
| 19 | 6H1–42617–10 | .DAMPER, FORM<br>.BOURRELET, CAOUTCHOUC | 1 | 1 | | | | |
| 20 | 6H1–42619–00 | .DAMPER, FORM<br>.BOURRELET, CAOUTCHOUC | 1 | 1 | | | | |
| 21 | 6H1–42627–00 | .DAMPER, FORM<br>.BOURRELET, CAOUTCHOUC | 1 | 1 | | | | |
| 22 | 6H1–42637–00 | .DAMPER, FORM<br>.BOURRELET, CAOUTCHOUC | 1 | 1 | | | | |
| 23 | 6H1–42694–00 | .BAND<br>.COLLIER | 1 | 1 | | | | |

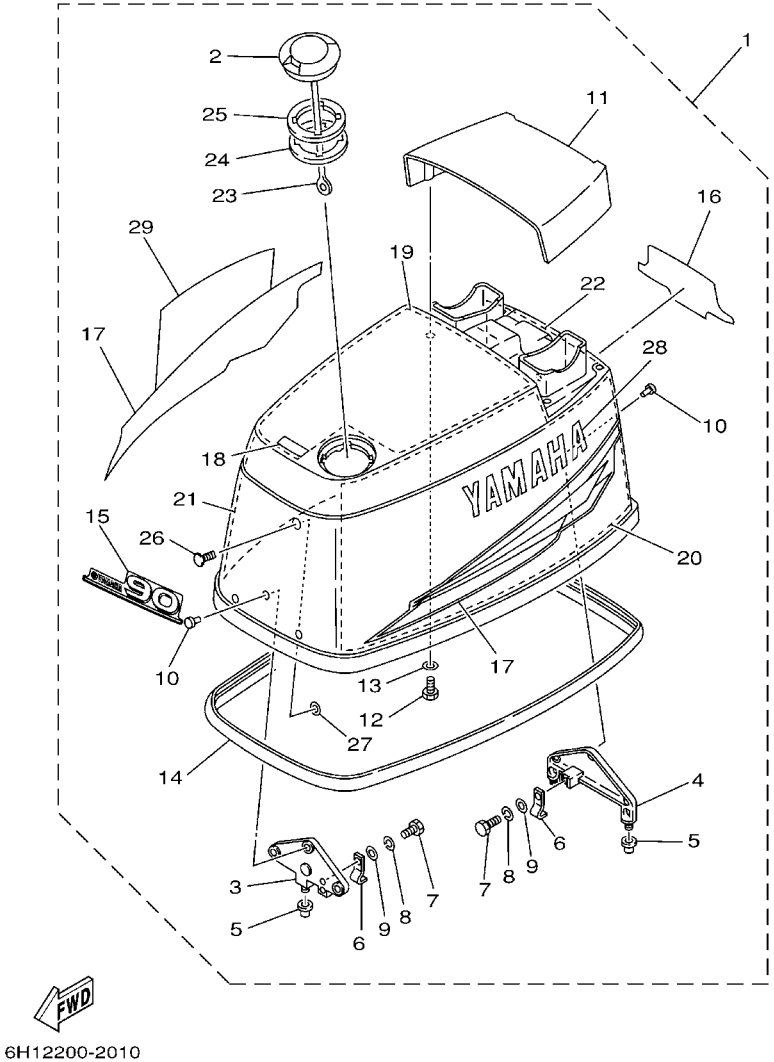


## FIG. 1 TOP COWLING — CAPOT SUPERIEUR

| REF. NO. | PART NO. N° PIECES | DESCRIPTION DESCRIPTION | 67P5 | 6H19 | | | | REMARKS REMARQUES |
|---|---|---|---|---|---|---|---|---|
| 24 | 6H3–21732–00 | .SEAL 1<br>.JOINT 1 | 1 | 1 | | | | |
| 25 | 6H3–21735–00 | .SEAL 2<br>.JOINT 2 | 1 | 1 | | | | |
| 26 | 90338–05M12 | .PLUG<br>.PLOT | 1 | 1 | | | | |
| 27 | 90183–05M06 | .NUT, SPRING<br>.ECROU, RESSORT | 1 | 1 | | | | |
| 28 | 6H1–42681–30 | .MARK, COWLING<br>.ADHESIF, CAPOT | 1 | 1 | | | | |
| 29 | 6H1–42682–30 | .MARK, COWLING<br>.ADHESIF, CAPOT | 1 | 1 | | | | |

## FIG. 2 CYLINDER & CRANKCASE CYLINDRE & CARTER

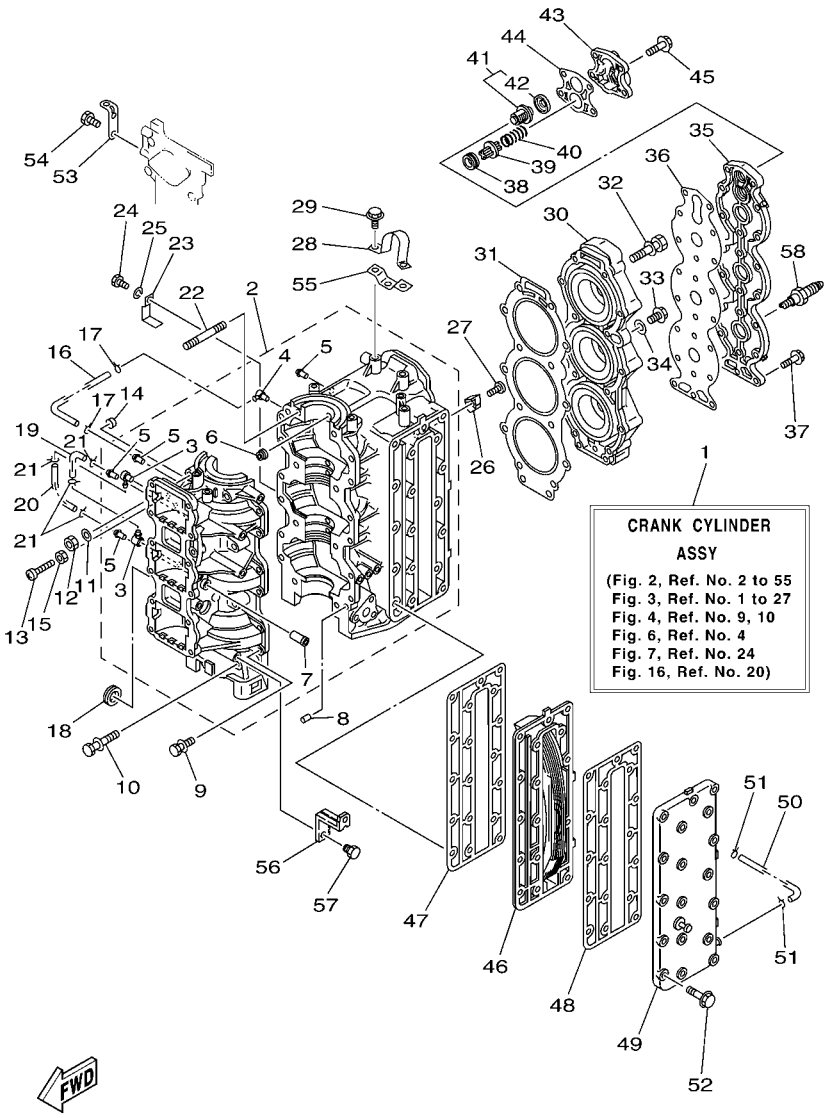


| REF. NO. | PART NO. N° PIECES | DESCRIPTION DESCRIPTION | 67P5 | 6H19 | | | | REMARKS REMARQUES |
|---|---|---|---|---|---|---|---|---|
| 1 | 6H1–W0090–44–1S | CRANK CYLINDER ASSY<br>EMBIELLAGE CYLINDRE (ENS.) | 1 | 1 | | | | |
| 2 | 6H1–15100–04–1S | CRANKCASE ASSY<br>CARTER DE MOTEUR COMPLET | 1 | 1 | | | | |
| 3 | 688–11370–01 | .CHECK VALVE ASSY<br>.CLAPET (ENS.) | 2 | 2 | | | | |
| 4 | 650–11370–01 | .CHECK VALVE ASSY<br>.CLAPET (ENS.) | 1 | 1 | | | | |
| 5 | 624–14485–00 | .PIPE, JOINT<br>.DURITE | 4 | 4 | | | | |
| 6 | 663–11518–01 | .LOCK, BEARING<br>.CENTREUR, ROULEMENT | 3 | 3 | | | | |
| 7 | 650–24378–00 | .PIPE, JOINT 4<br>.DURITE RACCORDEMENT 4 | 1 | 1 | | | | |
| 8 | 93608–12063 | PIN, DOWEL<br>AXE | 2 | 2 | | | | |
| 9 | 90119–06M12 | BOLT, WITH WASHER<br>BOULON, AVEC RONDELLE | 12 | 12 | | | | |
| 10 | 90119–10005 | BOLT, WITH WASHER<br>BOULON, AVEC RONDELLE | 6 | 6 | | | | |
| 11 | 90201–10008 | WASHER, PLATE<br>RONDELLE, PLATE | 2 | 2 | | | | |
| 12 | 95313–10600 | NUT<br>ECROU, HEXAGONAL | 2 | 2 | | | | |
| 13 | 90157–06014 | SCREW, PAN HEAD<br>VIS, TETE TRONCONIQUE | 1 | 1 | | | | |
| 14 | 688–44194–00 | CAP<br>CAPUCHON | 1 | 1 | | | | |
| 15 | 95303–06700 | NUT<br>ECROU | 1 | 1 | | | | |
| 16 | 90445–07260 | HOSE (L276)<br>DURITE (L276) | 1 | 1 | | | | |
| 17 | 90467–06016 | CLIP<br>JONC | 2 | 2 | | | | |
| 18 | 90480–24M04 | GROMMET<br>PASSE-FIL | 1 | 1 | | | | |
| 19 | 90445–07M00 | HOSE (L100)<br>DURITE (L100) | 1 | 1 | | | | |
| 20 | 90445–07M23 | HOSE (L408)<br>DURITE (L408) | 1 | 1 | | | | |
| 21 | 90467–06016 | CLIP<br>JONC | 4 | 4 | | | | |
| 22 | 90116–10M06 | BOLT, STUD<br>GOUJON | 2 | 2 | | | | |
| 23 | 90465–12M03 | CLAMP<br>BRIDE | 1 | 1 | | | | |
| 24 | 97095–06014 | BOLT<br>BOULON | 1 | 1 | | | | |
| 25 | 92995–06100 | WASHER, SPRING<br>RONDELLE, GROWER | 1 | 1 | | | | |
| 26 | 688–11325–00 | ANODE<br>ANODE | 2 | 2 | | | | |
| 27 | 98780–04015 | SCREW, FLAT HEAD<br>VIS A TETE FRAISEE | 2 | 2 | | | | |

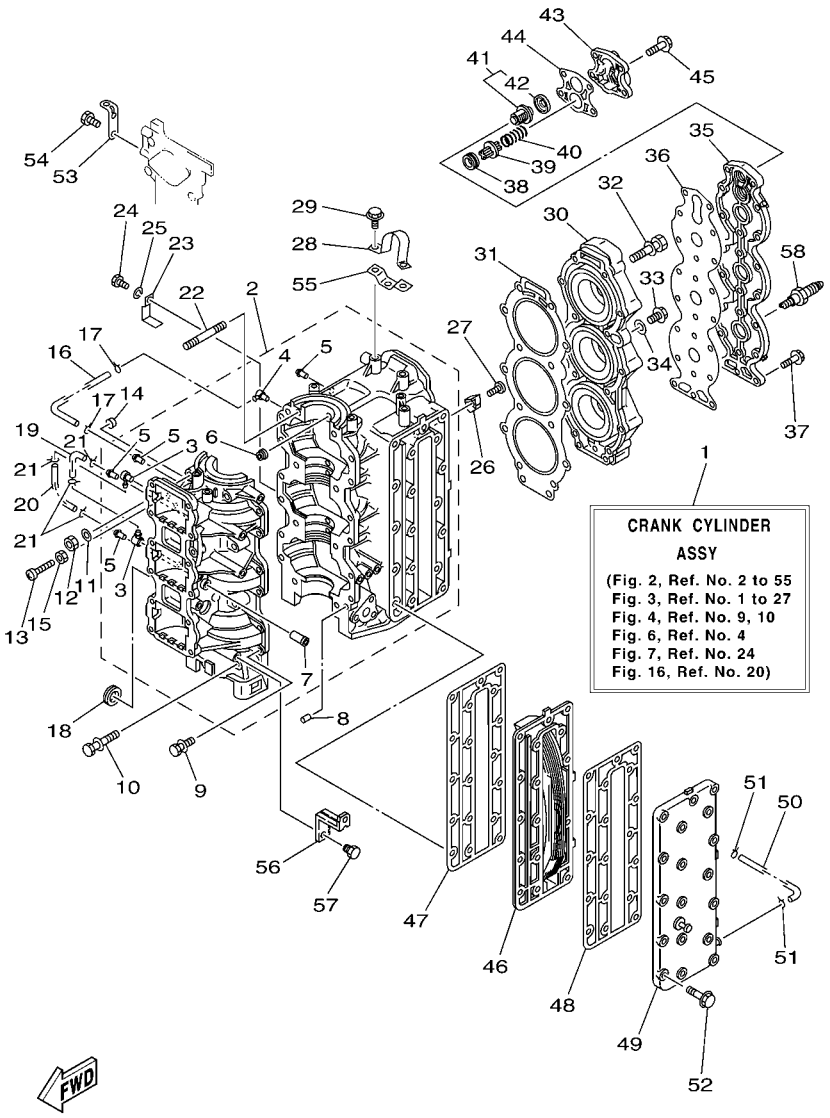


6H19300-F020

## FIG. 2 CYLINDER & CRANKCASE CYLINDRE & CARTER

| REF. NO. | PART NO. N° PIECES | DESCRIPTION DESCRIPTION | 67P5 | 6H19 | | | | REMARKS REMARQUES |
|---|---|---|---|---|---|---|---|---|
| 28 | 688–11119–01 | HANGER, ENGINE<br>ANNEAU, LEVAGE | 1 | 1 | | | | |
| 29 | 90119–08MA3 | BOLT, WITH WASHER<br>BOULON, AVEC RONDELLE | 2 | 2 | | | | |
| 30 | 6H1–11111–01–1S | HEAD, CYLINDER 1<br>CULASSE | 1 | 1 | | | | |
| 31 | 688–11181–A1 | GASKET, CYLINDER HEAD 1<br>JOINT, DE CULASSE 1 | 1 | 1 | | | | |
| 32 | 90119–08MA8 | BOLT, WITH WASHER<br>BOULON, AVEC RONDELLE | 14 | 14 | | | | |
| 33 | 90340–14M00 | PLUG, STRAIGHT SCREW<br>PLOT, FILETE DROIT | 1 | 1 | | | | |
| 34 | 90430–14115 | GASKET<br>JOINT | 1 | 1 | | | | |
| 35 | 688–11191–00–1S | COVER, CYLINDER HEAD 1<br>COUVERCLE, CULASSE 1 | 1 | 1 | | | | |
| 36 | 688–11193–A1 | GASKET, HEAD COVER 1<br>JOINT, COUVERCLE DE CULASSE 1 | 1 | 1 | | | | |
| 37 | 90119–06MA3 | BOLT, WITH WASHER<br>BOULON, AVEC RONDELLE | 18 | 18 | | | | |
| 38 | 90480–20M05 | GROMMET<br>PASSE-FIL | 1 | 1 | | | | |
| 39 | 688–12416–00 | VALVE, PRESSURE CONTROL<br>SOUPAPE DE CONTROLEUR PRESS | 1 | 1 | | | | |
| 40 | 90501–16M11 | SPRING, COMPRESSION<br>RESSORT, COMPRESSION | 1 | 1 | | | | |
| 41 | 688–12411–11 | THERMOSTAT<br>THERMOSTAT | 1 | 1 | | | | |
| 42 | 688–12412–00 | .SEAL, THERMOSTAT<br>.JOINT, THERMOSTAT | 1 | 1 | | | | |
| 43 | 688–12413–00–1S | COVER, THERMOSTAT<br>COUVERCLE, THERMOSTAT | 1 | 1 | | | | |
| 44 | 688–12414–A1 | GASKET, COVER<br>JOINT, COUVERCLE | 1 | 1 | | | | |
| 45 | 90119–06MA5 | BOLT, WITH WASHER<br>BOULON, AVEC RONDELLE | 4 | 4 | | | | |
| 46 | 688–41111–00–1S | INNER COVER, EXHAUST<br>PLAQUE, ECHAPPEMENT | 1 | 1 | | | | |
| 47 | 688–41112–A0 | GASKET, EXHAUST INNER COVER<br>JOINT, PLAQUE D'ECHAPPEMENT | 1 | 1 | | | | |
| 48 | 688–41114–A0 | GASKET, EXHAUST OUTER COVER<br>JOINT, COUVERCLE D'ECHAPPEMENT | 1 | 1 | | | | |
| 49 | 6H1–41113–00–1S | OUTER COVER, EXHAUST<br>COUVERCLE, ECHAPPEMENT | 1 | 1 | | | | FLUSHING KIT<br>FLUSHING KIT |
| 50 | 663–24312–01 | PIPE 2<br>DURITE 2 | 1 | 1 | | | | |
| 51 | 90467–08004 | CLIP<br>JONC | 2 | 2 | | | | |
| 52 | 90119–08020 | BOLT, WITH WASHER<br>BOULON, AVEC RONDELLE | 18 | 18 | | | | |
| 53 | 6H1–15772–00 | STAY 2<br>SUPPORT 2 | 1 | 1 | | | | |
| 54 | 97095–06012 | BOLT<br>BOULON | 2 | 2 | | | | |

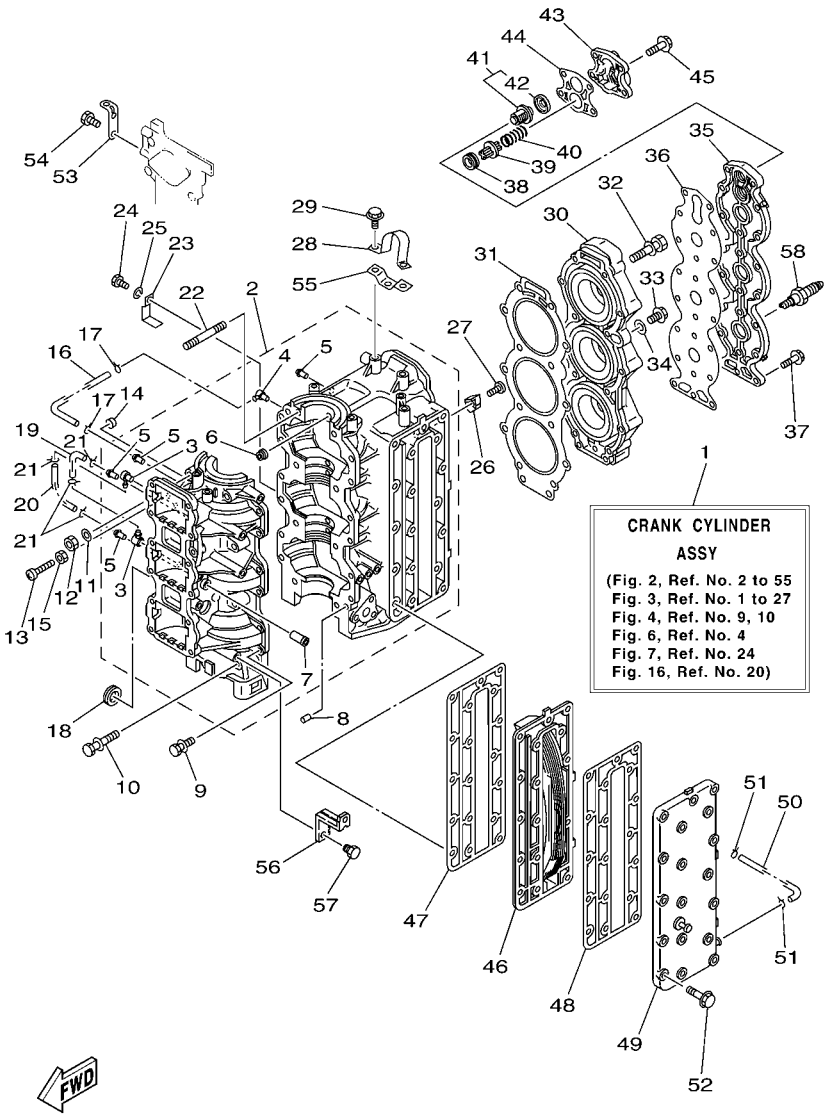


6H19300-F020

## FIG. 2 CYLINDER & CRANKCASE CYLINDRE & CARTER

| REF. NO. | PART NO. N° PIECES | DESCRIPTION DESCRIPTION | 67P5 | 6H19 | | | | REMARKS REMARQUES |
|---|---|---|---|---|---|---|---|---|
| 55 | 6H1–15773–01 | STAY 3<br>SUPPORT 3 | 1 | 1 | | | | |
| 56 | 6H1–21796–00 | HINGE<br>CHARNIERE | 1 | 1 | | | | |
| 57 | 97095–08012 | BOLT<br>BOULON | 1 | 1 | | | | |
| 58 | 94702–00247 | PLUG, SPARK (NGK BR8HS-10)<br>BOUGIE D'ALLUMAGE(NGK BR8HS-10 | 3 | 3 | | | | |

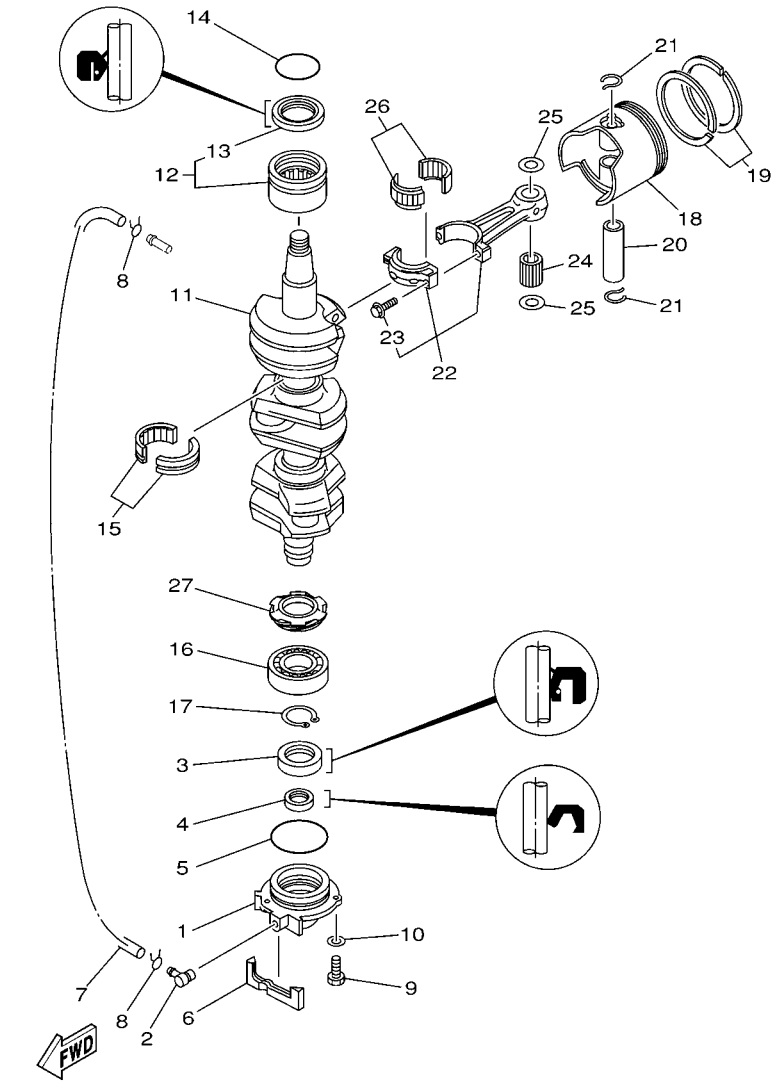


6H10010-0031

## FIG. 3 CRANKSHAFT & PISTON — VILEBREQUIN & PISTON

| REF. NO. | PART NO. N° PIECES | DESCRIPTION DESCRIPTION | 67P5 | 6H19 | | | | REMARKS REMARQUES |
|---|---|---|---|---|---|---|---|---|
| 1 | 6H1–15359–01–94 | HOUSING, OIL SEAL<br>LOGEMENT, BAGUE D'ETANCHEITE | 1 | 1 | | | | |
| 2 | 688–11370–01 | CHECK VALVE ASSY<br>CLAPET (ENS.) | 1 | 1 | | | | |
| 3 | 93102–30M05 | OIL SEAL<br>JOINT SPY | 1 | 1 | | | | |
| 4 | 93104–20M02 | OIL SEAL<br>JOINT SPY | 1 | 1 | | | | |
| 5 | 93210–62269 | O-RING<br>JOINT TORIQUE | 1 | 1 | | | | |
| 6 | 688–15379–00 | SEAL, CRANKCASE<br>JOINT SPY DE CARTER DE MOTEUR | 1 | 1 | | | | |
| 7 | 90445–07M86 | HOSE (L460)<br>DURITE (L460) | 1 | 1 | | | | |
| 8 | 90467–06016 | CLIP<br>JONC | 2 | 2 | | | | |
| 9 | 97095–06020 | BOLT<br>BOULON | 3 | 3 | | | | |
| 10 | 92995–06600 | WASHER<br>RONDELLE | 3 | 3 | | | | |
| 11 | 688–11411–01 | CRANKSHAFT<br>VILEBREQUIN COMPLET | 1 | 1 | | | | |
| 12 | 93310–636U4 | BEARING<br>ROULEMENT | 1 | 1 | | | | |
| 13 | 93102–36M02 | .OIL SEAL<br>.JOINT SPY | 1 | 1 | | | | |
| 14 | 93210–46M16 | O-RING<br>JOINT TORIQUE | 1 | 1 | | | | |
| 15 | 93310–835U8 | BEARING<br>ROULEMENT | 2 | 2 | | | | |
| 16 | 93306–206U5 | BEARING<br>ROULEMENT | 1 | 1 | | | | |
| 17 | 93410–32M00 | CIRCLIP<br>CLIPS | 1 | 1 | | | | |
| 18 | 6H1–11631–03–95 | PISTON (STD)<br>PISTON (STD) | 3 | 3 | | | | |
| | 6H1–11635–03 | PISTON (0.25MM O/S)<br>PISTON (0.25MM O/S) | 3 | 3 | | | | AP<br>AP |
| | 6H1–11636–03 | PISTON (0.50MM O/S)<br>PISTON (0.50MM O/S) | 3 | 3 | | | | AP<br>AP |
| 19 | 688–11603–A0 | PISTON RING SET (STD)<br>JEU DE SEGMENTS (STD) | 3 | 3 | | | | |
| | 688–11604–A0 | PISTON RING SET (0.25MM O/S)<br>JEU DE SEGMENTS (0.25MM O/S) | 3 | 3 | | | | AP<br>AP |
| | 688–11605–A0 | PISTON RING SET (0.50MM O/S)<br>JEU DE SEGMENTS (0.50MM O/S) | 3 | 3 | | | | AP<br>AP |
| 20 | 663–11633–00 | PIN, PISTON<br>AXE, PISTON | 3 | 3 | | | | |
| 21 | 688–11634–10 | CLIP, PISTON PIN<br>AGRAFE, AXE DE PISTON | 6 | 6 | | | | |
| 22 | 688–11650–03 | CONNECTING ROD ASSY<br>BIELLE COMPLETTE | 3 | 3 | | | | |
| 23 | 90109–08022 | .BOLT<br>.BOULON | 2 | 2 | | | | |

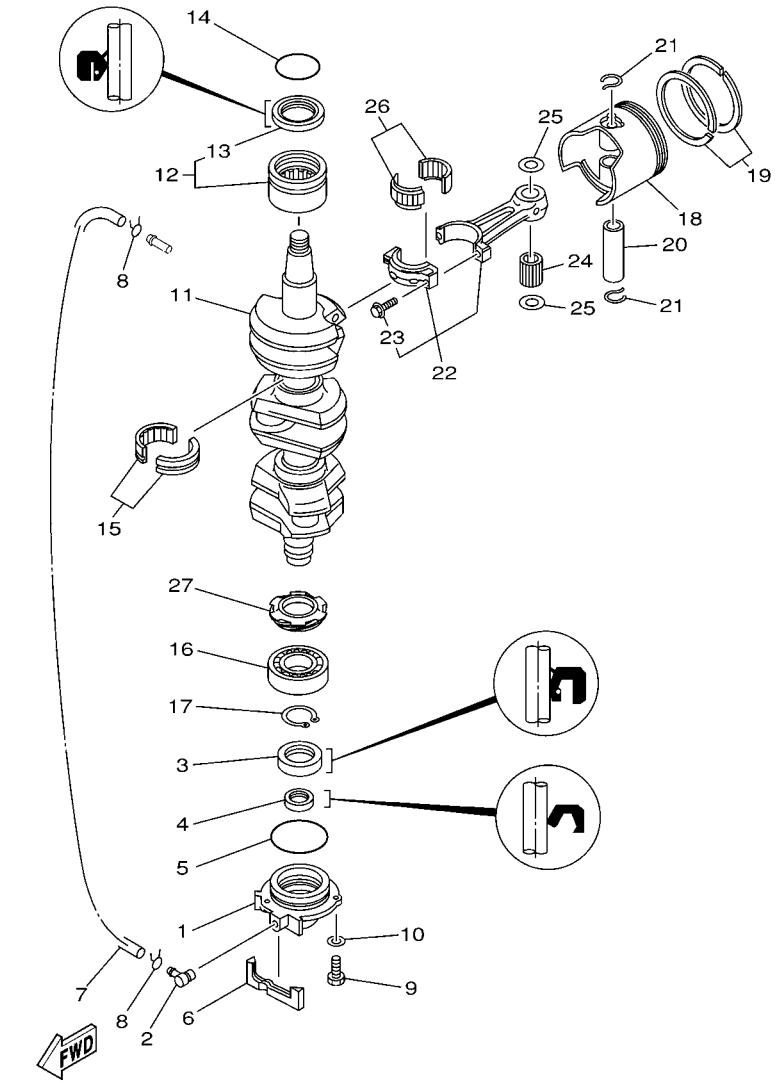

6H10010-0031

## FIG. 3 CRANKSHAFT & PISTON — VILEBREQUIN & PISTON

| REF. NO. | PART NO. N° PIECES | DESCRIPTION DESCRIPTION | 67P5 | 6H19 | | | | REMARKS REMARQUES |
|---|---|---|---|---|---|---|---|---|
| 24 | 93603–21111 | PIN, DOWEL<br>CLAVETTE | 84 | 84 | | | | |
| 25 | 90201–20417 | WASHER, PLATE<br>RONDELLE, PLATE | 6 | 6 | | | | |
| 26 | 93310–730V8 | BEARING<br>ROULEMENT | 3 | 3 | | | | |
| 27 | 6H1–11536–00 | GEAR, DRIVE<br>ENGRENAGE, MENANT | 1 | 1 | | | | |

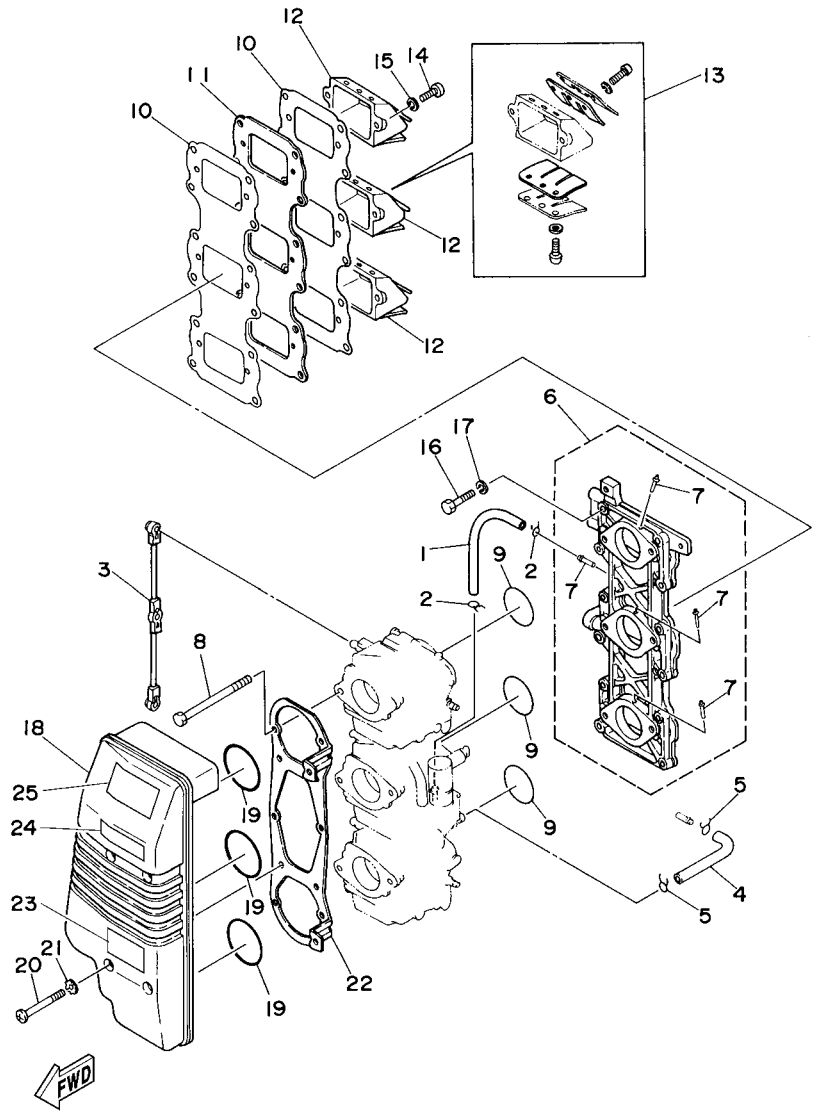


## FIG. 4 INTAKE — ADMISSION

| REF. NO. | PART NO. N° PIECES | DESCRIPTION DESCRIPTION | 67P5 | 6H19 | | | | REMARKS REMARQUES |
|---|---|---|---|---|---|---|---|---|
| 1 | 90445–07M23 | HOSE (L408)<br>DURITE (L408) | 1 | 1 | | | | |
| 2 | 90467–06016 | CLIP<br>JONC | 2 | 2 | | | | |
| 3 | 688–41217–01 | ROD, ACCEL. LEVER<br>TIGE, LEVIER ACCELERATION | 1 | 1 | | | | |
| 4 | 6H3–14349–00 | PIPE<br>DURITE | 1 | 1 | | | | |
| 5 | 90467–08004 | CLIP<br>JONC | 2 | 2 | | | | |
| 6 | 6H1–13641–02–94 | MANIFOLD 1<br>TUBULURE 1 | 1 | 1 | | | | |
| 7 | 6H1–14485–00 | .PIPE, JOINT<br>.DURITE | 4 | 4 | | | | |
| 8 | 97095–06095 | BOLT<br>BOULON | 6 | 6 | | | | |
| 9 | 93210–39ME4 | O-RING<br>JOINT TORIQUE | 3 | 3 | | | | |
| 10 | 688–13621–A1 | GASKET, VALVE SEAT<br>JOINT, SIEGE DE CLAPET | 2 | 2 | | | | |
| 11 | 688–13624–00 | PLATE,REED VALVE<br>PLAQUE DE CLAPET | 1 | 1 | | | | |
| 12 | 688–13610–00 | REED VALVE ASSY<br>CLAPET COMPLET | 3 | 3 | | | | |
| 13 | 688–W0004–00 | .REED SET<br>.JEU DE CLAPETS | 1 | 1 | | | | |
| 14 | 97880–05020 | SCREW, PAN HEAD<br>VIS, TETE TRONCONIQUE | 6 | 6 | | | | |
| 15 | 92990–05100 | WASHER, SPRING<br>RONDELLE, GROWER | 6 | 6 | | | | |
| 16 | 97013–06030 | BOLT<br>BOULON | 12 | 12 | | | | |
| 17 | 92903–06100 | WASHER, SPRING<br>RONDELLE, GROWER | 12 | 12 | | | | |
| 18 | 6H1–14440–02 | SILENCER ASSY, INTAKE<br>SIENCIEUX D'ADMISSION | 1 | 1 | | | | |
| 19 | 93210–46044 | O-RING<br>JOINT TORIQUE | 3 | 3 | | | | |
| 20 | 97885–06050 | SCREW, PAN HEAD<br>VIS, A ENCOCHE | 4 | 4 | | | | |
| 21 | 90209–06M05 | WASHER<br>RONDELLE | 4 | 4 | | | | |
| 22 | 6H1–14413–02 | STAY<br>SUPPORT | 1 | 1 | | | | |
| 23 | 6H1–85711–60 | MARK, CAUTION<br>MAKER | 1 | 1 | | | | |
| 24 | 6A1–83625–41 | MARK 5<br>ETIQUETTE 5 | 1 | 1 | | | | |
| 25 | 6A1–83625–51 | MARK 5<br>ETIQUETTE 5 | 1 | 1 | | | | |

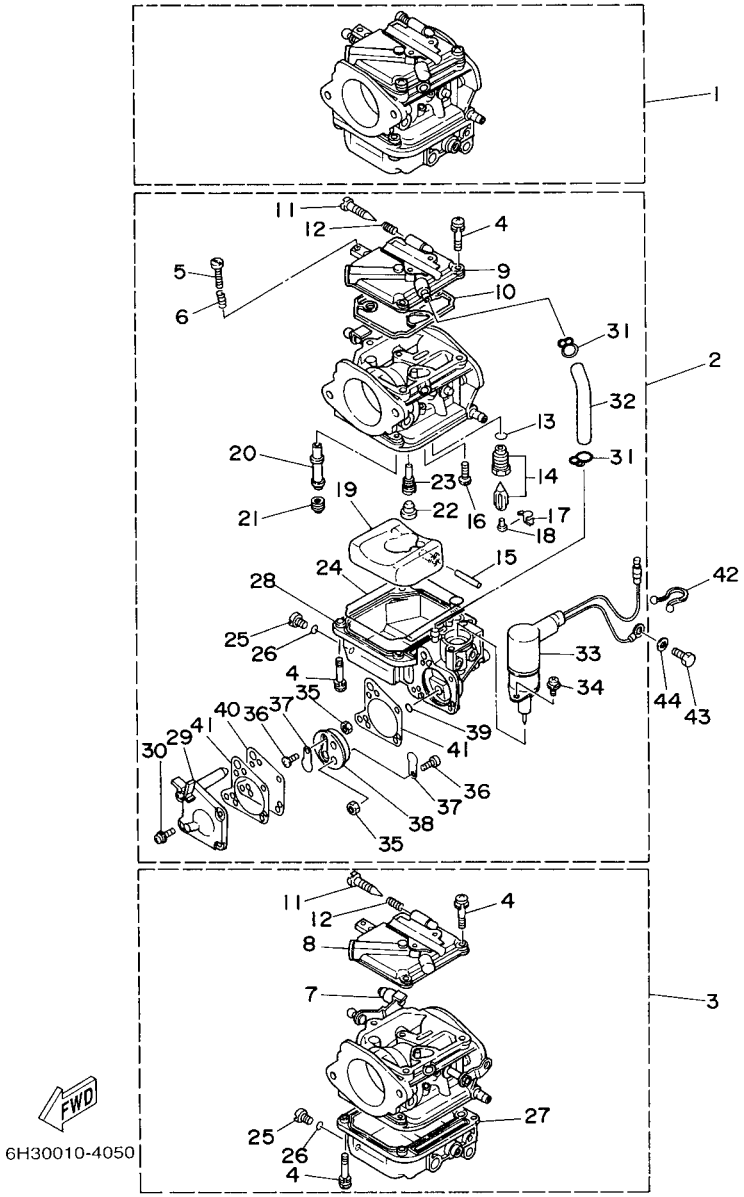


## FIG. 5 CARBURETOR CARBURATEUR

| REF. NO. | PART NO. N° PIECES | DESCRIPTION DESCRIPTION | 67P5 | 6H19 | | | | REMARKS REMARQUES |
|---|---|---|---|---|---|---|---|---|
| 1 | 6H1–14301–07 | CARBURETOR ASSY 1<br>CARBURATEUR COMPLET 1 | | 1 | | | | |
| | 6H0–14301–07 | CARBURETOR ASSY 1<br>CARBURATEUR COMPLET 1 | 1 | | | | | |
| 2 | 6H1–14302–07 | CARBURETOR ASSY 2<br>CARBURATEUR COMPLET 2 | | 1 | | | | |
| | 6H0–14302–07 | CARBURETOR ASSY 2<br>CARBURATEUR COMPLET 2 | 1 | | | | | |
| 3 | 6H1–14303–07 | CARBURETOR ASSY 3<br>CARBURATEUR COMPLET 3 | | 1 | | | | |
| | 6H0–14303–07 | CARBURETOR ASSY 3<br>CARBURATEUR COMPLET 3 | 1 | | | | | |
| 4 | 97980–04114 | .SCREW, WITH WASHER<br>.VIS, AVEC RONDELLE | 21 | 21 | | | | |
| 5 | 63V–14523–00 | .SCREW, STOP<br>.VIS, BUTEE | 1 | 1 | | | | #2<br>#2 |
| 6 | 90501–10326 | .SPRING, COMPRESSION<br>.RESSORT, COMPRESSION | 1 | 1 | | | | #2<br>#2 |
| 7 | 6H2–14578–00 | .COLLAR<br>.COLLERETTE | 1 | 1 | | | | #3<br>#3 |
| 8 | 6H4–14146–00 | .PLATE<br>.PLAQUE | 2 | 2 | | | | #1,3<br>#1,3 |
| 9 | 6H3–14146–10 | .PLATE<br>.PLAQUE | 1 | 1 | | | | #2<br>#2 |
| 10 | 6H4–14147–00 | .O-RING<br>.JOINT TORIQUE | 3 | 3 | | | | |
| 11 | 692–14923–00 | .SCREW, PILOT<br>.VIS, RALENTI | 3 | 3 | | | | |
| 12 | 697–14555–00 | .SPRING<br>.RESSORT | 3 | 3 | | | | |
| 13 | 93210–04228 | .O-RING<br>.JOINT TORIQUE | 3 | 3 | | | | |
| 14 | 692–14590–01 | .NEEDLE VALVE ASSY<br>.POINTEAU | 3 | 3 | | | | |
| 15 | 6H4–14548–00 | .PIN, FLOAT ARM<br>.AXE, BRAS DE FLOTTEUR | 3 | 3 | | | | |
| 16 | 98580–04008 | .SCREW, PAN HEAD<br>.VIS | 3 | 3 | | | | |
| 17 | 663–14159–00 | .CLIP<br>.JONC | 3 | 3 | | | | |
| 18 | 676–14186–00 | .PIN, FLOAT<br>.AXE, FLOTTEUR | 3 | 3 | | | | |
| 19 | 6H4–14985–01 | .FLOAT<br>.FLOTTEUR | 3 | 3 | | | | |
| 20 | 6H1–14947–75 | .JET, NEEDLE<br>.GICLEUR DE STARTER | 3 | 3 | | | | |
| 21 | 6H1–14943–39 | .JET, MAIN (#160)<br>.GICLEUR, PRINCIPAL (#160) | 3 | 3 | | | | |
| 22 | 676–14966–00 | .CAP<br>.CAPUCHON | 3 | 3 | | | | |
| 23 | 6H1–14948–18 | .JET (#78)<br>.GICLEUR (#78) | 3 | 3 | | | | |
| 24 | 6H4–14984–00 | .GASKET, FLOAT CHAMBER<br>.JOINT, CUVE DE FLOTTEUR | 3 | 3 | | | | |

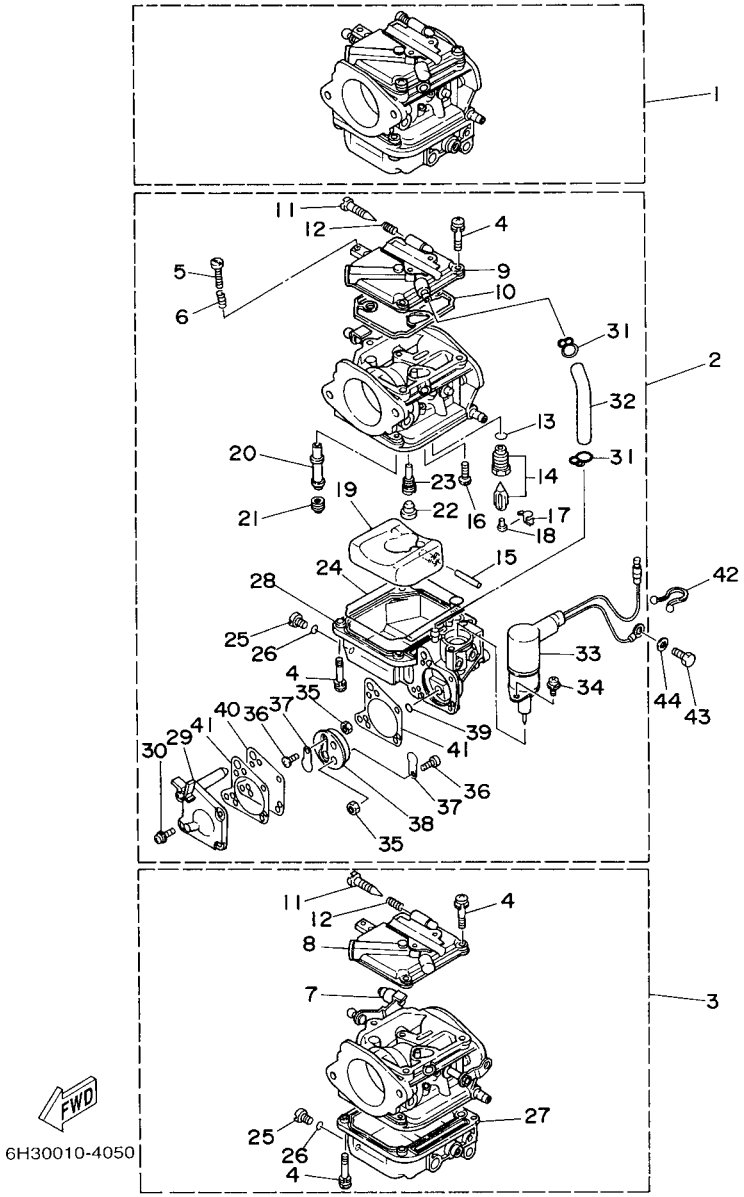


## FIG. 5 CARBURETOR CARBURATEUR

| REF. NO. | PART NO. N° PIECES | DESCRIPTION DESCRIPTION | 67P5 | 6H19 | | | | REMARKS REMARQUES |
|---|---|---|---|---|---|---|---|---|
| 25 | 6H3–14992–00 | .SCREW, DRAIN<br>.BOUCHON, PURGE | 3 | 3 | | | | |
| 26 | 93210–04230 | .O-RING<br>.JOINT TORIQUE | 3 | 3 | | | | |
| 27 | 6H4–14980–00 | .BODY, FLOAT CHAMBER<br>.CORPS, CUVE DE FLOTTEUR | 2 | 2 | | | | #1,3<br>#1,3 |
| 28 | 6H3–14980–10 | .BODY, FLOAT CHAMBER<br>.CORPS, CUVE DE FLOTTEUR | 1 | 1 | | | | #2<br>#2 |
| 29 | 6H3–24452–10 | .COVER<br>.COUVERCLE | 1 | 1 | | | | #2<br>#2 |
| 30 | 6H4–14567–00 | .SCREW<br>.VIS | 4 | 4 | | | | #2<br>#2 |
| 31 | 6H3–14137–00 | .CLIP<br>.JONC | 2 | 2 | | | | #2<br>#2 |
| 32 | 6H3–14349–00 | .PIPE<br>.DURITE | 1 | 1 | | | | #2<br>#2 |
| 33 | 6H3–14380–00 | .STARTER ASSY<br>.DEMARREUR COMPLET | 1 | 1 | | | | #2<br>#2 |
| 34 | 97803–04010 | .SCREW, PAN HEAD<br>.VIS, CRUCIFORME | 2 | 2 | | | | #2<br>#2 |
| 35 | 95380–03600 | .NUT<br>.ECROU | 2 | 2 | | | | #2<br>#2 |
| 36 | 98980–03006 | .SCREW, BIND<br>.VIS, DE PRESSION | 2 | 2 | | | | #2<br>#2 |
| 37 | 6L5–24421–00 | .VALVE, CHECK<br>.SOUPAPE, RETENUE | 2 | 2 | | | | #2<br>#2 |
| 38 | 6H4–24413–00 | .BODY 2<br>.CORPS 2 | 1 | 1 | | | | #2<br>#2 |
| 39 | 6H4–24486–00 | .O-RING<br>.JOINT TORIQUE | 1 | 1 | | | | #2<br>#2 |
| 40 | 6H3–24411–10 | .DIAPHRAGM<br>.DIAPHRAGME | 1 | 1 | | | | #2<br>#2 |
| 41 | 6H3–24434–10 | .GASKET, BODY<br>.JOINT, CORPS | 2 | 2 | | | | #2<br>#2 |
| 42 | 90465–18147 | CLAMP<br>BRIDE | 1 | 1 | | | | |
| 43 | 97013–06012 | BOLT<br>BOULON | 1 | 1 | | | | |
| 44 | 92903–06600 | WASHER, PLATE<br>RONDELLE, PLATE | 1 | 1 | | | | |

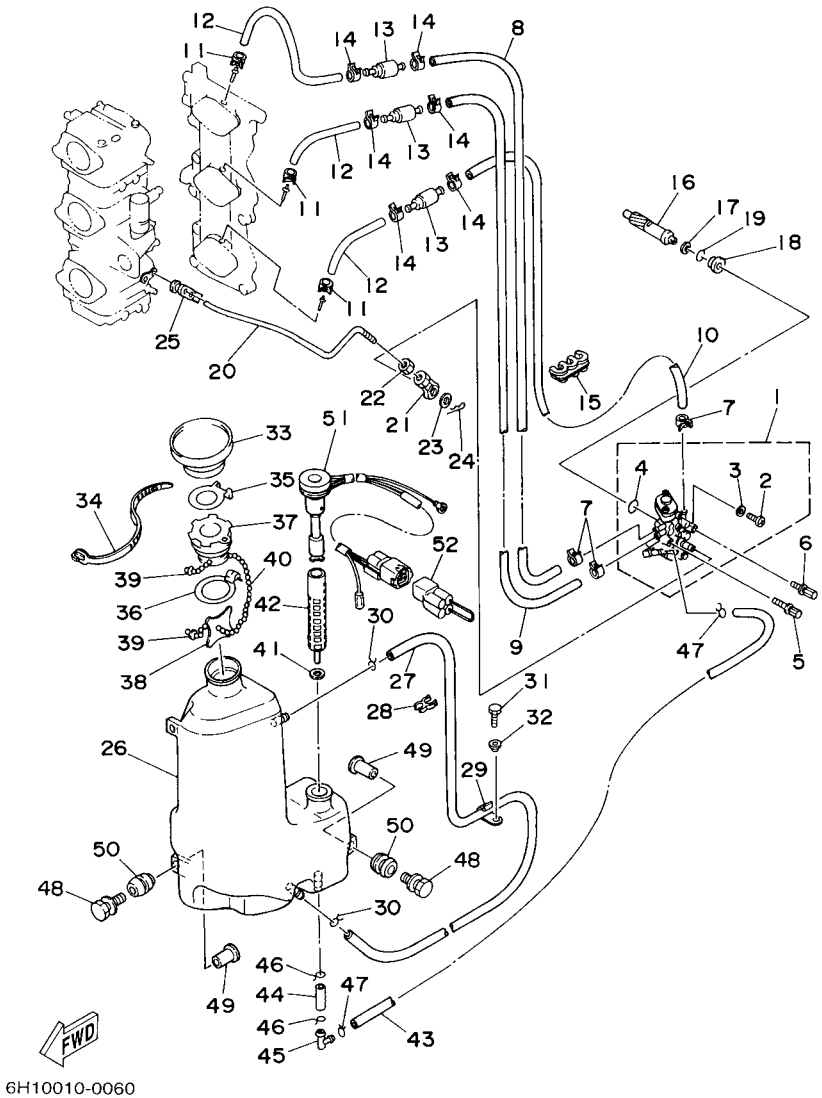


## FIG. 6 OIL PUMP — POMPE A HUILE

| REF. NO. | PART NO. N° PIECES | DESCRIPTION DESCRIPTION | 67P5 | 6H19 | | | | REMARKS REMARQUES |
|---|---|---|---|---|---|---|---|---|
| 1 | 6H1–13200–02 | OIL INJECTION PUMP ASSY<br>POMPE A HUILE COMPLET | 1 | 1 | | | | |
| 2 | 6R3–13471–00 | .PLUG, DRAIN<br>.PLOT, VIDANGE | 1 | 1 | | | | |
| 3 | 6L2–13475–00 | .GASKET<br>.JOINT | 1 | 1 | | | | |
| 4 | 93210–19MA7 | .O-RING<br>.JOINT TORIQUE | 1 | 1 | | | | |
| 5 | 90109–06M39 | BOLT<br>BOULON | 1 | 1 | | | | |
| 6 | 90109–06M40 | BOLT<br>BOULON | 1 | 1 | | | | |
| 7 | 90468–07M02 | CLIP<br>JONC | 3 | 3 | | | | |
| 8 | 90445–07M90 | HOSE (L390)<br>DURITE (L390) | 1 | 1 | | | | |
| 9 | 90445–07240 | HOSE (L330)<br>DURITE (L330) | 1 | 1 | | | | |
| 10 | 90445–07M44 | HOSE (L250)<br>DURITE (L250) | 1 | 1 | | | | |
| 11 | 90468–07M02 | CLIP<br>JONC | 3 | 3 | | | | |
| 12 | 90445–07M87 | HOSE (L110)<br>DURITE (L110) | 3 | 3 | | | | |
| 13 | 6E9–13183–70 | VALVE, CHECK<br>CLAPET ANTI RETOUR | 3 | 3 | | | | |
| 14 | 90468–07M02 | CLIP<br>JONC | 6 | 6 | | | | |
| 15 | 90464–07M05 | CLAMP<br>BRIDE | 1 | 1 | | | | |
| 16 | 6H1–11537–01 | GEAR, DRIVEN<br>PIGNON SECONDAIRE | 1 | 1 | | | | |
| 17 | 90201–08M93 | WASHER, PLATE<br>RONDELLE, PLATE | 1 | 1 | | | | |
| 18 | 6H1–13117–01 | COLLAR, DISTANCE<br>ENTRETOISE | 1 | 1 | | | | |
| 19 | 93210–13M04 | O-RING<br>JOINT TORIQUE | 1 | 1 | | | | |
| 20 | 6H1–41241–02 | ROD, LINK<br>BIELLETTE | 1 | 1 | | | | |
| 21 | 6H1–41237–00 | JOINT, LINK<br>RACCORD | 1 | 1 | | | | |
| 22 | 95380–05600 | NUT<br>ECROU | 1 | 1 | | | | |
| 23 | 90202–05088 | WASHER, PLATE<br>RONDELLE, PLATE | 1 | 1 | | | | |
| 24 | 90468–05M03 | CLIP<br>JONC | 1 | 1 | | | | |
| 25 | 6E9–41237–00 | JOINT, LINK<br>RACCORD | 1 | 1 | | | | |
| 26 | 6H1–21707–07 | OIL TANK COMP.<br>RESERVOIR A PETROLE COMP. | 1 | 1 | | | | |
| 27 | 90445–11M09 | HOSE (L600)<br>DURITE (L600) | 1 | 1 | | | | |

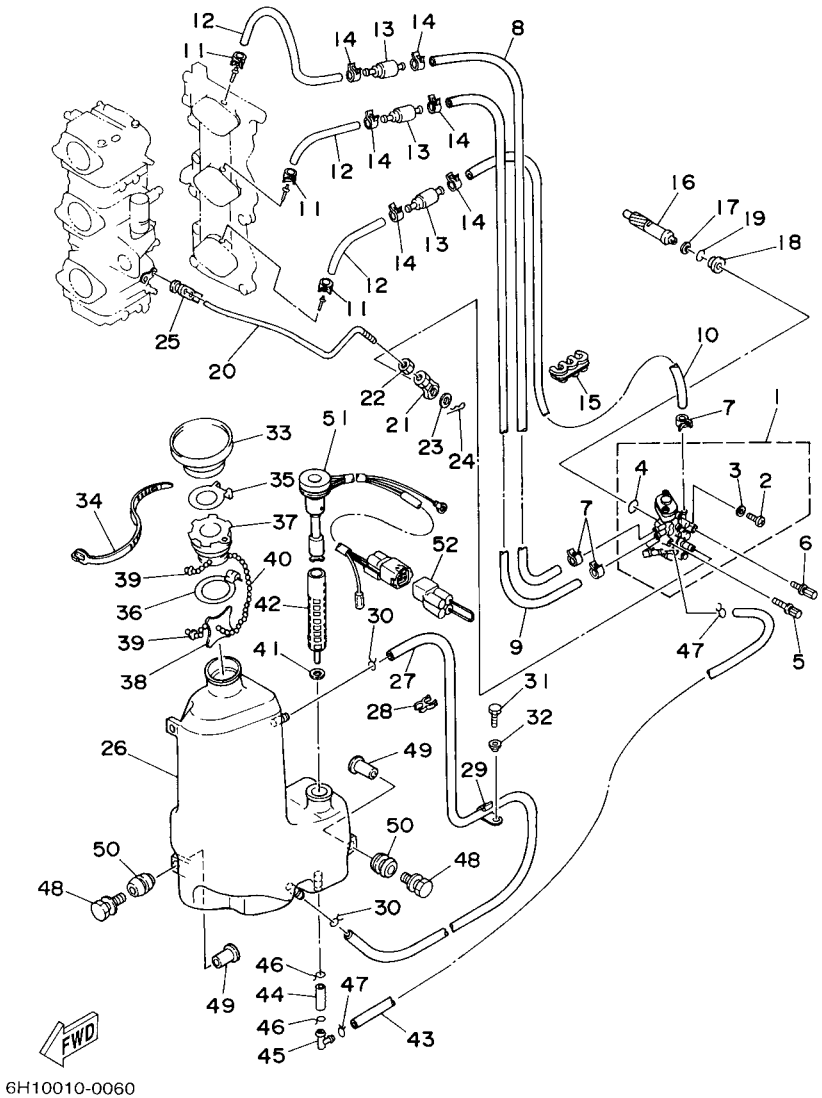


## FIG. 6 OIL PUMP — POMPE A HUILE

| REF. NO. | PART NO. N° PIECES | DESCRIPTION DESCRIPTION | 67P5 | 6H19 | | | | REMARKS REMARQUES |
|---|---|---|---|---|---|---|---|---|
| 28 | 90464–11M24 | CLAMP<br>BRIDE | 1 | 1 | | | | |
| 29 | 90465–11M27 | CLAMP<br>BRIDE | 1 | 1 | | | | |
| 30 | 90467–11M08 | CLIP<br>JONC | 2 | 2 | | | | |
| 31 | 97095–06016 | BOLT<br>BOULON | 1 | 1 | | | | |
| 32 | 90387–06M31 | COLLAR<br>COLLERETTE | 1 | 1 | | | | |
| 33 | 6H1–21752–00 | TUBE, FILLER 1<br>DURITE | 1 | 1 | | | | |
| 34 | 90465–13M30 | CLAMP<br>BRIDE | 1 | 1 | | | | |
| 35 | 63D–2176M–00 | HOOK<br>CROCHET | 1 | 1 | | | | |
| 36 | 63D–2175R–00 | HOOK, BAND<br>CROCHET, BANDE | 1 | 1 | | | | |
| 37 | 6H4–21770–00 | OIL TANK CAP ASSY<br>CABOCHON DE RESERVOIR A HUILE | 1 | 1 | | | | |
| 38 | 6J8–21758–00 | WASHER, SPECIAL 2<br>RONDELLE, SPECIALE 2 | 1 | 1 | | | | |
| 39 | 6H1–21757–00 | WASHER, SPECIAL 1<br>RONDELLE, SPECIALE 1 | 2 | 2 | | | | |
| 40 | 6H1–24633–00 | CHAIN, BALL<br>CHANE DE BALLE | 1 | 1 | | | | |
| 41 | 6J8–13414–00 | GASKET, STRAINER COVER<br>JOINT, COUVERCLE DE FILTRE | 1 | 1 | | | | |
| 42 | 6H1–13411–00 | STRAINER, OIL<br>FILTRE, HUILE | 1 | 1 | | | | |
| 43 | 6H1–21766–01 | PIPE, OIL<br>DURITE A HUILE | 1 | 1 | | | | |
| 44 | 90445–08M01 | HOSE (L30)<br>DURITE (L30) | 1 | 1 | | | | |
| 45 | 6H1–13435–00 | NIPPLE<br>RACCORD | 1 | 1 | | | | |
| 46 | 90467–12M11 | CLIP<br>JONC | 2 | 2 | | | | |
| 47 | 90467–08004 | CLIP<br>JONC | 2 | 2 | | | | |
| 48 | 90119–06M88 | BOLT, WITH WASHER<br>BOULON, AVEC RONDELLE | 3 | 3 | | | | |
| 49 | 90387–06119 | COLLAR<br>COLLERETTE | 3 | 3 | | | | |
| 50 | 6A0–82317–00 | DAMPER, IGNITION COIL<br>AMORTISSEUR, BOBINE D'ALLUM | 3 | 3 | | | | |
| 51 | 6H1–85720–15 | OIL LEVEL GAUGE ASSY<br>JAUGE A HUILE CPLT | 1 | 1 | | | | |
| 52 | 6R5–82582–B0 | COVER, WIRE HARNESS<br>COUVERCLE, FAISCEAU DE FILS | 1 | 1 | | | | AP<br>AP |

## FIG. 7 FUEL CARBURANT

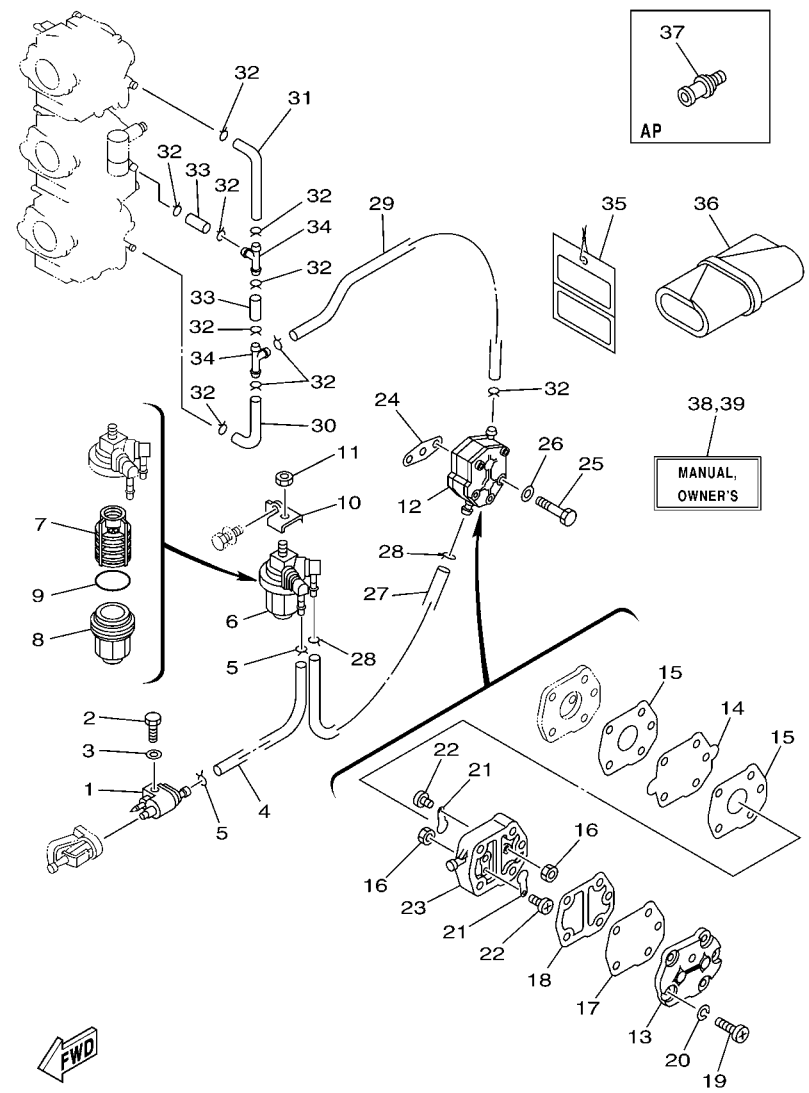


| REF. NO. | PART NO. N° PIECES | DESCRIPTION DESCRIPTION | 67P5 | 6H19 | | | | REMARKS REMARQUES |
|---|---|---|---|---|---|---|---|---|
| 1 | 6G1–24304–02 | FUEL PIPE JOINT COMP. 1<br>DURITE RACCORDEMT. A ESSENCE | 1 | 1 | | | | |
| 2 | 97095–06020 | BOLT<br>BOULON | 1 | 1 | | | | |
| 3 | 92995–06600 | WASHER<br>RONDELLE | 1 | 1 | | | | |
| 4 | 90445–09104 | HOSE (L300)<br>DURITE (L300) | 1 | 1 | | | | |
| 5 | 90467–08004 | CLIP<br>JONC | 2 | 2 | | | | |
| 6 | 61N–24560–00 | FILTER ASSY<br>ENS FILTRE | 1 | 1 | | | | |
| 7 | 61N–24563–00 | .ELEMENT, FILTER<br>.ELEMENT, FILTRE | 1 | 1 | | | | |
| 8 | 61N–24521–00 | .CUP, FILTER<br>.CUVETTE, FILTRE | 1 | 1 | | | | |
| 9 | 93210–32738 | .O-RING<br>.JOINT TORIQUE | 1 | 1 | | | | |
| 10 | 6H1–24566–01 | BRACKET, FILTER<br>SUPPORT, FILTRE | 1 | 1 | | | | |
| 11 | 95380–08600 | NUT<br>ECROU | 1 | 1 | | | | |
| 12 | 692–24410–00 | FUEL PUMP ASSY<br>POMPE A ESSENCE | 1 | 1 | | | | |
| 13 | 6A0–24413–00 | .BODY 2<br>.CORPS 2 | 1 | 1 | | | | |
| 14 | 692–24411–00 | .DIAPHRAGM<br>.DIAPHRAGME | 1 | 1 | | | | |
| 15 | 648–24434–01 | .GASKET, BODY<br>.JOINT, CORPS | 2 | 2 | | | | |
| 16 | 95380–03600 | .NUT<br>.ECROU | 2 | 2 | | | | |
| 17 | 663–24411–00 | .DIAPHRAGM<br>.DIAPHRAGME | 1 | 1 | | | | |
| 18 | 648–24435–02 | .GASKET, BODY 2<br>.JOINT, CORPS 2 | 1 | 1 | | | | |
| 19 | 98503–05028 | .SCREW, PAN HEAD<br>.VIS | 3 | 3 | | | | |
| 20 | 92990–05100 | .WASHER, SPRING<br>.RONDELLE, GROWER | 3 | 3 | | | | |
| 21 | 6A0–24421–01 | .VALVE, CHECK<br>.SOUPAPE, RETENUE | 2 | 2 | | | | |
| 22 | 6A0–14325–00 | .SCREW, PAN HEAD<br>.VIS TETE CONIQUE | 2 | 2 | | | | |
| 23 | 6A0–24412–02 | .BODY 1<br>.CORPS 1 | 1 | 1 | | | | |
| 24 | 650–24431–A0 | GASKET, FUEL PUMP 1<br>JOINT 1 DE POMPE A ESSENCE | 1 | 1 | | | | |
| 25 | 97095–06040 | BOLT<br>BOULON | 2 | 2 | | | | |
| 26 | 92995–06600 | WASHER<br>RONDELLE | 2 | 2 | | | | |
| 27 | 6H1–24314–00 | PIPE 4<br>DURITE 4 | 1 | 1 | | | | |

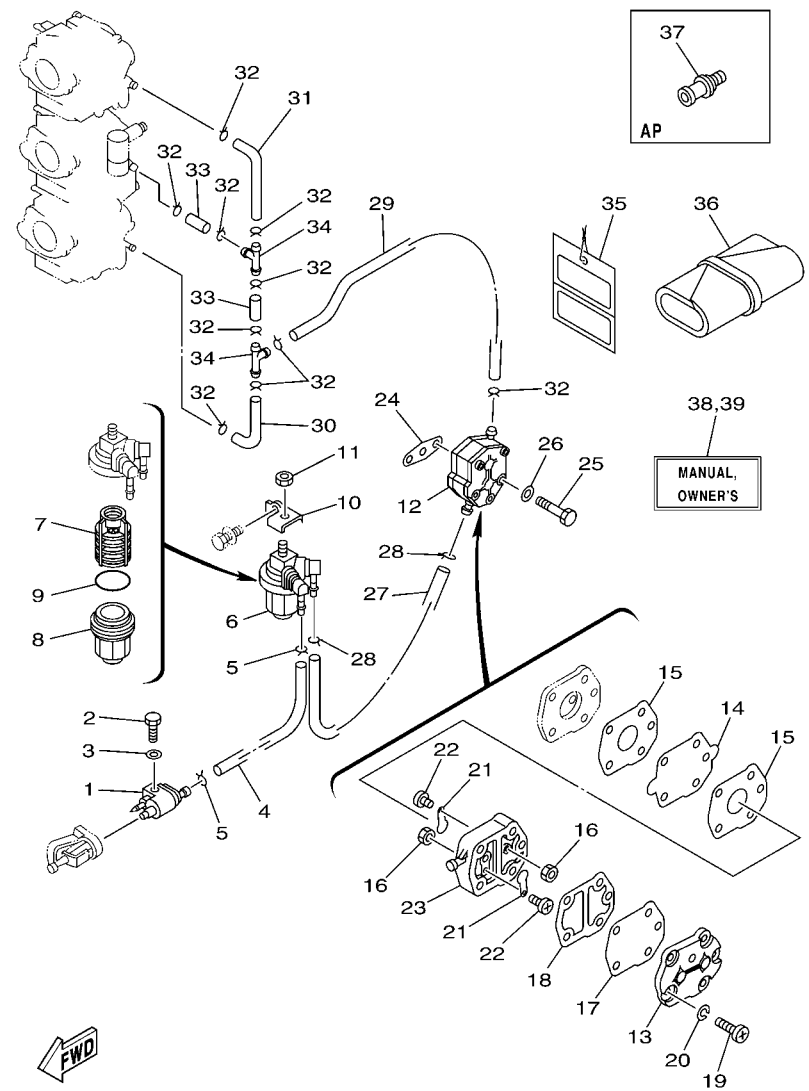


## FIG. 7 FUEL CARBURANT

| REF. NO. | PART NO. N° PIECES | DESCRIPTION DESCRIPTION | 67P5 | 6H19 | | | | REMARKS REMARQUES |
|---|---|---|---|---|---|---|---|---|
| 28 | 90467–08004 | CLIP<br>JONC | 2 | 2 | | | | |
| 29 | 90445–09097 | HOSE (L250)<br>DURITE (L250) | 1 | 1 | | | | |
| 30 | 688–24313–00 | PIPE 3<br>DURITE 3 | 1 | 1 | | | | |
| 31 | 688–24314–00 | PIPE 4<br>DURITE 4 | 1 | 1 | | | | |
| 32 | 90467–08004 | CLIP<br>JONC | 10 | 10 | | | | |
| 33 | 90445–09220 | HOSE (L30)<br>DURITE (L30) | 2 | 2 | | | | |
| 34 | 688–24378–00 | PIPE, JOINT 4<br>DURITE RACCORDEMENT 4 | 2 | 2 | | | | |
| 35 | 61H–2819R–31 | TAG, WARNING<br>ETIQUETTE, AVERTISSEMENT | 1 | 1 | | | | |
| 36 | 656–W2810–02 | TOOL KIT<br>TROUSSE A OUTILS | 1 | 1 | | | | |
| 37 | 6E0–28193–00–94 | PLUG, WATER CHECK<br>BOUCHON, CONTROLE D'EAU | 1 | 1 | | | | AP D:12.5MM<br>AP D:12.5MM |
| 38 | 67P–28199–72–E0 | MANUAL,OWNER'S<br>MANUEL D'UTILISATION | 1 | 1 | | | | UR (E)<br>UR (E) |
| | 67P–28199–72–F0 | MANUAL,OWNER'S<br>MANUEL D'UTILISATION | 1 | 1 | | | | UR (F)<br>UR (F) |
| | 67P–28199–72–S0 | MANUAL,OWNER'S<br>MANUEL D'UTILISATION | 1 | 1 | | | | UR (ES)<br>UR (ES) |
| | 67P–28199–72–G0 | MANUAL,OWNER'S<br>MANUEL D'UTILISATION | 1 | 1 | | | | UR (D)<br>UR (D) |
| | 67P–28199–72–D0 | MANUAL,OWNER'S<br>MANUEL D'UTILISATION | 1 | 1 | | | | UR (NL)<br>UR (NL) |
| | 67P–28199–72–H0 | MANUAL,OWNER'S<br>MANUEL D'UTILISATION | 1 | 1 | | | | UR (I)<br>UR (I) |
| 39 | 67P–28199–82–K0 | MANUAL,OWNER'S<br>MANUEL D'UTILISATION | 1 | 1 | | | | UR (DK)<br>UR (DK) |
| | 67P–28199–82–R0 | MANUAL,OWNER'S<br>MANUEL D'UTILISATION | 1 | 1 | | | | UR (GR)<br>UR (GR) |
| | 67P–28199–82–P0 | MANUAL,OWNER'S<br>MANUEL D'UTILISATION | 1 | 1 | | | | UR (P)<br>UR (P) |
| | 67P–28199–82–N0 | MANUAL,OWNER'S<br>MANUEL D'UTILISATION | 1 | 1 | | | | UR (N)<br>UR (N) |
| | 67P–28199–82–M0 | MANUAL,OWNER'S<br>MANUEL D'UTILISATION | 1 | 1 | | | | UR (S)<br>UR (S) |
| | 67P–28199–82–L0 | MANUAL,OWNER'S<br>MANUEL D'UTILISATION | 1 | 1 | | | | UR (SF)<br>UR (SF) |

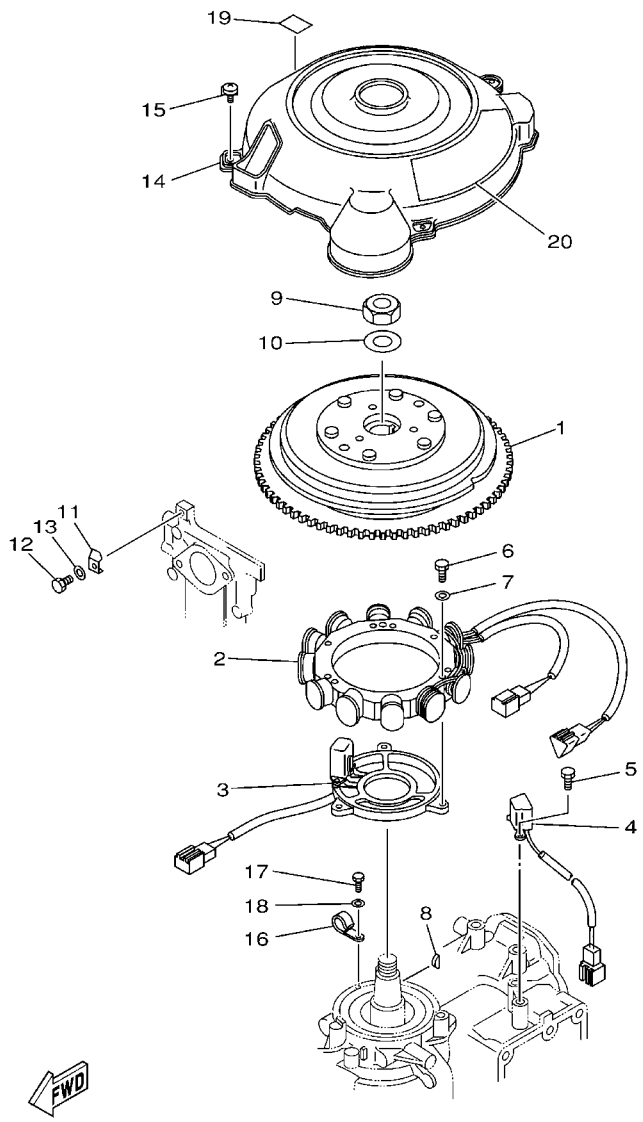


6H12200-2080

## FIG. 8 GENERATOR GENERATRICE

| REF. NO. | PART NO. N° PIECES | DESCRIPTION DESCRIPTION | 67P5 | 6H19 | | | | REMARKS REMARQUES |
|---|---|---|---|---|---|---|---|---|
| 1 | 6H0–85550–00 | ROTOR ASSY<br>ROTOR CPLT | 1 | 1 | | | | |
| 2 | 6H0–85510–03 | STATOR ASSY<br>STATOR CPLT | 1 | 1 | | | | |
| 3 | 6H0–85580–01 | COIL, PULSER<br>BOBINE, PULSEUR | 1 | 1 | | | | |
| 4 | 6H2–85895–01 | CRANK POSITION SENDER<br>SONDE, REGLAGE DE VILEBREQUIN | 1 | 1 | | | | |
| 5 | 97095–05012 | BOLT<br>BOULON | 2 | 2 | | | | |
| 6 | 97095–06040 | BOLT<br>BOULON | 3 | 3 | | | | |
| 7 | 92995–06600 | WASHER<br>RONDELLE | 3 | 3 | | | | |
| 8 | 90280–05015 | KEY, WOODRUFF<br>CLAVETTE, DEMI-LUNE | 1 | 1 | | | | |
| 9 | 90170–20137 | NUT<br>ECROU | 1 | 1 | | | | |
| 10 | 90201–21M18 | WASHER, PLATE<br>RONDELLE, PLATE | 1 | 1 | | | | |
| 11 | 688–81332–01 | PLATE, TIMING<br>PLATEAU, ALLUMAGE | 1 | 1 | | | | |
| 12 | 97095–06010 | BOLT<br>BOULON | 1 | 1 | | | | |
| 13 | 92995–06600 | WASHER<br>RONDELLE | 1 | 1 | | | | |
| 14 | 6H1–81337–01 | COVER, FLYWHEEL<br>COUVERCLE, VOLANT | 1 | 1 | | | | |
| 15 | 90159–06M20 | SCREW, WITH WASHER<br>VIS, AVEC RONDELLE | 3 | 3 | | | | |
| 16 | 90465–06M90 | CLAMP<br>BRIDE | 1 | 1 | | | | |
| 17 | 97095–06012 | BOLT<br>BOULON | 1 | 1 | | | | |
| 18 | 92995–06600 | WASHER<br>RONDELLE | 1 | 1 | | | | |
| 19 | 6H1–14488–00 | LABEL, CAUTION<br>ETIQUETTE, RECOMMANDATION | 1 | 1 | | | | |
| 20 | 6H1–13437–21 | MARK, CAUTION<br>MAKER | 1 | 1 | | | | |

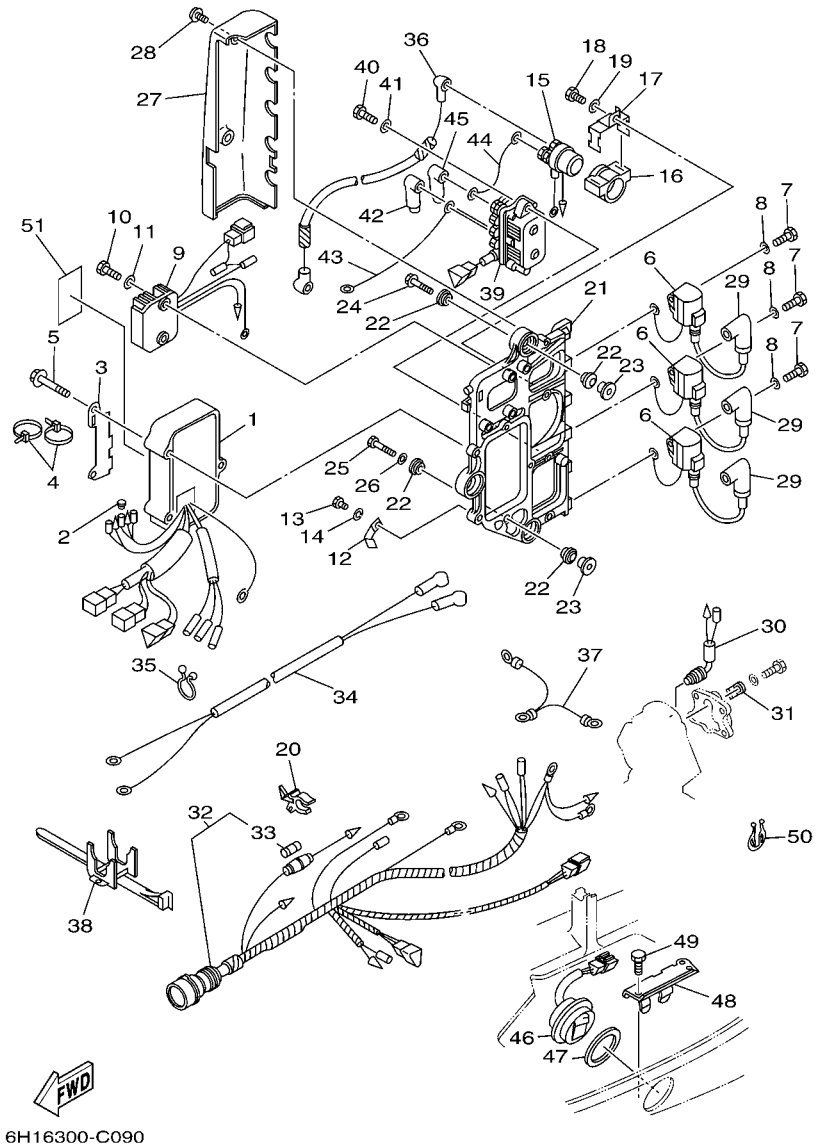


## FIG. 9 ELECTRICAL ELECTRIQUE

| REF. NO. | PART NO. N° PIECES | DESCRIPTION DESCRIPTION | 67P5 | 6H19 | | | | REMARKS REMARQUES |
|---|---|---|---|---|---|---|---|---|
| 1 | 6H0–85540–06 | C.D.I. UNIT ASSY<br>BLOC C.D.I. | 1 | 1 | | | | |
| 2 | 703–82119–00 | COVER, LEAD WIRE<br>GARNITURE, FIL | 1 | 1 | | | | |
| 3 | 6H1–85542–10 | BRACKET<br>SUPPORT | 1 | 1 | | | | |
| 4 | 90465–13M11 | CLAMP<br>BRIDE | 2 | 2 | | | | |
| 5 | 97595–06550 | BOLT, WITH WASHER<br>VIS HEXAGONAL AVC RONDELLE | 3 | 3 | | | | |
| 6 | 697–85570–00 | IGNITION COIL ASSY<br>BOBINE D'ALLUMAGE (ENS.) | 3 | 3 | | | | |
| 7 | 97013–06020 | BOLT<br>BOULON | 3 | 3 | | | | |
| 8 | 92903–06600 | WASHER, PLATE<br>RONDELLE, PLATE | 3 | 3 | | | | |
| 9 | 6H0–81960–10 | RECTIFIER & REGULATOR ASSY<br>REDRESSEUR REGULATEUR CPLT | 1 | 1 | | | | |
| 10 | 97095–06020 | BOLT<br>BOULON | 2 | 2 | | | | |
| 11 | 92995–06600 | WASHER<br>RONDELLE | 2 | 2 | | | | |
| 12 | 90465–08M23 | CLAMP<br>BRIDE | 1 | 1 | | | | |
| 13 | 97095–06012 | BOLT<br>BOULON | 1 | 1 | | | | |
| 14 | 92995–06100 | WASHER, SPRING<br>RONDELLE, GROWER | 1 | 1 | | | | |
| 15 | 6G1–81941–10 | STARTER RELAY ASSY<br>LANCEUR RELAIS (ENS.) | 1 | 1 | | | | |
| 16 | 6G1–81952–00 | HOLDER, RELAY<br>SUPPORT, RELAIS | 1 | 1 | | | | |
| 17 | 6E9–81945–70 | PLATE, SWITCH FITTING<br>PLAQUE, FIXATION DU RELAIS | 1 | 1 | | | | |
| 18 | 97013–06016 | BOLT<br>BOULON | 1 | 1 | | | | |
| 19 | 92903–06600 | WASHER, PLATE<br>RONDELLE, PLATE | 1 | 1 | | | | |
| 20 | 6G5–82152–00 | HOLDER, FUSE<br>SUPPORT, FUSIBLE | 1 | 1 | | | | |
| 21 | 6H1–85542–00–94 | BRACKET<br>SUPPORT | 1 | 1 | | | | |
| 22 | 90480–09M25 | GROMMET<br>PASSE-FIL | 6 | 6 | | | | |
| 23 | 90387–06M03 | COLLAR<br>COLLERETTE | 3 | 3 | | | | |
| 24 | 90119–06M75 | BOLT, WITH WASHER<br>BOULON, AVEC RONDELLE | 2 | 2 | | | | |
| 25 | 90109–06M39 | BOLT<br>BOULON | 1 | 1 | | | | |
| 26 | 90201–06M31 | WASHER, PLATE<br>RONDELLE, PLATE | 1 | 1 | | | | |
| 27 | 6H1–81916–00 | COVER, TERMINAL<br>COUVERCLE, BORNE | 1 | 1 | | | | |

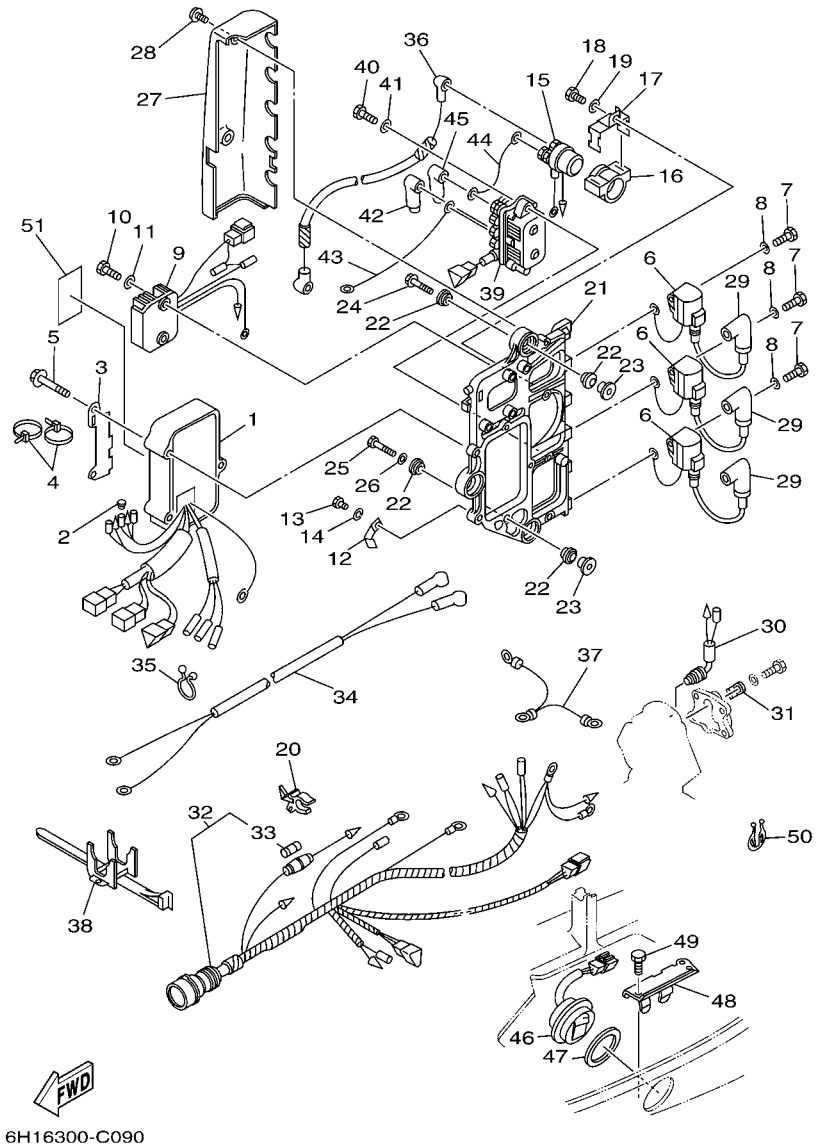


## FIG. 9 ELECTRICAL ELECTRIQUE

| REF. NO. | PART NO. N° PIECES | DESCRIPTION DESCRIPTION | 67P5 | 6H19 | | | | REMARKS REMARQUES |
|---|---|---|---|---|---|---|---|---|
| 28 | 90159–06M11 | SCREW, WITH WASHER<br>VIS, AVEC RONDELLE | 2 | 2 | | | | |
| 29 | 6E3–82370–21 | PLUG CAP ASSY<br>ANTIPARASITE | 3 | 3 | | | | |
| 30 | 688–82560–10 | THERMO SWITCH ASSY<br>THERMO-CONTACT COMPLET | 1 | 1 | | | | |
| 31 | 688–82588–01 | PLATE<br>PLAQUE | 1 | 1 | | | | |
| 32 | 6H0–82590–12 | WIRE HARNESS ASSY (10P)<br>FAISCEAU DE FILS COMPLET (10P) | 1 | 1 | | | | |
| 33 | 663–82151–00 | .FUSE (12V-20A)<br>.FUSIBLE (12V-20A) | 1 | 1 | | | | |
| 34 | 6H0–82105–02 | WIRE HARNESS<br>FAISCEAU DE FILS | 1 | 1 | | | | |
| 35 | 90464–23M22 | CLAMP<br>BRIDE | 1 | 1 | | | | |
| 36 | 6H0–82117–00 | WIRE, LEAD<br>FIL | 1 | 1 | | | | |
| 37 | 697–82519–00 | WIRE, EARTH LEAD<br>FIL, MASSE | 1 | 1 | | | | |
| 38 | 688–82594–00 | CLAMP<br>BRIDE | 1 | 1 | | | | |
| 39 | 61A–81950–00 | RELAY ASSY<br>RELAIS COMPLET | 1 | 1 | | | | |
| 40 | 97095–06025 | BOLT<br>BOULON | 2 | 2 | | | | |
| 41 | 92995–06600 | WASHER<br>RONDELLE | 2 | 2 | | | | |
| 42 | 682–82119–01 | COVER, LEAD WIRE<br>GARNITURE, FIL | 2 | 2 | | | | |
| 43 | 6H0–81949–10 | WIRE, LEAD<br>FIL | 1 | 1 | | | | |
| 44 | 6H0–81949–01 | WIRE, LEAD<br>FIL | 1 | 1 | | | | |
| 45 | 682–82119–01 | COVER, LEAD WIRE<br>GARNITURE, FIL | 1 | 1 | | | | |
| 46 | 6H1–82563–10 | TRIM & TILT SWITCH ASSY<br>INCLINER ET PARER COMMUTATEUR | 1 | 1 | | | | |
| 47 | 6E5–82587–00 | GASKET<br>JOINT | 1 | 1 | | | | |
| 48 | 6H1–83614–00 | BRACKET<br>SUPPORT | 1 | 1 | | | | |
| 49 | 97095–06016 | BOLT<br>BOULON | 1 | 1 | | | | |
| 50 | 90464–18M14 | CLAMP<br>BRIDE | 1 | 1 | | | | |
| 51 | 6R5–85711–60 | MARK, CAUTION<br>MAKER | 1 | 1 | | | | |

## FIG. 10 STARTING MOTOR DEMARREUR ELECTRIQUE

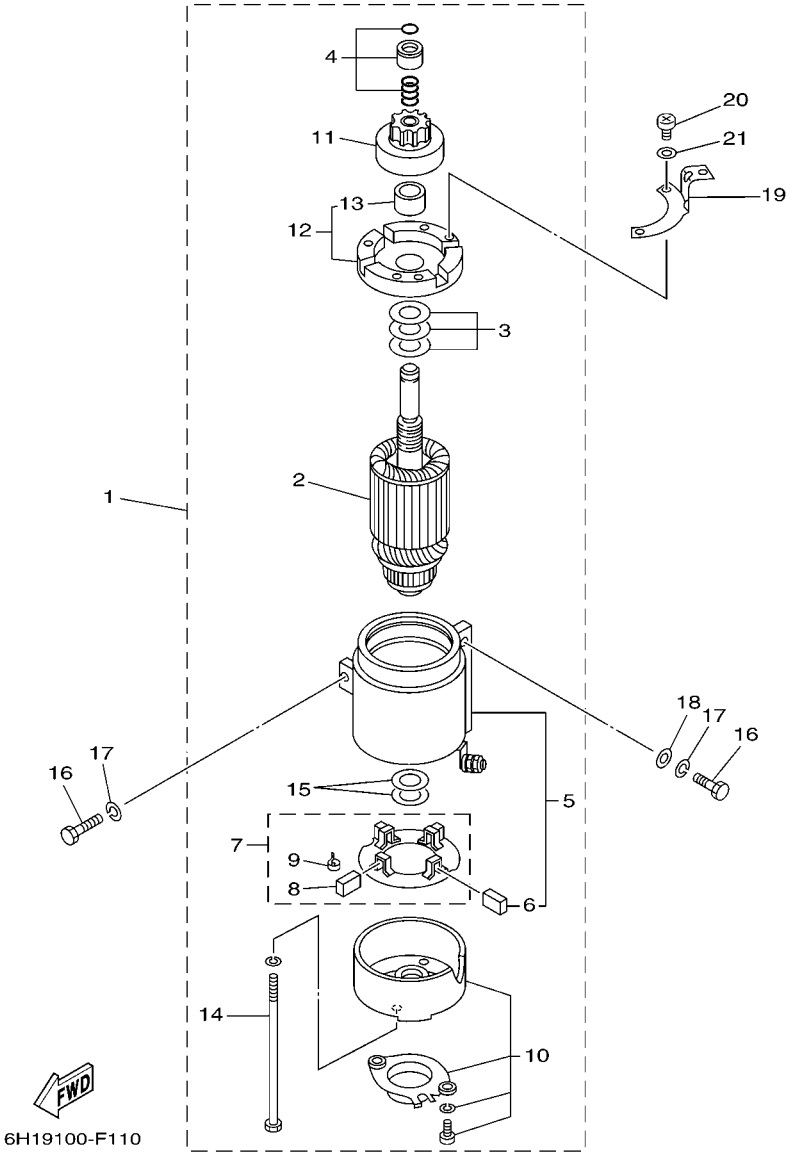


| REF. NO. | PART NO. N° PIECES | DESCRIPTION DESCRIPTION | 67P5 | 6H19 | | | | REMARKS REMARQUES |
|---|---|---|---|---|---|---|---|---|
| 1 | 688–81800–12 | STARTING MOTOR ASSY<br>DEMARREUR ELECTRIQUE COMPLET | 1 | 1 | | | | |
| 2 | 676–81850–11 | .ARMATURE ASSY<br>.INDUIT | 1 | 1 | | | | |
| 3 | 676–81809–10 | .WASHER KIT<br>.JEU DE RONDELLES | 1 | 1 | | | | |
| 4 | 676–81857–10 | .PINION STOPPER SET<br>.BUTEE PIGNON | 1 | 1 | | | | |
| 5 | 688–81810–11 | .STATOR ASSY<br>.STATOR COMPLET | 1 | 1 | | | | |
| 6 | 663–81811–11 | ..BRUSH 1<br>..CHARBON 1 | 2 | 2 | | | | |
| 7 | 663–81840–11 | .BRUSH HOLDER ASSY<br>.SUPPORT DE CHARBON | 1 | 1 | | | | |
| 8 | 663–81812–11 | ..BRUSH 2<br>..CHARBON 2 | 2 | 2 | | | | |
| 9 | 663–81813–10 | ..SPRING, BRUSH<br>..RESSORT, DE CHARBON | 4 | 4 | | | | |
| 10 | 663–81820–12 | .REAR BRACKET ASSY<br>.SUPPORT ARRIERE COMPLET | 1 | 1 | | | | |
| 11 | 663–81832–11 | .PINION ASSY<br>.PIGNON D'ATTAQUE (ENS.) | 1 | 1 | | | | |
| 12 | 688–81830–11 | .FRONT BRACKET ASSY<br>.SUPPORT AVANT | 1 | 1 | | | | |
| 13 | 688–81831–00 | ..METAL, FRONT<br>..METAL, AVANT | 1 | 1 | | | | |
| 14 | 663–81826–10 | .BOLT<br>.BOULON | 2 | 2 | | | | |
| 15 | 688–81824–00 | .WASHER 2<br>.RONDELLE 2 | 2 | 2 | | | | |
| 16 | 97013–08030 | BOLT<br>BOULON | 3 | 3 | | | | |
| 17 | 92903–08100 | WASHER, SPRING<br>RONDELLE, GROWER | 3 | 3 | | | | |
| 18 | 92990–08600 | WASHER, PLATE<br>RONDELLE, PLATE | 2 | 2 | | | | |
| 19 | 6H1–15771–00 | STAY 1<br>SUPPORT 1 | 1 | 1 | | | | |
| 20 | 97885–04010 | SCREW, PAN HEAD<br>VIS, A ENCOCHE | 3 | 3 | | | | |
| 21 | 92995–04600 | WASHER<br>RONDELLE | 3 | 3 | | | | |

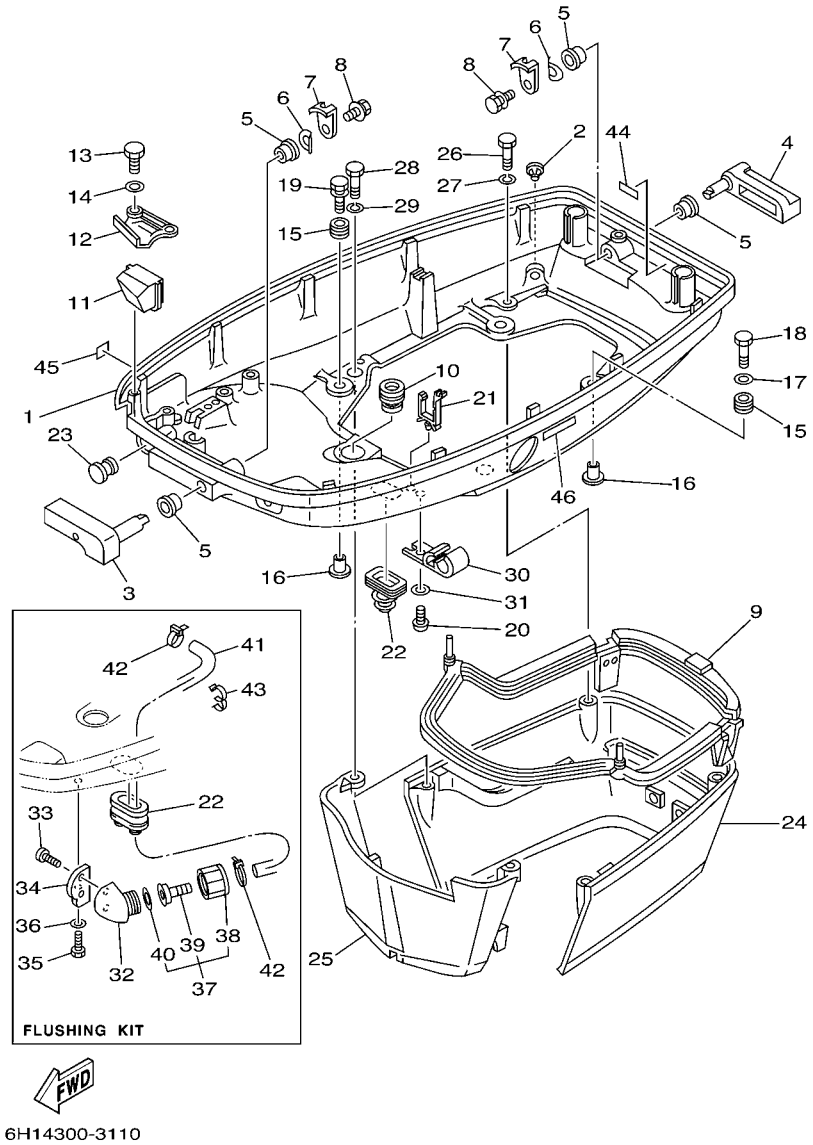


## FIG. 11 BOTTOM COWLING CAPOT INFERIEUR

| REF. NO. | PART NO. N° PIECES | DESCRIPTION DESCRIPTION | 67P5 | 6H19 | | | | REMARKS REMARQUES |
|---|---|---|---|---|---|---|---|---|
| 1 | 6H1–42711–10–4D | COWLING, BOTTOM 1<br>CUVETTE 1 | 1 | 1 | | | | FLUSHING KIT<br>FLUSHING KIT |
| 2 | 6H3–44391–01 | NIPPLE, HOSE<br>RACCORD D'ESSENCE | 1 | 1 | | | | |
| 3 | 688–42815–01–4D | LEVER, CLAMP<br>LEVIER, PRESSE | 1 | 1 | | | | |
| 4 | 688–42817–01–4D | LEVER, CLAMP<br>LEVIER, PRESSE | 1 | 1 | | | | |
| 5 | 90386–13M38 | BUSH<br>DOUILLE | 4 | 4 | | | | |
| 6 | 90206–13019 | WASHER, WAVE<br>RONDELLE, ONDULEE | 2 | 2 | | | | |
| 7 | 688–42816–00 | LEVER, CLAMP<br>LEVIER, PRESSE | 2 | 2 | | | | |
| 8 | 90119–06M09 | BOLT, WITH WASHER<br>BOULON, AVEC RONDELLE | 2 | 2 | | | | |
| 9 | 688–42716–02 | RUBBER, SEAL 1<br>JOINT EN CAOUTCHOUC 1 | 1 | 1 | | | | |
| 10 | 663–42724–00 | GROMMET<br>PASSE-FIL | 1 | 1 | | | | |
| 11 | 688–42725–20 | GROMMET<br>PASSE-FIL | 1 | 1 | | | | |
| 12 | 688–42738–01–94 | PLATE, FITTING<br>ETRIER | 1 | 1 | | | | |
| 13 | 97095–06016 | BOLT<br>BOULON | 2 | 2 | | | | |
| 14 | 92995–06600 | WASHER<br>RONDELLE | 2 | 2 | | | | |
| 15 | 90480–09M12 | GROMMET<br>PASSE-FIL | 4 | 4 | | | | |
| 16 | 90387–06M69 | COLLAR<br>COLLERETTE | 4 | 4 | | | | |
| 17 | 90201–06416 | WASHER, PLATE<br>RONDELLE, PLATE | 1 | 1 | | | | |
| 18 | 97095–06030 | BOLT<br>BOULON | 1 | 1 | | | | |
| 19 | 90119–06M61 | BOLT, WITH WASHER<br>BOULON, AVEC RONDELLE | 3 | 3 | | | | |
| 20 | 90157–06M01 | SCREW, PAN HEAD<br>VIS, TETE TRONCONIQUE | 1 | 1 | | | | |
| 21 | 90464–15M08 | CLAMP<br>BRIDE | 1 | 1 | | | | |
| 22 | 688–42726–10 | GROMMET<br>PASSE-FIL | 1 | | | | | UR<br>UR |
| | 6H1–42726–21 | GROMMET<br>PASSE-FIL | 1 | 1 | | | | UR FLUSHING KIT<br>UR FLUSHING KIT |
| 23 | 6G1–42748–00 | GROMMET<br>PASSE-FIL | 1 | 1 | | | | |
| 24 | 688–42741–01–4D | APRON<br>CAPOT LATERAL | 1 | 1 | | | | |
| 25 | 688–42771–01–4D | APRON<br>CAPOT LATERAL | 1 | 1 | | | | |
| 26 | 97095–06020 | BOLT<br>BOULON | 2 | 2 | | | | |

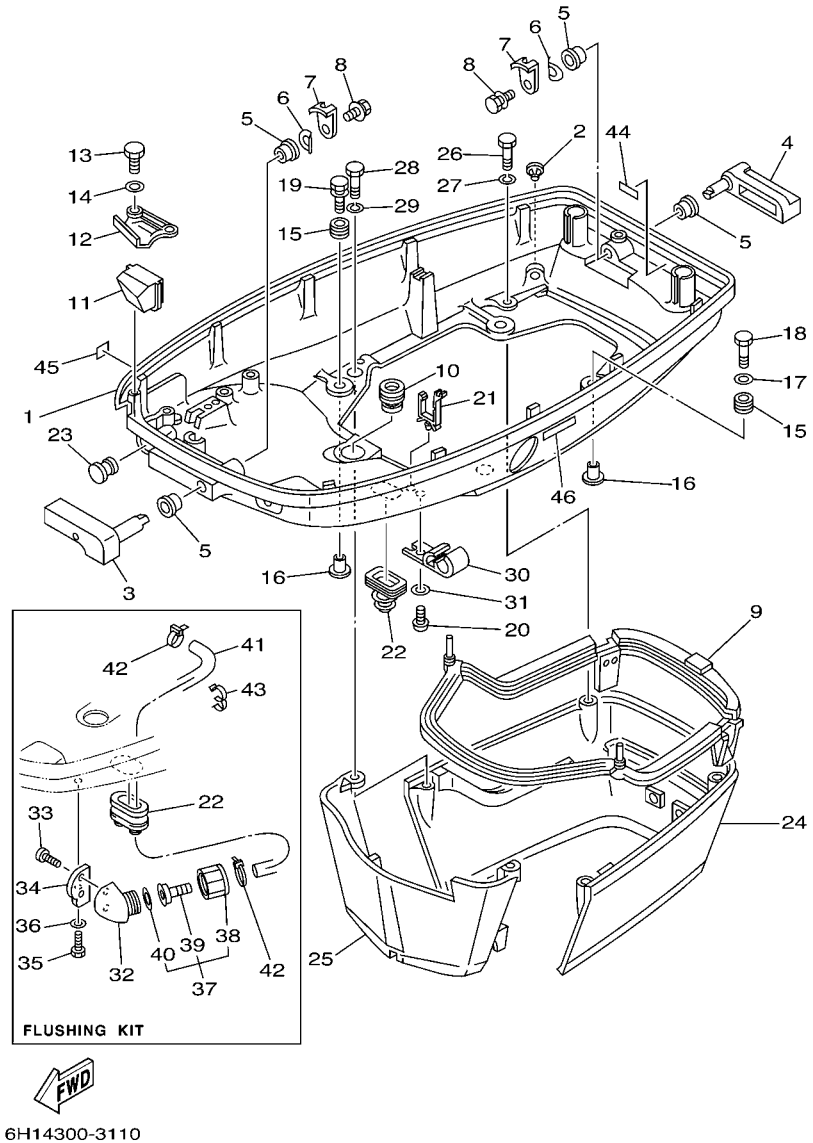


## FIG. 11 BOTTOM COWLING CAPOT INFERIEUR

| REF. NO. | PART NO. N° PIECES | DESCRIPTION DESCRIPTION | 67P5 | 6H19 | | | | REMARKS REMARQUES |
|---|---|---|---|---|---|---|---|---|
| 27 | 92995–06100 | WASHER, SPRING<br>RONDELLE, GROWER | 2 | 2 | | | | |
| 28 | 97095–06030 | BOLT<br>BOULON | 2 | 2 | | | | |
| 29 | 92995–06100 | WASHER, SPRING<br>RONDELLE, GROWER | 2 | 2 | | | | |
| 30 | 6E5–24367–01 | CLAMP, FUEL PIPE 2<br>COLLIER DE DURITE A ESSENCE | 1 | 1 | | | | |
| 31 | 92990–06600 | WASHER, PLATE<br>RONDELLE, PLATE | 1 | 1 | | | | |
| 32 | 68T–12572–00 | ADAPTER<br>ADAPTATEUR | 1 | 1 | | | | FLUSHING KIT<br>FLUSHING KIT |
| 33 | 90167–06002 | SCREW, TAPPING<br>VIS, TETE FRAISEE | 2 | 2 | | | | FLUSHING KIT<br>FLUSHING KIT |
| 34 | 6H1–12535–00 | PLATE<br>PLAQUE | 1 | 1 | | | | FLUSHING KIT<br>FLUSHING KIT |
| 35 | 97095–06020 | BOLT<br>BOULON | 1 | 1 | | | | FLUSHING KIT<br>FLUSHING KIT |
| 36 | 92995–06600 | WASHER<br>RONDELLE | 1 | 1 | | | | FLUSHING KIT<br>FLUSHING KIT |
| 37 | 6R3–12580–00 | JOINT ASSY<br>ARTICULER (ENS.) | 1 | 1 | | | | FLUSHING KIT<br>FLUSHING KIT |
| 38 | 6R3–12581–00 | .JOINT, HOSE 1<br>.JOINT DE TUYAU | 1 | 1 | | | | |
| 39 | 6R3–12582–00 | .JOINT, HOSE 2<br>.RACCORD DE TUYAU 1 | 1 | 1 | | | | |
| 40 | 6R3–12583–00 | .GASKET, HOSE JOINT<br>.JOINT | 1 | 1 | | | | |
| 41 | 6H1–24312–01 | PIPE 2<br>DURITE 2 | 1 | 1 | | | | FLUSHING KIT<br>FLUSHING KIT |
| 42 | 90465–11M10 | CLAMP<br>BRIDE | 2 | 2 | | | | FLUSHING KIT<br>FLUSHING KIT |
| 43 | 90464–09M31 | CLAMP<br>BRIDE | 1 | 1 | | | | FLUSHING KIT<br>FLUSHING KIT |
| 44 | 6G5–42791–10 | MARK 1<br>ETIQUETTE 1 | 1 | 1 | | | | |
| 45 | 6A1–28176–00 | LABEL, CAUTION<br>ETIQUETTE, RECOMMANDATION | 1 | 1 | | | | |
| 46 | 6E3–8257H–00 | PLATE, MARK<br>PLAQUE, ADHESIF | 1 | 1 | | | | |

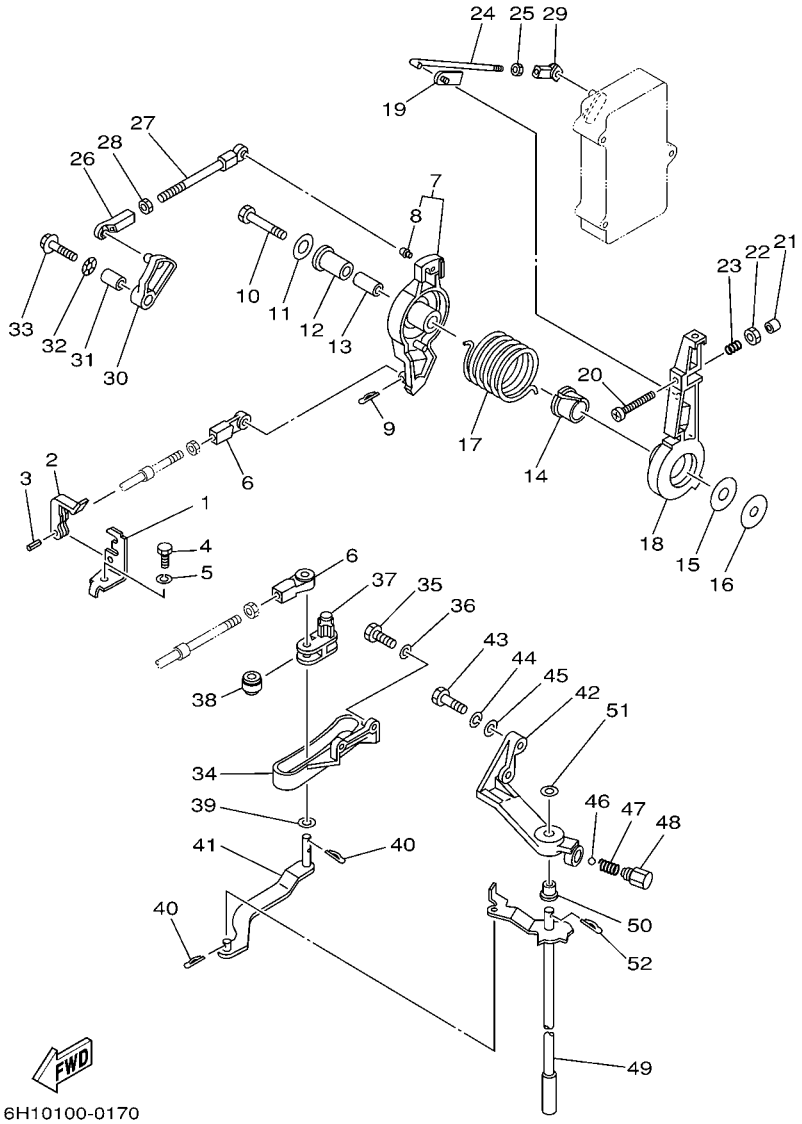


## FIG. 12 CONTROL COMMANDE

| REF. NO. | PART NO. N° PIECES | DESCRIPTION DESCRIPTION | 67P5 | 6H19 | | | | REMARKS REMARQUES |
|---|---|---|---|---|---|---|---|---|
| 1 | 663–48531–00 | BRACKET, REMOTE CONTROL<br>ETRIER 1, COMMANDE A DISTANCE | 1 | 1 | | | | |
| 2 | 663–48538–00 | CLAMP, CABLE 1<br>COLLIER | 1 | 1 | | | | |
| 3 | 91690–30012 | PIN, SPRING<br>AGRAFFE | 1 | 1 | | | | |
| 4 | 97095–08016 | BOLT<br>BOULON | 1 | 1 | | | | |
| 5 | 92995–08100 | WASHER<br>RONDELLE | 1 | 1 | | | | |
| 6 | 663–48344–00 | CABLE END, REMOTE CONTROL<br>CHAPE CABLE | 2 | 2 | | | | |
| 7 | 688–41632–01–94 | LEVER, MAGNETO CONTROL<br>LEVIER, COMMANDE D'AVANCE | 1 | 1 | | | | |
| 8 | 662–41214–01 | .JOINT 1<br>.RACCORD 1 | 1 | 1 | | | | |
| 9 | 90468–18008 | CLIP<br>JONC | 1 | 1 | | | | |
| 10 | 97095–08045 | BOLT<br>BOULON | 1 | 1 | | | | |
| 11 | 90201–08M23 | WASHER, PLATE<br>RONDELLE, PLATE | 1 | 1 | | | | |
| 12 | 90386–12089 | BUSH<br>DOUILLE | 1 | 1 | | | | |
| 13 | 90387–08M16 | COLLAR<br>COLLERETTE | 1 | 1 | | | | |
| 14 | 90386–22M13 | BUSH<br>DOUILLE | 1 | 1 | | | | |
| 15 | 90202–12092 | WASHER, PLATE<br>RONDELLE, PLATE | 1 | 1 | | | | |
| 16 | 90201–08M13 | WASHER, PLATE<br>RONDELLE, PLATE | 1 | 1 | | | | |
| 17 | 90508–29M05 | SPRING, TORSION<br>RESSORT, TORSION | 1 | 1 | | | | |
| 18 | 688–41631–01–94 | LEVER, MAGNETO CONTROL<br>LEVIER, COMMANDE D'AVANCE | 1 | 1 | | | | |
| 19 | 6F5–41237–00 | JOINT, LINK<br>RACCORD | 1 | 1 | | | | |
| 20 | 90157–06013 | SCREW, PAN HEAD<br>VIS, TETE TRONCONIQUE | 1 | 1 | | | | |
| 21 | 688–44194–00 | CAP<br>CAPUCHON | 1 | 1 | | | | |
| 22 | 95303–06600 | NUT<br>ECROU | 1 | 1 | | | | |
| 23 | 90501–16M12 | SPRING, COMPRESSION<br>RESSORT, COMPRESSION | 1 | 1 | | | | |
| 24 | 6H1–41636–00 | ROD, MAGNETO CONTROL<br>BIELLETTE, COMMANDE D'AVANCE | 1 | 1 | | | | |
| 25 | 95380–05600 | NUT<br>ECROU | 1 | 1 | | | | |
| 26 | 662–41237–01 | JOINT, LINK<br>RACCORD | 1 | 1 | | | | |
| 27 | 688–41211–01 | LINK, ACCEL.<br>BIELLETTE, ACCELERATION | 1 | 1 | | | | |

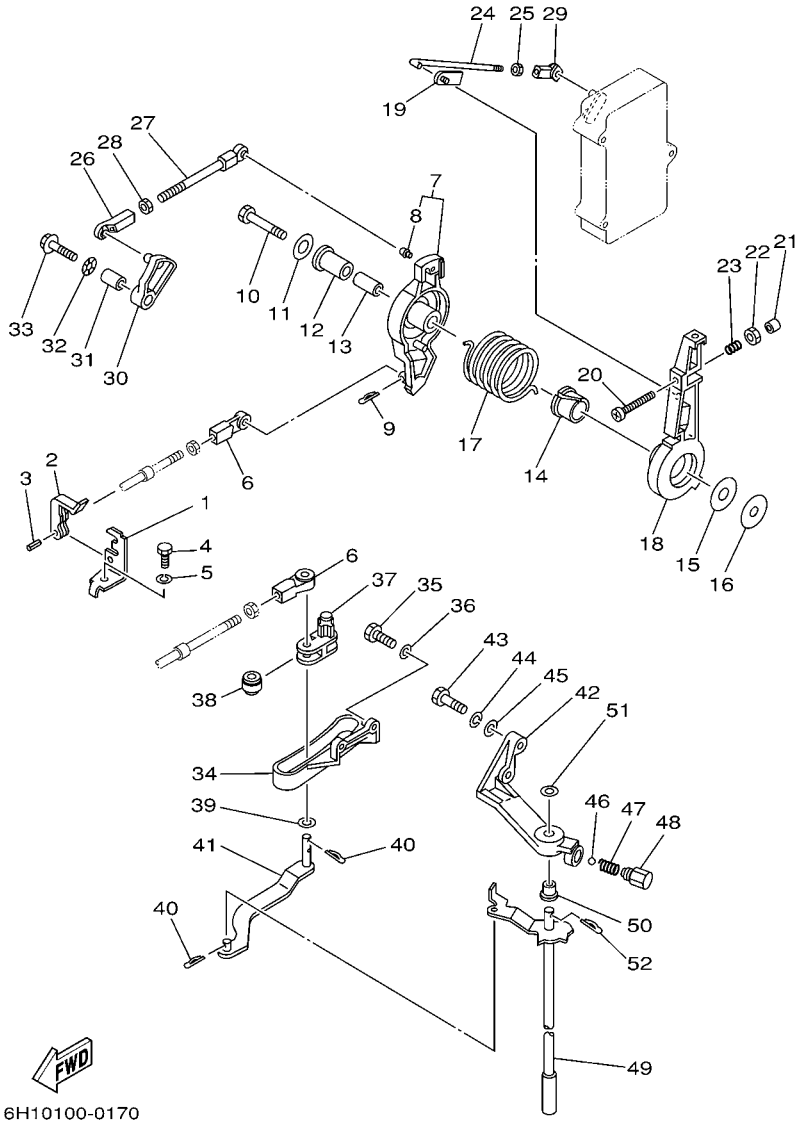


## FIG. 12 CONTROL COMMANDE

| REF. NO. | PART NO. N° PIECES | DESCRIPTION DESCRIPTION | 67P5 | 6H19 | | | | REMARKS REMARQUES |
|---|---|---|---|---|---|---|---|---|
| 28 | 95380–05600 | NUT<br>ECROU | 1 | 1 | | | | |
| 29 | 682–41237–00 | JOINT, LINK<br>RACCORD | 1 | 1 | | | | |
| 30 | 6H1–41213–00 | CAM, ACCEL.<br>CAME, ACCELERATION | 1 | 1 | | | | |
| 31 | 90387–06M17 | COLLAR<br>COLLERETTE | 1 | 1 | | | | |
| 32 | 90206–10M04 | WASHER, WAVE<br>RONDELLE, ONDULEE | 1 | 1 | | | | |
| 33 | 90119–06M24 | BOLT, WITH WASHER<br>BOULON, AVEC RONDELLE | 1 | 1 | | | | |
| 34 | 688–44117–00–94 | BRACKET<br>SUPPORT | 1 | 1 | | | | |
| 35 | 97013–06020 | BOLT<br>BOULON | 2 | 2 | | | | |
| 36 | 92903–06600 | WASHER, PLATE<br>RONDELLE, PLATE | 2 | 2 | | | | |
| 37 | 688–44124–00 | LINK, SHIFT ROD<br>BIELLETTE | 1 | 1 | | | | |
| 38 | 688–44122–00 | BUSHING, SHIFT ROD LEVER<br>DOUILLE, LEVIER D'EMBRAYAGE | 1 | 1 | | | | |
| 39 | 90202–07M07 | WASHER, PLATE<br>RONDELLE, PLATE | 1 | 1 | | | | |
| 40 | 90468–18008 | CLIP<br>JONC | 3 | 3 | | | | |
| 41 | 6H1–44121–00 | LEVER, SHIFT ROD<br>LEVIER, TIGE D'INVERSION | 1 | 1 | | | | |
| 42 | 688–44118–01–94 | BRACKET<br>SUPPORT | 1 | 1 | | | | |
| 43 | 97013–08030 | BOLT<br>BOULON | 2 | 2 | | | | |
| 44 | 92903–08100 | WASHER, SPRING<br>RONDELLE, GROWER | 2 | 2 | | | | |
| 45 | 92903–08600 | WASHER, PLATE<br>RONDELLE, PLATE | 2 | 2 | | | | |
| 46 | 93501–04M02 | BALL<br>BILLE | 1 | 1 | | | | |
| 47 | 90501–12082 | SPRING, COMPRESSION<br>RESSORT, COMPRESSION | 1 | 1 | | | | |
| 48 | 648–42715–00 | BUSHING<br>COUSSINET | 1 | 1 | | | | |
| 49 | 6H1–44120–12 | HANDLE GEAR SHIFT ASSY<br>LEVIER D'EMBRAYAGE | 1 | 1 | | | | L(20.3")<br>L(20.3") |
| 50 | 90386–07M58 | BUSH<br>DOUILLE | 1 | 1 | | | | |
| 51 | 92990–08200 | WASHER, PLAIN<br>RONDELLE, PLATE | 1 | 1 | | | | |
| 52 | 90468–18008 | CLIP<br>JONC | 1 | 1 | | | | |

## FIG. 13 BRACKET 1 SUPPORT 1

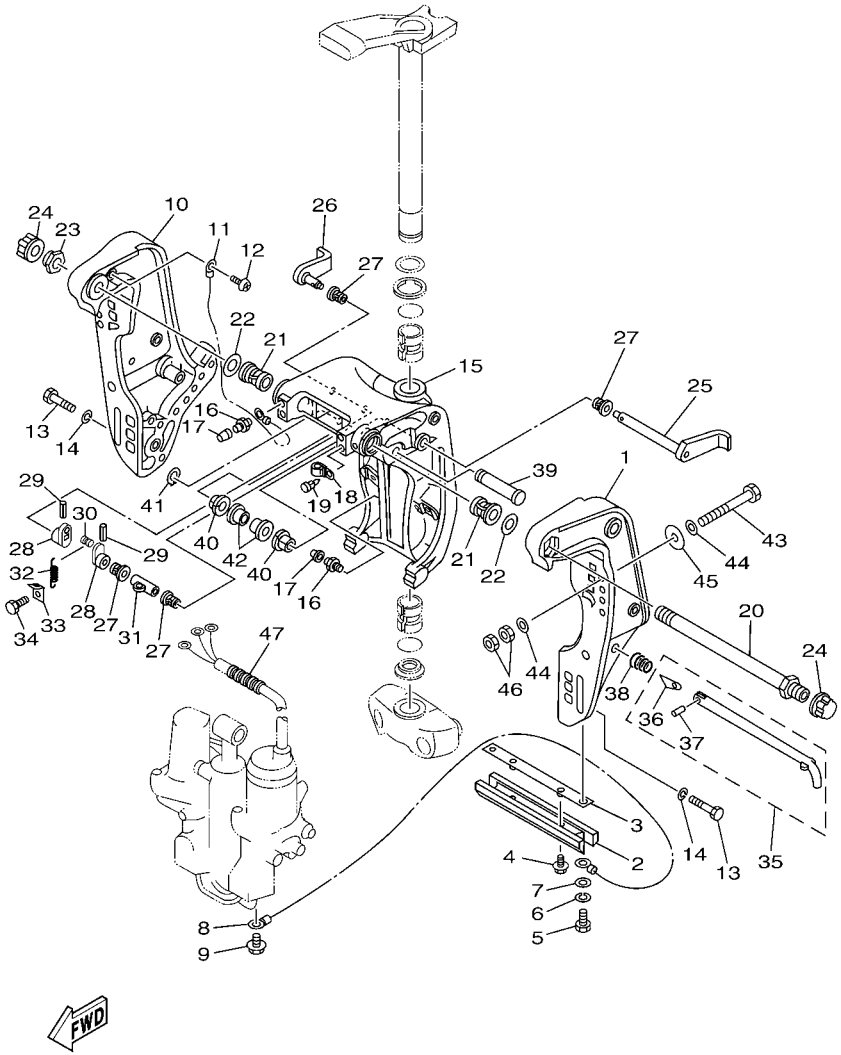


| REF. NO. | PART NO. N° PIECES | DESCRIPTION DESCRIPTION | 67P5 | 6H19 | | | | REMARKS REMARQUES |
|---|---|---|---|---|---|---|---|---|
| 1 | 6H1–43111–01–4D | BRACKET, CLAMP 1<br>PRESSE 1 | 1 | 1 | | | | |
| 2 | 6H1–45251–03 | ANODE<br>ANODE | 1 | 1 | | | | |
| 3 | 6H1–44526–00 | PLATE<br>PLAQUE | 1 | 1 | | | | |
| 4 | 90119–06M29 | BOLT, WITH WASHER<br>BOULON, AVEC RONDELLE | 2 | 2 | | | | |
| 5 | 97095–06016 | BOLT<br>BOULON | 2 | 2 | | | | |
| 6 | 92995–06100 | WASHER, SPRING<br>RONDELLE, GROWER | 2 | 2 | | | | |
| 7 | 92995–06600 | WASHER<br>RONDELLE | 2 | 2 | | | | |
| 8 | 6H1–82148–00 | WIRE, LEAD 4<br>FIL 4 | 1 | 1 | | | | |
| 9 | 97595–06510 | BOLT, WITH WASHER<br>VIS HEXAGONAL AVC RONDELLE | 1 | 1 | | | | |
| 10 | 6H1–43112–00–4D | BRACKET, CLAMP 2<br>PRESSE 2 | 1 | 1 | | | | |
| 11 | 6E5–82148–00 | WIRE, LEAD 4<br>FIL 4 | 1 | 1 | | | | |
| 12 | 97880–06012 | SCREW, PAN HEAD<br>VIS, TETE TRONCONIQUE | 1 | 1 | | | | |
| 13 | 97095–10045 | BOLT<br>BOULON | 6 | 6 | | | | |
| 14 | 92995–10100 | WASHER<br>RONDELLE | 6 | 6 | | | | |
| 15 | 6H1–43311–02–4D | BRACKET, SWIVEL 1<br>SUPPORT, PIVOT 1 | 1 | 1 | | | | |
| 16 | 93700–06M03 | NIPPLE, GREASE<br>PION | 3 | 3 | | | | |
| 17 | 663–45119–00 | CAP, GREASE NIPPLE<br>CAPUCHON, GRAISSEUR | 3 | 3 | | | | |
| 18 | 90464–11M18 | CLAMP<br>BRIDE | 1 | 1 | | | | |
| 19 | 90338–05M03 | PLUG<br>PLOT | 1 | 1 | | | | |
| 20 | 688–43131–03 | BOLT, CLAMP BRACKET<br>BOULON, PRESSE | 1 | 1 | | | | |
| 21 | 90386–22M15 | BUSH<br>DOUILLE | 2 | 2 | | | | |
| 22 | 90201–22M67 | WASHER, PLATE<br>RONDELLE, PLATE | 2 | 2 | | | | |
| 23 | 90185–22043 | NUT, SELF-LOCKING<br>ECROU,AUTO-BLOQUANT | 1 | 1 | | | | |
| 24 | 6G5–43145–01 | CAP, CLAMP BRACKET<br>CAPUCHON, PRESSE | 2 | 2 | | | | |
| 25 | 6H1–43181–01 | LEVER, TILT STOP<br>LEVIER, VERROUILLAGE RELEVAGE | 1 | 1 | | | | |
| 26 | 6H1–43185–01 | LEVER, TILT STOP<br>LEVIER, VERROUILLAGE RELEVAGE | 1 | 1 | | | | |
| 27 | 90386–10M16 | BUSH<br>DOUILLE | 4 | 4 | | | | |

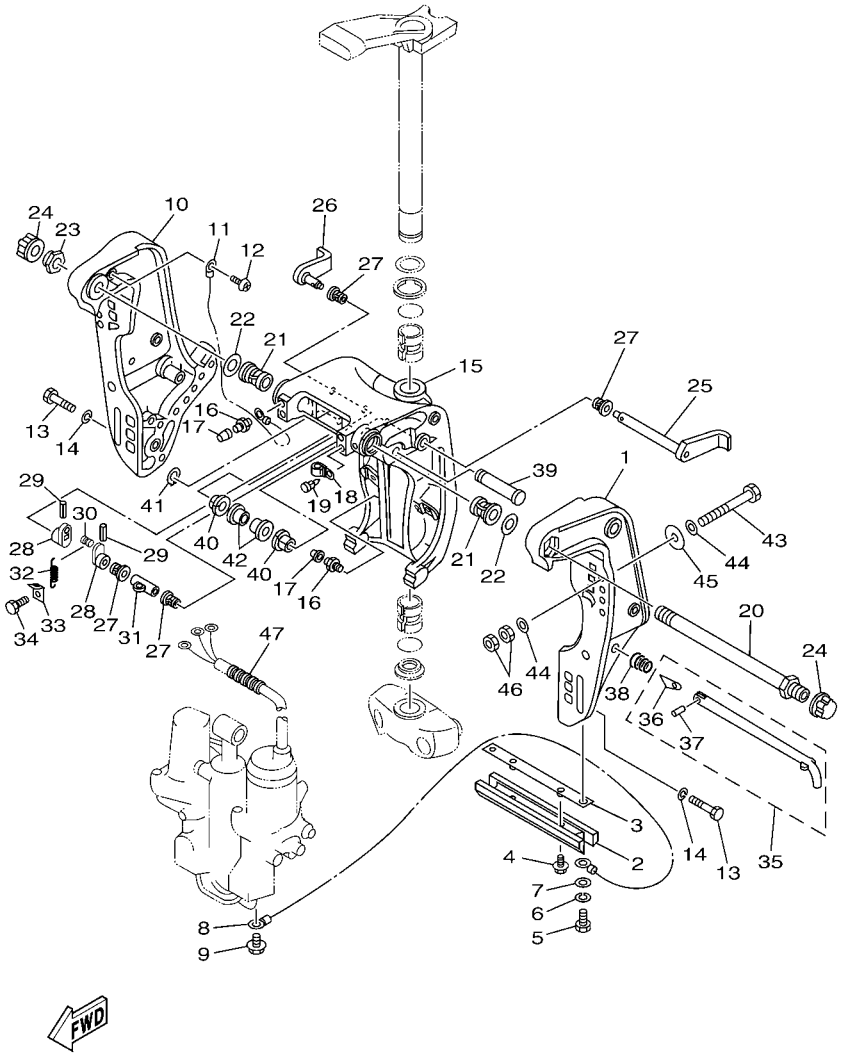


## FIG. 13 BRACKET 1 SUPPORT 1

| REF. NO. | PART NO. N° PIECES | DESCRIPTION DESCRIPTION | 67P5 | 6H19 | | | | REMARKS REMARQUES |
|---|---|---|---|---|---|---|---|---|
| 28 | 6G5–43148–00 | COLLAR, DISTANCE<br>ENTRETOISE | 2 | 2 | | | | |
| 29 | 91690–30020 | PIN, SPRING<br>AGRAFFE | 2 | 2 | | | | |
| 30 | 90249–06M19 | PIN<br>GOUPILLE | 1 | 1 | | | | |
| 31 | 90387–10M02 | COLLAR<br>COLLERETTE | 1 | 1 | | | | |
| 32 | 90506–14M24 | SPRING, TENSION<br>RESSORT, TENSION | 1 | 1 | | | | |
| 33 | 6G5–43144–00 | HOOK, SPRING<br>CROCHET | 1 | 1 | | | | |
| 34 | 97095–06010 | BOLT<br>BOULON | 1 | 1 | | | | |
| 35 | 688–43160–01 | TILT ROD ASSY<br>BROCHE D'INCLINAISON (ENS.) | 1 | 1 | | | | |
| 36 | 688–43165–00 | .PLATE, TILT LOCK<br>.TAQUET, BROCHE INCLINAISON | 1 | 1 | | | | |
| 37 | 91690–30012 | .PIN, SPRING<br>.AGRAFFE | 1 | 1 | | | | |
| 38 | 90502–16M02 | SPRING, CONICAL<br>RESSORT, CONIQUE | 1 | 1 | | | | |
| 39 | 6E5–43126–02 | PIN, UPPER SHOCK MOUNT<br>AXE, SUPERIEUR AMORTISSEUR | 1 | 1 | | | | |
| 40 | 90386–18M35 | BUSH<br>DOUILLE | 2 | 2 | | | | |
| 41 | 93410–18M02 | CIRCLIP<br>CLIPS | 1 | 1 | | | | |
| 42 | 90386–18M63 | BUSH<br>DOUILLE | 2 | 2 | | | | |
| 43 | 90101–12M65 | BOLT<br>BOULON | 4 | 4 | | | | |
| 44 | 92995–12200 | WASHER<br>RONDELLE | 8 | 8 | | | | |
| 45 | 90201–12426 | WASHER, PLATE<br>RONDELLE, PLATE | 4 | 4 | | | | |
| 46 | 95380–12600 | NUT<br>ECROU | 8 | 8 | | | | |
| 47 | 90440–14M00 | PIPE<br>DURITE | 1 | 1 | | | | |

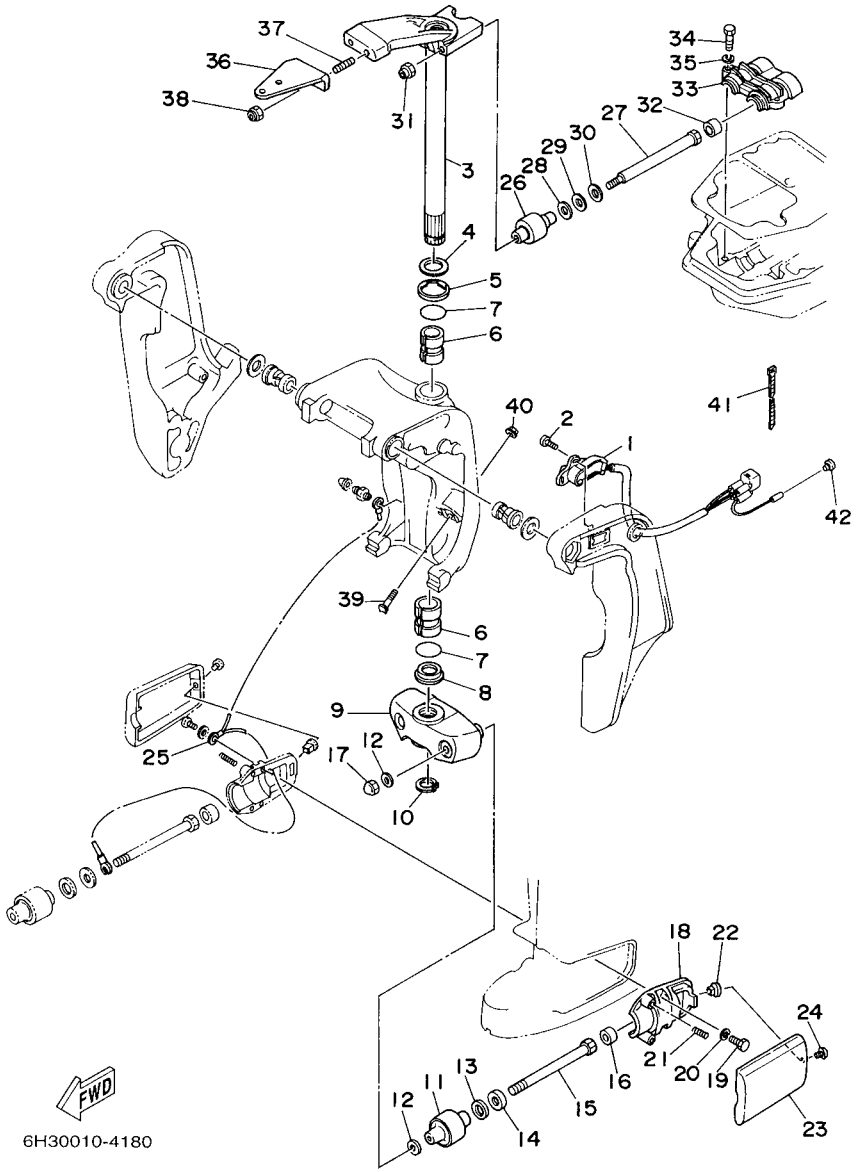


## FIG. 14 BRACKET 2 SUPPORT 2

| REF. NO. | PART NO. N° PIECES | DESCRIPTION DESCRIPTION | 67P5 | 6H19 | | | | REMARKS REMARQUES |
|---|---|---|---|---|---|---|---|---|
| 1 | 6H1–83672–12 | TRIM SENDER<br>INCLINER RACCORD | 1 | 1 | | | | |
| 2 | 97885–06016 | SCREW, PAN HEAD<br>VIS, A ENCOCHE | 2 | 2 | | | | |
| 3 | 688–42510–03–4D | STEERING BRACKET ASSY<br>DIRECTION SUPPORT (ENS.) | 1 | 1 | | | | |
| 4 | 90201–30M00 | WASHER, PLATE<br>RONDELLE, PLATE | 1 | 1 | | | | |
| 5 | 90386–30M78 | BUSH<br>DOUILLE | 1 | 1 | | | | |
| 6 | 90386–30M77 | BUSH<br>DOUILLE | 2 | 2 | | | | |
| 7 | 93210–29M94 | O-RING<br>JOINT TORIQUE | 2 | 2 | | | | |
| 8 | 90386–30M60 | BUSH<br>DOUILLE | 1 | 1 | | | | |
| 9 | 663–44551–02–4D | HOUSING, LOWER MOUNT RUBBER<br>BOITIER, SILENT-BLOC INFERIEUR | 1 | 1 | | | | |
| 10 | 93410–28M06 | CIRCLIP<br>CLIPS | 1 | 1 | | | | |
| 11 | 687–44555–00–94 | MOUNT DAMPER, LOWER SIDE<br>SILENT-BLOC, INFERIEUR LATERAL | 2 | 2 | | | | |
| 12 | 90201–12M16 | WASHER, PLATE<br>RONDELLE, PLATE | 4 | 4 | | | | |
| 13 | 90202–25M04 | WASHER, PLATE<br>RONDELLE, PLATE | 2 | 2 | | | | |
| 14 | 90201–13M19 | WASHER, PLATE<br>RONDELLE, PLATE | 2 | 2 | | | | |
| 15 | 90109–12261 | BOLT<br>BOULON | 2 | 2 | | | | |
| 16 | 663–44575–00 | DAMPER, LOWER MOUNT RUBBER<br>SILENT-BLOC, INFERIEUR | 2 | 2 | | | | |
| 17 | 95380–12800 | NUT, CROWN<br>ECROU, BORGNE | 2 | 2 | | | | |
| 18 | 687–44552–02–94 | HOUSING, LOWER MOUNT RUBBER<br>BOITIER, SILENT-BLOC INFERIEUR | 2 | 2 | | | | |
| 19 | 97075–08025 | BOLT<br>BOULON | 4 | 4 | | | | |
| 20 | 92995–08100 | WASHER<br>RONDELLE | 4 | 4 | | | | |
| 21 | 90501–14M08 | SPRING, COMPRESSION<br>RESSORT, COMPRESSION | 4 | 4 | | | | |
| 22 | 90179–06066 | NUT<br>ECROU | 2 | 2 | | | | |
| 23 | 663–44553–01–4D | COVER, LOWER MOUNT<br>COUVERCLE, SUSPENSION INFERIEU | 2 | 2 | | | | |
| 24 | 97885–06016 | SCREW, PAN HEAD<br>VIS, A ENCOCHE | 2 | 2 | | | | |
| 25 | 688–82127–02 | WIRE, LEAD 2<br>FIL 2 | 1 | 1 | | | | |
| 26 | 688–44514–00–94 | MOUNT DAMPER, UPPER SIDE<br>SILENT-BLOC, SUPERIEUR LATERAL | 2 | 2 | | | | |
| 27 | 90101–10M49 | BOLT<br>BOULON | 2 | 2 | | | | |

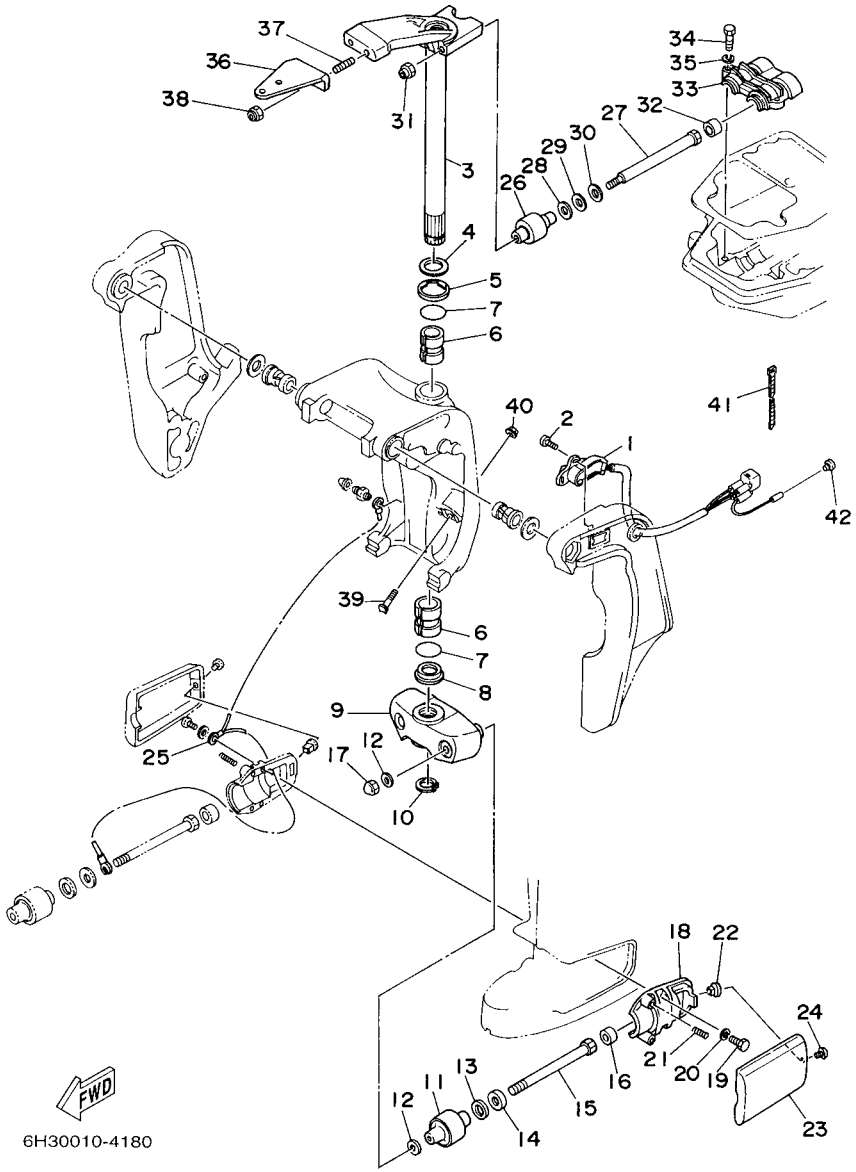


## FIG. 14 BRACKET 2 SUPPORT 2

| REF. NO. | PART NO. N° PIECES | DESCRIPTION DESCRIPTION | 67P5 | 6H19 | | | | REMARKS REMARQUES |
|---|---|---|---|---|---|---|---|---|
| 28 | 90201–20M21 | WASHER, PLATE<br>RONDELLE, PLATE | 2 | 2 | | | | |
| 29 | 90202–20M06 | WASHER, PLATE<br>RONDELLE, PLATE | 2 | 2 | | | | |
| 30 | 90201–11M22 | WASHER, PLATE<br>RONDELLE, PLATE | 2 | 2 | | | | |
| 31 | 90185–10051 | NUT, SELF-LOCKING<br>ECROU,AUTO-BLOQUANT | 2 | 2 | | | | |
| 32 | 663–44575–00 | DAMPER, LOWER MOUNT RUBBER<br>SILENT-BLOC, INFERIEUR | 2 | 2 | | | | |
| 33 | 688–44511–00–94 | COVER, UPPER MOUNT<br>COUVERCLE, SUSPENSION SUPERIEU | 1 | 1 | | | | |
| 34 | 97075–08035 | BOLT<br>BOULON | 3 | 3 | | | | |
| 35 | 92995–08100 | WASHER<br>RONDELLE | 3 | 3 | | | | |
| 36 | 688–48511–11–4D | HOOK, STEERING<br>ATTACHE, DIRECTION | 1 | 1 | | | | STEERING GUIDE<br>STEERING GUIDE |
| 37 | 90116–10175 | BOLT, STUD<br>GOUJON | 2 | 2 | | | | |
| 38 | 90185–10051 | NUT, SELF-LOCKING<br>ECROU,AUTO-BLOQUANT | 2 | 2 | | | | |
| 39 | 6H1–43376–00 | BOLT, THRUST RECEIVER<br>BOULON | 2 | 2 | | | | |
| 40 | 90185–08057 | NUT, SELF-LOCKING<br>ECROU,AUTO-BLOQUANT | 2 | 2 | | | | |
| 41 | 90465–11M10 | CLAMP<br>BRIDE | 3 | 3 | | | | |
| 42 | 703–82119–00 | COVER, LEAD WIRE<br>GARNITURE, FIL | 1 | 1 | | | | AP<br>AP |

## FIG. 15 POWER TRIM & TILT ASSY PUISSANCE PARER ET INCLINER

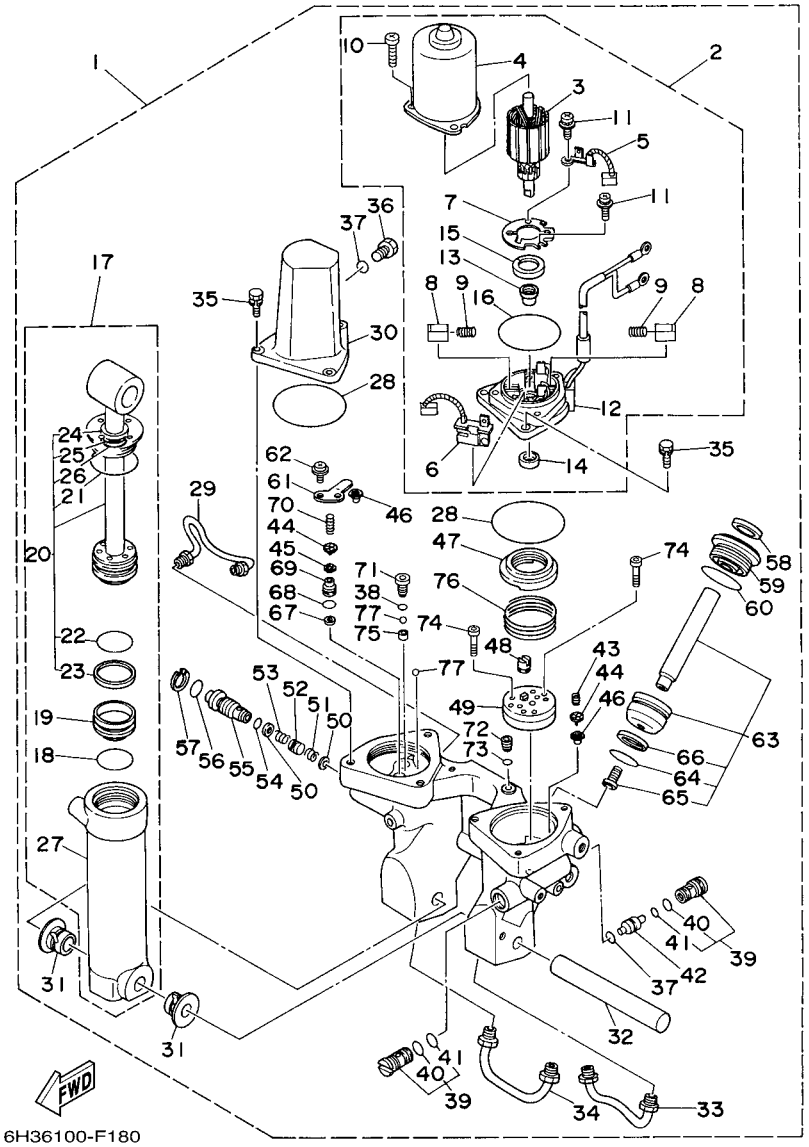


| REF. NO. | PART NO. N° PIECES | DESCRIPTION DESCRIPTION | 67P5 | 6H19 | | | | REMARKS REMARQUES |
|---|---|---|---|---|---|---|---|---|
| 1 | 6H1–43800–17–4D | POWER TRIM & TILT ASSY<br>PUISSANCE PARER ET INCLINER (E | 1 | 1 | | | | |
| 2 | 6H1–43880–02 | .MOTOR ASSY<br>.MOTEUR (ENS.) | 1 | 1 | | | | |
| 3 | 6H1–43805–10 | ..ARMATURE ASSY<br>..INDUIT (ENS.) | 1 | 1 | | | | |
| 4 | 6H1–43804–10 | ..STATOR ASSY<br>..STATOR (ENS.) | 1 | 1 | | | | |
| 5 | 6H1–43891–10 | ..BRUSH 1<br>..BALAI 1 | 1 | 1 | | | | |
| 6 | 6H1–43892–10 | ..BREAKER COMP. (BRUSH 2)<br>..RUPTEUR COMP. (BALAI 2) | 1 | 1 | | | | |
| 7 | 6H1–4380F–10 | ..PLATE, BRUSH HOLDER<br>..PLAQUE | 1 | 1 | | | | |
| 8 | 6H1–4380J–10 | ..HOLDER, BRUSH<br>..PORTE-BALAI | 2 | 2 | | | | |
| 9 | 6H1–4386K–10 | ..SPRING, BRUSH<br>..RESSORT, BALAI | 2 | 2 | | | | |
| 10 | 97885–05016 | ..SCREW, PAN HEAD<br>..VIS, A ENCOCHE | 3 | 3 | | | | |
| 11 | 97607–04310 | ..SCREW,WITH WASHER<br>..VIS HEXAGONAL | 2 | 2 | | | | |
| 12 | 6H1–43881–10 | ..FRAME, END<br>..BATI | 1 | 1 | | | | |
| 13 | 6H1–4380H–10 | ..METAL<br>..METAL | 1 | 1 | | | | |
| 14 | 93102–08M43 | ..OIL SEAL<br>..JOINT SPY | 1 | 1 | | | | |
| 15 | 6H1–4380G–10 | ..PLATE<br>..PLAQUE | 1 | 1 | | | | |
| 16 | 6H1–43865–10 | ..O-RING<br>..JOINT TORIQUE | 1 | 1 | | | | |
| 17 | 6H1–43840–11 | .POWER TILT ASSY<br>.PUISSANCE INCLINER (ENS.) | 1 | 1 | | | | |
| 18 | 6H1–43861–10 | ..O-RING<br>..JOINT TORIQUE | 1 | 1 | | | | |
| 19 | 6H1–43814–11 | ..PISTON, FREE<br>..PISTON | 1 | 1 | | | | |
| 20 | 6H1–43810–11 | ..TILT PISTON SUB ASSY<br>..INCLINER PISTON AUXILIAIRE(E | 1 | 1 | | | | |
| 21 | 6H1–43861–00 | ...O-RING<br>...JOINT TORIQUE | 1 | 1 | | | | |
| 22 | 6H1–43861–10 | ...O-RING<br>...JOINT TORIQUE | 1 | 1 | | | | |
| 23 | 6H1–43871–10 | ...RING, BACK UP<br>...SEGMENT | 1 | 1 | | | | |
| 24 | 6H1–43812–00 | ...SEAL, DUST<br>...JOINT | 1 | 1 | | | | |
| 25 | 6H1–43872–10 | ...RING, BACK UP<br>...RESSORT | 1 | 1 | | | | |
| 26 | 93210–18397 | ...O-RING<br>...JOINT TORIQUE | 1 | 1 | | | | |
| 27 | 6H1–43813–10 | ..CYLINDER, TILT<br>..CYLINDRE | 1 | 1 | | | | |

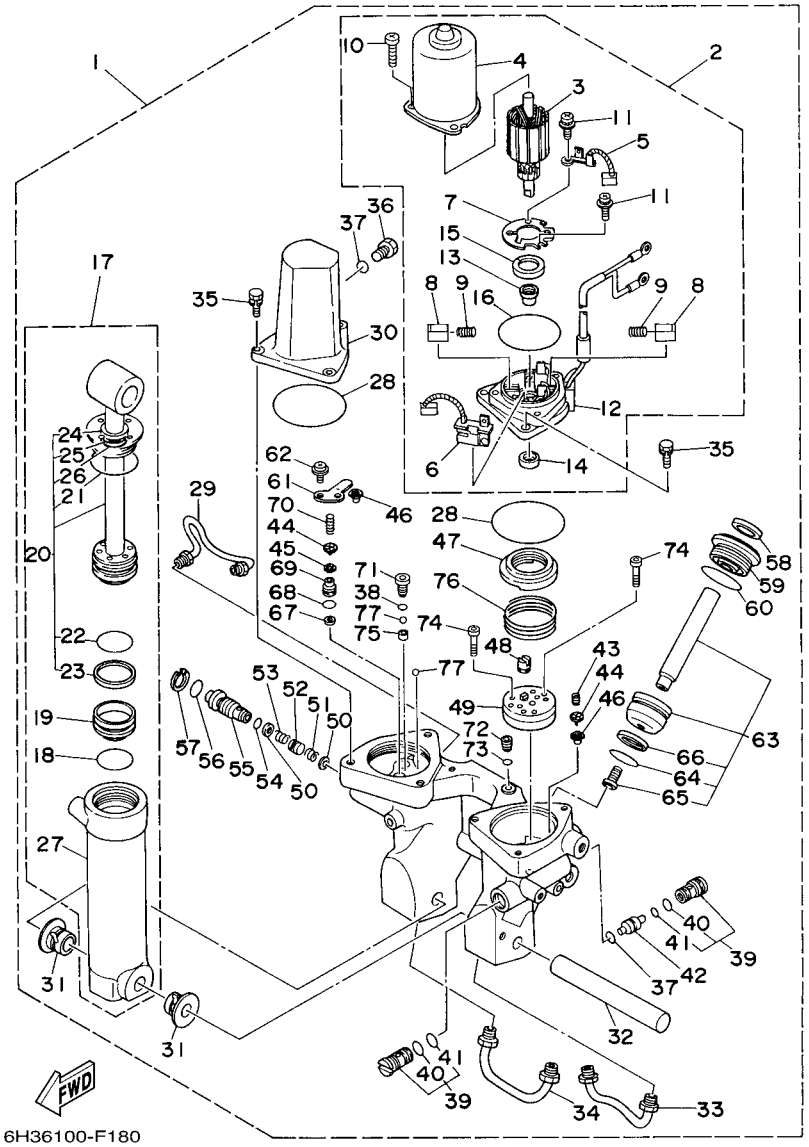


## FIG. 15 POWER TRIM & TILT ASSY PUISSANCE PARER ET INCLINER

| REF. NO. | PART NO. N° PIECES | DESCRIPTION DESCRIPTION | 67P5 | 6H19 | | | | REMARKS REMARQUES |
|---|---|---|---|---|---|---|---|---|
| 28 | 93210–68N50 | .O-RING<br>.JOINT TORIQUE | 2 | 2 | | | | |
| 29 | 6H1–43835–10 | .PIPE<br>.TUYAU | 1 | 1 | | | | |
| 30 | 6H1–43828–10 | .BODY, RESERVOIR<br>.CORPS | 1 | 1 | | | | |
| 31 | 90386–18M14 | .BUSH<br>.DOUILLE | 2 | 2 | | | | |
| 32 | 6E5–43818–00 | .PIN, LOWER SHOCK MOUNT<br>.AXE, INFERIEUR AMORTISSEUR | 1 | 1 | | | | |
| 33 | 6H1–43833–10 | .PIPE<br>.TUYAU | 1 | 1 | | | | |
| 34 | 6H1–43834–00 | .PIPE<br>.TUYAU | 1 | 1 | | | | |
| 35 | 97595–06420 | .BOLT, WITH WASHER<br>.VIS HEXAGONAL AVC RONDELLE | 6 | 6 | | | | |
| 36 | 6H1–43829–00 | .PLUG, RESERVOIR<br>.BOUCHON | 1 | 1 | | | | |
| 37 | 93210–09165 | .O-RING<br>.JOINT TORIQUE | 2 | 2 | | | | |
| 38 | 93210–064A5 | .O-RING<br>.JOINT TORIQUE | 1 | 1 | | | | |
| 39 | 67F–43802–00 | .VALVE SUB ASSY<br>.CLAPET AUXILIAIRE (ENS.) | 2 | 2 | | | | |
| 40 | 6H1–43866–00 | ..O-RING<br>..JOINT TORIQUE | 1 | 1 | | | | |
| 41 | 6H1–43867–00 | ..O-RING<br>..JOINT TORIQUE | 1 | 1 | | | | |
| 42 | 6H1–43841–11 | .PISTON, SHUTTLE<br>.PISTON | 1 | 1 | | | | |
| 43 | 6H1–43856–10 | .SPRING, DOWN RELIEF<br>.RESSORT | 1 | 1 | | | | |
| 44 | 6H1–43844–10 | .PIN, VALVE SUPPORT<br>.GOUPILLE | 2 | 2 | | | | |
| 45 | 6H1–4384G–11 | .SEAL, RELIEF VALVE<br>.JOINT | 1 | 1 | | | | |
| 46 | 6H1–4384F–10 | .SEAL, MAIN VALVE<br>.JOINT | 2 | 2 | | | | |
| 47 | 6H1–43817–01 | .FILTER 2<br>.FILTRE 2 | 1 | 1 | | | | |
| 48 | 6H1–43831–10 | .CONNECTOR, SHAFT<br>.RACCORD | 1 | 1 | | | | |
| 49 | 6H1–43830–11 | .GEAR PUMP ASSY<br>.POMPE A PIGNON (ENS.) | 1 | 1 | | | | |
| 50 | 6H1–43847–00 | .SEAT, MANUAL VALVE<br>.SIEGE | 2 | 2 | | | | |
| 51 | 6H1–43899–00 | .SPRING, MANUAL RELEASE<br>.RESSORT | 1 | 1 | | | | |
| 52 | 6H1–4382A–10 | .ADAPTOR 1<br>.ADAPTEUR 1 | 1 | 1 | | | | |
| 53 | 6H1–43854–00 | .SPRING, MANUAL RELEASE<br>.RESSORT | 1 | 1 | | | | |
| 54 | 93210–10M74 | .O-RING<br>.JOINT TORIQUE | 1 | 1 | | | | |

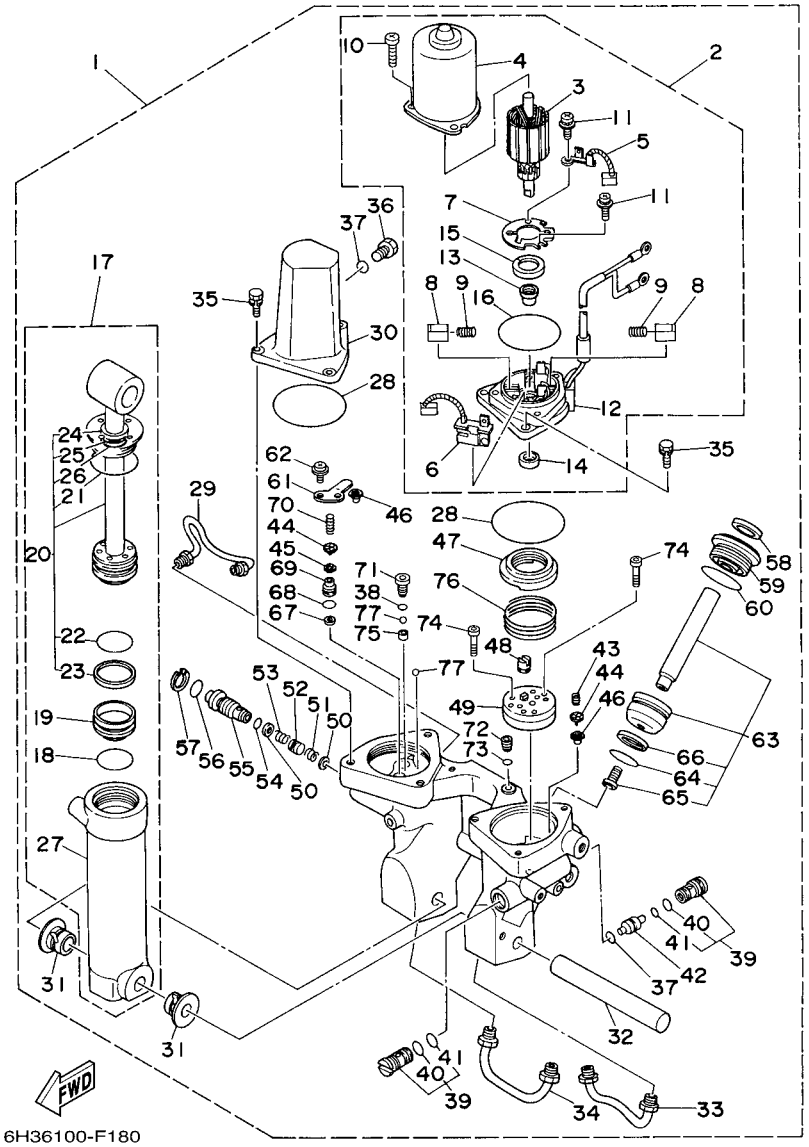


## FIG. 15 POWER TRIM & TILT ASSY PUISSANCE PARER ET INCLINER

| REF. NO. | PART NO. N° PIECES | DESCRIPTION DESCRIPTION | 67P5 | 6H19 | | | | REMARKS REMARQUES |
|---|---|---|---|---|---|---|---|---|
| 55 | 6H1–43845–00 | .SCREW, MANUAL RELEASE<br>.VIS | 1 | 1 | | | | |
| 56 | 93210–18M75 | .O-RING<br>.JOINT TORIQUE | 1 | 1 | | | | |
| 57 | 6H1–43875–00 | .RING, SNAP<br>.RESSORT | 1 | 1 | | | | |
| 58 | 6H1–43822–10 | .SEAL, TRIM DUST<br>.JOINT | 2 | 2 | | | | |
| 59 | 6H1–43821–11 | .SCREW, TRIM CYLINDER END<br>.VIS | 2 | 2 | | | | |
| 60 | 6H1–43861–10 | .O-RING<br>.JOINT TORIQUE | 2 | 2 | | | | |
| 61 | 6H1–4384E–20 | .SPRING, TRIM<br>.RESSORT | 1 | 1 | | | | |
| 62 | 97602–05210 | .SCREW, PAN HEAD WITH WASHER<br>.VIS | 2 | 2 | | | | |
| 63 | 6H1–43820–11 | .TRIM PISTON SUB ASSY<br>.PARER PISTON AUXILIAIRE (ENS. | 2 | 2 | | | | |
| 64 | 6H1–43864–00 | ..O-RING<br>..JOINT TORIQUE | 1 | 1 | | | | |
| 65 | 91318–08016 | ..BOLT<br>..BOULON | 1 | 1 | | | | |
| 66 | 6H1–43874–00 | ..RING, BACK UP<br>..RESSORT | 1 | 1 | | | | |
| 67 | 6H1–43816–00 | .FILTER 1<br>.FILTRE 1 | 1 | 1 | | | | |
| 68 | 6H1–43896–00 | .O-RING<br>.JOINT TORIQUE | 1 | 1 | | | | |
| 69 | 6H1–43895–12 | .SEAT, RELIEF VALVE<br>.SIEGE | 1 | 1 | | | | |
| 70 | 6H1–43855–11 | .SPRING, UP RELIEF<br>.RESSORT | 1 | 1 | | | | |
| 71 | 6H1–43843–11 | .SCREW, VALVE LOCK<br>.VIS | 1 | 1 | | | | |
| 72 | 6H1–4388E–11 | .PLUG, TAPER SCREW<br>.BOUCHON | 1 | 1 | | | | |
| 73 | 6H1–43868–00 | .O-RING<br>.JOINT TORIQUE | 1 | 1 | | | | |
| 74 | 91318–04025 | .BOLT<br>.BOULON | 4 | 4 | | | | |
| 75 | 6H1–4387J–00 | .WASHER, SPECIAL 2<br>.RONDELLE | 1 | 1 | | | | |
| 76 | 6H1–4385H–00 | .SPRING, SEAL<br>.RESSORT | 1 | 1 | | | | |
| 77 | 93505–32038 | .BALL<br>.BILLE | 2 | 2 | | | | |

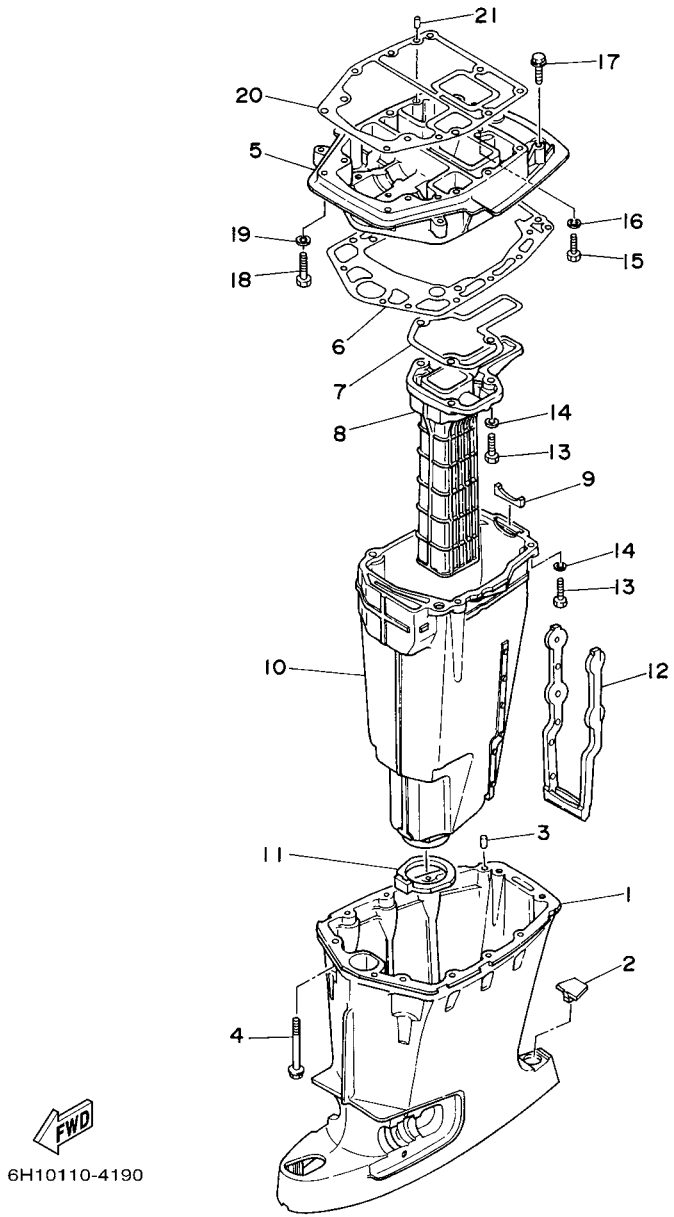


## FIG. 16 UPPER CASING FOURREAU

| REF. NO. | PART NO. N° PIECES | DESCRIPTION DESCRIPTION | 67P5 | 6H19 | | | | REMARKS REMARQUES |
|---|---|---|---|---|---|---|---|---|
| 1 | 688–45111–04–4D | CASING, UPPER<br>FOURREAU | 1 | 1 | | | | |
| 2 | 663–45155–10 | CAP<br>CAPUCHON | 1 | 1 | | | | |
| 3 | 93606–12019 | PIN, DOWEL<br>GOUPILLE | 2 | 2 | | | | |
| 4 | 90119–08M80 | BOLT, WITH WASHER<br>BOULON, AVEC RONDELLE | 8 | 8 | | | | |
| 5 | 688–41137–03–94 | GUIDE, EXHAUST<br>COLLECTEUR D'ECHAPPEMENT | 1 | 1 | | | | |
| 6 | 688–45114–A1 | GASKET, UPPER CASING<br>JOINT, TUBE D'ARBRE | 1 | 1 | | | | |
| 7 | 688–41134–A0 | GASKET, EXHAUST MANIFOLD<br>JOINT, PIPE D'ECHAPPEMENT | 1 | 1 | | | | |
| 8 | 688–41131–00–5B | MANIFOLD, EXT. 1<br>PIPE D'ECHAPPEMENT | | 1 | | | | |
| | 692–41131–00–5B | MANIFOLD, EXT. 1<br>PIPE D'ECHAPPEMENT | 1 | | | | | |
| 9 | 688–41133–00 | GASKET, EXHAUST MANIFOLD 1<br>JOINT, PIPE D'ECHAPPEMENT | 1 | 1 | | | | |
| 10 | 688–14711–01–5B | MUFFLER 1<br>POT D'ECHAPPEMENT 1 | 1 | 1 | | | | |
| 11 | 688–45123–00 | GASKET, MUFFLER<br>JOINT, POT DE DETENTE | 1 | 1 | | | | |
| 12 | 663–14737–10 | DAMPER, MUFFLER<br>AMORTISSEUR DE POT D'ECHAPPT | 1 | 1 | | | | |
| 13 | 97075–08030 | BOLT<br>BOULON | 7 | 7 | | | | |
| 14 | 92995–08100 | WASHER<br>RONDELLE | 7 | 7 | | | | |
| 15 | 97075–08025 | BOLT<br>BOULON | 1 | 1 | | | | |
| 16 | 92995–08100 | WASHER<br>RONDELLE | 1 | 1 | | | | |
| 17 | 90119–08M79 | BOLT, WITH WASHER<br>BOULON, AVEC RONDELLE | 2 | 2 | | | | |
| 18 | 97075–08035 | BOLT<br>BOULON | 2 | 2 | | | | |
| 19 | 92995–08100 | WASHER<br>RONDELLE | 2 | 2 | | | | |
| 20 | 688–45113–A0 | GASKET, UPPER CASING<br>JOINT, TUBE D'ARBRE | 1 | 1 | | | | |
| 21 | 93606–12019 | PIN, DOWEL<br>GOUPILLE | 2 | 2 | | | | |

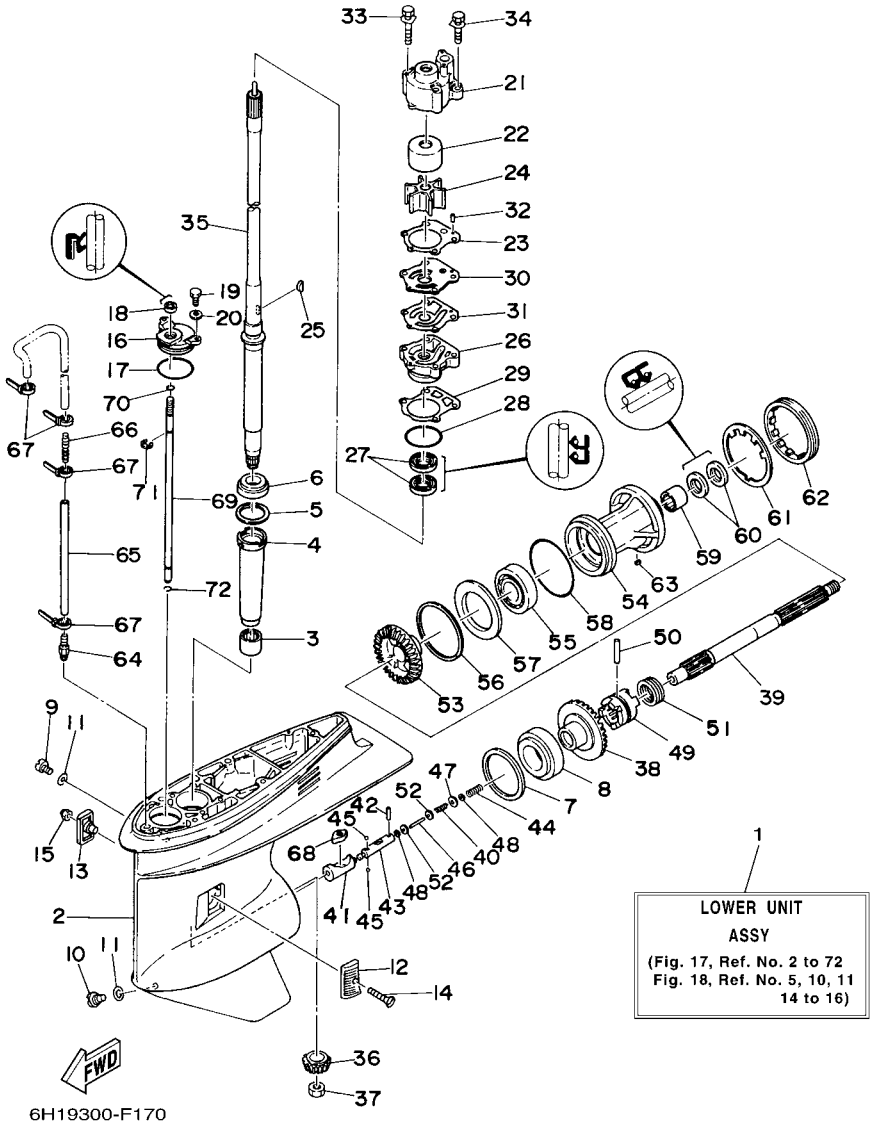


## FIG. 17 LOWER CASING & DRIVE 1 BOITIER D'HELICE TRANSMISSION1

| REF. NO. | PART NO. N° PIECES | DESCRIPTION DESCRIPTION | 67P5 | 6H19 | | | | REMARKS REMARQUES |
|---|---|---|---|---|---|---|---|---|
| 1 | 6H1–45300–15–4D | LOWER UNIT ASSY<br>UNITE INFERIEURE (ENS.) | 1 | 1 | | | | L(20.3")<br>L(20.3") |
| 2 | 6H1–45301–03–4D | CASING, LOWER<br>BEQUILLE | 1 | 1 | | | | |
| 3 | 93315–325V1 | BEARING<br>ROULEMENT | 1 | 1 | | | | |
| 4 | 688–45536–01 | SLEEVE, DRIVE SHAFT<br>MANCHON, ARBRE MOTEUR | 1 | 1 | | | | |
| 5 | 688–45587–01 | SHIM (T:0.10MM)<br>CALE (T:0.10MM) | 1 | 1 | | | | UR<br>UR |
| | 688–45587–10 | SHIM (T:0.12MM)<br>CALE (T:0.12MM) | 1 | 1 | | | | UR<br>UR |
| | 688–45587–20 | SHIM (T:0.15MM)<br>CALE (T:0.15MM) | 1 | 1 | | | | UR<br>UR |
| | 688–45587–30 | SHIM (T:0.18MM)<br>CALE (T:0.18MM) | 1 | 1 | | | | UR<br>UR |
| | 688–45587–40 | SHIM (T:0.30MM)<br>CALE (T:0.30MM) | 1 | 1 | | | | UR<br>UR |
| | 688–45587–50 | SHIM (T:0.40MM)<br>CALE (T:0.40MM) | 1 | 1 | | | | UR<br>UR |
| | 688–45587–60 | SHIM (T:0.50MM)<br>CALE (T:0.50MM) | 1 | 1 | | | | UR<br>UR |
| 6 | 93332–000U3 | BEARING<br>ROULEMENT | 1 | 1 | | | | |
| 7 | 688–45567–01 | SHIM (T:0.10MM)<br>CALE (T:0.10MM) | 1 | 1 | | | | UR<br>UR |
| | 688–45567–10 | SHIM (T:0.12MM)<br>CALE (T:0.12MM) | 1 | 1 | | | | UR<br>UR |
| | 688–45567–20 | SHIM (T:0.15MM)<br>CALE (T:0.15MM) | 1 | 1 | | | | UR<br>UR |
| | 688–45567–30 | SHIM (T:0.18MM)<br>CALE (T:0.18MM) | 1 | 1 | | | | UR<br>UR |
| | 688–45567–40 | SHIM (T:0.30MM)<br>CALE (T:0.30MM) | 1 | 1 | | | | UR<br>UR |
| | 688–45567–50 | SHIM (T:0.40MM)<br>CALE (T:0.40MM) | 1 | 1 | | | | UR<br>UR |
| | 688–45567–60 | SHIM (T:0.50MM)<br>CALE (T:0.50MM) | 1 | 1 | | | | UR<br>UR |
| 8 | 93332–000W7 | BEARING<br>ROULEMENT | 1 | 1 | | | | |
| 9 | 90340–08002 | PLUG, STRAIGHT SCREW<br>PLOT, FILETE DROIT | 1 | 1 | | | | |
| 10 | 688–45341–10 | PLUG, DRAIN<br>BOUCHON DE VIDANGE | 1 | 1 | | | | |
| 11 | 90430–08020 | GASKET<br>JOINT | 2 | 2 | | | | |
| 12 | 6H1–45214–00 | COVER, WATER INLET 1<br>GRILLE, ENTREE D'EAU 1 | 1 | 1 | | | | |
| 13 | 6H1–45215–00 | COVER, WATER INLET 2<br>GRILLE, ENTREE D'EAU 2 | 1 | 1 | | | | |
| 14 | 90151–05M00 | SCREW, COUNTERSUNK<br>VIS, TETE NOYEE | 1 | 1 | | | | |
| 15 | 90185–05002 | NUT, SELF-LOCKING<br>ECROU,AUTO-BLOQUANT | 1 | 1 | | | | |

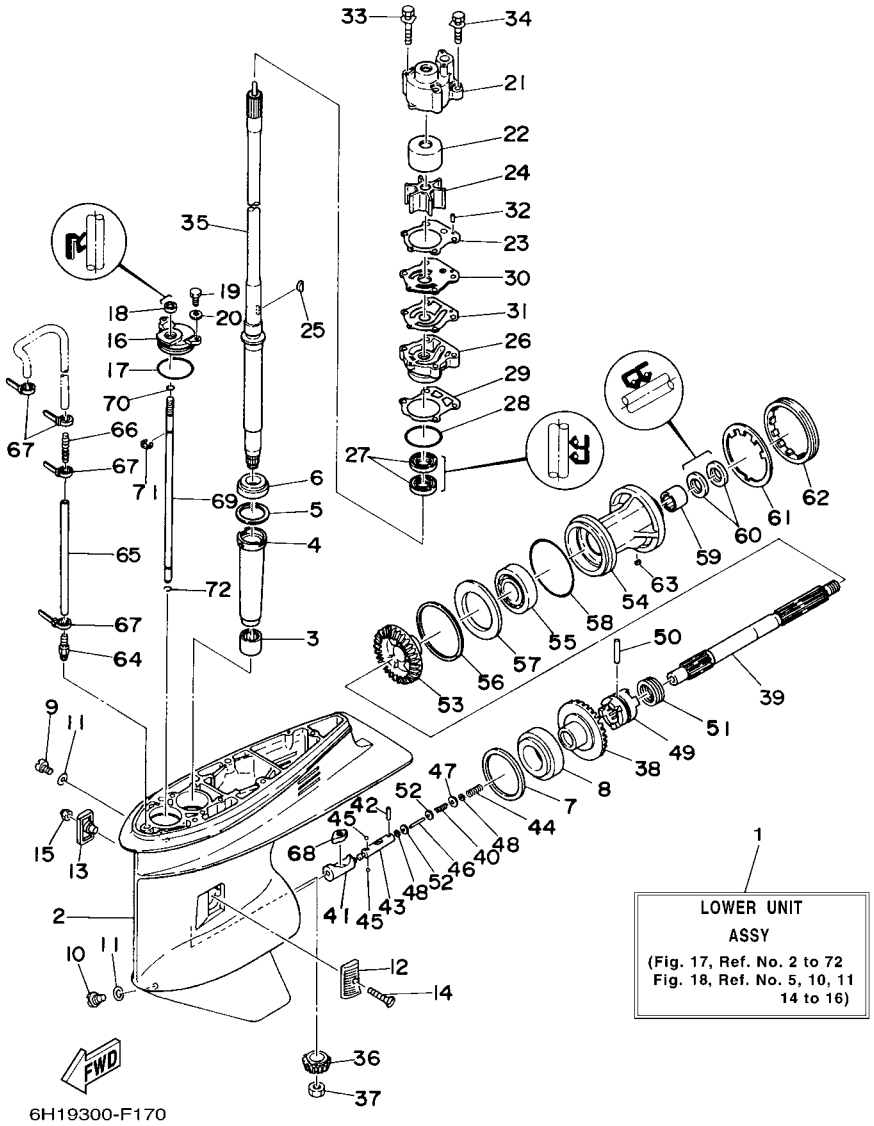


## FIG. 17 LOWER CASING & DRIVE 1 BOITIER D'HELICE TRANSMISSION1

| REF. NO. | PART NO. N° PIECES | DESCRIPTION DESCRIPTION | 67P5 | 6H19 | | | | REMARKS REMARQUES |
|---|---|---|---|---|---|---|---|---|
| 16 | 688–45321–00 | PLATE<br>PLAQUETTE | 1 | 1 | | | | |
| 17 | 93210–49046 | O-RING<br>JOINT TORIQUE | 1 | 1 | | | | |
| 18 | 93106–09014 | OIL SEAL<br>JOINT SPY | 1 | 1 | | | | |
| 19 | 97095–06016 | BOLT<br>BOULON | 2 | 2 | | | | |
| 20 | 92995–06600 | WASHER<br>RONDELLE | 2 | 2 | | | | |
| 21 | 688–44311–01 | HOUSING, WATER PUMP<br>CORPS, POMPE A EAU | 1 | 1 | | | | |
| 22 | 688–44322–00 | INSERT, CARTRIDGE<br>CUVETTE | 1 | 1 | | | | |
| 23 | 688–44315–A0 | GASKET, WATER PUMP<br>JOINT, POMPE A EAU | 1 | 1 | | | | |
| 24 | 688–44352–03 | IMPELLER<br>TURBINE | 1 | 1 | | | | |
| 25 | 90280–04M04 | KEY, WOODRUFF<br>CLAVETTE, DEMI-LUNE | 1 | 1 | | | | |
| 26 | 688–44341–01–94 | HOUSING, WATER PUMP<br>CORPS, POMPE A EAU | 1 | 1 | | | | |
| 27 | 93101–25M03 | OIL SEAL<br>JOINT SPY | 2 | 2 | | | | |
| 28 | 93210–46044 | O-RING<br>JOINT TORIQUE | 1 | 1 | | | | |
| 29 | 688–44316–A0 | GASKET, WATER PUMP<br>JOINT, POMPE A EAU | 1 | 1 | | | | |
| 30 | 688–44323–00 | OUTER PLATE, CARTRIDGE<br>PLAQUE EXTERIEURE | 1 | 1 | | | | |
| 31 | 688–44324–A0 | GASKET, CARTRIDGE<br>JOINT | 1 | 1 | | | | |
| 32 | 93604–10M03 | PIN, DOWEL<br>CLAVETTE | 2 | 2 | | | | |
| 33 | 90119–08M16 | BOLT, WITH WASHER<br>BOULON, AVEC RONDELLE | 2 | 2 | | | | |
| 34 | 90119–08M13 | BOLT, WITH WASHER<br>BOULON, AVEC RONDELLE | 2 | 2 | | | | |
| 35 | 6H1–45501–11 | DRIVE SHAFT COMP.<br>ARBRE MOTEUR COMP. | 1 | 1 | | | | L(20.3")<br>L(20.3") |
| 36 | 688–45551–01 | PINION (13T)<br>PIGNON D'ATTAQUE (13D) | 1 | 1 | | | | |
| 37 | 90170–16M01 | NUT<br>ECROU | 1 | 1 | | | | |
| 38 | 688–45560–00 | GEAR 1 (26T)<br>PIGNON 1 (26T) | 1 | 1 | | | | |
| 39 | 6H1–45611–01 | SHAFT, PROPELLER<br>ARBRE, HELICE | 1 | 1 | | | | |
| 40 | 90501–12M48 | SPRING, COMPRESSION<br>RESSORT, COMPRESSION | 1 | 1 | | | | |
| 41 | 6H1–45641–01 | SHIFTER<br>EMBRAYAGE | 1 | 1 | | | | |
| 42 | 93603–12M11 | PIN, DOWEL<br>CLAVETTE | 1 | 1 | | | | |

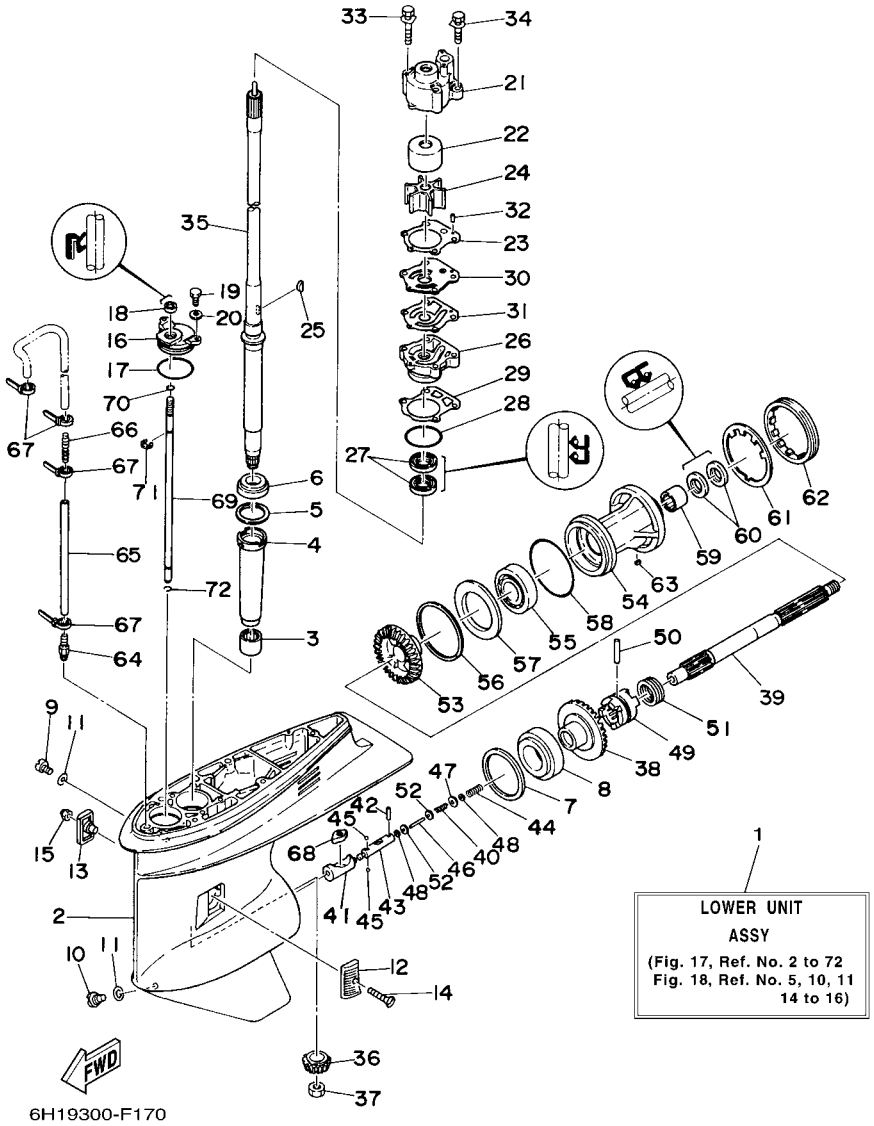


## FIG. 17 LOWER CASING & DRIVE 1 BOITIER D'HELICE TRANSMISSION1

| REF. NO. | PART NO. N° PIECES | DESCRIPTION DESCRIPTION | 67P5 | 6H19 | | | | REMARKS REMARQUES |
|---|---|---|---|---|---|---|---|---|
| 43 | 6H1–45634–02 | SLIDE, SHIFT<br>CONTRE-POUSSOIR | 1 | 1 | | | | |
| 44 | 90501–16M65 | SPRING, COMPRESSION<br>RESSORT, COMPRESSION | 1 | 1 | | | | |
| 45 | 93503–16003 | BALL<br>BILLES | 2 | 2 | | | | |
| 46 | 6H1–45668–00 | SHAFT, FREE<br>AXE | 1 | 1 | | | | |
| 47 | 90201–03313 | WASHER, PLATE<br>RONDELLE, PLATE | 1 | 1 | | | | |
| 48 | 90183–02M03 | NUT, SPRING<br>ECROU, RESSORT | 2 | 2 | | | | |
| 49 | 6H1–45631–01 | CLUTCH, DOG<br>CRABOT | 1 | 1 | | | | |
| 50 | 90250–07M02 | PIN, STRAIGHT<br>GOUPILLE, DROITE | 1 | 1 | | | | |
| 51 | 688–45633–00 | RING, CROSS PIN<br>JONC, GOUPILLE CRABOT | 1 | 1 | | | | |
| 52 | 6H1–45635–00 | PLUNGER, SHIFT<br>POUSSOIR D'EMBRAYAGE | 2 | 2 | | | | |
| 53 | 6H1–45571–00 | GEAR 2 (26T)<br>PIGNON 2 (26T) | 1 | 1 | | | | |
| 54 | 688–45331–00–94 | HOUSING, BEARING<br>FLASQUE, ROULEMENT | 1 | 1 | | | | |
| 55 | 93306–207U0 | BEARING<br>ROULEMENT | 1 | 1 | | | | |
| 56 | 688–45577–01 | SHIM (T:0.10MM)<br>CALE (T:0.10MM) | 1 | 1 | | | | UR<br>UR |
| | 688–45577–10 | SHIM (T:0.12MM)<br>CALE (T:0.12MM) | 1 | 1 | | | | UR<br>UR |
| | 688–45577–20 | SHIM (T:0.15MM)<br>CALE (T:0.15MM) | 1 | 1 | | | | UR<br>UR |
| | 688–45577–30 | SHIM (T:0.18MM)<br>CALE (T:0.18MM) | 1 | 1 | | | | UR<br>UR |
| | 688–45577–40 | SHIM (T:0.30MM)<br>CALE (T:0.30MM) | 1 | 1 | | | | UR<br>UR |
| | 688–45577–50 | SHIM (T:0.40MM)<br>CALE (T:0.40MM) | 1 | 1 | | | | UR<br>UR |
| | 688–45577–60 | SHIM (T:0.50MM)<br>CALE (T:0.50MM) | 1 | 1 | | | | UR<br>UR |
| 57 | 688–45576–00 | WASHER, THRUST<br>RONDELLE DE CALAGE | 1 | 1 | | | | |
| 58 | 93210–85M97 | O-RING<br>JOINT TORIQUE | 1 | 1 | | | | |
| 59 | 93317–325U0 | BEARING<br>ROULEMENT | 1 | 1 | | | | |
| 60 | 93101–25M03 | OIL SEAL<br>JOINT SPY | 2 | 2 | | | | |
| 61 | 688–45383–02 | WASHER, CLAW<br>FREIN D'ECROU | 1 | 1 | | | | |
| 62 | 688–45384–00 | NUT<br>ECROU | 1 | 1 | | | | |
| 63 | 90282–04010 | KEY, STRAIGHT<br>CLAVETTE, DROITE | 1 | 1 | | | | |

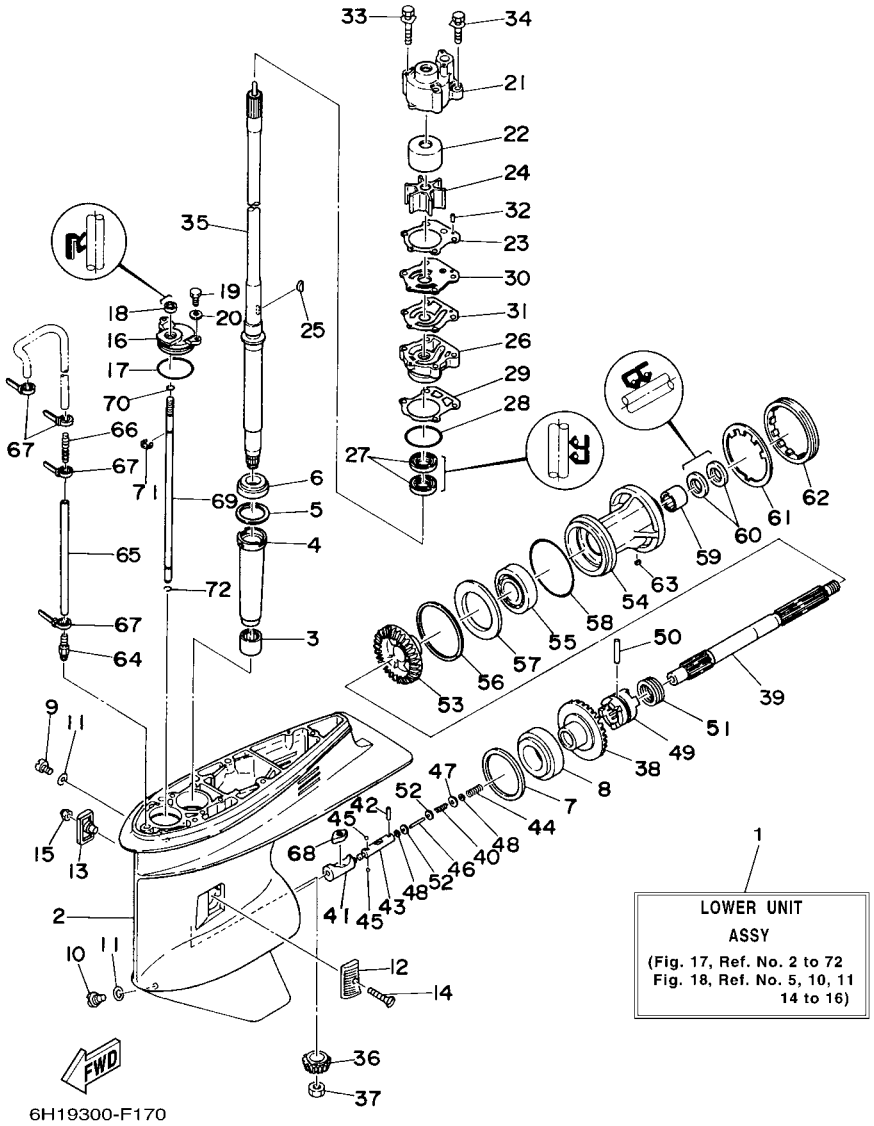


## FIG. 17 LOWER CASING & DRIVE 1 BOITIER D'HELICE TRANSMISSION1

| REF. NO. | PART NO. N° PIECES | DESCRIPTION DESCRIPTION | 67P5 | 6H19 | | | | REMARKS REMARQUES |
|---|---|---|---|---|---|---|---|---|
| 64 | 6E5–45378–00 | NIPPLE, HOSE<br>RACCORD, TUYAU | 1 | 1 | | | | |
| 65 | 90445–07ME9 | HOSE (L120)<br>DURITE (L120) | 1 | 1 | | | | L(20.3")<br>L(20.3") |
| 66 | 6E5–83558–10 | END, NIPPLE<br>RACCORD DE NIPPLE | 1 | 1 | | | | |
| 67 | 90465–11M10 | CLAMP<br>BRIDE | 4 | 4 | | | | |
| 68 | 6H1–44151–00 | CAM, SHIFT<br>CAME, INVERSION | 1 | 1 | | | | |
| 69 | 6H1–44144–00 | ROD, SHIFT<br>TIGE D'EMBRAYAGE | 1 | 1 | | | | |
| 70 | 93210–07003 | O-RING<br>JOINT TORIQUE | 1 | 1 | | | | |
| 71 | 99001–08600 | CIRCLIP<br>CIRCLIP | 1 | 1 | | | | |
| 72 | 93450–07M00 | CIRCLIP<br>CIRCLIP, TYPE S | 1 | 1 | | | | |

## FIG. 18 LOWER CASING & DRIVE 2 BOITIER D'HELICE TRANSMISSION2

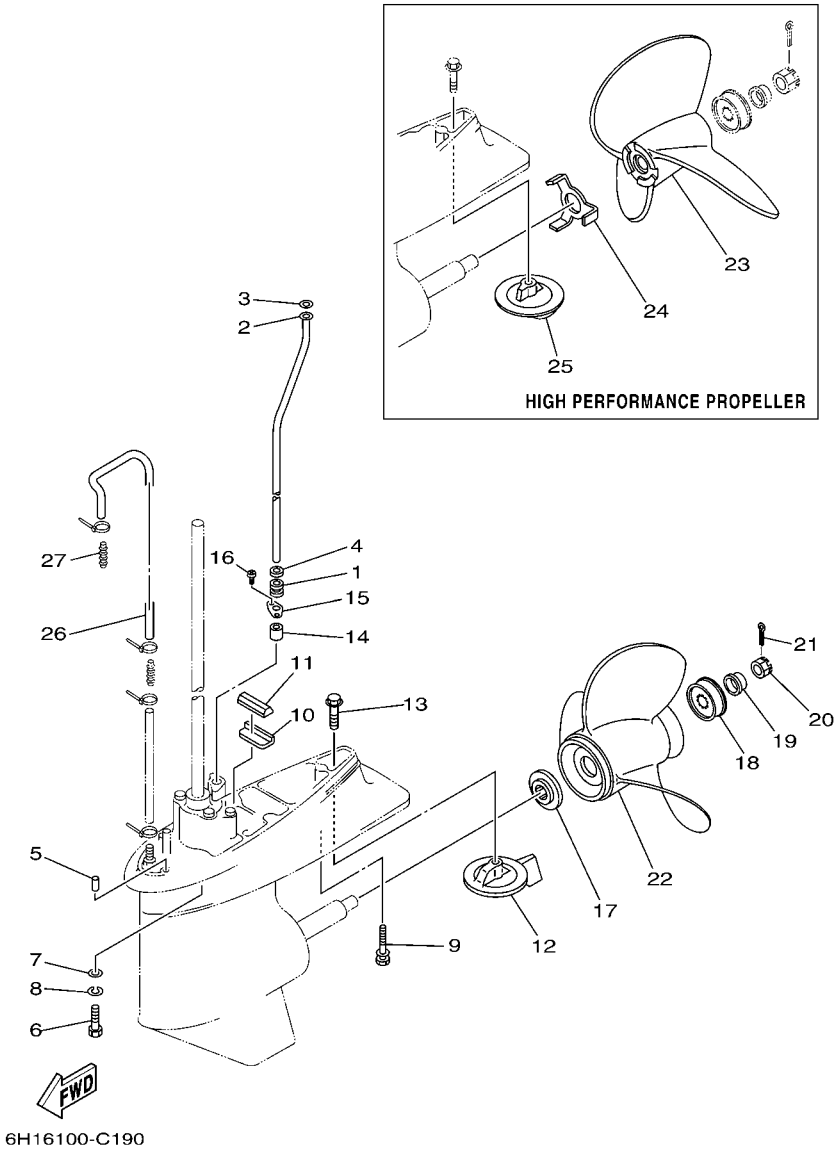


| REF. NO. | PART NO. N° PIECES | DESCRIPTION DESCRIPTION | 67P5 | 6H19 | | | | REMARKS REMARQUES |
|---|---|---|---|---|---|---|---|---|
| 1 | 663–44367–00 | DAMPER, WATER SEAL<br>JOINT TUBE D'EAU | 1 | 1 | | | | |
| 2 | 688–44361–10 | TUBE, WATER<br>TUBE D'EAU | 1 | 1 | | | | L(20.3")<br>L(20.3") |
| 3 | 90202–12060 | WASHER, PLATE<br>RONDELLE, PLATE | 1 | 1 | | | | |
| 4 | 90430–12072 | GASKET<br>JOINT | 1 | 1 | | | | |
| 5 | 93606–12019 | PIN, DOWEL<br>GOUPILLE | 2 | 2 | | | | L(20.3")<br>L(20.3") |
| 6 | 97075–10040 | BOLT<br>BOULON | 4 | 4 | | | | L(20.3")<br>L(20.3") |
| 7 | 92990–10600 | WASHER, PLATE<br>RONDELLE, PLATE | 4 | 4 | | | | |
| 8 | 92990–10100 | WASHER, SPRING<br>RONDELLE, GROWER | 4 | 4 | | | | |
| 9 | 90119–08M84 | BOLT, WITH WASHER<br>BOULON, AVEC RONDELLE | 1 | 1 | | | | L(20.3")<br>L(20.3") |
| 10 | 663–45376–00–94 | GUIDE, SEAL DAMPER<br>BUTEE, JOINT CAOUTCHOUC | 1 | 1 | | | | |
| 11 | 688–45375–00 | DAMPER, SEAL<br>BOURRELET, CAOUTCHOUC | 1 | 1 | | | | |
| 12 | 688–45371–02 | TAB-TRIM<br>ANODE DERIVE | 1 | 1 | | | | |
| 13 | 90105–10M67 | BOLT, FLANGE<br>BOULON | 1 | 1 | | | | |
| 14 | 663–44366–00 | DAMPER, WATER SEAL<br>JOINT, TUBE D'EAU | 1 | 1 | | | | |
| 15 | 90480–19M06 | GROMMET<br>PASSE-FIL | 1 | 1 | | | | |
| 16 | 90160–04006 | SCREW, ROUND TAPPING<br>VIS, TETE RONDE FRAISEE | 2 | 2 | | | | |
| 17 | 688–45987–01 | SPACER<br>ENTRETOISE | 1 | 1 | | | | |
| 18 | 67F–45997–00 | SPACER<br>ENTRETOISE | 1 | 1 | | | | |
| 19 | 90389–25M00 | BUSH<br>DOUILLE | 1 | 1 | | | | |
| 20 | 90171–16011 | NUT, CASTLE<br>ECROU, CRENELE | 1 | 1 | | | | |
| 21 | 91490–40025 | PIN, COTTER<br>GOUPILLE | 1 | 1 | | | | |
| 22 | 6E5–45941–00–EL | PROPELLER (3X13"X19"-K)<br>HELICE (3X13"X19"-K) | 1 | 1 | | | | UR<br>UR |
| | 6E5–45943–00–EL | PROPELLER (3X12-5/8"X21"-K)<br>HELICE (3X12-5/8"X21"-K) | 1 | 1 | | | | UR<br>UR |
| | 6E5–45945–01–EL | PROPELLER (3X13-1/4"X17"-K)<br>HELICE (3X13-1/4"X17"-K) | 1 | 1 | | | | UR<br>UR |
| | 6E5–45947–00–EL | PROPELLER (3X13-1/2"X15"-K)<br>HELICE (3X13-1/2"X15"-K) | 1 | 1 | | | | UR<br>UR |
| | 6E5–45949–00–EL | PROPELLER (3X13-5/8"X13"-K)<br>HELICE (3X13-5/8"X13"-K) | 1 | 1 | | | | UR<br>UR |
| | 6E5–45952–00–EL | PROPELLER (3X13"X23"-K)<br>HELICE (3X13"X23"-K) | 1 | 1 | | | | UR<br>UR |

## FIG. 18 LOWER CASING & DRIVE 2 BOITIER D'HELICE TRANSMISSION2

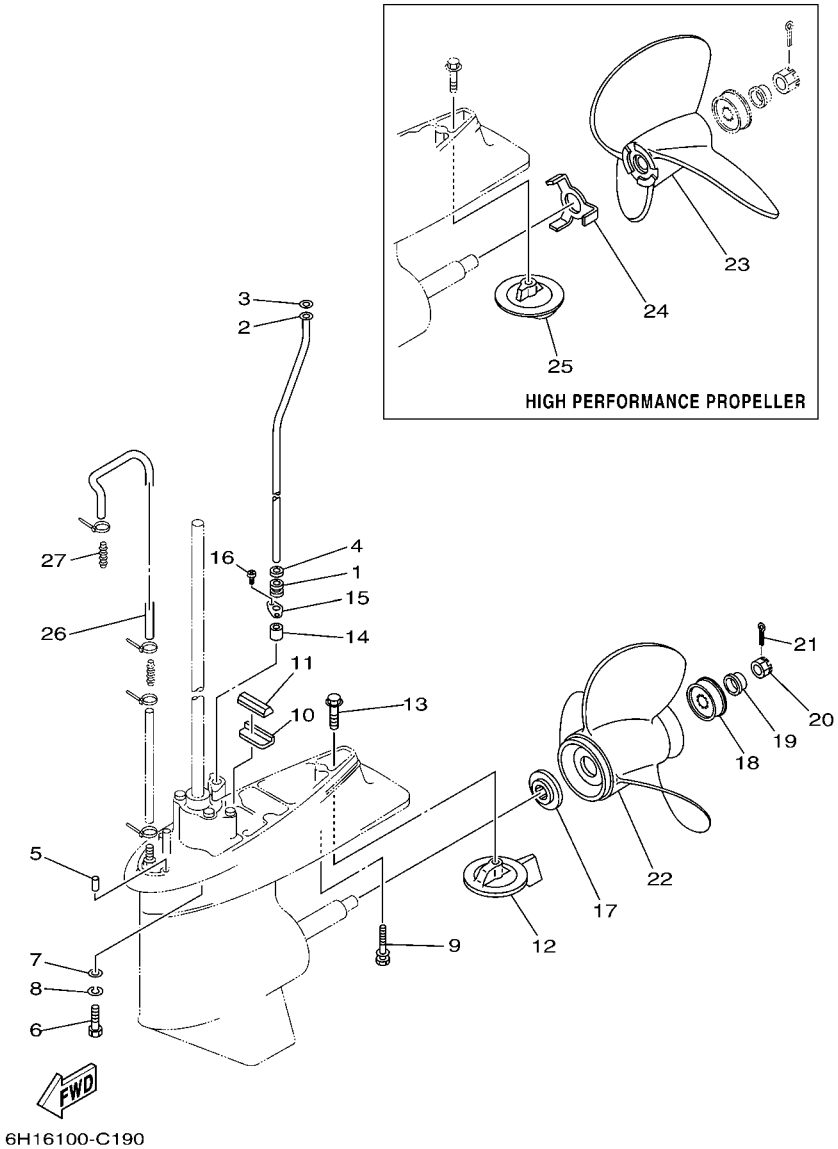


| REF. NO. | PART NO. N° PIECES | DESCRIPTION DESCRIPTION | 67P5 | 6H19 | | | | REMARKS REMARQUES |
|---|---|---|---|---|---|---|---|---|
| 22 | 6E5–45954–00–EL | PROPELLER (3X14"X11"-K)<br>HELICE (3X14"X11"-K) | 1 | 1 | | | | UR<br>UR |
| | 6E5–45956–00–EL | PROPELLER (3X13"X25"-K)<br>HELICE (3X13"X25"-K) | 1 | 1 | | | | UR<br>UR |
| | 688–45930–02–98 | PROPELLER (3X13"X17"-K)<br>HELICE (3X13"X17"-K) | 1 | 1 | | | | UR<br>UR |
| | 688–45970–03–98 | PROPELLER (3X13"X19"-K)<br>HELICE (3X13"X19"-K) | 1 | 1 | | | | UR<br>UR |
| | 688–45972–02–98 | PROPELLER (3X13"X21"-K)<br>HELICE (3X13"X21"-K) | 1 | 1 | | | | UR<br>UR |
| | 688–45974–02–98 | PROPELLER (3X13"X23"-K)<br>HELICE (3X13"X23"-K) | 1 | 1 | | | | UR<br>UR |
| | 688–45976–01–98 | PROPELLER (3X13"X25"-K)<br>HELICE (3X13"X25"-K) | 1 | 1 | | | | UR<br>UR |
| | 688–45932–60–98 | PROPELLER (3X13-1/2"X14"-K)<br>HELICE (3X13-1/2"X14"-K) | 1 | 1 | | | | UR<br>UR |
| | 688–45978–60–98 | PROPELLER (3X13-1/2"X16"-K)<br>HELICE (3X13-1/2"X16"-K) | 1 | 1 | | | | UR<br>UR |
| 23 | 6E5–45970–10 | PROPELLER (3X14"X20"-P)<br>HELICE (3X14"X20"-P) | 1 | 1 | | | | UR<br>UR |
| | 6E5–45972–10 | PROPELLER (3X14"X24"-P)<br>HELICE (3X14"X24"-P) | 1 | 1 | | | | UR<br>UR |
| | 6E5–45974–10 | PROPELLER (3X14"X28"-P)<br>HELICE (3X14"X28"-P) | 1 | 1 | | | | UR<br>UR |
| | 6E5–45976–10 | PROPELLER (3X14"X22"-P)<br>HELICE (3X14"X22"-P) | 1 | 1 | | | | UR<br>UR |
| | 6E5–45978–10 | PROPELLER (3X14"X26"-P)<br>HELICE (3X14"X26"-P) | 1 | 1 | | | | UR<br>UR |
| 24 | 6E5–45994–10 | PLATE, TOOTH<br>PLAQUETTE | 1 | 1 | | | | |
| 25 | 6E5–45371–10 | TAB-TRIM<br>ANODE DERIVE | 1 | 1 | | | | |
| 26 | 90445–07MF1 | HOSE (L570)<br>DURITE (L570) | 1 | 1 | | | | |
| 27 | 6E5–83558–00 | END, NIPPLE<br>RACCORD DE NIPPLE | 1 | 1 | | | | |

## FIG. 19 FUEL TANK RESERVOIR A CARBURANT

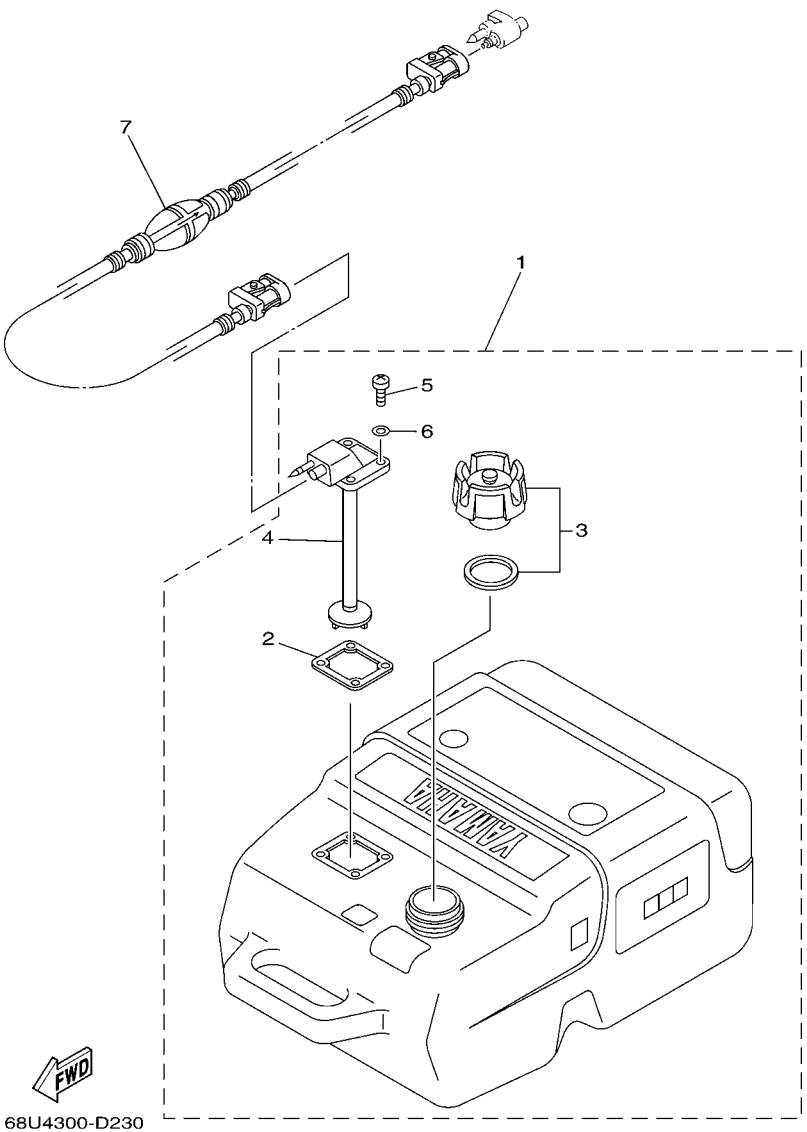


| REF. NO. | PART NO. N° PIECES | DESCRIPTION DESCRIPTION | 67P5 | 6H19 | | | | REMARKS REMARQUES |
|---|---|---|---|---|---|---|---|---|
| 1 | 6YK–24201–02 | FUEL TANK ASSY (25L)<br>RESERVOIR A ESSENCE (ENS.) 25L | 1 | 1 | | | | AP<br>AP |
| 2 | 6YL–24268–01 | .GASKET, FUEL METER<br>.JOINT, JAUGE A CARBURANT | 1 | 1 | | | | |
| 3 | 6YK–24610–01 | .CAP ASSY<br>.BOUCHON | 1 | 1 | | | | |
| 4 | 6YK–24260–01 | .FUEL METER ASSY<br>.INDICATEUR DE CARBURANT | 1 | 1 | | | | |
| 5 | 90157–05M16 | .SCREW, PAN HEAD<br>.VIS, TETE TRONCONIQUE | 4 | 4 | | | | |
| 6 | 6YL–24329–00 | .SEAL<br>.JOINT | 4 | 4 | | | | |
| 7 | 6YL–24306–54 | FUEL PIPE COMP. 1<br>DURITE A ESSENCE 1 | 1 | 1 | | | | AP<br>AP |

## FIG. 20 STEERING GUIDE FIXATION DE DIRECTION

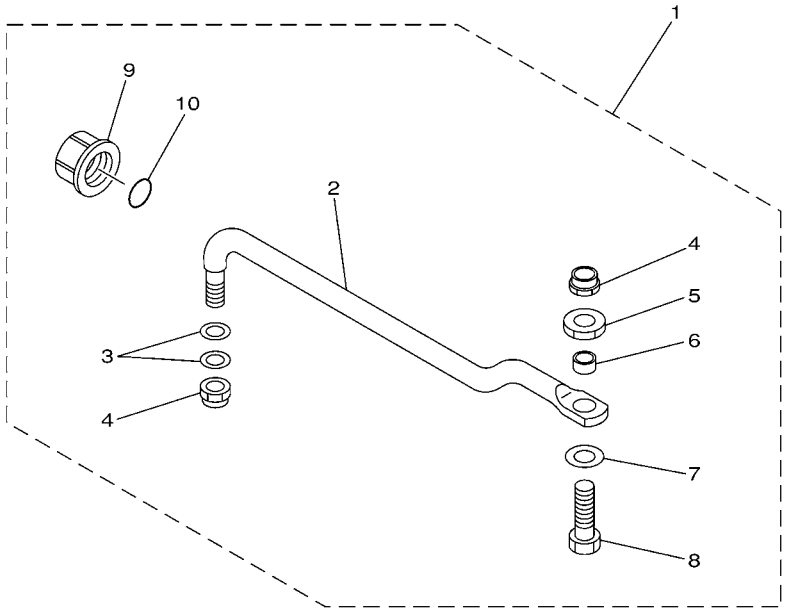


6880700-9190

| REF. NO. | PART NO. N° PIECES | DESCRIPTION DESCRIPTION | 67P5 | 6H19 | | | | REMARKS REMARQUES |
|---|---|---|---|---|---|---|---|---|
| 1 | 688–61350–10 | STEERING GUIDE ATTACHMENT KIT<br>FIXATIONS DE DIRECTION | 1 | 1 | | | | AP<br>AP |
| 2 | 688–61351–10 | .ROD, STEERING LINK<br>.RENVOI DE DIRECTION | 1 | 1 | | | | |
| 3 | 90201–10M20 | .WASHER, PLATE<br>.RONDELLE, PLATE | 2 | 2 | | | | |
| 4 | 90185–09M01 | .NUT, SELF-LOCKING<br>.ECROU,AUTO-BLOQUANT | 2 | 2 | | | | |
| 5 | 90170–09M03 | .NUT<br>.ECROU | 1 | 1 | | | | |
| 6 | 90387–10M42 | .COLLAR<br>.COLLERETTE | 1 | 1 | | | | |
| 7 | 90201–10M63 | .WASHER, PLATE<br>.RONDELLE, PLATE | 1 | 1 | | | | |
| 8 | 6E5–61355–00 | .BOLT<br>.BOULON | 1 | 1 | | | | |
| 9 | 6E5–43145–01 | .CAP, CLAMP BRACKET<br>.CAPUCHON, PRESSE | 1 | 1 | | | | |
| 10 | 93210–16275 | .O-RING<br>.JOINT TORIQUE | 1 | 1 | | | | |

## FIG. 21 REMOTE CONTROL BOX BOITIER DE COMMANDE A DISTANCE

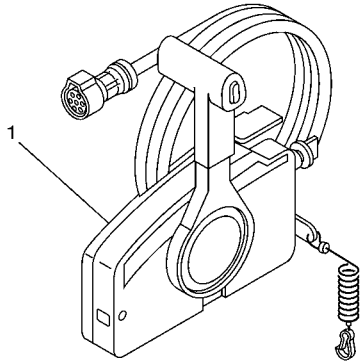


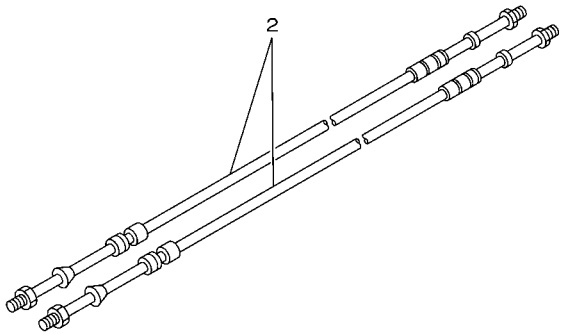

67M0100-8280

| REF. NO. | PART NO. N° PIECES | DESCRIPTION DESCRIPTION | 67P5 | 6H19 | | | | REMARKS REMARQUES |
|---|---|---|---|---|---|---|---|---|
| 1 | 703–48207–17 | REMOTE CONTROL ASSY (10P)<br>BOITIER DE COMMANDE A DISTANCE | 1 | 1 | | | | AP WITH PT/T SW.<br>AP WITH PT/T SW. |
| 2 | 701–48320–00 | CABLE, REMOTE CONTROL L=12F<br>CABLE, COMMANDE A DISTANCE:12F | 2 | 2 | | | | UR<br>UR |
| | 701–48320–20 | CABLE, REMOTE CONTROL L=13F<br>CABLE, COMMANDE A DISTANCE:13F | 2 | 2 | | | | UR<br>UR |
| | 701–48320–30 | CABLE, REMOTE CONTROL L=14F<br>CABLE, COMMANDE A DISTANCE:14F | 2 | 2 | | | | UR<br>UR |
| | 701–48320–50 | CABLE, REMOTE CONTROL L=15F<br>CABLE, COMMANDE A DISTANCE:15F | 2 | 2 | | | | UR<br>UR |
| | 701–48320–60 | CABLE, REMOTE CONTROL L=16F<br>CABLE, COMMANDE A DISTANCE:16F | 2 | 2 | | | | UR<br>UR |
| | 701–48320–80 | CABLE, REMOTE CONTROL L=17F<br>CABLE, COMMANDE A DISTANCE:17F | 2 | 2 | | | | UR<br>UR |

## FIG. 22 REMOTE CONTROL ASSY BOITIER DE COMMANDE A DISTANCE

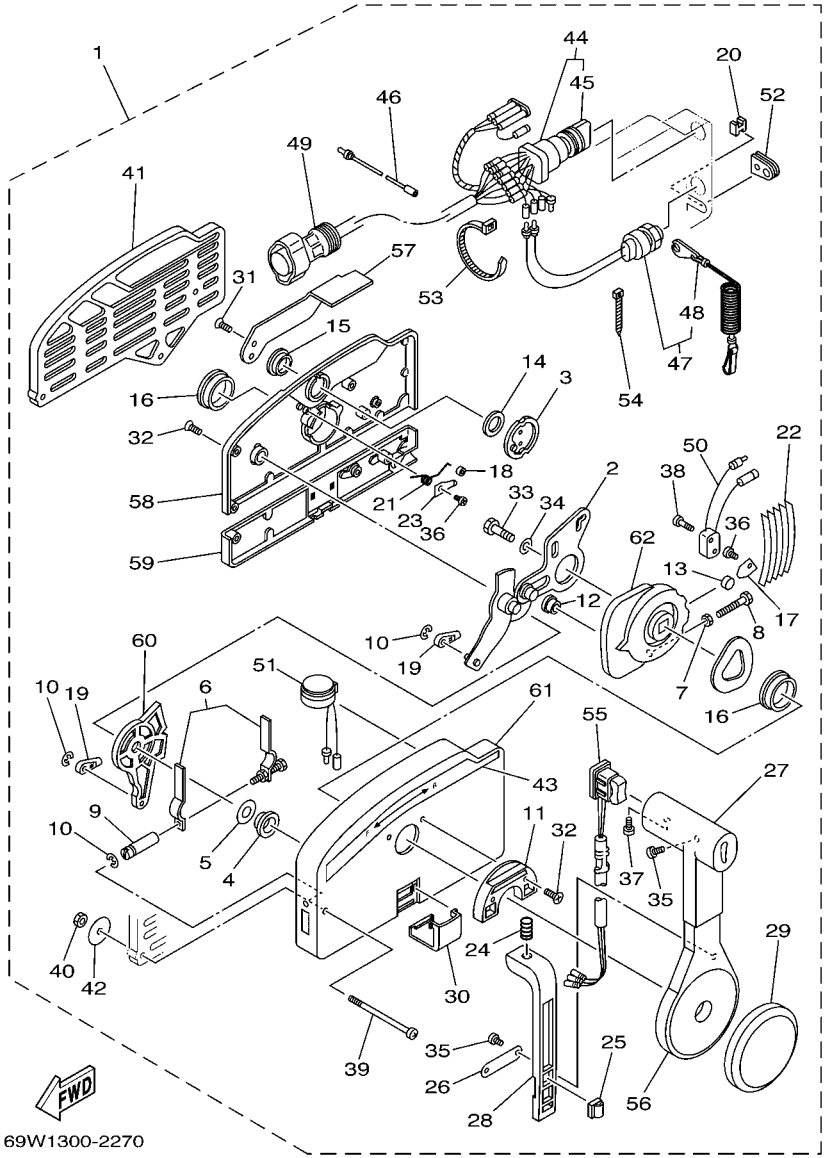


| REF. NO. | PART NO. N° PIECES | DESCRIPTION DESCRIPTION | 67P5 | 6H19 | | | | REMARKS REMARQUES |
|---|---|---|---|---|---|---|---|---|
| 1 | 703–48207–17 | REMOTE CONTROL ASSY (10P)<br>BOITIER DE COMMANDE A DISTANCE | 1 | 1 | | | | AP WITH PT/T SW.<br>AP WITH PT/T SW. |
| 2 | 703–48261–01 | .ARM, THROTTLE<br>.BRAS, ACCELERATION | 1 | 1 | | | | |
| 3 | 703–48153–00 | .SHAFT, FREE ACCEL.<br>.AXE | 1 | 1 | | | | |
| 4 | 703–48235–00 | .BUSHING<br>.COUSSINET | 1 | 1 | | | | |
| 5 | 703–48268–00 | .SPACER<br>.ENTRETOISE | 1 | 1 | | | | |
| 6 | 703–48264–00 | .FRICTION, THROTTLE<br>.FRICTION, ACCELERATION | 1 | 1 | | | | |
| 7 | 95380–05600 | .NUT<br>.ECROU | 1 | 1 | | | | |
| 8 | 97380–05025 | .BOLT<br>.BOULON, HEXAGONAL | 1 | 1 | | | | |
| 9 | 703–48265–00 | .SHAFT, FRICTION<br>.AXE, COPILOTE | 1 | 1 | | | | |
| 10 | 93430–06024 | .CIRCLIP<br>.CLIPS | 3 | 3 | | | | |
| 11 | 703–48245–00 | .PLATE, LOCK<br>.PLAQUE, VERROU | 1 | 1 | | | | |
| 12 | 703–48252–00 | .ROLLER, CAM<br>.POULIE | 1 | 1 | | | | |
| 13 | 701–48248–00 | .ROLLER, FREE ACCEL.<br>.POULIE | 1 | 1 | | | | |
| 14 | 703–48198–00 | .WASHER, WAVE<br>.RONDELLE, ELASTIQUE ONDULEE | 1 | 1 | | | | |
| 15 | 703–48243–00 | .BUSHING<br>.COUSSINET | 1 | 1 | | | | |
| 16 | 703–48236–00 | .BUSHING 1<br>.POULIE | 2 | 2 | | | | |
| 17 | 703–48189–00 | .RETAINER<br>.FLASQUE | 1 | 1 | | | | |
| 18 | 703–48234–00 | .ROLLER, DETENT<br>.POULIE | 1 | 1 | | | | |
| 19 | 703–48345–01 | .CABLE END, REMOTE CONTROL 2<br>.CHAPE CABLE | 2 | 2 | | | | |
| 20 | 703–48358–00 | .ANCHOR, CABLE<br>.COLLIER | 1 | 1 | | | | |
| 21 | 703–48244–00 | .SPRING, FREE ACCEL.<br>.RESSORT | 1 | 1 | | | | |
| 22 | 703–48238–00 | .SPRING, DETENT<br>.RESSORT | 5 | 5 | | | | |
| 23 | 703–48246–00 | .SPACER<br>.ENTRETOISE | 1 | 1 | | | | |
| 24 | 703–48227–00 | .SPRING, NEUTRAL LOCK<br>.RESSORT | 1 | 1 | | | | |
| 25 | 703–82594–00 | .CLAMP<br>.BRIDE | 1 | 1 | | | | WITH PT/T SW.<br>WITH PT/T SW. |
| 26 | 703–48226–00 | .PLATE, STOPPER<br>.PLAQUETTE | 1 | 1 | | | | |
| 27 | 703–48222–00 | .GRIP, CONTROL LEVER<br>.POIGNEE, COMMANDE LEVIER | 1 | 1 | | | | SINGLE<br>SINGLE |

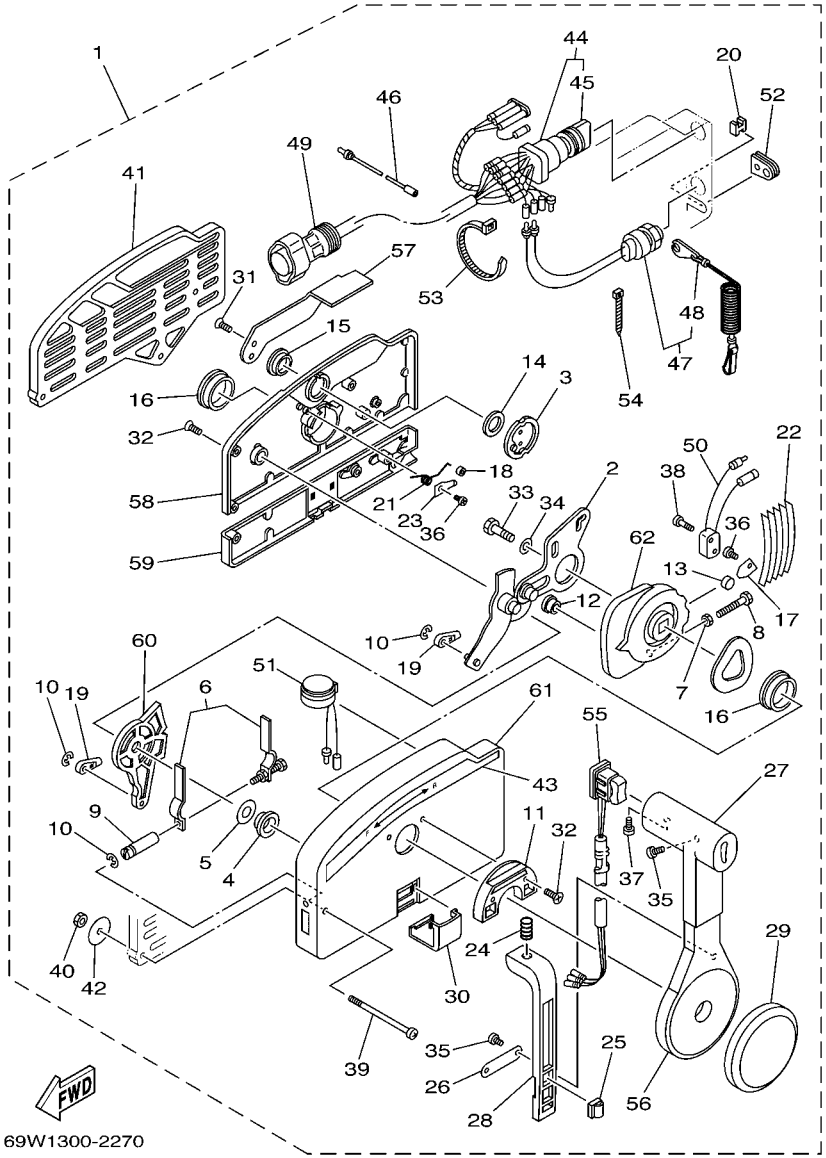

69W1300-2270

## FIG. 22 REMOTE CONTROL ASSY BOITIER DE COMMANDE A DISTANCE

| REF. NO. | PART NO. N° PIECES | DESCRIPTION DESCRIPTION | 67P5 | 6H19 | | | | REMARKS REMARQUES |
|---|---|---|---|---|---|---|---|---|
| 28 | 703–48223–00 | .LOCK, NEUTRAL<br>.VERROU, NEUTRAL | 1 | 1 | | | | |
| 29 | 703–48225–00 | .COVER<br>.COUVERCLE | 1 | 1 | | | | |
| 30 | 703–48219–00 | .COVER, LEAD<br>.COUVERCLE | 1 | 1 | | | | |
| 31 | 703–48281–00 | .SCREW<br>.VIS | 2 | 2 | | | | |
| 32 | 703–48282–00 | .SCREW<br>.VIS | 7 | 7 | | | | |
| 33 | 97380–08030 | .BOLT<br>.BOULON, HEXAGONAL | 1 | 1 | | | | |
| 34 | 92990–08600 | .WASHER, PLATE<br>.RONDELLE, PLATE | 1 | 1 | | | | |
| 35 | 98580–04010 | .SCREW, PAN HEAD<br>.VIS | 3 | 3 | | | | |
| 36 | 98580–04006 | .SCREW, PAN HEAD<br>.VIS | 2 | 2 | | | | |
| 37 | 98580–05010 | .SCREW, PAN HEAD<br>.VIS | 1 | 1 | | | | |
| 38 | 98580–03015 | .SCREW, PAN HEAD<br>.VIS | 2 | 2 | | | | |
| 39 | 703–48291–10 | .SCREW (M6)<br>.VIS (M6) | 3 | 3 | | | | |
| 40 | 95380–06600 | .NUT, HEXAGON<br>.ECROU | 3 | 3 | | | | |
| 41 | 703–48293–10 | .SPACER, REMOTE CONTROL<br>.ENTRETOISE | 1 | 1 | | | | SINGLE<br>SINGLE |
| 42 | 701–48287–00 | .WASHER<br>.RONDELLE | 3 | 3 | | | | |
| 43 | 703–48215–00 | .GRAPHIC<br>.ADHESIF | 1 | 1 | | | | |
| 44 | 703–82510–43 | .MAIN SWITCH ASSY<br>.CONTACTEUR A CLEF COMPLET | 1 | 1 | | | | |
| 45 | 703–82577–00 | ..CAP, KEY<br>..CABOCHON | 1 | 1 | | | | |
| 46 | 703–82531–00 | .WIRE, LEAD (L70)<br>.FIL (L70) | 1 | 1 | | | | |
| 47 | 688–82575–01 | .ENGINE STOP SWITCH ASSY<br>.COUPE CIRCUIT CPLT | 1 | 1 | | | | |
| 48 | 682–82556–00 | ..LANYARD, STOP SWITCH<br>..PLAQUETTE | 1 | 1 | | | | |
| 49 | 688–8258A–20 | .EXTENSION, WIRE HARNESS (4.9M<br>.EXTENSION, FAISCEAU DE FILS ( | 1 | 1 | | | | (10P)<br>(10P) |
| 50 | 703–82540–00 | .NEUTRAL SWITCH ASSY<br>.CONTACTEUR DE POINT-MORT | 1 | 1 | | | | |
| 51 | 703–83383–02 | .BUZZER<br>.RONFLEUR | 1 | 1 | | | | |
| 52 | 703–48284–10 | .GROMMET<br>.PASSE-FIL | 1 | 1 | | | | |
| 53 | 703–82591–00 | .BAND<br>.COLLIER | 3 | 3 | | | | |
| 54 | 703–82592–00 | .BAND<br>.COLLIER | 1 | 1 | | | | |

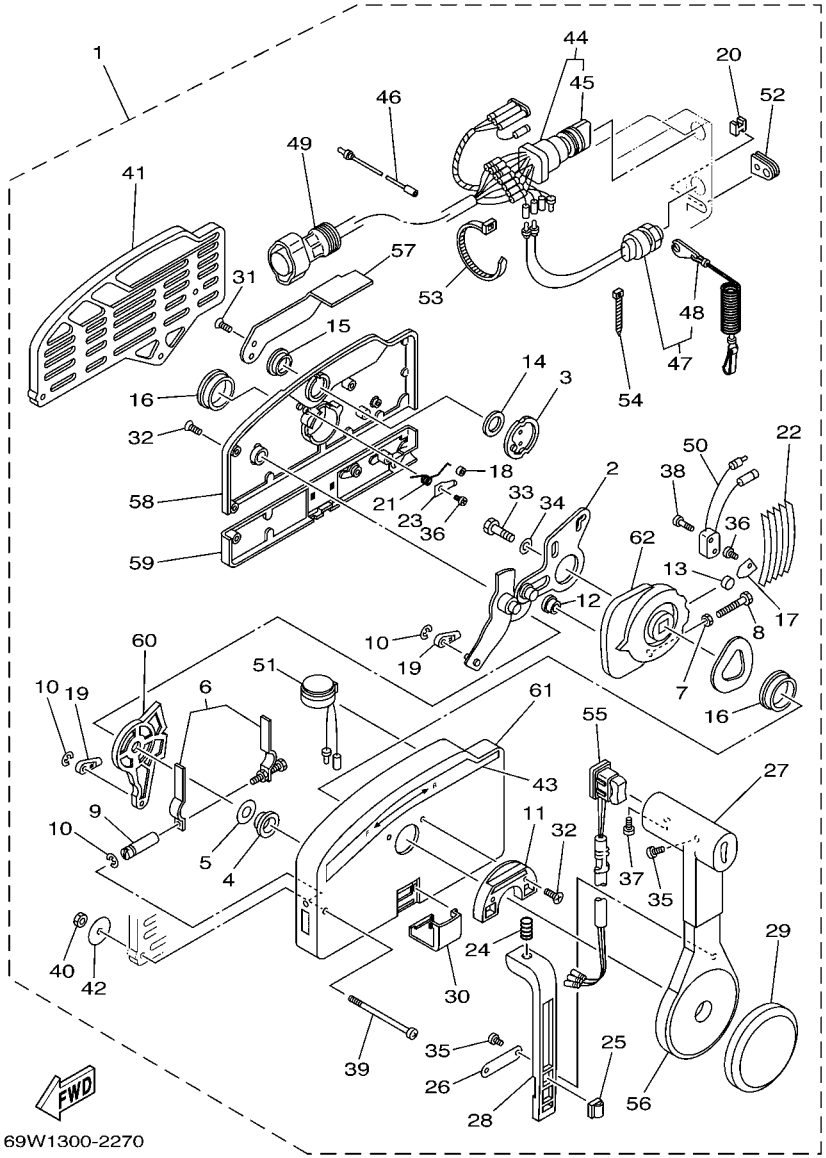


69W1300-2270

## FIG. 22 REMOTE CONTROL ASSY BOITIER DE COMMANDE A DISTANCE

| REF. NO. | PART NO. N° PIECES | DESCRIPTION DESCRIPTION | 67P5 | 6H19 | | | | REMARKS REMARQUES |
|---|---|---|---|---|---|---|---|---|
| 55 | 703–82563–12 | .TRIM & TILT SWITCH ASSY<br>.INCLINER ET PARER COMMUTATEUR | 1 | 1 | | | | WITH PT/T SW.<br>WITH PT/T SW. |
| 56 | 703–48221–00 | .LEVER, CONTROL<br>.LEVIER, COMMANDE | 1 | 1 | | | | |
| 57 | 703–48152–00 | .KNOB, FREE ACCEL.<br>.BOUTON | 1 | 1 | | | | |
| 58 | 703–48212–00 | .BACK PLATE 1<br>.PLAQUETTE 1 | 1 | 1 | | | | |
| 59 | 703–48213–00 | .BACK PLATE 2<br>.PLAQUETTE 2 | 1 | 1 | | | | |
| 60 | 703–48271–00 | .ARM, SHIFT<br>.BRAS | 1 | 1 | | | | |
| 61 | 703–48211–01 | .HOUSING,1<br>.CORPS | 1 | 1 | | | | |
| 62 | 703–48232–00 | .GEAR<br>.PIGNON | 1 | 1 | | | | |

## FIG. 23 METER COMPTEUR

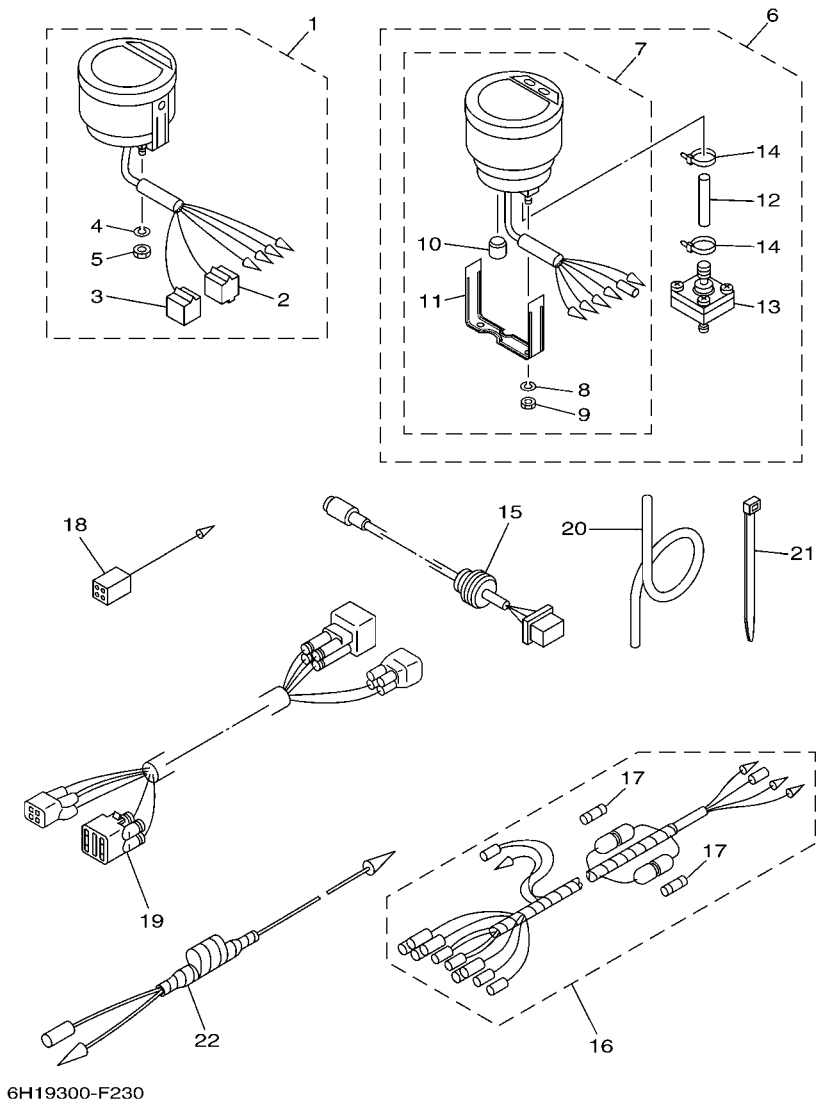


| REF. NO. | PART NO. N° PIECES | DESCRIPTION DESCRIPTION | 67P5 | 6H19 | | | | REMARKS REMARQUES |
|---|---|---|---|---|---|---|---|---|
| 1 | 6Y5–8350T–03 | DIGITAL TACHOMETER ASSY<br>COMPTE-TOURS NUMERIQUE CPLT | 1 | 1 | | | | AP<br>AP |
| 2 | 9E450–04433 | .CONNECTOR<br>.CONNECTEUR | 1 | 1 | | | | M-4-W<br>M-4-W |
| 3 | 9E450–04533 | .CONNECTOR<br>.CONNECTEUR | 1 | 1 | | | | F-4-W<br>F-4-W |
| 4 | 92990–04100 | .WASHER, SPRING<br>.RONDELLE, GROWER | 2 | 2 | | | | |
| 5 | 95380–04600 | .NUT<br>.ECROU | 2 | 2 | | | | |
| 6 | 6Y5–83500–S5 | DIGITAL SPEEDOMETER ASSY<br>TACHYMETRE NUMERIQUE CPLT. | | 1 | | | | AP<br>AP |
| 7 | 6Y5–83570–S5 | .SPEEDOMETER ASSY<br>.COMPTEUR DE VITESSE CPLT | | 1 | | | | |
| 8 | 92990–04100 | ..WASHER, SPRING<br>..RONDELLE, GROWER | | 2 | | | | |
| 9 | 95380–04600 | ..NUT<br>..ECROU | | 2 | | | | |
| 10 | 6Y5–83533–T2 | ..GROMMET<br>..RONDELLE CAOUTCHOUC | | 1 | | | | |
| 11 | 6Y5–8355X–T1 | ..BRACKET, METER 1<br>..CROCHET, COMPTEUR | | 1 | | | | |
| 12 | 6Y5–83557–31 | .TUBE<br>.TUBE | | 1 | | | | |
| 13 | 6Y5–83728–00 | .CONNECTOR ASSY<br>.CONNEXION COMPLET | | 1 | | | | |
| 14 | 90465–11M10 | .CLAMP<br>.BRIDE | | 2 | | | | |
| 15 | 6Y5–87122–S0 | CORD ASSY 1<br>CORDON COMPLET 1 | | 1 | | | | AP<br>AP |
| 16 | 6Y5–83553–M0 | WIRE, LEAD (L=2.5M)<br>FIL (L=2.5M) | | 1 | | | | AP<br>AP |
| | 6Y5–83553–00 | WIRE, LEAD (L=2.5M)<br>FIL (L=2.5M) | 1 | | | | | AP<br>AP |
| 17 | 1E6–82151–00 | .FUSE (10A)<br>.FUSIBLE (10A) | | 2 | | | | FOR 6Y5-83553-M0<br>FOR 6Y5-83553-M0 |
| | 1E6–82151–00 | .FUSE (10A)<br>.FUSIBLE (10A) | 1 | | | | | FOR 6Y5-83553-00<br>FOR 6Y5-83553-00 |
| 18 | 6Y5–82117–00 | WIRE, LEAD (BLACK) (L300)<br>FIL (NOIR) (L300) | | 1 | | | | AP<br>AP |
| 19 | 68F–82553–80 | EXTENSION, WIRE LEAD (L=8.0M)<br>EXTENSION, FAISCEAU (L=8.0M) | | 1 | | | | AP<br>AP |
| | 68F–82553–70 | EXTENSION, WIRE LEAD (L=7.0M)<br>EXTENSION, FAISCEAU (L=7.0M) | 1 | | | | | AP<br>AP |
| 20 | 6Y5–83557–10 | TUBE (8M)<br>TUBE (8M) | | 1 | | | | AP<br>AP |
| 21 | 90465–11M10 | CLAMP<br>BRIDE | | 2 | | | | AP<br>AP |
| 22 | 6H4–81315–11 | LEAD WIRE ASSY<br>FIL | 1 | 1 | | | | AP<br>AP |

## FIG. 24 OPTIONAL PARTS PIECES OPTIONNELLES

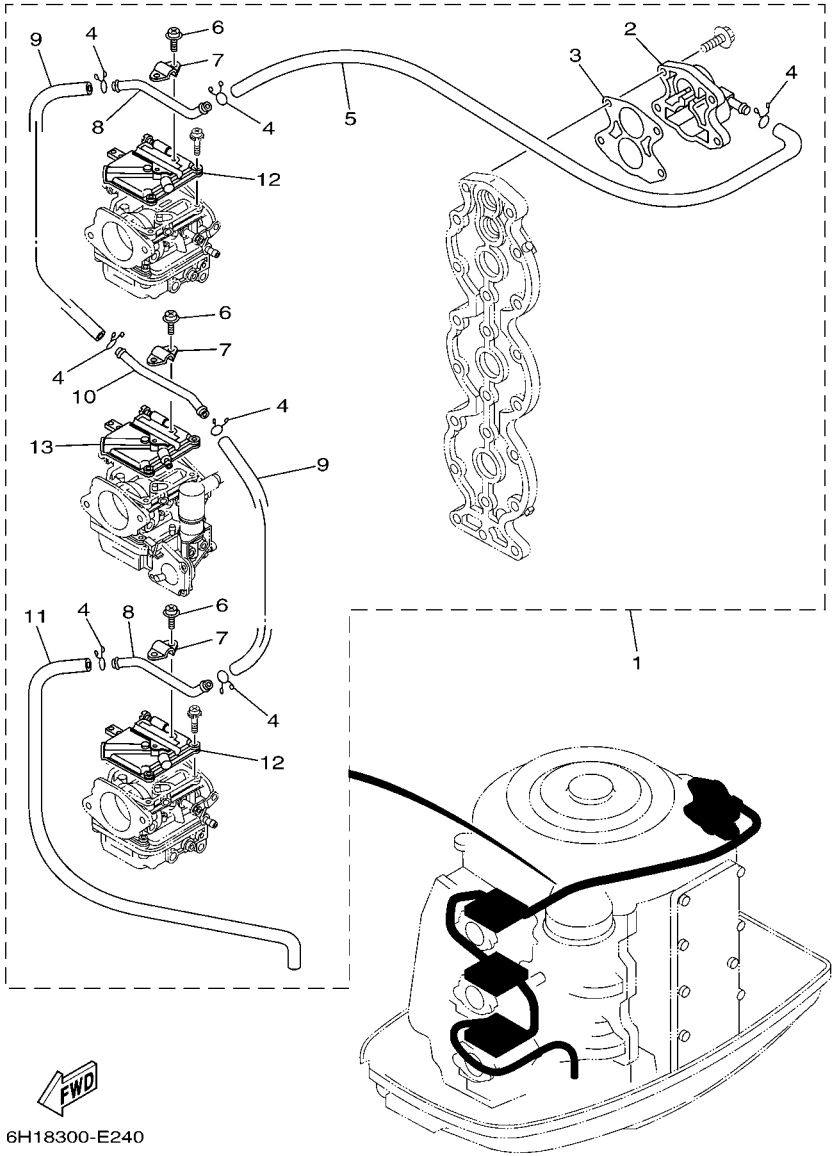


| REF. NO. | PART NO. N° PIECES | DESCRIPTION DESCRIPTION | 67P5 | 6H19 | | | | REMARKS REMARQUES |
|---|---|---|---|---|---|---|---|---|
| 1 | 6H1–12440–52 | HEAT EXCHANGER ASSY<br>ECHANGEUR DE CHALEUR | 1 | 1 | | | | AP<br>AP |
| 2 | 6H1–12413–50 | .COVER, THERMOSTAT<br>.COUVERCLE, THERMOSTAT | 1 | 1 | | | | |
| 3 | 6H1–12414–50 | .GASKET, COVER<br>.JOINT, COUVERCLE | 1 | 1 | | | | |
| 4 | 90467–10M04 | .CLIP<br>.JONC | 7 | 7 | | | | |
| 5 | 6H1–14348–51 | .PIPE 1<br>.DURITE | 1 | 1 | | | | |
| 6 | 97880–04006 | .SCREW, PAN HEAD<br>.VIS, TETE TRONCONIQUE | 6 | 6 | | | | |
| 7 | 6H1–12443–50 | .STAY<br>.SUPPORT | 3 | 3 | | | | |
| 8 | 6H1–12466–A0 | .EXCHANGER, HEAT<br>.ECHANGEUR DE CHALEUR | 2 | 2 | | | | |
| 9 | 6H1–14349–50 | .PIPE<br>.DURITE | 2 | 2 | | | | |
| 10 | 6H1–12466–B0 | .EXCHANGER, HEAT<br>.ECHANGEUR DE CHALEUR | 1 | 1 | | | | |
| 11 | 6E5–12481–00 | .PIPE 1<br>.DURITE 1 | 1 | 1 | | | | |
| 12 | 6H4–14146–50 | .PLATE<br>.PLAQUE | 2 | 2 | | | | |
| 13 | 6H3–14146–50 | .PLATE<br>.PLAQUE | 1 | 1 | | | | |

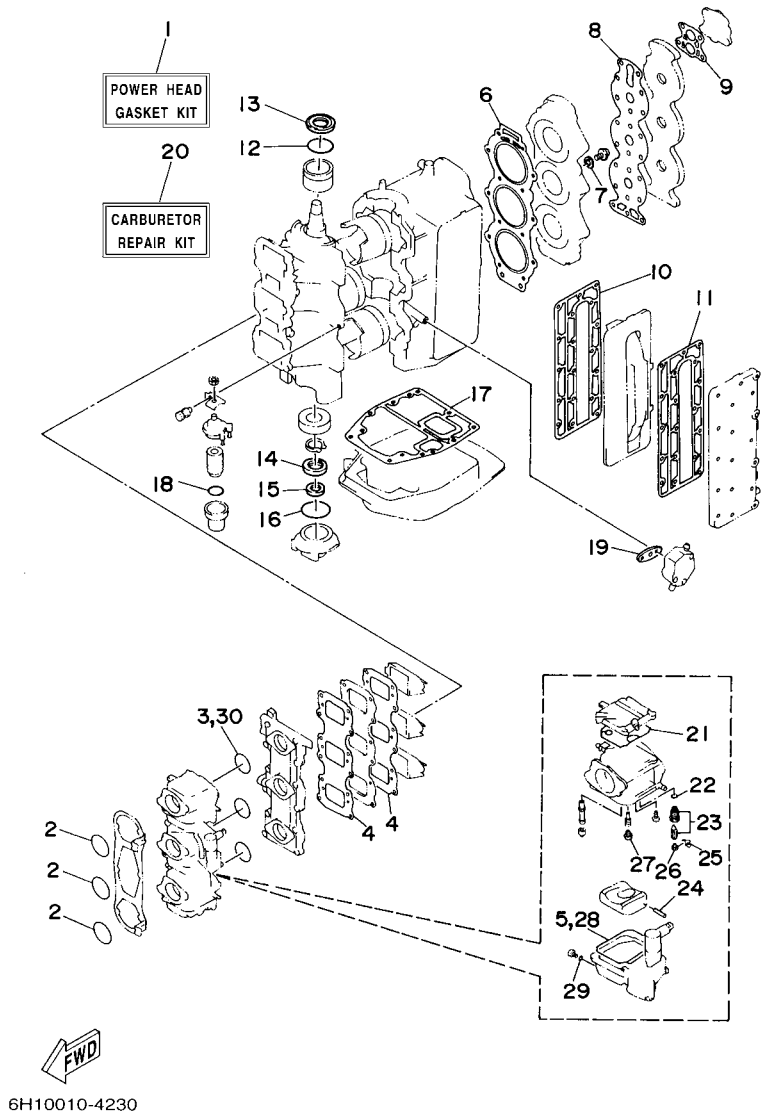


## FIG. 25 REPAIR KIT 1 — KITS DE REPARATION 1

| REF. NO. | PART NO. N° PIECES | DESCRIPTION DESCRIPTION | 67P5 | 6H19 | | | | REMARKS REMARQUES |
|---|---|---|---|---|---|---|---|---|
| 1 | 6H1–W0001–02 | POWER HEAD GASKET KIT<br>POCHETTE DE JINTS TETE MOTRICE | 1 | 1 | | | | |
| 2 | 93210–46044 | .O-RING<br>.JOINT TORIQUE | 3 | 3 | | | | |
| 3 | 93210–39ME4 | .O-RING<br>.JOINT TORIQUE | 3 | 3 | | | | |
| 4 | 688–13621–A1 | .GASKET, VALVE SEAT<br>.JOINT, SIEGE DE CLAPET | 2 | 2 | | | | |
| 5 | 6H4–14984–00 | .GASKET, FLOAT CHAMBER<br>.JOINT, CUVE DE FLOTTEUR | 3 | 3 | | | | |
| 6 | 688–11181–A1 | .GASKET, CYLINDER HEAD 1<br>.JOINT, DE CULASSE 1 | 1 | 1 | | | | |
| 7 | 90430–14115 | .GASKET<br>.JOINT | 1 | 1 | | | | |
| 8 | 688–11193–A1 | .GASKET, HEAD COVER 1<br>.JOINT, COUVERCLE DE CULASSE 1 | 1 | 1 | | | | |
| 9 | 688–12414–A1 | .GASKET, COVER<br>.JOINT, COUVERCLE | 1 | 1 | | | | |
| 10 | 688–41112–A0 | .GASKET, EXHAUST INNER COVER<br>.JOINT, PLAQUE D'ECHAPPEMENT | 1 | 1 | | | | |
| 11 | 688–41114–A0 | .GASKET, EXHAUST OUTER COVER<br>.JOINT, COUVERCLE D'ECHAPPEMEN | 1 | 1 | | | | |
| 12 | 93210–46M16 | .O-RING<br>.JOINT TORIQUE | 1 | 1 | | | | |
| 13 | 93102–36M02 | .OIL SEAL<br>.JOINT SPY | 1 | 1 | | | | |
| 14 | 93102–30M05 | .OIL SEAL<br>.JOINT SPY | 1 | 1 | | | | |
| 15 | 93104–20M02 | .OIL SEAL<br>.JOINT SPY | 1 | 1 | | | | |
| 16 | 93210–62269 | .O-RING<br>.JOINT TORIQUE | 1 | 1 | | | | |
| 17 | 688–45113–A0 | .GASKET, UPPER CASING<br>.JOINT, TUBE D'ARBRE | 1 | 1 | | | | |
| 18 | 93210–32738 | .O-RING<br>.JOINT TORIQUE | 1 | 1 | | | | |
| 19 | 650–24431–A0 | .GASKET, FUEL PUMP 1<br>.JOINT 1 DE POMPE A ESSENCE | 1 | 1 | | | | |
| 20 | 6H1–W0093–10 | CARBURETOR REPAIR KIT<br>KIT DE REPARATION CARBURATEUR | 1 | 1 | | | | |
| 21 | 6H4–14147–00 | .O-RING<br>.JOINT TORIQUE | 1 | 1 | | | | |
| 22 | 93210–04228 | .O-RING<br>.JOINT TORIQUE | 1 | 1 | | | | |
| 23 | 692–14590–01 | .NEEDLE VALVE ASSY<br>.POINTEAU | 1 | 1 | | | | |
| 24 | 6H4–14548–00 | .PIN, FLOAT ARM<br>.AXE, BRAS DE FLOTTEUR | 1 | 1 | | | | |
| 25 | 663–14159–00 | .CLIP<br>.JONC | 1 | 1 | | | | |
| 26 | 676–14186–00 | .PIN, FLOAT<br>.AXE, FLOTTEUR | 1 | 1 | | | | |
| 27 | 676–14966–00 | .CAP<br>.CAPUCHON | 1 | 1 | | | | |

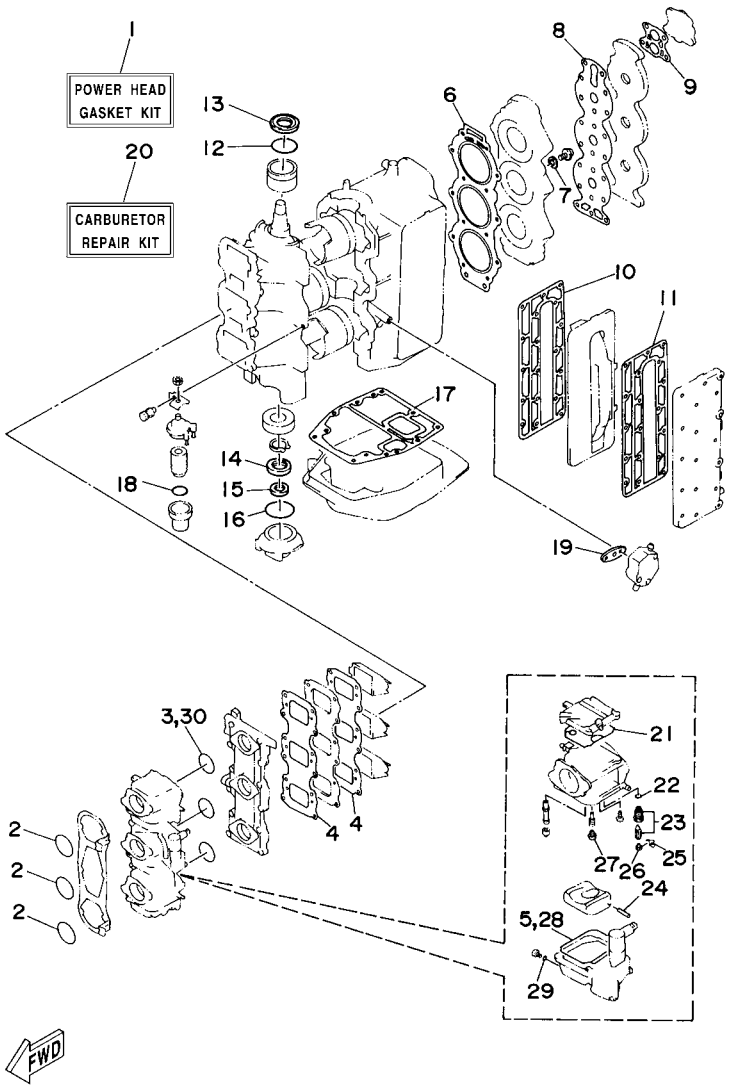


## FIG. 25 REPAIR KIT 1 — KITS DE REPARATION 1

| REF. NO. | PART NO. N° PIECES | DESCRIPTION DESCRIPTION | 67P5 | 6H19 | | | | REMARKS REMARQUES |
|---|---|---|---|---|---|---|---|---|
| 28 | 6H4–14984–00 | .GASKET, FLOAT CHAMBER<br>.JOINT, CUVE DE FLOTTEUR | 1 | 1 | | | | |
| 29 | 93210–04230 | .O-RING<br>.JOINT TORIQUE | 1 | 1 | | | | |
| 30 | 93210–39ME4 | .O-RING<br>.JOINT TORIQUE | 1 | 1 | | | | |

## FIG. 26 REPAIR KIT 2 — KITS DE REPARATION 2

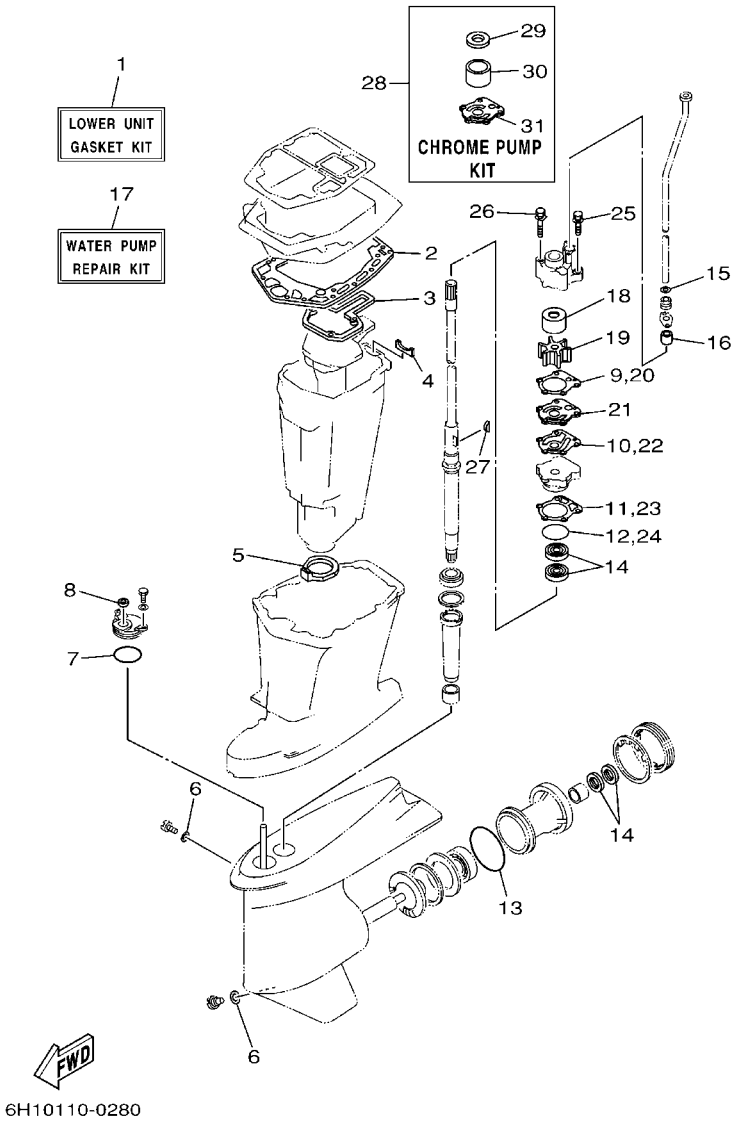


| REF. NO. | PART NO. N° PIECES | DESCRIPTION DESCRIPTION | 67P5 | 6H19 | | | | REMARKS REMARQUES |
|---|---|---|---|---|---|---|---|---|
| 1 | 688–W0001–21 | LOWER UNIT GASKET KIT<br>POCHETTE DE JOINTS EMBASE | 1 | 1 | | | | |
| 2 | 688–45114–A1 | .GASKET, UPPER CASING<br>.JOINT, TUBE D'ARBRE | 1 | 1 | | | | |
| 3 | 688–41134–A0 | .GASKET, EXHAUST MANIFOLD<br>.JOINT, PIPE D'ECHAPPEMENT | 1 | 1 | | | | |
| 4 | 688–41133–00 | .GASKET, EXHAUST MANIFOLD 1<br>.JOINT, PIPE D'ECHAPPEMENT | 1 | 1 | | | | |
| 5 | 688–45123–00 | .GASKET, MUFFLER<br>.JOINT, POT DE DETENTE | 1 | 1 | | | | |
| 6 | 90430–08020 | .GASKET<br>.JOINT | 2 | 2 | | | | |
| 7 | 93210–49046 | .O-RING<br>.JOINT TORIQUE | 1 | 1 | | | | |
| 8 | 93106–09014 | .OIL SEAL<br>.JOINT SPY | 1 | 1 | | | | |
| 9 | 688–44315–A0 | .GASKET, WATER PUMP<br>.JOINT, POMPE A EAU | 1 | 1 | | | | |
| 10 | 688–44324–A0 | .GASKET, CARTRIDGE<br>.JOINT | 1 | 1 | | | | |
| 11 | 688–44316–A0 | .GASKET, WATER PUMP<br>.JOINT, POMPE A EAU | 1 | 1 | | | | |
| 12 | 93210–46044 | .O-RING<br>.JOINT TORIQUE | 1 | 1 | | | | |
| 13 | 93210–85M97 | .O-RING<br>.JOINT TORIQUE | 1 | 1 | | | | |
| 14 | 93101–25M03 | .OIL SEAL<br>.JOINT SPY | 4 | 4 | | | | |
| 15 | 90430–12072 | .GASKET<br>.JOINT | 1 | 1 | | | | |
| 16 | 663–44366–00 | .DAMPER, WATER SEAL<br>.JOINT, TUBE D'EAU | 1 | 1 | | | | |
| 17 | 692–W0078–02 | WATER PUMP REPAIR KIT<br>KIT DE REPARATION DE LA POMPE | 1 | 1 | | | | |
| 18 | 688–44322–00 | .INSERT, CARTRIDGE<br>.CUVETTE | 1 | 1 | | | | |
| 19 | 688–44352–03 | .IMPELLER<br>.TURBINE | 1 | 1 | | | | |
| 20 | 688–44315–A0 | .GASKET, WATER PUMP<br>.JOINT, POMPE A EAU | 1 | 1 | | | | |
| 21 | 688–44323–00 | .OUTER PLATE, CARTRIDGE<br>.PLAQUE EXTERIEURE | 1 | 1 | | | | |
| 22 | 688–44324–A0 | .GASKET, CARTRIDGE<br>.JOINT | 1 | 1 | | | | |
| 23 | 688–44316–A0 | .GASKET, WATER PUMP<br>.JOINT, POMPE A EAU | 1 | 1 | | | | |
| 24 | 93210–46044 | .O-RING<br>.JOINT TORIQUE | 1 | 1 | | | | |
| 25 | 90119–08M13 | .BOLT, WITH WASHER<br>.BOULON, AVEC RONDELLE | 2 | 2 | | | | |
| 26 | 90119–08M16 | .BOLT, WITH WASHER<br>.BOULON, AVEC RONDELLE | 2 | 2 | | | | |
| 27 | 90280–04M04 | .KEY, WOODRUFF<br>.CLAVETTE, DEMI-LUNE | 1 | 1 | | | | |

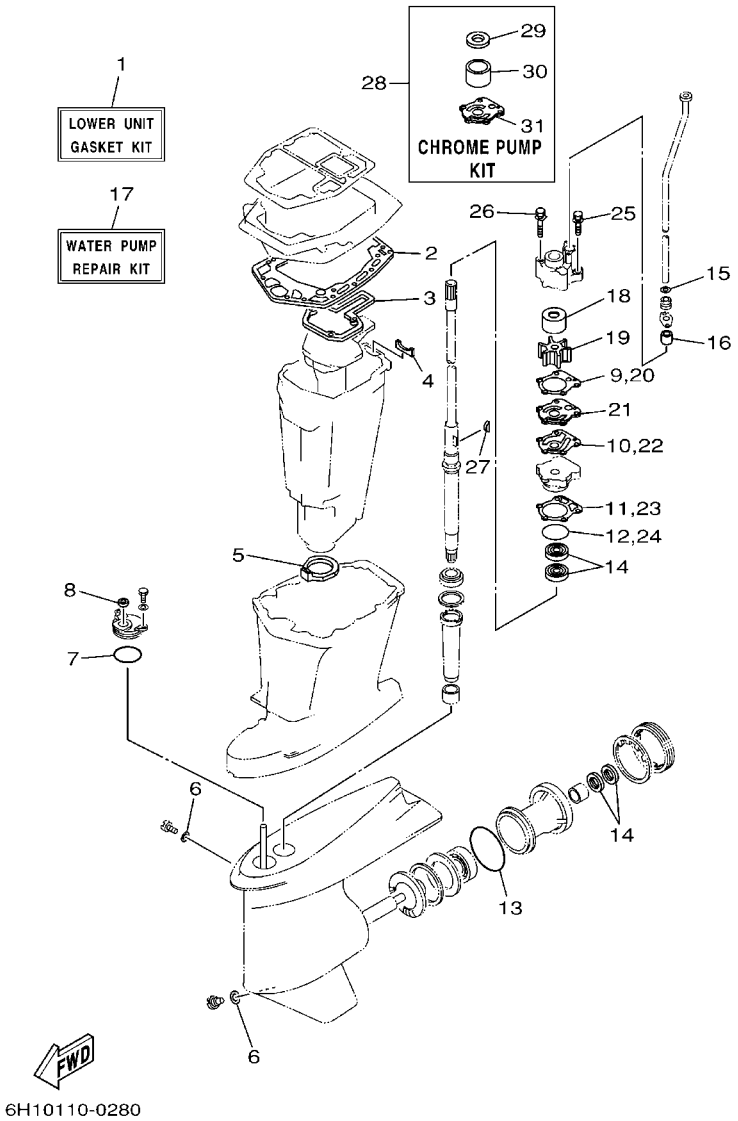


## FIG. 26 REPAIR KIT 2 — KITS DE REPARATION 2

| REF. NO. | PART NO. N° PIECES | DESCRIPTION DESCRIPTION | 67P5 | 6H19 | | | | REMARKS REMARQUES |
|---|---|---|---|---|---|---|---|---|
| 28 | 688–W0078–1A | CHROME PUMP KIT<br>KIT DE POMPE A EAU CHROMEE | 1 | 1 | | | | |
| 29 | 688–44321–41 | .INNER PLATE, CARTRIDGE<br>.CUVETTE | 1 | 1 | | | | |
| 30 | 688–44322–41 | .INSERT, CARTRIDGE<br>.CUVETTE | 1 | 1 | | | | |
| 31 | 688–44323–40 | .OUTER PLATE, CARTRIDGE<br>.PLAQUE EXTERIEURE | 1 | 1 | | | | |

NUMERICAL INDEX
INDEX NUMERIQUE


| PART NO. N° PIECES | REF. NO. |
|---|---|
| 6H1–11111–01–1S | 2 – 30 |
| 688–11119–01 | 2 – 28 |
| 688–11181–A1 | 2 – 31 |
| | 25 – 6 |
| 688–11191–00–1S | 2 – 35 |
| 688–11193–A1 | 2 – 36 |
| | 25 – 8 |
| 688–11325–00 | 2 – 26 |
| 650–11370–01 | 2 – 4 |
| 688–11370–01 | 2 – 3 |
| | 3 – 2 |
| 688–11411–01 | 3 – 11 |
| 663–11518–01 | 2 – 6 |
| 6H1–11536–00 | 3 – 27 |
| 6H1–11537–01 | 6 – 16 |
| 688–11603–A0 | 3 – 19 |
| 688–11604–A0 | 3 – 19 |
| 688–11605–A0 | 3 – 19 |
| 6H1–11631–03–95 | 3 – 18 |
| 663–11633–00 | 3 – 20 |
| 688–11634–10 | 3 – 21 |
| 6H1–11635–03 | 3 – 18 |
| 6H1–11636–03 | 3 – 18 |
| 688–11650–03 | 3 – 22 |
| 688–12411–11 | 2 – 41 |
| 688–12412–00 | 2 – 42 |
| 688–12413–00–1S | 2 – 43 |
| 6H1–12413–50 | 24 – 2 |
| 6H1–12414–50 | 24 – 3 |
| 688–12414–A1 | 2 – 44 |
| | 25 – 9 |
| 688–12416–00 | 2 – 39 |
| 6H1–12440–52 | 24 – 1 |
| 6H1–12443–50 | 24 – 7 |
| 6H1–12466–A0 | 24 – 8 |
| 6H1–12466–B0 | 24 – 10 |
| 6E5–12481–00 | 24 – 11 |
| 6H1–12535–00 | 11 – 34 |
| 68T–12572–00 | 11 – 32 |
| 6R3–12580–00 | 11 – 37 |
| 6R3–12581–00 | 11 – 38 |
| 6R3–12582–00 | 11 – 39 |
| 6R3–12583–00 | 11 – 40 |
| 6H1–13117–01 | 6 – 18 |
| 6E9–13183–70 | 6 – 13 |
| 6H1–13200–02 | 6 – 1 |
| 6H1–13411–00 | 6 – 42 |
| 6J8–13414–00 | 6 – 41 |

| PART NO. N° PIECES | REF. NO. |
|---|---|
| 6H1–13435–00 | 6 – 45 |
| 6H1–13436–00 | 1 – 18 |
| 6H1–13436–41 | 1 – 18 |
| 6H1–13437–21 | 8 – 20 |
| 6R3–13471–00 | 6 – 2 |
| 6L2–13475–00 | 6 – 3 |
| 688–13610–00 | 4 – 12 |
| 688–13621–A1 | 4 – 10 |
| | 25 – 4 |
| 688–13624–00 | 4 – 11 |
| 6H1–13641–02–94 | 4 – 6 |
| 6H3–14137–00 | 5 – 31 |
| 6H4–14146–00 | 5 – 8 |
| 6H3–14146–10 | 5 – 9 |
| 6H3–14146–50 | 24 – 13 |
| 6H4–14146–50 | 24 – 12 |
| 6H4–14147–00 | 5 – 10 |
| | 25 – 21 |
| 663–14159–00 | 5 – 17 |
| | 25 – 25 |
| 676–14186–00 | 5 – 18 |
| | 25 – 26 |
| 6H0–14301–07 | 5 – 1 |
| 6H1–14301–07 | 5 – 1 |
| 6H0–14302–07 | 5 – 2 |
| 6H1–14302–07 | 5 – 2 |
| 6H0–14303–07 | 5 – 3 |
| 6H1–14303–07 | 5 – 3 |
| 6A0–14325–00 | 7 – 22 |
| 6H1–14348–51 | 24 – 5 |
| 6H3–14349–00 | 4 – 4 |
| | 5 – 32 |
| 6H1–14349–50 | 24 – 9 |
| 6H3–14380–00 | 5 – 33 |
| 6H1–14413–02 | 4 – 22 |
| 6H1–14440–02 | 4 – 18 |
| 624–14485–00 | 2 – 5 |
| 6H1–14485–00 | 4 – 7 |
| 6H1–14488–00 | 8 – 19 |
| 63V–14523–00 | 5 – 5 |
| 6H4–14548–00 | 5 – 15 |
| | 25 – 24 |
| 697–14555–00 | 5 – 12 |
| 6H4–14567–00 | 5 – 30 |
| 6H2–14578–00 | 5 – 7 |
| 692–14590–01 | 5 – 14 |
| | 25 – 23 |
| 688–14711–01–5B | 16 – 10 |

| PART NO. N° PIECES | REF. NO. |
|---|---|
| 663–14737–10 | 16 – 12 |
| 692–14923–00 | 5 – 11 |
| 6H1–14943–39 | 5 – 21 |
| 6H1–14947–75 | 5 – 20 |
| 6H1–14948–18 | 5 – 23 |
| 676–14966–00 | 5 – 22 |
| | 25 – 27 |
| 6H4–14980–00 | 5 – 27 |
| 6H3–14980–10 | 5 – 28 |
| 6H4–14984–00 | 5 – 24 |
| | 25 – 5 |
| 6H4–14985–01 | 5 – 19 |
| 6H3–14992–00 | 5 – 25 |
| 6H1–15100–04–1S | 2 – 2 |
| 6H1–15359–01–94 | 3 – 1 |
| 688–15379–00 | 3 – 6 |
| 6H1–15771–00 | 10 – 19 |
| 6H1–15772–00 | 2 – 53 |
| 6H1–15773–01 | 2 – 55 |
| 6H1–21707–07 | 6 – 26 |
| 6H3–21732–00 | 1 – 24 |
| 6H3–21735–00 | 1 – 25 |
| 6H1–21752–00 | 6 – 33 |
| 6H1–21757–00 | 6 – 39 |
| 6J8–21758–00 | 6 – 38 |
| 63D–2175R–00 | 6 – 36 |
| 6H1–21766–01 | 6 – 43 |
| 63D–2176M–00 | 6 – 35 |
| 6H4–21770–00 | 6 – 37 |
| 63D–2177H–00 | 1 – 2 |
| 6H1–21796–00 | 2 – 56 |
| 6YK–24201–02 | 19 – 1 |
| 6YK–24260–01 | 19 – 4 |
| 6YL–24268–01 | 19 – 2 |
| 6G1–24304–02 | 7 – 1 |
| 6YL–24306–54 | 19 – 7 |
| 663–24312–01 | 2 – 50 |
| 6H1–24312–01 | 11 – 41 |
| 688–24313–00 | 7 – 30 |
| 688–24314–00 | 7 – 31 |
| 6H1–24314–00 | 7 – 27 |
| 6YL–24329–00 | 19 – 6 |
| 6E5–24367–01 | 11 – 30 |
| 650–24378–00 | 2 – 7 |
| 688–24378–00 | 7 – 34 |
| 692–24410–00 | 7 – 12 |
| 663–24411–00 | 7 – 17 |
| 692–24411–00 | 7 – 14 |

| PART NO. N° PIECES | REF. NO. |
|---|---|
| 6H3–24411–10 | 5 – 40 |
| 6A0–24412–02 | 7 – 23 |
| 6A0–24413–00 | 7 – 13 |
| 6H4–24413–00 | 5 – 38 |
| 6L5–24421–00 | 5 – 37 |
| 6A0–24421–01 | 7 – 21 |
| 650–24431–A0 | 7 – 24 |
| | 25 – 19 |
| 648–24434–01 | 7 – 15 |
| 6H3–24434–10 | 5 – 41 |
| 648–24435–02 | 7 – 18 |
| 6H3–24452–10 | 5 – 29 |
| 6H4–24486–00 | 5 – 39 |
| 61N–24521–00 | 7 – 8 |
| 61N–24560–00 | 7 – 6 |
| 61N–24563–00 | 7 – 7 |
| 6H1–24566–01 | 7 – 10 |
| 6YK–24610–01 | 19 – 3 |
| 6H1–24633–00 | 6 – 40 |
| 6A1–28176–00 | 11 – 45 |
| 6E0–28193–00–94 | 7 – 37 |
| 67P–28199–72–D0 | 7 – 38 |
| 67P–28199–72–E0 | 7 – 38 |
| 67P–28199–72–F0 | 7 – 38 |
| 67P–28199–72–G0 | 7 – 38 |
| 67P–28199–72–H0 | 7 – 38 |
| 67P–28199–72–S0 | 7 – 38 |
| 67P–28199–82–K0 | 7 – 39 |
| 67P–28199–82–L0 | 7 – 39 |
| 67P–28199–82–M0 | 7 – 39 |
| 67P–28199–82–N0 | 7 – 39 |
| 67P–28199–82–P0 | 7 – 39 |
| 67P–28199–82–R0 | 7 – 39 |
| 61H–2819R–31 | 7 – 35 |
| 688–41111–00–1S | 2 – 46 |
| 688–41112–A0 | 2 – 47 |
| | 25 – 10 |
| 6H1–41113–00–1S | 2 – 49 |
| 688–41114–A0 | 2 – 48 |
| | 25 – 11 |
| 688–41131–00–5B | 16 – 8 |
| 692–41131–00–5B | 16 – 8 |
| 688–41133–00 | 16 – 9 |
| | 26 – 4 |
| 688–41134–A0 | 16 – 7 |
| | 26 – 3 |
| 688–41137–03–94 | 16 – 5 |
| 688–41211–01 | 12 – 27 |

| PART NO. N° PIECES | REF. NO. |
|---|---|
| 6H1–41213–00 | 12 – 30 |
| 662–41214–01 | 12 – 8 |
| 688–41217–01 | 4 – 3 |
| 682–41237–00 | 12 – 29 |
| 6E9–41237–00 | 6 – 25 |
| 6F5–41237–00 | 12 – 19 |
| 6H1–41237–00 | 6 – 21 |
| 662–41237–01 | 12 – 26 |
| 6H1–41241–02 | 6 – 20 |
| 688–41631–01–94 | 12 – 18 |
| 688–41632–01–94 | 12 – 7 |
| 6H1–41636–00 | 12 – 24 |
| 688–42510–03–4D | 14 – 3 |
| 6H1–42610–60–4D | 1 – 1 |
| 6H0–42610–B0–4D | 1 – 1 |
| 6H1–42613–01–4D | 1 – 11 |
| 688–42615–00 | 1 – 14 |
| 6H1–42617–10 | 1 – 19 |
| 6H1–42619–00 | 1 – 20 |
| 6H1–42627–00 | 1 – 21 |
| 6H1–42637–00 | 1 – 22 |
| 6H1–42647–00–94 | 1 – 3 |
| 6H1–42649–00–94 | 1 – 4 |
| 688–42652–10 | 1 – 6 |
| 663–42662–00 | 1 – 5 |
| 6H1–42677–60 | 1 – 15 |
| 6H0–42677–A0 | 1 – 15 |
| 6H1–42678–30 | 1 – 16 |
| 6H0–42678–90 | 1 – 16 |
| 6H1–42681–30 | 1 – 28 |
| 6H1–42682–30 | 1 – 29 |
| 6H1–42694–00 | 1 – 23 |
| 6H1–42711–10–4D | 11 – 1 |
| 648–42715–00 | 12 – 48 |
| 688–42716–02 | 11 – 9 |
| 663–42724–00 | 11 – 10 |
| 688–42725–20 | 11 – 11 |
| 688–42726–10 | 11 – 22 |
| 6H1–42726–21 | 11 – 22 |
| 688–42738–01–94 | 11 – 12 |
| 688–42741–01–4D | 11 – 24 |
| 6G1–42748–00 | 11 – 23 |
| 688–42771–01–4D | 11 – 25 |
| 6G5–42791–10 | 11 – 44 |
| 688–42815–01–4D | 11 – 3 |
| 688–42816–00 | 11 – 7 |
| 688–42817–01–4D | 11 – 4 |
| 6H1–43111–01–4D | 13 – 1 |

| PART NO. N° PIECES | REF. NO. |
|---|---|
| 6H1–43112–00–4D | 13 – 10 |
| 6E5–43126–02 | 13 – 39 |
| 688–43131–03 | 13 – 20 |
| 6G5–43144–00 | 13 – 33 |
| 6E5–43145–01 | 20 – 9 |
| 6G5–43145–01 | 13 – 24 |
| 6G5–43148–00 | 13 – 28 |
| 688–43160–01 | 13 – 35 |
| 688–43165–00 | 13 – 36 |
| 6H1–43181–01 | 13 – 25 |
| 6H1–43185–01 | 13 – 26 |
| 6H1–43311–02–4D | 13 – 15 |
| 6H1–43376–00 | 14 – 39 |
| 6H1–43800–17–4D | 15 – 1 |
| 67F–43802–00 | 15 – 39 |
| 6H1–43804–10 | 15 – 4 |
| 6H1–43805–10 | 15 – 3 |
| 6H1–4380F–10 | 15 – 7 |
| 6H1–4380G–10 | 15 – 15 |
| 6H1–4380H–10 | 15 – 13 |
| 6H1–4380J–10 | 15 – 8 |
| 6H1–43810–11 | 15 – 20 |
| 6H1–43812–00 | 15 – 24 |
| 6H1–43813–10 | 15 – 27 |
| 6H1–43814–11 | 15 – 19 |
| 6H1–43816–00 | 15 – 67 |
| 6H1–43817–01 | 15 – 47 |
| 6E5–43818–00 | 15 – 32 |
| 6H1–43820–11 | 15 – 63 |
| 6H1–43821–11 | 15 – 59 |
| 6H1–43822–10 | 15 – 58 |
| 6H1–43828–10 | 15 – 30 |
| 6H1–43829–00 | 15 – 36 |
| 6H1–4382A–10 | 15 – 52 |
| 6H1–43830–11 | 15 – 49 |
| 6H1–43831–10 | 15 – 48 |
| 6H1–43833–10 | 15 – 33 |
| 6H1–43834–00 | 15 – 34 |
| 6H1–43835–10 | 15 – 29 |
| 6H1–43840–11 | 15 – 17 |
| 6H1–43841–11 | 15 – 42 |
| 6H1–43843–11 | 15 – 71 |
| 6H1–43844–10 | 15 – 44 |
| 6H1–43845–00 | 15 – 55 |
| 6H1–43847–00 | 15 – 50 |
| 6H1–4384E–20 | 15 – 61 |
| 6H1–4384F–10 | 15 – 46 |
| 6H1–4384G–11 | 15 – 45 |

NUMERICAL INDEX
INDEX NUMERIQUE


| PART NO. N° PIECES | REF. NO. |
|---|---|
| 6H1–43854–00 | 15 – 53 |
| 6H1–43855–11 | 15 – 70 |
| 6H1–43856–10 | 15 – 43 |
| 6H1–4385H–00 | 15 – 76 |
| 6H1–43861–00 | 15 – 21 |
| 6H1–43861–10 | 15 – 18 |
| 6H1–43864–00 | 15 – 64 |
| 6H1–43865–10 | 15 – 16 |
| 6H1–43866–00 | 15 – 40 |
| 6H1–43867–00 | 15 – 41 |
| 6H1–43868–00 | 15 – 73 |
| 6H1–4386K–10 | 15 – 9 |
| 6H1–43871–10 | 15 – 23 |
| 6H1–43872–10 | 15 – 25 |
| 6H1–43874–00 | 15 – 66 |
| 6H1–43875–00 | 15 – 57 |
| 6H1–4387J–00 | 15 – 75 |
| 6H1–43880–02 | 15 – 2 |
| 6H1–43881–10 | 15 – 12 |
| 6H1–4388E–11 | 15 – 72 |
| 6H1–43891–10 | 15 – 5 |
| 6H1–43892–10 | 15 – 6 |
| 6H1–43895–12 | 15 – 69 |
| 6H1–43896–00 | 15 – 68 |
| 6H1–43899–00 | 15 – 51 |
| 688–44117–00–94 | 12 – 34 |
| 688–44118–01–94 | 12 – 42 |
| 6H1–44120–12 | 12 – 49 |
| 6H1–44121–00 | 12 – 41 |
| 688–44122–00 | 12 – 38 |
| 688–44124–00 | 12 – 37 |
| 6H1–44144–00 | 17 – 69 |
| 6H1–44151–00 | 17 – 68 |
| 688–44194–00 | 2 – 14 |
| | 12 – 21 |
| 688–44311–01 | 17 – 21 |
| 688–44315–A0 | 17 – 23 |
| | 26 – 9 |
| 688–44316–A0 | 17 – 29 |
| | 26 – 11 |
| 688–44321–41 | 26 – 29 |
| 688–44322–00 | 17 – 22 |
| | 26 – 18 |
| 688–44322–41 | 26 – 30 |
| 688–44323–00 | 17 – 30 |
| | 26 – 21 |
| 688–44323–40 | 26 – 31 |
| 688–44324–A0 | 17 – 31 |

| PART NO. N° PIECES | REF. NO. |
|---|---|
| 688–44324–A0 | 26 – 10 |
| 688–44341–01–94 | 17 – 26 |
| 688–44352–03 | 17 – 24 |
| | 26 – 19 |
| 688–44361–10 | 18 – 2 |
| 663–44366–00 | 18 – 14 |
| | 26 – 16 |
| 663–44367–00 | 18 – 1 |
| 6H3–44391–01 | 11 – 2 |
| 688–44511–00–94 | 14 – 33 |
| 688–44514–00–94 | 14 – 26 |
| 6H1–44526–00 | 13 – 3 |
| 663–44551–02–4D | 14 – 9 |
| 687–44552–02–94 | 14 – 18 |
| 663–44553–01–4D | 14 – 23 |
| 687–44555–00–94 | 14 – 11 |
| 663–44575–00 | 14 – 16 |
| 688–45111–04–4D | 16 – 1 |
| 688–45113–A0 | 16 – 20 |
| | 25 – 17 |
| 688–45114–A1 | 16 – 6 |
| | 26 – 2 |
| 663–45119–00 | 13 – 17 |
| 688–45123–00 | 16 – 11 |
| | 26 – 5 |
| 663–45155–10 | 16 – 2 |
| 6H1–45214–00 | 17 – 12 |
| 6H1–45215–00 | 17 – 13 |
| 6H1–45251–03 | 13 – 2 |
| 6H1–45300–15–4D | 17 – 1 |
| 6H1–45301–03–4D | 17 – 2 |
| 688–45321–00 | 17 – 16 |
| 688–45331–00–94 | 17 – 54 |
| 688–45341–10 | 17 – 10 |
| 688–45371–02 | 18 – 12 |
| 6E5–45371–10 | 18 – 25 |
| 688–45375–00 | 18 – 11 |
| 663–45376–00–94 | 18 – 10 |
| 6E5–45378–00 | 17 – 64 |
| 688–45383–02 | 17 – 61 |
| 688–45384–00 | 17 – 62 |
| 6H1–45501–11 | 17 – 35 |
| 688–45536–01 | 17 – 4 |
| 688–45551–01 | 17 – 36 |
| 688–45560–00 | 17 – 38 |
| 688–45567–01 | 17 – 7 |
| 688–45567–10 | 17 – 7 |
| 688–45567–20 | 17 – 7 |

| PART NO. N° PIECES | REF. NO. |
|---|---|
| 688–45567–30 | 17 – 7 |
| 688–45567–40 | 17 – 7 |
| 688–45567–50 | 17 – 7 |
| 688–45567–60 | 17 – 7 |
| 6H1–45571–00 | 17 – 53 |
| 688–45576–00 | 17 – 57 |
| 688–45577–01 | 17 – 56 |
| 688–45577–10 | 17 – 56 |
| 688–45577–20 | 17 – 56 |
| 688–45577–30 | 17 – 56 |
| 688–45577–40 | 17 – 56 |
| 688–45577–50 | 17 – 56 |
| 688–45577–60 | 17 – 56 |
| 688–45587–01 | 17 – 5 |
| 688–45587–10 | 17 – 5 |
| 688–45587–20 | 17 – 5 |
| 688–45587–30 | 17 – 5 |
| 688–45587–40 | 17 – 5 |
| 688–45587–50 | 17 – 5 |
| 688–45587–60 | 17 – 5 |
| 6H1–45611–01 | 17 – 39 |
| 6H1–45631–01 | 17 – 49 |
| 688–45633–00 | 17 – 51 |
| 6H1–45634–02 | 17 – 43 |
| 6H1–45635–00 | 17 – 52 |
| 6H1–45641–01 | 17 – 41 |
| 6H1–45668–00 | 17 – 46 |
| 688–45930–02–98 | 18 – 22 |
| 688–45932–60–98 | 18 – 22 |
| 6E5–45941–00–EL | 18 – 22 |
| 6E5–45943–00–EL | 18 – 22 |
| 6E5–45945–01–EL | 18 – 22 |
| 6E5–45947–00–EL | 18 – 22 |
| 6E5–45949–00–EL | 18 – 22 |
| 6E5–45952–00–EL | 18 – 22 |
| 6E5–45954–00–EL | 18 – 22 |
| 6E5–45956–00–EL | 18 – 22 |
| 688–45970–03–98 | 18 – 22 |
| 6E5–45970–10 | 18 – 23 |
| 688–45972–02–98 | 18 – 22 |
| 6E5–45972–10 | 18 – 23 |
| 688–45974–02–98 | 18 – 22 |
| 6E5–45974–10 | 18 – 23 |
| 688–45976–01–98 | 18 – 22 |
| 6E5–45976–10 | 18 – 23 |
| 6E5–45978–10 | 18 – 23 |
| 688–45978–60–98 | 18 – 22 |
| 688–45987–01 | 18 – 17 |

| PART NO. N° PIECES | REF. NO. |
|---|---|
| 6E5–45994–10 | 18 – 24 |
| 67F–45997–00 | 18 – 18 |
| 703–48152–00 | 22 – 57 |
| 703–48153–00 | 22 – 3 |
| 703–48189–00 | 22 – 17 |
| 703–48198–00 | 22 – 14 |
| 703–48207–17 | 21 – 1 |
| | 22 – 1 |
| 703–48211–01 | 22 – 61 |
| 703–48212–00 | 22 – 58 |
| 703–48213–00 | 22 – 59 |
| 703–48215–00 | 22 – 43 |
| 703–48219–00 | 22 – 30 |
| 703–48221–00 | 22 – 56 |
| 703–48222–00 | 22 – 27 |
| 703–48223–00 | 22 – 28 |
| 703–48225–00 | 22 – 29 |
| 703–48226–00 | 22 – 26 |
| 703–48227–00 | 22 – 24 |
| 703–48232–00 | 22 – 62 |
| 703–48234–00 | 22 – 18 |
| 703–48235–00 | 22 – 4 |
| 703–48236–00 | 22 – 16 |
| 703–48238–00 | 22 – 22 |
| 703–48243–00 | 22 – 15 |
| 703–48244–00 | 22 – 21 |
| 703–48245–00 | 22 – 11 |
| 703–48246–00 | 22 – 23 |
| 701–48248–00 | 22 – 13 |
| 703–48252–00 | 22 – 12 |
| 703–48261–01 | 22 – 2 |
| 703–48264–00 | 22 – 6 |
| 703–48265–00 | 22 – 9 |
| 703–48268–00 | 22 – 5 |
| 703–48271–00 | 22 – 60 |
| 703–48281–00 | 22 – 31 |
| 703–48282–00 | 22 – 32 |
| 703–48284–10 | 22 – 52 |
| 701–48287–00 | 22 – 42 |
| 703–48291–10 | 22 – 39 |
| 703–48293–10 | 22 – 41 |
| 701–48320–00 | 21 – 2 |
| 701–48320–20 | 21 – 2 |
| 701–48320–30 | 21 – 2 |
| 701–48320–50 | 21 – 2 |
| 701–48320–60 | 21 – 2 |
| 701–48320–80 | 21 – 2 |
| 663–48344–00 | 12 – 6 |

| PART NO. N° PIECES | REF. NO. |
|---|---|
| 703–48345–01 | 22 – 19 |
| 703–48358–00 | 22 – 20 |
| 688–48511–11–4D | 14 – 36 |
| 663–48531–00 | 12 – 1 |
| 663–48538–00 | 12 – 2 |
| 688–61350–10 | 20 – 1 |
| 688–61351–10 | 20 – 2 |
| 6E5–61355–00 | 20 – 8 |
| 6H4–81315–11 | 23 – 22 |
| 688–81332–01 | 8 – 11 |
| 6H1–81337–01 | 8 – 14 |
| 688–81800–12 | 10 – 1 |
| 676–81809–10 | 10 – 3 |
| 688–81810–11 | 10 – 5 |
| 663–81811–11 | 10 – 6 |
| 663–81812–11 | 10 – 8 |
| 663–81813–10 | 10 – 9 |
| 663–81820–12 | 10 – 10 |
| 688–81824–00 | 10 – 15 |
| 663–81826–10 | 10 – 14 |
| 688–81830–11 | 10 – 12 |
| 688–81831–00 | 10 – 13 |
| 663–81832–11 | 10 – 11 |
| 663–81840–11 | 10 – 7 |
| 676–81850–11 | 10 – 2 |
| 676–81857–10 | 10 – 4 |
| 6H1–81916–00 | 9 – 27 |
| 6G1–81941–10 | 9 – 15 |
| 6E9–81945–70 | 9 – 17 |
| 6H0–81949–01 | 9 – 44 |
| 6H0–81949–10 | 9 – 43 |
| 61A–81950–00 | 9 – 39 |
| 6G1–81952–00 | 9 – 16 |
| 6H0–81960–10 | 9 – 9 |
| 6H0–82105–02 | 9 – 34 |
| 6H0–82117–00 | 9 – 36 |
| 6Y5–82117–00 | 23 – 18 |
| 703–82119–00 | 9 – 2 |
| | 14 – 42 |
| 682–82119–01 | 9 – 42 |
| 688–82127–02 | 14 – 25 |
| 6E5–82148–00 | 13 – 11 |
| 6H1–82148–00 | 13 – 8 |
| 1E6–82151–00 | 23 – 17 |
| 663–82151–00 | 9 – 33 |
| 6G5–82152–00 | 9 – 20 |
| 6A0–82317–00 | 6 – 50 |
| 6E3–82370–21 | 9 – 29 |

| PART NO. N° PIECES | REF. NO. |
|---|---|
| 703–82510–43 | 22 – 44 |
| 697–82519–00 | 9 – 37 |
| 703–82531–00 | 22 – 46 |
| 703–82540–00 | 22 – 50 |
| 68F–82553–70 | 23 – 19 |
| 68F–82553–80 | 23 – 19 |
| 682–82556–00 | 22 – 48 |
| 688–82560–10 | 9 – 30 |
| 6H1–82563–10 | 9 – 46 |
| 703–82563–12 | 22 – 55 |
| 688–82575–01 | 22 – 47 |
| 703–82577–00 | 22 – 45 |
| 6E3–8257H–00 | 11 – 46 |
| 6R5–82582–B0 | 6 – 52 |
| 6E5–82587–00 | 9 – 47 |
| 688–82588–01 | 9 – 31 |
| 688–8258A–20 | 22 – 49 |
| 6H0–82590–12 | 9 – 32 |
| 703–82591–00 | 22 – 53 |
| 703–82592–00 | 22 – 54 |
| 688–82594–00 | 9 – 38 |
| 703–82594–00 | 22 – 25 |
| 703–83383–02 | 22 – 51 |
| 6Y5–83500–S5 | 23 – 6 |
| 6Y5–8350T–03 | 23 – 1 |
| 6Y5–83533–T2 | 23 – 10 |
| 6Y5–83553–00 | 23 – 16 |
| 6Y5–83553–M0 | 23 – 16 |
| 6Y5–83557–10 | 23 – 20 |
| 6Y5–83557–31 | 23 – 12 |
| 6E5–83558–00 | 18 – 27 |
| 6E5–83558–10 | 17 – 66 |
| 6Y5–8355X–T1 | 23 – 11 |
| 6Y5–83570–S5 | 23 – 7 |
| 6H1–83614–00 | 9 – 48 |
| 6A1–83625–41 | 4 – 24 |
| 6A1–83625–51 | 4 – 25 |
| 6H1–83672–12 | 14 – 1 |
| 6Y5–83728–00 | 23 – 13 |
| 6H0–85510–03 | 8 – 2 |
| 6H0–85540–06 | 9 – 1 |
| 6H1–85542–00–94 | 9 – 21 |
| 6H1–85542–10 | 9 – 3 |
| 6H0–85550–00 | 8 – 1 |
| 697–85570–00 | 9 – 6 |
| 6H0–85580–01 | 8 – 3 |
| 6H1–85711–60 | 4 – 23 |
| 6R5–85711–60 | 9 – 51 |

NUMERICAL INDEX
INDEX NUMERIQUE


| PART NO. N° PIECES | REF. NO. |
|---|---|
| 6H1–85720–15 | 6 – 51 |
| 6H2–85895–01 | 8 – 4 |
| 6Y5–87122–S0 | 23 – 15 |
| 6H1–W0001–02 | 25 – 1 |
| 688–W0001–21 | 26 – 1 |
| 688–W0004–00 | 4 – 13 |
| 6H1–W0070–30 | 1 – 17 |
| 692–W0078–02 | 26 – 17 |
| 688–W0078–1A | 26 – 28 |
| 6H1–W0090–44–1S | 2 – 1 |
| 6H1–W0093–10 | 25 – 20 |
| 656–W2810–02 | 7 – 36 |
| 90101–10M49 | 14 – 27 |
| 90101–12M65 | 13 – 43 |
| 90105–10M67 | 18 – 13 |
| 90109–06M39 | 6 – 5 |
| | 9 – 25 |
| 90109–06M40 | 6 – 6 |
| 90109–08022 | 3 – 23 |
| 90109–12261 | 14 – 15 |
| 90116–10175 | 14 – 37 |
| 90116–10M06 | 2 – 22 |
| 90119–06M09 | 11 – 8 |
| 90119–06M12 | 2 – 9 |
| 90119–06M24 | 12 – 33 |
| 90119–06M29 | 13 – 4 |
| 90119–06M61 | 11 – 19 |
| 90119–06M75 | 9 – 24 |
| 90119–06M88 | 6 – 48 |
| 90119–06MA3 | 2 – 37 |
| 90119–06MA5 | 2 – 45 |
| 90119–08020 | 2 – 52 |
| 90119–08M13 | 17 – 34 |
| | 26 – 25 |
| 90119–08M16 | 17 – 33 |
| | 26 – 26 |
| 90119–08M79 | 16 – 17 |
| 90119–08M80 | 16 – 4 |
| 90119–08M84 | 18 – 9 |
| 90119–08MA3 | 2 – 29 |
| 90119–08MA8 | 2 – 32 |
| 90119–10005 | 2 – 10 |
| 90151–05M00 | 17 – 14 |
| 90157–05M16 | 19 – 5 |
| 90157–06013 | 12 – 20 |
| 90157–06014 | 2 – 13 |
| 90157–06M01 | 11 – 20 |
| 90159–06M11 | 9 – 28 |
| 90159–06M20 | 8 – 15 |
| 90160–04006 | 18 – 16 |
| 90167–06002 | 11 – 33 |
| 90170–09M03 | 20 – 5 |
| 90170–16M01 | 17 – 37 |
| 90170–20137 | 8 – 9 |
| 90171–16011 | 18 – 20 |
| 90179–06066 | 14 – 22 |
| 90183–02M03 | 17 – 48 |
| 90183–05M06 | 1 – 27 |
| 90185–05002 | 17 – 15 |
| 90185–08057 | 14 – 40 |
| 90185–09M01 | 20 – 4 |
| 90185–10051 | 14 – 31 |
| 90185–22043 | 13 – 23 |
| 90201–03313 | 17 – 47 |
| 90201–06416 | 11 – 17 |
| 90201–06M31 | 9 – 26 |
| 90201–08M13 | 12 – 16 |
| 90201–08M23 | 12 – 11 |
| 90201–08M93 | 6 – 17 |
| 90201–10008 | 2 – 11 |
| 90201–10M20 | 20 – 3 |
| 90201–10M63 | 20 – 7 |
| 90201–11M22 | 14 – 30 |
| 90201–12426 | 13 – 45 |
| 90201–12M16 | 14 – 12 |
| 90201–13M19 | 14 – 14 |
| 90201–20417 | 3 – 25 |
| 90201–20M21 | 14 – 28 |
| 90201–21M18 | 8 – 10 |
| 90201–22M67 | 13 – 22 |
| 90201–30M00 | 14 – 4 |
| 90202–05088 | 6 – 23 |
| 90202–07M07 | 12 – 39 |
| 90202–12060 | 18 – 3 |
| 90202–12092 | 12 – 15 |
| 90202–20M06 | 14 – 29 |
| 90202–25M04 | 14 – 13 |
| 90206–10M04 | 12 – 32 |
| 90206–13019 | 11 – 6 |
| 90209–06M05 | 4 – 21 |
| 90249–06M19 | 13 – 30 |
| 90250–07M02 | 17 – 50 |
| 90266–06009 | 1 – 10 |
| 90280–04M04 | 17 – 25 |
| | 26 – 27 |
| 90280–05015 | 8 – 8 |
| 90282–04010 | 17 – 63 |
| 90338–05M03 | 13 – 19 |
| 90338–05M12 | 1 – 26 |
| 90340–08002 | 17 – 9 |
| 90340–14M00 | 2 – 33 |
| 90386–07M58 | 12 – 50 |
| 90386–10M16 | 13 – 27 |
| 90386–12089 | 12 – 12 |
| 90386–13M38 | 11 – 5 |
| 90386–18M14 | 15 – 31 |
| 90386–18M35 | 13 – 40 |
| 90386–18M63 | 13 – 42 |
| 90386–22M13 | 12 – 14 |
| 90386–22M15 | 13 – 21 |
| 90386–30M60 | 14 – 8 |
| 90386–30M77 | 14 – 6 |
| 90386–30M78 | 14 – 5 |
| 90387–06119 | 6 – 49 |
| 90387–06M03 | 9 – 23 |
| 90387–06M17 | 12 – 31 |
| 90387–06M31 | 6 – 32 |
| 90387–06M69 | 11 – 16 |
| 90387–08M16 | 12 – 13 |
| 90387–10M02 | 13 – 31 |
| 90387–10M42 | 20 – 6 |
| 90389–25M00 | 18 – 19 |
| 90430–08020 | 17 – 11 |
| | 26 – 6 |
| 90430–12072 | 18 – 4 |
| | 26 – 15 |
| 90430–14115 | 2 – 34 |
| | 25 – 7 |
| 90440–14M00 | 13 – 47 |
| 90445–07240 | 6 – 9 |
| 90445–07260 | 2 – 16 |
| 90445–07M00 | 2 – 19 |
| 90445–07M23 | 2 – 20 |
| | 4 – 1 |
| 90445–07M44 | 6 – 10 |
| 90445–07M86 | 3 – 7 |
| 90445–07M87 | 6 – 12 |
| 90445–07M90 | 6 – 8 |
| 90445–07ME9 | 17 – 65 |
| 90445–07MF1 | 18 – 26 |
| 90445–08M01 | 6 – 44 |
| 90445–09097 | 7 – 29 |
| 90445–09104 | 7 – 4 |
| 90445–09220 | 7 – 33 |
| 90445–11M09 | 6 – 27 |
| 90464–07M05 | 6 – 15 |
| 90464–09M31 | 11 – 43 |
| 90464–11M18 | 13 – 18 |
| 90464–11M24 | 6 – 28 |
| 90464–15M08 | 11 – 21 |
| 90464–18M14 | 9 – 50 |
| 90464–23M22 | 9 – 35 |
| 90465–06M90 | 8 – 16 |
| 90465–08M23 | 9 – 12 |
| 90465–11M10 | 11 – 42 |
| | 14 – 41 |
| | 17 – 67 |
| | 23 – 14 |
| 90465–11M27 | 6 – 29 |
| 90465–12M03 | 2 – 23 |
| 90465–13M11 | 9 – 4 |
| 90465–13M30 | 6 – 34 |
| 90465–18147 | 5 – 42 |
| 90467–06016 | 2 – 17 |
| | 3 – 8 |
| | 4 – 2 |
| 90467–08004 | 2 – 51 |
| | 4 – 5 |
| | 6 – 47 |
| | 7 – 5 |
| 90467–10M04 | 24 – 4 |
| 90467–11M08 | 6 – 30 |
| 90467–12M11 | 6 – 46 |
| 90468–05M03 | 6 – 24 |
| 90468–07M02 | 6 – 7 |
| 90468–18008 | 12 – 9 |
| 90480–09M12 | 11 – 15 |
| 90480–09M25 | 9 – 22 |
| 90480–19M06 | 18 – 15 |
| 90480–20M05 | 2 – 38 |
| 90480–24M04 | 2 – 18 |
| 90501–10326 | 5 – 6 |
| 90501–12082 | 12 – 47 |
| 90501–12M48 | 17 – 40 |
| 90501–14M08 | 14 – 21 |
| 90501–16M11 | 2 – 40 |
| 90501–16M12 | 12 – 23 |
| 90501–16M65 | 17 – 44 |
| 90502–16M02 | 13 – 38 |
| 90506–14M24 | 13 – 32 |
| 90508–29M05 | 12 – 17 |
| 91318–04025 | 15 – 74 |
| 91318–08016 | 15 – 65 |
| 91490–40025 | 18 – 21 |
| 91690–30012 | 12 – 3 |
| | 13 – 37 |
| 91690–30020 | 13 – 29 |
| 92903–06100 | 4 – 17 |
| 92903–06600 | 5 – 44 |
| | 9 – 8 |
| | 12 – 36 |
| 92903–08100 | 10 – 17 |
| | 12 – 44 |
| 92903–08600 | 12 – 45 |
| 92990–04100 | 23 – 4 |
| 92990–05100 | 4 – 15 |
| | 7 – 20 |
| 92990–06600 | 11 – 31 |
| 92990–08200 | 12 – 51 |
| 92990–08600 | 10 – 18 |
| | 22 – 34 |
| 92990–10100 | 18 – 8 |
| 92990–10600 | 18 – 7 |
| 92995–04600 | 10 – 21 |
| 92995–06100 | 1 – 8 |
| | 2 – 25 |
| | 9 – 14 |
| | 11 – 27 |
| | 13 – 6 |
| 92995–06600 | 1 – 9 |
| | 3 – 10 |
| | 7 – 3 |
| | 8 – 7 |
| | 9 – 11 |
| | 11 – 14 |
| | 13 – 7 |
| | 17 – 20 |
| 92995–08100 | 12 – 5 |
| | 14 – 20 |
| | 16 – 14 |
| 92995–10100 | 13 – 14 |
| 92995–12200 | 13 – 44 |
| 93101–25M03 | 17 – 27 |
| | 26 – 14 |
| 93102–08M43 | 15 – 14 |
| 93102–30M05 | 3 – 3 |
| | 25 – 14 |
| 93102–36M02 | 3 – 13 |
| | 25 – 13 |
| 93104–20M02 | 3 – 4 |
| 93104–20M02 | 25 – 15 |
| 93106–09014 | 17 – 18 |
| | 26 – 8 |
| 93210–04228 | 5 – 13 |
| | 25 – 22 |
| 93210–04230 | 5 – 26 |
| | 25 – 29 |
| 93210–064A5 | 15 – 38 |
| 93210–07003 | 17 – 70 |
| 93210–09165 | 15 – 37 |
| 93210–10M74 | 15 – 54 |
| 93210–13M04 | 6 – 19 |
| 93210–16275 | 20 – 10 |
| 93210–18397 | 15 – 26 |
| 93210–18M75 | 15 – 56 |
| 93210–19MA7 | 6 – 4 |
| 93210–29M94 | 14 – 7 |
| 93210–32738 | 7 – 9 |
| | 25 – 18 |
| 93210–39ME4 | 4 – 9 |
| | 25 – 3 |
| 93210–46044 | 4 – 19 |
| | 17 – 28 |
| | 25 – 2 |
| | 26 – 12 |
| 93210–46M16 | 3 – 14 |
| | 25 – 12 |
| 93210–49046 | 17 – 17 |
| | 26 – 7 |
| 93210–62269 | 3 – 5 |
| | 25 – 16 |
| 93210–68N50 | 15 – 28 |
| 93210–85M97 | 17 – 58 |
| | 26 – 13 |
| 93306–206U5 | 3 – 16 |
| 93306–207U0 | 17 – 55 |
| 93310–636U4 | 3 – 12 |
| 93310–730V8 | 3 – 26 |
| 93310–835U8 | 3 – 15 |
| 93315–325V1 | 17 – 3 |
| 93317–325U0 | 17 – 59 |
| 93332–000U3 | 17 – 6 |
| 93332–000W7 | 17 – 8 |
| 93410–18M02 | 13 – 41 |
| 93410–28M06 | 14 – 10 |
| 93410–32M00 | 3 – 17 |
| 93430–06024 | 22 – 10 |
| 93450–07M00 | 17 – 72 |

NUMERICAL INDEX
INDEX NUMERIQUE


| PART NO. N° PIECES | REF. NO. |
|---|---|
| 93501–04M02 | 12 – 46 |
| 93503–16003 | 17 – 45 |
| 93505–32038 | 15 – 77 |
| 93603–12M11 | 17 – 42 |
| 93603–21111 | 3 – 24 |
| 93604–10M03 | 17 – 32 |
| 93606–12019 | 16 – 3 |
| | 18 – 5 |
| 93608–12063 | 2 – 8 |
| 93700–06M03 | 13 – 16 |
| 94702–00247 | 2 – 58 |
| 95303–06600 | 12 – 22 |
| 95303–06700 | 2 – 15 |
| 95313–10600 | 2 – 12 |
| 95380–03600 | 5 – 35 |
| | 7 – 16 |
| 95380–04600 | 23 – 5 |
| 95380–05600 | 6 – 22 |
| | 12 – 25 |
| | 22 – 7 |
| 95380–06600 | 22 – 40 |
| 95380–08600 | 7 – 11 |
| 95380–12600 | 13 – 46 |
| 95380–12800 | 14 – 17 |
| 97013–06012 | 5 – 43 |
| 97013–06016 | 9 – 18 |
| 97013–06020 | 9 – 7 |
| | 12 – 35 |
| 97013–06030 | 4 – 16 |
| 97013–08030 | 10 – 16 |
| | 12 – 43 |
| 97075–08025 | 14 – 19 |
| | 16 – 15 |
| 97075–08030 | 16 – 13 |
| 97075–08035 | 14 – 34 |
| | 16 – 18 |
| 97075–10040 | 18 – 6 |
| 97095–05012 | 8 – 5 |
| 97095–06010 | 8 – 12 |
| | 13 – 34 |
| 97095–06012 | 2 – 54 |
| | 8 – 17 |
| | 9 – 13 |
| 97095–06014 | 2 – 24 |
| 97095–06016 | 1 – 7 |
| | 6 – 31 |
| | 9 – 49 |
| | 11 – 13 |

| PART NO. N° PIECES | REF. NO. |
|---|---|
| 97095–06016 | 13 – 5 |
| | 17 – 19 |
| 97095–06020 | 3 – 9 |
| | 7 – 2 |
| | 9 – 10 |
| | 11 – 26 |
| 97095–06025 | 9 – 40 |
| 97095–06030 | 11 – 18 |
| 97095–06040 | 7 – 25 |
| | 8 – 6 |
| 97095–06095 | 4 – 8 |
| 97095–08012 | 2 – 57 |
| 97095–08016 | 12 – 4 |
| 97095–08045 | 12 – 10 |
| 97095–10045 | 13 – 13 |
| 97380–05025 | 22 – 8 |
| 97380–08030 | 22 – 33 |
| 97595–06420 | 15 – 35 |
| 97595–06510 | 13 – 9 |
| 97595–06550 | 9 – 5 |
| 97602–05210 | 15 – 62 |
| 97607–04310 | 15 – 11 |
| 97803–04010 | 5 – 34 |
| 97880–04006 | 24 – 6 |
| 97880–05020 | 4 – 14 |
| 97880–06012 | 13 – 12 |
| 97885–04010 | 10 – 20 |
| 97885–05016 | 15 – 10 |
| 97885–06016 | 14 – 2 |
| 97885–06050 | 4 – 20 |
| 97980–04114 | 5 – 4 |
| 98503–05028 | 7 – 19 |
| 98580–03015 | 22 – 38 |
| 98580–04006 | 22 – 36 |
| 98580–04008 | 5 – 16 |
| 98580–04010 | 22 – 35 |
| 98580–05010 | 22 – 37 |
| 98780–04015 | 2 – 27 |
| 98980–03006 | 5 – 36 |
| 99001–08600 | 17 – 71 |
| 9E450–04433 | 23 – 2 |
| 9E450–04533 | 23 – 3 |

| PART NO. N° PIECES | REF. NO. |
|---|---|

| PART NO. N° PIECES | REF. NO. |
|---|---|

| PART NO. N° PIECES | REF. NO. |
|---|---|

| PART NO. N° PIECES | REF. NO. |
|---|---|