YAMAHA

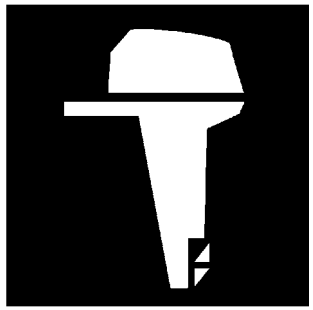

PARTS CATALOGUE
CATALOGUE DE PIECES DETACHEES

40VMHO'08 (63B7)
40VEO'08 (63C7)
40YETO'08 (68PF)

1G63B-300F1

(2G63B-300F1)

YAMAHA GENUINE Parts & Accessories

2009/3/31

NEWS NO.	DATE	COMMENT
PE0-OM-090004	March,2,2009	MOD:FIG.23 PTT(62Y-43800-01-4D) P/No. REVISION

40VMHO
40VEO/40YETO
PARTS CATALOGUE
©2007 by Yamaha Motor Co., Ltd.
1st edition, July 2007
All rights reserved.
Any reprinting or unauthorized use
without the written permission of
Yamaha Motor Co., Ltd.
is expressly prohibited.

40VMHO
40VEO/40YETO
CATALOGUE DE PIECES DETACHEES
©2007 par Yamaha Motor Co., Ltd.
1re édition, juillet 2007
Tous droits réservés
Toute réimpression ou utilisation
non autorisée sans la permission écrite
de la Yamaha Motor Co., Ltd.
est formellement interdite.

FOREWORD

This Parts Catalogue is related to the parts for the model(s) on the cover page. When you are ordering replacement parts, please refer to this Parts Catalogue and quote both part numbers and part names correctly.

1. Modifications or additions which have been made after the issue of the Parts Catalogue will be announced in the Parts News.
   It is advisable that you make the necessary corrections to the Parts Catalogue according to the Parts News.

2. Abbreviations
   The following abbreviations are used in this Parts Catalogue.

   "UR" Use specified parts number.
   "UN" Use as many as needed.
   "AP" Alternate Parts
   "LM" Locally Made (Parts need to be ordered locally)
   "F#" Frame No. (Applicable machine No.)
   "O/S" Over Size

3. The number of components for assembly
   - Parts, which are to be supplied in an assembly, are listed with a dot (.) in front of the part name as shown below.
   - The numeral appearing to the right of each component part indicates the quantity of parts for each assembly unit.

PART NO.	DESCRIPTION	Q'TY	REMARKS
2F5–83310–60	FRONT FLASHER LIGHT ASSY	2	
115–83311–60	.BULB (6V–18W)	1	

4. Applicable colours of graphics are represented in the "REMARKS" as shown below.

PART NO.	DESCRIPTION	Q'TY	REMARKS
2N4–24110–00–X5	FUEL TANK COMP.	2	MXR
3J1–24240–10	.GRAPHIC, FUEL TANK	1	FOR MXR

5. Note that the illustrations for reference in finding parts numbers are not to be used for assembling. When assembling, please use the applicable service manual.

6. The asterisk (*) before a reference number indicates modified items after the first edition.

7. Applicable Serial No.

   Engine Serial No.

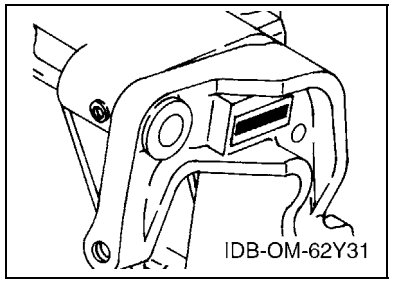

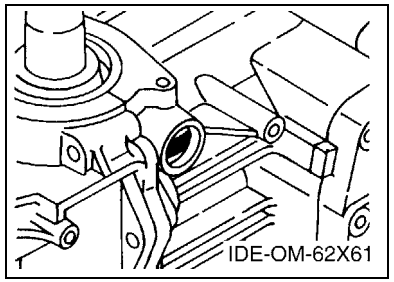

8. Applicable Engine Starting Serial No.

Model	Serial No.	Model	Serial No.
40V	6H4K-1014124	40Y	68PK-1001432

9. Applicable Colour Code

Abbreviation	Colour Name	Colour Code
DBNM2	DARK BLUISH GRAY METALLIC 2	004D

10. Quantity Column Information

Column No.	Name Of Q'ty Column	Applicable Model
1	ETO	40YETO
2	EO	40VEO
3	MHO	40VMHO

AVANT–PROPOS

Ce catalogue de pièces détachées concerne les pièces pour le(s) modèle(s) indiqué(s) sur la page de couverture. Lorsque vous commandez des pièces de rechange, veuillez vous référer à ce catalogue de pieces détachées et indiquer clairement les numéros et les noms des pièces détachées.

1. Les modifications ou ajouts ayant été effectués après la parution du catalogue de pièces détachées seront décrits dans les Bulletins d'information concernant les pièces détachées.
   Il est recommandé que vous apportiez les corrections nécessaires au catalogue des pièces détachées en vous référant aux Bulletins d'information.

2. Abréviations
   Dans ce catalogue, les abréviations suivantes sont utilisées:

   "UR" Utiliser le numéro de pièces spécifié.
   "UN" Utiliser autant que nécessaire.
   "AP" Pièces de substitution
   "LM" Fabrication locale (les pièces doivent être commandées localement.)
   "F#" N° de cadre (applicable au N° de série)
   "O/S" Surdimensionné

3. Nombre de pièces d'un assemblage
   - Les pièces fournies comme composants d'un assemblage sont précédées d'un point (.) de la manière indiquée ci–dessous.
   - Le chiffre apparaissant à la droite de chaque composant indique la quantité de pièces pour chaque unité d'assemblage.

N° PIECES	DESCRIPTION	QTE	REMARQUES
2F5–83310–60	ENS. CLIGNOTANT AVANT	2	
115–83311–60	.AMPOULE (6V–18W)	1	

4. Les couleurs concernant les graphiques sont indiquées dans la colonne "REMARQUES", comme indiqué ci–dessous.

N° PIECES	DESCRIPTION	QTE	REMARQUES
2N4–24110–00–X5	RESERVOIR A ESSENCE.	2	MXR
3J1–24240–10	.GRAPHIQUE	1	POUR MXR

5. Veuillez noter que les illustrations sont indiquées à titre de référence pour trouver les numéros de pièces, non pour être utilisées lors de l'assemblage. Lors de l'assemblage, veuillez utiliser le manuel d'entretien adéquat.

6. L'astérisque (*) placé devant un numéro de référence indique des éléments qui ont été modifiés après la première édition.

7. N° de série applicable

   N° de Série du moteur

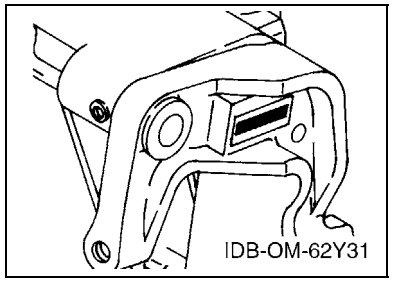

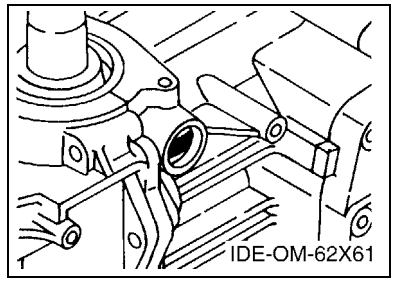

8. N° de série initial du moteur applicable

Modèle	N° de série	Modèle	N° de série
40V	6H4K-1014124	40Y	68PK-1001432

9. Code couleur applicable

Abréviation	Nom de la couleur	Code couleur
DBNM2	DARK BLUISH GRAY METALLIC 2	004D

10. Informations relatives à la colonne Quantité

N° de la colonne	Nom de la colonne Qté	Modèle applicable
1	ETO	40YETO
2	EO	40VEO
3	MHO	40VMHO

CONTENTS

SHEET1/2
TOP COWLING A4
CYLINDER & CRANKCASE A5
CRANKSHAFT & PISTON A7
INTAKE B1
CARBURETOR B3
OIL PUMP 1 ..... B6
OIL PUMP 2 ..... C1
FUEL C3
STARTER C5
GENERATOR C7
ELECTRICAL 1 ..... D1
ELECTRICAL 2 ..... D3
ELECTRICAL 3 ..... D5
STARTING MOTOR D6
BOTTOM COWLING E1
STEERING 1 ..... E3
STEERING 2 ..... E6
CONTROL E7
BRACKET 1 ..... F2
BRACKET 2 ..... F4
BRACKET 3 ..... F6

INDEX

NUMERICAL INDEX G1

SHEET2/2
BRACKET 4 ..... A4*
POWER TRIM & TILT ASSY 1 ..... A6*
POWER TRIM & TILT ASSY 2 ..... B2*
UPPER CASING B3*
LOWER CASING & DRIVE 1 ..... B4*
LOWER CASING & DRIVE 2 ..... C1*
FUEL TANK C3*
STEERING GUIDE C4*
REMOTE CONTROL BOX C5*
REMOTE CONTROL ASSY C6*
METER D2*
OPTIONAL PARTS D3*
REPAIR KIT 1 ..... D4*
REPAIR KIT 2 ..... D6*

INDEX

NUMERICAL INDEX G1*

TABLE DES MATIERES

Feuille1/2
CAPOT SUPERIEUR A4
CYLINDRE & CARTER A5
VILEBREQUIN & PISTON A7
ADMISSION B1
CARBURATEUR B3
POMPE A HUILE 1 ..... B6
POMPE A HUILE 2 ..... C1
CARBURANT C3
DEMARREUR C5
GENERATRICE C7
PARTIE ELECTRIQUE 1 ..... D1
PARTIE ELECTRIQUE 2 ..... D3
PARTIE ELECTRIQUE 3 ..... D5
DEMARREUR ELECTRIQUE D6
CAPOT INFERIEUR E1
DIRECTION 1 ..... E3
DIRECTION 2 ..... E6
COMMANDE E7
SUPPORT 1 ..... F2
SUPPORT 2 ..... F4
SUPPORT 3 ..... F6

INDEX

INDEX NUMERIQUE G1

Feuille2/2
SUPPORT 4 ..... A4*
PUISSANCE PARER ET INCLINER 1 ..... A6*
PUISSANCE PARER ET INCLINER 2 ..... B2*
FOURREAU B3*
BOITIER D'HELICE TRANSMISSION1 ..... B4*
BOITIER D'HELICE TRANSMISSION2 ..... C1*
RESERVOIR A CARBURANT C3*
FIXATION DE DIRECTION C4*
BOITIER DE COMMANDE A DISTANCE C5*
BOITIER DE COMMANDE A DISTANCE C6*
COMPTEUR D2*
PIECES OPTIONNELLES D3*
KITS DE REPARATION 1 ..... D4*
KITS DE REPARATION 2 ..... D6*

INDEX

INDEX NUMERIQUE G1*

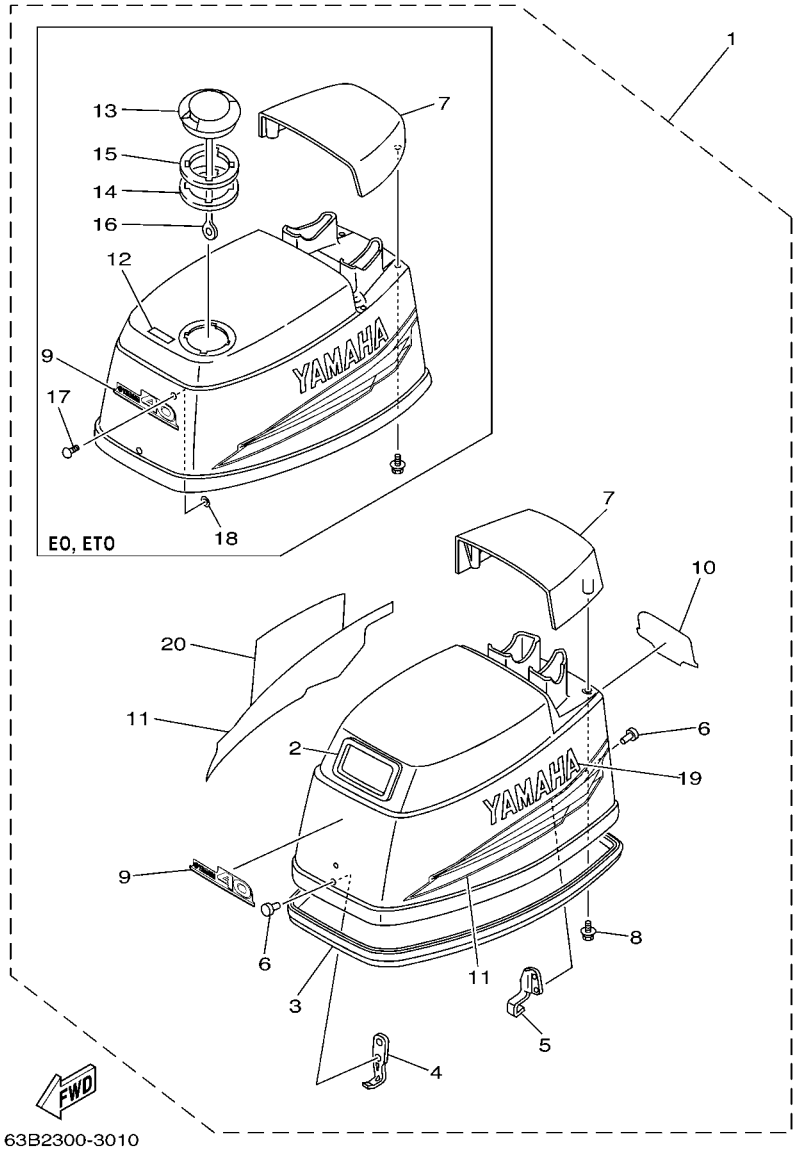

FIG. 1 TOP COWLING — CAPOT SUPERIEUR

REF. NO.	PART NO. N° PIECES	DESCRIPTION DESCRIPTION	ETO	EO	MHO			REMARKS REMARQUES
1	63D–42610–50–4D	TOP COWLING ASSY CAPOT (ENS.)	1	1				
	63D–42610–20–4D	TOP COWLING ASSY CAPOT (ENS.)			1			
2	6H4–15761–00	.SEAL, RUBBER 1 .JOINT CAOUTCHOUC 1			1			
3	6H4–42615–00	.SEAL .JOINT	1	1	1			
4	6H4–42651–00	.HOOK .CROCHET	1	1	1			
5	6H4–42652–00	.HOOK .CROCHET	1	1	1			
6	90266–04M01	.RIVET .RIVET	4	4	4			
7	6H4–42613–11–4D	.MOLDING, AIR DUCT .MANCHON A AIR	1	1				
	6H4–42613–01–4D	.MOLDING, AIR DUCT .MANCHON A AIR			1			
8	90119–06M99	.BOLT, WITH WASHER .BOULON, AVEC RONDELLE	4	4	4			
9	63D–42677–20	.GRAPHIC, FRONT .ADHESIF, AVANT	1	1	1			
10	63D–42678–11	.GRAPHIC, REAR .ADHESIF, ARRIERE	1	1	1			
11	63D–W0070–10	.GRAPHIC SET .JEU DIEMBLEMES	1	1	1			
12	63D–13436–40	.MARK .ADHESIF	1	1				
13	63D–2177H–00	.DISK CAP 2 .BOUCHON DE DISQUE 2	1	1				
14	6H3–21732–00	.SEAL 1 .JOINT 1	1	1				
15	6H3–21735–00	.SEAL 2 .JOINT 2	1	1				
16	6H1–42694–00	.BAND .COLLIER	1	1				
17	90338–05M03	.PLUG .PLOT	1	1				
18	90183–05M06	.NUT, SPRING .ECROU, RESSORT	1	1				
19	63D–42681–10	.MARK, COWLING .ADHESIF, CAPOT	1	1	1			
20	63D–42682–10	.MARK, COWLING .ADHESIF, CAPOT	1	1	1			

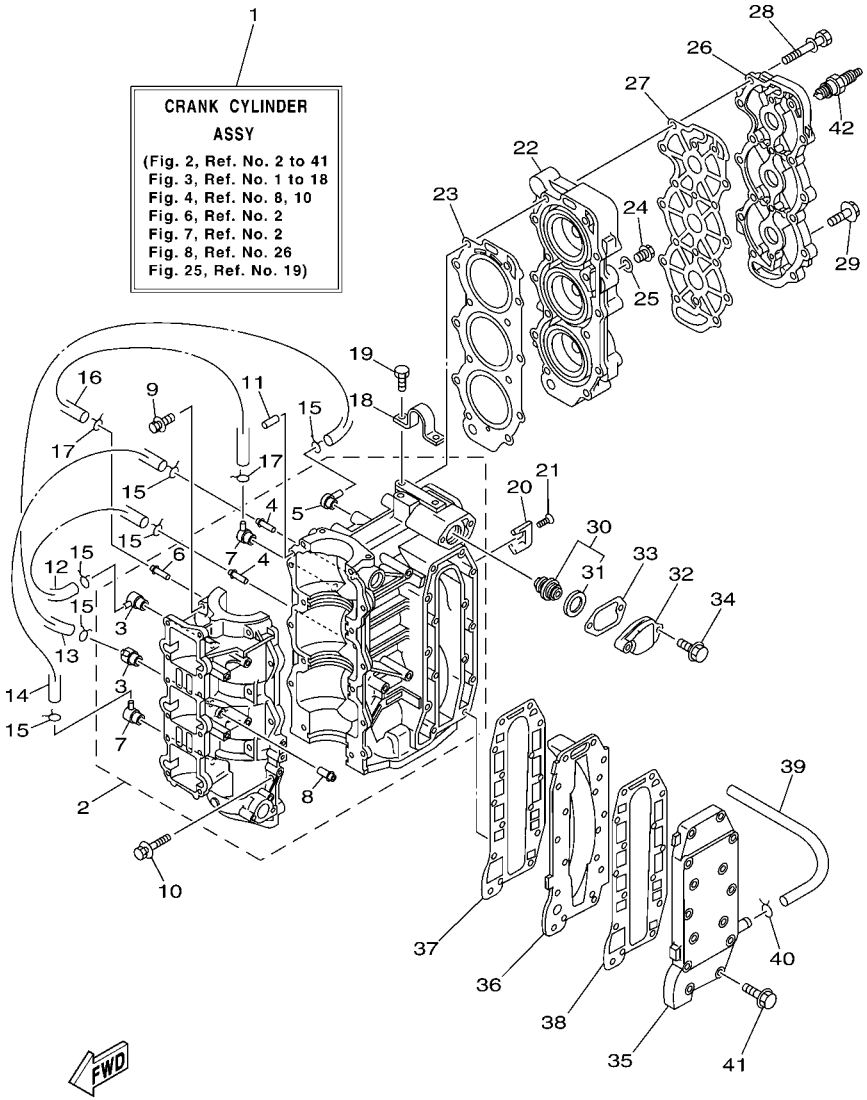

63B5300-E020

FIG. 2 CYLINDER & CRANKCASE CYLINDRE & CARTER

REF. NO.	PART NO. N° PIECES	DESCRIPTION DESCRIPTION	ETO	EO	MHO			REMARKS REMARQUES
1	63D–W0090–11–1S	CRANK CYLINDER ASSY EMBIELLAGE CYLINDRE (ENS.)	1	1				EO SPEC EO SPEC
	63D–W0090–31–1S	CRANK CYLINDER ASSY EMBIELLAGE CYLINDRE (ENS.)			1			MO SPEC MO SPEC
2	6H4–15100–13–1S	CRANKCASE ASSY CARTER DE MOTEUR COMPLET	1	1				EO SPEC EO SPEC
	6H4–15100–30–1S	CRANKCASE ASSY CARTER DE MOTEUR COMPLET			1			MO SPEC MO SPEC
3	650–11370–01	.CHECK VALVE ASSY .CLAPET (ENS.)	2	2	2			
4	624–14485–00	.PIPE, JOINT .DURITE	2	2	2			
5	6H4–11372–01	.NIPPLE, HOSE .RACCORD, TUYAU	1	1	1			
6	624–14485–00	.PIPE, JOINT .DURITE	1	1	1			
7	688–11370–01	.CHECK VALVE ASSY .CLAPET (ENS.)	2	2	2			
8	650–24378–00	.PIPE, JOINT 4 .DURITE RACCORDEMENT 3	1	1				EO SPEC EO SPEC
9	90119–08019	BOLT, WITH WASHER BOULON, AVEC RONDELLE	8	8	8			
10	90119–06M13	BOLT, WITH WASHER BOULON, AVEC RONDELLE	6	6	6			
11	93606–12019	PIN, DOWEL GOUPILLE	2	2	2			
12	90445–07M46	HOSE (L360) DURITE (L360)	1	1	1			
13	90445–07M27	HOSE (L310) DURITE (L310)	1	1	1			
14	90445–07M24	HOSE (L240) DURITE (L240)	1	1	1			
15	90467–06016	CLIP JONC	6	6	6			
16	90445–07MA3	HOSE (L200) DURITE (L200)	1	1	1			
17	90467–06016	CLIP JONC	2	2	2			
18	6H4–11119–01	HANGER, ENGINE ANNEAU, LEVAGE	1	1	1			
19	90101–06021	BOLT BOULON	2	2	2			
20	688–11325–00	ANODE ANODE	2	2	2			
21	98780–04016	SCREW, FLAT HEAD VIS A TETE FRAISEE	2	2	2			
22	63D–11111–00–1S	HEAD, CYLINDER 1 CULASSE	1	1	1			
23	63D–11181–A1	GASKET, CYLINDER HEAD 1 JOINT, DE CULASSE 1	1	1	1			
24	90340–14M00	PLUG, STRAIGHT SCREW PLOT, FILETE DROIT	1	1	1			
25	90430–14115	GASKET JOINT	1	1	1			

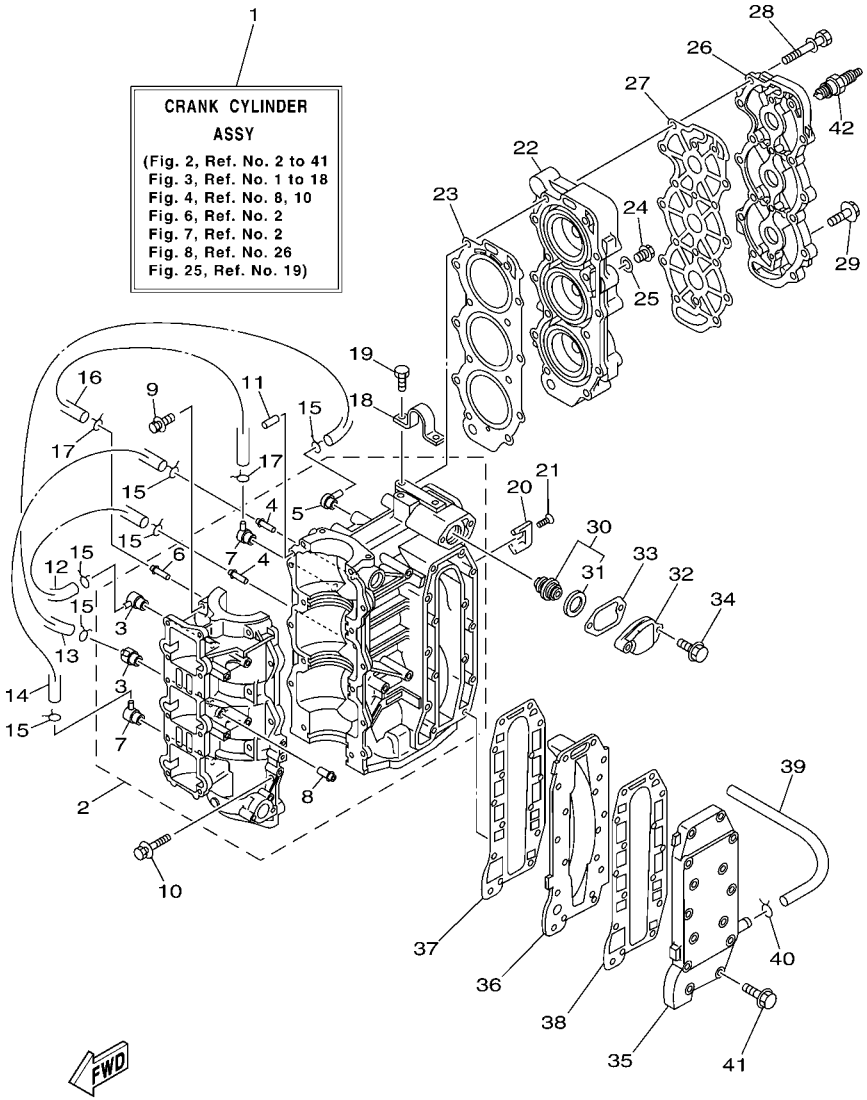

FIG. 2 CYLINDER & CRANKCASE CYLINDRE & CARTER

REF. NO.	PART NO. N° PIECES	DESCRIPTION DESCRIPTION	ETO	EO	MHO			REMARKS REMARQUES
26	63D–11191–00–1S	COVER, CYLINDER HEAD 1 COUVERCLE, CULASSE 1	1	1	1			
27	63D–11193–A0	GASKET, HEAD COVER 1 JOINT, COUVERCLE DE CULASSE 1	1	1	1			
28	90119–08015	BOLT, WITH WASHER BOULON, AVEC RONDELLE	14	14	14			
29	90119–06MA3	BOLT, WITH WASHER BOULON, AVEC RONDELLE	4	4	4			
30	6E5–12411–30	THERMOSTAT THERMOSTAT	1	1	1			
31	688–12412–00	.SEAL, THERMOSTAT .JOINT, THERMOSTAT	1	1	1			
32	6H4–12413–00–1S	COVER, THERMOSTAT COUVERCLE, THERMOSTAT	1	1	1			
33	6J8–12414–A0	GASKET, COVER JOINT, COUVERCLE	1	1	1			
34	90119–06MA3	BOLT, WITH WASHER BOULON, AVEC RONDELLE	2	2	2			
35	6H4–41113–00–1S	OUTER COVER, EXHAUST COUVERCLE, ECHAPPEMENT	1	1	1			
36	6H4–41111–00–1S	INNER COVER, EXHAUST PLAQUE, ECHAPPEMENT	1	1	1			
37	6H4–41112–A0	GASKET, EXHAUST INNER COVER JOINT, PLAQUE D'ECHAPPEMENT	1	1	1			
38	6H4–41114–A0	GASKET, EXHAUST OUTER COVER JOINT, COUVERCLE D'ECHAPPEMENT	1	1	1			
39	90445–09M37	HOSE (L240) DURITE (L240)	1	1	1			
40	90467–08004	CLIP JONC	1	1	1			
41	90119–06MA5	BOLT, WITH WASHER BOULON, AVEC RONDELLE	13	13	13			
42	94702–00271	PLUG, SPARK (NGK BR7HS-10) BOUGIE D'ALLUMAGE(NGK BR7HS-10		3	3			40V 40V
	94702–00247	PLUG, SPARK (NGK BR8HS-10) BOUGIE D'ALLUMAGE(NGK BR8HS-10	3					40Y 40Y

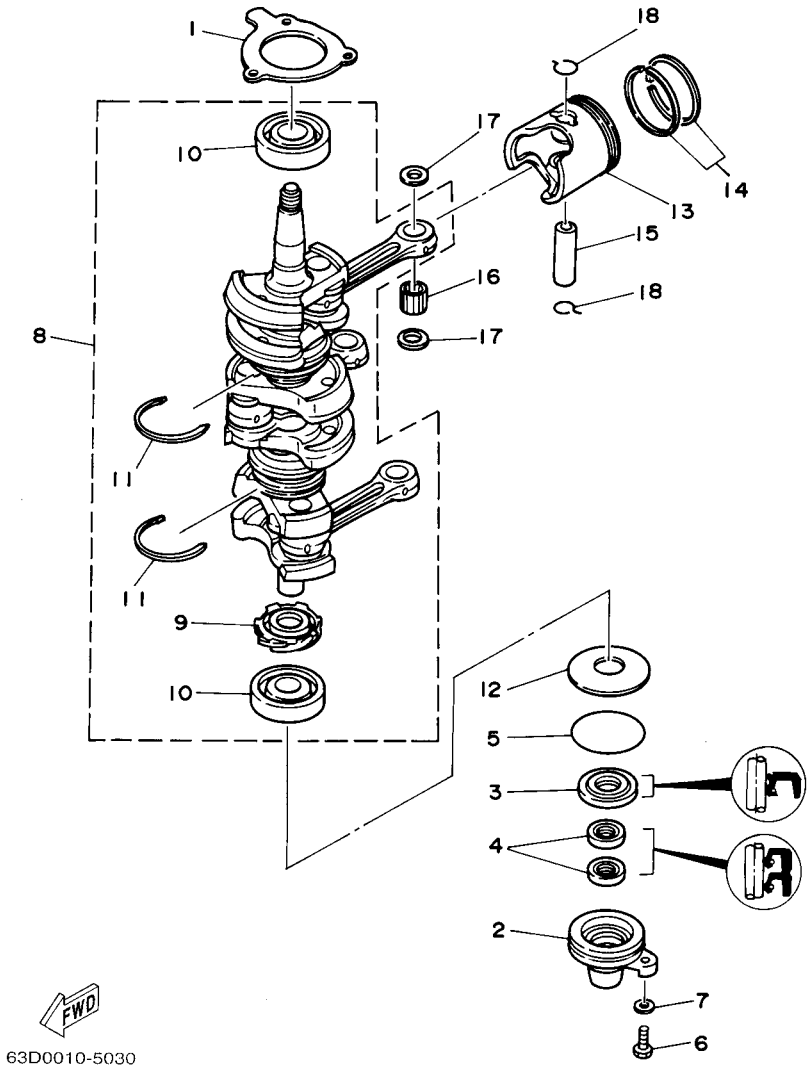

FIG. 3 CRANKSHAFT & PISTON VILEBREQUIN & PISTON

REF. NO.	PART NO. N° PIECES	DESCRIPTION DESCRIPTION	ETO	EO	MHO			REMARKS REMARQUES
1	6H4–15369–A1	GASKET, OIL SEAL HOUSING JOINT SPY DE LOGEMENT	1	1	1			
2	6H4–15396–03–5B	HOUSING, OIL SEAL LOGEMENT DE JOINT SPY	1	1	1			
3	93102–25M28	OIL SEAL JOINT SPY	1	1	1			
4	93104–16M01	OIL SEAL JOINT SPY	2	2	2			
5	93210–58M21	O-RING JOINT TORIQUE	1	1	1			
6	97095–06020	BOLT BOULON	1	1	1			
7	92995–06600	WASHER RONDELLE	1	1	1			
8	6H4–11400–14	CRANKSHAFT ASSY VILEBREQUIN COMPLET	1	1	1			
9	6H4–11536–00	.GEAR, DRIVE .ENGRENAGE, MENANT	1	1	1			
10	93306–305U8	.BEARING .ROULEMENT	2	2	2			
11	93440–62057	.CIRCLIP .CIRCLIP	2	2	2			
12	90201–50306	WASHER, PLATE RONDELLE, PLATE	1	1	1			
13	6H4–11631–01–95	PISTON (STD) PISTON (STD)	3	3	3			
	6H4–11635–01	PISTON (0.25MM O/S) PISTON (0.25MM O/S)	3	3	3			AP AP
	6H4–11636–01	PISTON (0.50MM O/S) PISTON (0.50MM O/S)	3	3	3			AP AP
14	63D–11603–00	PISTON RING SET (STD) JEU DE SEGMENTS (STD)	3	3	3			
	63D–11604–00	PISTON RING SET (0.25MM O/S) JEU DE SEGMENTS (0.25MM O/S)	3	3	3			AP AP
	63D–11605–00	PISTON RING SET (0.50MM O/S) JEU DE SEGMENTS (0.50MM O/S)	3	3	3			AP AP
15	648–11633–00	PIN, PISTON AXE, PISTON	3	3	3			
16	93602–20M02	PIN, DOWEL GOUJON	93	93	93			
17	6H4–11641–00	WASHER, PISTON PIN RONDELLE, AXE DE PISTON	6	6	6			
18	6H4–11634–01	CLIP, PISTON PIN AGRAFE, AXE DE PISTON	6	6	6			

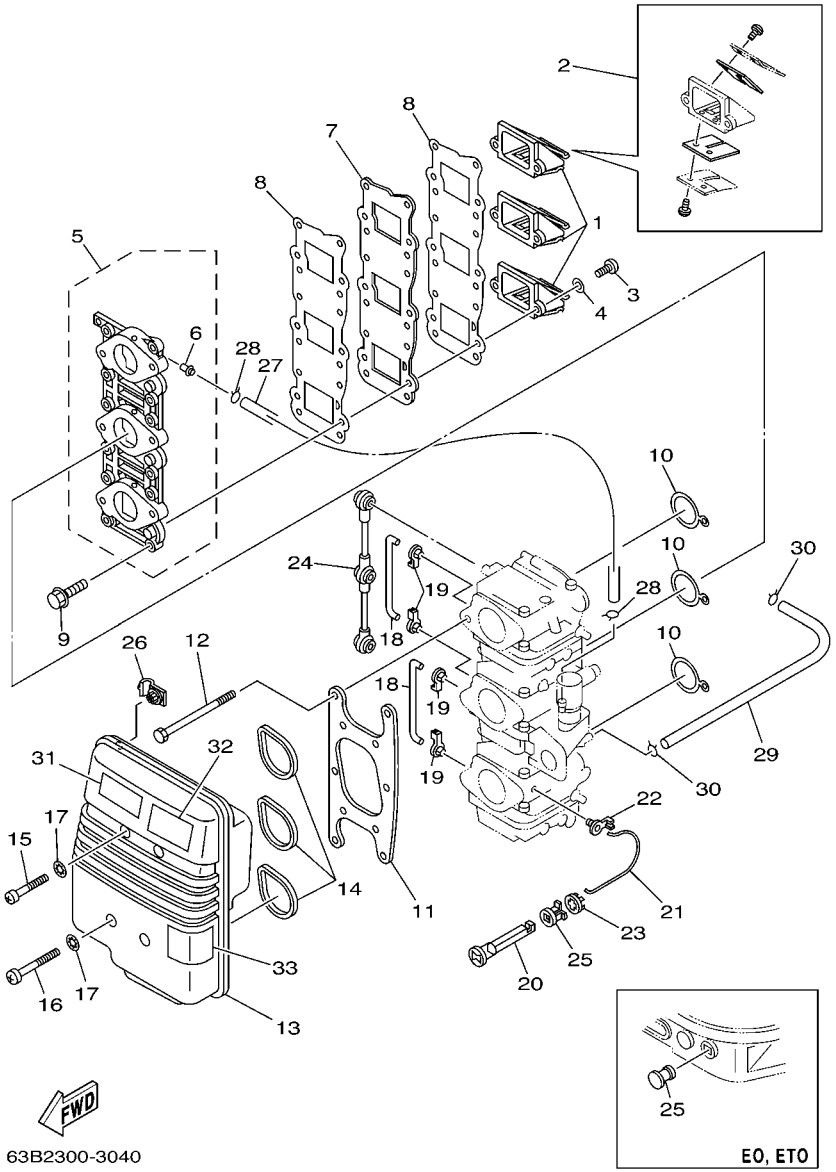

FIG. 4 INTAKE — ADMISSION

REF. NO.	PART NO. N° PIECES	DESCRIPTION DESCRIPTION	ETO	EO	MHO			REMARKS REMARQUES
1	6H5–13610–00	REED VALVE ASSY CLAPET COMPLET	3	3	3			
2	6H4–W0004–00	.REED SET .JEU DE CLAPETS	1	1	1			
3	97880–05014	SCREW, PAN HEAD VIS, TETE TRONCONIQUE	6	6	6			
4	92990–05600	WASHER, PLATE RONDELLE, PLATE	6	6	6			
5	6H4–13641–12–94	MANIFOLD 1 TUBULURE 1	1	1				
	6H4–13641–30–94	MANIFOLD 1 TUBULURE 1			1			
6	6H1–14485–00	.PIPE, JOINT .DURITE	4	4				
	6H1–14485–00	.PIPE, JOINT .DURITE			3			
7	6H4–13624–01–94	PLATE,REED VALVE PLAQUE DE CLAPET	1	1	1			
8	6H4–13621–A1	GASKET, VALVE SEAT JOINT, SIEGE DE CLAPET	2	2	2			
9	90119–06MA2	BOLT, WITH WASHER BOULON, AVEC RONDELLE	12	12	12			
10	6H4–14198–01	GASKET JOINT	3	3	3			
11	6H4–14406–00	HINGE PENTURE	1	1	1			
12	97095–06095	BOLT BOULON	6	6	6			
13	6H4–14431–02	SILENCER, INTAKE 1 SILENCIEUX, ADMISSION	1	1				
	6H4–14431–13	SILENCER, INTAKE 1 SILENCIEUX, ADMISSION			1			
14	6H3–14457–01	SEAL JOINT	3	3	3			
15	97885–06040	SCREW, PAN HEAD VIS, A ENCOCHE	2	2	2			
16	97885–06055	SCREW, PAN HEAD VIS, A ENCOCHE	2	2	2			
17	90209–06M05	WASHER RONDELLE	4	4	4			
18	6H4–41257–00	ROD, CHOKE 2 TRINGLE 2, STARTER			2			
19	661–41262–02	JOINT, CHOKE LEVER RACCORD, LEVIER DE STARTER			4			
20	6H4–41271–01	KNOB, CHOKE BOUTON DE STARTER			1			
21	6H4–41259–01	ROD, CHOKE 3 TRINGLE 3, STARTER			1			
22	6J8–41262–00	JOINT, CHOKE LEVER RACCORD, LEVIER DE STARTER			1			
23	6J8–41274–00	GROMMET 2 PASSE-FIL 2			1			
24	6H4–41217–01	ROD, ACCEL. LEVER TIGE, LEVIER ACCELERATION	1	1	1			

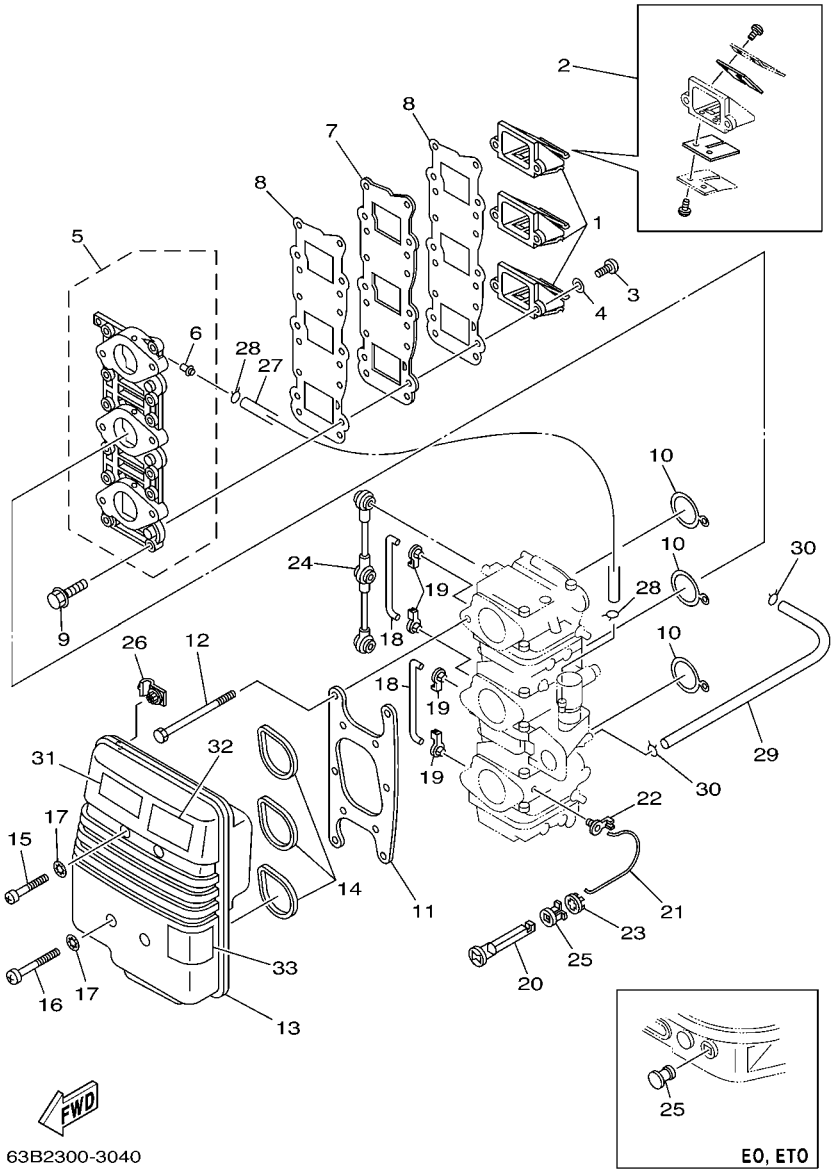

FIG. 4 INTAKE — ADMISSION

REF. NO.	PART NO. N° PIECES	DESCRIPTION DESCRIPTION	ETO	EO	MHO			REMARKS REMARQUES
25	6G1–42748–00	GROMMET PASSE-FIL	1	1				
	689–41273–00	GROMMET PASSE-FIL			1			
26	90464–06M19	CLAMP BRIDE			1			
27	90445–07MA5	HOSE (L150) DURITE (L150)	1	1				
28	90467–06016	CLIP JONC	2	2				
29	6H3–14349–00	PIPE DURITE	1	1				
30	90467–08004	CLIP JONC	2	2				
31	6A1–83625–41	MARK 5 ETIQUETTE 5	1	1	1			
32	6A1–83625–51	MARK 5 ETIQUETTE 5	1	1	1			
33	6H1–85711–60	MARK, CAUTION MAKER	1	1				

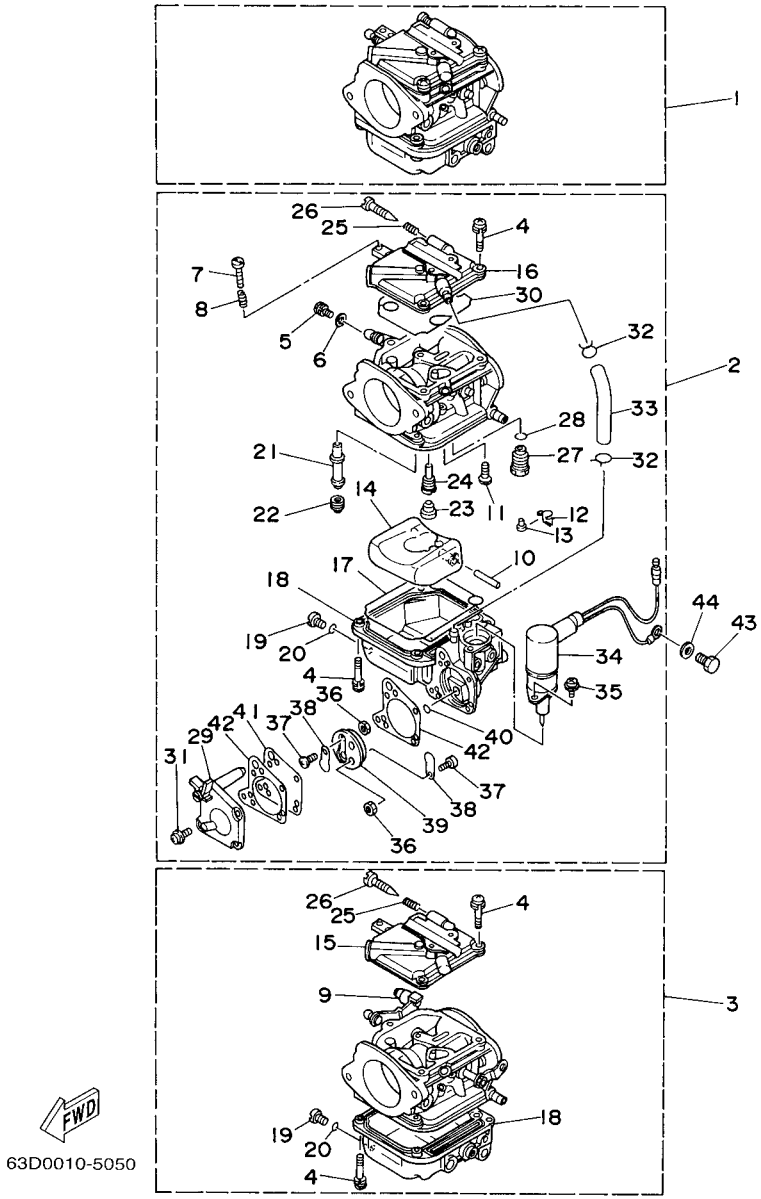

FIG. 5 CARBURETOR CARBURATEUR

REF. NO.	PART NO. N° PIECES	DESCRIPTION DESCRIPTION	ETO	EO	MHO			REMARKS REMARQUES
1	63D–14301–00	CARBURETOR ASSY 1 CARBURATEUR COMPLET 1		1				40V 40V
	63B–14301–00	CARBURETOR ASSY 1 CARBURATEUR COMPLET 1			1			40V 40V
	62X–14301–00	CARBURETOR ASSY 1 CARBURATEUR COMPLET 1	1					40Y 40Y
2	63D–14302–00	CARBURETOR ASSY 2 CARBURATEUR COMPLET 2		1				40V 40V
	63B–14302–00	CARBURETOR ASSY 2 CARBURATEUR COMPLET 2			1			40V 40V
	62X–14302–00	CARBURETOR ASSY 2 CARBURATEUR COMPLET 2	1					40Y 40Y
3	63D–14303–00	CARBURETOR ASSY 3 CARBURATEUR COMPLET 3		1				40V 40V
	63B–14303–00	CARBURETOR ASSY 3 CARBURATEUR COMPLET 3			1			40V 40V
	62X–14303–00	CARBURETOR ASSY 3 CARBURATEUR COMPLET 3	1					40Y 40Y
4	97980–04114	.SCREW, WITH WASHER .VIS, AVEC RONDELLE	21	21	21			
5	6K5–14592–00	.SCREW .VIS	3	3	3			
6	90201–05652	.WASHER, PLATE .RONDELLE, PLATE	3	3	3			
7	63V–14523–00	.SCREW, STOP .VIS, BUTEE	1	1	1			#2 #2
8	90501–10326	.SPRING, COMPRESSION .RESSORT, COMPRESSION	1	1	1			#2 #2
9	6H2–14578–00	.COLLAR .COLLERETTE	1	1	1			#3 #3
10	6H4–14548–00	.PIN, FLOAT ARM .AXE, BRAS DE FLOTTEUR	3	3	3			
11	98580–04008	.SCREW, PAN HEAD .VIS	3	3	3			
12	663–14159–00	.CLIP .JONC	3	3	3			
13	676–14186–00	.PIN, FLOAT .AXE, FLOTTEUR	3	3	3			
14	6H4–14985–01	.FLOAT .FLOTTEUR	3	3	3			
15	6H4–14146–10	.PLATE .PLAQUE	2	2	2			#1,3 #1,3
16	6H3–14146–10	.PLATE .PLAQUE	1	1				#2 #2
	6H4–14146–00	.PLATE .PLAQUE			1			#2 #2
17	6H4–14984–00	.GASKET, FLOAT CHAMBER .JOINT, CUVE DE FLOTTEUR	3	3	3			
18	6H4–14980–00	.BODY, FLOAT CHAMBER .CORPS, CUVE DE FLOTTEUR	2	2				#1,3 #1,3
	6H3–14980–10	.BODY, FLOAT CHAMBER .CORPS, CUVE DE FLOTTEUR	1	1				#2 #2
	6H4–14980–00	.BODY, FLOAT CHAMBER .CORPS, CUVE DE FLOTTEUR			3			

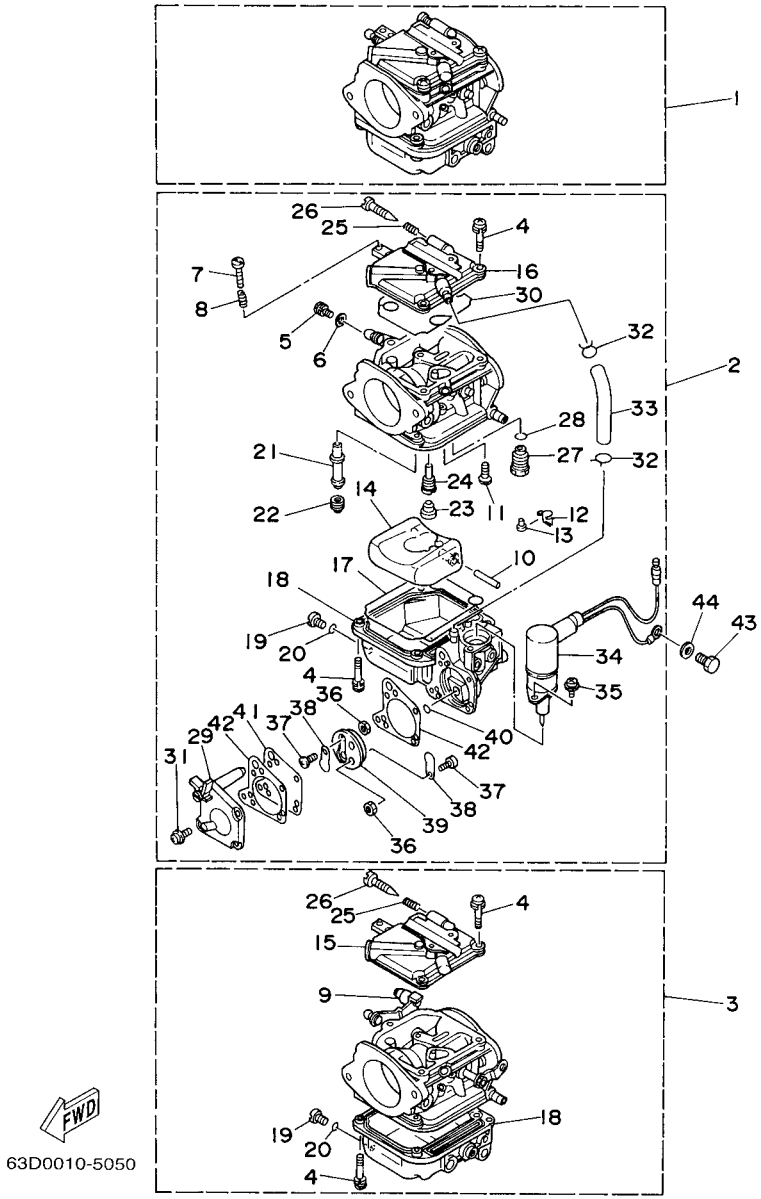

FIG. 5 CARBURETOR CARBURATEUR

REF. NO.	PART NO. N° PIECES	DESCRIPTION DESCRIPTION	ETO	EO	MHO			REMARKS REMARQUES
19	6H3–14992–00	.SCREW, DRAIN .BOUCHON, PURGE	3	3	3			
20	93210–04230	.O-RING .JOINT TORIQUE	3	3	3			
21	63D–14947–00	.JET, NEEDLE .GICLEUR DE STARTER		3	3			40V 40V
	62X–14947–00	.JET, NEEDLE .GICLEUR DE STARTER	3					40Y 40Y
22	676–14943–30	.JET, MAIN (#115) .GICLEUR, PRINCIPAL (#115)		2	2			40V-#1,3 40V-#1,3
	63D–14943–81	.JET, MAIN (#118) .GICLEUR, PRINCIPAL (#118)		1	1			40V-#2 40V-#2
	676–14943–33	.JET, MAIN (#130) .GICLEUR, PRINCIPAL (#130)	3					40Y 40Y
23	676–14966–00	.CAP .CAPUCHON	3	3	3			
24	6H4–14948–11	.JET (#60) .GICLEUR (#60)		3	3			40V 40V
	6H4–14948–12	.JET (#62) .GICLEUR (#62)	3					40Y 40Y
25	679–14555–00	.SPRING .RESSORT	3	3	3			
26	692–14923–00	.SCREW, PILOT .VIS, RALENTI	3	3	3			
27	6H4–14590–01	.NEEDLE VALVE ASSY .POINTEAU	3	3	3			
28	93210–04228	.O-RING .JOINT TORIQUE	3	3	3			
29	6H3–24452–10	.COVER .COUVERCLE	1	1				#2 #2
30	6H4–14147–00	.O-RING .JOINT TORIQUE	3	3	3			
31	6H4–14567–00	.SCREW .VIS	4	4				#2 #2
32	6H3–14137–00	.CLIP .JONC	2	2				#2 #2
33	6H3–14349–00	.PIPE .DURITE	1	1				#2 #2
34	63D–14380–00	.PRIME STARTER ASSY .STARTER AUTOMATIQUE	1	1				#2 #2
35	97803–04010	.SCREW, PAN HEAD .VIS, CRUCIFORME	2	2				#2 #2
36	95380–03600	.NUT .ECROU	2	2				#2 #2
37	98980–03006	.SCREW, BIND .VIS, DE PRESSION	2	2				#2 #2
38	6L5–24421–00	.VALVE, CHECK .SOUPAPE, RETENUE	2	2				#2 #2
39	6H4–24413–00	.BODY 2 .CORPS 2	1	1				#2 #2
40	6H4–24486–00	.O-RING .JOINT TORIQUE	1	1				#2 #2
41	6H3–24411–10	.DIAPHRAGM .DIAPHRAGME	1	1				#2 #2

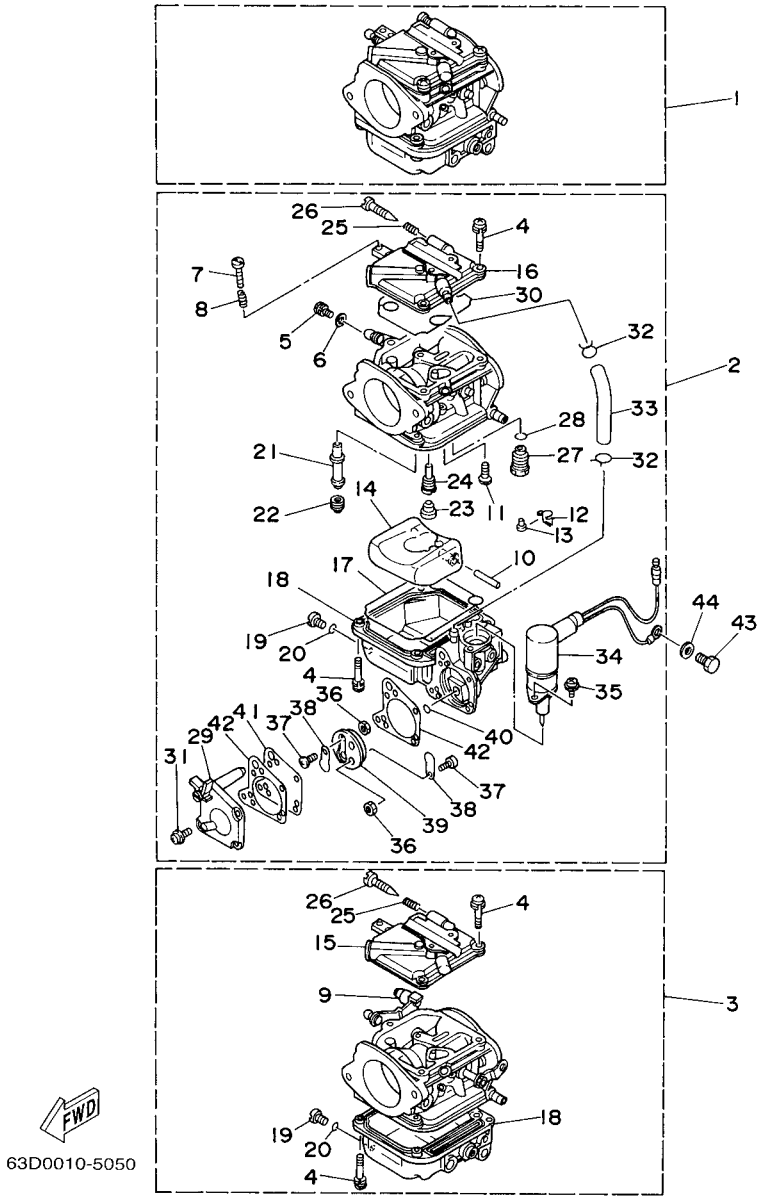

FIG. 5 CARBURETOR CARBURATEUR

REF. NO.	PART NO. N° PIECES	DESCRIPTION DESCRIPTION	ETO	EO	MHO			REMARKS REMARQUES
42	6H3–24434–10	.GASKET, BODY .JOINT, CORPS	2	2				#2 #2
43	97013–06012	BOLT BOULON	1	1				
44	92903–06600	WASHER, PLATE RONDELLE, PLATE	1	1				

FIG. 6 OIL PUMP 1 — POMPE A HUILE 1

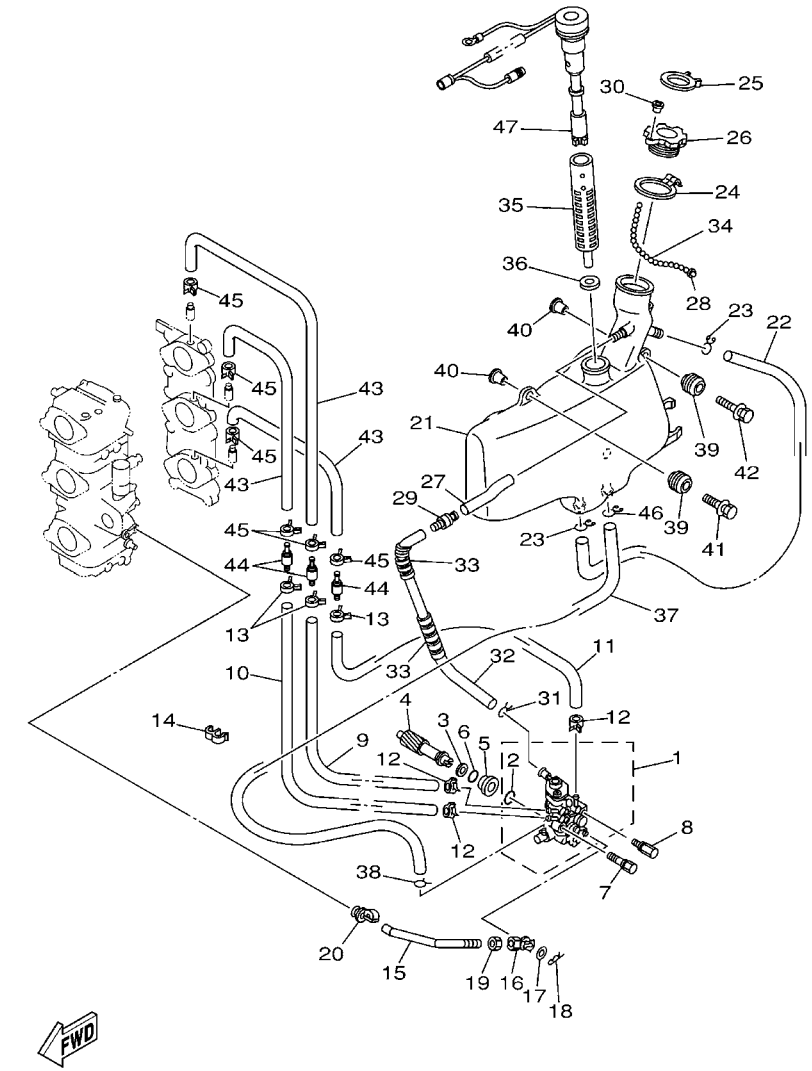

63B0100-1060

REF. NO.	PART NO. N° PIECES	DESCRIPTION DESCRIPTION	ETO	EO	MHO			REMARKS REMARQUES
1	63D–13200–00	OIL INJECTION PUMP ASSY POMPE A HUILE COMPLET			1			
2	93210–19MA7	.O-RING .JOINT TORIQUE			1			
3	90201–08M93	WASHER, PLATE RONDELLE, PLATE			1			
4	6H4–11537–01	GEAR, DRIVEN PIGNON SECONDAIRE			1			
5	6H1–13117–01	COLLAR, DISTANCE ENTRETOISE			1			
6	93210–13M04	O-RING JOINT TORIQUE			1			
7	90109–06M39	BOLT BOULON			1			
8	90109–06M40	BOLT BOULON			1			
9	90445–07M44	HOSE (L250) DURITE (L250)			1			
10	90445–07M23	HOSE (L408) DURITE (L408)			1			
11	90445–07MA6	HOSE (L90) DURITE (L90)			1			
12	90468–07M02	CLIP JONC			3			
13	90468–07M02	CLIP JONC			3			
14	90464–07M20	CLAMP BRIDE			1			
15	6H4–41241–01	ROD, LINK BIELLETTE			1			
16	6H1–41237–00	JOINT, LINK RACCORD			1			
17	90202–05088	WASHER, PLATE RONDELLE, PLATE			1			
18	90468–05M03	CLIP JONC			1			
19	95380–05600	NUT ECROU			1			
20	6E9–41237–00	JOINT, LINK RACCORD			1			
21	63D–21707–10	OIL TANK COMP. RESERVOIR A PETROLE COMP.			1			
22	90445–11M15	HOSE (L360) DURITE (L360)			1			
23	90467–11M08	CLIP JONC			2			
24	63D–2175R–00	HOOK, BAND CROCHET, BANDE			1			
25	63D–2176M–00	HOOK CROCHET			1			
26	6H4–21770–00	OIL TANK CAP ASSY CABOCHON DE RESERVOIR A HUILE			1			
27	90445–11M23	HOSE (L85) DURITE (L85)			1			

FIG. 6 OIL PUMP 1 POMPE A HUILE 1

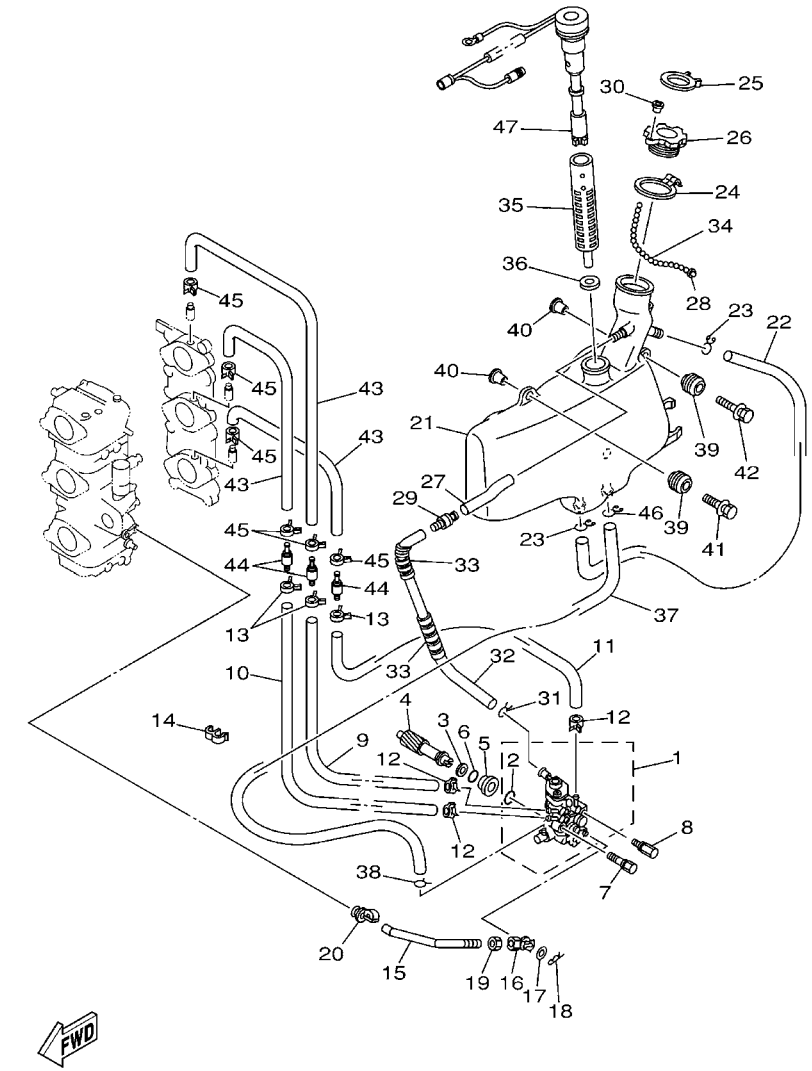

63B0100-1060

REF. NO.	PART NO. N° PIECES	DESCRIPTION DESCRIPTION	ETO	EO	MHO			REMARKS REMARQUES
28	6H4–21757–00	WASHER, SPECIAL 1 RONDELLE, SPECIALE 1			1			
29	63D–21744–00	BREATHER RENIFLARD			1			
30	6H4–24634–00	HOOK, CHAIN BALL ATTACHE			1			
31	90467–10M04	CLIP JONC			1			
32	90445–11M17	HOSE (L300) DURITE (L300)			1			
33	90446–10M01	HOSE (L60) DURITE (L60)			2			
34	6H4–24633–00	CHAIN, BALL CHANE DE BALLE			1			
35	6J8–13411–00	STRAINER, OIL FILTRE, HUILE			1			
36	6J8–13414–00	GASKET, STRAINER COVER JOINT, COUVERCLE DE FILTRE			1			
37	6L2–13416–00	PIPE, OIL 1 DURITE A HUILE			1			
38	90467–08004	CLIP JONC			1			
39	6A0–82317–00	DAMPER, IGNITION COIL AMORTISSEUR, BOBINE D'ALLUM			3			
40	90387–06119	COLLAR COLLERETTE			3			
41	90119–06M65	BOLT, WITH WASHER BOULON, AVEC RONDELLE			2			
42	90119–06M67	BOLT, WITH WASHER BOULON, AVEC RONDELLE			1			
43	90445–07M87	HOSE (L110) DURITE (L110)			3			
44	6E9–13183–70	VALVE, CHECK CLAPET ANTI RETOUR			3			
45	90468–07M02	CLIP JONC			6			
46	90467–11M08	CLIP JONC			1			
47	63D–85720–10	OIL LEVEL GAUGE ASSY JAUGE A HUILE CPLT			1			

FIG. 7 OIL PUMP 2 — POMPE A HUILE 2

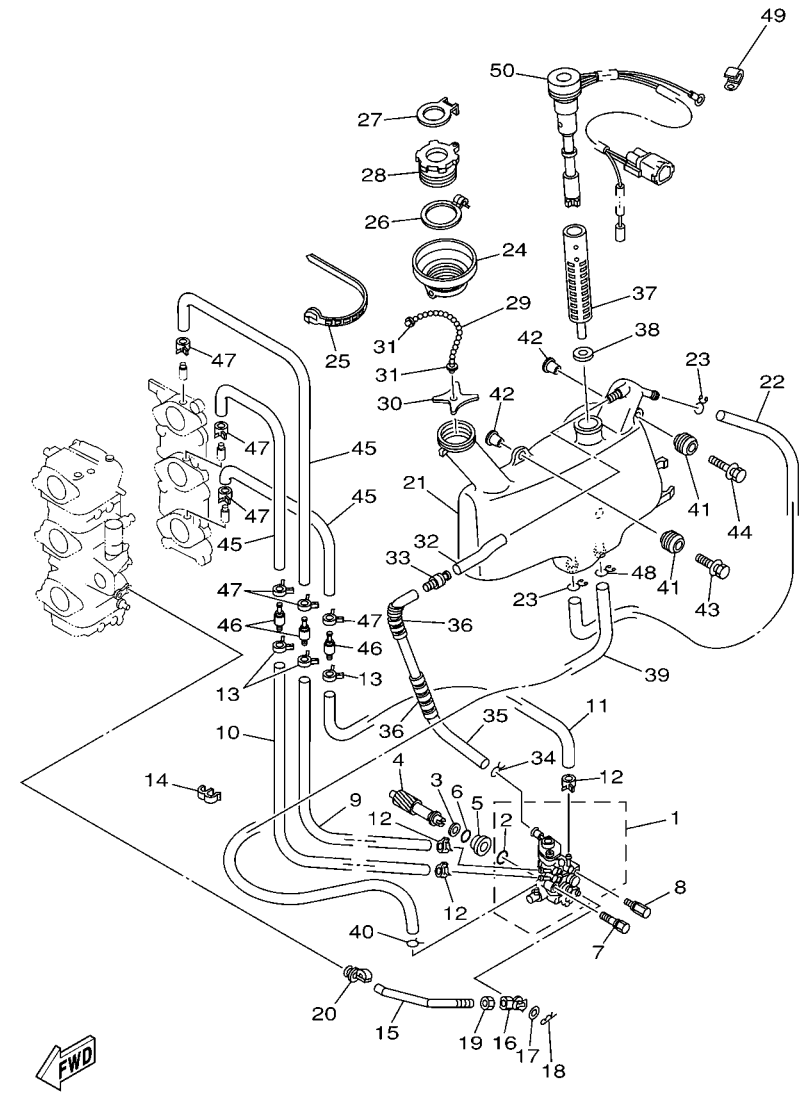

REF. NO.	PART NO. N° PIECES	DESCRIPTION DESCRIPTION	ETO	EO	MHO			REMARKS REMARQUES
1	63D–13200–00	OIL INJECTION PUMP ASSY POMPE A HUILE COMPLET	1	1				
2	93210–19MA7	.O-RING .JOINT TORIQUE	1	1				
3	90201–08M93	WASHER, PLATE RONDELLE, PLATE	1	1				
4	6H4–11537–01	GEAR, DRIVEN PIGNON SECONDAIRE	1	1				
5	6H1–13117–01	COLLAR, DISTANCE ENTRETOISE	1	1				
6	93210–13M04	O-RING JOINT TORIQUE	1	1				
7	90109–06M39	BOLT BOULON	1	1				
8	90109–06M40	BOLT BOULON	1	1				
9	90445–07M44	HOSE (L250) DURITE (L250)	1	1				
10	90445–07M23	HOSE (L408) DURITE (L408)	1	1				
11	90445–07MA6	HOSE (L90) DURITE (L90)	1	1				
12	90468–07M02	CLIP JONC	3	3				
13	90468–07M02	CLIP JONC	3	3				
14	90464–07M20	CLAMP BRIDE	1	1				
15	6H4–41241–01	ROD, LINK BIELLETTE	1	1				
16	6H1–41237–00	JOINT, LINK RACCORD	1	1				
17	90202–05088	WASHER, PLATE RONDELLE, PLATE	1	1				
18	90468–05M03	CLIP JONC	1	1				
19	95380–05600	NUT ECROU	1	1				
20	6E9–41237–00	JOINT, LINK RACCORD	1	1				
21	63D–21707–00	OIL TANK COMP. RESERVOIR A PETROLE COMP.	1	1				
22	90445–11M15	HOSE (L360) DURITE (L360)	1	1				
23	90467–11M08	CLIP JONC	2	2				
24	6H4–21752–00	TUBE, FILLER 1 DURITE	1	1				
25	90465–13M30	CLAMP BRIDE	1	1				
26	63D–2175R–00	HOOK, BAND CROCHET, BANDE	1	1				
27	63D–2176M–00	HOOK CROCHET	1	1				

FIG. 7 OIL PUMP 2 — POMPE A HUILE 2

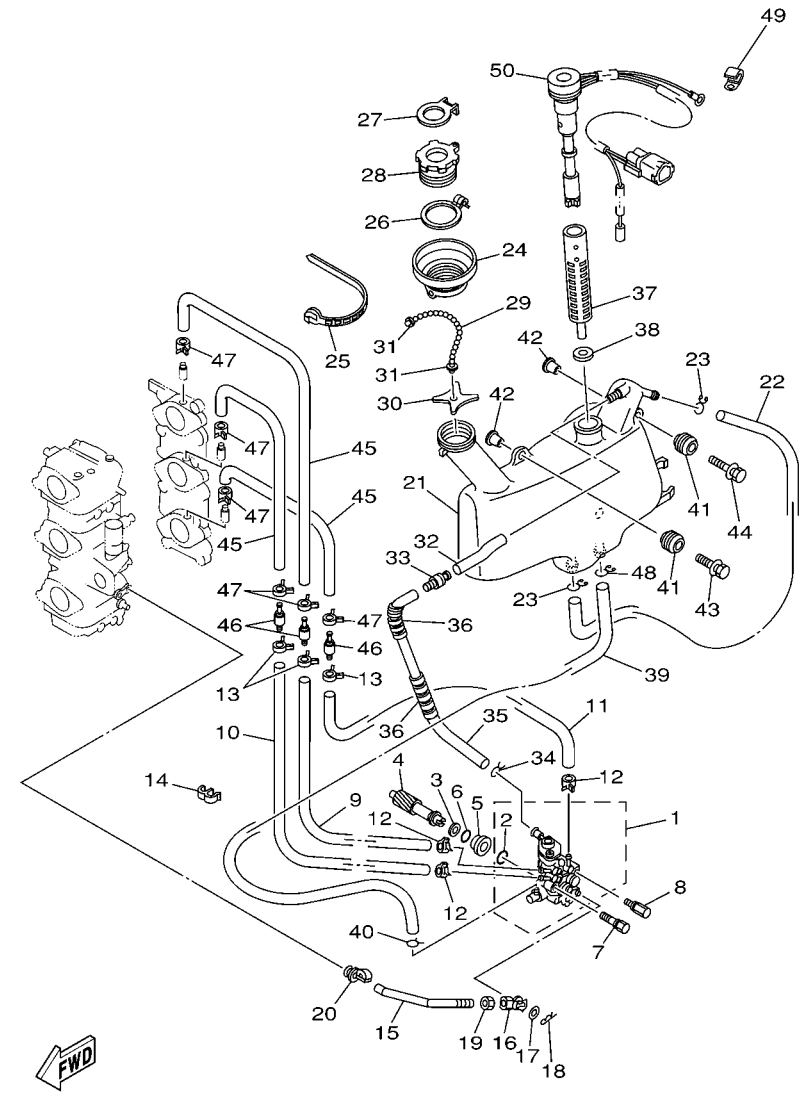

REF. NO.	PART NO. N° PIECES	DESCRIPTION DESCRIPTION	ETO	EO	MHO			REMARKS REMARQUES
28	6H4–21770–00	OIL TANK CAP ASSY CABOCHON DE RESERVOIR A HUILE	1	1				
29	6H5–24633–00	CHAIN, BALL CHANE DE BALLE	1	1				
30	6J8–21758–00	WASHER, SPECIAL 2 RONDELLE, SPECIALE 2	1	1				
31	6H1–21757–00	WASHER, SPECIAL 1 RONDELLE, SPECIALE 1	2	2				
32	90445–11M23	HOSE (L85) DURITE (L85)	1	1				
33	63D–21744–00	BREATHER RENIFLARD	1	1				
34	90467–10M04	CLIP JONC	1	1				
35	90445–11M17	HOSE (L300) DURITE (L300)	1	1				
36	90446–10M01	HOSE (L60) DURITE (L60)	2	2				
37	6J8–13411–00	STRAINER, OIL FILTRE, HUILE	1	1				
38	6J8–13414–00	GASKET, STRAINER COVER JOINT, COUVERCLE DE FILTRE	1	1				
39	6L2–13416–00	PIPE, OIL 1 DURITE A HUILE	1	1				
40	90467–08004	CLIP JONC	1	1				
41	6A0–82317–00	DAMPER, IGNITION COIL AMORTISSEUR, BOBINE D'ALLUM	3	3				
42	90387–06119	COLLAR COLLERETTE	3	3				
43	90119–06M65	BOLT, WITH WASHER BOULON, AVEC RONDELLE	2	2				
44	90119–06M67	BOLT, WITH WASHER BOULON, AVEC RONDELLE	1	1				
45	90445–07M87	HOSE (L110) DURITE (L110)	3	3				
46	6E9–13183–70	VALVE, CHECK CLAPET ANTI RETOUR	3	3				
47	90468–07M02	CLIP JONC	6	6				
48	90467–11M08	CLIP JONC	1	1				
49	90465–06M86	CLAMP BRIDE	1	1				
50	63D–85720–00	OIL LEVEL GAUGE ASSY JAUGE A HUILE CPLT	1	1				

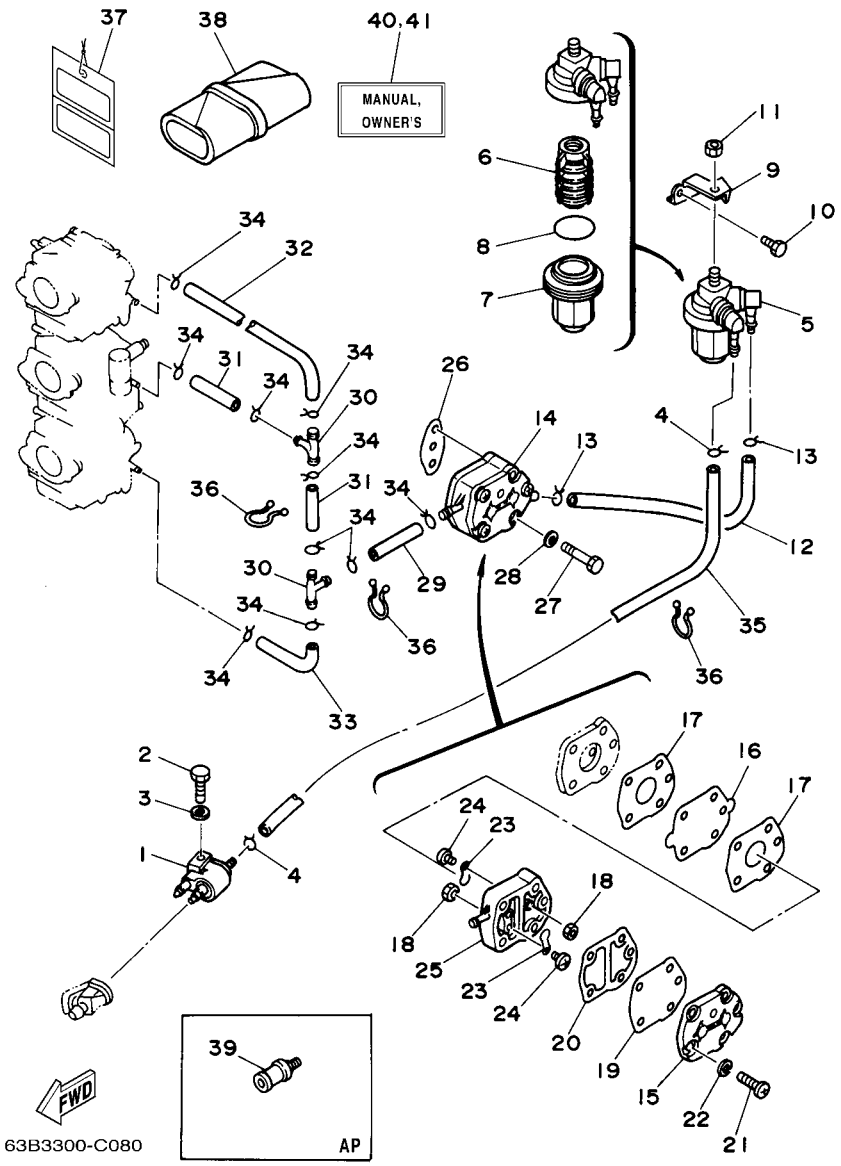

FIG. 8 FUEL CARBURANT

REF. NO.	PART NO. N° PIECES	DESCRIPTION DESCRIPTION	ETO	EO	MHO			REMARKS REMARQUES
1	6G1–24304–02	FUEL PIPE JOINT COMP. 1 DURITE RACCORDEMT. A ESSENCE	1	1	1			
2	97095–06025	BOLT BOULON	1	1	1			
3	92995–06600	WASHER RONDELLE	1	1	1			
4	90467–08004	CLIP JONC	2	2	2			
5	61N–24560–00	FILTER ASSY ENS FILTRE	1	1	1			
6	61N–24563–00	.ELEMENT, FILTER .ELEMENT, FILTRE	1	1	1			
7	61N–24521–00	.CUP, FILTER .CUVETTE, FILTRE	1	1	1			
8	93210–32738	.O-RING .JOINT TORIQUE	1	1	1			
9	6H4–24566–02	BRACKET, FILTER SUPPORT, FILTRE	1	1	1			
10	97013–06014	BOLT BOULON	1	1	1			
11	95380–08600	NUT ECROU	1	1	1			
12	6H4–24314–00	PIPE 4 DURITE 4	1	1	1			
13	90467–08004	CLIP JONC	2	2	2			
14	692–24410–00	FUEL PUMP ASSY POMPE A ESSENCE	1	1	1			
15	6A0–24413–00	.BODY 2 .CORPS 2	1	1	1			
16	692–24411–00	.DIAPHRAGM .DIAPHRAGME	1	1	1			
17	648–24434–01	.GASKET, BODY .JOINT, CORPS	2	2	2			
18	95380–03600	.NUT .ECROU	2	2	2			
19	663–24411–00	.DIAPHRAGM .DIAPHRAGME	1	1	1			
20	648–24435–02	.GASKET, BODY 2 .JOINT, CORPS 2	1	1	1			
21	98503–05028	.SCREW, PAN HEAD .VIS	3	3	3			
22	92990–05100	.WASHER, SPRING .RONDELLE, GROWER	3	3	3			
23	6A0–24421–01	.VALVE, CHECK .SOUPAPE, RETENUE	2	2	2			
24	6A0–14325–00	.SCREW, PAN HEAD .VIS TETE CONIQUE	2	2	2			
25	6A0–24412–02	.BODY 1 .CORPS 1	1	1	1			
26	650–24431–A0	GASKET, FUEL PUMP 1 JOINT 1 DE POMPE A ESSENCE	1	1	1			
27	97095–06040	BOLT BOULON	2	2	2			

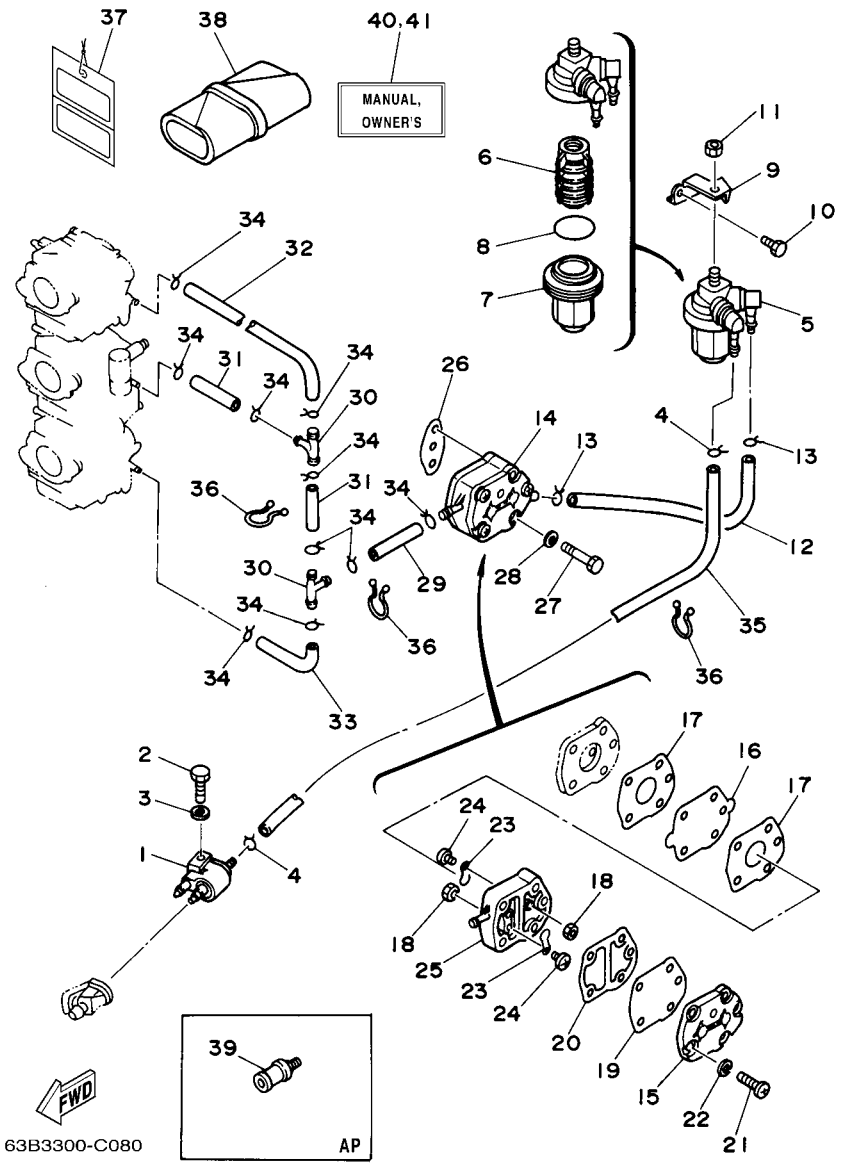

FIG. 8 FUEL CARBURANT

REF. NO.	PART NO. N° PIECES	DESCRIPTION DESCRIPTION	ETO	EO	MHO			REMARKS REMARQUES
28	92995–06600	WASHER RONDELLE	2	2	2			
29	90445–09063	HOSE (L80) DURITE (L80)	1	1	1			
30	688–24378–00	PIPE, JOINT 3 DURITE RACCORDEMENT 3	2	2	2			
31	90445–09057	HOSE (L45) DURITE (L45)	2	2	2			
32	6H4–24313–00	PIPE 3 DURITE 3	1	1	1			
33	6H4–24312–00	PIPE 2 DURITE 2	1	1	1			
34	90467–08004	CLIP JONC	10	10	10			
35	6H4–24311–00	PIPE, FUEL 1 DURITE A ESSENCE	1	1	1			
36	90464–15M11	CLAMP BRIDE	3	3	3			
37	61H–2819R–31	TAG, WARNING ETIQUETTE, AVERTISSEMENT	1	1	1			
38	656–W2810–02	TOOL KIT TROUSSE A OUTILS	1	1	1			
39	6E0–28193–00–94	PLUG, WATER CHECK BOUCHON, CONTROLE D'EAU	1	1	1			AP D:12.5MM AP D:12.5MM
40	63B–28199–7C–E0	MANUAL,OWNER'S MANUEL D'UTILISATION	1	1	1			UR (E) UR (E)
	63B–28199–7C–F0	MANUAL,OWNER'S MANUEL D'UTILISATION	1	1	1			UR (F) UR (F)
	63B–28199–7C–S0	MANUAL,OWNER'S MANUEL D'UTILISATION	1	1	1			UR (ES) UR (ES)
	63B–28199–7C–G0	MANUAL,OWNER'S MANUEL D'UTILISATION	1	1	1			UR (D) UR (D)
	63B–28199–7C–D0	MANUAL,OWNER'S MANUEL D'UTILISATION	1	1	1			UR (NL) UR (NL)
	63B–28199–7C–H0	MANUAL,OWNER'S MANUEL D'UTILISATION	1	1	1			UR (I) UR (I)
41	63B–28199–8C–K0	MANUAL,OWNER'S MANUEL D'UTILISATION	1	1	1			UR (DK) UR (DK)
	63B–28199–8C–R0	MANUAL,OWNER'S MANUEL D'UTILISATION	1	1	1			UR (GR) UR (GR)
	63B–28199–8C–P0	MANUAL,OWNER'S MANUEL D'UTILISATION	1	1	1			UR (P) UR (P)
	63B–28199–8C–N0	MANUAL,OWNER'S MANUEL D'UTILISATION	1	1	1			UR (N) UR (N)
	63B–28199–8C–M0	MANUAL,OWNER'S MANUEL D'UTILISATION	1	1	1			UR (S) UR (S)
	63B–28199–8C–L0	MANUAL,OWNER'S MANUEL D'UTILISATION	1	1	1			UR (SF) UR (SF)

FIG. 9 STARTER DEMARREUR

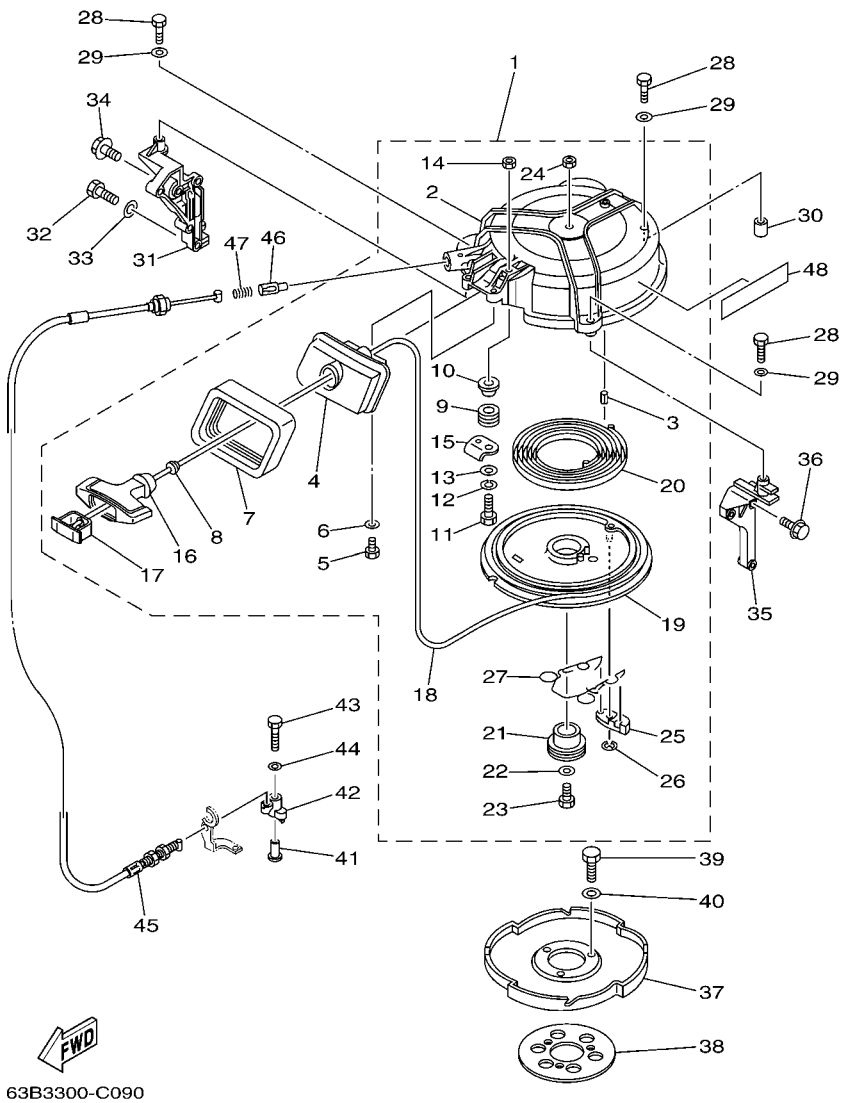

*1:CUT FROM 50M ROLLS,PART NO.90890-44373,CUTTING LENGTH 2.095M

*1:A PRELEVER SUR BOBINE 50M ,REFERENCE 90890-44373,
LONGUEUR DE COUPE 2.095M

REF. NO.	PART NO. N° PIECES	DESCRIPTION DESCRIPTION	ETO	EO	MHO			REMARKS REMARQUES
1	6H4–15710–04–4D	STARTER ASSY DEMARREUR COMPLET			1			
2	6H4–15711–02–94	.CASE, STARTER .CARTER DE DEMARREUR			1			
3	91690–40018	.PIN, SPRING .AGRAFFE			1			
4	6H4–15758–01–4D	.GUIDE, ROPE .GUIDE DE CABLE			1			
5	97095–06016	.BOLT .BOULON			2			
6	92995–06600	.WASHER .RONDELLE			2			
7	6H4–15762–00	.SEAL, RUBBER 2 .JOINT CAOUTCHOUC 2			1			
8	6A0–15789–00	.DAMPER .AMORTISSEUR			1			
9	6F5–15752–00	.ROLLER, WIRE .GALET, CABLE			1			
10	90387–06M69	.COLLAR .COLLERETTE			1			
11	97013–06030	.BOLT .BOULON			1			
12	92903–06100	.WASHER, SPRING .RONDELLE, GROWER			1			
13	92903–06600	.WASHER, PLATE .RONDELLE, PLATE			1			
14	95380–06600	.NUT, HEXAGON .ECROU			1			
15	6H4–15787–01	.STAY .SUPPORT			1			
16	689–15755–01	.HANDLE, STARTER .POIGNEE, DE DEMARREUR			1			
17	6F5–15779–02	.COVER .COUVERCLE			1			
18	*	.WIRE (L:2095MM) .FIL (L:2095MM)			1			*1 *1
19	6H4–15714–00	.DRUM, SHEAVE .TAMBOUR, POULIE			1			
20	90510–08002	.SPRING, SPIRAL .RESSORT, HELICOIDAL			1			
21	6H4–15717–01	.SHAFT, STARTER .AXE DE DEMARREUR			1			
22	90201–06060	.WASHER, PLATE .RONDELLE, PLATE			1			
23	97095–06020	.BOLT .BOULON			1			
24	95380–06600	.NUT, HEXAGON .ECROU			1			
25	676–15741–03	.PAWL, DRIVE .CLIQUET, ENTRAINEMENT			1			
26	93430–06M02	.CIRCLIP .CLIPS			1			
27	6H4–15705–00	.SPRING, DRIVE PAWL .RESSORT DE CLIQUET			1			

FIG. 9 STARTER DEMARREUR

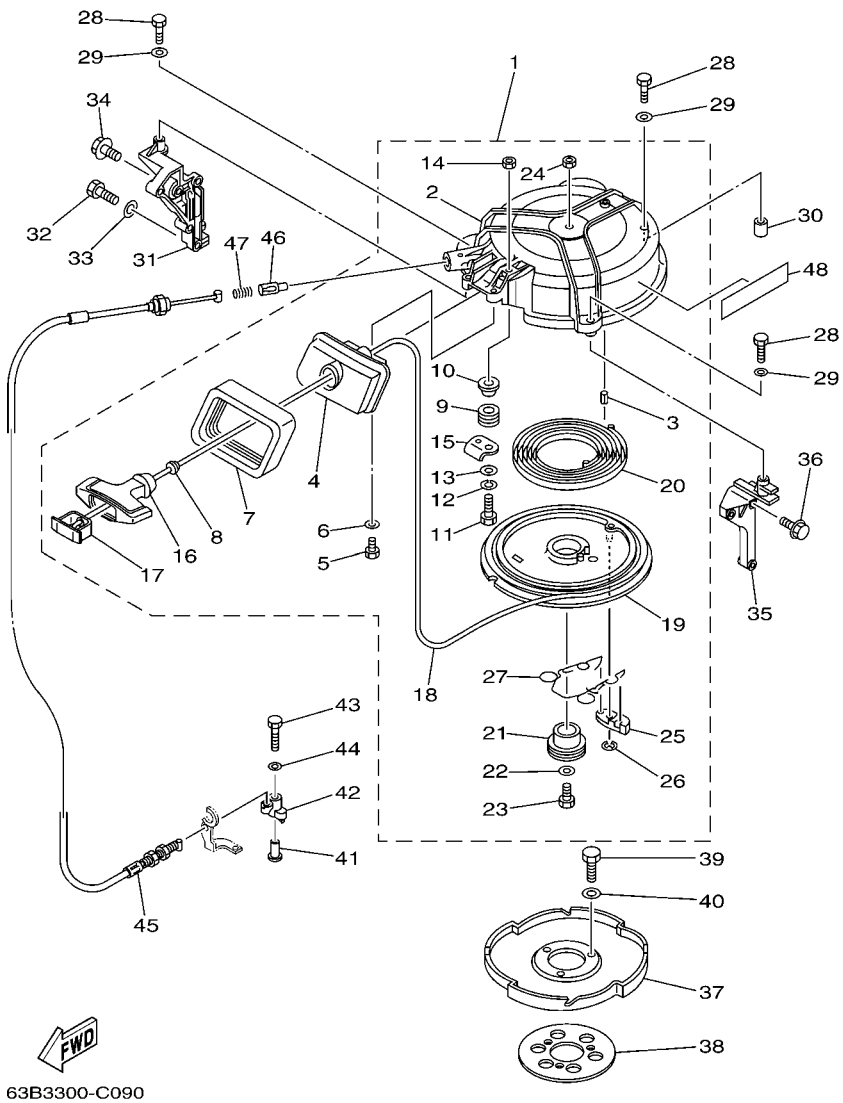

*1:CUT FROM 50M ROLLS,PART NO.90890-44373,CUTTING LENGTH 2.095M

*1:A PRELEVER SUR BOBINE 50M ,REFERENCE 90890-44373,
LONGUEUR DE COUPE 2.095M

REF. NO.	PART NO. N° PIECES	DESCRIPTION DESCRIPTION	ETO	EO	MHO			REMARKS REMARQUES
28	97095–06035	BOLT BOULON			3			
29	92995–06600	WASHER RONDELLE			3			
30	99530–10014	PIN, DOWEL GOUJON, D'ASSEMBLAGE			1			
31	63D–15771–00–4D	STAY 1 SUPPORT 1			1			
32	97013–08025	BOLT BOULON			2			
33	92903–08600	WASHER, PLATE RONDELLE, PLATE			2			
34	90119–06MA2	BOLT, WITH WASHER BOULON, AVEC RONDELLE			1			
35	6H4–15772–02–94	STAY 2 SUPPORT 2			1			
36	90119–06MA3	BOLT, WITH WASHER BOULON, AVEC RONDELLE			3			
37	6H4–15723–01–94	PULLEY, STARTER POULIE DE DEMARREUR			1			
38	6J8–81365–A0	GASKET, HOLE COVER JOINT, COUVERCLE DE TROU			1			
39	97013–08020	BOLT BOULON			3			
40	92903–08600	WASHER, PLATE RONDELLE, PLATE			3			
41	90387–06M66	COLLAR COLLERETTE			1			
42	63D–15746–00	ARM BRAS			1			
43	97095–06040	BOLT BOULON			1			
44	92995–06600	WASHER RONDELLE			1			
45	63D–15770–00	CABLE COMP., STARTER STOP CABLE, BUTEE DE DEMAR			1			
46	656–15748–00	PLUNGER, STARTER STOP PLONGEUR, BOUTE DE DEMAR			1			
47	90501–10227	SPRING, COMPRESSION RESSORT, COMPRESSION			1			
48	63D–13437–N0	MARK, CAUTION MAKER			1			

FIG. 10 GENERATOR GENERATRICE

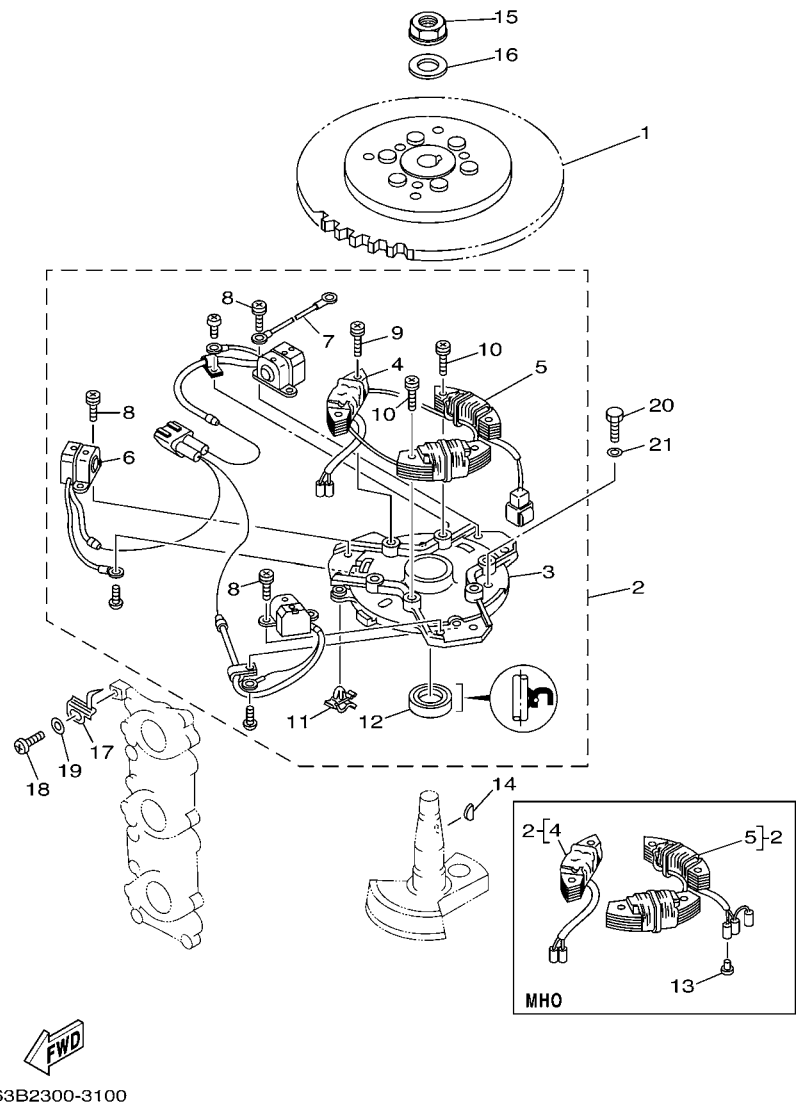

63B2300-3100

REF. NO.	PART NO. N° PIECES	DESCRIPTION DESCRIPTION	ETO	EO	MHO			REMARKS REMARQUES
1	63D–85550–00	ROTOR ASSY ROTOR CPLT	1	1				
	63D–85550–10	ROTOR ASSY ROTOR CPLT			1			
2	63D–85560–10	BASE ASSY ENS. FLASQUE	1	1				
	63D–85560–00	BASE ASSY ENS. FLASQUE			1			
3	6H4–15359–04–94	.HOUSING, OIL SEAL .LOGEMENT, BAGUE D'ETANCHEITE	1	1	1			
4	63D–85520–01	.COIL, CHARGE .BOBINE, CHARGE	1	1	1			
5	63D–85533–10	.COIL, LIGHTING .BOBINE, ECLAIRAGE	1	1				
	63D–85533–00	.COIL, LIGHTING .BOBINE, ECLAIRAGE			1			
6	63D–85580–00	.COIL, PULSER .BOBINE, PULSEUR	1	1	1			
7	6H4–83354–00	.WIRE, EARTH LEAD 1 .FIL 1, MASSE	1	1	1			
8	63D–81345–00	.SCREW, WITH WASHER (M5X12) .VIS, AVEC RONDELLE (M5X12)	6	6	6			
9	63D–81345–10	.SCREW, WITH WASHER (M6X25) .VIS, AVEC RONDELLE (M6X25)	2	2	2			
10	63D–81345–20	.SCREW, WITH WASHER (M6X30) .VIS, AVEC RONDELLE (M6X30)	4	4	4			
11	90464–03M15	.CLAMP .BRIDE	1	1	1			
12	93102–23096	.OIL SEAL .JOINT SPY	1	1	1			
13	703–82119–00	COVER, LEAD WIRE GARNITURE, FIL			1			
14	6H4–11545–00	KEY, WOODRUFF CLAVETTE, DEMI-LUNE	1	1	1			
15	90179–16M05	NUT ECROU	1	1	1			
16	90201–16M44	WASHER, PLATE RONDELLE, PLATE	1	1	1			
17	6H4–81332–00	PLATE, TIMING PLATEAU, ALLUMAGE	1	1	1			
18	97885–05010	SCREW, PAN HEAD VIS, A ENCOCHE	1	1	1			
19	92995–05600	WASHER RONDELLE	1	1	1			
20	97013–06018	BOLT BOULON	3	3	3			
21	92903–06600	WASHER, PLATE RONDELLE, PLATE	3	3	3			

FIG. 11 ELECTRICAL 1 — PARTIE ELECTRIQUE 1

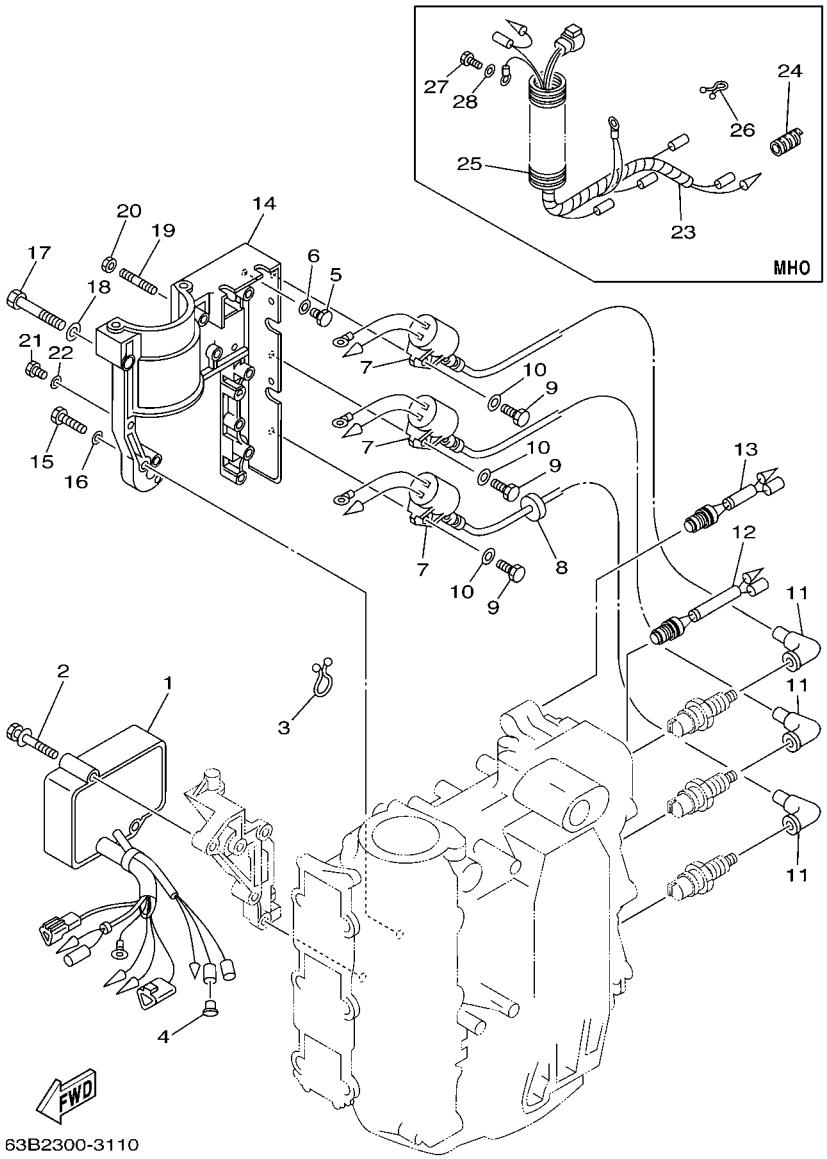

REF. NO.	PART NO. N° PIECES	DESCRIPTION DESCRIPTION	ETO	EO	MHO			REMARKS REMARQUES
1	63D–85540–03	C.D.I. UNIT ASSY BLOC C.D.I.	1	1	1			
2	90119–06M51	BOLT, WITH WASHER BOULON, AVEC RONDELLE	2	2	2			
3	90464–15M11	CLAMP BRIDE	1	1	1			
4	703–82119–00	COVER, LEAD WIRE GARNITURE, FIL	1					
5	97095–06014	BOLT BOULON	1	1	1			
6	92995–06600	WASHER RONDELLE	1	1	1			
7	6H5–85570–00	IGNITION COIL ASSY BOBINE D'ALLUMAGE (ENS.)	3	3	3			
8	90480–25161	GROMMET PASSE-FIL	1	1	1			
9	97095–06020	BOLT BOULON	3	3	3			
10	92995–06600	WASHER RONDELLE	3	3	3			
11	6G1–82370–21	PLUG CAP ASSY ANTIPARASITE	3	3	3			
12	689–82560–00	THERMO SWITCH ASSY THERMO-CONTACT COMPLET	1	1	1			
13	6H4–82560–00	THERMO SWITCH ASSY THERMO-CONTACT COMPLET	1	1	1			
14	6H4–81822–02–98	BRACKET, STARTING MOTOR SUPPORT, DEMARREUR ELECTRIQUE	1	1				
15	97095–06030	BOLT BOULON	4	4				
16	92995–06600	WASHER RONDELLE	4	4				
17	97013–08050	BOLT BOULON	1	1				
18	92903–08600	WASHER, PLATE RONDELLE, PLATE	1	1				
19	95670–06640	BOLT, STUD GOUJON	1	1				
20	90179–06M24	NUT ECROU	1	1				
21	97095–06014	BOLT BOULON	2	2				
22	92995–06600	WASHER RONDELLE	2	2				
23	63D–82531–00	WIRE, LEAD FIL			1			
24	90446–10M02	HOSE DURITE			1			
25	6G1–83557–00	TUBE TUBE			1			
26	90464–05M16	CLAMP BRIDE			1			
27	97095–06014	BOLT BOULON			1			

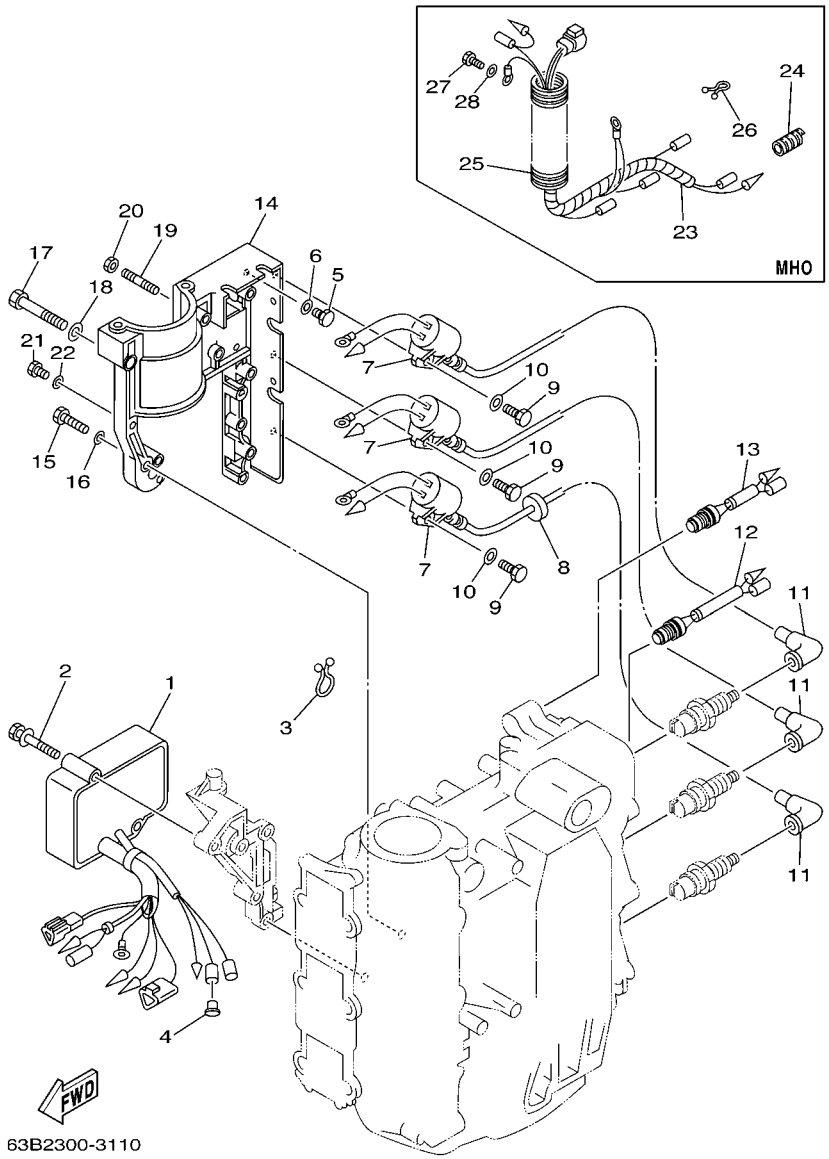

FIG. 11 ELECTRICAL 1 — PARTIE ELECTRIQUE 1

REF. NO.	PART NO. N° PIECES	DESCRIPTION DESCRIPTION	ETO	EO	MHO			REMARKS REMARQUES
28	92995–06600	WASHER RONDELLE			1			

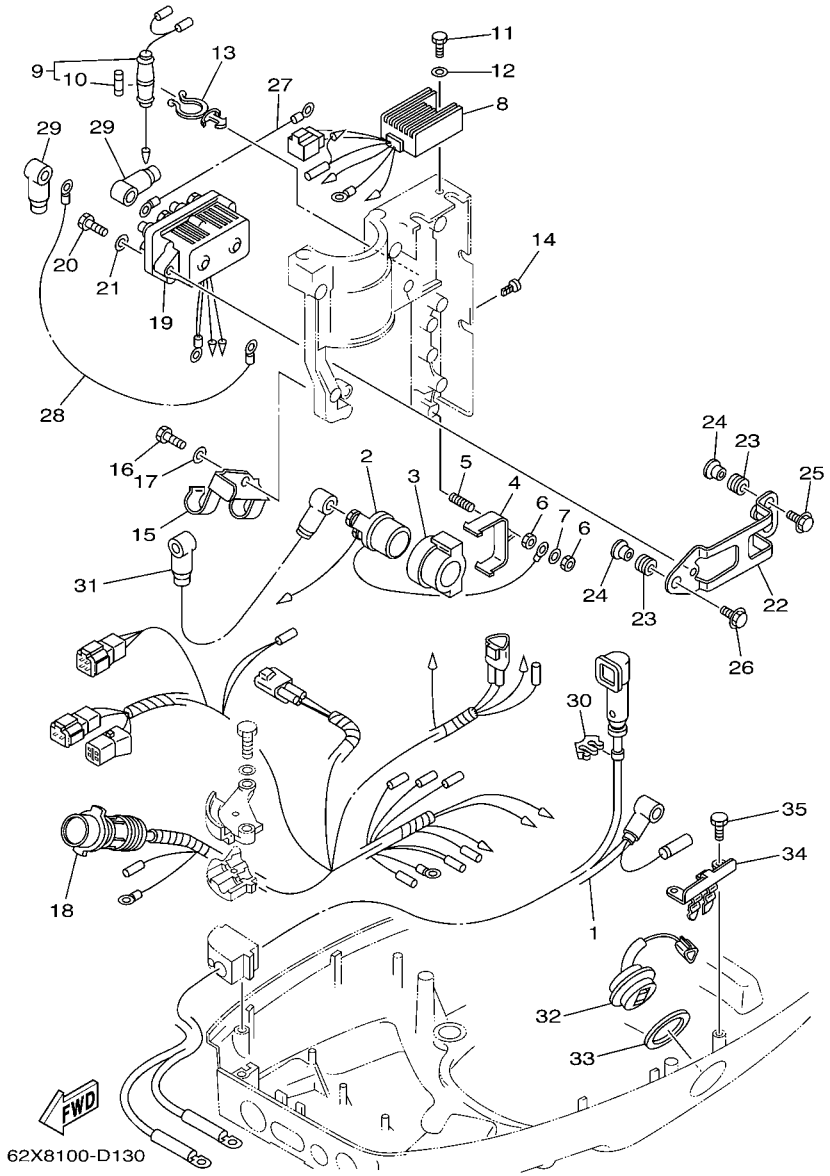

FIG. 12 ELECTRICAL 2 — PARTIE ELECTRIQUE 2

REF. NO.	PART NO. N° PIECES	DESCRIPTION DESCRIPTION	ETO	EO	MHO			REMARKS REMARQUES
1	63D–82105–U0	WIRE HARNESS FAISCEAU DE FILS	1					
	6H4–82105–02	WIRE HARNESS FAISCEAU DE FILS		1				
2	6G1–81941–10	STARTER RELAY ASSY LANCEUR RELAIS (ENS.)	1	1				
3	6H4–81952–00	HOLDER, RELAY SUPPORT, RELAIS	1	1				
4	6H4–81945–00	PLATE, SWITCH FITTING PLAQUE, FIXATION DU RELAIS	1	1				
5	90116–06M22	BOLT, STUD GOUJON	1	1				
6	95380–06600	NUT, HEXAGON ECROU	2	2				
7	92990–06600	WASHER, PLATE RONDELLE, PLATE	1	1				
8	6H2–81960–10	RECTIFIER & REGULATOR ASSY REDRESSEUR REGULATEUR CPLT	1	1				
9	6H4–82150–00	FUSE HOLDER ASSY SUPPORT DE FUSIBLE	1	1				
10	663–82151–00	.FUSE (12V-20A) .FUSIBLE (12V-20A)	1	1				
11	97095–06014	BOLT BOULON	1	1				
12	92995–06600	WASHER RONDELLE	1	1				
13	90464–15M27	CLAMP BRIDE	1	1				
14	90338–05M11	PLUG PLOT	2	2				
15	63D–82594–00	CLAMP BRIDE	1	1				
16	97095–06012	BOLT BOULON	1	1				
17	92995–06600	WASHER RONDELLE	1	1				
18	63D–82590–40	WIRE HARNESS ASSY (10P) FAISCEAU DE FILS COMPLET (10P)	1					
	63D–82590–10	WIRE HARNESS ASSY (10P) FAISCEAU DE FILS COMPLET (10P)		1				
19	6H1–81950–00	RELAY ASSY RELAIS COMPLET	1					
20	97095–06025	BOLT BOULON	2					
21	92995–06600	WASHER RONDELLE	2					
22	6H4–81945–20	PLATE, SWITCH FITTING PLAQUE, FIXATION DU RELAIS	1					
23	90480–13M24	GROMMET PASSE-FIL	3					
24	90387–06M05	COLLAR COLLERETTE	3					
25	90105–06M15	BOLT, FLANGE BOULON	2					

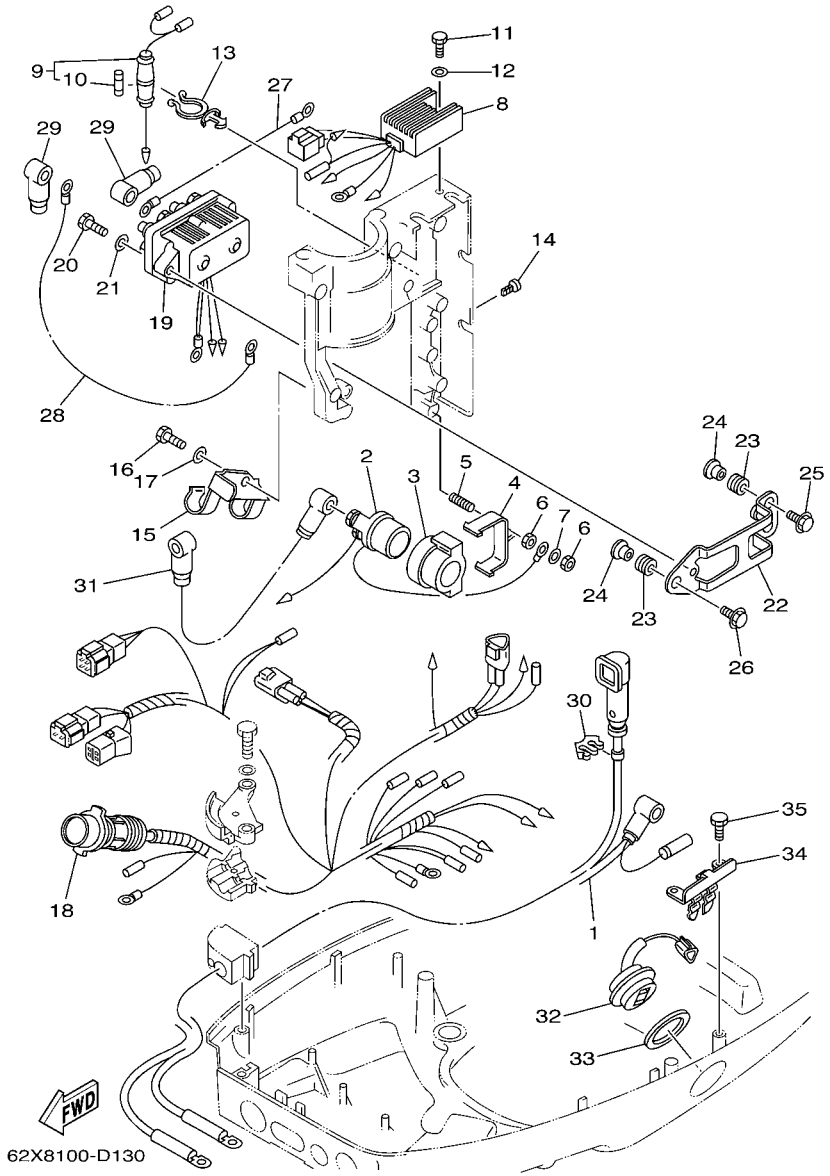

FIG. 12 ELECTRICAL 2 — PARTIE ELECTRIQUE 2

REF. NO.	PART NO. N° PIECES	DESCRIPTION DESCRIPTION	ETO	EO	MHO			REMARKS REMARQUES
26	90105–06M16	BOLT, FLANGE BOULON	1					
27	6H5–81949–00	WIRE, LEAD FIL	1					
28	61A–81949–00	WIRE, LEAD FIL	1					
29	682–82119–01	COVER, LEAD WIRE GARNITURE, FIL	4					
30	90464–07M20	CLAMP BRIDE	1	1				
31	6H4–82117–00	WIRE, LEAD FIL	1	1				
32	63D–82563–10	TRIM & TILT SWITCH ASSY INCLINER ET PARER COMMUTATEUR	1					
33	6E5–82587–00	GASKET JOINT	1					
34	6R3–83614–00	BRACKET SUPPORT	1					
35	97095–06016	BOLT BOULON	2					

FIG. 13 ELECTRICAL 3 — PARTIE ELECTRIQUE 3

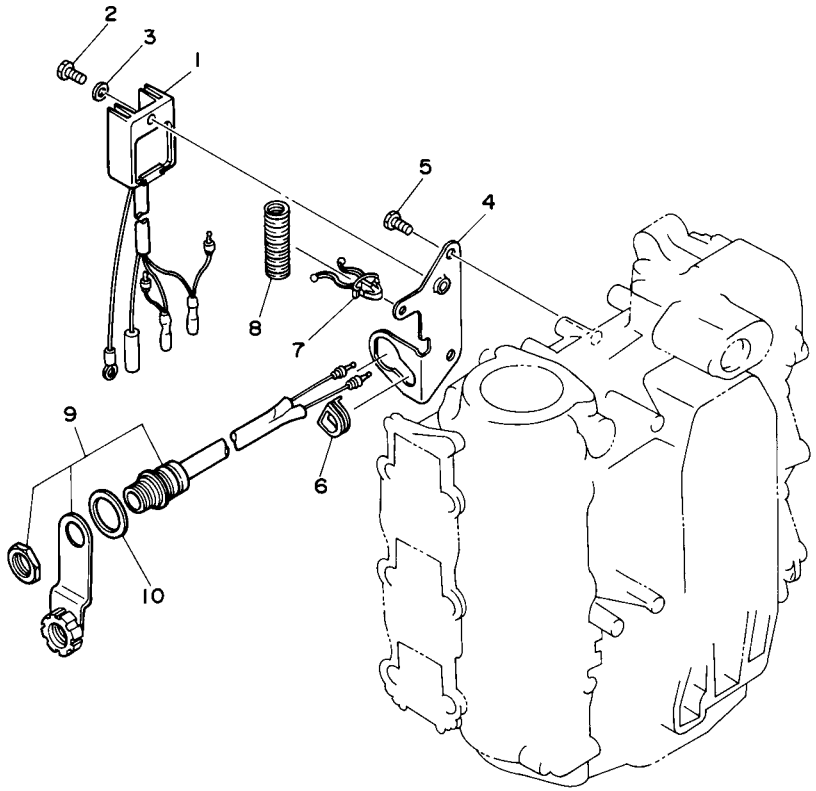

63B0300-5130

REF. NO.	PART NO. N° PIECES	DESCRIPTION DESCRIPTION	ETO	EO	MHO			REMARKS REMARQUES
1	6J8–81960–00	RECTIFIER & REGULATOR ASSY REDRESSEUR REGULATEUR CPLT			1			
2	97095–06012	BOLT BOULON			1			
3	92995–06600	WASHER RONDELLE			1			
4	6H4–81975–02	PLATE, RECTIFIER FITTING PLAQUE, FIXATION DU REDRESSEUR			1			
5	97013–06012	BOLT BOULON			2			
6	6F5–81922–00	GROMMET OEILLET CAOUTCHOUC			1			
7	90464–12M35	CLAMP BRIDE			1			
8	90440–14M00	PIPE DURITE			1			
9	682–84381–00	2P CONCENT RALLONGE 2 FILS			1			
10	90202–26M45	WASHER, PLATE RONDELLE, PLATE			1			

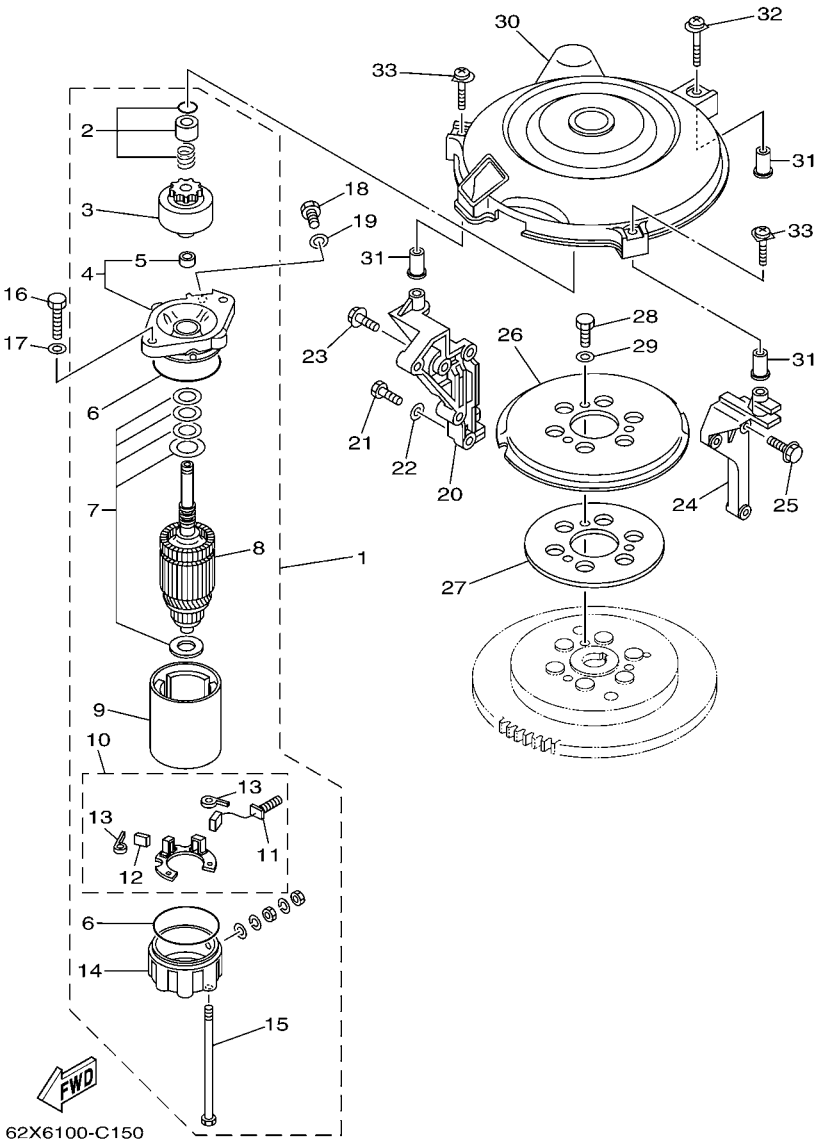

FIG. 14 STARTING MOTOR DEMARREUR ELECTRIQUE

REF. NO.	PART NO. N° PIECES	DESCRIPTION DESCRIPTION	ETO	EO	MHO			REMARKS REMARQUES
1	6F5–81800–11	STARTING MOTOR ASSY DEMARREUR ELECTRIQUE COMPLET	1	1				
2	689–81857–11	.PINION STOPPER SET .BUTEE PIGNON	1	1				
3	689–81807–12	.GEAR ASSY, STARTING MOTOR .PIGNON, DEMARREUR ELECTRIQUE	1	1				
4	6F5–81830–11	.FRONT BRACKET ASSY .SUPPORT AVANT	1	1				
5	689–81831–00	..METAL, FRONT ..METAL, AVANT	1	1				
6	689–81847–11	.O-RING .JOINT TORIQUE	2	2				
7	689–81809–11	.WASHER KIT .JEU DE RONDELLES	1	1				
8	689–81850–12	.ARMATURE ASSY .INDUIT	1	1				
9	689–81810–11	.STATOR ASSY .STATOR COMPLET	1	1				
10	689–81840–11	.BRUSH HOLDER ASSY .SUPPORT DE CHARBON	1	1				
11	689–81811–11	..BRUSH 1 ..CHARBON 1	1	1				
12	689–81812–11	..BRUSH 2 ..CHARBON 2	1	1				
13	689–81813–10	..SPRING, BRUSH ..RESSORT, DE CHARBON	2	2				
14	689–81820–11	.REAR BRACKET ASSY .SUPPORT ARRIERE COMPLET	1	1				
15	689–81826–10	.BOLT .BOULON	2	2				
16	97013–08030	BOLT BOULON	2	2				
17	92903–08600	WASHER, PLATE RONDELLE, PLATE	2	2				
18	97013–08016	BOLT BOULON	1	1				
19	92903–08600	WASHER, PLATE RONDELLE, PLATE	1	1				
20	63D–15771–00–4D	STAY 1 SUPPORT 1	1	1				
21	97013–08025	BOLT BOULON	2	2				
22	92903–08600	WASHER, PLATE RONDELLE, PLATE	2	2				
23	90119–06MA2	BOLT, WITH WASHER BOULON, AVEC RONDELLE	1	1				
24	6H4–15772–02–94	STAY 2 SUPPORT 2	1	1				
25	90119–06MA3	BOLT, WITH WASHER BOULON, AVEC RONDELLE	3	3				
26	6J8–15723–E1	PULLEY, STARTER POULIE DE DEMARREUR	1	1				
27	6J8–81365–A0	GASKET, HOLE COVER JOINT, COUVERCLE DE TROU	1	1				

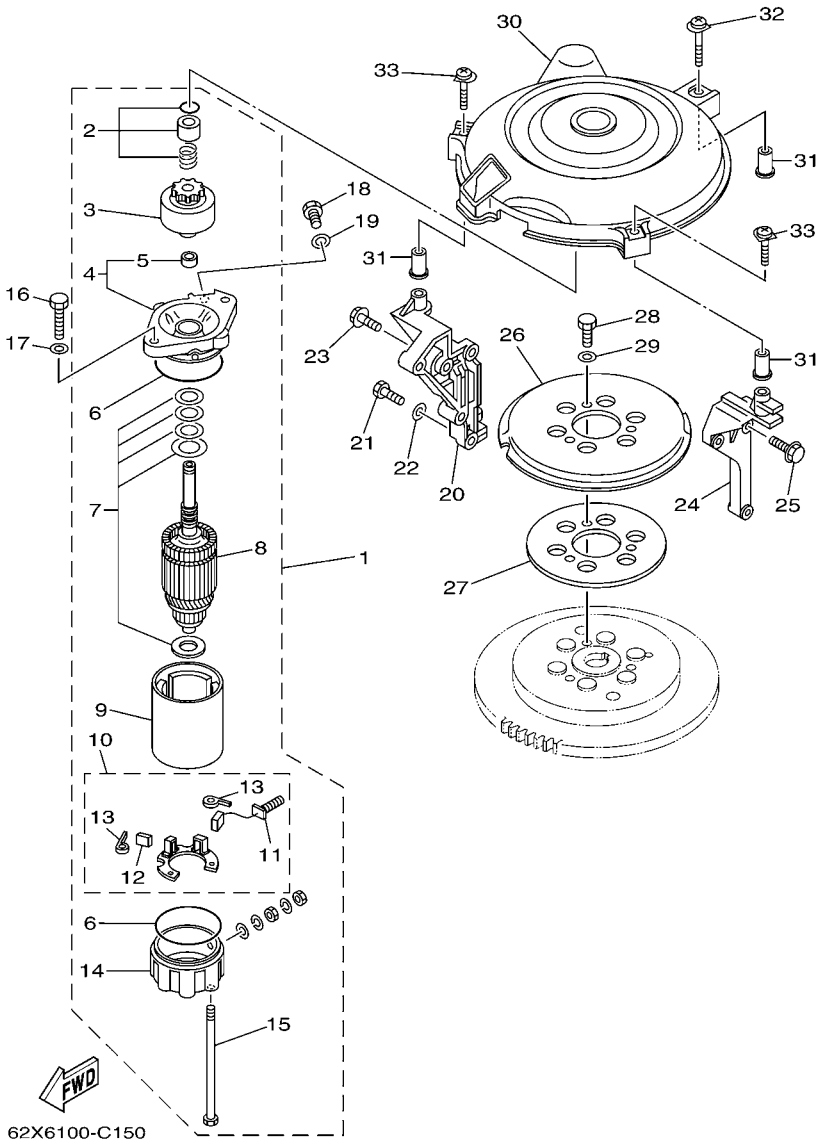

FIG. 14 STARTING MOTOR DEMARREUR ELECTRIQUE

REF. NO.	PART NO. N° PIECES	DESCRIPTION DESCRIPTION	ETO	EO	MHO			REMARKS REMARQUES
28	97013–08014	BOLT BOULON	3	3				
29	92903–08600	WASHER, PLATE RONDELLE, PLATE	3	3				
30	6H4–81337–01	COVER, FLYWHEEL COUVERCLE, VOLANT	1	1				
31	90387–06M65	COLLAR COLLERETTE	3	3				
32	90159–06M21	SCREW, WITH WASHER VIS, AVEC RONDELLE	1	1				
33	90159–06M22	SCREW, WITH WASHER VIS, AVEC RONDELLE	2	2				

FIG. 15 BOTTOM COWLING CAPOT INFERIEUR

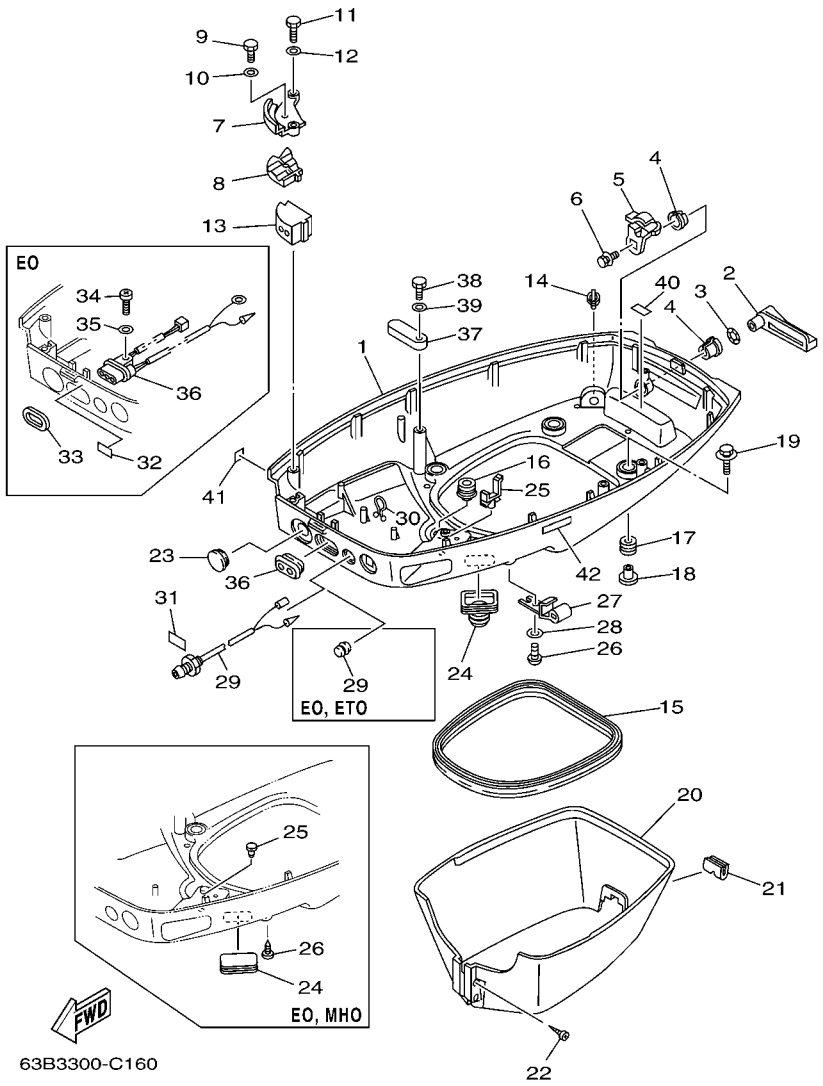

REF. NO.	PART NO. N° PIECES	DESCRIPTION DESCRIPTION	ETO	EO	MHO			REMARKS REMARQUES
1	6H4–42711–25–4D	COWLING, BOTTOM 1 CUVETTE 1	1					
	6H4–42711–07–4D	COWLING, BOTTOM 1 CUVETTE 1		1	1			
2	6H4–42815–00	LEVER, CLAMP LEVIER, PRESSE	1	1	1			
3	90206–12052	WASHER, WAVE RONDELLE, ONDULEE	1	1	1			
4	90386–12069	BUSH DOUILLE	2	2	2			
5	6H4–42816–00	LEVER, CLAMP LEVIER, PRESSE	1	1	1			
6	90119–06M73	BOLT, WITH WASHER BOULON, AVEC RONDELLE	1	1	1			
7	6H4–48531–11–94	BRACKET, REMOTE CONTROL 1 ETRIER 1, COMMANDE A DISTANCE	1	1	1			
8	6H4–48532–11–94	BRACKET, REMOTE CONTROL 2 ETRIER 2, COMMANDE A DISTANCE	1	1	1			
9	97095–05016	BOLT BOULON	1	1	1			
10	92995–05600	WASHER RONDELLE	1	1	1			
11	97095–06020	BOLT BOULON	2	2	2			
12	92995–06600	WASHER RONDELLE	2	2	2			
13	6H4–42724–30	GROMMET PASSE-FIL	1					
	6H4–42724–20	GROMMET PASSE-FIL		1				
	6H4–42724–00	GROMMET PASSE-FIL			1			
14	6E5–44391–00	NIPPLE, HOSE RACCORD D'ESSENCE	1	1	1			
15	6H4–42716–00	RUBBER, SEAL 1 JOINT EN CAOUTCHOUC 1	1	1	1			
16	6E5–42724–00	GROMMET PASSE-FIL	1	1	1			
17	90480–09M21	GROMMET PASSE-FIL	4	4	4			
18	90387–06M41	COLLAR COLLERETTE	4	4	4			
19	90119–06M61	BOLT, WITH WASHER BOULON, AVEC RONDELLE	4	4	4			
20	63D–42741–00–4D	APRON CAPOT LATERAL	1	1	1			
21	63D–42717–00	RUBBER, SEAL 2 JOINT EN CAOUTCHOUC 2	1	1	1			
22	97780–60525	SCREW, TAPPING VIS, TETE BOMBEE	2	2	2			
23	676–42726–00	GROMMET PASSE-FIL	1	1				
	6H4–42726–40	GROMMET PASSE-FIL			1			

FIG. 15 BOTTOM COWLING CAPOT INFERIEUR

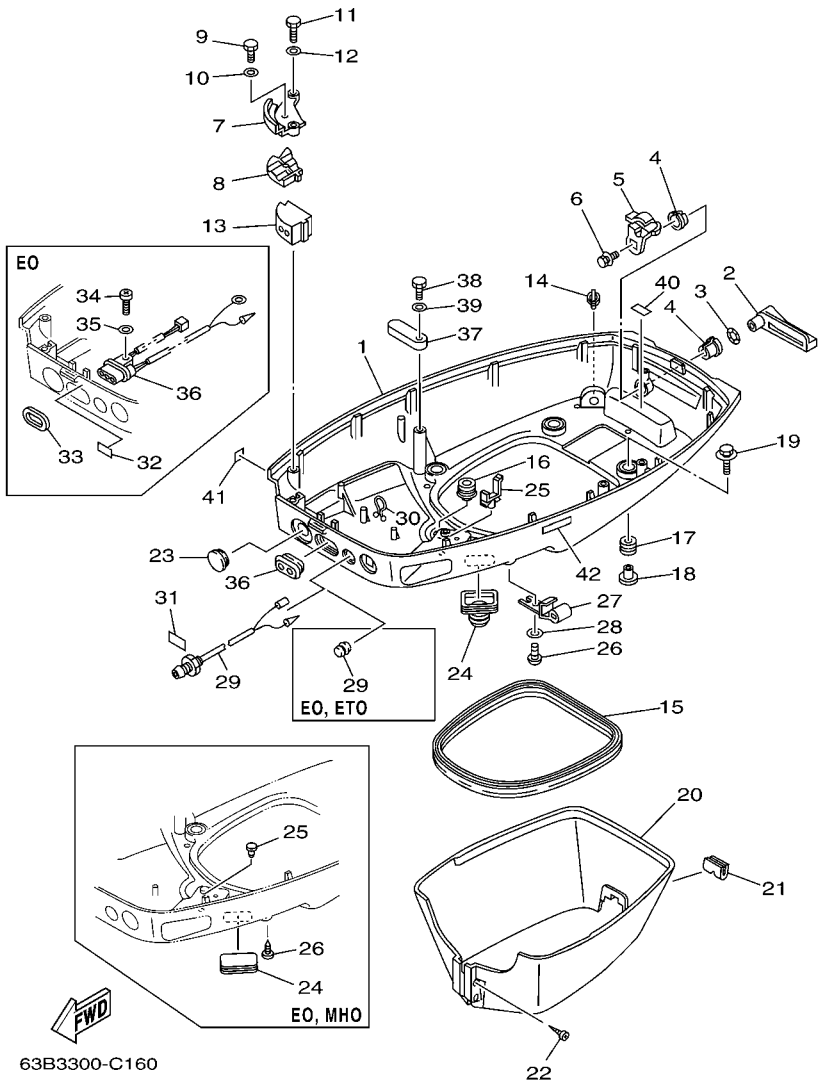

REF. NO.	PART NO. N° PIECES	DESCRIPTION DESCRIPTION	ETO	EO	MHO			REMARKS REMARQUES
24	688–42726–10	GROMMET PASSE-FIL	1					
	6H4–42726–00	GROMMET PASSE-FIL		1	1			
25	90464–09M13	CLAMP BRIDE	1					
	703–82119–00	COVER, LEAD WIRE GARNITURE, FIL		1	1			
26	90157–06M01	SCREW, PAN HEAD VIS, TETE TRONCONIQUE	1					
	90338–05M03	PLUG PLOT		1	1			
27	6E5–24367–01	CLAMP, FUEL PIPE 2 COLLIER DE DURITE A ESSENCE	1					
28	92990–06600	WASHER, PLATE RONDELLE, PLATE	1					
29	6H4–42725–00	GROMMET PASSE-FIL	1	1				
	6J8–85410–00	EMERGENCY SIGNAL LIGHT ASSY FEU DE DETRESSE			1			
30	90464–08M07	CLAMP BRIDE			1			
31	6H4–85415–10	MARK, SIGNAL LAMP ETIQUETTE			1			
32	63D–84342–00	SEAT, EMBLEM SIEGE, EMBLEME		1				
33	6H4–83589–00	GASKET GARNITURE		1				
34	97880–06014	SCREW, PAN HEAD VIS, TETE TRONCONIQUE		1				
35	92990–06600	WASHER, PLATE RONDELLE, PLATE		1				
36	63D–84301–00	PILOT LIGHT ASSY 1 LAMPE-TEMOIN 1		1				
	6H3–42727–00	GROMMET PASSE-FIL	1		1			
37	6E5–82588–00	PLATE PLAQUE	1	1	1			
38	97095–06020	BOLT BOULON	1	1	1			
39	92995–06600	WASHER RONDELLE	1	1	1			
40	6E7–42791–10	MARK 1 ETIQUETTE 1		1	1			40V 40V
	6G5–42791–10	MARK 1 ETIQUETTE 1	1					40Y 40Y
41	6A1–28176–00	LABEL, CAUTION ETIQUETTE, RECOMMANDATION	1	1	1			
42	6E3–8257H–00	PLATE, MARK PLAQUE, ADHESIF	1	1	1			

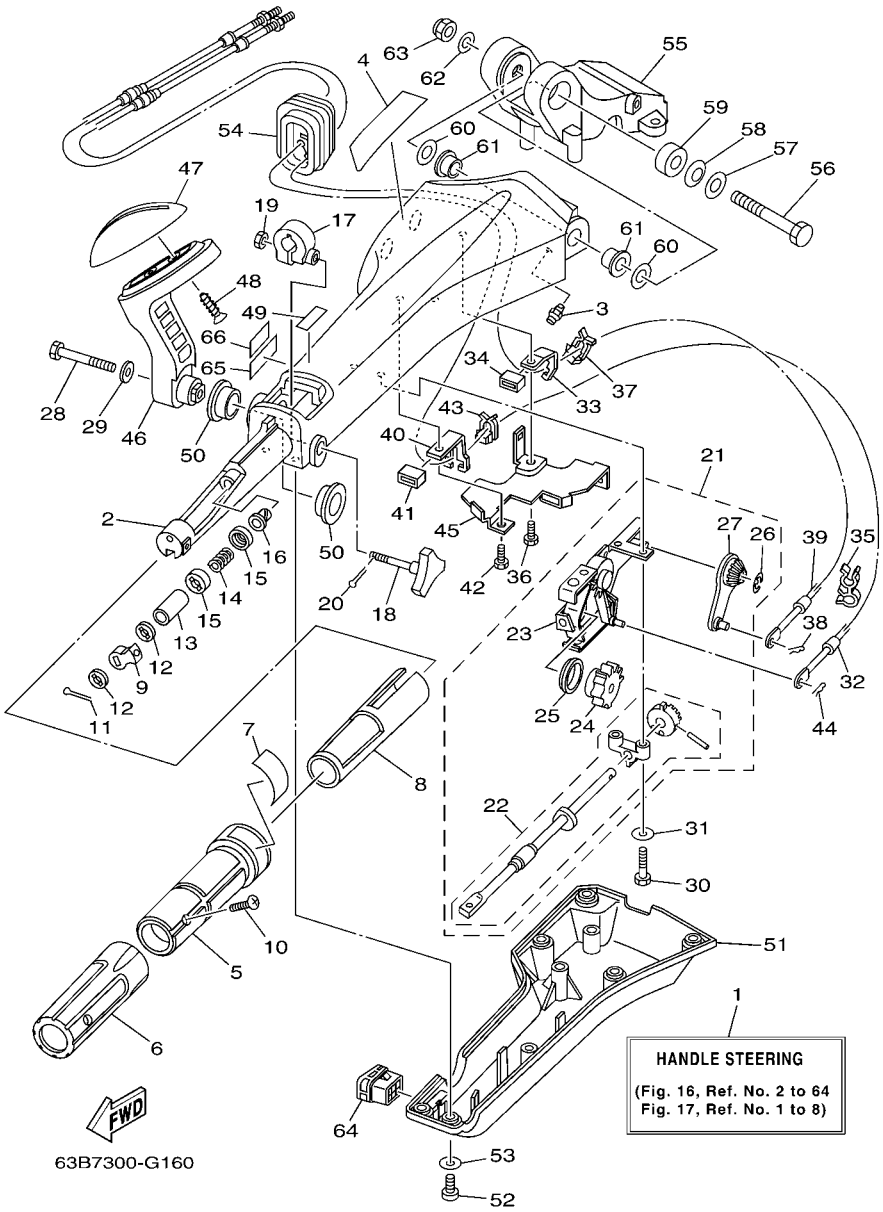

FIG. 16 STEERING 1 — DIRECTION 1

REF. NO.	PART NO. N° PIECES	DESCRIPTION DESCRIPTION	ETO	EO	MHO			REMARKS REMARQUES
1	6X4–42101–G2–4D	HANDLE, STEERING POIGNEE			1			
2	6X4–42111–01–4D	HANDLE, STEERING POIGNEE			1			
3	93700–06M03	NIPPLE, GREASE PION			1			
4	6X4–48215–10	GRAPHIC ADHESIF			1			
5	6X4–42119–00	GRIP, STEERING HANDLE POIGNEE, BARRE FRANCHE			1			
6	6X4–42177–00	RUBBER, HANDLE CAOUTCHOUC, POIGNEE			1			
7	6X4–42137–00	INDICATOR, THROTTLE INDICATEUR, ACCELERATION			1			
8	6X4–41291–00	BUSHING COUSSINET			1			
9	6X4–44139–00	COLLAR COLLIER			1			
10	90142–05001	SCREW, COUNTERSUNK VIS, TETE NOYEE			1			
11	91490–20010	PIN, COTTER GOUPILLE			1			
12	6X4–44177–00	WASHER RONDELLE			2			
13	6X4–42128–00	COLLAR, DISTANCE 1 COLLIER, D'ENTRETOISE 1			1			
14	90501–23215	SPRING, COMPRESSION RESSORT, COMPRESSION			1			
15	6X4–44188–00	WASHER RONDELLE			2			
16	90386–08032	BUSH DOUILLE			1			
17	63D–42126–00	FRICTION, STEERING HANDLE GRIP CUVETTE, POIGNEE DE DIRECTION			1			
18	6X4–48154–00	KNOB, THROTTLE BOUTON, ACCELERATEUR			1			
19	95380–06600	NUT, HEXAGON ECROU			1			
20	91490–20010	PIN, COTTER GOUPILLE			1			
21	6X4–44100–10	SHIFT LINK ASSY MAILLON DE SELECTEUR			1			
22	6X4–42115–00	.SHAFT, STEERING HANDLE .AXE, BARRE FRANCHE			1			
23	6X4–44102–00	.SHIFT ASSIST ASSY. .SELECTEUR DE MAINTIEN			1			
24	6X4–47731–00	.GEAR, DRIVE .PIGNON D'ENTRAINEMENT			1			
25	6X4–44132–00	.BUSHING .COUSSINET			1			
26	6X4–14137–00	.CLIP .JONC			1			
27	6X4–48261–00	.ARM, THROTTLE .BRAS, ACCELERATION			1			

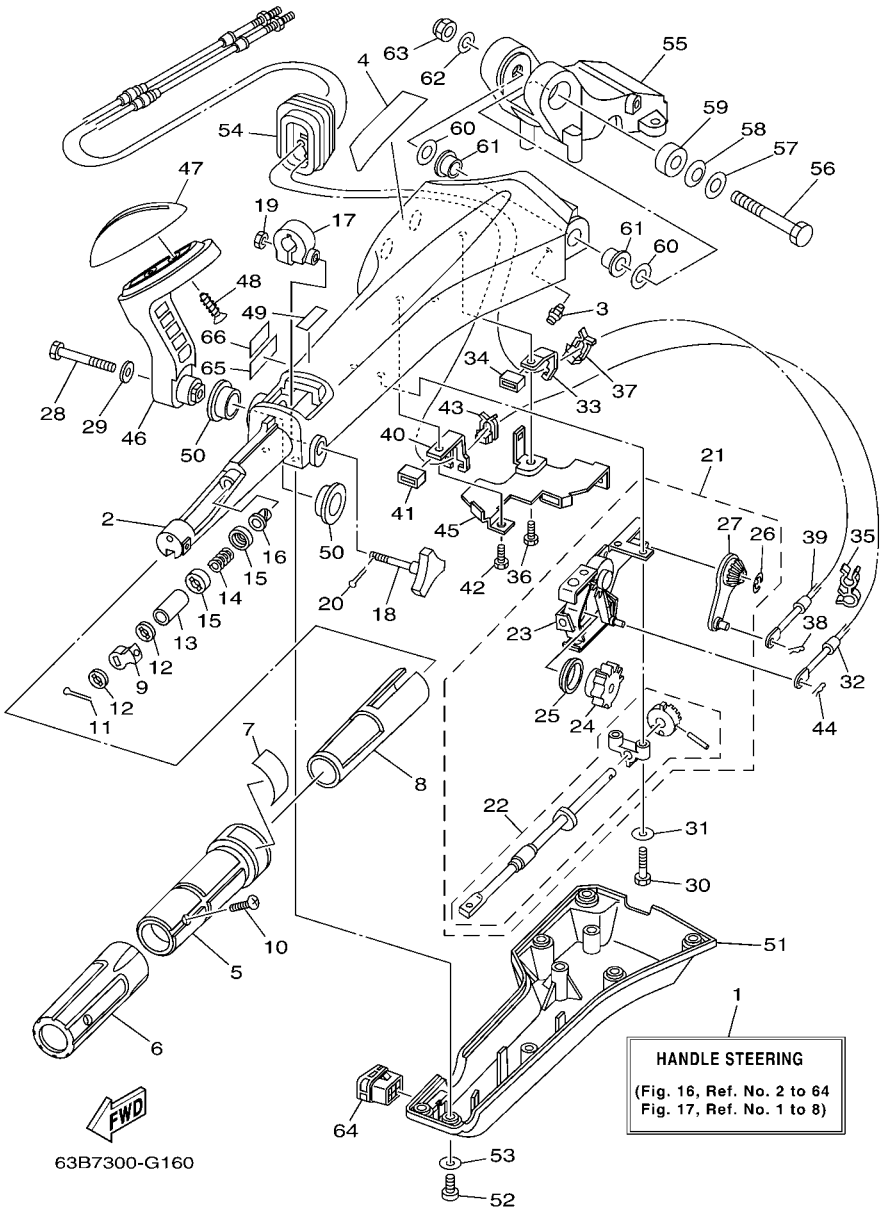

FIG. 16 STEERING 1 — DIRECTION 1

REF. NO.	PART NO. N° PIECES	DESCRIPTION DESCRIPTION	ETO	EO	MHO			REMARKS REMARQUES
28	97095–08040	BOLT BOULON			1			
29	92995–08600	WASHER RONDELLE			1			
30	97095–06030	BOLT BOULON			2			
31	92995–06600	WASHER RONDELLE			2			
32	63D–48321–11	CABLE CABLE			1			
33	6X4–48538–00	CLAMP, CABLE 1 COLLIER			1			
34	6X4–26367–00	PROTECTOR PROTECTEUR			1			
35	90464–09M42	CLAMP BRIDE			1			
36	97095–06014	BOLT BOULON			1			
37	63D–48538–00	CLAMP, CABLE 1 COLLIER			1			
38	90468–10005	CLIP JONC			1			
39	63D–26301–01	THROTTLE CABLE ASSY CABLE D'ACCELERATEUR			1			
40	6X4–48538–10	CLAMP, CABLE 1 COLLIER			1			
41	6X4–26367–00	PROTECTOR PROTECTEUR			1			
42	97095–06014	BOLT BOULON			1			
43	63D–48538–00	CLAMP, CABLE 1 COLLIER			1			
44	90468–10005	CLIP JONC			1			
45	6X4–42159–00	STAY SUPPORT			1			
46	6X4–44159–00–4D	HANDLE, GEAR SHIFT POIGNEE, LEVIER D'EMBRAYAGE			1			
47	6X4–44173–00	LEVER, SHIFT CONTROL POIGNEE, INVERSION			1			
48	97780–60920	SCREW, TAPPING VIS, TETE BOMBEE			2			
49	6G8–44191–00	INDICATOR, SHIFT ETIQUETTE, EMBRAYAGE			1			
50	90386–26MA3	BUSH DOUILLE			2			
51	6X4–42131–01	COVER, HANDLE STEERING COUVERCLE			1			
52	97885–06016	SCREW, PAN HEAD VIS, A ENCOCHE			6			
53	92995–06600	WASHER RONDELLE			6			
54	6X4–42725–10	GROMMET PASSE-FIL			1			

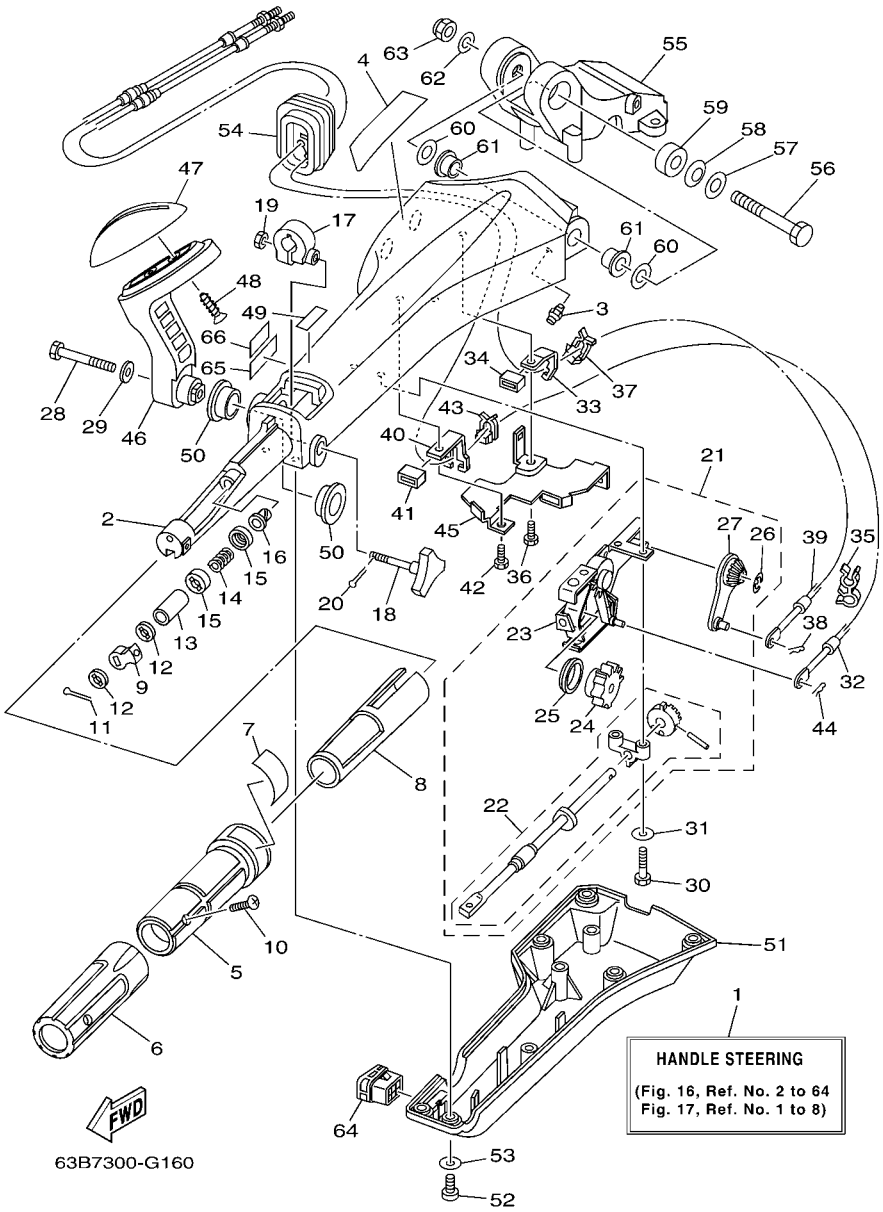

FIG. 16 STEERING 1 — DIRECTION 1

REF. NO.	PART NO. N° PIECES	DESCRIPTION DESCRIPTION	ETO	EO	MHO			REMARKS REMARQUES
55	63D–42121–22–4D	BRACKET SUPPORT			1			
56	90101–12014	BOLT BOULON			1			
57	92990–12200	WASHER, PLAIN RONDELLE, PLATE			1			
58	90206–12M22	WASHER, WAVE RONDELLE, ONDULEE			1			
59	90387–12M02	COLLAR COLLERETTE			1			
60	90201–12035	WASHER, PLATE RONDELLE, PLATE			2			
61	90386–12003	BUSH DOUILLE			2			
62	92990–12600	WASHER, PLATE RONDELLE, PLATE			1			
63	90185–12M12	NUT, SELF-LOCKING ECROU,AUTO-BLOQUANT			1			
64	6X4–42728–10	CAP CAPUCHON			1			
65	6E0–83627–41	LABEL, CAUTION 7 ETIQUETTE, RECOMMANDATION 7			1			
66	6E0–83627–51	LABEL, CAUTION 7 ETIQUETTE, RECOMMANDATION 7			1			

FIG. 17 STEERING 2 DIRECTION 2

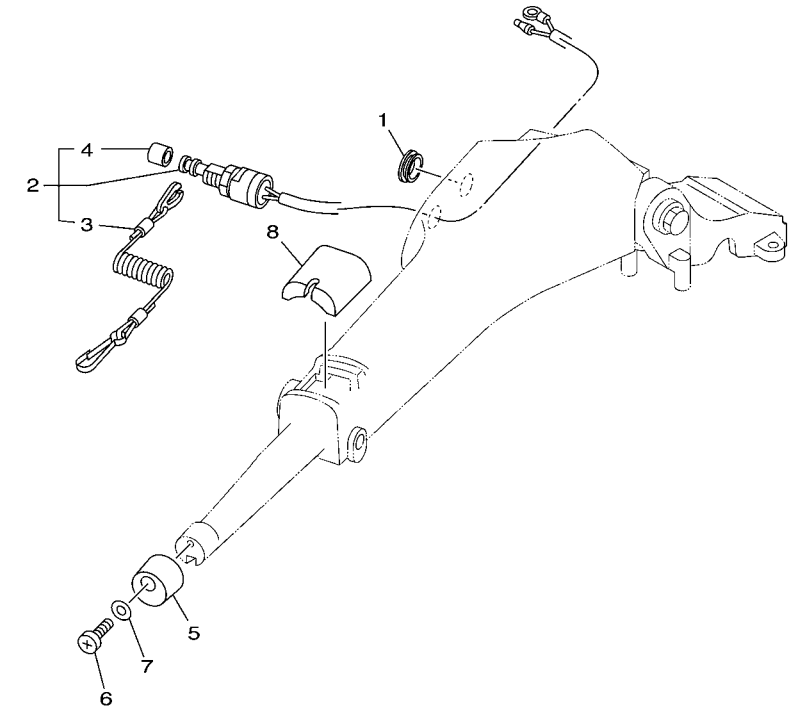

63B6700-F140

REF. NO.	PART NO. N° PIECES	DESCRIPTION DESCRIPTION	ETO	EO	MHO			REMARKS REMARQUES
1	676–42726–00	GROMMET PASSE-FIL			1			
2	6K5–82575–03	ENGINE STOP SWITCH ASSY COUPE CIRCUIT CPLT			1			
3	682–82556–00	.LANYARD, STOP SWITCH .PLAQUETTE			1			
4	689–8257Y–00	.CAP .CHAPEAU			1			
5	6X4–42728–00	CAP CAPUCHON			1			
6	97880–06016	SCREW, PAN HEAD VIS, TETE TRONCONIQUE			1			
7	92990–06600	WASHER, PLATE RONDELLE, PLATE			1			
8	6X4–81942–00	COVER COUVERCLE			1			

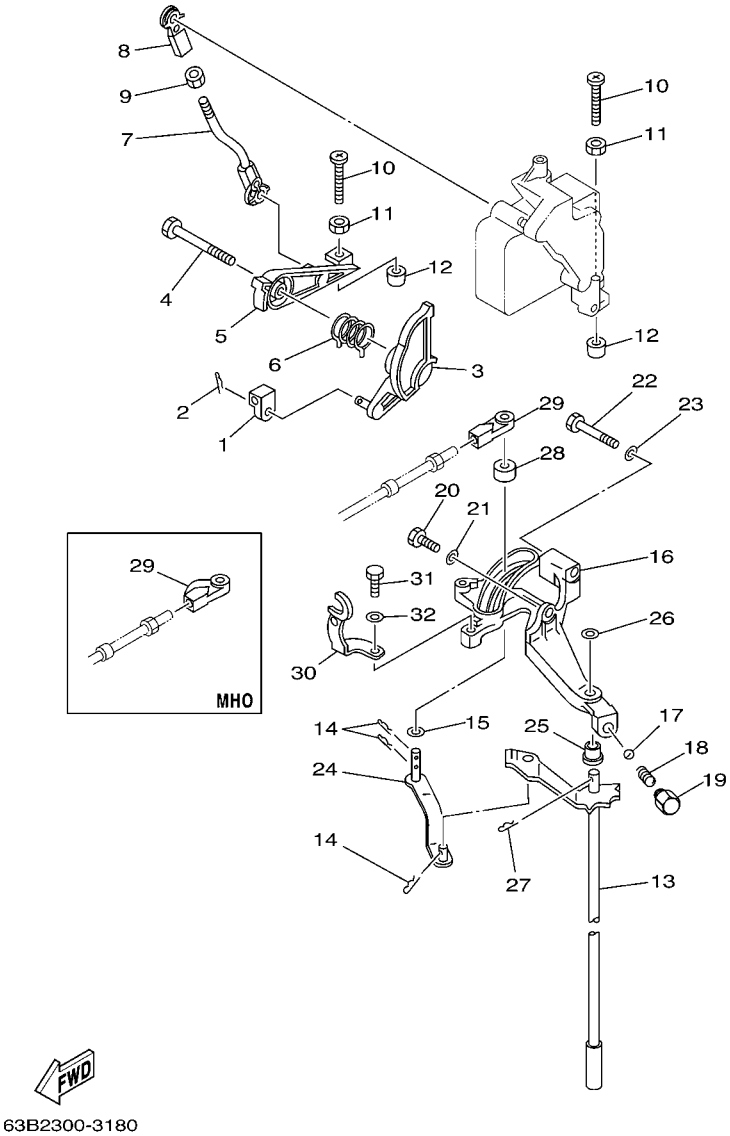

FIG. 18 CONTROL COMMANDE

REF. NO.	PART NO. N° PIECES	DESCRIPTION DESCRIPTION	ETO	EO	MHO			REMARKS REMARQUES
1	6H4–48344–00	CABLE END, REMOTE CONTROL CHAPE CABLE	1	1	1			
2	90468–18008	CLIP JONC	1	1	1			
3	63D–41213–00	CAM, ACCEL. CAME, ACCELERATION		1	1			40V 40V
	68P–41213–A0	CAM, ACCEL. CAME, ACCELERATION	1					40Y 40Y
4	90109–06M43	BOLT BOULON	1	1	1			
5	63D–41632–00	LEVER, MAGNETO CONTROL LEVIER, COMMANDE D'AVANCE	1	1	1			
6	90508–26M35	SPRING, TORSION RESSORT, TORSION	1	1	1			
7	63D–41636–00	ROD, MAGNETO CONTROL BIELLETTE, COMMANDE D'AVANCE	1	1	1			
8	6H4–41237–00	JOINT, LINK RACCORD	1	1	1			
9	95380–05600	NUT ECROU	1	1	1			
10	90157–06M13	SCREW, PAN HEAD VIS, TETE TRONCONIQUE	2	2	2			
11	95303–06600	NUT ECROU	2	2	2			
12	688–44194–00	CAP CAPUCHON	2	2	2			
13	63D–44120–00	HANDLE GEAR SHIFT ASSY LEVIER D'EMBRAYAGE		1	1			S(16.0") S(16.0")
	63D–44120–10	HANDLE GEAR SHIFT ASSY LEVIER D'EMBRAYAGE	1	1	1			L(21.0") L(21.0")
14	90468–18008	CLIP JONC	3	3	3			
15	90202–07M07	WASHER, PLATE RONDELLE, PLATE	1	1	1			
16	63D–44117–00	BRACKET SUPPORT	1	1	1			
17	93501–04M02	BALL BILLE	1	1	1			
18	90501–12082	SPRING, COMPRESSION RESSORT, COMPRESSION	1	1	1			
19	648–42715–00	BUSHING COUSSINET	1	1	1			
20	97013–06020	BOLT BOULON	1	1	1			
21	92903–06600	WASHER, PLATE RONDELLE, PLATE	1	1	1			
22	97013–06045	BOLT BOULON	1	1	1			
23	92903–06600	WASHER, PLATE RONDELLE, PLATE	1	1	1			
24	63D–44121–00	LEVER, SHIFT ROD LEVIER, TIGE D'INVERSION	1	1	1			
25	90386–07M58	BUSH DOUILLE	1	1	1			

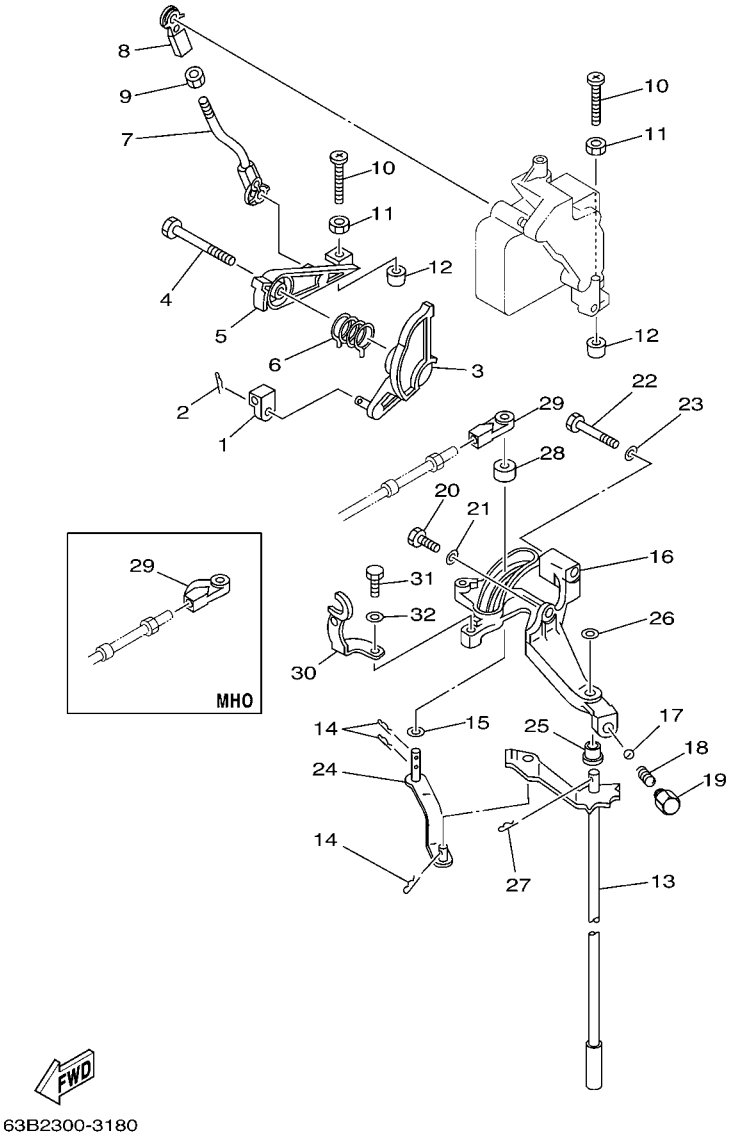

FIG. 18 CONTROL COMMANDE

REF. NO.	PART NO. N° PIECES	DESCRIPTION DESCRIPTION	ETO	EO	MHO			REMARKS REMARQUES
26	92990–08200	WASHER, PLAIN RONDELLE, PLATE	1	1	1			
27	91490–20012	PIN, COTTER GOUPILLE	1	1	1			
28	688–44122–00	BUSHING, SHIFT ROD LEVER DOUILLE, LEVIER D'EMBRAYAGE	1	1	1			
29	663–48344–00	CABLE END, REMOTE CONTROL CHAPE CABLE	1	1				
	63D–48344–00	CABLE END, REMOTE CONTROL CHAPE CABLE			1			
30	63D–15774–00	STAY 4 SUPPORT 4	1	1	1			
31	97095–06016	BOLT BOULON	1	1	1			
32	92995–06600	WASHER RONDELLE	1	1	1			

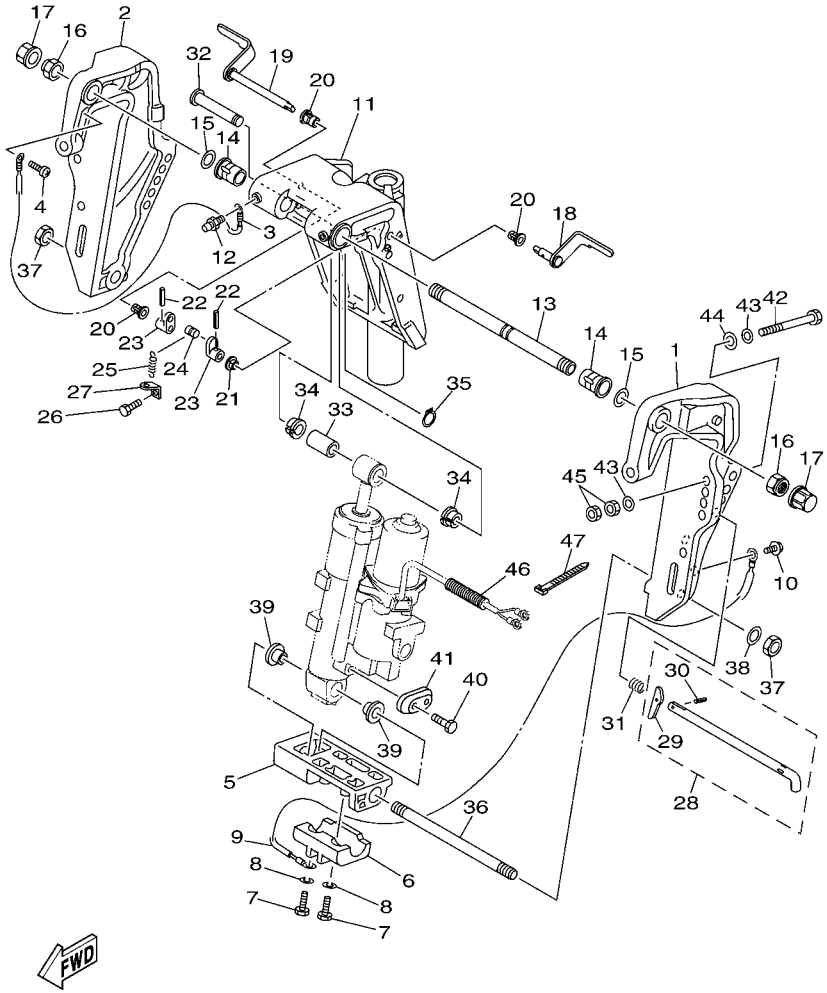

63B6300-F190

FIG. 19 BRACKET 1 SUPPORT 1

REF. NO.	PART NO. N° PIECES	DESCRIPTION DESCRIPTION	ETO	EO	MHO			REMARKS REMARQUES
1	63D–43111–01–4D	BRACKET, CLAMP 1 PRESSE 1	1					
2	63D–43112–01–4D	BRACKET, CLAMP 2 PRESSE 2	1					
3	63D–82148–00	WIRE, LEAD 4 FIL 4	1					
4	97885–06008	SCREW, PAN HEAD VIS, A ENCOCHE	1					
5	63D–43128–01–4D	SPACER, CLAMP BRACKET ENTRETOISE	1					
6	63D–45251–01	ANODE ANODE	1					
7	97095–06025	BOLT BOULON	2					
8	92995–06100	WASHER, SPRING RONDELLE, GROWER	2					
9	6H1–82148–00	WIRE, LEAD 4 FIL 4	1					
10	97595–06510	BOLT, WITH WASHER VIS HEXAGONAL AVC RONDELLE	1					
11	63D–43311–13–4D	BRACKET, SWIVEL 1 SUPPORT, PIVOT 1	1					
12	93700–06M03	NIPPLE, GREASE PION	3					
13	63D–43131–01	BOLT, CLAMP BRACKET BOULON, PRESSE	1					
14	90386–22M15	BUSH DOUILLE	2					
15	90201–22M03	WASHER, PLATE RONDELLE, PLATE	2					
16	90185–22M11	NUT, SELF-LOCKING ECROU,AUTO-BLOQUANT	2					
17	6G5–43145–01	CAP, CLAMP BRACKET CAPUCHON, PRESSE	2					
18	6H5–43181–03	LEVER, TILT STOP LEVIER, VERROUILLAGE RELEVAGE	1					
19	6H5–43185–03	LEVER, TILT STOP LEVIER, VERROUILLAGE RELEVAGE	1					
20	90386–10M16	BUSH DOUILLE	3					
21	90386–10025	BUSH DOUILLE	1					
22	91690–30020	PIN, SPRING AGRAFFE	2					
23	6G5–43148–00	COLLAR, DISTANCE ENTRETOISE	2					
24	90249–06M19	PIN GOUPILLE	1					
25	90506–14M24	SPRING, TENSION RESSORT, TENSION	1					
26	97095–06010	BOLT BOULON	1					
27	6G5–43144–00	HOOK, SPRING CROCHET	1					

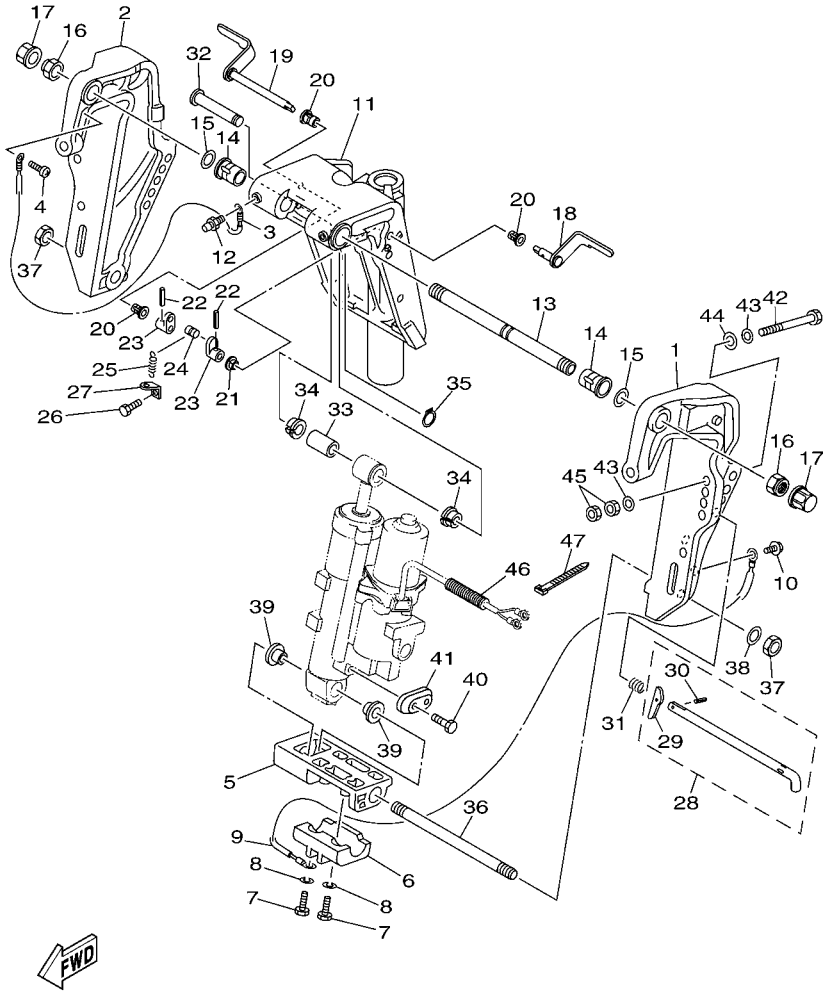

63B6300-F190

FIG. 19 BRACKET 1 — SUPPORT 1

REF. NO.	PART NO. N° PIECES	DESCRIPTION DESCRIPTION	ETO	EO	MHO			REMARKS REMARQUES
28	688–43160–01	TILT ROD ASSY BROCHE D'INCLINAISON (ENS.)	1					
29	688–43165–00	.PLATE, TILT LOCK .TAQUET, BROCHE INCLINAISON	1					
30	91690–30012	.PIN, SPRING .AGRAFFE	1					
31	90502–16M02	SPRING, CONICAL RESSORT, CONIQUE	1					
32	6E5–43126–02	PIN, UPPER SHOCK MOUNT AXE, SUPERIEUR AMORTISSEUR	1					
33	90386–18M92	BUSH DOUILLE	1					
34	90386–18M35	BUSH DOUILLE	2					
35	93410–18M02	CIRCLIP CLIPS	1					
36	90116–18M52	BOLT, STUD GOUJON	1					
37	90170–18M10	NUT ECROU	2					
38	92995–18600	WASHER RONDELLE	1					
39	90386–18M44	BUSH DOUILLE	2					
40	90101–06020	BOLT BOULON	2					
41	65W–45251–00	ANODE ANODE	1					
42	90101–12M65	BOLT BOULON	4					
43	92995–12200	WASHER RONDELLE	8					
44	90201–12426	WASHER, PLATE RONDELLE, PLATE	4					
45	95380–12600	NUT ECROU	8					
46	90440–14M00	PIPE DURITE	1					
47	90465–11M10	CLAMP BRIDE	3					

FIG. 20 BRACKET 2 SUPPORT 2

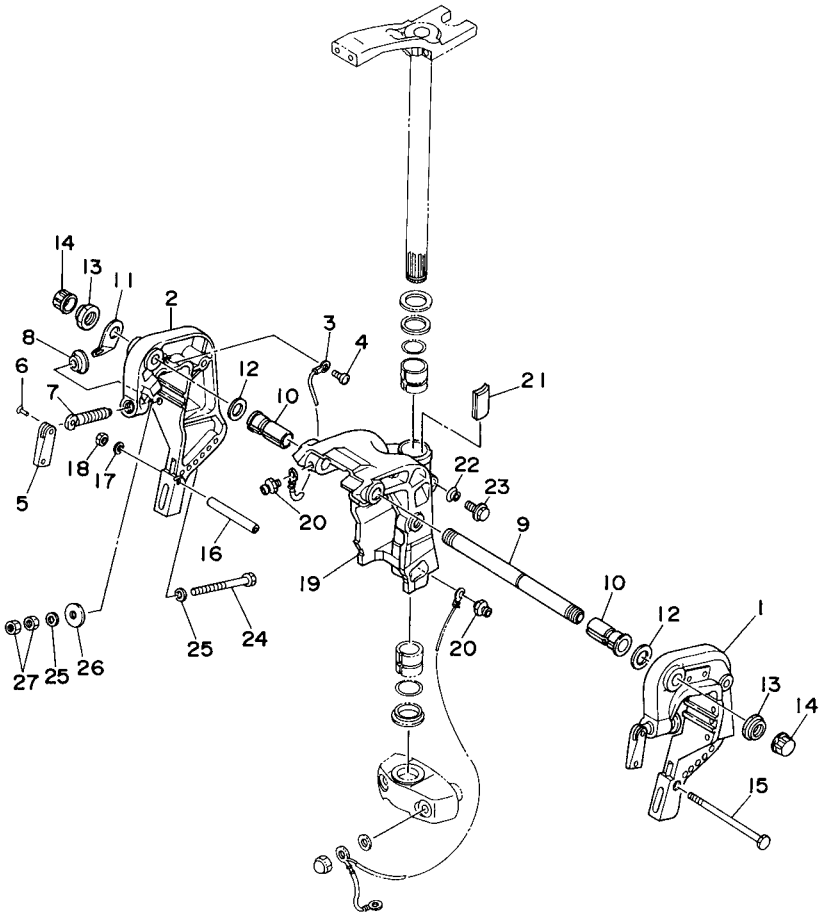

63D0010-5200

REF. NO.	PART NO. N° PIECES	DESCRIPTION DESCRIPTION	ETO	EO	MHO			REMARKS REMARQUES
1	6H4–43111–05–4D	BRACKET, CLAMP 1 PRESSE 1		1	1			
2	6H4–43112–04–4D	BRACKET, CLAMP 2 PRESSE 2		1	1			
3	6E5–82148–00	WIRE, LEAD 4 FIL 4		1	1			
4	97885–06008	SCREW, PAN HEAD VIS, A ENCOCHE		1	1			
5	6E0–43118–01	HANDLE, TRANSOM CLAMP POIGNEE DE VIS DE PRESSE		2	2			
6	90243–04M01	PIN GOUPILLE		2	2			
7	90149–14M12	SCREW VIS		2	2			
8	648–43114–01	PAD, TRANSOM CLAMP RONDELLE D'APPUI		2	2			
9	63D–43131–01	BOLT, CLAMP BRACKET BOULON, PRESSE		1	1			
10	90386–22M69	BUSH DOUILLE		2	2			
11	6J8–43113–01	PLATE, CLAMP BRACKET PLAQUETTE, PRESSE		1	1			
12	90201–22M03	WASHER, PLATE RONDELLE, PLATE		2	2			
13	90185–22M11	NUT, SELF-LOCKING ECROU,AUTO-BLOQUANT		2	2			
14	6G5–43145–01	CAP, CLAMP BRACKET CAPUCHON, PRESSE		2	2			
15	90101–08339	BOLT BOULON		1	1			
16	90387–08M03	COLLAR COLLERETTE		1	1			
17	92990–08600	WASHER, PLATE RONDELLE, PLATE		1	1			
18	95380–08600	NUT ECROU		1	1			
19	6J8–43311–04–4D	BRACKET, SWIVEL 1 SUPPORT, PIVOT 1		1	1			S(16.0") S(16.0")
	6J8–43311–10–4D	BRACKET, SWIVEL 1 SUPPORT, PIVOT 1		1	1			L(21.0") L(21.0")
20	93700–06M03	NIPPLE, GREASE PION		3	3			
21	6J8–42528–00	PLATE, FRICTION PLAQUE, FRICTION		1	1			
22	689–43373–01	SEAL, DAMPER JOINT		1	1			
23	90105–06M18	BOLT, FLANGE BOULON		1	1			
24	90101–10M58	BOLT BOULON		4	4			
25	92995–10600	WASHER RONDELLE		8	8			
26	90201–12426	WASHER, PLATE RONDELLE, PLATE		4	4			

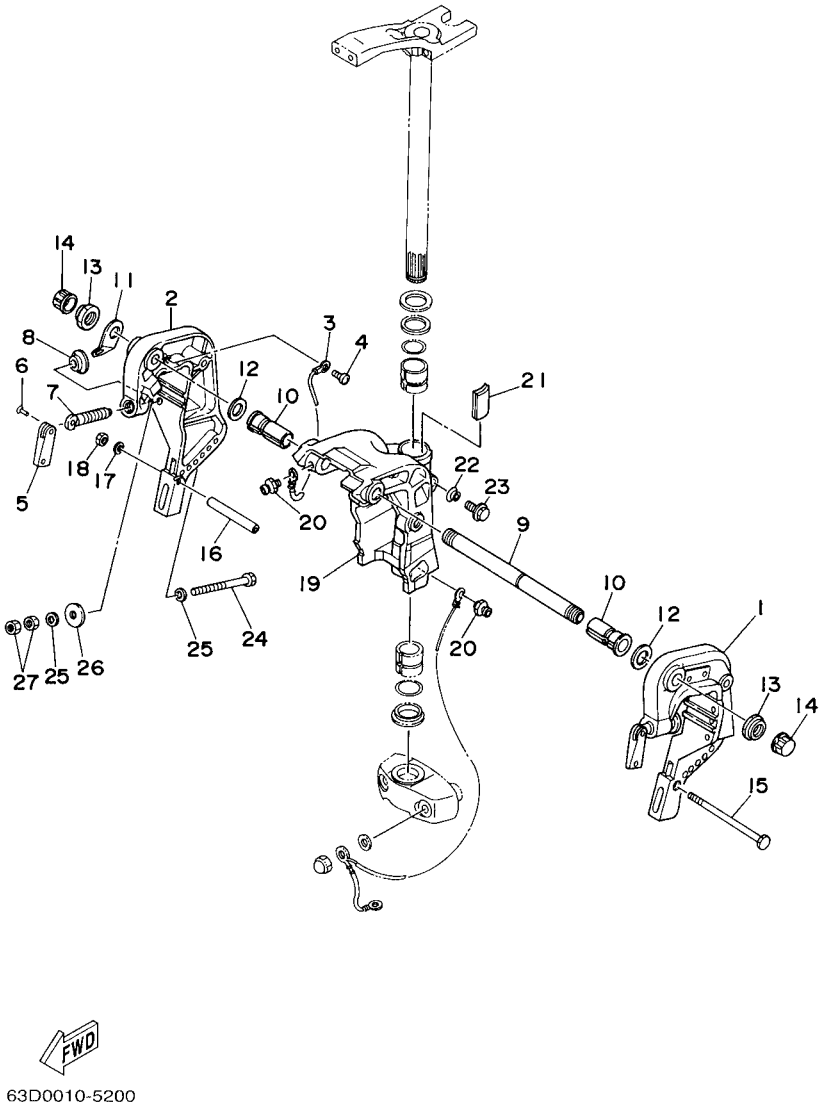

FIG. 20 BRACKET 2 SUPPORT 2

REF. NO.	PART NO. N° PIECES	DESCRIPTION DESCRIPTION	ETO	EO	MHO			REMARKS REMARQUES
27	95380–10600	NUT ECROU		8	8			

FIG. 21 BRACKET 3 SUPPORT 3

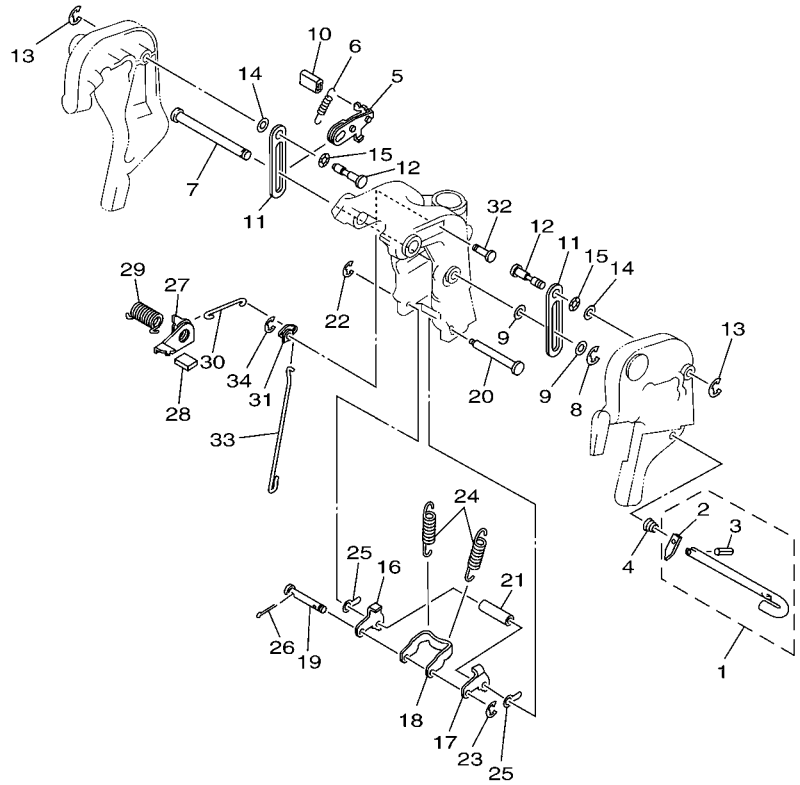

63B3300-C210

REF. NO.	PART NO. N° PIECES	DESCRIPTION DESCRIPTION	ETO	EO	MHO			REMARKS REMARQUES
1	6H4–43160–01	TILT ROD ASSY BROCHE D'INCLINAISON (ENS.)		1	1			
2	676–43165–00	.PLATE, TILT LOCK .TAQUET, BROCHE INCLINAISON		1	1			
3	91690–30010	.PIN, SPRING .AGRAFFE		1	1			
4	90502–10M04	SPRING, CONICAL RESSORT, CONIQUE		1	1			
5	6J8–43181–01	LEVER, TILT STOP LEVIER, VERROUILLAGE RELEVAGE		1	1			
6	90506–12M25	SPRING, TENSION RESSORT, TENSION		1	1			
7	90249–12M28	PIN GOUPILLE		1	1			
8	93430–10M00	CIRCLIP CLIPS		1	1			
9	90202–12031	WASHER, PLATE RONDELLE, PLATE		2	2			
10	682–43318–01	COVER CAPUCHON		1	1			
11	6J8–43627–00	STOPPER PLAQUETTE		2	2			
12	90249–12M27	PIN GOUPILLE		2	2			
13	93430–10M00	CIRCLIP CLIPS		2	2			
14	90202–12031	WASHER, PLATE RONDELLE, PLATE		2	2			
15	90206–12M16	WASHER, WAVE RONDELLE, ONDULEE		2	2			
16	6J8–43614–00	PLATE, TILT LOCK ETRIER, VERROUILLAGE MARCHE AR		1	1			
17	6J8–43615–00	PLATE, TILT LOCK ETRIER, VERROUILLAGE MARCHE AR		1	1			
18	6J8–43613–01	ARM, TILT LOCK GUIDE		1	1			
19	6H4–43659–00	SHAFT, REVERSE LOCK AXE, VERROUILLAGE MARCHE AR		1	1			
20	6J8–43611–01	SHAFT, TILT LOCK AXE, VERROUILLAGE MARCHE AR		1	1			
21	90387–07M64	COLLAR COLLERETTE		1	1			
22	93430–06M02	CIRCLIP CLIPS		1	1			
23	99080–05600	CIRCLIP CIRCLIP		1	1			
24	90506–32M22	SPRING, TENSION RESSORT, TENSION		2	2			
25	6H4–43674–00	WASHER RONDELLE		2	2			
26	91490–20010	PIN, COTTER GOUPILLE		2	2			
27	6J8–43631–00	LEVER, TILT LEVIER, INCLINAISON		1	1			

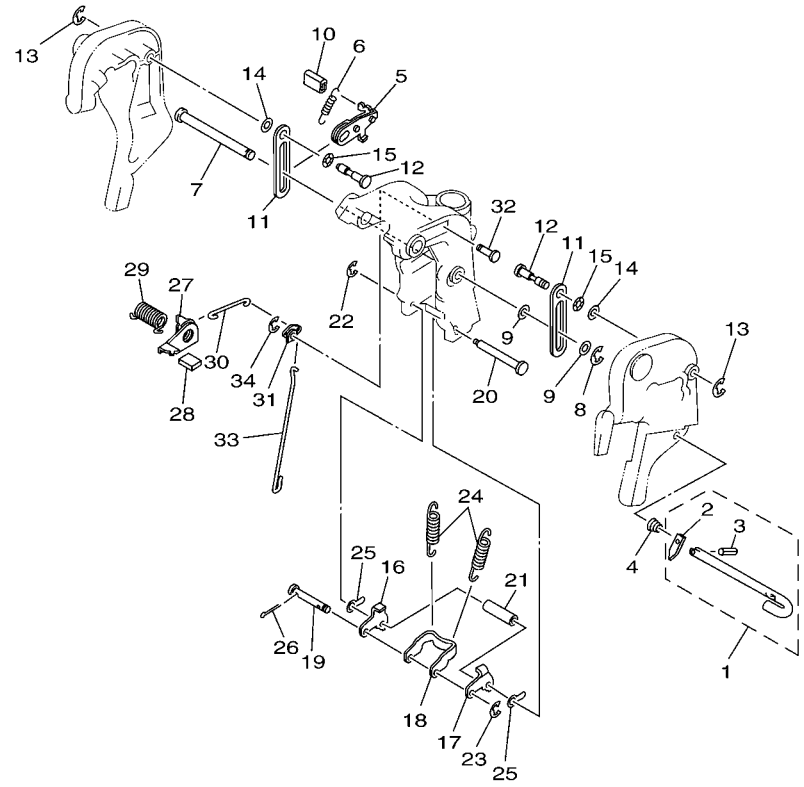

63B3300-C210

FIG. 21 BRACKET 3 SUPPORT 3

REF. NO.	PART NO. N° PIECES	DESCRIPTION DESCRIPTION	ETO	EO	MHO			REMARKS REMARQUES
28	6J8–43633–00	COVER, TILT LEVER COUVERCLE		1	1			
29	90508–18M24	SPRING, TORSION RESSORT, TORSION		1	1			
30	6H4–43616–00	ROD, TILT LOCK TIGE		1	1			
31	6J8–43641–00	LEVER, TILT LEVIER, INCLINAISON		1	1			
32	90249–06M23	PIN GOUPILLE		1	1			
33	6J8–43617–00	ROD, TILT LOCK TIGE		1	1			
34	99080–05600	CIRCLIP CIRCLIP		1	1			

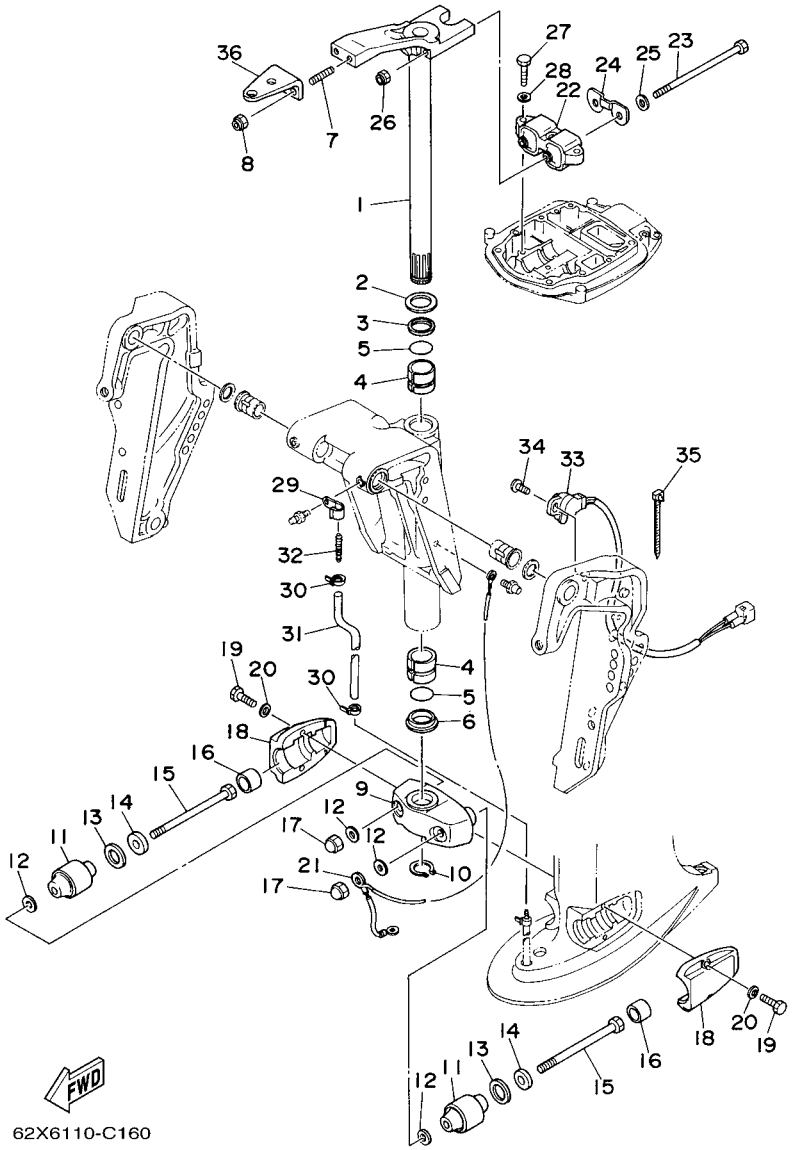

FIG. 22 BRACKET 4 SUPPORT 4

REF. NO.	PART NO. N° PIECES	DESCRIPTION DESCRIPTION	ETO	EO	MHO			REMARKS REMARQUES
1	63B–42510–01–4D	STEERING BRACKET ASSY DIRECTION SUPPORT (ENS.)		1	1			S(16.0") S(16.0")
	63B–42510–11–4D	STEERING BRACKET ASSY DIRECTION SUPPORT (ENS.)		1	1			L(21.0") L(21.0")
	63D–42510–12–4D	STEERING BRACKET ASSY DIRECTION SUPPORT (ENS.)	1					L(21.0") L(21.0")
2	90201–30M00	WASHER, PLATE RONDELLE, PLATE	1	1	1			
3	90386–30M78	BUSH DOUILLE	1	1	1			
4	90386–30M77	BUSH DOUILLE	2	2	2			
5	93210–29M94	O-RING JOINT TORIQUE	2	2	2			
6	90386–30M60	BUSH DOUILLE	1	1	1			
7	90116–10175	BOLT, STUD GOUJON	2	2	2			
8	90185–10051	NUT, SELF-LOCKING ECROU,AUTO-BLOQUANT	2	2	2			
9	63D–44551–01–4D	HOUSING, LOWER MOUNT RUBBER BOITIER, SILENT-BLOC INFERIEUR	1	1	1			
10	93410–28M06	CIRCLIP CLIPS	1	1	1			
11	687–44555–00–94	MOUNT DAMPER, LOWER SIDE SILENT-BLOC, INFERIEUR LATERAL		2	2			S(16.0") S(16.0")
	63D–44555–00–94	MOUNT DAMPER, LOWER SIDE SILENT-BLOC, INFERIEUR LATERAL	2	2	2			L(21.0") L(21.0")
12	90201–12M16	WASHER, PLATE RONDELLE, PLATE	4	4	4			
13	90202–25M04	WASHER, PLATE RONDELLE, PLATE	2	2	2			
14	90201–13M19	WASHER, PLATE RONDELLE, PLATE	2	2	2			
15	90109–12M21	BOLT BOULON	2	2	2			
16	663–44575–00	DAMPER, LOWER MOUNT RUBBER SILENT-BLOC, INFERIEUR	2	2	2			
17	95380–12800	NUT, CROWN ECROU, BORGNE	2	2	2			
18	63D–44552–01–4D	HOUSING, LOWER MOUNT RUBBER BOITIER, SILENT-BLOC INFERIEUR	2	2	2			
19	97075–08030	BOLT BOULON	4	4	4			
20	92995–08100	WASHER RONDELLE	4	4	4			
21	63D–82127–00	WIRE, LEAD 2 FIL 2		1	1			S(16.0") S(16.0")
	63D–82127–10	WIRE, LEAD 2 FIL 2	1	1	1			L(21.0") L(21.0")
22	63D–44514–01–94	MOUNT DAMPER, UPPER SIDE SILENT-BLOC, SUPERIEUR LATERAL	1	1	1			
23	90101–08M15	BOLT BOULON	2	2	2			

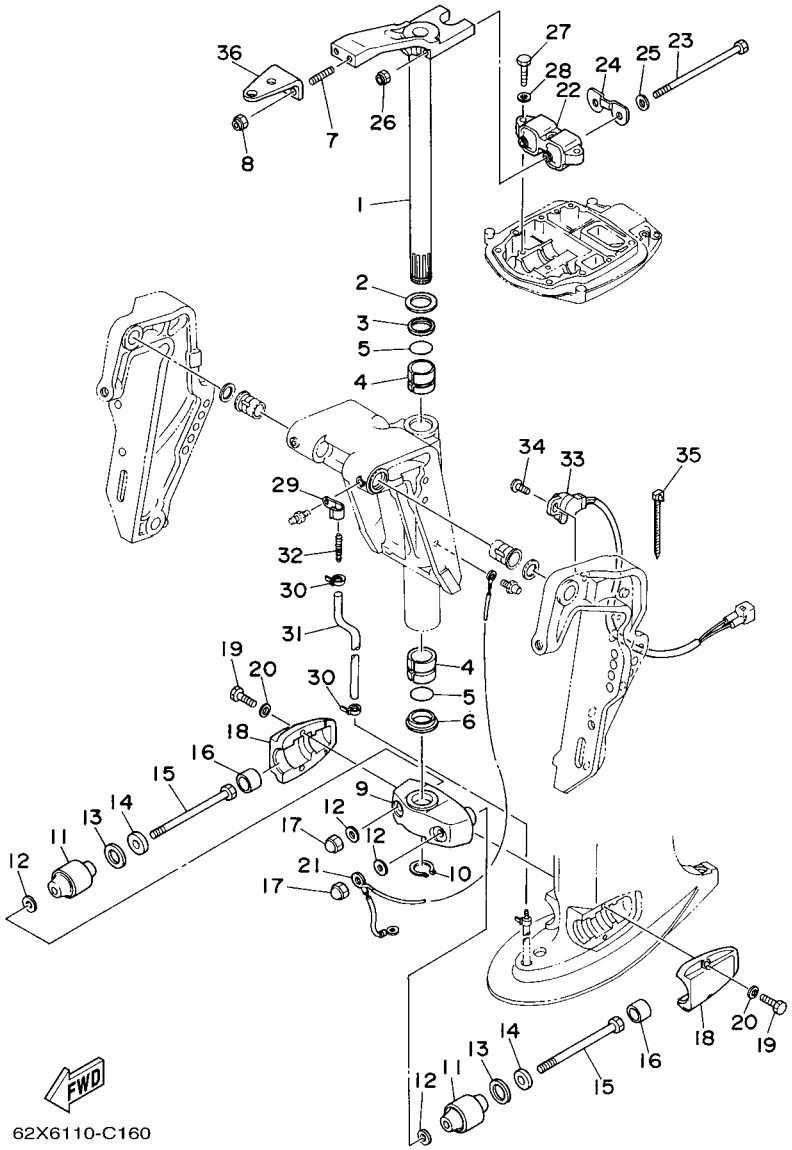

FIG. 22 BRACKET 4 SUPPORT 4

REF. NO.	PART NO. N° PIECES	DESCRIPTION DESCRIPTION	ETO	EO	MHO			REMARKS REMARQUES
24	63D–44526–00	PLATE PLAQUE	1	1	1			
25	90201–09425	WASHER, PLATE RONDELLE, PLATE	2	2	2			
26	90185–08045	NUT, SELF-LOCKING ECROU,AUTO-BLOQUANT	2	2	2			
27	97075–08030	BOLT BOULON	3	3	3			
28	92995–08100	WASHER RONDELLE	3	3	3			
29	90465–06M86	CLAMP BRIDE	1					
30	90465–11M10	CLAMP BRIDE	2					
31	90445–07MF1	HOSE (L570) DURITE (L570)	1					
32	6E5–83558–00	END, NIPPLE RACCORD DE NIPPLE	1					
33	63D–83672–10	TRIM SENDER INCLINER RACCORD	1					
34	97885–06016	SCREW, PAN HEAD VIS, A ENCOCHE	2					
35	90465–13M11	CLAMP BRIDE	1					
36	63D–48511–00–4D	HOOK, STEERING ATTACHE, DIRECTION	1	1				STEERING GUIDE

FIG. 23 POWER TRIM & TILT ASSY 1 PUISSANCE PARER ET INCLINER 1

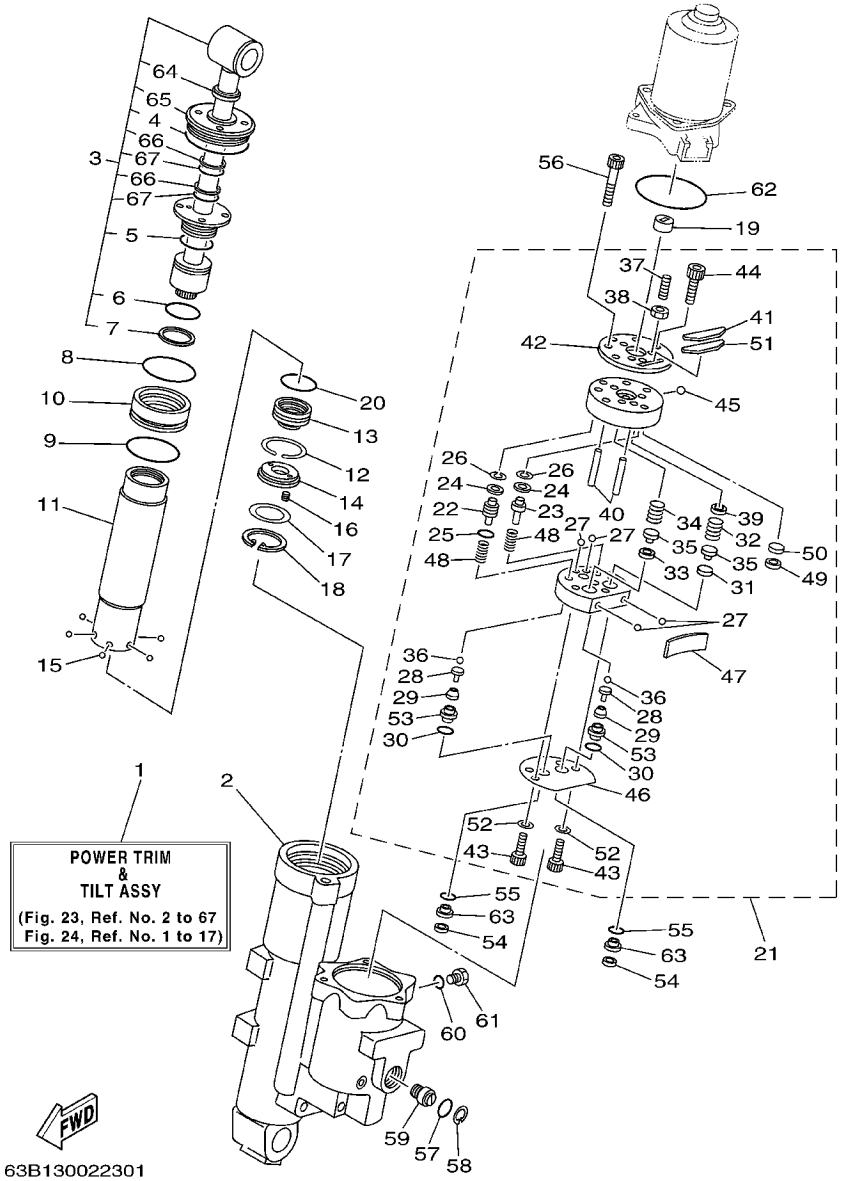

REF. NO.	PART NO. N° PIECES	DESCRIPTION DESCRIPTION	ETO	EO	MHO			REMARKS REMARQUES
1	62Y–43800–01–4D	POWER TRIM & TILT ASSY PUISSANCE PARER ET INCLINER (E	1					
2	62Y–4380K–01	CYLINDER, TILT SUB ASSY CYLINDRE	1					
3	62X–43810–01	TILT PISTON SUB ASSY INCLINER PISTON AUXILIAIRE(ENS	1					
4	62X–43861–00	.O-RING .JOINT TORIQUE	1					
5	62X–43862–00	.O-RING .JOINT TORIQUE	1					
6	93210–29375	.O-RING .JOINT TORIQUE	1					
7	62X–43871–00	.RING, BACK UP .SEGMENT	1					
8	93210–44383	O-RING JOINT TORIQUE	1					
9	93210–48214	O-RING JOINT TORIQUE	1					
10	62X–4388A–00	PISTON, TRIM PISTON	1					
11	62Y–22471–00	CYLINDER, SHOCK ABSORBER CYLINDRE, AMORTISSEUR	1					
12	67F–43875–00	RING, SNAP RESSORT	1					
13	69W–4381B–00	FREE PISTON SUB ASSY PISTON AUXILIAIRE (ENS.)	1					
14	62X–43899–00	PLATE STOPPER PLAQUETTE	1					
15	93503–16003	BALL BILLES	6					
16	62X–4384H–00	SPRING RESSORT	2					
17	1UF–22434–00	PLATE, VALVE 1 PLATEAU, SOUPAPE 1	1					
18	62X–43875–00	RING, SNAP RESSORT	1					
19	6H1–43831–10	CONNECTOR, SHAFT RACCORD	1					
20	93210–29375	O-RING JOINT TORIQUE	1					
21	62Y–43830–01	GEAR PUMP ASSY POMPE A PIGNON (ENS.)	1					
22	69J–43841–00	.PISTON, SHUTTLE .PISTON	1					
23	69J–4384M–00	.PISTON, SHUTTLE 2 .PISTON 2	1					
24	69A–4384F–00	.SEAL, MAIN VALVE .JOINT	2					
25	6H1–43883–00	.O-RING .JOINT TORIQUE	1					
26	99002–03600	.CIRCLIP .CIRCLIP	2					
27	93505–32038	.BALL .BILLE	4					

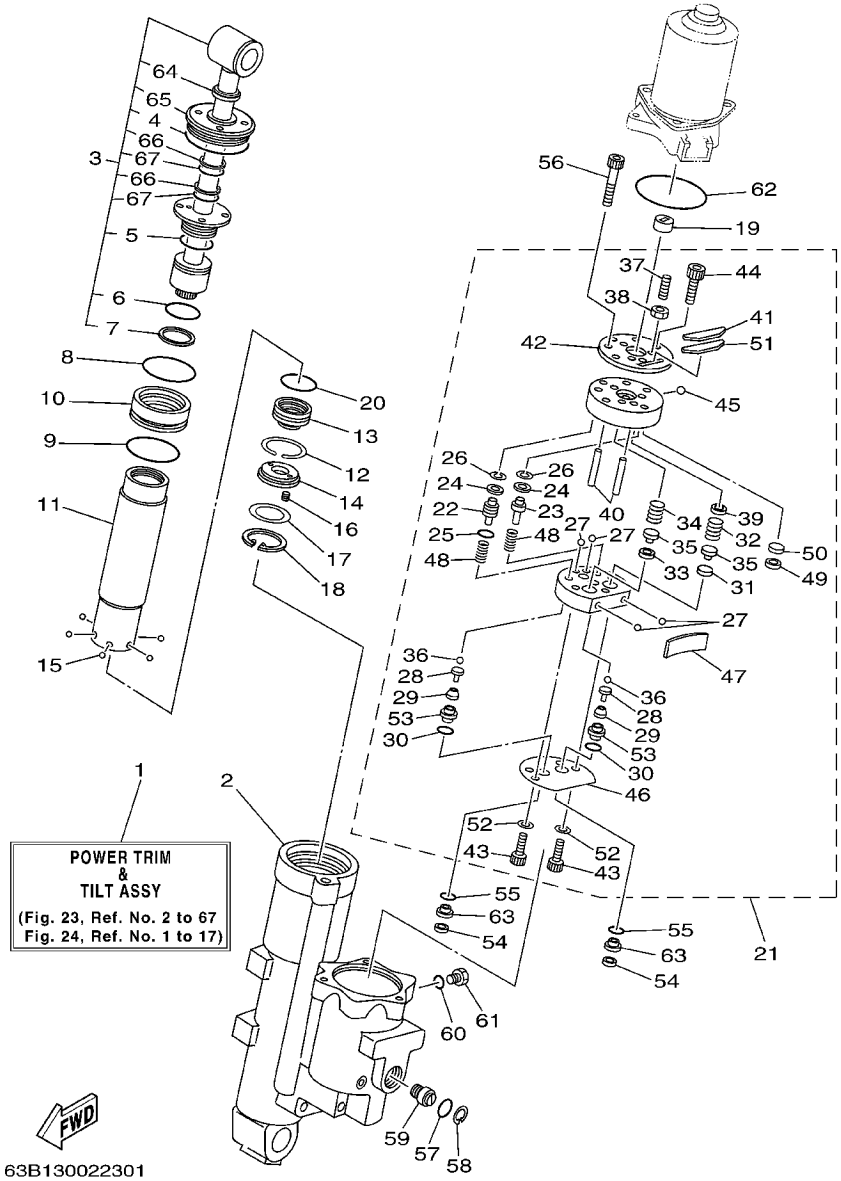

FIG. 23 POWER TRIM & TILT ASSY 1 PUISSANCE PARER ET INCLINER 1

REF. NO.	PART NO. N° PIECES	DESCRIPTION DESCRIPTION	ETO	EO	MHO			REMARKS REMARQUES
28	65W–4386A–00	.PIN, ABSORBER VALVE .GOUPILLE, SOUPAPE	2					
29	69J–43853–00	.SPRING, MAIN VALVE .RESSORT	2					
30	69J–4389J–00	.O-RING .JOINT TORIQUE	2					
31	6H1–4384G–11	.SEAL, RELIEF VALVE .JOINT	1					
32	62Y–43855–00	.SPRING, UP RELIEF .RESSORT	1					
33	6H1–4384F–10	.SEAL, MAIN VALVE .JOINT	1					
34	6H1–43856–10	.SPRING, DOWN RELIEF .RESSORT	1					
35	6H1–43844–10	.PIN, VALVE SUPPORT .GOUPILLE	2					
36	93505–32038	.BALL .BILLE	2					
37	92A08–03110	.SCREW SET .VIS	1					
38	95302–03600	.NUT .ECROU	1					
39	62Y–4382A–00	.ADAPTOR 1 .ADAPTEUR 1	1					
40	93604–26256	.PIN, DOWEL .CLAVETTE	2					
41	62Y–43816–00	.FILTER 1 .FILTRE 1	1					
42	62Y–4382L–00	.CAP, RELIEF VALVE .CAPUCHON	1					
43	91318–05020	.BOLT .BOULON	2					
44	91318–05008	.BOLT .BOULON	2					
45	93501–08001	.BALL .BILLE	1					
46	69W–4384G–00	.SEAL, RELIEF VALVE .JOINT	1					
47	62Y–43854–00	.SPRING, MANUAL RELEASE .RESSORT	1					
48	69J–43894–00	.SPRING, SHUTTLE RETURN .RESSORT	2					
49	62Y–4387J–00	.WASHER, SPECIAL 2 .RONDELLE	1					
50	62Y–22434–00	.PLATE, VALVE 1 .PLATEAU, SOUPAPE 1	1					
51	62Y–43871–00	.RING, BACK UP .SEGMENT	1					
52	62Y–4387G–00	.WASHER .RONDELLE	2					
53	69J–43893–00	.WASHER .RONDELLE	2					
54	6H1–43816–00	FILTER 1 FILTRE 1	2					

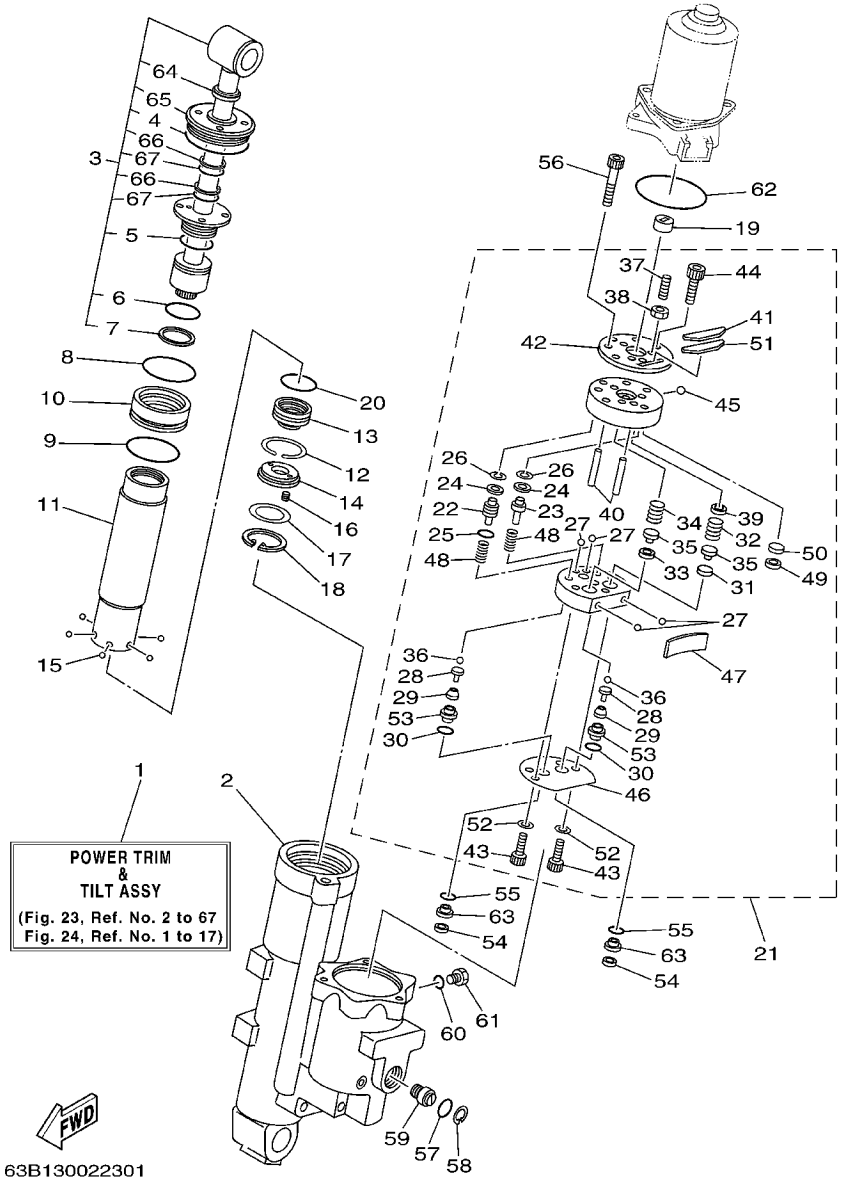

FIG. 23 POWER TRIM & TILT ASSY 1 PUISSANCE PARER ET INCLINER 1

REF. NO.	PART NO. N° PIECES	DESCRIPTION DESCRIPTION	ETO	EO	MHO			REMARKS REMARQUES
55	69J–4389J–00	O-RING JOINT TORIQUE	2					
56	91318–06040	BOLT BOULON	3					
57	93210–18397	O-RING JOINT TORIQUE	1					
58	6H1–43875–00	RING, SNAP RESSORT	1					
59	62Y–43845–00	SCREW, MANUAL RELEASE VIS	1					
60	93210–09165	O-RING JOINT TORIQUE	1					
61	6H1–43829–00	PLUG, RESERVOIR BOUCHON	1					
62	62X–43865–00	O-RING JOINT TORIQUE	1					
63	69W–43899–01	PLATE STOPPER PLAQUETTE	2					
64	62Y–43822–00	.SEAL, TRIM DUST .JOINT	1					
65	62X–43821–00	.SCREW, TRIM CYLINDER END .VIS	1					
66	62X–43872–00	.RING, BACK UP .RESSORT	2					
67	6C5–43863–00	.O-RING .JOINT TORIQUE	2					

FIG. 24 POWER TRIM & TILT ASSY 2 PUISSANCE PARER ET INCLINER 2

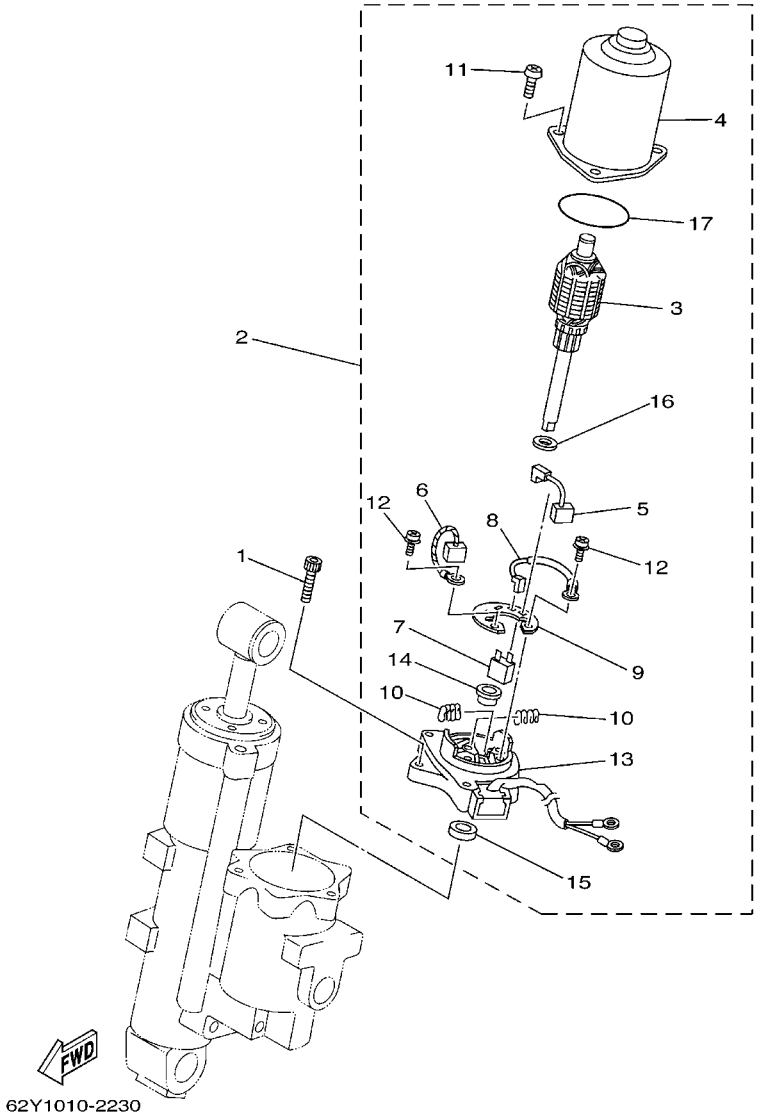

REF. NO.	PART NO. N° PIECES	DESCRIPTION DESCRIPTION	ETO	EO	MHO			REMARKS REMARQUES
1	62X–43888–00	BOLT, SOCKET BOULON	3					
2	62Y–43880–01	MOTOR ASSY MOTEUR (ENS.)	1					
3	62Y–43805–00	.ARMATURE ASSY .INDUIT (ENS.)	1					
4	62X–43804–01	.STATOR ASSY .STATOR (ENS.)	1					
5	62Y–43892–00	.BRUSH 2 .BALAI 2	1					
6	62Y–43891–00	.BRUSH 1 .BALAI 1	1					
7	62Y–82181–01	.CIRCUIT BREAKER COMP. .RUPTEUR COMPLET	1					
8	62X–43807–00	.WIRE SUB ASSY .AUXILIAIRE CABLE (ENS.)	1					
9	69W–4380F–00	.PLATE, BRUSH HOLDER .PLAQUE	1					
10	62X–4386K–00	.SPRING, BRUSH .RESSORT, BALAI	2					
11	97880–05020	.SCREW, PAN HEAD .VIS, TETE TRONCONIQUE	3					
12	97602–04216	.SCREW, PAN HEAD WITH WASHER .VIS	2					
13	62Y–43881–00	.FRAME, END .BATI	1					
14	62X–4380H–00	.METAL .METAL	1					
15	93102–08414	.OIL SEAL .JOINT SPY	1					
16	90201–083J8	.WASHER, PLATE .RONDELLE, PLATE	1					
17	93210–52449	.O-RING .JOINT TORIQUE	1					

FIG. 25 UPPER CASING FOURREAU

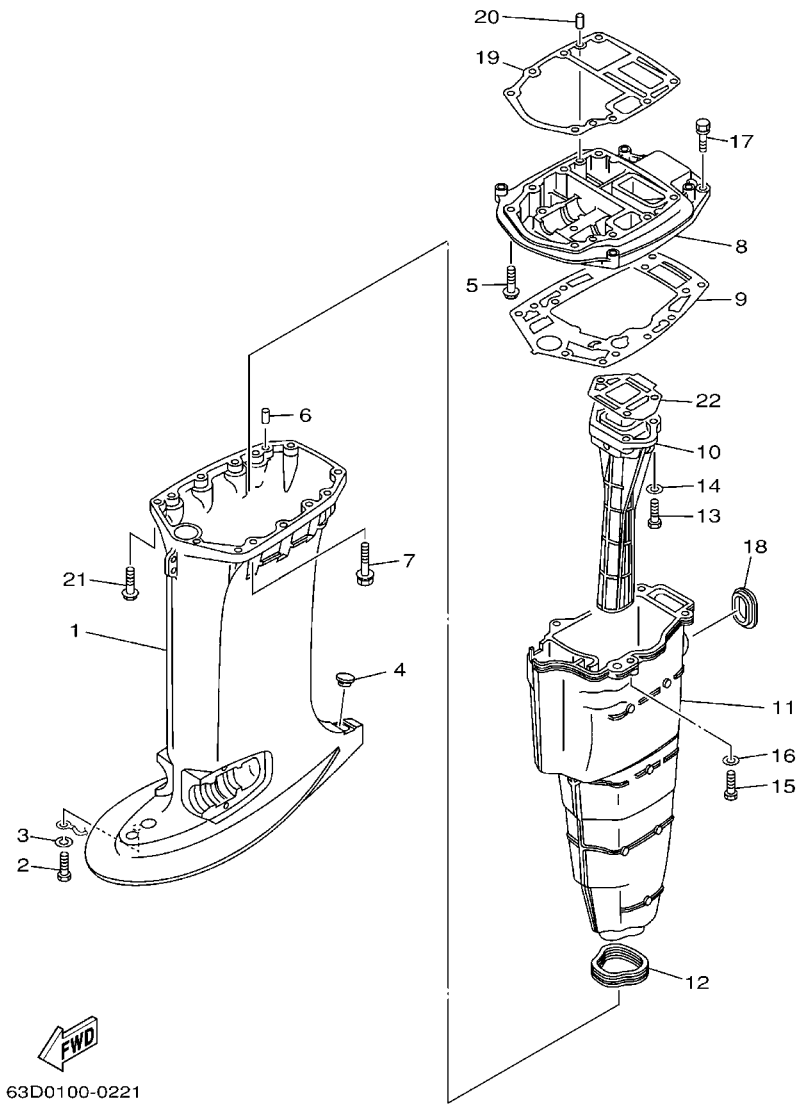

REF. NO.	PART NO. N° PIECES	DESCRIPTION DESCRIPTION	ETO	EO	MHO			REMARKS REMARQUES
1	63D–45111–01–4D	CASING, UPPER FOURREAU		1	1			S(16.0") S(16.0")
	63D–45111–11–4D	CASING, UPPER FOURREAU	1	1	1			L(21.0") L(21.0")
2	97095–06012	BOLT BOULON	1	1	1			
3	92995–06100	WASHER, SPRING RONDELLE, GROWER	1	1	1			
4	63D–45155–00	CAP CAPUCHON	1	1	1			
5	97575–08445	BOLT, WITH WASHER VIS HEXAGONAL AVC RONDELLE	2	2	2			
6	93606–12019	PIN, DOWEL GOUPILLE	2	2	2			
7	90119–08M83	BOLT, WITH WASHER BOULON, AVEC RONDELLE	6	6	6			
8	63D–41137–01–5B	GUIDE, EXHAUST COLLECTEUR D'ECHAPPEMENT	1	1	1			
9	63D–45114–A0	GASKET, UPPER CASING JOINT, TUBE D'ARBRE	1	1	1			
10	6H4–41131–01–5B	MANIFOLD, EXT. 1 PIPE D'ECHAPPEMENT		1	1			40V 40V
	6H5–41131–00–5B	MANIFOLD, EXT. 1 PIPE D'ECHAPPEMENT	1					40Y 40Y
11	63D–14711–00–5B	MUFFLER 1 POT D'ECHAPPEMENT 1		1	1			S(16.0") S(16.0")
	63D–14711–11–5B	MUFFLER 1 POT D'ECHAPPEMENT 1	1	1	1			L(21.0") L(21.0")
12	63D–45123–00	GASKET, MUFFLER JOINT, POT DE DETENTE	1	1	1			
13	97075–08030	BOLT BOULON	3	3	3			
14	92995–08600	WASHER RONDELLE	3	3	3			
15	97075–08030	BOLT BOULON	4	4	4			
16	92995–08600	WASHER RONDELLE	4	4	4			
17	90119–08M79	BOLT, WITH WASHER BOULON, AVEC RONDELLE	2	2	2			
18	6H3–45127–00	SEAL JOINT	1	1	1			
19	6H4–45113–A0	GASKET, UPPER CASING JOINT, TUBE D'ARBRE	1	1	1			
20	93606–12019	PIN, DOWEL GOUPILLE	2	2	2			
21	97575–08445	BOLT, WITH WASHER VIS HEXAGONAL AVC RONDELLE	2	2	2			
22	6H4–41134–A0	GASKET, EXHAUST MANIFOLD JOINT, PIPE D'ECHAPPEMENT	1	1	1			

FIG. 26 LOWER CASING & DRIVE 1 BOITIER D'HELICE TRANSMISSION1

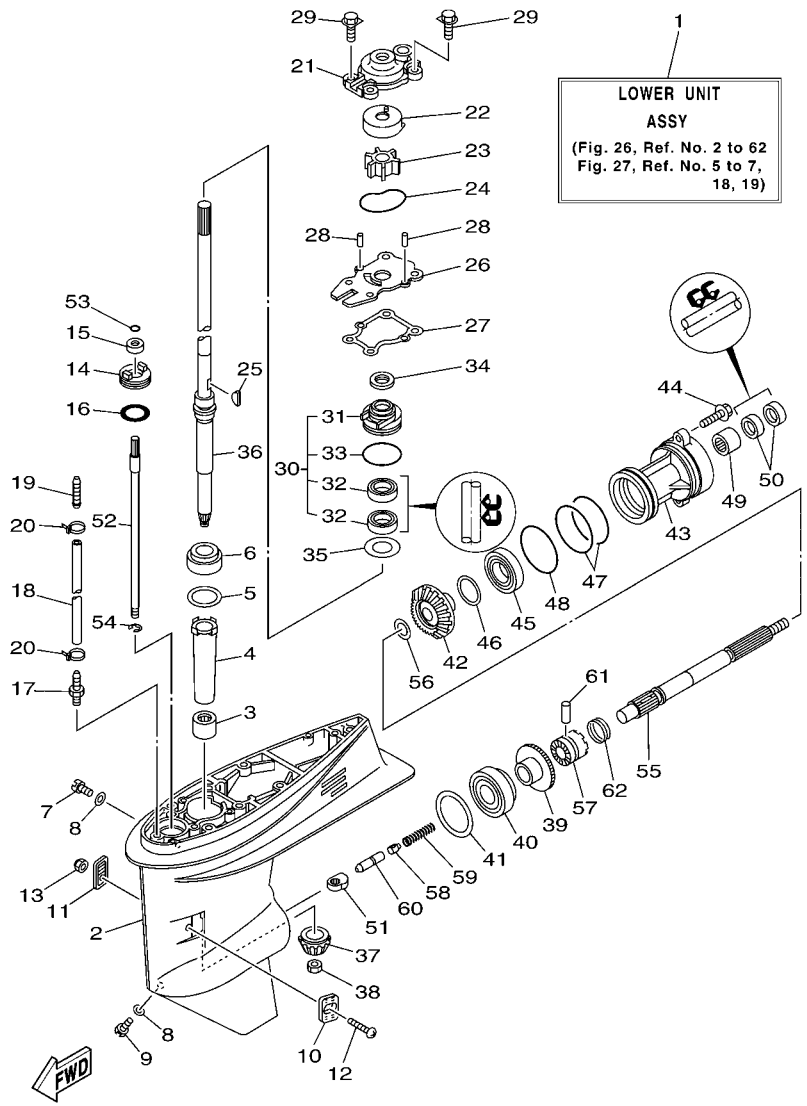

REF. NO.	PART NO. N° PIECES	DESCRIPTION DESCRIPTION	ETO	EO	MHO			REMARKS REMARQUES
1	63D–45300–02–4D	LOWER UNIT ASSY UNITE INFERIEURE (ENS.)		1	1			S(16.0") S(16.0")
	63D–45300–12–4D	LOWER UNIT ASSY UNITE INFERIEURE (ENS.)	1	1	1			L(21.0") L(21.0")
2	63D–45301–03–4D	CASING, LOWER BEQUILLE	1	1	1			
3	93315–32224	BEARING ROULEMENT	1	1	1			
4	6H4–45536–00	SLEEVE, DRIVE SHAFT MANCHON, ARBRE MOTEUR	1	1	1			
5	663–45587–01	SHIM (T:0.10MM) CALE (T:0.10MM)	1	1	1			UR UR
	663–45587–10	SHIM (T:0.12MM) CALE (T:0.12MM)	1	1	1			UR UR
	663–45587–20	SHIM (T:0.15MM) CALE (T:0.15MM)	1	1	1			UR UR
	663–45587–30	SHIM (T:0.18MM) CALE (T:0.18MM)	1	1	1			UR UR
	663–45587–40	SHIM (T:0.30MM) CALE (T:0.30MM)	1	1	1			UR UR
	663–45587–50	SHIM (T:0.40MM) CALE (T:0.40MM)	1	1	1			UR UR
	663–45587–60	SHIM (T:0.50MM) CALE (T:0.50MM)	1	1	1			UR UR
6	93332–00001	BEARING ROULEMENT	1	1	1			
7	90340–08002	PLUG, STRAIGHT SCREW PLOT, FILETE DROIT	1	1	1			
8	90430–08020	GASKET JOINT	2	2	2			
9	688–45341–10	PLUG, DRAIN BOUCHON DE VIDANGE	1	1	1			
10	63D–45214–00	COVER, WATER INLET 1 GRILLE, ENTREE D'EAU 1	1	1	1			
11	63D–45215–00	COVER, WATER INLET 2 GRILLE, ENTREE D'EAU 2	1	1	1			
12	90142–05M06	SCREW, COUNTERSUNK VIS, TETE NOYEE	1	1	1			
13	95380–05600	NUT ECROU	1	1	1			
14	63D–45321–00	PLATE PLAQUETTE	1	1	1			
15	93106–09014	OIL SEAL JOINT SPY	1	1	1			
16	93210–33MG4	O-RING JOINT TORIQUE	1	1	1			
17	6E5–45378–00	NIPPLE, HOSE RACCORD, TUYAU	1	1	1			
18	90445–07ME9	HOSE (L120) DURITE (L120)		1	1			S(16.0") S(16.0")
	90445–07M31	HOSE (L200) DURITE (L200)	1	1	1			L(21.0") L(21.0")
19	6E5–83558–10	END, NIPPLE RACCORD DE NIPPLE	1					

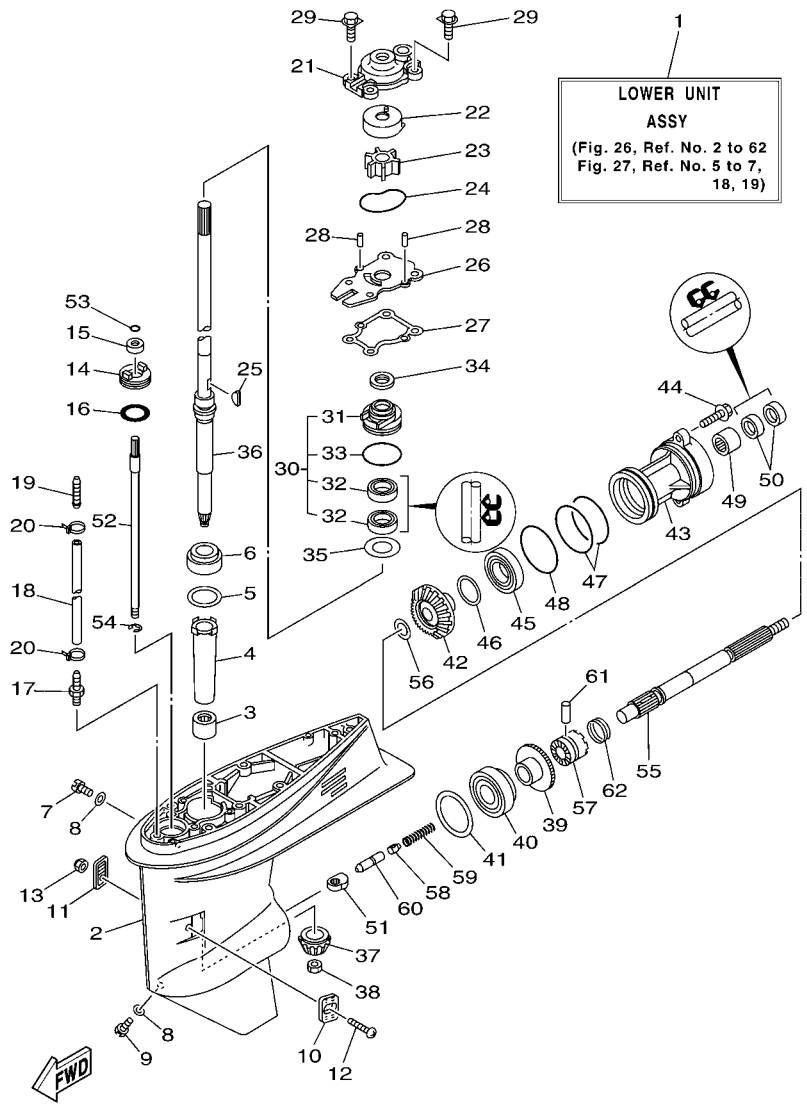

FIG. 26 LOWER CASING & DRIVE 1 BOITIER D'HELICE TRANSMISSION1

REF. NO.	PART NO. N° PIECES	DESCRIPTION DESCRIPTION	ETO	EO	MHO			REMARKS REMARQUES
19	6E5–83558–00	END, NIPPLE RACCORD DE NIPPLE		1	1			
20	90465–11M10	CLAMP BRIDE	2	2	2			
21	63D–44311–00	HOUSING, WATER PUMP CORPS, POMPE A EAU	1	1	1			
22	63D–44322–00	INSERT, CARTRIDGE CUVETTE	1	1	1			
23	6H3–44352–00	IMPELLER TURBINE	1	1	1			
24	93210–59MG7	O-RING JOINT TORIQUE	1	1	1			
25	90280–03024	KEY, WOODRUFF CLAVETTE, DEMI-LUNE	1	1	1			
26	63D–44323–00	OUTER PLATE, CARTRIDGE PLAQUE EXTERIEURE	1	1	1			
27	63D–44316–00	GASKET, WATER PUMP JOINT, POMPE A EAU	1	1	1			
28	93604–08062	PIN, DOWEL CLAVETTE	2	2	2			
29	90119–08M15	BOLT, WITH WASHER BOULON, AVEC RONDELLE	4	4	4			
30	63D–W4434–00	WATER PUMP HOUSING ASSY CORPS ENS., POMPE A EAU	1	1	1			
31	63D–44341–00	.HOUSING, WATER PUMP .CORPS, POMPE A EAU	1	1	1			
32	93101–25M57	.OIL SEAL .JOINT SPY	2	2	2			
33	93210–48MG8	.O-RING .JOINT TORIQUE	1	1	1			
34	63D–45344–00	COVER, OIL SEAL FLASQE, JOINT D'HUILE	1	1	1			
35	90201–27M00	WASHER, PLATE RONDELLE, PLATE	1	1	1			
36	63D–45501–00	DRIVE SHAFT COMP. ARBRE MOTEUR COMP.		1	1			S(16.0") S(16.0")
	63D–45501–10	DRIVE SHAFT COMP. ARBRE MOTEUR COMP.	1	1	1			L(21.0") L(21.0")
37	6H4–45551–01	PINION (13T) PIGNON D'ATTAQUE (13D)	1	1	1			
38	90170–12138	NUT ECROU	1	1	1			
39	6H4–45560–01	GEAR 1 (24T) PIGNON 1 (24T)	1	1	1			
40	93332–00003	BEARING ROULEMENT	1	1	1			
41	663–45567–01	SHIM (T:0.10MM) CALE (T:0.10MM)	1	1	1			UR UR
	663–45567–10	SHIM (T:0.12MM) CALE (T:0.12MM)	1	1	1			UR UR
	663–45567–20	SHIM (T:0.15MM) CALE (T:0.15MM)	1	1	1			UR UR
	663–45567–30	SHIM (T:0.18MM) CALE (T:0.18MM)	1	1	1			UR UR

FIG. 26 LOWER CASING & DRIVE 1 BOITIER D'HELICE TRANSMISSION1

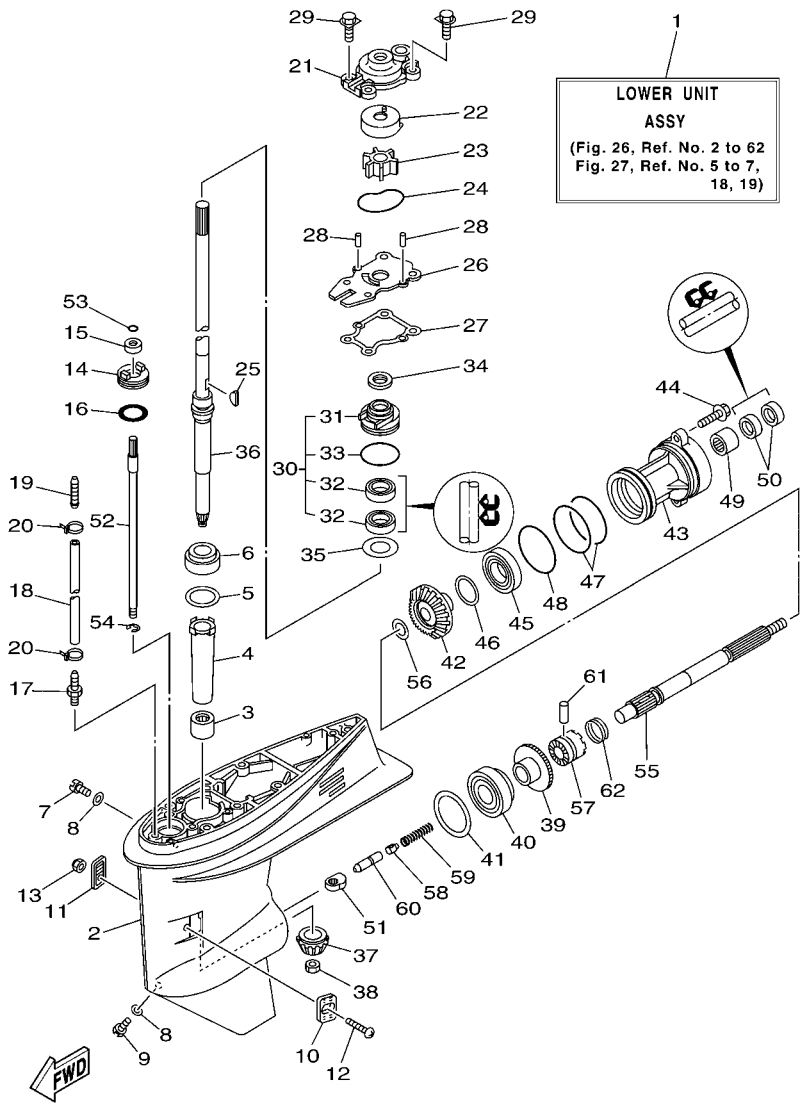

REF. NO.	PART NO. N° PIECES	DESCRIPTION DESCRIPTION	ETO	EO	MHO			REMARKS REMARQUES
41	663–45567–40	SHIM (T:0.30MM) CALE (T:0.30MM)	1	1	1			UR UR
	663–45567–50	SHIM (T:0.40MM) CALE (T:0.40MM)	1	1	1			UR UR
	663–45567–60	SHIM (T:0.50MM) CALE (T:0.50MM)	1	1	1			UR UR
42	6H4–45571–01	GEAR 2 (24T) PIGNON 2 (24T)	1	1	1			
43	63D–45361–02–4D	CAP, LOWER CASING COUVERCLE, BOITIER D'HELICE	1	1	1			
44	90105–08M61	BOLT, FLANGE BOULON	2	2	2			
45	93306–001U1	BEARING ROULEMENT	1	1	1			
46	63D–45577–00	SHIM (T:0.10MM) CALE (T:0.10MM)	1	1	1			UR UR
	63D–45577–10	SHIM (T:0.12MM) CALE (T:0.12MM)	1	1	1			UR UR
	63D–45577–20	SHIM (T:0.15MM) CALE (T:0.15MM)	1	1	1			UR UR
	63D–45577–30	SHIM (T:0.18MM) CALE (T:0.18MM)	1	1	1			UR UR
	63D–45577–40	SHIM (T:0.30MM) CALE (T:0.30MM)	1	1	1			UR UR
	63D–45577–50	SHIM (T:0.40MM) CALE (T:0.40MM)	1	1	1			UR UR
	63D–45577–60	SHIM (T:0.50MM) CALE (T:0.50MM)	1	1	1			UR UR
47	93210–74MG5	O-RING JOINT TORIQUE	2	2	2			
48	93210–69MG6	O-RING JOINT TORIQUE	1	1	1			
49	93317–22204	BEARING ROULEMENT	1	1	1			
50	93101–22M00	OIL SEAL JOINT SPY	2	2	2			
51	663–44151–00	CAM, SHIFT CAME, INVERSION	1	1	1			
52	63D–44144–00	ROD, SHIFT TIGE D'EMBRAYAGE	1	1	1			
53	93210–07003	O-RING JOINT TORIQUE	1	1	1			
54	99001–08600	CIRCLIP CIRCLIP	1	1	1			
55	63D–45611–00	SHAFT, PROPELLER ARBRE, HELICE	1	1	1			
56	90201–22429	WASHER, PLATE RONDELLE, PLATE	1	1	1			
57	63D–45631–01	CLUTCH, DOG CRABOT	1	1	1			
58	663–45634–00	SLIDE, SHIFT CONTRE-POUSSOIR	1	1	1			
59	90501–16M01	SPRING, COMPRESSION RESSORT, COMPRESSION	1	1	1			

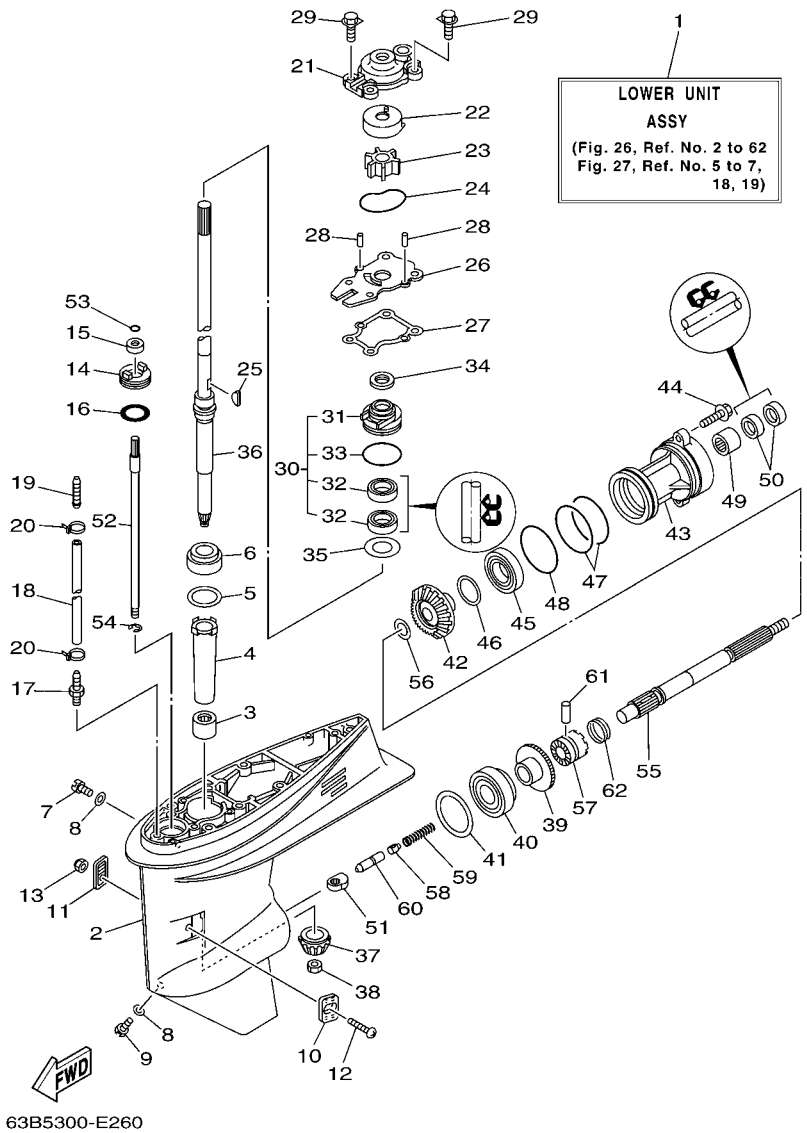

FIG. 26 LOWER CASING & DRIVE 1 BOITIER D'HELICE TRANSMISSION1

REF. NO.	PART NO. N° PIECES	DESCRIPTION DESCRIPTION	ETO	EO	MHO			REMARKS REMARQUES
60	63D–45635–00	PLUNGER, SHIFT POUSSOIR D'EMBRAYAGE	1	1	1			
61	90250–06023	PIN, STRAIGHT GOUPILLE, DROITE	1	1	1			
62	663–45633–00	RING, CROSS PIN JONC, GOUPILLE CRABOT	1	1	1			

FIG. 27 LOWER CASING & DRIVE 2 BOITIER D'HELICE TRANSMISSION2

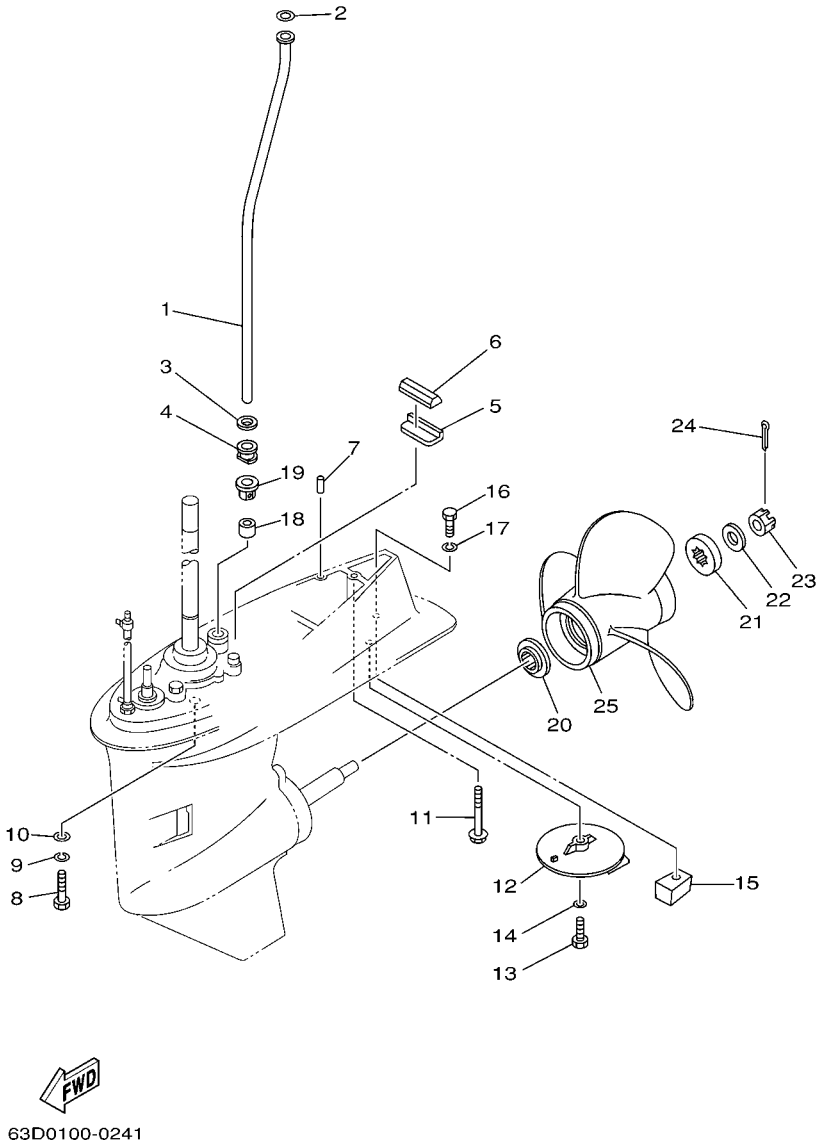

REF. NO.	PART NO. N° PIECES	DESCRIPTION DESCRIPTION	ETO	EO	MHO			REMARKS REMARQUES
1	63D–44361–00	TUBE, WATER TUBE D'EAU		1	1			S(16.0") S(16.0")
	63D–44361–10	TUBE, WATER TUBE D'EAU	1	1	1			L(21.0") L(21.0")
2	90202–12060	WASHER, PLATE RONDELLE, PLATE	1	1	1			
3	90430–12072	GASKET JOINT	1	1	1			
4	63D–44367–00	DAMPER, WATER SEAL JOINT TUBE D'EAU	1	1	1			
5	663–45376–00–94	GUIDE, SEAL DAMPER BUTEE, JOINT CAOUTCHOUC	1	1	1			
6	63D–45375–00	DAMPER, SEAL BOURRELET, CAOUTCHOUC	1	1	1			
7	93606–12019	PIN, DOWEL GOUPILLE	2	2	2			
8	97075–10040	BOLT BOULON	4	4	4			
9	92995–10100	WASHER RONDELLE	4	4	4			
10	92995–10600	WASHER RONDELLE	4	4	4			
11	90119–08M84	BOLT, WITH WASHER BOULON, AVEC RONDELLE	1	1	1			
12	664–45371–01	TAB-TRIM ANODE DERIVE	1	1	1			
13	97095–08025	BOLT BOULON	1	1	1			
14	92995–08100	WASHER RONDELLE	1	1	1			
15	67C–45251–00	ANODE ANODE	1	1	1			
16	97095–08035	BOLT BOULON	1	1	1			
17	92995–08100	WASHER RONDELLE	1	1	1			
18	663–44366–00	DAMPER, WATER SEAL JOINT, TUBE D'EAU	1	1	1			
19	63D–44312–00	COVER, WATER PUMP HOUSING COUVERCLE	1	1	1			
20	663–45987–02	SPACER ENTRETOISE	1	1	1			
21	670–45997–02	SPACER ENTRETOISE	1	1	1			
22	92990–16200	WASHER, PLAIN RONDELLE, PLATE	1	1	1			
23	90171–16011	NUT, CASTLE ECROU, CRENELE	1	1	1			
24	91490–30025	PIN, COTTER GOUPILLE	1	1	1			
25	663–45941–01–EL	PROPELLER (3X10-3/4"X17"-G) HELICE (3X10-3/4"X17"-G)	1	1	1			UR UR
	663–45949–01–EL	PROPELLER (3X10-3/4"X16"-G) HELICE (3X10-3/4"X16"-G)	1	1	1			UR UR

FIG. 27 LOWER CASING & DRIVE 2 BOITIER D'HELICE TRANSMISSION2

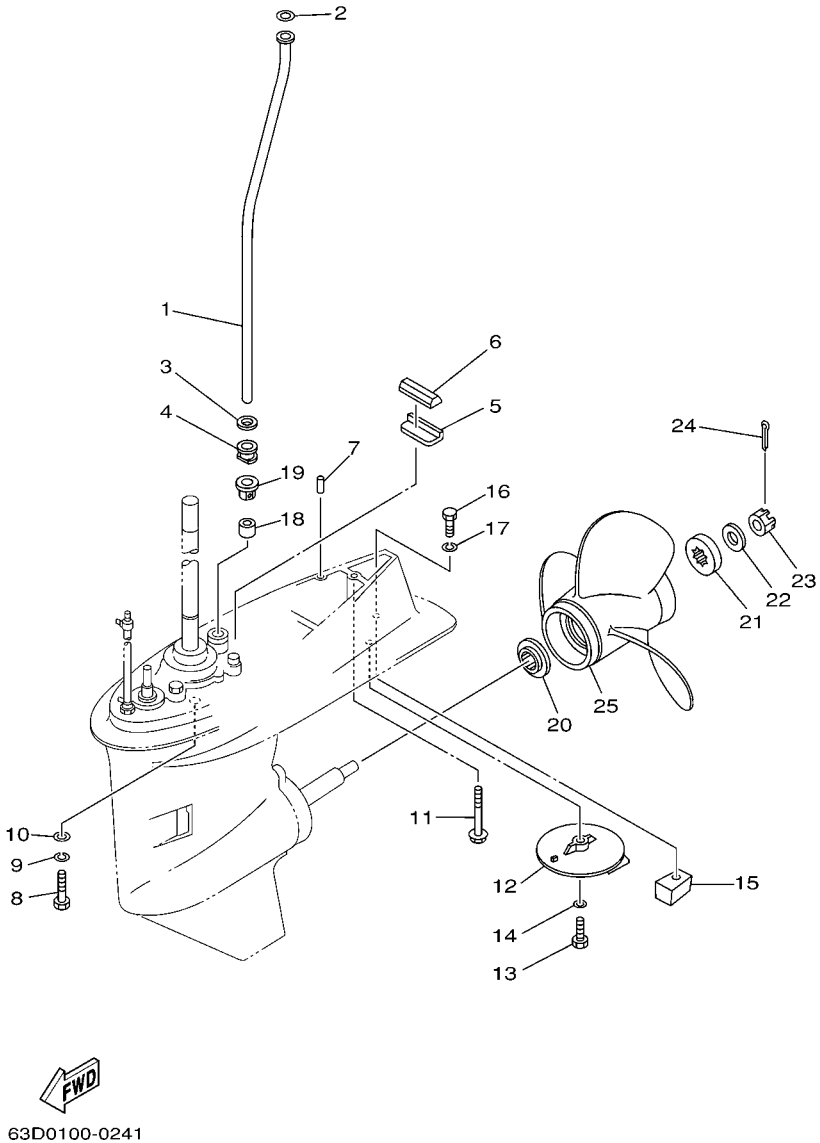

REF. NO.	PART NO. N° PIECES	DESCRIPTION DESCRIPTION	ETO	EO	MHO			REMARKS REMARQUES
25	663–45952–02–EL	PROPELLER (3X11-3/8"X12"-G) HELICE (3X11-3/8"X12"-G)	1	1	1			UR UR
	663–45954–01–EL	PROPELLER (3X11-3/4"X10"-G) HELICE (3X11-3/4"X10"-G)	1	1	1			UR UR
	663–45956–01–EL	PROPELLER (3X12-1/4"X9"-G) HELICE (3X12-1/4"X9"-G)	1	1	1			UR UR
	663–45958–01–EL	PROPELLER (3X11-1/4"X14"-G) HELICE (3X11-1/4"X14"-G)	1	1	1			UR UR
	69W–45943–00–EL	PROPELLER (3X11"X15"-G) HELICE (3X11"X15"-G)	1	1	1			UR UR
	69W–45945–00–EL	PROPELLER (3X11-1/8"X13"-G) HELICE (3X11-1/8"X13"-G)	1	1	1			UR UR
	69W–45947–00–EL	PROPELLER (3X11-5/8"X11"-G) HELICE (3X11-5/8"X11"-G)	1	1	1			UR UR
	69W–45952–00–EL	PROPELLER (3X11-3/8"X12"-G) HELICE (3X11-3/8"X12"-G)	1	1	1			UR UR
	69W–45958–00–EL	PROPELLER (3X11-1/4"X14"-G) HELICE (3X11-1/4"X14"-G)	1	1	1			UR UR
	6H5–45943–00–EL	PROPELLER (3X10"X15"-G) HELICE (3X10"X15"-G)	1	1	1			UR WITH LIP CUP UR WITH LIP CUP
	6H5–45945–00–EL	PROPELLER (3X10-3/8"X13"-G) HELICE (3X10-3/8"X13"-G)	1	1	1			UR WITH LIP CUP UR WITH LIP CUP
	6H5–45952–00–EL	PROPELLER (3X10-5/8"X12"-G) HELICE (3X10-5/8"X12"-G)	1	1	1			UR WITH LIP CUP UR WITH LIP CUP
	6H5–45958–00–EL	PROPELLER (3X10-1/4"X14"-G) HELICE (3X10-1/4"X14"-G)	1	1	1			UR WITH LIP CUP UR WITH LIP CUP
	663–45930–00–98	PROPELLER (3X10-1/4"X14"-G) HELICE (3X10-1/4"X14"-G)	1	1	1			UR UR
	663–45974–02–98	PROPELLER (3X10-5/8"X13"-G) HELICE (3X10-5/8"X13"-G)	1	1	1			UR UR
	663–45976–00–98	PROPELLER (3X10-1/4"X15"-G) HELICE (3X10-1/4"X15"-G)	1	1	1			UR UR
	663–45978–00–98	PROPELLER (3X10-1/4"X16"-G) HELICE (3X10-1/4"X16"-G)	1	1	1			UR UR
	663–45970–60–98	PROPELLER (3X11-3/4"X12"-G) HELICE (3X11-3/4"X12"-G)	1	1	1			UR UR
	663–45972–60–98	PROPELLER (3X12"X11"-G) HELICE (3X12"X11"-G)	1	1	1			UR UR
	663–45974–60–98	PROPELLER (3X11-1/2"X13"-G) HELICE (3X11-1/2"X13"-G)	1	1	1			UR UR
	697–45970–00–98	PROPELLER (3X11-1/4"X14"-G) HELICE (3X11-1/4"X14"-G)	1	1	1			UR UR

FIG. 28 FUEL TANK — RESERVOIR A CARBURANT

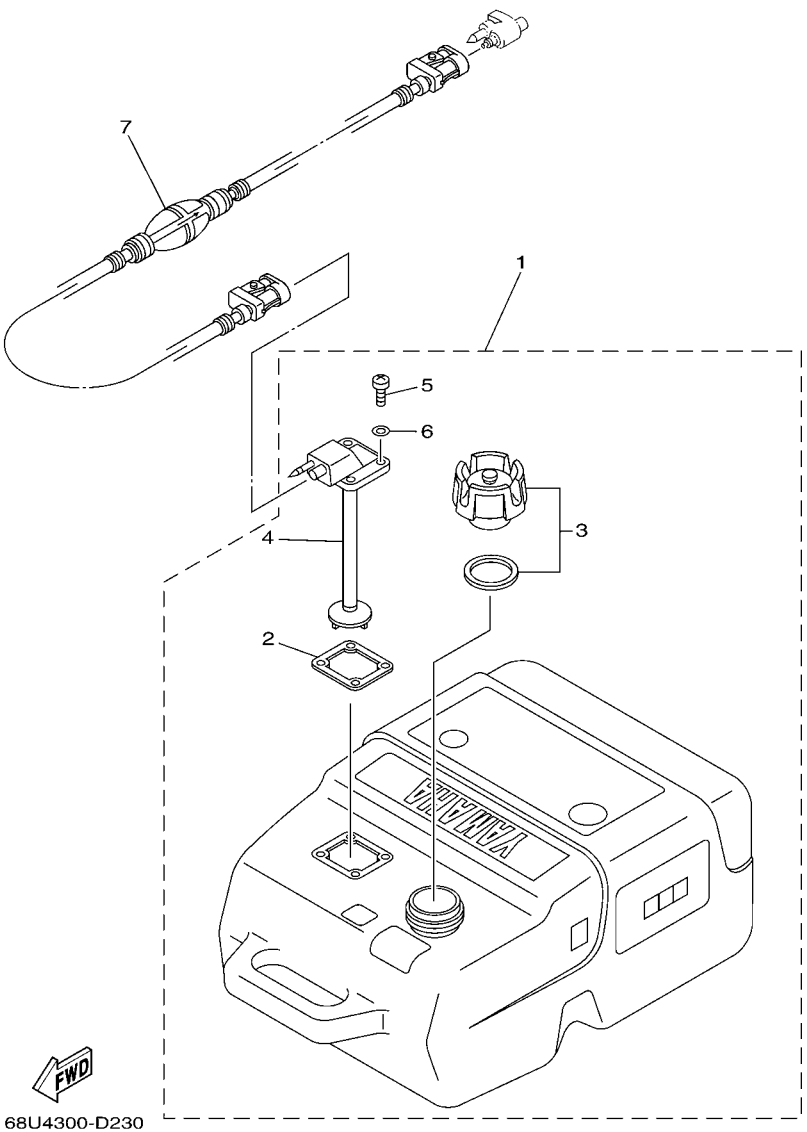

REF. NO.	PART NO. N° PIECES	DESCRIPTION DESCRIPTION	ETO	EO	MHO			REMARKS REMARQUES
1	6YK–24201–02	FUEL TANK ASSY (25L) RESERVOIR A ESSENCE (ENS.) 25L	1	1	1			AP AP
2	6YL–24268–01	.GASKET, FUEL METER .JOINT, JAUGE A CARBURANT	1	1	1			
3	6YK–24610–01	.CAP ASSY .BOUCHON	1	1	1			
4	6YK–24260–01	.FUEL METER ASSY .INDICATEUR DE CARBURANT	1	1	1			
5	90157–05M16	.SCREW, PAN HEAD .VIS, TETE TRONCONIQUE	4	4	4			
6	6YL–24329–00	.SEAL .JOINT	4	4	4			
7	6YL–24306–54	FUEL PIPE COMP. 1 DURITE A ESSENCE 1	1	1	1			AP AP

FIG. 29 STEERING GUIDE FIXATION DE DIRECTION

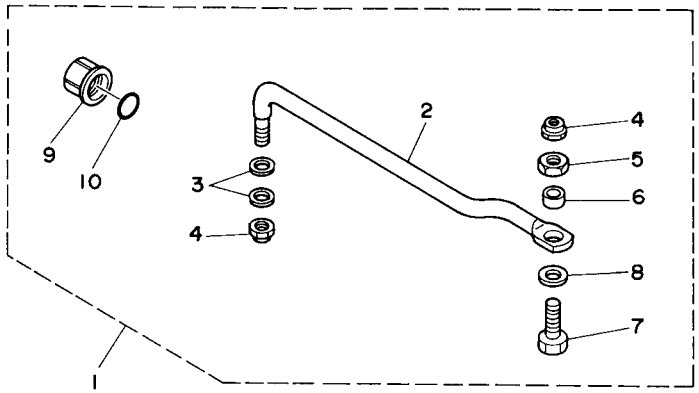

62Y0010-5200

REF. NO.	PART NO. N° PIECES	DESCRIPTION DESCRIPTION	ETO	EO	MHO			REMARKS REMARQUES
1	63D–61350–00	STEERING GUIDE ATTACHMENT KIT FIXATIONS DE DIRECTION	1	1				AP AP
2	63D–61351–00	.ROD, STEERING LINK .RENVOI DE DIRECTION	1	1				
3	90201–10M20	.WASHER, PLATE .RONDELLE, PLATE	2	2				
4	90185–09M01	.NUT, SELF-LOCKING .ECROU,AUTO-BLOQUANT	2	2				
5	90170–09M03	.NUT .ECROU	1	1				
6	90387–10M42	.COLLAR .COLLERETTE	1	1				
7	90101–09M01	.BOLT .BOULON	1	1				
8	90201–10M63	.WASHER, PLATE .RONDELLE, PLATE	1	1				
9	6E5–43145–01	.CAP, CLAMP BRACKET .CAPUCHON, PRESSE	1	1				
10	93210–16275	.O-RING .JOINT TORIQUE	1	1				

FIG. 30 REMOTE CONTROL BOX BOITIER DE COMMANDE A DISTANCE

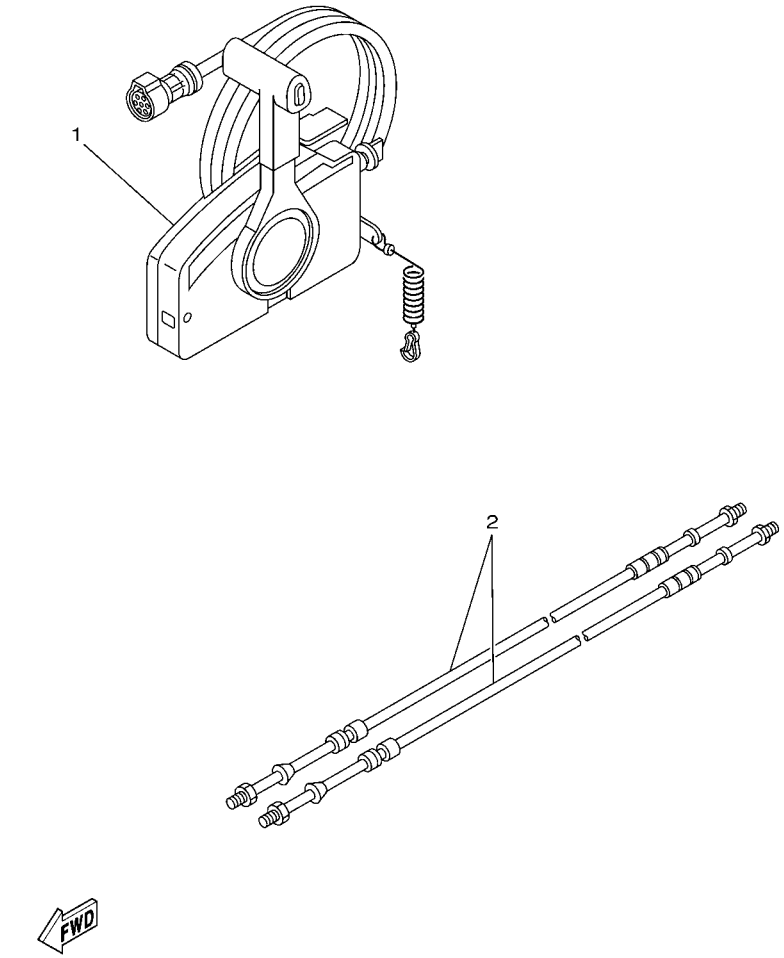

REF. NO.	PART NO. N° PIECES	DESCRIPTION DESCRIPTION	ETO	EO	MHO			REMARKS REMARQUES
1	703–48205–A5	REMOTE CONTROL ASSY (10P) BOITIER DE COMMANDE A DISTANCE	1					AP WITH PT/T SW. AP WITH PT/T SW.
	703–48201–A3	REMOTE CONTROL ASSY (10P) BOITIER DE COMMANDE A DISTANCE		1				AP WITHOUT PT/T SW. AP WITHOUT PT/T SW.
2	701–48320–00	CABLE, REMOTE CONTROL L=12F CABLE, COMMANDE A DISTANCE:12F	2	2				UR UR
	701–48320–20	CABLE, REMOTE CONTROL L=13F CABLE, COMMANDE A DISTANCE:13F	2	2				UR UR
	701–48320–30	CABLE, REMOTE CONTROL L=14F CABLE, COMMANDE A DISTANCE:14F	2	2				UR UR
	701–48320–50	CABLE, REMOTE CONTROL L=15F CABLE, COMMANDE A DISTANCE:15F	2	2				UR UR
	701–48320–60	CABLE, REMOTE CONTROL L=16F CABLE, COMMANDE A DISTANCE:16F	2	2				UR UR
	701–48320–80	CABLE, REMOTE CONTROL L=17F CABLE, COMMANDE A DISTANCE:17F	2	2				UR UR

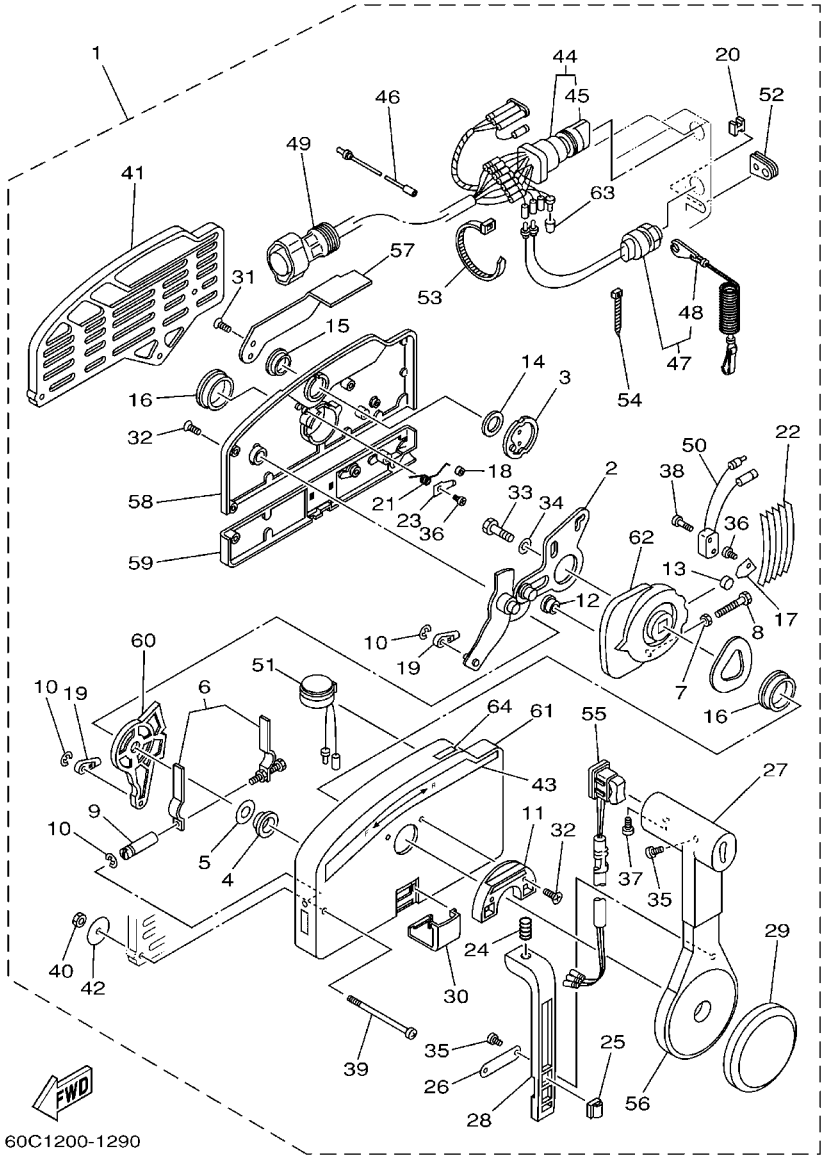

FIG. 31 REMOTE CONTROL ASSY BOITIER DE COMMANDE A DISTANCE

REF. NO.	PART NO. N° PIECES	DESCRIPTION DESCRIPTION	ETO	EO	MHO			REMARKS REMARQUES
1	703–48205–A5	REMOTE CONTROL ASSY (10P) BOITIER DE COMMANDE A DISTANCE	1					AP WITH PT/T SW. AP WITH PT/T SW.
	703–48201–A3	REMOTE CONTROL ASSY (10P) BOITIER DE COMMANDE A DISTANCE		1				AP WITHOUT PT/T SW. AP WITHOUT PT/T SW.
2	703–48261–01	.ARM, THROTTLE .BRAS, ACCELERATION	1	1				
3	703–48153–00	.SHAFT, FREE ACCEL. .AXE	1	1				
4	703–48235–00	.BUSHING .COUSSINET	1	1				
5	703–48268–00	.SPACER .ENTRETOISE	1	1				
6	703–48264–00	.FRICTION, THROTTLE .FRICTION, ACCELERATION	1	1				
7	95380–05600	.NUT .ECROU	1	1				
8	97380–05025	.BOLT .BOULON, HEXAGONAL	1	1				
9	703–48265–00	.SHAFT, FRICTION .AXE, COPILOTE	1	1				
10	93430–06024	.CIRCLIP .CLIPS	3	3				
11	703–48245–00	.PLATE, LOCK .PLAQUE, VERROU	1	1				
12	703–48252–00	.ROLLER, CAM .POULIE	1	1				
13	701–48248–00	.ROLLER, FREE ACCEL. .POULIE	1	1				
14	703–48198–00	.WASHER, WAVE .RONDELLE, ELASTIQUE ONDULEE	1	1				
15	703–48243–00	.BUSHING .COUSSINET	1	1				
16	703–48236–00	.BUSHING 1 .POULIE	2	2				
17	703–48189–00	.RETAINER .FLASQUE	1	1				
18	703–48234–00	.ROLLER, DETENT .POULIE	1	1				
19	703–48345–01	.CABLE END, REMOTE CONTROL 2 .CHAPE CABLE	2	2				
20	703–48358–00	.ANCHOR, CABLE .COLLIER	1	1				
21	703–48244–00	.SPRING, FREE ACCEL. .RESSORT	1	1				
22	703–48238–00	.SPRING, DETENT .RESSORT	5	5				
23	703–48246–00	.SPACER .ENTRETOISE	1	1				
24	703–48227–00	.SPRING, NEUTRAL LOCK .RESSORT	1	1				
25	703–82594–00	.CLAMP .BRIDE	1					WITH PT/T SW. WITH PT/T SW.
26	703–48226–00	.PLATE, STOPPER .PLAQUETTE	1	1				

FIG. 31 REMOTE CONTROL ASSY BOITIER DE COMMANDE A DISTANCE

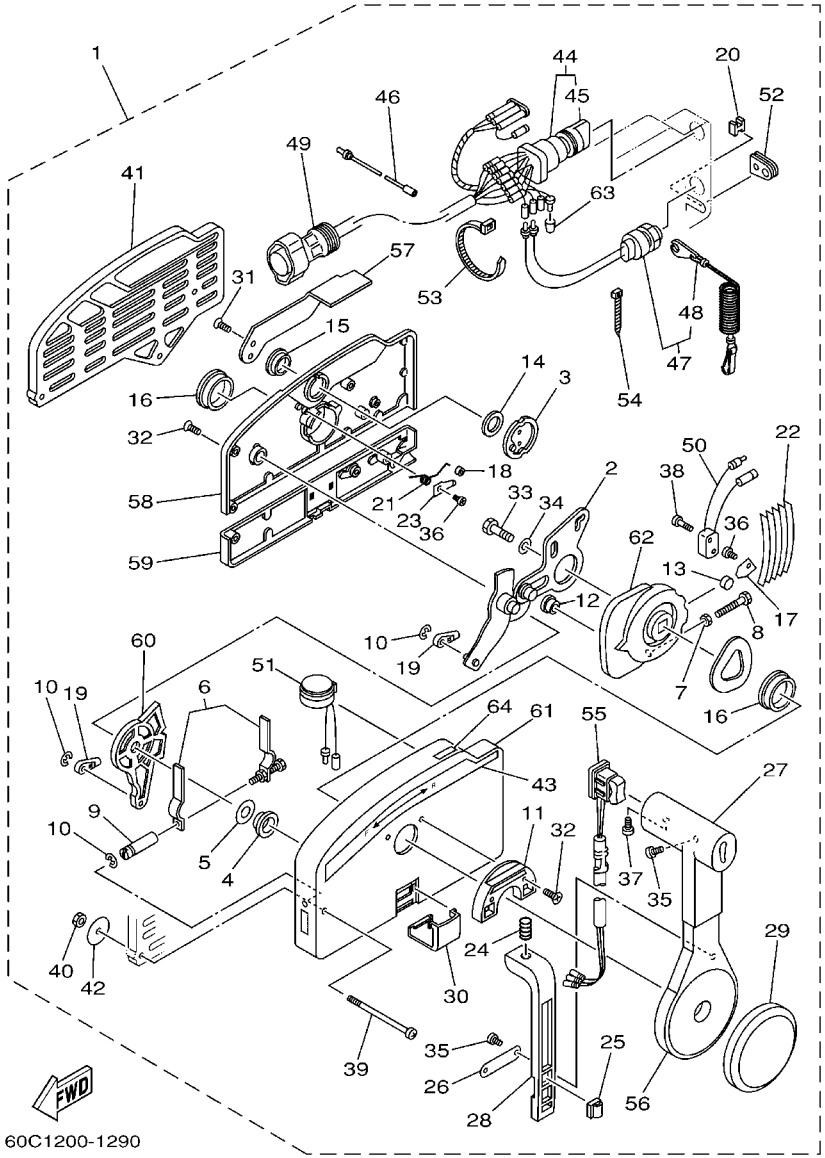

60C1200-1290

REF. NO.	PART NO. N° PIECES	DESCRIPTION DESCRIPTION	ETO	EO	MHO			REMARKS REMARQUES
27	703–48222–00	.GRIP, CONTROL LEVER .POIGNEE, COMMANDE LEVIER	1	1				SINGLE SINGLE
28	703–48223–00	.LOCK, NEUTRAL .VERROU, NEUTRAL	1	1				
29	703–48225–00	.COVER .COUVERCLE	1	1				
30	703–48219–00	.COVER, LEAD .COUVERCLE	1	1				
31	703–48281–00	.SCREW .VIS	2	2				
32	703–48282–00	.SCREW .VIS	7	7				
33	97380–08030	.BOLT .BOULON, HEXAGONAL	1	1				
34	92990–08600	.WASHER, PLATE .RONDELLE, PLATE	1	1				
35	98580–04010	.SCREW, PAN HEAD .VIS	3	3				
36	98580–04006	.SCREW, PAN HEAD .VIS	2	2				
37	98580–05010	.SCREW, PAN HEAD .VIS	1	1				
38	98580–03015	.SCREW, PAN HEAD .VIS	2	2				
39	703–48291–10	.SCREW (M6) .VIS (M6)	3	3				
40	95380–06600	.NUT, HEXAGON .ECROU	3	3				
41	703–48293–10	.SPACER, REMOTE CONTROL .ENTRETOISE	1	1				SINGLE SINGLE
42	701–48287–00	.WASHER .RONDELLE	3	3				
43	703–48215–00	.GRAPHIC .ADHESIF	1	1				
44	703–82510–12	.MAIN SWITCH ASSY .CONTACTEUR A CLEF COMPLET	1	1				PRIME START PRIME START
45	676–82577–00	..CAP, KEY ..CABOCHON	1	1				
46	703–82531–00	.WIRE, LEAD (L70) .FIL (L70)	1	1				
47	688–82575–01	.ENGINE STOP SWITCH ASSY .COUPE CIRCUIT CPLT	1	1				
48	682–82556–00	..LANYARD, STOP SWITCH ..PLAQUETTE	1	1				
49	688–8258A–20	.EXTENSION, WIRE HARNESS (4.9M) .EXTENSION, FAISCEAU DE FILS (4	1	1				(10P) (10P)
50	703–82540–00	.NEUTRAL SWITCH ASSY .CONTACTEUR DE POINT-MORT	1	1				
51	703–83383–B0	.BUZZER .RONFLEUR	1	1				
52	703–48284–00	.GROMMET .PASSE-FIL	1	1				
53	703–82591–00	.BAND .COLLIER	1	1				

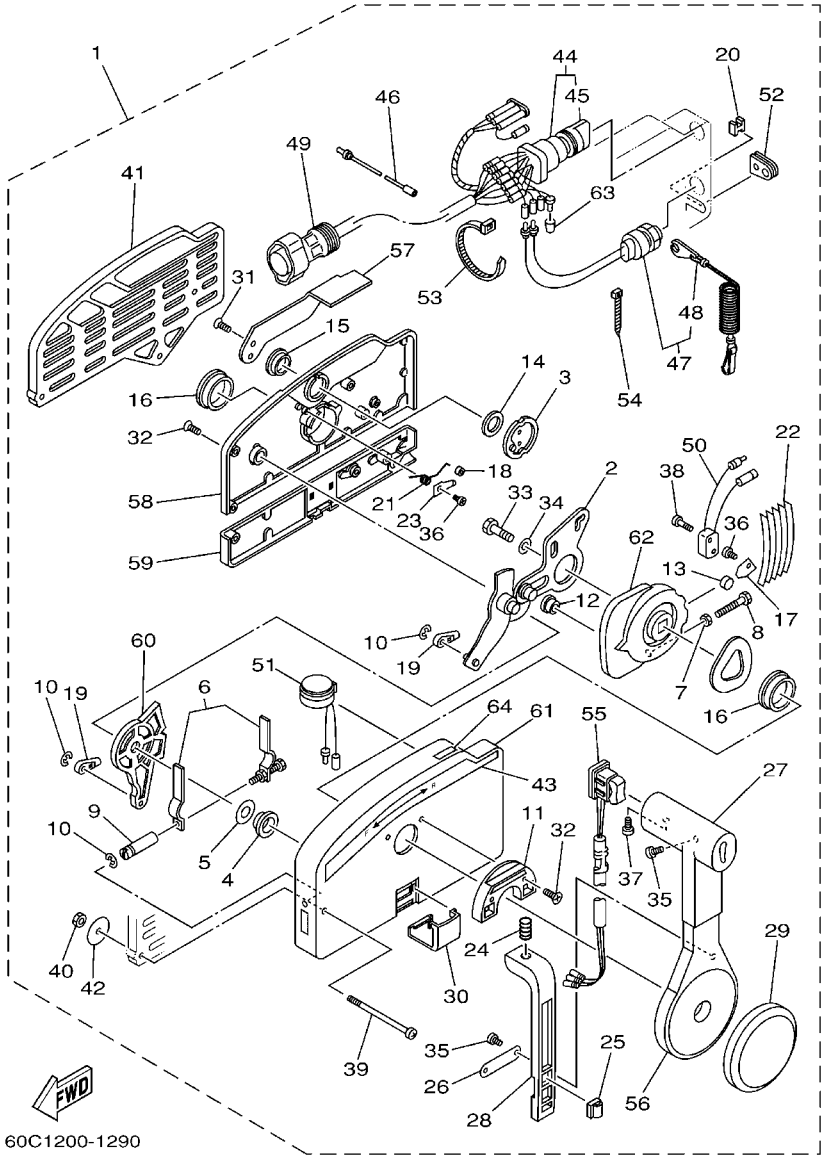

60C1200-1290

FIG. 31 REMOTE CONTROL ASSY BOITIER DE COMMANDE A DISTANCE

REF. NO.	PART NO. N° PIECES	DESCRIPTION DESCRIPTION	ETO	EO	MHO			REMARKS REMARQUES
54	703–82592–00	.BAND .COLLIER	1	1				
55	703–82563–02	.TRIM & TILT SWITCH ASSY .INCLINER ET PARER COMMUTATEUR	1					WITH PT/T SW. WITH PT/T SW.
	703–48224–00	.COVER, CONTROL LEVER .COUVERCLE		1				WITHOUT PT/T SW. WITHOUT PT/T SW.
56	703–48221–00	.LEVER, CONTROL .LEVIER, COMMANDE	1	1				
57	703–48152–00	.KNOB, FREE ACCEL. .BOUTON	1	1				
58	703–48212–00	.BACK PLATE 1 .PLAQUETTE 1	1	1				
59	703–48213–00	.BACK PLATE 2 .PLAQUETTE 2	1	1				
60	703–48271–00	.ARM, SHIFT .BRAS	1	1				
61	703–48211–01	.HOUSING,1 .CORPS	1	1				
62	703–48232–00	.GEAR .PIGNON	1	1				
63	703–82542–00	.CAP .COUVERCLE	1					
	703–82542–00	.CAP .COUVERCLE		3				
64	703–48218–00	.GRAPHIC .ADHESIF	1	1				

FIG. 32 METER COMPTEUR

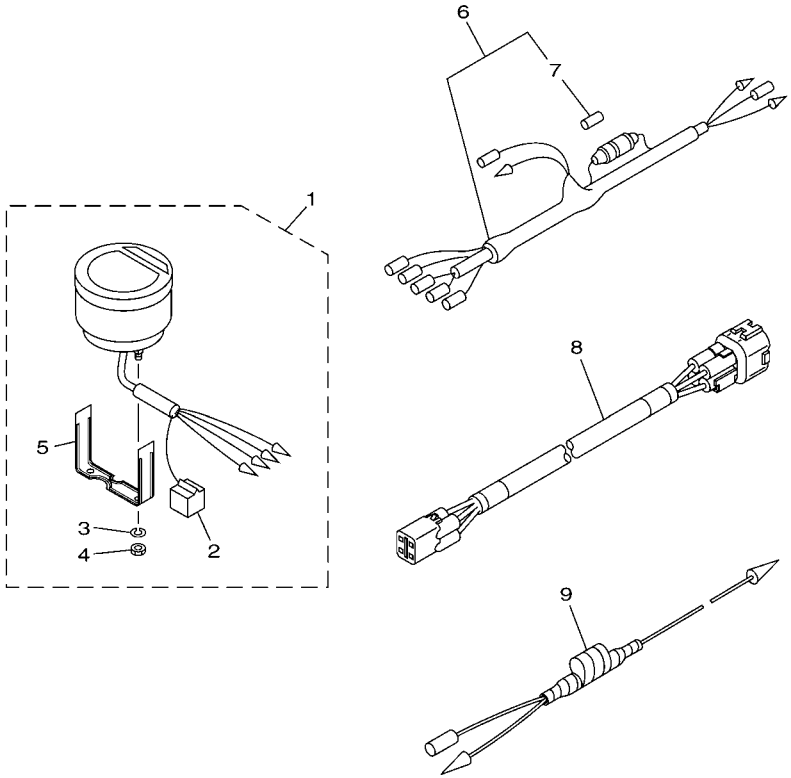

63B7300-G320

REF. NO.	PART NO. N° PIECES	DESCRIPTION DESCRIPTION	ETO	EO	MHO			REMARKS REMARQUES
1	6Y5–8350T–90	DIGITAL TACHOMETER ASSY COMPTE-TOURS NUMERIQUE CPLT	1					AP 40Y AP 40Y
2	9E450–04533	.CONNECTOR .CONNECTEUR	1					F-4-W F-4-W
3	92990–04100	.WASHER, SPRING .RONDELLE, GROWER	2					
4	95380–04600	.NUT .ECROU	2					
5	6Y5–8355X–T1	.BRACKET, METER 1 .CROCHET, COMPTEUR	1					
6	6Y5–83553–00	WIRE, LEAD (L=2.5M) FIL (L=2.5M)	1					AP 40Y AP 40Y
7	1E6–82151–00	.FUSE (10A) .FUSIBLE (10A)	1					
8	6Y5–83653–20	WIRE, LEAD FIL	1					AP 40Y 4P,7M AP 40Y 4P,7M
9	6H4–81315–11	LEAD WIRE ASSY FIL	1					AP 40Y AP 40Y

FIG. 33 OPTIONAL PARTS PIECES OPTIONNELLES

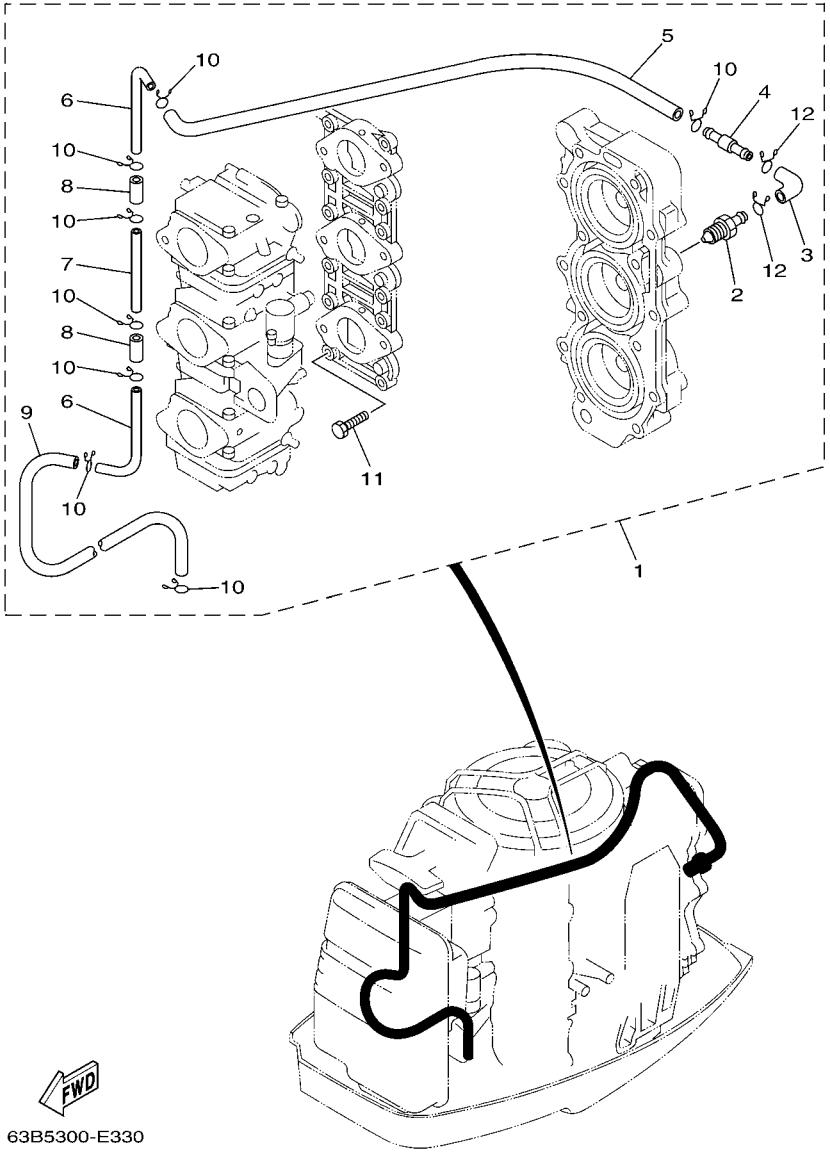

REF. NO.	PART NO. N° PIECES	DESCRIPTION DESCRIPTION	ETO	EO	MHO			REMARKS REMARQUES
1	63D–12440–51	HEAT EXCHANGER ASSY ECHANGEUR DE CHALEUR	1	1				AP AP
2	6H4–12469–01	.JOINT 1 .RACCORD 1	1	1				
3	6E5–24315–00	.PIPE 5 .DURITE 5	1	1				
4	63D–12469–00	.JOINT 1 .RACCORD 1	1	1				
5	6E5–12481–00	.PIPE 1 .DURITE 1	1	1				
6	6H4–12466–A0	.EXCHANGER, HEAT .ECHANGEUR DE CHALEUR	2	2				
7	6H4–12466–B0	.EXCHANGER, HEAT .ECHANGEUR DE CHALEUR	1	1				
8	90445–11M30	.HOSE (L20) .DURITE (L20)	2	2				
9	90445–11M66	.HOSE (L410) .DURITE (L410)	1	1				
10	90467–10M04	.CLIP .JONC	8	8				
11	90101–06128	.BOLT .BOULON	1	1				
12	90467–11M08	.CLIP .JONC	2	2				

FIG. 34 REPAIR KIT 1 — KITS DE REPARATION 1

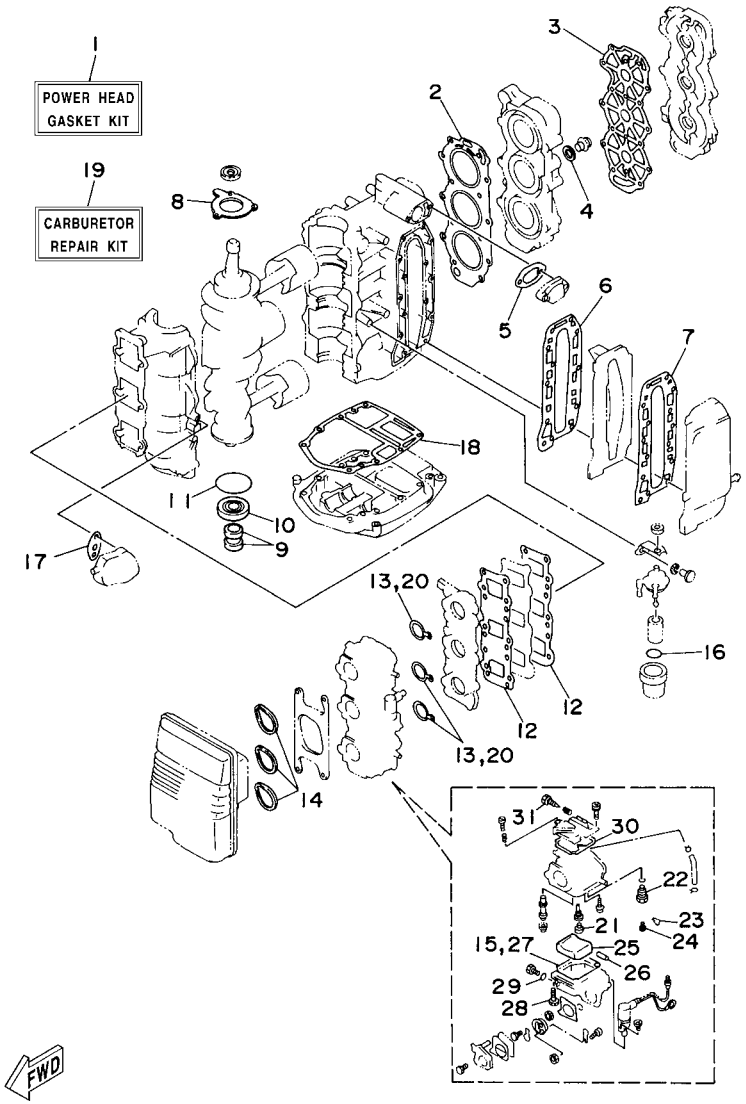

63D0010-5270

REF. NO.	PART NO. N° PIECES	DESCRIPTION DESCRIPTION	ETO	EO	MHO			REMARKS REMARQUES
1	63D–W0001–00	POWER HEAD GASKET KIT POCHETTE DE JINTS TETE MOTRICE	1	1	1			
2	63D–11181–A1	.GASKET, CYLINDER HEAD 1 .JOINT, DE CULASSE 1	1	1	1			
3	63D–11193–A0	.GASKET, HEAD COVER 1 .JOINT, COUVERCLE DE CULASSE 1	1	1	1			
4	90430–14115	.GASKET .JOINT	1	1	1			
5	6J8–12414–A0	.GASKET, COVER .JOINT, COUVERCLE	1	1	1			
6	6H4–41112–A0	.GASKET, EXHAUST INNER COVER .JOINT, PLAQUE D'ECHAPPEMENT	1	1	1			
7	6H4–41114–A0	.GASKET, EXHAUST OUTER COVER .JOINT, COUVERCLE D'ECHAPPEMENT	1	1	1			
8	6H4–15369–A1	.GASKET, OIL SEAL HOUSING .JOINT SPY DE LOGEMENT	1	1	1			
9	93104–16M01	.OIL SEAL .JOINT SPY	2	2	2			
10	93102–25M28	.OIL SEAL .JOINT SPY	1	1	1			
11	93210–58M21	.O-RING .JOINT TORIQUE	1	1	1			
12	6H4–13621–A1	.GASKET, VALVE SEAT .JOINT, SIEGE DE CLAPET	2	2	2			
13	6H4–14198–01	.GASKET .JOINT	3	3	3			
14	6H3–14457–01	.SEAL .JOINT	3	3	3			
15	6H4–14984–00	.GASKET, FLOAT CHAMBER .JOINT, CUVE DE FLOTTEUR	3	3	3			
16	93210–32738	.O-RING .JOINT TORIQUE	1	1	1			
17	650–24431–A0	.GASKET, FUEL PUMP 1 .JOINT 1 DE POMPE A ESSENCE	1	1	1			
18	6H4–45113–A0	.GASKET, UPPER CASING .JOINT, TUBE D'ARBRE	1	1	1			
19	6H4–W0093–03	CARBURETOR REPAIR KIT KIT DE REPARATION CARBURATEUR	1	1	1			
20	6H4–14198–01	.GASKET .JOINT	3	3	3			
21	676–14966–00	.CAP .CAPUCHON	3	3	3			
22	6H4–14590–01	.NEEDLE VALVE ASSY .POINTEAU	3	3	3			
23	663–14159–00	.CLIP .JONC	3	3	3			
24	676–14186–00	.PIN, FLOAT .AXE, FLOTTEUR	3	3	3			
25	6H4–14985–01	.FLOAT .FLOTTEUR	3	3	3			
26	6H4–14548–00	.PIN, FLOAT ARM .AXE, BRAS DE FLOTTEUR	3	3	3			
27	6H4–14984–00	.GASKET, FLOAT CHAMBER .JOINT, CUVE DE FLOTTEUR	3	3	3			

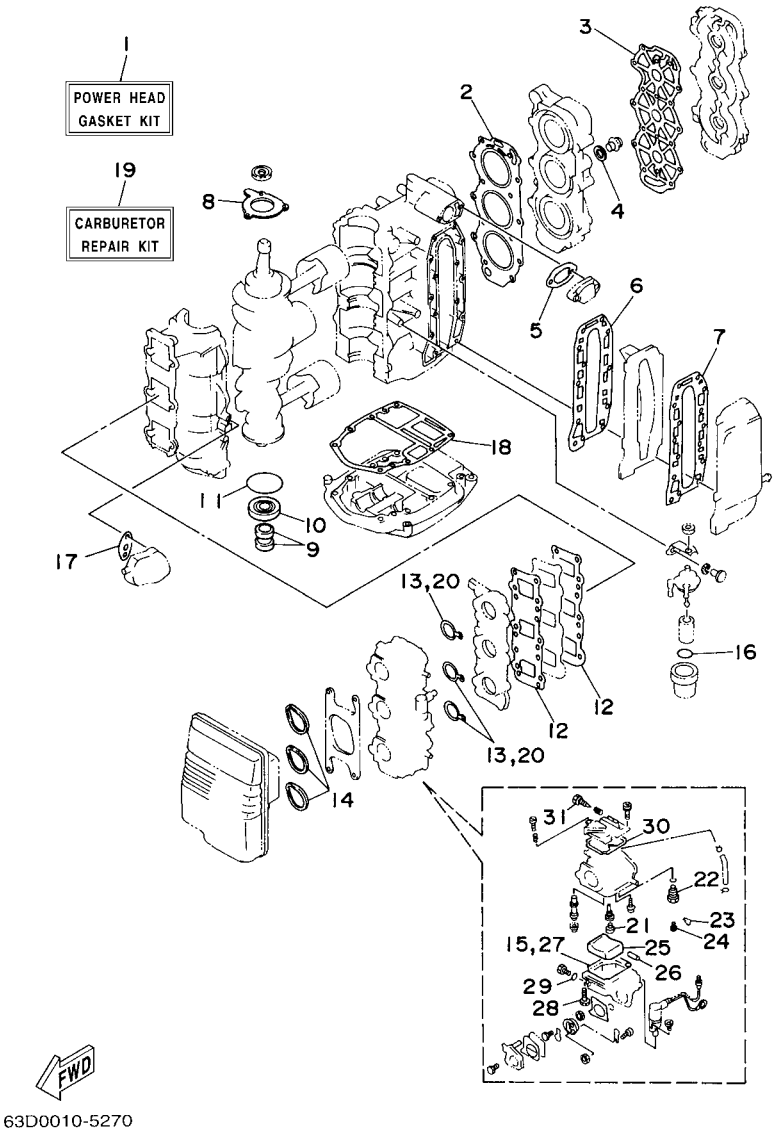

FIG. 34 REPAIR KIT 1 — KITS DE REPARATION 1

REF. NO.	PART NO. N° PIECES	DESCRIPTION DESCRIPTION	ETO	EO	MHO			REMARKS REMARQUES
28	97980–04114	.SCREW, WITH WASHER .VIS, AVEC RONDELLE	3	3	3			
29	93210–04230	.O-RING .JOINT TORIQUE	3	3	3			
30	6H4–14147–00	.O-RING .JOINT TORIQUE	3	3	3			
31	692–14923–00	.SCREW, PILOT .VIS, RALENTI	3	3	3			

FIG. 35 REPAIR KIT 2 — KITS DE REPARATION 2

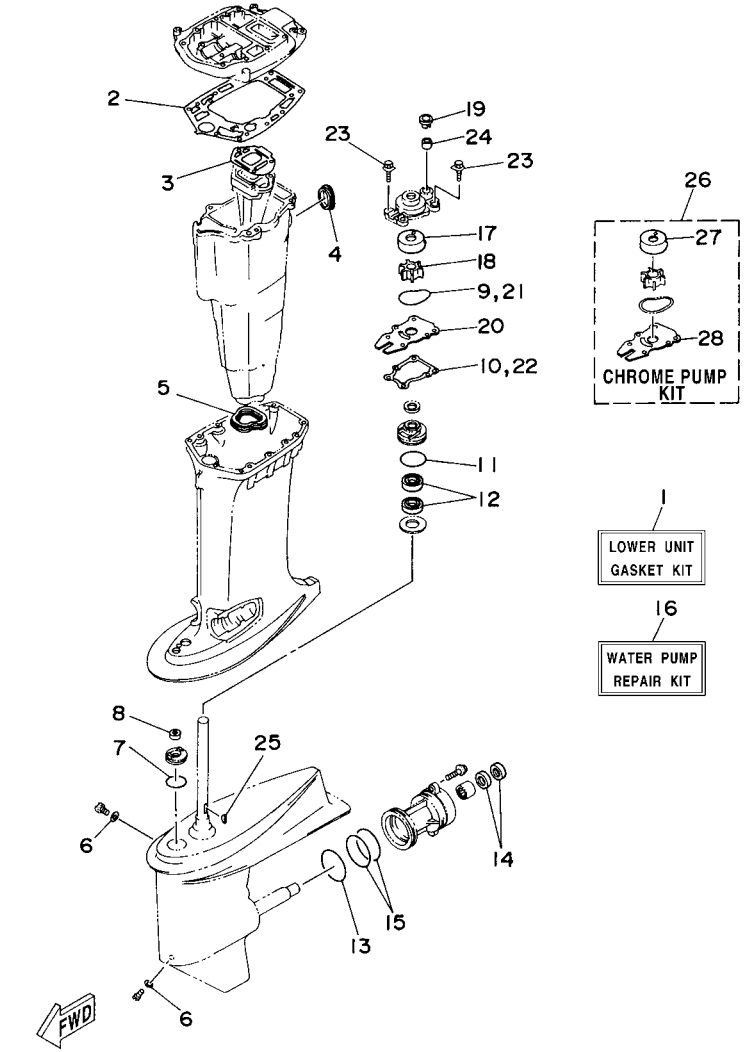

REF. NO.	PART NO. N° PIECES	DESCRIPTION DESCRIPTION	ETO	EO	MHO			REMARKS REMARQUES
1	63D–W0001–20	LOWER UNIT GASKET KIT POCHETTE DE JOINTS EMBASE	1	1	1			
2	63D–45114–A0	.GASKET, UPPER CASING .JOINT, TUBE D'ARBRE	1	1	1			
3	6H4–41134–A0	.GASKET, EXHAUST MANIFOLD .JOINT, PIPE D'ECHAPPEMENT	1	1	1			
4	6H3–45127–00	.SEAL .JOINT	1	1	1			
5	63D–45123–00	.GASKET, MUFFLER .JOINT, POT DE DETENTE	1	1	1			
6	90430–08020	.GASKET .JOINT	2	2	2			
7	93210–33MG4	.O-RING .JOINT TORIQUE	1	1	1			
8	93106–09014	.OIL SEAL .JOINT SPY	1	1	1			
9	93210–59MG7	.O-RING .JOINT TORIQUE	1	1	1			
10	63D–44316–00	.GASKET, WATER PUMP .JOINT, POMPE A EAU	1	1	1			
11	93210–48MG8	.O-RING .JOINT TORIQUE	1	1	1			
12	93101–25M57	.OIL SEAL .JOINT SPY	2	2	2			
13	93210–69MG6	.O-RING .JOINT TORIQUE	1	1	1			
14	93101–22M00	.OIL SEAL .JOINT SPY	2	2	2			
15	93210–74MG5	.O-RING .JOINT TORIQUE	2	2	2			
16	63D–W0078–01	WATER PUMP REPAIR KIT KIT DE REPARATION DE LA POMPE	1	1	1			
17	63D–44322–00	.INSERT, CARTRIDGE .CUVETTE	1	1	1			
18	6H3–44352–00	.IMPELLER .TURBINE	1	1	1			
19	63D–44312–00	.COVER, WATER PUMP HOUSING .COUVERCLE	1	1	1			
20	63D–44323–00	.OUTER PLATE, CARTRIDGE .PLAQUE EXTERIEURE	1	1	1			
21	93210–59MG7	.O-RING .JOINT TORIQUE	1	1	1			
22	63D–44316–00	.GASKET, WATER PUMP .JOINT, POMPE A EAU	1	1	1			
23	90119–08M15	.BOLT, WITH WASHER .BOULON, AVEC RONDELLE	4	4	4			
24	663–44366–00	.DAMPER, WATER SEAL .JOINT, TUBE D'EAU	1	1	1			
25	90280–03024	.KEY, WOODRUFF .CLAVETTE, DEMI-LUNE	1	1	1			
26	63D–W0078–0A	CHROME PUMP KIT KIT DE POMPE A EAU CHROMEE	1	1	1			
27	63D–44322–40	.INSERT, CARTRIDGE .CUVETTE	1	1	1			

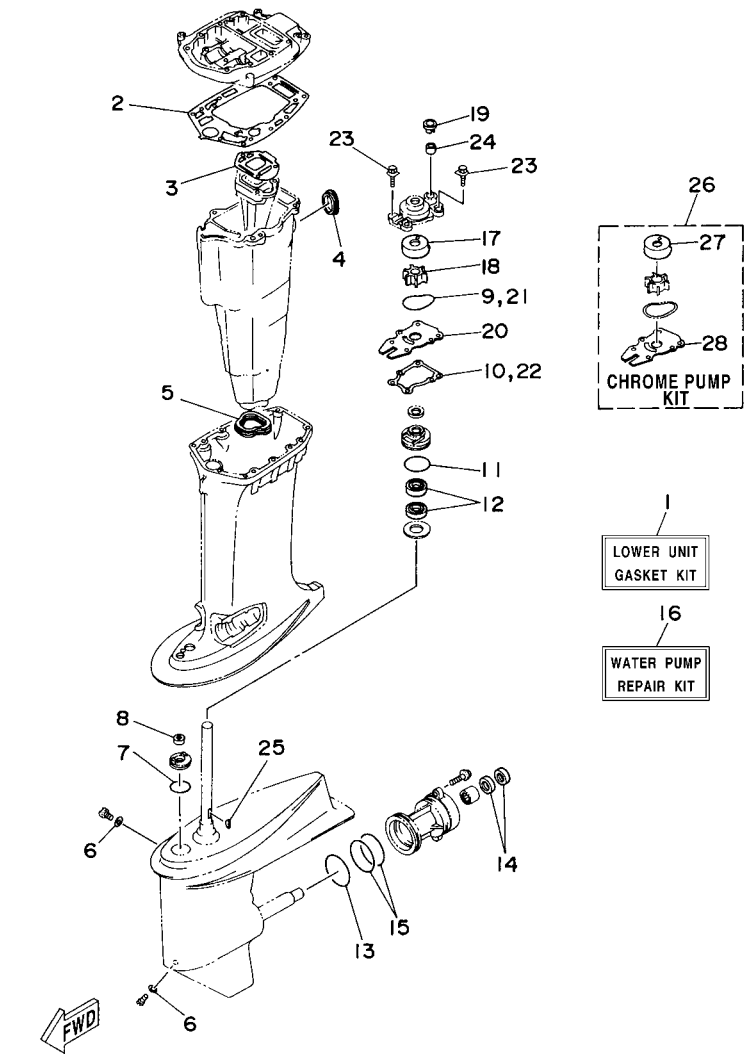

FIG. 35 REPAIR KIT 2 — KITS DE REPARATION 2

REF. NO.	PART NO. N° PIECES	DESCRIPTION DESCRIPTION	ETO	EO	MHO			REMARKS REMARQUES
28	63D–44323–40	.OUTER PLATE, CARTRIDGE .PLAQUE EXTERIEURE	1	1	1			

NUMERICAL INDEX
INDEX NUMERIQUE

PART NO. N° PIECES	REF. NO.
63D–11111–00–1S	2 – 22
6H4–11119–01	2 – 18
63D–11181–A1	2 – 23
	34 – 2
63D–11191–00–1S	2 – 26
63D–11193–A0	2 – 27
	34 – 3
688–11325–00	2 – 20
650–11370–01	2 – 3
688–11370–01	2 – 7
6H4–11372–01	2 – 5
6H4–11400–14	3 – 8
6H4–11536–00	3 – 9
6H4–11537–01	6 – 4
	7 – 4
6H4–11545–00	10 – 14
63D–11603–00	3 – 14
63D–11604–00	3 – 14
63D–11605–00	3 – 14
6H4–11631–01–95	3 – 13
648–11633–00	3 – 15
6H4–11634–01	3 – 18
6H4–11635–01	3 – 13
6H4–11636–01	3 – 13
6H4–11641–00	3 – 17
6E5–12411–30	2 – 30
688–12412–00	2 – 31
6H4–12413–00–1S	2 – 32
6J8–12414–A0	2 – 33
	34 – 5
63D–12440–51	33 – 1
6H4–12466–A0	33 – 6
6H4–12466–B0	33 – 7
63D–12469–00	33 – 4
6H4–12469–01	33 – 2
6E5–12481–00	33 – 5
6H1–13117–01	6 – 5
	7 – 5
6E9–13183–70	6 – 44
	7 – 46
63D–13200–00	6 – 1
	7 – 1
6J8–13411–00	6 – 35
	7 – 37
6J8–13414–00	6 – 36
	7 – 38
6L2–13416–00	6 – 37
	7 – 39

PART NO. N° PIECES	REF. NO.
63D–13436–40	1 – 12
63D–13437–N0	9 – 48
6H5–13610–00	4 – 1
6H4–13621–A1	4 – 8
	34 – 12
6H4–13624–01–94	4 – 7
6H4–13641–12–94	4 – 5
6H4–13641–30–94	4 – 5
6H3–14137–00	5 – 32
6X4–14137–00	16 – 26
6H4–14146–00	5 – 16
6H3–14146–10	5 – 16
6H4–14146–10	5 – 15
6H4–14147–00	5 – 30
	34 – 30
663–14159–00	5 – 12
	34 – 23
676–14186–00	5 – 13
	34 – 24
6H4–14198–01	4 – 10
	34 – 13
62X–14301–00	5 – 1
63B–14301–00	5 – 1
63D–14301–00	5 – 1
62X–14302–00	5 – 2
63B–14302–00	5 – 2
63D–14302–00	5 – 2
62X–14303–00	5 – 3
63B–14303–00	5 – 3
63D–14303–00	5 – 3
6A0–14325–00	8 – 24
6H3–14349–00	4 – 29
	5 – 33
63D–14380–00	5 – 34
6H4–14406–00	4 – 11
6H4–14431–02	4 – 13
6H4–14431–13	4 – 13
6H3–14457–01	4 – 14
	34 – 14
624–14485–00	2 – 4
6H1–14485–00	4 – 6
63V–14523–00	5 – 7
6H4–14548–00	5 – 10
	34 – 26
679–14555–00	5 – 25
6H4–14567–00	5 – 31
6H2–14578–00	5 – 9
6H4–14590–01	5 – 27

PART NO. N° PIECES	REF. NO.
6H4–14590–01	34 – 22
6K5–14592–00	5 – 5
63D–14711–00–5B	25 – 11
63D–14711–11–5B	25 – 11
692–14923–00	5 – 26
	34 – 31
676–14943–30	5 – 22
676–14943–33	5 – 22
63D–14943–81	5 – 22
62X–14947–00	5 – 21
63D–14947–00	5 – 21
6H4–14948–11	5 – 24
6H4–14948–12	5 – 24
676–14966–00	5 – 23
	34 – 21
6H4–14980–00	5 – 18
6H3–14980–10	5 – 18
6H4–14984–00	5 – 17
	34 – 15
6H4–14985–01	5 – 14
	34 – 25
6H3–14992–00	5 – 19
6H4–15100–13–1S	2 – 2
6H4–15100–30–1S	2 – 2
6H4–15359–04–94	10 – 3
6H4–15369–A1	3 – 1
	34 – 8
6H4–15396–03–5B	3 – 2
6H4–15705–00	9 – 27
6H4–15710–04–4D	9 – 1
6H4–15711–02–94	9 – 2
6H4–15714–00	9 – 19
6H4–15717–01	9 – 21
6H4–15723–01–94	9 – 37
6J8–15723–E1	14 – 26
676–15741–03	9 – 25
63D–15746–00	9 – 42
656–15748–00	9 – 46
6F5–15752–00	9 – 9
689–15755–01	9 – 16
6H4–15758–01–4D	9 – 4
6H4–15761–00	1 – 2
6H4–15762–00	9 – 7
63D–15770–00	9 – 45
63D–15771–00–4D	9 – 31
	14 – 20
6H4–15772–02–94	9 – 35
	14 – 24

PART NO. N° PIECES	REF. NO.
63D–15774–00	18 – 30
6F5–15779–02	9 – 17
6H4–15787–01	9 – 15
6A0–15789–00	9 – 8
63D–21707–00	7 – 21
63D–21707–10	6 – 21
6H3–21732–00	1 – 14
6H3–21735–00	1 – 15
63D–21744–00	6 – 29
	7 – 33
6H4–21752–00	7 – 24
6H1–21757–00	7 – 31
6H4–21757–00	6 – 28
6J8–21758–00	7 – 30
63D–2175R–00	6 – 24
	7 – 26
63D–2176M–00	6 – 25
	7 – 27
6H4–21770–00	6 – 26
	7 – 28
63D–2177H–00	1 – 13
1UF–22434–00	23 – 17
62Y–22434–00	23 – 50
62Y–22471–00	23 – 11
6YK–24201–02	28 – 1
6YK–24260–01	28 – 4
6YL–24268–01	28 – 2
6G1–24304–02	8 – 1
6YL–24306–54	28 – 7
6H4–24311–00	8 – 35
6H4–24312–00	8 – 33
6H4–24313–00	8 – 32
6H4–24314–00	8 – 12
6E5–24315–00	33 – 3
6YL–24329–00	28 – 6
6E5–24367–01	15 – 27
650–24378–00	2 – 8
688–24378–00	8 – 30
692–24410–00	8 – 14
663–24411–00	8 – 19
692–24411–00	8 – 16
6H3–24411–10	5 – 41
6A0–24412–02	8 – 25
6A0–24413–00	8 – 15
6H4–24413–00	5 – 39
6L5–24421–00	5 – 38
6A0–24421–01	8 – 23
650–24431–A0	8 – 26

PART NO. N° PIECES	REF. NO.
650–24431–A0	34 – 17
648–24434–01	8 – 17
6H3–24434–10	5 – 42
648–24435–02	8 – 20
6H3–24452–10	5 – 29
6H4–24486–00	5 – 40
61N–24521–00	8 – 7
61N–24560–00	8 – 5
61N–24563–00	8 – 6
6H4–24566–02	8 – 9
6YK–24610–01	28 – 3
6H4–24633–00	6 – 34
6H5–24633–00	7 – 29
6H4–24634–00	6 – 30
63D–26301–01	16 – 39
6X4–26367–00	16 – 34
6A1–28176–00	15 – 41
6E0–28193–00–94	8 – 39
63B–28199–7C–D0	8 – 40
63B–28199–7C–E0	8 – 40
63B–28199–7C–F0	8 – 40
63B–28199–7C–G0	8 – 40
63B–28199–7C–H0	8 – 40
63B–28199–7C–S0	8 – 40
63B–28199–8C–K0	8 – 41
63B–28199–8C–L0	8 – 41
63B–28199–8C–M0	8 – 41
63B–28199–8C–N0	8 – 41
63B–28199–8C–P0	8 – 41
63B–28199–8C–R0	8 – 41
61H–2819R–31	8 – 37
6H4–41111–00–1S	2 – 36
6H4–41112–A0	2 – 37
	34 – 6
6H4–41113–00–1S	2 – 35
6H4–41114–A0	2 – 38
	34 – 7
6H5–41131–00–5B	25 – 10
6H4–41131–01–5B	25 – 10
6H4–41134–A0	25 – 22
	35 – 3
63D–41137–01–5B	25 – 8
63D–41213–00	18 – 3
68P–41213–A0	18 – 3
6H4–41217–01	4 – 24
6E9–41237–00	6 – 20
	7 – 20
6H1–41237–00	6 – 16

PART NO. N° PIECES	REF. NO.
6H1–41237–00	7 – 16
6H4–41237–00	18 – 8
6H4–41241–01	6 – 15
	7 – 15
6H4–41257–00	4 – 18
6H4–41259–01	4 – 21
6J8–41262–00	4 – 22
661–41262–02	4 – 19
6H4–41271–01	4 – 20
689–41273–00	4 – 25
6J8–41274–00	4 – 23
6X4–41291–00	16 – 8
63D–41632–00	18 – 5
63D–41636–00	18 – 7
6X4–42101–G2–4D	16 – 1
6X4–42111–01–4D	16 – 2
6X4–42115–00	16 – 22
6X4–42119–00	16 – 5
63D–42121–22–4D	16 – 55
63D–42126–00	16 – 17
6X4–42128–00	16 – 13
6X4–42131–01	16 – 51
6X4–42137–00	16 – 7
6X4–42159–00	16 – 45
6X4–42177–00	16 – 6
63B–42510–01–4D	22 – 1
63B–42510–11–4D	22 – 1
63D–42510–12–4D	22 – 1
6J8–42528–00	20 – 21
63D–42610–20–4D	1 – 1
63D–42610–50–4D	1 – 1
6H4–42613–01–4D	1 – 7
6H4–42613–11–4D	1 – 7
6H4–42615–00	1 – 3
6H4–42651–00	1 – 4
6H4–42652–00	1 – 5
63D–42677–20	1 – 9
63D–42678–11	1 – 10
63D–42681–10	1 – 19
63D–42682–10	1 – 20
6H1–42694–00	1 – 16
6H4–42711–07–4D	15 – 1
6H4–42711–25–4D	15 – 1
648–42715–00	18 – 19
6H4–42716–00	15 – 15
63D–42717–00	15 – 21
6E5–42724–00	15 – 16
6H4–42724–00	15 – 13

NUMERICAL INDEX
INDEX NUMERIQUE

PART NO. N° PIECES	REF. NO.
6H4–42724–20	15 – 13
6H4–42724–30	15 – 13
6H4–42725–00	15 – 29
6X4–42725–10	16 – 54
676–42726–00	15 – 23
	17 – 1
6H4–42726–00	15 – 24
688–42726–10	15 – 24
6H4–42726–40	15 – 23
6H3–42727–00	15 – 36
6X4–42728–00	17 – 5
6X4–42728–10	16 – 64
63D–42741–00–4D	15 – 20
6G1–42748–00	4 – 25
6E7–42791–10	15 – 40
6G5–42791–10	15 – 40
6H4–42815–00	15 – 2
6H4–42816–00	15 – 5
63D–43111–01–4D	19 – 1
6H4–43111–05–4D	20 – 1
63D–43112–01–4D	19 – 2
6H4–43112–04–4D	20 – 2
6J8–43113–01	20 – 11
648–43114–01	20 – 8
6E0–43118–01	20 – 5
6E5–43126–02	19 – 32
63D–43128–01–4D	19 – 5
63D–43131–01	19 – 13
	20 – 9
6G5–43144–00	19 – 27
6E5–43145–01	29 – 9
6G5–43145–01	19 – 17
	20 – 14
6G5–43148–00	19 – 23
688–43160–01	19 – 28
6H4–43160–01	21 – 1
676–43165–00	21 – 2
688–43165–00	19 – 29
6J8–43181–01	21 – 5
6H5–43181–03	19 – 18
6H5–43185–03	19 – 19
6J8–43311–04–4D	20 – 19
6J8–43311–10–4D	20 – 19
63D–43311–13–4D	19 – 11
682–43318–01	21 – 10
689–43373–01	20 – 22
6J8–43611–01	21 – 20
6J8–43613–01	21 – 18

PART NO. N° PIECES	REF. NO.
6J8–43614–00	21 – 16
6J8–43615–00	21 – 17
6H4–43616–00	21 – 30
6J8–43617–00	21 – 33
6J8–43627–00	21 – 11
6J8–43631–00	21 – 27
6J8–43633–00	21 – 28
6J8–43641–00	21 – 31
6H4–43659–00	21 – 19
6H4–43674–00	21 – 25
62Y–43800–01–4D	23 – 1
62X–43804–01	24 – 4
62Y–43805–00	24 – 3
62X–43807–00	24 – 8
69W–4380F–00	24 – 9
62X–4380H–00	24 – 14
62Y–4380K–01	23 – 2
62X–43810–01	23 – 3
62Y–43816–00	23 – 41
6H1–43816–00	23 – 54
69W–4381B–00	23 – 13
6H1–43829–00	23 – 61
62Y–4382A–00	23 – 39
62Y–4382L–00	23 – 42
62Y–43830–01	23 – 21
6H1–43831–10	23 – 19
69J–43841–00	23 – 22
6H1–43844–10	23 – 35
62Y–43845–00	23 – 59
69A–4384F–00	23 – 24
6H1–4384F–10	23 – 33
69W–4384G–00	23 – 46
6H1–4384G–11	23 – 31
62X–4384H–00	23 – 16
69J–4384M–00	23 – 23
69J–43853–00	23 – 29
62Y–43854–00	23 – 47
62Y–43855–00	23 – 32
6H1–43856–10	23 – 34
62X–43861–00	23 – 4
62X–43862–00	23 – 5
62X–43865–00	23 – 62
65W–4386A–00	23 – 28
62X–4386K–00	24 – 10
62X–43871–00	23 – 7
62Y–43871–00	23 – 51
62X–43875–00	23 – 18
67F–43875–00	23 – 12

PART NO. N° PIECES	REF. NO.
6H1–43875–00	23 – 58
62Y–4387G–00	23 – 52
62Y–4387J–00	23 – 49
62Y–43880–01	24 – 2
62Y–43881–00	24 – 13
6H1–43883–00	23 – 25
62X–43888–00	24 – 1
62X–4388A–00	23 – 10
62Y–43891–00	24 – 6
62Y–43892–00	24 – 5
69J–43893–00	23 – 53
69J–43894–00	23 – 48
62X–43899–00	23 – 14
69W–43899–01	23 – 63
69J–4389J–00	23 – 30
6X4–44100–10	16 – 21
6X4–44102–00	16 – 23
63D–44117–00	18 – 16
63D–44120–00	18 – 13
63D–44120–10	18 – 13
63D–44121–00	18 – 24
688–44122–00	18 – 28
6X4–44132–00	16 – 25
6X4–44139–00	16 – 9
63D–44144–00	26 – 52
663–44151–00	26 – 51
6X4–44159–00–4D	16 – 46
6X4–44173–00	16 – 47
6X4–44177–00	16 – 12
6X4–44188–00	16 – 15
6G8–44191–00	16 – 49
688–44194–00	18 – 12
63D–44311–00	26 – 21
63D–44312–00	27 – 19
	35 – 19
63D–44316–00	26 – 27
	35 – 10
63D–44322–00	26 – 22
	35 – 17
63D–44322–40	35 – 27
63D–44323–00	26 – 26
	35 – 20
63D–44323–40	35 – 28
63D–44341–00	26 – 31
6H3–44352–00	26 – 23
	35 – 18
63D–44361–00	27 – 1
63D–44361–10	27 – 1

PART NO. N° PIECES	REF. NO.
663–44366–00	27 – 18
	35 – 24
63D–44367–00	27 – 4
6E5–44391–00	15 – 14
63D–44514–01–94	22 – 22
63D–44526–00	22 – 24
63D–44551–01–4D	22 – 9
63D–44552–01–4D	22 – 18
63D–44555–00–94	22 – 11
687–44555–00–94	22 – 11
663–44575–00	22 – 16
63D–45111–01–4D	25 – 1
63D–45111–11–4D	25 – 1
6H4–45113–A0	25 – 19
	34 – 18
63D–45114–A0	25 – 9
	35 – 2
63D–45123–00	25 – 12
	35 – 5
6H3–45127–00	25 – 18
	35 – 4
63D–45155–00	25 – 4
63D–45214–00	26 – 10
63D–45215–00	26 – 11
65W–45251–00	19 – 41
67C–45251–00	27 – 15
63D–45251–01	19 – 6
63D–45300–02–4D	26 – 1
63D–45300–12–4D	26 – 1
63D–45301–03–4D	26 – 2
63D–45321–00	26 – 14
688–45341–10	26 – 9
63D–45344–00	26 – 34
63D–45361–02–4D	26 – 43
664–45371–01	27 – 12
63D–45375–00	27 – 6
663–45376–00–94	27 – 5
6E5–45378–00	26 – 17
63D–45501–00	26 – 36
63D–45501–10	26 – 36
6H4–45536–00	26 – 4
6H4–45551–01	26 – 37
6H4–45560–01	26 – 39
663–45567–01	26 – 41
663–45567–10	26 – 41
663–45567–20	26 – 41
663–45567–30	26 – 41
663–45567–40	26 – 41

PART NO. N° PIECES	REF. NO.
663–45567–50	26 – 41
663–45567–60	26 – 41
6H4–45571–01	26 – 42
63D–45577–00	26 – 46
63D–45577–10	26 – 46
63D–45577–20	26 – 46
63D–45577–30	26 – 46
63D–45577–40	26 – 46
63D–45577–50	26 – 46
63D–45577–60	26 – 46
663–45587–01	26 – 5
663–45587–10	26 – 5
663–45587–20	26 – 5
663–45587–30	26 – 5
663–45587–40	26 – 5
663–45587–50	26 – 5
663–45587–60	26 – 5
63D–45611–00	26 – 55
63D–45631–01	26 – 57
663–45633–00	26 – 62
663–45634–00	26 – 58
63D–45635–00	26 – 60
663–45930–00–98	27 – 25
663–45941–01–EL	27 – 25
69W–45943–00–EL	27 – 25
6H5–45943–00–EL	27 – 25
69W–45945–00–EL	27 – 25
6H5–45945–00–EL	27 – 25
69W–45947–00–EL	27 – 25
663–45949–01–EL	27 – 25
69W–45952–00–EL	27 – 25
6H5–45952–00–EL	27 – 25
663–45952–02–EL	27 – 25
663–45954–01–EL	27 – 25
663–45956–01–EL	27 – 25
69W–45958–00–EL	27 – 25
6H5–45958–00–EL	27 – 25
663–45958–01–EL	27 – 25
697–45970–00–98	27 – 25
663–45970–60–98	27 – 25
663–45972–60–98	27 – 25
663–45974–02–98	27 – 25
663–45974–60–98	27 – 25
663–45976–00–98	27 – 25
663–45978–00–98	27 – 25
663–45987–02	27 – 20
670–45997–02	27 – 21
6X4–47731–00	16 – 24

PART NO. N° PIECES	REF. NO.
703–48152–00	31 – 57
703–48153–00	31 – 3
6X4–48154–00	16 – 18
703–48189–00	31 – 17
703–48198–00	31 – 14
703–48201–A3	30 – 1
	31 – 1
703–48205–A5	30 – 1
	31 – 1
703–48211–01	31 – 61
703–48212–00	31 – 58
703–48213–00	31 – 59
703–48215–00	31 – 43
6X4–48215–10	16 – 4
703–48218–00	31 – 64
703–48219–00	31 – 30
703–48221–00	31 – 56
703–48222–00	31 – 27
703–48223–00	31 – 28
703–48224–00	31 – 55
703–48225–00	31 – 29
703–48226–00	31 – 26
703–48227–00	31 – 24
703–48232–00	31 – 62
703–48234–00	31 – 18
703–48235–00	31 – 4
703–48236–00	31 – 16
703–48238–00	31 – 22
703–48243–00	31 – 15
703–48244–00	31 – 21
703–48245–00	31 – 11
703–48246–00	31 – 23
701–48248–00	31 – 13
703–48252–00	31 – 12
6X4–48261–00	16 – 27
703–48261–01	31 – 2
703–48264–00	31 – 6
703–48265–00	31 – 9
703–48268–00	31 – 5
703–48271–00	31 – 60
703–48281–00	31 – 31
703–48282–00	31 – 32
703–48284–00	31 – 52
701–48287–00	31 – 42
703–48291–10	31 – 39
703–48293–10	31 – 41
701–48320–00	30 – 2
701–48320–20	30 – 2

NUMERICAL INDEX
INDEX NUMERIQUE

PART NO. N° PIECES	REF. NO.
701–48320–30	30 – 2
701–48320–50	30 – 2
701–48320–60	30 – 2
701–48320–80	30 – 2
63D–48321–11	16 – 32
63D–48344–00	18 – 29
663–48344–00	18 – 29
6H4–48344–00	18 – 1
703–48345–01	31 – 19
703–48358–00	31 – 20
63D–48511–00–4D	22 – 36
6H4–48531–11–94	15 – 7
6H4–48532–11–94	15 – 8
63D–48538–00	16 – 37
6X4–48538–00	16 – 33
6X4–48538–10	16 – 40
63D–61350–00	29 – 1
63D–61351–00	29 – 2
6H4–81315–11	32 – 9
6H4–81332–00	10 – 17
6H4–81337–01	14 – 30
63D–81345–00	10 – 8
63D–81345–10	10 – 9
63D–81345–20	10 – 10
6J8–81365–A0	9 – 38
	14 – 27
6F5–81800–11	14 – 1
689–81807–12	14 – 3
689–81809–11	14 – 7
689–81810–11	14 – 9
689–81811–11	14 – 11
689–81812–11	14 – 12
689–81813–10	14 – 13
689–81820–11	14 – 14
6H4–81822–02–98	11 – 14
689–81826–10	14 – 15
6F5–81830–11	14 – 4
689–81831–00	14 – 5
689–81840–11	14 – 10
689–81847–11	14 – 6
689–81850–12	14 – 8
689–81857–11	14 – 2
6F5–81922–00	13 – 6
6G1–81941–10	12 – 2
6X4–81942–00	17 – 8
6H4–81945–00	12 – 4
6H4–81945–20	12 – 22
61A–81949–00	12 – 28

PART NO. N° PIECES	REF. NO.
6H5–81949–00	12 – 27
6H1–81950–00	12 – 19
6H4–81952–00	12 – 3
6J8–81960–00	13 – 1
6H2–81960–10	12 – 8
6H4–81975–02	13 – 4
6H4–82105–02	12 – 1
63D–82105–U0	12 – 1
6H4–82117–00	12 – 31
703–82119–00	10 – 13
	11 – 4
	15 – 25
682–82119–01	12 – 29
63D–82127–00	22 – 21
63D–82127–10	22 – 21
63D–82148–00	19 – 3
6E5–82148–00	20 – 3
6H1–82148–00	19 – 9
6H4–82150–00	12 – 9
1E6–82151–00	32 – 7
663–82151–00	12 – 10
62Y–82181–01	24 – 7
6A0–82317–00	6 – 39
	7 – 41
6G1–82370–21	11 – 11
703–82510–12	31 – 44
63D–82531–00	11 – 23
703–82531–00	31 – 46
703–82540–00	31 – 50
703–82542–00	31 – 63
682–82556–00	17 – 3
	31 – 48
689–82560–00	11 – 12
6H4–82560–00	11 – 13
703–82563–02	31 – 55
63D–82563–10	12 – 32
688–82575–01	31 – 47
6K5–82575–03	17 – 2
676–82577–00	31 – 45
6E3–8257H–00	15 – 42
689–8257Y–00	17 – 4
6E5–82587–00	12 – 33
6E5–82588–00	15 – 37
688–8258A–20	31 – 49
63D–82590–10	12 – 18
63D–82590–40	12 – 18
703–82591–00	31 – 53
703–82592–00	31 – 54

PART NO. N° PIECES	REF. NO.
63D–82594–00	12 – 15
703–82594–00	31 – 25
6H4–83354–00	10 – 7
703–83383–B0	31 – 51
6Y5–8350T–90	32 – 1
6Y5–83553–00	32 – 6
6G1–83557–00	11 – 25
6E5–83558–00	22 – 32
	26 – 19
6E5–83558–10	26 – 19
6Y5–8355X–T1	32 – 5
6H4–83589–00	15 – 33
6R3–83614–00	12 – 34
6A1–83625–41	4 – 31
6A1–83625–51	4 – 32
6E0–83627–41	16 – 65
6E0–83627–51	16 – 66
6Y5–83653–20	32 – 8
63D–83672–10	22 – 33
63D–84301–00	15 – 36
63D–84342–00	15 – 32
682–84381–00	13 – 9
6J8–85410–00	15 – 29
6H4–85415–10	15 – 31
63D–85520–01	10 – 4
63D–85533–00	10 – 5
63D–85533–10	10 – 5
63D–85540–03	11 – 1
63D–85550–00	10 – 1
63D–85550–10	10 – 1
63D–85560–00	10 – 2
63D–85560–10	10 – 2
6H5–85570–00	11 – 7
63D–85580–00	10 – 6
6H1–85711–60	4 – 33
63D–85720–00	7 – 50
63D–85720–10	6 – 47
63D–W0001–00	34 – 1
63D–W0001–20	35 – 1
6H4–W0004–00	4 – 2
63D–W0070–10	1 – 11
63D–W0078–01	35 – 16
63D–W0078–0A	35 – 26
63D–W0090–11–1S	2 – 1
63D–W0090–31–1S	2 – 1
6H4–W0093–03	34 – 19
656–W2810–02	8 – 38
63D–W4434–00	26 – 30

PART NO. N° PIECES	REF. NO.
90101–06020	19 – 40
90101–06021	2 – 19
90101–06128	33 – 11
90101–08339	20 – 15
90101–08M15	22 – 23
90101–09M01	29 – 7
90101–10M58	20 – 24
90101–12014	16 – 56
90101–12M65	19 – 42
90105–06M15	12 – 25
90105–06M16	12 – 26
90105–06M18	20 – 23
90105–08M61	26 – 44
90109–06M39	6 – 7
	7 – 7
90109–06M40	6 – 8
	7 – 8
90109–06M43	18 – 4
90109–12M21	22 – 15
90116–06M22	12 – 5
90116–10175	22 – 7
90116–18M52	19 – 36
90119–06M13	2 – 10
90119–06M51	11 – 2
90119–06M61	15 – 19
90119–06M65	6 – 41
	7 – 43
90119–06M67	6 – 42
	7 – 44
90119–06M73	15 – 6
90119–06M99	1 – 8
90119–06MA2	4 – 9
	9 – 34
	14 – 23
90119–06MA3	2 – 29
	9 – 36
	14 – 25
90119–06MA5	2 – 41
90119–08015	2 – 28
90119–08019	2 – 9
90119–08M15	26 – 29
	35 – 23
90119–08M79	25 – 17
90119–08M83	25 – 7
90119–08M84	27 – 11
90142–05001	16 – 10
90142–05M06	26 – 12
90149–14M12	20 – 7

PART NO. N° PIECES	REF. NO.
90157–05M16	28 – 5
90157–06M01	15 – 26
90157–06M13	18 – 10
90159–06M21	14 – 32
90159–06M22	14 – 33
90170–09M03	29 – 5
90170–12138	26 – 38
90170–18M10	19 – 37
90171–16011	27 – 23
90179–06M24	11 – 20
90179–16M05	10 – 15
90183–05M06	1 – 18
90185–08045	22 – 26
90185–09M01	29 – 4
90185–10051	22 – 8
90185–12M12	16 – 63
90185–22M11	19 – 16
	20 – 13
90201–05652	5 – 6
90201–06060	9 – 22
90201–083J8	24 – 16
90201–08M93	6 – 3
	7 – 3
90201–09425	22 – 25
90201–10M20	29 – 3
90201–10M63	29 – 8
90201–12035	16 – 60
90201–12426	19 – 44
	20 – 26
90201–12M16	22 – 12
90201–13M19	22 – 14
90201–16M44	10 – 16
90201–22429	26 – 56
90201–22M03	19 – 15
	20 – 12
90201–27M00	26 – 35
90201–30M00	22 – 2
90201–50306	3 – 12
90202–05088	6 – 17
	7 – 17
90202–07M07	18 – 15
90202–12031	21 – 9
90202–12060	27 – 2
90202–25M04	22 – 13
90202–26M45	13 – 10
90206–12052	15 – 3
90206–12M16	21 – 15
90206–12M22	16 – 58

PART NO. N° PIECES	REF. NO.
90209–06M05	4 – 17
90243–04M01	20 – 6
90249–06M19	19 – 24
90249–06M23	21 – 32
90249–12M27	21 – 12
90249–12M28	21 – 7
90250–06023	26 – 61
90266–04M01	1 – 6
90280–03024	26 – 25
	35 – 25
90338–05M03	1 – 17
	15 – 26
90338–05M11	12 – 14
90340–08002	26 – 7
90340–14M00	2 – 24
90386–07M58	18 – 25
90386–08032	16 – 16
90386–10025	19 – 21
90386–10M16	19 – 20
90386–12003	16 – 61
90386–12069	15 – 4
90386–18M35	19 – 34
90386–18M44	19 – 39
90386–18M92	19 – 33
90386–22M15	19 – 14
90386–22M69	20 – 10
90386–26MA3	16 – 50
90386–30M60	22 – 6
90386–30M77	22 – 4
90386–30M78	22 – 3
90387–06119	6 – 40
	7 – 42
90387–06M05	12 – 24
90387–06M41	15 – 18
90387–06M65	14 – 31
90387–06M66	9 – 41
90387–06M69	9 – 10
90387–07M64	21 – 21
90387–08M03	20 – 16
90387–10M42	29 – 6
90387–12M02	16 – 59
90430–08020	26 – 8
	35 – 6
90430–12072	27 – 3
90430–14115	2 – 25
	34 – 4
90440–14M00	13 – 8
	19 – 46

NUMERICAL INDEX
INDEX NUMERIQUE

PART NO. N° PIECES	REF. NO.
90445–07M23	6 – 10
	7 – 10
90445–07M24	2 – 14
90445–07M27	2 – 13
90445–07M31	26 – 18
90445–07M44	6 – 9
	7 – 9
90445–07M46	2 – 12
90445–07M87	6 – 43
	7 – 45
90445–07MA3	2 – 16
90445–07MA5	4 – 27
90445–07MA6	6 – 11
	7 – 11
90445–07ME9	26 – 18
90445–07MF1	22 – 31
90445–09057	8 – 31
90445–09063	8 – 29
90445–09M37	2 – 39
90445–11M15	6 – 22
	7 – 22
90445–11M17	6 – 32
	7 – 35
90445–11M23	6 – 27
	7 – 32
90445–11M30	33 – 8
90445–11M66	33 – 9
90446–10M01	6 – 33
	7 – 36
90446–10M02	11 – 24
90464–03M15	10 – 11
90464–05M16	11 – 26
90464–06M19	4 – 26
90464–07M20	6 – 14
	7 – 14
	12 – 30
90464–08M07	15 – 30
90464–09M13	15 – 25
90464–09M42	16 – 35
90464–12M35	13 – 7
90464–15M11	8 – 36
	11 – 3
90464–15M27	12 – 13
90465–06M86	7 – 49
	22 – 29
90465–11M10	19 – 47
	22 – 30
	26 – 20

PART NO. N° PIECES	REF. NO.
90465–13M11	22 – 35
90465–13M30	7 – 25
90467–06016	2 – 15
	4 – 28
90467–08004	2 – 40
	4 – 30
	6 – 38
	7 – 40
	8 – 4
90467–10M04	6 – 31
	7 – 34
	33 – 10
90467–11M08	6 – 23
	7 – 23
	33 – 12
90468–05M03	6 – 18
	7 – 18
90468–07M02	6 – 12
	7 – 12
90468–10005	16 – 38
90468–18008	18 – 2
90480–09M21	15 – 17
90480–13M24	12 – 23
90480–25161	11 – 8
90501–10227	9 – 47
90501–10326	5 – 8
90501–12082	18 – 18
90501–16M01	26 – 59
90501–23215	16 – 14
90502–10M04	21 – 4
90502–16M02	19 – 31
90506–12M25	21 – 6
90506–14M24	19 – 25
90506–32M22	21 – 24
90508–18M24	21 – 29
90508–26M35	18 – 6
90510–08002	9 – 20
91318–05008	23 – 44
91318–05020	23 – 43
91318–06040	23 – 56
91490–20010	16 – 11
	21 – 26
91490–20012	18 – 27
91490–30025	27 – 24
91690–30010	21 – 3
91690–30012	19 – 30
91690–30020	19 – 22
91690–40018	9 – 3

PART NO. N° PIECES	REF. NO.
92903–06100	9 – 12
92903–06600	5 – 44
	9 – 13
	10 – 21
	18 – 21
92903–08600	9 – 33
	11 – 18
	14 – 17
92990–04100	32 – 3
92990–05100	8 – 22
92990–05600	4 – 4
92990–06600	12 – 7
	15 – 28
	17 – 7
92990–08200	18 – 26
92990–08600	20 – 17
	31 – 34
92990–12200	16 – 57
92990–12600	16 – 62
92990–16200	27 – 22
92995–05600	10 – 19
	15 – 10
92995–06100	19 – 8
	25 – 3
92995–06600	3 – 7
	8 – 3
	9 – 6
	11 – 6
	12 – 12
	13 – 3
	15 – 12
	16 – 31
	18 – 32
92995–08100	22 – 20
	27 – 14
92995–08600	16 – 29
	25 – 14
92995–10100	27 – 9
92995–10600	20 – 25
	27 – 10
92995–12200	19 – 43
92995–18600	19 – 38
92A08–03110	23 – 37
93101–22M00	26 – 50
	35 – 14
93101–25M57	26 – 32
	35 – 12
93102–08414	24 – 15

PART NO. N° PIECES	REF. NO.
93102–23096	10 – 12
93102–25M28	3 – 3
	34 – 10
93104–16M01	3 – 4
	34 – 9
93106–09014	26 – 15
	35 – 8
93210–04228	5 – 28
93210–04230	5 – 20
	34 – 29
93210–07003	26 – 53
93210–09165	23 – 60
93210–13M04	6 – 6
	7 – 6
93210–16275	29 – 10
93210–18397	23 – 57
93210–19MA7	6 – 2
	7 – 2
93210–29375	23 – 6
93210–29M94	22 – 5
93210–32738	8 – 8
	34 – 16
93210–33MG4	26 – 16
	35 – 7
93210–44383	23 – 8
93210–48214	23 – 9
93210–48MG8	26 – 33
	35 – 11
93210–52449	24 – 17
93210–58M21	3 – 5
	34 – 11
93210–59MG7	26 – 24
	35 – 9
93210–69MG6	26 – 48
	35 – 13
93210–74MG5	26 – 47
	35 – 15
93306–001U1	26 – 45
93306–305U8	3 – 10
93315–32224	26 – 3
93317–22204	26 – 49
93332–00001	26 – 6
93332–00003	26 – 40
93410–18M02	19 – 35
93410–28M06	22 – 10
93430–06024	31 – 10
93430–06M02	9 – 26
	21 – 22

PART NO. N° PIECES	REF. NO.
93430–10M00	21 – 8
93440–62057	3 – 11
93501–04M02	18 – 17
93501–08001	23 – 45
93503–16003	23 – 15
93505–32038	23 – 27
93602–20M02	3 – 16
93604–08062	26 – 28
93604–26256	23 – 40
93606–12019	2 – 11
	25 – 6
	27 – 7
93700–06M03	16 – 3
	19 – 12
	20 – 20
94702–00247	2 – 42
94702–00271	2 – 42
95302–03600	23 – 38
95303–06600	18 – 11
95380–03600	5 – 36
	8 – 18
95380–04600	32 – 4
95380–05600	6 – 19
	7 – 19
	18 – 9
	26 – 13
	31 – 7
95380–06600	9 – 14
	12 – 6
	16 – 19
	31 – 40
95380–08600	8 – 11
	20 – 18
95380–10600	20 – 27
95380–12600	19 – 45
95380–12800	22 – 17
95670–06640	11 – 19
97013–06012	5 – 43
	13 – 5
97013–06014	8 – 10
97013–06018	10 – 20
97013–06020	18 – 20
97013–06030	9 – 11
97013–06045	18 – 22
97013–08014	14 – 28
97013–08016	14 – 18
97013–08020	9 – 39
97013–08025	9 – 32

PART NO. N° PIECES	REF. NO.
97013–08025	14 – 21
97013–08030	14 – 16
97013–08050	11 – 17
97075–08030	22 – 19
	25 – 13
97075–10040	27 – 8
97095–05016	15 – 9
97095–06010	19 – 26
97095–06012	12 – 16
	13 – 2
	25 – 2
97095–06014	11 – 5
	12 – 11
	16 – 36
97095–06016	9 – 5
	12 – 35
	18 – 31
97095–06020	3 – 6
	9 – 23
	11 – 9
	15 – 11
97095–06025	8 – 2
	12 – 20
	19 – 7
97095–06030	11 – 15
	16 – 30
97095–06035	9 – 28
97095–06040	8 – 27
	9 – 43
97095–06095	4 – 12
97095–08025	27 – 13
97095–08035	27 – 16
97095–08040	16 – 28
97380–05025	31 – 8
97380–08030	31 – 33
97575–08445	25 – 5
97595–06510	19 – 10
97602–04216	24 – 12
97780–60525	15 – 22
97780–60920	16 – 48
97803–04010	5 – 35
97880–05014	4 – 3
97880–05020	24 – 11
97880–06014	15 – 34
97880–06016	17 – 6
97885–05010	10 – 18
97885–06008	19 – 4
	20 – 4

NUMERICAL INDEX
INDEX NUMERIQUE

PART NO. N° PIECES	REF. NO.	PART NO. N° PIECES	REF. NO.	PART NO. N° PIECES	REF. NO.	PART NO. N° PIECES	REF. NO.	PART NO. N° PIECES	REF. NO.	PART NO. N° PIECES	REF. NO.
97885–06016	16 – 52										
	22 – 34										
97885–06040	4 – 15										
97885–06055	4 – 16										
97980–04114	5 – 4										
	34 – 28										
98503–05028	8 – 21										
98580–03015	31 – 38										
98580–04006	31 – 36										
98580–04008	5 – 11										
98580–04010	31 – 35										
98580–05010	31 – 37										
98780–04016	2 – 21										
98980–03006	5 – 37										
99001–08600	26 – 54										
99002–03600	23 – 26										
99080–05600	21 – 23										
99530–10014	9 – 30										
9E450–04533	32 – 2										