YAMAHA

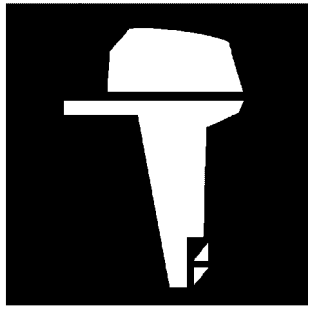

PARTS CATALOGUE
CATALOGUE DE PIECES DETACHEES

F150AET'09 (63P6)
FL150AET'09 (64P6)

YAMAHA
GENUINE
Parts & Accessories

1H63P-300F1

( )

F150AET/FL150AET
PARTS CATALOGUE
©2023 by Yamaha Motor Co., Ltd.
1st edition, April 2023
All rights reserved.
Any reprinting or unauthorized use
without the written permission of
Yamaha Motor Co., Ltd.
is expressly prohibited.
Printed in Japan.

F150AET/FL150AET
CATALOGUE DE PIECES DETACHEES
©2023 par Yamaha Motor Co., Ltd.
1re édition, avril 2023
Tous droits réservés
Toute réimpression ou utilisation
non autorisée sans la permission écrite
de la Yamaha Motor Co., Ltd.
est formellement interdite.
Imprimé au Japon

FOREWORD

This Parts Catalogue is related to the parts for the model(s) on the cover page. When you are ordering replacement parts, please refer to this Parts Catalogue and quote both part numbers and part names correctly.

1. Modifications or additions which have been made after the issue of the Parts Catalogue will be announced in the Parts News.
   It is advisable that you make the necessary corrections to the Parts Catalogue according to the Parts News.

2. Abbreviations
   The following abbreviations are used in this Parts Catalogue.
   "UR" Use specified parts number.
   "UN" Use as many as needed.
   "AP" Alternate Parts
   "LM" Locally Made (Parts need to be ordered locally)
   "F#" Frame No. (Applicable machine No.)
   "O/S" Over Size

3. The number of components for assembly
   - Parts, which are to be supplied in an assembly, are listed with a dot (.) in front of the part name as shown below.
   - The numeral appearing to the right of each component part indicates the quantity of parts for each assembly unit.

PART NO.	DESCRIPTION	Q'TY	REMARKS
2F5–83310–60	FRONT FLASHER LIGHT ASSY	2	
115–83311–60	.BULB (6V–18W)	1	

4. Applicable colours of graphics are represented in the "REMARKS" as shown below.

PART NO.	DESCRIPTION	Q'TY	REMARKS
2N4–24110–00–X5	FUEL TANK COMP.	2	MXR
3J1–24240–10	.GRAPHIC, FUEL TANK	1	FOR MXR

5. Note that the illustrations for reference in finding parts numbers are not to be used for assembling. When assembling, please use the applicable service manual.

6. The asterisk (*) before a reference number indicates modified items after the first edition.

7. Applicable Serial No.
   Engine Serial No.

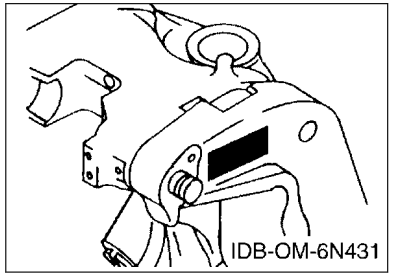

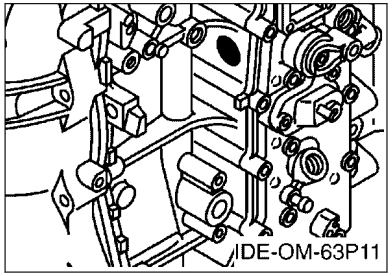

8. Applicable Engine Starting Serial No.

Model	Serial No.	Model	Serial No.
F150A	63P-1079661	FL150A	64P-1010645

9. Applicable Colour Code

Abbreviation	Colour Name	Colour Code
DBN1	DARK BLUISH GRAY 1	008D

10. Quantity Column Information

Column No.	Name Of Q'ty Column	Applicable Model
1	63P6	F150AET
2	64P6	FL150AET

AVANT–PROPOS

Ce catalogue de pièces détachées concerne les pièces pour le(s) modèle(s) indiqué(s) sur la page de couverture. Lorsque vous commandez des pièces de rechange, veuillez vous référer à ce catalogue de pieces détachées et indiquer clairement les numéros et les noms des pièces détachées.

1. Les modifications ou ajouts ayant été effectués après la parution du catalogue de pièces détachées seront décrits dans les Bulletins d'information concernant les pièces détachées.
   Il est recommandé que vous apportiez les corrections nécessaires au catalogue des pièces détachées en vous référant aux Bulletins d'information.

2. Abréviations
   Dans ce catalogue, les abréviations suivantes sont utilisées:
   "UR" Utiliser le numéro de pièces spécifié.
   "UN" Utiliser autant que nécessaire.
   "AP" Pièces de substitution
   "LM" Fabrication locale (les pièces doivent être commandées localement.)
   "F#" N° de cadre (applicable au N° de série)
   "O/S" Surdimensionné

3. Nombre de pièces d'un assemblage
   - Les pièces fournies comme composants d'un assemblage sont précédées d'un point (.) de la manière indiquée ci–dessous.
   - Le chiffre apparaissant à la droite de chaque composant indique la quantité de pièces pour chaque unité d'assemblage.

N° PIECES	DESCRIPTION	QTE	REMARQUES
2F5–83310–60	ENS. CLIGNOTANT AVANT	2	
115–83311–60	.AMPOULE (6V–18W)	1	

4. Les couleurs concernant les graphiques sont indiquées dans la colonne "REMARQUES", comme indiqué ci–dessous.

N° PIECES	DESCRIPTION	QTE	REMARQUES
2N4–24110–00–X5	RESERVOIR A ESSENCE.	2	MXR
3J1–24240–10	.GRAPHIQUE	1	POUR MXR

5. Veuillez noter que les illustrations sont indiquées à titre de référence pour trouver les numéros de pièces, non pour être utilisées lors de l'assemblage. Lors de l'assemblage, veuillez utiliser le manuel d'entretien adéquat.

6. L'astérisque (*) placé devant un numéro de référence indique des éléments qui ont été modifiés après la première édition.

7. N° de série applicable
   N° de Série du moteur

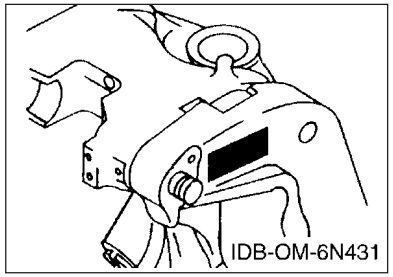

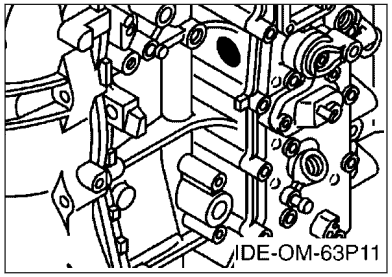

8. N° de série initial du moteur applicable

Modèle	N° de série	Modèle	N° de série
F150A	63P-1079661	FL150A	64P-1010645

9. Code couleur applicable

Abréviation	Nom de la couleur	Code couleur
DBN1	DARK BLUISH GRAY 1	008D

10. Informations relatives à la colonne Quantité

N° de la colonne	Nom de la colonne Qté	Modèle applicable
1	63P6	F150AET
2	64P6	FL150AET

CONTENTS

TOP COWLING..... 1
CYLINDER & CRANKCASE 1.....2
CRANKSHAFT & PISTON.....4
CYLINDER & CRANKCASE 2.....5
CYLINDER & CRANKCASE 3.....7
VALVE..... 9
INTAKE 1.....11
INTAKE 2.....12
INTAKE 3.....13
FUEL INJECTION PUMP 1..... 15
FUEL INJECTION PUMP 2..... 17
FUEL 1.....18
FUEL 2.....20
GENERATOR.....21
ELECTRICAL 1.....22
ELECTRICAL 2.....23
ELECTRICAL 3.....25
STARTING MOTOR..... 27
BOTTOM COWLING..... 29
CONTROL..... 31
BRACKET 1.....34
BRACKET 2.....36
POWER TRIM & TILT ASSY 1.....38
POWER TRIM & TILT ASSY 2..... 40
UPPER CASING.....42
OIL PAN.....44
LOWER CASING & DRIVE 1..... 46
LOWER CASING & DRIVE 2..... 50
LOWER CASING & DRIVE 3..... 52
LOWER CASING & DRIVE 4..... 56
STEERING GUIDE.....58
REPAIR KIT 1.....59
REPAIR KIT 2.....60

INDEX

NUMERICAL INDEX.....62

TABLE DES MATIERES

CAPOT SUPERIEUR..... 1
CYLINDRE & CARTER 1..... 2
VILEBREQUIN & PISTON.....4
CYLINDRE & CARTER 2..... 5
CYLINDRE & CARTER 3..... 7
SOUPAPE..... 9
ADMISSION 1.....11
ADMISSION 2.....12
ADMISSION 3.....13
POMPE A INJECTEUR 1..... 15
POMPE A INJECTEUR 2..... 17
CARBURANT 1..... 18
CARBURANT 2..... 20
GENERATRICE.....21
PARTIE ELECTRIQUE 1.....22
PARTIE ELECTRIQUE 2.....23
PARTIE ELECTRIQUE 3.....25
DEMARREUR ELECTRIQUE.....27
CAPOT INFERIEUR.....29
COMMANDE..... 31
SUPPORT 1..... 34
SUPPORT 2..... 36
PUISSANCE PARER ET INCLINER 1..... 38
PUISSANCE PARER ET INCLINER 2..... 40
FOURREAU.....42
VENTILATEUR D'HUILE..... 44
BOITIER D'HELICE TRANSMISSION1.....46
BOITIER D'HELICE TRANSMISSION2.....50
BOITIER D'HELICE TRANSMISSION3.....52
BOITIER D'HELICE TRANSMISSION4.....56
FIXATION DE DIRECTION..... 58
KITS DE REPARATION 1..... 59
KITS DE REPARATION 2..... 60

INDEX

INDEX NUMERIQUE.....62

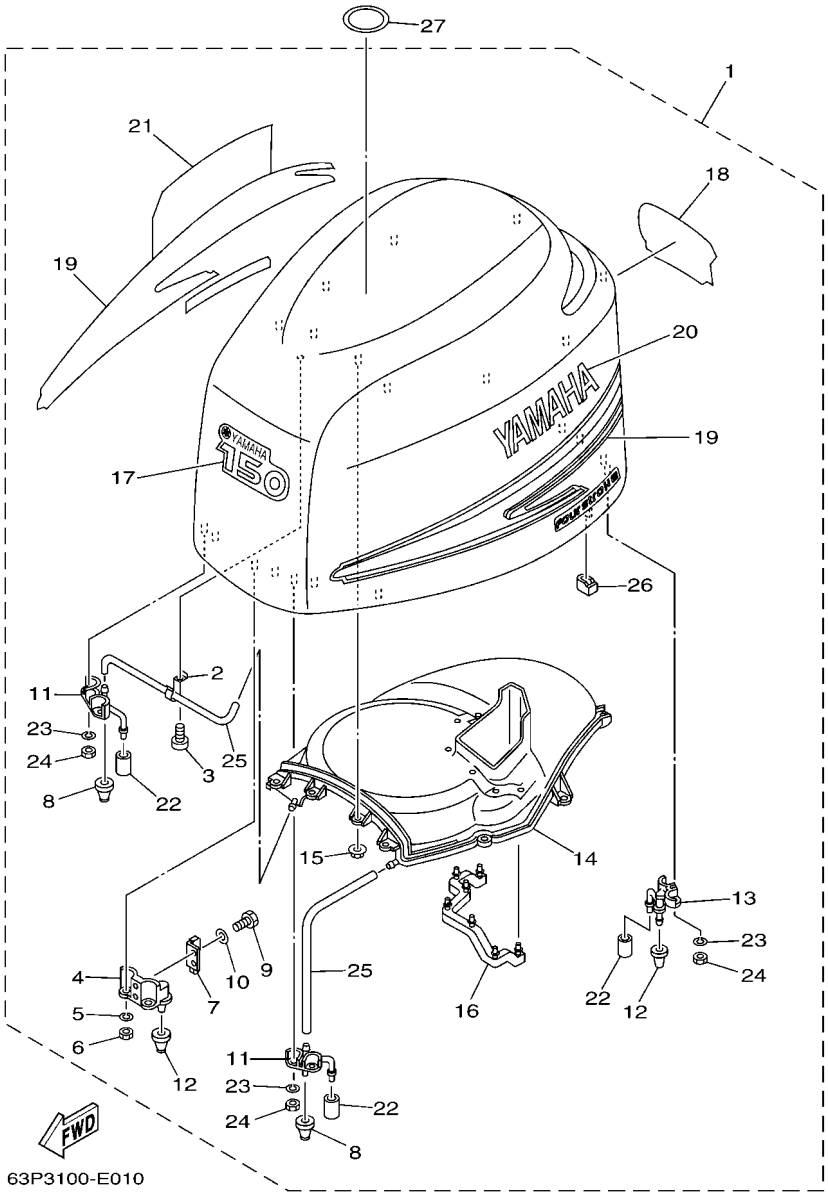

FIG. 1 TOP COWLING — CAPOT SUPERIEUR

REF. NO.	PART NO. N° PIECES	DESCRIPTION DESCRIPTION	63P6	64P6				REMARKS REMARQUES
1	63P–42610–01–8D	TOP COWLING ASSY CAPOT (ENS.)	1	1				
2	90465–10032	.CLAMP .BRIDE	1	1				
3	97780–50620	.SCREW, TAPPING .VIS, TETE BOMBEE	1	1				
4	63P–42647–00–94	.HOLDER, CLAMP BAND .SUPPORT, SANDOW DE SERRAGE	2	2				
5	92990–06100	.WASHER, SPRING .RONDELLE, GROWER	4	4				
6	95380–06600	.NUT, HEXAGON .ECROU	4	4				
7	60V–42651–01	.HOOK .CROCHET	2	2				
8	69J–42663–00	.DAMPER .AMORTISSEUR	2	2				
9	97095–06016	.BOLT .BOULON	4	4				
10	92995–06600	.WASHER .RONDELLE	4	4				
11	63P–42643–00–94	.PLATE, CLAMP .PLAQUE, PRESSE	2	2				
12	68F–42663–00	.DAMPER .AMORTISSEUR	4	4				
13	63P–42644–00–94	.PLATE, CLAMP 2 .PLAQUE, PRESSE 2	2	2				
14	63P–42613–00	.MOLDING, AIR DUCT .MANCHON A AIR	1	1				
15	90179–06M24	.NUT .ECROU	10	10				
16	63P–42617–00	.DAMPER, FORM .BOURRELET, CAOUTCHOUC	1	1				
17	63P–42677–00	.GRAPHIC, FRONT .ADHESIF, AVANT	1	1				
18	63P–42678–00	.GRAPHIC, REAR .ADHESIF, ARRIERE	1	1				
19	63P–W0070–00	.GRAPHIC SET .JEU DIEMBLEMES	1	1				
20	63P–42681–00	.MARK, COWLING .ADHESIF, CAPOT	1	1				
21	63P–42682–00	.MARK, COWLING .ADHESIF, CAPOT	1	1				
22	67F–13448–00	.CAP .CAPUCHON	4	4				
23	92990–06100	.WASHER, SPRING .RONDELLE, GROWER	8	8				
24	95380–06600	.NUT, HEXAGON .ECROU	8	8				
25	90445–11020	.HOSE (L400) .DURITE (L400)	2	2				
26	63P–42662–00	.DAMPER .AMORTISSEUR	4	4				
27	67F–13434–10	LABEL, CAUTION ETIQUETTE, ATTENTION	1	1				

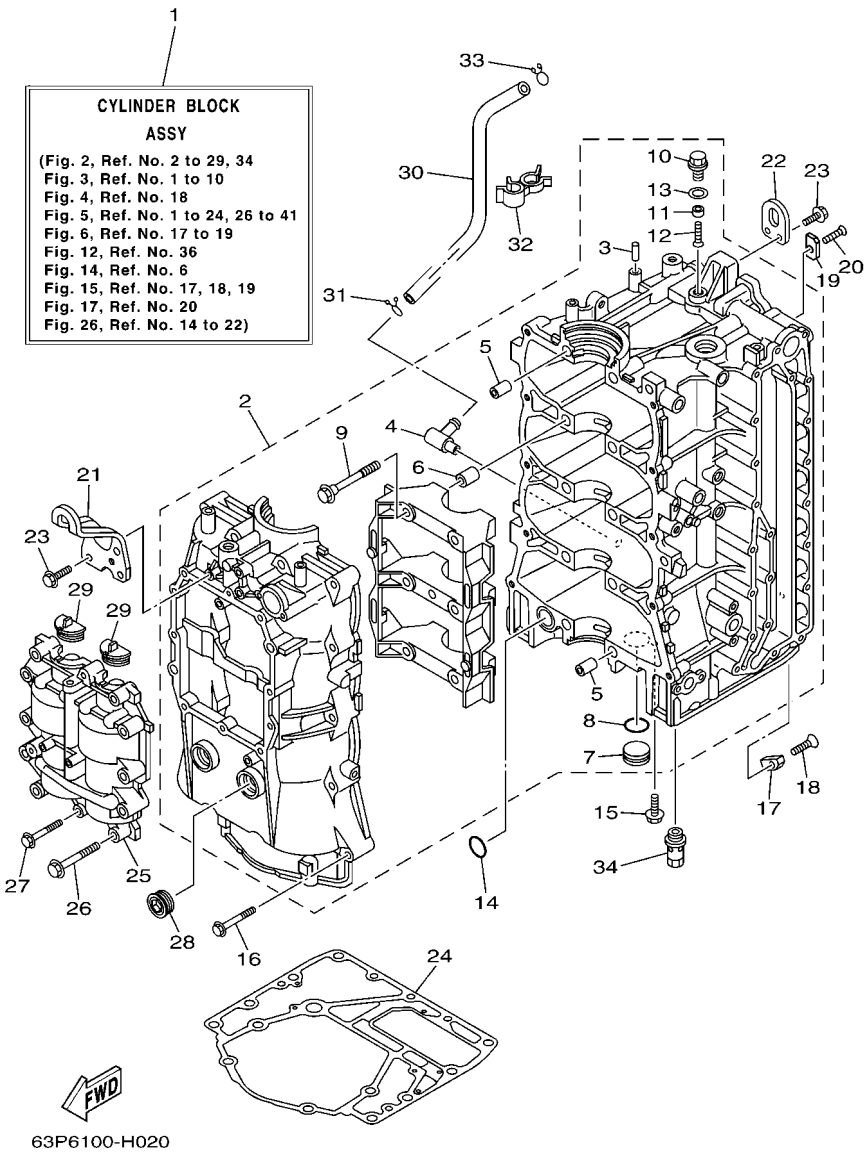

FIG. 2 CYLINDER & CRANKCASE 1 — CYLINDRE & CARTER 1

REF. NO.	PART NO. N° PIECES	DESCRIPTION DESCRIPTION	63P6	64P6				REMARKS REMARQUES
1	63P–W009B–05–9S	CYLINDER BLOCK ASSY CYLINDRE GROUPE (ENS.)	1	1				
2	63P–W1510–03–9S	CRANKCASE ASSY CARTER DE MOTEUR COMPLET	1	1				
3	93606–12019	.PIN, DOWEL .GOUPILLE	1	1				
4	63P–11372–00	.NIPPLE, HOSE .RACCORD, TUYAU	1	1				
5	91814–18001	.PIN, DOWEL .GOUJON, D'ASSEMBLAGE	4	4				
6	91814–18001	.PIN, DOWEL .GOUJON, D'ASSEMBLAGE	6	6				
7	90338–25004	.PLUG .PLOT	1	1				
8	93210–25647	.O-RING .JOINT TORIQUE	1	1				
9	90105–10071	.BOLT, FLANGE .BOULON	10	10				
10	63P–11197–00	.PLUG, BLIND .PLOT, BORGNE	1	1				
11	63P–11325–21	.ANODE .ANODE	1	1				
12	98780–05016	.SCREW, FLAT HEAD .VIS A TETE FRAISEE	1	1				
13	90430–14115	.GASKET .JOINT	1	1				
14	93210–25552	O-RING JOINT TORIQUE	1	1				
15	90119–06M81	BOLT, WITH WASHER BOULON, AVEC RONDELLE	1	1				
16	90119–08M66	BOLT, WITH WASHER BOULON, AVEC RONDELLE	10	10				
17	63P–11325–01	ANODE ANODE	1	1				
18	90151–06M02	SCREW, COUNTERSUNK VIS, TETE NOYEE	1	1				
19	63P–11325–11	ANODE ANODE	4	4				
20	90151–06M02	SCREW, COUNTERSUNK VIS, TETE NOYEE	4	4				
21	63P–11119–00	HANGER, ENGINE ANNEAU, LEVAGE	1	1				
22	68F–11119–00	HANGER, ENGINE ANNEAU, LEVAGE	1	1				
23	90119–06MA2	BOLT, WITH WASHER BOULON, AVEC RONDELLE	5	5				
24	63P–11351–00	GASKET, CYLINDER JOINT, D'EMBASE	1	1				
25	63P–11500–02	BALANCER ASSY ARBRE D'EQUILIBRAGE COMPLET	1	1				
26	90119–08M66	BOLT, WITH WASHER BOULON, AVEC RONDELLE	10	10				
27	90119–06MA6	BOLT, WITH WASHER BOULON, AVEC RONDELLE	2	2				

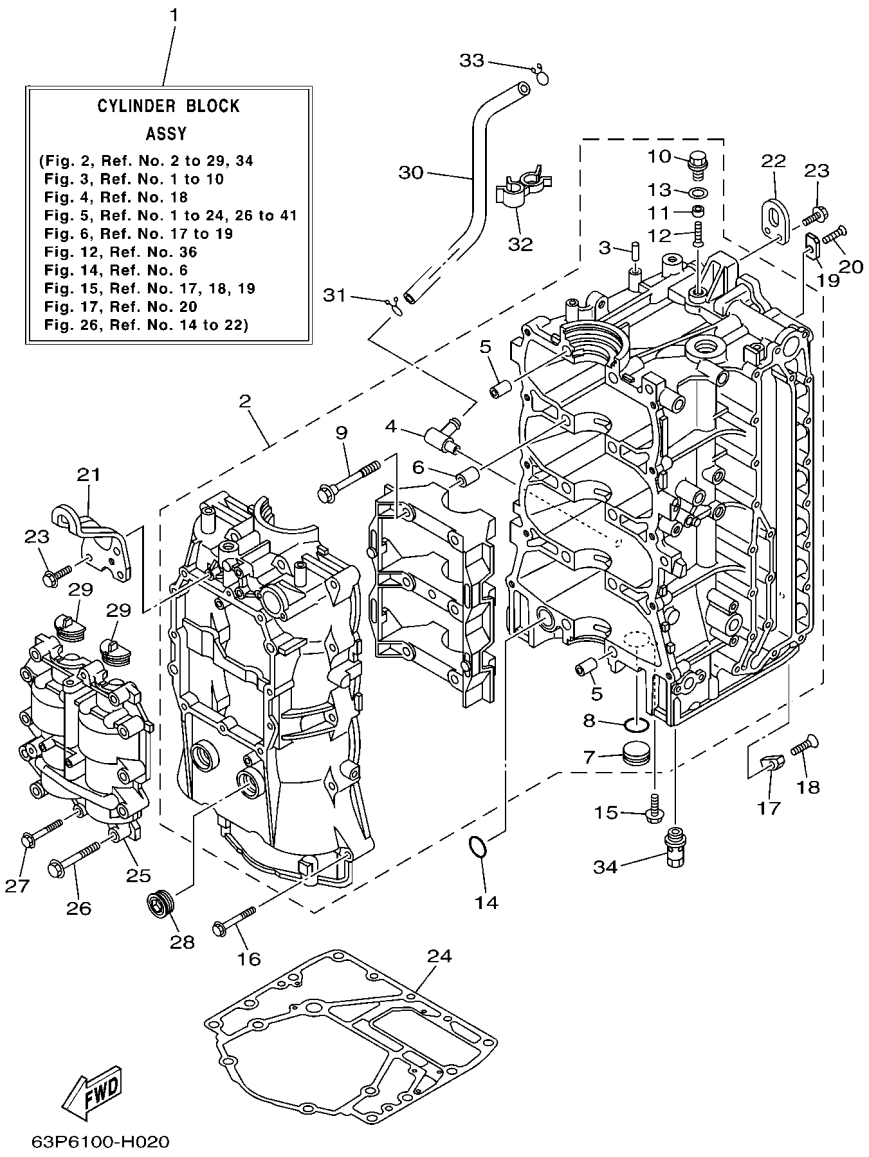

FIG. 2 CYLINDER & CRANKCASE 1 — CYLINDRE & CARTER 1

REF. NO.	PART NO. N° PIECES	DESCRIPTION DESCRIPTION	63P6	64P6				REMARKS REMARQUES
28	90340–27129	PLUG, STRAIGHT SCREW PLOT, FILETE DROIT	2	2				
29	63P–11512–00	SEAL, CRANK COVER JOINT, COUV DE VILEBREQUIN	2	2				
30	63P–11377–00	HOSE DURITE	1	1				
31	90467–15M14	CLIP JONC	1	1				
32	90464–16013	CLAMP BRIDE	1	1				
33	90467–15M14	CLIP JONC	1	1				
34	63P–13490–00	RELIEF VALVE ASSY SOUPAPE DE SECURITE COMPLET	1	1				

FIG. 3 CRANKSHAFT & PISTON — VILEBREQUIN & PISTON

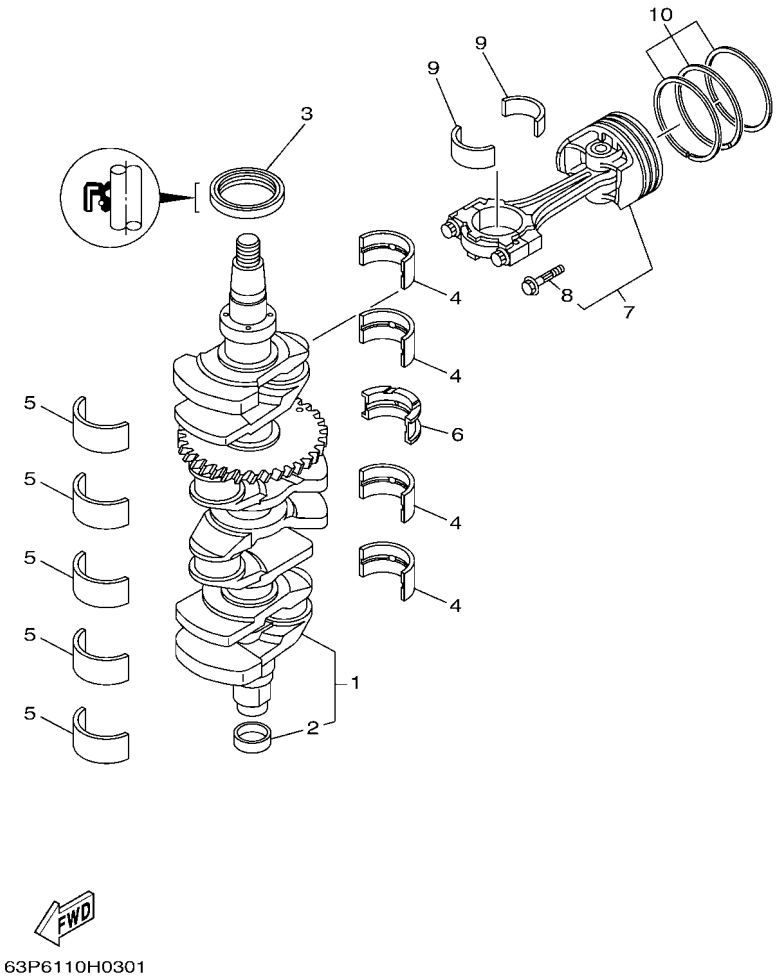

REF. NO.	PART NO. N° PIECES	DESCRIPTION DESCRIPTION	63P6	64P6				REMARKS REMARQUES
1	63P–11410–02	CRANKSHAFT VILEBREQUIN COMPLET	1	1				
2	69J–11478–00	.COLLAR .COLLERETTE	1	1				
3	93102–60004	OIL SEAL JOINT SPY	1	1				
4	63P–11416–31	PLANE BEARING, CRANKSHAFT 1 COUSSINET DE VILEBREQUIN 1	4	4				UR GREEN UR GREEN
	63P–11416–41	PLANE BEARING, CRANKSHAFT 1 COUSSINET DE VILEBREQUIN 1	4	4				UR RED UR RED
	63P–11416–51	PLANE BEARING, CRANKSHAFT 1 COUSSINET DE VILEBREQUIN 1	4	4				UR YELLOW UR YELLOW
5	63P–11417–41	PLANE BEARING, CRANKSHAFT 2 COUSSINET DE VILEBREQUIN 2	5	5				UR BROWN UR BROWN
	63P–11417–51	PLANE BEARING, CRANKSHAFT 2 COUSSINET DE VILEBREQUIN 2	5	5				UR GREEN UR GREEN
	63P–11417–61	PLANE BEARING, CRANKSHAFT 2 COUSSINET DE VILEBREQUIN 2	5	5				UR RED UR RED
	63P–11417–71	PLANE BEARING, CRANKSHAFT 2 COUSSINET DE VILEBREQUIN 2	5	5				UR YELLOW UR YELLOW
	63P–11417–81	PLANE BEARING, CRANKSHAFT 2 COUSSINET DE VILEBREQUIN 2	5	5				UR BLUE UR BLUE
6	63P–11426–31	BEARING, THRUST 1 ROULEMENT DE BUTEE 1	1	1				UR GREEN UR GREEN
	63P–11426–41	BEARING, THRUST 1 ROULEMENT DE BUTEE 1	1	1				UR RED UR RED
	63P–11426–51	BEARING, THRUST 1 ROULEMENT DE BUTEE 1	1	1				UR YELLOW UR YELLOW
7	63P–W1164–01	PISTON/CONROD ASSY(STD) PISTON/BIELLE COMPLETTE(STD)	4	4				
	63P–W1164–10	PISTON/CON-ROD ASSY(0.25MM OS) PISTON/BIELLE COMPLETTE:0.25MM	4	4				AP AP
8	63P–11654–01	.BOLT, CONNECTING ROD .BOULON, BIELLE	2	2				
9	63P–11656–01	PLANE BEARING, CONNECTING ROD ROULEMENT DE BIELLE	8	8				UR GREEN UR GREEN
	63P–11656–11	PLANE BEARING, CONNECTING ROD ROULEMENT DE BIELLE	8	8				UR BLUE UR BLUE
	63P–11656–21	PLANE BEARING, CONNECTING ROD ROULEMENT DE BIELLE	8	8				UR RED UR RED
10	63P–11603–01	PISTON RING SET (STD) JEU DE SEGMENTS (STD)	4	4				
	63P–11604–00	PISTON RING SET (0.25MM O/S) JEU DE SEGMENTS (0.25MM O/S)	4	4				AP AP

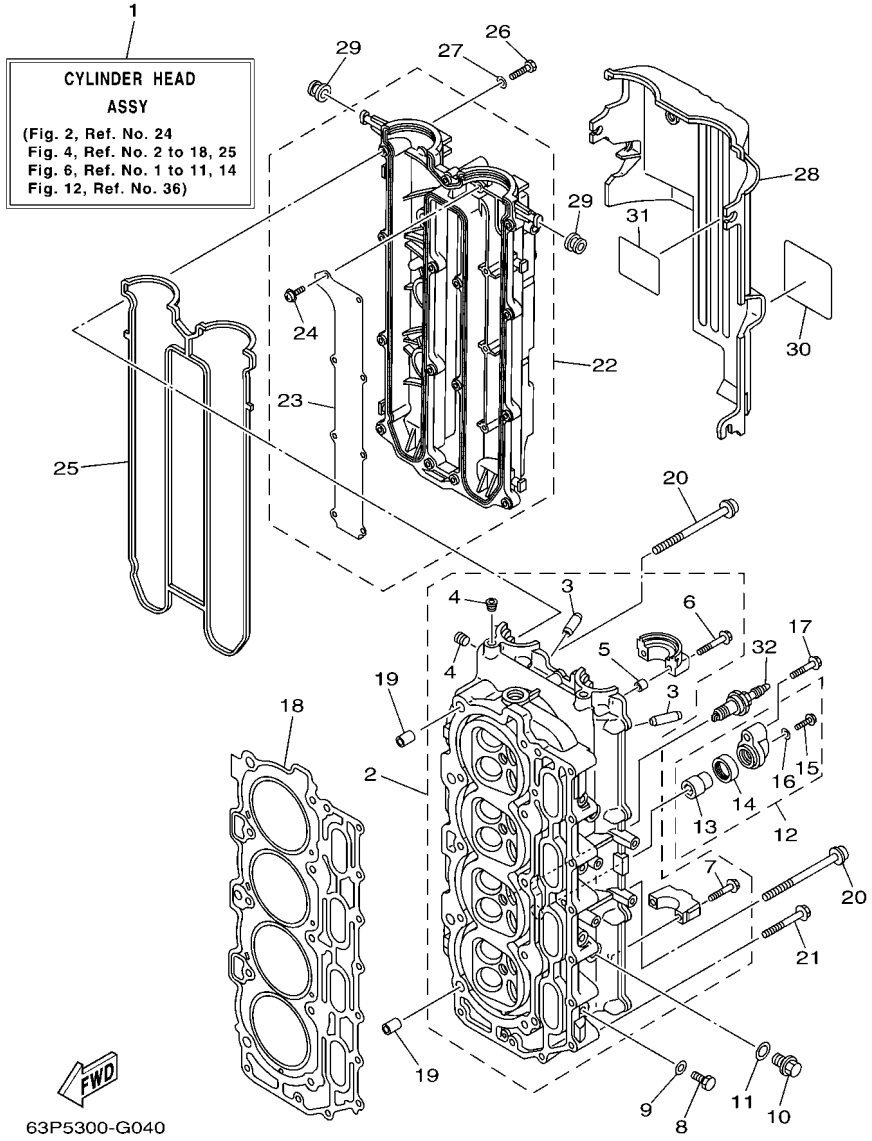

FIG. 4 CYLINDER & CRANKCASE 2 — CYLINDRE & CARTER 2

REF. NO.	PART NO. N° PIECES	DESCRIPTION DESCRIPTION	63P6	64P6				REMARKS REMARQUES
1	63P–W009A–02–9S	CYLINDER HEAD ASSY CULASSE (ENS.)	1	1				
2	63P–11110–00–9S	CYLINDER HEAD ASSY JEU DE CULASSE	1	1				
3	69J–11133–10	.GUIDE, VALVE 1 .GUIDE, SOUPAPE 1	16	16				
4	90344–51019	.PLUG, TAPER SCREW .PLOT, FILETE CONIQUE	3	3				
5	91809–08006	.PIN, DOWEL .GOUJON, D'ASSEMBLAGE	4	4				
6	90119–07235	.BOLT/WASHER-CAM CAPS .BOULON, AVEC RONDELLE	4	4				
7	90119–07234	.BOLT, WITH WASHER .BOULON, AVEC RONDELLE	16	16				
8	97095–08014	BOLT BOULON	4	4				
9	90430–08143	GASKET JOINT	4	4				
10	90340–14M06	PLUG, STRAIGHT SCREW PLOT, FILETE DROIT	2	2				
11	90430–14115	GASKET JOINT	2	2				
12	69J–11301–10	ANODE COVER ASSY COUVERCLE ANODE (ENS.)	2	2				
13	68V–11325–02	.ANODE .ANODE	1	1				
14	67F–11328–00	.GROMMET, ANODE .PASSE-FIL	1	1				
15	90105–06M07	.BOLT, FLANGE .BOULON	1	1				
16	90430–06M03	.GASKET .JOINT	1	1				
17	97575–08540	BOLT, WITH WASHER VIS HEXAGONAL AVC RONDELLE	2	2				
18	63P–11181–00	GASKET, CYLINDER HEAD 1 JOINT, DE CULASSE 1	1	1				
19	90387–10M08	COLLAR COLLERETTE	2	2				
20	90155–10001	SCREW, FLAT FILLISTER VIS, TETE OVALE PLATE	10	10				
21	90119–08M91	BOLT, WITH WASHER BOULON, AVEC RONDELLE	10	10				
22	63P–11191–00–9S	COVER, CYLINDER HEAD 1 COUVERCLE, CULASSE 1	1	1				
23	63P–11135–00	.PLATE, BREATHER 3 .PLAQUE, RENIFLARD 3	1	1				
24	97607–04208	.SCREW,WITH WASHER .VIS HEXAGONAL	8	8				
25	63P–11193–00	GASKET, HEAD COVER 1 JOINT, COUVERCLE DE CULASSE 1	1	1				
26	97095–06030	BOLT BOULON	13	13				
27	92995–06600	WASHER RONDELLE	13	13				

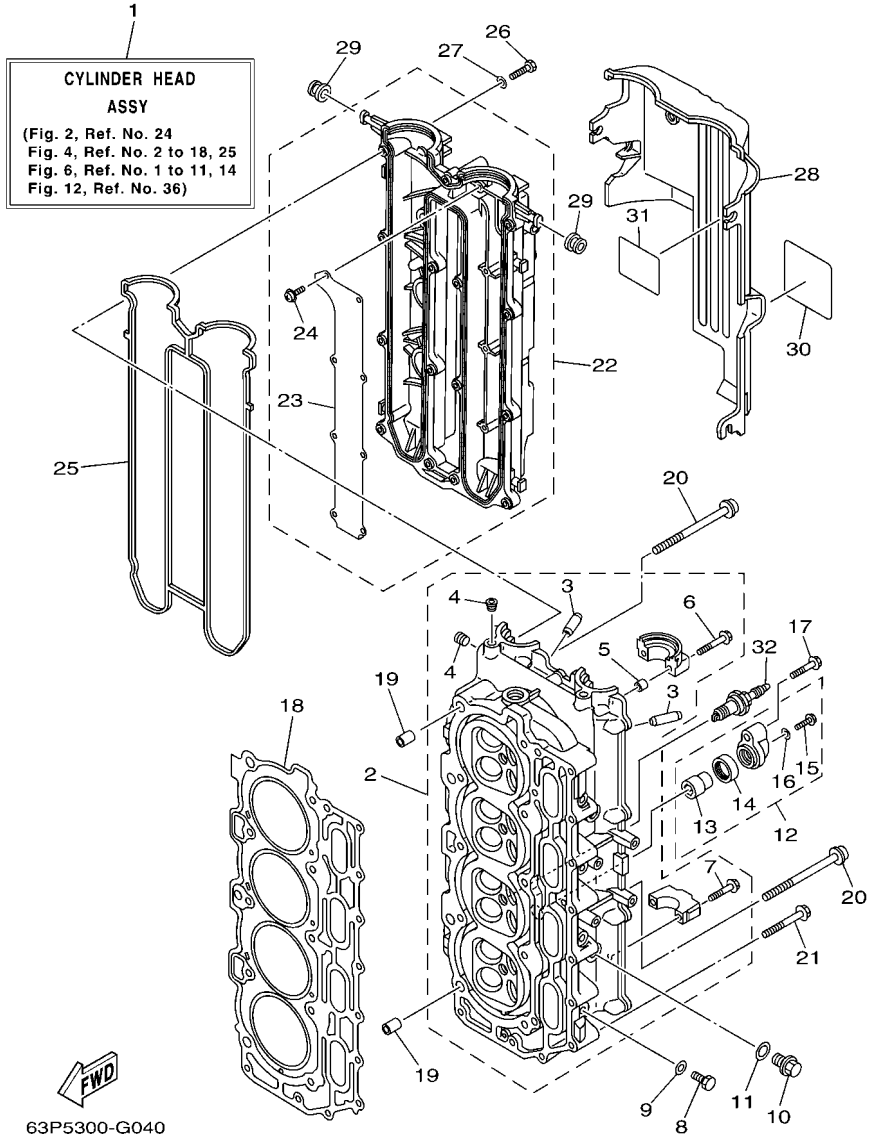

FIG. 4 CYLINDER & CRANKCASE 2 — CYLINDRE & CARTER 2

REF. NO.	PART NO. N° PIECES	DESCRIPTION DESCRIPTION	63P6	64P6				REMARKS REMARQUES
28	63P–11192–01	COVER, CYLINDER HEAD 2 COUVERCLE, CULASSE 2	1	1				
29	90480–12072	GROMMET PASSE-FIL	5	5				
30	63P–83626–00	MARK 6 MARK 6	1	1				
31	67F–12138–60	MARK, CAUTION MAKER	1	1				
32	94702–00391	PLUG, SPARK (NGK LFR5A-11) BOUGIE D'ALLUMAGE(NGK LFR5A-11	4	4				

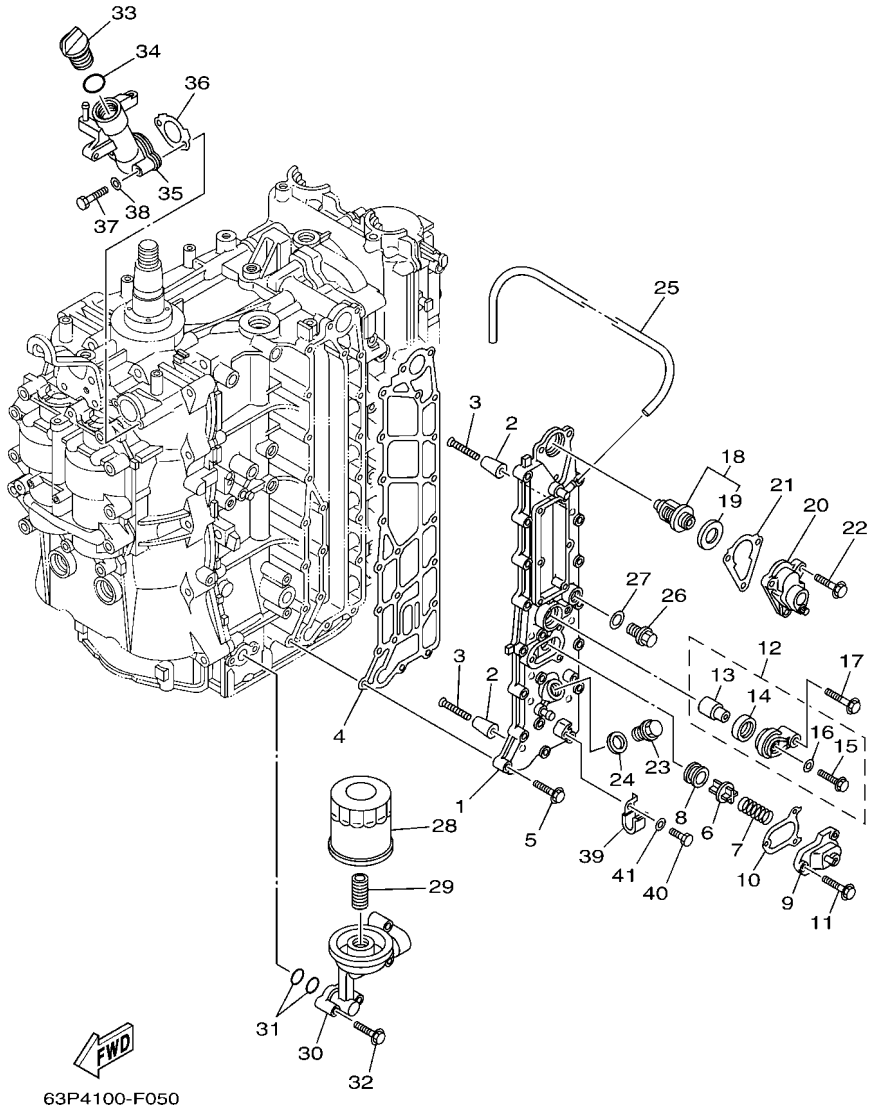

FIG. 5 CYLINDER & CRANKCASE 3 — CYLINDRE & CARTER 3

REF. NO.	PART NO. N° PIECES	DESCRIPTION DESCRIPTION	63P6	64P6				REMARKS REMARQUES
1	63P–41113–03–9S	OUTER COVER, EXHAUST COUVERCLE, ECHAPPEMENT	1	1				
2	68T–11325–00	ANODE ANODE	8	8				
3	90151–05M05	SCREW, COUNTERSUNK VIS, TETE NOYEE	8	8				
4	63P–41114–A1	GASKET, EXHAUST OUTER COVER JOINT, COUVERCLE D'ECHAPPEMENT	1	1				
5	90119–06MA4	BOLT, WITH WASHER BOULON, AVEC RONDELLE	19	19				
6	6G5–12416–00	VALVE, PRESSURE CONTROL SOUPAPE DE CONTROLEUR PRESS	1	1				
7	90501–16M11	SPRING, COMPRESSION RESSORT, COMPRESSION	1	1				
8	90480–20M05	GROMMET PASSE-FIL	1	1				
9	67F–1246A–01–9S	COVER 1 COUVERCLE 1	1	1				
10	67F–12435–A0	GASKET JOINT	1	1				
11	90119–06MA2	BOLT, WITH WASHER BOULON, AVEC RONDELLE	3	3				
12	69J–11301–10	ANODE COVER ASSY COUVERCLE ANODE (ENS.)	1	1				
13	68V–11325–02	.ANODE .ANODE	1	1				
14	67F–11328–00	.GROMMET, ANODE .PASSE-FIL	1	1				
15	90105–06M07	.BOLT, FLANGE .BOULON	1	1				
16	90430–06M03	.GASKET .JOINT	1	1				
17	97575–08540	BOLT, WITH WASHER VIS HEXAGONAL AVC RONDELLE	1	1				
18	67F–12411–01	THERMOSTAT THERMOSTAT	1	1				
19	67F–12412–00	.SEAL, THERMOSTAT .JOINT, THERMOSTAT	1	1				
20	63P–1240H–01–9S	COVER ASSEMBLY BOITIER DISTRIBUTEUR COMPLET	1	1				
21	63P–12414–00	GASKET, COVER JOINT, COUVERCLE	1	1				
22	90119–06MA4	BOLT, WITH WASHER BOULON, AVEC RONDELLE	3	3				
23	90340–18M09	PLUG, STRAIGHT SCREW PLOT, FILETE DROIT	1	1				
24	90430–18130	GASKET JOINT	1	1				
25	90445–10027	HOSE (L670) DURITE (L670)	1	1				
26	90340–14M06	PLUG, STRAIGHT SCREW PLOT, FILETE DROIT	1	1				
27	90430–14115	GASKET JOINT	1	1				

FIG. 5 CYLINDER & CRANKCASE 3 — CYLINDRE & CARTER 3

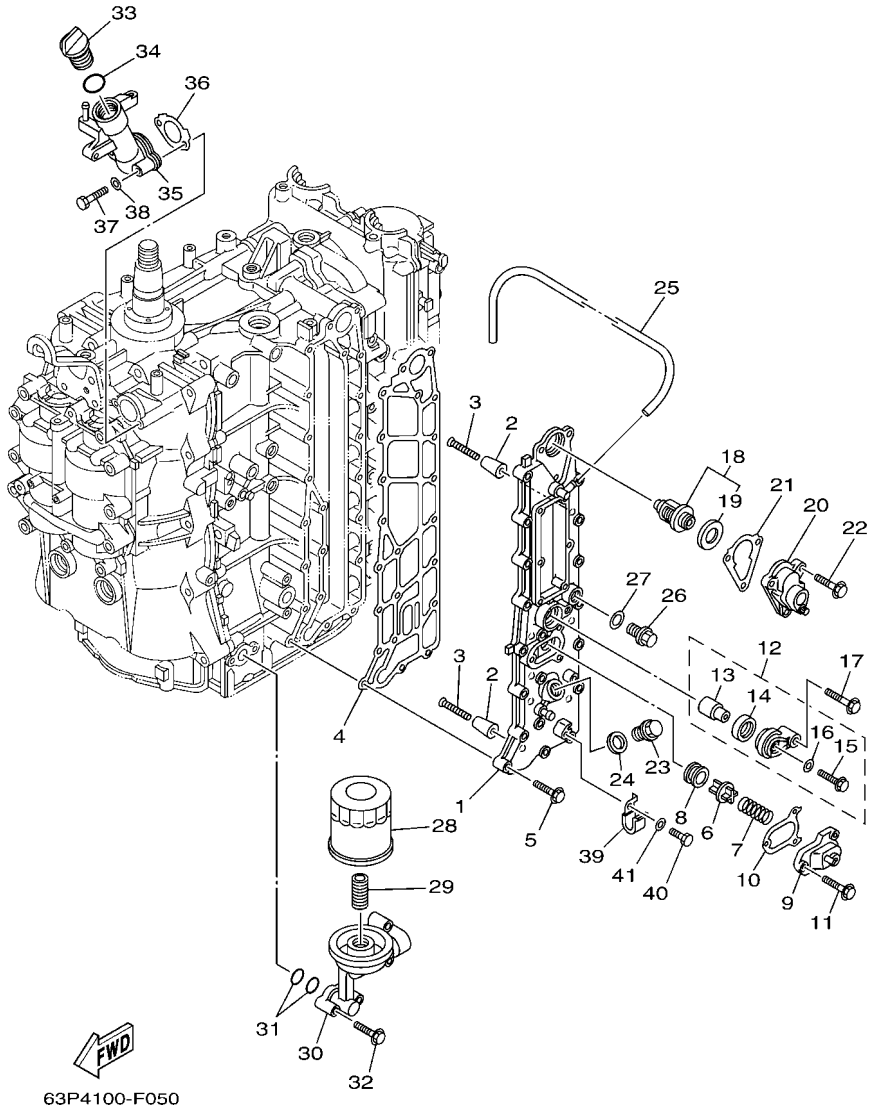

REF. NO.	PART NO. N° PIECES	DESCRIPTION DESCRIPTION	63P6	64P6				REMARKS REMARQUES
28	69J–13440–01	ELEMENT ASSY, OIL CLEANER ELEMENT, FILTRE A HUILE	1	1				
29	69J–12858–00	BOLT, UNION BOULON, RACCORD	1	1				
30	63P–13446–00–9S	CONNECTOR CONNECTEUR	1	1				
31	93210–19MJ1	O-RING JOINT TORIQUE	2	2				
32	97575–06540	BOLT, WITH WASHER VIS HEXAGONAL AVC RONDELLE	4	4				
33	6G8–15363–00	PLUG, OIL PLOT, HUILE	1	1				
34	93210–24M79	O-RING JOINT TORIQUE	1	1				
35	63P–15319–00–9S	JOINT JOINT	1	1				
36	63P–15364–A0	GASKET, OIL PLUG JOINT, PLOT D'HUILE	1	1				
37	97095–06045	BOLT BOULON	2	2				
38	92995–06600	WASHER RONDELLE	2	2				
39	90462–06013	CLAMP BRIDE	1	1				
40	97095–06012	BOLT BOULON	1	1				
41	92995–06600	WASHER RONDELLE	1	1				

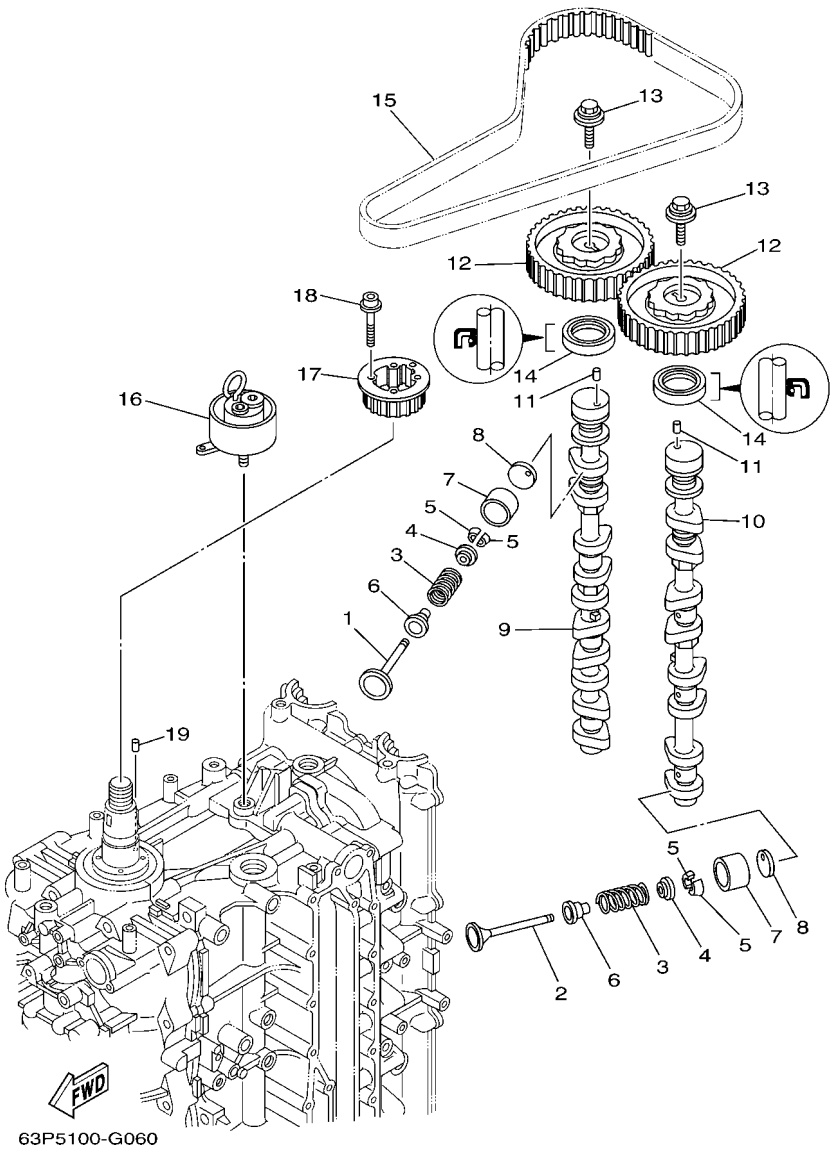

FIG. 6 VALVE — SOUPAPE

REF. NO.	PART NO. N° PIECES	DESCRIPTION DESCRIPTION	63P6	64P6				REMARKS REMARQUES
1	69J–12111–00	VALVE, INTAKE SOUPAPE, ADMISSION	8	8				
2	69J–12121–00	VALVE, EXHAUST SOUPAPE, ECHAPPEMENT	8	8				
3	69J–12113–01	SPRING, VALVE INNER RESSORT DE SOUPAPE, INTERNE	16	16				
4	69J–12117–01	RETAINER, VALVE SPRING BUTEE DE RESSORT DE SOUPAPE	16	16				
5	69J–12118–00	COTTER, VALVE FRAISE, SOUPAPE	32	32				
6	69J–12119–00	SEAL, VALVE STEM JOINT, QUEUE DE SOUPAPE	16	16				
7	69J–12153–00	LIFTER, VALVE LEVE-SOUPAPE	16	16				
8	6S1–12168–00	PAD, ADJUSTING (2.320) PASTILLE, REGLAGE (2.320)	16	16				UR UR
	6S1–12168–10	PAD, ADJUSTING (2.340) PASTILLE, REGLAGE (2.340)	16	16				UR UR
	6S1–12168–20	PAD, ADJUSTING (2.360) PASTILLE, REGLAGE (2.360)	16	16				UR UR
	6S1–12168–30	PAD, ADJUSTING (2.380) PASTILLE, REGLAGE (2.380)	16	16				UR UR
	6S1–12168–40	PAD, ADJUSTING (2.400) PASTILLE, REGLAGE (2.400)	16	16				UR UR
	6S1–12168–50	PAD, ADJUSTING (2.420) PASTILLE, REGLAGE (2.420)	16	16				UR UR
	6S1–12168–60	PAD, ADJUSTING (2.440) PASTILLE, REGLAGE (2.440)	16	16				UR UR
	6S1–12168–70	PAD, ADJUSTING (2.460) PASTILLE, REGLAGE (2.460)	16	16				UR UR
	6S1–12168–80	PAD, ADJUSTING (2.480) PASTILLE, REGLAGE (2.480)	16	16				UR UR
	6S1–12168–90	PAD, ADJUSTING (2.500) PASTILLE, REGLAGE (2.500)	16	16				UR UR
	6S1–12168–A0	PAD, ADJUSTING (2.520) PASTILLE, REGLAGE (2.520)	16	16				UR UR
	6S1–12168–B0	PAD, ADJUSTING (2.540) PASTILLE, REGLAGE (2.540)	16	16				UR UR
	6S1–12168–C0	PAD, ADJUSTING (2.560) PASTILLE, REGLAGE (2.560)	16	16				UR UR
	6S1–12168–D0	PAD, ADJUSTING (2.580) PASTILLE, REGLAGE (2.580)	16	16				UR UR
	6S1–12168–E0	PAD, ADJUSTING (2.600) PASTILLE, REGLAGE (2.600)	16	16				UR UR
	6S1–12168–F0	PAD, ADJUSTING (2.620) PASTILLE, REGLAGE (2.620)	16	16				UR UR
	6S1–12168–G0	PAD, ADJUSTING (2.640) PASTILLE, REGLAGE (2.640)	16	16				UR UR
	6S1–12168–H0	PAD, ADJUSTING (2.660) PASTILLE, REGLAGE (2.660)	16	16				UR UR
	6S1–12168–J0	PAD, ADJUSTING (2.680) PASTILLE, REGLAGE (2.680)	16	16				UR UR
	6S1–12168–K0	PAD, ADJUSTING (2.700) PASTILLE, REGLAGE (2.700)	16	16				UR UR

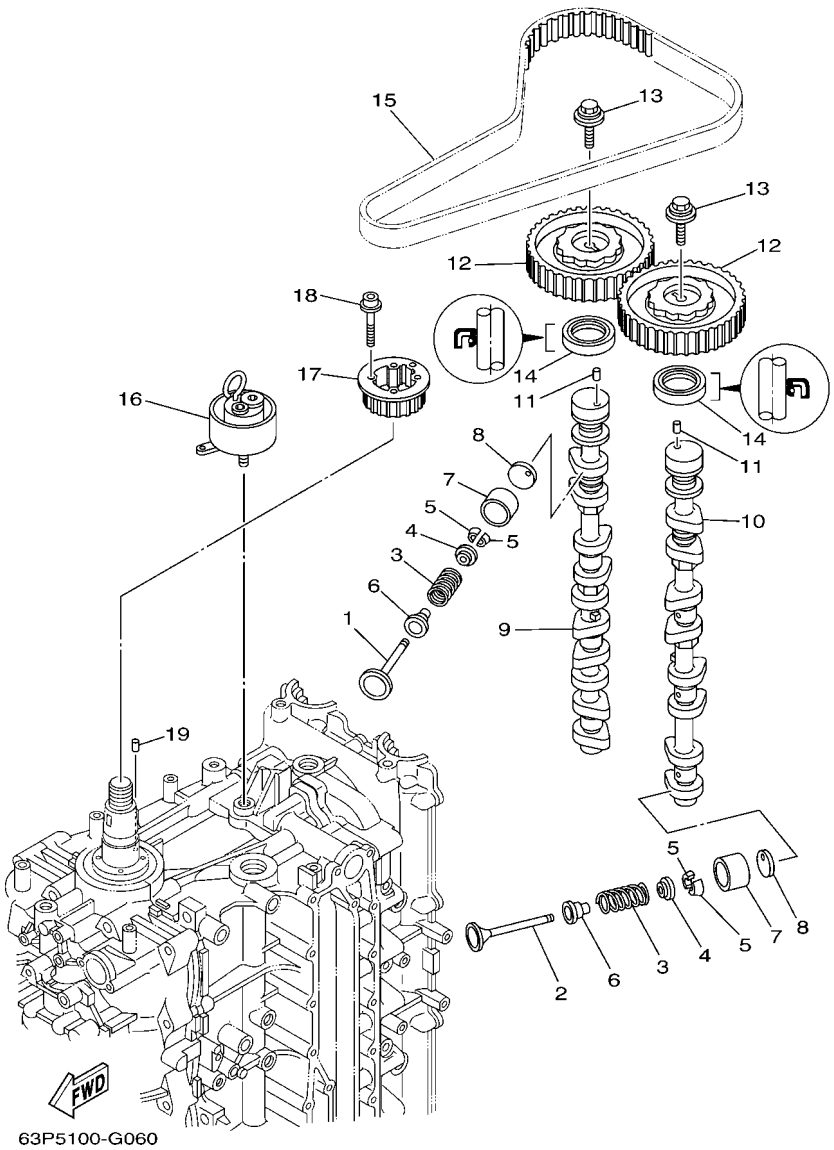

FIG. 6 VALVE — SOUPAPE

REF. NO.	PART NO. N° PIECES	DESCRIPTION DESCRIPTION	63P6	64P6				REMARKS REMARQUES
8	6S1–12168–L0	PAD, ADJUSTING (2.720) PASTILLE, REGLAGE (2.720)	16	16				UR UR
	6S1–12168–M0	PAD, ADJUSTING (2.740) PASTILLE, REGLAGE (2.740)	16	16				UR UR
	6S1–12168–N0	PAD, ADJUSTING (2.760) PASTILLE, REGLAGE (2.760)	16	16				UR UR
	6S1–12168–P0	PAD, ADJUSTING (2.780) PASTILLE, REGLAGE (2.780)	16	16				UR UR
	6S1–12168–R0	PAD, ADJUSTING (2.800) PASTILLE, REGLAGE (2.800)	16	16				UR UR
	6S1–12168–S0	PAD, ADJUSTING (2.820) PASTILLE, REGLAGE (2.820)	16	16				UR UR
	6S1–12168–T0	PAD, ADJUSTING (2.840) PASTILLE, REGLAGE (2.840)	16	16				UR UR
	6S1–12168–U0	PAD, ADJUSTING (2.860) PASTILLE, REGLAGE (2.860)	16	16				UR UR
	6S1–12168–V0	PAD, ADJUSTING (2.880) PASTILLE, REGLAGE (2.880)	16	16				UR UR
	6S1–12168–W0	PAD, ADJUSTING (2.900) PASTILLE, REGLAGE (2.900)	16	16				UR UR
	6S1–12168–X0	PAD, ADJUSTING (2.920) PASTILLE, REGLAGE (2.920)	16	16				UR UR
	6S1–12168–Y0	PAD, ADJUSTING (2.940) PASTILLE, REGLAGE (2.940)	16	16				UR UR
	6S1–12169–00	PAD, ADJUSTING (2.960) PASTILLE, REGLAGE (2.960)	16	16				UR UR
9	63P–12171–00	CAMSHAFT 1 ARBRE A CAMES 1	1	1				
10	63P–12181–00	CAMSHAFT 2 ARBRE A CAMES 2	1	1				
11	93605–10108	PIN, DOWEL AXE	2	2				
12	63P–11537–00	GEAR, DRIVEN PIGNON SECONDAIRE	2	2				
13	68V–12157–00	BOLT BOULON	2	2				
14	93102–38008	OIL SEAL JOINT SPY	2	2				
15	63P–46241–00	V-BELT COURROIE TRAPEZOIDALE	1	1				
16	63P–11590–01	TENSIONER ASSY TENDEUR (ENS.)	1	1				
17	63P–11536–01	GEAR, DRIVE ENGRENAGE, MENANT	1	1				
18	90110–05020	BOLT, HEXAGON SOCKET HEAD BOULON, TETE HEXAGONALE CREUSE	4	4				
19	93605–17002	PIN, DOWEL AXE	1	1				

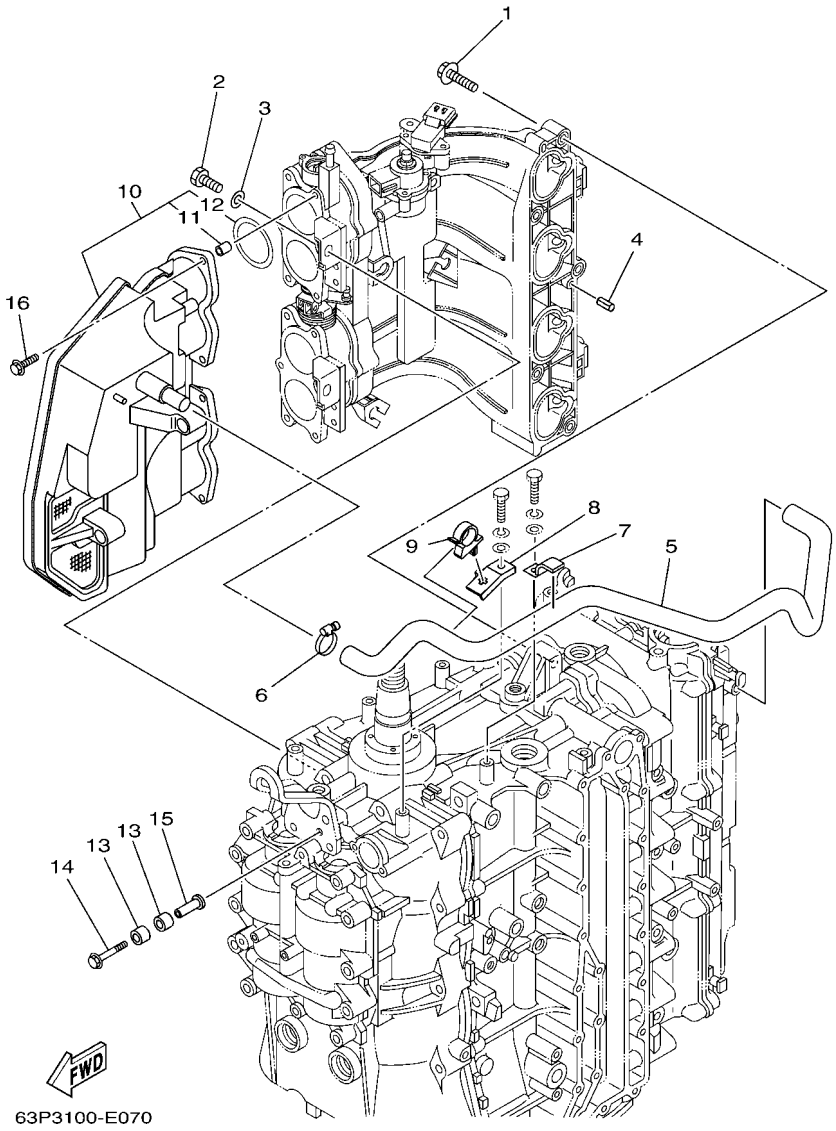

FIG. 7 INTAKE 1 — ADMISSION 1

REF. NO.	PART NO. N° PIECES	DESCRIPTION DESCRIPTION	63P6	64P6				REMARKS REMARQUES
1	97575–08540	BOLT, WITH WASHER VIS HEXAGONAL AVC RONDELLE	5	5				
2	97013–08020	BOLT BOULON	2	2				
3	92903–08600	WASHER, PLATE RONDELLE, PLATE	2	2				
4	91690–50014	PIN, SPRING AGRAFFE	2	2				
5	63P–15373–00	PIPE, BREATHER DURITE DE RENIFLARD	1	1				
6	90450–22M14	HOSE CLAMP ASSY BRIDE, DE DURITE	1	1				
7	90462–10023	CLAMP BRIDE	1	1				
8	63P–15378–00	HOLDER SUPPORT	1	1				
9	90464–20006	CLAMP BRIDE	1	1				
10	63P–14440–00	SILENCER ASSY, INTAKE SIENCIEUX D'ADMISSION	1	1				
11	63P–14449–00	.COLLAR .COLLERETTE	6	6				
12	63P–14457–00	.SEAL .JOINT	4	4				
13	90386–08001	BUSH DOUILLE	4	4				
14	90119–06076	BOLT, WITH WASHER BOULON, AVEC RONDELLE	2	2				
15	90387–06038	COLLAR COLLERETTE	2	2				
16	90119–06M82	BOLT, WITH WASHER BOULON, AVEC RONDELLE	6	6				

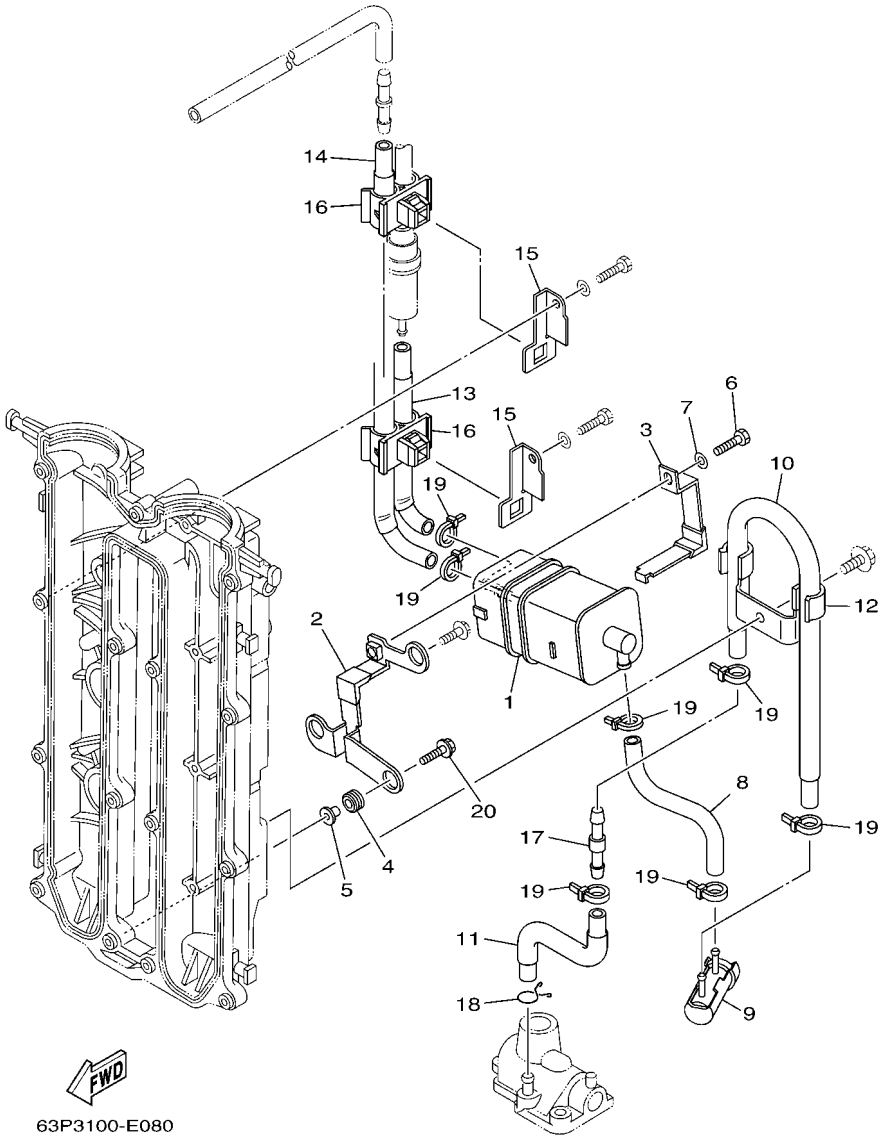

FIG. 8 INTAKE 2 — ADMISSION 2

REF. NO.	PART NO. N° PIECES	DESCRIPTION DESCRIPTION	63P6	64P6				REMARKS REMARQUES
1	6P2–24170–00	CANISTER ASSY BANDE, RASERVOIR A ESSENCE	1	1				
2	63P–2134X–00	BRACKET, CANISTER SUPPORT	1	1				
3	63P–2419A–00	HOLDER SUPPORT	1	1				
4	90480–10M23	GROMMET PASSE-FIL	3	3				
5	90387–06M60	COLLAR COLLERETTE	3	3				
6	97095–06016	BOLT BOULON	1	1				
7	92995–06600	WASHER RONDELLE	1	1				
8	64P–24313–00	PIPE 3 DURITE 3	1	1				
9	69J–24502–00	FILTER, FUEL FILTRE	1	1				
10	64P–24312–00	PIPE 2 DURITE 2	1	1				
11	64P–24311–00	PIPE, FUEL 1 DURITE A ESSENCE	1	1				
12	63P–24367–00	CLAMP, FUEL PIPE 2 COLLIER DE DURITE A ESSENCE	1	1				
13	64P–24315–00	PIPE 5 DURITE 5	1	1				
14	64P–24314–00	PIPE 4 DURITE 4	1	1				
15	63P–24364–00	STAY SUPPORT	2	2				
16	90464–11012	CLAMP BRIDE	2	2				
17	6E5–24379–00	PIPE, JOINT 4 DURITE RACCORDEMENT 4	1	1				
18	90467–09M09	CLIP JONC	1	1				
19	90465–11M10	CLAMP BRIDE	7	7				
20	90119–06135	BOLT, WITH WASHER BOULON, AVEC RONDELLE	2	2				

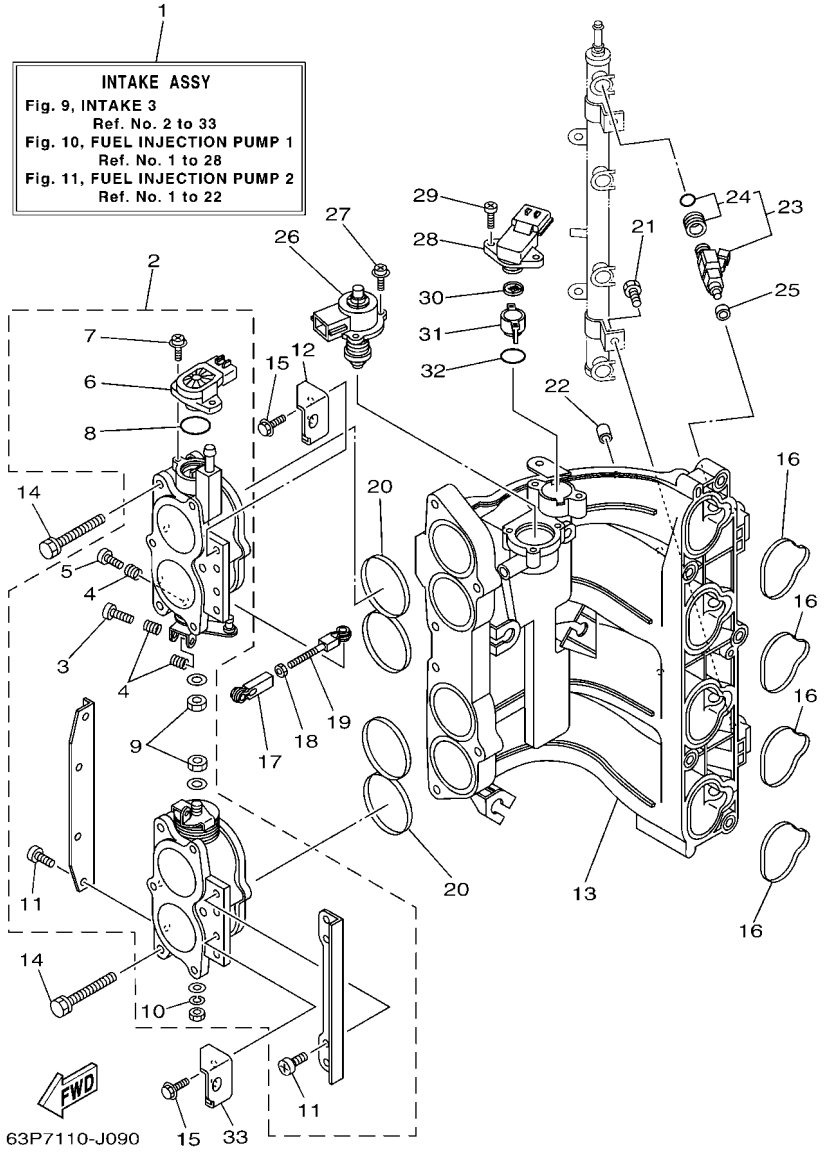

FIG. 9 INTAKE 3 — ADMISSION 3

REF. NO.	PART NO. N° PIECES	DESCRIPTION DESCRIPTION	63P6	64P6				REMARKS REMARQUES
1	63P–14200–21	INTAKE ASSY ADMISSION (ENS.)	1	1				
2	63P–13751–01	BODY, THROTTLE 1 CARTER 1	1	1				
3	69J–14321–00	.SCREW, THROTTLE .VIS, ACCELERATEUR	1	1				
4	68V–14331–00	.SPRING, THROTTLE VALVE .RESSORT, BOISSEAU	3	3				
5	68V–14323–00	.SCREW, AIR ADJUSTING .VIS DE DOSEUR D'AIR	1	1				
6	6S1–85885–00	.THROTTLE SENSOR ASSY .SENSITOMETRE (ENS.)	1	1				
7	68V–81145–01	.SCREW 1 .VIS 1	2	2				
8	68V–8182L–00	.O-RING 1 .JOINT TORIQUE 1	1	1				
9	3CF–14594–00	.NUT .ECROU	2	2				
10	68V–14356–00	.WASHER, SPRING .RONDELLE	1	1				
11	68V–14565–00	.SCREW .VIS	8	8				
12	63P–14291–00	BRACKET 1 SUPPORT 1	1	1				
13	63P–13641–00	MANIFOLD 1 TUBULURE 1	1	1				
14	63P–14496–00	BOLT BOULON	6	6				
15	97595–06516	BOLT, WITH WASHER VIS HEXAGONAL AVC RONDELLE	4	4				
16	63P–13645–00	GASKET, MANIFOLD 1 JOINT, TUBULURE 1	4	4				
17	6H4–41237–00	JOINT, LINK RACCORD	1	1				
18	95380–05700	NUT ECROU	1	1				
19	682–41238–01	JOINT, LINK RACCORD	1	1				
20	63P–13557–00	GASKET JOINT	2	2				
21	63P–14446–00	BOLT BOULON	2	2				
22	63P–13643–00	COVER, MANIFOLD COUVERCLE, TUBULURE	4	4				
23	63P–13761–00	INJECTOR INJECTEUR	4	4				
24	68V–1410B–00	.PACKING KIT .POCHETTE DE JOINTS	1	1				
25	68V–13766–00	RUBBER, INJECTOR RONDELLE CAOUTCHOUC	4	4				
26	63P–1312A–01	VALVE, CONTROL SOUPAPE,CONTROLE	1	1				
27	68V–81146–01	SCREW 2 VIS 2	3	3				

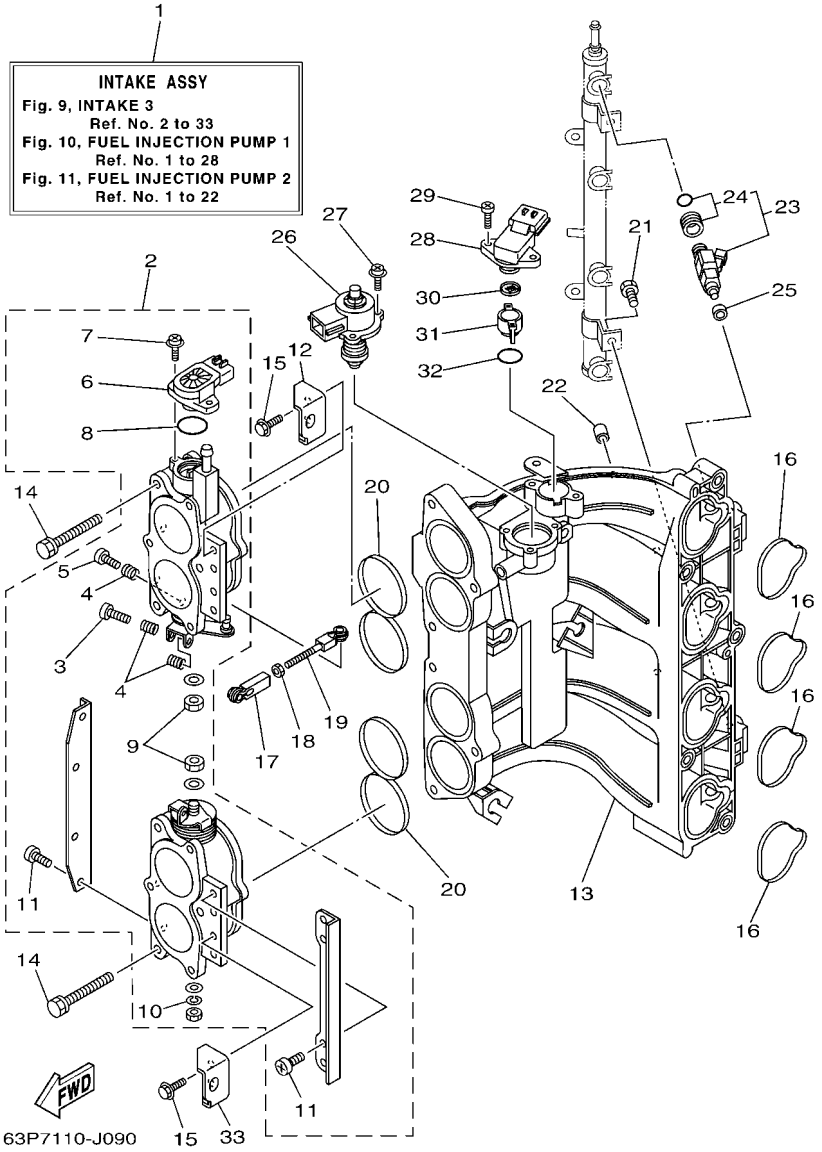

FIG. 9 INTAKE 3 — ADMISSION 3

REF. NO.	PART NO. N° PIECES	DESCRIPTION DESCRIPTION	63P6	64P6				REMARKS REMARQUES
28	63P–82380–00	SENSOR, PRESSURE SONDE DE PRESSION	1	1				
29	68V–81147–00	SCREW 3 VIS 3	2	2				
30	63P–13905–00	FILTER COMP. ENS FILTRE	1	1				
31	63P–13898–00	HOLDER SUPPORT	1	1				
32	63P–13769–00	O-RING JOINT TORIQUE	1	1				
33	63P–14292–00	BRACKET 2 SUPPORT 2	1	1				

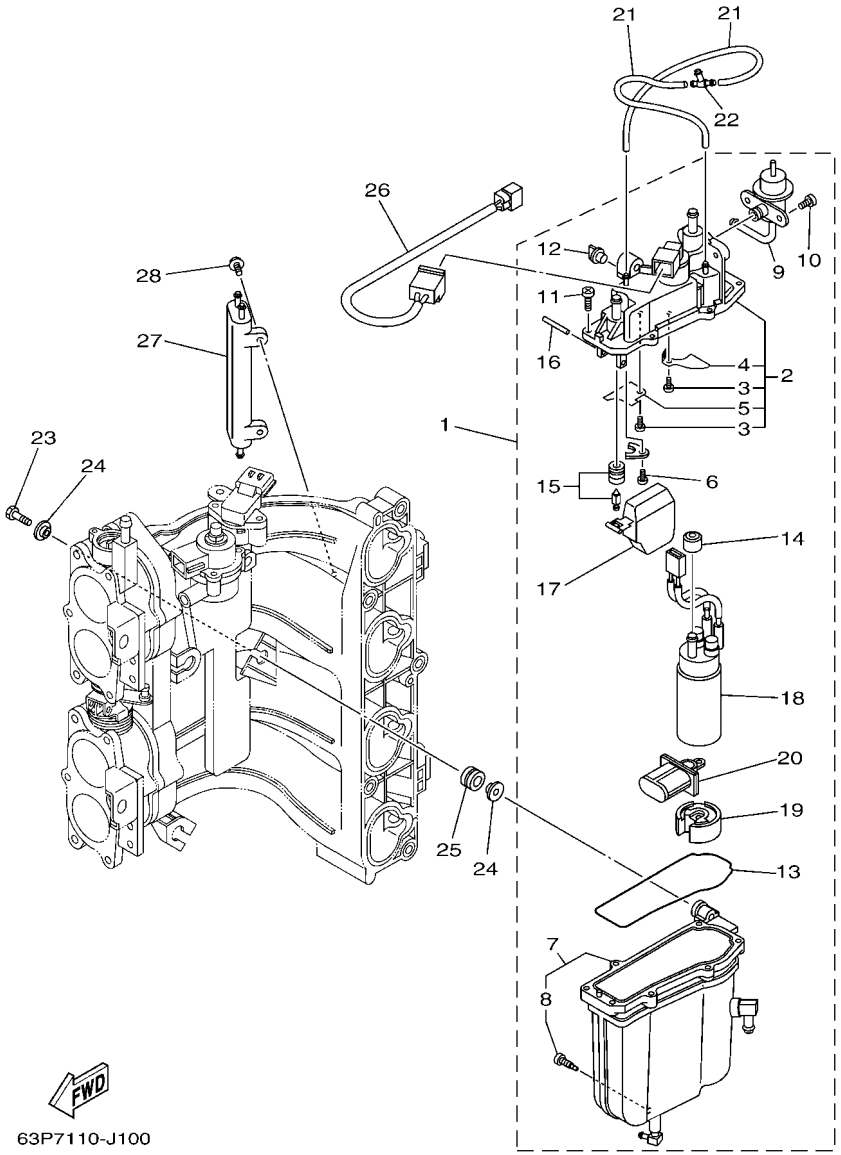

FIG. 10 FUEL INJECTION PUMP 1 — POMPE A INJECTEUR 1

REF. NO.	PART NO. N° PIECES	DESCRIPTION DESCRIPTION	63P6	64P6				REMARKS REMARQUES
1	63P–14180–01	FLOAT CHAMBER ASSY CUVE DE FLOTTEUR	1	1				
2	63P–14182–00	.COVER, FLOAT CHAMBER .COUVERCLE, CUVE DE FLOTTEUR	1	1				
3	4SV–24453–00	.SCREW .VIS	2	2				
4	63P–2411R–00	PLATE 1 PLAQUE 1	1	1				
5	63P–2411T–00	PLATE 2 PLAQUE 2	1	1				
6	4SV–24453–00	.SCREW .VIS	1	1				
7	63P–14181–00	.BODY, FLOAT CHAMBER 1 .CORPS, CUVE DE FLOTTEUR 1	1	1				
8	63P–14191–00	PLUG, DRAIN PLOT, VIDANGE	1	1				
9	63P–13906–00	.REGULATOR, PRESSURE .REGULATEUR DE PRESSION	1	1				
10	63P–14565–00	.SCREW .VIS	2	2				
11	63P–14567–00	.SCREW .VIS	7	7				
12	69J–14225–01	.CAP .COUVERCLE	1	1				
13	63P–14984–00	.GASKET, FLOAT CHAMBER .JOINT, CUVE DE FLOTTEUR	1	1				
14	68V–13781–10	.DAMPER, PUMP .AMORTISSEUR, POMPE	1	1				
15	63P–14546–00	.VALVE, NEEDLE .POINTEAU	1	1				
16	68V–14386–00	.PIN, FLOAT .AXE, FLOTTEUR	1	1				
17	63P–14985–00	.FLOAT .FLOTTEUR	1	1				
18	63P–13907–02	.FUEL PUMP COMP. .POMPE A CARBURANT COMP.	1	1				
19	63P–13784–00	.COVER, PUMP .COUVERCLE, POMPE	1	1				
20	63P–13915–00	.FILTER .FILTRE	1	1				
21	63P–14148–00	PIPE DURITE	2	2				
22	69J–24379–00	PIPE, JOINT 4 DURITE RACCORDEMENT 4	1	1				
23	63P–14777–00	BOLT BOULON	3	3				
24	69J–13716–00	COLLAR COLLERETTE	6	6				
25	6BM–13593–00	DAMPER AMORTISSEUR	3	3				
26	63P–8259L–00	WIRE HARNESS ASSY 1 FAISCEAU DE FILS COMPLET 1	1	1				
27	69J–21841–02	COOLER RADIATEUR	1	1				

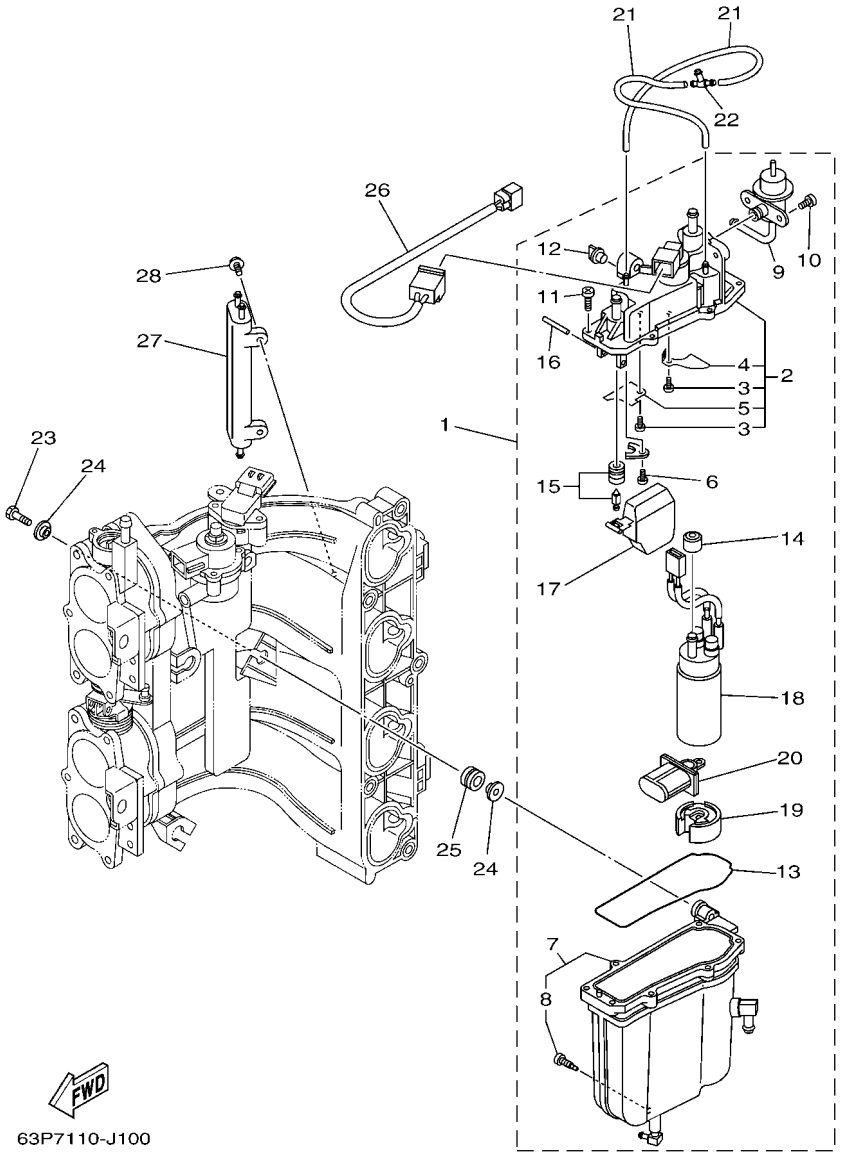

FIG. 10 FUEL INJECTION PUMP 1 — POMPE A INJECTEUR 1

REF. NO.	PART NO. N° PIECES	DESCRIPTION DESCRIPTION	63P6	64P6				REMARKS REMARQUES
28	68V–14446–00	BOLT BOULON	2	2				

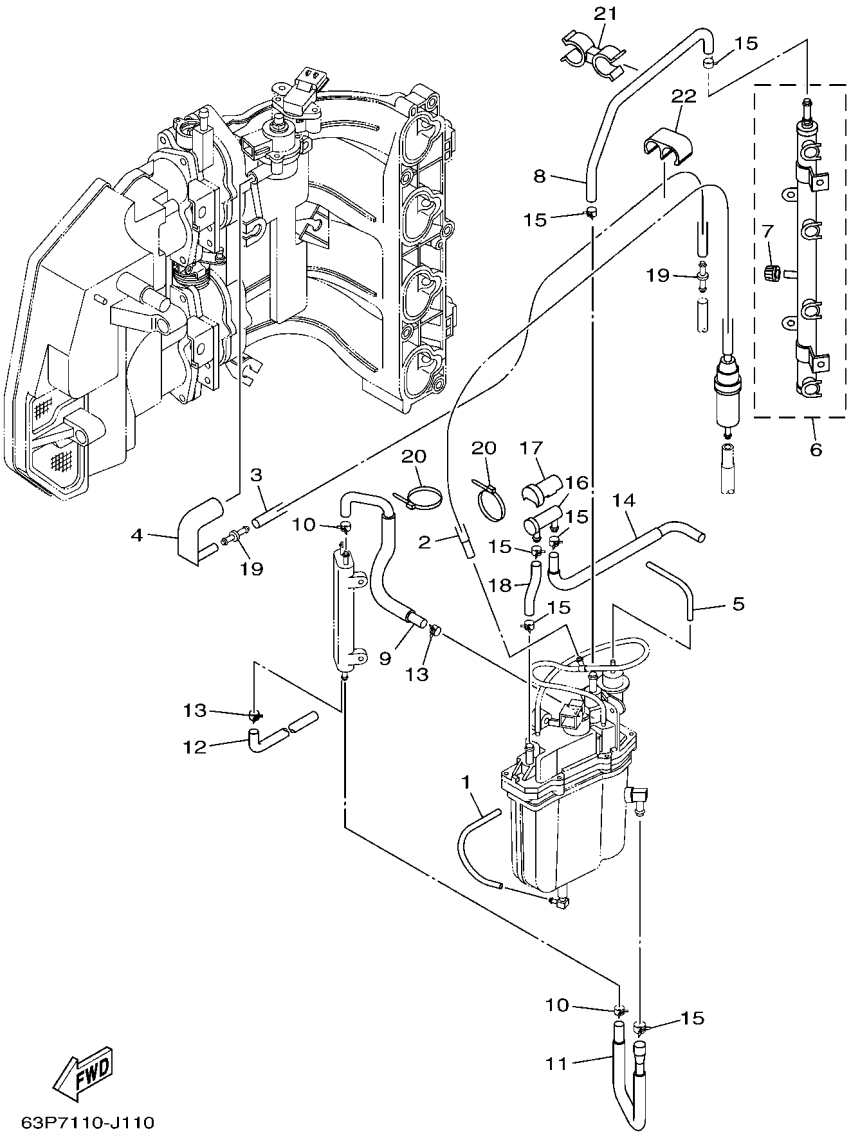

FIG. 11 FUEL INJECTION PUMP 2 — POMPE A INJECTEUR 2

REF. NO.	PART NO. N° PIECES	DESCRIPTION DESCRIPTION	63P6	64P6				REMARKS REMARQUES
1	63P–14149–00	PIPE DURITE	1	1				
2	63P–13971–00	PIPE, FUEL 1 TUBE 1, CARBURANT	1	1				
3	63P–13546–00	HOSE 2 DURITE 2	1	1				
4	63P–13545–00	HOSE 1 DURITE 1	1	1				
5	63P–13532–10	HOSE, VACUUM SENSING 3 DURITE 3	1	1				
6	63P–13160–00	DELIVERY PIPE ASSY 1 ENS. TUBE DE REFOULEMENT 1	1	1				
7	63P–14225–00	CAP COUVERCLE	1	1				
8	63P–13974–20	PIPE, FUEL 4 TUBE 4, CARBURANT	1	1				
9	63P–13976–00	PIPE, FUEL 6 TUBE 6, CARBURANT	1	1				
10	68V–2411M–00	CLIP JONC	2	2				
11	63P–24317–00	PIPE 7 DURITE 7	1	1				
12	63P–2247B–00	HOSE 2 DURITE 2	1	1				
13	68V–24519–00	CLIP JONC	2	2				
14	63P–24325–00	PIPE 14 DURITE 14	1	1				
15	68V–13577–00	CLIP AGRAFE	6	6				
16	69J–24501–10	FILTER, FUEL FILTRE	1	1				
17	69J–24599–10	CAP CAPUCHON	1	1				
18	63P–13975–00	PIPE, FUEL 5 TUBE 5, CARBURANT	1	1				
19	6P2–13758–00	PIPE, JOINT DURITE	2	2				
20	68V–2481H–00	CLAMP BRIDE	2	2				
21	63P–2417H–00	CLAMP 1 COLLIER 1	1	1				
22	63P–2417J–00	CLAMP 2 COLLIER 2	1	1				

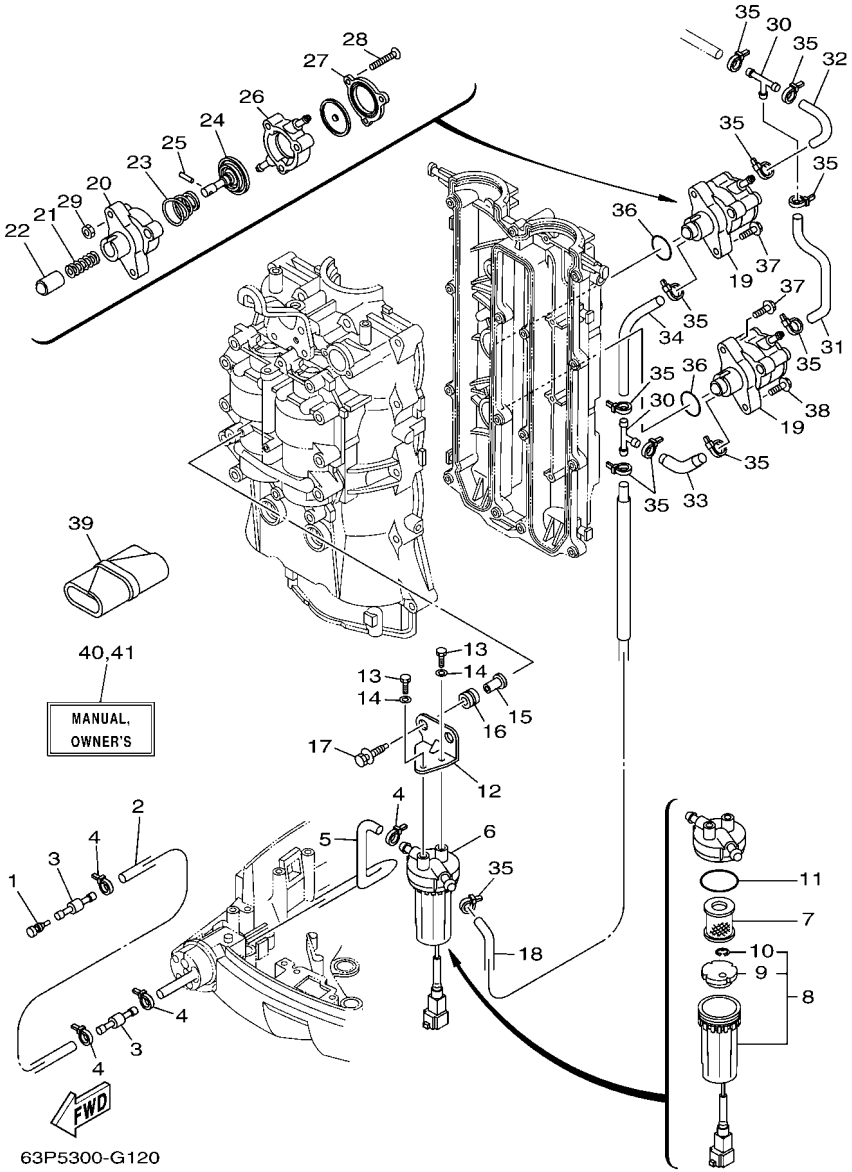

FIG. 12 FUEL 1 — CARBURANT 1

REF. NO.	PART NO. N° PIECES	DESCRIPTION DESCRIPTION	63P6	64P6				REMARKS REMARQUES
1	689–85547–00	DAMPER AMORTISSEUR	1	1				
2	90445–13511	HOSE (L2000) DURITE (L2000)	1	1				
3	6R3–24377–10	PIPE, JOINT 2 DURITE RACCORDEMENT 2	2	2				
4	90465–11M10	CLAMP BRIDE	4	4				
5	63P–24316–00	PIPE 6 DURITE 6	1	1				
6	6P3–24560–01	FILTER ASSY ENS FILTRE	1	1				
7	6P3–24563–00	.ELEMENT, FILTER .ELEMENT, FILTRE	1	1				
8	6P3–24562–01	.CUP, FILTER .CUVETTE, FILTRE	1	1				
9	6P3–24469–00	..FLOAT, WATER LEVEL ..FLOTTEUR	1	1				
10	6P3–24519–00	..CLIP ..JONC	1	1				
11	6P3–24564–00	.GASKET .JOINT	1	1				
12	63P–24566–00	BRACKET, FILTER SUPPORT, FILTRE	1	1				
13	97095–06014	BOLT BOULON	2	2				
14	92995–06600	WASHER RONDELLE	2	2				
15	90387–06M60	COLLAR COLLERETTE	2	2				
16	90480–10M23	GROMMET PASSE-FIL	2	2				
17	90119–06071	BOLT, WITH WASHER BOULON, AVEC RONDELLE	2	2				
18	63P–24311–10	PIPE, FUEL 1 DURITE A ESSENCE	1	1				
19	63P–24410–00	FUEL PUMP ASSY POMPE A ESSENCE	2	2				
20	68V–24412–00	.BODY 1 .CORPS 1	1	1				
21	68V–24454–00	.SPRING .RESSORT	1	1				
22	63P–13131–00	.PLUNGER .PLONGEUR	1	1				
23	63P–24423–00	.SPRING, DIAPHRAGM .RESSORT, DIAPHRAGME	1	1				
24	68V–24411–00	.DIAPHRAGM .DIAPHRAGME	1	1				
25	68V–24374–00	.PIN .GOUPILLE	1	1				
26	68V–24413–00	.BODY 2 .CORPS 2	1	1				
27	63P–24414–00	.BODY 3 .CORPS 3	1	1				

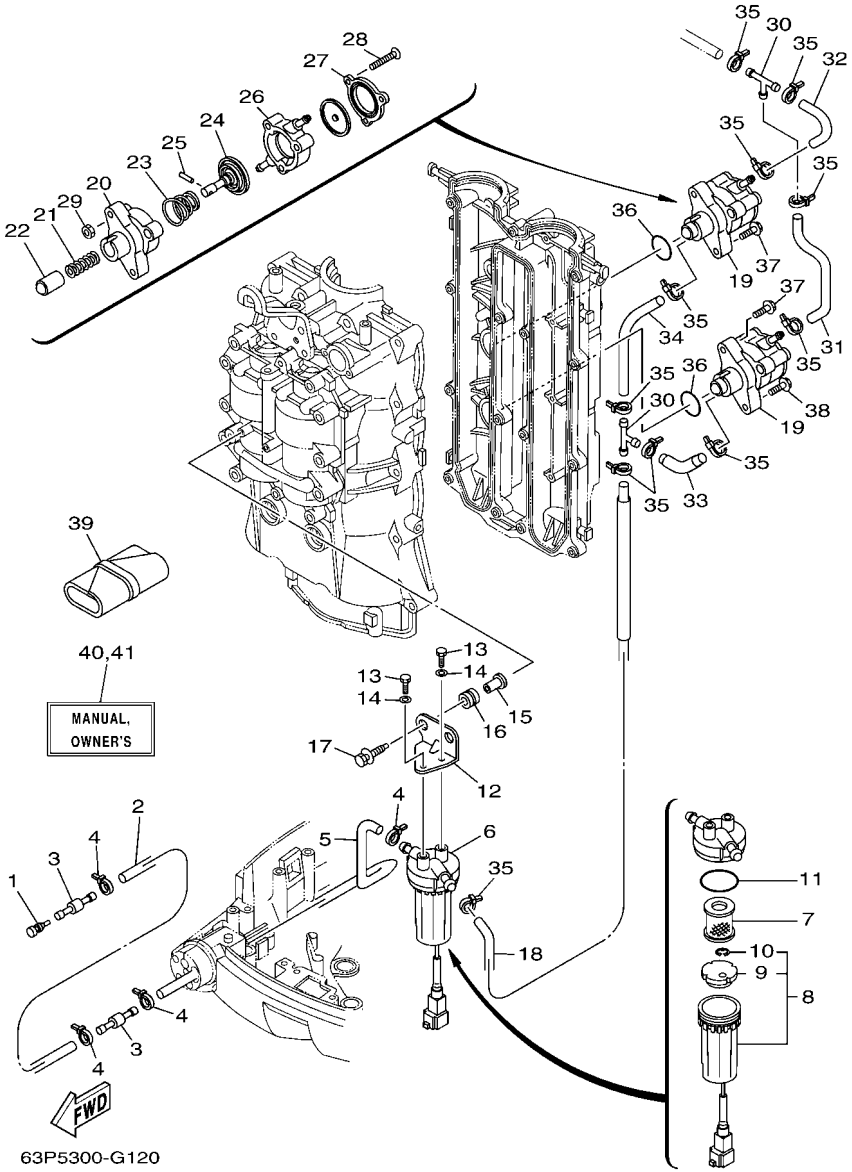

FIG. 12 FUEL 1 — CARBURANT 1

REF. NO.	PART NO. N° PIECES	DESCRIPTION DESCRIPTION	63P6	64P6				REMARKS REMARQUES
28	68V–24444–00	.SCREW .VIS	3	3				
29	68V–24149–00	.NUT .ECROU	3	3				
30	6E5–24378–00	PIPE, JOINT 3 DURITE, RACCORDEMENT 3	2	2				
31	63P–24314–00	PIPE 4 DURITE 4	1	1				
32	63P–24315–00	PIPE 5 DURITE 5	1	1				
33	63P–24312–10	PIPE 2 DURITE 2	1	1				
34	63P–24313–10	PIPE 3 DURITE 3	1	1				
35	90465–11M10	CLAMP BRIDE	11	11				
36	93210–30682	O-RING JOINT TORIQUE	2	2				
37	90119–06M83	BOLT, WITH WASHER BOULON, AVEC RONDELLE	3	3				
38	90119–06135	BOLT, WITH WASHER BOULON, AVEC RONDELLE	1	1				
39	67F–28100–01	TOOL KIT TROUSSE A OUTILS	1	1				
40	63P–28199–77–E0	MANUAL,OWNER'S MANUEL D'UTILISATION	1	1				UR (E) UR (E)
	63P–28199–77–F0	MANUAL,OWNER'S MANUEL D'UTILISATION	1	1				UR (F) UR (F)
	63P–28199–77–S0	MANUAL,OWNER'S MANUEL D'UTILISATION	1	1				UR (ES) UR (ES)
	63P–28199–77–G0	MANUAL,OWNER'S MANUEL D'UTILISATION	1	1				UR (D) UR (D)
	63P–28199–77–D0	MANUAL,OWNER'S MANUEL D'UTILISATION	1	1				UR (NL) UR (NL)
	63P–28199–77–H0	MANUAL,OWNER'S MANUEL D'UTILISATION	1	1				UR (I) UR (I)
41	63P–28199–87–K0	MANUAL,OWNER'S MANUEL D'UTILISATION	1	1				UR (DK) UR (DK)
	63P–28199–87–R0	MANUAL,OWNER'S MANUEL D'UTILISATION	1	1				UR (GR) UR (GR)
	63P–28199–87–P0	MANUAL,OWNER'S MANUEL D'UTILISATION	1	1				UR (P) UR (P)
	63P–28199–87–N0	MANUAL,OWNER'S MANUEL D'UTILISATION	1	1				UR (N) UR (N)
	63P–28199–87–M0	MANUAL,OWNER'S MANUEL D'UTILISATION	1	1				UR (S) UR (S)
	63P–28199–87–L0	MANUAL,OWNER'S MANUEL D'UTILISATION	1	1				UR (SF) UR (SF)

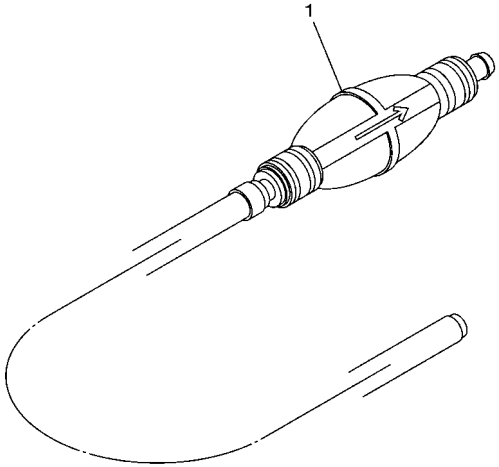

63P1300-C120

FIG. 13 FUEL 2 — CARBURANT 2

REF. NO.	PART NO. N° PIECES	DESCRIPTION DESCRIPTION	63P6	64P6				REMARKS REMARQUES
1	6YK–24307–42	FUEL PIPE COMP. 2 DURITE A ESSENCE 2	1	1				AP AP

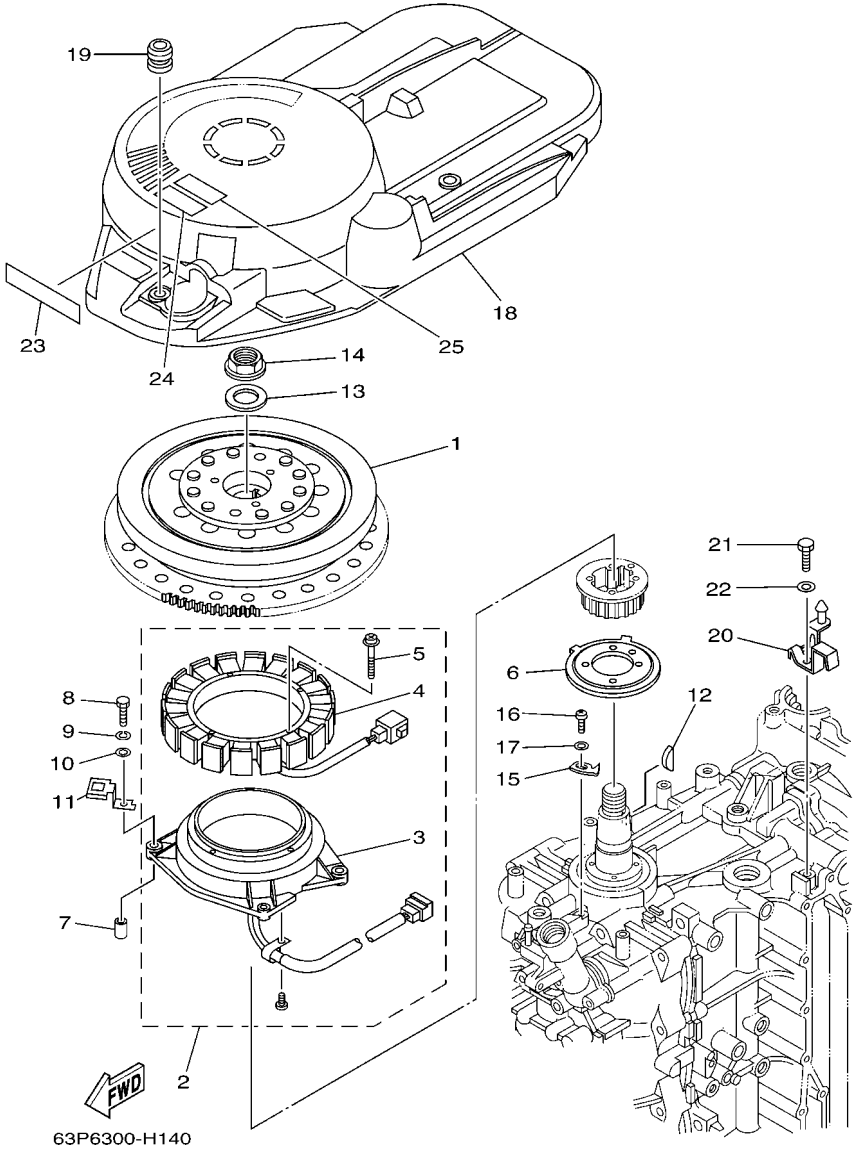

FIG. 14 GENERATOR — GENERATRICE

REF. NO.	PART NO. N° PIECES	DESCRIPTION DESCRIPTION	63P6	64P6				REMARKS REMARQUES
1	63P–81450–00	ROTOR ASSY ROTOR COMPLET	1	1				
2	63P–81460–00	BASE ASSY ENS. FLASQUE	1	1				
3	63P–85580–00	.COIL, PULSER .BOBINE, PULSEUR	1	1				
4	63P–81410–00	.STATOR ASSY .STATOR COMPLET	1	1				
5	63D–81345–20	.SCREW, WITH WASHER (M6X30) .VIS, AVEC RONDELLE (M6X30)	4	4				
6	63P–81673–01	ROTOR ROTOR	1	1				
7	99530–08012	PIN, DOWEL GOUJON, D'ASSEMBLAGE	2	2				
8	97095–06035	BOLT BOULON	4	4				
9	92995–06100	WASHER, SPRING RONDELLE, GROWER	4	4				
10	92995–06600	WASHER RONDELLE	4	4				
11	63P–81845–00	PLATE PLAQUE	2	2				
12	90280–05015	KEY, WOODRUFF CLAVETTE, DEMI-LUNE	1	1				
13	90201–24014	WASHER, PLATE RONDELLE, PLATE	1	1				
14	90179–24002	NUT ECROU	1	1				
15	6P2–81332–00	PLATE, TIMING PLATEAU, ALLUMAGE	1	1				
16	97885–06010	SCREW, PAN HEAD VIS, A ENCOCHE	1	1				
17	92995–06600	WASHER RONDELLE	1	1				
18	63P–81337–00	COVER, FLYWHEEL COUVERCLE, VOLANT	1	1				
19	663–82317–01	DAMPER, IGNITION COIL AMORTISSEUR, BOBINE D'ALLUM	3	3				
20	63P–8132G–00	PLATE PLAQUE	1	1				
21	97095–06016	BOLT BOULON	1	1				
22	92995–06600	WASHER RONDELLE	1	1				
23	63P–13437–61	MARK, CAUTION MAKER	1	1				
24	6AH–81994–40	LABEL, SAFETY ETIQUETTE, SECURITE	1	1				
25	6AH–81994–50	LABEL, SAFETY ETIQUETTE, SECURITE	1	1				

FIG. 15 ELECTRICAL 1 — PARTIE ELECTRIQUE 1

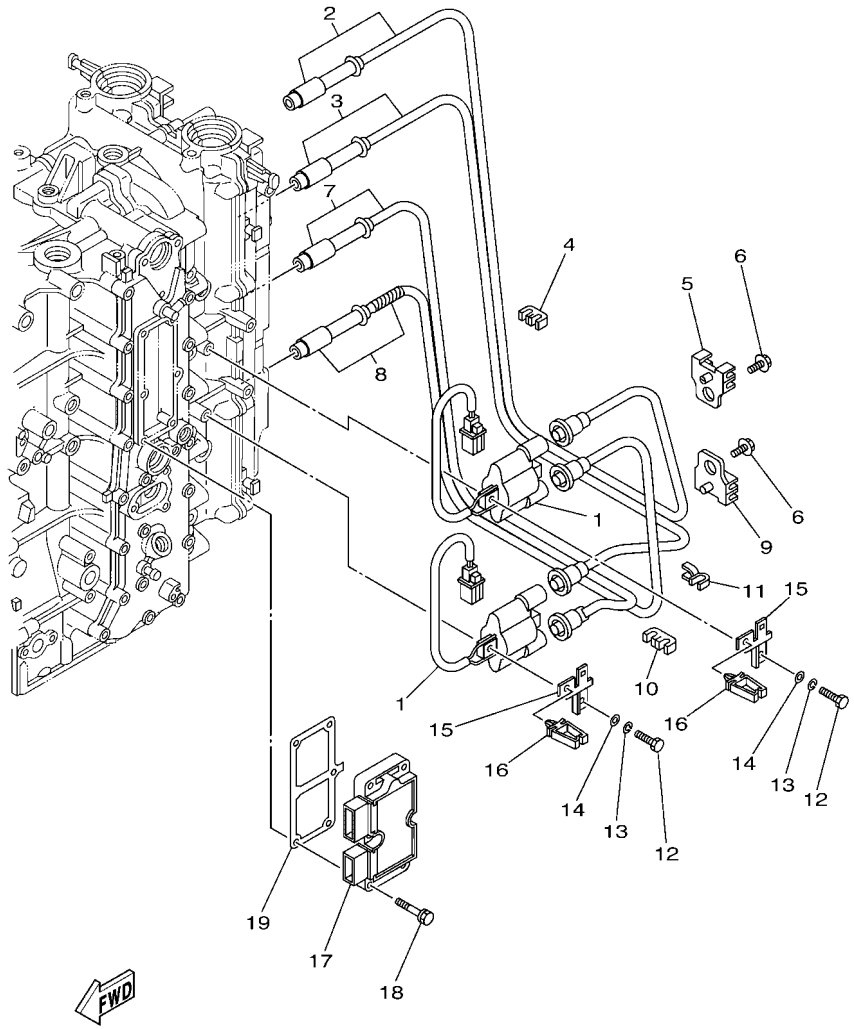

63P2100-D142

REF. NO.	PART NO. N° PIECES	DESCRIPTION DESCRIPTION	63P6	64P6				REMARKS REMARQUES
1	63P–82310–01	IGNITION COIL ASSY BOBINE D'ALLUMAGE	2	2				
2	63P–W823A–00	CORD, HIGH TENSION 1 CORDON, HAUTE-TENSION 1	1	1				
3	63P–W823B–00	CORD, HIGH TENSION 2 CORDON, HAUTE-TENSION 2	1	1				
4	67F–82361–00	CLAMP, CORD COLLIER, CORDON	1	1				
5	67F–82362–00	CLAMP, CORD 2 COLLIER, CABLE 2	1	1				
6	90119–06134	BOLT, WITH WASHER BOULON, AVEC RONDELLE	2	2				
7	63P–W823C–00	CORD, HIGH TENSION 3 CORDON, HAUTE-TENSION 3	1	1				
8	63P–W823D–00	CORD, HIGH TENSION 4 CORDON, HAUTE TENSION 4	1	1				
9	67F–82362–00	CLAMP, CORD 2 COLLIER, CABLE 2	1	1				
10	67F–82361–00	CLAMP, CORD COLLIER, CORDON	1	1				
11	90464–07M41	CLAMP BRIDE	1	1				
12	97095–06025	BOLT BOULON	4	4				
13	92995–06100	WASHER, SPRING RONDELLE, GROWER	4	4				
14	92995–06600	WASHER RONDELLE	4	4				
15	63P–82388–00	PLATE PLAQUETTE	2	2				
16	90464–05141	CLAMP BRIDE	2	2				
17	63P–81960–01	RECTIFIER & REGULATOR ASSY REDRESSEUR REGULATEUR CPLT	1	1				
18	90119–06MA4	BOLT, WITH WASHER BOULON, AVEC RONDELLE	6	6				
19	63P–81975–00	PLATE, RECTIFIER FITTING PLAQUE, FIXATION DU REDRESSEUR	1	1				

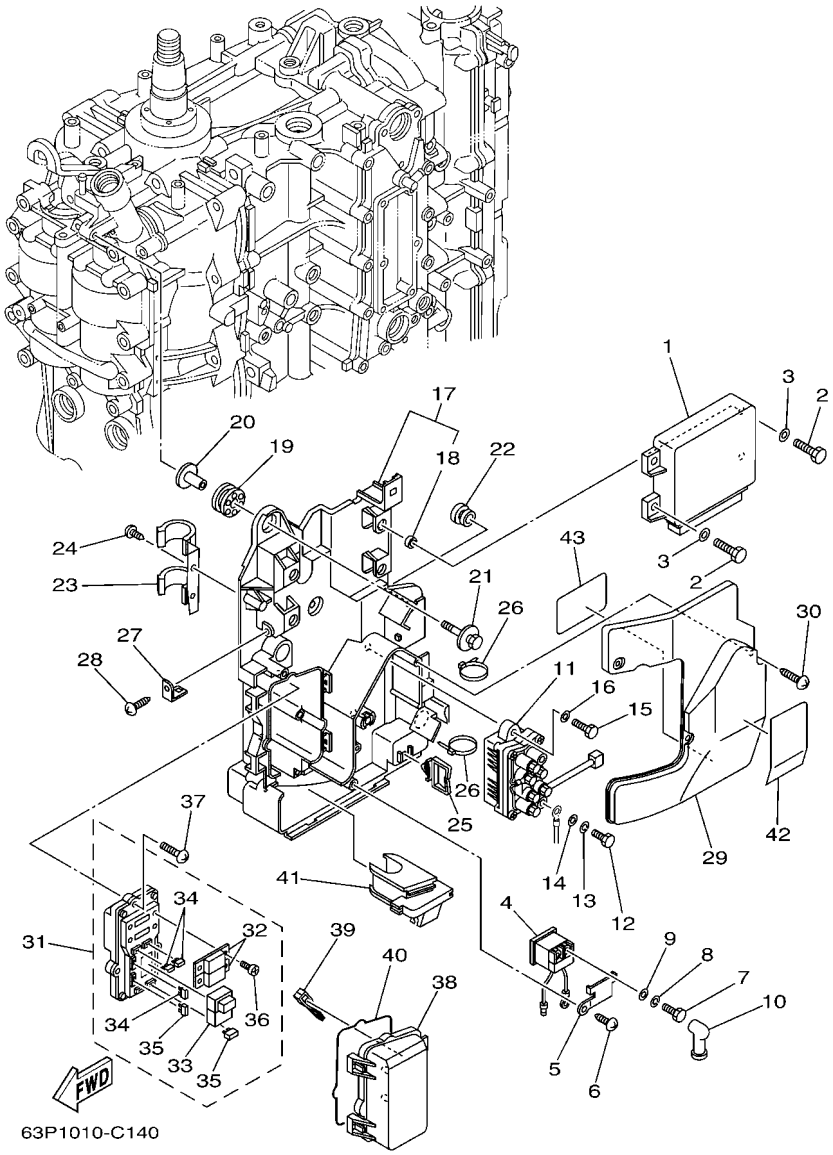

FIG. 16 ELECTRICAL 2 — PARTIE ELECTRIQUE 2

REF. NO.	PART NO. N° PIECES	DESCRIPTION DESCRIPTION	63P6	64P6				REMARKS REMARQUES
1	63P–8591A–61	ENGINE CONTROL UNIT ASSY BLOC DE CONTROL	1	1				
2	97095–06016	BOLT BOULON	4	4				
3	92995–06600	WASHER RONDELLE	4	4				
4	68V–8194A–00	RELAY RELAIS	1	1				
5	68V–81953–00	STAY, RELAY SUPPORT, RELAIS	1	1				
6	97780–60620	SCREW, TAPPING VIS, TETE BOMBEE	1	1				
7	97095–06010	BOLT BOULON	2	2				
8	92995–06100	WASHER, SPRING RONDELLE, GROWER	2	2				
9	92995–06600	WASHER RONDELLE	2	2				
10	6G5–82119–00	COVER, LEAD WIRE GARNITURE, FIL	2	2				
11	63P–81950–00	RELAY ASSY RELAIS COMPLET	1	1				
12	97095–06010	BOLT BOULON	2	2				
13	92995–06100	WASHER, SPRING RONDELLE, GROWER	2	2				
14	92995–06600	WASHER RONDELLE	2	2				
15	97013–06020	BOLT BOULON	2	2				
16	92903–06600	WASHER, PLATE RONDELLE, PLATE	2	2				
17	63P–81948–00	BRACKET SUPPORT	1	1				
18	90387–06010	.COLLAR .COLLERETTE	4	4				
19	68F–85516–01	SPACER ENTRETOISE	3	3				
20	90387–06176	COLLAR COLLERETTE	3	3				
21	68F–85119–00	BOLT BOULON	3	3				
22	90480–10627	GROMMET PASSE-FIL	1	1				
23	63P–82594–00	CLAMP BRIDE	1	1				
24	97780–60620	SCREW, TAPPING VIS, TETE BOMBEE	1	1				
25	90464–23199	CLAMP BRIDE	1	1				
26	90465–13M18	CLAMP BRIDE	3	3				
27	68V–85548–00	HOLDER SUPPORT	1	1				

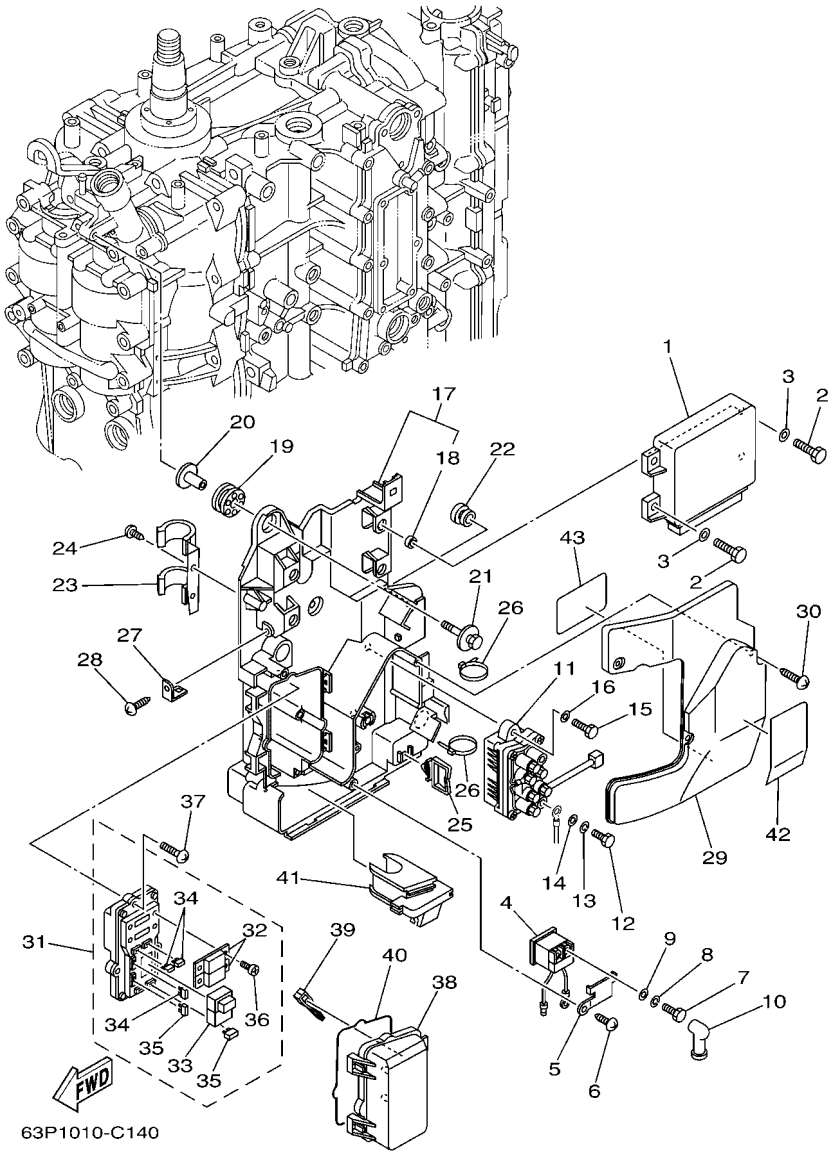

FIG. 16 ELECTRICAL 2 — PARTIE ELECTRIQUE 2

REF. NO.	PART NO. N° PIECES	DESCRIPTION DESCRIPTION	63P6	64P6				REMARKS REMARQUES
28	97780–60620	SCREW, TAPPING VIS, TETE BOMBEE	1	1				
29	63P–81942–00	COVER COUVERCLE	1	1				
30	90169–05M00	SCREW, TRUSS HEAD TAPPING VIS, TETE FRAISEE	3	3				
31	63P–82170–00	FUSE BOX ASSY BOITE A FUSIBLES	1	1				
32	63P–82151–00	.FUSE (50A) .FUSIBLE (50A)	2	2				
33	68F–8195A–00	.RELAY ASSY .RELAIS COMPLET	1	1				
34	67F–82151–00	.FUSE (20A) .FUSIBLE (20A)	3	3				
35	67F–82151–10	.FUSE (30A) .FUSIBLE (30A)	2	2				
36	68F–82846–00	.SCREW, PAN HEAD (M5) .VIS, TETE TRONCONIQUE (M5)	4	4				
37	97780–50620	SCREW, TAPPING VIS, TETE BOMBEE	3	3				
38	60V–85544–00	CASE BOITIER	1	1				
39	67F–2812A–00	PULLER, FUSE TENDEUR, FUSIBLE	1	1				
40	60V–82157–00	DAMPER AMORTISSEUR	1	1				
41	63P–81336–00	GROMMET OEILLET CAOUTCHOUC	1	1				
42	63P–81919–00	GRAPHIC, REGULATOR ADHESIF, REGULATEUR	1	1				
43	63P–81919–10	GRAPHIC, REGULATOR ADHESIF, REGULATEUR	1	1				

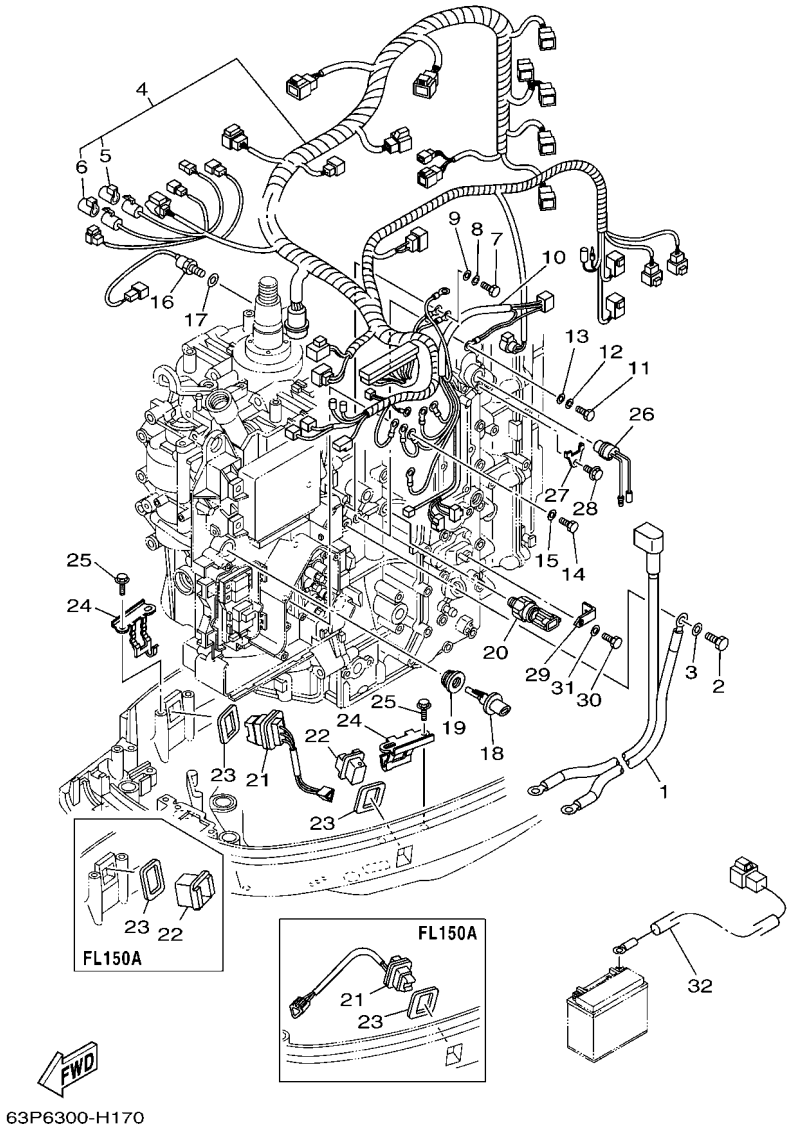

FIG. 17 ELECTRICAL 3 — PARTIE ELECTRIQUE 3

REF. NO.	PART NO. N° PIECES	DESCRIPTION DESCRIPTION	63P6	64P6				REMARKS REMARQUES
1	63P–82105–00	WIRE HARNESS FAISCEAU DE FILS	1	1				
2	97095–08016	BOLT BOULON	1	1				
3	92995–08600	WASHER RONDELLE	1	1				
4	63P–82590–30	WIRE HARNESS ASSY FAISCEAU DE FILS COMPLET	1	1				
5	6P2–82582–00	.CAP 1 (FEMALE) .BOUCHON 1 (FEMME)	1	1				
6	6P2–82582–10	.CAP 1 (MALE) .BOUCHON 1 (MALE)	1	1				
7	97095–06020	BOLT BOULON	1	1				
8	92995–06100	WASHER, SPRING RONDELLE, GROWER	1	1				
9	92995–06600	WASHER RONDELLE	1	1				
10	63P–8259M–00	WIRE HARNESS ASSY 2 FAISCEAU DE FILS	1	1				
11	97095–06020	BOLT BOULON	1	1				
12	92995–06100	WASHER, SPRING RONDELLE, GROWER	1	1				
13	92995–06600	WASHER RONDELLE	1	1				
14	97095–06012	BOLT BOULON	1	1				
15	92995–06600	WASHER RONDELLE	1	1				
16	61A–85790–00	THERMOSENSOR ASSY SENSITOMETRE	1	1				
17	92990–10600	WASHER, PLATE RONDELLE, PLATE	1	1				
18	63P–85886–00	SENSOR, AIR TEMPERATURE SONDE	1	1				
19	63P–14435–00	GROMMET RONDELLE CAOUTCHOUC	1	1				
20	6AW–83651–00	SENDER, OIL PRESSURE RACCORD, PRESSION D'HUILE	1	1				
21	69J–82563–00	TRIM & TILT SWITCH ASSY INCLINER ET PARER COMMUTATEUR	1	1				
22	69J–42723–00–8D	COVER, BOTTOM COUVERCLE	1	1				
23	69J–82587–00	GASKET JOINT	2	2				
24	63P–83614–00	BRACKET SUPPORT	2	2				
25	90109–06M86	BOLT BOULON	4	4				
26	6P2–82560–01	THERMO SWITCH ASSY THERMO-CONTACT COMPLET	1	1				
27	6E9–82588–00	PLATE PLAQUE	1	1				

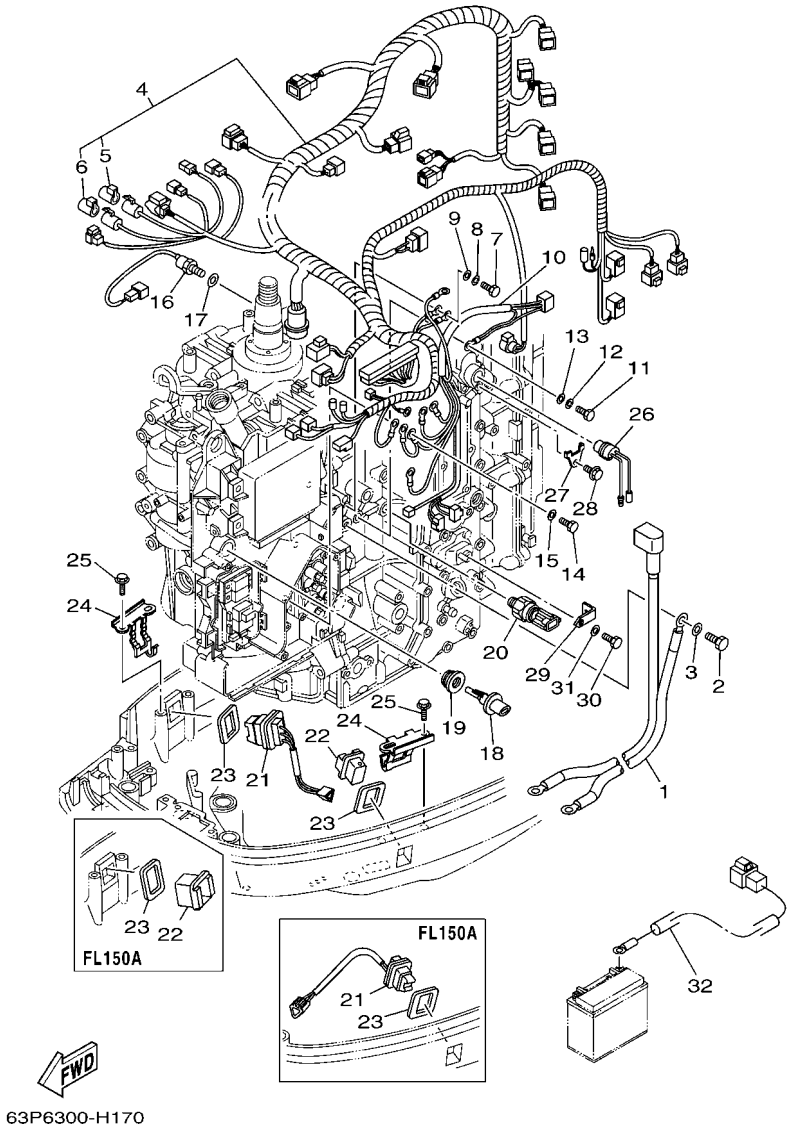

63P6300-H170

FIG. 17 ELECTRICAL 3 — PARTIE ELECTRIQUE 3

REF. NO.	PART NO. N° PIECES	DESCRIPTION DESCRIPTION	63P6	64P6				REMARKS REMARQUES
28	90109–06M80	BOLT BOULON	1	1				
29	63P–8366P–00	BRACKET 4 SUPPORT 4	1	1				
30	97095–06012	BOLT BOULON	1	1				
31	92995–06600	WASHER RONDELLE	1	1				
32	68F–81949–00	WIRE, LEAD (ISOLATOR CABLE) FIL (ISOLATOR CABLE)	1	1				AP AP

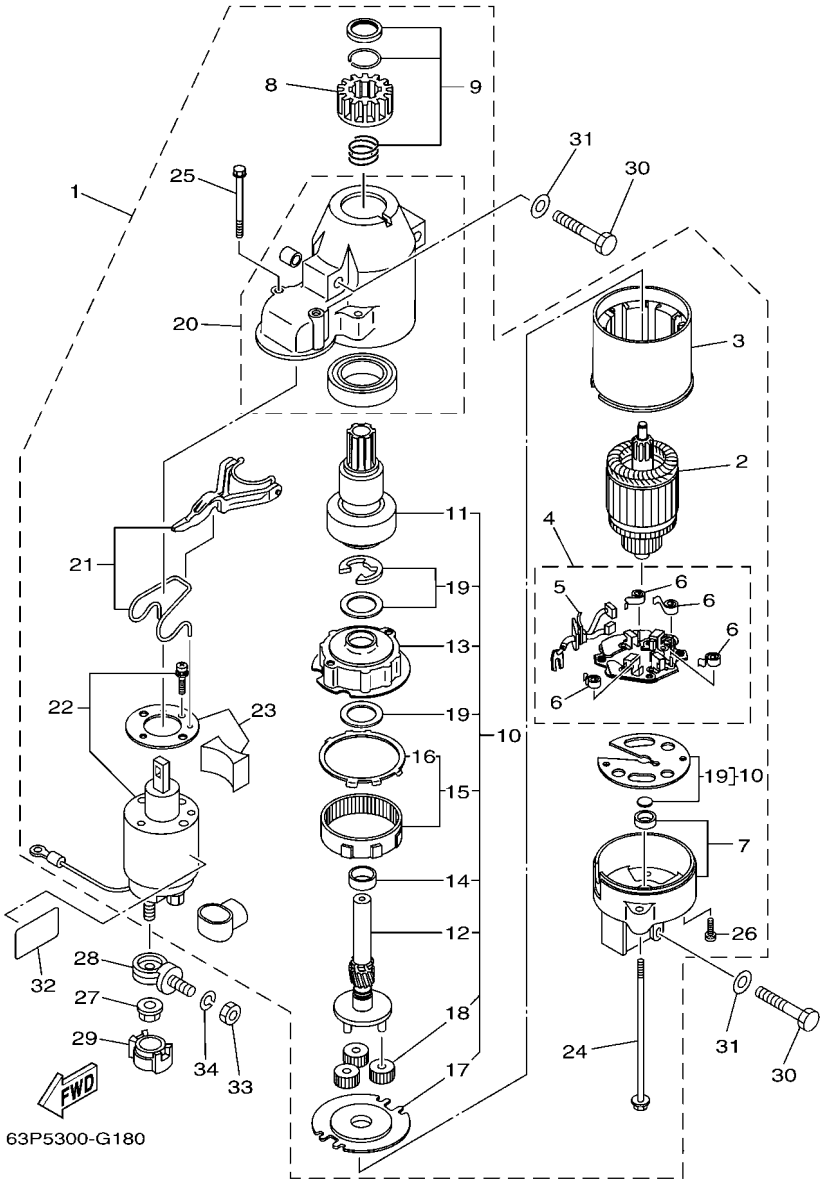

FIG. 18 STARTING MOTOR — DEMARREUR ELECTRIQUE

REF. NO.	PART NO. N° PIECES	DESCRIPTION DESCRIPTION	63P6	64P6				REMARKS REMARQUES
1	6BR–81800–00	STARTING MOTOR ASSY DEMARREUR ELECTRIQUE COMPLET	1	1				
2	67F–81850–00	.ARMATURE ASSY .INDUIT	1	1				
3	67F–81810–00	.STATOR ASSY .STATOR COMPLET	1	1				
4	69J–81840–00	.BRUSH HOLDER ASSY .SUPPORT DE CHARBON	1	1				
5	69J–81801–00	..BRUSH SET ..CHARBON	1	1				
6	67F–81813–00	..SPRING, BRUSH ..RESSORT, DE CHARBON	4	4				
7	67F–81820–00	.REAR BRACKET ASSY .SUPPORT ARRIERE COMPLET	1	1				
8	67F–81808–00	.PINION ASSY .PIGNON	1	1				
9	67F–81857–00	.PINION STOPPER SET .BUTEE PIGNON	1	1				
10	67F–81807–00	.GEAR ASSY, STARTING MOTOR .PIGNON, DEMARREUR ELECTRIQUE	1	1				
11	67F–81832–00	..CLUTCH, OVER RUN ..EMBRAYAGE, ROUE LIBRE	1	1				
12	67F–81836–00	..SHAFT, PINION ..AXE, PIGNON	1	1				
13	67F–81821–00	..BRACKET, CENTER 1 ..SUPPORT, CENTRE 1	1	1				
14	67F–81841–00	..BEARING ..ROULEMENT	1	1				
15	67F–81891–00	..GEAR, RING ..ROUE DENTEE	1	1				
16	67F–8183R–00	...GASKET ...JOINT	1	1				
17	67F–81830–00	..BRACKET, CENTER 2 ..SUPPORT, CENTRE 2	1	1				
18	60V–8183T–00	..GEAR, IDLER ..PIGNON, INTERMEDIAIRE	3	3				
19	67F–81809–00	..WASHER KIT ..JEU DE RONDELLES	1	1				
20	69J–81842–00	.COVER .COUVERCLE	1	1				
21	69J–81839–00	.LEVER ASSY .LEVIER COMPLET	1	1				
22	63P–81941–00	.STARTER RELAY ASSY .LANCEUR RELAIS (ENS.)	1	1				
23	69J–81869–00	.COVER, DUST .COUVERCLE, POUSSIERE	1	1				
24	6K7–81826–11	.BOLT .BOULON	2	2				
25	69J–81828–00	.BOLT 2 .RONDELLE, BUTEE 2	2	2				
26	67F–81846–00	.SCREW .VIS	2	2				
27	90179–08003	NUT ECROU	1	1				

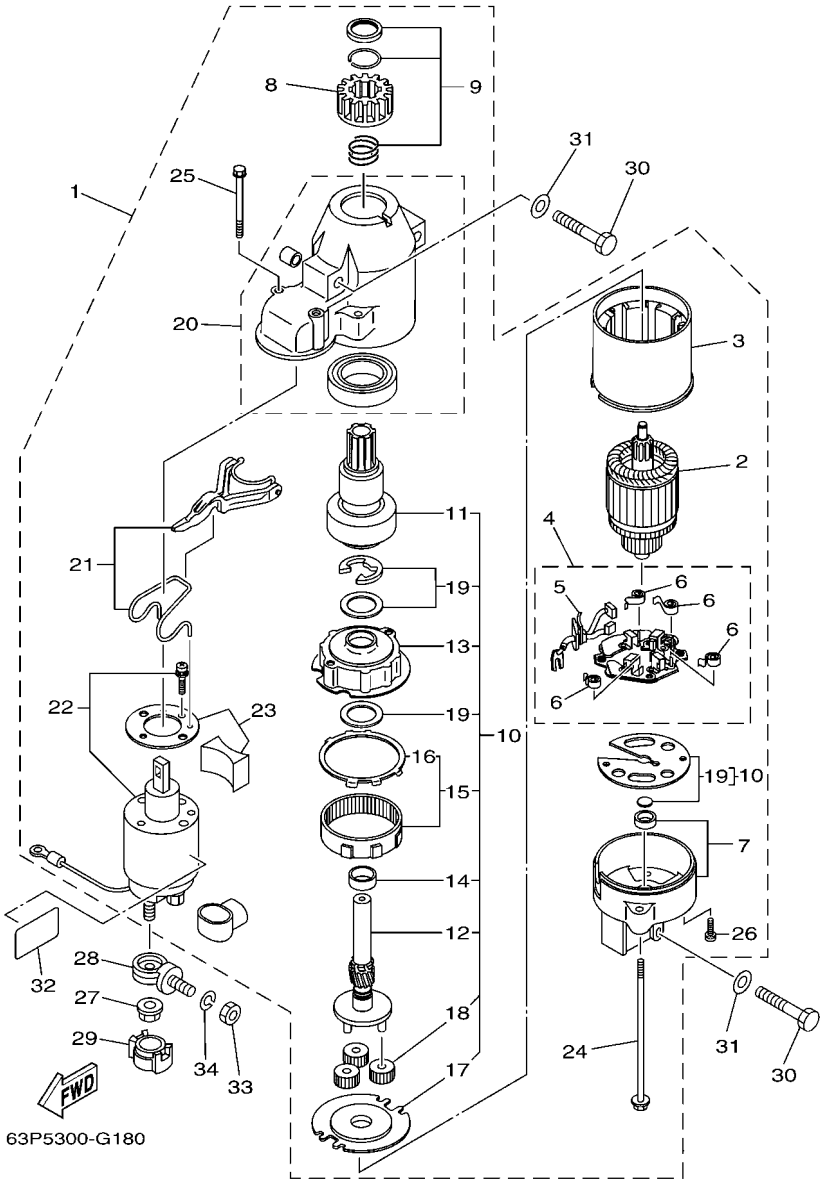

FIG. 18 STARTING MOTOR — DEMARREUR ELECTRIQUE

REF. NO.	PART NO. N° PIECES	DESCRIPTION DESCRIPTION	63P6	64P6				REMARKS REMARQUES
28	60V–81925–00	TERMINAL BORNE	1	1				
29	68F–82582–00	COVER, WIRE HARNESS COUVERCLE, FAISCEAU DE FILS	1	1				
30	97013–08045	BOLT BOULON	3	3				
31	92903–08600	WASHER, PLATE RONDELLE, PLATE	3	3				
32	67F–83627–01	LABEL, CAUTION 7 ETIQUETTE, RECOMMANDATION 7	1	1				
33	95333–08600	NUT ECROU	1	1				
34	92903–08100	WASHER, SPRING RONDELLE, GROWER	1	1				

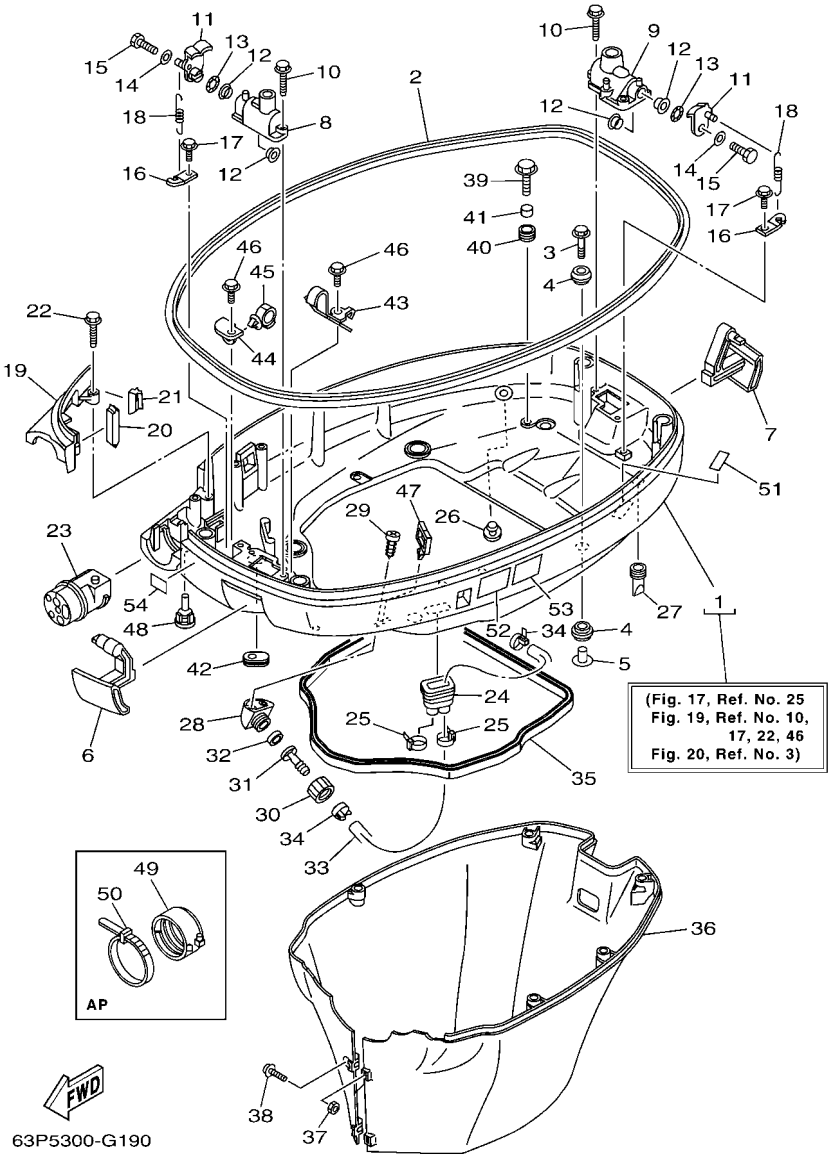

FIG. 19 BOTTOM COWLING — CAPOT INFERIEUR

REF. NO.	PART NO. N° PIECES	DESCRIPTION DESCRIPTION	63P6	64P6				REMARKS REMARQUES
1	63P–42710–01–8D	BOTTOM COWLING ASSY ENS. EMBASE	1	1				
2	63P–42615–00	SEAL JOINT	1	1				
3	90119–08M22	BOLT, WITH WASHER BOULON, AVEC RONDELLE	4	4				
4	90480–22M81	GROMMET PASSE-FIL	8	8				
5	90387–08M37	COLLAR COLLERETTE	4	4				
6	63P–42815–00–8D	LEVER, CLAMP LEVIER, PRESSE	1	1				
7	63P–42816–00–8D	LEVER, CLAMP LEVIER, PRESSE	1	1				
8	68F–42828–03–8D	PLATE, CLAMP PLAQUE, PRESSE	1	1				
9	63P–42828–00–8D	PLATE, CLAMP PLAQUE, PRESSE	1	1				
10	90109–06M82	BOLT BOULON	4	4				
11	63P–42818–01	LEVER, CLAMP LEVIER, PRESSE	2	2				
12	90386–15M73	BUSH DOUILLE	4	4				
13	90206–15M18	WASHER, WAVE RONDELLE, ONDULEE	2	2				
14	90201–06068	WASHER, PLATE RONDELLE, PLATE	2	2				
15	97095–06020	BOLT BOULON	2	2				
16	64D–43144–00	HOOK, SPRING CROCHET	2	2				
17	90109–06M86	BOLT BOULON	2	2				
18	90506–16M34	SPRING, TENSION RESSORT, TENSION	2	2				
19	63P–42738–00–8D	PLATE, FITTING ETRIER	1	1				
20	63P–42717–00	RUBBER, SEAL 2 JOINT EN CAOUTCHOUC 2	1	1				
21	63P–42718–00	RUBBER, SEAL 3 JOINT	1	1				
22	90109–06M82	BOLT BOULON	2	2				
23	63P–42725–00	GROMMET PASSE-FIL	1	1				
24	6H1–42726–21	GROMMET PASSE-FIL	1	1				
25	90465–11M10	CLAMP BRIDE	2	2				
26	6P2–44391–00	NIPPLE, HOSE RACCORD D'ESSENCE	1	1				
27	61A–42717–00	RUBBER, SEAL 2 JOINT EN CAOUTCHOUC 2	4	4				

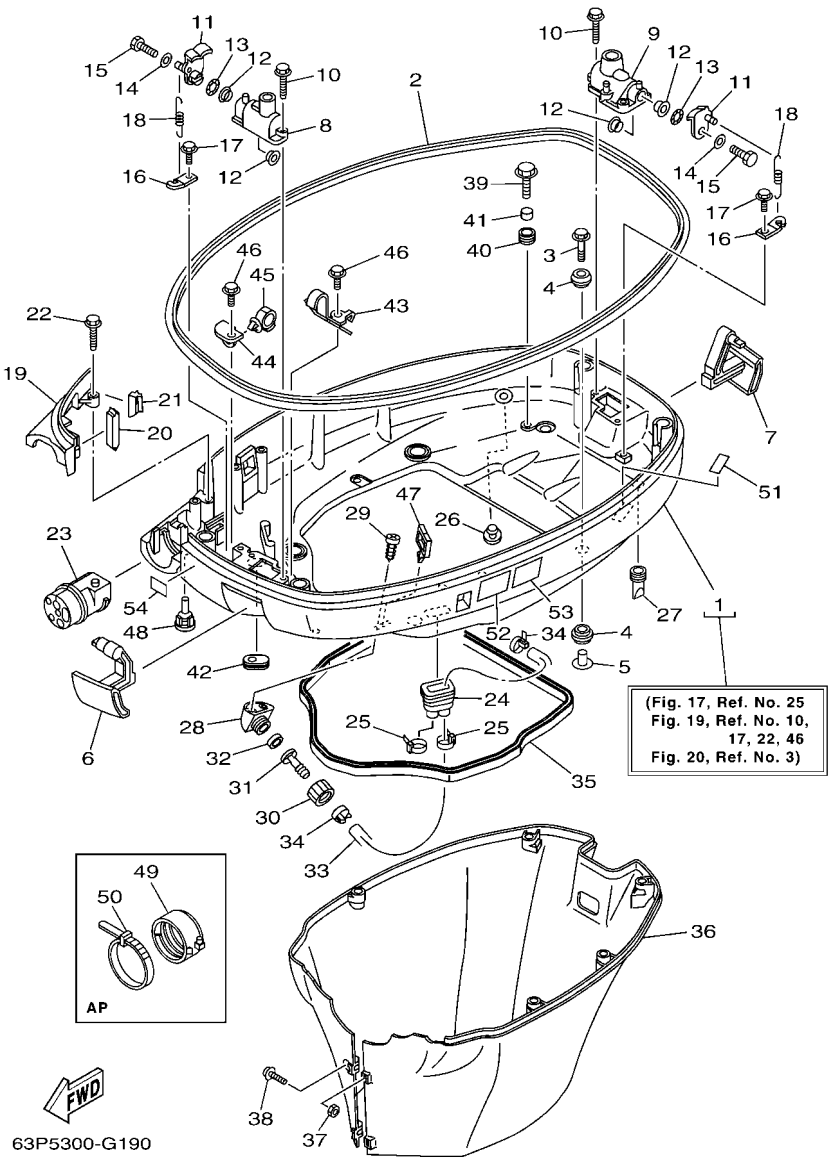

FIG. 19 BOTTOM COWLING — CAPOT INFERIEUR

REF. NO.	PART NO. N° PIECES	DESCRIPTION DESCRIPTION	63P6	64P6				REMARKS REMARQUES
28	68T–12572–00	ADAPTER ADAPTATEUR	1	1				
29	97780–60520	SCREW, TAPPING VIS, TETE BOMBEE	2	2				
30	6R3–12581–00	JOINT, HOSE 1 JOINT DE TUYAU	1	1				
31	6R3–12582–00	JOINT, HOSE 2 RACCORD DE TUYAU 1	1	1				
32	6R3–12583–00	GASKET, HOSE JOINT JOINT	1	1				
33	63P–42541–00	PIPE 1 DURITE 1	1	1				
34	90465–11M10	CLAMP BRIDE	2	2				
35	63P–42716–00	RUBBER, SEAL 1 JOINT EN CAOUTCHOUC 1	1	1				
36	63P–42741–01–8D	APRON CAPOT LATERAL	1	1				
37	95380–06600	NUT, HEXAGON ECROU	2	2				
38	90159–06M28	SCREW, WITH WASHER VIS, AVEC RONDELLE	2	2				
39	90109–06M80	BOLT BOULON	4	4				
40	90480–13M24	GROMMET PASSE-FIL	4	4				
41	90387–06M43	COLLAR COLLERETTE	4	4				
42	61A–42727–00	GROMMET PASSE-FIL	1	1				
43	63P–42811–01	STAY SUPPORT	1	1				
44	63P–42756–00	STAY, CLAMP SUPPORT, COLLIER	1	1				
45	90464–20181	CLAMP BRIDE	1	1				
46	90109–06M86	BOLT BOULON	2	2				
47	90464–23199	CLAMP BRIDE	1	1				
48	6H4–42748–00	GROMMET PASSE-FIL	2	2				
49	68F–42753–00	FASTNER ATTACHE	1	1				AP AP
50	90464–20258	CLAMP BRIDE	1	1				AP AP
51	67F–82377–00	LABEL ETIQUETTE	1	1				
52	6AH–42794–40	LABEL, WARNING (GENERAL) ETIQUETTE, AVERTISSEMENT	1	1				
53	6AH–42794–50	LABEL, WARNING (GENERAL) ETIQUETTE, AVERTISSEMENT	1	1				
54	6AH–81996–00	MARK MARQUE	1	1				

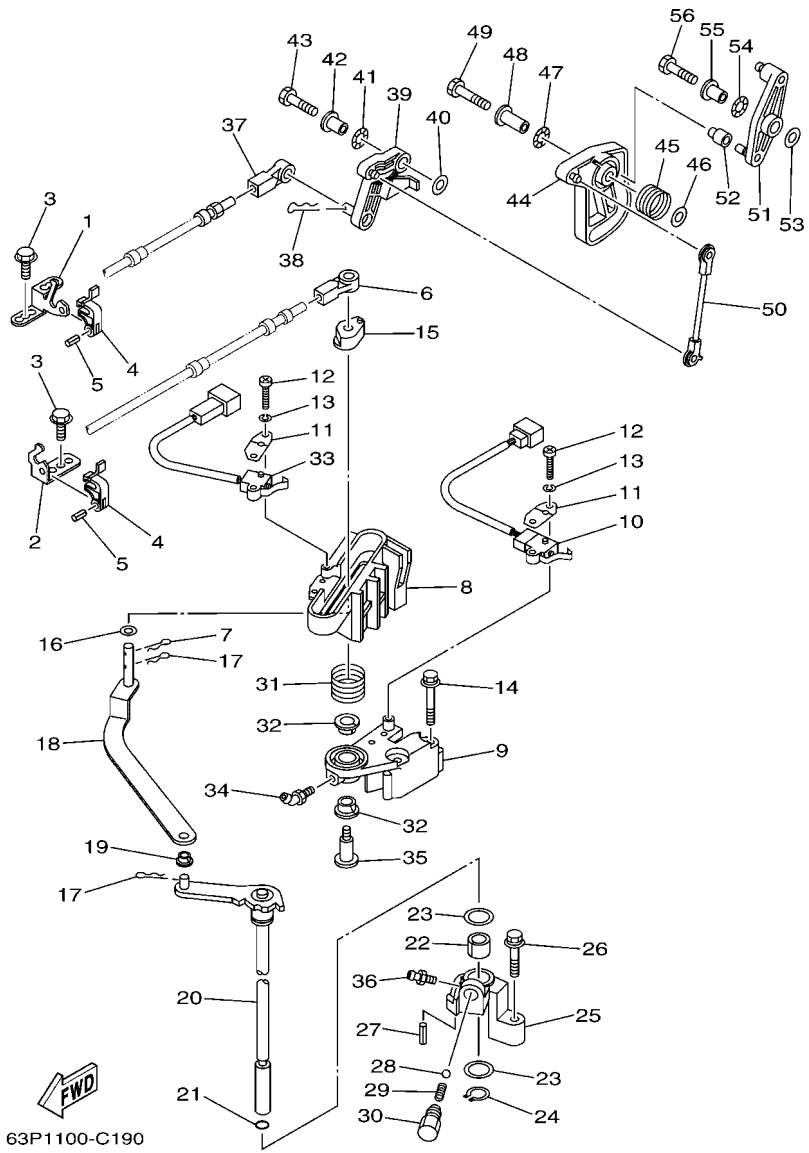

FIG. 20 CONTROL — COMMANDE

REF. NO.	PART NO. N° PIECES	DESCRIPTION DESCRIPTION	63P6	64P6				REMARKS REMARQUES
1	63P–48531–00	BRACKET, REMOTE CONTROL 1 ETRIER 1, COMMANDE A DISTANCE	1	1				
2	63P–48532–00	BRACKET, REMOTE CONTROL 2 ETRIER 2, COMMANDE A DISTANCE	1	1				
3	90109–06M86	BOLT BOULON	3	3				
4	63P–48538–00	CLAMP, CABLE 1 COLLIER	2	2				
5	91690–30010	PIN, SPRING AGRAFFE	2	2				
6	6E5–48344–00	CABLE END, REMOTE CONTROL CHAPE CABLE	1	1				
7	90468–18008	CLIP JONC	1	1				
8	63P–44176–00–94	BRACKET SUPPORT	1	1				
9	63P–44117–00–94	BRACKET SUPPORT	1	1				
10	69J–8259F–00	SWITCH ASSY COMMUTATEUR	1	1				
11	61A–82588–01	PLATE PLAQUE	2	2				
12	97885–04016	SCREW, PAN HEAD VIS, A ENCOCHE	4	4				
13	92995–04100	WASHER RONDELLE	4	4				
14	97595–06550	BOLT, WITH WASHER VIS HEXAGONAL AVC RONDELLE	2	2				
15	63P–44122–00	BUSHING, SHIFT ROD LEVER DOUILLE, LEVIER D'EMBRAYAGE	1	1				
16	90202–08M20	WASHER, PLATE RONDELLE, PLATE	1	1				
17	90468–18008	CLIP JONC	2	2				
18	63P–44121–00	LEVER, SHIFT ROD LEVIER, TIGE D'INVERSION	1	1				
19	90386–06M12	BUSH DOUILLE	1	1				
20	63P–44120–00	HANDLE GEAR SHIFT ASSY LEVIER D'EMBRAYAGE	1	1				
21	93210–09165	O-RING JOINT TORIQUE	1	1				
22	90386–16M66	BUSH DOUILLE	1	1				
23	90202–16061	WASHER, PLATE RONDELLE, PLATE	2	2				
24	93410–16006	CIRCLIP CLIPS	1	1				
25	63P–44118–00–94	BRACKET SUPPORT	1	1				
26	97575–06535	BOLT, WITH WASHER VIS HEXAGONAL AVC RONDELLE	1	1				
27	91690–30010	PIN, SPRING AGRAFFE	1	1				

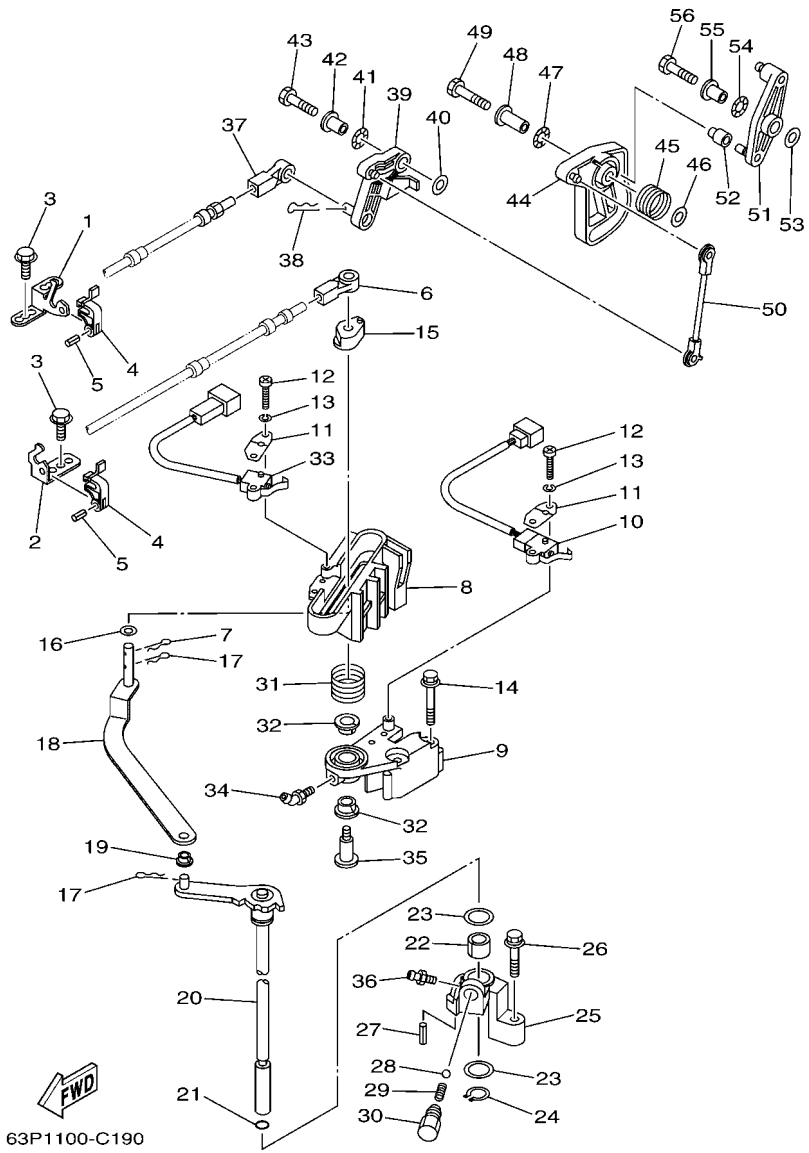

FIG. 20 CONTROL — COMMANDE

REF. NO.	PART NO. N° PIECES	DESCRIPTION DESCRIPTION	63P6	64P6				REMARKS REMARQUES
28	93501–04M02	BALL BILLE	1	1				
29	90501–12082	SPRING, COMPRESSION RESSORT, COMPRESSION	1	1				
30	648–42715–00	BUSHING COUSSINET	1	1				
31	90508–20M31	SPRING, TORSION RESSORT, TORSION	1	1				
32	90386–12069	BUSH DOUILLE	2	2				
33	60V–8259F–00	SWITCH ASSY COMMUTATEUR	1	1				
34	93700–06M01	NIPPLE, GREASE PION	1	1				
35	90109–08019	BOLT BOULON	1	1				
36	93700–06M03	NIPPLE, GREASE PION	1	1				
37	6E5–48344–00	CABLE END, REMOTE CONTROL CHAPE CABLE	1	1				
38	90468–18008	CLIP JONC	1	1				
39	63P–42154–00	LEVER, THROTTLE CONTROL LEVIER DE COMMANDE D'AVANCE	1	1				
40	90201–06M31	WASHER, PLATE RONDELLE, PLATE	1	1				
41	90206–10M04	WASHER, WAVE RONDELLE, ONDULEE	1	1				
42	90387–06M29	COLLAR COLLERETTE	1	1				
43	97095–06025	BOLT BOULON	1	1				
44	63P–41213–00	CAM, ACCEL. CAME, ACCELERATION	1	1				
45	69J–44135–00	SPRING RESSORT	1	1				
46	90201–06M31	WASHER, PLATE RONDELLE, PLATE	1	1				
47	90206–10M04	WASHER, WAVE RONDELLE, ONDULEE	1	1				
48	90387–06M82	COLLAR COLLERETTE	1	1				
49	97095–06035	BOLT BOULON	1	1				
50	63P–41237–00	JOINT, LINK RACCORD	1	1				
51	63P–42157–00	LEVER, THROTTLE LEVIER DE AVANCE	1	1				
52	68V–42171–00	BUSHING COUSSINET	1	1				
53	90201–06M31	WASHER, PLATE RONDELLE, PLATE	1	1				
54	90206–10M04	WASHER, WAVE RONDELLE, ONDULEE	1	1				

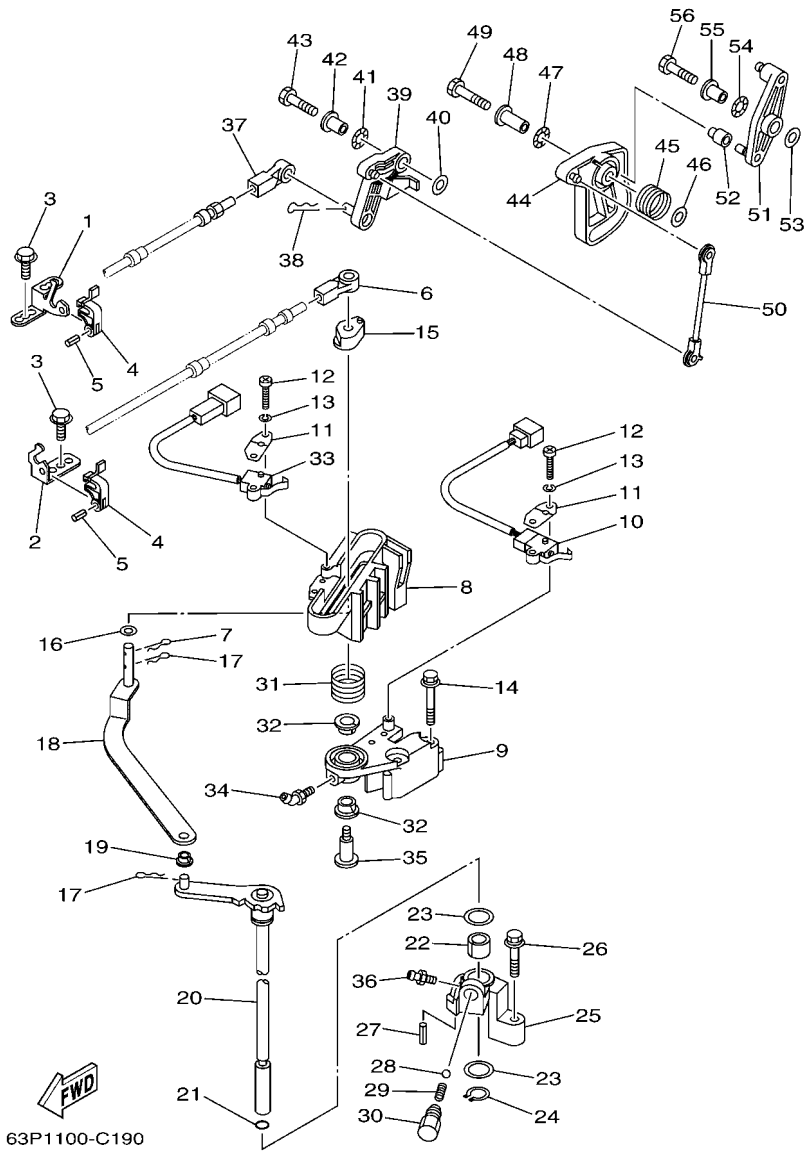

FIG. 20 CONTROL — COMMANDE

REF. NO.	PART NO. N° PIECES	DESCRIPTION DESCRIPTION	63P6	64P6				REMARKS REMARQUES
55	90387–06M29	COLLAR COLLERETTE	1	1				
56	97095–06025	BOLT BOULON	1	1				

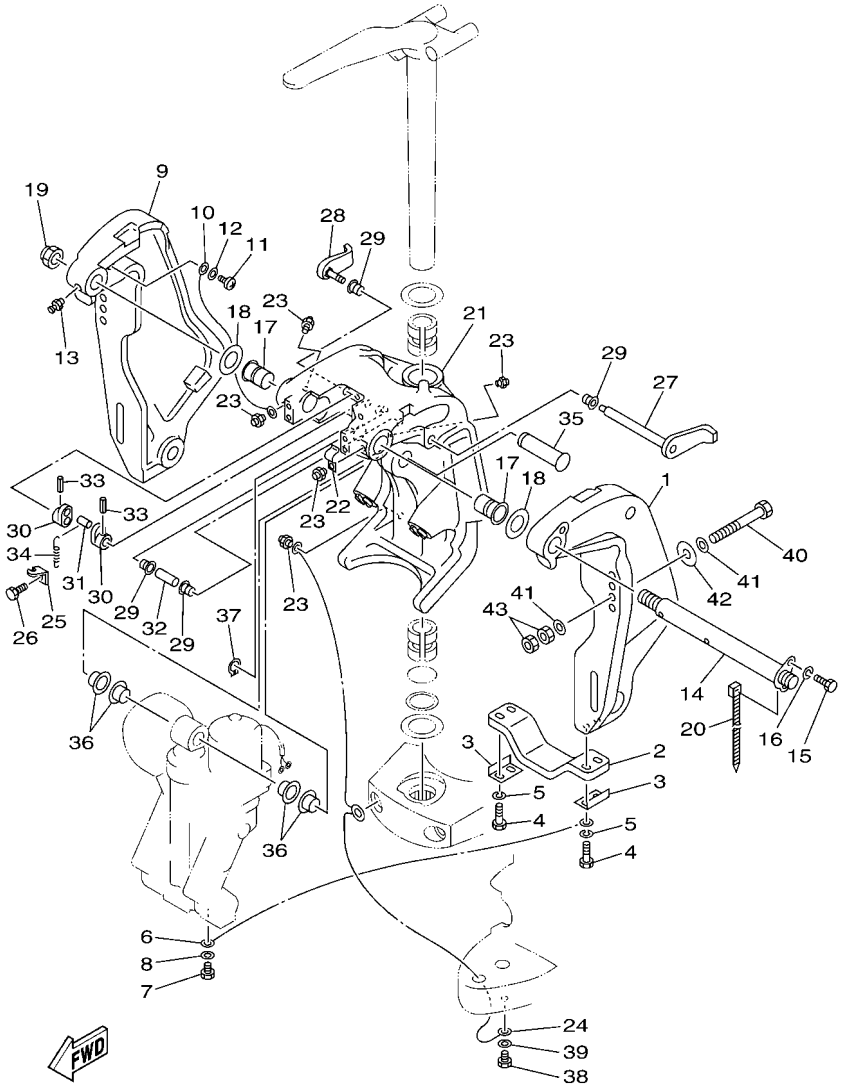

FIG. 21 BRACKET 1 — SUPPORT 1

REF. NO.	PART NO. N° PIECES	DESCRIPTION DESCRIPTION	63P6	64P6				REMARKS REMARQUES
1	64E–43111–02–8D	BRACKET, CLAMP 1 PRESSE 1	1	1				
2	6G5–45251–02	ANODE ANODE	1	1				
3	6G5–44526–00	PLATE PLAQUE	2	2				
4	97095–06030	BOLT BOULON	4	4				
5	92995–06100	WASHER, SPRING RONDELLE, GROWER	4	4				
6	6E5–82148–00	WIRE, LEAD 4 FIL 4	1	1				
7	97095–06010	BOLT BOULON	1	1				
8	92995–06600	WASHER RONDELLE	1	1				
9	64E–43112–02–8D	BRACKET, CLAMP 2 PRESSE 2	1	1				
10	6E5–82148–00	WIRE, LEAD 4 FIL 4	1	1				
11	97885–06012	SCREW, PAN HEAD VIS, A ENCOCHE	1	1				
12	92995–06600	WASHER RONDELLE	1	1				
13	93700–06M03	NIPPLE, GREASE PION	1	1				
14	64E–43131–10	BOLT, CLAMP BRACKET BOULON, PRESSE	1	1				
15	97095–08020	BOLT BOULON	1	1				
16	92995–08100	WASHER RONDELLE	1	1				
17	90386–25M31	BUSH DOUILLE	2	2				
18	90201–26M59	WASHER, PLATE RONDELLE, PLATE	2	2				
19	90185–22007	NUT, SELF-LOCKING ECROU,AUTO-BLOQUANT	1	1				
20	90465–11M10	CLAMP BRIDE	1	1				
21	64E–43311–10–8D	BRACKET, SWIVEL 1 SUPPORT, PIVOT 1	1	1				
22	90465–08M63	CLAMP BRIDE	1	1				
23	93700–06M03	NIPPLE, GREASE PION	5	5				
24	66K–82149–00	WIRE, LEAD 3 FIL 3	1	1				
25	6G5–43144–00	HOOK, SPRING CROCHET	1	1				
26	97095–06010	BOLT BOULON	1	1				
27	6G5–43181–10	LEVER, TILT STOP LEVIER, VERROUILLAGE RELEVAGE	1	1				

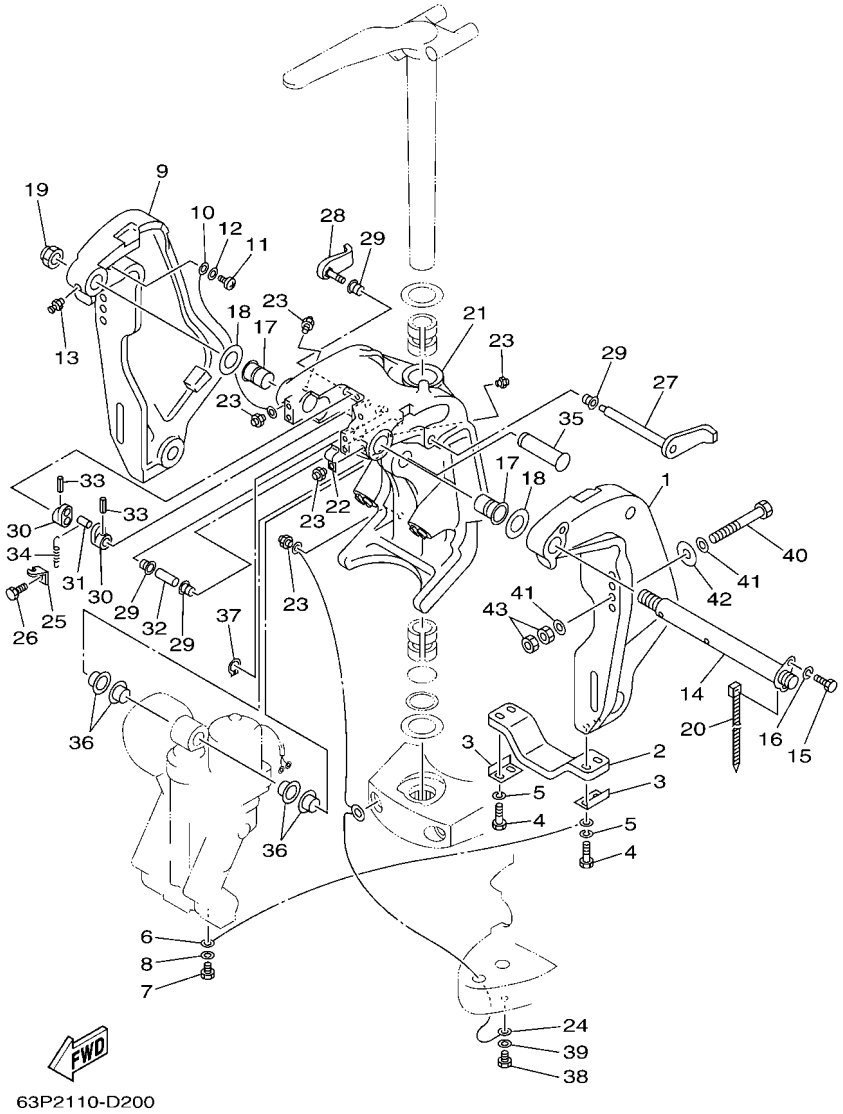

FIG. 21 BRACKET 1 — SUPPORT 1

REF. NO.	PART NO. N° PIECES	DESCRIPTION DESCRIPTION	63P6	64P6				REMARKS REMARQUES
28	6G5–43185–10	LEVER, TILT STOP LEVIER, VERROUILLAGE RELEVAGE	1	1				
29	90386–10M16	BUSH DOUILLE	4	4				
30	6G5–43148–00	COLLAR, DISTANCE ENTRETOISE	2	2				
31	90249–06M19	PIN GOUPILLE	1	1				
32	90387–10M05	COLLAR COLLERETTE	1	1				
33	91690–30020	PIN, SPRING AGRAFFE	2	2				
34	90506–16003	SPRING, TENSION RESSORT, TENSION	1	1				
35	64E–43126–00	PIN, UPPER SHOCK MOUNT AXE, SUPERIEUR AMORTISSEUR	1	1				
36	90386–22M98	BUSH DOUILLE	4	4				
37	93410–22M11	CIRCLIP CLIPS	1	1				
38	97095–06010	BOLT BOULON	1	1				
39	92995–06600	WASHER RONDELLE	1	1				
40	90101–12M05	BOLT (L:130MM) BOULON (L:130MM)	4	4				
41	90201–13M01	WASHER, PLATE RONDELLE, PLATE	8	8				
42	90201–12M05	WASHER, PLATE RONDELLE, PLATE	4	4				
43	95380–12600	NUT ECROU	8	8				

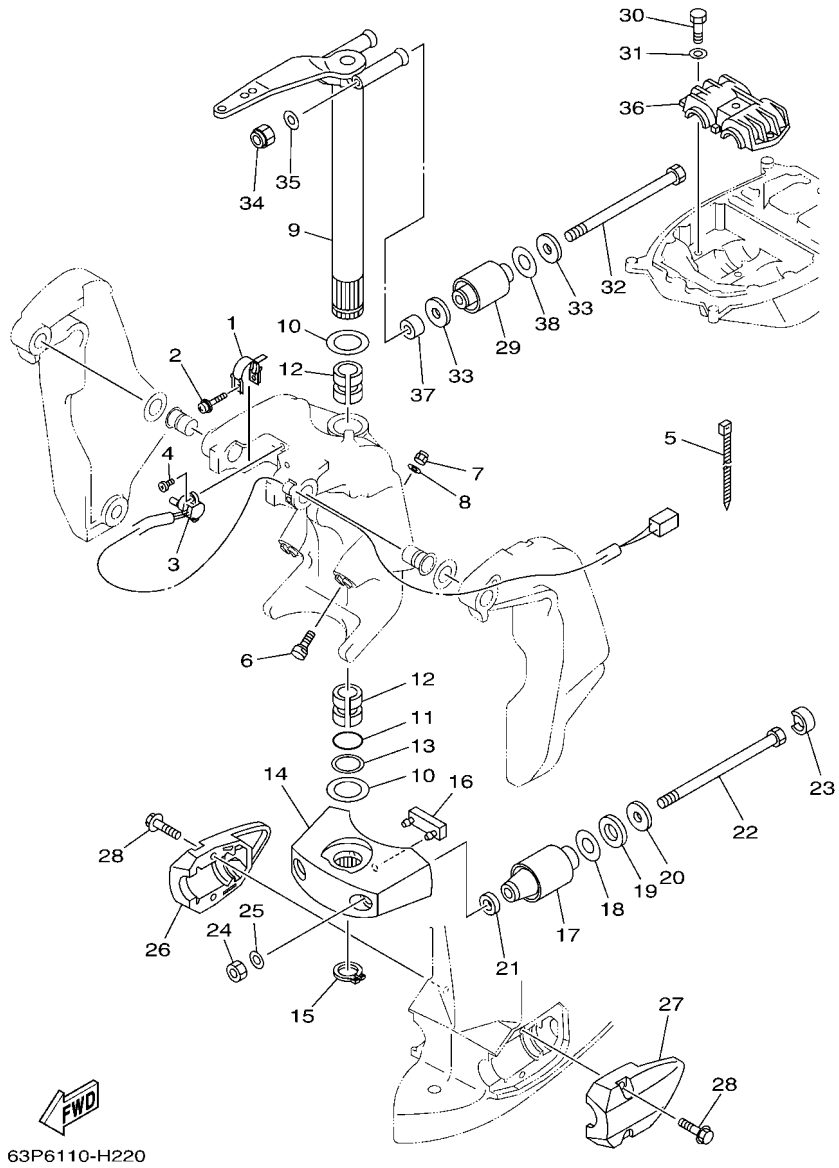

FIG. 22 BRACKET 2 — SUPPORT 2

REF. NO.	PART NO. N° PIECES	DESCRIPTION DESCRIPTION	63P6	64P6				REMARKS REMARQUES
1	64E–43139–10	CAM, TRIM SENDER VILEBREQUIN TRUM	1	1				
2	90159–05059	SCREW, WITH WASHER VIS, AVEC RONDELLE	1	1				
3	67H–83672–00	TRIM SENDER INCLINER RACCORD	1	1				
4	97885–06016	SCREW, PAN HEAD VIS, A ENCOCHE	2	2				
5	90465–11M10	CLAMP BRIDE	3	3				
6	63P–43376–00	BOLT, THRUST RECEIVER BOULON	2	2				
7	95780–10300	NUT, FLANGE ECROU	2	2				
8	92995–10600	WASHER RONDELLE	2	2				
9	66K–42510–02–8D	STEERING BRACKET ASSY DIRECTION SUPPORT (ENS.)	1	1				
10	90201–38M60	WASHER, PLATE RONDELLE, PLATE	2	2				
11	93210–37MH7	O-RING JOINT TORIQUE	1	1				
12	90386–38M32	BUSH DOUILLE	2	2				
13	90202–40M47	WASHER, PLATE RONDELLE, PLATE	1	1				
14	68V–44551–00–8D	HOUSING, LOWER MOUNT RUBBER BOITIER, SILENT-BLOC INFERIEUR	1	1				
15	93410–37M04	CIRCLIP CLIPS	1	1				
16	61A–44575–00	DAMPER, LOWER MOUNT RUBBER SILENT-BLOC, INFERIEUR	1	1				
17	60V–44555–00–94	MOUNT DAMPER, LOWER SIDE SILENT-BLOC, INFERIEUR LATERAL	2	2				L(20.3") L(20.3")
	63P–44555–00–94	MOUNT DAMPER, LOWER SIDE SILENT-BLOC, INFERIEUR LATERAL	2	2				X(25.3") X(25.3")
18	90201–35008	WASHER, PLATE RONDELLE, PLATE	2	2				
19	90202–32M19	WASHER, PLATE RONDELLE, PLATE	2	2				
20	90201–16M55	WASHER, PLATE RONDELLE, PLATE	2	2				
21	90201–15M58	WASHER, PLATE RONDELLE, PLATE	2	2				
22	90109–14007	BOLT BOULON	2	2				
23	69J–44533–00	DAMPER, UPPER MOUNT RUBBER COUVERCLE, SUSPENSION INFERIEU	2	2				
24	95380–14600	NUT ECROU	2	2				
25	92995–14600	WASHER RONDELLE	2	2				
26	63P–44553–00–8D	COVER, LOWER MOUNT COUVERCLE, SUSPENSION INFERIEU	1	1				

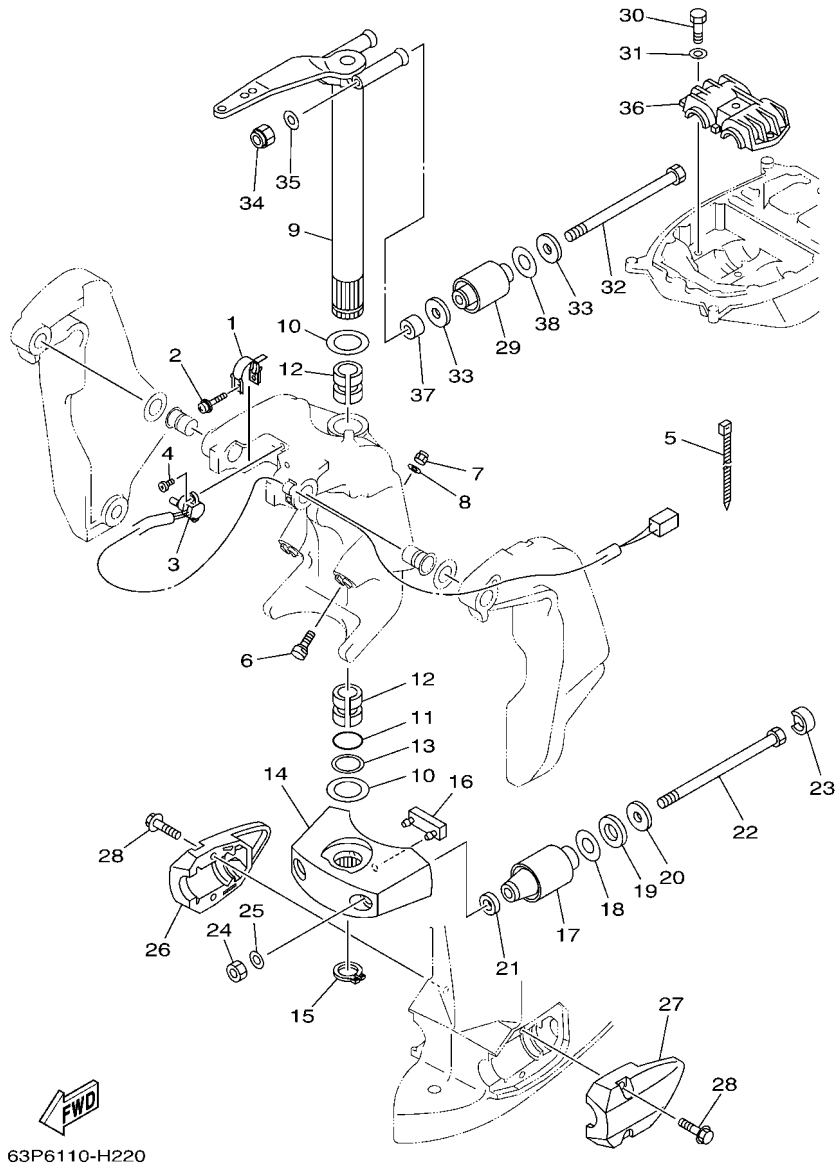

FIG. 22 BRACKET 2 — SUPPORT 2

REF. NO.	PART NO. N° PIECES	DESCRIPTION DESCRIPTION	63P6	64P6				REMARKS REMARQUES
27	63P–44556–00–8D	COVER, LOWER MOUNT 2 COUVERCLE,SUSPENSION INFERIEU	1	1				
28	90119–10049	BOLT, WITH WASHER BOULON, AVEC RONDELLE	4	4				
29	63P–44514–00–94	MOUNT DAMPER, UPPER SIDE SILENT-BLOC, SUPERIEUR LATERAL	2	2				
30	97075–10045	BOLT BOULON	3	3				
31	92995–10600	WASHER RONDELLE	3	3				
32	90109–14005	BOLT BOULON	2	2				
33	90201–16M01	WASHER, PLATE RONDELLE, PLATE	4	4				
34	90185–14M00	NUT, SELF-LOCKING ECROU,AUTO-BLOQUANT	2	2				
35	92995–14600	WASHER RONDELLE	2	2				
36	63P–44511–00–94	COVER, UPPER MOUNT COUVERCLE, SUSPENSION SUPERIEU	1	1				
37	90387–14004	COLLAR COLLERETTE	2	2				
38	90202–28001	WASHER, PLATE RONDELLE, PLATE	2	2				

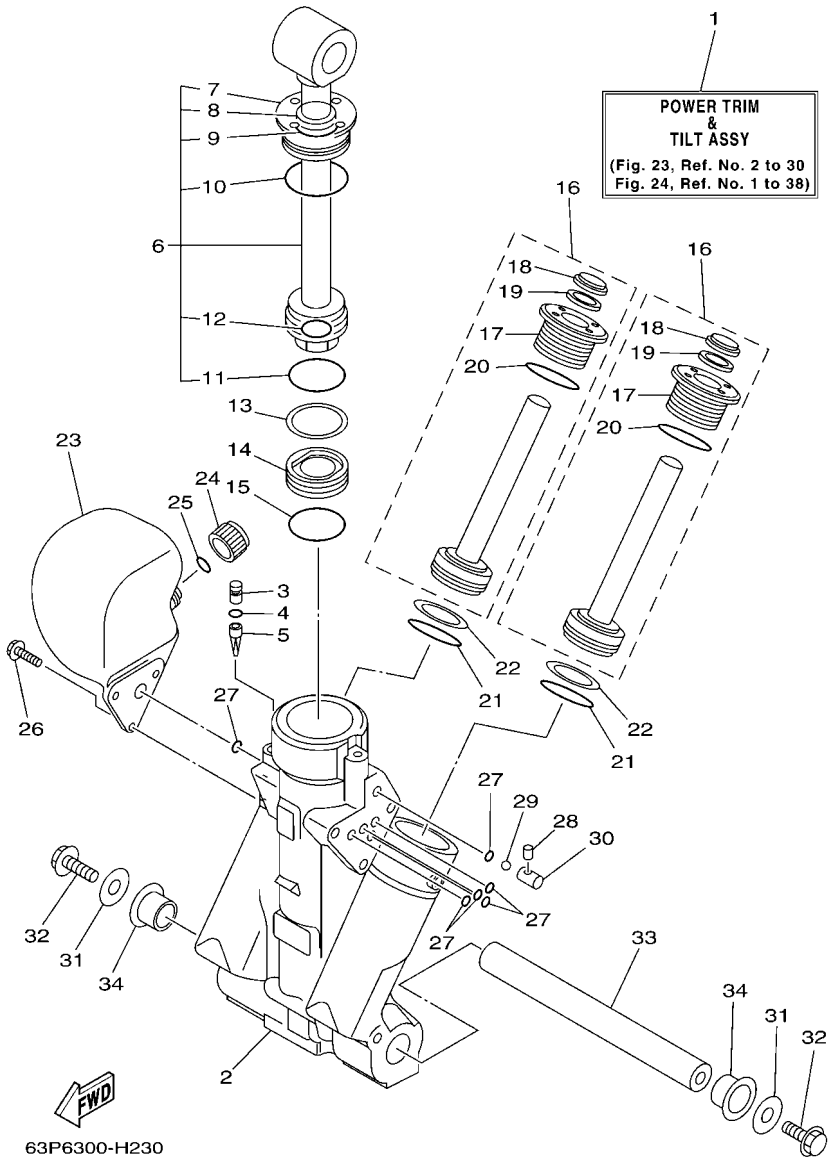

FIG. 23 POWER TRIM & TILT ASSY 1 — PUISSANCE PARER ET INCLINER 1

REF. NO.	PART NO. N° PIECES	DESCRIPTION DESCRIPTION	63P6	64P6				REMARKS REMARQUES
1	63P–43800–02–8D	POWER TRIM & TILT ASSY PUISSANCE PARER ET INCLINER (E	1	1				
2	64E–43825–02	HOUSING, TRIM & TILT CARTER	1	1				
3	64E–4388J–00	PLUG 2 BOUCHON 2	1	1				
4	93210–10M74	O-RING JOINT TORIQUE	1	1				
5	64E–43817–00	FILTER 2 FILTRE 2	1	1				
6	63P–43810–01	TILT PISTON SUB ASSY INCLINER PISTON AUXILIAIRE(ENS	1	1				
7	64E–43811–01	.SCREW, CYLINDER END .VIS, CYLINDRE RACCORD	1	1				
8	64E–43898–00	.SEAL ,DUST 2 .JOINT ANTI-PUSSIERE	1	1				
9	64E–43867–00	.O-RING .JOINT TORIQUE	1	1				
10	64E–43866–00	.O-RING .JOINT TORIQUE	1	1				
11	6E5–43862–00	.O-RING .JOINT TORIQUE	1	1				
12	64E–43883–00	.O-RING .JOINT TORIQUE	1	1				
13	6E5–43872–00	RING, BACK UP RESSORT	1	1				
14	6E5–43814–02	PISTON, FREE PISTON	1	1				
15	6E5–43862–00	O-RING JOINT TORIQUE	1	1				
16	64E–43820–01	TRIM PISTON SUB ASSY PARER PISTON AUXILIAIRE (ENS.)	2	2				
17	64E–43821–01	.SCREW, TRIM CYLINDER END .VIS	1	1				
18	64E–43822–00	.SEAL, TRIM DUST .JOINT	1	1				
19	64E–4384J–00	.SEAL, TRIM DOWN .JOINT	1	1				
20	6G5–43864–00	.O-RING .JOINT TORIQUE	1	1				
21	6E5–43864–00	O-RING JOINT TORIQUE	2	2				
22	6E5–43874–01	RING, BACK UP RESSORT	2	2				
23	64E–43828–00	BODY, RESERVOIR CORPS	1	1				
24	64E–43829–00	PLUG, RESERVOIR BOUCHON	1	1				
25	64E–43897–00	O-RING JOINT TORIQUE	1	1				
26	64E–4388E–00	BOLT ,SCREW (L:14MM) VIS (L:14MM)	3	3				
27	64E–43869–00	O-RING JOINT TORIQUE	6	6				

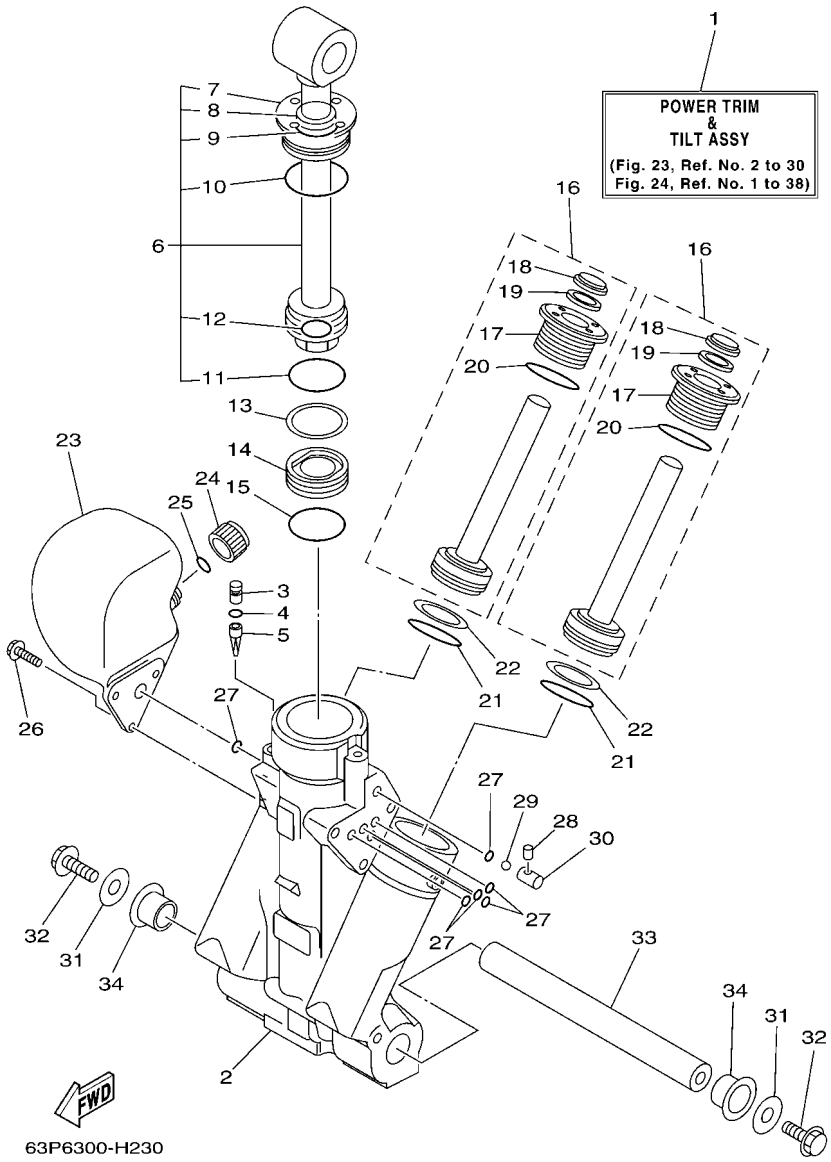

FIG. 23 POWER TRIM & TILT ASSY 1 — PUISSANCE PARER ET INCLINER 1

REF. NO.	PART NO. N° PIECES	DESCRIPTION DESCRIPTION	63P6	64P6				REMARKS REMARQUES
28	64E–4381G–00	PIN COUPILL	1	1				
29	6E5–43858–00	BALL BILLE	1	1				
30	64E–4382G–00	VALVE, SEAT JEU DE POINTEAUX	1	1				
31	90201–10060	WASHER, PLATE RONDELLE, PLATE	2	2				
32	97575–10530	BOLT, WITH WASHER VIS HEXAGONAL AVC RONDELLE	2	2				
33	6BC–43818–00	PIN, LOWER SHOCK MOUNT AXE, INFERIEUR AMORTISSEUR	1	1				
34	90386–22M98	BUSH DOUILLE	2	2				

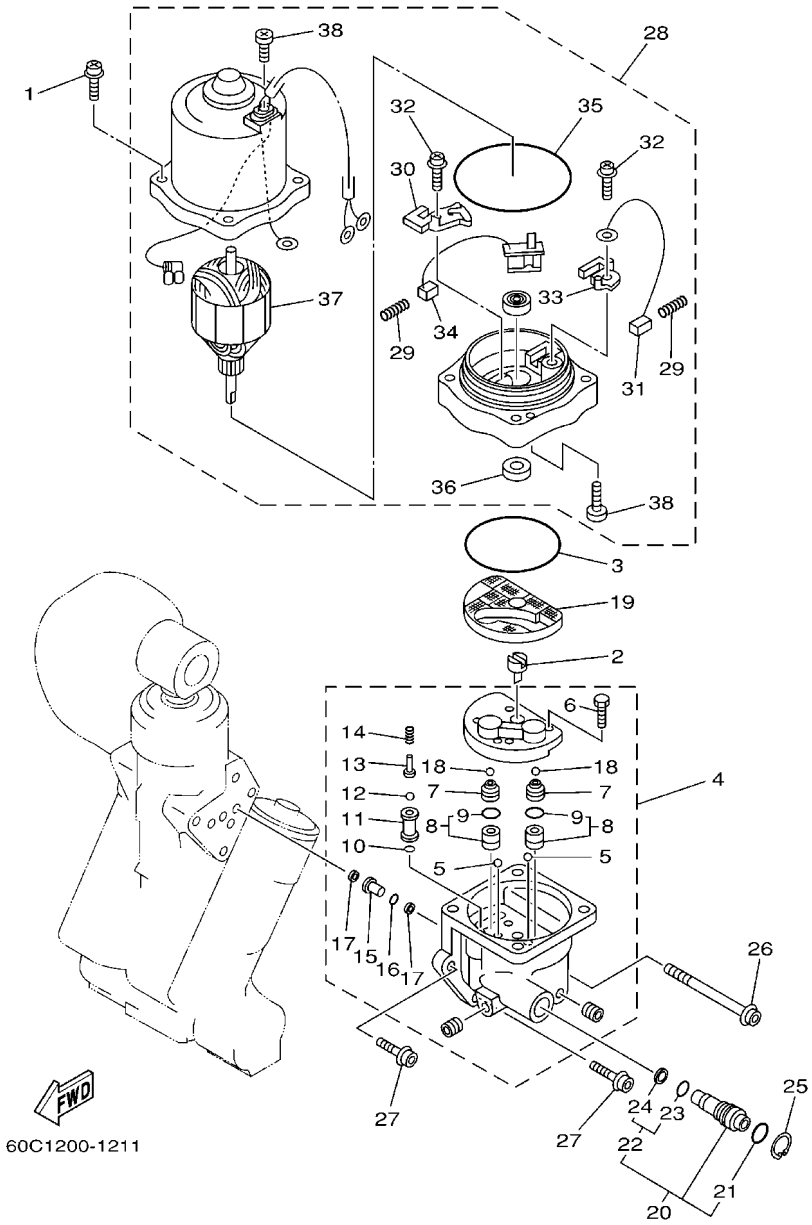

FIG. 24 POWER TRIM & TILT ASSY 2 — PUISSANCE PARER ET INCLINER 2

REF. NO.	PART NO. N° PIECES	DESCRIPTION DESCRIPTION	63P6	64P6				REMARKS REMARQUES
1	64E–4388E–10	BOLT ,SCREW (L:34.7MM) VIS (L:34.7MM)	4	4				
2	64E–43831–00	CONNECTOR, SHAFT RACCORD	1	1				
3	64E–43868–00	O-RING JOINT TORIQUE	1	1				
4	64E–43830–00	GEAR PUMP ASSY POMPE A PIGNON (ENS.)	1	1				
5	72X–43858–00	.BALL .BILLE	2	2				
6	64E–43843–00	.SCREW, VALVE LOCK .VIS	4	4				
7	64E–43841–00	.PISTON, SHUTTLE .PISTON	2	2				
8	64E–43802–00	.VALVE SUB ASSY .CLAPET AUXILIAIRE (ENS.)	2	2				
9	6E5–43896–00	..O-RING ..JOINT TORIQUE	1	1				
10	6G5–43863–00	.O-RING .JOINT TORIQUE	1	1				
11	64E–43851–00	.SEAT, RELIEF VALVE .SIEGE	1	1				
12	64E–43858–00	.BALL .BILLE	1	1				
13	64E–43859–00	.PIN, VALVE SUPPORT .GOUPILLE	1	1				
14	64E–43855–00	.SPRING, UP RELIEF .RESSORT	1	1				
15	64E–43850–00	.VALVE SUB ASSY .CLAPET AUXILIAIRE (ENS.)	1	1				
16	64E–43865–00	.O-RING .JOINT TORIQUE	1	1				
17	64E–43816–00	.FILTER 1 .FILTRE 1	2	2				
18	64E–43858–00	.BALL .BILLE	2	2				
19	64E–43817–10	FILTER 2 FILTRE 2	1	1				
20	64E–43860–00	MANUAL VALVE SUB-ASSY SOUPAPE, MANUEL (ENS.)	1	1				
21	72X–85075–L0	.O-RING .JOINT TORIQUE	1	1				
22	64E–43827–00	.RING SET .BILLE	1	1				
23	64E–4387A–00	..O-RING ..JOINT TORIQUE	1	1				
24	64E–43873–00	..RING, BACK UP ..RESSORT	1	1				
25	64E–43875–00	RING, SNAP RESSORT	1	1				
26	64E–43879–10	SCREW, WITH WASHER VIS, AVEC RONDELLE	1	1				
27	64E–43879–00	SCREW, WITH WASHER VIS, AVEC RONDELLE	2	2				

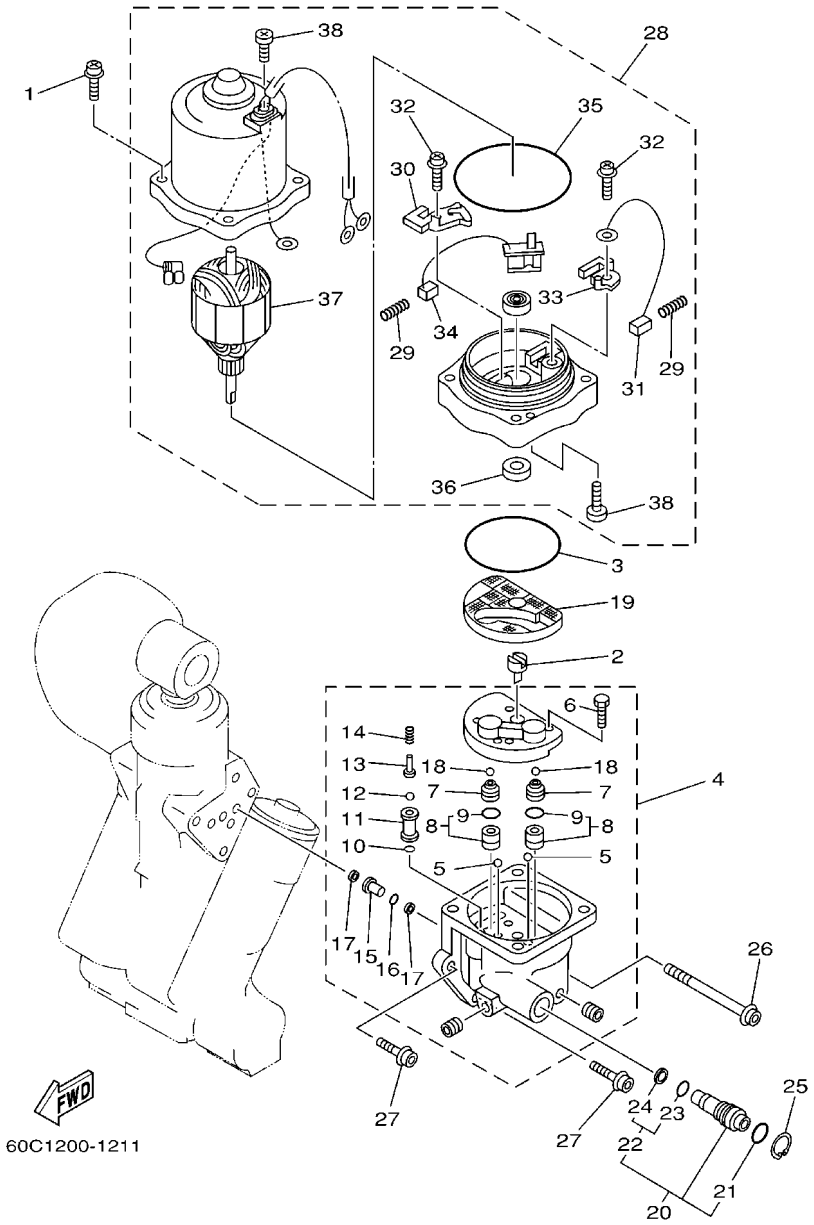

FIG. 24 POWER TRIM & TILT ASSY 2 — PUISSANCE PARER ET INCLINER 2

REF. NO.	PART NO. N° PIECES	DESCRIPTION DESCRIPTION	63P6	64P6				REMARKS REMARQUES
28	67H–43880–02	MOTOR ASSY MOTEUR (ENS.)	1	1				
29	6H1–4386K–10	.SPRING, BRUSH .RESSORT, BALAI	2	2				
30	64E–4380J–00	.HOLDER, BRUSH .PORTE-BALAI	1	1				
31	64E–43891–00	.BRUSH 1 .BALAI 1	1	1				
32	97607–04310	.SCREW,WITH WASHER .VIS HEXAGONAL	2	2				
33	64E–4380F–00	.HOLDER, BRUSH 2 .PORTE-BALAI 2	1	1				
34	64E–43892–00	.BRUSH 2 .BALAI 2	1	1				
35	6G5–43865–00	.O-RING .JOINT TORIQUE	1	1				
36	93102–08M43	.OIL SEAL .JOINT SPY	1	1				
37	64E–43805–00	.ARMATURE ASSY .INDUIT (ENS.)	1	1				
38	64E–43843–10	.SCREW, VALVE LOCK .VIS	3	3				

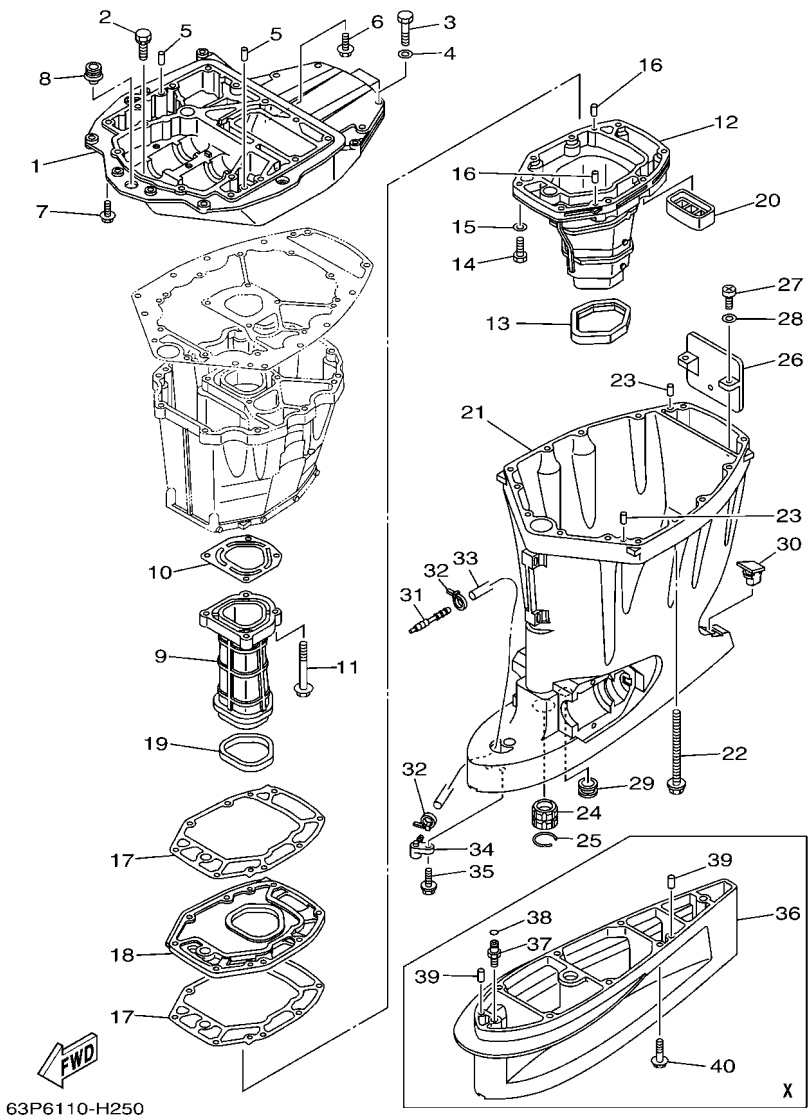

FIG. 25 UPPER CASING FOURREAU

REF. NO.	PART NO. N° PIECES	DESCRIPTION DESCRIPTION	63P6	64P6				REMARKS REMARQUES
1	63P–41137–01–CA	GUIDE, EXHAUST COLLECTEUR D'ECHAPPEMENT	1	1				
2	90119–08M79	BOLT, WITH WASHER BOULON, AVEC RONDELLE	2	2				
3	97075–10045	BOLT BOULON	4	4				
4	92995–10600	WASHER RONDELLE	4	4				
5	93608–16M16	PIN, DOWEL AXE	2	2				
6	90119–08M58	BOLT, WITH WASHER BOULON, AVEC RONDELLE	3	3				
7	97575–10535	BOLT, WITH WASHER VIS HEXAGONAL AVC RONDELLE	4	4				
8	6E5–42724–00	GROMMET PASSE-FIL	1	1				
9	63P–41131–01–9S	MANIFOLD, EXT. 1 PIPE D'ECHAPPEMENT	1	1				
10	63P–41133–A0	GASKET, EXHAUST MANIFOLD 1 JOINT, PIPE D'ECHAPPEMENT	1	1				
11	97575–08560	BOLT, WITH WASHER VIS HEXAGONAL AVC RONDELLE	4	4				
12	63P–14711–01–9S	MUFFLER 1 POT D'ECHAPPEMENT 1	1	1				
13	69J–45123–00	GASKET, MUFFLER JOINT, POT DE DETENTE	1	1				
14	97075–08035	BOLT BOULON	8	8				
15	92995–08600	WASHER RONDELLE	8	8				
16	93606–19M23	PIN, DOWEL GOUPILLE	2	2				
17	63P–41134–A0	GASKET, EXHAUST MANIFOLD JOINT, PIPE D'ECHAPPEMENT	2	2				
18	63P–45181–01–9S	PLATE PLAQUETTE	1	1				
19	63P–41138–00	SEAL, EXT. 1 JOINT DE GROUPE 1	1	1				
20	69J–45127–00	SEAL JOINT	1	1				
21	63P–45111–00–8D	CASING, UPPER FOURREAU	1	1				
22	90119–10007	BOLT, WITH WASHER BOULON, AVEC RONDELLE	8	8				
23	93608–16M16	PIN, DOWEL AXE	2	2				
24	6E5–45318–00	BUSHING, DRIVE SHAFT DOUILLE, ARBRE MOTEUR	1	1				
25	93420–36M01	CIRCLIP CIRCLIP, TYPE S	1	1				
26	69J–14624–01	COVER, EXHAUST CACHE D'ECHAPPEMENT	1	1				
27	97880–06016	SCREW, PAN HEAD VIS, TETE TRONCONIQUE	2	2				

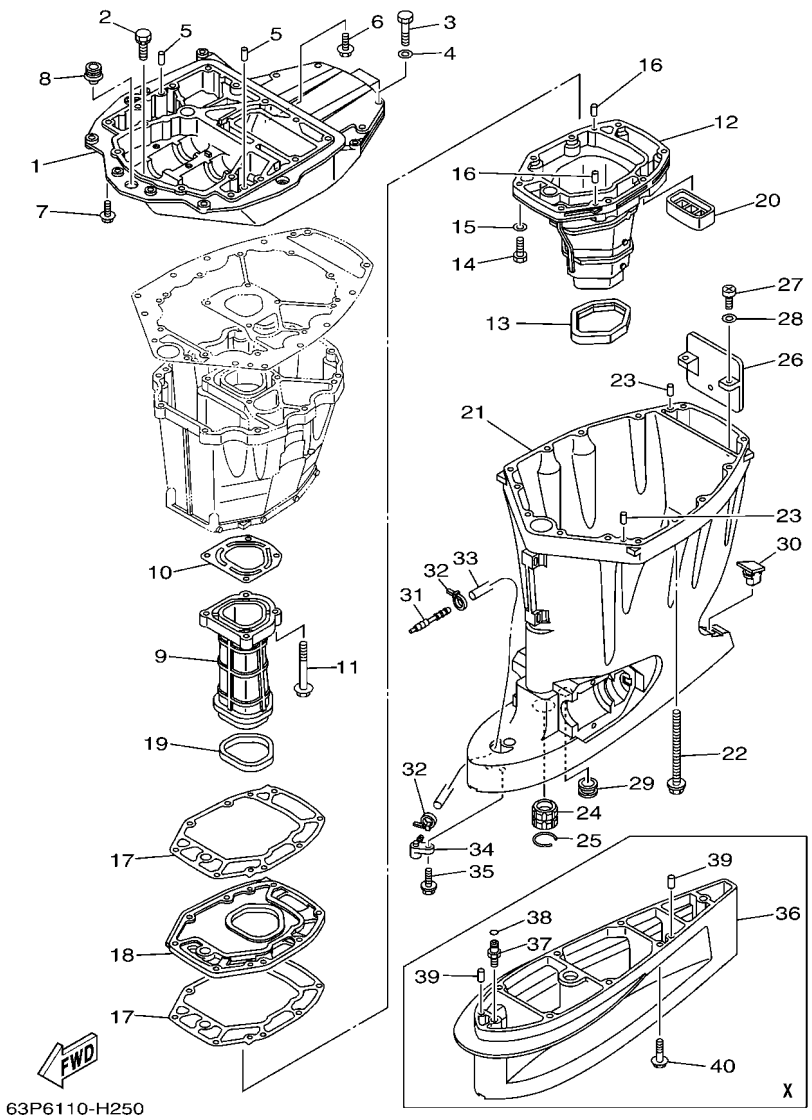

FIG. 25 UPPER CASING — FOURREAU

REF. NO.	PART NO. N° PIECES	DESCRIPTION DESCRIPTION	63P6	64P6				REMARKS REMARQUES
28	92990–06600	WASHER, PLATE RONDELLE, PLATE	2	2				
29	6E5–44366–00	DAMPER, WATER SEAL JOINT, TUBE D'EAU	1	1				
30	6C5–45155–00	CAP CAPUCHON	1	1				
31	6E5–83558–00	END, NIPPLE RACCORD DE NIPPLE	1	1				
32	90465–11M10	CLAMP BRIDE	2	2				
33	90445–070F1	HOSE (L950) DURITE (L950)	1	1				
34	63P–45379–00	NIPPLE, HOSE RACCORD D'ESSENCE	1	1				
35	90119–06M18	BOLT, WITH WASHER BOULON, AVEC RONDELLE	1	1				
36	63P–45211–00–8D	EXTENSION EXTENSION	1	1				X(25.3") X(25.3")
37	63P–45378–00	NIPPLE, HOSE RACCORD, TUYAU	1	1				X(25.3") X(25.3")
38	93210–07003	O-RING JOINT TORIQUE	1	1				X(25.3") X(25.3")
39	93608–16M16	PIN, DOWEL AXE	2	2				X(25.3") X(25.3")
40	90119–10038	BOLT, WITH WASHER BOULON, AVEC RONDELLE	6	6				X(25.3") X(25.3")

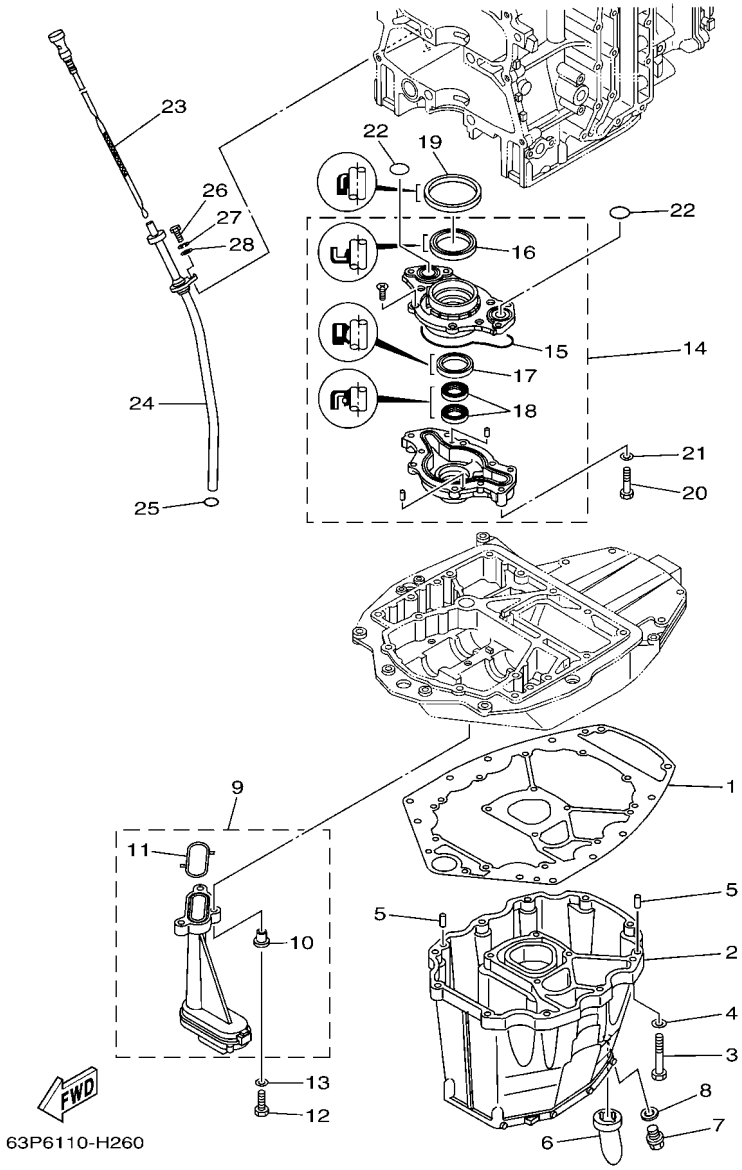

FIG. 26 OIL PAN — VENTILATEUR D'HUILE

REF. NO.	PART NO. N° PIECES	DESCRIPTION DESCRIPTION	63P6	64P6				REMARKS REMARQUES
1	63P–15312–00	GASKET, OIL PAN JOINT DE VENTILATEUR D'HUILE	1	1				
2	63P–15311–01–CA	OIL PAN VENTILATEUR D'HUILE	1	1				
3	97075–08035	BOLT BOULON	10	10				
4	92995–08600	WASHER RONDELLE	10	10				
5	93608–16M16	PIN, DOWEL AXE	2	2				
6	63P–15316–00	DAMPER 1 AMORTISSEUR 1	1	1				
7	90340–14M06	PLUG, STRAIGHT SCREW PLOT, FILETE DROIT	1	1				
8	90430–14M09	GASKET JOINT	1	1				
9	63P–13411–00	STRAINER, OIL FILTRE, HUILE	1	1				
10	90387–06M64	.COLLAR .COLLERETTE	3	3				
11	63P–13415–00	.SEAL, OIL STRAINER .JOINT, FILTRE A HUILE	1	1				
12	97027–06025	BOLT, HEXAGON BOULON	3	3				
13	92907–06600	WASHER, PLATE RONDELLE	3	3				
14	63P–13300–01	OIL PUMP ASSY POMPE A HUILE COMPLETE	1	1				
15	63P–13329–00	.GASKET, PUMP COVER .JOINT, COUVERCLE DE POMPE	1	1				
16	69J–13338–00	.OIL SEAL .JOINT SPY	1	1				
17	6AW–13119–00	.OIL SEAL .JOINT SPY	1	1				
18	69J–13631–00	.OIL SEAL .JOINT SPY	2	2				
19	69J–11355–00	SEAL, CYLINDER 1 JOINT, SPY CYLINDRE	1	1				
20	97095–06040	BOLT BOULON	4	4				
21	92995–06600	WASHER RONDELLE	4	4				
22	93210–25552	O-RING JOINT TORIQUE	2	2				
23	63P–15362–00	PLUG, OIL LEVEL PLOT, NIVEAU D'HUILE	1	1				
24	63P–15377–00	GUIDE, INLET GUIDE D'ADMISSION	1	1				
25	93210–19MJ3	O-RING JOINT TORIQUE	1	1				
26	97095–06020	BOLT BOULON	1	1				
27	92995–06100	WASHER, SPRING RONDELLE, GROWER	1	1				

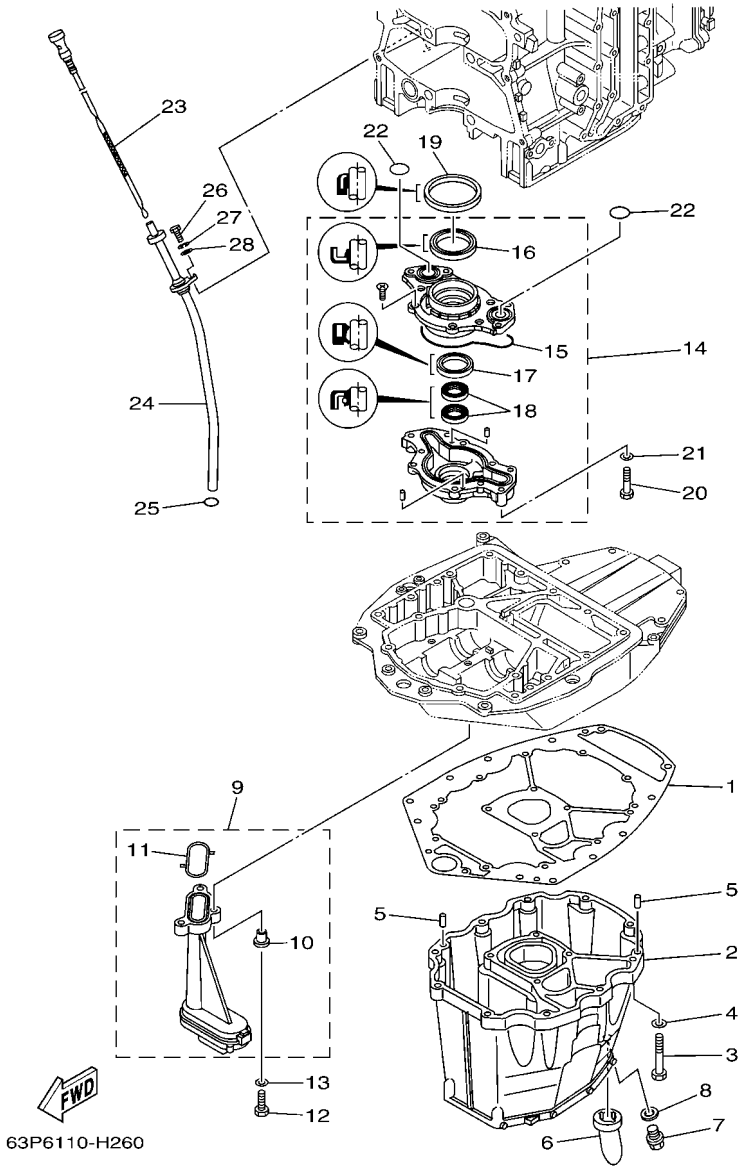

FIG. 26 OIL PAN — VENTILATEUR D'HUILE

REF. NO.	PART NO. N° PIECES	DESCRIPTION DESCRIPTION	63P6	64P6				REMARKS REMARQUES
28	92995–06600	WASHER RONDELLE	1	1				

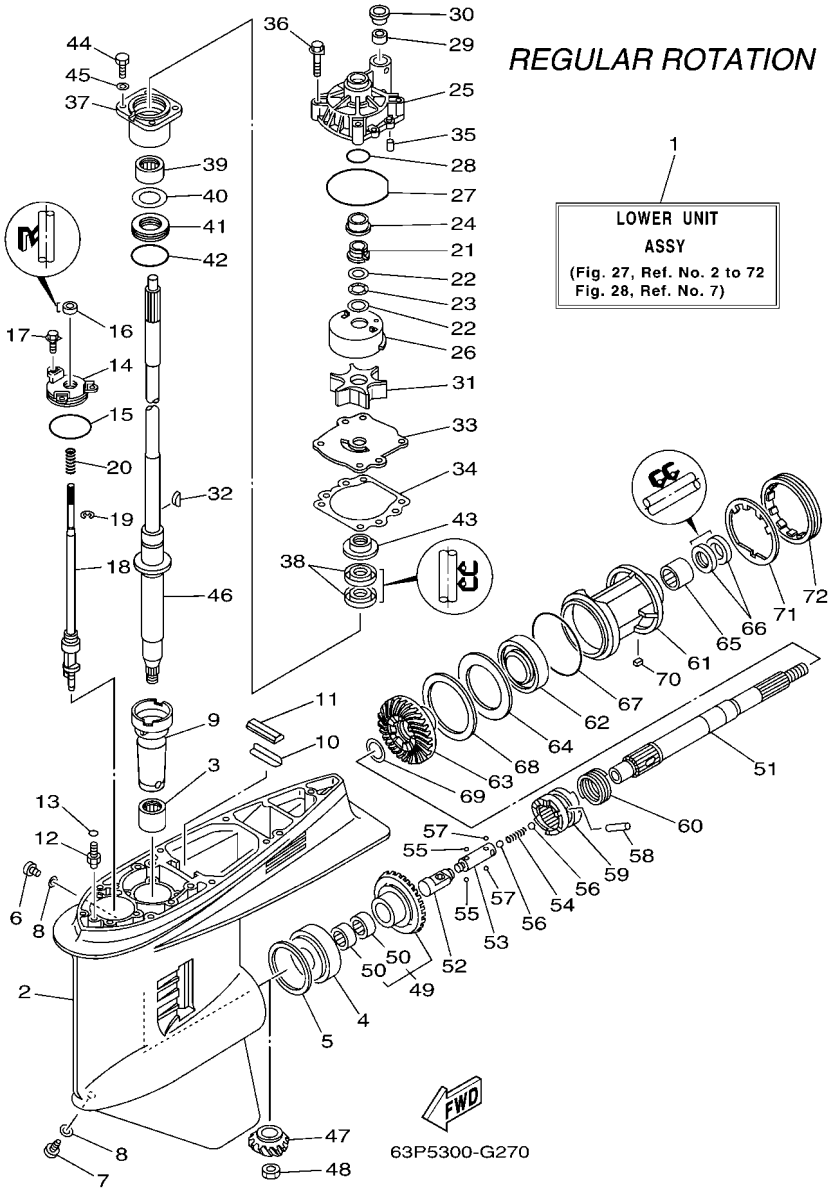

FIG. 27 LOWER CASING & DRIVE 1 — BOITIER D'HELICE TRANSMISSION1

REF. NO.	PART NO. N° PIECES	DESCRIPTION DESCRIPTION	63P6	64P6				REMARKS REMARQUES
1	63P–45300–02–8D	LOWER UNIT ASSY UNITE INFERIEURE (ENS.)	1					L(20.3"),RH L(20.3"),RH
	63P–45300–12–8D	LOWER UNIT ASSY UNITE INFERIEURE (ENS.)	1					X(25.3"),RH X(25.3"),RH
2	6J9–45301–05–8D	CASING, LOWER BEQUILLE	1					
3	93311–928U5	BEARING ROULEMENT	1					
4	93332–000V3	BEARING ROULEMENT	1					
5	6G5–45567–01	SHIM (T:0.10MM) CALE (T:0.10MM)	1					UR UR
	6G5–45567–10	SHIM (T:0.12MM) CALE (T:0.12MM)	1					UR UR
	6G5–45567–20	SHIM (T:0.15MM) CALE (T:0.15MM)	1					UR UR
	6G5–45567–30	SHIM (T:0.18MM) CALE (T:0.18MM)	1					UR UR
	6G5–45567–40	SHIM (T:0.30MM) CALE (T:0.30MM)	1					UR UR
	6G5–45567–50	SHIM (T:0.40MM) CALE (T:0.40MM)	1					UR UR
	6G5–45567–60	SHIM (T:0.50MM) CALE (T:0.50MM)	1					UR UR
6	90340–08002	PLUG, STRAIGHT SCREW PLOT, FILETE DROIT	1					
7	688–45341–10	PLUG, DRAIN BOUCHON DE VIDANGE	1					
8	90430–08020	GASKET JOINT	2					
9	6G5–45536–01	SLEEVE, DRIVE SHAFT MANCHON, ARBRE MOTEUR	1					
10	663–45376–00–94	GUIDE, SEAL DAMPER BUTEE, JOINT CAOUTCHOUC	1					
11	688–45375–00	DAMPER, SEAL BOURRELET, CAOUTCHOUC	1					
12	63P–45378–00	NIPPLE, HOSE RACCORD, TUYAU	1					
13	93210–07003	O-RING JOINT TORIQUE	1					
14	6E5–45321–00	PLATE PLAQUETTE	1					
15	93210–58144	O-RING JOINT TORIQUE	1					
16	93106–09014	OIL SEAL JOINT SPY	1					
17	90119–06M10	BOLT, WITH WASHER BOULON, AVEC RONDELLE	3					
18	63P–44150–00	SHIFT CAM ASSY CAME D'INVERSION	1					L(20.3"),RH L(20.3"),RH
	63P–44150–10	SHIFT CAM ASSY CAME D'INVERSION	1					X(25.3"),RH X(25.3"),RH
19	99001–08600	CIRCLIP CIRCLIP	1					

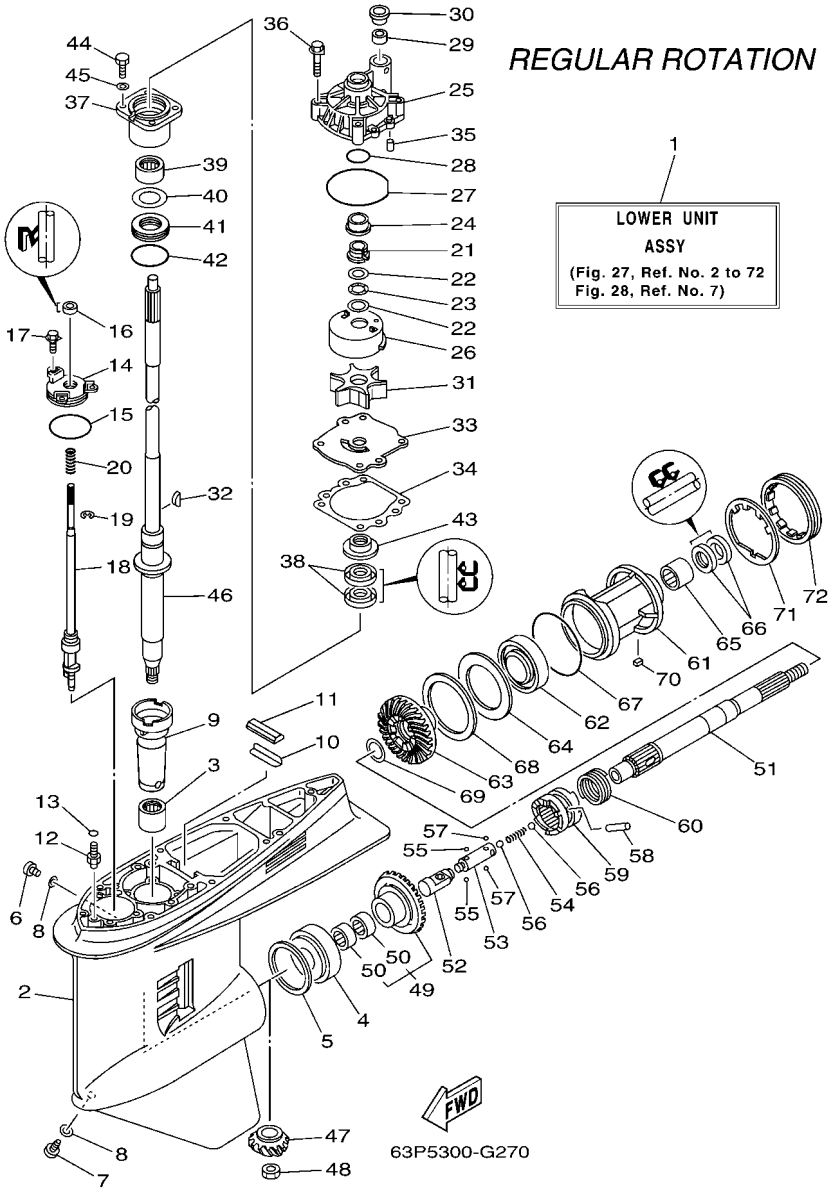

FIG. 27 LOWER CASING & DRIVE 1 — BOITIER D'HELICE TRANSMISSION1

REF. NO.	PART NO. N° PIECES	DESCRIPTION DESCRIPTION	63P6	64P6				REMARKS REMARQUES
20	90501–11M10	SPRING, COMPRESSION RESSORT, COMPRESSION	1					
21	61A–45538–00	SPACER 1 ENTRETOISE	1					
22	90201–22M01	WASHER, PLATE RONDELLE, PLATE	2					
23	90206–22M19	WASHER, WAVE RONDELLE, ONDULEE	1					
24	61A–45527–00	COLLAR, DRIVE SHAFT ENTRETOISE	1					
25	61A–44311–01	HOUSING, WATER PUMP CORPS, POMPE A EAU	1					
26	61A–44322–02	INSERT, CARTRIDGE CUVETTE	1					
27	93210–86M38	O-RING JOINT TORIQUE	1					
28	93210–37160	O-RING JOINT TORIQUE	1					
29	6E5–44365–00	DAMPER, WATER SEAL JOINT, TUBE D'EAU	1					
30	6E5–44312–00	COVER, WATER PUMP HOUSING COUVERCLE	1					
31	6E5–44352–01	IMPELLER TURBINE	1					
32	90280–04M05	KEY, WOODRUFF CLAVETTE, DEMI-LUNE	1					
33	6G5–44323–00	OUTER PLATE, CARTRIDGE PLAQUE EXTERIEURE	1					
34	6E5–44315–A0	GASKET, WATER PUMP JOINT, POMPE A EAU	1					
35	93606–12019	PIN, DOWEL GOUPILLE	2					
36	90119–08M14	BOLT, WITH WASHER BOULON, AVEC RONDELLE	4					
37	6E5–45331–00–9S	HOUSING, BEARING FLASQUE, ROULEMENT	1					
38	93101–28M16	OIL SEAL JOINT SPY	2					
39	93317–330U2	BEARING ROULEMENT	1					
40	6E5–45587–01	SHIM (T:0.10MM) CALE (T:0.10MM)	1					UR UR
	6E5–45587–10	SHIM (T:0.12MM) CALE (T:0.12MM)	1					UR UR
	6E5–45587–20	SHIM (T:0.15MM) CALE (T:0.15MM)	1					UR UR
	6E5–45587–30	SHIM (T:0.18MM) CALE (T:0.18MM)	1					UR UR
	6E5–45587–40	SHIM (T:0.30MM) CALE (T:0.30MM)	1					UR UR
	6E5–45587–50	SHIM (T:0.40MM) CALE (T:0.40MM)	1					UR UR
	6E5–45587–60	SHIM (T:0.50MM) CALE (T:0.50MM)	1					UR UR

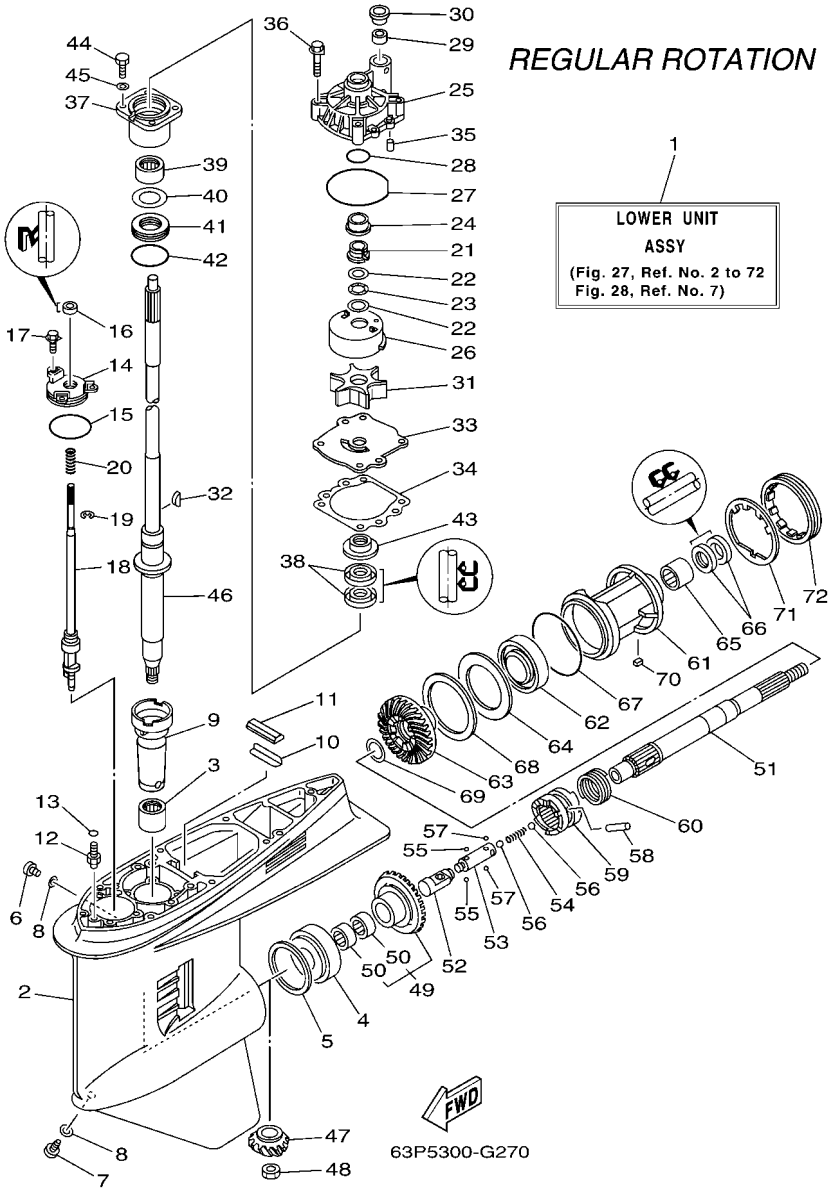

FIG. 27 LOWER CASING & DRIVE 1 — BOITIER D'HELICE TRANSMISSION1

REF. NO.	PART NO. N° PIECES	DESCRIPTION DESCRIPTION	63P6	64P6				REMARKS REMARQUES
41	93341–930V2	BEARING CERVEAUX DE DIRECTION	1					
42	93210–55M14	O-RING JOINT TORIQUE	1					
43	6E5–45344–00	COVER, OIL SEAL FLASQE, JOINT D'HUILE	1					
44	97095–08025	BOLT BOULON	4					
45	92995–08600	WASHER RONDELLE	4					
46	63P–45501–00	DRIVE SHAFT COMP. ARBRE MOTEUR COMP.	1					L(20.3") L(20.3")
	63P–45501–10	DRIVE SHAFT COMP. ARBRE MOTEUR COMP.	1					X(25.3") X(25.3")
47	63P–45551–00	PINION (14T) PIGNON D'ATTAQUE (14D)	1					
48	90170–16M01	NUT ECROU	1					
49	63P–45560–02	GEAR 1 (28T) PIGNON 1 (28T)	1					
50	93315–425V3	.BEARING .ROULEMENT	2					
51	6J9–45611–01	SHAFT, PROPELLER ARBRE, HELICE	1					
52	6E5–45641–03	SHIFTER EMBRAYAGE	1					
53	6E5–45634–01	SLIDE, SHIFT CONTRE-POUSSOIR	1					
54	90501–16M37	SPRING, COMPRESSION RESSORT, COMPRESSION	1					
55	93507–32009	BALL BILLE	2					
56	93511–32017	BALL BILLES	2					
57	93503–16003	BALL BILLES	2					
58	90250–08M07	PIN, STRAIGHT GOUPILLE, DROITE	1					
59	63P–45631–10	CLUTCH, DOG CRABOT	1					
60	6E5–45633–01	RING, CROSS PIN JONC, GOUPILLE CRABOT	1					
61	6J9–45332–00–CA	HOUSING, BEARING FLASQUE, ROULEMENT	1					
62	93306–209U0	BEARING ROULEMENT	1					
63	63P–45571–02	GEAR 2 (28T) PIGNON 2 (28T)	1					
64	6G5–45576–10	WASHER, THRUST RONDELLE DE CALAGE	1					
65	93315–43061	BEARING ROULEMENT	1					
66	93101–30M17	OIL SEAL JOINT SPY	2					

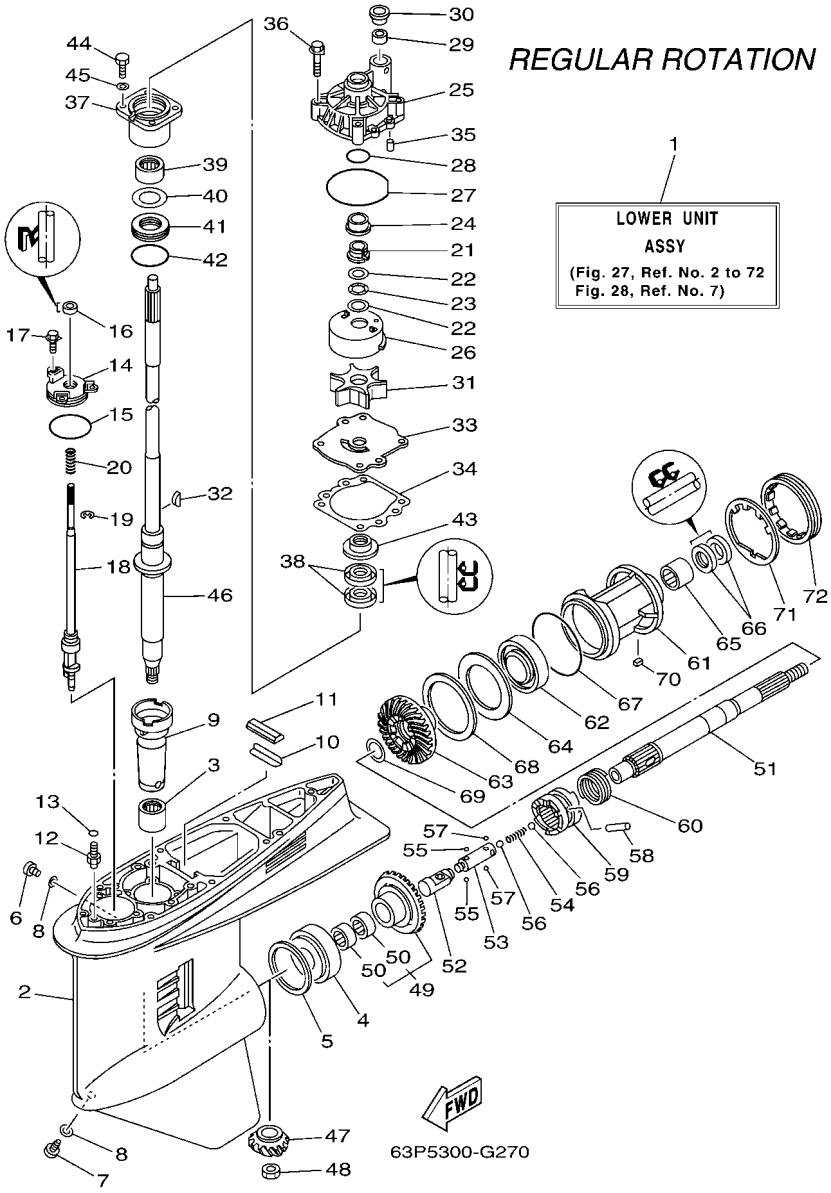

FIG. 27 LOWER CASING & DRIVE 1 — BOITIER D'HELICE TRANSMISSION1

REF. NO.	PART NO. N° PIECES	DESCRIPTION DESCRIPTION	63P6	64P6				REMARKS REMARQUES
67	93210–97M55	O-RING JOINT TORIQUE	1					
68	6G5–45577–02	SHIM (T:0.10MM) CALE (T:0.10MM)	1					UR UR
	6G5–45577–10	SHIM (T:0.12MM) CALE (T:0.12MM)	1					UR UR
	6G5–45577–20	SHIM (T:0.15MM) CALE (T:0.15MM)	1					UR UR
	6G5–45577–30	SHIM (T:0.18MM) CALE (T:0.18MM)	1					UR UR
	6G5–45577–40	SHIM (T:0.30MM) CALE (T:0.30MM)	1					UR UR
	6G5–45577–50	SHIM (T:0.40MM) CALE (T:0.40MM)	1					UR UR
	6G5–45577–60	SHIM (T:0.50MM) CALE (T:0.50MM)	1					UR UR
69	90201–30M92	WASHER, PLATE RONDELLE, PLATE	1					
70	90282–04M00	KEY, STRAIGHT CLAVETTE, DROITE	1					
71	6G5–45383–01	WASHER, CLAW FREIN D'ECROU	1					
72	6G5–45384–00	NUT ECROU	1					

FIG. 28 LOWER CASING & DRIVE 2 — BOITIER D'HELICE TRANSMISSION2

REGULAR ROTATION

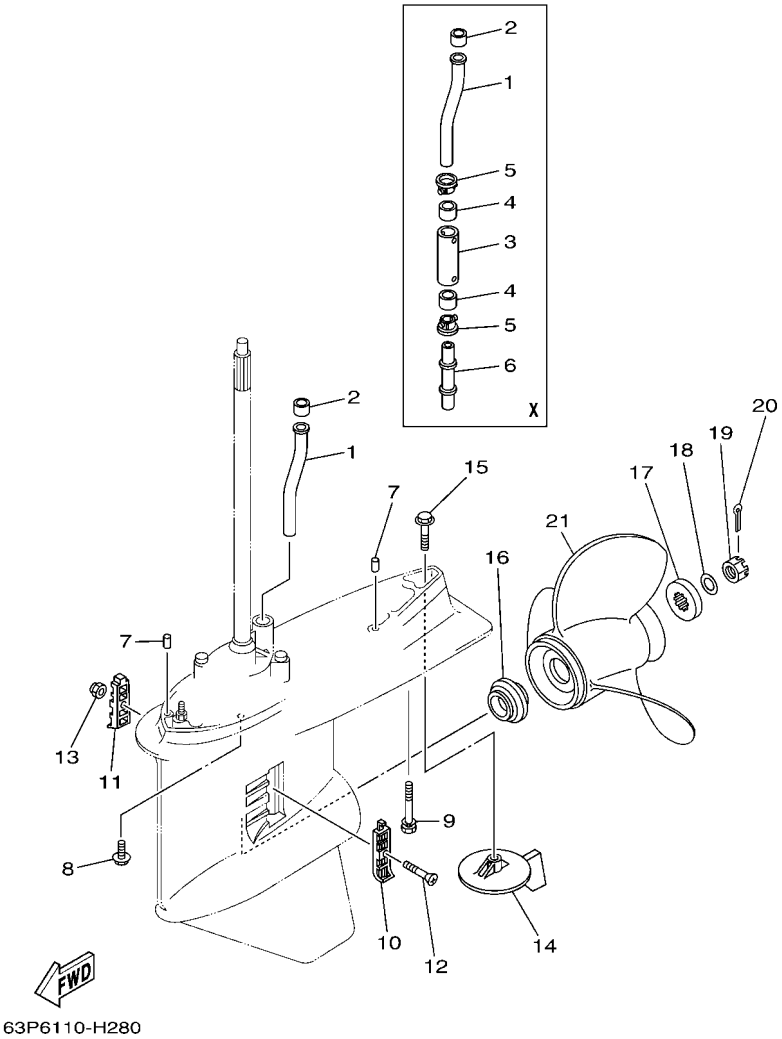

REF. NO.	PART NO. N° PIECES	DESCRIPTION DESCRIPTION	63P6	64P6				REMARKS REMARQUES
1	63P–44361–00	TUBE, WATER TUBE D'EAU	1					
2	6E5–44365–00	DAMPER, WATER SEAL JOINT, TUBE D'EAU	1					
3	63P–44362–00	TUBE, WATER TUBE D'EAU	1					X(25.3") X(25.3")
4	6E5–44365–00	DAMPER, WATER SEAL JOINT, TUBE D'EAU	2					X(25.3") X(25.3")
5	6E5–44312–00	COVER, WATER PUMP HOUSING COUVERCLE	2					X(25.3") X(25.3")
6	63P–44363–00	TUBE, WATER 3 TUBE D'EAU 3	1					X(25.3") X(25.3")
7	93608–16M16	PIN, DOWEL AXE	2					
8	90119–10038	BOLT, WITH WASHER BOULON, AVEC RONDELLE	6					
9	90119–10MA2	BOLT, WITH WASHER BOULON, AVEC RONDELLE	1					L(20.3") L(20.3")
	90119–10008	BOLT, WITH WASHER BOULON, AVEC RONDELLE	1					X(25.3") X(25.3")
10	6J9–45214–00	COVER, WATER INLET 1 GRILLE, ENTREE D'EAU 1	1					
11	6J9–45215–00	COVER, WATER INLET 2 GRILLE, ENTREE D'EAU 2	1					
12	90152–05M08	SCREW, COUNTERSUNK VIS, TETE NOYEE	1					
13	90185–05002	NUT, SELF-LOCKING ECROU,AUTO-BLOQUANT	1					
14	6J9–45371–01	TAB-TRIM ANODE DERIVE	1					
15	90105–10M00	BOLT, FLANGE BOULON	1					
16	63P–45987–00	SPACER ENTRETOISE	1					
17	688–45997–01	SPACER ENTRETOISE	1					
18	92990–18200	WASHER RONDELLE, PLATE	1					
19	90171–18M04	NUT, CASTLE ECROU, CRENELE	1					
20	91490–40030	PIN. COTTER GOUPILLE	1					
21	6G5–45941–00–98	PROPELLER (3X15-1/4"X15"-M) HELICE (3X15-1/4"X15"-M)	1					UR UR
	6G5–45943–01–98	PROPELLER (3X13-3/4"X21"-M) HELICE (3X13-3/4"X21"-M)	1					UR UR
	6G5–45945–01–98	PROPELLER (3X14"X19"-M) HELICE (3X14"X19"-M)	1					UR UR
	6G5–45947–01–98	PROPELLER (3X14-1/2"X17"-M) HELICE (3X14-1/2"X17"-M)	1					UR UR
	6G5–45949–00–98	PROPELLER (3X13-1/2"X23"-M) HELICE (3X13-1/2"X23"-M)	1					UR UR
	6G5–45930–00–98	PROPELLER (3X13-3/8"X25"-M) HELICE (3X13-3/8"X25"-M)	1					UR UR

FIG. 28 LOWER CASING & DRIVE 2 — BOITIER D'HELICE TRANSMISSION2

REGULAR ROTATION

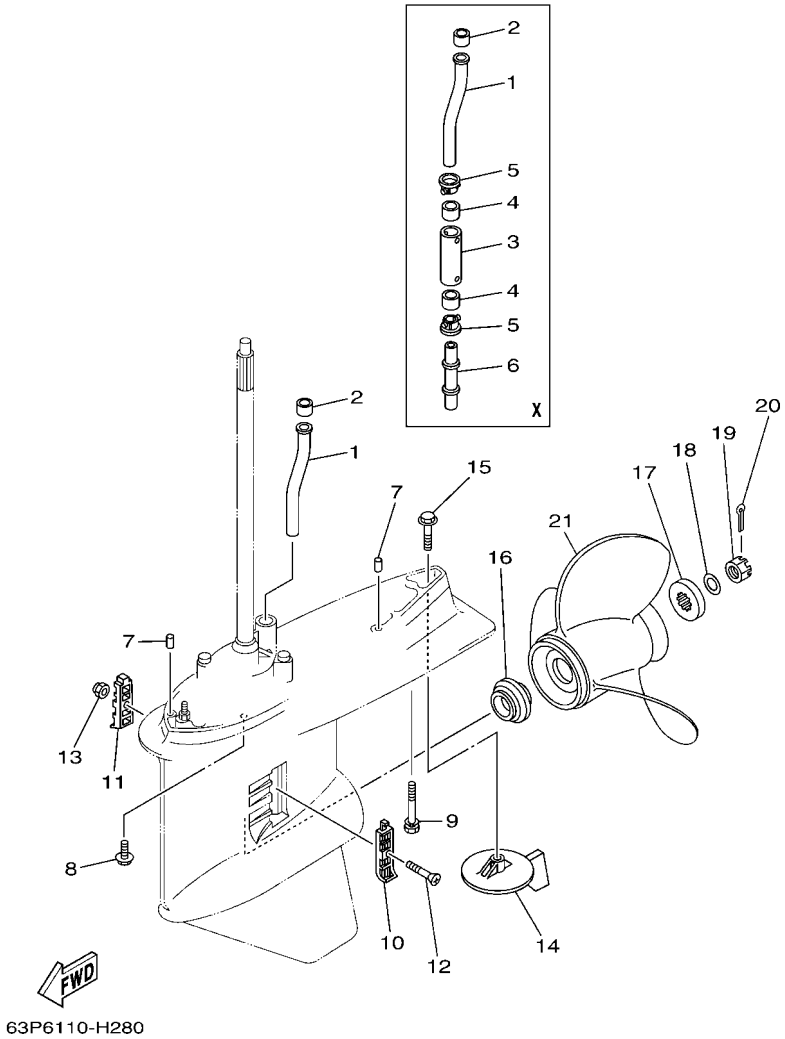

REF. NO.	PART NO. N° PIECES	DESCRIPTION DESCRIPTION	63P6	64P6				REMARKS REMARQUES
21	6G5–45932–00–98	PROPELLER (3X15-3/4"X13"-M) HELICE (3X15-3/4"X13"-M)	1					UR UR
	6G5–45970–02–98	PROPELLER (3X15-1/4"X15"-M) HELICE (3X15-1/4"X15"-M)	1					UR UR
	6G5–45972–02–98	PROPELLER (3X13-3/4"X21"-M) HELICE (3X13-3/4"X21"-M)	1					UR UR
	6G5–45974–03–98	PROPELLER (3X13-3/4"X19"-M2) HELICE (3X13-3/4"X19"-M2)	1					UR UR
	6G5–45976–01–98	PROPELLER (3X13-3/8"X23"-M) HELICE (3X13-3/8"X23"-M)	1					UR UR
	6G5–45978–03–98	PROPELLER (3X13-3/4"X17"-M2) HELICE (3X13-3/4"X17"-M2)	1					UR UR
	6R4–45970–A1	PROPELLER (3X15-1/4"X19"-M) HELICE (3X15-1/4"X19"-M)	1					UR UR
	6R4–45972–A0	PROPELLER (3X14-7/8"X21"-M) HELICE (3X14-7/8"X21"-M)	1					UR UR
	6R4–45974–A0	PROPELLER (3X14-1/2"X23"-M) HELICE (3X14-1/2"X23"-M)	1					UR UR
	6R4–45976–A0	PROPELLER (3X14-1/2"X15"-M) HELICE (3X14-1/2"X15"-M)	1					UR UR
	6R4–45978–A0	PROPELLER (3X15-1/4"X17"-M) HELICE (3X15-1/4"X17"-M)	1					UR UR
	66K–45970–B0	PROPELLER (3X14-1/2"X27"-M1) HELICE (3X14-1/2"X27"-M1)	1					UR UR
	66K–45972–B0	PROPELLER (3X14-1/2"X25"-M2) HELICE (3X14-1/2"X25"-M2)	1					UR UR
	66K–45974–B0	PROPELLER (3X14-1/2"X23"-M2) HELICE (3X14-1/2"X23"-M2)	1					UR UR
	6J9–45976–10	PROPELLER (3X14-1/2"X21"-M1) HELICE (3X14-1/2"X21"-M1)	1					UR UR

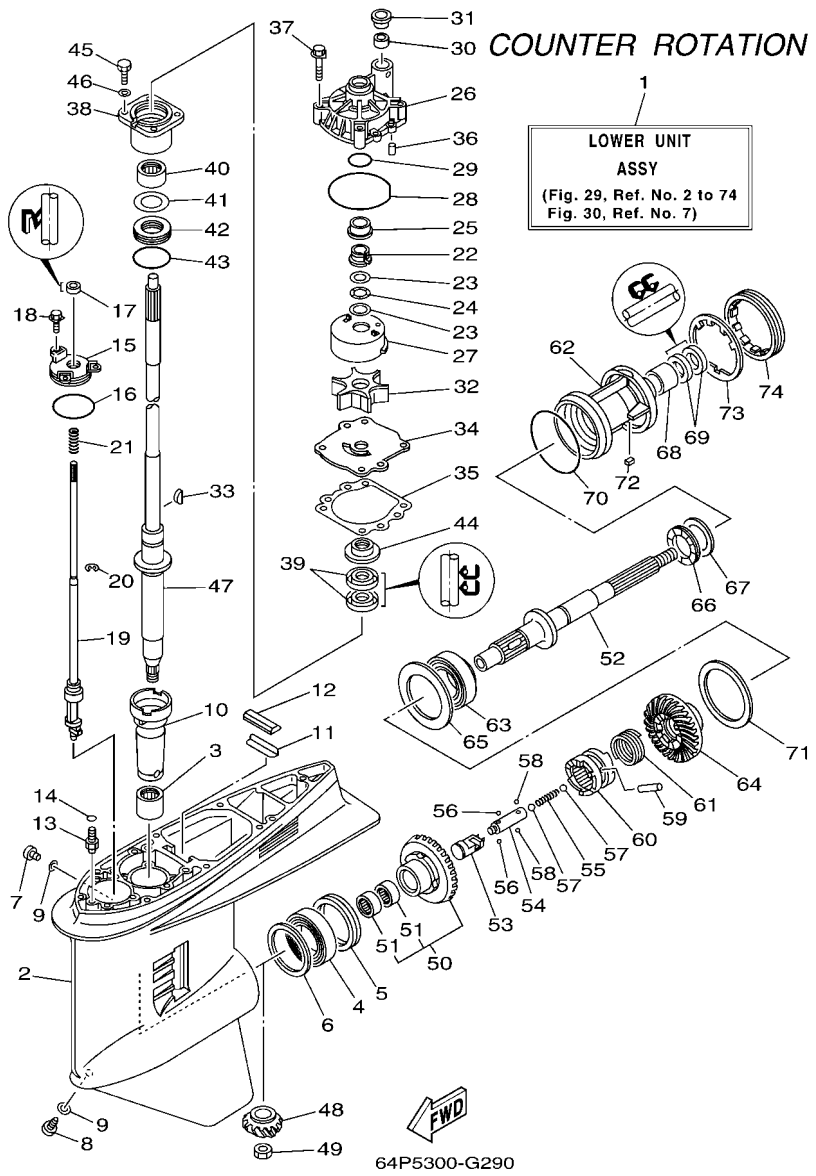

FIG. 29 LOWER CASING & DRIVE 3 — BOITIER D'HELICE TRANSMISSION3

REF. NO.	PART NO. N° PIECES	DESCRIPTION DESCRIPTION	63P6	64P6				REMARKS REMARQUES
1	64P–45300–01–8D	LOWER UNIT ASSY UNITE INFERIEURE (ENS.)		1				L(20.3"),LH L(20.3"),LH
	64P–45300–11–8D	LOWER UNIT ASSY UNITE INFERIEURE (ENS.)		1				X(25.3"),LH X(25.3"),LH
2	6J9–45301–05–8D	CASING, LOWER BEQUILLE		1				
3	93311–928U5	BEARING ROULEMENT		1				
4	93390–000U2	BEARING ROULEMENT		1				
5	93341–465U4	BEARING CERVEAUX DE DIRECTION		1				
6	6G5–45567–01	SHIM (T:0.10MM) CALE (T:0.10MM)		1				UR UR
	6G5–45567–10	SHIM (T:0.12MM) CALE (T:0.12MM)		1				UR UR
	6G5–45567–20	SHIM (T:0.15MM) CALE (T:0.15MM)		1				UR UR
	6G5–45567–30	SHIM (T:0.18MM) CALE (T:0.18MM)		1				UR UR
	6G5–45567–40	SHIM (T:0.30MM) CALE (T:0.30MM)		1				UR UR
	6G5–45567–50	SHIM (T:0.40MM) CALE (T:0.40MM)		1				UR UR
	6G5–45567–60	SHIM (T:0.50MM) CALE (T:0.50MM)		1				UR UR
7	90340–08002	PLUG, STRAIGHT SCREW PLOT, FILETE DROIT		1				
8	688–45341–10	PLUG, DRAIN BOUCHON DE VIDANGE		1				
9	90430–08020	GASKET JOINT		2				
10	6G5–45536–01	SLEEVE, DRIVE SHAFT MANCHON, ARBRE MOTEUR		1				
11	663–45376–00–94	GUIDE, SEAL DAMPER BUTEE, JOINT CAOUTCHOUC		1				
12	688–45375–00	DAMPER, SEAL BOURRELET, CAOUTCHOUC		1				
13	63P–45378–00	NIPPLE, HOSE RACCORD, TUYAU		1				
14	93210–07003	O-RING JOINT TORIQUE		1				
15	6E5–45321–00	PLATE PLAQUETTE		1				
16	93210–58144	O-RING JOINT TORIQUE		1				
17	93106–09014	OIL SEAL JOINT SPY		1				
18	90119–06M10	BOLT, WITH WASHER BOULON, AVEC RONDELLE		3				
19	64P–44150–00	SHIFT CAM ASSY CAME D'INVERSION		1				L(20.3"),LH L(20.3"),LH
	64P–44150–10	SHIFT CAM ASSY CAME D'INVERSION		1				X(25.3"),LH X(25.3"),LH

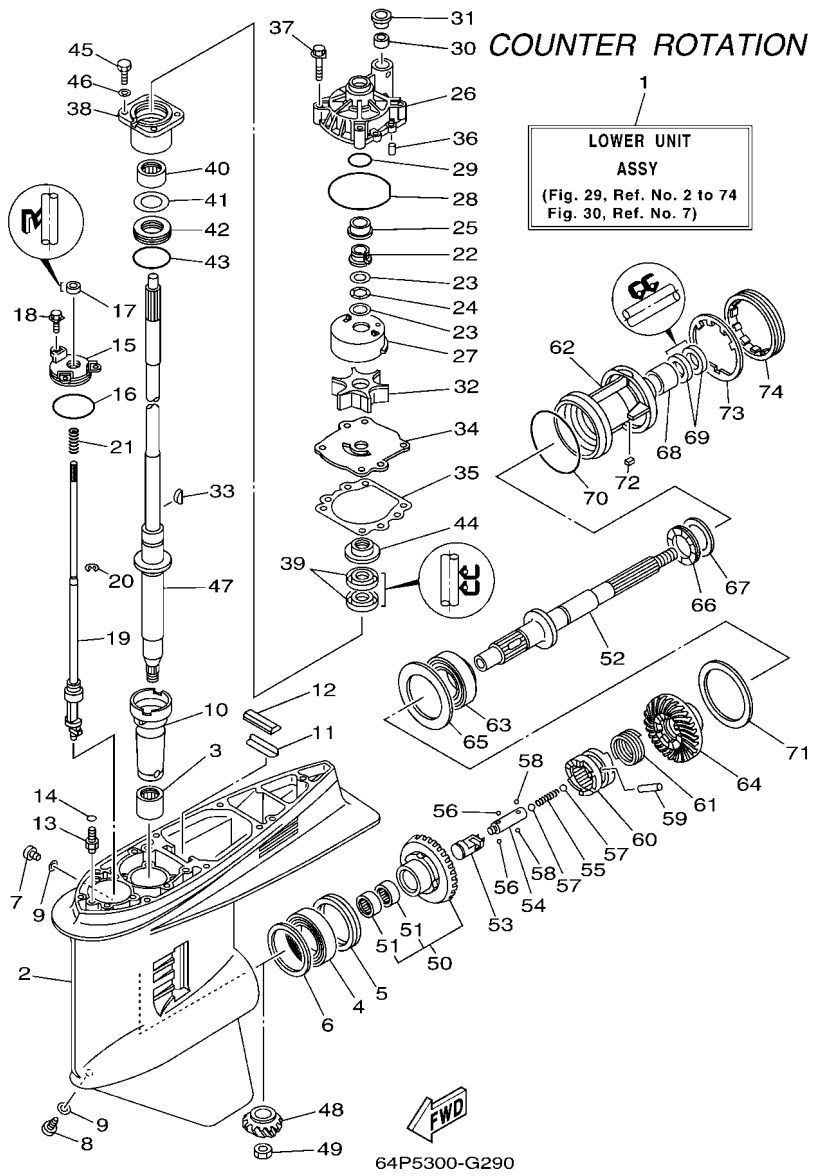

FIG. 29 LOWER CASING & DRIVE 3 — BOITIER D'HELICE TRANSMISSION3

REF. NO.	PART NO. N° PIECES	DESCRIPTION DESCRIPTION	63P6	64P6				REMARKS REMARQUES
20	99001–08600	CIRCLIP CIRCLIP		1				
21	90501–11M10	SPRING, COMPRESSION RESSORT, COMPRESSION		1				
22	61A–45538–00	SPACER 1 ENTRETOISE		1				
23	90201–22M01	WASHER, PLATE RONDELLE, PLATE		2				
24	90206–22M19	WASHER, WAVE RONDELLE, ONDULEE		1				
25	61A–45527–00	COLLAR, DRIVE SHAFT ENTRETOISE		1				
26	61A–44311–01	HOUSING, WATER PUMP CORPS, POMPE A EAU		1				
27	61A–44322–02	INSERT, CARTRIDGE CUVETTE		1				
28	93210–86M38	O-RING JOINT TORIQUE		1				
29	93210–37160	O-RING JOINT TORIQUE		1				
30	6E5–44365–00	DAMPER, WATER SEAL JOINT, TUBE D'EAU		1				
31	6E5–44312–00	COVER, WATER PUMP HOUSING COUVERCLE		1				
32	6E5–44352–01	IMPELLER TURBINE		1				
33	90280–04M05	KEY, WOODRUFF CLAVETTE, DEMI-LUNE		1				
34	6G5–44323–00	OUTER PLATE, CARTRIDGE PLAQUE EXTERIEURE		1				
35	6E5–44315–A0	GASKET, WATER PUMP JOINT, POMPE A EAU		1				
36	93606–12019	PIN, DOWEL GOUPILLE		2				
37	90119–08M14	BOLT, WITH WASHER BOULON, AVEC RONDELLE		4				
38	6E5–45331–00–9S	HOUSING, BEARING FLASQUE, ROULEMENT		1				
39	93101–28M16	OIL SEAL JOINT SPY		2				
40	93317–330U2	BEARING ROULEMENT		1				
41	6E5–45587–01	SHIM (T:0.10MM) CALE (T:0.10MM)		1				UR UR
	6E5–45587–10	SHIM (T:0.12MM) CALE (T:0.12MM)		1				UR UR
	6E5–45587–20	SHIM (T:0.15MM) CALE (T:0.15MM)		1				UR UR
	6E5–45587–30	SHIM (T:0.18MM) CALE (T:0.18MM)		1				UR UR
	6E5–45587–40	SHIM (T:0.30MM) CALE (T:0.30MM)		1				UR UR
	6E5–45587–50	SHIM (T:0.40MM) CALE (T:0.40MM)		1				UR UR

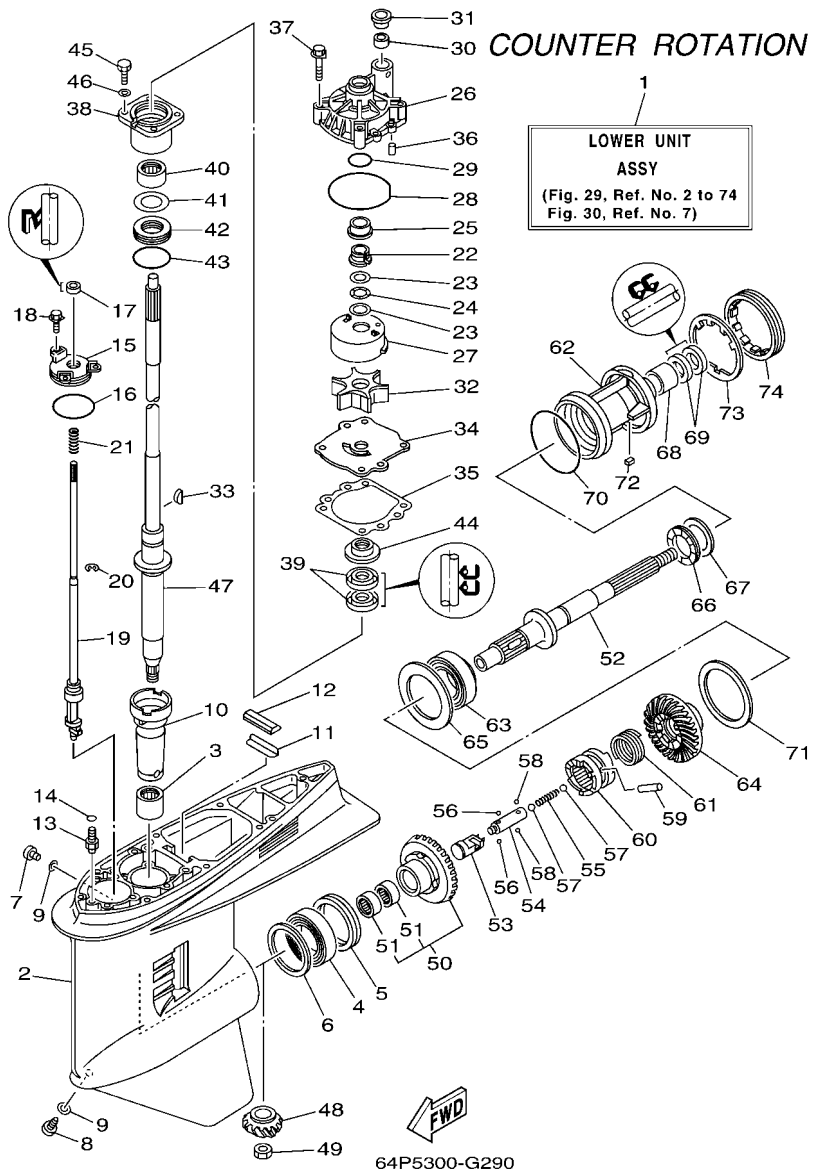

FIG. 29 LOWER CASING & DRIVE 3 — BOITIER D'HELICE TRANSMISSION3

REF. NO.	PART NO. N° PIECES	DESCRIPTION DESCRIPTION	63P6	64P6				REMARKS REMARQUES
41	6E5–45587–60	SHIM (T:0.50MM) CALE (T:0.50MM)		1				UR UR
42	93341–930V2	BEARING CERVEAUX DE DIRECTION		1				
43	93210–55M14	O-RING JOINT TORIQUE		1				
44	6E5–45344–00	COVER, OIL SEAL FLASQE, JOINT D'HUILE		1				
45	97095–08025	BOLT BOULON		4				
46	92995–08600	WASHER RONDELLE		4				
47	63P–45501–00	DRIVE SHAFT COMP. ARBRE MOTEUR COMP.		1				L(20.3") L(20.3")
	63P–45501–10	DRIVE SHAFT COMP. ARBRE MOTEUR COMP.		1				X(25.3") X(25.3")
48	63P–45551–00	PINION (14T) PIGNON D'ATTAQUE (14D)		1				
49	90170–16M01	NUT ECROU		1				
50	64P–45560–01	GEAR 1 (28T) PIGNON 1 (28T)		1				
51	93315–425V3	.BEARING .ROULEMENT		2				
52	6K1–45611–10	SHAFT, PROPELLER ARBRE, HELICE		1				
53	6K1–45641–01	SHIFTER EMBRAYAGE		1				
54	6E5–45634–01	SLIDE, SHIFT CONTRE-POUSSOIR		1				
55	90501–16M37	SPRING, COMPRESSION RESSORT, COMPRESSION		1				
56	93507–32009	BALL BILLE		2				
57	93511–32017	BALL BILLES		2				
58	93503–16003	BALL BILLES		2				
59	90250–08M07	PIN, STRAIGHT GOUPILLE, DROITE		1				
60	63P–45631–01	CLUTCH, DOG CRABOT		1				
61	6E5–45633–01	RING, CROSS PIN JONC, GOUPILLE CRABOT		1				
62	6K1–45332–01–CA	HOUSING, BEARING FLASQUE, ROULEMENT		1				
63	93332–00048	BEARING ROULEMENT		1				
64	64P–45570–01	GEAR 2 (28T) PIGNON 2 (28T)		1				
65	6K1–45576–00	WASHER, THRUST RONDELLE DE CALAGE		1				
66	93341–440U5	BEARING CERVEAUX DE DIRECTION		1				

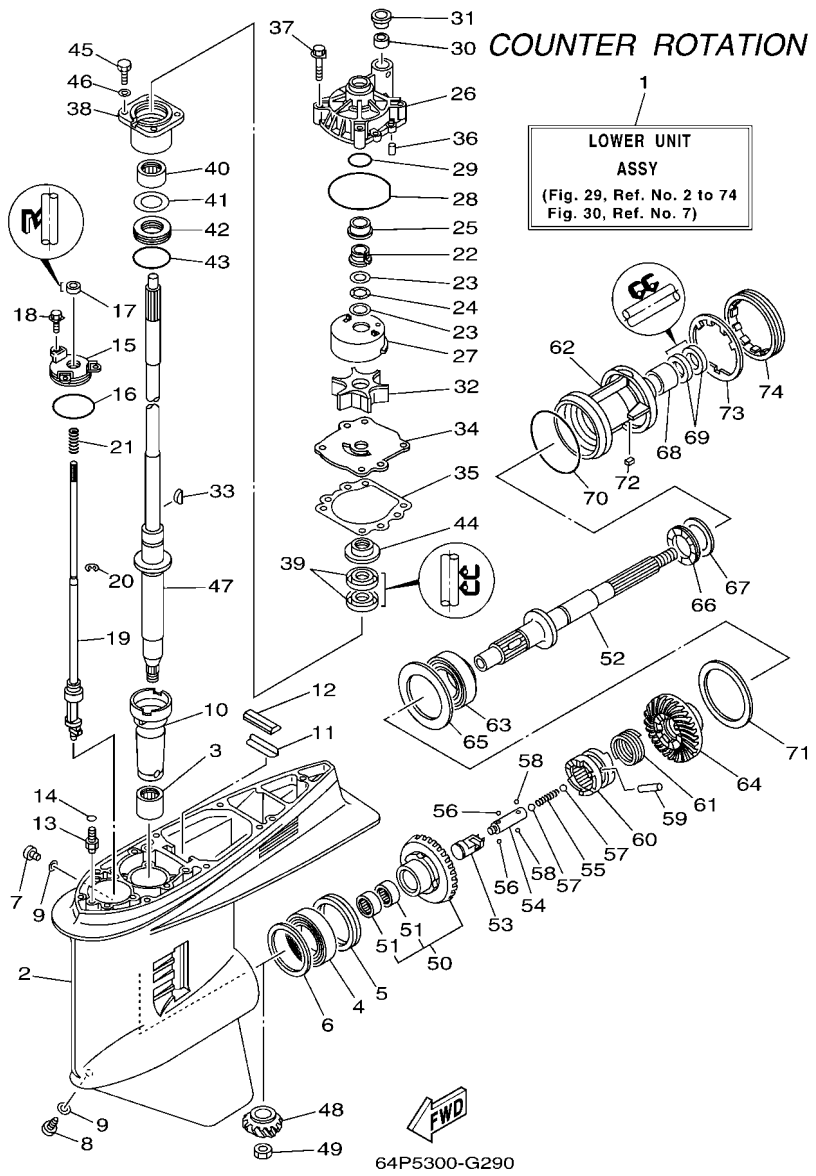

FIG. 29 LOWER CASING & DRIVE 3 — BOITIER D'HELICE TRANSMISSION3

REF. NO.	PART NO. N° PIECES	DESCRIPTION DESCRIPTION	63P6	64P6				REMARKS REMARQUES
67	6K1–45578–01	SHIM (T:0.10MM) CALE (T:0.10MM)		1				UR UR
	6K1–45578–10	SHIM (T:0.12MM) CALE (T:0.12MM)		1				UR UR
	6K1–45578–20	SHIM (T:0.15MM) CALE (T:0.15MM)		1				UR UR
	6K1–45578–30	SHIM (T:0.18MM) CALE (T:0.18MM)		1				UR UR
	6K1–45578–40	SHIM (T:0.30MM) CALE (T:0.30MM)		1				UR UR
	6K1–45578–50	SHIM (T:0.40MM) CALE (T:0.40MM)		1				UR UR
	6K1–45578–60	SHIM (T:0.50MM) CALE (T:0.50MM)		1				UR UR
68	93315–43061	BEARING ROULEMENT		1				
69	93101–30M17	OIL SEAL JOINT SPY		2				
70	93210–97M55	O-RING JOINT TORIQUE		1				
71	6G5–45577–02	SHIM (T:0.10MM) CALE (T:0.10MM)		1				UR UR
	6G5–45577–10	SHIM (T:0.12MM) CALE (T:0.12MM)		1				UR UR
	6G5–45577–20	SHIM (T:0.15MM) CALE (T:0.15MM)		1				UR UR
	6G5–45577–30	SHIM (T:0.18MM) CALE (T:0.18MM)		1				UR UR
	6G5–45577–40	SHIM (T:0.30MM) CALE (T:0.30MM)		1				UR UR
	6G5–45577–50	SHIM (T:0.40MM) CALE (T:0.40MM)		1				UR UR
	6G5–45577–60	SHIM (T:0.50MM) CALE (T:0.50MM)		1				UR UR
72	90282–04M00	KEY, STRAIGHT CLAVETTE, DROITE		1				
73	6G5–45383–01	WASHER, CLAW FREIN D'ECROU		1				
74	6G5–45384–00	NUT ECROU		1				

FIG. 30 LOWER CASING & DRIVE 4 — BOITIER D'HELICE TRANSMISSION4

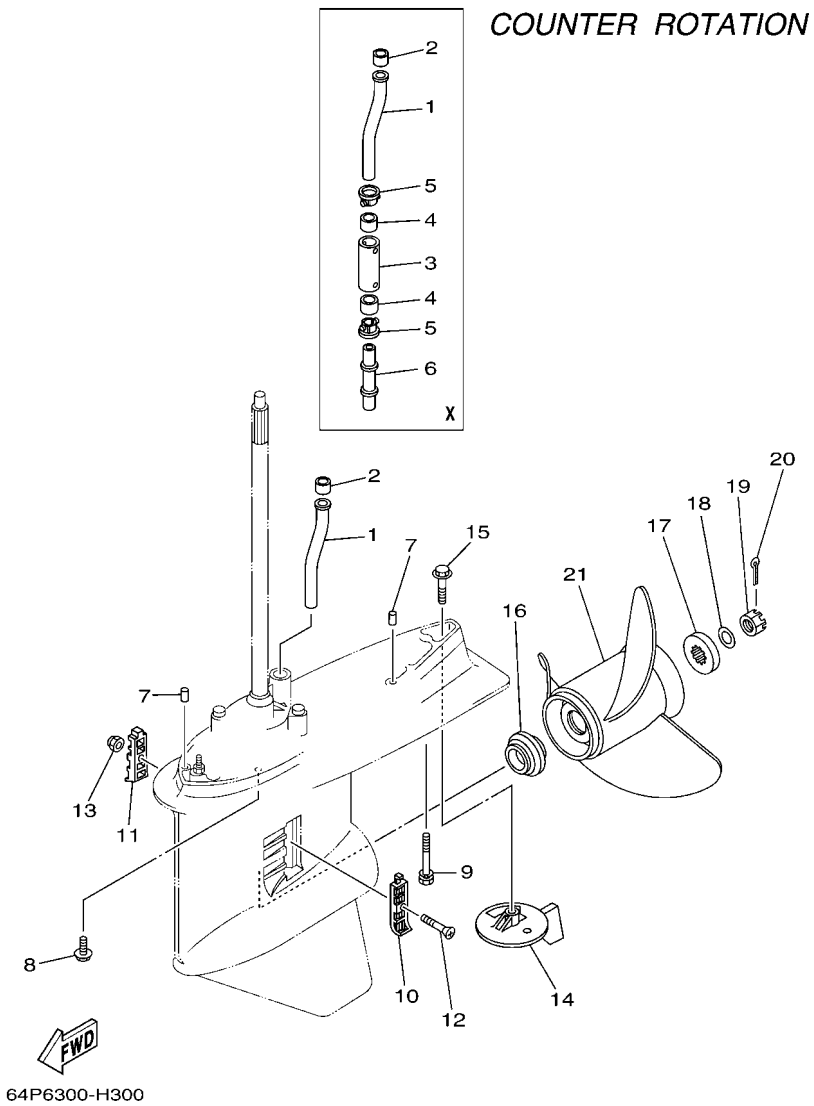

REF. NO.	PART NO. N° PIECES	DESCRIPTION DESCRIPTION	63P6	64P6				REMARKS REMARQUES
1	63P–44361–00	TUBE, WATER TUBE D'EAU		1				
2	6E5–44365–00	DAMPER, WATER SEAL JOINT, TUBE D'EAU		1				
3	63P–44362–00	TUBE, WATER TUBE D'EAU		1				X(25.3") X(25.3")
4	6E5–44365–00	DAMPER, WATER SEAL JOINT, TUBE D'EAU		2				X(25.3") X(25.3")
5	6E5–44312–00	COVER, WATER PUMP HOUSING COUVERCLE		2				X(25.3") X(25.3")
6	63P–44363–00	TUBE, WATER 3 TUBE D'EAU 3		1				X(25.3") X(25.3")
7	93608–16M16	PIN, DOWEL AXE		2				
8	90119–10038	BOLT, WITH WASHER BOULON, AVEC RONDELLE		6				
9	90119–10MA2	BOLT, WITH WASHER BOULON, AVEC RONDELLE		1				L(20.3") L(20.3")
	90119–10008	BOLT, WITH WASHER BOULON, AVEC RONDELLE		1				X(25.3") X(25.3")
10	6J9–45214–00	COVER, WATER INLET 1 GRILLE, ENTREE D'EAU 1		1				
11	6J9–45215–00	COVER, WATER INLET 2 GRILLE, ENTREE D'EAU 2		1				
12	90152–05M08	SCREW, COUNTERSUNK VIS, TETE NOYEE		1				
13	90185–05002	NUT, SELF-LOCKING ECROU,AUTO-BLOQUANT		1				
14	6K1–45371–02	TAB-TRIM ANODE DERIVE		1				
15	90105–10M00	BOLT, FLANGE BOULON		1				
16	63P–45987–00	SPACER ENTRETOISE		1				
17	688–45997–01	SPACER ENTRETOISE		1				
18	92990–18200	WASHER RONDELLE, PLATE		1				
19	90171–18M04	NUT, CASTLE ECROU, CRENELE		1				
20	91490–40030	PIN. COTTER GOUPILLE		1				
21	6K1–45970–01–98	PROPELLER (3X15-1/4"X15"-ML) HELICE (3X15-1/4"X15"-ML)		1				UR UR
	6K1–45972–01–98	PROPELLER (3X13-3/4"X21"-ML) HELICE (3X13-3/4"X21"-ML)		1				UR UR
	6K1–45974–02–98	PROPELLER (3X13-3/4"X19"-ML1) HELICE (3X13-3/4"X19"-ML1)		1				UR UR
	6K1–45976–00–98	PROPELLER (3X13-3/8"X23"-ML) HELICE (3X13-3/8"X23"-ML)		1				UR UR
	6K1–45978–02–98	PROPELLER (3X13-3/4"X17"-ML1) HELICE (3X13-3/4"X17"-ML1)		1				UR UR
	6K1–45945–00–98	PROPELLER (3X14"X19"-ML) HELICE (3X14"X19"-ML)		1				UR UR

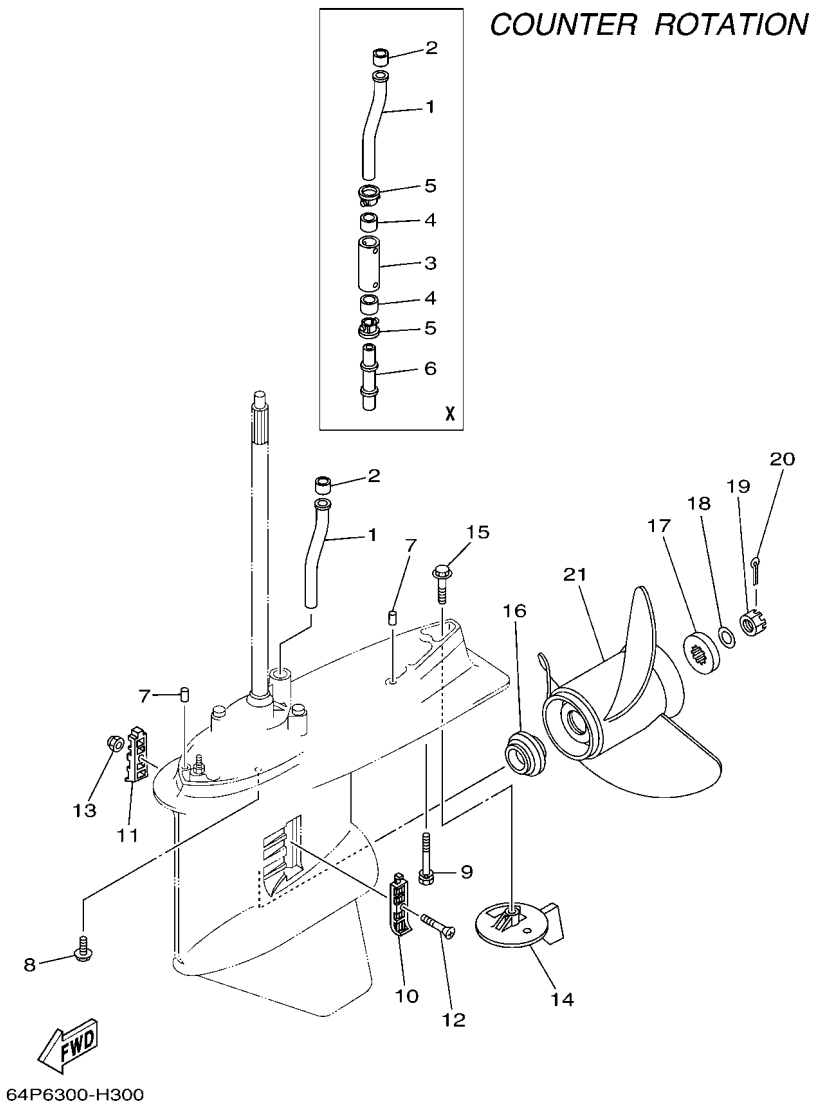

REF. NO.	PART NO. N° PIECES	DESCRIPTION DESCRIPTION	63P6	64P6				REMARKS REMARQUES
21	6K1–45947–00–98	PROPELLER (3X14-1/2"X17"-ML) HELICE (3X14-1/2"X17"-ML)		1				UR UR
	6R1–45970–A1	PROPELLER (3X15-1/4"X19"-ML) HELICE (3X15-1/4"X19"-ML)		1				UR UR
	6R1–45972–A0	PROPELLER (3X14-7/8"X21"-ML) HELICE (3X14-7/8"X21"-ML)		1				UR UR
	6R1–45974–A0	PROPELLER (3X14-1/2"X23"-ML) HELICE (3X14-1/2"X23"-ML)		1				UR UR
	6R1–45976–A0	PROPELLER (3X15-1/4"X15"-ML) HELICE (3X15-1/4"X15"-ML)		1				UR UR
	6R1–45978–A0	PROPELLER (3X15-1/4"X17"-ML) HELICE (3X15-1/4"X17"-ML)		1				UR UR

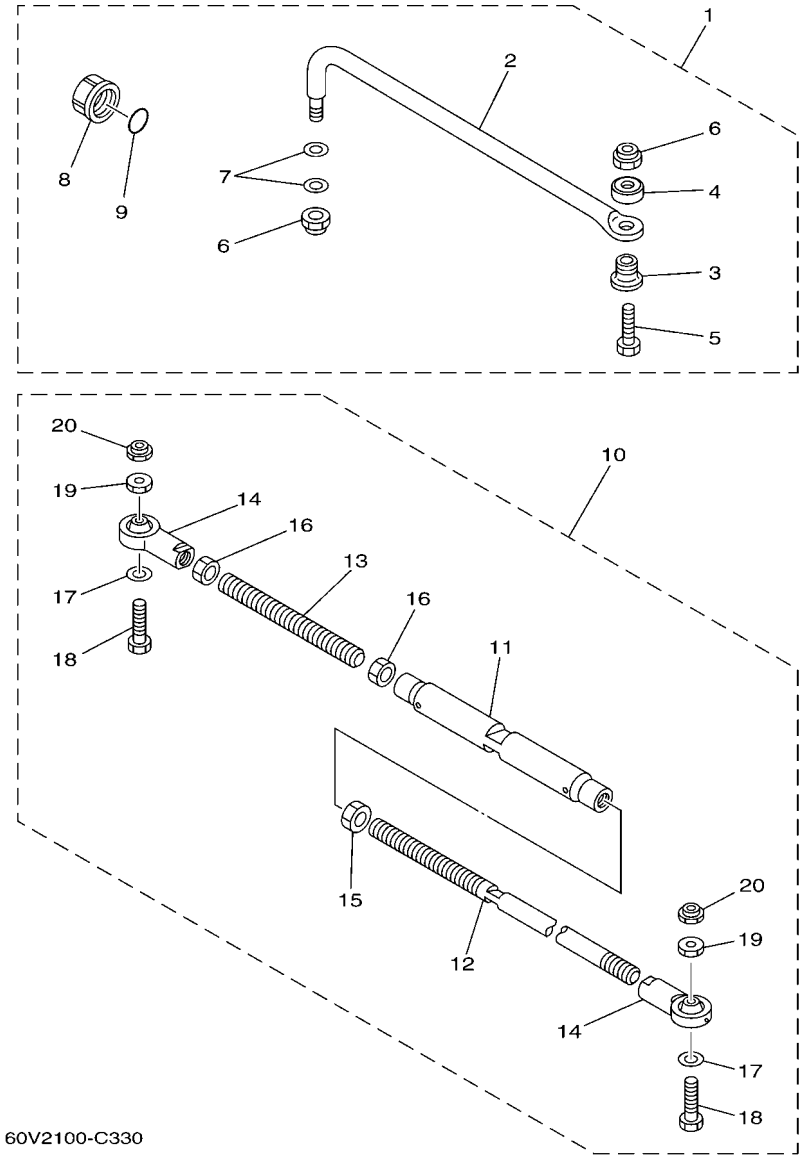

FIG. 31 STEERING GUIDE — FIXATION DE DIRECTION

REF. NO.	PART NO. N° PIECES	DESCRIPTION DESCRIPTION	63P6	64P6				REMARKS REMARQUES
1	6E5–61350–02	STEERING GUIDE ATTACHMENT KIT FIXATIONS DE DIRECTION	1					AP AP
2	6E5–61351–01	.ROD, STEERING LINK .RENVOI DE DIRECTION	1					
3	90387–10M61	.COLLAR .COLLERETTE	1					
4	90560–12M01	.SPACER .ENTRETOISE	1					
5	6E5–61355–00	.BOLT .BOULON	1					
6	90185–09M01	.NUT, SELF-LOCKING .ECROU,AUTO-BLOQUANT	2					
7	90201–10M20	.WASHER, PLATE .RONDELLE, PLATE	2					
8	6E5–43145–01	.CAP, CLAMP BRACKET .CAPUCHON, PRESSE	1					
9	93210–16275	.O-RING .JOINT TORIQUE	1					
10	6E5–61301–01	TWIN KIT (L:600-800MM) JUMELE KIT (L:600-800MM)		1				AP AP
11	6E5–61313–00	.ADJUSTER .TENDEUR		1				
12	6E5–61311–11	.TIE BAR .BARRE D'ACCOUPLEMENT		1				
13	6E5–61315–00	.TIE BAR .BARRE D'ACCOUPLEMENT		1				
14	6E5–61303–00	.STEERING AXLE COMP. .AXLE COMP.		2				
15	90170–14M06	.NUT .ECROU		1				
16	95380–14700	.NUT .ECROU		2				
17	90201–10M76	.WASHER, PLATE .RONDELLE, PLATE		2				
18	90101–09M70	.BOLT .BOULON		2				
19	90170–09M05	.NUT .ECROU		2				
20	90185–09M01	.NUT, SELF-LOCKING .ECROU,AUTO-BLOQUANT		2				

FIG. 32 REPAIR KIT 1 — KITS DE REPARATION 1

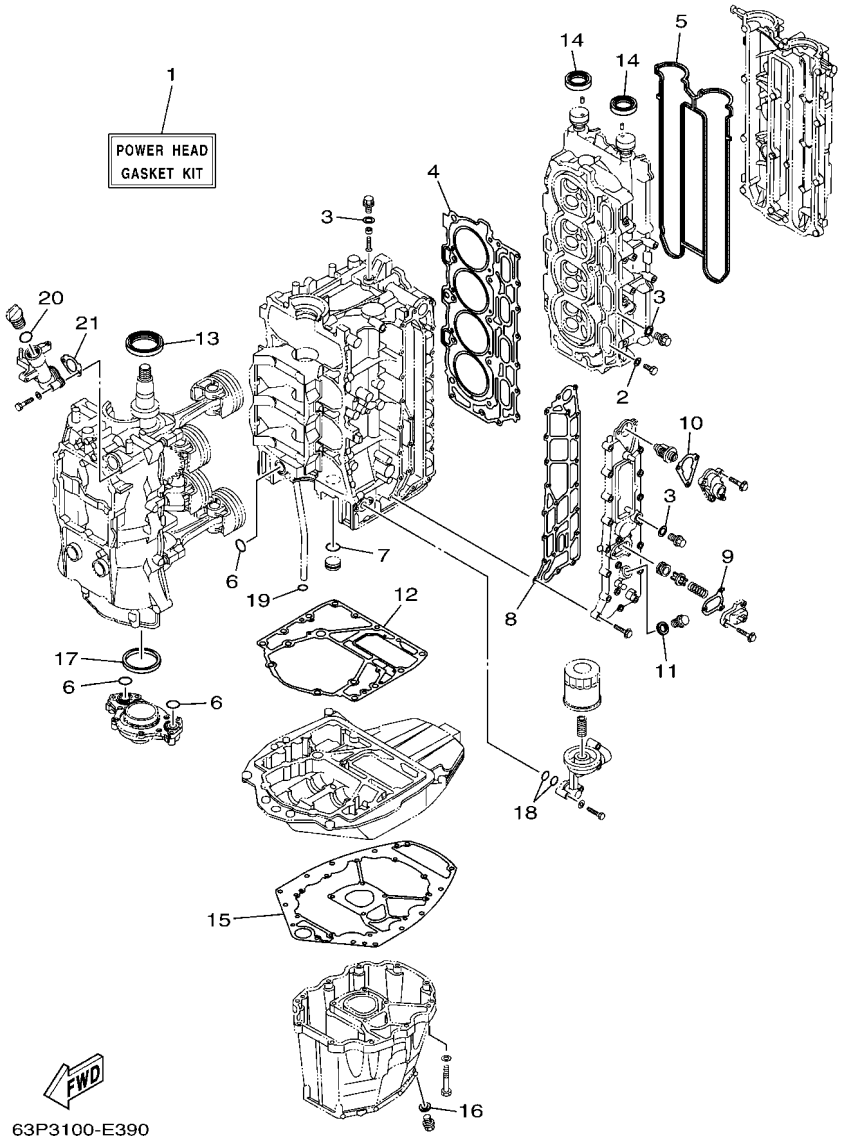

REF. NO.	PART NO. N° PIECES	DESCRIPTION DESCRIPTION	63P6	64P6				REMARKS REMARQUES
1	63P–W0001–01	POWER HEAD GASKET KIT POCHETTE DE JINTS TETE MOTRICE	1	1				
2	90430–08143	.GASKET .JOINT	4	4				
3	90430–14115	.GASKET .JOINT	4	4				
4	63P–11181–00	.GASKET, CYLINDER HEAD 1 .JOINT, DE CULASSE 1	1	1				
5	63P–11193–00	.GASKET, HEAD COVER 1 .JOINT, COUVERCLE DE CULASSE 1	1	1				
6	93210–25552	.O-RING .JOINT TORIQUE	3	3				
7	93210–25647	.O-RING .JOINT TORIQUE	1	1				
8	63P–41114–A1	.GASKET, EXHAUST OUTER COVER .JOINT, COUVERCLE D'ECHAPPEMENT	1	1				
9	67F–12435–A0	.GASKET .JOINT	1	1				
10	63P–12414–00	.GASKET, COVER .JOINT, COUVERCLE	1	1				
11	90430–18130	.GASKET .JOINT	1	1				
12	63P–11351–00	.GASKET, CYLINDER .JOINT, D'EMBASE	1	1				
13	93102–60004	.OIL SEAL .JOINT SPY	1	1				
14	93102–38008	.OIL SEAL .JOINT SPY	2	2				
15	63P–15312–00	.GASKET, OIL PAN .JOINT DE VENTILATEUR D'HUILE	1	1				
16	90430–14M09	.GASKET .JOINT	1	1				
17	69J–11355–00	.SEAL, CYLINDER 1 .JOINT, SPY CYLINDRE	1	1				
18	93210–19MJ1	.O-RING .JOINT TORIQUE	2	2				
19	93210–19MJ3	.O-RING .JOINT TORIQUE	1	1				
20	93210–24M79	.O-RING .JOINT TORIQUE	1	1				
21	63P–15364–A0	.GASKET, OIL PLUG .JOINT, PLOT D'HUILE	1	1				

FIG. 33 REPAIR KIT 2 — KITS DE REPARATION 2

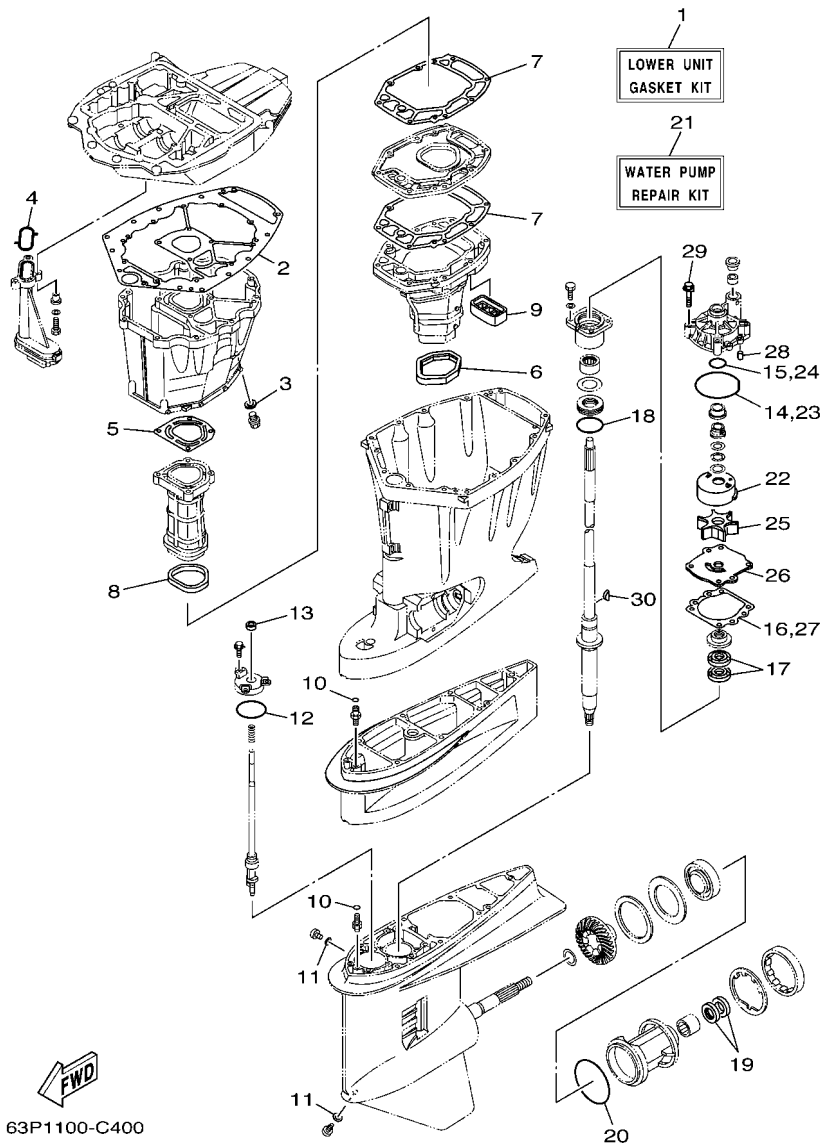

REF. NO.	PART NO. N° PIECES	DESCRIPTION DESCRIPTION	63P6	64P6				REMARKS REMARQUES
1	63P–W0001–20	LOWER UNIT GASKET KIT POCHETTE DE JOINTS EMBASE	1	1				
2	63P–15312–00	.GASKET, OIL PAN .JOINT DE VENTILATEUR D'HUILE	1	1				
3	90430–14M09	.GASKET .JOINT	1	1				
4	63P–13415–00	.SEAL, OIL STRAINER .JOINT, FILTRE A HUILE	1	1				
5	63P–41133–A0	.GASKET, EXHAUST MANIFOLD 1 .JOINT, PIPE D'ECHAPPEMENT	1	1				
6	69J–45123–00	.GASKET, MUFFLER .JOINT, POT DE DETENTE	1	1				
7	63P–41134–A0	.GASKET, EXHAUST MANIFOLD .JOINT, PIPE D'ECHAPPEMENT	2	2				
8	63P–41138–00	.SEAL, EXT. 1 .JOINT DE GROUPE 1	1	1				
9	69J–45127–00	.SEAL .JOINT	1	1				
10	93210–07003	.O-RING .JOINT TORIQUE	2	2				
11	90430–08020	.GASKET .JOINT	2	2				
12	93210–58144	.O-RING .JOINT TORIQUE	1	1				
13	93106–09014	.OIL SEAL .JOINT SPY	1	1				
14	93210–86M38	.O-RING .JOINT TORIQUE	1	1				
15	93210–37160	.O-RING .JOINT TORIQUE	1	1				
16	6E5–44315–A0	.GASKET, WATER PUMP .JOINT, POMPE A EAU	1	1				
17	93101–28M16	.OIL SEAL .JOINT SPY	2	2				
18	93210–55M14	.O-RING .JOINT TORIQUE	1	1				
19	93101–30M17	.OIL SEAL .JOINT SPY	2	2				
20	93210–97M55	.O-RING .JOINT TORIQUE	1	1				
21	61A–W0078–A3	WATER PUMP REPAIR KIT KIT DE REPARATION DE LA POMPE	1	1				
22	61A–44322–02	.INSERT, CARTRIDGE .CUVETTE	1	1				
23	93210–86M38	.O-RING .JOINT TORIQUE	1	1				
24	93210–37160	.O-RING .JOINT TORIQUE	1	1				
25	6E5–44352–01	.IMPELLER .TURBINE	1	1				
26	6G5–44323–00	.OUTER PLATE, CARTRIDGE .PLAQUE EXTERIEURE	1	1				
27	6E5–44315–A0	.GASKET, WATER PUMP .JOINT, POMPE A EAU	1	1				

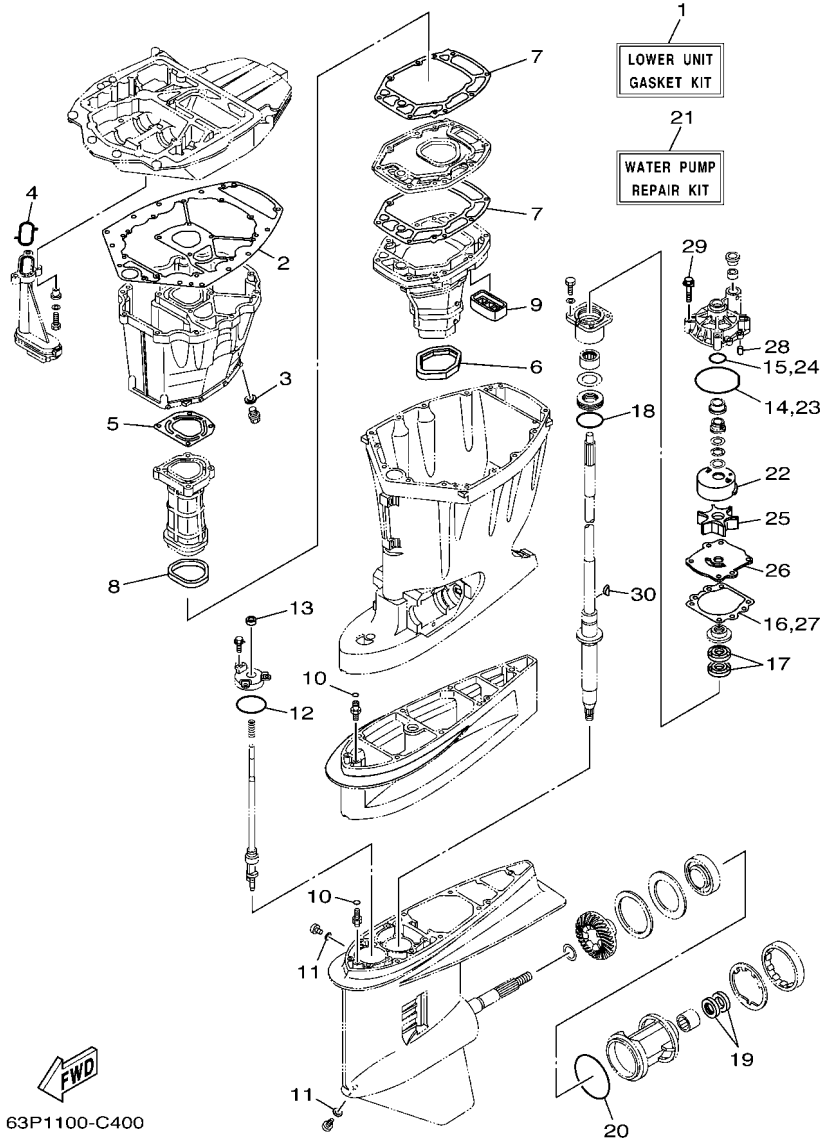

FIG. 33 REPAIR KIT 2 — KITS DE REPARATION 2

REF. NO.	PART NO. N° PIECES	DESCRIPTION DESCRIPTION	63P6	64P6				REMARKS REMARQUES
28	93606–12019	.PIN, DOWEL .GOUPILLE	2	2				
29	90119–08M14	.BOLT, WITH WASHER .BOULON, AVEC RONDELLE	4	4				
30	90280–04M05	.KEY, WOODRUFF .CLAVETTE, DEMI-LUNE	1	1				

NUMERICAL INDEX
INDEX NUMERIQUE

PART NO. N° PIECES	REF. NO.
63P–11110–00–9S	4 – 2
63P–11119–00	2 – 21
68F–11119–00	2 – 22
69J–11133–10	4 – 3
63P–11135–00	4 – 23
63P–11181–00	4 – 18
	32 – 4
63P–11191–00–9S	4 – 22
63P–11192–01	4 – 28
63P–11193–00	4 – 25
	32 – 5
63P–11197–00	2 – 10
69J–11301–10	4 – 12
	5 – 12
68T–11325–00	5 – 2
63P–11325–01	2 – 17
68V–11325–02	4 – 13
	5 – 13
63P–11325–11	2 – 19
63P–11325–21	2 – 11
67F–11328–00	4 – 14
	5 – 14
63P–11351–00	2 – 24
	32 – 12
69J–11355–00	26 – 19
	32 – 17
63P–11372–00	2 – 4
63P–11377–00	2 – 30
63P–11410–02	3 – 1
63P–11416–31	3 – 4
63P–11416–41	3 – 4
63P–11416–51	3 – 4
63P–11417–41	3 – 5
63P–11417–51	3 – 5
63P–11417–61	3 – 5
63P–11417–71	3 – 5
63P–11417–81	3 – 5
63P–11426–31	3 – 6
63P–11426–41	3 – 6
63P–11426–51	3 – 6
69J–11478–00	3 – 2
63P–11500–02	2 – 25
63P–11512–00	2 – 29
63P–11536–01	6 – 17
63P–11537–00	6 – 12
63P–11590–01	6 – 16
63P–11603–01	3 – 10
63P–11604–00	3 – 10

PART NO. N° PIECES	REF. NO.
63P–11654–01	3 – 8
63P–11656–01	3 – 9
63P–11656–11	3 – 9
63P–11656–21	3 – 9
69J–12111–00	6 – 1
69J–12113–01	6 – 3
69J–12117–01	6 – 4
69J–12118–00	6 – 5
69J–12119–00	6 – 6
69J–12121–00	6 – 2
67F–12138–60	4 – 31
69J–12153–00	6 – 7
68V–12157–00	6 – 13
6S1–12168–00	6 – 8
6S1–12168–10	6 – 8
6S1–12168–20	6 – 8
6S1–12168–30	6 – 8
6S1–12168–40	6 – 8
6S1–12168–50	6 – 8
6S1–12168–60	6 – 8
6S1–12168–70	6 – 8
6S1–12168–80	6 – 8
6S1–12168–90	6 – 8
6S1–12168–A0	6 – 8
6S1–12168–B0	6 – 8
6S1–12168–C0	6 – 8
6S1–12168–D0	6 – 8
6S1–12168–E0	6 – 8
6S1–12168–F0	6 – 8
6S1–12168–G0	6 – 8
6S1–12168–H0	6 – 8
6S1–12168–J0	6 – 8
6S1–12168–K0	6 – 8
6S1–12168–L0	6 – 8
6S1–12168–M0	6 – 8
6S1–12168–N0	6 – 8
6S1–12168–P0	6 – 8
6S1–12168–R0	6 – 8
6S1–12168–S0	6 – 8
6S1–12168–T0	6 – 8
6S1–12168–U0	6 – 8
6S1–12168–V0	6 – 8
6S1–12168–W0	6 – 8
6S1–12168–X0	6 – 8
6S1–12168–Y0	6 – 8
6S1–12169–00	6 – 8
63P–12171–00	6 – 9
63P–12181–00	6 – 10

PART NO. N° PIECES	REF. NO.
63P–1240H–01–9S	5 – 20
67F–12411–01	5 – 18
67F–12412–00	5 – 19
63P–12414–00	5 – 21
	32 – 10
6G5–12416–00	5 – 6
67F–12435–A0	5 – 10
	32 – 9
67F–1246A–01–9S	5 – 9
68T–12572–00	19 – 28
6R3–12581–00	19 – 30
6R3–12582–00	19 – 31
6R3–12583–00	19 – 32
69J–12858–00	5 – 29
6AW–13119–00	26 – 17
63P–1312A–01	9 – 26
63P–13131–00	12 – 22
63P–13160–00	11 – 6
63P–13300–01	26 – 14
63P–13329–00	26 – 15
69J–13338–00	26 – 16
63P–13411–00	26 – 9
63P–13415–00	26 – 11
	33 – 4
67F–13434–10	1 – 27
63P–13437–61	14 – 23
69J–13440–01	5 – 28
63P–13446–00–9S	5 – 30
67F–13448–00	1 – 22
63P–13490–00	2 – 34
63P–13532–10	11 – 5
63P–13545–00	11 – 4
63P–13546–00	11 – 3
63P–13557–00	9 – 20
68V–13577–00	11 – 15
6BM–13593–00	10 – 25
69J–13631–00	26 – 18
63P–13641–00	9 – 13
63P–13643–00	9 – 22
63P–13645–00	9 – 16
69J–13716–00	10 – 24
63P–13751–01	9 – 2
6P2–13758–00	11 – 19
63P–13761–00	9 – 23
68V–13766–00	9 – 25
63P–13769–00	9 – 32
68V–13781–10	10 – 14
63P–13784–00	10 – 19

PART NO. N° PIECES	REF. NO.
63P–13898–00	9 – 31
63P–13905–00	9 – 30
63P–13906–00	10 – 9
63P–13907–02	10 – 18
63P–13915–00	10 – 20
63P–13971–00	11 – 2
63P–13974–20	11 – 8
63P–13975–00	11 – 18
63P–13976–00	11 – 9
68V–1410B–00	9 – 24
63P–14148–00	10 – 21
63P–14149–00	11 – 1
63P–14180–01	10 – 1
63P–14181–00	10 – 7
63P–14182–00	10 – 2
63P–14191–00	10 – 8
63P–14200–21	9 – 1
63P–14225–00	11 – 7
69J–14225–01	10 – 12
63P–14291–00	9 – 12
63P–14292–00	9 – 33
69J–14321–00	9 – 3
68V–14323–00	9 – 5
68V–14331–00	9 – 4
68V–14356–00	9 – 10
68V–14386–00	10 – 16
63P–14435–00	17 – 19
63P–14440–00	7 – 10
63P–14446–00	9 – 21
68V–14446–00	10 – 28
63P–14449–00	7 – 11
63P–14457–00	7 – 12
63P–14496–00	9 – 14
63P–14546–00	10 – 15
63P–14565–00	10 – 10
68V–14565–00	9 – 11
63P–14567–00	10 – 11
3CF–14594–00	9 – 9
69J–14624–01	25 – 26
63P–14711–01–9S	25 – 12
63P–14777–00	10 – 23
63P–14984–00	10 – 13
63P–14985–00	10 – 17
63P–15311–01–CA	26 – 2
63P–15312–00	26 – 1
	32 – 15
	33 – 2
63P–15316–00	26 – 6

PART NO. N° PIECES	REF. NO.
63P–15319–00–9S	5 – 35
63P–15362–00	26 – 23
6G8–15363–00	5 – 33
63P–15364–A0	5 – 36
	32 – 21
63P–15373–00	7 – 5
63P–15377–00	26 – 24
63P–15378–00	7 – 8
63P–2134X–00	8 – 2
69J–21841–02	10 – 27
63P–2247B–00	11 – 12
68V–2411M–00	11 – 10
63P–2411R–00	10 – 4
63P–2411T–00	10 – 5
68V–24149–00	12 – 29
6P2–24170–00	8 – 1
63P–2417H–00	11 – 21
63P–2417J–00	11 – 22
63P–2419A–00	8 – 3
6YK–24307–42	13 – 1
64P–24311–00	8 – 11
63P–24311–10	12 – 18
64P–24312–00	8 – 10
63P–24312–10	12 – 33
64P–24313–00	8 – 8
63P–24313–10	12 – 34
63P–24314–00	12 – 31
64P–24314–00	8 – 14
63P–24315–00	12 – 32
64P–24315–00	8 – 13
63P–24316–00	12 – 5
63P–24317–00	11 – 11
63P–24325–00	11 – 14
63P–24364–00	8 – 15
63P–24367–00	8 – 12
68V–24374–00	12 – 25
6R3–24377–10	12 – 3
6E5–24378–00	12 – 30
69J–24379–00	10 – 22
6E5–24379–00	8 – 17
63P–24410–00	12 – 19
68V–24411–00	12 – 24
68V–24412–00	12 – 20
68V–24413–00	12 – 26
63P–24414–00	12 – 27
63P–24423–00	12 – 23
68V–24444–00	12 – 28
4SV–24453–00	10 – 3

PART NO. N° PIECES	REF. NO.
4SV–24453–00	10 – 6
68V–24454–00	12 – 21
6P3–24469–00	12 – 9
69J–24501–10	11 – 16
69J–24502–00	8 – 9
68V–24519–00	11 – 13
6P3–24519–00	12 – 10
6P3–24560–01	12 – 6
6P3–24562–01	12 – 8
6P3–24563–00	12 – 7
6P3–24564–00	12 – 11
63P–24566–00	12 – 12
69J–24599–10	11 – 17
68V–2481H–00	11 – 20
67F–28100–01	12 – 39
67F–2812A–00	16 – 39
63P–28199–77–D0	12 – 40
63P–28199–77–E0	12 – 40
63P–28199–77–F0	12 – 40
63P–28199–77–G0	12 – 40
63P–28199–77–H0	12 – 40
63P–28199–77–S0	12 – 40
63P–28199–87–K0	12 – 41
63P–28199–87–L0	12 – 41
63P–28199–87–M0	12 – 41
63P–28199–87–N0	12 – 41
63P–28199–87–P0	12 – 41
63P–28199–87–R0	12 – 41
63P–41113–03–9S	5 – 1
63P–41114–A1	5 – 4
	32 – 8
63P–41131–01–9S	25 – 9
63P–41133–A0	25 – 10
	33 – 5
63P–41134–A0	25 – 17
	33 – 7
63P–41137–01–CA	25 – 1
63P–41138–00	25 – 19
	33 – 8
63P–41213–00	20 – 44
63P–41237–00	20 – 50
6H4–41237–00	9 – 17
682–41238–01	9 – 19
63P–42154–00	20 – 39
63P–42157–00	20 – 51
68V–42171–00	20 – 52
66K–42510–02–8D	22 – 9
63P–42541–00	19 – 33

PART NO. N° PIECES	REF. NO.
63P–42610–01–8D	1 – 1
63P–42613–00	1 – 14
63P–42615–00	19 – 2
63P–42617–00	1 – 16
63P–42643–00–94	1 – 11
63P–42644–00–94	1 – 13
63P–42647–00–94	1 – 4
60V–42651–01	1 – 7
63P–42662–00	1 – 26
68F–42663–00	1 – 12
69J–42663–00	1 – 8
63P–42677–00	1 – 17
63P–42678–00	1 – 18
63P–42681–00	1 – 20
63P–42682–00	1 – 21
63P–42710–01–8D	19 – 1
648–42715–00	20 – 30
63P–42716–00	19 – 35
61A–42717–00	19 – 27
63P–42717–00	19 – 20
63P–42718–00	19 – 21
69J–42723–00–8D	17 – 22
6E5–42724–00	25 – 8
63P–42725–00	19 – 23
6H1–42726–21	19 – 24
61A–42727–00	19 – 42
63P–42738–00–8D	19 – 19
63P–42741–01–8D	19 – 36
6H4–42748–00	19 – 48
68F–42753–00	19 – 49
63P–42756–00	19 – 44
6AH–42794–40	19 – 52
6AH–42794–50	19 – 53
63P–42811–01	19 – 43
63P–42815–00–8D	19 – 6
63P–42816–00–8D	19 – 7
63P–42818–01	19 – 11
63P–42828–00–8D	19 – 9
68F–42828–03–8D	19 – 8
64E–43111–02–8D	21 – 1
64E–43112–02–8D	21 – 9
64E–43126–00	21 – 35
64E–43131–10	21 – 14
64E–43139–10	22 – 1
64D–43144–00	19 – 16
6G5–43144–00	21 – 25
6E5–43145–01	31 – 8
6G5–43148–00	21 – 30

PART NO. N° PIECES	REF. NO.
6G5–43181–10	21 – 27
6G5–43185–10	21 – 28
64E–43311–10–8D	21 – 21
63P–43376–00	22 – 6
63P–43800–02–8D	23 – 1
64E–43802–00	24 – 8
64E–43805–00	24 – 37
64E–4380F–00	24 – 33
64E–4380J–00	24 – 30
63P–43810–01	23 – 6
64E–43811–01	23 – 7
6E5–43814–02	23 – 14
64E–43816–00	24 – 17
64E–43817–00	23 – 5
64E–43817–10	24 – 19
6BC–43818–00	23 – 33
64E–4381G–00	23 – 28
64E–43820–01	23 – 16
64E–43821–01	23 – 17
64E–43822–00	23 – 18
64E–43825–02	23 – 2
64E–43827–00	24 – 22
64E–43828–00	23 – 23
64E–43829–00	23 – 24
64E–4382G–00	23 – 30
64E–43830–00	24 – 4
64E–43831–00	24 – 2
64E–43841–00	24 – 7
64E–43843–00	24 – 6
64E–43843–10	24 – 38
64E–4384J–00	23 – 19
64E–43850–00	24 – 15
64E–43851–00	24 – 11
64E–43855–00	24 – 14
64E–43858–00	24 – 12
	24 – 18
6E5–43858–00	23 – 29
72X–43858–00	24 – 5
64E–43859–00	24 – 13
64E–43860–00	24 – 20
6E5–43862–00	23 – 11
	23 – 15
6G5–43863–00	24 – 10
6E5–43864–00	23 – 21
6G5–43864–00	23 – 20
64E–43865–00	24 – 16
6G5–43865–00	24 – 35
64E–43866–00	23 – 10

PART NO. N° PIECES	REF. NO.
64E–43867–00	23 – 9
64E–43868–00	24 – 3
64E–43869–00	23 – 27
6H1–4386K–10	24 – 29
6E5–43872–00	23 – 13
64E–43873–00	24 – 24
6E5–43874–01	23 – 22
64E–43875–00	24 – 25
64E–43879–00	24 – 27
64E–43879–10	24 – 26
64E–4387A–00	24 – 23
67H–43880–02	24 – 28
64E–43883–00	23 – 12
64E–4388E–00	23 – 26
64E–4388E–10	24 – 1
64E–4388J–00	23 – 3
64E–43891–00	24 – 31
64E–43892–00	24 – 34
6E5–43896–00	24 – 9
64E–43897–00	23 – 25
64E–43898–00	23 – 8
63P–44117–00–94	20 – 9
63P–44118–00–94	20 – 25
63P–44120–00	20 – 20
63P–44121–00	20 – 18
63P–44122–00	20 – 15
69J–44135–00	20 – 45
63P–44150–00	27 – 18
64P–44150–00	29 – 19
63P–44150–10	27 – 18
64P–44150–10	29 – 19
63P–44176–00–94	20 – 8
61A–44311–01	27 – 25
	29 – 26
6E5–44312–00	27 – 30
	28 – 5
	29 – 31
	30 – 5
6E5–44315–A0	27 – 34
	29 – 35
	33 – 16
	33 – 27
61A–44322–02	27 – 26
	29 – 27
	33 – 22
6G5–44323–00	27 – 33
	29 – 34
	33 – 26

PART NO. N° PIECES	REF. NO.
6E5–44352–01	27 – 31
	29 – 32
	33 – 25
63P–44361–00	28 – 1
	30 – 1
63P–44362–00	28 – 3
	30 – 3
63P–44363–00	28 – 6
	30 – 6
6E5–44365–00	27 – 29
	28 – 2
	28 – 4
	29 – 30
	30 – 2
	30 – 4
6E5–44366–00	25 – 29
6P2–44391–00	19 – 26
63P–44511–00–94	22 – 36
63P–44514–00–94	22 – 29
6G5–44526–00	21 – 3
69J–44533–00	22 – 23
68V–44551–00–8D	22 – 14
63P–44553–00–8D	22 – 26
60V–44555–00–94	22 – 17
63P–44555–00–94	22 – 17
63P–44556–00–8D	22 – 27
61A–44575–00	22 – 16
63P–45111–00–8D	25 – 21
69J–45123–00	25 – 13
	33 – 6
69J–45127–00	25 – 20
	33 – 9
6C5–45155–00	25 – 30
63P–45181–01–9S	25 – 18
63P–45211–00–8D	25 – 36
6J9–45214–00	28 – 10
	30 – 10
6J9–45215–00	28 – 11
	30 – 11
6G5–45251–02	21 – 2
64P–45300–01–8D	29 – 1
63P–45300–02–8D	27 – 1
64P–45300–11–8D	29 – 1
63P–45300–12–8D	27 – 1
6J9–45301–05–8D	27 – 2
	29 – 2
6E5–45318–00	25 – 24
6E5–45321–00	27 – 14

PART NO. N° PIECES	REF. NO.
6E5–45321–00	29 – 15
6E5–45331–00–9S	27 – 37
	29 – 38
6J9–45332–00–CA	27 – 61
6K1–45332–01–CA	29 – 62
688–45341–10	27 – 7
	29 – 8
6E5–45344–00	27 – 43
	29 – 44
6J9–45371–01	28 – 14
6K1–45371–02	30 – 14
688–45375–00	27 – 11
	29 – 12
663–45376–00–94	27 – 10
	29 – 11
63P–45378–00	25 – 37
	27 – 12
	29 – 13
63P–45379–00	25 – 34
6G5–45383–01	27 – 71
	29 – 73
6G5–45384–00	27 – 72
	29 – 74
63P–45501–00	27 – 46
	29 – 47
63P–45501–10	27 – 46
	29 – 47
61A–45527–00	27 – 24
	29 – 25
6G5–45536–01	27 – 9
	29 – 10
61A–45538–00	27 – 21
	29 – 22
63P–45551–00	27 – 47
	29 – 48
64P–45560–01	29 – 50
63P–45560–02	27 – 49
6G5–45567–01	27 – 5
	29 – 6
6G5–45567–10	27 – 5
	29 – 6
6G5–45567–20	27 – 5
	29 – 6
6G5–45567–30	27 – 5
	29 – 6
6G5–45567–40	27 – 5
	29 – 6
6G5–45567–50	27 – 5

PART NO. N° PIECES	REF. NO.
6G5–45567–50	29 – 6
6G5–45567–60	27 – 5
	29 – 6
64P–45570–01	29 – 64
63P–45571–02	27 – 63
6K1–45576–00	29 – 65
6G5–45576–10	27 – 64
6G5–45577–02	27 – 68
	29 – 71
6G5–45577–10	27 – 68
	29 – 71
6G5–45577–20	27 – 68
	29 – 71
6G5–45577–30	27 – 68
	29 – 71
6G5–45577–40	27 – 68
	29 – 71
6G5–45577–50	27 – 68
	29 – 71
6G5–45577–60	27 – 68
	29 – 71
6K1–45578–01	29 – 67
6K1–45578–10	29 – 67
6K1–45578–20	29 – 67
6K1–45578–30	29 – 67
6K1–45578–40	29 – 67
6K1–45578–50	29 – 67
6K1–45578–60	29 – 67
6E5–45587–01	27 – 40
	29 – 41
6E5–45587–10	27 – 40
	29 – 41
6E5–45587–20	27 – 40
	29 – 41
6E5–45587–30	27 – 40
	29 – 41
6E5–45587–40	27 – 40
	29 – 41
6E5–45587–50	27 – 40
	29 – 41
6E5–45587–60	27 – 40
	29 – 41
6J9–45611–01	27 – 51
6K1–45611–10	29 – 52
63P–45631–01	29 – 60
63P–45631–10	27 – 59
6E5–45633–01	27 – 60
	29 – 61

NUMERICAL INDEX
INDEX NUMERIQUE

PART NO. N° PIECES	REF. NO.
6E5–45634–01	27 – 53
	29 – 54
6K1–45641–01	29 – 53
6E5–45641–03	27 – 52
6G5–45930–00–98	28 – 21
6G5–45932–00–98	28 – 21
6G5–45941–00–98	28 – 21
6G5–45943–01–98	28 – 21
6K1–45945–00–98	30 – 21
6G5–45945–01–98	28 – 21
6K1–45947–00–98	30 – 21
6G5–45947–01–98	28 – 21
6G5–45949–00–98	28 – 21
6K1–45970–01–98	30 – 21
6G5–45970–02–98	28 – 21
6R1–45970–A1	30 – 21
6R4–45970–A1	28 – 21
66K–45970–B0	28 – 21
6K1–45972–01–98	30 – 21
6G5–45972–02–98	28 – 21
6R1–45972–A0	30 – 21
6R4–45972–A0	28 – 21
66K–45972–B0	28 – 21
6K1–45974–02–98	30 – 21
6G5–45974–03–98	28 – 21
6R1–45974–A0	30 – 21
6R4–45974–A0	28 – 21
66K–45974–B0	28 – 21
6K1–45976–00–98	30 – 21
6G5–45976–01–98	28 – 21
6J9–45976–10	28 – 21
6R1–45976–A0	30 – 21
6R4–45976–A0	28 – 21
6K1–45978–02–98	30 – 21
6G5–45978–03–98	28 – 21
6R1–45978–A0	30 – 21
6R4–45978–A0	28 – 21
63P–45987–00	28 – 16
	30 – 16
688–45997–01	28 – 17
	30 – 17
63P–46241–00	6 – 15
6E5–48344–00	20 – 6
	20 – 37
63P–48531–00	20 – 1
63P–48532–00	20 – 2
63P–48538–00	20 – 4
6E5–61301–01	31 – 10

PART NO. N° PIECES	REF. NO.
6E5–61303–00	31 – 14
6E5–61311–11	31 – 12
6E5–61313–00	31 – 11
6E5–61315–00	31 – 13
6E5–61350–02	31 – 1
6E5–61351–01	31 – 2
6E5–61355–00	31 – 5
68V–81145–01	9 – 7
68V–81146–01	9 – 27
68V–81147–00	9 – 29
63P–8132G–00	14 – 20
6P2–81332–00	14 – 15
63P–81336–00	16 – 41
63P–81337–00	14 – 18
63D–81345–20	14 – 5
63P–81410–00	14 – 4
63P–81450–00	14 – 1
63P–81460–00	14 – 2
63P–81673–01	14 – 6
6BR–81800–00	18 – 1
69J–81801–00	18 – 5
67F–81807–00	18 – 10
67F–81808–00	18 – 8
67F–81809–00	18 – 19
67F–81810–00	18 – 3
67F–81813–00	18 – 6
67F–81820–00	18 – 7
67F–81821–00	18 – 13
6K7–81826–11	18 – 24
69J–81828–00	18 – 25
68V–8182L–00	9 – 8
67F–81830–00	18 – 17
67F–81832–00	18 – 11
67F–81836–00	18 – 12
69J–81839–00	18 – 21
67F–8183R–00	18 – 16
60V–8183T–00	18 – 18
69J–81840–00	18 – 4
67F–81841–00	18 – 14
69J–81842–00	18 – 20
63P–81845–00	14 – 11
67F–81846–00	18 – 26
67F–81850–00	18 – 2
67F–81857–00	18 – 9
69J–81869–00	18 – 23
67F–81891–00	18 – 15
63P–81919–00	16 – 42
63P–81919–10	16 – 43

PART NO. N° PIECES	REF. NO.
60V–81925–00	18 – 28
63P–81941–00	18 – 22
63P–81942–00	16 – 29
63P–81948–00	16 – 17
68F–81949–00	17 – 32
68V–8194A–00	16 – 4
63P–81950–00	16 – 11
68V–81953–00	16 – 5
68F–8195A–00	16 – 33
63P–81960–01	15 – 17
63P–81975–00	15 – 19
6AH–81994–40	14 – 24
6AH–81994–50	14 – 25
6AH–81996–00	19 – 54
63P–82105–00	17 – 1
6G5–82119–00	16 – 10
6E5–82148–00	21 – 6
	21 – 10
66K–82149–00	21 – 24
63P–82151–00	16 – 32
67F–82151–00	16 – 34
67F–82151–10	16 – 35
60V–82157–00	16 – 40
63P–82170–00	16 – 31
63P–82310–01	15 – 1
663–82317–01	14 – 19
67F–82361–00	15 – 4
	15 – 10
67F–82362–00	15 – 5
	15 – 9
67F–82377–00	19 – 51
63P–82380–00	9 – 28
63P–82388–00	15 – 15
6P2–82560–01	17 – 26
69J–82563–00	17 – 21
68F–82582–00	18 – 29
6P2–82582–00	17 – 5
6P2–82582–10	17 – 6
69J–82587–00	17 – 23
6E9–82588–00	17 – 27
61A–82588–01	20 – 11
63P–82590–30	17 – 4
63P–82594–00	16 – 23
60V–8259F–00	20 – 33
69J–8259F–00	20 – 10
63P–8259L–00	10 – 26
63P–8259M–00	17 – 10
68F–82846–00	16 – 36

PART NO. N° PIECES	REF. NO.
6E5–83558–00	25 – 31
63P–83614–00	17 – 24
63P–83626–00	4 – 30
67F–83627–01	18 – 32
6AW–83651–00	17 – 20
63P–8366P–00	17 – 29
67H–83672–00	22 – 3
72X–85075–L0	24 – 21
68F–85119–00	16 – 21
68F–85516–01	16 – 19
60V–85544–00	16 – 38
689–85547–00	12 – 1
68V–85548–00	16 – 27
63P–85580–00	14 – 3
61A–85790–00	17 – 16
6S1–85885–00	9 – 6
63P–85886–00	17 – 18
63P–8591A–61	16 – 1
63P–W0001–01	32 – 1
63P–W0001–20	33 – 1
63P–W0070–00	1 – 19
61A–W0078–A3	33 – 21
63P–W009A–02–9S	4 – 1
63P–W009B–05–9S	2 – 1
63P–W1164–01	3 – 7
63P–W1164–10	3 – 7
63P–W1510–03–9S	2 – 2
63P–W823A–00	15 – 2
63P–W823B–00	15 – 3
63P–W823C–00	15 – 7
63P–W823D–00	15 – 8
90101–09M70	31 – 18
90101–12M05	21 – 40
90105–06M07	4 – 15
	5 – 15
90105–10071	2 – 9
90105–10M00	28 – 15
	30 – 15
90109–06M80	17 – 28
	19 – 39
90109–06M82	19 – 10
	19 – 22
90109–06M86	17 – 25
	19 – 17
	19 – 46
	20 – 3
90109–08019	20 – 35
90109–14005	22 – 32

PART NO. N° PIECES	REF. NO.
90109–14007	22 – 22
90110–05020	6 – 18
90119–06071	12 – 17
90119–06076	7 – 14
90119–06134	15 – 6
90119–06135	8 – 20
	12 – 38
90119–06M10	27 – 17
	29 – 18
90119–06M18	25 – 35
90119–06M81	2 – 15
90119–06M82	7 – 16
90119–06M83	12 – 37
90119–06MA2	2 – 23
	5 – 11
90119–06MA4	5 – 5
	5 – 22
	15 – 18
90119–06MA6	2 – 27
90119–07234	4 – 7
90119–07235	4 – 6
90119–08M14	27 – 36
	29 – 37
	33 – 29
90119–08M22	19 – 3
90119–08M58	25 – 6
90119–08M66	2 – 16
	2 – 26
90119–08M79	25 – 2
90119–08M91	4 – 21
90119–10007	25 – 22
90119–10008	28 – 9
	30 – 9
90119–10038	25 – 40
	28 – 8
	30 – 8
90119–10049	22 – 28
90119–10MA2	28 – 9
	30 – 9
90151–05M05	5 – 3
90151–06M02	2 – 18
	2 – 20
90152–05M08	28 – 12
	30 – 12
90155–10001	4 – 20
90159–05059	22 – 2
90159–06M28	19 – 38
90169–05M00	16 – 30

PART NO. N° PIECES	REF. NO.
90170–09M05	31 – 19
90170–14M06	31 – 15
90170–16M01	27 – 48
	29 – 49
90171–18M04	28 – 19
	30 – 19
90179–06M24	1 – 15
90179–08003	18 – 27
90179–24002	14 – 14
90185–05002	28 – 13
	30 – 13
90185–09M01	31 – 6
	31 – 20
90185–14M00	22 – 34
90185–22007	21 – 19
90201–06068	19 – 14
90201–06M31	20 – 40
	20 – 46
	20 – 53
90201–10060	23 – 31
90201–10M20	31 – 7
90201–10M76	31 – 17
90201–12M05	21 – 42
90201–13M01	21 – 41
90201–15M58	22 – 21
90201–16M01	22 – 33
90201–16M55	22 – 20
90201–22M01	27 – 22
	29 – 23
90201–24014	14 – 13
90201–26M59	21 – 18
90201–30M92	27 – 69
90201–35008	22 – 18
90201–38M60	22 – 10
90202–08M20	20 – 16
90202–16061	20 – 23
90202–28001	22 – 38
90202–32M19	22 – 19
90202–40M47	22 – 13
90206–10M04	20 – 41
	20 – 47
	20 – 54
90206–15M18	19 – 13
90206–22M19	27 – 23
	29 – 24
90249–06M19	21 – 31
90250–08M07	27 – 58
	29 – 59

NUMERICAL INDEX
INDEX NUMERIQUE

PART NO. N° PIECES	REF. NO.
90280–04M05	27 – 32
	29 – 33
	33 – 30
90280–05015	14 – 12
90282–04M00	27 – 70
	29 – 72
90338–25004	2 – 7
90340–08002	27 – 6
	29 – 7
90340–14M06	4 – 10
	5 – 26
	26 – 7
90340–18M09	5 – 23
90340–27129	2 – 28
90344–51019	4 – 4
90386–06M12	20 – 19
90386–08001	7 – 13
90386–10M16	21 – 29
90386–12069	20 – 32
90386–15M73	19 – 12
90386–16M66	20 – 22
90386–22M98	21 – 36
	23 – 34
90386–25M31	21 – 17
90386–38M32	22 – 12
90387–06010	16 – 18
90387–06038	7 – 15
90387–06176	16 – 20
90387–06M29	20 – 42
	20 – 55
90387–06M43	19 – 41
90387–06M60	8 – 5
	12 – 15
90387–06M64	26 – 10
90387–06M82	20 – 48
90387–08M37	19 – 5
90387–10M05	21 – 32
90387–10M08	4 – 19
90387–10M61	31 – 3
90387–14004	22 – 37
90430–06M03	4 – 16
	5 – 16
90430–08020	27 – 8
	29 – 9
	33 – 11
90430–08143	4 – 9
	32 – 2
90430–14115	2 – 13

PART NO. N° PIECES	REF. NO.
90430–14115	4 – 11
	5 – 27
	32 – 3
90430–14M09	26 – 8
	32 – 16
	33 – 3
90430–18130	5 – 24
	32 – 11
90445–070F1	25 – 33
90445–10027	5 – 25
90445–11020	1 – 25
90445–13511	12 – 2
90450–22M14	7 – 6
90462–06013	5 – 39
90462–10023	7 – 7
90464–05141	15 – 16
90464–07M41	15 – 11
90464–11012	8 – 16
90464–16013	2 – 32
90464–20006	7 – 9
90464–20181	19 – 45
90464–20258	19 – 50
90464–23199	16 – 25
	19 – 47
90465–08M63	21 – 22
90465–10032	1 – 2
90465–11M10	8 – 19
	12 – 4
	12 – 35
	19 – 25
	19 – 34
	21 – 20
	22 – 5
	25 – 32
90465–13M18	16 – 26
90467–09M09	8 – 18
90467–15M14	2 – 31
	2 – 33
90468–18008	20 – 7
	20 – 17
	20 – 38
90480–10627	16 – 22
90480–10M23	8 – 4
	12 – 16
90480–12072	4 – 29
90480–13M24	19 – 40
90480–20M05	5 – 8
90480–22M81	19 – 4

PART NO. N° PIECES	REF. NO.
90501–11M10	27 – 20
	29 – 21
90501–12082	20 – 29
90501–16M11	5 – 7
90501–16M37	27 – 54
	29 – 55
90506–16003	21 – 34
90506–16M34	19 – 18
90508–20M31	20 – 31
90560–12M01	31 – 4
91490–40030	28 – 20
	30 – 20
91690–30010	20 – 5
	20 – 27
91690–30020	21 – 33
91690–50014	7 – 4
91809–08006	4 – 5
91814–18001	2 – 5
	2 – 6
92903–06600	16 – 16
92903–08100	18 – 34
92903–08600	7 – 3
	18 – 31
92907–06600	26 – 13
92990–06100	1 – 5
	1 – 23
92990–06600	25 – 28
92990–10600	17 – 17
92990–18200	28 – 18
	30 – 18
92995–04100	20 – 13
92995–06100	14 – 9
	15 – 13
	16 – 8
	16 – 13
	17 – 8
	17 – 12
	21 – 5
	26 – 27
92995–06600	1 – 10
	4 – 27
	5 – 38
	5 – 41
	8 – 7
	12 – 14
	14 – 10
	14 – 17
	14 – 22

PART NO. N° PIECES	REF. NO.
92995–06600	15 – 14
	16 – 3
	16 – 9
	16 – 14
	17 – 9
	17 – 13
	17 – 15
	17 – 31
	21 – 8
	21 – 12
	21 – 39
	26 – 21
	26 – 28
92995–08100	21 – 16
92995–08600	17 – 3
	25 – 15
	26 – 4
	27 – 45
	29 – 46
92995–10600	22 – 8
	22 – 31
	25 – 4
92995–14600	22 – 25
	22 – 35
93101–28M16	27 – 38
	29 – 39
	33 – 17
93101–30M17	27 – 66
	29 – 69
	33 – 19
93102–08M43	24 – 36
93102–38008	6 – 14
	32 – 14
93102–60004	3 – 3
	32 – 13
93106–09014	27 – 16
	29 – 17
	33 – 13
93210–07003	25 – 38
	27 – 13
	29 – 14
	33 – 10
93210–09165	20 – 21
93210–10M74	23 – 4
93210–16275	31 – 9
93210–19MJ1	5 – 31
	32 – 18
93210–19MJ3	26 – 25

PART NO. N° PIECES	REF. NO.
93210–19MJ3	32 – 19
93210–24M79	5 – 34
	32 – 20
93210–25552	2 – 14
	26 – 22
	32 – 6
93210–25647	2 – 8
	32 – 7
93210–30682	12 – 36
93210–37160	27 – 28
	29 – 29
	33 – 15
	33 – 24
93210–37MH7	22 – 11
93210–55M14	27 – 42
	29 – 43
	33 – 18
93210–58144	27 – 15
	29 – 16
	33 – 12
93210–86M38	27 – 27
	29 – 28
	33 – 14
	33 – 23
93210–97M55	27 – 67
	29 – 70
	33 – 20
93306–209U0	27 – 62
93311–928U5	27 – 3
	29 – 3
93315–425V3	27 – 50
	29 – 51
93315–43061	27 – 65
	29 – 68
93317–330U2	27 – 39
	29 – 40
93332–00048	29 – 63
93332–000V3	27 – 4
93341–440U5	29 – 66
93341–465U4	29 – 5
93341–930V2	27 – 41
	29 – 42
93390–000U2	29 – 4
93410–16006	20 – 24
93410–22M11	21 – 37
93410–37M04	22 – 15
93420–36M01	25 – 25
93501–04M02	20 – 28

PART NO. N° PIECES	REF. NO.
93503–16003	27 – 57
	29 – 58
93507–32009	27 – 55
	29 – 56
93511–32017	27 – 56
	29 – 57
93605–10108	6 – 11
93605–17002	6 – 19
93606–12019	2 – 3
	27 – 35
	29 – 36
	33 – 28
93606–19M23	25 – 16
93608–16M16	25 – 5
	25 – 23
	25 – 39
	26 – 5
	28 – 7
	30 – 7
93700–06M01	20 – 34
93700–06M03	20 – 36
	21 – 13
	21 – 23
94702–00391	4 – 32
95333–08600	18 – 33
95380–05700	9 – 18
95380–06600	1 – 6
	1 – 24
	19 – 37
95380–12600	21 – 43
95380–14600	22 – 24
95380–14700	31 – 16
95780–10300	22 – 7
97013–06020	16 – 15
97013–08020	7 – 2
97013–08045	18 – 30
97027–06025	26 – 12
97075–08035	25 – 14
	26 – 3
97075–10045	22 – 30
	25 – 3
97095–06010	16 – 7
	16 – 12
	21 – 7
	21 – 26
	21 – 38
97095–06012	5 – 40
	17 – 14

PART NO. N° PIECES	REF. NO.
97095–06012	17 – 30
97095–06014	12 – 13
97095–06016	1 – 9
	8 – 6
	14 – 21
	16 – 2
97095–06020	17 – 7
	17 – 11
	19 – 15
	26 – 26
97095–06025	15 – 12
	20 – 43
	20 – 56
97095–06030	4 – 26
	21 – 4
97095–06035	14 – 8
	20 – 49
97095–06040	26 – 20
97095–06045	5 – 37
97095–08014	4 – 8
97095–08016	17 – 2
97095–08020	21 – 15
97095–08025	27 – 44
	29 – 45
97575–06535	20 – 26
97575–06540	5 – 32
97575–08540	4 – 17
	5 – 17
	7 – 1
97575–08560	25 – 11
97575–10530	23 – 32
97575–10535	25 – 7
97595–06516	9 – 15
97595–06550	20 – 14
97607–04208	4 – 24
97607–04310	24 – 32
97780–50620	1 – 3
	16 – 37
97780–60520	19 – 29
97780–60620	16 – 6
	16 – 24
	16 – 28
97880–06016	25 – 27
97885–04016	20 – 12
97885–06010	14 – 16
97885–06012	21 – 11
97885–06016	22 – 4
98780–05016	2 – 12

PART NO. N° PIECES	REF. NO.
99001–08600	27 – 19
	29 – 20
99530–08012	14 – 7