YAMAHA

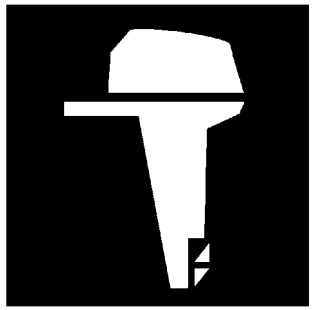

PARTS CATALOGUE
CATALOGUE DE PIECES DETACHEES

F30B'09 (6BT1)

1H6BT-300F1

( )

YAMAHA
GENUINE
Parts & Accessories

F30B
PARTS CATALOGUE
©2009 by Yamaha Motor Co., Ltd.
1st edition, January 2009
All rights reserved.
Any reprinting or unauthorized use
without the written permission of
Yamaha Motor Co., Ltd.
is expressly prohibited.
Printed in Japan.

F30B
CATALOGUE DE PIECES DETACHEES
©2009 par Yamaha Motor Co., Ltd.
1re édition, janvier 2009
Tous droits réservés
Toute réimpression ou utilisation
non autorisée sans la permission écrite
de la Yamaha Motor Co., Ltd.
est formellement interdite.
Imprimé au Japon

FOREWORD

This Parts Catalogue is related to the parts for the model(s) on the cover page. When you are ordering replacement parts, please refer to this Parts Catalogue and quote both part numbers and part names correctly.

1. Modifications or additions which have been made after the issue of the Parts Catalogue will be announced in the Parts News.
   It is advisable that you make the necessary corrections to the Parts Catalogue according to the Parts News.

2. Abbreviations
   The following abbreviations are used in this Parts Catalogue.

   "UR" Use specified parts number.
   "UN" Use as many as needed.
   "AP" Alternate Parts
   "LM" Locally Made (Parts need to be ordered locally)
   "F#" Frame No. (Applicable machine No.)
   "O/S" Over Size

3. The number of components for assembly
   - Parts, which are to be supplied in an assembly, are listed with a dot (.) in front of the part name as shown below.
   - The numeral appearing to the right of each component part indicates the quantity of parts for each assembly unit.

PART NO.	DESCRIPTION	Q'TY	REMARKS
2F5–83310–60	FRONT FLASHER LIGHT ASSY	2	
115–83311–60	.BULB (6V–18W)	1	

4. Applicable colours of graphics are represented in the "REMARKS" as shown below.

PART NO.	DESCRIPTION	Q'TY	REMARKS
2N4–24110–00–X5	FUEL TANK COMP.	2	MXR
3J1–24240–10	.GRAPHIC, FUEL TANK	1	FOR MXR

5. Note that the illustrations for reference in finding parts numbers are not to be used for assembling. When assembling, please use the applicable service manual.

6. The asterisk (*) before a reference number indicates modified items after the first edition.

7. Applicable Serial No.

   Engine Serial No.

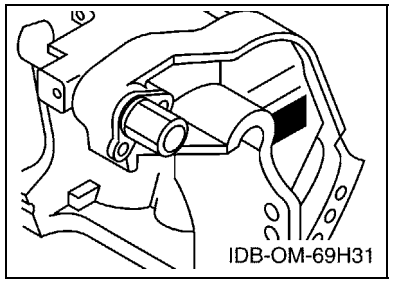

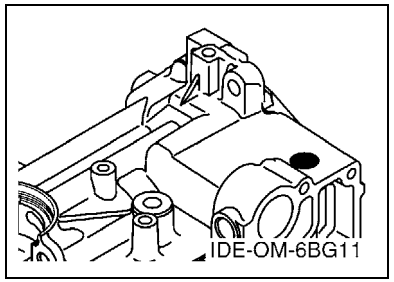

8. Applicable Engine Starting Serial No.

Model	Serial No.	Model	Serial No.
F30B	6BT-1000001		

9. Applicable Colour Code

Abbreviation	Colour Name	Colour Code
DBN1	DARK BLUISH GRAY 1	008D

10. Quantity Column Information

Column No.	Name Of Q'ty Column	Applicable Model
1	ET	F30BET
2	EHD	F30BEHD

AVANT–PROPOS

Ce catalogue de pièces détachées concerne les pièces pour le(s) modèle(s) indiqué(s) sur la page de couverture. Lorsque vous commandez des pièces de rechange, veuillez vous référer à ce catalogue de pieces détachées et indiquer clairement les numéros et les noms des pièces détachées.

1. Les modifications ou ajouts ayant été effectués après la parution du catalogue de pièces détachées seront décrits dans les Bulletins d'information concernant les pièces détachées.
   Il est recommandé que vous apportiez les corrections nécessaires au catalogue des pièces détachées en vous référant aux Bulletins d'information.

2. Abréviations
   Dans ce catalogue, les abréviations suivantes sont utilisées:

   "UR" Utiliser le numéro de pièces spécifié.
   "UN" Utiliser autant que nécessaire.
   "AP" Pièces de substitution
   "LM" Fabrication locale (les pièces doivent être commandées localement.)
   "F#" N° de cadre (applicable au N° de série)
   "O/S" Surdimensionné

3. Nombre de pièces d'un assemblage
   - Les pièces fournies comme composants d'un assemblage sont précédées d'un point (.) de la manière indiquée ci–dessous.
   - Le chiffre apparaissant à la droite de chaque composant indique la quantité de pièces pour chaque unité d'assemblage.

N° PIECES	DESCRIPTION	QTE	REMARQUES
2F5–83310–60	ENS. CLIGNOTANT AVANT	2	
115–83311–60	.AMPOULE (6V–18W)	1	

4. Les couleurs concernant les graphiques sont indiquées dans la colonne "REMARQUES", comme indiqué ci–dessous.

N° PIECES	DESCRIPTION	QTE	REMARQUES
2N4–24110–00–X5	RESERVOIR A ESSENCE.	2	MXR
3J1–24240–10	.GRAPHIQUE	1	POUR MXR

5. Veuillez noter que les illustrations sont indiquées à titre de référence pour trouver les numéros de pièces, non pour être utilisées lors de l'assemblage. Lors de l'assemblage, veuillez utiliser le manuel d'entretien adéquat.

6. L'astérisque (*) placé devant un numéro de référence indique des éléments qui ont été modifiés après la première édition.

7. N° de série applicable

   N° de Série du moteur

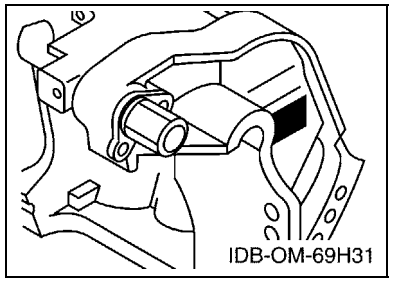

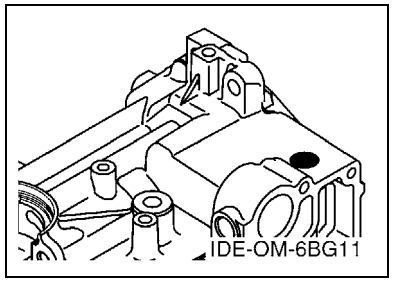

8. N° de série initial du moteur applicable

Modèle	N° de série	Modèle	N° de série
F30B	6BT-1000001		

9. Code couleur applicable

Abréviation	Nom de la couleur	Code couleur
DBN1	DARK BLUISH GRAY 1	008D

10. Informations relatives à la colonne Quantité

N° de la colonne	Nom de la colonne Qté	Modèle applicable
1	ET	F30BET
2	EHD	F30BEHD

CONTENTS

TOP COWLING 1
CYLINDER & CRANKCASE 1 2
CRANKSHAFT & PISTON 3
CYLINDER & CRANKCASE 2 4
VALVE 5
INTAKE 1 6
INTAKE 2 7
FUEL INJECTION PUMP 1 8
FUEL INJECTION PUMP 2 9
OIL PUMP 10
FUEL 11
GENERATOR 13
ELECTRICAL 1 14
ELECTRICAL 2 15
ELECTRICAL 3 16
ELECTRICAL 4 18
ELECTRICAL 5 19
STARTING MOTOR 21
BOTTOM COWLING 1 22
BOTTOM COWLING 2 24
STEERING 1 25
STEERING 2 28
STEERING FRICTION 29
CONTROL 30
BRACKET 1 32
BRACKET 2 34
BRACKET 3 36
POWER TRIM & TILT ASSY 38
UPPER CASING 41
OIL PAN 43
LOWER CASING & DRIVE 1 44
LOWER CASING & DRIVE 2 47
FUEL TANK 49
STEERING GUIDE 50
OPTIONAL PARTS 51
REPAIR KIT 1 52
REPAIR KIT 2 53

INDEX

NUMERICAL INDEX 55

TABLE DES MATIERES

CAPOT SUPERIEUR 1
CYLINDRE & CARTER 1 2
VILEBREQUIN & PISTON 3
CYLINDRE & CARTER 2 4
SOUPAPE 5
ADMISSION 1 6
ADMISSION 2 7
POMPE A INJECTEUR 1 8
POMPE A INJECTEUR 2 9
POMPE A HUILE 10
CARBURANT 11
GENERATRICE 13
PARTIE ELECTRIQUE 1 14
PARTIE ELECTRIQUE 2 15
PARTIE ELECTRIQUE 3 16
PARTIE ELECTRIQUE 4 18
PARTIE ELECTRIQUE 5 19
DEMARREUR ELECTRIQUE 21
CAPOT INFERIEUR 1 22
CAPOT INFERIEUR 2 24
DIRECTION 1 25
DIRECTION 2 28
CUVETTE POIGNEE DE DIRECTION 29
COMMANDE 30
SUPPORT 1 32
SUPPORT 2 34
SUPPORT 3 36
PUISSANCE PARER ET INCLINER 38
FOURREAU 41
VENTILATEUR D'HUILE 43
BOITIER D'HELICE TRANSMISSION1 44
BOITIER D'HELICE TRANSMISSION2 47
RESERVOIR A CARBURANT 49
FIXATION DE DIRECTION 50
PIECES OPTIONNELLES 51
KITS DE REPARATION 1 52
KITS DE REPARATION 2 53

INDEX

INDEX NUMERIQUE 55

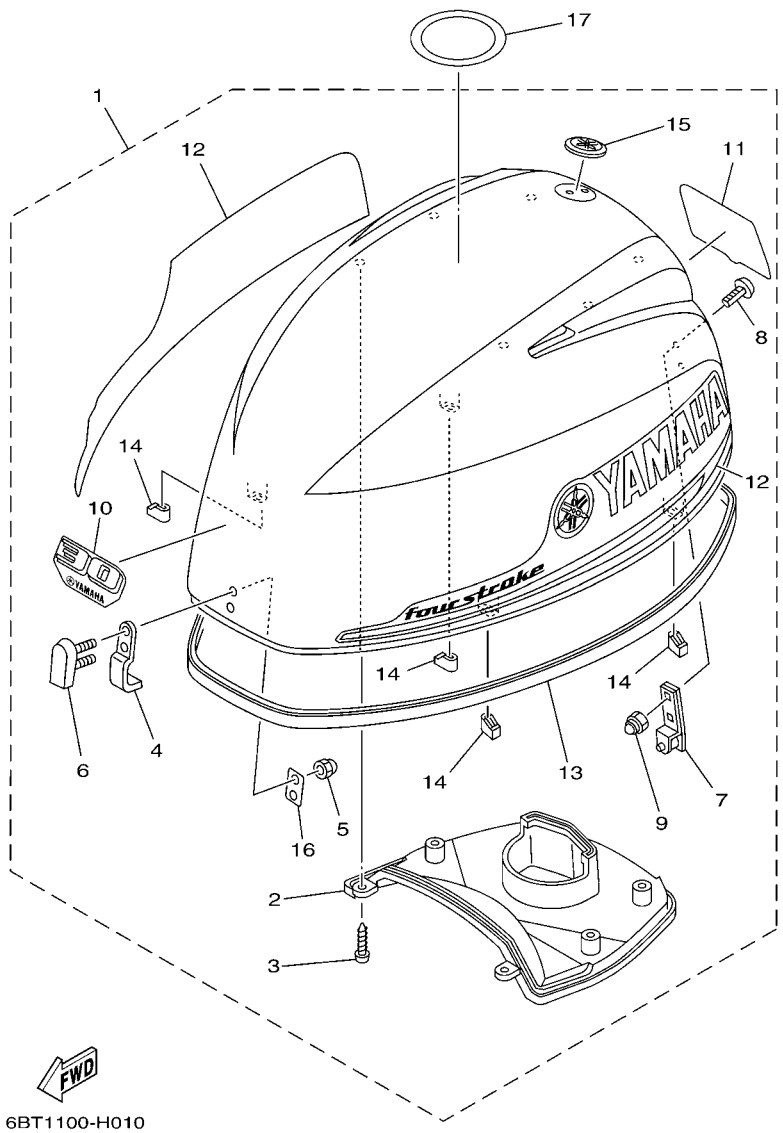

FIG. 1 TOP COWLING — CAPOT SUPERIEUR

REF. NO.	PART NO. N° PIECES	DESCRIPTION DESCRIPTION	ET	EHD				REMARKS REMARQUES
1	6BT–42610–00–8D	TOP COWLING ASSY CAPOT (ENS.)	1	1				
2	6BG–42613–00	.MOLDING, AIR DUCT .MANCHON A AIR	1	1				
3	97780–50616	.SCREW, TAPPING .VIS, TETE BOMBEE	6	6				
4	6BG–42651–00	.HOOK .CROCHET	1	1				
5	95380–05800	.NUT .ECROU	2	2				
6	6BG–42851–00	.COVER, CLAMP .COUVERCLE, BRIDE	1	1				
7	6BG–42652–00	.HOOK .CROCHET	1	1				
8	90109–06047	.BOLT .BOULON	2	2				
9	90185–06M05	.NUT, SELF-LOCKING .ECROU,AUTO-BLOQUANT	2	2				
10	6BG–42677–10	.GRAPHIC, FRONT .ADHESIF, AVANT	1	1				
11	6BT–42678–00	.GRAPHIC, REAR .ADHESIF, ARRIERE	1	1				
12	6BG–W0070–00	.GRAPHIC SET .JEU DIEMBLEMES	1	1				
13	6BG–42615–00	.SEAL .JOINT	1	1				
14	6BG–42662–00	.DAMPER .AMORTISSEUR	4	4				
15	6AH–42697–01	.TUNING FORK MARK .MARQUE, YAMAHA	1	1				
16	6BG–42649–00	.HOLDER, CLAMP BAND .SUPPORT, SANDOW DE SERRAGE	1	1				
17	67F–13434–10	LABEL, CAUTION ETIQUETTE, ATTENTION	1	1				

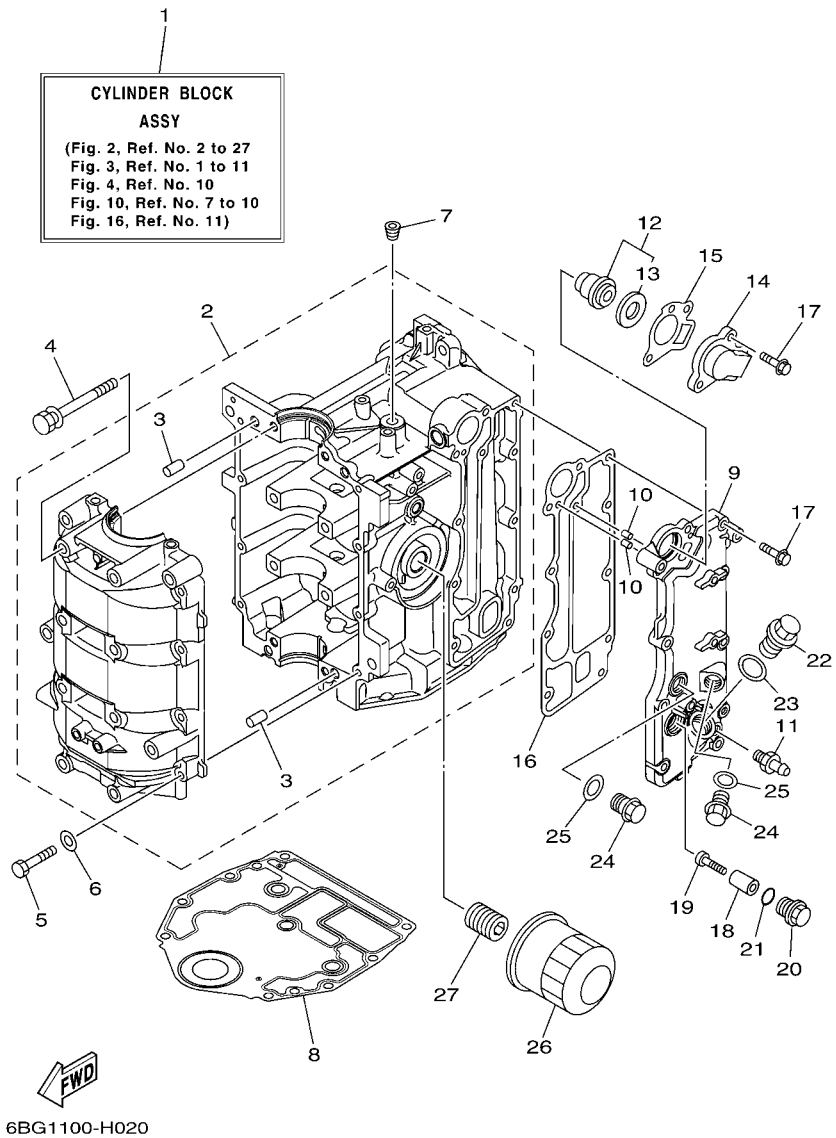

FIG. 2 CYLINDER & CRANKCASE 1 CYLINDRE & CARTER 1

REF. NO.	PART NO. N° PIECES	DESCRIPTION DESCRIPTION	ET	EHD				REMARKS REMARQUES
1	6BG–W009B–00–9S	CYLINDER BLOCK ASSY CYLINDRE GROUPE (ENS.)	1	1				
2	6BG–15100–00–9S	CRANKCASE ASSY CARTER DE MOTEUR COMPLET	1	1				
3	93606–12019	.PIN, DOWEL .GOUPILLE	4	4				
4	90119–08M01	BOLT, WITH WASHER BOULON, AVEC RONDELLE	8	8				
5	97013–06035	BOLT BOULON	8	8				
6	92903–06600	WASHER, PLATE RONDELLE, PLATE	8	8				
7	90344–51003	PLUG, TAPER SCREW PLOT, FILETE CONIQUE	1	1				
8	6BG–11351–00	GASKET, CYLINDER JOINT, D'EMBASE	1	1				
9	6BG–41113–00–9S	OUTER COVER, EXHAUST COUVERCLE, ECHAPPEMENT	1	1				
10	93604–10M03	PIN, DOWEL CLAVETTE	2	2				
11	62Y–12481–10	PIPE 1 DURITE 1	1	1				
12	6G8–12411–03	THERMOSTAT THERMOSTAT	1	1				
13	688–12412–00	.SEAL, THERMOSTAT .JOINT, THERMOSTAT	1	1				
14	6C5–12413–00–9S	COVER, THERMOSTAT COUVERCLE, THERMOSTAT	1	1				
15	62Y–12414–00	GASKET, COVER JOINT, COUVERCLE	1	1				
16	6BG–41114–00	GASKET, EXHAUST OUTER COVER JOINT, COUVERCLE D'ECHAPPEMENT	1	1				
17	90119–06MA5	BOLT, WITH WASHER BOULON, AVEC RONDELLE	10	10				
18	6G8–11325–00	ANODE ANODE	1	1				
19	97880–05025	SCREW, PAN HEAD VIS, TETE TRONCONIQUE	1	1				
20	6G8–11197–01	PLUG, BLIND PLOT, BORGNE	1	1				
21	93210–13M63	O-RING JOINT TORIQUE	1	1				
22	90340–18M09	PLUG, STRAIGHT SCREW PLOT, FILETE DROIT	1	1				
23	90430–18130	GASKET JOINT	1	1				
24	90340–14M06	PLUG, STRAIGHT SCREW PLOT, FILETE DROIT	2	2				
25	90430–14115	GASKET JOINT	2	2				
26	5GH–13440–20	ELEMENT ASSY, OIL CLEANER ELEMENT, FILTRE A HUILE	1	1				
27	6C5–12858–00	BOLT, UNION BOULON, RACCORD	1	1				

FIG. 3 CRANKSHAFT & PISTON VILEBREQUIN & PISTON

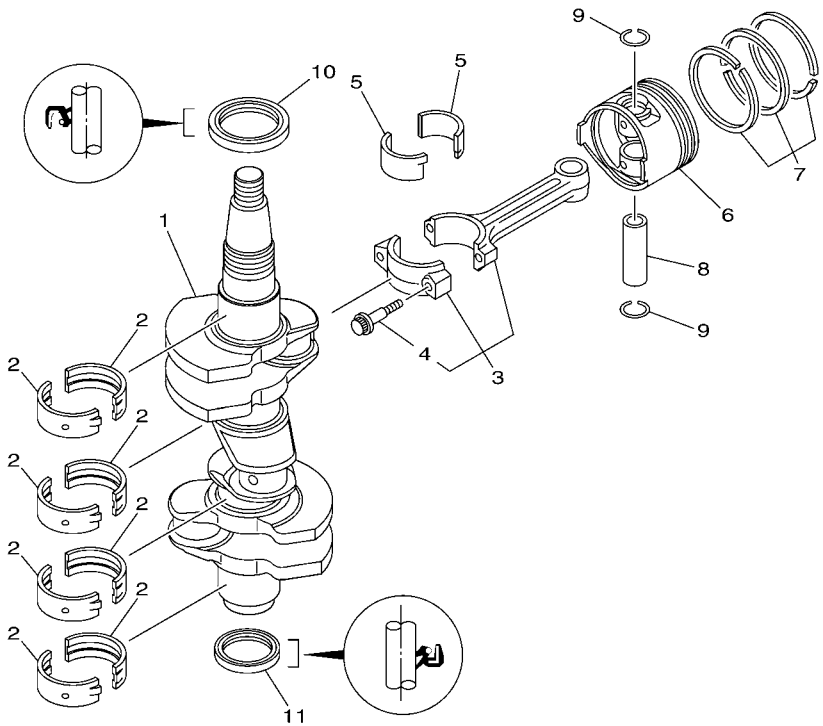

6BG1100-H030

REF. NO.	PART NO. N° PIECES	DESCRIPTION DESCRIPTION	ET	EHD				REMARKS REMARQUES
1	6BG–11411–00	CRANKSHAFT VILEBREQUIN COMPLET	1	1				
2	6BG–11416–00	PLANE BEARING, CRANKSHAFT 1 COUSSINET DE VILEBREQUIN 1	8	8				UR YELLOW UR YELLOW
	6BG–11416–10	PLANE BEARING, CRANKSHAFT 1 COUSSINET DE VILEBREQUIN 1	8	8				UR RED UR RED
	6BG–11416–20	PLANE BEARING, CRANKSHAFT 1 COUSSINET DE VILEBREQUIN 1	8	8				UR PINK UR PINK
	6BG–11416–30	PLANE BEARING, CRANKSHAFT 1 COUSSINET DE VILEBREQUIN 1	8	8				UR GREEN UR GREEN
3	6C5–11650–00	CONNECTING ROD ASSY BIELLE COMPLETTE	3	3				
4	6C5–11654–00	.BOLT, CONNECTING ROD .BOULON, BIELLE	2	2				
5	6C5–11656–00	PLANE BEARING, CONNECTING ROD ROULEMENT DE BIELLE	6	6				UR YELLOW UR YELLOW
	6C5–11656–10	PLANE BEARING, CONNECTING ROD ROULEMENT DE BIELLE	6	6				UR RED UR RED
	6C5–11656–20	PLANE BEARING, CONNECTING ROD ROULEMENT DE BIELLE	6	6				UR PINK UR PINK
	6C5–11656–30	PLANE BEARING, CONNECTING ROD ROULEMENT DE BIELLE	6	6				UR GREEN UR GREEN
6	69W–11631–01–97	PISTON (STD) PISTON (STD)	3	3				
	69W–11635–01	PISTON (0.25MM O/S) PISTON (0.25MM O/S)	3	3				AP AP
	69W–11636–01	PISTON (0.50MM O/S) PISTON (0.50MM O/S)	3	3				AP AP
7	67C–11603–00	PISTON RING SET (STD) JEU DE SEGMENTS (STD)	3	3				
	67C–11604–00	PISTON RING SET (0.25MM O/S) JEU DE SEGMENTS (0.25MM O/S)	3	3				AP AP
	67C–11605–00	PISTON RING SET (0.50MM O/S) JEU DE SEGMENTS (0.50MM O/S)	3	3				AP AP
8	62Y–11633–00	PIN, PISTON AXE, PISTON	3	3				
9	93450–17129	CIRCLIP CIRCLIP, TYPE S	6	6				
10	93102–43M42	OIL SEAL JOINT SPY	1	1				
11	93101–35002	OIL SEAL JOINT SPY	1	1				

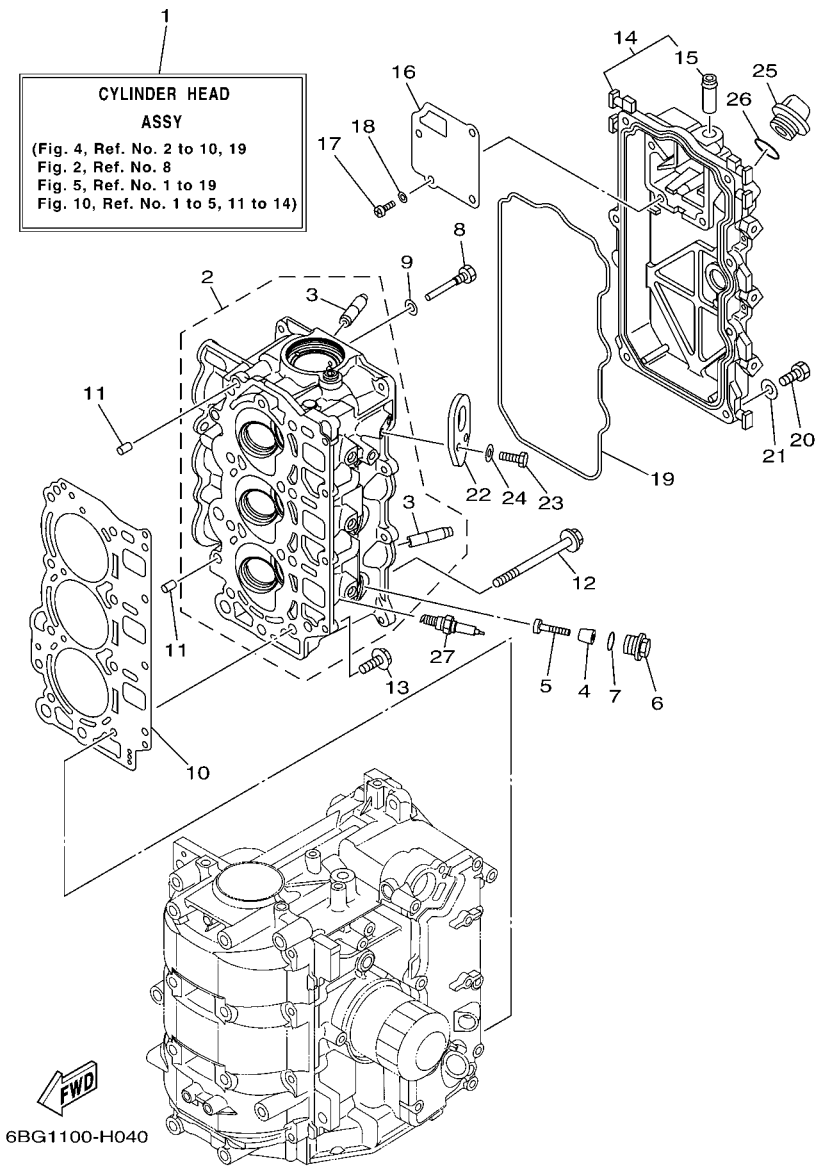

FIG. 4 CYLINDER & CRANKCASE 2 CYLINDRE & CARTER 2

REF. NO.	PART NO. N° PIECES	DESCRIPTION DESCRIPTION	ET	EHD				REMARKS REMARQUES
1	6BG–W009A–00–9S	CYLINDER HEAD ASSY CULASSE (ENS.)	1	1				
2	6BG–11111–00–9S	HEAD, CYLINDER 1 CULASSE	1	1				
3	62Y–11133–30	.GUIDE, VALVE 1 .GUIDE, SOUPAPE 1	6	6				
4	6G8–11325–00	ANODE ANODE	3	3				
5	97880–05025	SCREW, PAN HEAD VIS, TETE TRONCONIQUE	3	3				
6	6G8–11197–01	PLUG, BLIND PLOT, BORGNE	3	3				
7	93210–13M63	O-RING JOINT TORIQUE	3	3				
8	90109–06M65	BOLT BOULON	1	1				
9	90430–06014	GASKET JOINT	1	1				
10	6BG–11181–00	GASKET, CYLINDER HEAD 1 JOINT, DE CULASSE 1	1	1				
11	99530–08012	PIN, DOWEL GOUJON, D'ASSEMBLAGE	2	2				
12	90105–09005	BOLT, FLANGE BOULON	8	8				
13	90119–06MA3	BOLT, WITH WASHER BOULON, AVEC RONDELLE	4	4				
14	6BG–11191–00–9S	COVER, CYLINDER HEAD 1 COUVERCLE, CULASSE 1	1	1				
15	62Y–14485–00	.PIPE, JOINT .DURITE	1	1				
16	6BG–11168–00	COVER, BREATHER COUVERCLE, RENIFLARD	1	1				
17	98507–04010	SCREW, PAN HEAD VIS, TETE TRONCONIQUE	4	4				
18	92907–04600	WASHER RONDELLE	4	4				
19	6BG–11356–00	SEAL, CYLINDER 2 JOINT, SPY CYLINDRE	1	1				
20	97095–06020	BOLT BOULON	7	7				
21	92995–06600	WASHER RONDELLE	7	7				
22	6BG–11119–00	HANGER, ENGINE ANNEAU, LEVAGE	1	1				
23	97095–06020	BOLT BOULON	2	2				
24	92995–06600	WASHER RONDELLE	2	2				
25	6G8–15363–00	PLUG, OIL PLOT, HUILE	1	1				
26	93210–24M79	O-RING JOINT TORIQUE	1	1				
27	94702–00418	PLUG, SPARK (NGK DPR6EB) BOUGIE D,ALLUMAGE (NGK DPR6EB)	3	3				

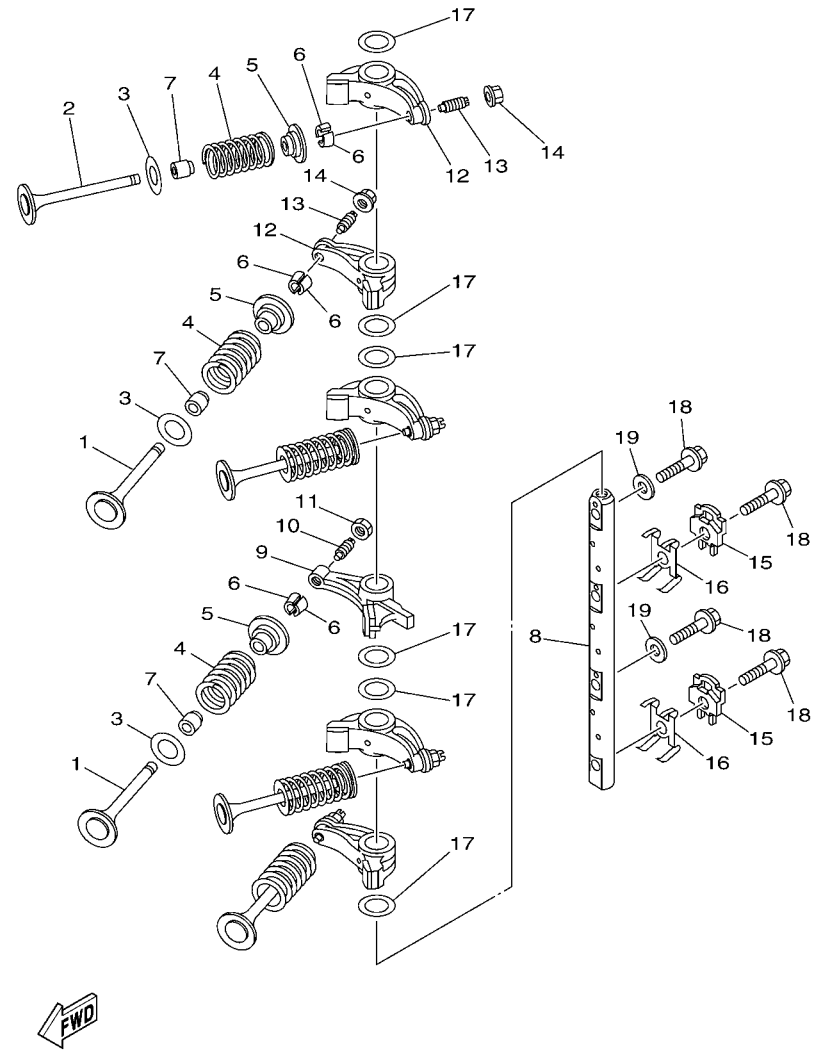

6BG1100-H050

FIG. 5 VALVE SOUPAPE

REF. NO.	PART NO. N° PIECES	DESCRIPTION DESCRIPTION	ET	EHD				REMARKS REMARQUES
1	69W–12111–00	VALVE, INTAKE SOUPAPE, ADMISSION	3	3				
2	69W–12121–00	VALVE, EXHAUST SOUPAPE, ECHAPPEMENT	3	3				
3	62Y–12116–00	SEAT, VALVE SPRING SIEGE, RESSORT DE SOUPAPE	6	6				
4	51Y–12114–00	SPRING, VALVE OUTER RESSORT DE SOUPAPE, EXTERNE	6	6				
5	30X–12117–00	RETAINER, VALVE SPRING BUTEE DE RESSORT DE SOUPAPE	6	6				
6	30X–12118–00	COTTER, VALVE FRAISE, SOUPAPE	12	12				
7	51Y–12119–00	SEAL, VALVE STEM JOINT, QUEUE DE SOUPAPE	6	6				
8	6BG–12146–00	SHAFT, ROCKER AXE, CULBUTEUR	1	1				
9	62Y–12151–00	ARM, VALVE ROCKER CULBUTEUR	1	1				
10	64J–12159–00	SCREW, VALVE ADJUSTING VIS, REGLAGE DE SOUPAPE	1	1				
11	62Y–12158–00	NUT, LOCK CONTRE-ECROU	1	1				
12	6C5–12151–00	ARM, VALVE ROCKER CULBUTEUR	5	5				
13	6C5–12159–00	SCREW, VALVE ADJUSTING VIS, REGLAGE DE SOUPAPE	5	5				
14	6C5–12158–00	NUT, LOCK CONTRE-ECROU	5	5				
15	6C5–12231–00	GUIDE, STOPPER 1 GUIDE, BUTEE 1	2	2				
16	6C5–12233–00	PLATE, GUIDE STOPPER 1 PLAQUE, GUIDE BUTEE 1	2	2				
17	90201–16014	WASHER, PLATE RONDELLE, PLATE	6	6				
18	90105–08060	BOLT, FLANGE BOULON	4	4				
19	92990–08200	WASHER, PLAIN RONDELLE, PLATE	2	2				

FIG. 6 INTAKE 1 — ADMISSION 1

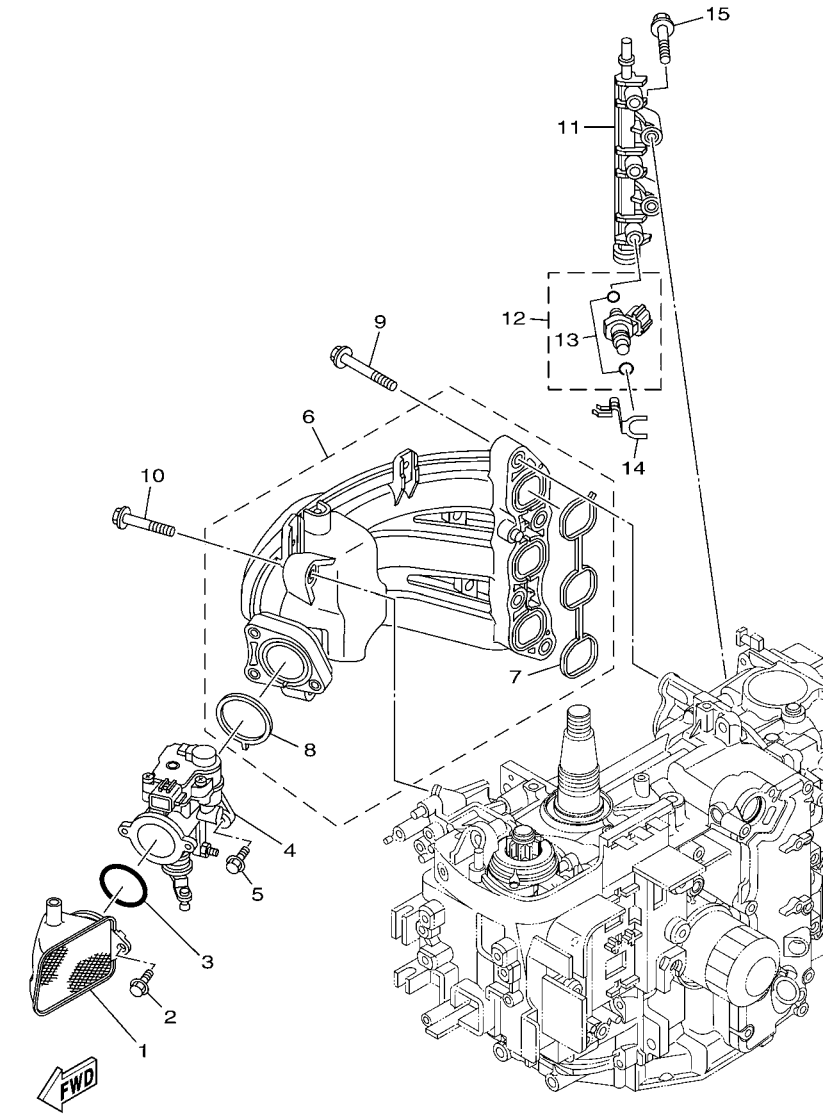

6BG1100-H060

REF. NO.	PART NO. N° PIECES	DESCRIPTION DESCRIPTION	ET	EHD				REMARKS REMARQUES
1	6BT–14440–00	SILENCER ASSY, INTAKE SIENCIEUX D'ADMISSION	1	1				
2	95895–06016	BOLT, FLANGE BOULON	2	2				
3	93210–42159	O-RING JOINT TORIQUE	1	1				
4	6BG–13750–00	THROTTLE BODY ASSY CARTER D'ACCELERATEUR COMPLET	1	1				
5	95895–06016	BOLT, FLANGE BOULON	3	3				
6	6BG–13641–00	MANIFOLD 1 TUBULURE 1	1	1				
7	6BG–13645–00	.GASKET, MANIFOLD 1 .JOINT, TUBULURE 1	1	1				
8	6BG–13557–00	.GASKET .JOINT	1	1				
9	90119–08069	BOLT, WITH WASHER BOULON, AVEC RONDELLE	4	4				
10	90119–06126	BOLT, WITH WASHER BOULON, AVEC RONDELLE	2	2				
11	6BG–13161–00	PIPE, DELIVERY 1 DURITE REFOULEMENT 1	1	1				
12	6BG–13761–00	INJECTOR INJECTEUR	3	3				
13	6C5–1410B–00	.PACKING KIT .POCHETTE DE JOINTS	1	1				
14	6BG–13577–00	CLIP AGRAFE	3	3				
15	95895–06040	BOLT, FLANGE BOULON	2	2				

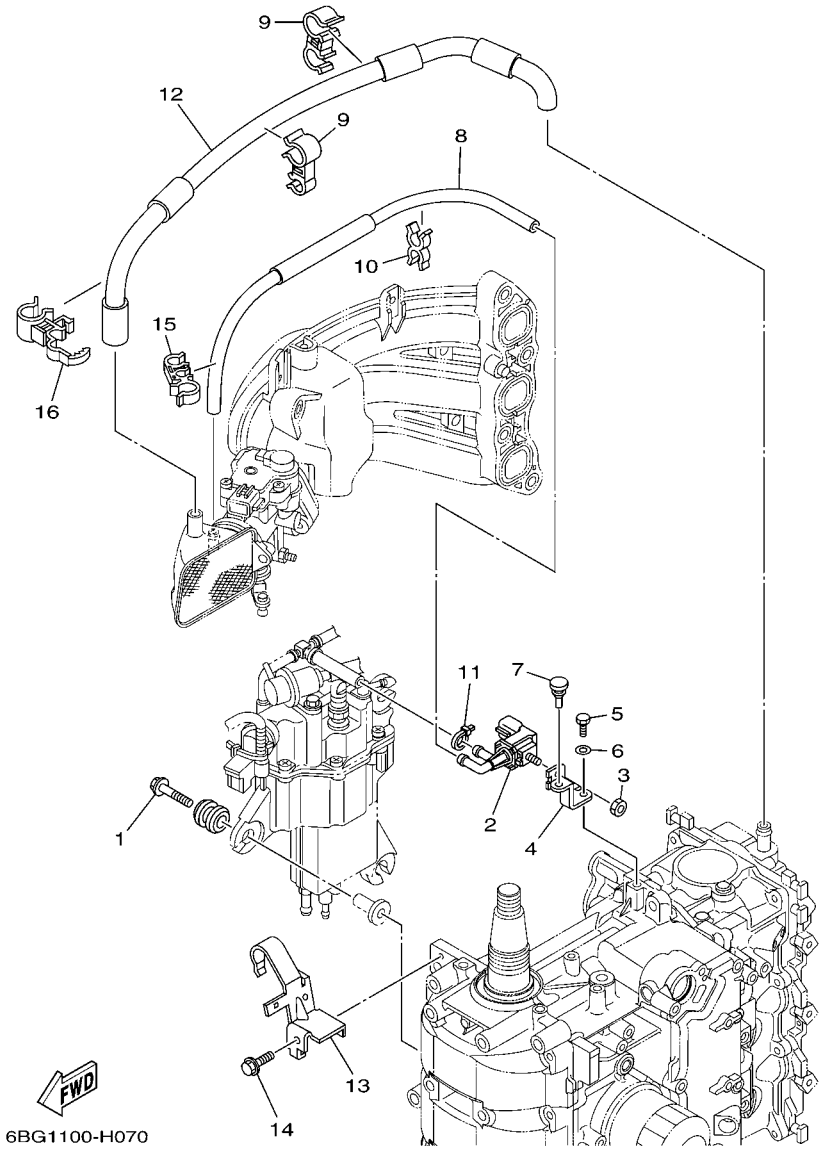

FIG. 7 INTAKE 2 — ADMISSION 2

REF. NO.	PART NO. N° PIECES	DESCRIPTION DESCRIPTION	ET	EHD				REMARKS REMARQUES
1	90119–06M61	BOLT, WITH WASHER BOULON, AVEC RONDELLE	3	3				
2	6C5–86120–00	SOLENOID VALVE ASSY SOLENOIDE	1	1				
3	95380–06600	NUT, HEXAGON ECROU	1	1				
4	6BG–86112–00	STAY, SOLENOID SUPPORT, SOLENOIDE	1	1				
5	97095–06016	BOLT BOULON	1	1				
6	92995–06600	WASHER RONDELLE	1	1				
7	90480–06M19	GROMMET PASSE-FIL	1	1				
8	6BG–12576–00	HOSE 1 TUYAU 1	1	1				
9	90464–15007	CLAMP BRIDE	2	2				
10	90464–11M24	CLAMP BRIDE	1	1				
11	90465–11M10	CLAMP BRIDE	1	1				
12	6BG–1531A–00	HOSE, BREATHER 1 DURITE DE RENIFLARD 1	1	1				
13	6BG–15378–00	HOLDER SUPPORT	1	1				
14	90119–06037	BOLT, WITH WASHER BOULON, AVEC RONDELLE	1	1				
15	90464–15008	CLAMP BRIDE	1	1				
16	90464–15011	CLAMP BRIDE	1	1				

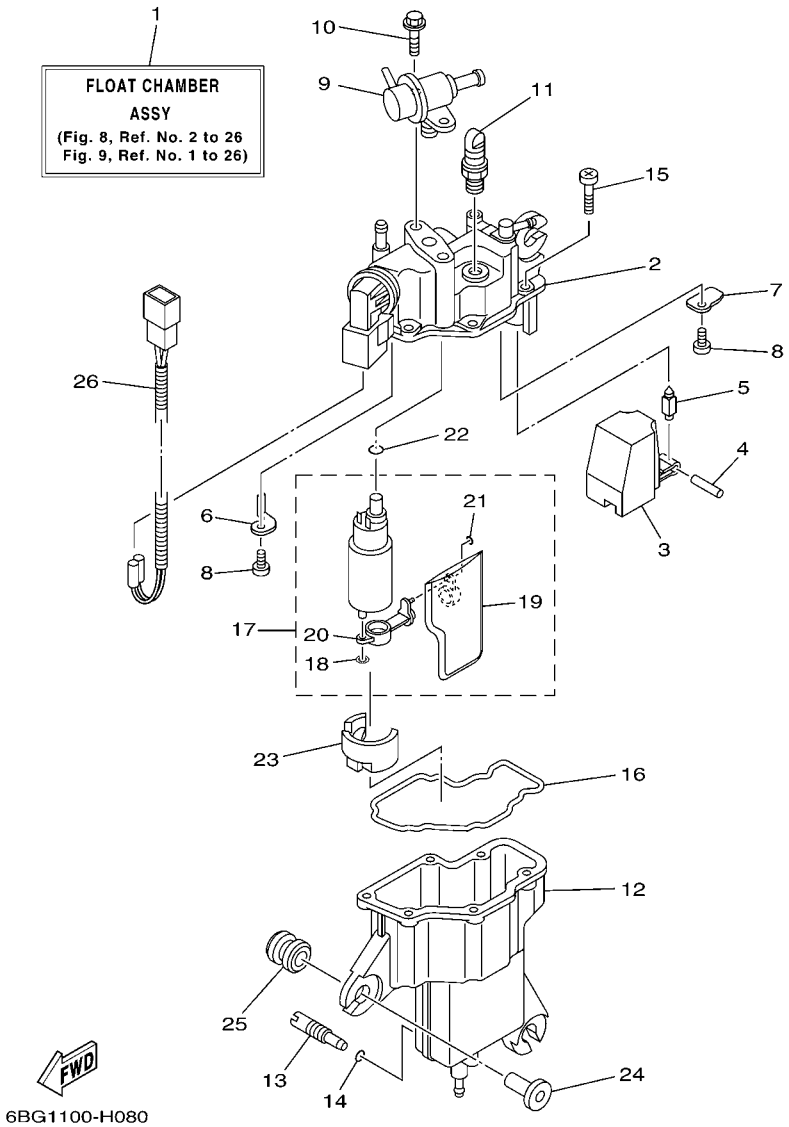

FIG. 8 FUEL INJECTION PUMP 1 POMPE A INJECTEUR 1

REF. NO.	PART NO. N° PIECES	DESCRIPTION DESCRIPTION	ET	EHD				REMARKS REMARQUES
1	6BG–14180–00	FLOAT CHAMBER ASSY CUVE DE FLOTTEUR	1	1				
2	6BG–14182–00	COVER, FLOAT CHAMBER COUVERCLE, CUVE DE FLOTTEUR	1	1				
3	6BG–14985–00	FLOAT FLOTTEUR	1	1				
4	6C5–14386–00	PIN, FLOAT AXE, FLOTTEUR	1	1				
5	6C5–14546–00	VALVE, NEEDLE POINTEAU	1	1				
6	6BG–2441R–00	PLATE, BAFFLE 1 SEPARATEUR 1	1	1				
7	6BG–2441T–00	PLATE, BAFFLE 2 SEPARATEUR 2	1	1				
8	6C5–24453–00	SCREW VIS	2	2				
9	6C5–13906–01	REGULATOR, PRESSURE REGULATEUR DE PRESSION	1	1				
10	6C5–24592–00	BOLT BOLTE	2	2				
11	6C5–14225–00	CAP COUVERCLE	1	1				
12	6BG–14960–00	BODY ASSY CARTER (ENS.)	1	1				
13	6C5–14191–00	PLUG, DRAIN PLOT, VIDANGE	1	1				
14	6C5–14397–00	O-RING JOINT TORIQUE	1	1				
15	6C5–14567–00	SCREW VIS	6	6				
16	6BG–14984–00	GASKET, FLOAT CHAMBER JOINT, CUVE DE FLOTTEUR	1	1				
17	6BG–13910–00	FUEL PUMP ASSY POMPE A ESSENCE COMPLET	1	1				
18	6C5–14127–00	.CLIP .JONC	1	1				
19	6BG–13915–00	.FILTER .FILTRE	1	1				
20	6BG–13938–00	.PIPE .DURITE	1	1				
21	6BG–14137–00	.CLIP .JONC	1	1				
22	6BG–14561–00	O-RING JOINT TORIQUE	1	1				
23	6BG–13593–00	DAMPER AMORTISSEUR	1	1				
24	90387–06M69	COLLAR COLLERETTE	3	3				
25	90480–09M12	GROMMET PASSE-FIL	3	3				
26	6BG–82553–00	EXTENSION, WIRE LEAD EXTENSION, FAISCEAU	1	1				

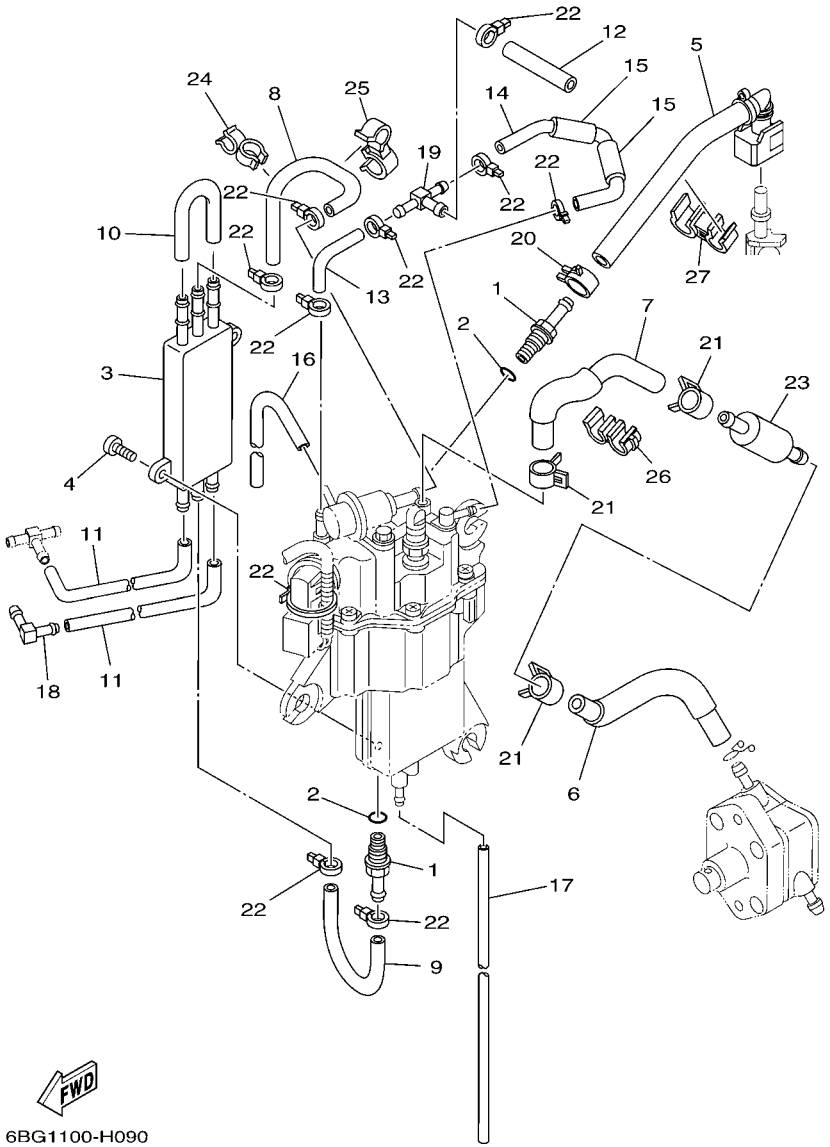

FIG. 9 FUEL INJECTION PUMP 2 POMPE A INJECTEUR 2

REF. NO.	PART NO. N° PIECES	DESCRIPTION DESCRIPTION	ET	EHD				REMARKS REMARQUES
1	6C5–14251–00	NIPPLE RACCORD	2	2				
2	6C5–13739–00	O-RING JOINT TORIQUE	2	2				
3	6C5–21841–00	COOLER RADIATEUR	1	1				
4	6C5–24444–00	SCREW VIS	2	2				
5	6BG–13974–00	PIPE, FUEL 4 TUBE 4, CARBURANT	1	1				
6	6BG–2451B–00	HOSE, FUEL INLET DURITE	1	1				
7	6BG–14148–00	PIPE DURITE	1	1				
8	6BG–24321–00	PIPE 10 DURITE 10	1	1				
9	6BG–24322–00	PIPE 11 DURITE 11	1	1				
10	6BG–24323–00	PIPE 12 DURITE 12	1	1				
11	6BG–24324–00	PIPE 13 DURITE 13	2	2				
12	6C5–13547–00	HOSE 3 DURITE 3	1	1				
13	6BG–13545–00	HOSE 1 DURITE 1	1	1				
14	6BG–13546–00	HOSE 2 DURITE 2	1	1				
15	6BG–13548–00	HOSE, AIR 4 DURITE, A AIR 4	2	2				
16	6BG–13542–00	HOSE, VACUUM SENSING 1 DURITE 1	1	1				
17	6BG–14149–00	PIPE DURITE	1	1				
18	6C5–1410F–00	CONNECTOR CONNECTEUR	1	1				
19	6C5–24379–00	PIPE, JOINT 4 DURITE RACCORDEMENT 4	1	1				
20	6C5–13577–00	CLIP AGRAFE	1	1				
21	6BG–24387–00	CLIP SANDOW	3	3				
22	90465–11M10	CLAMP BRIDE	10	10				
23	6C5–24251–00	STRAINER 1 FILTRE 1	1	1				
24	90464–12006	CLAMP BRIDE	1	1				
25	90464–12010	CLAMP BRIDE	1	1				
26	90464–12224	CLAMP BRIDE	1	1				
27	90464–15007	CLAMP BRIDE	1	1				

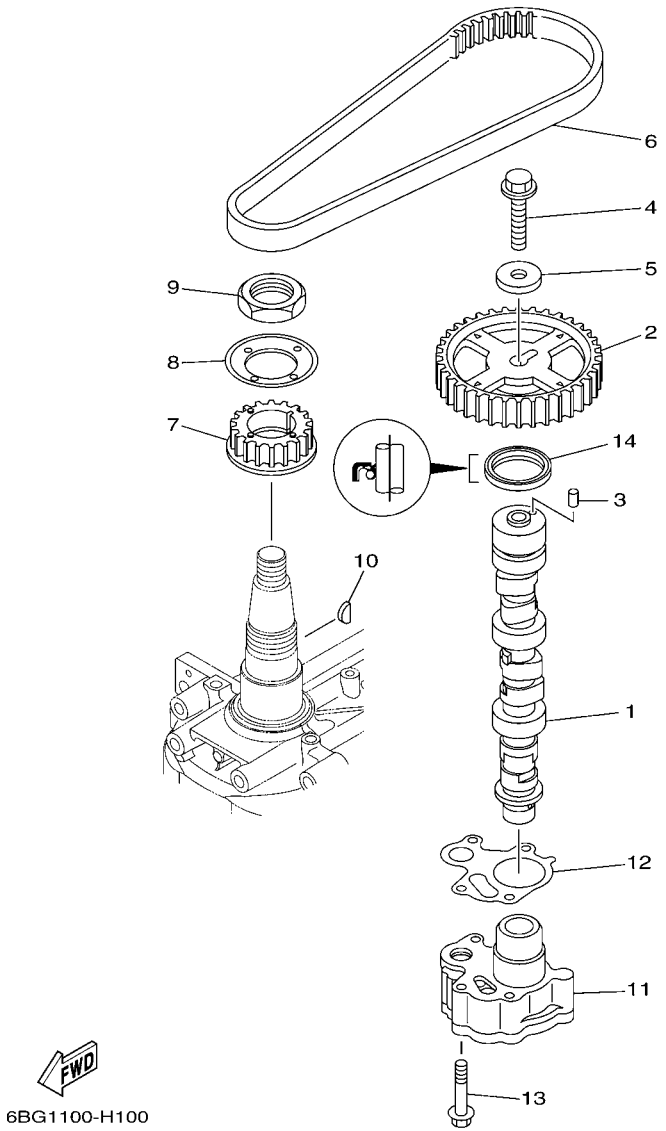

FIG. 10 OIL PUMP POMPE A HUILE

REF. NO.	PART NO. N° PIECES	DESCRIPTION DESCRIPTION	ET	EHD				REMARKS REMARQUES
1	6BG–12171–00	CAMSHAFT 1 ARBRE A CAMES 1	1	1				
2	6C5–11537–00	GEAR, DRIVEN PIGNON SECONDAIRE	1	1				
3	93605–17002	PIN, DOWEL AXE	1	1				
4	95817–10035	BOLT, FLANGE BOULON, A COLLERETTE	1	1				
5	90201–10144	WASHER, PLATE RONDELLE, PLATE	1	1				
6	6C5–46241–00	V-BELT COURROIE TRAPEZOIDALE	1	1				
7	6C5–11536–00	GEAR, DRIVE ENGRENAGE, MENANT	1	1				
8	62Y–11557–00	WASHER 1 RONDELLE 1	1	1				
9	90179–35001	NUT ECROU	1	1				
10	90280–03M01	KEY, WOODRUFF CLAVETTE, DEMI-LUNE	1	1				
11	6BG–13300–00	OIL PUMP ASSY POMPE A HUILE COMPLETE	1	1				
12	6C5–13329–00	GASKET, PUMP COVER JOINT, COUVERCLE DE POMPE	1	1				
13	90119–06025	BOLT, WITH WASHER BOULON, AVEC RONDELLE	4	4				
14	93102–37M40	OIL SEAL JOINT SPY	1	1				

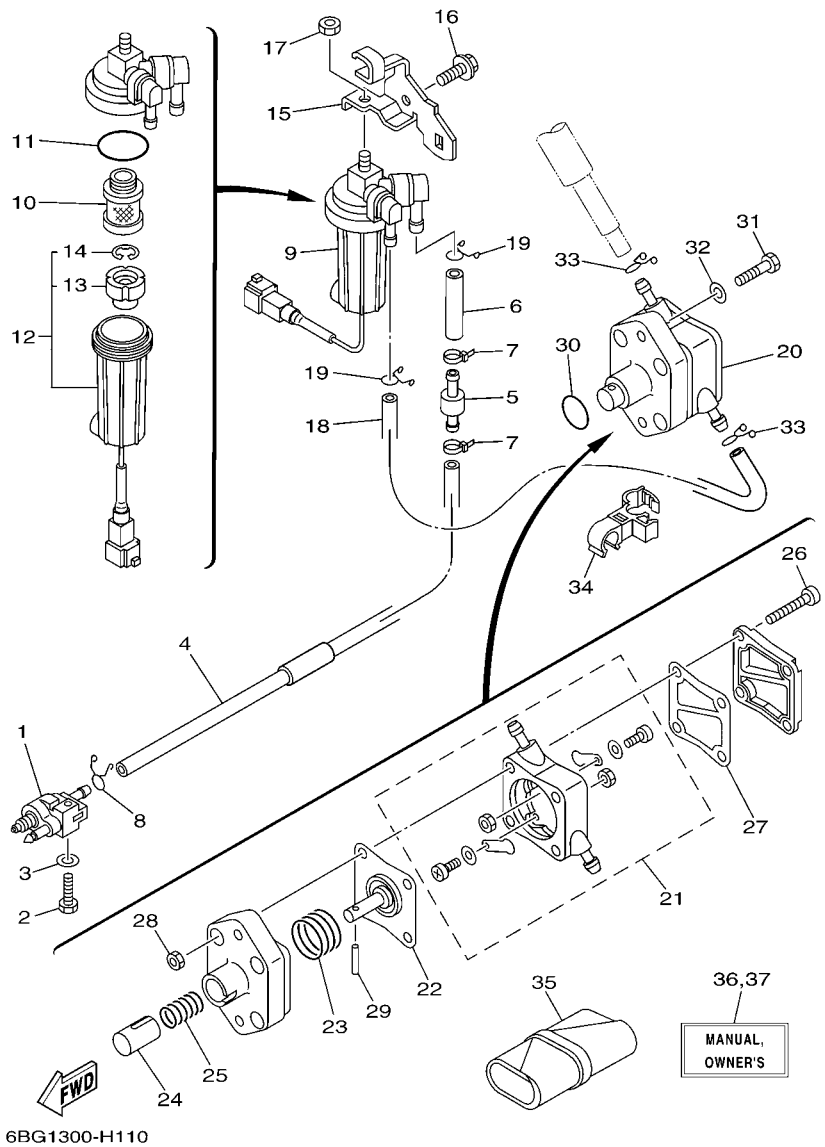

FIG. 11 FUEL CARBURANT

REF. NO.	PART NO. N° PIECES	DESCRIPTION DESCRIPTION	ET	EHD				REMARKS REMARQUES
1	6G1–24304–02	FUEL PIPE JOINT COMP. 1 DURITE RACCORDEMT. A ESSENCE	1	1				
2	97095–06025	BOLT BOULON	1	1				
3	92995–06600	WASHER RONDELLE	1	1				
4	6BG–24313–00	PIPE 3 DURITE 3	1	1				
5	67F–24377–00	PIPE, JOINT 2 DURITE RACCORDEMENT 2	1	1				
6	90445–13M02	HOSE (L40) DURITE (L40)	1	1				
7	90465–11M10	CLAMP BRIDE	2	2				
8	90467–09M17	CLIP JONC	1	1				
9	6D8–24560–00	FILTER ASSY ENS FILTRE	1	1				
10	6D8–24563–00	.ELEMENT, FILTER .ELEMENT, FILTRE	1	1				
11	6D8–24564–00	.GASKET .JOINT	1	1				
12	6D8–24562–00	.CUP, FILTER .CUVETTE, FILTRE	1	1				
13	6D8–24469–00	..FLOAT, WATER LEVEL ..FLOTTEUR	1	1				
14	6D8–24519–00	..CLIP ..JONC	1	1				
15	6BG–24566–00	BRACKET, FILTER SUPPORT, FILTRE	1	1				
16	95895–08016	BOLT, FLANGE BOULON	1	1				
17	95380–08600	NUT ECROU	1	1				
18	6BG–24311–00	PIPE, FUEL 1 DURITE A ESSENCE	1	1				
19	90467–11M08	CLIP JONC	2	2				
20	6C5–24410–00	FUEL PUMP ASSY POMPE A ESSENCE	1	1				
21	6C5–24415–00	.BODY 4 .CORPS 4	1	1				
22	62Y–24411–02	.DIAPHRAGM .DIAPHRAGME	1	1				
23	62Y–24423–00	.SPRING, DIAPHRAGM .RESSORT, DIAPHRAGME	1	1				
24	62Y–13131–00	.PLUNGER .PLONGEUR	1	1				
25	62Y–24454–00	.SPRING .RESSORT	1	1				
26	62Y–24444–01	.SCREW .VIS	4	4				
27	6C5–24471–00	.DIAPHRAGM .DIAPHRAGME	1	1				

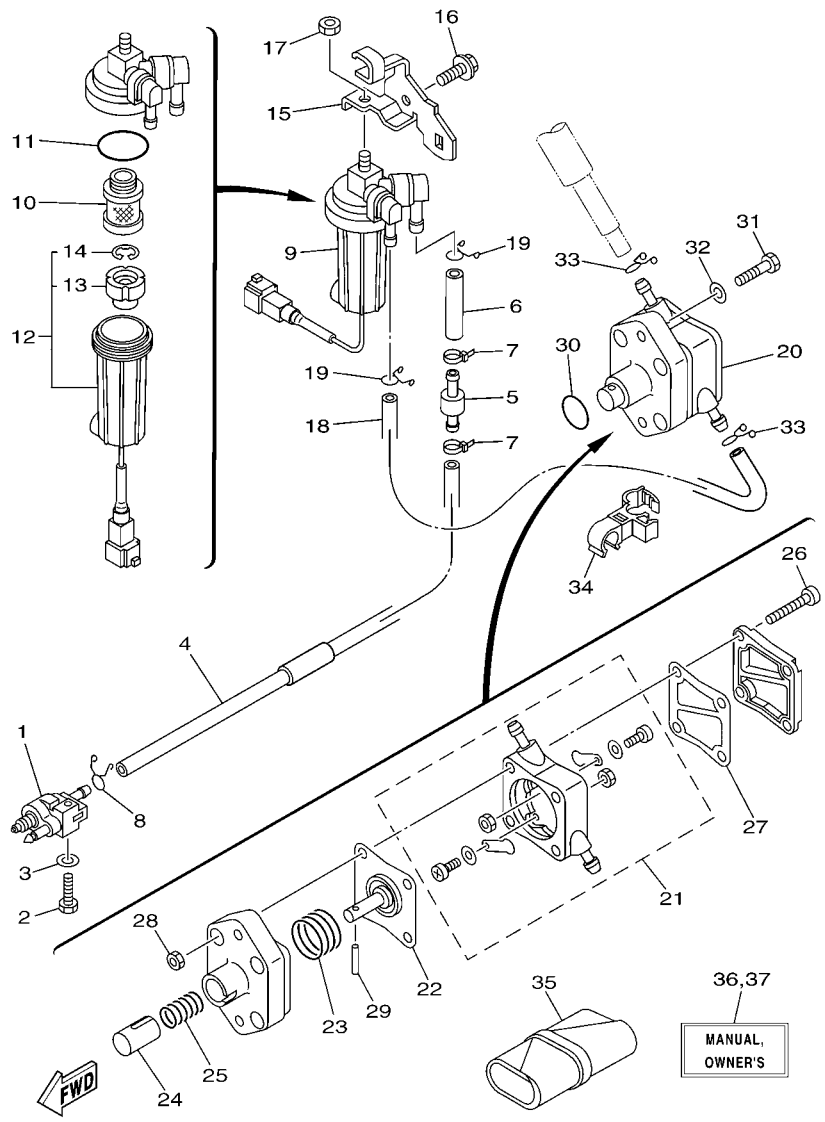

FIG. 11 FUEL CARBURANT

REF. NO.	PART NO. N° PIECES	DESCRIPTION DESCRIPTION	ET	EHD				REMARKS REMARQUES
28	95380–05600	.NUT .ECROU	4	4				
29	62Y–24374–01	.PIN .PIN	1	1				
30	93210–24M79	O-RING JOINT TORIQUE	1	1				
31	97095–06030	BOLT BOULON	2	2				
32	92995–06600	WASHER RONDELLE	2	2				
33	90467–10M04	CLIP JONC	2	2				
34	90464–12012	CLAMP BRIDE	1	1				
35	6C5–28100–00	TOOL KIT TROUSSE A OUTILS	1	1				
36	6BG–28199–71–E0	MANUAL,OWNER'S MANUEL D'UTILISATION	1	1				UR (E) UR (E)
	6BG–28199–71–F0	MANUAL,OWNER'S MANUEL D'UTILISATION	1	1				UR (F) UR (F)
	6BG–28199–71–S0	MANUAL,OWNER'S MANUEL D'UTILISATION	1	1				UR (ES) UR (ES)
	6BG–28199–71–G0	MANUAL,OWNER'S MANUEL D'UTILISATION	1	1				UR (D) UR (D)
	6BG–28199–71–D0	MANUAL,OWNER'S MANUEL D'UTILISATION	1	1				UR (NL) UR (NL)
	6BG–28199–71–H0	MANUAL,OWNER'S MANUEL D'UTILISATION	1	1				UR (I) UR (I)
37	6BG–28199–81–K0	MANUAL,OWNER'S MANUEL D'UTILISATION	1	1				UR (DK) UR (DK)
	6BG–28199–81–R0	MANUAL,OWNER'S MANUEL D'UTILISATION	1	1				UR (GR) UR (GR)
	6BG–28199–81–P0	MANUAL,OWNER'S MANUEL D'UTILISATION	1	1				UR (P) UR (P)
	6BG–28199–81–N0	MANUAL,OWNER'S MANUEL D'UTILISATION	1	1				UR (N) UR (N)
	6BG–28199–81–M0	MANUAL,OWNER'S MANUEL D'UTILISATION	1	1				UR (S) UR (S)
	6BG–28199–81–L0	MANUAL,OWNER'S MANUEL D'UTILISATION	1	1				UR (SF) UR (SF)

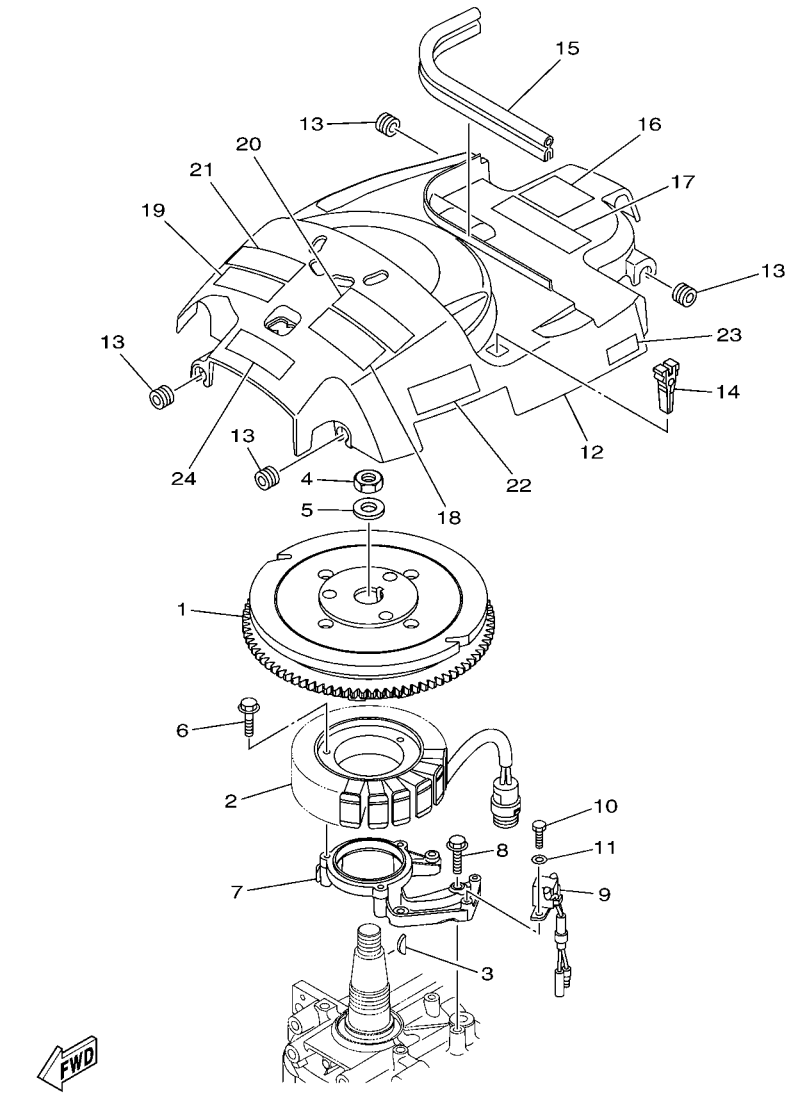

FIG. 12 GENERATOR GENERATRICE

REF. NO.	PART NO. N° PIECES	DESCRIPTION DESCRIPTION	ET	EHD				REMARKS REMARQUES
1	6BG–81450–00	ROTOR ASSY ROTOR COMPLET	1	1				
2	6BG–81410–00	STATOR ASSY STATOR COMPLET	1	1				
3	6H4–11545–00	KEY, WOODRUFF CLAVETTE, DEMI-LUNE	1	1				
4	90170–20137	NUT ECROU	1	1				
5	90201–21M18	WASHER, PLATE RONDELLE, PLATE	1	1				
6	95023–06030	BOLT BOULON, A COLLERETTE	3	3				
7	6BG–85561–00–94	BASE, MAGNETO BASE, MAGNETO	1	1				
8	95023–06030	BOLT BOULON, A COLLERETTE	4	4				
9	6AH–85580–00	COIL, PULSER BOBINE, PULSEUR	1	1				
10	97095–05016	BOLT BOULON	2	2				
11	92995–05600	WASHER RONDELLE	2	2				
12	6BG–81337–00	COVER, FLYWHEEL COUVERCLE, VOLANT	1	1				
13	90480–12314	GROMMET PASSE-FIL	4	4				
14	67F–2812A–00	PULLER, FUSE TENDEUR, FUSIBLE	1	1				
15	6BG–42617–00	DAMPER, FORM BOURRELET, CAOUTCHOUC	1	1				
16	62Y–12138–60	MARK, CAUTION MAKER	1	1				
17	6BG–13437–60	MARK, CAUTION MAKER	1	1				
18	6AH–81995–40	LABEL, WARNING ETIQUETTE, AVERTISSEMENT	1	1				
19	6AH–81995–50	LABEL, WARNING ETIQUETTE, AVERTISSEMENT	1	1				
20	6AH–81994–40	LABEL, SAFETY ETIQUETTE, SECURITE	1	1				
21	6AH–81994–50	LABEL, SAFETY ETIQUETTE, SECURITE	1	1				
22	6BG–81919–00	GRAPHIC, REGULATOR ADHESIF, REGULATEUR	1	1				
23	6C5–82377–00	LABEL ETIQUETTE	1	1				
24	6AG–81996–00	MARK MARQUE	1					

FIG. 13 ELECTRICAL 1 PARTIE ELECTRIQUE 1

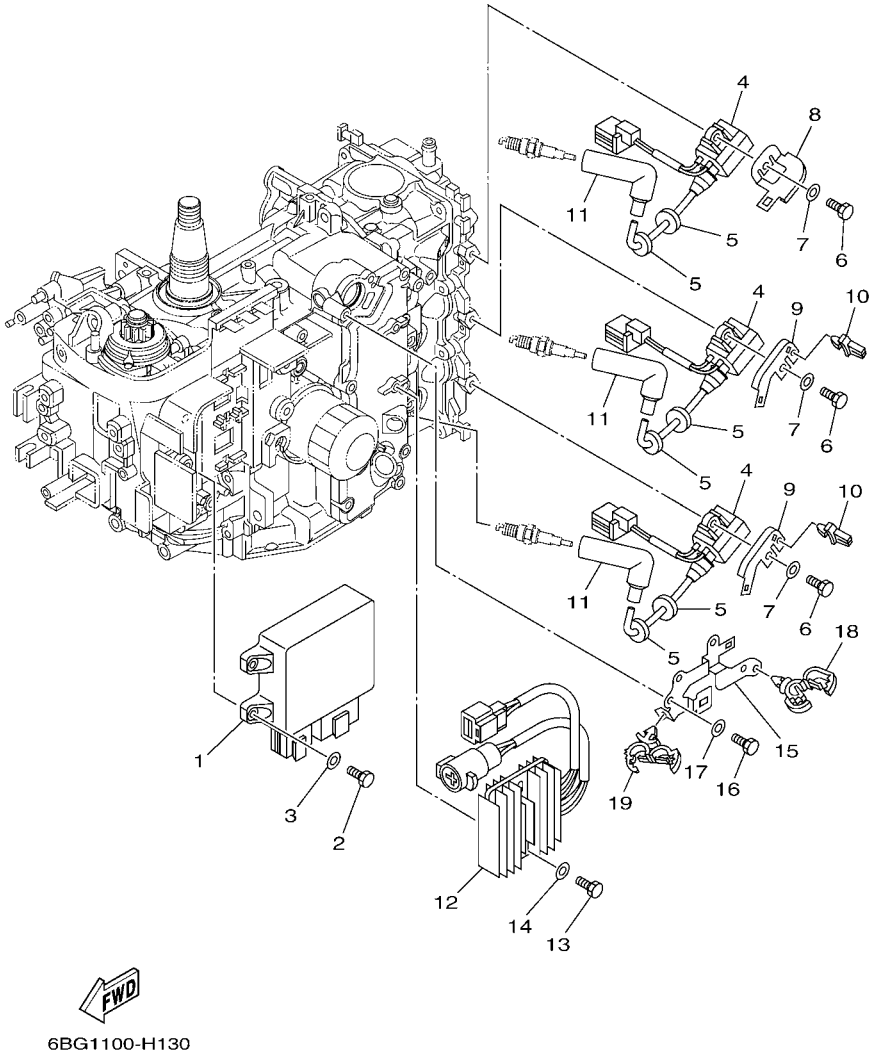

REF. NO.	PART NO. N° PIECES	DESCRIPTION DESCRIPTION	ET	EHD				REMARKS REMARQUES
1	6BT–8591A–00	ENGINE CONTROL UNIT ASSY BLOC DE CONTROL	1	1				
2	97095–06025	BOLT BOULON	4	4				
3	92995–06600	WASHER RONDELLE	4	4				
4	6BG–85570–00	IGNITION COIL ASSY BOBINE D'ALLUMAGE (ENS.)	3	3				
5	90480–25003	GROMMET PASSE-FIL	6	6				
6	97095–06025	BOLT BOULON	3	3				
7	92995–06600	WASHER RONDELLE	3	3				
8	6BG–82398–00	PLATE 3 PLAQUETTE 3	1	1				
9	6BG–82389–00	PLATE 2 PLAQUETTE 2	2	2				
10	90464–06001	CLAMP BRIDE	2	2				
11	6AH–82370–00	PLUG CAP ASSY ANTIPARASITE	3	3				
12	6BG–81960–00	RECTIFIER & REGULATOR ASSY REDRESSEUR REGULATEUR CPLT	1	1				
13	97095–06025	BOLT BOULON	2	2				
14	92995–06600	WASHER RONDELLE	2	2				
15	6BG–81528–00	CLAMP 1 COLLIER 1	1	1				
16	97095–06016	BOLT BOULON	2	2				
17	92995–06600	WASHER RONDELLE	2	2				
18	90464–13249	CLAMP BRIDE	3	3				
19	90464–18246	CLAMP BRIDE	1	1				

FIG. 14 ELECTRICAL 2 PARTIE ELECTRIQUE 2

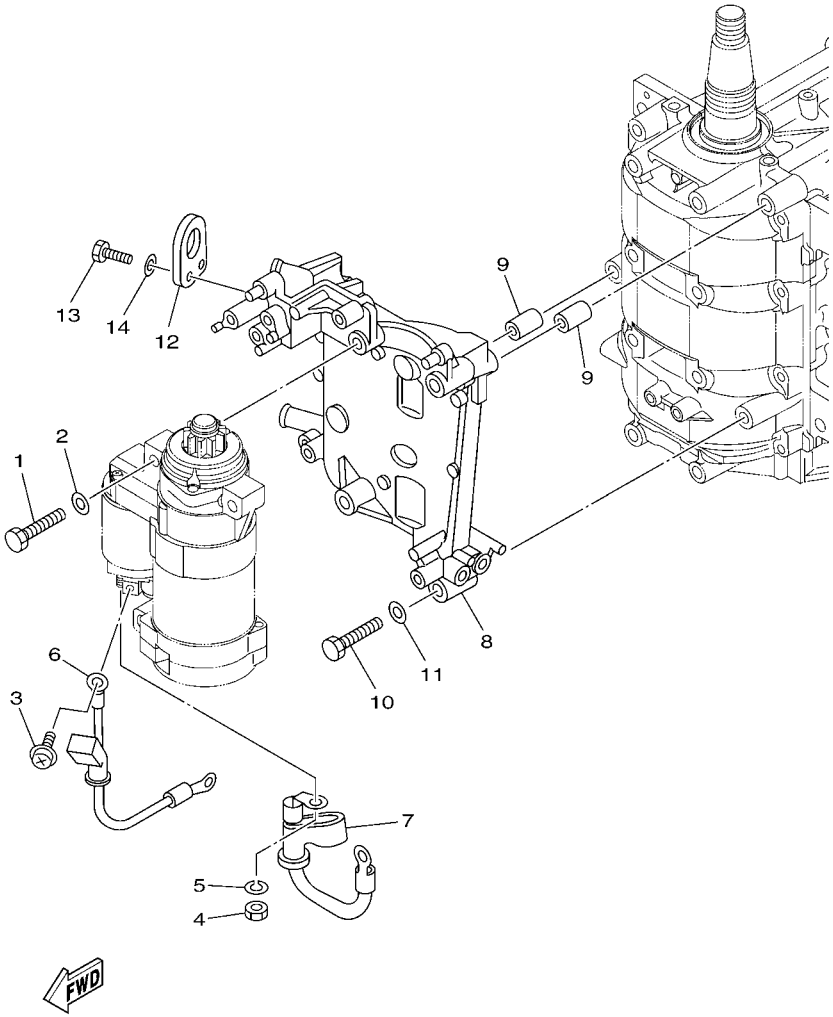

REF. NO.	PART NO. N° PIECES	DESCRIPTION DESCRIPTION	ET	EHD				REMARKS REMARQUES
1	97013–08045	BOLT BOULON	3	3				
2	92903–08600	WASHER, PLATE RONDELLE, PLATE	3	3				
3	90159–05M12	SCREW, WITH WASHER VIS, AVEC RONDELLE	1	1				
4	95333–08600	NUT ECROU	1	1				
5	92903–08100	WASHER, SPRING RONDELLE, GROWER	1	1				
6	6BG–81815–00	CORD, STARTER MOTOR FIL, DEMARREUR ELECTRIQUE	1	1				
7	6BG–82115–00	WIRE, PLUS LEAD FIL, POSITIF	1	1				
8	6BG–81822–00–94	BRACKET, STARTING MOTOR SUPPORT, DEMARREUR ELECTRIQUE	1	1				
9	99590–10114	PIN, DOWEL GOUJON, D'ASSEMBLAGE	2	2				
10	97095–08045	BOLT BOULON	4	4				
11	92995–08600	WASHER RONDELLE	4	4				
12	62Y–11119–00	HANGER, ENGINE ANNEAU, LEVAGE	1	1				
13	97095–06020	BOLT BOULON	2	2				
14	92995–06600	WASHER RONDELLE	2	2				

FIG. 15 ELECTRICAL 3 PARTIE ELECTRIQUE 3

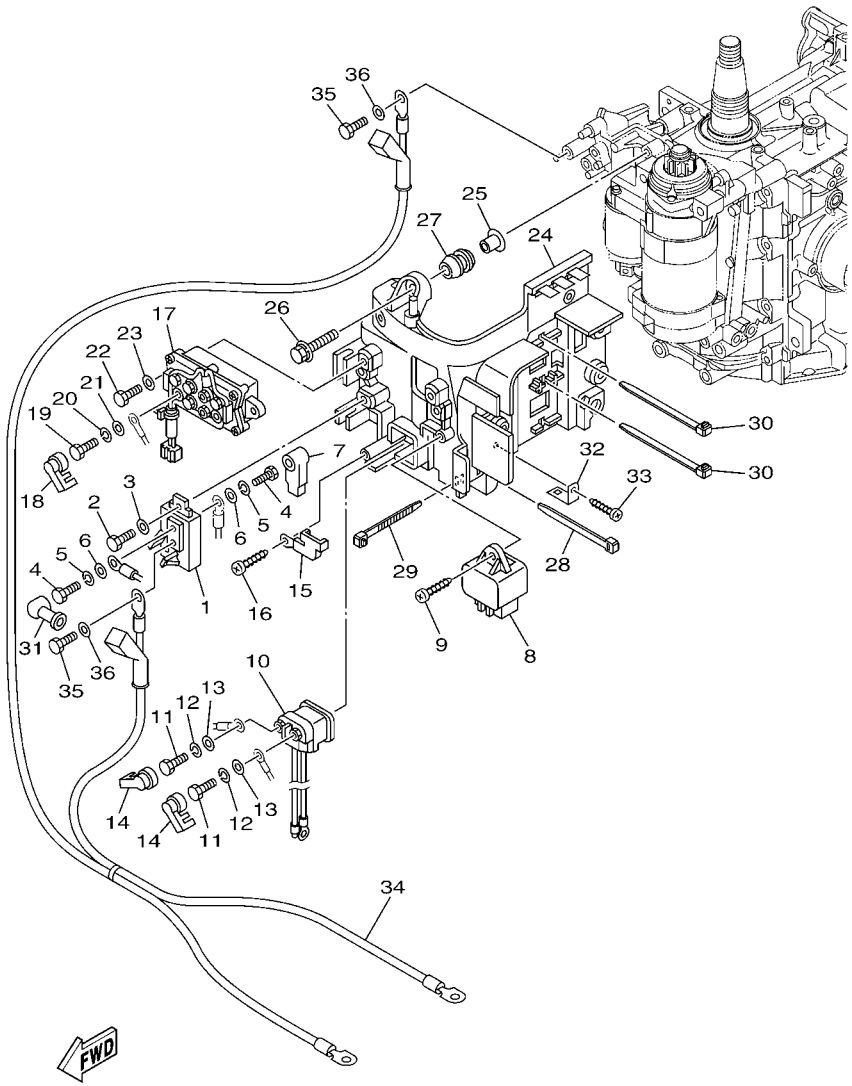

6BG1110-H160

REF. NO.	PART NO. N° PIECES	DESCRIPTION DESCRIPTION	ET	EHD				REMARKS REMARQUES
1	6BG–81925–00	TERMINAL BORNE	1	1				
2	97095–06016	BOLT BOULON	1	1				
3	92995–06600	WASHER RONDELLE	1	1				
4	97095–06010	BOLT BOULON	2	2				
5	92995–06100	WASHER, SPRING RONDELLE, GROWER	2	2				
6	92995–06600	WASHER RONDELLE	2	2				
7	682–82119–01	COVER, LEAD WIRE GARNITURE, FIL	1	1				
8	60E–81950–00	RELAY ASSY RELAIS COMPLET	1	1				
9	97780–60620	SCREW, TAPPING VIS, TETE BOMBEE	1	1				
10	6AW–8194A–00	RELAY RELAIS	1	1				
11	97095–06010	BOLT BOULON	2	2				
12	92995–06100	WASHER, SPRING RONDELLE, GROWER	2	2				
13	92995–06600	WASHER RONDELLE	2	2				
14	6P2–8183X–00	CAP, TERMINAL COUVERCLE, BORNE	2	2				
15	68F–81953–00	STAY, RELAY SUPPORT, RELAIS	1	1				
16	97780–60620	SCREW, TAPPING VIS, TETE BOMBEE	1	1				
17	63P–81950–00	RELAY ASSY RELAIS COMPLET	1					
18	6P2–8183X–00	CAP, TERMINAL COUVERCLE, BORNE	2					
19	97095–06010	BOLT BOULON	2					
20	92995–06100	WASHER, SPRING RONDELLE, GROWER	2					
21	92995–06600	WASHER RONDELLE	2					
22	97095–06020	BOLT BOULON	2					
23	92995–06600	WASHER RONDELLE	2					
24	6BG–81948–00	BRACKET SUPPORT	1	1				
25	90387–06119	COLLAR COLLERETTE	6	6				
26	90119–06M59	BOLT, WITH WASHER BOULON, AVEC RONDELLE	6	6				
27	6A0–82317–00	DAMPER, IGNITION COIL AMORTISSEUR, BOBINE D'ALLUM	6	6				

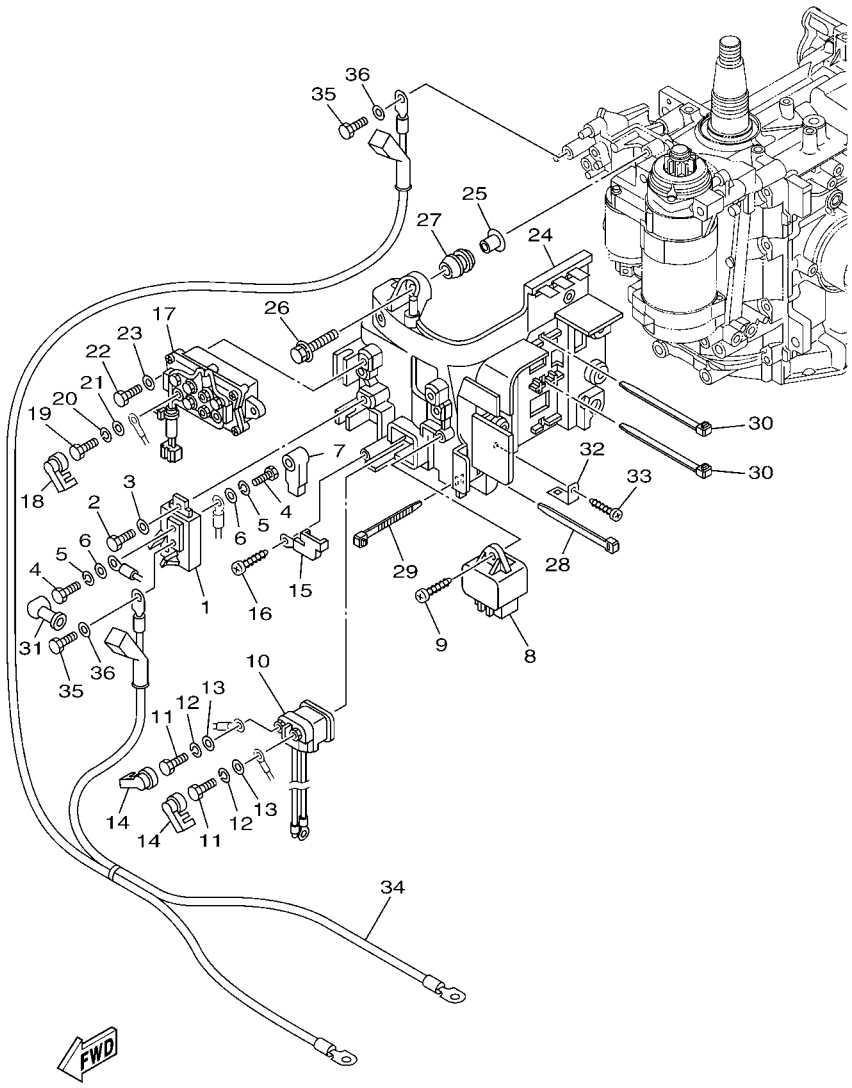

FIG. 15 ELECTRICAL 3 — PARTIE ELECTRIQUE 3

REF. NO.	PART NO. N° PIECES	DESCRIPTION DESCRIPTION	ET	EHD				REMARKS REMARQUES
28	90465–13M24	CLAMP BRIDE	1	1				
29	90465–13M39	CLAMP BRIDE	1	1				
30	90465–14M66	CLAMP BRIDE	2	2				
31	6G5–82119–00	COVER, LEAD WIRE GARNITURE, FIL	1	1				
32	68V–85548–00	HOLDER SUPPORT	1	1				
33	97780–60620	SCREW, TAPPING VIS, TETE BOMBEE	1	1				
34	6BG–82105–00	WIRE HARNESS FAISCEAU DE FILS	1	1				AP AP
35	97095–06016	BOLT BOULON	2	2				AP AP
36	92995–06600	WASHER RONDELLE	2	2				AP AP

FIG. 16 ELECTRICAL 4 PARTIE ELECTRIQUE 4

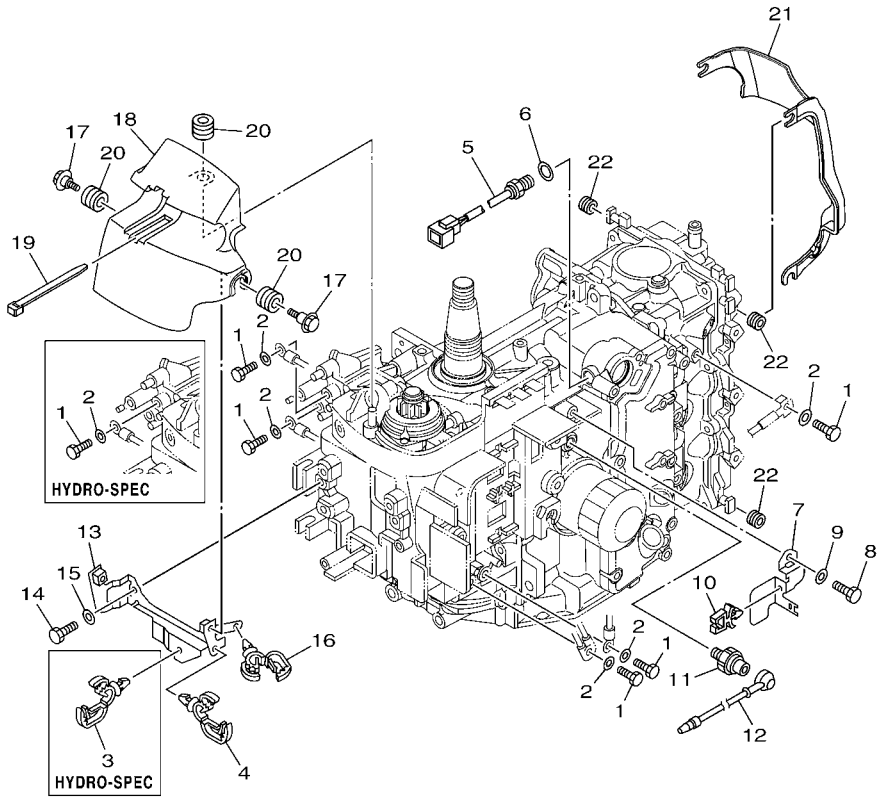

REF. NO.	PART NO. N° PIECES	DESCRIPTION DESCRIPTION	ET	EHD				REMARKS REMARQUES
1	97095–06016	BOLT BOULON	5					
	97095–06016	BOLT BOULON		4				
2	92995–06600	WASHER RONDELLE	5					
	92995–06600	WASHER RONDELLE		4				
3	90464–13249	CLAMP BRIDE		1				
4	90464–13249	CLAMP BRIDE	1	1				
5	6C5–85790–00	THERMOSENSOR ASSY SENSITOMETRE	1	1				
6	90430–14115	GASKET JOINT	1	1				
7	6BG–82388–00	PLATE PLAQUETTE	1	1				
8	97095–06016	BOLT BOULON	1	1				
9	92995–06600	WASHER RONDELLE	1	1				
10	90464–06001	CLAMP BRIDE	1	1				
11	64J–82504–00	OIL PRESSURE SWITCH ASSY CONTACTEUR DE PRESSION D'HUILE	1	1				
12	68V–81315–00	LEAD WIRE ASSY FIL	1	1				
13	6BG–8257V–00	PLATE, CONNECTOR PLAQUE, CONNECTEUR	1	1				
14	97095–06016	BOLT BOULON	2	2				
15	92995–06600	WASHER RONDELLE	2	2				
16	90464–18246	CLAMP BRIDE	1	1				
17	90109–06MA1	BOLT BOULON	2	2				
18	6BG–81942–00	COVER COUVERCLE	1	1				
19	90465–13M24	CLAMP BRIDE	1	1				
20	90480–12314	GROMMET PASSE-FIL	3	3				
21	6BG–11192–00	COVER, CYLINDER HEAD 2 COUVERCLE, CULASSE 2	1	1				
22	90480–12314	GROMMET PASSE-FIL	3	3				

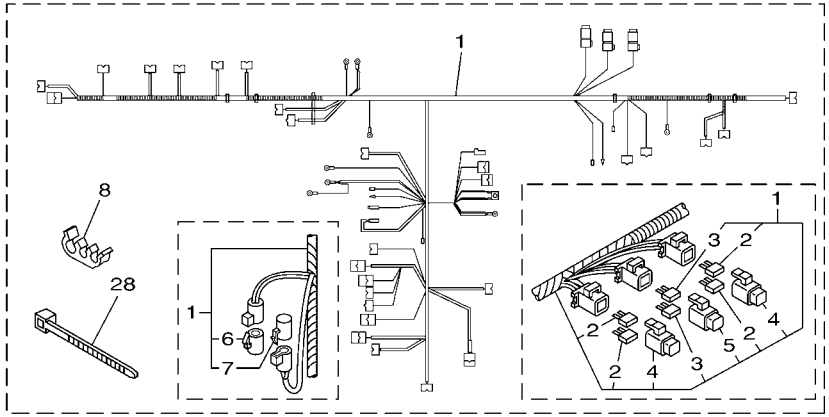

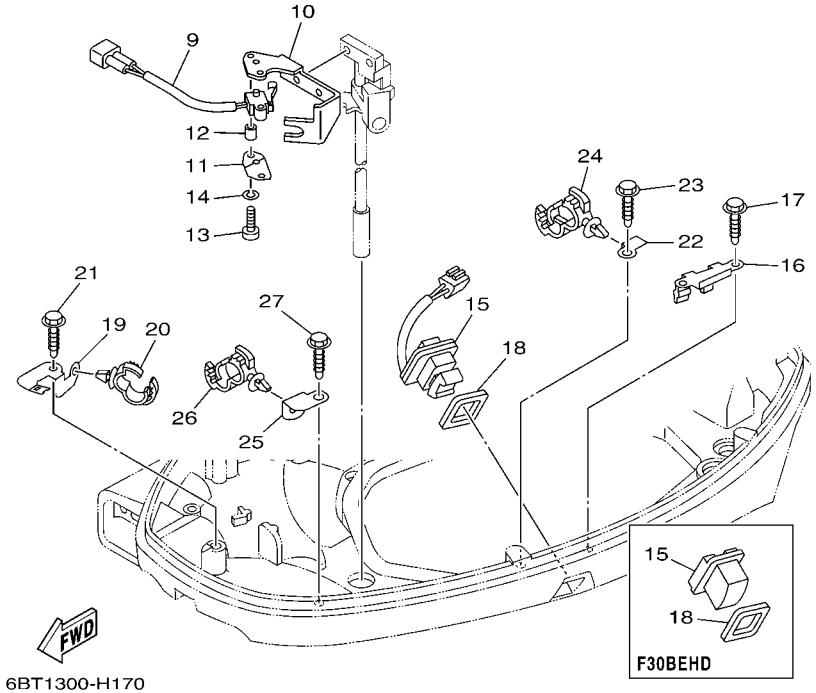

6BT1300-H170

FIG. 17 ELECTRICAL 5 — PARTIE ELECTRIQUE 5

REF. NO.	PART NO. N° PIECES	DESCRIPTION DESCRIPTION	ET	EHD				REMARKS REMARQUES
1	6BG–82590–01	WIRE HARNESS ASSY FAISCEAU DE FILS COMPLET	1					
	6BG–82590–11	WIRE HARNESS ASSY FAISCEAU DE FILS COMPLET		1				
2	67F–82151–00	.FUSE (20A) .FUSIBLE (20A)	4	4				
3	67F–82151–10	.FUSE (30A) .FUSIBLE (30A)	2	2				
4	67F–8215B–10	.CAP (YELLOW) .BOUCHON (YELLOW)	2	2				
5	67F–8215B–20	.CAP (GREEN) .BOUCHON (GREEN)	1	1				
6	6P2–82582–00	.CAP 1 (FEMALE) .BOUCHON 1 (FEMME)	1					FOR 6BG-82590-01 FOR 6BG-82590-01
7	6P2–82582–10	.CAP 1 (MALE) .BOUCHON 1 (MALE)	1					FOR 6BG-82590-01 FOR 6BG-82590-01
8	90464–11008	CLAMP BRIDE	1	1				
9	60V–8259F–00	SWITCH ASSY COMMUTATEUR	1	1				
10	6C5–82554–01	STAY, NEUTRAL SWITCH SUPPORT, CONT DE POINT-MORT	1	1				
11	61A–82588–01	PLATE PLAQUE	1	1				
12	90387–04001	COLLAR COLLERETTE	1	1				
13	97885–04016	SCREW, PAN HEAD VIS, A ENCOCHE	2	2				
14	92995–04100	WASHER RONDELLE	2	2				
15	69J–82563–00	TRIM & TILT SWITCH ASSY INCLINER ET PARER COMMUTATEUR	1					
	69J–42723–00–8D	COVER, BOTTOM COUVERCLE		1				
16	6BG–83614–00	BRACKET SUPPORT	1	1				
17	90109–06M86	BOLT BOULON	2	2				
18	69J–82587–00	GASKET JOINT	1	1				
19	6BG–42811–00	STAY SUPPORT	1	1				
20	90464–20181	CLAMP BRIDE	1	1				
21	90109–06M86	BOLT BOULON	1	1				
22	6BG–42743–00	BRACKET SUPPORT	1	1				
23	90109–06M86	BOLT BOULON	1	1				
24	90464–20181	CLAMP BRIDE	1	1				
25	63P–42756–00	STAY, CLAMP SUPPORT, COLLIER	1	1				

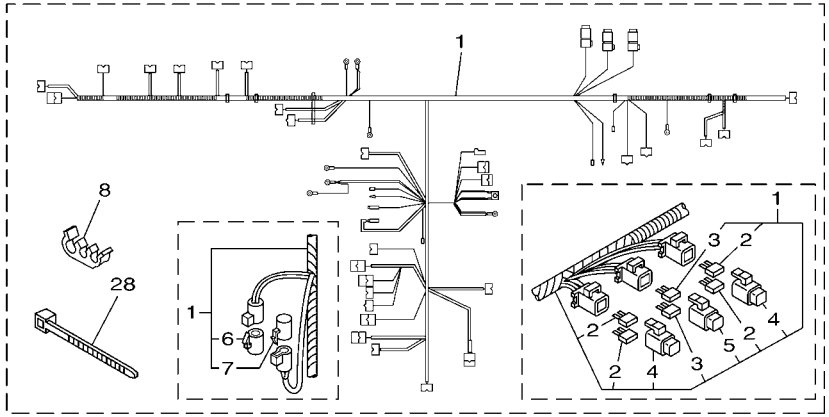

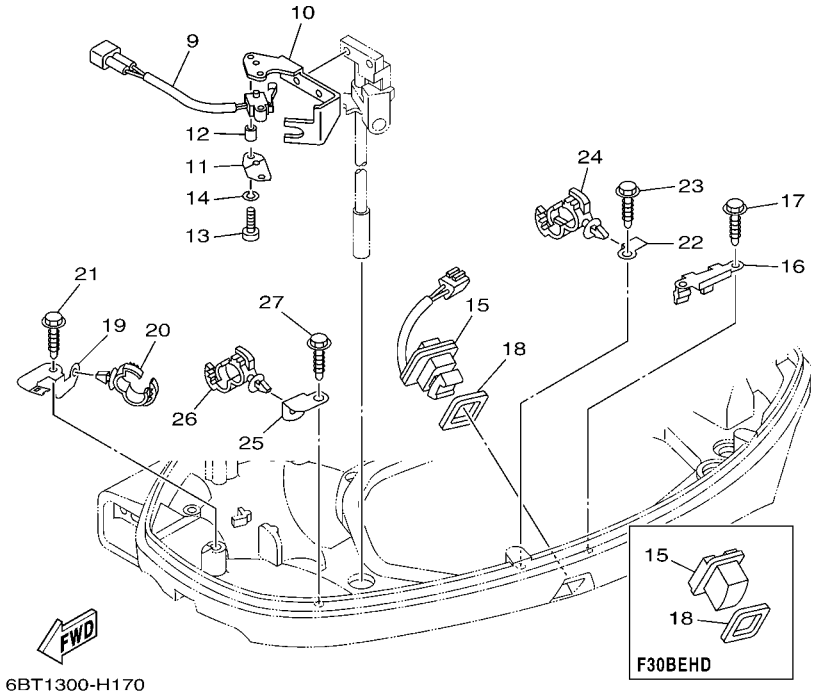

FIG. 17 ELECTRICAL 5 — PARTIE ELECTRIQUE 5

REF. NO.	PART NO. N° PIECES	DESCRIPTION DESCRIPTION	ET	EHD				REMARKS REMARQUES
26	90464–20181	CLAMP BRIDE	1	1				
27	90109–06M86	BOLT BOULON	1	1				
28	90465–13M97	CLAMP BRIDE	1	1				

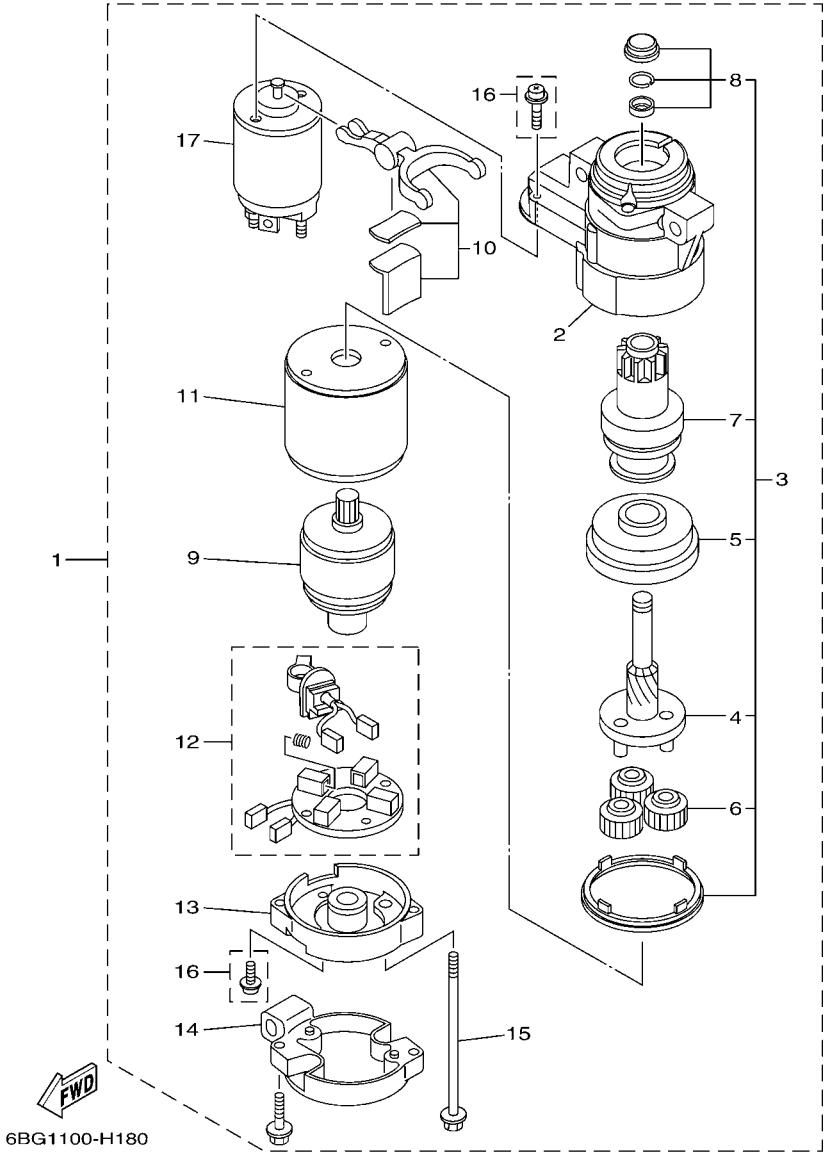

FIG. 18 STARTING MOTOR DEMARREUR ELECTRIQUE

REF. NO.	PART NO. N° PIECES	DESCRIPTION DESCRIPTION	ET	EHD				REMARKS REMARQUES
1	6BG–81800–00	STARTING MOTOR ASSY DEMARREUR ELECTRIQUE COMPLET	1	1				
2	6BG–81830–00	.FRONT BRACKET ASSY .SUPPORT AVANT	1	1				
3	6BG–81807–00	.GEAR ASSY, STARTING MOTOR .PIGNON, DEMARREUR ELECTRIQUE	1	1				
4	6BG–81836–00	..SPRING, LEVER ..RESSORT, LEVIER	1	1				
5	6BG–81891–00	..GEAR, RING ..ROUE DENTEE	1	1				
6	6AW–8183T–00	..GEAR, IDLER ..PIGNON, INTERMEDIAIRE	3	3				
7	6BG–81832–00	..CLUTCH, OVER RUN ..EMBRAYAGE, ROUE LIBRE	1	1				
8	6BG–81857–00	..RETAINER ..ARRETOIR	1	1				
9	6BG–81850–00	.ARMATURE ASSY .INDUIT	1	1				
10	6BG–81839–00	.LEVER ASSY .LEVIER COMPLET	1	1				
11	6BG–81810–00	.STATOR ASSY .STATOR COMPLET	1	1				
12	6BG–81840–00	.BRUSH HOLDER ASSY .SUPPORT DE CHARBON	1	1				
13	6BG–81820–00	.REAR BRACKET ASSY .SUPPORT ARRIERE COMPLET	1	1				
14	6BG–8182J–00	.BRACKET COMPLETE .SUPPORTE COMPLETE	1	1				
15	6BG–81826–00	.BOLT .BOULON	2	2				
16	6BG–81846–00	.SCREW SET .VIS	1	1				
17	6BG–81941–00	.STARTER RELAY ASSY .LANCEUR RELAIS (ENS.)	1	1				

FIG. 19 BOTTOM COWLING 1 CAPOT INFERIEUR 1

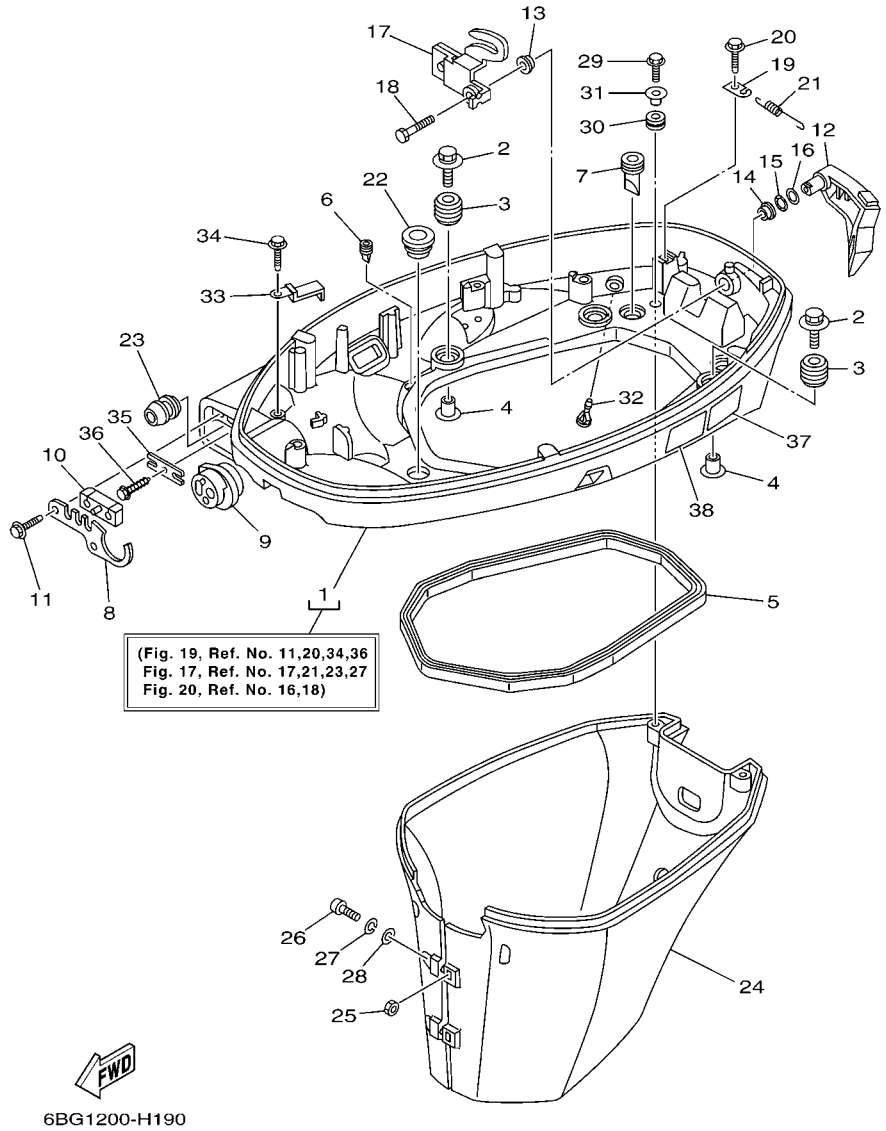

REF. NO.	PART NO. N° PIECES	DESCRIPTION DESCRIPTION	ET	EHD				REMARKS REMARQUES
1	6BG–42710–00–8D	BOTTOM COWLING ASSY ENS. EMBASE	1	1				
2	90119–06M61	BOLT, WITH WASHER BOULON, AVEC RONDELLE	4	4				
3	6BG–42748–00	GROMMET PASSE-FIL	4	4				
4	90387–06060	COLLAR COLLERETTE	4	4				
5	62Y–42716–00	RUBBER, SEAL 1 JOINT EN CAOUTCHOUC 1	1	1				
6	65W–42717–00	RUBBER, SEAL 2 JOINT EN CAOUTCHOUC 2	2	2				
7	61A–42717–00	RUBBER, SEAL 2 JOINT EN CAOUTCHOUC 2	2	2				
8	6BG–42761–00	STOPPER PLAQUETTE	1	1				
9	6BG–42725–00	GROMMET PASSE-FIL	1	1				
10	6BG–42727–00	GROMMET PASSE-FIL	1	1				
11	90109–06M86	BOLT BOULON	2	2				
12	6BG–42815–00–8D	LEVER, CLAMP LEVIER, PRESSE	1	1				
13	90386–12M37	BUSH DOUILLE	1	1				
14	90386–12MA2	BUSH DOUILLE	1	1				
15	90206–12052	WASHER, WAVE RONDELLE, ONDULEE	1	1				
16	90201–12M07	WASHER, PLATE RONDELLE, PLATE	1	1				
17	6BG–42816–00	LEVER, CLAMP LEVIER, PRESSE	1	1				
18	97095–06014	BOLT BOULON	1	1				
19	66T–43144–00	HOOK, SPRING CROCHET	1	1				
20	90109–06M86	BOLT BOULON	1	1				
21	90506–18M40	SPRING, TENSION RESSORT, TENSION	1	1				
22	68U–42727–00	GROMMET PASSE-FIL	1	1				
23	6BG–24329–00	SEAL JOINT	1	1				
24	6BG–42741–00–8D	APRON CAPOT LATERAL	1					S(16.1") S(16.1")
	6BG–42741–10–8D	APRON CAPOT LATERAL	1	1				L(21.0") L(21.0")
25	95380–06600	NUT, HEXAGON ECROU	2	2				
26	97880–06025	SCREW, PAN HEAD VIS, TETE TRONCONIQUE	2	2				

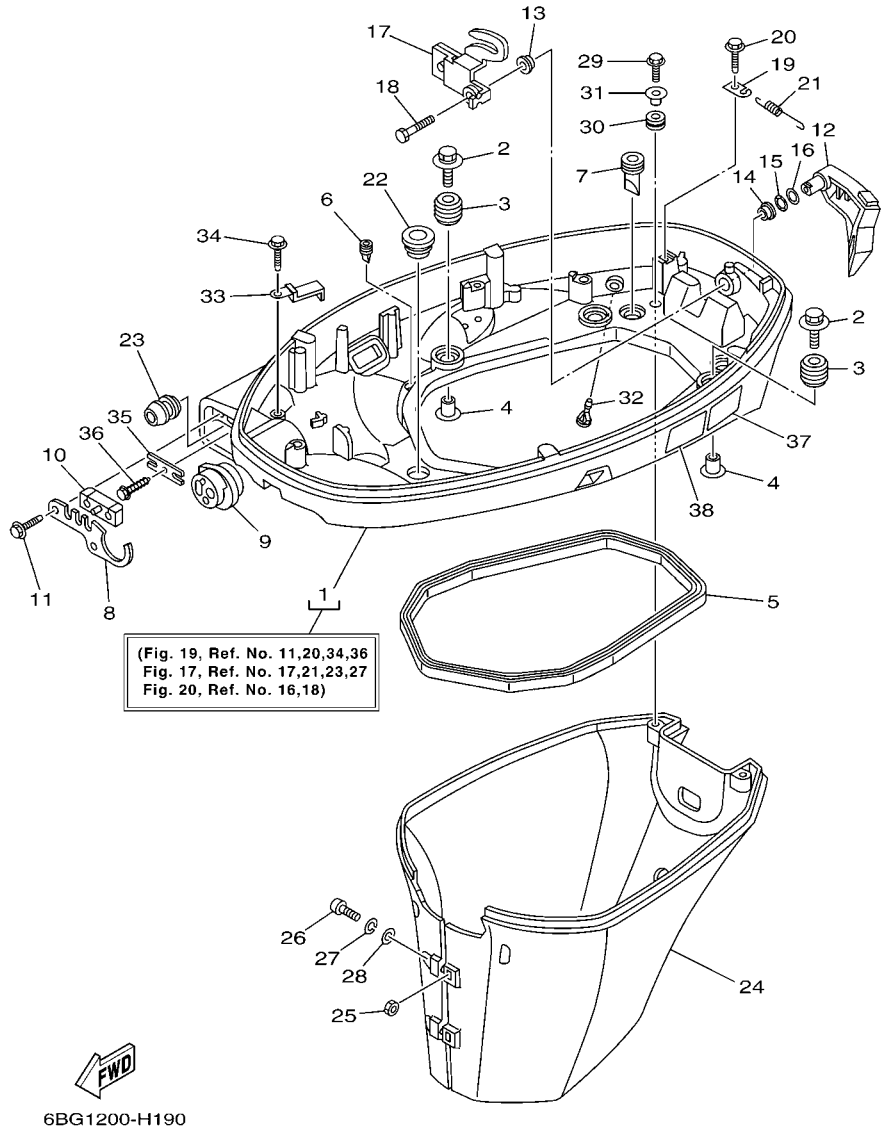

FIG. 19 BOTTOM COWLING 1 CAPOT INFERIEUR 1

REF. NO.	PART NO. N° PIECES	DESCRIPTION DESCRIPTION	ET	EHD				REMARKS REMARQUES
27	92990–06100	WASHER, SPRING RONDELLE, GROWER	2	2				
28	92990–06600	WASHER, PLATE RONDELLE, PLATE	2	2				
29	90109–06M80	BOLT BOULON	2	2				
30	90480–13M24	GROMMET PASSE-FIL	2	2				
31	90387–06M43	COLLAR COLLERETTE	2	2				
32	6H3–44391–01	NIPPLE, HOSE RACCORD D'ESSENCE	1	1				
33	90462–20005	CLAMP BRIDE	1	1				
34	90109–06M86	BOLT BOULON	1	1				
35	6BG–48538–00	CLAMP, CABLE 1 COLLIER	1	1				
36	90109–06M86	BOLT BOULON	1	1				
37	6AH–42794–40	LABEL, WARNING (GENERAL) ETIQUETTE, AVERTISSEMENT	1	1				
38	6AH–42794–50	LABEL, WARNING (GENERAL) ETIQUETTE, AVERTISSEMENT	1	1				

FIG. 20 BOTTOM COWLING 2 CAPOT INFERIEUR 2

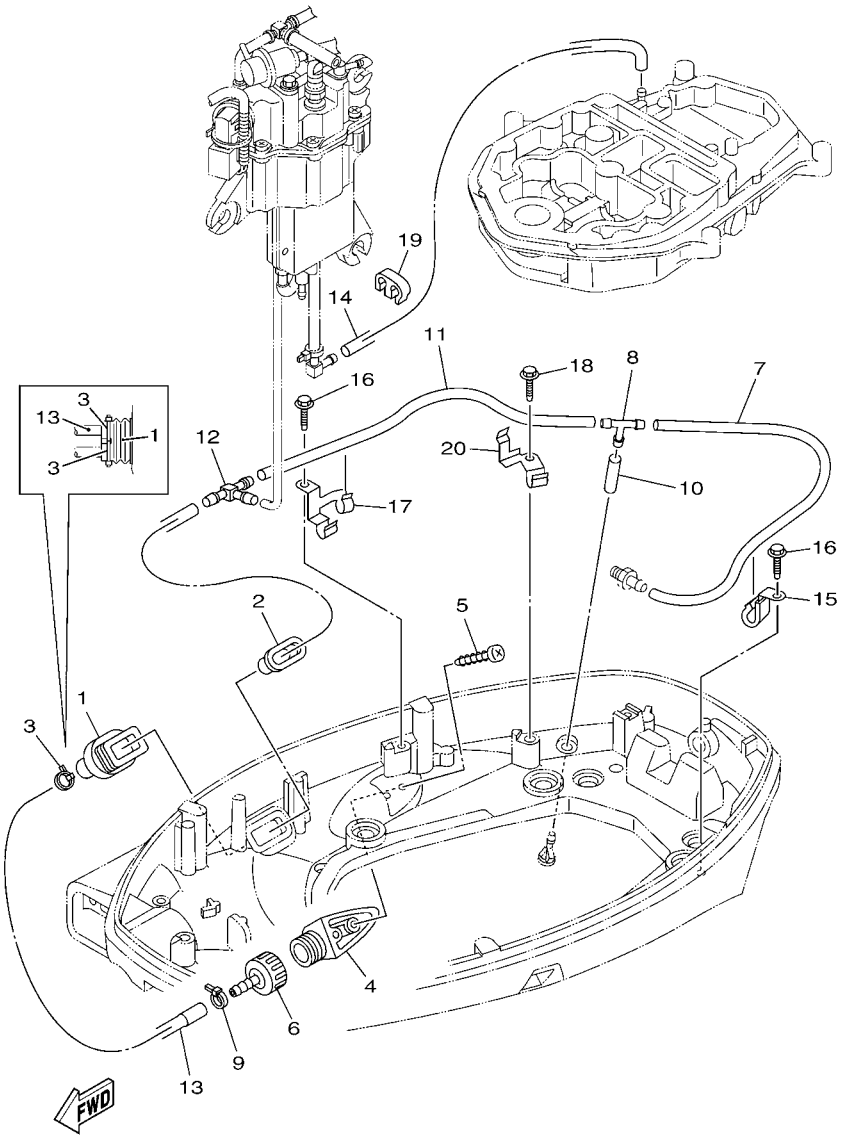

6BG1200-H200

REF. NO.	PART NO. N° PIECES	DESCRIPTION DESCRIPTION	ET	EHD				REMARKS REMARQUES
1	6H1–42726–21	GROMMET PASSE-FIL	1	1				
2	6BG–42384–00	SEAL, CAP JOINT, CAPUCHON	1	1				
3	90465–11M10	CLAMP BRIDE	2	2				
4	6AW–12572–00	ADAPTER ADAPTATEUR	1	1				
5	97780–60520	SCREW, TAPPING VIS, TETE BOMBEE	2	2				
6	6R3–12580–00	JOINT ASSY ARTICULER (ENS.)	1	1				
7	90445–09035	HOSE (L380) DURITE (L380)	1	1				
8	688–24378–00	PIPE, JOINT 3 DURITE RACCORDEMENT 3	1	1				
9	90465–11M10	CLAMP BRIDE	1	1				
10	90445–09220	HOSE (L30) DURITE (L30)	1	1				
11	90445–09224	HOSE (L270) DURITE (L270)	1	1				
12	688–24378–00	PIPE, JOINT 3 DURITE RACCORDEMENT 3	1	1				
13	6BG–12481–00	PIPE 1 DURITE 1	1	1				
14	6A1–24311–00	PIPE, FUEL 1 DURITE A ESSENCE	1	1				
15	90462–08067	CLAMP BRIDE	1	1				
16	90109–06M86	BOLT BOULON	2	2				
17	6BG–24135–00	CLAMP 1 COLLIER 1	1	1				
18	90109–06M86	BOLT BOULON	1	1				
19	90464–09M21	CLAMP BRIDE	1	1				
20	6BG–24136–00	CLAMP 2 COLLIER 2	1	1				

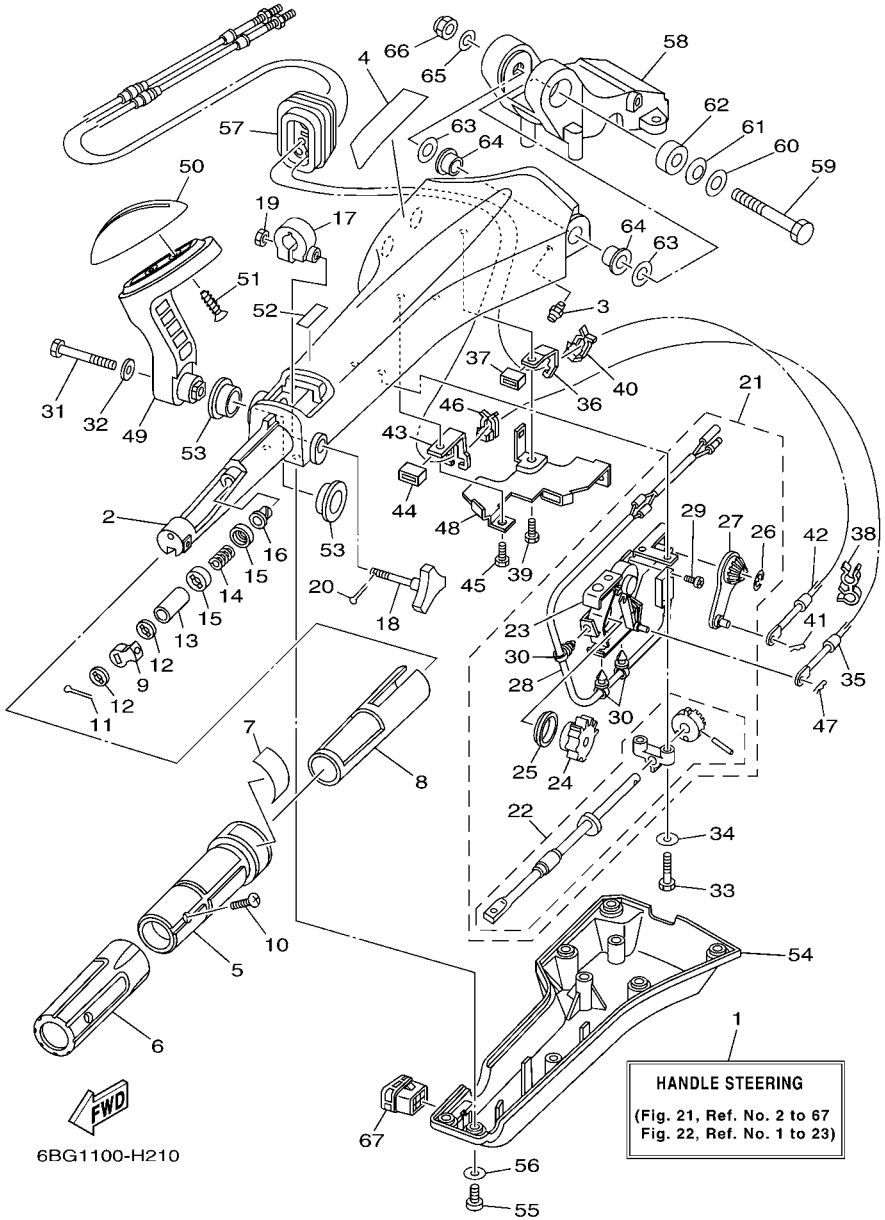

FIG. 21 STEERING 1 DIRECTION 1

REF. NO.	PART NO. N° PIECES	DESCRIPTION DESCRIPTION	ET	EHD				REMARKS REMARQUES
1	6X4–42101–K3–4D	HANDLE, STEERING POIGNEE		1				
2	6X4–42111–02–4D	HANDLE, STEERING POIGNEE		1				
3	93700–06M03	NIPPLE, GREASE PION		1				
4	6X4–48215–00	GRAPHIC ADHESIF		1				
5	6X4–42119–00	GRIP, STEERING HANDLE POIGNEE, BARRE FRANCHE		1				
6	6X4–42177–00	RUBBER, HANDLE CAOUTCHOUC, POIGNEE		1				
7	6X4–42137–00	INDICATOR, THROTTLE INDICATEUR, ACCELERATION		1				
8	6X4–41291–00	BUSHING COUSSINET		1				
9	6X4–44139–00–94	COLLAR COLLIER		1				
10	90142–05001	SCREW, COUNTERSUNK VIS, TETE NOYEE		1				
11	91490–20010	PIN. COTTER GOUPILLE		1				
12	6X4–44177–00	WASHER RONDELLE		2				
13	6X4–42128–00	COLLAR, DISTANCE 1 COLLIER, D'ENTRETOISE 1		1				
14	90501–23215	SPRING, COMPRESSION RESSORT, COMPRESSION		1				
15	6X4–44188–00	WASHER RONDELLE		2				
16	90386–08032	BUSH DOUILLE		1				
17	63D–42126–00	FRICTION, STEERING HANDLE GRIP CUVETTE, POIGNEE DE DIRECTION		1				
18	6X4–48154–00	KNOB, THROTTLE BOUTON, ACCELERATEUR		1				
19	95380–06600	NUT, HEXAGON ECROU		1				
20	91490–20010	PIN. COTTER GOUPILLE		1				
21	6X4–44100–00	SHIFT LINK ASSY MAILLON DE SELECTEUR		1				
22	6X4–42115–00	.SHAFT, STEERING HANDLE .AXE, BARRE FRANCHE		1				
23	6X4–44102–00	.SHIFT ASSIST ASSY. .SELECTEUR DE MAINTIEN		1				
24	6X4–47731–00	.GEAR, DRIVE .PIGNON D'ENTRAINEMENT		1				
25	6X4–44132–00	.BUSHING .COUSSINET		1				
26	6X4–14137–00	.CLIP .JONC		1				
27	6X4–48261–00	.ARM, THROTTLE .BRAS, ACCELERATION		1				

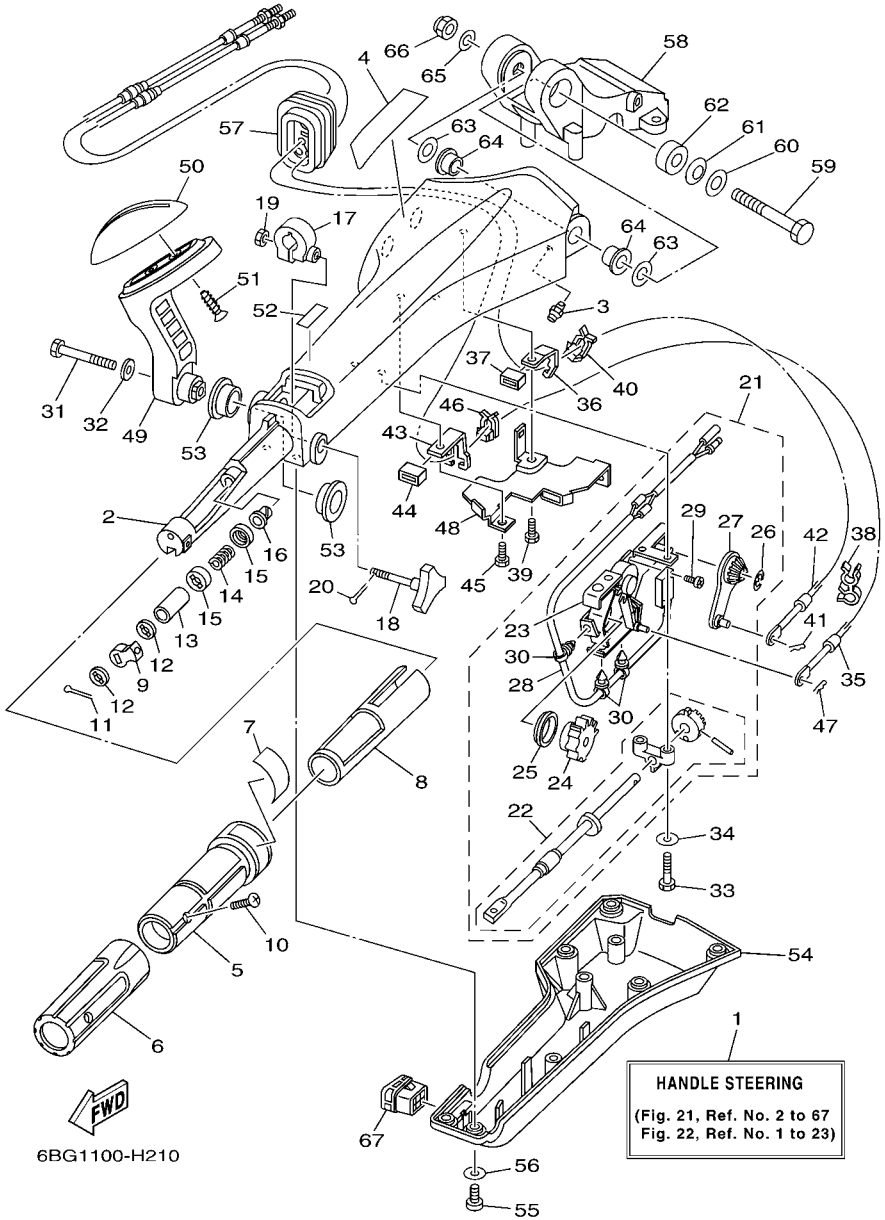

FIG. 21 STEERING 1 DIRECTION 1

REF. NO.	PART NO. N° PIECES	DESCRIPTION DESCRIPTION	ET	EHD				REMARKS REMARQUES
28	6X4–82540–00	.NEUTRAL SWITCH ASSY .CONTACTEUR DE POINT-MORT		1				
29	6A5–48129–10	.SCREW 3 .VIS 3		2				
30	6X4–42821–00	.BAND, CLAMP .BRIDE, COLLIER		3				
31	97095–08040	BOLT BOULON		1				
32	92995–08600	WASHER RONDELLE		1				
33	97095–06030	BOLT BOULON		2				
34	92995–06600	WASHER RONDELLE		2				
35	67C–48321–11	CABLE CABLE		1				
36	6X4–48538–00	CLAMP, CABLE 1 COLLIER		1				
37	6X4–26367–00	PROTECTOR PROTECTEUR		1				
38	90464–09M42	CLAMP BRIDE		1				
39	97095–06014	BOLT BOULON		1				
40	63D–48538–00	CLAMP, CABLE 1 COLLIER		1				
41	90468–10005	CLIP JONC		1				
42	69W–26301–00	THROTTLE CABLE ASSY CABLE D'ACCELERATEUR		1				
43	6X4–48538–10	CLAMP, CABLE 1 COLLIER		1				
44	6X4–26367–00	PROTECTOR PROTECTEUR		1				
45	97095–06014	BOLT BOULON		1				
46	63D–48538–00	CLAMP, CABLE 1 COLLIER		1				
47	90468–10005	CLIP JONC		1				
48	6X4–42159–00	STAY SUPPORT		1				
49	6X4–44159–00–4D	HANDLE, GEAR SHIFT POIGNEE, LEVIER D'EMBRAYAGE		1				
50	6X4–44173–00	LEVER, SHIFT CONTROL POIGNEE, INVERSION		1				
51	97780–60920	SCREW, TAPPING VIS, TETE BOMBEE		2				
52	6G8–44191–00	INDICATOR, SHIFT ETIQUETTE, EMBRAYAGE		1				
53	90386–26MA3	BUSH DOUILLE		2				
54	6X4–42131–11	COVER, HANDLE STEERING COUVERCLE		1				

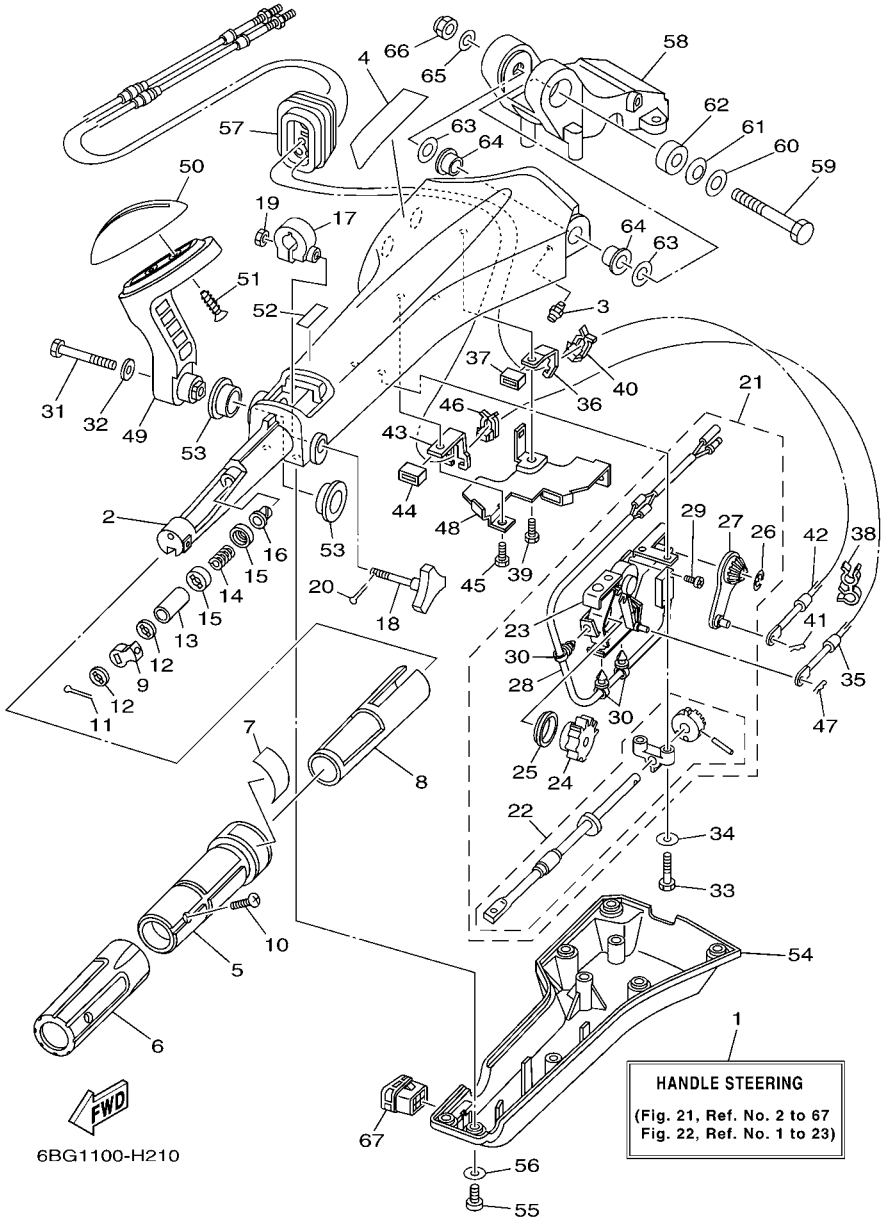

FIG. 21 STEERING 1 DIRECTION 1

REF. NO.	PART NO. N° PIECES	DESCRIPTION DESCRIPTION	ET	EHD				REMARKS REMARQUES
55	97885–06016	SCREW, PAN HEAD VIS, A ENCOCHE		6				
56	92995–06600	WASHER RONDELLE		6				
57	6X4–42725–01	GROMMET PASSE-FIL		1				
58	63D–42121–22–4D	BRACKET SUPPORT		1				
59	90101–12014	BOLT BOULON		1				
60	92990–12200	WASHER, PLAIN RONDELLE, PLATE		1				
61	90206–12M22	WASHER, WAVE RONDELLE, ONDULEE		1				
62	90387–12M02	COLLAR COLLERETTE		1				
63	90201–12035	WASHER, PLATE RONDELLE, PLATE		2				
64	90386–12003	BUSH DOUILLE		2				
65	92990–12600	WASHER, PLATE RONDELLE, PLATE		1				
66	90185–12M12	NUT, SELF-LOCKING ECROU,AUTO-BLOQUANT		1				
67	6X4–42728–10	CAP CAPUCHON		1				

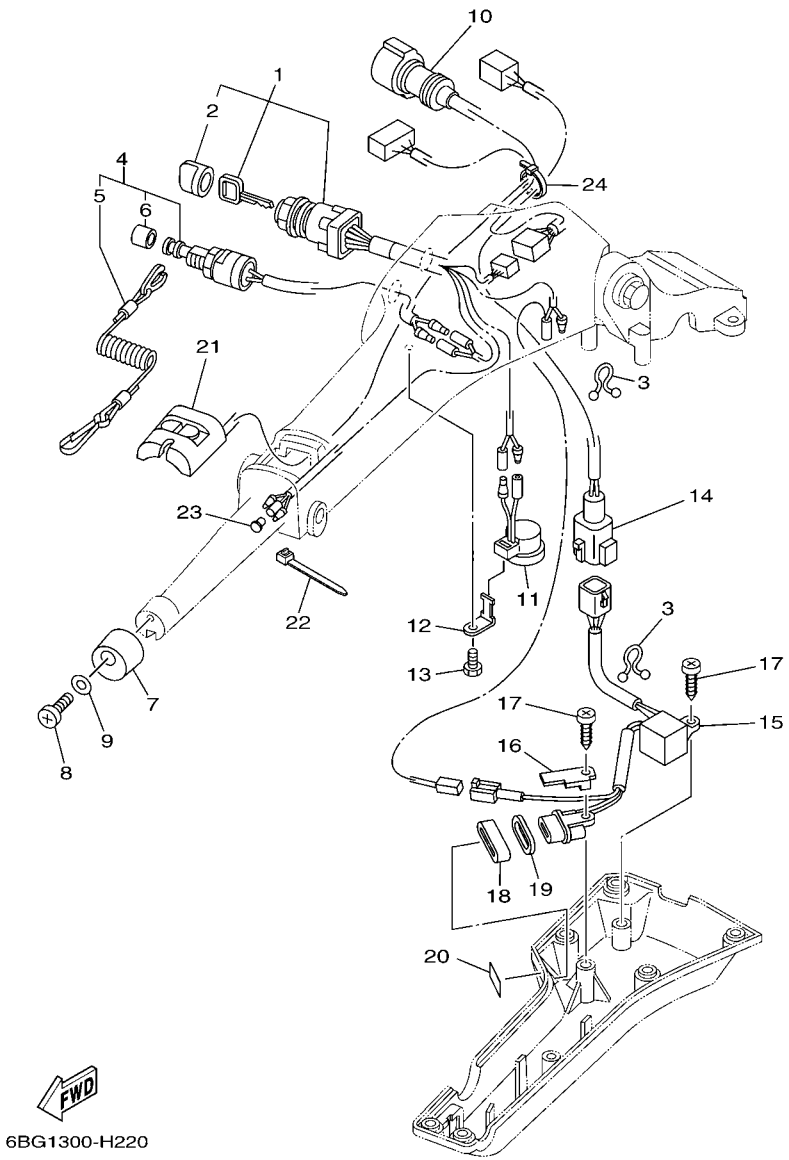

FIG. 22 STEERING 2 DIRECTION 2

REF. NO.	PART NO. N° PIECES	DESCRIPTION DESCRIPTION	ET	EHD				REMARKS REMARQUES
1	6X4–82510–10	MAIN SWITCH ASSY CONTACTEUR A CLEF COMPLET		1				
2	676–82577–00	.CAP, KEY .CABOCHON		1				
3	90464–08M07	CLAMP BRIDE		2				
4	69W–82575–00	ENGINE STOP SWITCH ASSY COUPE CIRCUIT CPLT		1				
5	682–82556–00	.LANYARD, STOP SWITCH .PLAQUETTE		1				
6	689–8257Y–00	.CAP .COUVERCLE		1				
7	6X4–42728–00	CAP CAPUCHON		1				
8	97880–06016	SCREW, PAN HEAD VIS, TETE TRONCONIQUE		1				
9	92990–06600	WASHER, PLATE RONDELLE, PLATE		1				
10	6X4–82586–10	EXT., WIRE HARNESS (L: 950MM) EXT, FAISCEAU DE FILS L: 950MM		1				
11	6X4–83383–00	BUZZER RONFLEUR		1				
12	6X4–83386–00	STAY, BUZZER SUPPOR, RONFLEUR		1				
13	97095–06014	BOLT BOULON		1				
14	6X4–83653–20	WIRE, LEAD (L: 700MM) FIL (L: 700MM)		1				
15	6C5–84301–00	PILOT LIGHT ASSY 1 LAMPE-TEMOIN 1		1				
16	6X4–44114–00	STOPPER PLAQUETTE		1				
17	97780–60620	SCREW, TAPPING VIS, TETE BOMBEE		2				
18	6X4–42727–00	GROMMET PASSE-FIL		1				
19	6H4–83589–00	GASKET GARNITURE		1				
20	6X4–85415–00	MARK, SIGNAL LAMP ETIQUETTE		1				
21	6X4–81860–00	SWITCH ASSY COMMUTATEUR COMPLET		1				
22	90465–13M97	CLAMP BRIDE		1				
23	703–82119–00	COVER, LEAD WIRE GARNITURE, FIL		1				
24	90465–13M36	CLAMP BRIDE		1				

FIG. 23 STEERING FRICTION CUVETTE POIGNEE DE DIRECTION

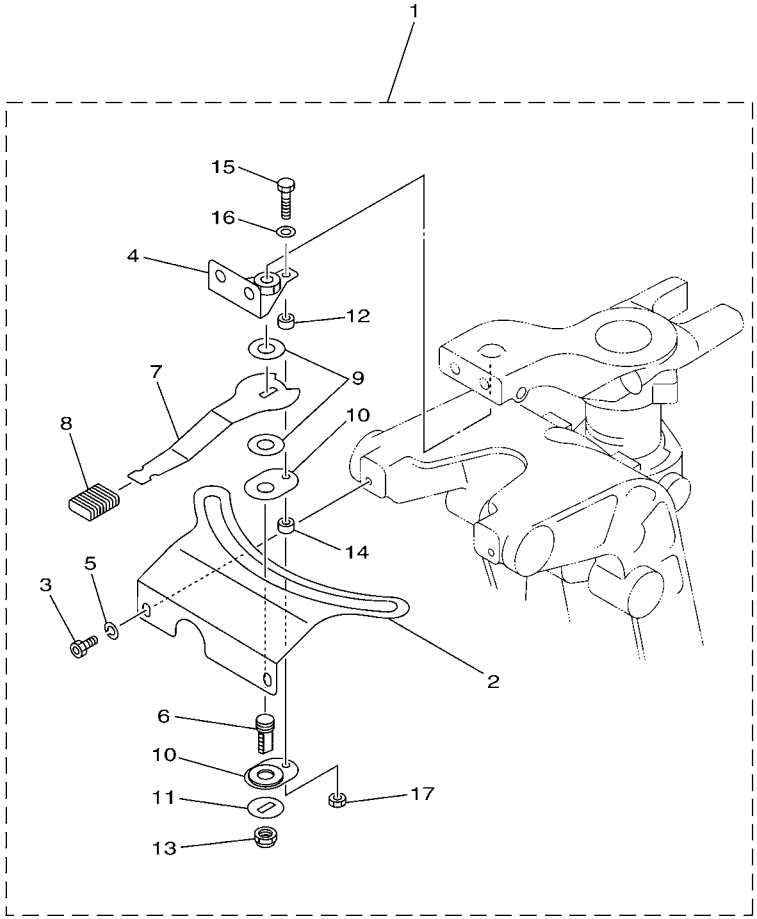

67C3100-C200

REF. NO.	PART NO. N° PIECES	DESCRIPTION DESCRIPTION	ET	EHD				REMARKS REMARQUES
1	67C–42508–03	STEERING FRICTION ASSY DIRECTION FRICTION (ENS.)		1				
2	67C–42527–03	.PLATE, FRICTION .PLAQUE, FRICTION		1				
3	90109–06M88	.BOLT .BOULON		2				
4	67C–42525–00	.PLATE, FRICTION .PLAQUE, FRICTION		1				
5	92990–06100	.WASHER, SPRING .RONDELLE, GROWER		2				
6	67C–42562–00	.SHAFT, STEERING LOCK .ARBRE,ANTIVOL DE DIRECTION		1				
7	67C–42561–00	.KNOB, STEERING LOCK .BOUTON		1				
8	689–43633–00	.COVER, TILT LEVER .COUVERCLE		1				
9	90202–10M56	.WASHER, PLATE .RONDELLE, PLATE		2				
10	65W–42528–00	.PLATE, FRICTION .PLAQUE, FRICTION		2				
11	90209–10M26	.WASHER .RONDELLE		1				
12	90387–05M05	.COLLAR .COLLERETTE		1				
13	90185–10M14	.NUT, SELF-LOCKING .ECROU,AUTO-BLOQUANT		1				
14	90387–05M11	.COLLAR .COLLERETTE		1				
15	97095–05020	.BOLT .BOULON		1				
16	92995–05600	.WASHER .RONDELLE		1				
17	95380–05600	.NUT .ECROU		1				

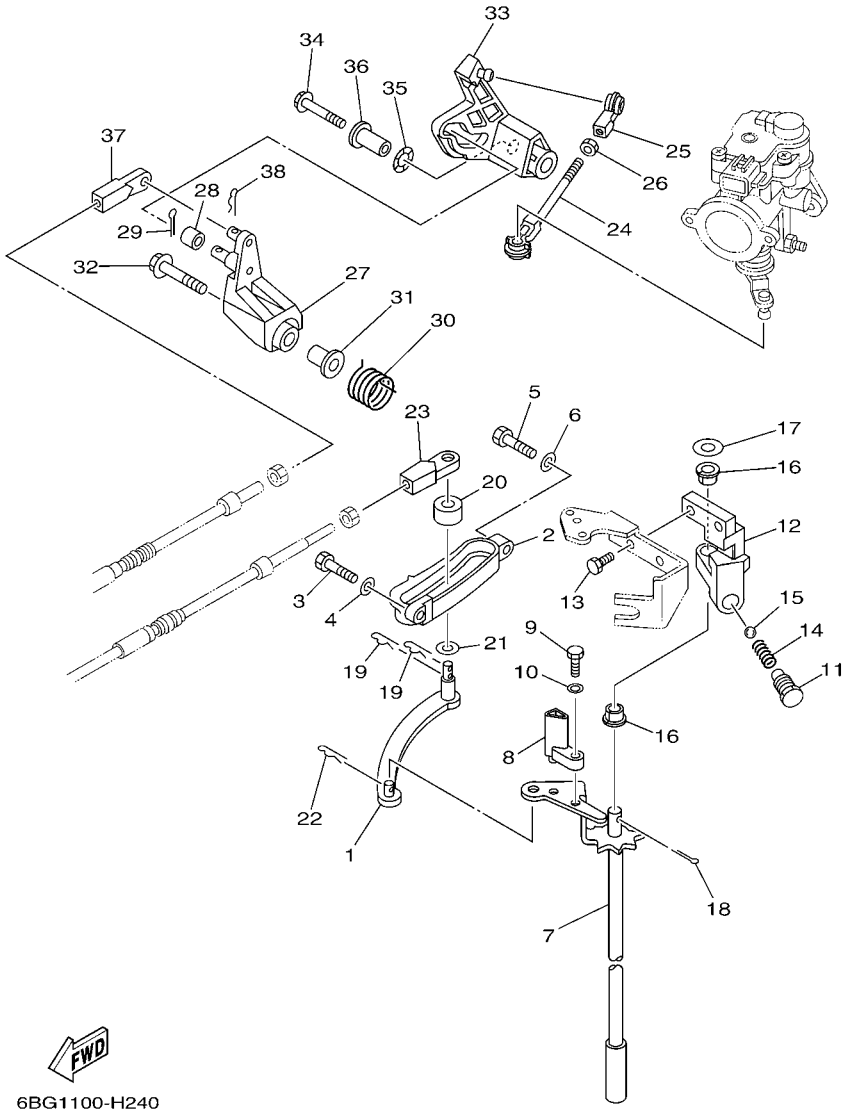

FIG. 24 CONTROL COMMANDE

REF. NO.	PART NO. N° PIECES	DESCRIPTION DESCRIPTION	ET	EHD				REMARKS REMARQUES
1	69W–44121–00	LEVER, SHIFT ROD LEVIER, TIGE D'INVERSION	1	1				
2	62Y–44117–01–9S	BRACKET SUPPORT	1	1				
3	97095–06020	BOLT BOULON	1	1				
4	92995–06600	WASHER RONDELLE	1	1				
5	97095–06025	BOLT BOULON	1	1				
6	92995–06600	WASHER RONDELLE	1	1				
7	6BG–44120–00	HANDLE GEAR SHIFT ASSY LEVIER D'EMBRAYAGE	1					S(16.1") S(16.1")
	6C5–44120–01	HANDLE GEAR SHIFT ASSY LEVIER D'EMBRAYAGE	1	1				L(21.0") L(21.0")
8	6C5–44122–00	BUSHING, SHIFT ROD LEVER DOUILLE, LEVIER D'EMBRAYAGE	1	1				
9	97095–05014	BOLT BOULON	1	1				
10	92995–05600	WASHER RONDELLE	1	1				
11	62Y–42715–01	BUSHING COUSSINET	1	1				
12	62Y–44118–00	BRACKET SUPPORT	1	1				
13	90101–06054	BOLT BOULON	2	2				
14	90501–12082	SPRING, COMPRESSION RESSORT, COMPRESSION	1	1				
15	93501–04M02	BALL BILLE	1	1				
16	90386–90M90	BUSH DOUILLE	2	2				
17	90201–10M20	WASHER, PLATE RONDELLE, PLATE	1	1				
18	91490–20015	PIN. COTTER GOUPILLE	1	1				
19	90468–18008	CLIP JONC	2	2				
20	688–44122–00	BUSHING, SHIFT ROD LEVER DOUILLE, LEVIER D'EMBRAYAGE	1	1				
21	90202–07M07	WASHER, PLATE RONDELLE, PLATE	1	1				
22	90468–18008	CLIP JONC	1	1				
23	69W–48344–00	CABLE END, REMOTE CONTROL CHAPE CABLE	1	1				
24	6J8–41237–00	JOINT, LINK RACCORD	1	1				
25	682–41237–00	JOINT, LINK RACCORD	1	1				
26	95380–05700	NUT ECROU	1	1				

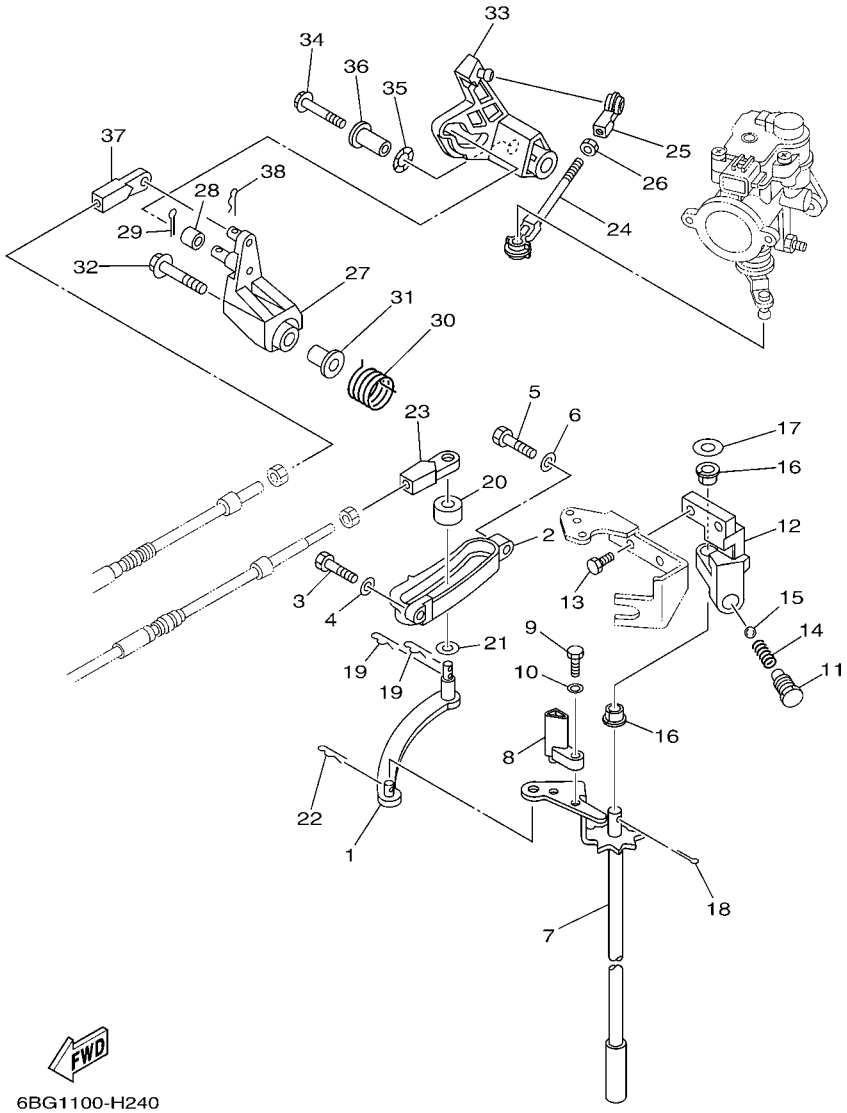

FIG. 24 CONTROL — COMMANDE

REF. NO.	PART NO. N° PIECES	DESCRIPTION DESCRIPTION	ET	EHD				REMARKS REMARQUES
27	62Y–42154–00	LEVER, THROTTLE CONTROL LEVIER DE COMMANDE D'AVANCE	1	1				
28	6C5–42171–00	BUSHING COUSSINET	1	1				
29	91490–16010	PIN. COTTER GOUPILLE	1	1				
30	62Y–44135–00	SPRING RESSORT	1	1				
31	90387–06M45	COLLAR COLLERETTE	1	1				
32	90119–06106	BOLT, WITH WASHER BOULON, AVEC RONDELLE	1	1				
33	6BG–42335–00	LEVER, ACCEL. CONTROL LEVIER, ACCELERATION	1	1				
34	95895–06045	BOLT, FLANGE BOULON	1	1				
35	90206–10M04	WASHER, WAVE RONDELLE, ONDULEE	1	1				
36	90387–06225	COLLAR COLLERETTE	1	1				
37	69W–48344–00	CABLE END, REMOTE CONTROL CHAPE CABLE	1	1				
38	90468–18008	CLIP JONC	1	1				

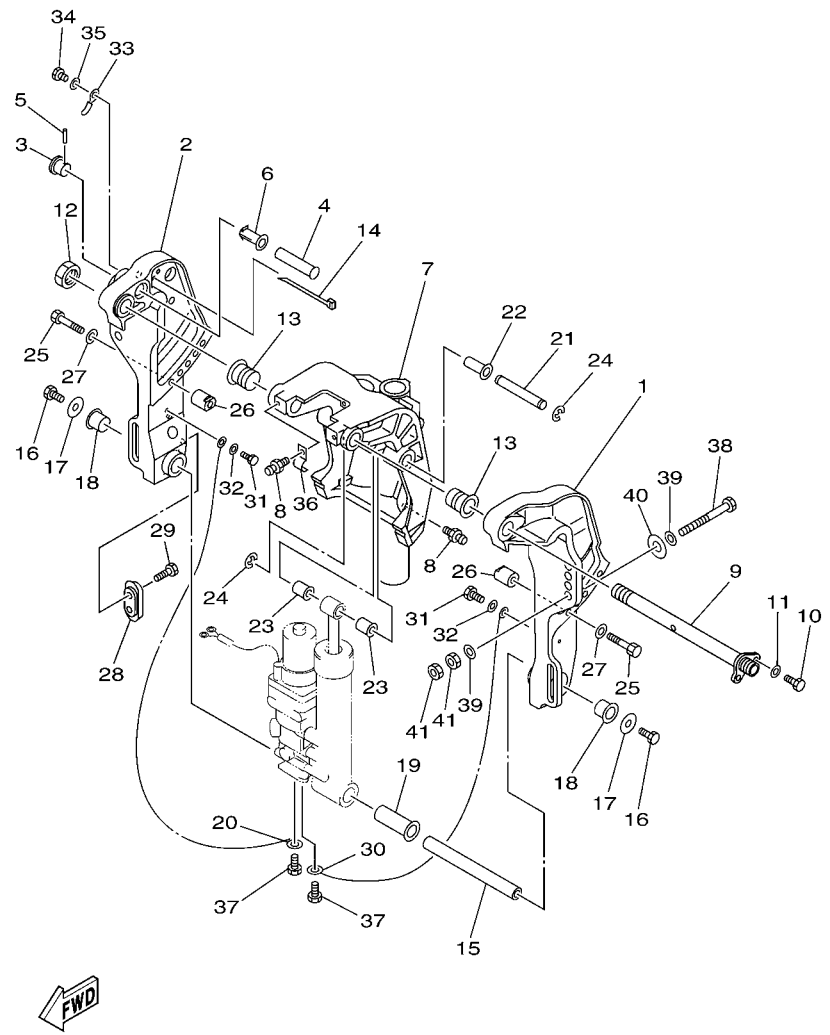

6BG1110-H260

FIG. 25 BRACKET 1 SUPPORT 1

REF. NO.	PART NO. N° PIECES	DESCRIPTION DESCRIPTION	ET	EHD				REMARKS REMARQUES
1	6K9–43111–10–8D	BRACKET, CLAMP 1 PRESSE 1	1					
2	6BG–43112–10–8D	BRACKET, CLAMP 2 PRESSE 2	1					
3	65W–43192–00	KNOB, STOPPER BOUTON, BUTEE DE RELEVAGE	1					
4	65W–43191–00	SHAFT, STOPPER AXE, BUTEE	1					
5	91690–30018	PIN, SPRING AGRAFFE	1					
6	90386–14MA1	BUSH DOUILLE	1					
7	67C–43311–00–8D	BRACKET, SWIVEL 1 SUPPORT, PIVOT 1	1					S(16.1") S(16.1")
	67C–43311–10–8D	BRACKET, SWIVEL 1 SUPPORT, PIVOT 1	1					L(21.0") L(21.0")
8	93700–06M03	NIPPLE, GREASE PION	3					
9	6K9–43131–01	BOLT, CLAMP BRACKET BOULON, PRESSE	1					
10	97095–08020	BOLT BOULON	1					
11	92995–08600	WASHER RONDELLE	1					
12	90185–22M11	NUT, SELF-LOCKING ECROU,AUTO-BLOQUANT	1					
13	90386–22MA4	BUSH DOUILLE	2					
14	90465–13M11	CLAMP BRIDE	2					
15	90249–18M35	PIN GOUPILLE	1					
16	97080–08016	BOLT BOULON	2					
17	90201–08M00	WASHER, PLATE RONDELLE, PLATE	2					
18	90386–18M44	BUSH DOUILLE	2					
19	90386–18MA0	BUSH DOUILLE	1					
20	6H1–82148–00	WIRE, LEAD 4 FIL 4	1					
21	90249–12M38	PIN GOUPILLE	1					
22	90381–12M10	BUSH, SOLID DOUILLE, SOLIDE	1					
23	90381–12M11	BUSH, SOLID DOUILLE, SOLIDE	2					
24	99080–10600	CIRCLIP CIRCLIP	2					
25	97095–10050	BOLT BOULON	2					
26	6BG–43654–00	NUT 1 ECROU 1	2					

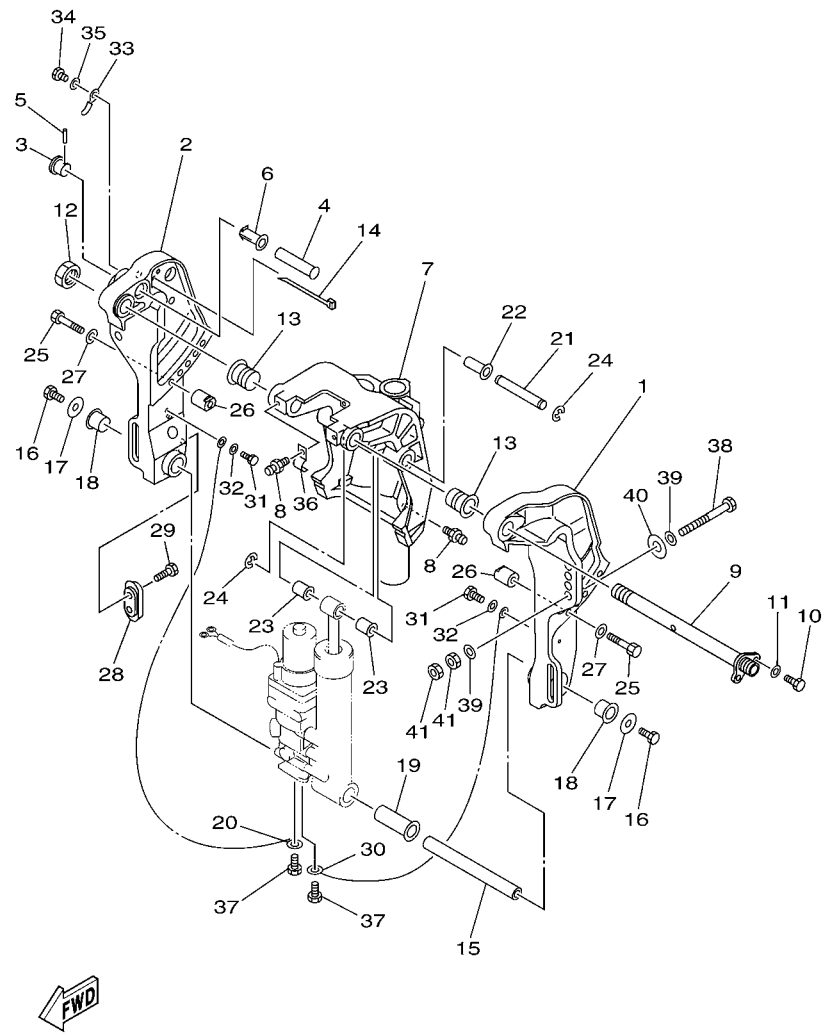

FIG. 25 BRACKET 1 SUPPORT 1

REF. NO.	PART NO. N° PIECES	DESCRIPTION DESCRIPTION	ET	EHD				REMARKS REMARQUES
27	92995–10600	WASHER RONDELLE	2					
28	65W–45251–00	ANODE ANODE	1					
29	90101–06020	BOLT BOULON	2					
30	6U0–82127–00	WIRE, LEAD 2 FIL 2	1					
31	97095–06014	BOLT BOULON	2					
32	92995–06600	WASHER RONDELLE	2					
33	90465–10M77	CLAMP BRIDE	1					
34	97095–06014	BOLT BOULON	1					
35	92995–06600	WASHER RONDELLE	1					
36	90465–08M63	CLAMP BRIDE	1					
37	97085–06010	BOLT BOULON	2					
38	90101–12M65	BOLT BOULON	4					
39	92995–12200	WASHER RONDELLE	8					
40	90201–12426	WASHER, PLATE RONDELLE, PLATE	4					
41	95380–12600	NUT ECROU	8					

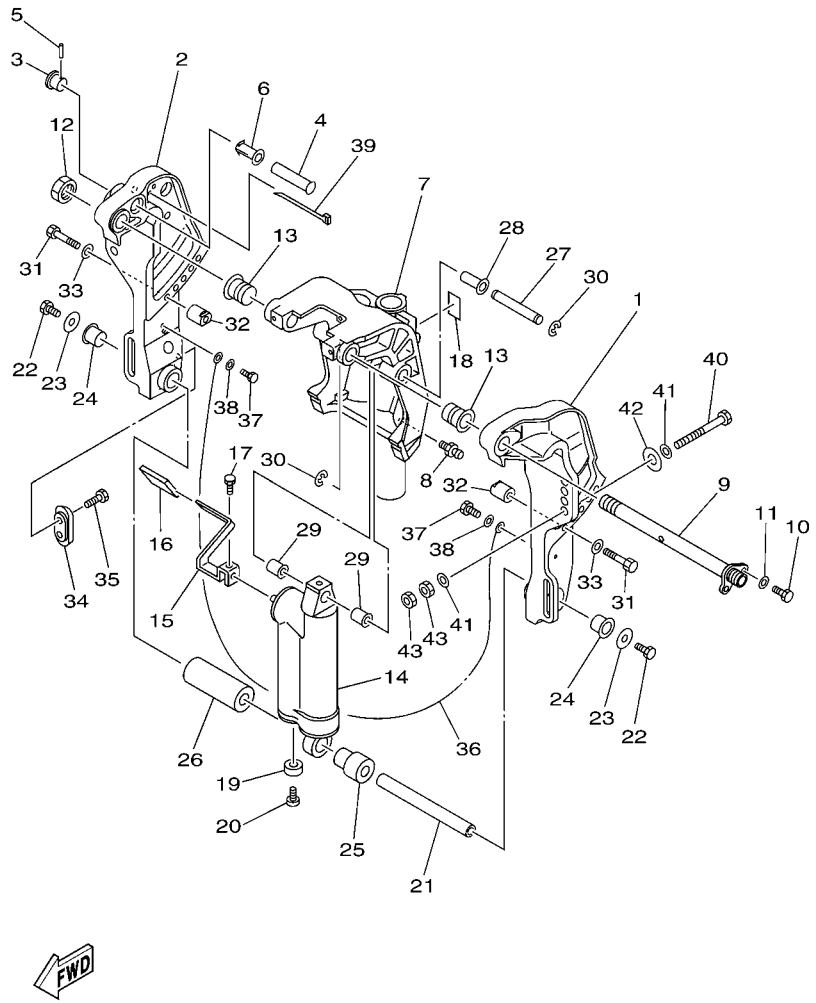

6BT1300-H260

FIG. 26 BRACKET 2 SUPPORT 2

REF. NO.	PART NO. N° PIECES	DESCRIPTION DESCRIPTION	ET	EHD				REMARKS REMARQUES
1	6K9–43111–10–8D	BRACKET, CLAMP 1 PRESSE 1		1				
2	6BG–43112–10–8D	BRACKET, CLAMP 2 PRESSE 2		1				
3	65W–43192–00	KNOB, STOPPER BOUTON, BUTEE DE RELEVAGE		1				
4	65W–43191–00	SHAFT, STOPPER AXE, BUTEE		1				
5	91690–30018	PIN, SPRING AGRAFFE		1				
6	90386–14MA1	BUSH DOUILLE		1				
7	67C–43311–10–8D	BRACKET, SWIVEL 1 SUPPORT, PIVOT 1		1				L(21.0") L(21.0")
8	93700–06M03	NIPPLE, GREASE PION		1				
9	6K9–43131–01	BOLT, CLAMP BRACKET BOULON, PRESSE		1				
10	97095–08020	BOLT BOULON		1				
11	92995–08600	WASHER RONDELLE		1				
12	90185–22M11	NUT, SELF-LOCKING ECROU,AUTO-BLOQUANT		1				
13	90386–22MA4	BUSH DOUILLE		2				
14	67C–43107–11–8D	SHOCK ABSORBER SUB-ASSY AMORTISSEUR (ENS.)		1				L(21.0") L(21.0")
15	67C–43631–00	LEVER, TILT LEVIER, INCLINAISON		1				
16	682–43318–01	COVER CAPUCHON		1				
17	97095–06010	BOLT BOULON		1				
18	63D–43691–00	INDICATOR, TILT ETIQUETTE, RELEVAGE		1				
19	663–45251–00	ANODE ANODE		1				
20	98680–06525	SCREW, OVAL HEAD VIS, TETE FRAISEE BOMBEE		1				
21	90249–18M35	PIN GOUPILLE		1				
22	97080–08016	BOLT BOULON		2				
23	90201–08M00	WASHER, PLATE RONDELLE, PLATE		2				
24	90386–18M44	BUSH DOUILLE		2				
25	90386–18MA5	BUSH DOUILLE		1				
26	90387–18M03	COLLAR COLLERETTE		1				
27	90249–12M38	PIN GOUPILLE		1				

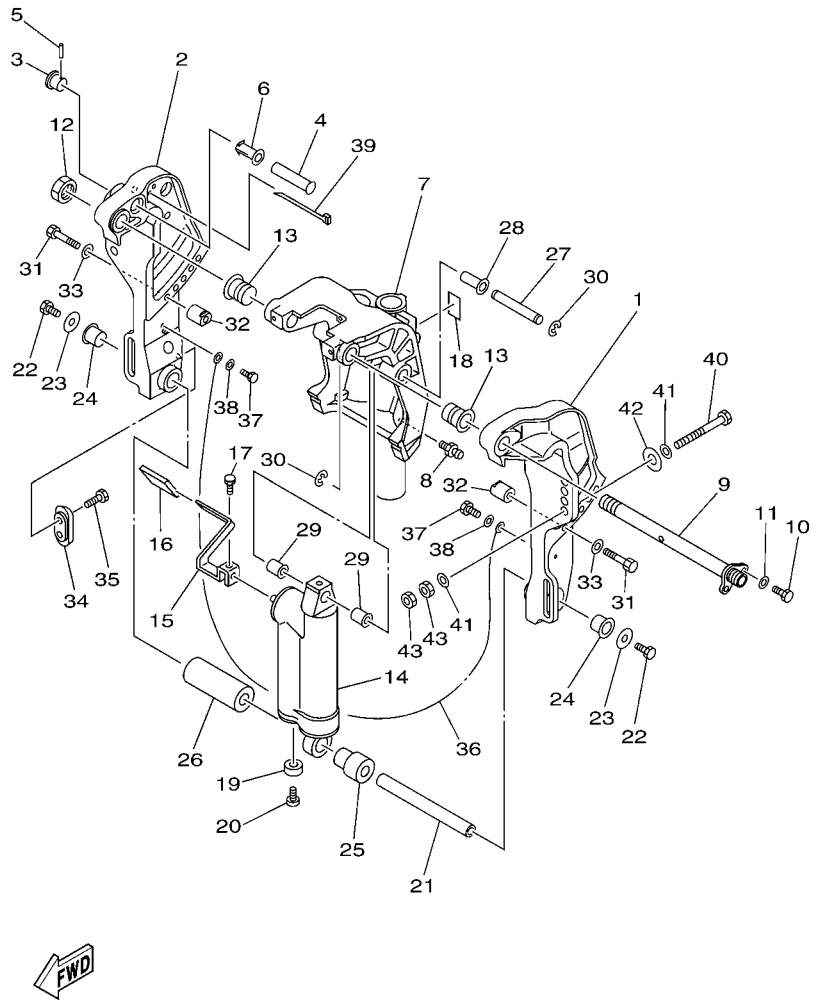

FIG. 26 BRACKET 2 SUPPORT 2

REF. NO.	PART NO. N° PIECES	DESCRIPTION DESCRIPTION	ET	EHD				REMARKS REMARQUES
28	90381–12M10	BUSH, SOLID DOUILLE, SOLIDE		1				
29	90381–12M11	BUSH, SOLID DOUILLE, SOLIDE		2				
30	99080–10600	CIRCLIP CIRCLIP		2				
31	97095–10050	BOLT BOULON		2				
32	6BG–43654–00	NUT 1 ECROU 1		2				
33	92995–10600	WASHER RONDELLE		2				
34	65W–45251–00	ANODE ANODE		1				
35	90101–06020	BOLT BOULON		2				
36	67C–82127–20	WIRE, LEAD 2 FIL 2		1				
37	97095–06014	BOLT BOULON		2				
38	92995–06600	WASHER RONDELLE		2				
39	90465–13M11	CLAMP BRIDE		1				
40	90101–12M65	BOLT BOULON		4				
41	92995–12200	WASHER RONDELLE		8				
42	90201–12426	WASHER, PLATE RONDELLE, PLATE		4				
43	95380–12600	NUT ECROU		8				

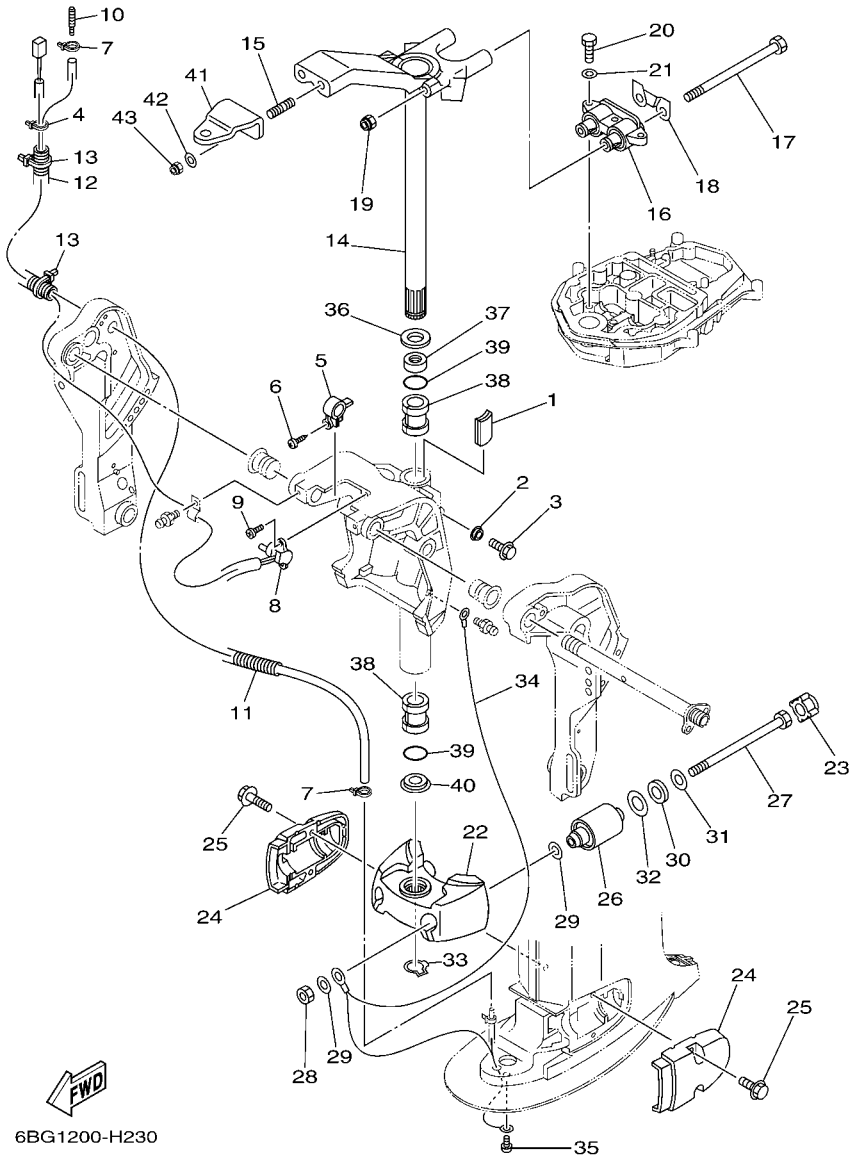

FIG. 27 BRACKET 3 SUPPORT 3

REF. NO.	PART NO. N° PIECES	DESCRIPTION DESCRIPTION	ET	EHD				REMARKS REMARQUES
1	6J8–42528–00	PLATE, FRICTION PLAQUE, FRICTION	1	1				
2	689–43373–01	SEAL, DAMPER JOINT	1	1				
3	90105–06M18	BOLT, FLANGE BOULON	1	1				
4	90465–11M10	CLAMP BRIDE	1					
5	6K9–43139–01	CAM, TRIM SENDER VILEBREQUIN TRUM	1					
6	97780–60525	SCREW, TAPPING VIS, TETE BOMBEE	1					
7	90465–11M10	CLAMP BRIDE	2	2				
8	67H–83672–00	TRIM SENDER INCLINER RACCORD	1					
9	97885–06016	SCREW, PAN HEAD VIS, A ENCOCHE	2					
10	6E5–83558–00	END, NIPPLE RACCORD DE NIPPLE	1	1				
11	6BG–44385–00	HOSE, WATER 1 TUBE D'EAU 1	1					S(16.1") S(16.1")
	6BG–44385–10	HOSE, WATER 1 TUBE D'EAU 1	1	1				L(21.0") L(21.0")
12	90447–19014	TUBE DURITE	1					
13	90465–13M18	CLAMP BRIDE	2					
14	6BG–42510–00–8D	STEERING BRACKET ASSY DIRECTION SUPPORT (ENS.)	1					S(16.1") S(16.1")
	6BG–42510–10–8D	STEERING BRACKET ASSY DIRECTION SUPPORT (ENS.)	1	1				L(21.0") L(21.0")
15	90116–10M28	BOLT, STUD GOUJON	2	2				
16	67C–44514–00–8D	MOUNT DAMPER, UPPER SIDE SILENT-BLOC, SUPERIEUR LATERAL	1					S(16.1") S(16.1")
	67C–44514–10–8D	MOUNT DAMPER, UPPER SIDE SILENT-BLOC, SUPERIEUR LATERAL	1	1				L(21.0") L(21.0")
17	90101–08M15	BOLT BOULON	2	2				
18	66T–44526–30	PLATE PLAQUE	1	1				
19	90185–08045	NUT, SELF-LOCKING ECROU,AUTO-BLOQUANT	2	2				
20	97075–08030	BOLT BOULON	3	3				
21	92995–08600	WASHER RONDELLE	3	3				
22	67C–44551–01–8D	HOUSING, LOWER MOUNT RUBBER BOITIER, SILENT-BLOC INFERIEUR	1					S(16.1") S(16.1")
	6C5–44551–00–8D	HOUSING, LOWER MOUNT RUBBER BOITIER, SILENT-BLOC INFERIEUR	1	1				L(21.0") L(21.0")
23	69W–44575–00	DAMPER, LOWER MOUNT RUBBER SILENT-BLOC, INFERIEUR	2	2				

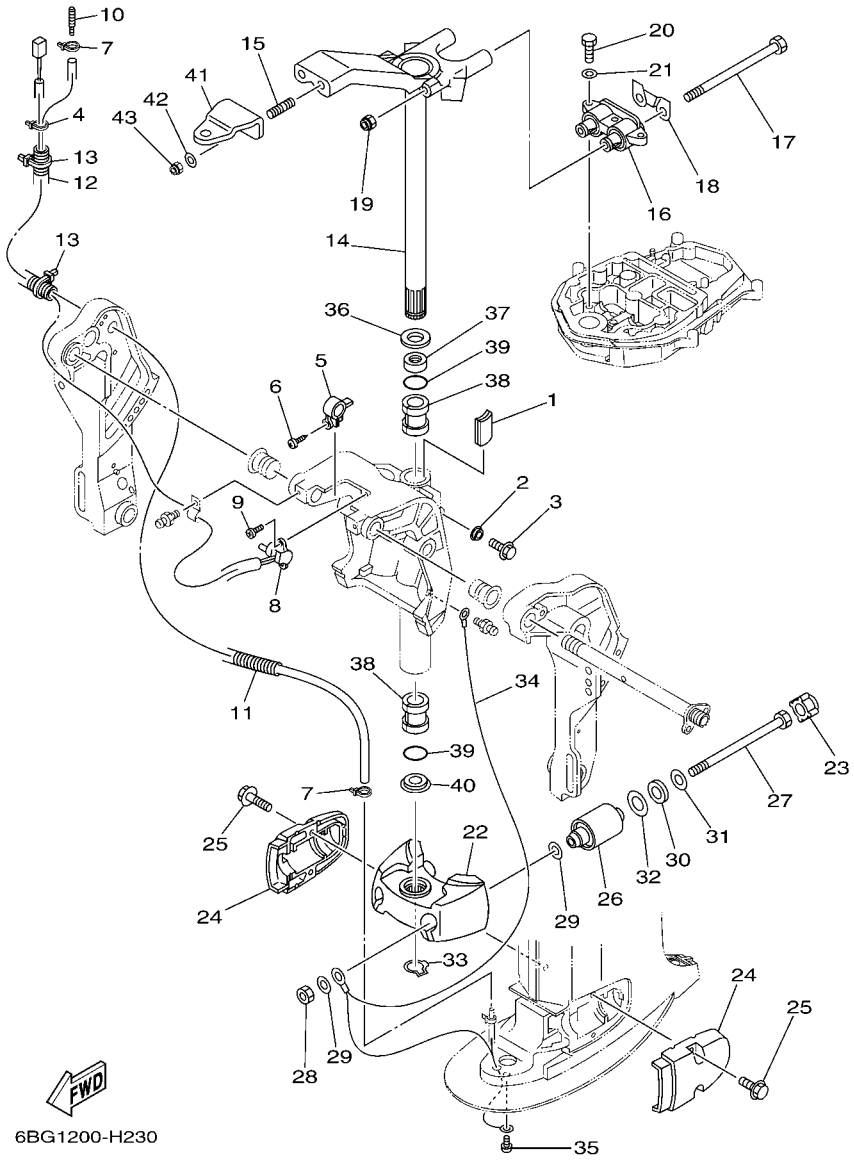

FIG. 27 BRACKET 3 SUPPORT 3

REF. NO.	PART NO. N° PIECES	DESCRIPTION DESCRIPTION	ET	EHD				REMARKS REMARQUES
24	6C5–44552–00–8D	HOUSING, LOWER MOUNT RUBBER BOITIER, SILENT-BLOC INFERIEUR	2	2				
25	90119–08131	BOLT, WITH WASHER BOULON, AVEC RONDELLE	4	4				
26	67C–44555–21–94	MOUNT DAMPER, LOWER SIDE SILENT-BLOC, INFERIEUR LATERAL	2					S(16.1") S(16.1")
	67C–44555–11–94	MOUNT DAMPER, LOWER SIDE SILENT-BLOC, INFERIEUR LATERAL	2	2				L(21.0") L(21.0")
27	90109–12MA3	BOLT BOULON	2	2				
28	95380–12700	NUT ECROU	2	2				
29	90201–12M16	WASHER, PLATE RONDELLE, PLATE	4	4				
30	90202–21100	WASHER, PLATE RONDELLE, PLATE	2	2				
31	90201–13M19	WASHER, PLATE RONDELLE, PLATE	2	2				
32	90201–22M05	WASHER, PLATE RONDELLE, PLATE	2	2				
33	93410–28M06	CIRCLIP CLIPS	1	1				
34	67C–82127–00	WIRE, LEAD 2 FIL 2	1					S(16.1") S(16.1")
	67C–82127–10	WIRE, LEAD 2 FIL 2	1	1				L(21.0") L(21.0")
35	97885–06008	SCREW, PAN HEAD VIS, A ENCOCHE	1	1				
36	90201–30M00	WASHER, PLATE RONDELLE, PLATE	1	1				
37	90386–30M78	BUSH DOUILLE	1	1				
38	90386–30M77	BUSH DOUILLE	2	2				
39	93210–29M94	O-RING JOINT TORIQUE	2	2				
40	90386–30M60	BUSH DOUILLE	1	1				
41	65W–48511–00	HOOK, STEERING ATTACHE, DIRECTION	1					
42	90201–10120	WASHER, PLATE RONDELLE, PLATE	2					
43	90185–10051	NUT, SELF-LOCKING ECROU,AUTO-BLOQUANT	2	2				

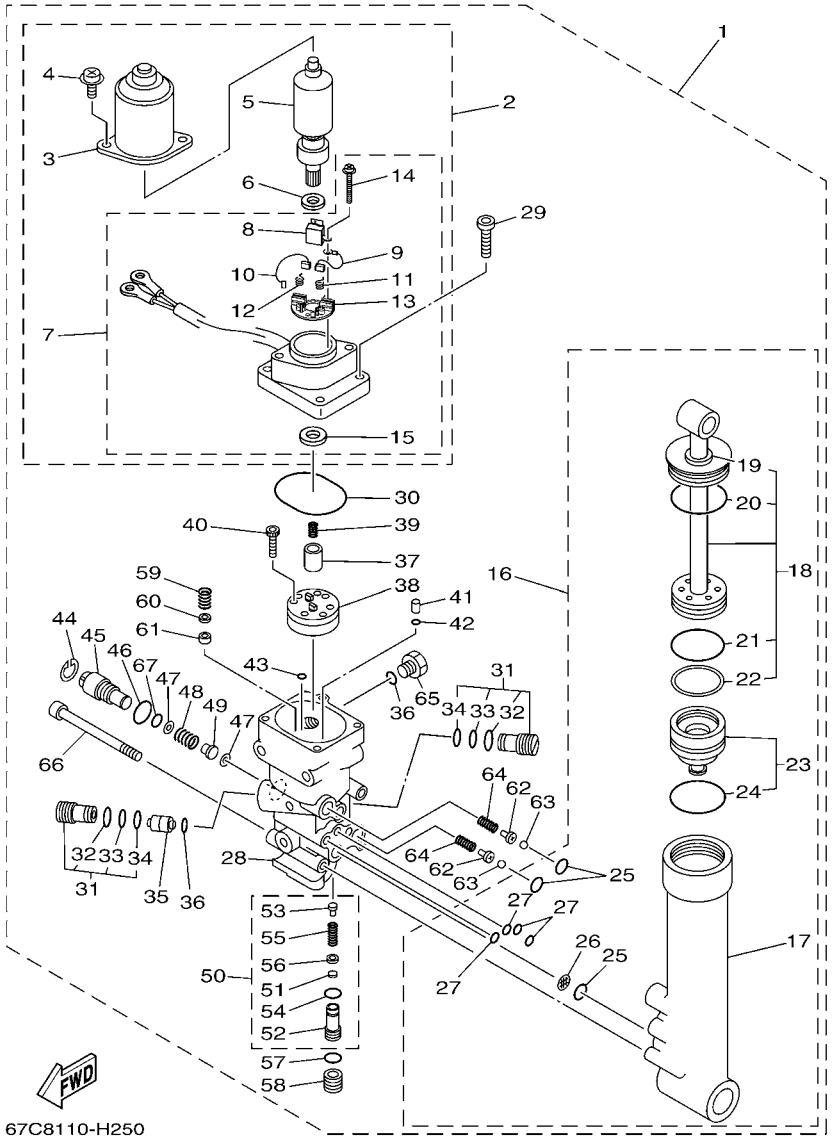

FIG. 28 POWER TRIM & TILT ASSY PUISSANCE PARER ET INCLINER

REF. NO.	PART NO. N° PIECES	DESCRIPTION DESCRIPTION	ET	EHD				REMARKS REMARQUES
1	67C–43800–01–8D	POWER TRIM & TILT ASSY PUISSANCE PARER ET INCLINER (E	1					
2	67C–43880–01	.MOTOR ASSY .MOTEUR (ENS.)	1					
3	65W–43804–01	..STATOR ASSY ..STATOR (ENS.)	1					
4	65W–43887–01	..BOLT ..BOULON	2					
5	65W–43805–01	..ARMATURE ASSY ..INDUIT (ENS.)	1					
6	65W–4387G–00	..WASHER ..RONDELLE	1					
7	67C–43881–01	..FRAME, END ..BATI	1					
8	65W–82181–00	...CIRCUIT BREAKER COMP. ...RUPTEUR COMPLET	1					
9	65W–43892–01	...BRUSH 2 ...BALAI 2	1					
10	65W–43891–01	...BRUSH 1 ...BALAI 1	1					
11	65W–4386K–01	...SPRING, BRUSH ...RESSORT, BALAI	1					
12	65W–4386L–00	...SPRING, BRUSH 2 ...RESSORT, BALAI 2	1					
13	65W–4380F–01	...PLATE, BRUSH HOLDER ...PLAQUE	1					
14	65W–43879–01	...SCREW, WITH WASHER ...VIS, AVEC RONDELLE	2					
15	65W–43882–01	...OIL SEAL ...JOINT SPI	1					
16	67C–43840–00	.POWER TILT ASSY .PUISSANCE INCLINER (ENS.)	1					
17	65W–4380K–00	..CYLINDER, TILT SUB ASSY ..CYLINDRE	1					
18	67C–43810–00	..TILT PISTON SUB ASSY ..INCLINER PISTON AUXILIAIRE(ENS	1					
19	65W–43812–00	...SEAL, DUST ...JOINT	1					
20	65W–43865–00	...O-RING ...JOINT TORIQUE	1					
21	6H1–43861–10	...O-RING ...JOINT TORIQUE	1					
22	65W–43871–00	...RING, BACK UP ...SEGMENT	1					
23	65W–4381B–00	..FREE PISTON SUB ASSY ..PISTON AUXILIAIRE (ENS.)	1					
24	6H1–43861–10	...O-RING ...JOINT TORIQUE	1					
25	93210–11368	..O-RING ..JOINT TORIQUE	3					
26	6H1–43816–00	..FILTER 1 ..FILTRE 1	1					
27	93210–064A5	..O-RING ..JOINT TORIQUE	4					

FIG. 28 POWER TRIM & TILT ASSY PUISSANCE PARER ET INCLINER

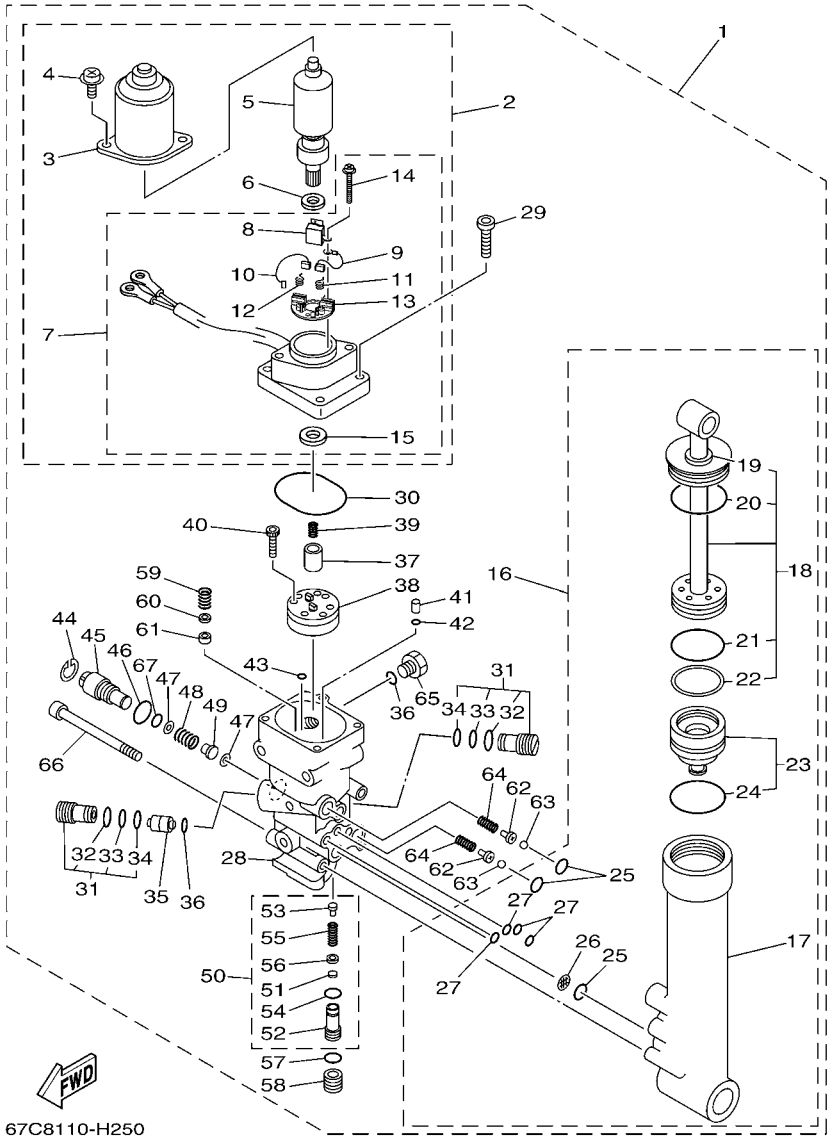

REF. NO.	PART NO. N° PIECES	DESCRIPTION DESCRIPTION	ET	EHD				REMARKS REMARQUES
28	67C–4380L–00	.HOUSING, TRIM & TILT SUB ASSY .CARTER	1					
29	65W–43888–00	.BOLT, SOCKET .BOULON	4					
30	93210–50768	.O-RING .JOINT TORIQUE	1					
31	6T4–43802–03	.VALVE SUB ASSY .CLAPET AUXILIAIRE (ENS.)	2					
32	6H1–43866–00	..O-RING ..JOINT TORIQUE	1					
33	93210–10M74	..O-RING ..JOINT TORIQUE	1					
34	93210–12N52	..O-RING ..JOINT TORIQUE	1					
35	62X–43841–00	.PISTON, SHUTTLE .PISTON	1					
36	93210–09165	.O-RING .JOINT TORIQUE	2					
37	65W–43831–00	.CONNECTOR, SHAFT .RACCORD	1					
38	65W–43830–00	.GEAR PUMP ASSY .POMPE A PIGNON (ENS.)	1					
39	6T4–43853–00	.SPRING, MAIN VALVE .RESSORT	1					
40	91318–04025	.BOLT .BOULON	4					
41	65W–43817–00	.FILTER 2 .FILTRE 2	2					
42	93210–04N50	.O-RING .JOINT TORIQUE	2					
43	93210–04N51	.O-RING .JOINT TORIQUE	2					
44	6H1–43875–00	.RING, SNAP .RESSORT	1					
45	6H1–43845–00	.SCREW, MANUAL RELEASE .VIS	1					
46	93210–18397	.O-RING .JOINT TORIQUE	1					
47	6H1–43847–00	.SEAT, MANUAL VALVE .SIEGE	2					
48	65W–43854–00	.SPRING, MANUAL RELEASE .RESSORT	1					
49	65W–4382A–00	.ADAPTOR 1 .ADAPTEUR 1	1					
50	CS2–43803–81	.CASE VALVE COMP. .CARTER VALVE COMP.	1					
51	6H1–4384G–11	..SEAL, RELIEF VALVE ..JOINT	1					
52	67C–43851–00	..SEAT, RELIEF VALVE ..SIEGE	1					
53	67F–43843–00	..SCREW, VALVE LOCK ..VIS	1					
54	93210–10M74	..O-RING ..JOINT TORIQUE	1					

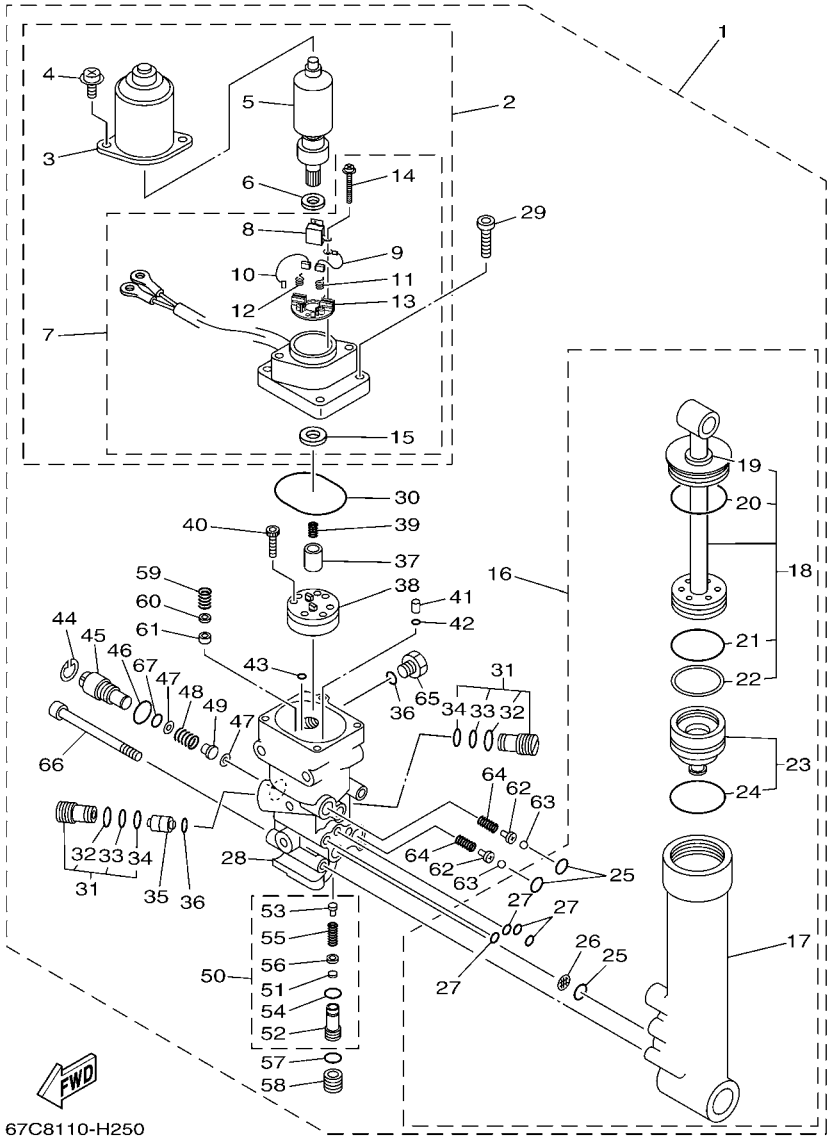

FIG. 28 POWER TRIM & TILT ASSY PUISSANCE PARER ET INCLINER

REF. NO.	PART NO. N° PIECES	DESCRIPTION DESCRIPTION	ET	EHD				REMARKS REMARQUES
55	6H1–43856–10	..SPRING, DOWN RELIEF ..RESSORT	1					
56	6H1–43844–10	..PIN, VALVE SUPPORT ..GOUPILLE	1					
57	93210–11073	.O-RING .JOINT TORIQUE	1					
58	65W–43843–00	.SCREW, VALVE LOCK .VIS	1					
59	6H1–43856–10	.SPRING, DOWN RELIEF .RESSORT	1					
60	6H1–43844–10	.PIN, VALVE SUPPORT .GOUPILLE	1					
61	6H1–4384F–10	.SEAL, MAIN VALVE .JOINT	1					
62	65W–4386A–00	.PIN, ABSORBER VALVE .GOUPILLE, SOUPAPE	2					
63	93501–08001	.BALL .BILLE	2					
64	65W–43853–00	.SPRING, MAIN VALVE .RESSORT	2					
65	6H1–43829–00	.PLUG, RESERVOIR .BOUCHON	1					
66	62X–43878–00	.BOLT, SOCKET .BOULON	3					
67	93210–10M74	.O-RING .JOINT TORIQUE	1					

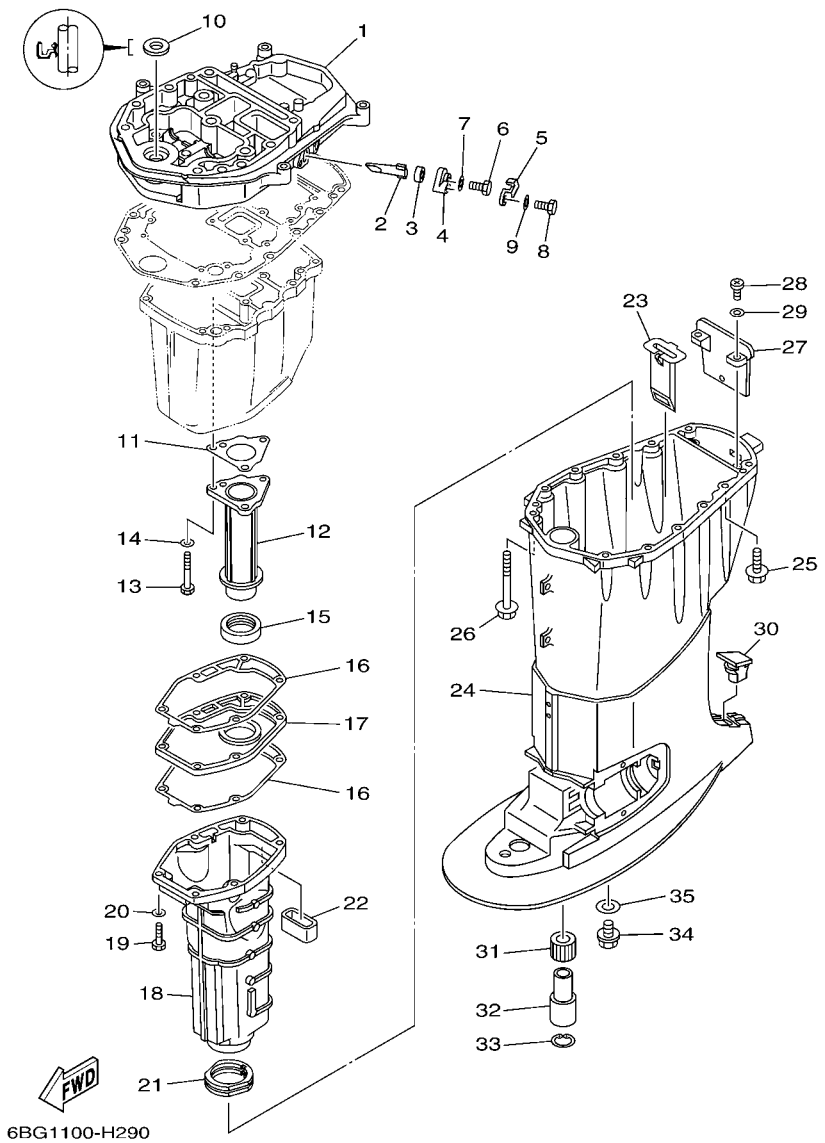

FIG. 29 UPPER CASING FOURREAU

REF. NO.	PART NO. N° PIECES	DESCRIPTION DESCRIPTION	ET	EHD				REMARKS REMARQUES
1	6BG–41137–00–5B	GUIDE, EXHAUST COLLECTEUR D'ECHAPPEMENT	1	1				
2	62Y–11325–00	ANODE ANODE	1	1				
3	66M–11328–00	GROMMET, ANODE PASSE-FIL	1	1				
4	66M–11327–00–94	COVER, ANODE COUVERCLE ANODE	1	1				
5	66M–12535–00	PLATE PLAQUE	1	1				
6	97095–05012	BOLT BOULON	1	1				
7	92995–05600	WASHER RONDELLE	1	1				
8	97013–06020	BOLT BOULON	1	1				
9	92903–06600	WASHER, PLATE RONDELLE, PLATE	1	1				
10	93110–16004	OIL SEAL JOINT SPY	1	1				
11	64J–41133–10	GASKET, EXHAUST MANIFOLD 1 JOINT, PIPE D'ECHAPPEMENT	1	1				
12	6BG–41131–00–5B	MANIFOLD, EXT. 1 PIPE D'ECHAPPEMENT	1	1				
13	97075–06050	BOLT BOULON	3	3				
14	92995–06600	WASHER RONDELLE	3	3				
15	64J–46132–10	GASKET 1 JOINT 1	1	1				
16	6BG–41134–00	GASKET, EXHAUST MANIFOLD JOINT, PIPE D'ECHAPPEMENT	2	2				
17	6BG–45181–00–5B	PLATE PLAQUETTE	1	1				
18	6BG–14711–00–5B	MUFFLER 1 POT D'ECHAPPEMENT 1	1					S(16.1") S(16.1")
	69W–14711–00–5B	MUFFLER 1 POT D'ECHAPPEMENT 1	1	1				L(21.0") L(21.0")
19	97075–06025	BOLT BOULON	6	6				
20	92995–06600	WASHER RONDELLE	6	6				
21	67C–45123–00	GASKET, MUFFLER JOINT, POT DE DETENTE	1	1				
22	62Y–45127–00	SEAL JOINT	1	1				
23	64J–77123–00	GUIDE 1 GUIDE 1	1	1				
24	6BG–45111–00–8D	CASING, UPPER FOURREAU	1					S(16.1") S(16.1")
	6BG–45111–10–8D	CASING, UPPER FOURREAU	1	1				L(21.0") L(21.0")
25	90119–08102	BOLT, WITH WASHER BOULON, AVEC RONDELLE	4	4				

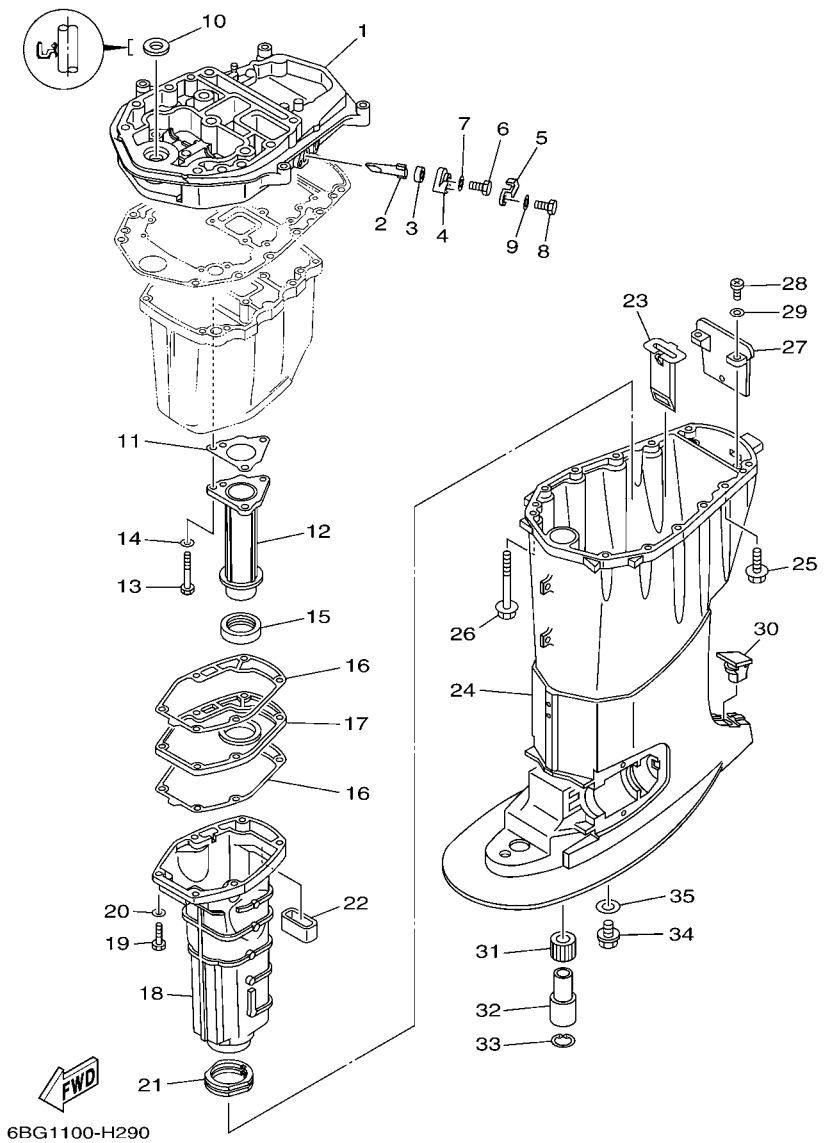

FIG. 29 UPPER CASING FOURREAU

REF. NO.	PART NO. N° PIECES	DESCRIPTION DESCRIPTION	ET	EHD				REMARKS REMARQUES
26	90119–08132	BOLT, WITH WASHER BOULON, AVEC RONDELLE	8	8				
27	67C–45151–00	COVER, UPPER CASING CAPUCHON, FOURREAU	1	1				
28	97880–05016	SCREW, PAN HEAD VIS, TETE TRONCONIQUE	2	2				
29	92990–05600	WASHER, PLATE RONDELLE, PLATE	2	2				
30	63D–45155–00	CAP CAPUCHON	1					S(16.1") S(16.1")
	6C5–45155–00	CAP CAPUCHON	1	1				L(21.0") L(21.0")
31	679–45318–00	BUSHING, DRIVE SHAFT DOUILLE, ARBRE MOTEUR	1	1				L(21.0") L(21.0")
32	90387–23002	COLLAR COLLERETTE	1	1				L(21.0") L(21.0")
33	93420–36M01	CIRCLIP CIRCLIP, TYPE S	1	1				L(21.0") L(21.0")
34	90340–14M06	PLUG, STRAIGHT SCREW PLOT, FILETE DROIT	1	1				L(21.0") L(21.0")
35	90430–14M09	GASKET JOINT	1	1				L(21.0") L(21.0")

FIG. 30 OIL PAN — VENTILATEUR D'HUILE

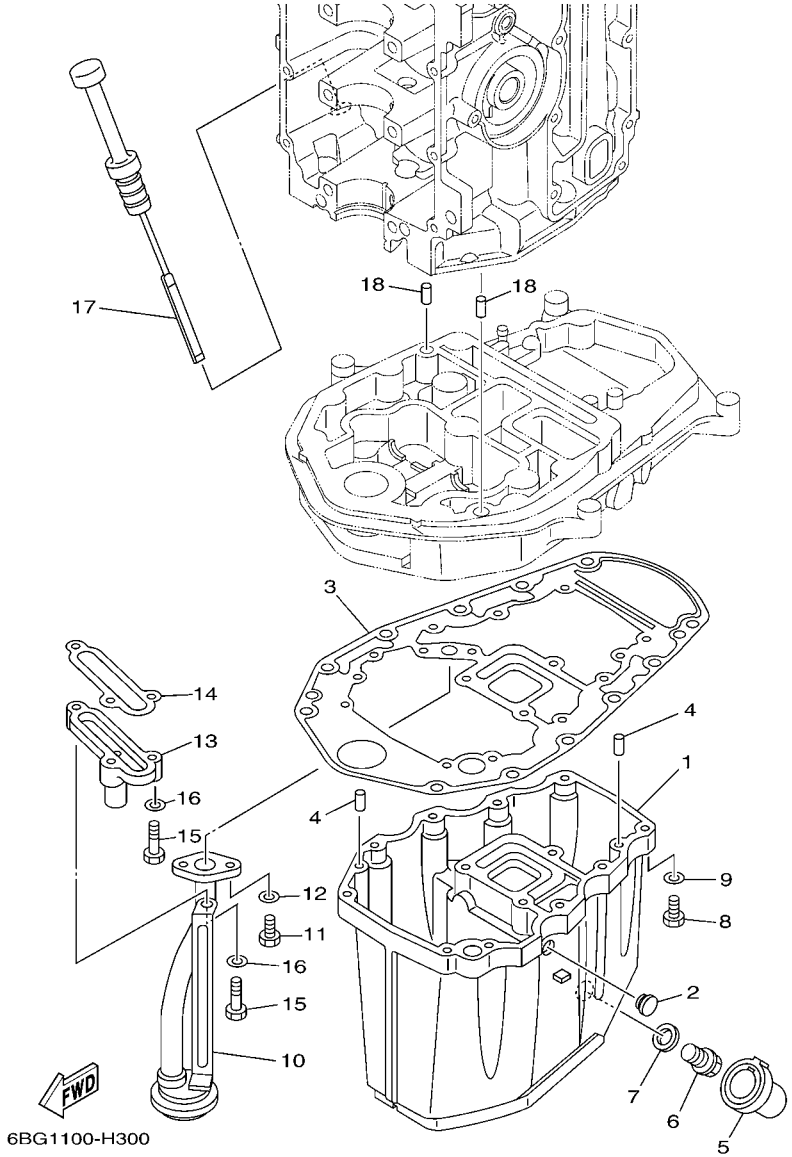

REF. NO.	PART NO. N° PIECES	DESCRIPTION DESCRIPTION	ET	EHD				REMARKS REMARQUES
1	6BG–15311–00–5B	OIL PAN VENTILATEUR D'HUILE	1	1				
2	90480–12M25	GROMMET PASSE-FIL	1	1				
3	69W–15312–00	GASKET, OIL PAN JOINT DE VENTILATEUR D'HUILE	1	1				
4	93606–12019	PIN, DOWEL GOUPILLE	4	4				
5	67C–15316–10	DAMPER 1 AMORTISSEUR 1	1					S(16.1") S(16.1")
	67C–15316–00	DAMPER 1 AMORTISSEUR 1	1	1				L(21.0") L(21.0")
6	90340–14M06	PLUG, STRAIGHT SCREW PLOT, FILETE DROIT	1	1				
7	90430–14M09	GASKET JOINT	1	1				
8	97075–06025	BOLT BOULON	10	10				
9	92995–06600	WASHER RONDELLE	10	10				
10	62Y–13411–00	STRAINER, OIL FILTRE, HUILE	1	1				
11	97013–06016	BOLT BOULON	2	2				
12	92903–06600	WASHER, PLATE RONDELLE, PLATE	2	2				
13	6BG–11576–00–94	BODY, RELIEF CORPS DE SECURITE	1	1				
14	62Y–13475–00	GASKET JOINT	1	1				
15	97013–06025	BOLT BOULON	3	3				
16	92903–06600	WASHER, PLATE RONDELLE, PLATE	3	3				
17	6BG–15362–00	PLUG, OIL LEVEL PLOT, NIVEAU D'HUILE	1	1				
18	93608–12M05	PIN, DOWEL AXE	2	2				

FIG. 31 LOWER CASING & DRIVE 1 BOITIER D'HELICE TRANSMISSION1

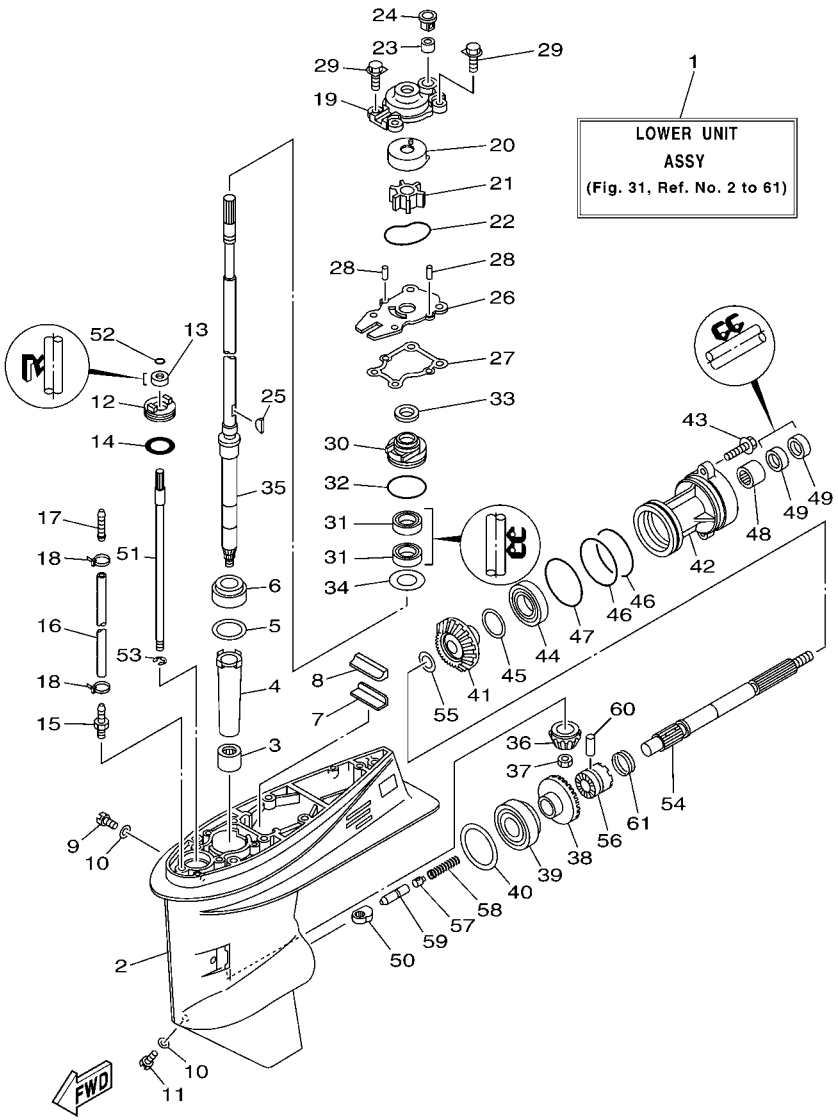

REF. NO.	PART NO. N° PIECES	DESCRIPTION DESCRIPTION	ET	EHD				REMARKS REMARQUES
1	6BG–45300–00–8D	LOWER UNIT ASSY UNITE INFERIEURE (ENS.)	1					S(16.1") S(16.1")
	6BG–45300–10–8D	LOWER UNIT ASSY UNITE INFERIEURE (ENS.)	1	1				L(21.0") L(21.0")
2	62Y–45301–00–8D	CASING, LOWER BEQUILLE	1	1				
3	93315–32224	BEARING ROULEMENT	1	1				
4	6H4–45536–00	SLEEVE, DRIVE SHAFT MANCHON, ARBRE MOTEUR	1	1				
5	663–45587–01	SHIM (T:0.10MM) CALE (T:0.10MM)	1	1				UR UR
	663–45587–10	SHIM (T:0.12MM) CALE (T:0.12MM)	1	1				UR UR
	663–45587–20	SHIM (T:0.15MM) CALE (T:0.15MM)	1	1				UR UR
	663–45587–30	SHIM (T:0.18MM) CALE (T:0.18MM)	1	1				UR UR
	663–45587–40	SHIM (T:0.30MM) CALE (T:0.30MM)	1	1				UR UR
	663–45587–50	SHIM (T:0.40MM) CALE (T:0.40MM)	1	1				UR UR
	663–45587–60	SHIM (T:0.50MM) CALE (T:0.50MM)	1	1				UR UR
6	93332–00001	BEARING ROULEMENT	1	1				
7	663–45376–00–94	GUIDE, SEAL DAMPER BUTEE, JOINT CAOUTCHOUC	1	1				
8	63D–45375–00	DAMPER, SEAL BOURRELET, CAOUTCHOUC	1	1				
9	90340–08002	PLUG, STRAIGHT SCREW PLOT, FILETE DROIT	1	1				
10	90430–08020	GASKET JOINT	2	2				
11	688–45341–10	PLUG, DRAIN BOUCHON DE VIDANGE	1	1				
12	63D–45321–00	PLATE PLAQUETTE	1	1				
13	93106–09014	OIL SEAL JOINT SPY	1	1				
14	93210–33MG4	O-RING JOINT TORIQUE	1	1				
15	6E5–45378–00	NIPPLE, HOSE RACCORD, TUYAU	1	1				
16	90445–07ME8	HOSE (L80) DURITE (L80)	1	1				
17	6E5–83558–10	END, NIPPLE RACCORD DE NIPPLE	1	1				
18	90465–11M10	CLAMP BRIDE	2	2				
19	66T–44311–00	HOUSING, WATER PUMP CORPS, POMPE A EAU	1	1				
20	63D–44322–00	INSERT, CARTRIDGE CUVETTE	1	1				

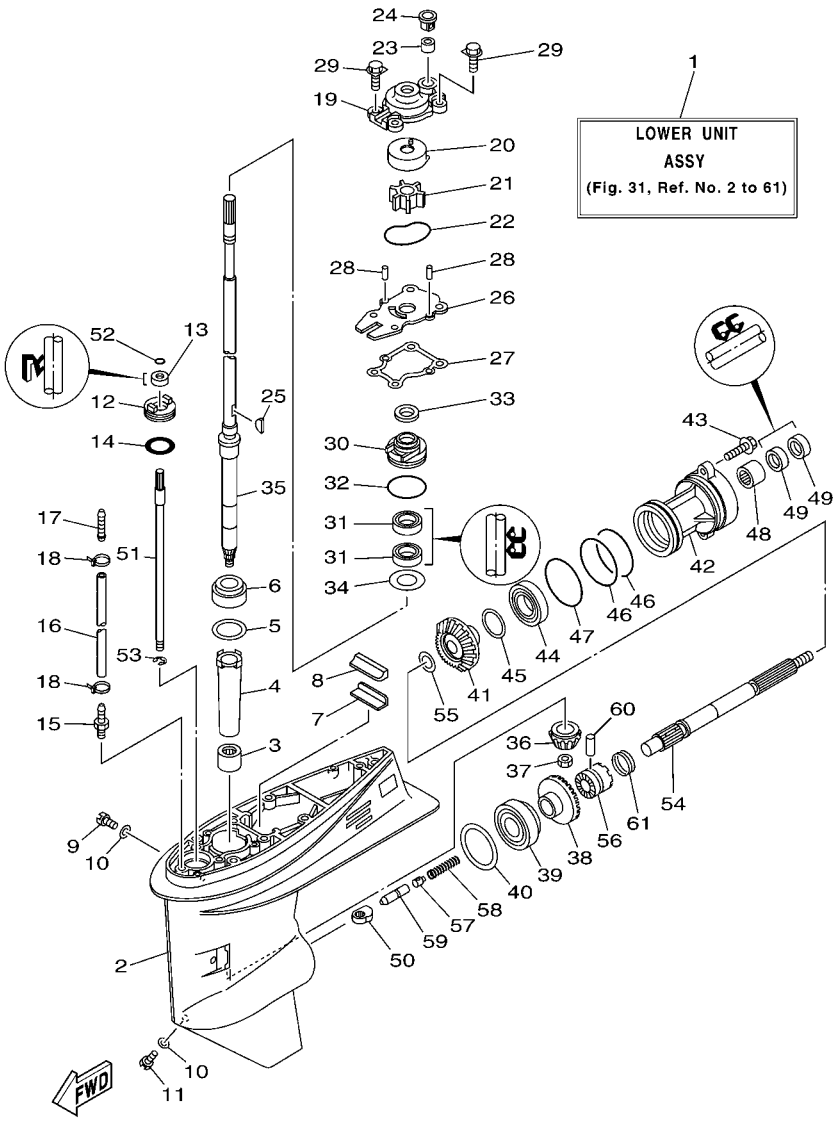

FIG. 31 LOWER CASING & DRIVE 1 BOITIER D'HELICE TRANSMISSION1

REF. NO.	PART NO. N° PIECES	DESCRIPTION DESCRIPTION	ET	EHD				REMARKS REMARQUES
21	6H4–44352–02	IMPELLER TURBINE	1	1				
22	93210–59MG7	O-RING JOINT TORIQUE	1	1				
23	663–44366–00	DAMPER, WATER SEAL JOINT, TUBE D'EAU	1	1				
24	63D–44312–00	COVER, WATER PUMP HOUSING COUVERCLE	1	1				
25	90280–03M03	KEY, WOODRUFF CLAVETTE, DEMI-LUNE	1	1				
26	63D–44323–00	OUTER PLATE, CARTRIDGE PLAQUE EXTERIEURE	1	1				
27	63D–44316–00	GASKET, WATER PUMP JOINT, POMPE A EAU	1	1				
28	93604–08062	PIN, DOWEL CLAVETTE	2	2				
29	90119–08M15	BOLT, WITH WASHER BOULON, AVEC RONDELLE	4	4				
30	6BG–44341–00	HOUSING, WATER PUMP CORPS, POMPE A EAU	1	1				
31	93101–22M60	OIL SEAL JOINT SPY	2	2				
32	93210–48001	O-RING JOINT TORIQUE	1	1				
33	66T–45344–01	COVER, OIL SEAL FLASQE, JOINT D'HUILE	1	1				
34	90201–27M00	WASHER, PLATE RONDELLE, PLATE	1	1				
35	67C–45501–00	DRIVE SHAFT COMP. ARBRE MOTEUR COMP.	1					S(16.1") S(16.1")
	67C–45501–10	DRIVE SHAFT COMP. ARBRE MOTEUR COMP.	1	1				L(21.0") L(21.0")
36	66T–45551–00	PINION (13T) PIGNON D'ATTAQUE (13D)	1	1				
37	90170–12138	NUT ECROU	1	1				
38	66T–45560–01	GEAR 1 (26T) PIGNON 1 (26T)	1	1				
39	93332–00003	BEARING ROULEMENT	1	1				
40	663–45567–01	SHIM (T:0.10MM) CALE (T:0.10MM)	1	1				UR UR
	663–45567–10	SHIM (T:0.12MM) CALE (T:0.12MM)	1	1				UR UR
	663–45567–20	SHIM (T:0.15MM) CALE (T:0.15MM)	1	1				UR UR
	663–45567–30	SHIM (T:0.18MM) CALE (T:0.18MM)	1	1				UR UR
	663–45567–40	SHIM (T:0.30MM) CALE (T:0.30MM)	1	1				UR UR
	663–45567–50	SHIM (T:0.40MM) CALE (T:0.40MM)	1	1				UR UR
	663–45567–60	SHIM (T:0.50MM) CALE (T:0.50MM)	1	1				UR UR

FIG. 31 LOWER CASING & DRIVE 1 BOITIER D'HELICE TRANSMISSION1

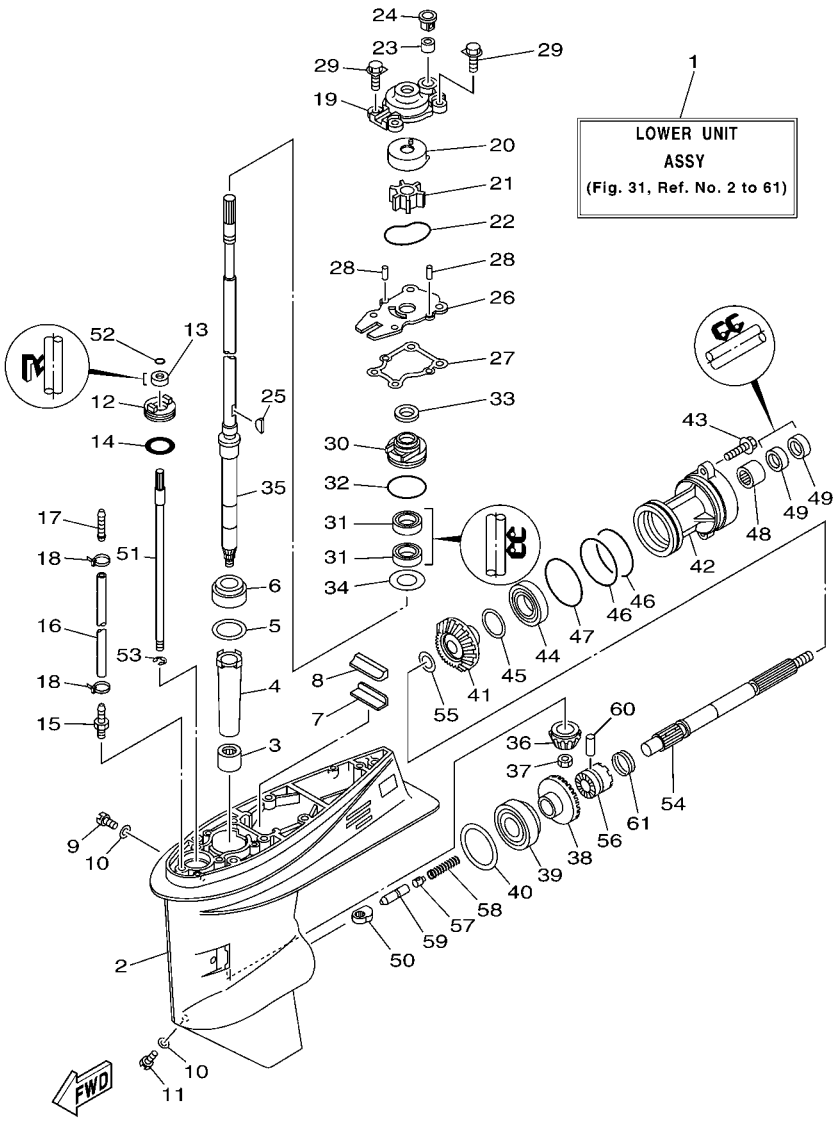

REF. NO.	PART NO. N° PIECES	DESCRIPTION DESCRIPTION	ET	EHD				REMARKS REMARQUES
41	66T–45571–00	GEAR 2 (26T) PIGNON 2 (26T)	1	1				
42	63D–45361–02–8D	CAP, LOWER CASING COUVERCLE, BOITIER D'HELICE	1	1				
43	90105–08M61	BOLT, FLANGE BOULON	2	2				
44	93306–001U1	BEARING ROULEMENT	1	1				
45	63D–45577–00	SHIM (T:0.10MM) CALE (T:0.10MM)	1	1				UR UR
	63D–45577–10	SHIM (T:0.12MM) CALE (T:0.12MM)	1	1				UR UR
	63D–45577–20	SHIM (T:0.15MM) CALE (T:0.15MM)	1	1				UR UR
	63D–45577–30	SHIM (T:0.18MM) CALE (T:0.18MM)	1	1				UR UR
	63D–45577–40	SHIM (T:0.30MM) CALE (T:0.30MM)	1	1				UR UR
	63D–45577–50	SHIM (T:0.40MM) CALE (T:0.40MM)	1	1				UR UR
	63D–45577–60	SHIM (T:0.50MM) CALE (T:0.50MM)	1	1				UR UR
46	93210–74MG5	O-RING JOINT TORIQUE	2	2				
47	93210–69MG6	O-RING JOINT TORIQUE	1	1				
48	93317–22204	BEARING ROULEMENT	1	1				
49	93101–22M00	OIL SEAL JOINT SPY	2	2				
50	62Y–44151–00	CAM, SHIFT CAME, INVERSION	1	1				
51	63D–44144–00	ROD, SHIFT TIGE D'EMBRAYAGE	1	1				
52	93210–07003	O-RING JOINT TORIQUE	1	1				
53	99001–08600	CIRCLIP CIRCLIP	1	1				
54	63D–45611–00	SHAFT, PROPELLER ARBRE, HELICE	1	1				
55	90201–22429	WASHER, PLATE RONDELLE, PLATE	1	1				
56	63D–45631–01	CLUTCH, DOG CRABOT	1	1				
57	663–45634–00	SLIDE, SHIFT CONTRE-POUSSOIR	1	1				
58	90501–18001	SPRING, COMPRESSION RESSORT, COMPRESSION	1	1				
59	63D–45635–00	PLUNGER, SHIFT POUSSOIR D'EMBRAYAGE	1	1				
60	90250–06023	PIN, STRAIGHT GOUPILLE, DROITE	1	1				
61	67C–45633–00	RING, CROSS PIN JONC, GOUPILLE CRABOT	1	1				

FIG. 32 LOWER CASING & DRIVE 2 BOITIER D'HELICE TRANSMISSION2

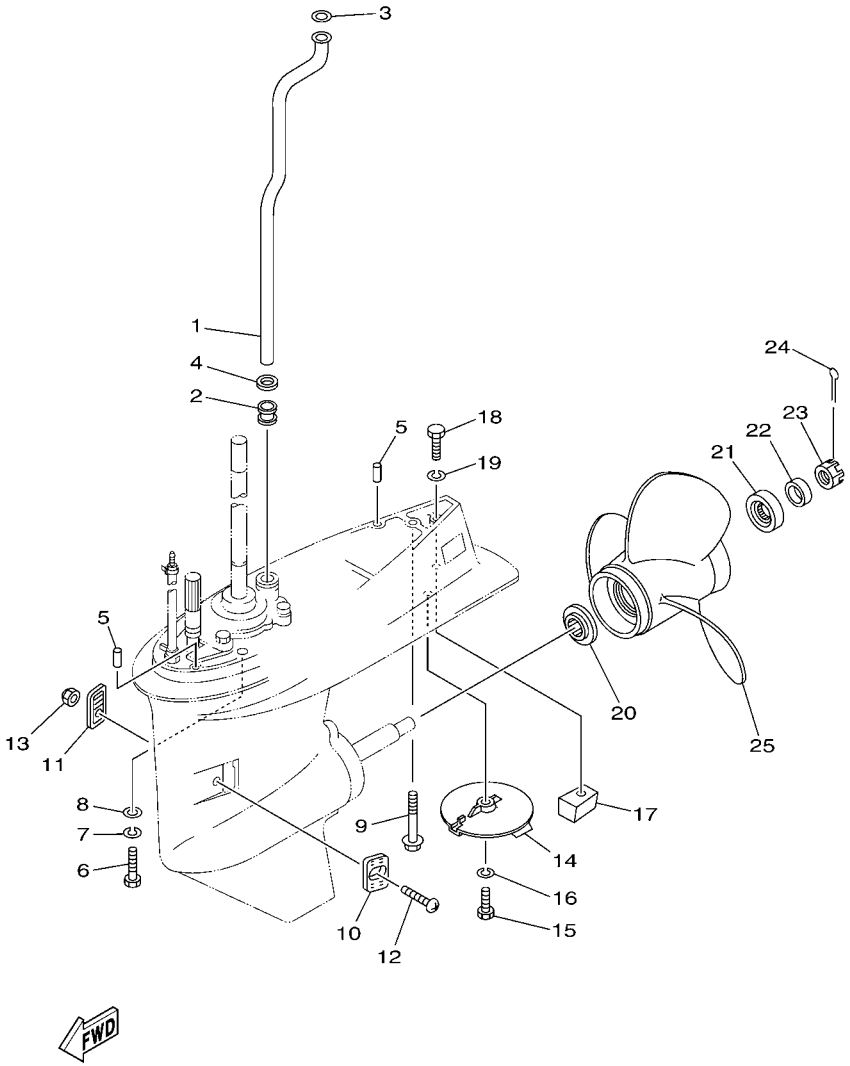

6BG1200-H280

REF. NO.	PART NO. N° PIECES	DESCRIPTION DESCRIPTION	ET	EHD				REMARKS REMARQUES
1	67C–44361–00	TUBE, WATER TUBE D'EAU	1					S(16.1") S(16.1")
	62Y–44361–00	TUBE, WATER TUBE D'EAU	1	1				L(21.0") L(21.0")
2	663–44367–00	DAMPER, WATER SEAL JOINT TUBE D'EAU	1	1				
3	90202–12060	WASHER, PLATE RONDELLE, PLATE	1	1				
4	90430–12072	GASKET JOINT	1	1				
5	93606–12019	PIN, DOWEL GOUPILLE	2	2				
6	97075–10040	BOLT BOULON	4	4				
7	92995–10100	WASHER RONDELLE	4	4				
8	92995–10600	WASHER RONDELLE	4	4				
9	90119–08M84	BOLT, WITH WASHER BOULON, AVEC RONDELLE	1	1				
10	63D–45214–00	COVER, WATER INLET 1 GRILLE, ENTREE D'EAU 1	1	1				
11	63D–45215–00	COVER, WATER INLET 2 GRILLE, ENTREE D'EAU 2	1	1				
12	90142–05M06	SCREW, COUNTERSUNK VIS, TETE NOYEE	1	1				
13	95380–05600	NUT ECROU	1	1				
14	67C–45371–00	TAB-TRIM ANODE DERIVE	1	1				
15	97095–08025	BOLT BOULON	1	1				
16	92995–08100	WASHER RONDELLE	1	1				
17	67C–45251–00	ANODE ANODE	1	1				
18	97095–08035	BOLT BOULON	1	1				
19	92995–08100	WASHER RONDELLE	1	1				
20	663–45987–02	SPACER ENTRETOISE	1	1				
21	66T–45997–00	SPACER ENTRETOISE	1	1				
22	90389–22M01	BUSH DOUILLE	1	1				
23	90171–16011	NUT, CASTLE ECROU, CRENELE	1	1				
24	91490–30025	PIN. COTTER GOUPILLE	1	1				
25	69W–45943–00–EL	PROPELLER (3X11"X15"-G) HELICE (3X11"X15"-G)	1	1				UR UR
	69W–45945–00–EL	PROPELLER (3X11-1/8"X13"-G) HELICE (3X11-1/8"X13"-G)	1	1				UR UR

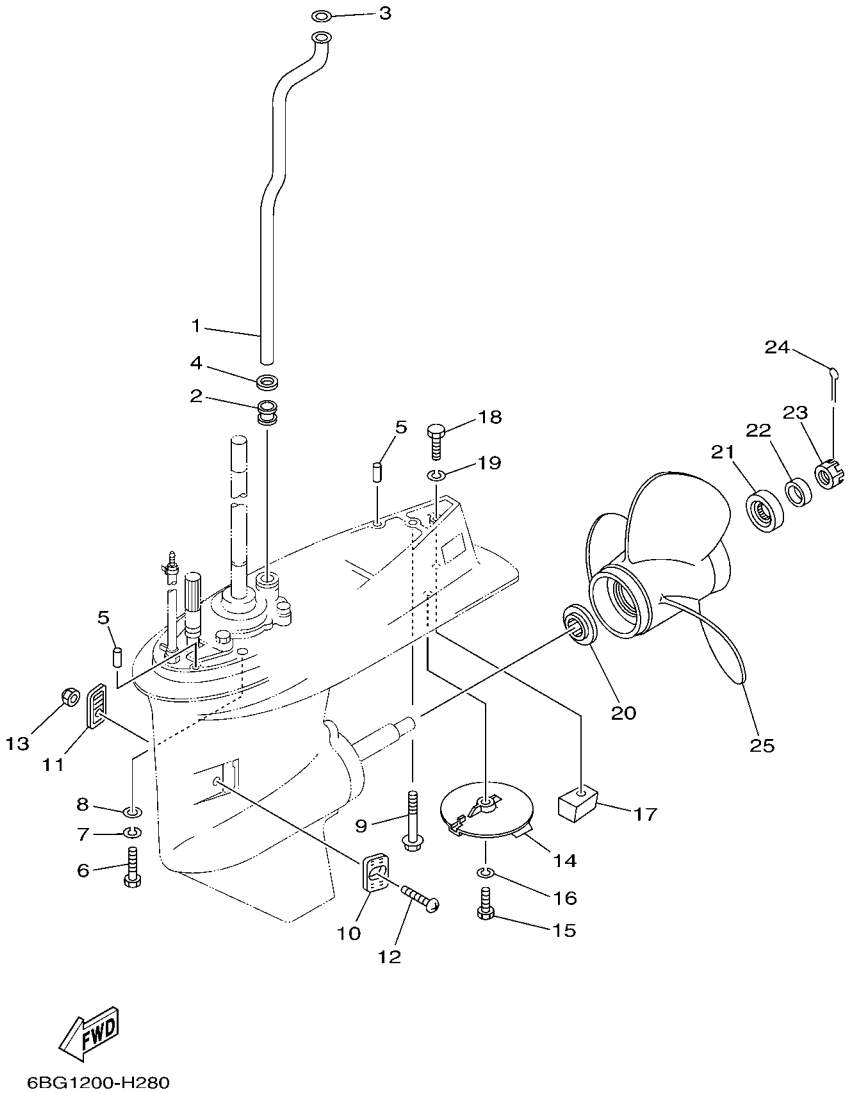

FIG. 32 LOWER CASING & DRIVE 2 BOITIER D'HELICE TRANSMISSION2

REF. NO.	PART NO. N° PIECES	DESCRIPTION DESCRIPTION	ET	EHD				REMARKS REMARQUES
25	69W–45947–00–EL	PROPELLER (3X11-5/8"X11"-G) HELICE (3X11-5/8"X11"-G)	1	1				UR UR
	69W–45952–00–EL	PROPELLER (3X11-3/8"X12"-G) HELICE (3X11-3/8"X12"-G)	1	1				UR UR
	663–45941–01–EL	PROPELLER (3X10-3/4"X17"-G) HELICE (3X10-3/4"X17"-G)	1	1				UR UR
	663–45949–01–EL	PROPELLER (3X10-3/4"X16"-G) HELICE (3X10-3/4"X16"-G)	1	1				UR UR
	663–45952–02–EL	PROPELLER (3X11-3/8"X12"-G) HELICE (3X11-3/8"X12"-G)	1	1				UR UR
	663–45956–01–EL	PROPELLER (3X12-1/4"X9"-G) HELICE (3X12-1/4"X9"-G)	1	1				UR UR
	663–45958–01–EL	PROPELLER (3X11-1/4"X14"-G) HELICE (3X11-1/4"X14"-G)	1	1				UR UR
	6H5–45943–00–EL	PROPELLER (3X10"X15"-G) HELICE (3X10"X15"-G)	1	1				UR WITH LIP CUP UR WITH LIP CUP
	6H5–45945–00–EL	PROPELLER (3X10-3/8"X13"-G) HELICE (3X10-3/8"X13"-G)	1	1				UR WITH LIP CUP UR WITH LIP CUP
	6H5–45952–00–EL	PROPELLER (3X10-5/8"X12"-G) HELICE (3X10-5/8"X12"-G)	1	1				UR WITH LIP CUP UR WITH LIP CUP
	6H5–45958–00–EL	PROPELLER (3X10-1/4"X14"-G) HELICE (3X10-1/4"X14"-G)	1	1				UR WITH LIP CUP UR WITH LIP CUP
	663–45970–60–98	PROPELLER (3X11-3/4"X12"-G) HELICE (3X11-3/4"X12"-G)	1	1				UR UR
	663–45972–60–98	PROPELLER (3X12"X11"-G) HELICE (3X12"X11"-G)	1	1				UR UR
	663–45974–60–98	PROPELLER (3X11-1/2"X13"-G) HELICE (3X11-1/2"X13"-G)	1	1				UR UR
	697–45970–00–98	PROPELLER (3X11-1/4"X14"-G) HELICE (3X11-1/4"X14"-G)	1	1				UR UR
	663–45930–00–98	PROPELLER (3X10-1/4"X14"-G) HELICE (3X10-1/4"X14"-G)	1	1				UR UR
	663–45974–02–98	PROPELLER (3X10-5/8"X13"-G) HELICE (3X10-5/8"X13"-G)	1	1				UR UR
	663–45976–00–98	PROPELLER (3X10-1/4"X15"-G) HELICE (3X10-1/4"X15"-G)	1	1				UR UR
	663–45978–00–98	PROPELLER (3X10-1/4"X16"-G) HELICE (3X10-1/4"X16"-G)	1	1				UR UR

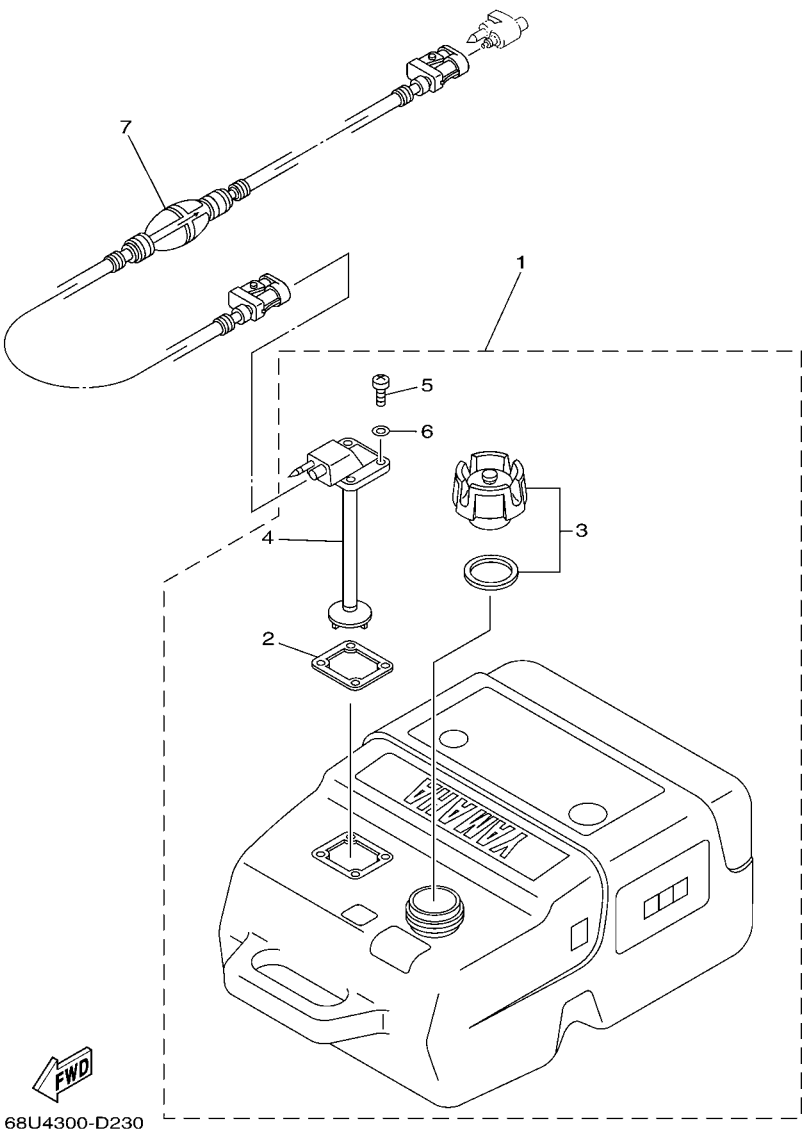

FIG. 33 FUEL TANK — RESERVOIR A CARBURANT

REF. NO.	PART NO. N° PIECES	DESCRIPTION DESCRIPTION	ET	EHD				REMARKS REMARQUES
1	6YK–24201–03	FUEL TANK ASSY (25L) RESERVOIR A ESSENCE (ENS.) 25L	1	1				AP AP
2	6YL–24268–01	.GASKET, FUEL METER .JOINT, JAUGE A CARBURANT	1	1				
3	6YK–24610–01	.CAP ASSY .BOUCHON	1	1				
4	6YK–24260–01	.FUEL METER ASSY .INDICATEUR DE CARBURANT	1	1				
5	90157–05M16	.SCREW, PAN HEAD .VIS, TETE TRONCONIQUE	4	4				
6	6YL–24329–00	.SEAL .JOINT	4	4				
7	6YL–24306–54	FUEL PIPE COMP. 1 DURITE A ESSENCE 1	1	1				AP AP

FIG. 34 STEERING GUIDE FIXATION DE DIRECTION

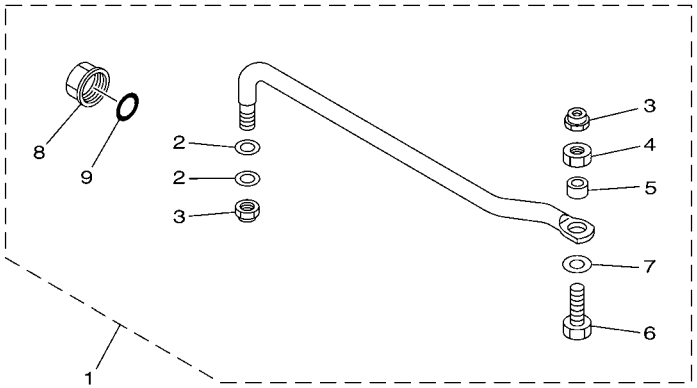

6BG1100-H340

REF. NO.	PART NO. N° PIECES	DESCRIPTION DESCRIPTION	ET	EHD				REMARKS REMARQUES
1	6BG–61350–00	STEERING GUIDE ATTACHMENT KIT FIXATIONS DE DIRECTION	1					AP AP
2	90201–10M20	.WASHER, PLATE .RONDELLE, PLATE	2					
3	90185–09M01	.NUT, SELF-LOCKING .ECROU,AUTO-BLOQUANT	2					
4	90170–09M03	.NUT .ECROU	1					
5	90387–10M42	.COLLAR .COLLERETTE	1					
6	90101–09M01	.BOLT .BOULON	1					
7	90201–10M63	.WASHER, PLATE .RONDELLE, PLATE	1					
8	6E5–43145–01	.CAP, CLAMP BRACKET .CAPUCHON, PRESSE	1					
9	93210–16275	.O-RING .JOINT TORIQUE	1					

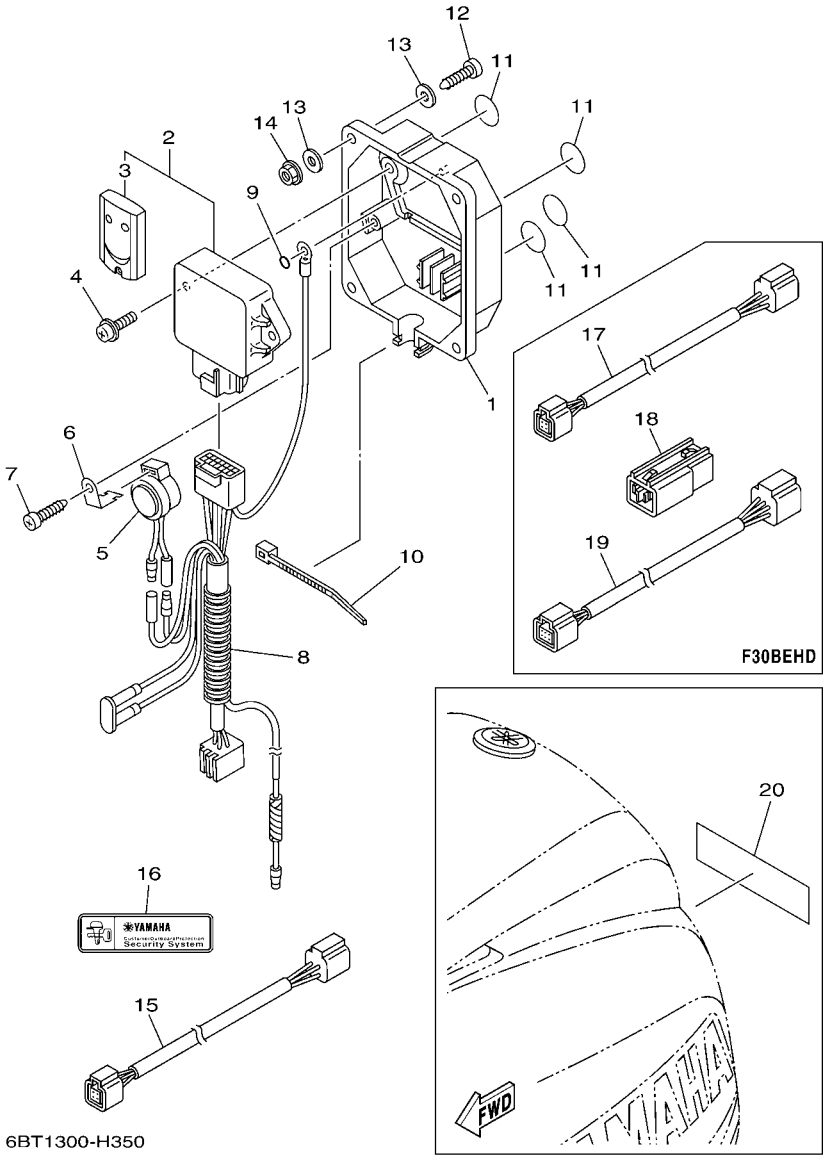

FIG. 35 OPTIONAL PARTS PIECES OPTIONNELLES

REF. NO.	PART NO. N° PIECES	DESCRIPTION DESCRIPTION	ET	EHD				REMARKS REMARQUES
1	6Y8–86267–00	CASE COMPLETE 1 CARTER (ENS.) 1	1	1				
2	6Y8–86260–01	REMOTE CONTROL UNIT ASSY UNITE DE TELECOMMANDE (ENS.)	1	1				
3	6AA–86261–00	.TRANSMITTER COMP .TRANSMETTEUR	2	2				
4	97980–06216	SCREW, WITH WASHER VIS, AVEC RONDELLE	2	2				
5	6X4–83383–00	BUZZER RONFLEUR	1	1				
6	6X4–83386–00	STAY, BUZZER SUPPOR, RONFLEUR	1	1				
7	97780–60620	SCREW, TAPPING VIS, TETE BOMBEE	1	1				
8	6Y8–82509–10	WIRE, SUB LEAD FIL, SECONDAIRE	1					
	6Y8–82509–20	WIRE, SUB LEAD FIL, SECONDAIRE		1				
9	93210–04279	O-RING JOINT TORIQUE	1	1				
10	90465–11M10	CLAMP BRIDE	1	1				
11	6Y8–8454G–00	PATCH 1 TAMPON 1	4	4				
12	90167–06M00	SCREW, TAPPING VIS, TETE FRAISEE	4	4				UR UR
	97880–06035	SCREW, PAN HEAD VIS, TETE TRONCONIQUE	4	4				UR UR
13	90201–06M30	WASHER, PLATE RONDELLE, PLATE	8	8				
14	95780–06300	NUT, FLANGE ECROU	4	4				
15	6Y8–82521–11	2FT PIGTAIL BUS FIL	1					
	6Y8–82521–01	1FT PIGTAIL BUS FIL		1				
16	6Y8–48277–00	STICKER 1 ETIQUETTE 1	1	1				
17	6Y8–82521–60	12FT PIGTAIL BUS (4P) FAISCEAU (L: 15FT., 4P)		1				
18	6Y8–81920–11	IN-LINE HUB ASSY BORNE		2				
19	6Y8–82553–01	1FT MAIN BUS EXTENSION, FAISCEAU		1				
20	6Y8–48277–00	STICKER 1 ETIQUETTE 1	1	1				

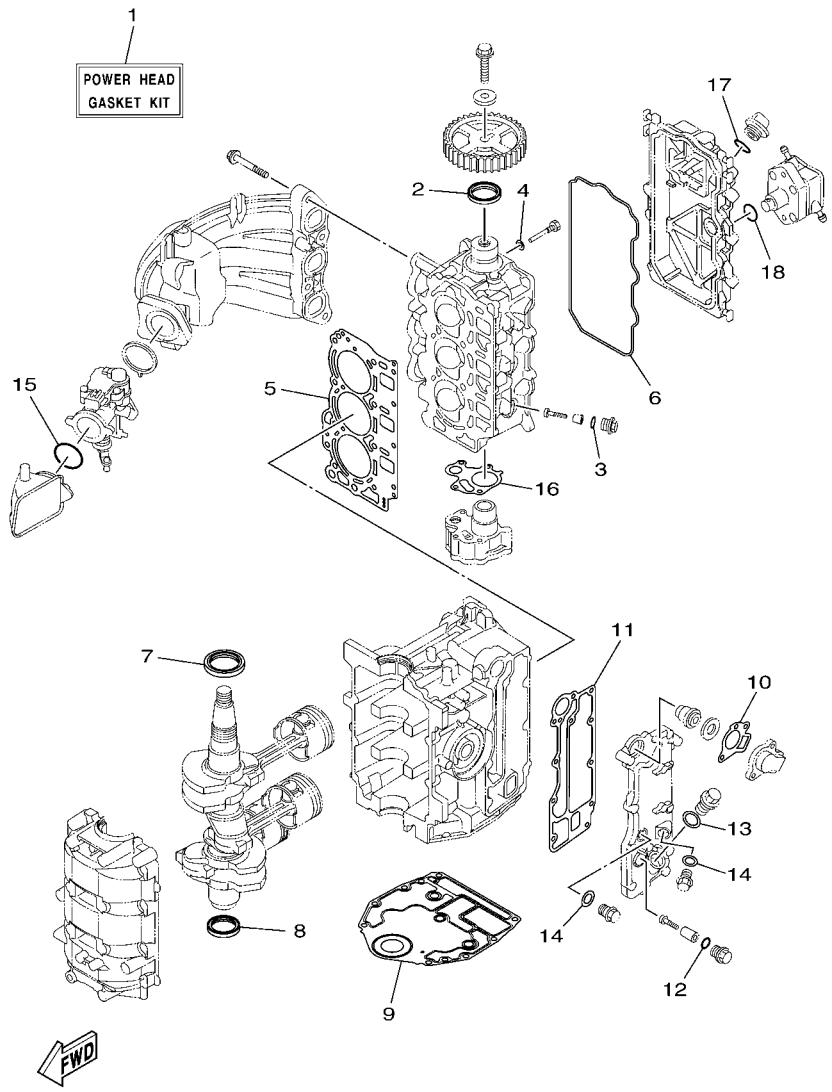

6BG1100-H380

FIG. 36 REPAIR KIT 1 — KITS DE REPARATION 1

REF. NO.	PART NO. N° PIECES	DESCRIPTION DESCRIPTION	ET	EHD				REMARKS REMARQUES
1	6BG–W0001–00	POWER HEAD GASKET KIT POCHETTE DE JINTS TETE MOTRICE	1	1				
2	93102–37M40	.OIL SEAL .JOINT SPY	1	1				
3	93210–13M63	.O-RING .JOINT TORIQUE	3	3				
4	90430–06014	.GASKET .JOINT	1	1				
5	6BG–11181–00	.GASKET, CYLINDER HEAD 1 .JOINT, DE CULASSE 1	1	1				
6	6BG–11356–00	.SEAL, CYLINDER 2 .JOINT, SPY CYLINDRE	1	1				
7	93102–43M42	.OIL SEAL .JOINT SPY	1	1				
8	93101–35002	.OIL SEAL .JOINT SPY	1	1				
9	6BG–11351–00	.GASKET, CYLINDER .JOINT, D'EMBASE	1	1				
10	62Y–12414–00	.GASKET, COVER .JOINT, COUVERCLE	1	1				
11	6BG–41114–00	.GASKET, EXHAUST OUTER COVER .JOINT, COUVERCLE D'ECHAPPEMENT	1	1				
12	93210–13M63	.O-RING .JOINT TORIQUE	1	1				
13	90430–18130	.GASKET .JOINT	1	1				
14	90430–14115	.GASKET .JOINT	2	2				
15	93210–42159	.O-RING .JOINT TORIQUE	1	1				
16	6C5–13329–00	.GASKET, PUMP COVER .JOINT, COUVERCLE DE POMPE	1	1				
17	93210–24M79	.O-RING .JOINT TORIQUE	1	1				
18	93210–24M79	.O-RING .JOINT TORIQUE	1	1				

FIG. 37 REPAIR KIT 2 — KITS DE REPARATION 2

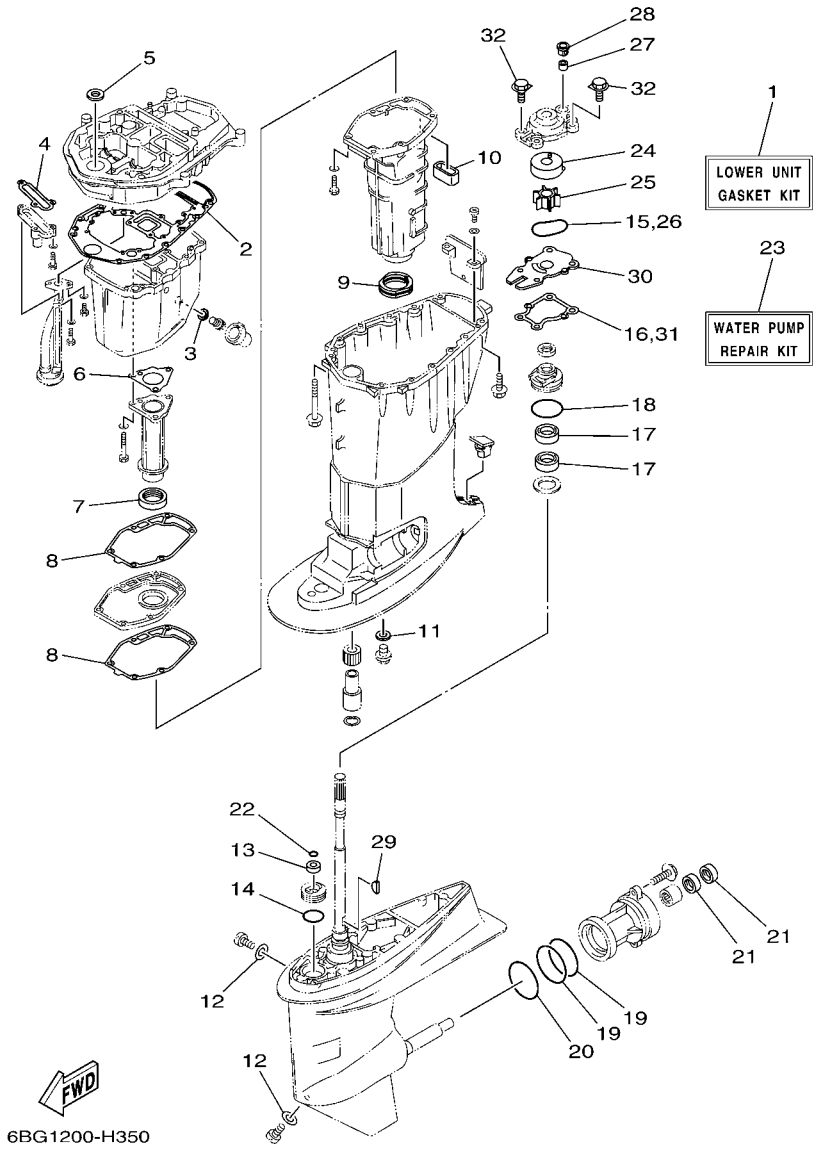

REF. NO.	PART NO. N° PIECES	DESCRIPTION DESCRIPTION	ET	EHD				REMARKS REMARQUES
1	6BG–W0001–20	LOWER UNIT GASKET KIT POCHETTE DE JOINTS EMBASE	1	1				
2	69W–15312–00	.GASKET, OIL PAN .JOINT DE VENTILATEUR D'HUILE	1	1				
3	90430–14M09	.GASKET .JOINT	1	1				
4	62Y–13475–00	.GASKET .JOINT	1	1				
5	93110–16004	.OIL SEAL .JOINT SPY	1	1				
6	64J–41133–10	.GASKET, EXHAUST MANIFOLD 1 .JOINT, PIPE D'ECHAPPEMENT	1	1				
7	64J–46132–10	.GASKET 1 .JOINT 1	1	1				
8	6BG–41134–00	.GASKET, EXHAUST MANIFOLD .JOINT, PIPE D'ECHAPPEMENT	2	2				
9	67C–45123–00	.GASKET, MUFFLER .JOINT, POT DE DETENTE	1	1				
10	62Y–45127–00	.SEAL .JOINT	1	1				
11	90430–14M09	.GASKET .JOINT	1	1				
12	90430–08020	.GASKET .JOINT	2	2				
13	93106–09014	.OIL SEAL .JOINT SPY	1	1				
14	93210–33MG4	.O-RING .JOINT TORIQUE	1	1				
15	93210–59MG7	.O-RING .JOINT TORIQUE	1	1				
16	63D–44316–00	.GASKET, WATER PUMP .JOINT, POMPE A EAU	1	1				
17	93101–22M60	.OIL SEAL .JOINT SPY	2	2				
18	93210–48001	.O-RING .JOINT TORIQUE	1	1				
19	93210–74MG5	.O-RING .JOINT TORIQUE	2	2				
20	93210–69MG6	.O-RING .JOINT TORIQUE	1	1				
21	93101–22M00	.OIL SEAL .JOINT SPY	2	2				
22	93210–07003	.O-RING .JOINT TORIQUE	1	1				
23	6BG–W0078–00	WATER PUMP REPAIR KIT KIT DE REPARATION DE LA POMPE	1	1				
24	63D–44322–00	.INSERT, CARTRIDGE .CUVETTE	1	1				
25	6H4–44352–02	.IMPELLER .TURBINE	1	1				
26	93210–59MG7	.O-RING .JOINT TORIQUE	1	1				
27	663–44366–00	.DAMPER, WATER SEAL .JOINT, TUBE D'EAU	1	1				

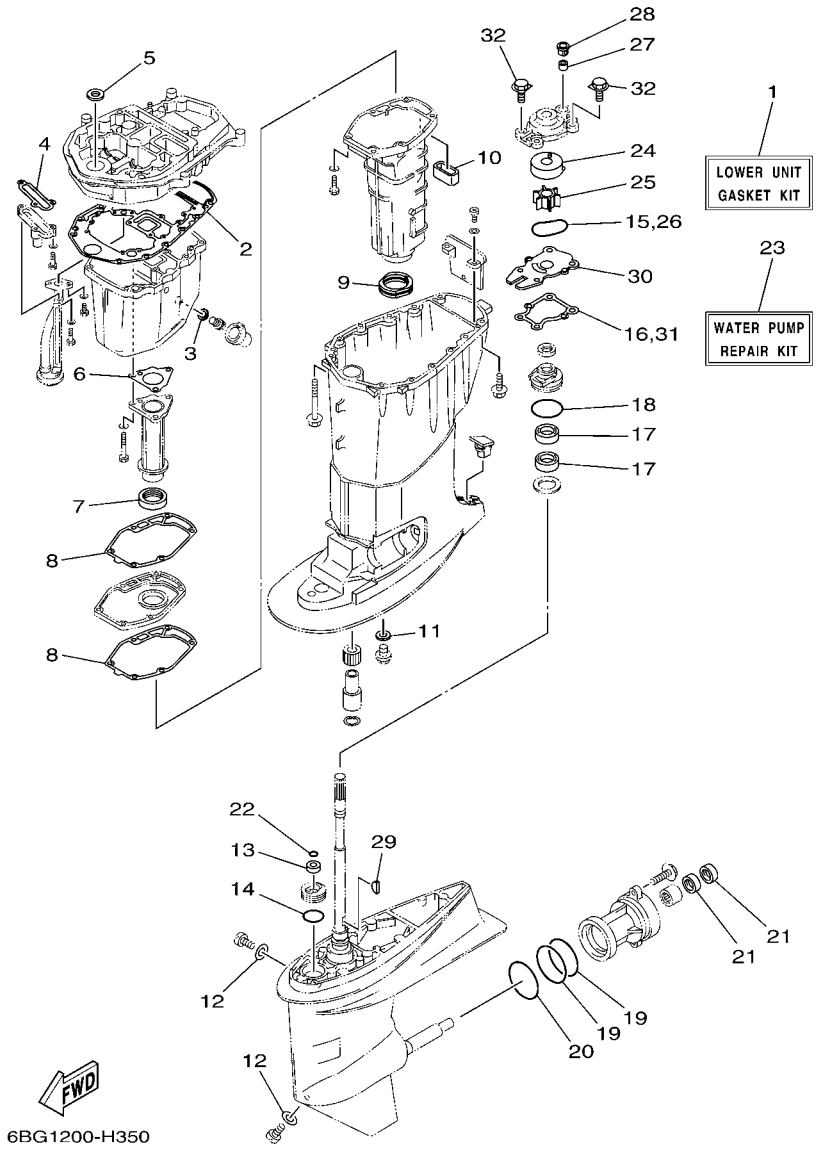

FIG. 37 REPAIR KIT 2 — KITS DE REPARATION 2

REF. NO.	PART NO. N° PIECES	DESCRIPTION DESCRIPTION	ET	EHD				REMARKS REMARQUES
28	63D–44312–00	.COVER, WATER PUMP HOUSING .COUVERCLE	1	1				
29	90280–03M03	.KEY, WOODRUFF .CLAVETTE, DEMI-LUNE	1	1				
30	63D–44323–00	.OUTER PLATE, CARTRIDGE .PLAQUE EXTERIEURE	1	1				
31	63D–44316–00	.GASKET, WATER PUMP .JOINT, POMPE A EAU	1	1				
32	90119–08M15	.BOLT, WITH WASHER .BOULON, AVEC RONDELLE	4	4				

NUMERICAL INDEX
INDEX NUMERIQUE

PART NO. N° PIECES	REF. NO.
6BG–11111–00–9S	4 – 2
62Y–11119–00	14 – 12
6BG–11119–00	4 – 22
62Y–11133–30	4 – 3
6BG–11168–00	4 – 16
6BG–11181–00	4 – 10
	36 – 5
6BG–11191–00–9S	4 – 14
6BG–11192–00	16 – 21
6G8–11197–01	2 – 20
	4 – 6
62Y–11325–00	29 – 2
6G8–11325–00	2 – 18
	4 – 4
66M–11327–00–94	29 – 4
66M–11328–00	29 – 3
6BG–11351–00	2 – 8
	36 – 9
6BG–11356–00	4 – 19
	36 – 6
6BG–11411–00	3 – 1
6BG–11416–00	3 – 2
6BG–11416–10	3 – 2
6BG–11416–20	3 – 2
6BG–11416–30	3 – 2
6C5–11536–00	10 – 7
6C5–11537–00	10 – 2
6H4–11545–00	12 – 3
62Y–11557–00	10 – 8
6BG–11576–00–94	30 – 13
67C–11603–00	3 – 7
67C–11604–00	3 – 7
67C–11605–00	3 – 7
69W–11631–01–97	3 – 6
62Y–11633–00	3 – 8
69W–11635–01	3 – 6
69W–11636–01	3 – 6
6C5–11650–00	3 – 3
6C5–11654–00	3 – 4
6C5–11656–00	3 – 5
6C5–11656–10	3 – 5
6C5–11656–20	3 – 5
6C5–11656–30	3 – 5
69W–12111–00	5 – 1
51Y–12114–00	5 – 4
62Y–12116–00	5 – 3
30X–12117–00	5 – 5
30X–12118–00	5 – 6

PART NO. N° PIECES	REF. NO.
51Y–12119–00	5 – 7
69W–12121–00	5 – 2
62Y–12138–60	12 – 16
6BG–12146–00	5 – 8
62Y–12151–00	5 – 9
6C5–12151–00	5 – 12
62Y–12158–00	5 – 11
6C5–12158–00	5 – 14
64J–12159–00	5 – 10
6C5–12159–00	5 – 13
6BG–12171–00	10 – 1
6C5–12231–00	5 – 15
6C5–12233–00	5 – 16
6G8–12411–03	2 – 12
688–12412–00	2 – 13
6C5–12413–00–9S	2 – 14
62Y–12414–00	2 – 15
	36 – 10
6BG–12481–00	20 – 13
62Y–12481–10	2 – 11
66M–12535–00	29 – 5
6AW–12572–00	20 – 4
6BG–12576–00	7 – 8
6R3–12580–00	20 – 6
6C5–12858–00	2 – 27
62Y–13131–00	11 – 24
6BG–13161–00	6 – 11
6BG–13300–00	10 – 11
6C5–13329–00	10 – 12
	36 – 16
62Y–13411–00	30 – 10
67F–13434–10	1 – 17
6BG–13437–60	12 – 17
5GH–13440–20	2 – 26
62Y–13475–00	30 – 14
	37 – 4
6BG–13542–00	9 – 16
6BG–13545–00	9 – 13
6BG–13546–00	9 – 14
6C5–13547–00	9 – 12
6BG–13548–00	9 – 15
6BG–13557–00	6 – 8
6BG–13577–00	6 – 14
6C5–13577–00	9 – 20
6BG–13593–00	8 – 23
6BG–13641–00	6 – 6
6BG–13645–00	6 – 7
6C5–13739–00	9 – 2

PART NO. N° PIECES	REF. NO.
6BG–13750–00	6 – 4
6BG–13761–00	6 – 12
6C5–13906–01	8 – 9
6BG–13910–00	8 – 17
6BG–13915–00	8 – 19
6BG–13938–00	8 – 20
6BG–13974–00	9 – 5
6C5–1410B–00	6 – 13
6C5–1410F–00	9 – 18
6C5–14127–00	8 – 18
6BG–14137–00	8 – 21
6X4–14137–00	21 – 26
6BG–14148–00	9 – 7
6BG–14149–00	9 – 17
6BG–14180–00	8 – 1
6BG–14182–00	8 – 2
6C5–14191–00	8 – 13
6C5–14225–00	8 – 11
6C5–14251–00	9 – 1
6C5–14386–00	8 – 4
6C5–14397–00	8 – 14
6BT–14440–00	6 – 1
62Y–14485–00	4 – 15
6C5–14546–00	8 – 5
6BG–14561–00	8 – 22
6C5–14567–00	8 – 15
69W–14711–00–5B	29 – 18
6BG–14711–00–5B	29 – 18
6BG–14960–00	8 – 12
6BG–14984–00	8 – 16
6BG–14985–00	8 – 3
6BG–15100–00–9S	2 – 2
6BG–15311–00–5B	30 – 1
69W–15312–00	30 – 3
	37 – 2
67C–15316–00	30 – 5
67C–15316–10	30 – 5
6BG–1531A–00	7 – 12
6BG–15362–00	30 – 17
6G8–15363–00	4 – 25
6BG–15378–00	7 – 13
6C5–21841–00	9 – 3
6BG–24135–00	20 – 17
6BG–24136–00	20 – 20
6YK–24201–03	33 – 1
6C5–24251–00	9 – 23
6YK–24260–01	33 – 4
6YL–24268–01	33 – 2

PART NO. N° PIECES	REF. NO.
6G1–24304–02	11 – 1
6YL–24306–54	33 – 7
6A1–24311–00	20 – 14
6BG–24311–00	11 – 18
6BG–24313–00	11 – 4
6BG–24321–00	9 – 8
6BG–24322–00	9 – 9
6BG–24323–00	9 – 10
6BG–24324–00	9 – 11
6BG–24329–00	19 – 23
6YL–24329–00	33 – 6
62Y–24374–01	11 – 29
67F–24377–00	11 – 5
688–24378–00	20 – 8
	20 – 12
6C5–24379–00	9 – 19
6BG–24387–00	9 – 21
6C5–24410–00	11 – 20
62Y–24411–02	11 – 22
6C5–24415–00	11 – 21
6BG–2441R–00	8 – 6
6BG–2441T–00	8 – 7
62Y–24423–00	11 – 23
6C5–24444–00	9 – 4
62Y–24444–01	11 – 26
6C5–24453–00	8 – 8
62Y–24454–00	11 – 25
6D8–24469–00	11 – 13
6C5–24471–00	11 – 27
6D8–24519–00	11 – 14
6BG–2451B–00	9 – 6
6D8–24560–00	11 – 9
6D8–24562–00	11 – 12
6D8–24563–00	11 – 10
6D8–24564–00	11 – 11
6BG–24566–00	11 – 15
6C5–24592–00	8 – 10
6YK–24610–01	33 – 3
69W–26301–00	21 – 42
6X4–26367–00	21 – 37
	21 – 44
6C5–28100–00	11 – 35
67F–2812A–00	12 – 14
6BG–28199–71–D0	11 – 36
6BG–28199–71–E0	11 – 36
6BG–28199–71–F0	11 – 36
6BG–28199–71–G0	11 – 36
6BG–28199–71–H0	11 – 36

PART NO. N° PIECES	REF. NO.
6BG–28199–71–S0	11 – 36
6BG–28199–81–K0	11 – 37
6BG–28199–81–L0	11 – 37
6BG–28199–81–M0	11 – 37
6BG–28199–81–N0	11 – 37
6BG–28199–81–P0	11 – 37
6BG–28199–81–R0	11 – 37
6BG–41113–00–9S	2 – 9
6BG–41114–00	2 – 16
	36 – 11
6BG–41131–00–5B	29 – 12
64J–41133–10	29 – 11
	37 – 6
6BG–41134–00	29 – 16
	37 – 8
6BG–41137–00–5B	29 – 1
682–41237–00	24 – 25
6J8–41237–00	24 – 24
6X4–41291–00	21 – 8
6X4–42101–K3–4D	21 – 1
6X4–42111–02–4D	21 – 2
6X4–42115–00	21 – 22
6X4–42119–00	21 – 5
63D–42121–22–4D	21 – 58
63D–42126–00	21 – 17
6X4–42128–00	21 – 13
6X4–42131–11	21 – 54
6X4–42137–00	21 – 7
62Y–42154–00	24 – 27
6X4–42159–00	21 – 48
6C5–42171–00	24 – 28
6X4–42177–00	21 – 6
6BG–42335–00	24 – 33
6BG–42384–00	20 – 2
67C–42508–03	23 – 1
6BG–42510–00–8D	27 – 14
6BG–42510–10–8D	27 – 14
67C–42525–00	23 – 4
67C–42527–03	23 – 2
65W–42528–00	23 – 10
6J8–42528–00	27 – 1
67C–42561–00	23 – 7
67C–42562–00	23 – 6
6BT–42610–00–8D	1 – 1
6BG–42613–00	1 – 2
6BG–42615–00	1 – 13
6BG–42617–00	12 – 15
6BG–42649–00	1 – 16

PART NO. N° PIECES	REF. NO.
6BG–42651–00	1 – 4
6BG–42652–00	1 – 7
6BG–42662–00	1 – 14
6BG–42677–10	1 – 10
6BT–42678–00	1 – 11
6AH–42697–01	1 – 15
6BG–42710–00–8D	19 – 1
62Y–42715–01	24 – 11
62Y–42716–00	19 – 5
61A–42717–00	19 – 7
65W–42717–00	19 – 6
69J–42723–00–8D	17 – 15
6BG–42725–00	19 – 9
6X4–42725–01	21 – 57
6H1–42726–21	20 – 1
68U–42727–00	19 – 22
6BG–42727–00	19 – 10
6X4–42727–00	22 – 18
6X4–42728–00	22 – 7
6X4–42728–10	21 – 67
6BG–42741–00–8D	19 – 24
6BG–42741–10–8D	19 – 24
6BG–42743–00	17 – 22
6BG–42748–00	19 – 3
63P–42756–00	17 – 25
6BG–42761–00	19 – 8
6AH–42794–40	19 – 37
6AH–42794–50	19 – 38
6BG–42811–00	17 – 19
6BG–42815–00–8D	19 – 12
6BG–42816–00	19 – 17
6X4–42821–00	21 – 30
6BG–42851–00	1 – 6
67C–43107–11–8D	26 – 14
6K9–43111–10–8D	25 – 1
	26 – 1
6BG–43112–10–8D	25 – 2
	26 – 2
6K9–43131–01	25 – 9
	26 – 9
6K9–43139–01	27 – 5
66T–43144–00	19 – 19
6E5–43145–01	34 – 8
65W–43191–00	25 – 4
	26 – 4
65W–43192–00	25 – 3
	26 – 3
67C–43311–00–8D	25 – 7

PART NO. N° PIECES	REF. NO.
67C–43311–10–8D	25 – 7
	26 – 7
682–43318–01	26 – 16
689–43373–01	27 – 2
67C–43631–00	26 – 15
689–43633–00	23 – 8
6BG–43654–00	25 – 26
	26 – 32
63D–43691–00	26 – 18
67C–43800–01–8D	28 – 1
6T4–43802–03	28 – 31
CS2–43803–81	28 – 50
65W–43804–01	28 – 3
65W–43805–01	28 – 5
65W–4380F–01	28 – 13
65W–4380K–00	28 – 17
67C–4380L–00	28 – 28
67C–43810–00	28 – 18
65W–43812–00	28 – 19
6H1–43816–00	28 – 26
65W–43817–00	28 – 41
65W–4381B–00	28 – 23
6H1–43829–00	28 – 65
65W–4382A–00	28 – 49
65W–43830–00	28 – 38
65W–43831–00	28 – 37
67C–43840–00	28 – 16
62X–43841–00	28 – 35
65W–43843–00	28 – 58
67F–43843–00	28 – 53
6H1–43844–10	28 – 56
	28 – 60
6H1–43845–00	28 – 45
6H1–43847–00	28 – 47
6H1–4384F–10	28 – 61
6H1–4384G–11	28 – 51
67C–43851–00	28 – 52
65W–43853–00	28 – 64
6T4–43853–00	28 – 39
65W–43854–00	28 – 48
6H1–43856–10	28 – 55
	28 – 59
6H1–43861–10	28 – 21
	28 – 24
65W–43865–00	28 – 20
6H1–43866–00	28 – 32
65W–4386A–00	28 – 62
65W–4386K–01	28 – 11

PART NO. N° PIECES	REF. NO.
65W–4386L–00	28 – 12
65W–43871–00	28 – 22
6H1–43875–00	28 – 44
62X–43878–00	28 – 66
65W–43879–01	28 – 14
65W–4387G–00	28 – 6
67C–43880–01	28 – 2
67C–43881–01	28 – 7
65W–43882–01	28 – 15
65W–43887–01	28 – 4
65W–43888–00	28 – 29
65W–43891–01	28 – 10
65W–43892–01	28 – 9
6X4–44100–00	21 – 21
6X4–44102–00	21 – 23
6X4–44114–00	22 – 16
62Y–44117–01–9S	24 – 2
62Y–44118–00	24 – 12
6BG–44120–00	24 – 7
6C5–44120–01	24 – 7
69W–44121–00	24 – 1
688–44122–00	24 – 20
6C5–44122–00	24 – 8
6X4–44132–00	21 – 25
62Y–44135–00	24 – 30
6X4–44139–00–94	21 – 9
63D–44144–00	31 – 51
62Y–44151–00	31 – 50
6X4–44159–00–4D	21 – 49
6X4–44173–00	21 – 50
6X4–44177–00	21 – 12
6X4–44188–00	21 – 15
6G8–44191–00	21 – 52
66T–44311–00	31 – 19
63D–44312–00	31 – 24
	37 – 28
63D–44316–00	31 – 27
	37 – 16
	37 – 31
63D–44322–00	31 – 20
	37 – 24
63D–44323–00	31 – 26
	37 – 30
6BG–44341–00	31 – 30
6H4–44352–02	31 – 21
	37 – 25
62Y–44361–00	32 – 1
67C–44361–00	32 – 1

PART NO. N° PIECES	REF. NO.
663–44366–00	31 – 23
	37 – 27
663–44367–00	32 – 2
6BG–44385–00	27 – 11
6BG–44385–10	27 – 11
6H3–44391–01	19 – 32
67C–44514–00–8D	27 – 16
67C–44514–10–8D	27 – 16
66T–44526–30	27 – 18
6C5–44551–00–8D	27 – 22
67C–44551–01–8D	27 – 22
6C5–44552–00–8D	27 – 24
67C–44555–11–94	27 – 26
67C–44555–21–94	27 – 26
69W–44575–00	27 – 23
6BG–45111–00–8D	29 – 24
6BG–45111–10–8D	29 – 24
67C–45123–00	29 – 21
	37 – 9
62Y–45127–00	29 – 22
	37 – 10
67C–45151–00	29 – 27
63D–45155–00	29 – 30
6C5–45155–00	29 – 30
6BG–45181–00–5B	29 – 17
63D–45214–00	32 – 10
63D–45215–00	32 – 11
65W–45251–00	25 – 28
	26 – 34
663–45251–00	26 – 19
67C–45251–00	32 – 17
6BG–45300–00–8D	31 – 1
6BG–45300–10–8D	31 – 1
62Y–45301–00–8D	31 – 2
679–45318–00	29 – 31
63D–45321–00	31 – 12
688–45341–10	31 – 11
66T–45344–01	31 – 33
63D–45361–02–8D	31 – 42
67C–45371–00	32 – 14
63D–45375–00	31 – 8
663–45376–00–94	31 – 7
6E5–45378–00	31 – 15
67C–45501–00	31 – 35
67C–45501–10	31 – 35
6H4–45536–00	31 – 4
66T–45551–00	31 – 36
66T–45560–01	31 – 38

PART NO. N° PIECES	REF. NO.
663–45567–01	31 – 40
663–45567–10	31 – 40
663–45567–20	31 – 40
663–45567–30	31 – 40
663–45567–40	31 – 40
663–45567–50	31 – 40
663–45567–60	31 – 40
66T–45571–00	31 – 41
63D–45577–00	31 – 45
63D–45577–10	31 – 45
63D–45577–20	31 – 45
63D–45577–30	31 – 45
63D–45577–40	31 – 45
63D–45577–50	31 – 45
63D–45577–60	31 – 45
663–45587–01	31 – 5
663–45587–10	31 – 5
663–45587–20	31 – 5
663–45587–30	31 – 5
663–45587–40	31 – 5
663–45587–50	31 – 5
663–45587–60	31 – 5
63D–45611–00	31 – 54
63D–45631–01	31 – 56
67C–45633–00	31 – 61
663–45634–00	31 – 57
63D–45635–00	31 – 59
663–45930–00–98	32 – 25
663–45941–01–EL	32 – 25
69W–45943–00–EL	32 – 25
6H5–45943–00–EL	32 – 25
69W–45945–00–EL	32 – 25
6H5–45945–00–EL	32 – 25
69W–45947–00–EL	32 – 25
663–45949–01–EL	32 – 25
69W–45952–00–EL	32 – 25
6H5–45952–00–EL	32 – 25
663–45952–02–EL	32 – 25
663–45956–01–EL	32 – 25
6H5–45958–00–EL	32 – 25
663–45958–01–EL	32 – 25
697–45970–00–98	32 – 25
663–45970–60–98	32 – 25
663–45972–60–98	32 – 25
663–45974–02–98	32 – 25
663–45974–60–98	32 – 25
663–45976–00–98	32 – 25
663–45978–00–98	32 – 25

PART NO. N° PIECES	REF. NO.
663–45987–02	32 – 20
66T–45997–00	32 – 21
64J–46132–10	29 – 15
	37 – 7
6C5–46241–00	10 – 6
6X4–47731–00	21 – 24
6A5–48129–10	21 – 29
6X4–48154–00	21 – 18
6X4–48215–00	21 – 4
6X4–48261–00	21 – 27
6Y8–48277–00	35 – 16
	35 – 20
67C–48321–11	21 – 35
69W–48344–00	24 – 23
	24 – 37
65W–48511–00	27 – 41
63D–48538–00	21 – 40
	21 – 46
6BG–48538–00	19 – 35
6X4–48538–00	21 – 36
6X4–48538–10	21 – 43
6BG–61350–00	34 – 1
64J–77123–00	29 – 23
68V–81315–00	16 – 12
6BG–81337–00	12 – 12
6BG–81410–00	12 – 2
6BG–81450–00	12 – 1
6BG–81528–00	13 – 15
6BG–81800–00	18 – 1
6BG–81807–00	18 – 3
6BG–81810–00	18 – 11
6BG–81815–00	14 – 6
6BG–81820–00	18 – 13
6BG–81822–00–94	14 – 8
6BG–81826–00	18 – 15
6BG–8182J–00	18 – 14
6BG–81830–00	18 – 2
6BG–81832–00	18 – 7
6BG–81836–00	18 – 4
6BG–81839–00	18 – 10
6AW–8183T–00	18 – 6
6P2–8183X–00	15 – 14
	15 – 18
6BG–81840–00	18 – 12
6BG–81846–00	18 – 16
6BG–81850–00	18 – 9
6BG–81857–00	18 – 8
6X4–81860–00	22 – 21

PART NO. N° PIECES	REF. NO.
6BG–81891–00	18 – 5
6BG–81919–00	12 – 22
6Y8–81920–11	35 – 18
6BG–81925–00	15 – 1
6BG–81941–00	18 – 17
6BG–81942–00	16 – 18
6BG–81948–00	15 – 24
6AW–8194A–00	15 – 10
60E–81950–00	15 – 8
63P–81950–00	15 – 17
68F–81953–00	15 – 15
6BG–81960–00	13 – 12
6AH–81994–40	12 – 20
6AH–81994–50	12 – 21
6AH–81995–40	12 – 18
6AH–81995–50	12 – 19
6AG–81996–00	12 – 24
6BG–82105–00	15 – 34
6BG–82115–00	14 – 7
6G5–82119–00	15 – 31
703–82119–00	22 – 23
682–82119–01	15 – 7
67C–82127–00	27 – 34
6U0–82127–00	25 – 30
67C–82127–10	27 – 34
67C–82127–20	26 – 36
6H1–82148–00	25 – 20
67F–82151–00	17 – 2
67F–82151–10	17 – 3
67F–8215B–10	17 – 4
67F–8215B–20	17 – 5
65W–82181–00	28 – 8
6A0–82317–00	15 – 27
6AH–82370–00	13 – 11
6C5–82377–00	12 – 23
6BG–82388–00	16 – 7
6BG–82389–00	13 – 9
6BG–82398–00	13 – 8
64J–82504–00	16 – 11
6Y8–82509–10	35 – 8
6Y8–82509–20	35 – 8
6X4–82510–10	22 – 1
6Y8–82521–01	35 – 15
6Y8–82521–11	35 – 15
6Y8–82521–60	35 – 17
6X4–82540–00	21 – 28
6BG–82553–00	8 – 26
6Y8–82553–01	35 – 19

NUMERICAL INDEX
INDEX NUMERIQUE

PART NO. N° PIECES	REF. NO.
6C5–82554–01	17 – 10
682–82556–00	22 – 5
69J–82563–00	17 – 15
69W–82575–00	22 – 4
676–82577–00	22 – 2
6BG–8257V–00	16 – 13
689–8257Y–00	22 – 6
6P2–82582–00	17 – 6
6P2–82582–10	17 – 7
6X4–82586–10	22 – 10
69J–82587–00	17 – 18
61A–82588–01	17 – 11
6BG–82590–01	17 – 1
6BG–82590–11	17 – 1
60V–8259F–00	17 – 9
6X4–83383–00	22 – 11
	35 – 5
6X4–83386–00	22 – 12
	35 – 6
6E5–83558–00	27 – 10
6E5–83558–10	31 – 17
6H4–83589–00	22 – 19
6BG–83614–00	17 – 16
6X4–83653–20	22 – 14
67H–83672–00	27 – 8
6C5–84301–00	22 – 15
6Y8–8454G–00	35 – 11
6X4–85415–00	22 – 20
68V–85548–00	15 – 32
6BG–85561–00–94	12 – 7
6BG–85570–00	13 – 4
6AH–85580–00	12 – 9
6C5–85790–00	16 – 5
6BT–8591A–00	13 – 1
6BG–86112–00	7 – 4
6C5–86120–00	7 – 2
6Y8–86260–01	35 – 2
6AA–86261–00	35 – 3
6Y8–86267–00	35 – 1
6BG–W0001–00	36 – 1
6BG–W0001–20	37 – 1
6BG–W0070–00	1 – 12
6BG–W0078–00	37 – 23
6BG–W009A–00–9S	4 – 1
6BG–W009B–00–9S	2 – 1
90101–06020	25 – 29
	26 – 35
90101–06054	24 – 13

PART NO. N° PIECES	REF. NO.
90101–08M15	27 – 17
90101–09M01	34 – 6
90101–12014	21 – 59
90101–12M65	25 – 38
	26 – 40
90105–06M18	27 – 3
90105–08060	5 – 18
90105–08M61	31 – 43
90105–09005	4 – 12
90109–06047	1 – 8
90109–06M65	4 – 8
90109–06M80	19 – 29
90109–06M86	17 – 17
	17 – 21
	17 – 23
	17 – 27
	19 – 11
	19 – 20
	19 – 34
	19 – 36
	20 – 16
	20 – 18
90109–06M88	23 – 3
90109–06MA1	16 – 17
90109–12MA3	27 – 27
90116–10M28	27 – 15
90119–06025	10 – 13
90119–06037	7 – 14
90119–06106	24 – 32
90119–06126	6 – 10
90119–06M59	15 – 26
90119–06M61	7 – 1
	19 – 2
90119–06MA3	4 – 13
90119–06MA5	2 – 17
90119–08069	6 – 9
90119–08102	29 – 25
90119–08131	27 – 25
90119–08132	29 – 26
90119–08M01	2 – 4
90119–08M15	31 – 29
	37 – 32
90119–08M84	32 – 9
90142–05001	21 – 10
90142–05M06	32 – 12
90157–05M16	33 – 5
90159–05M12	14 – 3
90167–06M00	35 – 12

PART NO. N° PIECES	REF. NO.
90170–09M03	34 – 4
90170–12138	31 – 37
90170–20137	12 – 4
90171–16011	32 – 23
90179–35001	10 – 9
90185–06M05	1 – 9
90185–08045	27 – 19
90185–09M01	34 – 3
90185–10051	27 – 43
90185–10M14	23 – 13
90185–12M12	21 – 66
90185–22M11	25 – 12
	26 – 12
90201–06M30	35 – 13
90201–08M00	25 – 17
	26 – 23
90201–10120	27 – 42
90201–10144	10 – 5
90201–10M20	24 – 17
	34 – 2
90201–10M63	34 – 7
90201–12035	21 – 63
90201–12426	25 – 40
	26 – 42
90201–12M07	19 – 16
90201–12M16	27 – 29
90201–13M19	27 – 31
90201–16014	5 – 17
90201–21M18	12 – 5
90201–22429	31 – 55
90201–22M05	27 – 32
90201–27M00	31 – 34
90201–30M00	27 – 36
90202–07M07	24 – 21
90202–10M56	23 – 9
90202–12060	32 – 3
90202–21100	27 – 30
90206–10M04	24 – 35
90206–12052	19 – 15
90206–12M22	21 – 61
90209–10M26	23 – 11
90249–12M38	25 – 21
	26 – 27
90249–18M35	25 – 15
	26 – 21
90250–06023	31 – 60
90280–03M01	10 – 10
90280–03M03	31 – 25

PART NO. N° PIECES	REF. NO.
90280–03M03	37 – 29
90340–08002	31 – 9
90340–14M06	2 – 24
	29 – 34
	30 – 6
90340–18M09	2 – 22
90344–51003	2 – 7
90381–12M10	25 – 22
	26 – 28
90381–12M11	25 – 23
	26 – 29
90386–08032	21 – 16
90386–12003	21 – 64
90386–12M37	19 – 13
90386–12MA2	19 – 14
90386–14MA1	25 – 6
	26 – 6
90386–18M44	25 – 18
	26 – 24
90386–18MA0	25 – 19
90386–18MA5	26 – 25
90386–22MA4	25 – 13
	26 – 13
90386–26MA3	21 – 53
90386–30M60	27 – 40
90386–30M77	27 – 38
90386–30M78	27 – 37
90386–90M90	24 – 16
90387–04001	17 – 12
90387–05M05	23 – 12
90387–05M11	23 – 14
90387–06060	19 – 4
90387–06119	15 – 25
90387–06225	24 – 36
90387–06M43	19 – 31
90387–06M45	24 – 31
90387–06M69	8 – 24
90387–10M42	34 – 5
90387–12M02	21 – 62
90387–18M03	26 – 26
90387–23002	29 – 32
90389–22M01	32 – 22
90430–06014	4 – 9
	36 – 4
90430–08020	31 – 10
	37 – 12
90430–12072	32 – 4
90430–14115	2 – 25

PART NO. N° PIECES	REF. NO.
90430–14115	16 – 6
	36 – 14
90430–14M09	29 – 35
	30 – 7
	37 – 3
	37 – 11
90430–18130	2 – 23
	36 – 13
90445–07ME8	31 – 16
90445–09035	20 – 7
90445–09220	20 – 10
90445–09224	20 – 11
90445–13M02	11 – 6
90447–19014	27 – 12
90462–08067	20 – 15
90462–20005	19 – 33
90464–06001	13 – 10
	16 – 10
90464–08M07	22 – 3
90464–09M21	20 – 19
90464–09M42	21 – 38
90464–11008	17 – 8
90464–11M24	7 – 10
90464–12006	9 – 24
90464–12010	9 – 25
90464–12012	11 – 34
90464–12224	9 – 26
90464–13249	13 – 18
	16 – 3
	16 – 4
90464–15007	7 – 9
	9 – 27
90464–15008	7 – 15
90464–15011	7 – 16
90464–18246	13 – 19
	16 – 16
90464–20181	17 – 20
	17 – 24
	17 – 26
90465–08M63	25 – 36
90465–10M77	25 – 33
90465–11M10	7 – 11
	9 – 22
	11 – 7
	20 – 3
	20 – 9
	27 – 4
	27 – 7

PART NO. N° PIECES	REF. NO.
90465–11M10	31 – 18
	35 – 10
90465–13M11	25 – 14
	26 – 39
90465–13M18	27 – 13
90465–13M24	15 – 28
	16 – 19
90465–13M36	22 – 24
90465–13M39	15 – 29
90465–13M97	17 – 28
	22 – 22
90465–14M66	15 – 30
90467–09M17	11 – 8
90467–10M04	11 – 33
90467–11M08	11 – 19
90468–10005	21 – 41
	21 – 47
90468–18008	24 – 19
	24 – 22
	24 – 38
90480–06M19	7 – 7
90480–09M12	8 – 25
90480–12314	12 – 13
	16 – 20
	16 – 22
90480–12M25	30 – 2
90480–13M24	19 – 30
90480–25003	13 – 5
90501–12082	24 – 14
90501–18001	31 – 58
90501–23215	21 – 14
90506–18M40	19 – 21
91318–04025	28 – 40
91490–16010	24 – 29
91490–20010	21 – 11
	21 – 20
91490–20015	24 – 18
91490–30025	32 – 24
91690–30018	25 – 5
	26 – 5
92903–06600	2 – 6
	29 – 9
	30 – 12
	30 – 16
92903–08100	14 – 5
92903–08600	14 – 2
92907–04600	4 – 18
92990–05600	29 – 29

NUMERICAL INDEX
INDEX NUMERIQUE

PART NO. N° PIECES	REF. NO.
92990–06100	19 – 27
	23 – 5
92990–06600	19 – 28
	22 – 9
92990–08200	5 – 19
92990–12200	21 – 60
92990–12600	21 – 65
92995–04100	17 – 14
92995–05600	12 – 11
	23 – 16
	24 – 10
	29 – 7
92995–06100	15 – 5
	15 – 12
	15 – 20
92995–06600	4 – 21
	4 – 24
	7 – 6
	11 – 3
	11 – 32
	13 – 3
	13 – 7
	13 – 14
	13 – 17
	14 – 14
	15 – 3
	15 – 6
	15 – 13
	15 – 21
	15 – 23
	15 – 36
	16 – 2
	16 – 2
	16 – 9
	16 – 15
	21 – 34
	21 – 56
	24 – 4
	24 – 6
	25 – 32
	25 – 35
	26 – 38
	29 – 14
	29 – 20
	30 – 9
92995–08100	32 – 16
	32 – 19
92995–08600	14 – 11

PART NO. N° PIECES	REF. NO.
92995–08600	21 – 32
	25 – 11
	26 – 11
	27 – 21
92995–10100	32 – 7
92995–10600	25 – 27
	26 – 33
	32 – 8
92995–12200	25 – 39
	26 – 41
93101–22M00	31 – 49
	37 – 21
93101–22M60	31 – 31
	37 – 17
93101–35002	3 – 11
	36 – 8
93102–37M40	10 – 14
	36 – 2
93102–43M42	3 – 10
	36 – 7
93106–09014	31 – 13
	37 – 13
93110–16004	29 – 10
	37 – 5
93210–04279	35 – 9
93210–04N50	28 – 42
93210–04N51	28 – 43
93210–064A5	28 – 27
93210–07003	31 – 52
	37 – 22
93210–09165	28 – 36
93210–10M74	28 – 33
	28 – 54
	28 – 67
93210–11073	28 – 57
93210–11368	28 – 25
93210–12N52	28 – 34
93210–13M63	2 – 21
	4 – 7
	36 – 3
	36 – 12
93210–16275	34 – 9
93210–18397	28 – 46
93210–24M79	4 – 26
	11 – 30
	36 – 17
	36 – 18
93210–29M94	27 – 39

PART NO. N° PIECES	REF. NO.
93210–33MG4	31 – 14
	37 – 14
93210–42159	6 – 3
	36 – 15
93210–48001	31 – 32
	37 – 18
93210–50768	28 – 30
93210–59MG7	31 – 22
	37 – 15
	37 – 26
93210–69MG6	31 – 47
	37 – 20
93210–74MG5	31 – 46
	37 – 19
93306–001U1	31 – 44
93315–32224	31 – 3
93317–22204	31 – 48
93332–00001	31 – 6
93332–00003	31 – 39
93410–28M06	27 – 33
93420–36M01	29 – 33
93450–17129	3 – 9
93501–04M02	24 – 15
93501–08001	28 – 63
93604–08062	31 – 28
93604–10M03	2 – 10
93605–17002	10 – 3
93606–12019	2 – 3
	30 – 4
	32 – 5
93608–12M05	30 – 18
93700–06M03	21 – 3
	25 – 8
	26 – 8
94702–00418	4 – 27
95023–06030	12 – 6
	12 – 8
95333–08600	14 – 4
95380–05600	11 – 28
	23 – 17
	32 – 13
95380–05700	24 – 26
95380–05800	1 – 5
95380–06600	7 – 3
	19 – 25
	21 – 19
95380–08600	11 – 17
95380–12600	25 – 41

PART NO. N° PIECES	REF. NO.
95380–12600	26 – 43
95380–12700	27 – 28
95780–06300	35 – 14
95817–10035	10 – 4
95895–06016	6 – 2
	6 – 5
95895–06040	6 – 15
95895–06045	24 – 34
95895–08016	11 – 16
97013–06016	30 – 11
97013–06020	29 – 8
97013–06025	30 – 15
97013–06035	2 – 5
97013–08045	14 – 1
97075–06025	29 – 19
	30 – 8
97075–06050	29 – 13
97075–08030	27 – 20
97075–10040	32 – 6
97080–08016	25 – 16
	26 – 22
97085–06010	25 – 37
97095–05012	29 – 6
97095–05014	24 – 9
97095–05016	12 – 10
97095–05020	23 – 15
97095–06010	15 – 4
	15 – 11
	15 – 19
	26 – 17
97095–06014	19 – 18
	21 – 39
	21 – 45
	22 – 13
	25 – 31
	25 – 34
	26 – 37
97095–06016	7 – 5
	13 – 16
	15 – 2
	15 – 35
	16 – 1
	16 – 1
	16 – 8
	16 – 14
97095–06020	4 – 20
	4 – 23
	14 – 13

PART NO. N° PIECES	REF. NO.
97095–06020	15 – 22
	24 – 3
97095–06025	11 – 2
	13 – 2
	13 – 6
	13 – 13
	24 – 5
97095–06030	11 – 31
	21 – 33
97095–08020	25 – 10
	26 – 10
97095–08025	32 – 15
97095–08035	32 – 18
97095–08040	21 – 31
97095–08045	14 – 10
97095–10050	25 – 25
	26 – 31
97780–50616	1 – 3
97780–60520	20 – 5
97780–60525	27 – 6
97780–60620	15 – 9
	15 – 16
	15 – 33
	22 – 17
	35 – 7
97780–60920	21 – 51
97880–05016	29 – 28
97880–05025	2 – 19
	4 – 5
97880–06016	22 – 8
97880–06025	19 – 26
97880–06035	35 – 12
97885–04016	17 – 13
97885–06008	27 – 35
97885–06016	21 – 55
	27 – 9
97980–06216	35 – 4
98507–04010	4 – 17
98680–06525	26 – 20
99001–08600	31 – 53
99080–10600	25 – 24
	26 – 30
99530–08012	4 – 11
99590–10114	14 – 9

PART NO. N° PIECES	REF. NO.