YAMAHA

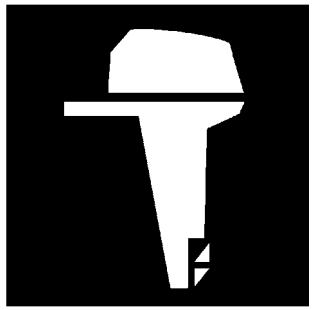

PARTS CATALOGUE
CATALOGUE DE PIECES DETACHEES

E60HMHD'10 (69D9)

1J69D-300F1

( )

YAMAHA
GENUINE
Parts & Accessories

E60HMHD
PARTS CATALOGUE
©2009 by Yamaha Motor Co., Ltd.
1st edition, July 2009
All rights reserved.
Any reprinting or unauthorized use
without the written permission of
Yamaha Motor Co., Ltd.
is expressly prohibited.
Printed in Japan.

E60HMHD
CATALOGUE DE PIECES DETACHEES
©2009 par Yamaha Motor Co., Ltd.
1re édition, juillet 2009
Tous droits réservés
Toute réimpression ou utilisation
non autorisée sans la permission écrite
de la Yamaha Motor Co., Ltd.
est formellement interdite.
Imprimé au Japon

FOREWORD

This Parts Catalogue is related to the parts for the model(s) on the cover page. When you are ordering replacement parts, please refer to this Parts Catalogue and quote both part numbers and part names correctly.

1. Modifications or additions which have been made after the issue of the Parts Catalogue will be announced in the Parts News.
   It is advisable that you make the necessary corrections to the Parts Catalogue according to the Parts News.

2. Abbreviations
   The following abbreviations are used in this Parts Catalogue.

   "UR" Use specified parts number.
   "UN" Use as many as needed.
   "AP" Alternate Parts
   "LM" Locally Made (Parts need to be ordered locally)
   "F#" Frame No. (Applicable machine No.)
   "O/S" Over Size

3. The number of components for assembly
   - Parts, which are to be supplied in an assembly, are listed with a dot (.) in front of the part name as shown below.
   - The numeral appearing to the right of each component part indicates the quantity of parts for each assembly unit.

PART NO.	DESCRIPTION	Q'TY	REMARKS
2F5–83310–60	FRONT FLASHER LIGHT ASSY	2	
115–83311–60	.BULB (6V–18W)	1	

4. Applicable colours of graphics are represented in the "REMARKS" as shown below.

PART NO.	DESCRIPTION	Q'TY	REMARKS
2N4–24110–00–X5	FUEL TANK COMP.	2	MXR
3J1–24240–10	.GRAPHIC, FUEL TANK	1	FOR MXR

5. Note that the illustrations for reference in finding parts numbers are not to be used for assembling. When assembling, please use the applicable service manual.

6. The asterisk (*) before a reference number indicates modified items after the first edition.

7. Applicable Serial No.

   Engine Serial No.

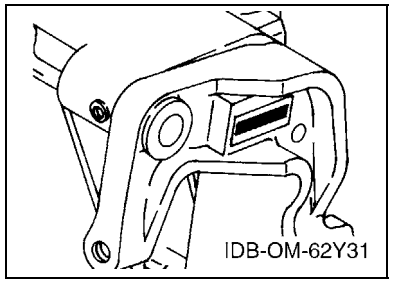

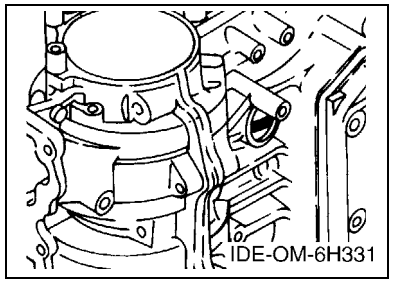

8. Applicable Engine Starting Serial No.

Model	Serial No.	Model	Serial No.
E60H	6K5K-1023249		

9. Applicable Colour Code

Abbreviation	Colour Name	Colour Code
DBNM2	DARK BLUISH GRAY METALLIC 2	004D

10. Quantity Column Information

Column No.	Name Of Q'ty Column	Applicable Model
1	69D9	E60HMHD

AVANT–PROPOS

Ce catalogue de pièces détachées concerne les pièces pour le(s) modèle(s) indiqué(s) sur la page de couverture. Lorsque vous commandez des pièces de rechange, veuillez vous référer à ce catalogue de pieces détachées et indiquer clairement les numéros et les noms des pièces détachées.

1. Les modifications ou ajouts ayant été effectués après la parution du catalogue de pièces détachées seront décrits dans les Bulletins d'information concernant les pièces détachées.
   Il est recommandé que vous apportiez les corrections nécessaires au catalogue des pièces détachées en vous référant aux Bulletins d'information.

2. Abréviations
   Dans ce catalogue, les abréviations suivantes sont utilisées:

   "UR" Utiliser le numéro de pièces spécifié.
   "UN" Utiliser autant que nécessaire.
   "AP" Pièces de substitution
   "LM" Fabrication locale (les pièces doivent être commandées localement.)
   "F#" N° de cadre (applicable au N° de série)
   "O/S" Surdimensionné

3. Nombre de pièces d'un assemblage
   - Les pièces fournies comme composants d'un assemblage sont précédées d'un point (.) de la manière indiquée ci–dessous.
   - Le chiffre apparaissant à la droite de chaque composant indique la quantité de pièces pour chaque unité d'assemblage.

N° PIECES	DESCRIPTION	QTE	REMARQUES
2F5–83310–60	ENS. CLIGNOTANT AVANT	2	
115–83311–60	.AMPOULE (6V–18W)	1	

4. Les couleurs concernant les graphiques sont indiquées dans la colonne "REMARQUES", comme indiqué ci–dessous.

N° PIECES	DESCRIPTION	QTE	REMARQUES
2N4–24110–00–X5	RESERVOIR A ESSENCE.	2	MXR
3J1–24240–10	.GRAPHIQUE	1	POUR MXR

5. Veuillez noter que les illustrations sont indiquées à titre de référence pour trouver les numéros de pièces, non pour être utilisées lors de l'assemblage. Lors de l'assemblage, veuillez utiliser le manuel d'entretien adéquat.

6. L'astérisque (*) placé devant un numéro de référence indique des éléments qui ont été modifiés après la première édition.

7. N° de série applicable

   N° de Série du moteur

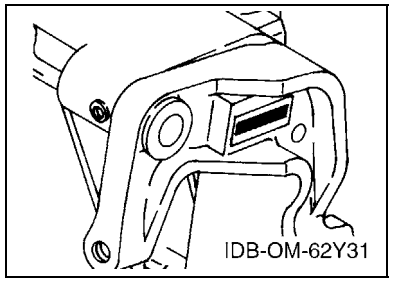

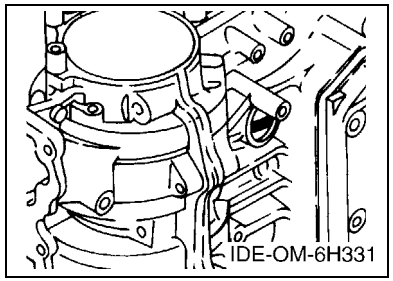

8. N° de série initial du moteur applicable

Modèle	N° de série	Modèle	N° de série
E60H	6K5K-1023249		

9. Code couleur applicable

Abréviation	Nom de la couleur	Code couleur
DBNM2	DARK BLUISH GRAY METALLIC 2	004D

10. Informations relatives à la colonne Quantité

N° de la colonne	Nom de la colonne Qté	Modèle applicable
1	69D9	E60HMHD

CONTENTS

TOP COWLING 1
CYLINDER & CRANKCASE 2
CRANKSHAFT & PISTON 4
INTAKE 5
CARBURETOR 6
FUEL 8
STARTER 10
GENERATOR 13
ELECTRICAL 14
BOTTOM COWLING 16
STEERING 18
CONTROL 20
BRACKET 1 22
BRACKET 2 24
UPPER CASING 26
LOWER CASING & DRIVE 1 27
LOWER CASING & DRIVE 2 31
FUEL TANK 33
REPAIR KIT 1 34
REPAIR KIT 2 36

INDEX

NUMERICAL INDEX 37

TABLE DES MATIERES

CAPOT SUPERIEUR 1
CYLINDRE & CARTER 2
VILEBREQUIN & PISTON 4
ADMISSION 5
CARBURATEUR 6
CARBURANT 8
DEMARREUR 10
GENERATRICE 13
ELECTRIQUE 14
CAPOT INFERIEUR 16
DIRECTION 18
COMMANDE 20
SUPPORT 1 22
SUPPORT 2 24
FOURREAU 26
BOITIER D'HELICE TRANSMISSION1 27
BOITIER D'HELICE TRANSMISSION2 31
RESERVOIR A CARBURANT 33
KITS DE REPARATION 1 34
KITS DE REPARATION 2 36

INDEX

INDEX NUMERIQUE 37

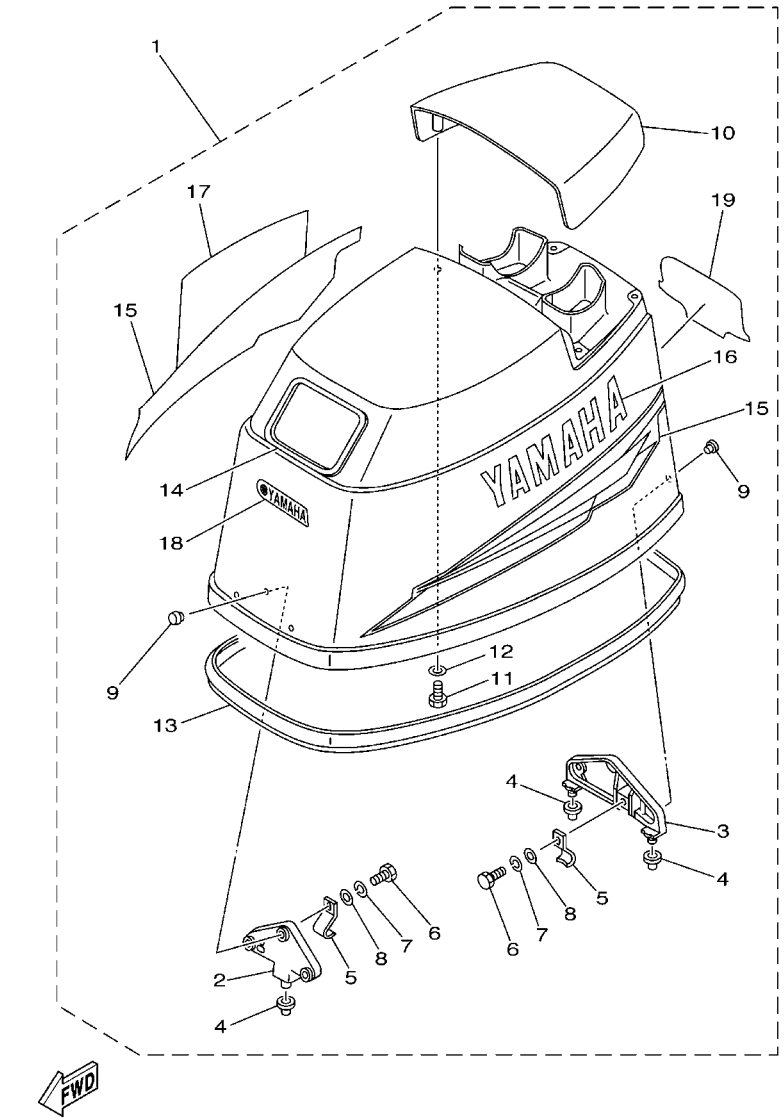

69D1300-2010

FIG. 1 TOP COWLING — CAPOT SUPERIEUR

REF. NO.	PART NO. N° PIECES	DESCRIPTION DESCRIPTION	69D9					REMARKS REMARQUES
1	6K5–42610–C0–4D	TOP COWLING ASSY CAPOT (ENS.)	1					
2	6H3–42647–00–94	.HOLDER, CLAMP BAND .SUPPORT, SANDOW DE SERRAGE	1					
3	6H3–42649–00–94	.HOLDER, CLAMP BAND .SUPPORT, SANDOW DE SERRAGE	1					
4	663–42662–00	.DAMPER .AMORTISSEUR	3					
5	6H3–42652–00	.HOOK .CROCHET	2					
6	97095–06016	.BOLT .BOULON	2					
7	92995–06100	.WASHER, SPRING .RONDELLE, GROWER	2					
8	92995–06600	.WASHER .RONDELLE	2					
9	90266–06009	.RIVET .RIVET	6					
10	6H3–42613–01–4D	.MOLDING, AIR DUCT .MANCHON A AIR	1					
11	97095–06016	.BOLT .BOULON	4					
12	92995–06600	.WASHER .RONDELLE	4					
13	6H3–42615–00	.SEAL .JOINT	1					
14	6K5–15761–00	.SEAL, RUBBER 1 .JOINT CAOUTCHOUC 1	1					
15	6H3–W0070–30	.GRAPHIC SET .JEU DIEMBLEMES	1					
16	6H3–42681–30	.MARK, COWLING .ADHESIF, CAPOT	1					
17	6H3–42682–30	.MARK, COWLING .ADHESIF, CAPOT	1					
18	688–42677–D0	.GRAPHIC, FRONT .ADHESIF, AVANT	1					YAMAHA YAMAHA
19	6H2–42678–30	.GRAPHIC, REAR .ADHESIF, ARRIERE	1					

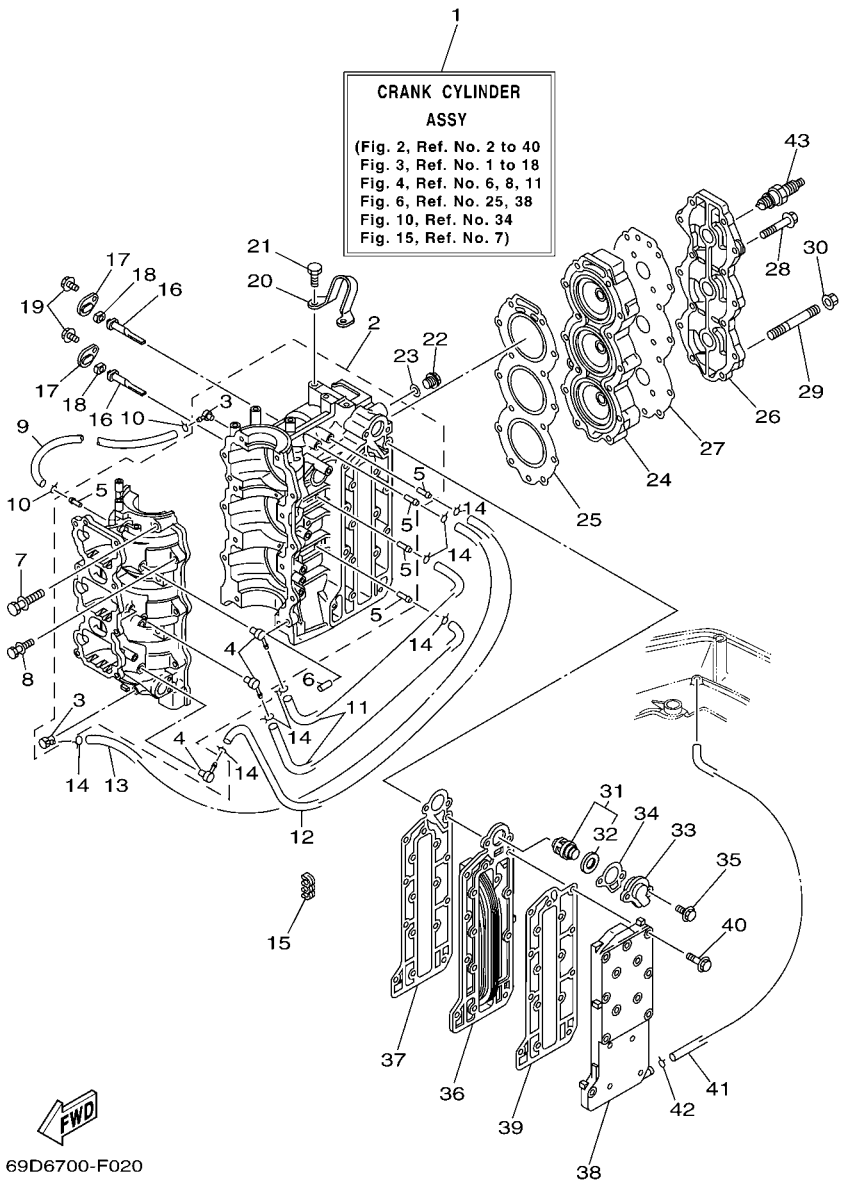

FIG. 2 CYLINDER & CRANKCASE CYLINDRE & CARTER

REF. NO.	PART NO. N° PIECES	DESCRIPTION DESCRIPTION	69D9					REMARKS REMARQUES
1	69D–W0090–01–1S	CRANK CYLINDER ASSY EMBIELLAGE CYLINDRE (ENS.)	1					
2	69D–15100–00–1S	CRANKCASE ASSY CARTER DE MOTEUR COMPLET	1					
3	688–11370–01	.CHECK VALVE ASSY .CLAPET (ENS.)	2					
4	650–11370–01	.CHECK VALVE ASSY .CLAPET (ENS.)	3					
5	624–14485–00	.PIPE, JOINT .DURITE	5					
6	93608–12063	PIN, DOWEL AXE	2					
7	90119–10005	BOLT, WITH WASHER BOULON, AVEC RONDELLE	8					
8	90119–08M64	BOLT, WITH WASHER BOULON, AVEC RONDELLE	6					
9	90445–07M44	HOSE (L250) DURITE (L250)	1					
10	90467–06016	CLIP JONC	2					
11	90445–07M02	HOSE (L167) DURITE (L167)	2					
12	90445–07M45	HOSE (L340) DURITE (L340)	1					
13	90445–07M82	HOSE (L440) DURITE (L440)	1					
14	90467–06016	CLIP JONC	8					
15	90464–07M05	CLAMP BRIDE	1					
16	6H3–11325–01	ANODE ANODE	2					
17	6H3–11327–00–1S	COVER, ANODE COUVERCLE ANODE	2					
18	6H3–11328–00	GROMMET, ANODE PASSE-FIL	2					
19	90119–06023	BOLT, WITH WASHER BOULON, AVEC RONDELLE	2					
20	6K5–11119–01	HANGER, ENGINE ANNEAU, LEVAGE	1					
21	90101–08002	BOLT BOULON	2					
22	90340–14M00	PLUG, STRAIGHT SCREW PLOT, FILETE DROIT	1					
23	90430–14115	GASKET JOINT	1					
24	6H3–11111–01–1S	HEAD, CYLINDER 1 CULASSE	1					
25	6H3–11181–A2	GASKET, CYLINDER HEAD 1 JOINT, DE CULASSE 1	1					
26	6H3–11191–00–1S	COVER, CYLINDER HEAD 1 COUVERCLE, CULASSE 1	1					
27	6H3–11193–A1	GASKET, HEAD COVER 1 JOINT, COUVERCLE DE CULASSE 1	1					

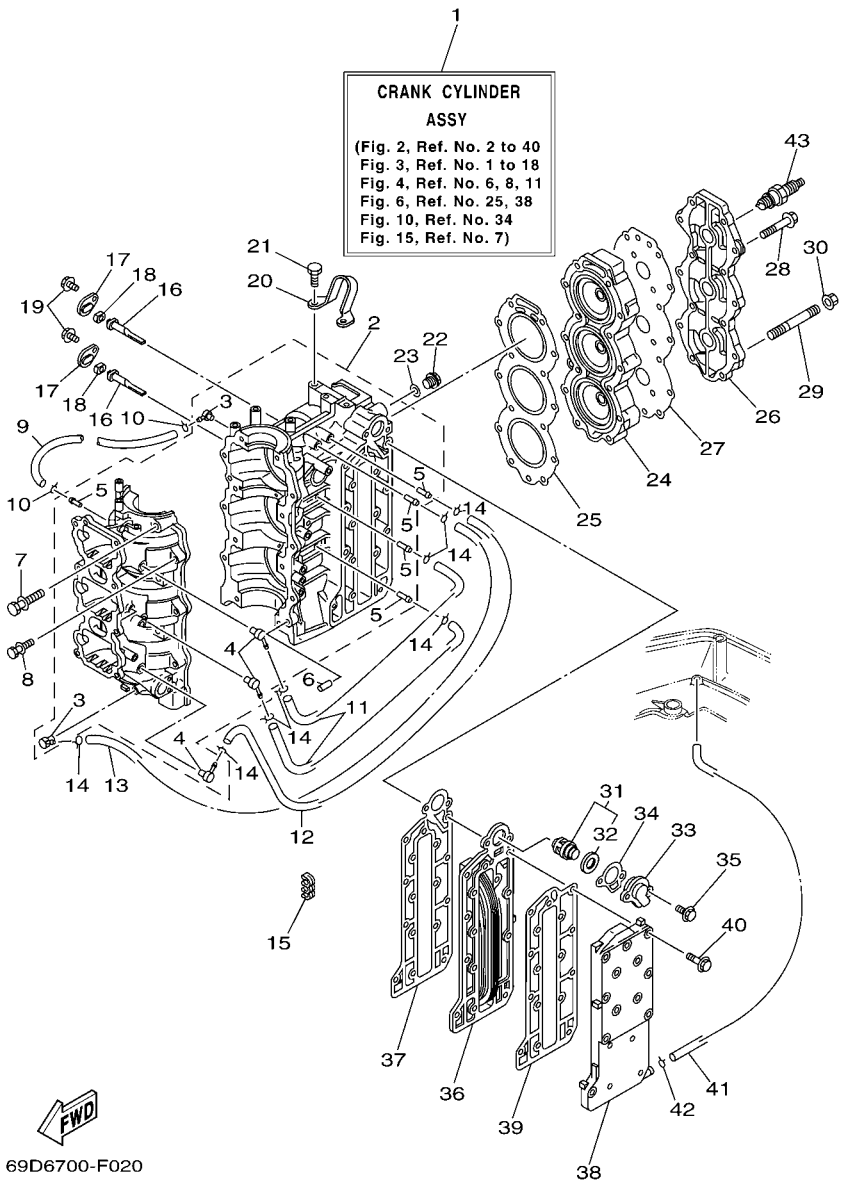

FIG. 2 CYLINDER & CRANKCASE CYLINDRE & CARTER

REF. NO.	PART NO. N° PIECES	DESCRIPTION DESCRIPTION	69D9					REMARKS REMARQUES
28	90119–08MA5	BOLT, WITH WASHER BOULON, AVEC RONDELLE	13					
29	90116–08M69	BOLT, STUD GOUJON	1					
30	90179–08M34	NUT ECROU	1					
31	6H3–12411–11	THERMOSTAT THERMOSTAT	1					
32	688–12412–00	.SEAL, THERMOSTAT .JOINT, THERMOSTAT	1					
33	6H3–12413–00–1S	COVER, THERMOSTAT COUVERCLE, THERMOSTAT	1					
34	6H3–12414–A1	GASKET, COVER JOINT, COUVERCLE	1					
35	90119–06MA3	BOLT, WITH WASHER BOULON, AVEC RONDELLE	2					
36	6H3–41111–01–1S	INNER COVER, EXHAUST PLAQUE, ECHAPPEMENT	1					
37	6H3–41112–A0	GASKET, EXHAUST INNER COVER JOINT, PLAQUE D'ECHAPPEMENT	1					
38	6H3–41113–02–1S	OUTER COVER, EXHAUST COUVERCLE, ECHAPPEMENT	1					
39	6H3–41114–A0	GASKET, EXHAUST OUTER COVER JOINT, COUVERCLE D'ECHAPPEMENT	1					
40	90119–06MA5	BOLT, WITH WASHER BOULON, AVEC RONDELLE	16					
41	663–24312–01	PIPE 2 DURITE 2	1					
42	90467–08004	CLIP JONC	1					
43	94702–00247	PLUG, SPARK (NGK BR8HS-10) BOUGIE D'ALLUMAGE(NGK BR8HS-10	3					

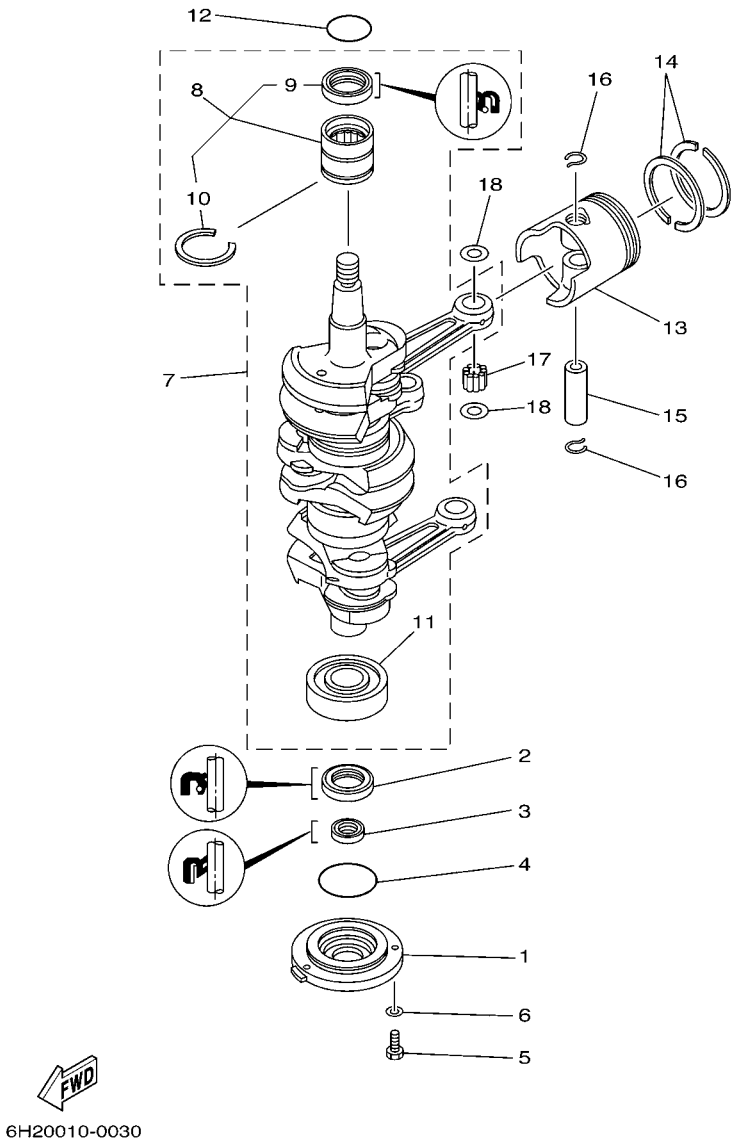

FIG. 3 CRANKSHAFT & PISTON VILEBREQUIN & PISTON

REF. NO.	PART NO. N° PIECES	DESCRIPTION DESCRIPTION	69D9					REMARKS REMARQUES
1	6H3–15359–00–94	HOUSING, OIL SEAL LOGEMENT, BAGUE D'ETANCHEITE	1					
2	93102–30009	OIL SEAL JOINT SPY	1					
3	93106–18001	OIL SEAL JOINT SPY	1					
4	93210–65M50	O-RING JOINT TORIQUE	1					
5	97095–06020	BOLT BOULON	3					
6	92995–06600	WASHER RONDELLE	3					
7	69D–W1140–01	CRANKSHAFT ASSY VILEBREQUIN COMPLET	1					
8	93311–636U6	.BEARING .ROULEMENT	1					
9	93102–36M24	..OIL SEAL ..JOINT SPY	1					
10	93440–49M04	..CIRCLIP ..CIRCLIP	1					
11	93306–306V1	.BEARING .ROULEMENT	1					
12	93210–46M16	O-RING JOINT TORIQUE	1					
13	6K5–11631–03–95	PISTON (STD) PISTON (STD)	3					
	6K5–11635–03	PISTON (0.25MM O/S) PISTON (0.25MM O/S)	3					AP AP
	6K5–11636–03	PISTON (0.50MM O/S) PISTON (0.50MM O/S)	3					AP AP
14	6K5–11601–02	PISTON RING SET (STD) JEU DE SEGMENTS (STD)	3					
	6K5–11601–12	PISTON RING SET (0.25MM O/S) JEU DE SEGMENTS (0.25MM O/S)	3					AP AP
	6K5–11601–22	PISTON RING SET (0.50MM O/S) JEU DE SEGMENTS (0.50MM O/S)	3					AP AP
15	6H3–11633–00	PIN, PISTON AXE, PISTON	3					
16	688–11634–10	CLIP, PISTON PIN AGRAFE, AXE DE PISTON	6					
17	93603–18M09	PIN, DOWEL CLAVETTE	84					
18	90201–20417	WASHER, PLATE RONDELLE, PLATE	6					

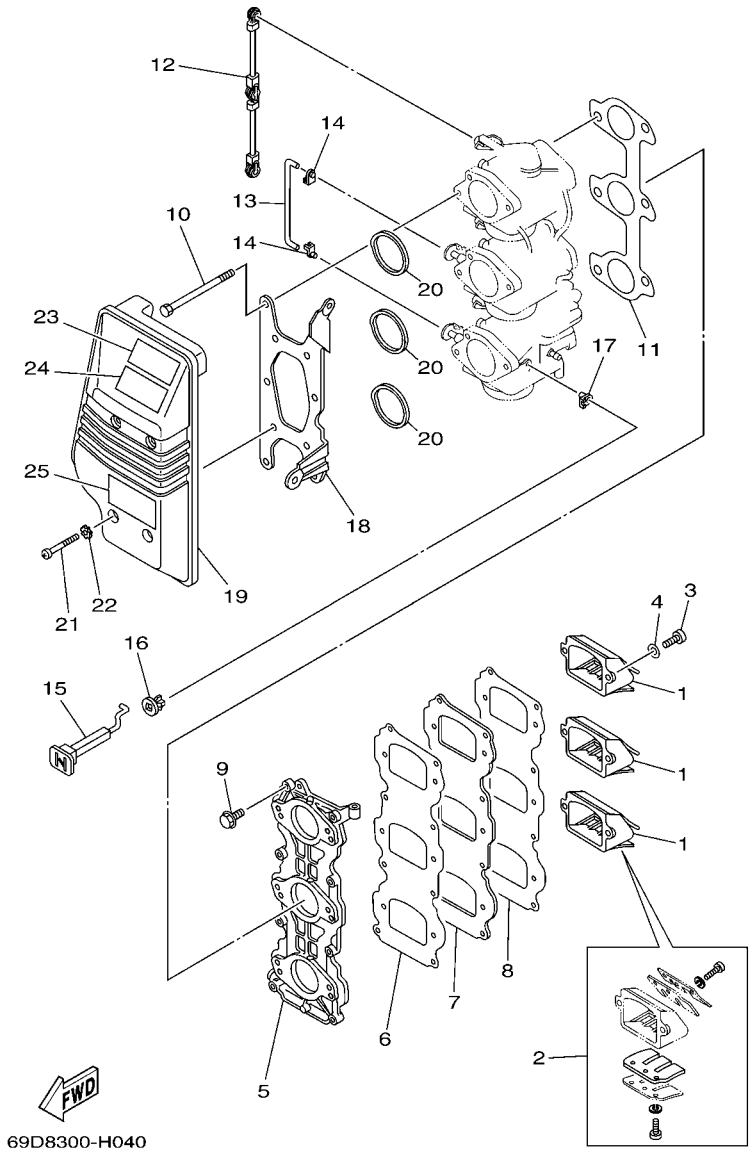

FIG. 4 INTAKE — ADMISSION

REF. NO.	PART NO. N° PIECES	DESCRIPTION DESCRIPTION	69D9					REMARKS REMARQUES
1	6H2–13610–00	REED VALVE ASSY CLAPET COMPLET	3					
2	688–W0004–00	.REED SET .JEU DE CLAPETS	1					
3	97880–05016	SCREW, PAN HEAD VIS, TETE TRONCONIQUE	6					
4	92990–05600	WASHER, PLATE RONDELLE, PLATE	6					
5	6H3–13641–03–94	MANIFOLD 1 TUBULURE 1	1					
6	6H3–13621–A1	GASKET, VALVE SEAT JOINT, SIEGE DE CLAPET	1					
7	6H3–13624–00–94	PLATE,REED VALVE PLAQUE DE CLAPET	1					
8	6H3–13622–A1	GASKET, VALVE SEAT JOINT, SIEGE DE CLAPET	1					
9	90119–06MA3	BOLT, WITH WASHER BOULON, AVEC RONDELLE	8					
10	97095–06095	BOLT BOULON	6					
11	6H3–14198–A1	GASKET JOINT	1					
12	6H3–41217–00	ROD, ACCEL. LEVER TIGE, LEVIER ACCELERATION	1					
13	6H3–41257–00	ROD, CHOKE 2 TRINGLE 2, STARTER	2					
14	661–41262–02	JOINT, CHOKE LEVER RACCORD, LEVIER DE STARTER	4					
15	6H3–41271–00	KNOB, CHOKE BOUTON DE STARTER	1					
16	689–41273–00	GROMMET PASSE-FIL	1					
17	661–41262–02	JOINT, CHOKE LEVER RACCORD, LEVIER DE STARTER	1					
18	6H3–14413–11	STAY SUPPORT	1					
19	6H3–14440–02	SILENCER ASSY, INTAKE SIENCIEUX D'ADMISSION	1					
20	6H3–14457–01	SEAL JOINT	3					
21	97885–06045	SCREW, PAN HEAD VIS, A ENCOCHE	4					
22	90209–06M05	WASHER RONDELLE	4					
23	6AH–81994–40	LABEL, SAFETY ETIQUETTE, SECURITE	1					
24	6AH–81994–50	LABEL, SAFETY ETIQUETTE, SECURITE	1					
25	6K5–14488–00	LABEL, CAUTION ETIQUETTE, RECOMMANDATION	1					

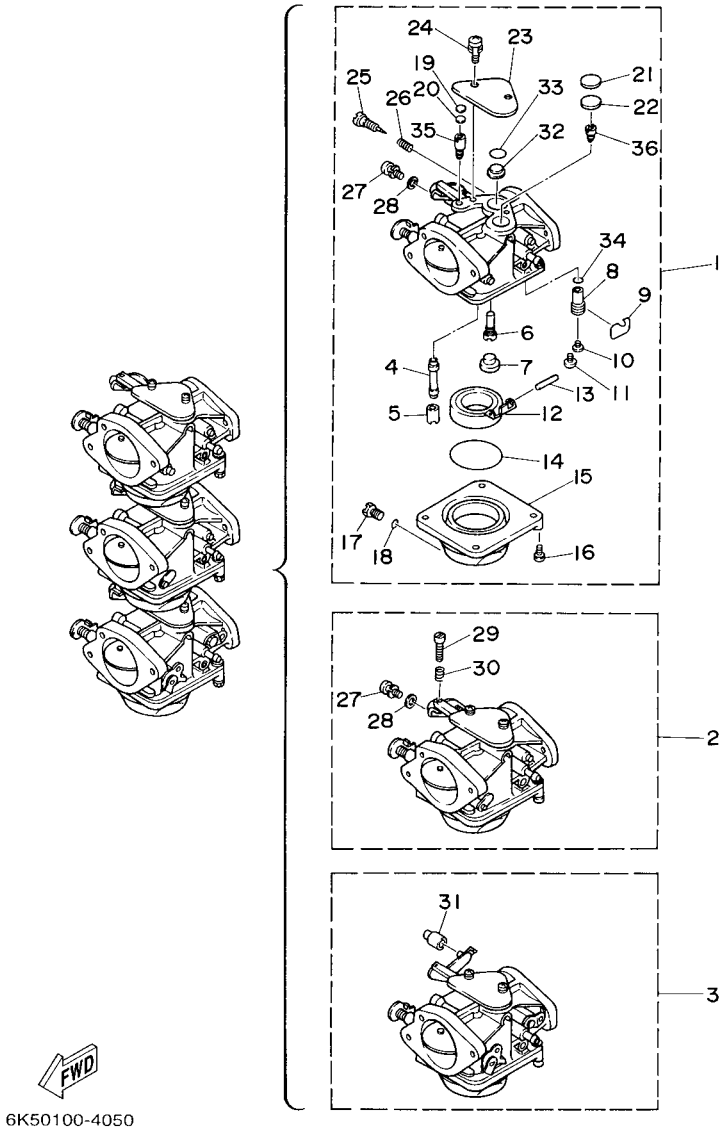

FIG. 5 CARBURETOR CARBURATEUR

REF. NO.	PART NO. N° PIECES	DESCRIPTION DESCRIPTION	69D9					REMARKS REMARQUES
1	6K5–14301–03	CARBURETOR ASSY 1 CARBURATEUR COMPLET 1	1					
2	6K5–14302–03	CARBURETOR ASSY 2 CARBURATEUR COMPLET 2	1					
3	6K5–14303–03	CARBURETOR ASSY 3 CARBURATEUR COMPLET 3	1					
4	6H2–14947–02	.NOZZLE, MAIN .PUITS D'AIGUILLE	3					
5	676–14943–34	.JET, MAIN (#135) .GICLEUR, PRINCIPAL (#135)	3					
6	6H4–14948–15	.JET, SLOW (#70) .GICLEUR (#70)	3					
7	676–14966–00	.CAP .CAPUCHON	3					
8	6H3–14590–01	.NEEDLE VALVE ASSY .POINTEAU	3					
9	663–14159–00	.CLIP .JONC	3					
10	676–14186–00	.PIN, FLOAT .AXE, FLOTTEUR	3					
11	98580–04008	.SCREW, PAN HEAD .VIS	3					
12	6G1–14985–00	.FLOAT .FLOTTEUR	3					
13	688–14548–00	.PIN, FLOAT ARM .AXE, BRAS DE FLOTTEUR	3					
14	6G1–14984–00	.O-RING .JOINT TORIQUE	3					
15	6H2–14980–00	.BODY, FLOAT CHAMBER .CORPS, CUVE DE FLOTTEUR	3					
16	97980–04114	.SCREW, WITH WASHER .VIS, AVEC RONDELLE	12					
17	6H3–14992–00	.SCREW, DRAIN .BOUCHON, PURGE	3					
18	93210–04230	.O-RING .JOINT TORIQUE	3					
19	663–14126–00	.GASKET .JOINT	3					
20	663–14527–00	.PLATE .PLAQUE	3					
21	688–14126–00	.GASKET .JOINT	3					
22	688–14527–00	.PLATE .PLAQUE	3					
23	6H2–14527–01	.PLATE .PLAQUE	3					
24	97980–05310	.SCREW, WITH WASHER .VIS, AVEC RONDELLE	6					
25	692–14923–00	.SCREW, PILOT .VIS, RALENTI	3					
26	679–14555–00	.SPRING .RESSORT	3					
27	6K5–14592–00	.SCREW .VIS	2					#1,2 #1,2

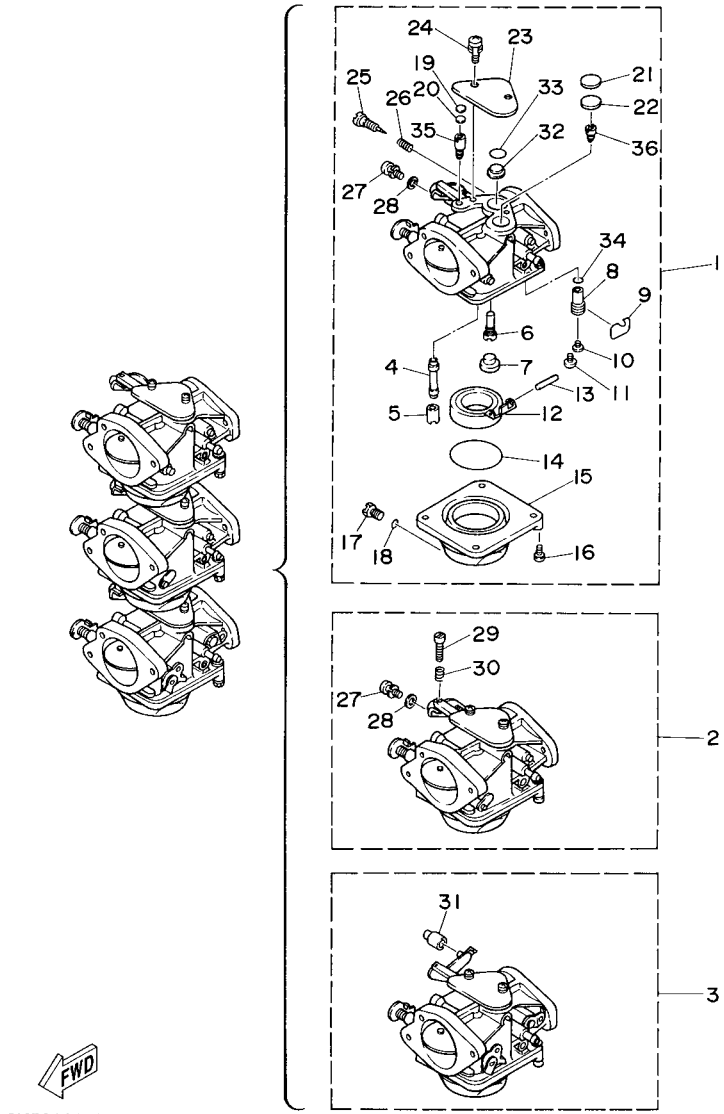

6K50100-4050

FIG. 5 CARBURETOR CARBURATEUR

REF. NO.	PART NO. N° PIECES	DESCRIPTION DESCRIPTION	69D9					REMARKS REMARQUES
28	90201–05652	.WASHER, PLATE .RONDELLE, PLATE	2					#1,2 #1,2
29	63V–14523–00	.SCREW, STOP .VIS, BUTEE	1					#2 #2
30	90501–10326	.SPRING, COMPRESSION .RESSORT, COMPRESSION	1					#2 #2
31	6H2–14578–00	.COLLAR .COLLERETTE	1					#3 #3
32	6H3–14578–00	.PLATE .PLAQUE	3					
33	93210–15M52	.O-RING .JOINT TORIQUE	3					
34	93210–04228	.O-RING .JOINT TORIQUE	3					
35	6K5–14945–36	.JET, AIR MAIN (#145) .GICLEUR (#145)	3					
36	6K5–14950–21	.JET, AIR SLOW (#85) .GICLEUR (#85)	3					

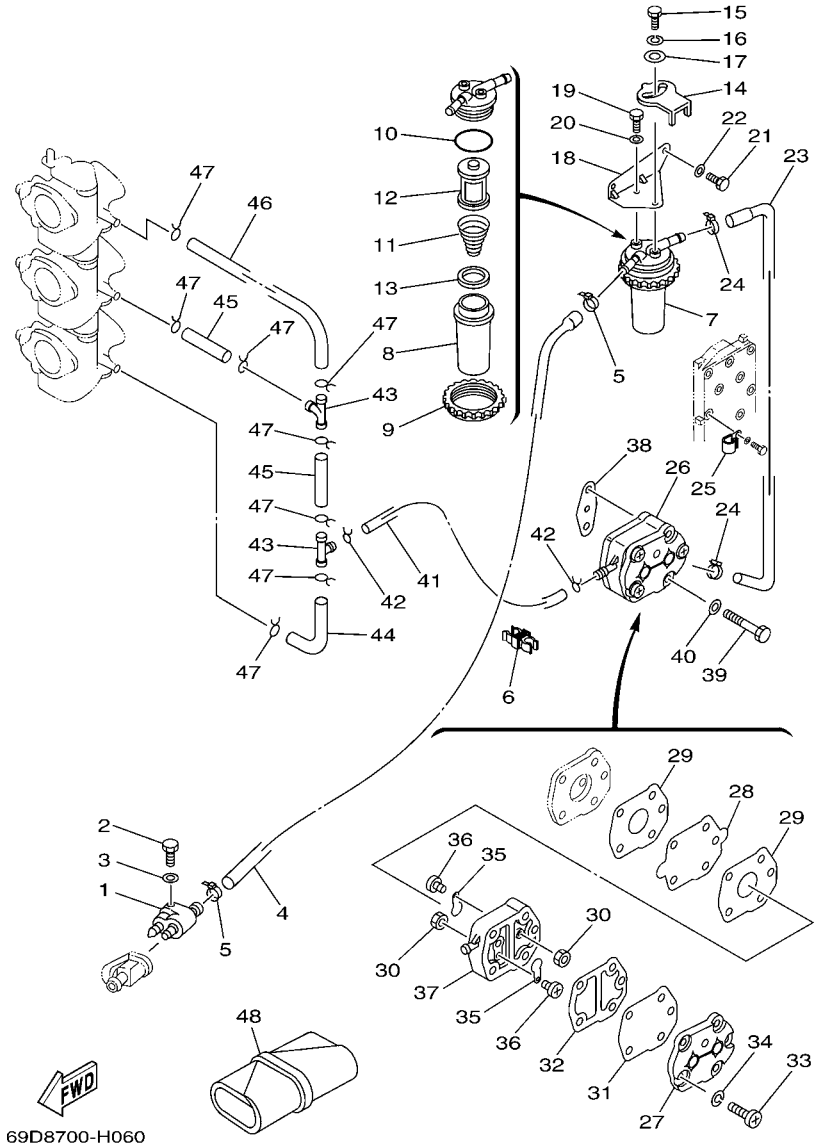

FIG. 6 FUEL CARBURANT

REF. NO.	PART NO. N° PIECES	DESCRIPTION DESCRIPTION	69D9					REMARKS REMARQUES
1	6G1–24304–02	FUEL PIPE JOINT COMP. 1 DURITE RACCORDEMT. A ESSENCE	1					
2	97095–06025	BOLT BOULON	1					
3	92995–06600	WASHER RONDELLE	1					
4	69D–24311–00	PIPE, FUEL 1 DURITE A ESSENCE	1					
5	90465–11M10	CLAMP BRIDE	2					
6	90464–10M59	CLAMP BRIDE	1					
7	61A–24560–04	FILTER ASSY ENS FILTRE	1					
8	61A–24521–00	.CUP, FILTER .CUVETTE, FILTRE	1					
9	65L–24531–01	.NUT .ECROU	1					
10	61A–24564–00	.O-RING .JOINT TORIQUE	1					
11	61A–24577–01	.SPRING .RESSORT	1					
12	61A–24563–00	.ELEMENT, FILTER .ELEMENT, FILTRE	1					
13	61A–24469–00	.FLOAT, WATER LEVEL .FLOTTEUR	1					
14	60H–24558–00	HOLDER, FILTER SUPPORT, FILTRE	1					
15	97095–06016	BOLT BOULON	1					
16	92995–06100	WASHER, SPRING RONDELLE, GROWER	1					
17	90201–06068	WASHER, PLATE RONDELLE, PLATE	1					
18	69D–24566–01	BRACKET, FILTER SUPPORT, FILTRE	1					
19	97095–06014	BOLT BOULON	1					
20	92995–06600	WASHER RONDELLE	1					
21	97095–06016	BOLT BOULON	2					
22	92995–06600	WASHER RONDELLE	2					
23	69D–24312–00	PIPE 2 DURITE 2	1					
24	90465–11M10	CLAMP BRIDE	2					
25	90465–08M83	CLAMP BRIDE	1					
26	692–24410–00	FUEL PUMP ASSY POMPE A ESSENCE	1					
27	6A0–24413–00	.BODY 2 .CORPS 2	1					

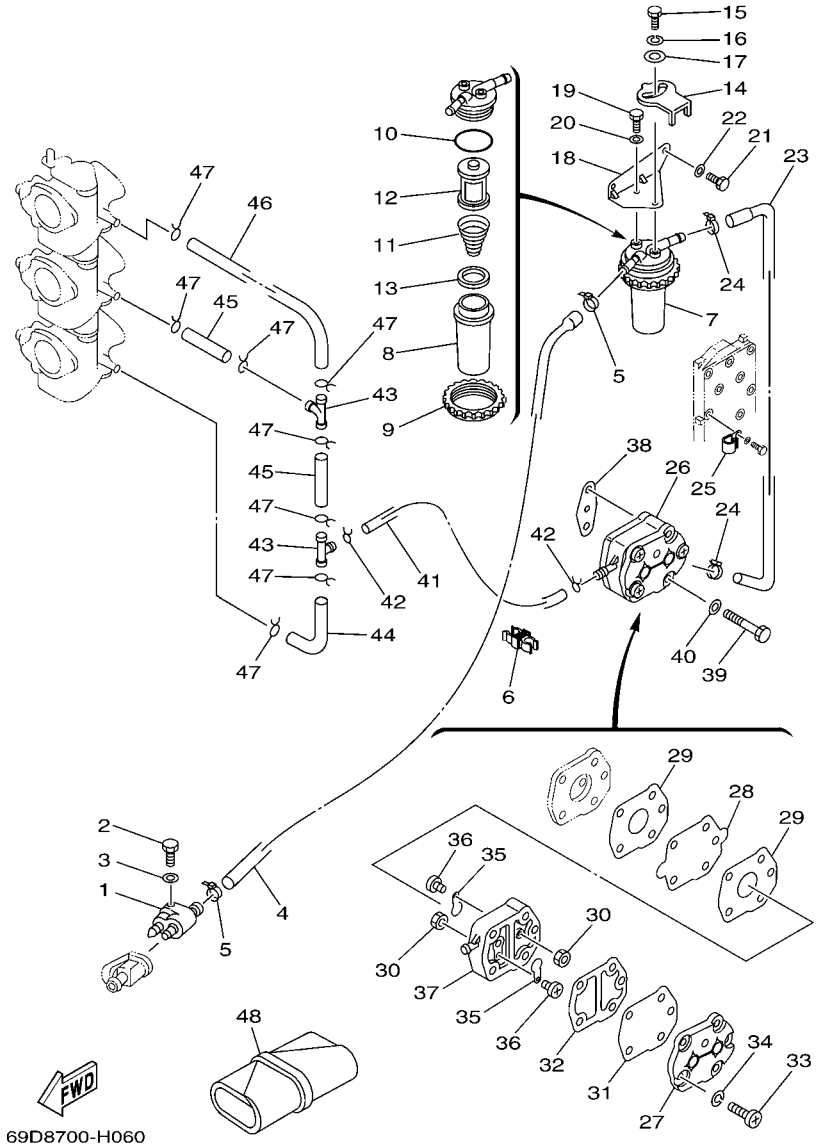

FIG. 6 FUEL CARBURANT

REF. NO.	PART NO. N° PIECES	DESCRIPTION DESCRIPTION	69D9					REMARKS REMARQUES
28	692–24411–00	.DIAPHRAGM .DIAPHRAGME	1					
29	648–24434–01	.GASKET, BODY .JOINT, CORPS	2					
30	95380–03600	.NUT .ECROU	2					
31	663–24411–00	.DIAPHRAGM .DIAPHRAGME	1					
32	648–24435–02	.GASKET, BODY 2 .JOINT, CORPS 2	1					
33	98503–05028	.SCREW, PAN HEAD .VIS	3					
34	92990–05100	.WASHER, SPRING .RONDELLE, GROWER	3					
35	6A0–24421–01	.VALVE, CHECK .SOUPAPE, RETENUE	2					
36	6A0–14325–00	.SCREW, PAN HEAD .VIS TETE CONIQUE	2					
37	6A0–24412–02	.BODY 1 .CORPS 1	1					
38	650–24431–A0	GASKET, FUEL PUMP 1 JOINT 1 DE POMPE A ESSENCE	1					
39	97095–06040	BOLT BOULON	2					
40	92995–06600	WASHER RONDELLE	2					
41	90445–09072	HOSE (L120) DURITE (L120)	1					
42	90467–08004	CLIP JONC	2					
43	688–24378–00	PIPE, JOINT 3 DURITE RACCORDEMENT 3	2					
44	6H3–24313–00	PIPE 3 DURITE 3	1					
45	90445–09220	HOSE (L30) DURITE (L30)	2					
46	6H3–24314–00	PIPE 4 DURITE 4	1					
47	90467–08004	CLIP JONC	8					
48	656–W2810–02	TOOL KIT TROUSSE A OUTILS	1					

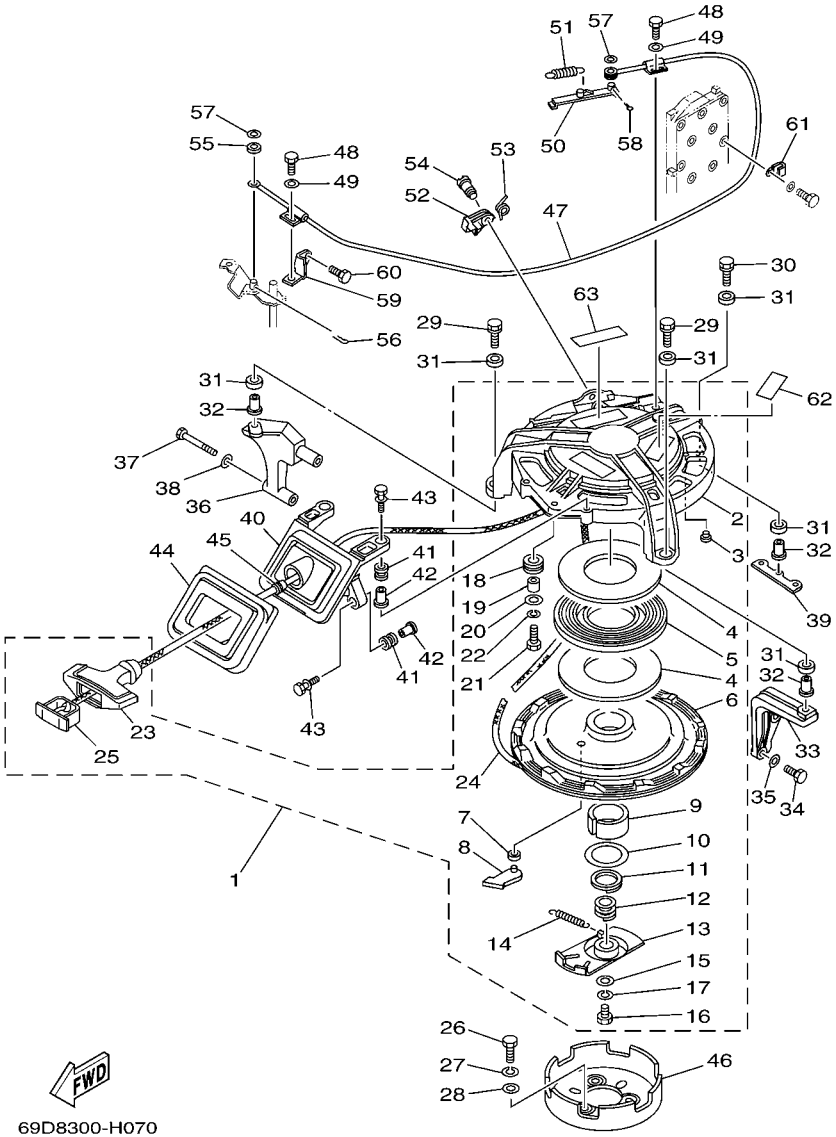

*1:CUT FROM 50M ROLLS,PART NO.90890-44374,CUTTING LENGTH 2.3M

*1:A PRELEVER SUR BOBINE 50M ,REFERENCE 90890-44374,
LONGUEUR DE COUPE 2.3M

FIG. 7 STARTER DEMARREUR

REF. NO.	PART NO. N° PIECES	DESCRIPTION DESCRIPTION	69D9					REMARKS REMARQUES
1	692–W1571–03	STARTER ASSY DEMARREUR COMPLET	1					
2	692–15711–01	.CASE, STARTER .CARTER DE DEMARREUR	1					
3	648–15773–00	.STAY 3 .SUPPORT 3	5					
4	663–15739–00	.WASHER, THRUST .RONDELLE, DE BUTEE	2					
5	663–15713–00	.SPRING, STARTER .RESSORT DE DEMARREUR	1					
6	663–15714–01	.DRUM, SHEAVE .TAMBOUR, POULIE	1					
7	663–15764–00	.COLLAR 1 .COLLERETTE 1	1					
8	663–15741–02	.PAWL, DRIVE .CLIQUET, ENTRAINEMENT	1					
9	663–15754–00	.BUSH 2 .BAGUE 2	1					
10	663–15726–01	.WASHER, FLAT .RONDELLE, PLATE	1					
11	663–15744–00	.CIRCLIP .CIRCLIP	1					
12	663–15715–00	.SPRING, FRICTION .RESSORT, PLAQUE D'ENTRAINEMT	1					
13	696–15716–00	.PLATE, DRIVE .PLAQUE, ENTRAINEMENT	1					
14	696–15734–00	.SPRING, RETURN .RESSORT, RAPPEL	1					
15	663–15719–00	.WASHER, THRUST .RONDELLE, DE BUTEE	1					
16	97095–06016	.BOLT .BOULON	1					
17	92995–06100	.WASHER, SPRING .RONDELLE, GROWER	1					
18	663–15752–00	.ROLLER, WIRE .GALET, CABLE	1					
19	6F5–15753–00	.BUSH .CHARBON	1					
20	6F5–15791–00	.WASHER, LOCK .RONDELLE-FREIN	1					
21	97017–06025	.BOLT .BOULON	1					
22	92995–06100	.WASHER, SPRING .RONDELLE, GROWER	1					
23	689–15755–01	.HANDLE, STARTER .POIGNEE, DE DEMARREUR	1					
24	*	.WIRE (L:2300MM) .FIL (L:2300MM)	1					*1 *1
25	6F5–15779–02	.COVER .COUVERCLE	1					
26	97013–08012	BOLT BOULON	3					
27	92903–08100	WASHER, SPRING RONDELLE, GROWER	3					

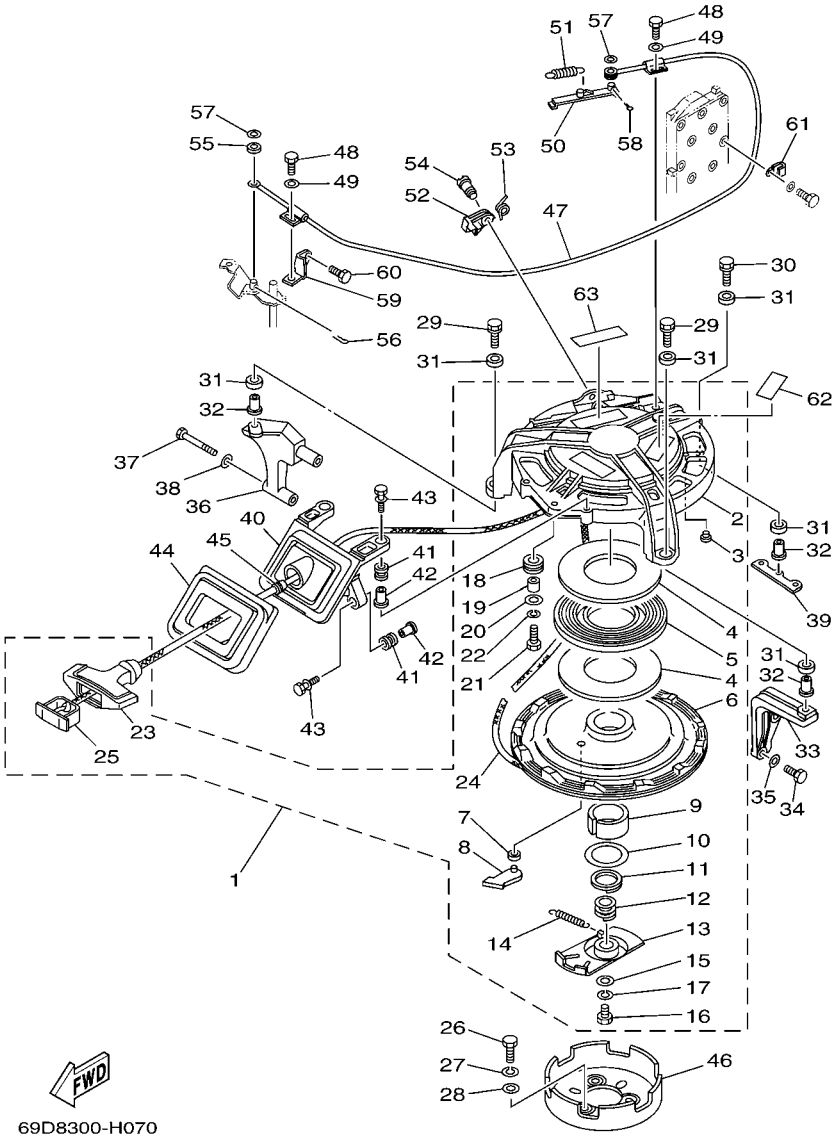

*1:CUT FROM 50M ROLLS,PART NO.90890-44374,CUTTING LENGTH 2.3M

*1:A PRELEVER SUR BOBINE 50M ,REFERENCE 90890-44374,
LONGUEUR DE COUPE 2.3M

FIG. 7 STARTER DEMARREUR

REF. NO.	PART NO. N° PIECES	DESCRIPTION DESCRIPTION	69D9					REMARKS REMARQUES
28	92903–08600	WASHER, PLATE RONDELLE, PLATE	3					
29	90119–08087	BOLT, WITH WASHER BOULON, AVEC RONDELLE	2					
30	90119–08M32	BOLT, WITH WASHER BOULON, AVEC RONDELLE	1					
31	90385–12M04	BUSH DOUILLE	6					
32	90387–08M05	COLLAR COLLERETTE	3					
33	6K5–15771–00–94	STAY 1 SUPPORT 1	1					
34	97013–06025	BOLT BOULON	2					
35	92903–06600	WASHER, PLATE RONDELLE, PLATE	2					
36	6K5–15772–00–94	STAY 2 SUPPORT 2	1					
37	97013–06055	BOLT BOULON	2					
38	92903–06600	WASHER, PLATE RONDELLE, PLATE	2					
39	6K5–15773–01	STAY 3 SUPPORT 3	1					
40	6K5–15758–01–94	GUIDE, ROPE GUIDE DE CABLE	1					
41	6A0–82317–00	DAMPER, IGNITION COIL AMORTISSEUR, BOBINE D'ALLUM	4					
42	90387–06119	COLLAR COLLERETTE	4					
43	90119–06M65	BOLT, WITH WASHER BOULON, AVEC RONDELLE	4					
44	6K5–15762–00	SEAL, RUBBER 2 JOINT CAOUTCHOUC 2	1					
45	697–15789–00	DAMPER AMORTISSEUR	1					
46	6K5–15723–00	PULLEY, STARTER POULIE DE DEMARREUR	1					
47	6K5–15770–01	CABLE COMP., STARTER STOP CABLE, BUTEE DE DEMAR	1					
48	97095–06012	BOLT BOULON	2					
49	92995–06600	WASHER RONDELLE	2					
50	663–15735–01	GUIDE, CAM COULISSEAU	1					
51	90506–08M23	SPRING, TENSION RESSORT, TENSION	1					
52	663–15794–00	STOPPER BUTEE	1					
53	90508–12015	SPRING, TORSION RESSORT, TORSION	1					
54	90149–05095	SCREW VIS	1					

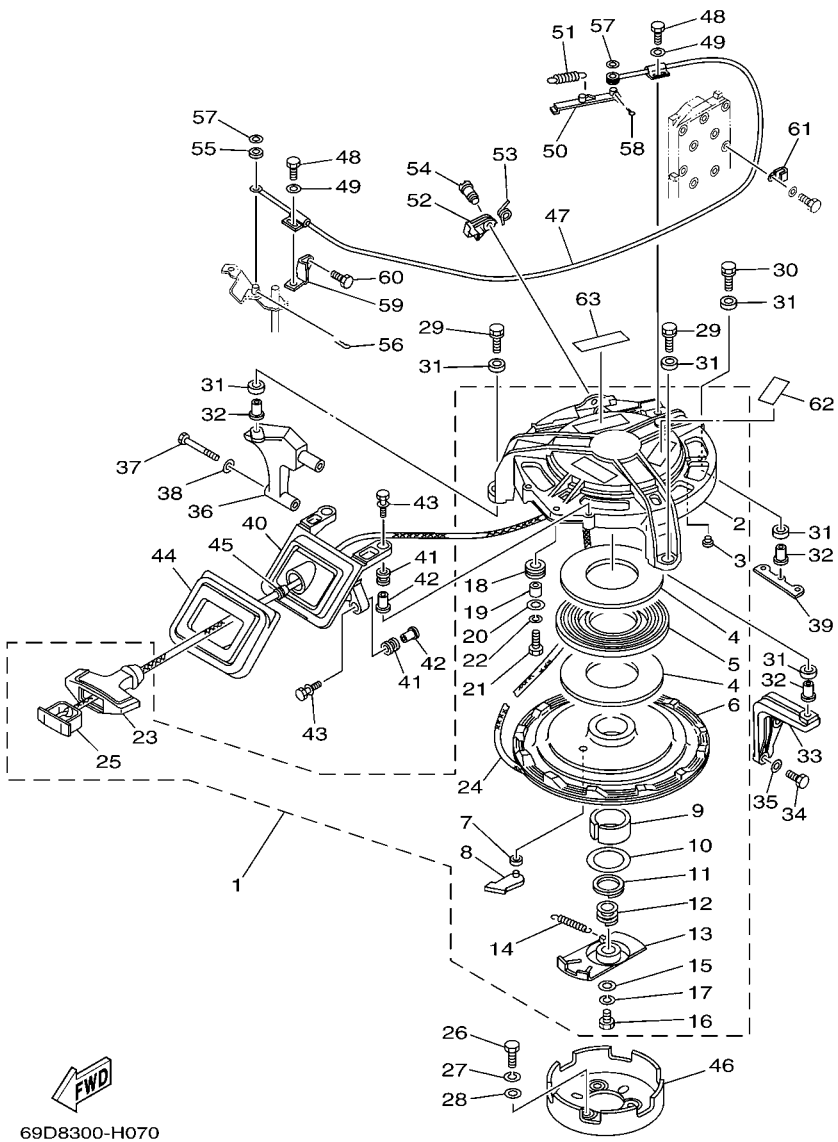

*1:CUT FROM 50M ROLLS,PART NO.90890-44374,CUTTING LENGTH 2.3M

*1:A PRELEVER SUR BOBINE 50M ,REFERENCE 90890-44374,
LONGUEUR DE COUPE 2.3M

FIG. 7 STARTER DEMARREUR

REF. NO.	PART NO. N° PIECES	DESCRIPTION DESCRIPTION	69D9					REMARKS REMARQUES
55	663–15736–00	RING, RETAINING 1 CIRCLIP 1	1					
56	90468–18008	CLIP JONC	1					
57	92903–06200	WASHER, PLAIN RONDELLE, PLATE	2					
58	91490–16012	PIN. COTTER GOUPILLE	1					
59	6K5–15774–00	STAY 4 SUPPORT 4	1					
60	97013–06012	BOLT BOULON	1					
61	90465–06M90	CLAMP BRIDE	1					
62	6AH–81995–40	LABEL, WARNING ETIQUETTE, AVERTISSEMENT	1					
63	6AH–81995–50	LABEL, WARNING ETIQUETTE, AVERTISSEMENT	1					

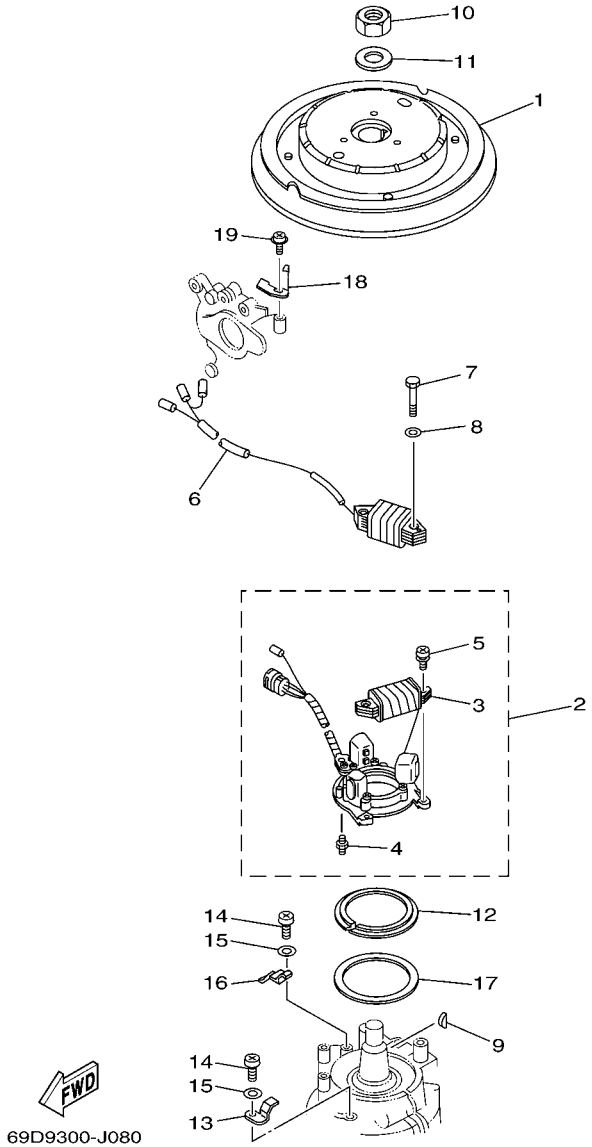

FIG. 8 GENERATOR GENERATRICE

REF. NO.	PART NO. N° PIECES	DESCRIPTION DESCRIPTION	69D9					REMARKS REMARQUES
1	6K5–85550–10	ROTOR ASSY ROTOR CPLT	1					
2	6H3–85510–A1	STATOR ASSY STATOR CPLT	1					
3	6H3–85520–00	.COIL, CHARGE .BOBINE, CHARGE	1					
4	663–85518–00	.JOINT, BALL .JOINT SPHERIQUE	1					
5	97902–05125	.SCREW, WITH WASHER .VIS, AVEC RONDELLE	2					
6	6H3–85533–A0	COIL, LIGHTING BOBINE, ECLAIRAGE	1					
7	97013–06030	BOLT BOULON	2					
8	92903–06600	WASHER, PLATE RONDELLE, PLATE	2					
9	90280–05015	KEY, WOODRUFF CLAVETTE, DEMI-LUNE	1					
10	90170–20137	NUT ECROU	1					
11	90201–21M18	WASHER, PLATE RONDELLE, PLATE	1					
12	6H4–41611–00	RETAINER, MAGNETO BASE FLASQUE, PLATEAU D'AVANCE	1					
13	6H3–41612–00	RETAINER, MAGNETO BASE FLASQUE, PLATEAU D'AVANCE	2					
14	97885–06012	SCREW, PAN HEAD VIS, A ENCOCHE	3					
15	92995–06600	WASHER RONDELLE	3					
16	6H3–41612–10	RETAINER, MAGNETO BASE FLASQUE, PLATEAU D'AVANCE	1					
17	6K5–41618–00	WASHER, MAGNETO RONDELLE, MAGNETO	1					
18	6K5–81332–60	PLATE, TIMING PLATEAU, ALLUMAGE	1					
19	97985–06210	SCREW, WITH WASHER VIS, AVEC RONDELLE	1					

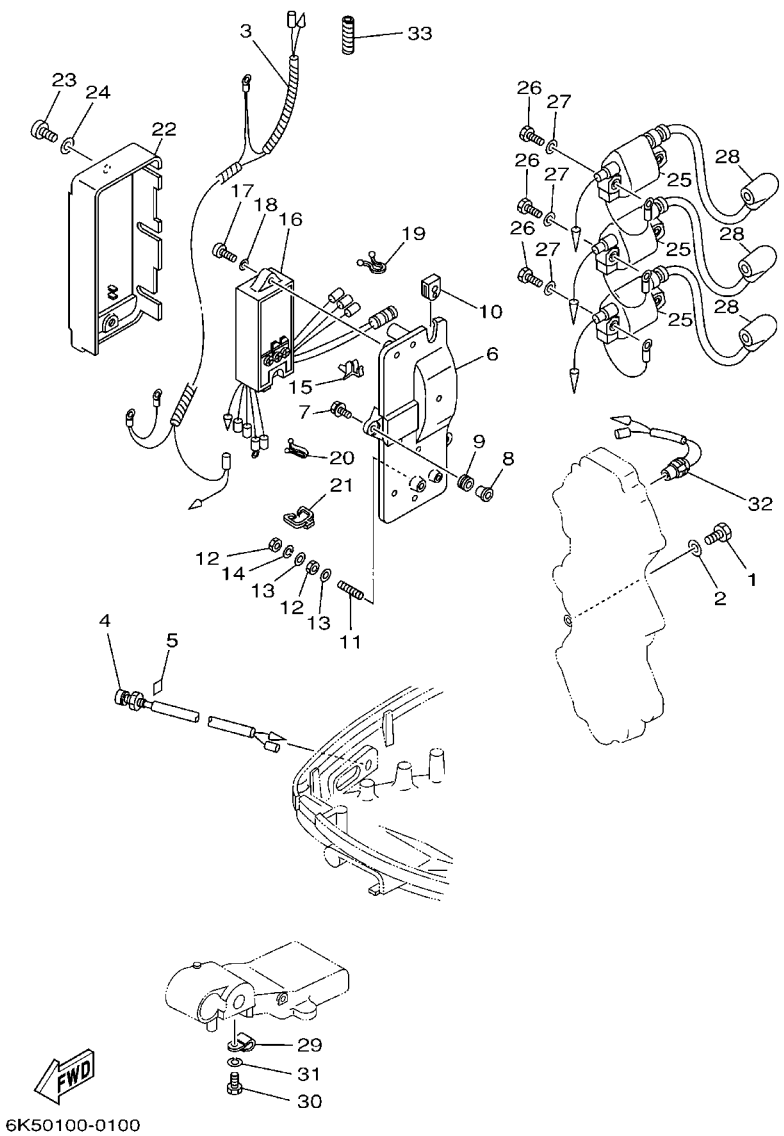

FIG. 9 ELECTRICAL ELECTRIQUE

REF. NO.	PART NO. N° PIECES	DESCRIPTION DESCRIPTION	69D9					REMARKS REMARQUES
1	97013–06012	BOLT BOULON	1					
2	92903–06600	WASHER, PLATE RONDELLE, PLATE	1					
3	6K5–82531–00	WIRE, LEAD FIL	1					
4	6H4–85411–00	OVERHEAT WARNING LAMP SURCHAUFFER LAMPE GRI	1					
5	6H4–85415–00	MARK, SIGNAL LAMP ETIQUETTE	1					
6	6H3–85542–00–94	BRACKET SUPPORT	1					
7	90105–06M14	BOLT FLANGE BOULON	3					
8	90387–06M43	COLLAR COLLERETTE	3					
9	90480–13M24	GROMMET PASSE-FIL	3					
10	6H3–81922–00	GROMMET OEILLET CAOUTCHOUC	1					
11	90116–06M07	BOLT, STUD GOUJON	1					
12	95380–06700	NUT ECROU	2					
13	92990–06200	WASHER, PLAIN RONDELLE, PLATE	2					
14	92990–06100	WASHER, SPRING RONDELLE, GROWER	1					
15	90464–04M12	CLAMP BRIDE	1					
16	6H3–85540–11	C.D.I. UNIT ASSY BLOC C.D.I.	1					
17	97880–06025	SCREW, PAN HEAD VIS, TETE TRONCONIQUE	2					
18	92990–06600	WASHER, PLATE RONDELLE, PLATE	2					
19	90464–08M07	CLAMP BRIDE	1					
20	90464–12M17	CLAMP BRIDE	1					
21	90464–07M10	CLAMP BRIDE	1					
22	6H3–81916–00	COVER, TERMINAL COUVERCLE, BORNE	1					
23	97885–06012	SCREW, PAN HEAD VIS, A ENCOCHE	2					
24	92995–06600	WASHER RONDELLE	2					
25	6H3–85570–10	IGNITION COIL ASSY BOBINE D'ALLUMAGE (ENS.)	3					
26	97013–06025	BOLT BOULON	6					
27	92903–06600	WASHER, PLATE RONDELLE, PLATE	6					

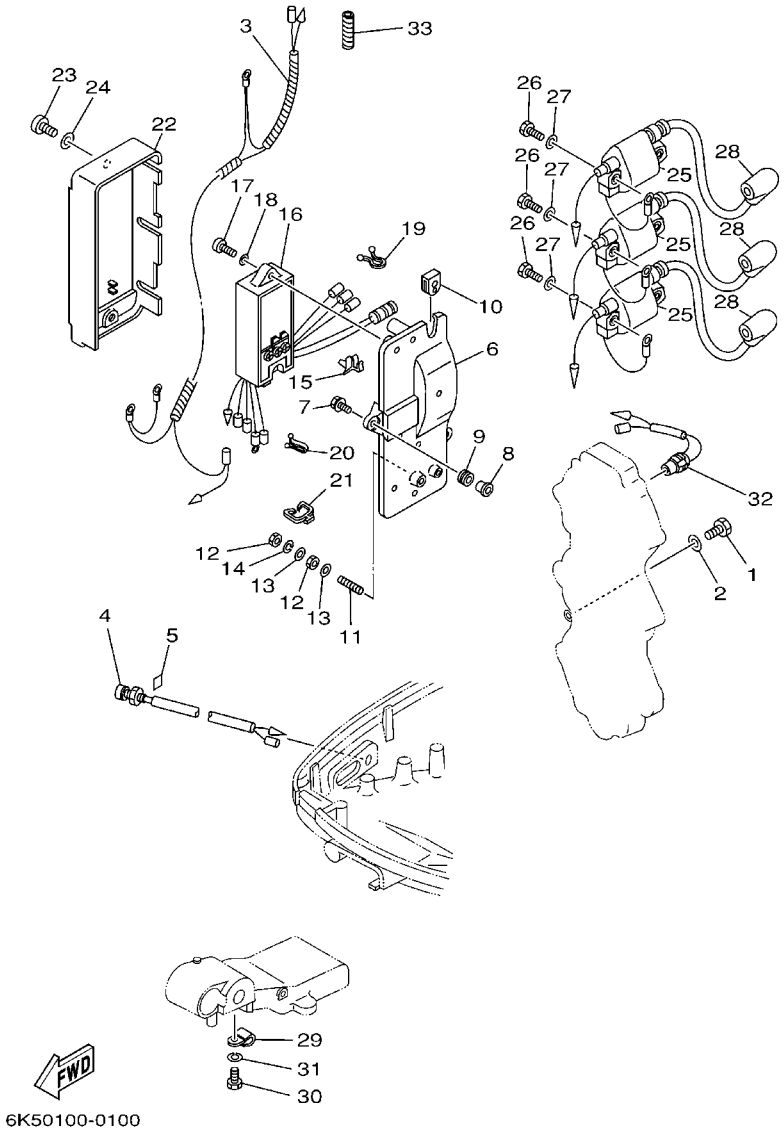

FIG. 9 ELECTRICAL ELECTRIQUE

REF. NO.	PART NO. N° PIECES	DESCRIPTION DESCRIPTION	69D9					REMARKS REMARQUES
28	6G1–82370–21	PLUG CAP ASSY ANTIPARASITE	3					
29	90465–06M90	CLAMP BRIDE	1					
30	97013–06012	BOLT BOULON	1					
31	92903–06100	WASHER, SPRING RONDELLE, GROWER	1					
32	688–82560–10	THERMO SWITCH ASSY THERMO-CONTACT COMPLET	1					
33	90446–10M02	HOSE DURITE	1					

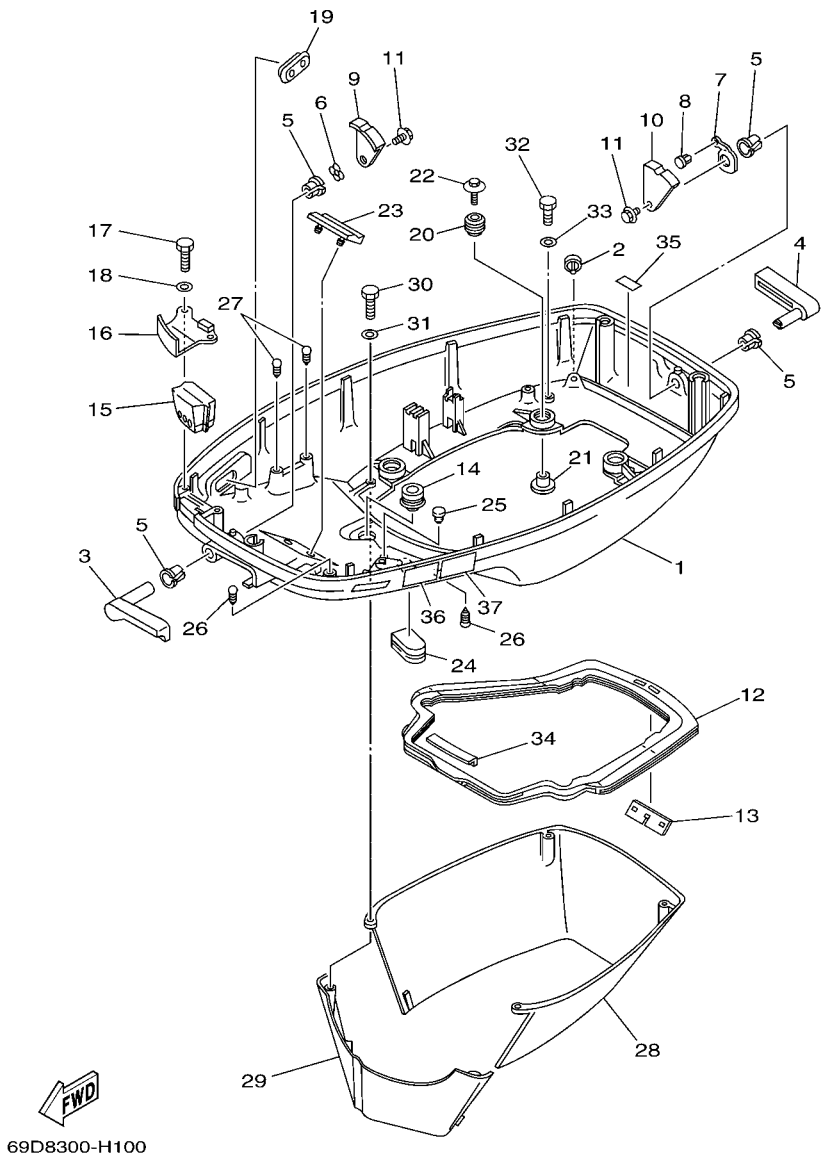

FIG. 10 BOTTOM COWLING CAPOT INFERIEUR

REF. NO.	PART NO. N° PIECES	DESCRIPTION DESCRIPTION	69D9					REMARKS REMARQUES
1	6H3–42711–15–4D	COWLING, BOTTOM 1 CUVETTE 1	1					
2	69D–44391–00	NIPPLE, HOSE RACCORD D'ESSENCE	1					
3	6H3–42815–01–4D	LEVER, CLAMP LEVIER, PRESSE	1					
4	6H3–42817–01–4D	LEVER, CLAMP LEVIER, PRESSE	1					
5	90386–13M38	BUSH DOUILLE	4					
6	90206–13M10	WASHER, WAVE RONDELLE, ONDULEE	1					
7	6H3–42813–00	SPRING, CLAMP LEVER RESSORT	1					
8	90269–04M03	RIVET RIVET	1					
9	6H3–42816–00	LEVER, CLAMP LEVIER, PRESSE	1					
10	6H3–42818–00	LEVER, CLAMP LEVIER, PRESSE	1					
11	90119–06M09	BOLT, WITH WASHER BOULON, AVEC RONDELLE	2					
12	6H3–42716–02	RUBBER, SEAL 1 JOINT EN CAOUTCHOUC 1	1					
13	6K5–42717–00	RUBBER, SEAL 2 JOINT EN CAOUTCHOUC 2	1					
14	6E5–42724–00	GROMMET PASSE-FIL	1					
15	6K5–42725–00	GROMMET PASSE-FIL	1					
16	6H3–42738–01–5B	PLATE, FITTING ETRIER	1					
17	97095–06016	BOLT BOULON	2					
18	92995–06600	WASHER RONDELLE	2					
19	6H3–42727–00	GROMMET PASSE-FIL	1					
20	6BG–42748–00	GROMMET PASSE-FIL	4					
21	90387–06M69	COLLAR COLLERETTE	4					
22	90119–06M61	BOLT, WITH WASHER BOULON, AVEC RONDELLE	4					
23	6H3–42768–00	DAMPER AMORTISSEUR	1					
24	6H4–42726–00	GROMMET PASSE-FIL	1					
25	703–82119–00	COVER, LEAD WIRE GARNITURE, FIL	2					
26	90338–05M03	PLUG PLOT	2					
27	90338–05M03	PLUG PLOT	2					

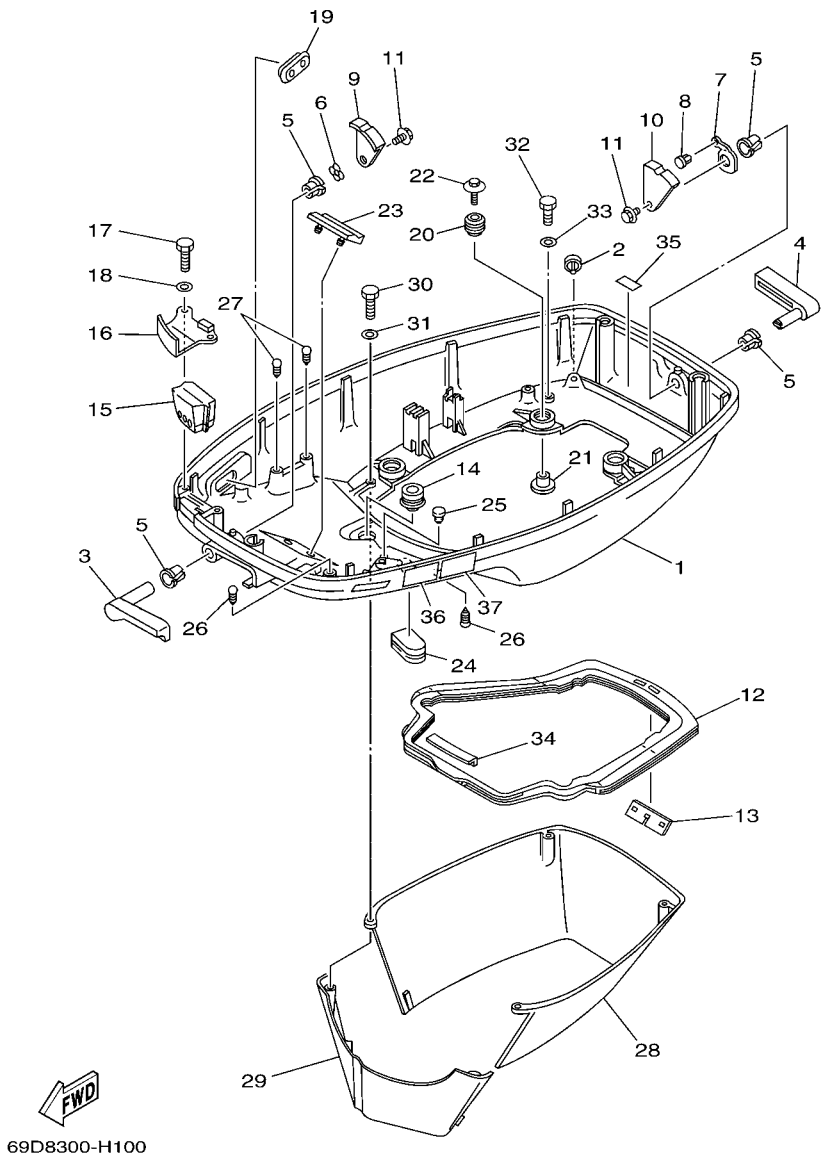

FIG. 10 BOTTOM COWLING CAPOT INFERIEUR

REF. NO.	PART NO. N° PIECES	DESCRIPTION DESCRIPTION	69D9					REMARKS REMARQUES
28	6H3–42741–01–4D	APRON CAPOT LATERAL	1					
29	6H3–42771–01–4D	APRON CAPOT LATERAL	1					
30	97095–06025	BOLT BOULON	2					
31	92995–06600	WASHER RONDELLE	2					
32	97095–06020	BOLT BOULON	2					
33	92995–06600	WASHER RONDELLE	2					
34	6H3–42718–00	RUBBER, SEAL 3 JOINT	1					
35	6G5–42791–10	MARK 1 ETIQUETTE 1	1					
36	6AH–42794–40	LABEL, WARNING (GENERAL) ETIQUETTE, AVERTISSEMENT	1					
37	6AH–42794–50	LABEL, WARNING (GENERAL) ETIQUETTE, AVERTISSEMENT	1					

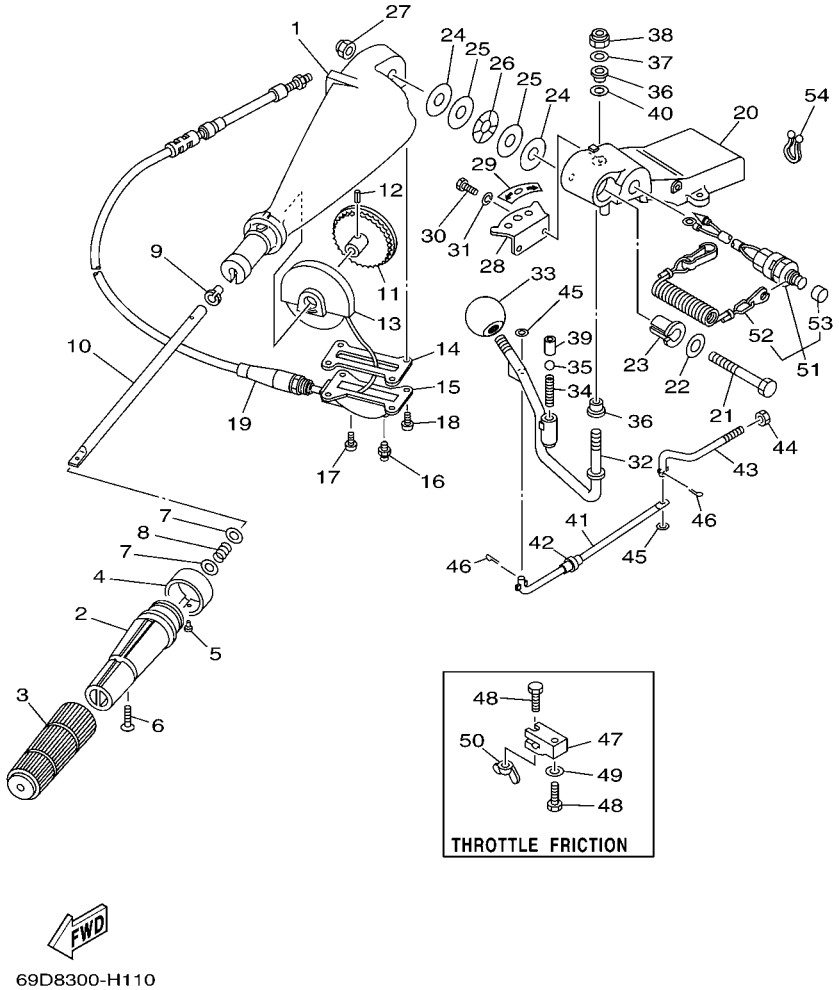

FIG. 11 STEERING DIRECTION

REF. NO.	PART NO. N° PIECES	DESCRIPTION DESCRIPTION	69D9					REMARKS REMARQUES
1	663–42111–02–4D	HANDLE, STEERING POIGNEE	1					
2	664–42119–00	GRIP, STEERING HANDLE POIGNEE, BARRE FRANCHE	1					
3	6F6–42177–A0	RUBBER, HANDLE CAOUTCHOUC, POIGNEE	1					
4	6K5–42137–00	INDICATOR, THROTTLE INDICATEUR, ACCELERATION	1					
5	90269–02M09	RIVET RIVET	1					
6	90149–05M13	SCREW VIS	1					
7	90201–10M02	WASHER, PLATE RONDELLE, PLATE	2					
8	90501–23215	SPRING, COMPRESSION RESSORT, COMPRESSION	1					
9	90386–08032	BUSH DOUILLE	1					
10	663–42115–00	SHAFT, STEERING HANDLE AXE, BARRE FRANCHE	1					
11	663–42138–00	LEVER, THROTTLE LEVIER, ACCELERATEUR	1					
12	90254–03003	PIN, SPRING RIVET, TETE TRONCONIQUE	1					
13	663–42135–01	HOUSING, THROTTLE LEVER BOITIER, CREMAILLERE	1					
14	663–42133–01	GASKET JOINT	1					
15	663–42134–03–94	COVER, THROTTLE LEVER CAPOT, CREMAILLERE	1					
16	93700–06M03	NIPPLE, GREASE PION	1					
17	97885–06008	SCREW, PAN HEAD VIS, A ENCOCHE	1					
18	97885–05012	SCREW, PAN HEAD VIS, A ENCOCHE	4					
19	692–26301–03	THROTTLE CABLE ASSY CABLE D'ACCELERATEUR	1					
20	692–42121–02–4D	BRACKET SUPPORT	1					
21	90101–12M06	BOLT BOULON	1					
22	92990–12200	WASHER, PLAIN RONDELLE, PLATE	1					
23	90386–12089	BUSH DOUILLE	1					
24	90202–12092	WASHER, PLATE RONDELLE, PLATE	2					
25	90201–12537	WASHER, PLATE RONDELLE, PLATE	2					
26	90206–12054	WASHER, WAVE RONDELLE, ONDULEE	1					
27	90185–12058	NUT, SELF-LOCKING ECROU,AUTO-BLOQUANT	1					

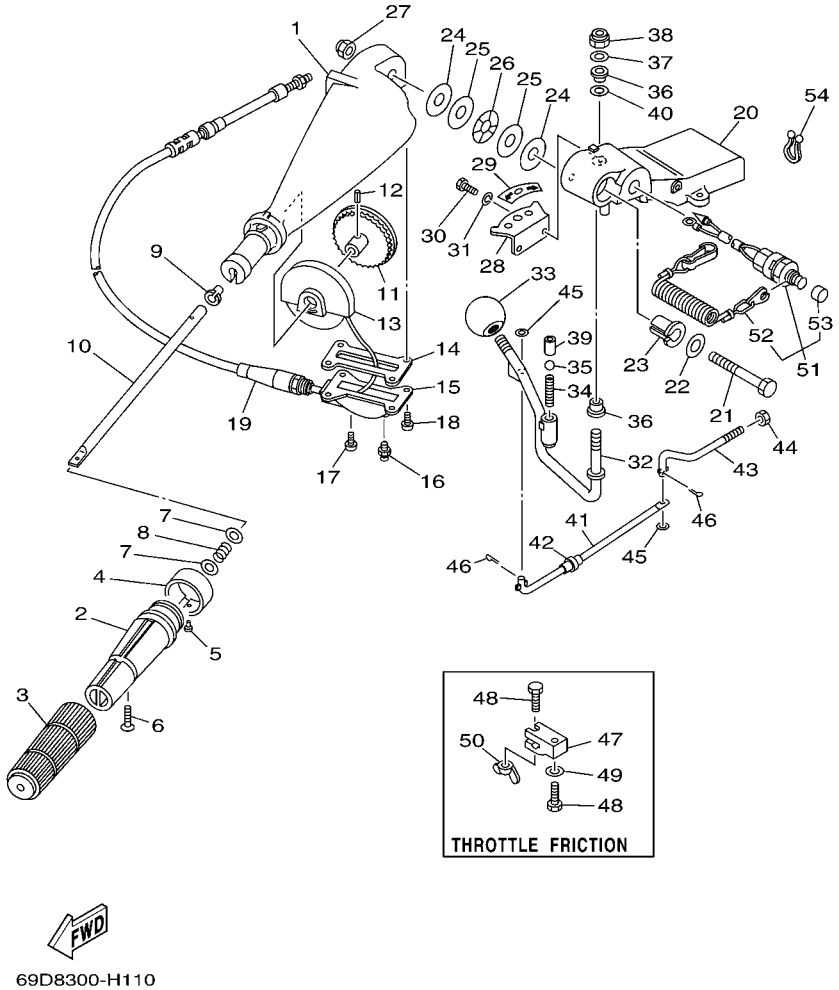

FIG. 11 STEERING DIRECTION

REF. NO.	PART NO. N° PIECES	DESCRIPTION DESCRIPTION	69D9					REMARKS REMARQUES
28	697–44113–00	CAM PLATE, HANDLE CAME, VERROUILLAGE	1					
29	6K5–44191–00	INDICATOR, SHIFT ETIQUETTE, EMBRAYAGE	1					
30	97013–06016	BOLT BOULON	2					
31	92903–06100	WASHER, SPRING RONDELLE, GROWER	2					
32	692–44159–01	HANDLE, GEAR SHIFT POIGNEE, LEVIER D'EMBRAYAGE	1					
33	663–44173–00	LEVER, SHIFT CONTROL POIGNEE, INVERSION	1					
34	90501–16M17	SPRING, COMPRESSION RESSORT, COMPRESSION	1					
35	93515–32M01	BALL BILLE	1					
36	90386–10009	BUSH DOUILLE	2					
37	90201–10120	WASHER, PLATE RONDELLE, PLATE	1					
38	90185–10051	NUT, SELF-LOCKING ECROU,AUTO-BLOQUANT	1					
39	90387–12M30	COLLAR COLLERETTE	1					
40	90201–12M34	WASHER, PLATE RONDELLE, PLATE	1					
41	6H3–42191–01	ROD 1 TRINGLE 2	1					
42	90386–06088	BUSH DOUILLE	1					
43	6H3–42192–00	ROD 2 TRINGLE 2	1					
44	700–48339–00	NUT, CABLE END ECROU, CABLE COMMANDE DISTANCE	1					
45	92990–06600	WASHER, PLATE RONDELLE, PLATE	2					
46	91490–25012	PIN. COTTER GOUPILLE	2					
47	663–42126–01	FRICTION, STEERING HANDLE GRIP CUVETTE, POIGNEE DE DIRECTION	1					
48	90101–06M27	BOLT BOULON	2					
49	92990–06600	WASHER, PLATE RONDELLE, PLATE	1					
50	90175–06003	NUT, WING ECROU, A OREILLES	1					
51	6K5–82575–03	ENGINE STOP SWITCH ASSY COUPE CIRCUIT CPLT	1					
52	682–82556–00	.LANYARD, STOP SWITCH .PLAQUETTE	1					
53	689–8257Y–00	.CAP .COUVERCLE	1					
54	90464–08M07	CLAMP BRIDE	2					

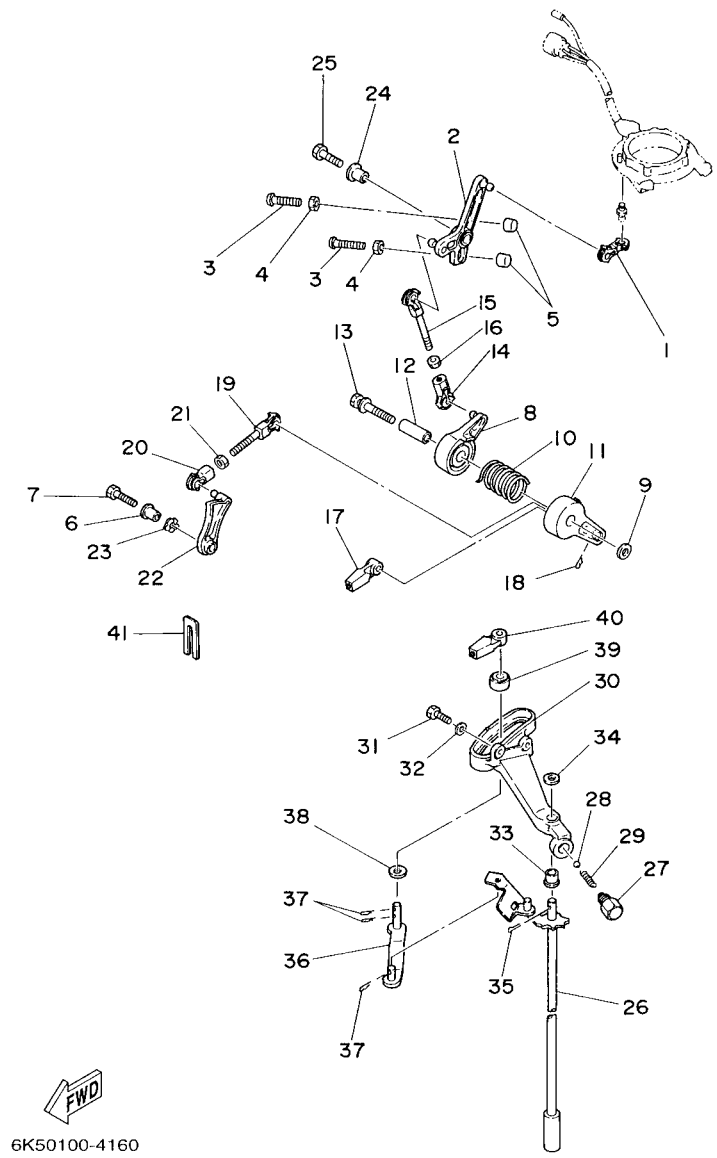

FIG. 12 CONTROL COMMANDE

REF. NO.	PART NO. N° PIECES	DESCRIPTION DESCRIPTION	69D9					REMARKS REMARQUES
1	6H3–41238–00	JOINT, LINK RACCORD	1					
2	6H3–41631–00	LEVER, MAGNETO CONTROL LEVIER, COMMANDE D'AVANCE	1					
3	90157–06M13	SCREW, PAN HEAD VIS, TETE TRONCONIQUE	2					
4	95380–06600	NUT, HEXAGON ECROU	2					
5	688–44194–00	CAP CAPUCHON	2					
6	90387–06M60	COLLAR COLLERETTE	1					
7	97095–06025	BOLT BOULON	1					
8	6H3–41632–00	LEVER, MAGNETO CONTROL LEVIER, COMMANDE D'AVANCE	1					
9	90201–06M31	WASHER, PLATE RONDELLE, PLATE	1					
10	90508–29M19	SPRING, TORSION RESSORT, TORSION	1					
11	6H3–41633–00	LEVER, MAGNETO CONTROL LEVIER, COMMANDE D'AVANCE	1					
12	90387–06M59	COLLAR COLLERETTE	1					
13	90119–06M91	BOLT, WITH WASHER BOULON, AVEC RONDELLE	1					
14	662–41237–01	JOINT, LINK RACCORD	1					
15	679–41636–00	ROD, MAGNETO CONTROL BIELLETTE, COMMANDE D'AVANCE	1					
16	95380–05600	NUT ECROU	1					
17	663–48344–00	CABLE END, REMOTE CONTROL CHAPE CABLE	1					
18	90468–18008	CLIP JONC	1					
19	682–41237–50	JOINT, LINK RACCORD	1					
20	662–41237–01	JOINT, LINK RACCORD	1					
21	95380–05600	NUT ECROU	1					
22	6H3–41213–01	CAM, ACCEL. CAME, ACCELERATION	1					
23	90206–10M04	WASHER, WAVE RONDELLE, ONDULEE	1					
24	90387–06M60	COLLAR COLLERETTE	1					
25	97095–06025	BOLT BOULON	1					
26	6K5–44120–11	HANDLE GEAR SHIFT ASSY LEVIER D'EMBRAYAGE	1					L(22.5") L(22.5")
27	648–42715–00	BUSHING COUSSINET	1					

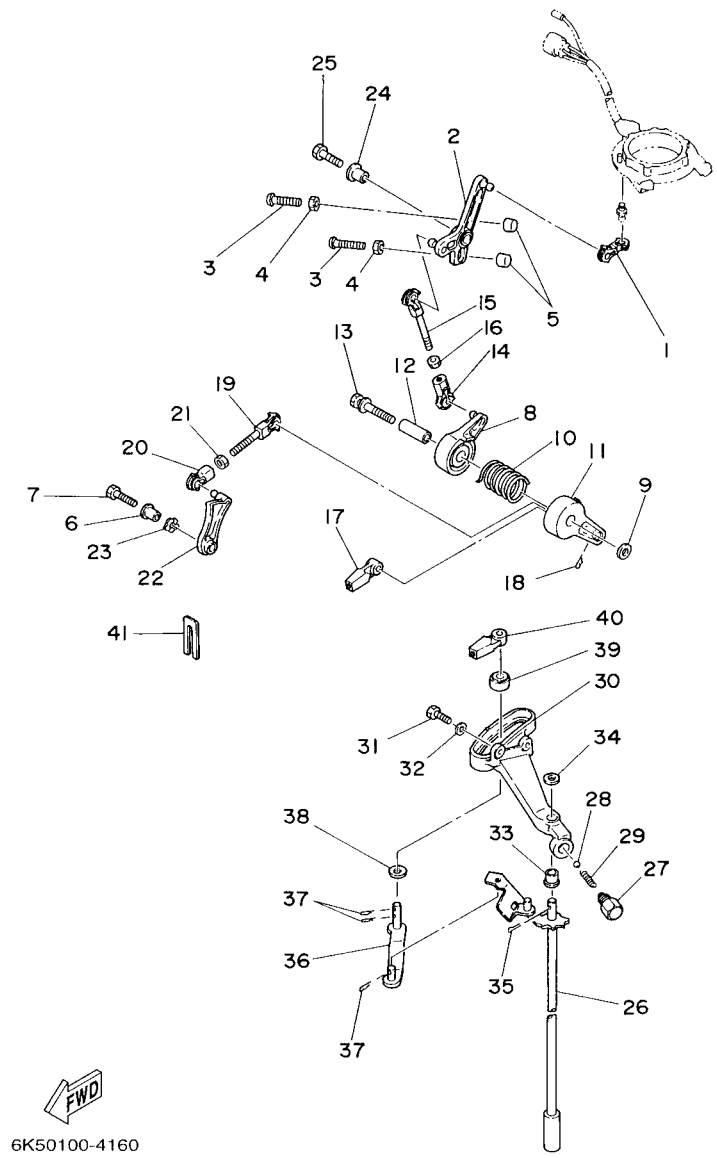

FIG. 12 CONTROL COMMANDE

REF. NO.	PART NO. N° PIECES	DESCRIPTION DESCRIPTION	69D9					REMARKS REMARQUES
28	93501–04M02	BALL BILLE	1					
29	90501–12082	SPRING, COMPRESSION RESSORT, COMPRESSION	1					
30	6H3–44117–00–94	BRACKET SUPPORT	1					
31	97013–06020	BOLT BOULON	2					
32	92903–06600	WASHER, PLATE RONDELLE, PLATE	2					
33	90386–07M58	BUSH DOUILLE	1					
34	92990–08200	WASHER, PLAIN RONDELLE, PLATE	1					
35	91490–20012	PIN. COTTER GOUPILLE	1					
36	6H3–44121–01	LEVER, SHIFT ROD LEVIER, TIGE D'INVERSION	1					
37	90468–18008	CLIP JONC	3					
38	90202–07M07	WASHER, PLATE RONDELLE, PLATE	1					
39	688–44122–00	BUSHING, SHIFT ROD LEVER DOUILLE, LEVIER D'EMBRAYAGE	1					
40	663–48344–00	CABLE END, REMOTE CONTROL CHAPE CABLE	1					
41	6H3–48538–00	CLAMP, CABLE 1 COLLIER	1					

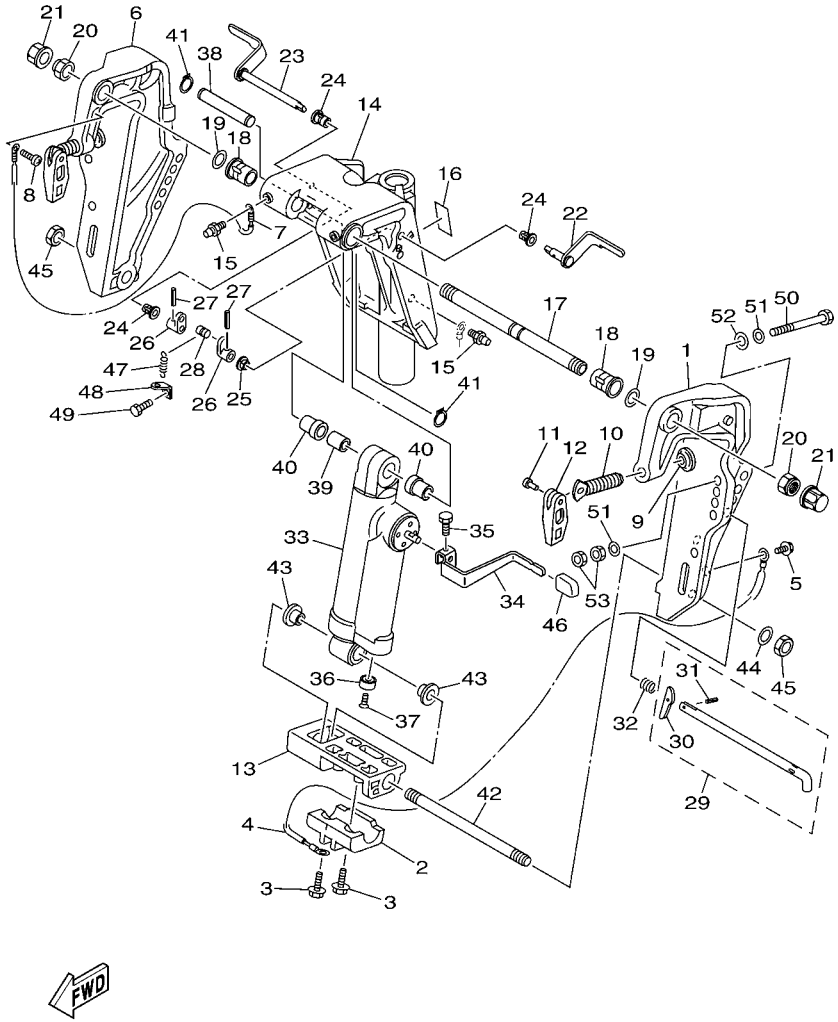

FIG. 13 BRACKET 1 SUPPORT 1

REF. NO.	PART NO. N° PIECES	DESCRIPTION DESCRIPTION	69D9					REMARKS REMARQUES
1	63D–43111–01–4D	BRACKET, CLAMP 1 PRESSE 1	1					
2	63D–45251–01	ANODE ANODE	1					
3	97595–06425	BOLT, WITH WASHER VIS HEXAGONAL AVC RONDELLE	2					
4	6H1–82148–00	WIRE, LEAD 4 FIL 4	1					
5	97595–06510	BOLT, WITH WASHER VIS HEXAGONAL AVC RONDELLE	1					
6	63D–43112–01–4D	BRACKET, CLAMP 2 PRESSE 2	1					
7	63D–82148–00	WIRE, LEAD 4 FIL 4	1					
8	97885–06008	SCREW, PAN HEAD VIS, A ENCOCHE	1					
9	648–43114–01	PAD, TRANSOM CLAMP RONDELLE D'APPUI	2					
10	663–43116–01	SCREW, TRANSOM CLAMP VIS DE PRESSE	2					
11	90243–04007	PIN GOUPILLE	2					
12	663–43118–01–4D	HANDLE, TRANSOM CLAMP POIGNEE DE VIS DE PRESSE	2					
13	63D–43128–01–4D	SPACER, CLAMP BRACKET ENTRETOISE	1					
14	69D–43311–11–4D	BRACKET, SWIVEL 1 SUPPORT, PIVOT 1	1					
15	93700–06M03	NIPPLE, GREASE PION	3					
16	63D–43691–00	INDICATOR, TILT ETIQUETTE, RELEVAGE	1					
17	63D–43131–01	BOLT, CLAMP BRACKET BOULON, PRESSE	1					
18	90386–22M15	BUSH DOUILLE	2					
19	90201–22M03	WASHER, PLATE RONDELLE, PLATE	2					
20	90185–22M11	NUT, SELF-LOCKING ECROU,AUTO-BLOQUANT	2					
21	6G5–43145–01	CAP, CLAMP BRACKET CAPUCHON, PRESSE	2					
22	6H5–43181–03	LEVER, TILT STOP LEVIER, VERROUILLAGE RELEVAGE	1					
23	6H5–43185–03	LEVER, TILT STOP LEVIER, VERROUILLAGE RELEVAGE	1					
24	90386–10M16	BUSH DOUILLE	3					
25	90386–10025	BUSH DOUILLE	1					
26	6G5–43148–00	COLLAR, DISTANCE ENTRETOISE	2					
27	91690–30020	PIN, SPRING AGRAFFE	2					

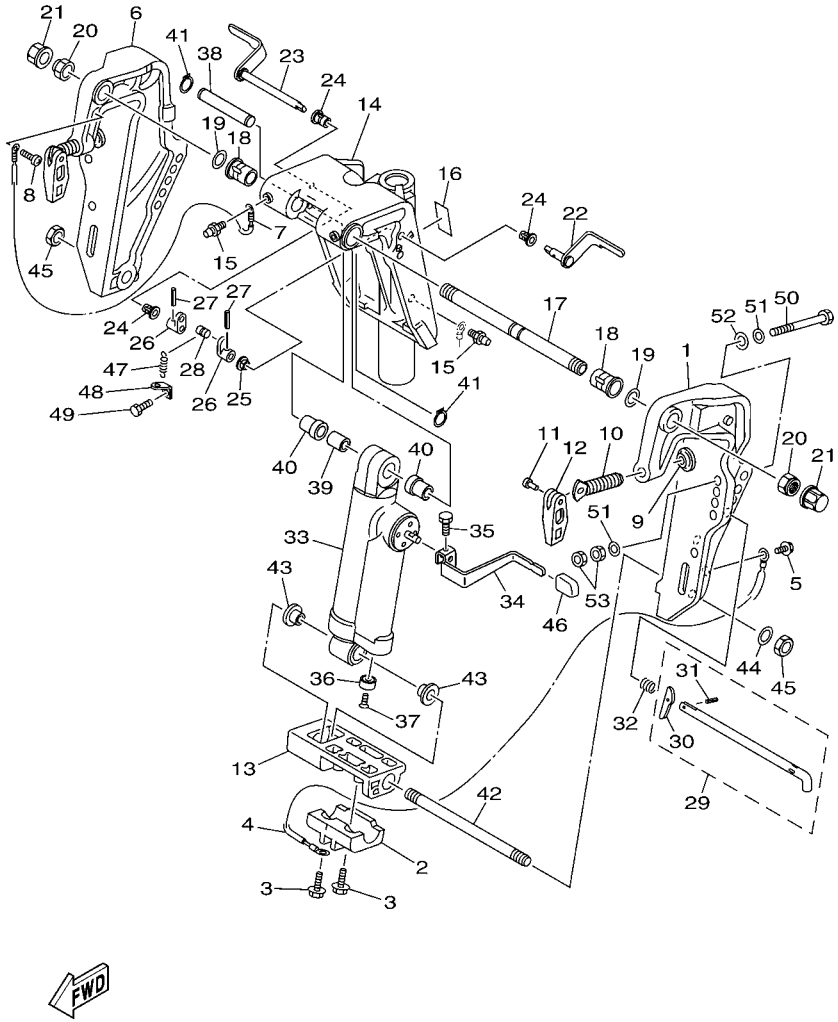

FIG. 13 BRACKET 1 SUPPORT 1

REF. NO.	PART NO. N° PIECES	DESCRIPTION DESCRIPTION	69D9					REMARKS REMARQUES
28	90249–06M19	PIN GOUPILLE	1					
29	688–43160–01	TILT ROD ASSY BROCHE D'INCLINAISON (ENS.)	1					
30	688–43165–00	.PLATE, TILT LOCK .TAQUET, BROCHE INCLINAISON	1					
31	91690–30012	.PIN, SPRING .AGRAFFE	1					
32	90502–16M02	SPRING, CONICAL RESSORT, CONIQUE	1					
33	69D–43107–11–4D	SHOCK ABSORBER SUB-ASSY AMORTISSEUR (ENS.)	1					
34	69D–43631–00	LEVER, TILT LEVIER, INCLINAISON	1					
35	97095–06010	BOLT BOULON	1					
36	663–45251–00	ANODE ANODE	1					
37	98680–06525	SCREW, OVAL HEAD VIS, TETE FRAISEE BOMBEE	1					
38	69D–43126–00	PIN, UPPER SHOCK MOUNT AXE, SUPERIEUR AMORTISSEUR	1					
39	90387–16003	COLLAR COLLERETTE	1					
40	90387–16004	COLLAR COLLERETTE	2					
41	93410–16006	CIRCLIP CLIPS	2					
42	90116–18M52	BOLT, STUD GOUJON	1					
43	90386–18M44	BUSH DOUILLE	2					
44	92995–18600	WASHER RONDELLE	1					
45	90170–18M10	NUT ECROU	2					
46	682–43318–01	COVER CAPUCHON	1					
47	90506–14M24	SPRING, TENSION RESSORT, TENSION	1					
48	6G5–43144–00	HOOK, SPRING CROCHET	1					
49	97095–06010	BOLT BOULON	1					
50	90101–12M65	BOLT BOULON	4					
51	92995–12200	WASHER RONDELLE	8					
52	90201–12426	WASHER, PLATE RONDELLE, PLATE	4					
53	95380–12600	NUT ECROU	8					

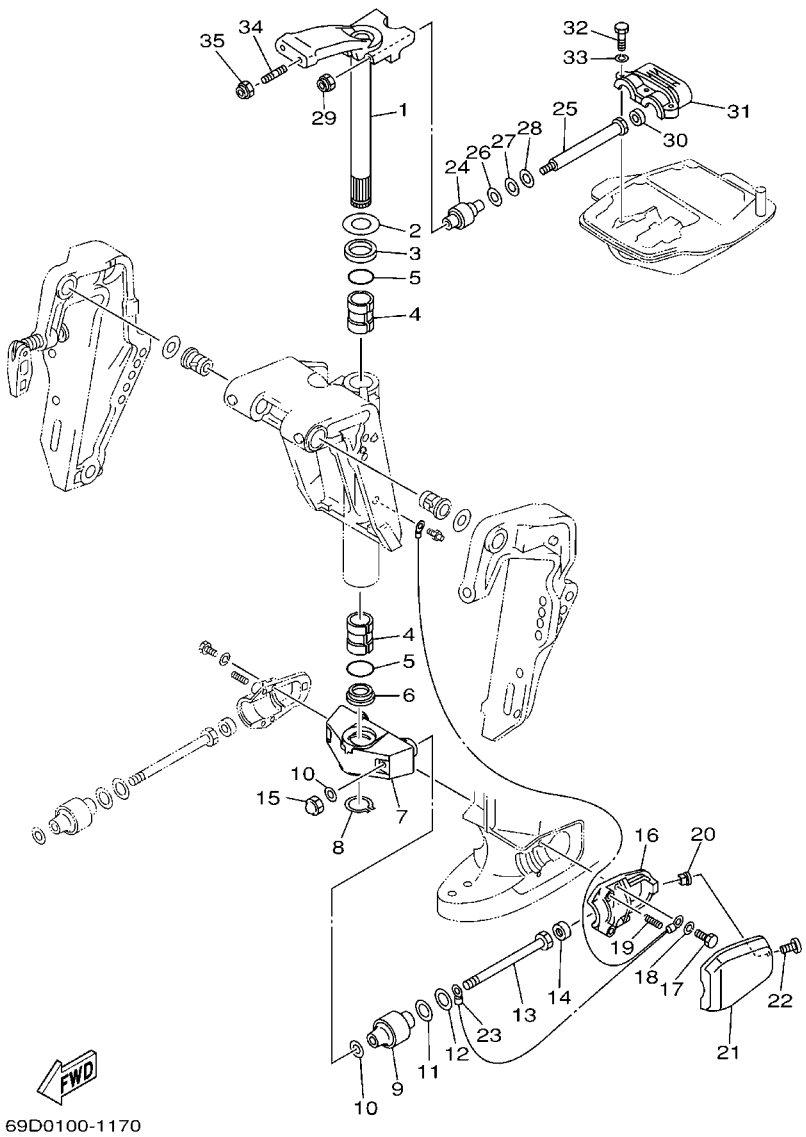

FIG. 14 BRACKET 2 SUPPORT 2

REF. NO.	PART NO. N° PIECES	DESCRIPTION DESCRIPTION	69D9					REMARKS REMARQUES
1	69D–42510–11–4D	STEERING BRACKET ASSY DIRECTION SUPPORT (ENS.)	1					
2	90201–30M00	WASHER, PLATE RONDELLE, PLATE	1					
3	90386–30M78	BUSH DOUILLE	1					
4	90386–30M77	BUSH DOUILLE	2					
5	93210–29M94	O-RING JOINT TORIQUE	2					
6	90386–30M60	BUSH DOUILLE	1					
7	69D–44551–10–4D	HOUSING, LOWER MOUNT RUBBER BOITIER, SILENT-BLOC INFERIEUR	1					
8	93410–28M06	CIRCLIP CLIPS	1					
9	687–44555–00–94	MOUNT DAMPER, LOWER SIDE SILENT-BLOC, INFERIEUR LATERAL	2					
10	90201–12M16	WASHER, PLATE RONDELLE, PLATE	4					
11	90202–25M04	WASHER, PLATE RONDELLE, PLATE	2					
12	90201–13M19	WASHER, PLATE RONDELLE, PLATE	2					
13	90109–12M21	BOLT BOULON	2					
14	663–44575–00	DAMPER, LOWER MOUNT RUBBER SILENT-BLOC, INFERIEUR	2					
15	95380–12800	NUT, CROWN ECROU, BORGNE	2					
16	6H3–44552–03–94	HOUSING, LOWER MOUNT RUBBER BOITIER, SILENT-BLOC INFERIEUR	2					
17	97075–08025	BOLT BOULON	4					
18	92995–08100	WASHER RONDELLE	4					
19	90501–14M08	SPRING, COMPRESSION RESSORT, COMPRESSION	4					
20	90179–06066	NUT ECROU	2					
21	6H3–44553–01–4D	COVER, LOWER MOUNT COUVERCLE, SUSPENSION INFERIEU	2					
22	97885–06016	SCREW, PAN HEAD VIS, A ENCOCHE	2					
23	688–82127–02	WIRE, LEAD 2 FIL 2	1					
24	688–44514–00–94	MOUNT DAMPER, UPPER SIDE SILENT-BLOC, SUPERIEUR LATERAL	2					
25	90101–10M49	BOLT BOULON	2					
26	90201–20M21	WASHER, PLATE RONDELLE, PLATE	2					
27	90202–20M06	WASHER, PLATE RONDELLE, PLATE	2					

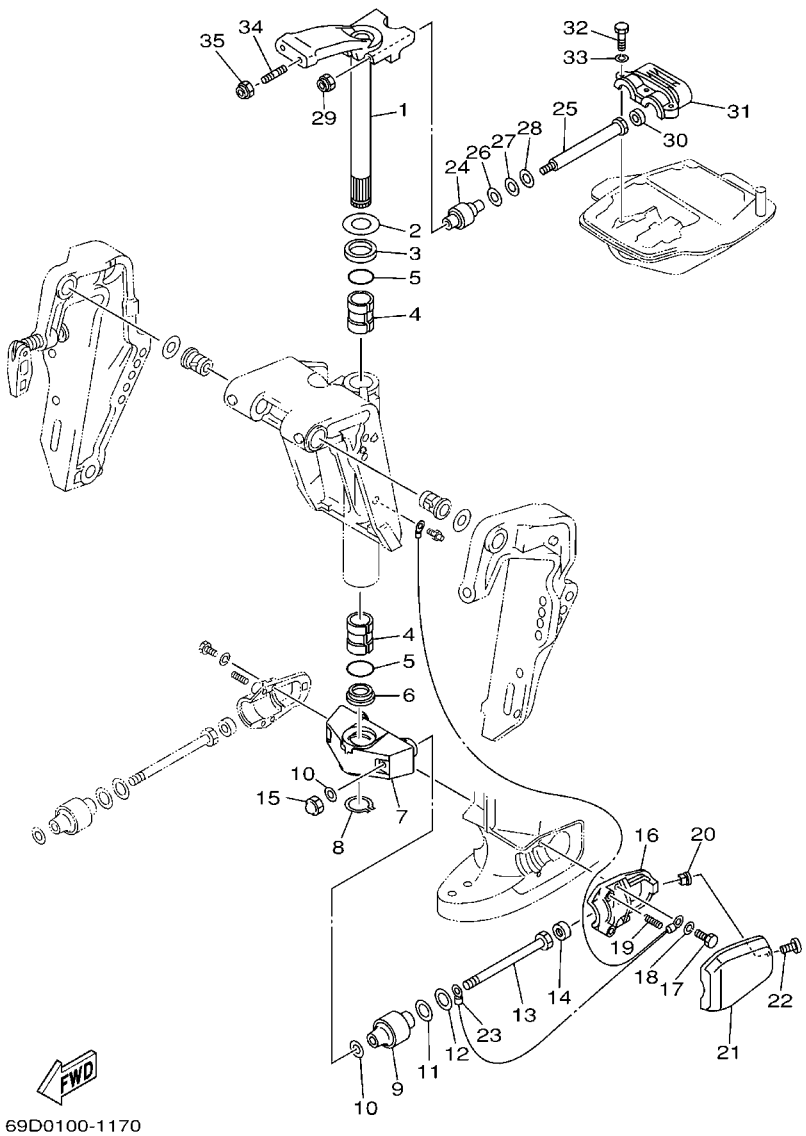

FIG. 14 BRACKET 2 SUPPORT 2

REF. NO.	PART NO. N° PIECES	DESCRIPTION DESCRIPTION	69D9					REMARKS REMARQUES
28	90201–11M22	WASHER, PLATE RONDELLE, PLATE	2					
29	90185–10051	NUT, SELF-LOCKING ECROU,AUTO-BLOQUANT	2					
30	663–44575–00	DAMPER, LOWER MOUNT RUBBER SILENT-BLOC, INFERIEUR	2					
31	688–44511–00–94	COVER, UPPER MOUNT COUVERCLE, SUSPENSION SUPERIEU	1					
32	97075–08035	BOLT BOULON	3					
33	92995–08100	WASHER RONDELLE	3					
34	90116–10M28	BOLT, STUD GOUJON	2					
35	90185–10051	NUT, SELF-LOCKING ECROU,AUTO-BLOQUANT	2					

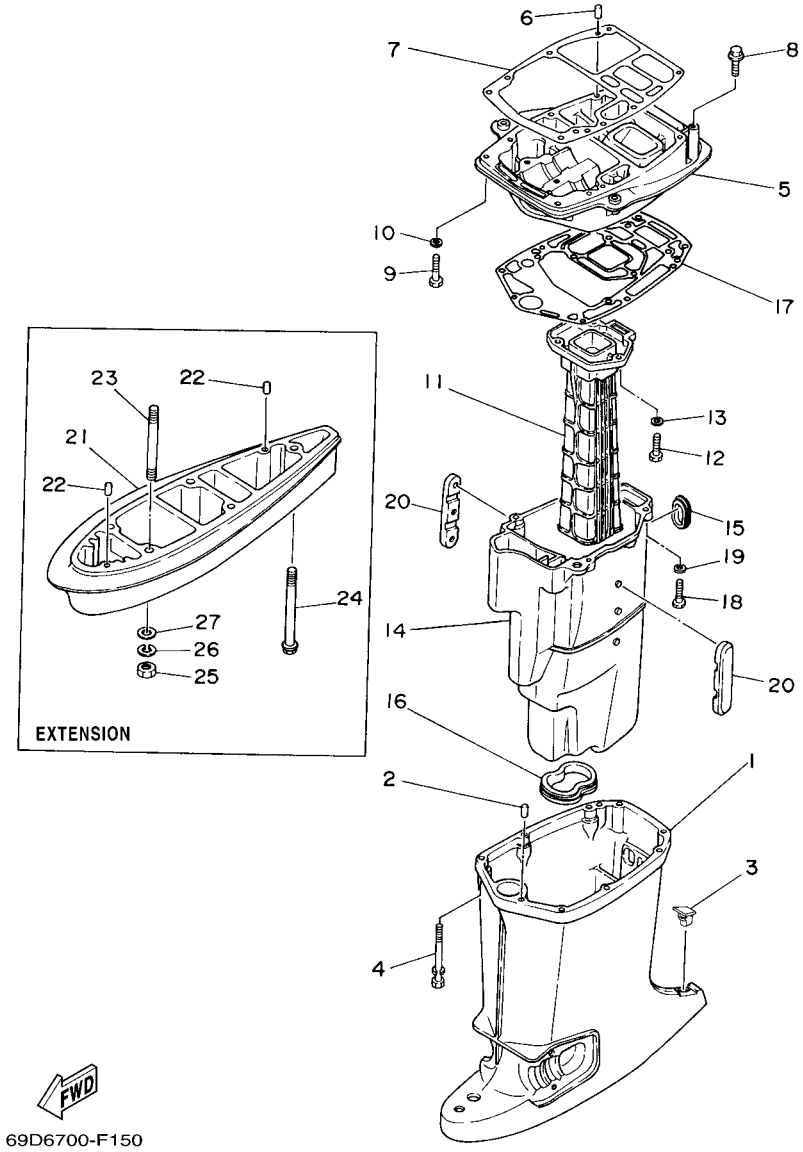

FIG. 15 UPPER CASING FOURREAU

REF. NO.	PART NO. N° PIECES	DESCRIPTION DESCRIPTION	69D9					REMARKS REMARQUES
1	6H3–45111–12–4D	CASING, UPPER FOURREAU	1					L(22.5") L(22.5")
2	93606–12019	PIN, DOWEL GOUPILLE	2					
3	6C5–45155–00	CAP CAPUCHON	1					
4	90119–08M81	BOLT, WITH WASHER BOULON, AVEC RONDELLE	6					
5	6H3–41137–01–94	GUIDE, EXHAUST COLLECTEUR D'ECHAPPEMENT	1					
6	93606–12019	PIN, DOWEL GOUPILLE	2					
7	6H3–45113–A0	GASKET, UPPER CASING JOINT, TUBE D'ARBRE	1					
8	90119–08M79	BOLT, WITH WASHER BOULON, AVEC RONDELLE	2					
9	97075–08035	BOLT BOULON	2					
10	92995–08100	WASHER RONDELLE	2					
11	6H2–41131–00–5B	MANIFOLD, EXT. 1 PIPE D'ECHAPPEMENT	1					
12	97075–08030	BOLT BOULON	3					
13	92995–08100	WASHER RONDELLE	3					
14	6H3–14711–11–5B	MUFFLER 1 POT D'ECHAPPEMENT 1	1					L(22.5") L(22.5")
15	6H3–45127–00	SEAL JOINT	1					
16	6H3–45123–00	GASKET, MUFFLER JOINT, POT DE DETENTE	1					
17	6H3–45114–A1	GASKET, UPPER CASING JOINT, TUBE D'ARBRE	1					
18	97075–08030	BOLT BOULON	4					
19	92995–08100	WASHER RONDELLE	4					
20	6H3–14737–10	DAMPER, MUFFLER AMORTISSEUR DE POT D'ECHAPPT	2					L(22.5") L(22.5")
21	696–45211–01–4D	EXTENSION EXTENSION	1					
22	93606–12019	PIN, DOWEL GOUPILLE	2					
23	90116–10M31	BOLT, STUD GOUJON	4					
24	90119–08M85	BOLT, WITH WASHER BOULON, AVEC RONDELLE	1					
25	95380–10600	NUT ECROU	4					
26	92990–10100	WASHER, SPRING RONDELLE, GROWER	4					
27	92990–10600	WASHER, PLATE RONDELLE, PLATE	4					

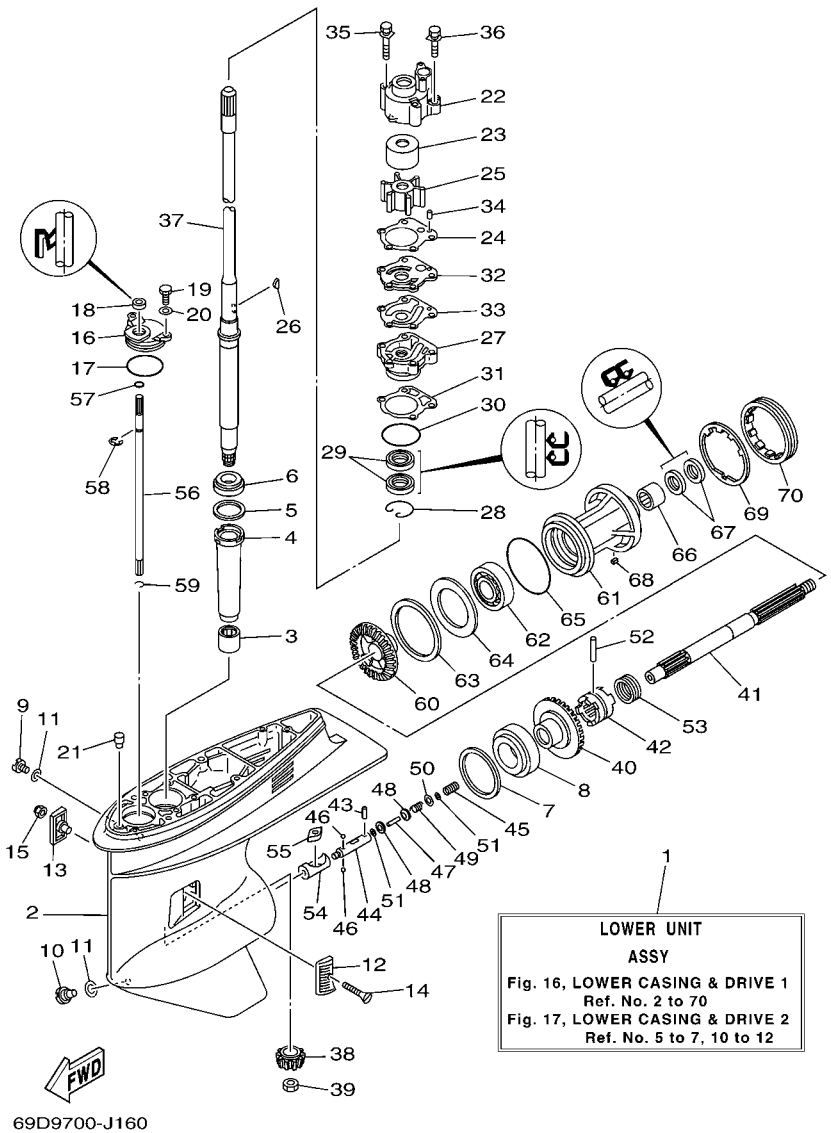

FIG. 16 LOWER CASING & DRIVE 1 BOITIER D'HELICE TRANSMISSION1

REF. NO.	PART NO. N° PIECES	DESCRIPTION DESCRIPTION	69D9					REMARKS REMARQUES
1	69D–45300–11–4D	LOWER UNIT ASSY UNITE INFERIEURE (ENS.)	1					L(22.5") L(22.5")
2	6H1–45301–03–4D	CASING, LOWER BEQUILLE	1					
3	93315–325V1	BEARING ROULEMENT	1					
4	688–45536–01	SLEEVE, DRIVE SHAFT MANCHON, ARBRE MOTEUR	1					
5	688–45587–01	SHIM (T:0.10MM) CALE (T:0.10MM)	1					UR UR
	688–45587–10	SHIM (T:0.12MM) CALE (T:0.12MM)	1					UR UR
	688–45587–20	SHIM (T:0.15MM) CALE (T:0.15MM)	1					UR UR
	688–45587–30	SHIM (T:0.18MM) CALE (T:0.18MM)	1					UR UR
	688–45587–40	SHIM (T:0.30MM) CALE (T:0.30MM)	1					UR UR
	688–45587–50	SHIM (T:0.40MM) CALE (T:0.40MM)	1					UR UR
	688–45587–60	SHIM (T:0.50MM) CALE (T:0.50MM)	1					UR UR
6	93332–000U3	BEARING ROULEMENT	1					
7	688–45567–01	SHIM (T:0.10MM) CALE (T:0.10MM)	1					UR UR
	688–45567–10	SHIM (T:0.12MM) CALE (T:0.12MM)	1					UR UR
	688–45567–20	SHIM (T:0.15MM) CALE (T:0.15MM)	1					UR UR
	688–45567–30	SHIM (T:0.18MM) CALE (T:0.18MM)	1					UR UR
	688–45567–40	SHIM (T:0.30MM) CALE (T:0.30MM)	1					UR UR
	688–45567–50	SHIM (T:0.40MM) CALE (T:0.40MM)	1					UR UR
	688–45567–60	SHIM (T:0.50MM) CALE (T:0.50MM)	1					UR UR
8	93332–000W7	BEARING ROULEMENT	1					
9	90340–08002	PLUG, STRAIGHT SCREW PLOT, FILETE DROIT	1					
10	688–45341–10	PLUG, DRAIN BOUCHON DE VIDANGE	1					
11	90430–08020	GASKET JOINT	2					
12	6H1–45214–00	COVER, WATER INLET 1 GRILLE, ENTREE D'EAU 1	1					
13	6H1–45215–00	COVER, WATER INLET 2 GRILLE, ENTREE D'EAU 2	1					
14	90151–05M00	SCREW, COUNTERSUNK VIS, TETE NOYEE	1					
15	90185–05002	NUT, NYLON ECROU,AUTO-BLOQUANT	1					

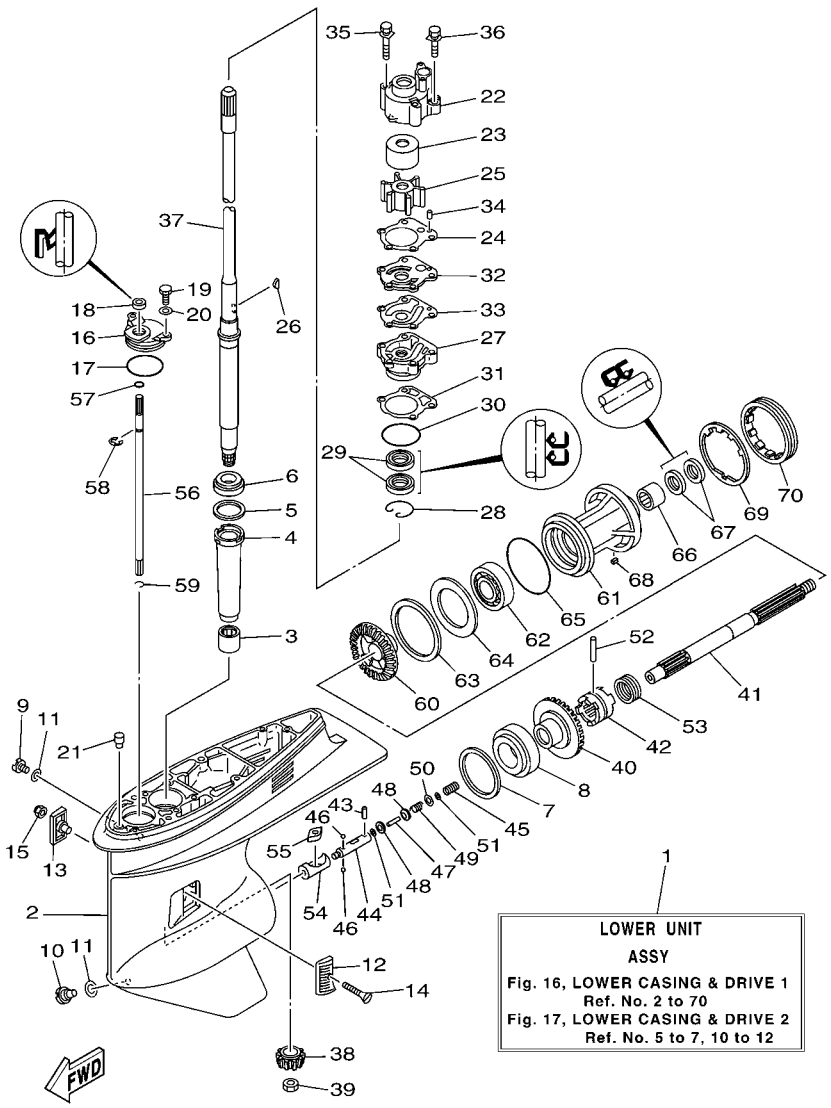

FIG. 16 LOWER CASING & DRIVE 1 BOITIER D'HELICE TRANSMISSION1

REF. NO.	PART NO. N° PIECES	DESCRIPTION DESCRIPTION	69D9					REMARKS REMARQUES
16	688–45321–00	PLATE PLAQUETTE	1					
17	93210–49046	O-RING JOINT TORIQUE	1					
18	93106–09014	OIL SEAL JOINT SPY	1					
19	97095–06016	BOLT BOULON	2					
20	92995–06600	WASHER RONDELLE	2					
21	6J8–45378–00	NIPPLE, HOSE (PLUG) RACCORD, TUYAU (PLOT)	1					
22	688–44311–01	HOUSING, WATER PUMP CORPS, POMPE A EAU	1					
23	69D–44322–00	INSERT, CARTRIDGE CUVETTE	1					
24	688–44315–A0	GASKET, WATER PUMP JOINT, POMPE A EAU	1					
25	688–44352–03	IMPELLER TURBINE	1					
26	90280–04M04	KEY, WOODRUFF CLAVETTE, DEMI-LUNE	1					
27	6D8–44341–01–CA	HOUSING, WATER PUMP CORPS, POMPE A EAU	1					
28	93450–44166	CIRCLIP CIRCLIP, TYPE S	1					
29	93101–25M03	OIL SEAL JOINT SPY	2					
30	93210–46044	O-RING JOINT TORIQUE	1					
31	688–44316–A0	GASKET, WATER PUMP JOINT, POMPE A EAU	1					
32	688–44323–40	OUTER PLATE, CARTRIDGE PLAQUE EXTERIEURE	1					
33	688–44324–A0	GASKET, CARTRIDGE JOINT	1					
34	93604–10M03	PIN, DOWEL CLAVETTE	2					
35	90119–08M16	BOLT, WITH WASHER BOULON, AVEC RONDELLE	2					
36	90119–08M13	BOLT, WITH WASHER BOULON, AVEC RONDELLE	2					
37	69D–45501–10	DRIVE SHAFT COMP. ARBRE MOTEUR COMP.	1					L(22.5") L(22.5")
38	6K5–45551–00	PINION (12T) PIGNON D'ATTAQUE (12D)	1					
39	90170–16M01	NUT ECROU	1					
40	6K5–45560–00	GEAR 1 (28T) PIGNON 1 (28T)	1					
41	6H1–45611–01	SHAFT, PROPELLER ARBRE, HELICE	1					
42	6H1–45631–01	CLUTCH, DOG CRABOT	1					

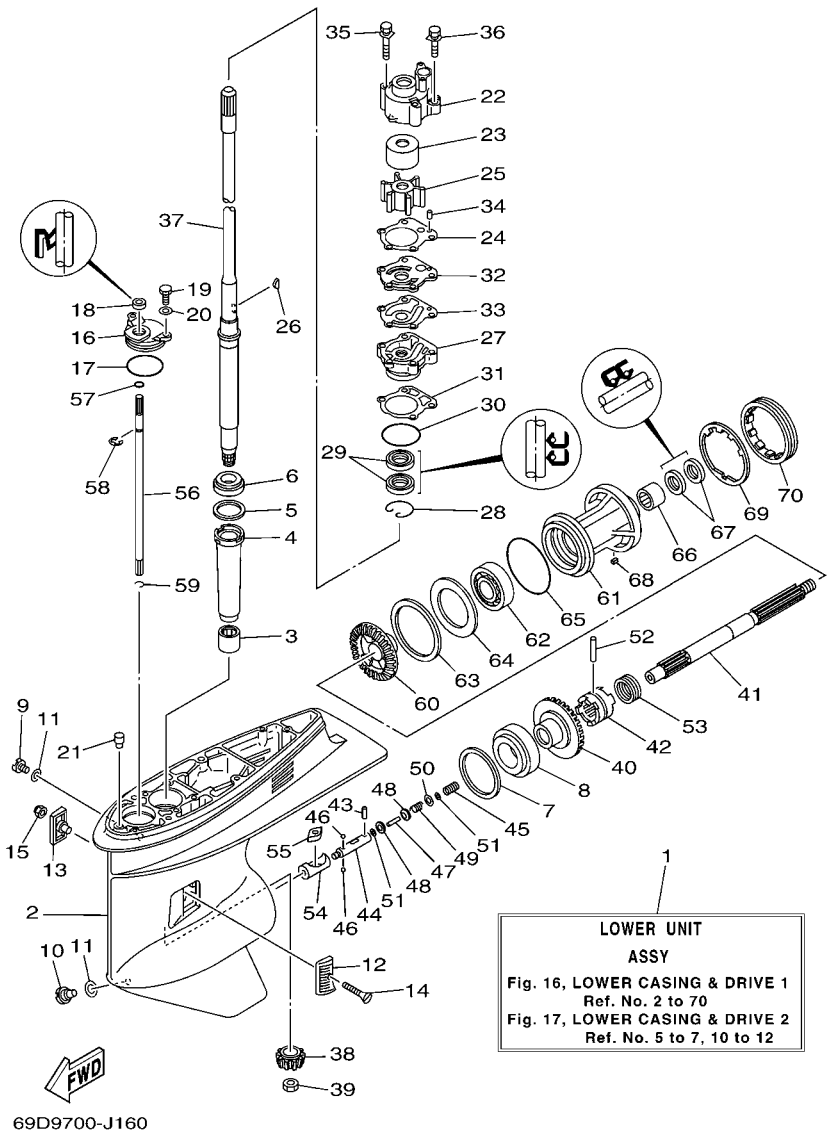

FIG. 16 LOWER CASING & DRIVE 1 BOITIER D'HELICE TRANSMISSION1

REF. NO.	PART NO. N° PIECES	DESCRIPTION DESCRIPTION	69D9					REMARKS REMARQUES
43	93603–12M11	PIN, DOWEL CLAVETTE	1					
44	6H1–45634–02	SLIDE, SHIFT CONTRE-POUSSOIR	1					
45	90501–16M65	SPRING, COMPRESSION RESSORT, COMPRESSION	1					
46	93503–16003	BALL BILLES	2					
47	6H1–45668–00	SHAFT, FREE AXE	1					
48	6H1–45635–00	PLUNGER, SHIFT POUSSOIR D'EMBRAYAGE	2					
49	90501–12M48	SPRING, COMPRESSION RESSORT, COMPRESSION	1					
50	90201–03313	WASHER, PLATE RONDELLE, PLATE	1					
51	90183–02M03	NUT, SPRING ECROU, RESSORT	2					
52	90250–07M02	PIN, STRAIGHT GOUPILLE, DROITE	1					
53	688–45633–00	RING, CROSS PIN JONC, GOUPILLE CRABOT	1					
54	6H1–45641–01	SHIFTER EMBRAYAGE	1					
55	6H1–44151–00	CAM, SHIFT CAME, INVERSION	1					
56	6H1–44144–00	ROD, SHIFT TIGE D'EMBRAYAGE	1					
57	93210–07003	O-RING JOINT TORIQUE	1					
58	99001–08600	CIRCLIP CIRCLIP	1					
59	93450–07M00	CIRCLIP CIRCLIP, TYPE S	1					
60	6H3–45571–00	GEAR (28T) PIGNON (28D)	1					
61	688–45331–00–94	HOUSING, BEARING FLASQUE, ROULEMENT	1					
62	93306–207U0	BEARING ROULEMENT	1					
63	688–45577–01	SHIM (T:0.10MM) CALE (T:0.10MM)	1					UR UR
	688–45577–10	SHIM (T:0.12MM) CALE (T:0.12MM)	1					UR UR
	688–45577–20	SHIM (T:0.15MM) CALE (T:0.15MM)	1					UR UR
	688–45577–30	SHIM (T:0.18MM) CALE (T:0.18MM)	1					UR UR
	688–45577–40	SHIM (T:0.30MM) CALE (T:0.30MM)	1					UR UR
	688–45577–50	SHIM (T:0.40MM) CALE (T:0.40MM)	1					UR UR
	688–45577–60	SHIM (T:0.50MM) CALE (T:0.50MM)	1					UR UR

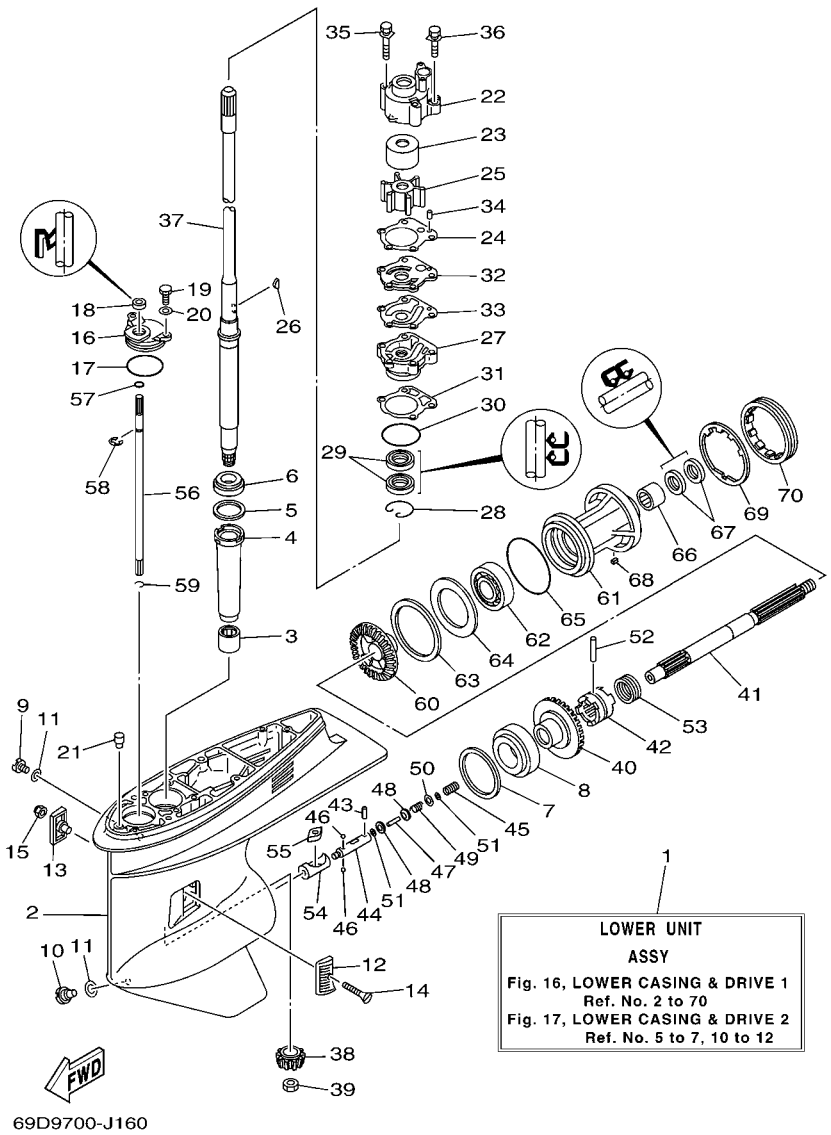

FIG. 16 LOWER CASING & DRIVE 1 BOITIER D'HELICE TRANSMISSION1

REF. NO.	PART NO. N° PIECES	DESCRIPTION DESCRIPTION	69D9					REMARKS REMARQUES
64	688–45576–00	WASHER, THRUST RONDELLE DE CALAGE	1					
65	93210–85M97	O-RING JOINT TORIQUE	1					
66	93317–325U0	BEARING ROULEMENT	1					
67	93101–25M03	OIL SEAL JOINT SPY	2					
68	90282–04010	KEY, STRAIGHT CLAVETTE, DROITE	1					
69	688–45383–02	WASHER, CLAW FREIN D'ECROU	1					
70	688–45384–00	NUT ECROU	1					

FIG. 17 LOWER CASING & DRIVE 2 BOITIER D'HELICE TRANSMISSION2

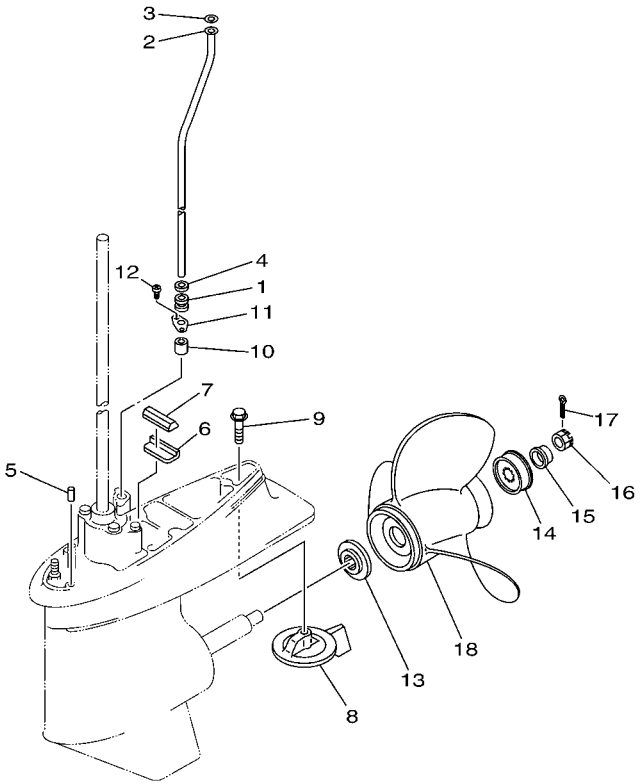

69D3700-C170

REF. NO.	PART NO. N° PIECES	DESCRIPTION DESCRIPTION	69D9					REMARKS REMARQUES
1	663–44367–00	DAMPER, WATER SEAL JOINT TUBE D'EAU	1					
2	69D–44361–10	TUBE, WATER TUBE D'EAU	1					L(22.5") L(22.5")
3	90202–12060	WASHER, PLATE RONDELLE, PLATE	1					
4	90430–12072	GASKET JOINT	1					
5	93606–12019	PIN, DOWEL GOUPILLE	2					
6	663–45376–00–94	GUIDE, SEAL DAMPER BUTEE, JOINT CAOUTCHOUC	1					
7	688–45375–00	DAMPER, SEAL BOURRELET, CAOUTCHOUC	1					
8	688–45371–02	TAB-TRIM ANODE DERIVE	1					
9	90105–10M67	BOLT, FLANGE BOULON	1					
10	663–44366–00	DAMPER, WATER SEAL JOINT, TUBE D'EAU	1					
11	90480–19M06	GROMMET PASSE-FIL	1					
12	90160–04006	SCREW, ROUND TAPPING VIS, TETE RONDE FRAISEE	2					
13	688–45987–01	SPACER ENTRETOISE	1					
14	67F–45997–00	SPACER ENTRETOISE	1					
15	90389–25M00	BUSH DOUILLE	1					
16	90171–16011	NUT, CASTLE ECROU, CRENELE	1					
17	91490–40025	PIN. COTTER GOUPILLE	1					
18	6E5–45941–00–EL	PROPELLER (3X13"X19"-K) HELICE (3X13"X19"-K)	1					UR UR
	6E5–45943–00–EL	PROPELLER (3X12-5/8"X21"-K) HELICE (3X12-5/8"X21"-K)	1					UR UR
	6E5–45945–01–EL	PROPELLER (3X13-1/4"X17"-K) HELICE (3X13-1/4"X17"-K)	1					UR UR
	6E5–45947–00–EL	PROPELLER (3X13-1/2"X15"-K) HELICE (3X13-1/2"X15"-K)	1					UR UR
	6E5–45949–00–EL	PROPELLER (3X13-5/8"X13"-K) HELICE (3X13-5/8"X13"-K)	1					UR UR
	6E5–45952–00–EL	PROPELLER (3X13"X23"-K) HELICE (3X13"X23"-K)	1					UR UR
	6E5–45954–00–EL	PROPELLER (3X14"X11"-K) HELICE (3X14"X11"-K)	1					UR UR
	6E5–45956–00–EL	PROPELLER (3X13"X25"-K) HELICE (3X13"X25"-K)	1					UR UR
	688–45970–03–98	PROPELLER (3X13"X19"-K) HELICE (3X13"X19"-K)	1					UR UR
	688–45972–02–98	PROPELLER (3X13"X21"-K) HELICE (3X13"X21"-K)	1					UR UR

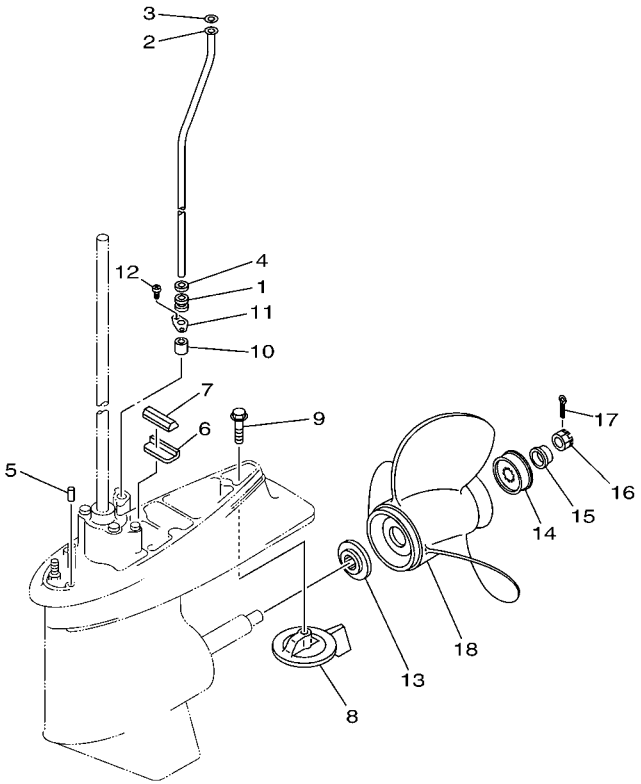

69D3700-C170

FIG. 17 LOWER CASING & DRIVE 2 BOITIER D'HELICE TRANSMISSION2

REF. NO.	PART NO. N° PIECES	DESCRIPTION DESCRIPTION	69D9					REMARKS REMARQUES
18	688–45974–02–98	PROPELLER (3X13"X23"-K) HELICE (3X13"X23"-K)	1					UR UR
	688–45976–01–98	PROPELLER (3X13"X25"-K) HELICE (3X13"X25"-K)	1					UR UR
	688–45930–02–98	PROPELLER (3X13"X17"-K) HELICE (3X13"X17"-K)	1					UR UR
	688–45932–60–98	PROPELLER (3X13-1/2"X14"-K) HELICE (3X13-1/2"X14"-K)	1					UR UR
	688–45978–60–98	PROPELLER (3X13-1/2"X16"-K) HELICE (3X13-1/2"X16"-K)	1					UR UR

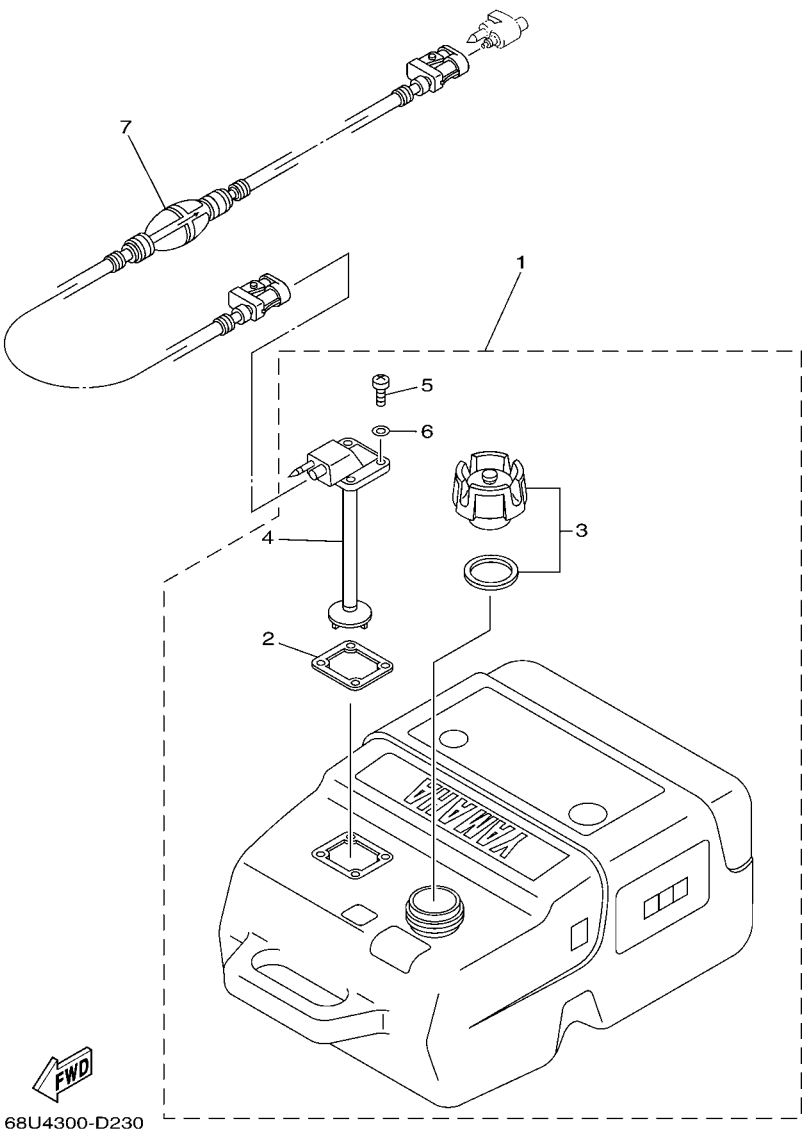

FIG. 18 FUEL TANK — RESERVOIR A CARBURANT

REF. NO.	PART NO. N° PIECES	DESCRIPTION DESCRIPTION	69D9					REMARKS REMARQUES
1	6YK–24201–03	FUEL TANK ASSY (25L) RESERVOIR A ESSENCE (ENS.) 25L	1					AP AP
2	6YL–24268–01	.GASKET, FUEL METER .JOINT, JAUGE A CARBURANT	1					
3	6YK–24610–01	.CAP ASSY .BOUCHON	1					
4	6YK–24260–01	.FUEL METER ASSY .INDICATEUR DE CARBURANT	1					
5	90157–05M16	.SCREW, PAN HEAD .VIS, TETE TRONCONIQUE	4					
6	6YL–24329–00	.SEAL .JOINT	4					
7	6YL–24306–54	FUEL PIPE COMP. 1 DURITE A ESSENCE 1	1					AP AP

FIG. 19 REPAIR KIT 1 — KITS DE REPARATION 1

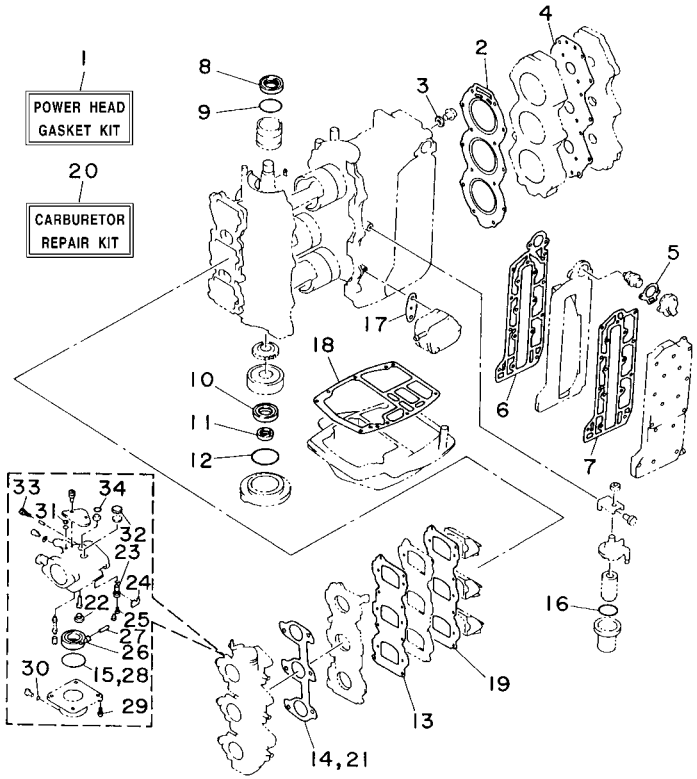

REF. NO.	PART NO. N° PIECES	DESCRIPTION DESCRIPTION	69D9					REMARKS REMARQUES
1	69D–W0001–00	POWER HEAD GASKET KIT KIT DE JOINTS TETE MOTRICE	1					
2	6H3–11181–A2	.GASKET, CYLINDER HEAD 1 .JOINT, DE CULASSE 1	1					
3	90430–14115	.GASKET .JOINT	1					
4	6H3–11193–A1	.GASKET, HEAD COVER 1 .JOINT, COUVERCLE DE CULASSE 1	1					
5	6H3–12414–A1	.GASKET, COVER .JOINT, COUVERCLE	1					
6	6H3–41112–A0	.GASKET, EXHAUST INNER COVER .JOINT, PLAQUE D'ECHAPPEMENT	1					
7	6H3–41114–A0	.GASKET, EXHAUST OUTER COVER .JOINT, COUVERCLE D'ECHAPPEMENT	1					
8	93102–36M24	.OIL SEAL .JOINT SPY	1					
9	93210–46M16	.O-RING .JOINT TORIQUE	1					
10	93102–30009	.OIL SEAL .JOINT SPY	1					
11	93106–18001	.OIL SEAL .JOINT SPY	1					
12	93210–65M50	.O-RING .JOINT TORIQUE	1					
13	6H3–13621–A1	.GASKET, VALVE SEAT .JOINT, SIEGE DE CLAPET	1					
14	6H3–14198–A1	.GASKET .JOINT	1					
15	6G1–14984–00	.O-RING .JOINT TORIQUE	3					
16	61A–24564–00	.O-RING .JOINT TORIQUE	1					
17	650–24431–A0	.GASKET, FUEL PUMP 1 .JOINT 1 DE POMPE A ESSENCE	1					
18	6H3–45113–A0	.GASKET, UPPER CASING .JOINT, TUBE D'ARBRE	1					
19	6H3–13622–A1	.GASKET, VALVE SEAT .JOINT, SIEGE DE CLAPET	1					
20	6H3–W0093–02	CARBURETOR REPAIR KIT KIT DE REPARATION CARBURATEUR	1					
21	6H3–14198–A1	.GASKET .JOINT	1					
22	676–14966–00	.CAP .CAPUCHON	3					
23	6H3–14590–01	.NEEDLE VALVE ASSY .POINTEAU	3					
24	663–14159–00	.CLIP .JONC	3					
25	676–14186–00	.PIN, FLOAT .AXE, FLOTTEUR	3					
26	6G1–14985–00	.FLOAT .FLOTTEUR	3					
27	688–14548–00	.PIN, FLOAT ARM .AXE, BRAS DE FLOTTEUR	3					

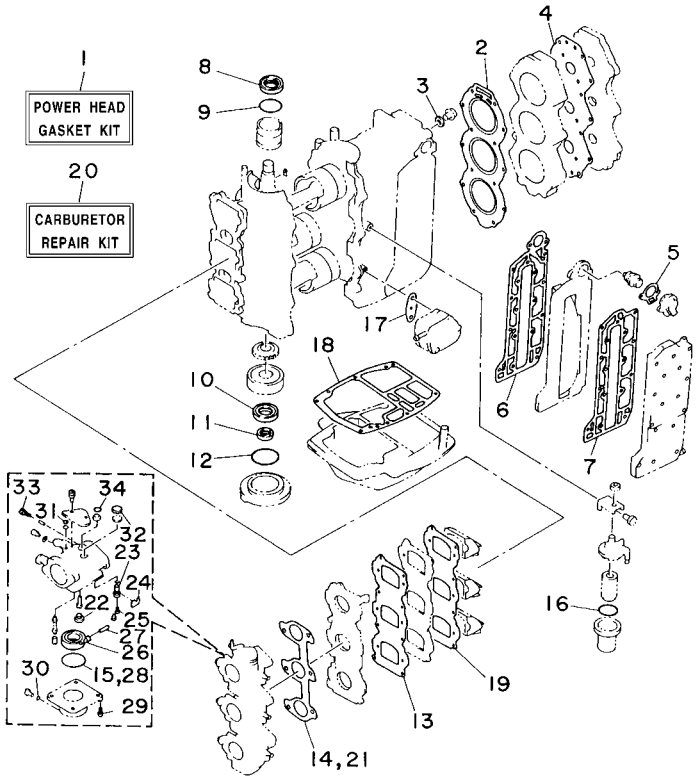

6H20010-4180

FIG. 19 REPAIR KIT 1 — KITS DE REPARATION 1

REF. NO.	PART NO. N° PIECES	DESCRIPTION DESCRIPTION	69D9					REMARKS REMARQUES
28	6G1–14984–00	.O-RING .JOINT TORIQUE	3					
29	97980–04114	.SCREW, WITH WASHER .VIS, AVEC RONDELLE	3					
30	93210–04230	.O-RING .JOINT TORIQUE	3					
31	663–14126–00	.GASKET .JOINT	3					
32	688–14126–00	.GASKET .JOINT	3					
33	692–14923–00	.SCREW, PILOT .VIS, RALENTI	3					
34	93210–15M52	.O-RING .JOINT TORIQUE	3					

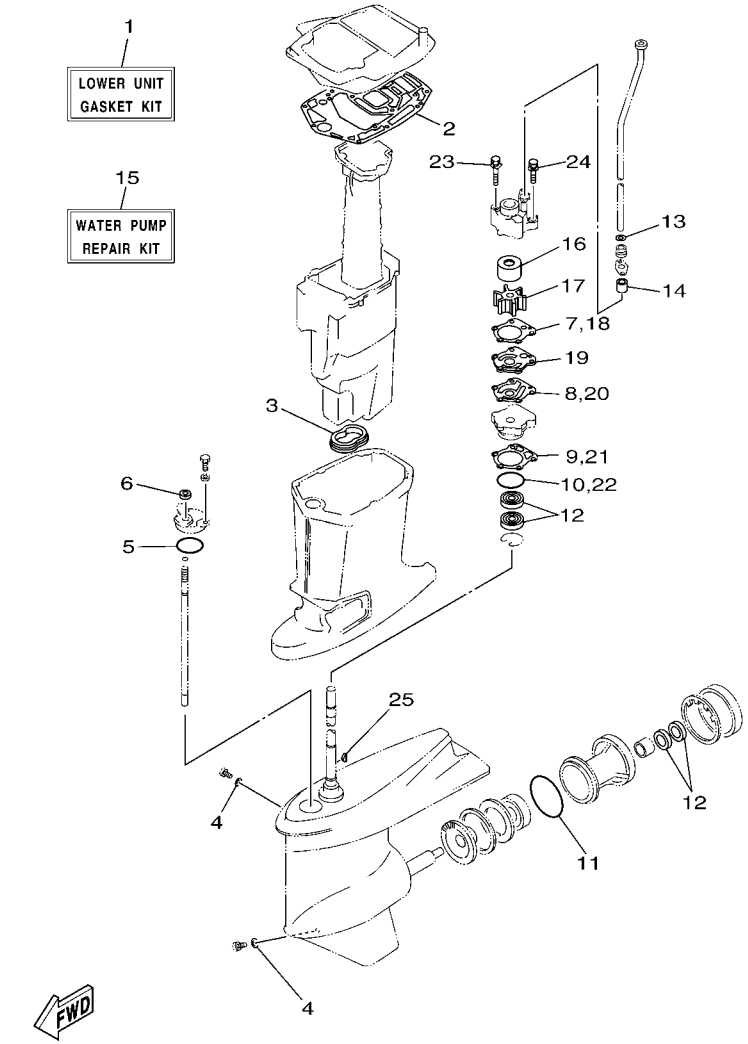

FIG. 20 REPAIR KIT 2 — KITS DE REPARATION 2

REF. NO.	PART NO. N° PIECES	DESCRIPTION DESCRIPTION	69D9					REMARKS REMARQUES
1	69D–W0001–20	LOWER UNIT GASKET KIT POCHETTE DE JOINTS EMBASE	1					
2	6H3–45114–A1	.GASKET, UPPER CASING .JOINT, TUBE D'ARBRE	1					
3	6H3–45123–00	.GASKET, MUFFLER .JOINT, POT DE DETENTE	1					
4	90430–08020	.GASKET .JOINT	2					
5	93210–49046	.O-RING .JOINT TORIQUE	1					
6	93106–09014	.OIL SEAL .JOINT SPY	1					
7	688–44315–A0	.GASKET, WATER PUMP .JOINT, POMPE A EAU	1					
8	688–44324–A0	.GASKET, CARTRIDGE .JOINT	1					
9	688–44316–A0	.GASKET, WATER PUMP .JOINT, POMPE A EAU	1					
10	93210–46044	.O-RING .JOINT TORIQUE	1					
11	93210–85M97	.O-RING .JOINT TORIQUE	1					
12	93101–25M03	.OIL SEAL .JOINT SPY	4					
13	90430–12072	.GASKET .JOINT	1					
14	663–44366–00	.DAMPER, WATER SEAL .JOINT, TUBE D'EAU	1					
15	69D–W0078–00	WATER PUMP REPAIR KIT KIT DE REPARATION DE LA POMPE	1					
16	69D–44322–00	.INSERT, CARTRIDGE .CUVETTE	1					
17	688–44352–03	.IMPELLER .TURBINE	1					
18	688–44315–A0	.GASKET, WATER PUMP .JOINT, POMPE A EAU	1					
19	688–44323–40	.OUTER PLATE, CARTRIDGE .PLAQUE EXTERIEURE	1					
20	688–44324–A0	.GASKET, CARTRIDGE .JOINT	1					
21	688–44316–A0	.GASKET, WATER PUMP .JOINT, POMPE A EAU	1					
22	93210–46044	.O-RING .JOINT TORIQUE	1					
23	90119–08M16	.BOLT, WITH WASHER .BOULON, AVEC RONDELLE	2					
24	90119–08M13	.BOLT, WITH WASHER .BOULON, AVEC RONDELLE	2					
25	90280–04M04	.KEY, WOODRUFF .CLAVETTE, DEMI-LUNE	1					

NUMERICAL INDEX
INDEX NUMERIQUE

PART NO. N° PIECES	REF. NO.
6H3–11111–01–1S	2 – 24
6K5–11119–01	2 – 20
6H3–11181–A2	2 – 25
	19 – 2
6H3–11191–00–1S	2 – 26
6H3–11193–A1	2 – 27
	19 – 4
6H3–11325–01	2 – 16
6H3–11327–00–1S	2 – 17
6H3–11328–00	2 – 18
650–11370–01	2 – 4
688–11370–01	2 – 3
6K5–11601–02	3 – 14
6K5–11601–12	3 – 14
6K5–11601–22	3 – 14
6K5–11631–03–95	3 – 13
6H3–11633–00	3 – 15
688–11634–10	3 – 16
6K5–11635–03	3 – 13
6K5–11636–03	3 – 13
6H3–12411–11	2 – 31
688–12412–00	2 – 32
6H3–12413–00–1S	2 – 33
6H3–12414–A1	2 – 34
	19 – 5
6H2–13610–00	4 – 1
6H3–13621–A1	4 – 6
	19 – 13
6H3–13622–A1	4 – 8
	19 – 19
6H3–13624–00–94	4 – 7
6H3–13641–03–94	4 – 5
663–14126–00	5 – 19
	19 – 31
688–14126–00	5 – 21
	19 – 32
663–14159–00	5 – 9
	19 – 24
676–14186–00	5 – 10
	19 – 25
6H3–14198–A1	4 – 11
	19 – 14
	19 – 21
6K5–14301–03	5 – 1
6K5–14302–03	5 – 2
6K5–14303–03	5 – 3
6A0–14325–00	6 – 36
6H3–14413–11	4 – 18

PART NO. N° PIECES	REF. NO.
6H3–14440–02	4 – 19
6H3–14457–01	4 – 20
624–14485–00	2 – 5
6K5–14488–00	4 – 25
63V–14523–00	5 – 29
663–14527–00	5 – 20
688–14527–00	5 – 22
6H2–14527–01	5 – 23
688–14548–00	5 – 13
	19 – 27
679–14555–00	5 – 26
6H2–14578–00	5 – 31
6H3–14578–00	5 – 32
6H3–14590–01	5 – 8
	19 – 23
6K5–14592–00	5 – 27
6H3–14711–11–5B	15 – 14
6H3–14737–10	15 – 20
692–14923–00	5 – 25
	19 – 33
676–14943–34	5 – 5
6K5–14945–36	5 – 35
6H2–14947–02	5 – 4
6H4–14948–15	5 – 6
6K5–14950–21	5 – 36
676–14966–00	5 – 7
	19 – 22
6H2–14980–00	5 – 15
6G1–14984–00	5 – 14
	19 – 15
	19 – 28
6G1–14985–00	5 – 12
	19 – 26
6H3–14992–00	5 – 17
69D–15100–00–1S	2 – 2
6H3–15359–00–94	3 – 1
692–15711–01	7 – 2
663–15713–00	7 – 5
663–15714–01	7 – 6
663–15715–00	7 – 12
696–15716–00	7 – 13
663–15719–00	7 – 15
6K5–15723–00	7 – 46
663–15726–01	7 – 10
696–15734–00	7 – 14
663–15735–01	7 – 50
663–15736–00	7 – 55
663–15739–00	7 – 4

PART NO. N° PIECES	REF. NO.
663–15741–02	7 – 8
663–15744–00	7 – 11
663–15752–00	7 – 18
6F5–15753–00	7 – 19
663–15754–00	7 – 9
689–15755–01	7 – 23
6K5–15758–01–94	7 – 40
6K5–15761–00	1 – 14
6K5–15762–00	7 – 44
663–15764–00	7 – 7
6K5–15770–01	7 – 47
6K5–15771–00–94	7 – 33
6K5–15772–00–94	7 – 36
648–15773–00	7 – 3
6K5–15773–01	7 – 39
6K5–15774–00	7 – 59
6F5–15779–02	7 – 25
697–15789–00	7 – 45
6F5–15791–00	7 – 20
663–15794–00	7 – 52
6YK–24201–03	18 – 1
6YK–24260–01	18 – 4
6YL–24268–01	18 – 2
6G1–24304–02	6 – 1
6YL–24306–54	18 – 7
69D–24311–00	6 – 4
69D–24312–00	6 – 23
663–24312–01	2 – 41
6H3–24313–00	6 – 44
6H3–24314–00	6 – 46
6YL–24329–00	18 – 6
688–24378–00	6 – 43
692–24410–00	6 – 26
663–24411–00	6 – 31
692–24411–00	6 – 28
6A0–24412–02	6 – 37
6A0–24413–00	6 – 27
6A0–24421–01	6 – 35
650–24431–A0	6 – 38
	19 – 17
648–24434–01	6 – 29
648–24435–02	6 – 32
61A–24469–00	6 – 13
61A–24521–00	6 – 8
65L–24531–01	6 – 9
60H–24558–00	6 – 14
61A–24560–04	6 – 7
61A–24563–00	6 – 12

PART NO. N° PIECES	REF. NO.
61A–24564–00	6 – 10
	19 – 16
69D–24566–01	6 – 18
61A–24577–01	6 – 11
6YK–24610–01	18 – 3
692–26301–03	11 – 19
6H3–41111–01–1S	2 – 36
6H3–41112–A0	2 – 37
	19 – 6
6H3–41113–02–1S	2 – 38
6H3–41114–A0	2 – 39
	19 – 7
6H2–41131–00–5B	15 – 11
6H3–41137–01–94	15 – 5
6H3–41213–01	12 – 22
6H3–41217–00	4 – 12
662–41237–01	12 – 14
	12 – 20
682–41237–50	12 – 19
6H3–41238–00	12 – 1
6H3–41257–00	4 – 13
661–41262–02	4 – 14
	4 – 17
6H3–41271–00	4 – 15
689–41273–00	4 – 16
6H4–41611–00	8 – 12
6H3–41612–00	8 – 13
6H3–41612–10	8 – 16
6K5–41618–00	8 – 17
6H3–41631–00	12 – 2
6H3–41632–00	12 – 8
6H3–41633–00	12 – 11
679–41636–00	12 – 15
663–42111–02–4D	11 – 1
663–42115–00	11 – 10
664–42119–00	11 – 2
692–42121–02–4D	11 – 20
663–42126–01	11 – 47
663–42133–01	11 – 14
663–42134–03–94	11 – 15
663–42135–01	11 – 13
6K5–42137–00	11 – 4
663–42138–00	11 – 11
6F6–42177–A0	11 – 3
6H3–42191–01	11 – 41
6H3–42192–00	11 – 43
69D–42510–11–4D	14 – 1
6K5–42610–C0–4D	1 – 1

PART NO. N° PIECES	REF. NO.
6H3–42613–01–4D	1 – 10
6H3–42615–00	1 – 13
6H3–42647–00–94	1 – 2
6H3–42649–00–94	1 – 3
6H3–42652–00	1 – 5
663–42662–00	1 – 4
688–42677–D0	1 – 18
6H2–42678–30	1 – 19
6H3–42681–30	1 – 16
6H3–42682–30	1 – 17
6H3–42711–15–4D	10 – 1
648–42715–00	12 – 27
6H3–42716–02	10 – 12
6K5–42717–00	10 – 13
6H3–42718–00	10 – 34
6E5–42724–00	10 – 14
6K5–42725–00	10 – 15
6H4–42726–00	10 – 24
6H3–42727–00	10 – 19
6H3–42738–01–5B	10 – 16
6H3–42741–01–4D	10 – 28
6BG–42748–00	10 – 20
6H3–42768–00	10 – 23
6H3–42771–01–4D	10 – 29
6G5–42791–10	10 – 35
6AH–42794–40	10 – 36
6AH–42794–50	10 – 37
6H3–42813–00	10 – 7
6H3–42815–01–4D	10 – 3
6H3–42816–00	10 – 9
6H3–42817–01–4D	10 – 4
6H3–42818–00	10 – 10
69D–43107–11–4D	13 – 33
63D–43111–01–4D	13 – 1
63D–43112–01–4D	13 – 6
648–43114–01	13 – 9
663–43116–01	13 – 10
663–43118–01–4D	13 – 12
69D–43126–00	13 – 38
63D–43128–01–4D	13 – 13
63D–43131–01	13 – 17
6G5–43144–00	13 – 48
6G5–43145–01	13 – 21
6G5–43148–00	13 – 26
688–43160–01	13 – 29
688–43165–00	13 – 30
6H5–43181–03	13 – 22
6H5–43185–03	13 – 23

PART NO. N° PIECES	REF. NO.
69D–43311–11–4D	13 – 14
682–43318–01	13 – 46
69D–43631–00	13 – 34
63D–43691–00	13 – 16
697–44113–00	11 – 28
6H3–44117–00–94	12 – 30
6K5–44120–11	12 – 26
6H3–44121–01	12 – 36
688–44122–00	12 – 39
6H1–44144–00	16 – 56
6H1–44151–00	16 – 55
692–44159–01	11 – 32
663–44173–00	11 – 33
6K5–44191–00	11 – 29
688–44194–00	12 – 5
688–44311–01	16 – 22
688–44315–A0	16 – 24
	20 – 7
	20 – 18
688–44316–A0	16 – 31
	20 – 9
	20 – 21
69D–44322–00	16 – 23
	20 – 16
688–44323–40	16 – 32
	20 – 19
688–44324–A0	16 – 33
	20 – 8
	20 – 20
6D8–44341–01–CA	16 – 27
688–44352–03	16 – 25
	20 – 17
69D–44361–10	17 – 2
663–44366–00	17 – 10
	20 – 14
663–44367–00	17 – 1
69D–44391–00	10 – 2
688–44511–00–94	14 – 31
688–44514–00–94	14 – 24
69D–44551–10–4D	14 – 7
6H3–44552–03–94	14 – 16
6H3–44553–01–4D	14 – 21
687–44555–00–94	14 – 9
663–44575–00	14 – 14
	14 – 30
6H3–45111–12–4D	15 – 1
6H3–45113–A0	15 – 7
	19 – 18

NUMERICAL INDEX
INDEX NUMERIQUE

PART NO. N° PIECES	REF. NO.
6H3–45114–A1	15 – 17
	20 – 2
6H3–45123–00	15 – 16
	20 – 3
6H3–45127–00	15 – 15
6C5–45155–00	15 – 3
696–45211–01–4D	15 – 21
6H1–45214–00	16 – 12
6H1–45215–00	16 – 13
663–45251–00	13 – 36
63D–45251–01	13 – 2
69D–45300–11–4D	16 – 1
6H1–45301–03–4D	16 – 2
688–45321–00	16 – 16
688–45331–00–94	16 – 61
688–45341–10	16 – 10
688–45371–02	17 – 8
688–45375–00	17 – 7
663–45376–00–94	17 – 6
6J8–45378–00	16 – 21
688–45383–02	16 – 69
688–45384–00	16 – 70
69D–45501–10	16 – 37
688–45536–01	16 – 4
6K5–45551–00	16 – 38
6K5–45560–00	16 – 40
688–45567–01	16 – 7
688–45567–10	16 – 7
688–45567–20	16 – 7
688–45567–30	16 – 7
688–45567–40	16 – 7
688–45567–50	16 – 7
688–45567–60	16 – 7
6H3–45571–00	16 – 60
688–45576–00	16 – 64
688–45577–01	16 – 63
688–45577–10	16 – 63
688–45577–20	16 – 63
688–45577–30	16 – 63
688–45577–40	16 – 63
688–45577–50	16 – 63
688–45577–60	16 – 63
688–45587–01	16 – 5
688–45587–10	16 – 5
688–45587–20	16 – 5
688–45587–30	16 – 5
688–45587–40	16 – 5
688–45587–50	16 – 5

PART NO. N° PIECES	REF. NO.
688–45587–60	16 – 5
6H1–45611–01	16 – 41
6H1–45631–01	16 – 42
688–45633–00	16 – 53
6H1–45634–02	16 – 44
6H1–45635–00	16 – 48
6H1–45641–01	16 – 54
6H1–45668–00	16 – 47
688–45930–02–98	17 – 18
688–45932–60–98	17 – 18
6E5–45941–00–EL	17 – 18
6E5–45943–00–EL	17 – 18
6E5–45945–01–EL	17 – 18
6E5–45947–00–EL	17 – 18
6E5–45949–00–EL	17 – 18
6E5–45952–00–EL	17 – 18
6E5–45954–00–EL	17 – 18
6E5–45956–00–EL	17 – 18
688–45970–03–98	17 – 18
688–45972–02–98	17 – 18
688–45974–02–98	17 – 18
688–45976–01–98	17 – 18
688–45978–60–98	17 – 18
688–45987–01	17 – 13
67F–45997–00	17 – 14
700–48339–00	11 – 44
663–48344–00	12 – 17
	12 – 40
6H3–48538–00	12 – 41
6K5–81332–60	8 – 18
6H3–81916–00	9 – 22
6H3–81922–00	9 – 10
6AH–81994–40	4 – 23
6AH–81994–50	4 – 24
6AH–81995–40	7 – 62
6AH–81995–50	7 – 63
703–82119–00	10 – 25
688–82127–02	14 – 23
63D–82148–00	13 – 7
6H1–82148–00	13 – 4
6A0–82317–00	7 – 41
6G1–82370–21	9 – 28
6K5–82531–00	9 – 3
682–82556–00	11 – 52
688–82560–10	9 – 32
6K5–82575–03	11 – 51
689–8257Y–00	11 – 53
6H4–85411–00	9 – 4

PART NO. N° PIECES	REF. NO.
6H4–85415–00	9 – 5
6H3–85510–A1	8 – 2
663–85518–00	8 – 4
6H3–85520–00	8 – 3
6H3–85533–A0	8 – 6
6H3–85540–11	9 – 16
6H3–85542–00–94	9 – 6
6K5–85550–10	8 – 1
6H3–85570–10	9 – 25
69D–W0001–00	19 – 1
69D–W0001–20	20 – 1
688–W0004–00	4 – 2
6H3–W0070–30	1 – 15
69D–W0078–00	20 – 15
69D–W0090–01–1S	2 – 1
6H3–W0093–02	19 – 20
69D–W1140–01	3 – 7
692–W1571–03	7 – 1
656–W2810–02	6 – 48
90101–06M27	11 – 48
90101–08002	2 – 21
90101–10M49	14 – 25
90101–12M06	11 – 21
90101–12M65	13 – 50
90105–06M14	9 – 7
90105–10M67	17 – 9
90109–12M21	14 – 13
90116–06M07	9 – 11
90116–08M69	2 – 29
90116–10M28	14 – 34
90116–10M31	15 – 23
90116–18M52	13 – 42
90119–06023	2 – 19
90119–06M09	10 – 11
90119–06M61	10 – 22
90119–06M65	7 – 43
90119–06M91	12 – 13
90119–06MA3	2 – 35
	4 – 9
90119–06MA5	2 – 40
90119–08087	7 – 29
90119–08M13	16 – 36
	20 – 24
90119–08M16	16 – 35
	20 – 23
90119–08M32	7 – 30
90119–08M64	2 – 8
90119–08M79	15 – 8

PART NO. N° PIECES	REF. NO.
90119–08M81	15 – 4
90119–08M85	15 – 24
90119–08MA5	2 – 28
90119–10005	2 – 7
90149–05095	7 – 54
90149–05M13	11 – 6
90151–05M00	16 – 14
90157–05M16	18 – 5
90157–06M13	12 – 3
90160–04006	17 – 12
90170–16M01	16 – 39
90170–18M10	13 – 45
90170–20137	8 – 10
90171–16011	17 – 16
90175–06003	11 – 50
90179–06066	14 – 20
90179–08M34	2 – 30
90183–02M03	16 – 51
90185–05002	16 – 15
90185–10051	11 – 38
	14 – 29
	14 – 35
90185–12058	11 – 27
90185–22M11	13 – 20
90201–03313	16 – 50
90201–05652	5 – 28
90201–06068	6 – 17
90201–06M31	12 – 9
90201–10120	11 – 37
90201–10M02	11 – 7
90201–11M22	14 – 28
90201–12426	13 – 52
90201–12537	11 – 25
90201–12M16	14 – 10
90201–12M34	11 – 40
90201–13M19	14 – 12
90201–20417	3 – 18
90201–20M21	14 – 26
90201–21M18	8 – 11
90201–22M03	13 – 19
90201–30M00	14 – 2
90202–07M07	12 – 38
90202–12060	17 – 3
90202–12092	11 – 24
90202–20M06	14 – 27
90202–25M04	14 – 11
90206–10M04	12 – 23
90206–12054	11 – 26

PART NO. N° PIECES	REF. NO.
90206–13M10	10 – 6
90209–06M05	4 – 22
90243–04007	13 – 11
90249–06M19	13 – 28
90250–07M02	16 – 52
90254–03003	11 – 12
90266–06009	1 – 9
90269–02M09	11 – 5
90269–04M03	10 – 8
90280–04M04	16 – 26
	20 – 25
90280–05015	8 – 9
90282–04010	16 – 68
90338–05M03	10 – 26
	10 – 27
90340–08002	16 – 9
90340–14M00	2 – 22
90385–12M04	7 – 31
90386–06088	11 – 42
90386–07M58	12 – 33
90386–08032	11 – 9
90386–10009	11 – 36
90386–10025	13 – 25
90386–10M16	13 – 24
90386–12089	11 – 23
90386–13M38	10 – 5
90386–18M44	13 – 43
90386–22M15	13 – 18
90386–30M60	14 – 6
90386–30M77	14 – 4
90386–30M78	14 – 3
90387–06119	7 – 42
90387–06M43	9 – 8
90387–06M59	12 – 12
90387–06M60	12 – 6
	12 – 24
90387–06M69	10 – 21
90387–08M05	7 – 32
90387–12M30	11 – 39
90387–16003	13 – 39
90387–16004	13 – 40
90389–25M00	17 – 15
90430–08020	16 – 11
	20 – 4
90430–12072	17 – 4
	20 – 13
90430–14115	2 – 23
	19 – 3

PART NO. N° PIECES	REF. NO.
90445–07M02	2 – 11
90445–07M44	2 – 9
90445–07M45	2 – 12
90445–07M82	2 – 13
90445–09072	6 – 41
90445–09220	6 – 45
90446–10M02	9 – 33
90464–04M12	9 – 15
90464–07M05	2 – 15
90464–07M10	9 – 21
90464–08M07	9 – 19
	11 – 54
90464–10M59	6 – 6
90464–12M17	9 – 20
90465–06M90	7 – 61
	9 – 29
90465–08M83	6 – 25
90465–11M10	6 – 5
	6 – 24
90467–06016	2 – 10
	2 – 14
90467–08004	2 – 42
	6 – 42
	6 – 47
90468–18008	7 – 56
	12 – 18
	12 – 37
90480–13M24	9 – 9
90480–19M06	17 – 11
90501–10326	5 – 30
90501–12082	12 – 29
90501–12M48	16 – 49
90501–14M08	14 – 19
90501–16M17	11 – 34
90501–16M65	16 – 45
90501–23215	11 – 8
90502–16M02	13 – 32
90506–08M23	7 – 51
90506–14M24	13 – 47
90508–12015	7 – 53
90508–29M19	12 – 10
91490–16012	7 – 58
91490–20012	12 – 35
91490–25012	11 – 46
91490–40025	17 – 17
91690–30012	13 – 31
91690–30020	13 – 27
92903–06100	9 – 31

NUMERICAL INDEX
INDEX NUMERIQUE

PART NO. N° PIECES	REF. NO.
92903–06100	11 – 31
92903–06200	7 – 57
92903–06600	7 – 35
	7 – 38
	8 – 8
	9 – 2
	9 – 27
	12 – 32
92903–08100	7 – 27
92903–08600	7 – 28
92990–05100	6 – 34
92990–05600	4 – 4
92990–06100	9 – 14
92990–06200	9 – 13
92990–06600	9 – 18
	11 – 45
	11 – 49
92990–08200	12 – 34
92990–10100	15 – 26
92990–10600	15 – 27
92990–12200	11 – 22
92995–06100	1 – 7
	6 – 16
	7 – 17
	7 – 22
92995–06600	1 – 8
	1 – 12
	3 – 6
	6 – 3
	6 – 20
	6 – 22
	6 – 40
	7 – 49
	8 – 15
	9 – 24
	10 – 18
	10 – 31
	10 – 33
	16 – 20
92995–08100	14 – 18
	14 – 33
	15 – 10
	15 – 13
	15 – 19
92995–12200	13 – 51
92995–18600	13 – 44
93101–25M03	16 – 29
	16 – 67

PART NO. N° PIECES	REF. NO.
93101–25M03	20 – 12
93102–30009	3 – 2
	19 – 10
93102–36M24	3 – 9
	19 – 8
93106–09014	16 – 18
	20 – 6
93106–18001	3 – 3
	19 – 11
93210–04228	5 – 34
93210–04230	5 – 18
	19 – 30
93210–07003	16 – 57
93210–15M52	5 – 33
	19 – 34
93210–29M94	14 – 5
93210–46044	16 – 30
	20 – 10
	20 – 22
93210–46M16	3 – 12
	19 – 9
93210–49046	16 – 17
	20 – 5
93210–65M50	3 – 4
	19 – 12
93210–85M97	16 – 65
	20 – 11
93306–207U0	16 – 62
93306–306V1	3 – 11
93311–636U6	3 – 8
93315–325V1	16 – 3
93317–325U0	16 – 66
93332–000U3	16 – 6
93332–000W7	16 – 8
93410–16006	13 – 41
93410–28M06	14 – 8
93440–49M04	3 – 10
93450–07M00	16 – 59
93450–44166	16 – 28
93501–04M02	12 – 28
93503–16003	16 – 46
93515–32M01	11 – 35
93603–12M11	16 – 43
93603–18M09	3 – 17
93604–10M03	16 – 34
93606–12019	15 – 2
	15 – 6
	15 – 22

PART NO. N° PIECES	REF. NO.
93606–12019	17 – 5
93608–12063	2 – 6
93700–06M03	11 – 16
	13 – 15
94702–00247	2 – 43
95380–03600	6 – 30
95380–05600	12 – 16
	12 – 21
95380–06600	12 – 4
95380–06700	9 – 12
95380–10600	15 – 25
95380–12600	13 – 53
95380–12800	14 – 15
97013–06012	7 – 60
	9 – 1
	9 – 30
97013–06016	11 – 30
97013–06020	12 – 31
97013–06025	7 – 34
	9 – 26
97013–06030	8 – 7
97013–06055	7 – 37
97013–08012	7 – 26
97017–06025	7 – 21
97075–08025	14 – 17
97075–08030	15 – 12
	15 – 18
97075–08035	14 – 32
	15 – 9
97095–06010	13 – 35
	13 – 49
97095–06012	7 – 48
97095–06014	6 – 19
97095–06016	1 – 6
	1 – 11
	6 – 15
	6 – 21
	7 – 16
	10 – 17
	16 – 19
97095–06020	3 – 5
	10 – 32
97095–06025	6 – 2
	10 – 30
	12 – 7
	12 – 25
97095–06040	6 – 39
97095–06095	4 – 10

PART NO. N° PIECES	REF. NO.
97595–06425	13 – 3
97595–06510	13 – 5
97880–05016	4 – 3
97880–06025	9 – 17
97885–05012	11 – 18
97885–06008	11 – 17
	13 – 8
97885–06012	8 – 14
	9 – 23
97885–06016	14 – 22
97885–06045	4 – 21
97902–05125	8 – 5
97980–04114	5 – 16
	19 – 29
97980–05310	5 – 24
97985–06210	8 – 19
98503–05028	6 – 33
98580–04008	5 – 11
98680–06525	13 – 37
99001–08600	16 – 58

PART NO. N° PIECES	REF. NO.

PART NO. N° PIECES	REF. NO.