YAMAHA

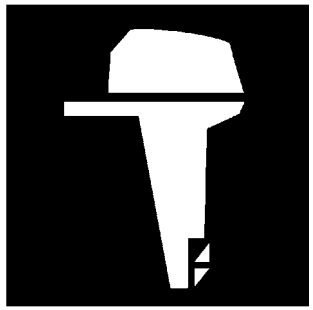

PARTS CATALOGUE
CATALOGO DE REPUESTOS

F50DET'10 (60AA)

1J60A-200S1

( )

YAMAHA GENUINE Parts & Accessories

2016/5/27

NEWS NO.	DATE	COMMENT
PE0-OM-100006	Feb.,18,2010	MOD:FIG.4 CYLINDER & CRANKCASE 2 LIST/ILLUSTRATION REVISION
PE0-OM-160018	May,24,2016	MOD:FIG.22 OIL PAN & FIG.32 REPAIR KIT 3 LIST/ILLUST. REVISION

F50DET
PARTS CATALOGUE
©2009 by Yamaha Motor Co., Ltd.
1st edition, August 2009
All rights reserved.
Any reprinting or unauthorized use
without the written permission of
Yamaha Motor Co., Ltd.
is expressly prohibited.
Printed in Japan.

F50DET
CATALOGO DE REPUESTOS
©2009 por Yamaha Motor Co., Ltd.
1ª edición, agosto 2009
Todos los derechos reservados.
Toda reproducción o uso no autorizado
sin el consentimiento escrito de
Yamaha Motor Co., Ltd.
quedan expresamente prohibidos
Impreso en Japón.

FOREWORD

This Parts Catalogue is related to the parts for the model(s) on the cover page. When you are ordering replacement parts, please refer to this Parts Catalogue and quote both part numbers and part names correctly.

1. Modifications or additions which have been made after the issue of the Parts Catalogue will be announced in the Parts News.
   It is advisable that you make the necessary corrections to the Parts Catalogue according to the Parts News.

2. Abbreviations
   The following abbreviations are used in this Parts Catalogue.

   "UR" Use specified parts number.
   "UN" Use as many as needed.
   "AP" Alternate Parts
   "LM" Locally Made (Parts need to be ordered locally)
   "F#" Frame No. (Applicable machine No.)
   "O/S" Over Size

3. The number of components for assembly
   - Parts, which are to be supplied in an assembly, are listed with a dot (.) in front of the part name as shown below.
   - The numeral appearing to the right of each component part indicates the quantity of parts for each assembly unit.

PART NO.	DESCRIPTION	Q'TY	REMARKS
2F5–83310–60	FRONT FLASHER LIGHT ASSY	2	
115–83311–60	.BULB (6V–18W)	1	

4. Applicable colours of graphics are represented in the "REMARKS" as shown below.

PART NO.	DESCRIPTION	Q'TY	REMARKS
2N4–24110–00–X5	FUEL TANK COMP.	2	MXR
3J1–24240–10	.GRAPHIC, FUEL TANK	1	FOR MXR

5. Note that the illustrations for reference in finding parts numbers are not to be used for assembling. When assembling, please use the applicable service manual.

6. The asterisk (*) before a reference number indicates modified items after the first edition.

7. Applicable Serial No.

   Engine Serial No.

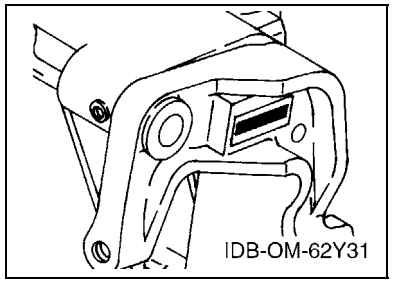

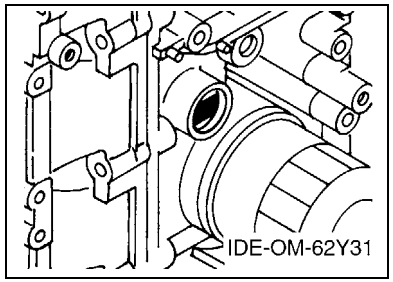

8. Applicable Engine Starting Serial No.

Model	Serial No.	Model	Serial No.
F50D	60A-1001388		

9. Applicable Colour Code

Abbreviation	Colour Name	Colour Code
DBN1	DARK BLUISH GRAY 1	008D

10. Quantity Column Information

Column No.	Name Of Q'ty Column	Applicable Model
1	60AA	F50DET

PROLOGO

Este catálogo de repuestos corresponde a las piezas para el o los modelos que figuran en la página de portada. Al formular el pedido de repuestos, se ruega citar este catálogo y especificar correctamente el número y el nombre de las piezas.

1. Las modificaciones y agregados que se hayan realizado después de la edición de este Catálogo de Repuestos, serán anunciados en las Informaciones de Recambios.
   Es recomendable que se hagan las correcciones necesarias en el Catálogo de Repuestos de acuerdo con las Informaciones de Recambios.

2. Abreviaciones
   En este. Catálogo de Repuestos se emplean las siguientes abreviaciones.

   "UR" Usar el número de partes especificado
   "UN" Usar la cantidad necesaria
   "AP" Piezas sustitutivas
   "LM" Fabricación local (Hay que pedir los repuestos en las cercanías)
   "F#" Nº de bastidor (Nº aplicable a la máquina)
   "O/S" Sobredimensionado

3. La cantidad de componentes para el montaje
   - Los componentes, suministrados como conjunto, se describen con un punto (.) que precede al nombre del parte como se indica a continuación.
   - La numeración que aparece a la derecha de cada descripción indica la cantidad de partes por cada unidad de conjunto.

CODIGO Nº	DESCRIPCION	CANT.	OBSERVACIONES
2F5–83310–60	ENSAMBLAJE DE LA LUZ	2	
115–83311–60	.BOMBILLA (6V–18W)	1	

4. Los colores de los componentes se indican como sigue en la columna de "OBSERVACIONES".

CODIGO Nº	DESCRIPCION	CANT.	OBSERVACIONES
2N4–24110–00–X5	COMP. DEL TANQUE	2	MXR
3J1–24240–10	.GRAFICO, DEL TANQUE	1	PARA MXR

5. Debe tenerse en cuenta que las ilustraciones sirven como guia para la búsqueda de los números de partes y no deben usarse para el montaje. Durante el montaje, se recomienda usar el manual de taller correspondiente.

6. EL asterisco (*) antes del número de referencia indica los elementos modificados después de la primera edición.

7. Números de serie

   Nº de Serie del motor

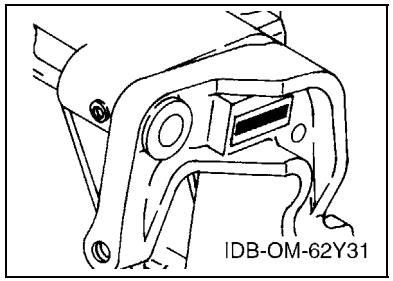

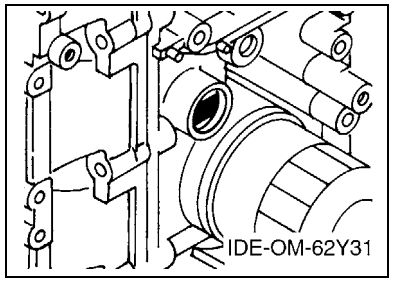

8. Números de serie del motor

Modelo	Nº de serie	Modelo	Nº de serie
F50D	60A-1001388		

9. Códigos de color aplicables

Abreviatura	Nombre de color	Código de color
DBN1	DARK BLUISH GRAY 1	008D

10. Informacion para la columna de cantidades

Columna Nº	Nombre de la columna de cantidades	Modelo aplicable
1	60AA	F50DET

CONTENTS

TOP COWLING 1
CYLINDER & CRANKCASE 1 2
CRANKSHAFT & PISTON 4
CYLINDER & CRANKCASE 2 5
VALVE 7
INTAKE 8
CARBURETOR 10
OIL PUMP 12
FUEL 13
GENERATOR 15
ELECTRICAL 1 16
ELECTRICAL 2 17
ELECTRICAL 3 19
STARTING MOTOR 20
BOTTOM COWLING 21
CONTROL 23
BRACKET 1 25
BRACKET 2 27
POWER TRIM & TILT ASSY 1 29
POWER TRIM & TILT ASSY 2 32
UPPER CASING 33
OIL PAN 35
LOWER CASING & DRIVE 1 36
LOWER CASING & DRIVE 2 39
FUEL TANK 41
STEERING GUIDE 42
REMOTE CONTROL BOX 43
REMOTE CONTROL ASSY 44
METER 47
REPAIR KIT 1 48
REPAIR KIT 2 49
REPAIR KIT 3 50

INDEX

NUMERICAL INDEX 52

CONTENIDO

SOPORTE SUPERIOR 1
CILINDRO & CARTER 1 2
CIGUENAL & PISTON 4
CILINDRO & CARTER 2 5
VALVULA 7
ADMISION 8
CARBURADOR 10
BOMBA DE ACEITE 12
COMBUSTIBLE 13
GENERADOR 15
EQUIPO ELECTRICO 1 16
EQUIPO ELECTRICO 2 17
EQUIPO ELECTRICO 3 19
MOTOR DE ARRANQUE 20
CUBIERTA INFERIOR 21
CONTROL 23
SOPORTE 1 25
SOPORTE 2 27
COMPONER Y PODER VARILLA 1 29
COMPONER Y PODER VARILLA 2 32
FUNDA SUPERIOR 33
OIL PAN 35
IMPULSOR E INFERIOR 1 36
IMPULSOR E INFERIOR 2 39
DEPOSITO DE COMBUSTIBLE 41
DIRECCIONGUIAR 42
CONTROL REMOTO COMPLETO 43
CONTROL REMOTO COMPL 44
MEDIDOR 47
ESTUCHE REPARATION 1 48
ESTUCHE REPARATION 2 49
ESTUCHE REPARATION 3 50

INDICE

INDICE NUMERICO 52

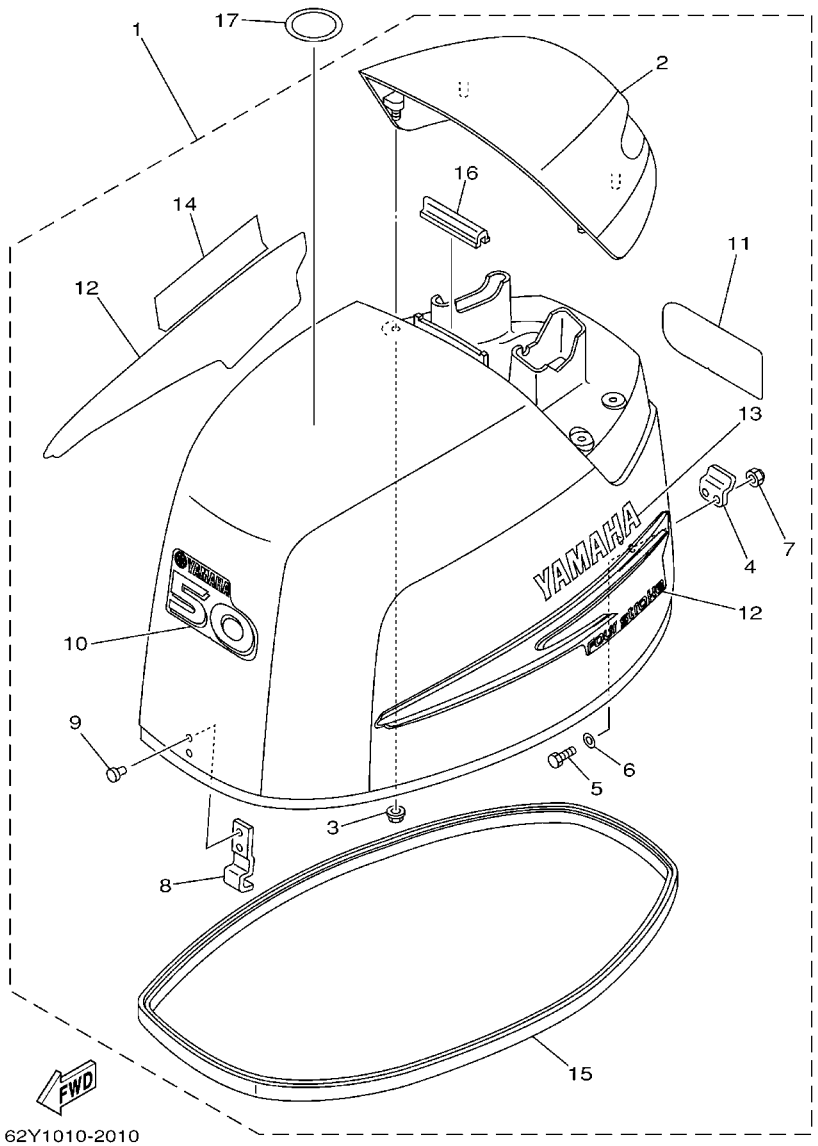

FIG. 1 TOP COWLING — SOPORTE SUPERIOR

REF. NO.	PART NO. CODIGO Nº	DESCRIPTION DESCRIPCION	60AA					REMARKS OBSERVACIONES
1	62Y–42610–30–8D	TOP COWLING ASSY SOPORTE SUPERIOR COMPL.	1					
2	62Y–42613–01–8D	.MOLDING, AIR DUCT .MOLDURA CONDUCTO AIRE	1					
3	90179–06M24	.NUT .TUERCA	4					
4	62Y–42652–00	.HOOK .GANCHO	1					
5	97095–05016	.BOLT .PERNO	2					
6	92995–05600	.WASHER .ARANDELA	2					
7	95780–05300	.NUT, NYLON .TUERCA	2					
8	62Y–42651–00	.HOOK .GANCHO	1					
9	90266–06M02	.RIVET .REMACHE	2					
10	62Y–42677–30	.GRAPHIC, FRONT .CALCAMONIA FRONTAL	1					
11	62Y–42678–30	.GRAPHIC, REAR .CALCAMONIA TRASERA	1					
12	62Y–W0070–10	.GRAPHIC SET .JUEGO DE EMBLEMA	1					
13	62Y–42681–10	.MARK, COWLING .MARCA DE CUBIERTA	1					
14	62Y–42682–10	.MARK, COWLING .MARCA DE CUBIERTA	1					
15	62Y–42615–10	.SEAL .SELLO	1					
16	61N–42628–00	.SEAL .SELLO DE GOMA	1					
17	67F–13434–10	LABEL, CAUTION ETIQUETA DE PRECAUCION	1					

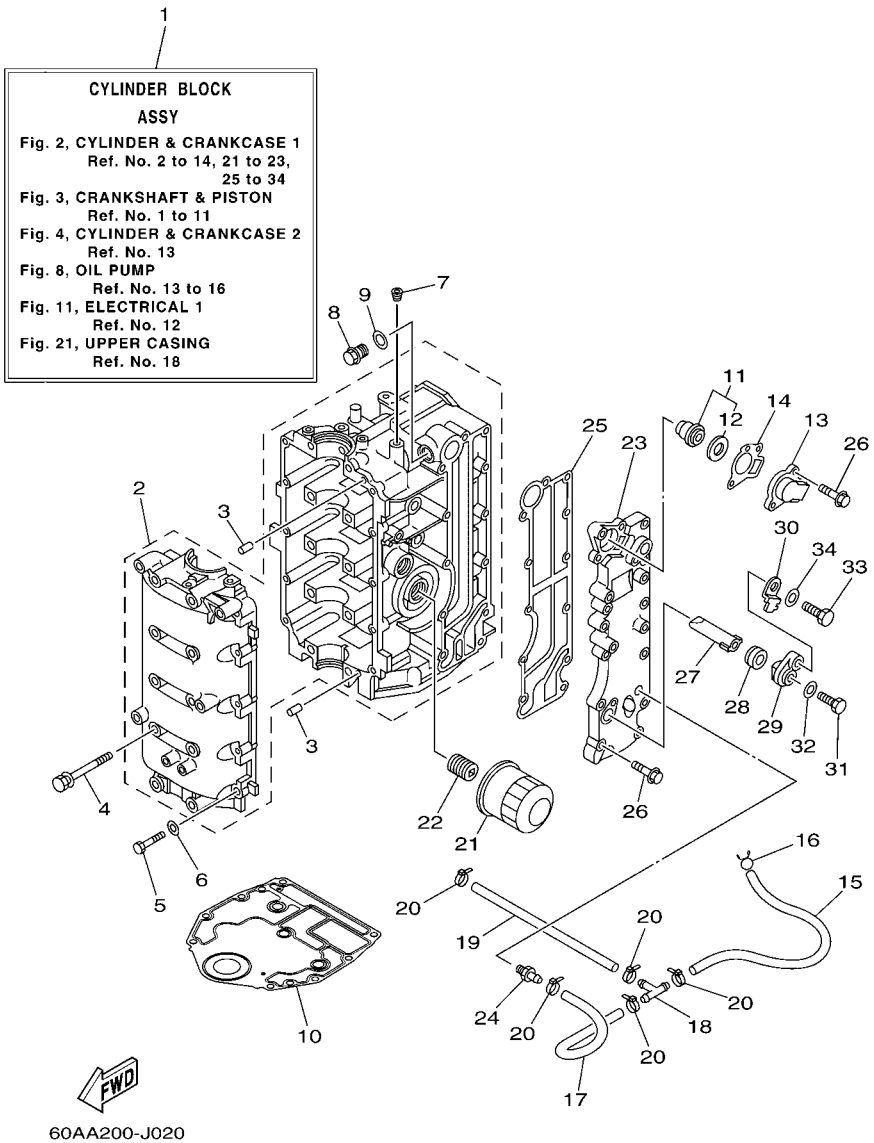

FIG. 2 CYLINDER & CRANKCASE 1 CILINDRO & CARTER 1

REF. NO.	PART NO. CODIGO Nº	DESCRIPTION DESCRIPCION	60AA					REMARKS OBSERVACIONES
1	60A–W009B–01–9S	CYLINDER BLOCK ASSY CYLINDRO BLOQUE COMPLETO	1					
2	64J–15100–00–9S	CRANKCASE ASSY CARTER COMPLETO	1					
3	93606–12019	PIN, DOWEL PASADOR DE CLAVIJA	4					
4	90119–08M01	BOLT, WITH WASHER TORNILLO CON ARANDELA	10					
5	97013–06035	BOLT PERNO	10					
6	92903–06600	WASHER, PLATE RONDANA SENCILLA	10					
7	90344–51003	PLUG, TAPER SCREW TAPON DE TORNILLO AHUSADO	1					
8	90340–14M06	PLUG, STRAIGHT SCREW TORNILLO, DE DRENAJE	1					
9	90430–14115	GASKET JUNTA	1					
10	6BG–11351–00	GASKET, CYLINDER JUNTA, DE CILINDRO	1					
11	6G8–12411–03	THERMOSTAT TERMOSTAT	1					
12	688–12412–00	.SEAL, THERMOSTAT .SELLO TERMOSTATO	1					
13	6H3–12413–00–9S	COVER, THERMOSTAT CUBIERTA TERMOSTATO	1					
14	62Y–12414–00	GASKET, COVER EMPAQUE	1					
15	90445–09104	HOSE (L300) TUBO (L300)	1					
16	90467–08M18	CLIP PRESILLA	1					
17	90445–09068	HOSE (L110) TUBO (L110)	1					
18	688–24378–00	PIPE, JOINT 3 TUBO DE UNION 3	1					
19	90445–09095	HOSE (L215) TUBO (L215)	1					
20	90465–11M10	CLAMP BRIDA	5					
21	5GH–13440–20	ELEMENT ASSY, OIL CLEANER ELEMENTO FILTRO DE ACEITE	1					
22	6C5–12858–00	BOLT, UNION PERNO DE UNION	1					
23	62Y–41113–30–9S	OUTER COVER, EXHAUST CUBOERTA EXTERIOR DE ESCAPE	1					
24	62Y–12481–10	PIPE 1 TUBO 1	1					
25	6C5–41114–00	GASKET, EXHAUST OUTER COVER EMPAQUE	1					
26	90119–06MA5	BOLT, WITH WASHER TORNILLO CON ARANDELA	12					
27	62Y–11325–00	ANODE ANODO	1					

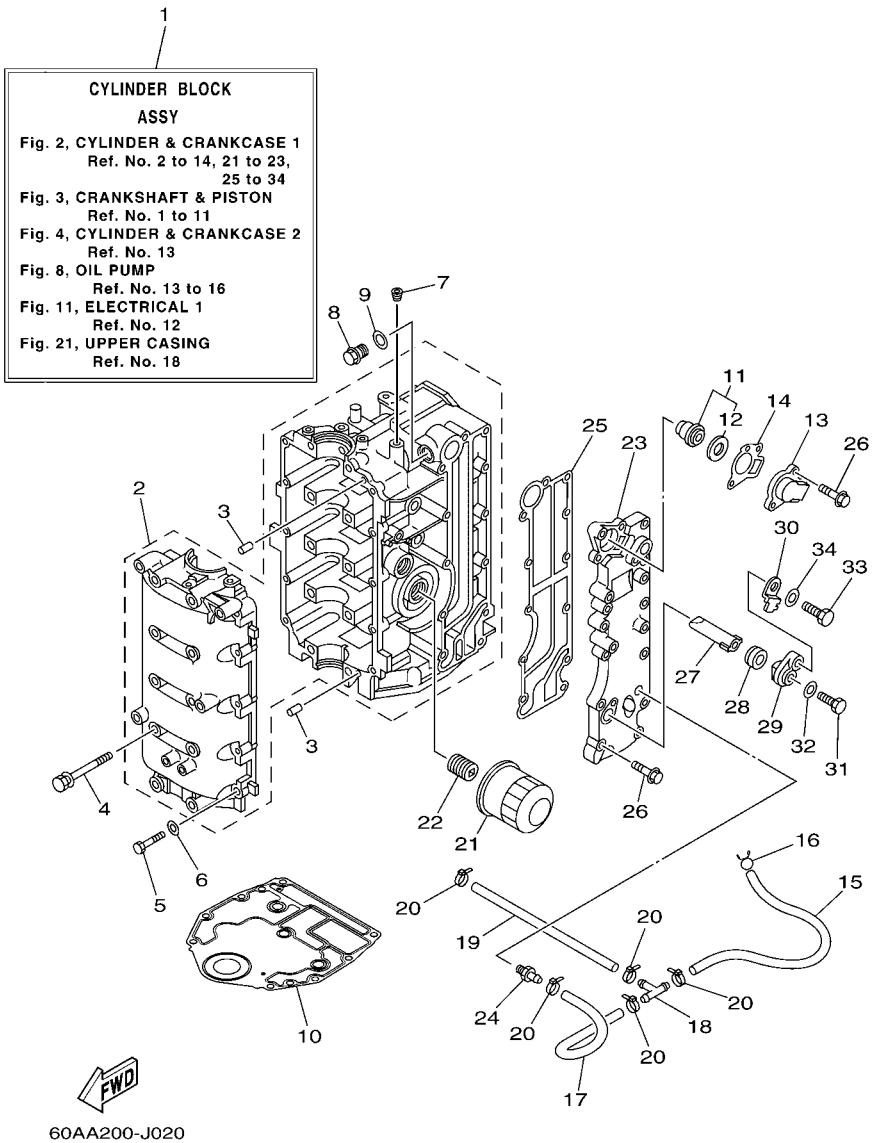

FIG. 2 CYLINDER & CRANKCASE 1 CILINDRO & CARTER 1

REF. NO.	PART NO. CODIGO Nº	DESCRIPTION DESCRIPCION	60AA					REMARKS OBSERVACIONES
28	66M–11328–00	GROMMET, ANODE TAPON	1					
29	66M–11327–00–94	COVER, ANODE CUBIERTA DE ANODO	1					
30	66M–12535–00	PLATE EMPAQUETADURA	1					
31	97095–05012	BOLT PERNO	1					
32	92995–05600	WASHER ARANDELA	1					
33	97095–06020	BOLT PERNO	1					
34	92995–06600	WASHER ARANDELA	1					

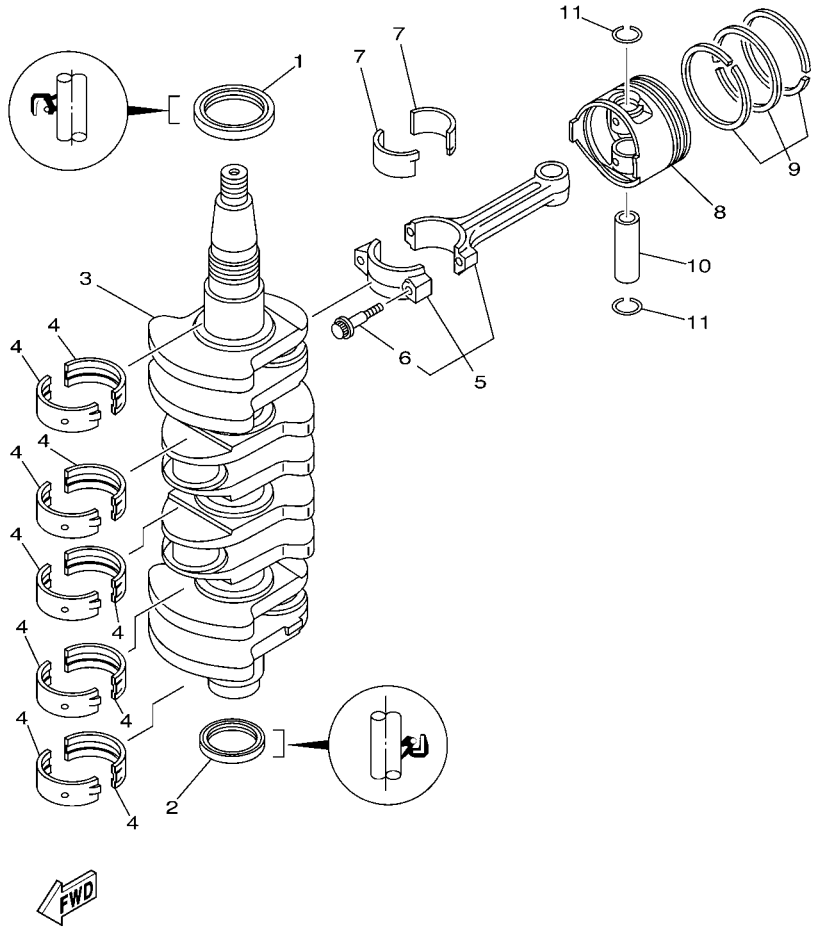

FIG. 3 CRANKSHAFT & PISTON CIGUENAL & PISTON

REF. NO.	PART NO. CODIGO Nº	DESCRIPTION DESCRIPCION	60AA					REMARKS OBSERVACIONES
1	93102–43M42	OIL SEAL SELLO ACEITE	1					
2	93101–35002	OIL SEAL SELLO ACEITE	1					
3	69W–11411–01	CRANKSHAFT CIGUENAL	1					
4	6C5–11416–00	PLANE BEARING, CRANKSHAFT 1 COJINETE PLANO 1	10					UR YELLOW UR YELLOW
	6C5–11416–10	PLANE BEARING, CRANKSHAFT 1 COJINETE PLANO 1	10					UR RED UR RED
	6C5–11416–20	PLANE BEARING, CRANKSHAFT 1 COJINETE PLANO 1	10					UR PINK UR PINK
	6C5–11416–30	PLANE BEARING, CRANKSHAFT 1 COJINETE PLANO 1	10					UR GREEN UR GREEN
5	6C5–11650–00	CONNECTING ROD ASSY BIELA COMPLETA	4					
6	6C5–11654–00	.BOLT, CONNECTING ROD .TORNILLO DE BIELA	2					
7	6C5–11656–00	PLANE BEARING, CONNECTING ROD COJINETE PLANO	8					UR YELLOW UR YELLOW
	6C5–11656–10	PLANE BEARING, CONNECTING ROD COJINETE PLANO	8					UR RED UR RED
	6C5–11656–20	PLANE BEARING, CONNECTING ROD COJINETE PLANO	8					UR PINK UR PINK
	6C5–11656–30	PLANE BEARING, CONNECTING ROD COJINETE PLANO	8					UR GREEN UR GREEN
8	62Y–11631–10–96	PISTON (STD) PISTON (NORMA)	4					
	62Y–11635–10	PISTON (0.25MM O/S) PISTON (0.25MM O/S)	4					AP AP
	62Y–11636–10	PISTON (0.50MM O/S) PISTON (0.50MM O/S)	4					AP AP
9	64J–11603–01	PISTON RING SET (STD) JUEGO DE ANILLOS (NORMA)	4					
	64J–11604–01	PISTON RING SET (0.25MM O/S) JUEGO DE ANILLOS (0.25MM O/S)	4					AP AP
	64J–11605–01	PISTON RING SET (0.50MM O/S) JUEGO DE ANILLOS (0.50MM O/S)	4					AP AP
10	62Y–11633–00	PIN, PISTON PASADOR, PISTON	4					
11	93450–17129	CIRCLIP SEGURO	8					

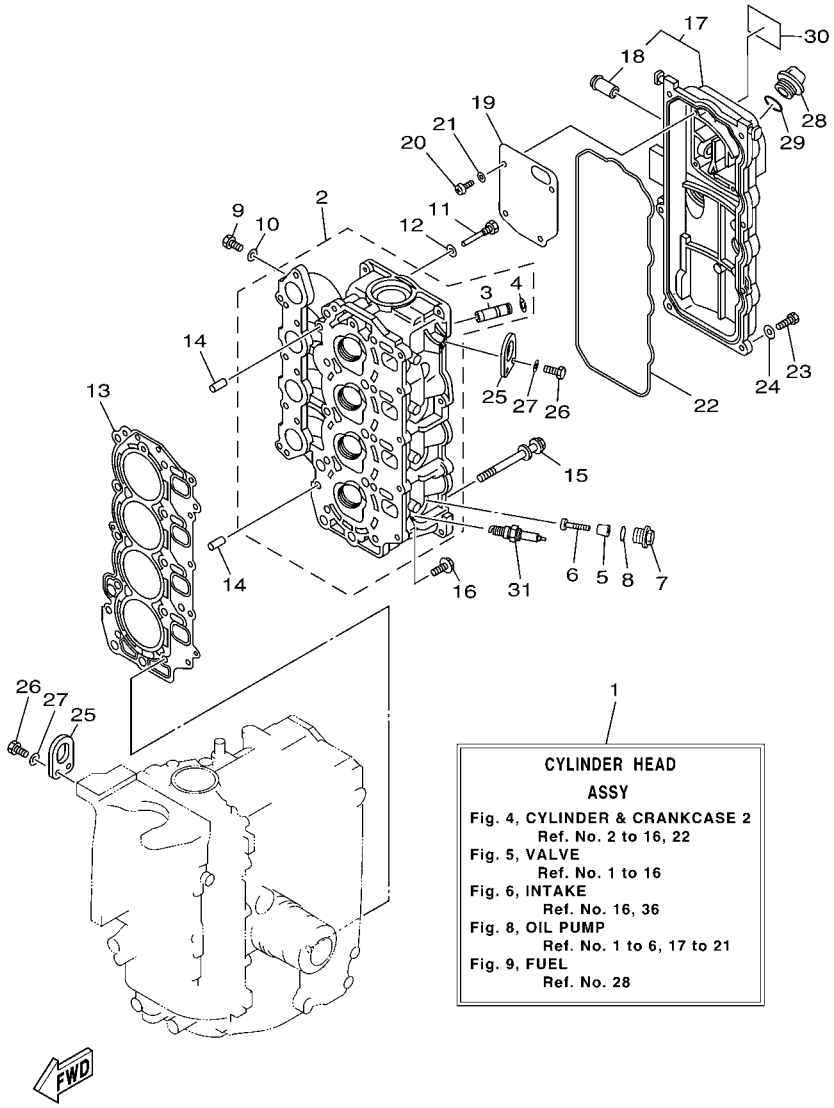

60AA200-J040

FIG. 4 CYLINDER & CRANKCASE 2 CILINDRO & CARTER 2

REF. NO.	PART NO. CODIGO Nº	DESCRIPTION DESCRIPCION	60AA					REMARKS OBSERVACIONES
1	64J–W009A–03–9S	CYLINDER HEAD ASSY CILINDRD CULATA COMPLETO	1					Go to P/N : PE0-OM-100006
2	64J–11111–01–9S	HEAD, CYLINDER 1 CULATA CILINDRO 1	1					Go to P/N : PE0-OM-100006
3	62Y–11133–30	.GUIDE, VALVE 1 .GUIA DE VALVULA 1	8					
4	93450–09M01	.CIRCLIP .SEGURO	8					
5	6G8–11325–00	ANODE ANODO	4					Go to P/N : PE0-OM-100006
6	97880–05025	SCREW, PAN HEAD TORNILLO DE CABEZA CON PLANA	4					Go to P/N : PE0-OM-100006
7	6G8–11197–01	PLUG, BLIND TAPON CIEGO	4					Go to P/N : PE0-OM-100006
8	93210–13M63	O-RING ANILLO O	4					Go to P/N : PE0-OM-100006
9	97095–06010	BOLT PERNO	4					
10	90430–06014	GASKET JUNTA	4					
11	90109–06M65	BOLT PERNO	1					
12	90430–06014	GASKET JUNTA	1					
13	62Y–11181–00	GASKET, CYLINDER HEAD 1 JUNTA, DE CULATA 1	1					
14	99530–08012	PIN, DOWEL PASADOR, DE ESPIGA	2					
15	90119–09M00	BOLT, WITH WASHER TORNILLO CON ARANDELA	10					
16	90119–06MA3	BOLT, WITH WASHER TORNILLO CON ARANDELA	5					
17	62Y–11191–01–9S	COVER, CYLINDER HEAD 1 TAPA CULATA DE CILINDRO 1	1					
18	62Y–14485–00	.PIPE, JOINT .TUBO DE UNION	1					
19	62Y–11168–00	COVER, BREATHER CUBIERTA RESPIRADERO	1					
20	98507–04010	SCREW, PAN HEAD TORNILLO DE CABEZA PLANA	4					
21	92907–04600	WASHER ARANDELA	4					
22	62Y–11356–00	SEAL, CYLINDER 2 RETEN ACEITE CILINDRO 2	1					
23	97095–06020	BOLT PERNO	7					
24	92995–06600	WASHER ARANDELA	7					
25	62Y–11119–00	HANGER, ENGINE SOPORTE DEL MOTOR	2					
26	97095–06020	BOLT PERNO	4					
27	92995–06600	WASHER ARANDELA	4					

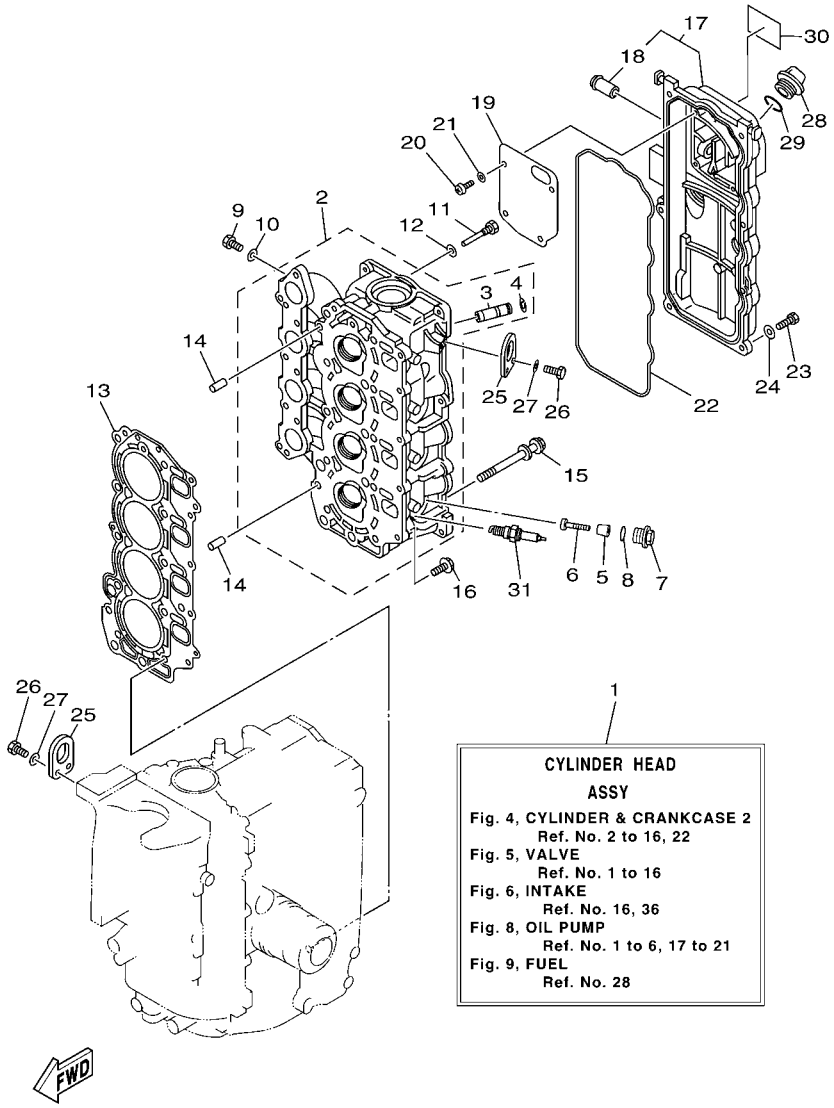

FIG. 4 CYLINDER & CRANKCASE 2 CILINDRO & CARTER 2

REF. NO.	PART NO. CODIGO Nº	DESCRIPTION DESCRIPCION	60AA					REMARKS OBSERVACIONES
28	6G8–15363–00	PLUG, OIL TAPON DE ACEITE	1					
29	93210–24M79	O-RING ANILLO O	1					
30	62Y–12138–60	MARK, CAUTION MARKER	1					
31	94701–00375	PLUG, SPARK (NGK DPR6EA-9) BUJIA (NGK DPR6EA-9)	4					

PARTS NEWS

YAMAHA
YAMAHA MOTOR CO., LTD.
2500 SHINGAI IWATA SHIZUOKA JAPAN

News No.PE0-OM-100006(1/3)

Date:February 18, 2010

Signature:F.Takahashi

Caus Cause ☑ Revision Notice ☐ Correction ☐ Sales Unit Change ☐ Others

Model	F50D (60AA) / FT50C (61S8)
Subject	PARTS CATALOGUE CORRECTIONS
CATALOGUE NO.	1J60A-664E1 / 1J60A-200S1 / 1J61S-200S1 / 1J61S-415M1

Time of YPEC Revision Text, Illustration --> Mar./23/2010 PDF Replace --> Mar./23/2010
(YPEC = Yamaha Parts Electrical Catalogue = Website parts catalogue)

Applicable Engine Serial No.

MODEL NAME	MODEL CODE	Applicable Engine Serial No.
F50D	60AA	60A:1001410-
FT50C	61S8	64J:1009772-

*1: Interchangeability

A	Old Parts →	Old Parts
	New Parts →	New Parts
B	Old Parts →	Old Parts
	New Parts →	New Parts
C	Old Parts →	Old Parts
	New Parts →	New Parts
○	These parts are interchangeable with a set	

FIG.4 CYLINDER & CRANKCASE 2

1. LIST CORRECTION

Fig. No.	Ref. No.	OLD P/No.	NEW P/No.	PART NAME	Q'TY	*Interchangeability	REMARKS
4	1	64J-W009A-02-9S	64J-W009A-03-9S	CYLINDER HEAD ASSY	1	B	
	2	64J-11111-00-9S	64J-11111-01-9S	HEAD,CYLINDER 1	1	○	*Part number revision
	5	62Y-11325-00	6G8-11325-00	ANODE	4	○	
	~~6~~	~~66M-11328-00~~	-	~~GROMMET,ANODE~~	~~4~~		
	~~7~~	~~66M-11327-00-94~~	-	~~COVER,ANODE~~	~~4~~		
	~~8~~	~~66M-12535-00~~	-	~~PLATE~~	~~4~~		
	~~9~~	~~97095-05012~~	-	~~BOLT~~	~~4~~		*Deleted Parts
	~~10~~	~~92995-05600~~	-	~~WASHER~~	~~4~~		
	~~11~~	~~97095-06020~~	-	~~BOLT~~	~~4~~		
	~~12~~	~~92995-06600~~	-	~~WASHER~~	~~4~~		
	6	-	97880-05025	SCREW,PAN HEAD	4	○	
	7	-	6G8-11197-01	PLUG,BLIND	4	○	*Added Parts
	8	-	93210-13M63	O-RING	4	○	
	~~13~~ 9	97095-06010	-	BOLT	4		
	~~14~~ 10	90430-06014	-	GASKET	4		
	~~15~~ 11	90109-06M65	-	BOLT	1		
	~~16~~ 12	90430-06014	-	GASKET	1		*Ref.No. change
	~~17~~ 13	62Y-11181-00	-	GASKET,CYLINDER HEAD 1	1		
	~~18~~ 14	99530-08012	-	PIN,DOWEL	2		
	~~19~~ 15	90119-09M00	-	BOLT,WITH WASHER	10		

Parts Manager Check | Service Manager Check | Parts Manager File

YAMAHA MOTOR CO.,LTD
2500 Shingai Iwata Shizuoka 438-8501.Japan
Technical Publication Dept.

YAMAHA GENUINE Parts & Accessories

PARTS NEWS

YAMAHA
YAMAHA MOTOR CO., LTD.
2500 SHINGAI IWATA SHIZUOKA JAPAN

News No.PE0-OM-100006(2/3)

Date:February 18, 2010

Signature:F.Takahashi

Caus Cause ☑ Revision Notice ☐ Correction ☐ Sales Unit Change ☐ Others

Model	F50D (60AA) / FT50C (61S8)
Subject	PARTS CATALOGUE CORRECTIONS
CATALOGUE NO.	1J60A-664E1 / 1J60A-200S1 / 1J61S-200S1 / 1J61S-415M1

Time of YPEC Revision Text, Illustration --> Mar./23/2010 PDF Replace --> Mar./23/2010
(YPEC = Yamaha Parts Electrical Catalogue = Website parts catalogue)

FIG.4 CYLINDER & CRANKCASE 2

1. LIST CORRECTION

Fig. No.	Ref. No.	OLD P/No.	NEW P/No.	PART NAME	Q'TY	*Interchangeability	REMARKS
4	~~20~~ 16	90119-06MA3	-	BOLT,WITH WASHER	5		*Ref.No. change
	~~21~~ 17	62Y-11191-01-9S	-	COVER,CYLINDER HEAD 1	1		
	~~22~~ 18	62Y-14485-00	-	. PIPE,JOINT	1		
	~~23~~ 19	62Y-11168-00	-	COVER,BREATHER	1		
	~~24~~ 20	98507-04010	-	SCREW,PAN HEAD	4		
	~~25~~ 21	92907-04600	-	WASHER	4		
	~~26~~ 22	62Y-11356-00	-	SEAL,CYLINDER 2	1		
	~~27~~ 23	97095-06020	-	BOLT	7		
	~~28~~ 24	92995-06600	-	WASHER	7		
	~~29~~ 25	62Y-11119-00	-	HANGER,ENGINE	2		
	~~30~~ 26	97095-06020	-	BOLT	4		
	~~31~~ 27	92995-06600	-	WASHER	4		
	~~32~~ 28	6G8-15363-00	-	PLUG,OIL	1		
	~~33~~ 29	93210-24M79	-	O-RING	1		
	~~34~~ 30	62Y-12138-60	-	MARK,CAUTION	1		
	~~35~~ 31	94701-00375	-	PLUG,SPARK (NGK DPR6EA-9)	4		

Parts Manager Check | Service Manager Check | Parts Manager File

YAMAHA MOTOR CO.,LTD
2500 Shingai Iwata Shizuoka 438-8501.Japan
Technical Publication Dept.

YAMAHA GENUINE Parts & Accessories

PARTS NEWS

YAMAHA
YAMAHA MOTOR CO., LTD.
2500 SHINGAI IWATA SHIZUOKA JAPAN

News No.PE0-OM-100006(3/3)

Date:February 18, 2010

Signature:F.Takahashi

Caus Cause ☑ Revision Notice ☐ Correction ☐ Sales Unit Change ☐ Others

Model	F50D (60AA) / FT50C (61S8)
Subject	PARTS CATALOGUE CORRECTIONS
CATALOGUE NO.	1J60A-664E1 / 1J60A-200S1 / 1J61S-200S1 / 1J61S-415M1
Time of YPEC Revision Text, Illustration --> Mar./23/2010 PDF Replace --> Mar./23/2010 (YPEC = Yamaha Parts Electrical Catalogue = Website parts catalogue)	

FIG.4 CYLINDER & CRANKCASE 2

2. ILLUSTRATION CORRECTION

(OLD)

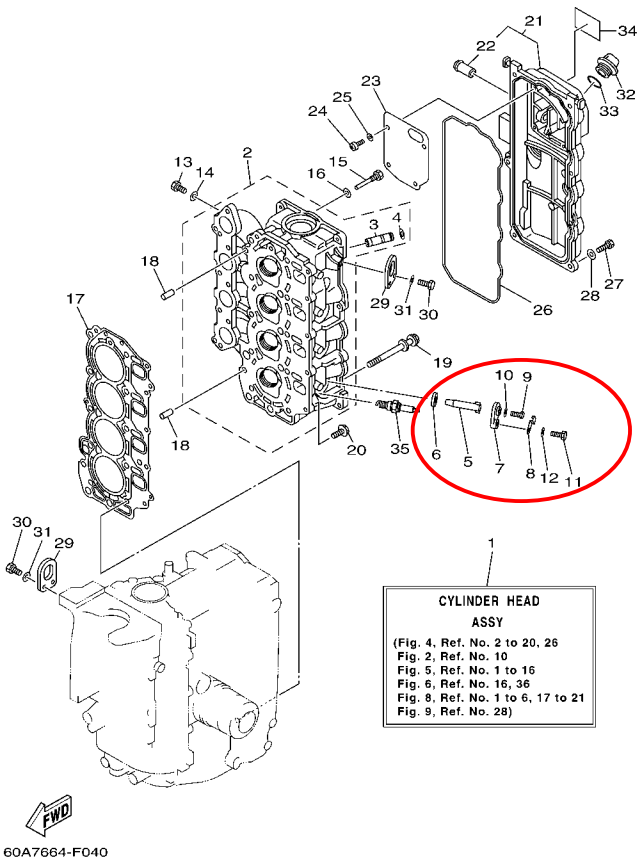

(NEW)

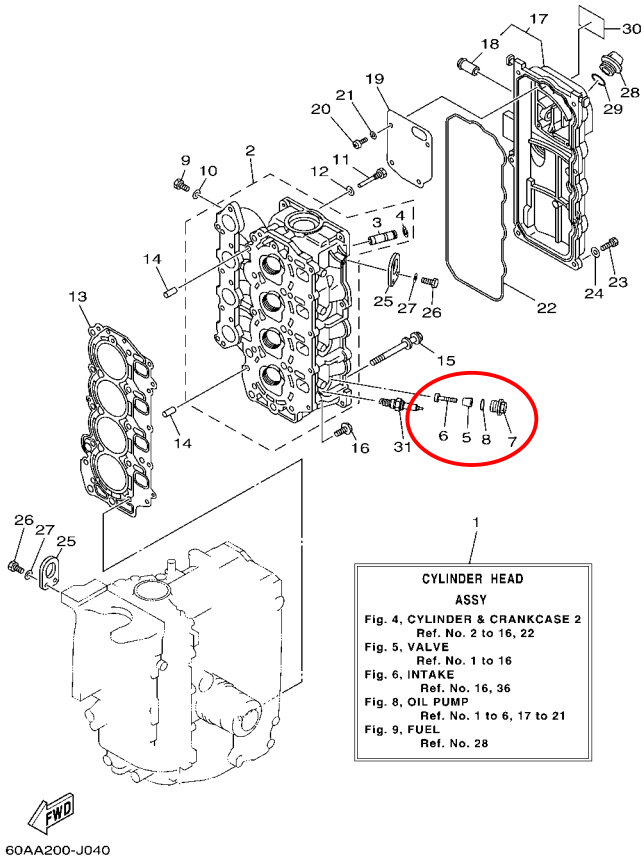

Thank you very much for your cooperation.

Parts Manager Check	Service Manager Check	Parts Manager File

YAMAHA MOTOR CO.,LTD
2500 Shingai Iwata Shizuoka 438-8501.Japan
Technical Publication Dept.

YAMAHA GENUINE Parts & Accessories

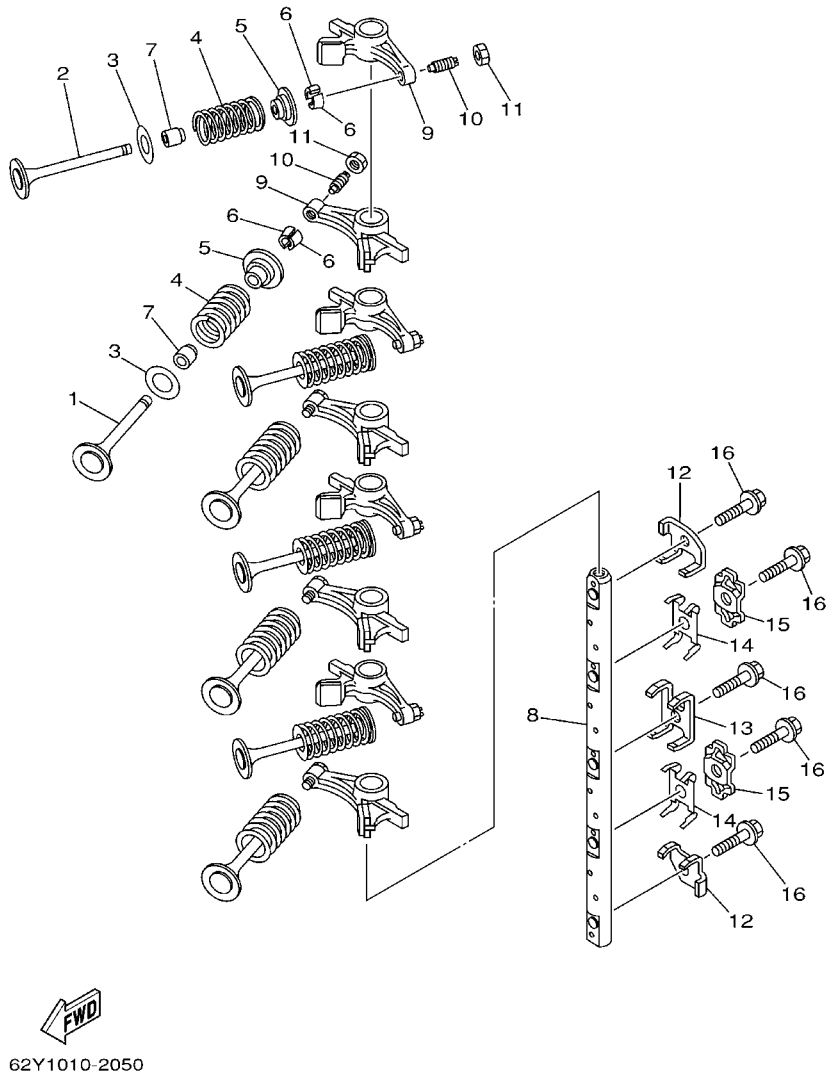

FIG. 5 VALVE VALVULA

REF. NO.	PART NO. CODIGO Nº	DESCRIPTION DESCRIPCION	60AA					REMARKS OBSERVACIONES
1	64J–12111–00	VALVE, INTAKE VALVULA DE ADMISION	4					
2	64J–12121–00	VALVE, EXHAUST VALVULA DE ESCAPE	4					
3	62Y–12116–00	SEAT, VALVE SPRING ASIENTO RESORTE DE VALVULA	8					
4	51Y–12114–00	SPRING, VALVE OUTER RESORTE VALVULA EXTERIOR	8					
5	30X–12117–00	RETAINER, VALVE SPRING RETEN RESORTE DE VALVULA	8					
6	30X–12118–00	COTTER, VALVE SEGURO DE VALVULA	16					
7	51Y–12119–00	SEAL, VALVE STEM SELLO DE ACEITE VALVULA	8					
8	62Y–12146–00	SHAFT, ROCKER ARBOL DE BALANCIN	1					
9	62Y–12151–00	ARM, VALVE ROCKER BRAZO DE BALANCIN DE VALVULA	8					
10	64J–12159–00	SCREW, VALVE ADJUSTING TORNILLO DE AJUSTE DE VALVULA	8					
11	62Y–12158–00	NUT, LOCK ARANDELA DE SEGURIDAD	8					
12	64J–12238–00	PLATE, BOLT STOPPER PLACA PERNO DE TOPE	2					
13	64J–12279–00	PLATE PLACA	1					
14	62Y–12216–00	SPRING RESORTE	2					
15	62Y–12231–00	GUIDE, STOPPER 1 TOPE DE GUIA 1	2					
16	90109–08M63	BOLT PERNO	5					

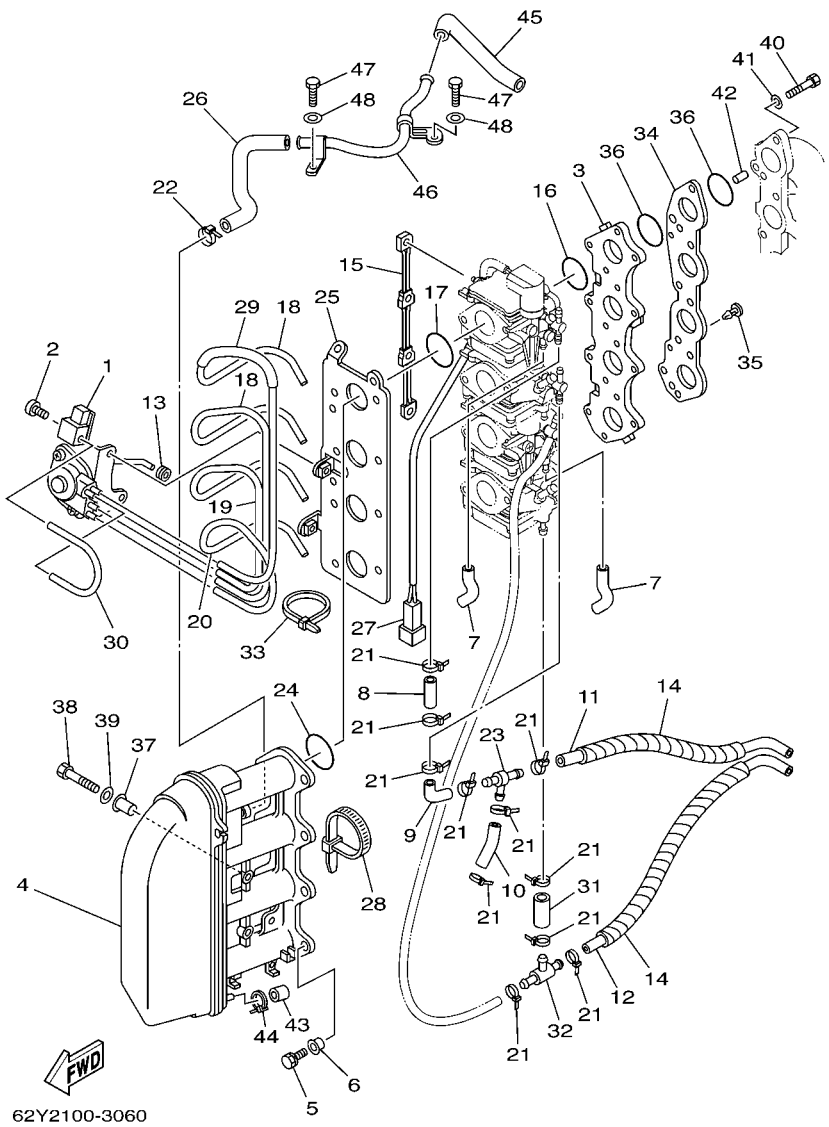

FIG. 6 INTAKE — ADMISION

REF. NO.	PART NO. CODIGO Nº	DESCRIPTION DESCRIPCION	60AA					REMARKS OBSERVACIONES
1	62Y–14369–30	DIAPHRAGM ASSY 2 DIAFRAGMA COMPLETO 2	1					
2	650–14327–01	SCREW TORNILLO	3					
3	62Y–13586–30	JOINT, CARBURETOR 1 TOBERA DE CARBURADOR 1	1					
4	62Y–14440–00	SILENCER ASSY, INTAKE SILENCIADOR COMPL DE ADMISION	1					
5	97595–06590	BOLT, WITH WASHER PERNO CON ARANDELA	8					
6	90387–06M70	COLLAR ESPACIADOR	8					
7	62Y–24312–00	PIPE 2 TUBO 2	2					
8	62Y–24313–30	PIPE 3 TUBO 3	1					
9	62Y–24313–40	PIPE 3 TUBO 3	1					
10	62Y–24313–50	PIPE 3 TUBO 3	1					
11	62Y–24313–61	PIPE 3 TUBO 3	1					
12	62Y–24313–70	PIPE 3 TUBO 3	1					
13	62Y–41262–30	JOINT, CHOKE LEVER CONECTOR DE AHOGADOR	1					
14	69W–24313–80	PIPE 3 TUBO 3	2					
15	64J–14585–00	ROD, CHOKE VARILLA DE CEBADOR	1					
16	93210–30MH4	O-RING ANILLO O	4					
17	93210–35M86	O-RING ANILLO O	4					
18	64J–14349–11	PIPE TUBO	2					
19	64J–14349–21	PIPE TUBO	1					
20	64J–14349–31	PIPE TUBO	1					
21	90465–11M10	CLAMP BRIDA	12					
22	90465–13M36	CLAMP BRIDA	1					
23	62Y–24378–00	PIPE, JOINT 3 TUBO DE UNION 3	1					
24	93210–38MH3	O-RING ANILLO O	4					
25	62Y–14291–30	BRACKET 1 SOPORTE 1	1					
26	62Y–1532B–00	PIPE, BREATHER MANGUELA DE RESPIRADERO	1					
27	62Y–82509–00	WIRE, SUB LEAD CABLE SUBCONDUCTOR	1					

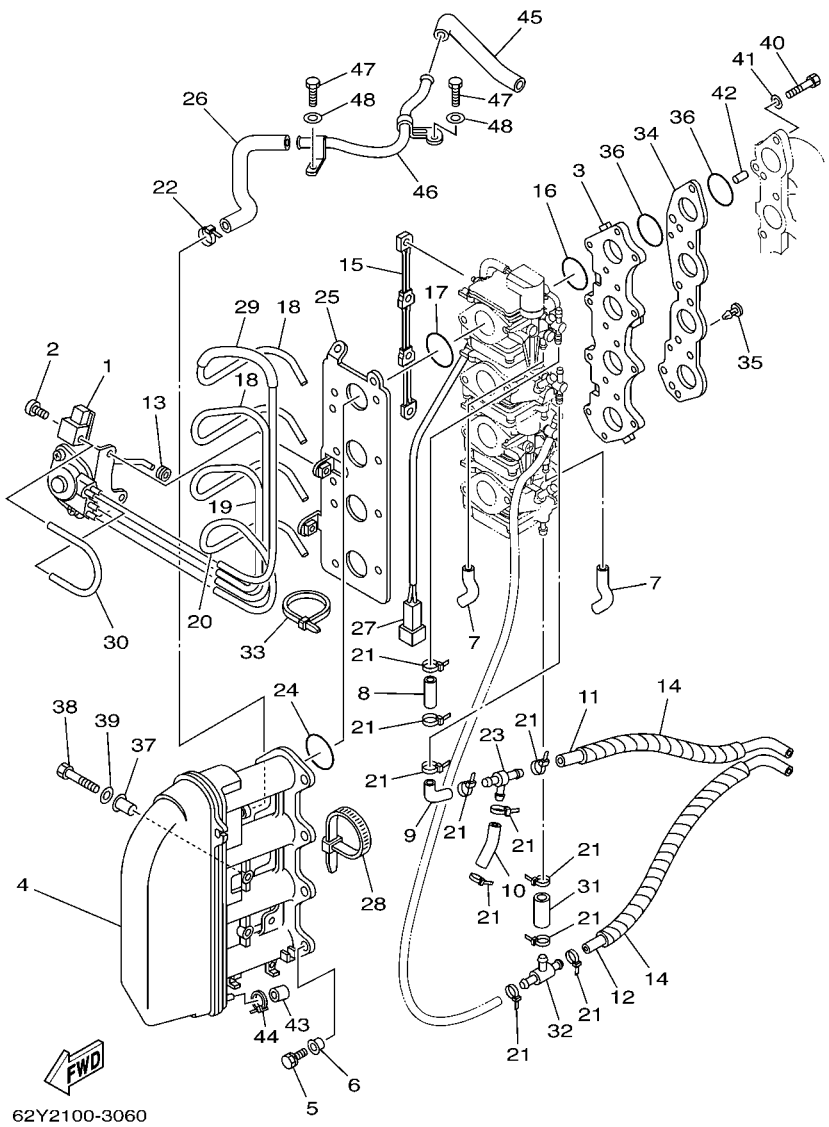

FIG. 6 INTAKE — ADMISION

REF. NO.	PART NO. CODIGO Nº	DESCRIPTION DESCRIPCION	60AA					REMARKS OBSERVACIONES
28	62Y–82544–00	CLAMP GRAMPA	1					
29	64J–14349–40	PIPE TUBO	1					
30	64J–14349–50	PIPE TUBO	1					
31	62Y–24314–00	PIPE 4 TUBO 4	1					
32	62Y–24378–00	PIPE, JOINT 3 TUBO DE UNION 3	1					
33	62Y–24135–00	CLAMP 1 GRAMPA 1	1					
34	62Y–14271–00	INSULATOR AISLANTE	1					
35	90338–04M17	PLUG TAPON	2					
36	93210–35M86	O-RING ANILLO O	8					
37	90387–06M15	COLLAR ESPACIADOR	2					
38	97095–06030	BOLT PERNO	2					
39	92995–06600	WASHER ARANDELA	2					
40	97095–06025	BOLT PERNO	8					
41	92995–06600	WASHER ARANDELA	8					
42	93608–16M16	PIN, DOWEL PASADOR DE CLAVIJA	2					
43	62Y–13448–00	CAP TAPA	1					
44	90465–11M10	CLAMP BRIDA	1					
45	62Y–1531A–00	HOSE, BREATHER 1 MANGUELA DE RESPIRADERO 1	1					
46	62Y–15373–10	PIPE, BREATHER MANGUELA DE RESPIRADERO	1					
47	97095–06016	BOLT PERNO	2					
48	92995–06600	WASHER ARANDELA	2					

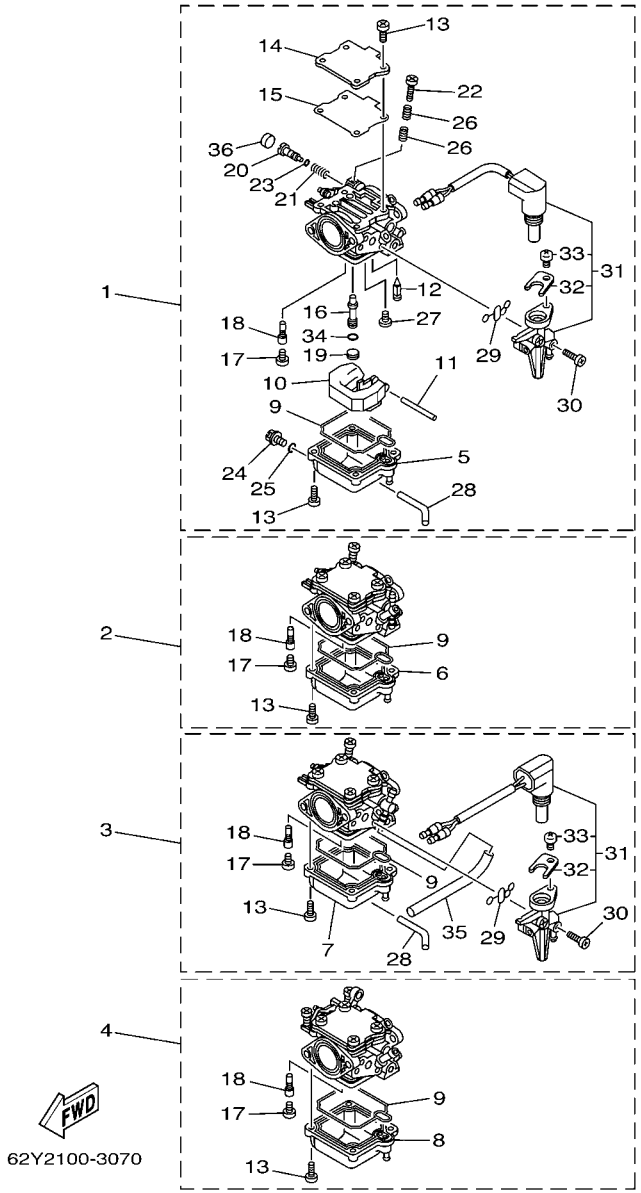

FIG. 7 CARBURETOR CARBURADOR

REF. NO.	PART NO. CODIGO Nº	DESCRIPTION DESCRIPCION	60AA					REMARKS OBSERVACIONES
1	62Y–14901–41	CARBURETOR ASSY 1 CARBURADOR COMPLETO 1	1					
2	62Y–14902–41	CARBURETOR ASSY 2 CARBURADOR COMPLETO 2	1					
3	62Y–14903–41	CARBURETOR ASSY 3 CARBURADOR COMPLETO 3	1					
4	62Y–14904–42	CARBURETOR ASSY 4 CARBURADOR COMPLETO 4	1					
5	62Y–14381–30	.BODY, FLOAT CHAMBER .CUERPO DE CAMARA DE BOIA	1					#1 #1
6	62Y–14381–40	.BODY, FLOAT CHAMBER .CUERPO DE CAMARA DE BOIA	1					#2 #2
7	62Y–14381–50	.BODY, FLOAT CHAMBER .CUERPO DE CAMARA DE BOIA	1					#3 #3
8	62Y–14381–61	.BODY, FLOAT CHAMBER .CUERPO DE CAMARA DE BOIA	1					#4 #4
9	62Y–14384–30	.GASKET, FLOAT CHAMBER .EMPAQUE DE CAMARA DE BOIA	4					
10	6L2–14385–00	.FLOAT .BOIA	4					
11	6E5–14386–01	.PIN, FLOAT .PASADOR DE BOIA	4					
12	62Y–14392–00	.VALVE, NEEDLE .VALVULA DE AGUJA	4					
13	62Y–14321–00	.SCREW, THROTTLE .TORNILLO DE OBTURADOR	32					
14	62Y–14157–30	.COVER, MIXING .CUBIERTA DE MEZCLA	4					
15	62Y–14399–30	.GASKET .EMPAQUE	4					
16	62Y–14341–30	.NOZZLE, MAIN .BOQUILLA PRINCIPAL	4					
17	62Y–14343–62	.JET, MAIN (#124) .INYECTOR PRINCIPAL (#124)	1					#1 #1
	62Y–14343–63	.JET, MAIN (#126) .INYECTOR PRINCIPAL (#126)	1					#2 #2
	62Y–14343–58	.JET, MAIN (#116) .INYECTOR PRINCIPAL (#116)	1					#3 #3
	62Y–14343–57	.JET, MAIN (#114) .INYECTOR PRINCIPAL (#114)	1					#4 #4
18	64J–14342–20	.JET, PILOT (#39) .ESPREA DE PILOTO (#39)	4					
19	62Y–14355–30	.PLUG .TAPON	4					
20	62Y–14323–30	.SCREW, AIR ADJUSTING .TORNILLO DE AJUSTE DE AIRE	4					
21	62Y–14334–00	.SPRING, AIR ADJUSTING .RESORTE DE AJUSTADOR DE AIRE	4					
22	62Y–14321–10	.SCREW, THROTTLE .TORNILLO DE OBTURADOR	4					
23	2T4–14397–00	.O-RING .ANILLO O	4					
24	62Y–14383–30	.SCREW, DRAIN .TORNILLO DE DRENAJE	4					

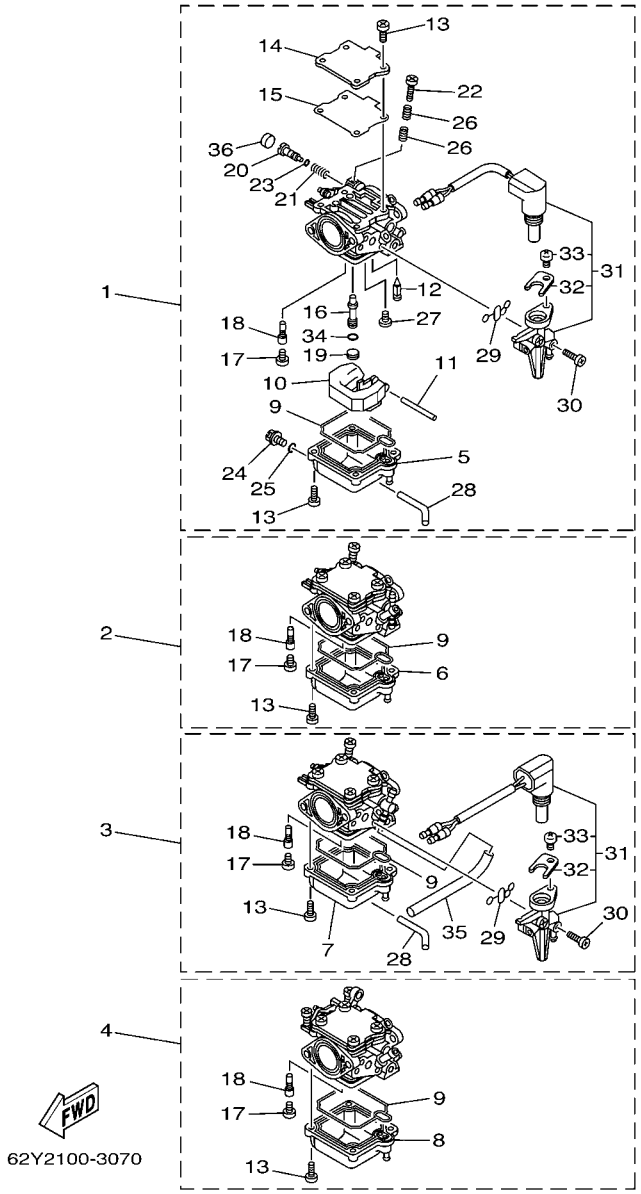

FIG. 7 CARBURETOR CARBURADOR

REF. NO.	PART NO. CODIGO Nº	DESCRIPTION DESCRIPCION	60AA					REMARKS OBSERVACIONES
25	652–14397–00	.O-RING .ANILLO O	4					
26	62Y–14212–00	.SPRING, PILOT ADJUSTING .RESORTE DE AJUSTE DE PILOTO	8					
27	98980–04006	.SCREW, BIND .TORNILLO DE LIGAR	4					
28	62Y–24311–30	.PIPE, FUEL 1 .TUBO DE COMBUSTIBLE 1	2					#1,3 #1,3
29	62Y–14398–30	.GASKET .EMPAQUE	2					#1,3 #1,3
30	62Y–14567–30	.SCREW .TORNILLO	2					#1 #1
	62Y–14567–40	.SCREW .TORNILLO	2					#3 #3
31	62Y–14380–10	.PRIME STARTER ASSY .JUEGO DE VALVULA DE ARRANQUE	1					#1 #1
	62Y–14380–20	.PRIME STARTER ASSY .JUEGO DE VALVULA DE ARRANQUE	1					#3 #3
32	62Y–14243–00	..PLATE ..PLACA	1					
33	97890–04007	..SCREW, PAN HEAD ..TORNILLO	1					
34	62Y–14227–00	.WASHER .EMPAQUE	4					
35	62Y–24313–90	.PIPE 3 .TUBO 3	1					#3 #3
36	62Y–1432A–01	.PLUG .TAPON	4					

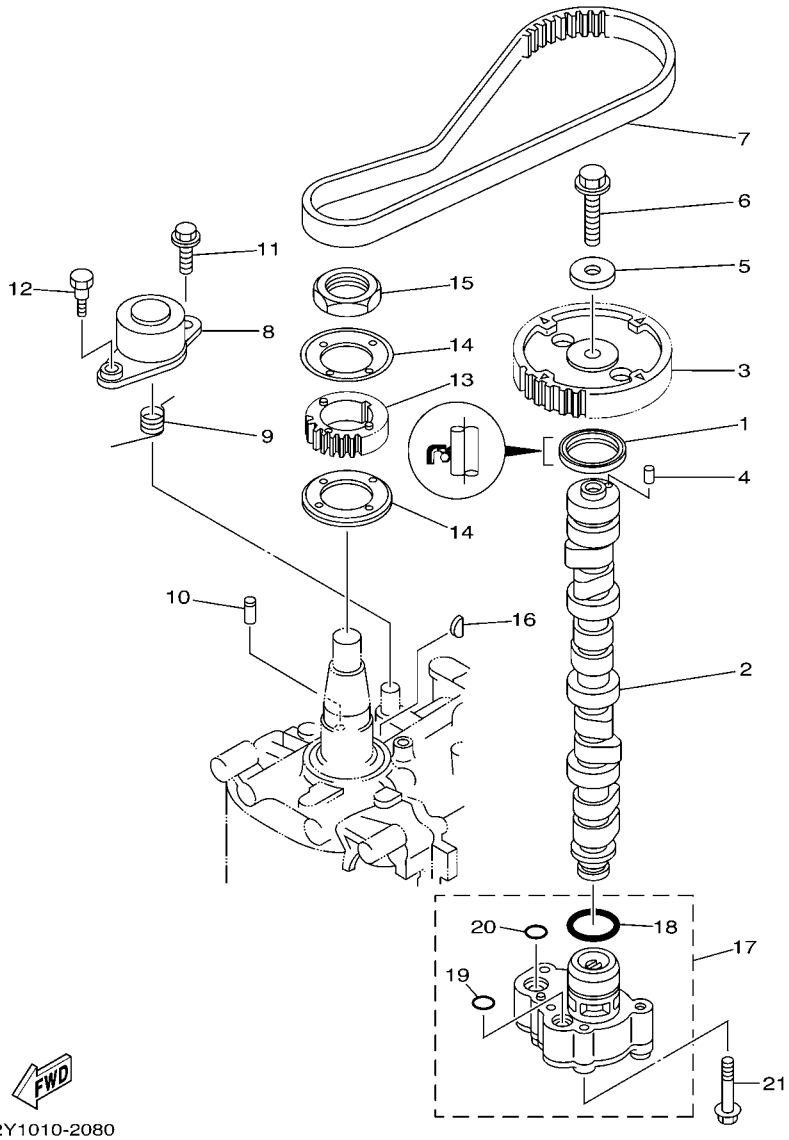

FIG. 8 OIL PUMP — BOMBA DE ACEITE

REF. NO.	PART NO. CODIGO Nº	DESCRIPTION DESCRIPCION	60AA					REMARKS OBSERVACIONES
1	93102–37M40	OIL SEAL SELLO ACEITE	1					
2	62Y–12171–00	CAMSHAFT 1 ARBOL DE LEVAS 1	1					
3	62Y–11537–10	GEAR, DRIVEN ENGRANAJE TRACCION	1					
4	93605–14143	PIN, DOWEL PASADOR DE CLAVIJA	1					
5	90201–10M06	WASHER, PLATE ARANDELA PLANA	1					
6	95895–10040	BOLT, FLANGE TORNILLO DE REBORDE	1					
7	62Y–46241–00	BELT CORREA	1					
8	62Y–11590–10	TENSIONER ASSY TENSOR COMPLET	1					
9	90508–20018	SPRING, TORSION RESORTE DE TORSION	1					
10	90249–07M29	PIN PASADOR	1					
11	95895–08020	BOLT, FLANGE TORNILLO DE REBORDE	1					
12	90109–06M64	BOLT PERNO	1					
13	62Y–11536–10	GEAR, DRIVE ENGRANAJE TRACCION	1					
14	62Y–11557–00	WASHER 1 ARANDELA 1	2					
15	90170–35008	NUT TUERCA	1					
16	90280–04M06	KEY, WOODRUFF CUNA WOODRUFF	1					
17	69W–13300–00	OIL PUMP ASSY BOMBA DE ACEITE COMPLETA	1					
18	93210–33MH2	.O-RING .ANILLO O	1					
19	93210–12MG9	.O-RING .ANILLO O	1					
20	93210–14515	.O-RING .ANILLO O	1					
21	90119–06025	BOLT, WITH WASHER TORNILLO CON ARANDELA	4					

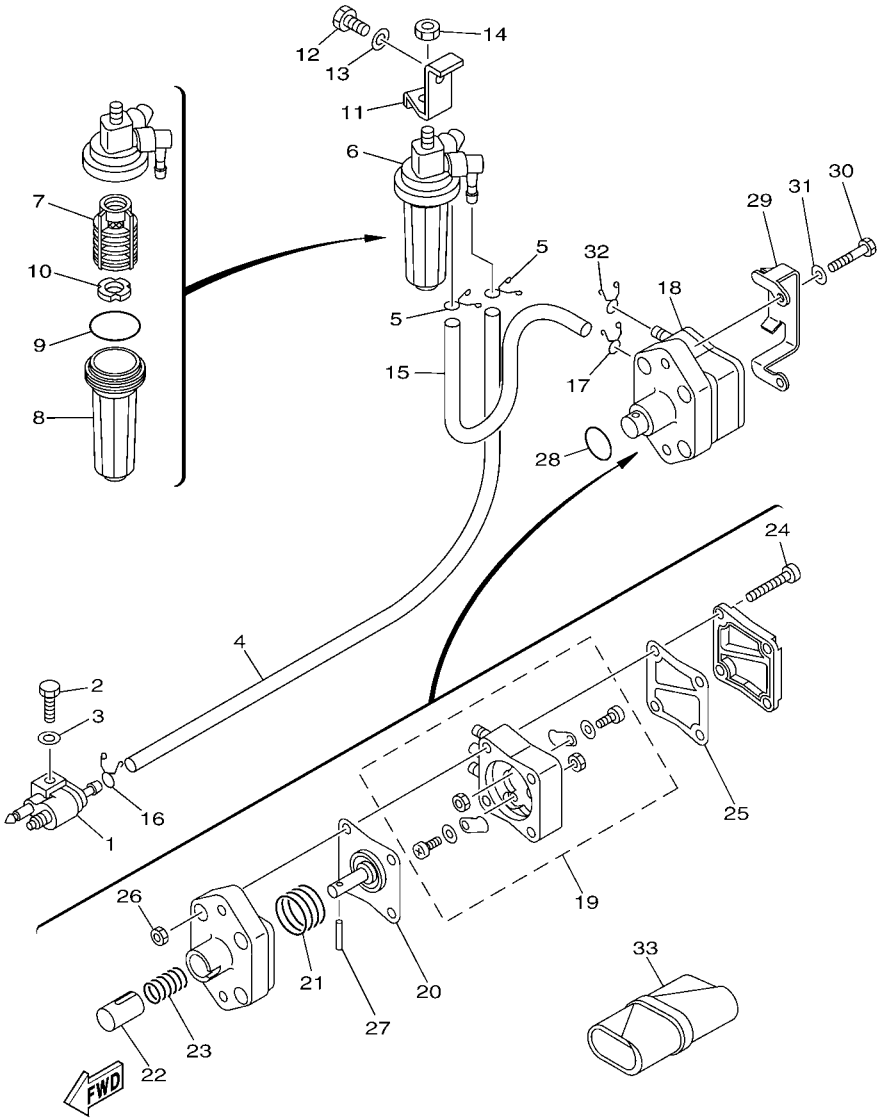

FIG. 9 FUEL COMBUSTIBLE

REF. NO.	PART NO. CODIGO Nº	DESCRIPTION DESCRIPCION	60AA					REMARKS OBSERVACIONES
1	6G1–24304–02	FUEL PIPE JOINT COMP. 1 CONECTOR MANGUERA COMBUST.1	1					
2	97095–06025	BOLT PERNO	1					
3	92995–06600	WASHER ARANDELA	1					
4	90445–10020	HOSE (L590) TUBO (L590)	1					
5	90467–09M17	CLIP PRESILLA	2					
6	64J–24560–00	FILTER ASSY FILTRO COMPLETO	1					
7	61N–24563–00	.ELEMENT, FILTER .ELEMENTO DEL FILTRO	1					
8	68V–24521–01	.CUP, FILTER .COPA DE FILTRO	1					
9	93210–32738	.O-RING .ANILLO O	1					
10	68V–24469–01	.FLOAT, WATER LEVEL .BOIA	1					
11	62Y–24566–00	BRACKET, FILTER SOPORTE DEL FILTRO	1					
12	97095–08014	BOLT PERNO	1					
13	92995–08600	WASHER ARANDELA	1					
14	95380–08600	NUT TUERCA	1					
15	90445–10M48	HOSE (L205) TUBO (L205)	1					
16	90467–09M17	CLIP PRESILLA	1					
17	90467–10M04	CLIP PRESILLA	1					
18	62Y–24410–04	FUEL PUMP ASSY BOMBA DE COMBUSTIBLE COMPLETA	1					
19	62Y–24415–01	.BODY 4 .CUERPO 4	1					
20	62Y–24411–02	.DIAPHRAGM .DIAFRAGMA	1					
21	62Y–24423–00	.SPRING, DIAPHRAGM .RESORTE DE DIAFRAGMA	1					
22	62Y–13131–01	.PLUNGER .ESPACIADOR	1					
23	62Y–24454–00	.SPRING .RESORTE	1					
24	62Y–24444–01	.SCREW .TORNILLO	4					
25	6C5–24471–00	.DIAPHRAGM .DIAFRAGMA	1					
26	95380–05600	.NUT .TUERCA	4					
27	62Y–24374–01	.PIN .PIN	1					

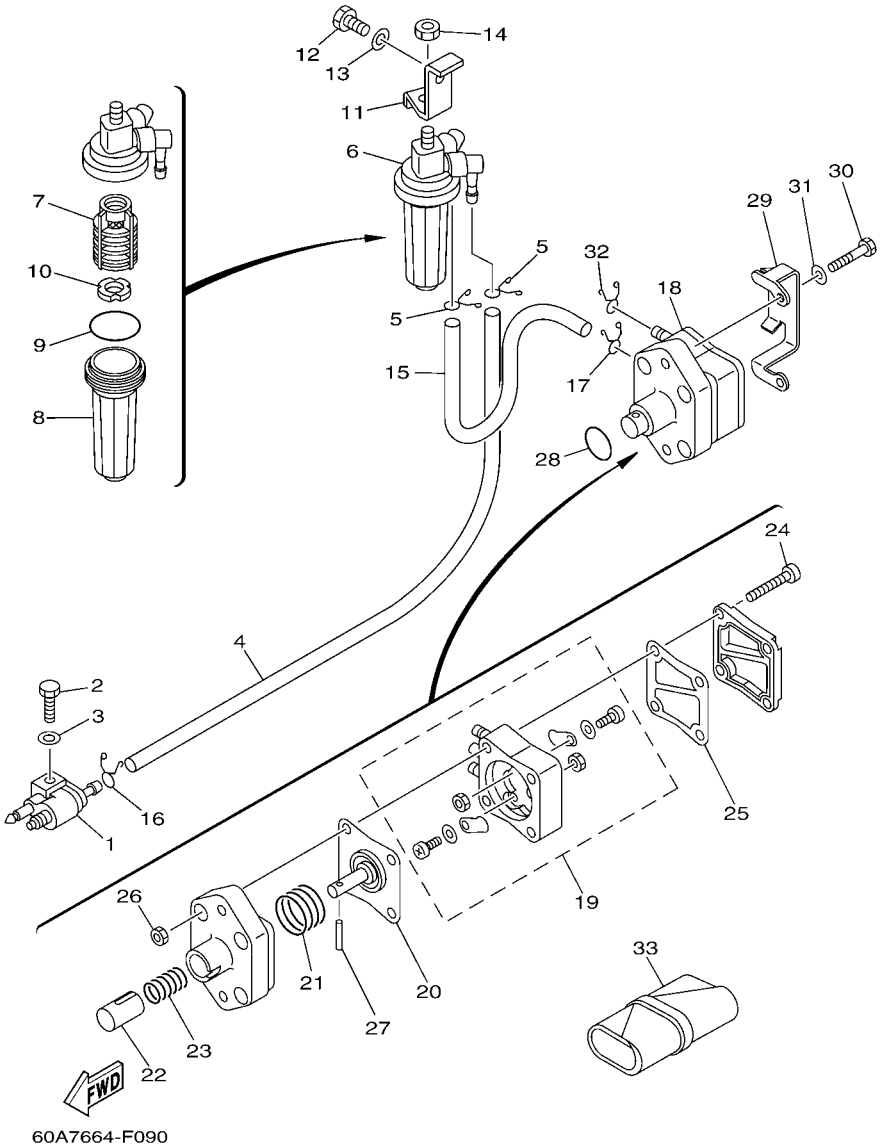

FIG. 9 FUEL COMBUSTIBLE

REF. NO.	PART NO. CODIGO Nº	DESCRIPTION DESCRIPCION	60AA					REMARKS OBSERVACIONES
28	93210–24M79	O-RING ANILLO O	1					
29	65W–24474–00	COVER CUBIERTA	1					
30	97095–06030	BOLT PERNO	2					
31	92995–06600	WASHER ARANDELA	2					
32	90467–10M04	CLIP PRESILLA	2					
33	62Y–28100–00	TOOL KIT JUEGO DE HERRAMIENTAS	1					

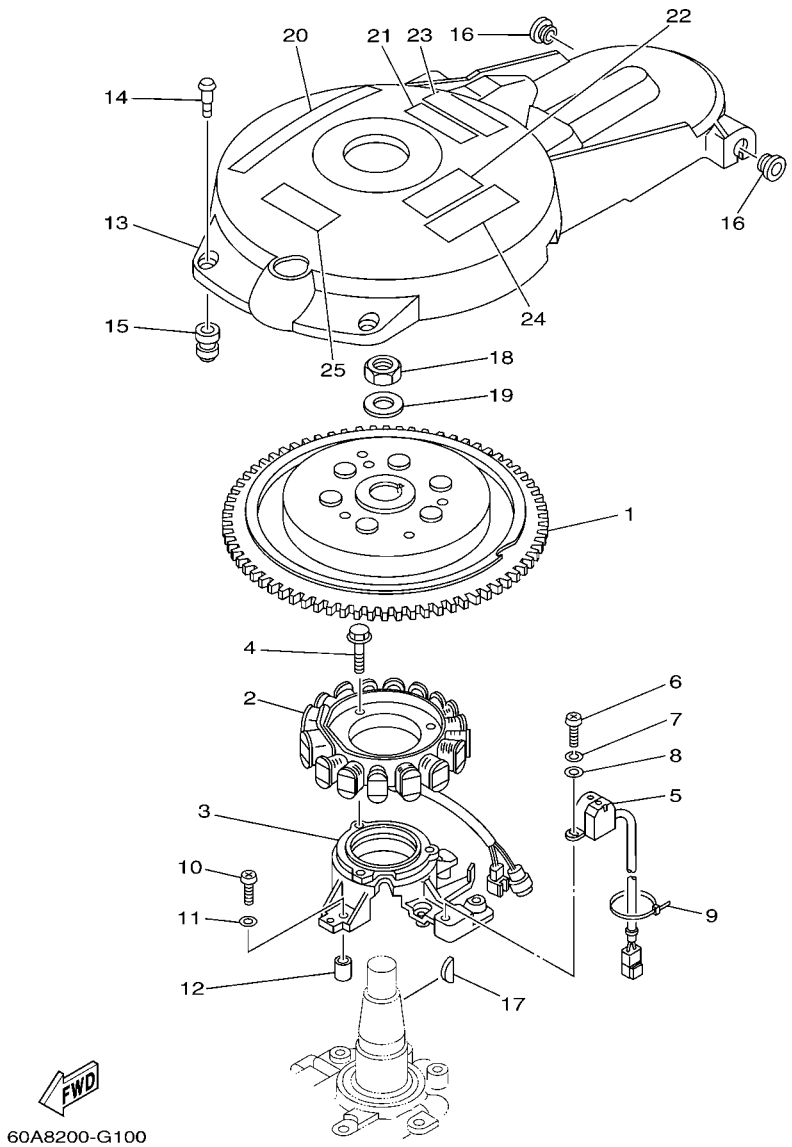

FIG. 10 GENERATOR GENERADOR

REF. NO.	PART NO. CODIGO Nº	DESCRIPTION DESCRIPCION	60AA					REMARKS OBSERVACIONES
1	69W–85550–10	ROTOR ASSY ROTOR COMPLETO	1					
2	64J–85510–00	STATOR ASSY ESTATOR COMPLETO	1					
3	62Y–85561–00–94	BASE, MAGNETO BASE DE MAGNETO	1					
4	95023–06025	BOLT TORNILLO	3					
5	62Y–85580–00	COIL, PULSER BOBINA DE PULSACION	1					
6	97880–05012	SCREW, PAN HEAD TORNILLO DE CABEZA CON PLANA	2					
7	92990–05100	WASHER, SPRING ARANDELA PLANA	2					
8	92990–05600	WASHER, PLATE ARANDELA PLANA	2					
9	90465–13M97	CLAMP BRIDA	1					
10	97880–06025	SCREW, PAN HEAD TORNILLO DE CABEZA CON PLANA	4					
11	92990–06600	WASHER, PLATE ARANDELA PLANA	4					
12	99530–08012	PIN, DOWEL PASADOR, DE ESPIGA	2					
13	62Y–81337–11	COVER, FLYWHEEL CUBIERTA DE VOLANTE	1					
14	6K7–81338–01	CLAMP, LEAD GRAMPA DE CONDUCTOR	2					
15	663–82317–01	DAMPER, IGNITION COIL AMORTIGUADOR BOBINA ENCENDIDO	2					
16	90480–12072	GROMMET TAPON	2					
17	6H4–11545–00	KEY, WOODRUFF CHAVETA WOODRUFF	1					
18	90170–20137	NUT TUERCA	1					
19	90201–21M18	WASHER, PLATE ARANDELA PLANA	1					
20	62Y–13437–62	MARK, CAUTION MARKER	1					
21	6AH–81995–40	LABEL, WARNING ETIQUETA DE PRECAUCION	1					
22	6AH–81995–50	LABEL, WARNING ETIQUETA DE PRECAUCION	1					
23	6AH–81994–40	LABEL, SAFETY ETIQUETA DE SEGURIDAD	1					
24	6AH–81994–50	LABEL, SAFETY ETIQUETA DE SEGURIDAD	1					
25	6AG–81996–00	MARK MARCA	1					

FIG. 11 ELECTRICAL 1 EQUIPO ELECTRICO 1

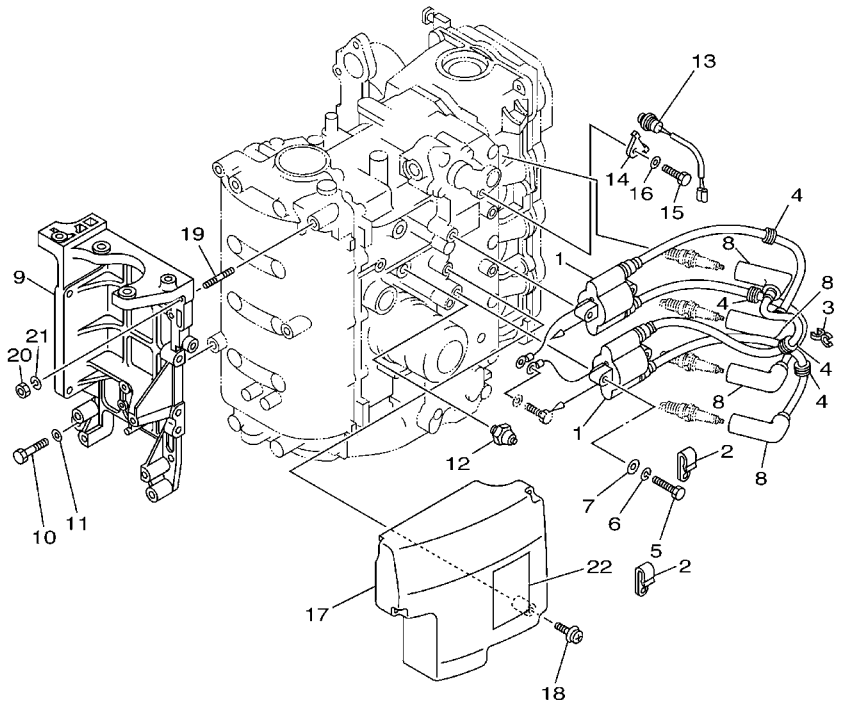

62Y1010-2110

REF. NO.	PART NO. CODIGO Nº	DESCRIPTION DESCRIPCION	60AA					REMARKS OBSERVACIONES
1	62Y–85570–00	IGNITION COIL ASSY BOBINA DE IGNICION COMPLETO	2					
2	90465–06M90	CLAMP BRIDA	2					
3	90464–07M41	CLAMP BRIDA	1					
4	90480–25161	GROMMET TAPON	4					
5	97095–06030	BOLT PERNO	4					
6	92995–06100	WASHER, SPRING ARANDELA	4					
7	92995–06600	WASHER ARANDELA	4					
8	6G8–82370–30	PLUG CAP ASSY TAPON DE BUJIA COMPLT	4					
9	62Y–81822–01–94	BRACKET, STARTING MOTOR SOPORTE DE MOTOR DE ARRANQUE	1					
10	97095–08035	BOLT PERNO	3					
11	92995–08600	WASHER ARANDELA	3					
12	64J–82504–00	OIL PRESSURE SWITCH ASSY INTERRUPTOR PRESION DE ACEITE	1					
13	62Y–82560–01	THERMO SWITCH ASSY INTER. DE TERMO	1					
14	6E9–82588–00	PLATE PLACA	1					
15	97095–06012	BOLT PERNO	1					
16	92995–06600	WASHER ARANDELA	1					
17	62Y–85599–00	COVER CUBIERTA	1					
18	90159–06M08	SCREW, WITH WASHER TORNILLO CON VALONA	3					
19	90116–08M14	BOLT, STUD ESPARRAGO	1					
20	95380–08600	NUT TUERCA	1					
21	92990–08100	WASHER, SPRING ARANDELA PLANA	1					
22	62Y–83626–00	MARK 6 MARCA 6	1					

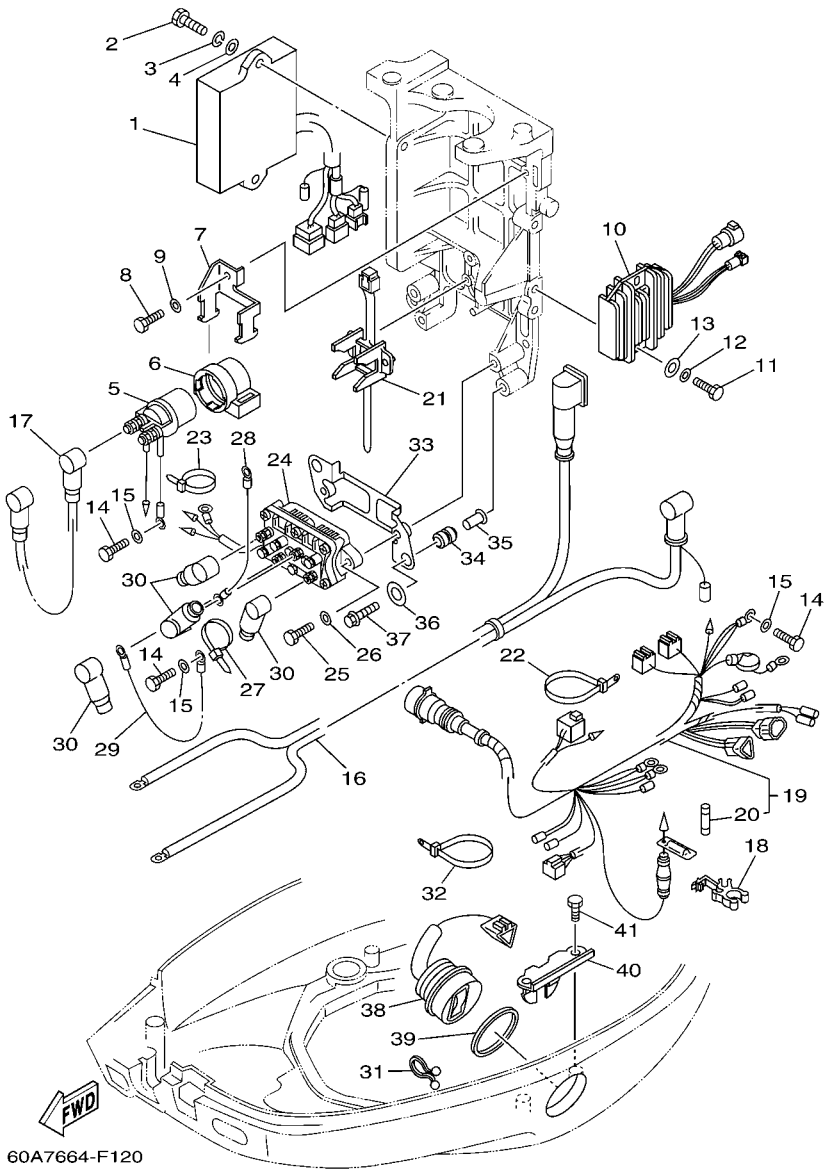

FIG. 12 ELECTRICAL 2 — EQUIPO ELECTRICO 2

REF. NO.	PART NO. CODIGO Nº	DESCRIPTION DESCRIPCION	60AA					REMARKS OBSERVACIONES
1	64J–85540–11	C.D.I. UNIT ASSY UNIDAD C.D.I. COMPLETA	1					
2	97095–06020	BOLT PERNO	2					
3	92995–06100	WASHER, SPRING ARANDELA	2					
4	92995–06600	WASHER ARANDELA	2					
5	6G1–81941–10	STARTER RELAY ASSY RELE DE ARRANQUE	1					
6	6G1–81952–00	HOLDER, RELAY SOSTEN DE RELE	1					
7	6L2–81945–00	PLATE, SWITCH FITTING PLACA ACCESORIA DE INTERRUP.	1					
8	97095–06014	BOLT PERNO	1					
9	92995–06600	WASHER ARANDELA	1					
10	64J–81960–10	RECTIFIER & REGULATOR ASSY RECTIFICADOR Y REGULADOR	1					
11	97095–06040	BOLT PERNO	2					
12	92995–06600	WASHER ARANDELA	2					
13	90201–06M05	WASHER, PLATE ARANDELA PLANA	2					
14	97095–06012	BOLT PERNO	4					
15	92995–06600	WASHER ARANDELA	4					
16	62Y–82105–00	WIRE HARNESS ARNES DE CABLES	1					
17	6E5–82117–01	WIRE, LEAD CABLE CONDUCTOR	1					
18	6G5–82152–00	HOLDER, FUSE PORTA-FUSIBLES	1					
19	64J–82590–50	WIRE HARNESS ASSY (10P) CONJUNTO DE CABLES (10P)	1					
20	663–82151–00	.FUSE (12V-20A) .FUSIBLE (12V-20A)	1					
21	688–82594–00	CLAMP GRAMPA	1					
22	90465–13M24	CLAMP BRIDA	1					
23	90465–13M11	CLAMP BRIDA	1					
24	6H1–81950–00	RELAY ASSY RELE COMPLETO	1					
25	97095–06020	BOLT PERNO	2					
26	92995–06600	WASHER ARANDELA	2					
27	90465–13M11	CLAMP BRIDA	1					

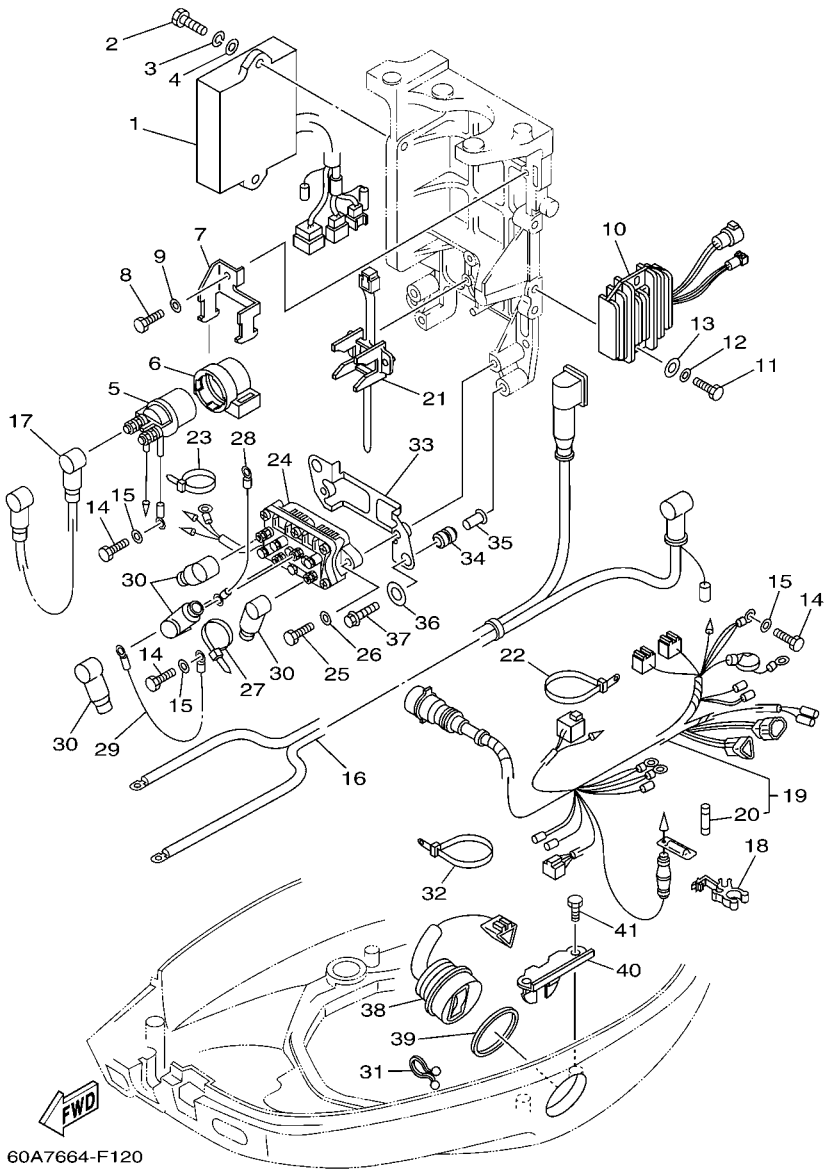

FIG. 12 ELECTRICAL 2 — EQUIPO ELECTRICO 2

REF. NO.	PART NO. CODIGO Nº	DESCRIPTION DESCRIPCION	60A-A					REMARKS OBSERVACIONES
28	6H2–81949–01	WIRE, LEAD CABLE CONDUCTOR	1					
29	61A–81949–00	WIRE, LEAD CABLE CONDUCTOR	1					
30	682–82119–01	COVER, LEAD WIRE CUBIERTA DE CABLE CONDUCTOR	4					
31	90464–15M11	CLAMP BRIDA	1					
32	90465–13M24	CLAMP BRIDA	1					
33	62Y–81948–00	BRACKET SOPORTE	1					
34	6A0–82317–00	DAMPER, IGNITION COIL AMORTIGUADOR BOBINA ENCENDIDO	2					
35	90387–06119	COLLAR ESPACIADOR	2					
36	90201–12M16	WASHER, PLATE ARANDELA PLANA	2					
37	95895–06025	BOLT, FLANGE TORNILLO DE REBORDE	2					
38	63D–82563–10	TRIM & TILT SWITCH ASSY INTERRUPTOR DE INCLINACION	1					
39	6E5–82587–00	GASKET EMPAQUETADURA	1					
40	62Y–83614–00	BRACKET SOPORTE	1					
41	97095–06012	BOLT PERNO	2					

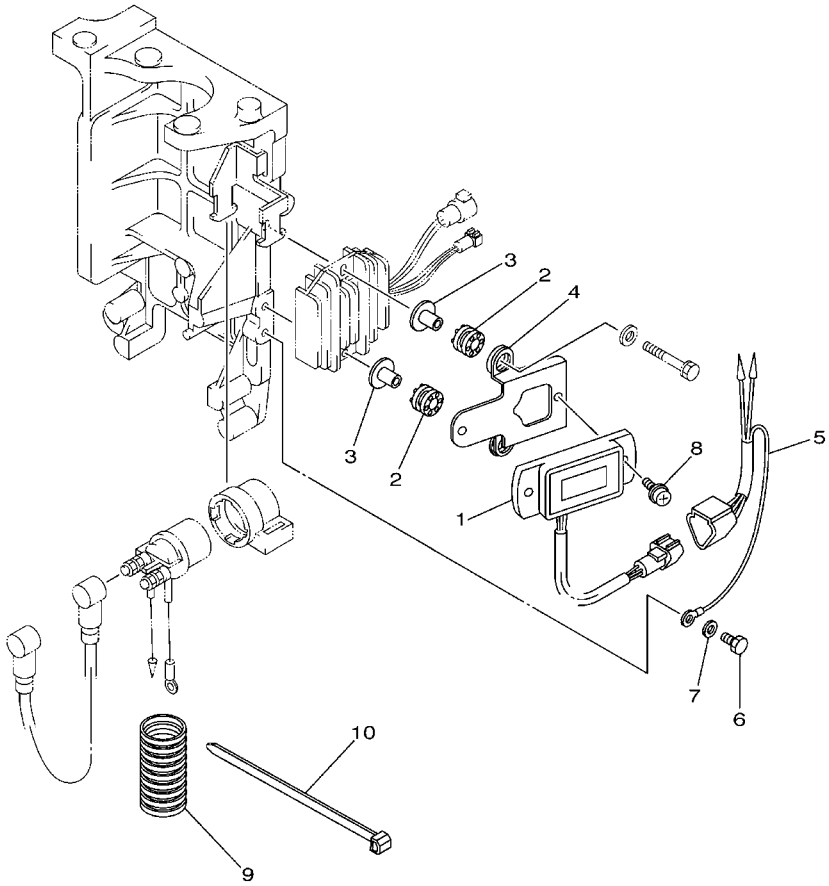

60A2200-2130

FIG. 13 ELECTRICAL 3 — EQUIPO ELECTRICO 3

REF. NO.	PART NO. CODIGO Nº	DESCRIPTION DESCRIPCION	60AA					REMARKS OBSERVACIONES
1	6Y5–83504–22	HOUR METER ASSY MEDIDOR DE HORAS COMPLETO	1					
2	64J–85516–00	SPACER ESPACIADOR	2					
3	69M–42758–00	COLLAR COLLAR	2					
4	64J–83519–00	BRACKET, METER SOPORTE DE MEDIDOR	1					
5	64J–82553–00	EXTENSION, WIRE LEAD CABLE	1					
6	97095–06012	BOLT PERNO	1					
7	92995–06600	WASHER ARANDELA	1					
8	90159–05M13	SCREW, WITH WASHER TORNILLO CON VALONA	2					
9	6K3–83557–00	TUBE ENCHUFE DE ACEITE	1					
10	90465–13M24	CLAMP BRIDA	1					

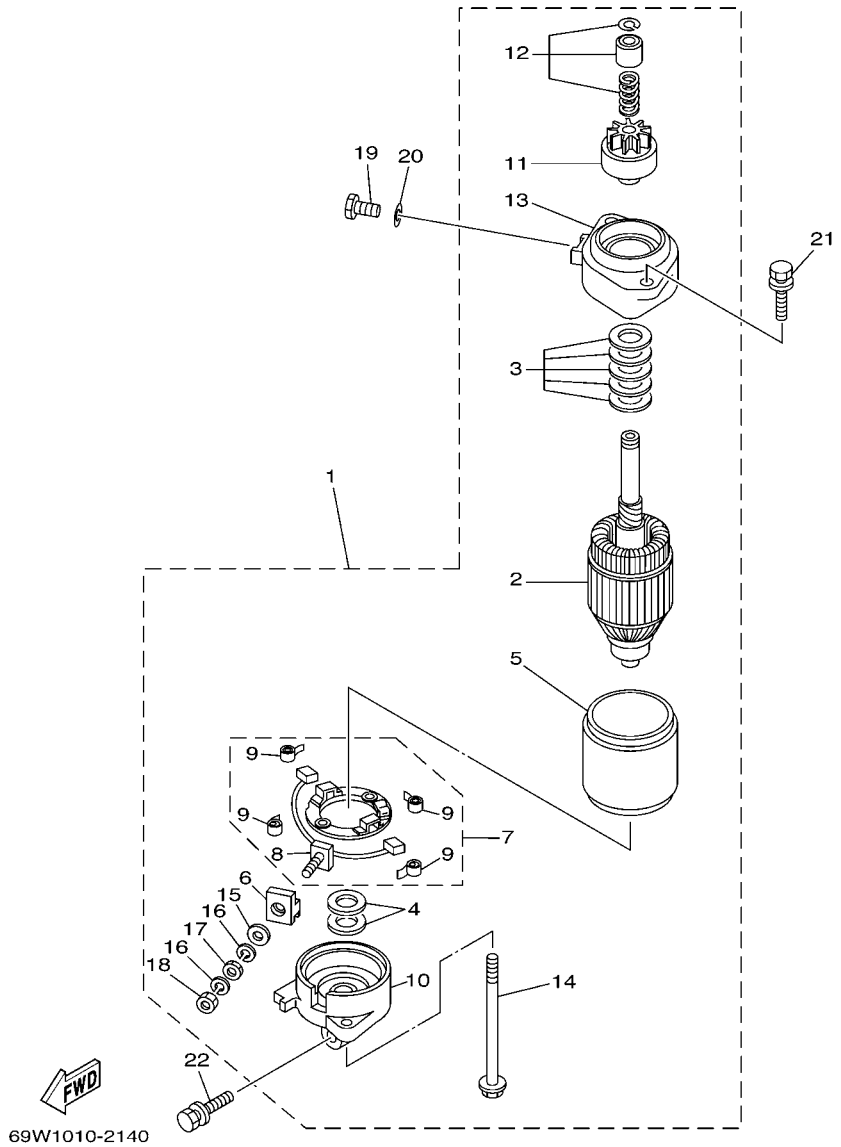

FIG. 14 STARTING MOTOR — MOTOR DE ARRANQUE

REF. NO.	PART NO. CODIGO Nº	DESCRIPTION DESCRIPCION	60AA					REMARKS OBSERVACIONES
1	69W–81800–00	STARTING MOTOR ASSY MOTOR DE ARRANQUE COMPLETO	1					
2	6N7–81850–10	.ARMATURE ASSY .INDUCIDO COMPLETO	1					
3	61A–81809–00	.WASHER KIT .JUEGO DE ARANDELA	1					
4	61A–81824–00	.WASHER 2 .ARANDELA 2	2					
5	6N7–81810–00	.STATOR ASSY .ESTATOR COMPLETO	1					
6	6K7–8182G–10	.BUSH, TERMINAL .BUJE DE TERMINAL	1					
7	6N7–81840–00	.BRUSH HOLDER ASSY .SOSTEN DE ESCOBILLA COMPLETO	1					
8	6N7–81801–00	..BRUSH SET ..JUEGO DE ESCOBILLA	1					
9	6N7–81813–00	..SPRING, BRUSH ..RESORTE DE ESCOBILLA	4					
10	6N7–81820–00	.REAR BRACKET ASSY .CUBIERTA TRASERA COMPL	1					
11	69W–81807–00	.GEAR ASSY, STARTING MOTOR .PINON CONJUNTO	1					
12	6N7–81857–00	.RETAINER .SEGURO	1					
13	6N7–81830–00	.FRONT BRACKET ASSY .SOPORTE DELANTERO COMPLETO	1					
14	6K7–81826–11	.BOLT .PERNO	2					
15	6E5–8182E–10	.WASHER .RONDANA	1					
16	6E5–8182F–10	.WASHER .RONDANA	2					
17	6E5–8182A–10	.NUT .TUERCA	1					
18	6E5–8182K–10	.NUT .TUERCA	1					
19	97095–08016	BOLT PERNO	1					
20	92995–08600	WASHER ARANDELA	1					
21	90119–08M76	BOLT, WITH WASHER TORNILLO CON ARANDELA	2					
22	90119–08M77	BOLT, WITH WASHER TORNILLO CON ARANDELA	1					

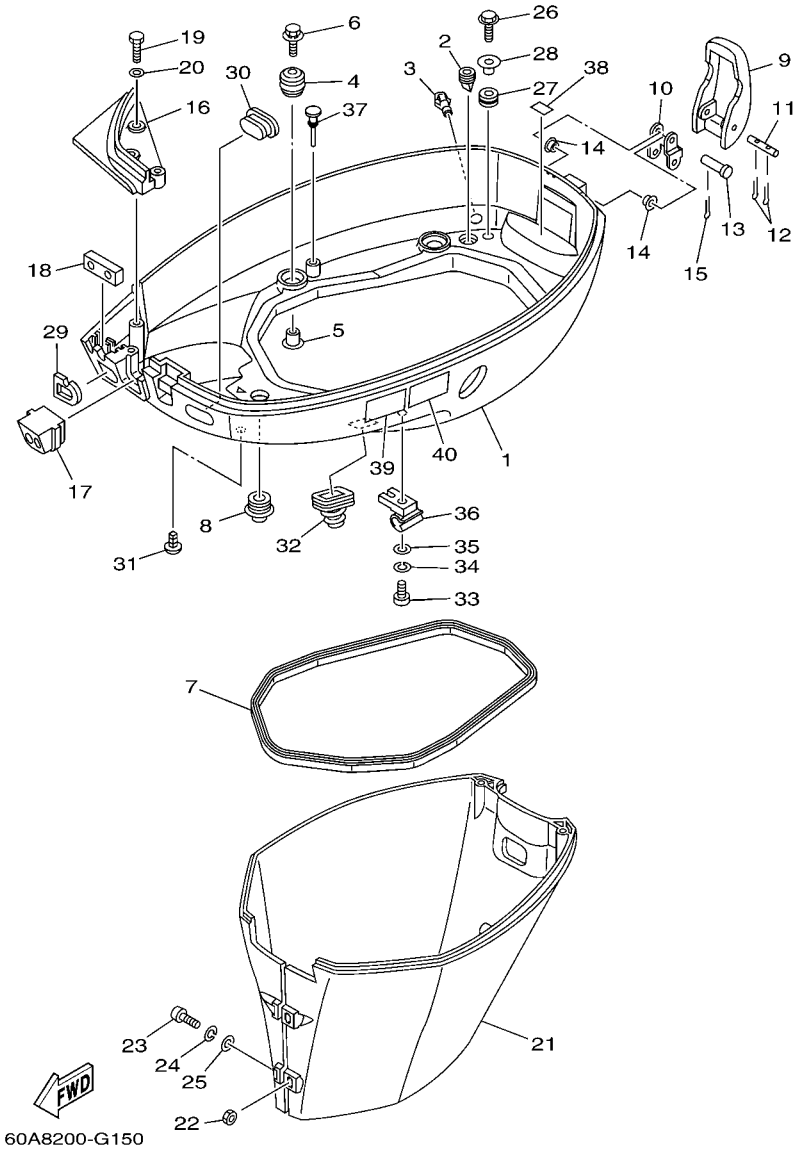

FIG. 15 BOTTOM COWLING CUBIERTA INFERIOR

REF. NO.	PART NO. CODIGO Nº	DESCRIPTION DESCRIPCION	60AA					REMARKS OBSERVACIONES
1	62Y–42711–14–8D	COWLING, BOTTOM 1 CUBIERTA INFERIOR 1	1					
2	65W–42717–00	RUBBER, SEAL 2 GOMA	4					
3	6BL–44391–00	NIPPLE, HOSE NIPLE MANGUERA	1					
4	6BG–42748–00	GROMMET TAPON	4					
5	90387–06060	COLLAR ESPACIADOR	4					
6	90119–06M61	BOLT, WITH WASHER TORNILLO CON ARANDELA	4					
7	62Y–42716–00	RUBBER, SEAL 1 SELLO DE GOMA 1	1					
8	6E5–42724–00	GROMMET TAPON	1					
9	62Y–42828–00–8D	PLATE, CLAMP PLACA, GRAMPA	1					
10	62Y–42815–00	LEVER, CLAMP PALANCA ABRAZADERA	1					
11	90249–05M30	PIN PASADOR	1					
12	91490–16010	PIN. COTTER CHAVETA	2					
13	90240–05M19	PIN, CLEVIS PASADOR CON HOYO	1					
14	90386–05002	BUSH BUJE	2					
15	91490–16010	PIN. COTTER CHAVETA	1					
16	62Y–42738–01–8D	PLATE, FITTING PLACA DE AJUSTE	1					
17	62Y–42725–30	GROMMET TAPON	1					
18	62Y–42727–00	GROMMET TAPON	1					
19	97095–06020	BOLT PERNO	3					
20	92995–06600	WASHER ARANDELA	3					
21	62Y–42741–00–8D	APRON MANDIL	1					
22	95380–06600	NUT, HEXAGON TUERCA	2					
23	97880–06025	SCREW, PAN HEAD TORNILLO DE CABEZA CON PLANA	2					
24	92990–06100	WASHER, SPRING ARANDELA PLANA	2					
25	92990–06600	WASHER, PLATE ARANDELA PLANA	2					
26	90109–06M80	BOLT PERNO	2					
27	90480–13M24	GROMMET TAPON	2					

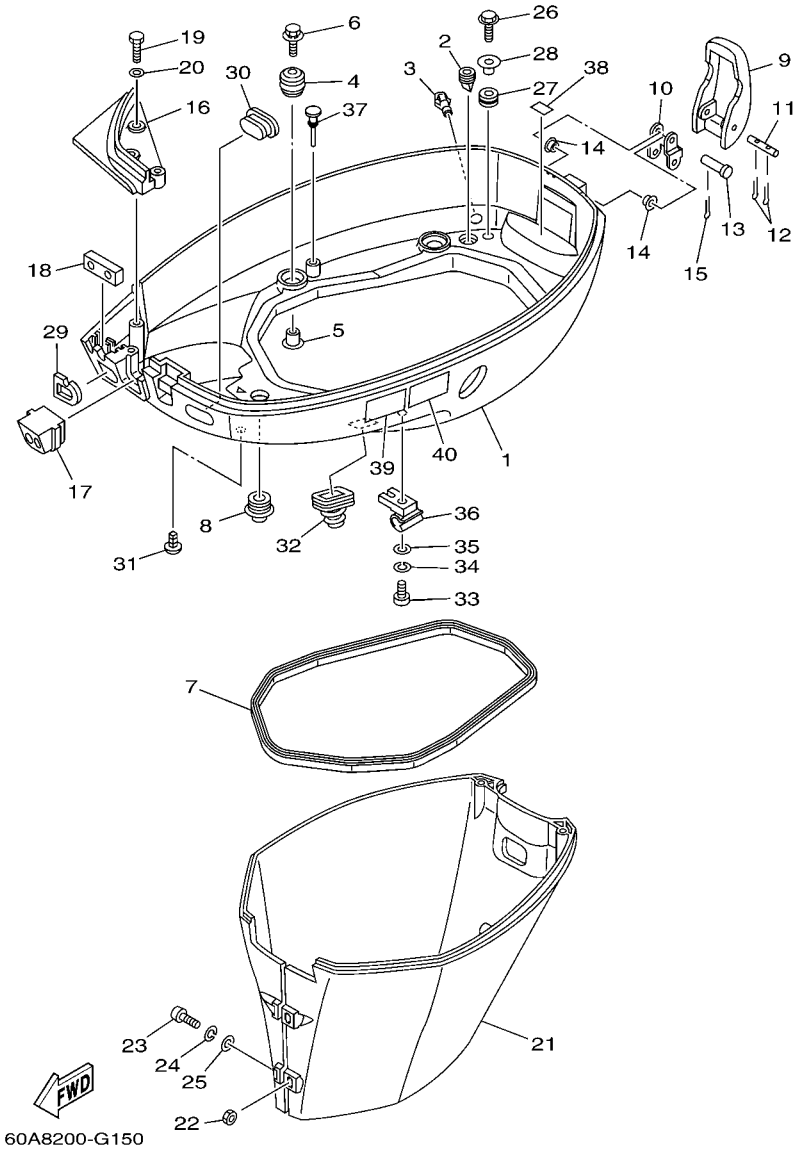

FIG. 15 BOTTOM COWLING CUBIERTA INFERIOR

REF. NO.	PART NO. CODIGO Nº	DESCRIPTION DESCRIPCION	60AA					REMARKS OBSERVACIONES
28	90387–06M43	COLLAR ESPACIADOR	2					
29	61N–24329–00	SEAL SELLO	1					
30	6H3–42727–00	GROMMET TAPON	1					
31	90338–05M03	PLUG TAPON	1					
32	688–42726–10	GROMMET TAPON	1					
33	97880–06025	SCREW, PAN HEAD TORNILLO DE CABEZA CON PLANA	1					
34	92990–06100	WASHER, SPRING ARANDELA PLANA	1					
35	92990–06600	WASHER, PLATE ARANDELA PLANA	1					
36	90464–09M43	CLAMP BRIDA	1					
37	62Y–42748–00	GROMMET TAPON	1					
38	62Y–82377–00	LABEL ETIQUETA	1					
39	6AH–42794–40	LABEL, WARNING (GENERAL) ETIQUETA DE PRECAUCION	1					
40	6AH–42794–50	LABEL, WARNING (GENERAL) ETIQUETA DE PRECAUCION	1					

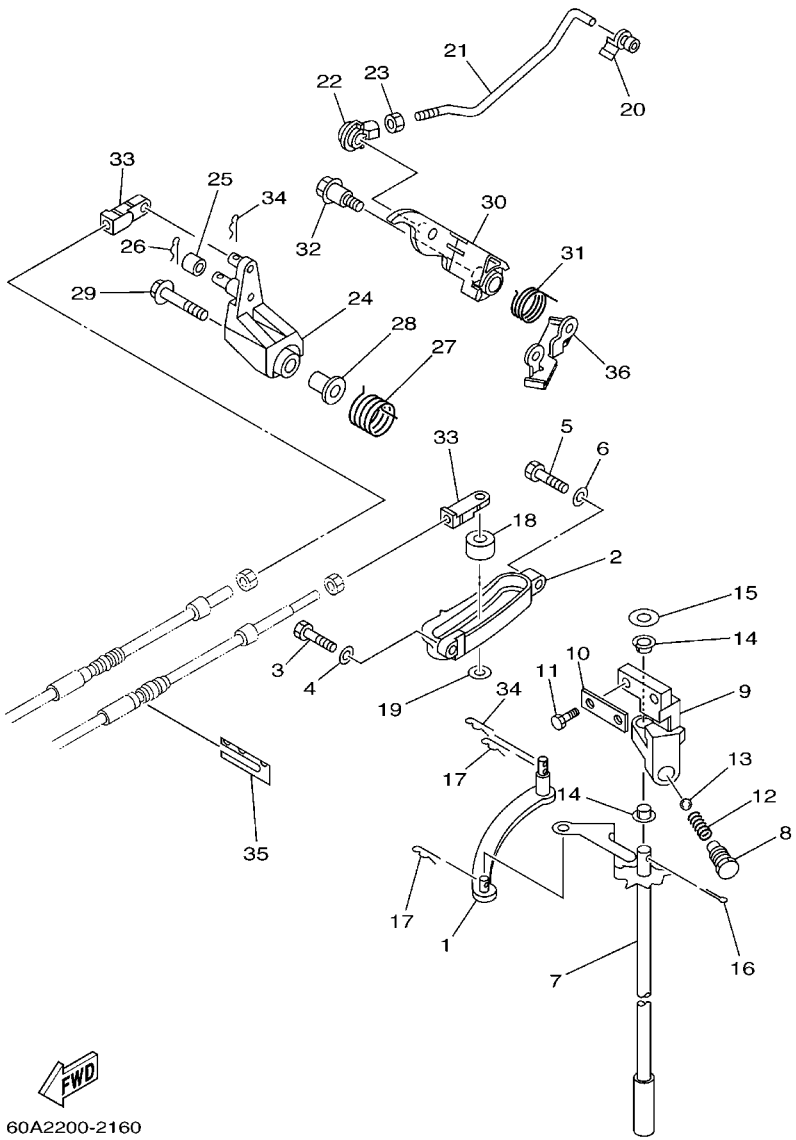

FIG. 16 CONTROL — CONTROL

REF. NO.	PART NO. CODIGO Nº	DESCRIPTION DESCRIPCION	60AA					REMARKS OBSERVACIONES
1	69W–44121–00	LEVER, SHIFT ROD PALANCA VARILLA CAMBIOS	1					
2	62Y–44117–01–94	BRACKET SOPORTE	1					
3	97095–06020	BOLT PERNO	1					
4	92995–06600	WASHER ARANDELA	1					
5	97095–06025	BOLT PERNO	1					
6	92995–06600	WASHER ARANDELA	1					
7	62Y–44120–01	HANDLE GEAR SHIFT ASSY MANIJA DE CAMBIO COMPL	1					
8	62Y–42715–01	BUSHING BUJE	1					
9	62Y–44118–00–94	BRACKET SOPORTE	1					
10	62Y–44112–00	STAY, HANDLE GEAR SHIFT SOPORTE HANIJA DE CABIO DE MAR	1					
11	90101–06054	BOLT TORNILLO	2					
12	90501–12082	SPRING, COMPRESSION RESORTE DE COMPRESION	1					
13	93501–04M02	BALL BOLA	1					
14	90386–90M90	BUSH BUJE	2					
15	90201–10M20	WASHER, PLATE ARANDELA PLANA	1					
16	91490–20015	PIN. COTTER CHAVETA	1					
17	90468–18008	CLIP PRESILLA	2					
18	688–44122–00	BUSHING, SHIFT ROD LEVER BUJE PALANCA VARILLA DE CAMBIO	1					
19	90202–07M07	WASHER, PLATE ARANDELA DE PLANA	1					
20	6F5–41237–00	JOINT, LINK CONECTOR	1					
21	62Y–41241–00	ROD, LINK VARILLA	1					
22	662–41237–01	JOINT, LINK CONECTOR	1					
23	95380–05700	NUT TUERCA	1					
24	62Y–42154–00	LEVER, THROTTLE CONTROL PALANCA CONTROL ACELERADOR	1					
25	62Y–42171–00	BUSHING BUJE	1					
26	91490–16010	PIN. COTTER CHAVETA	1					
27	62Y–44135–00	SPRING RESORTE	1					

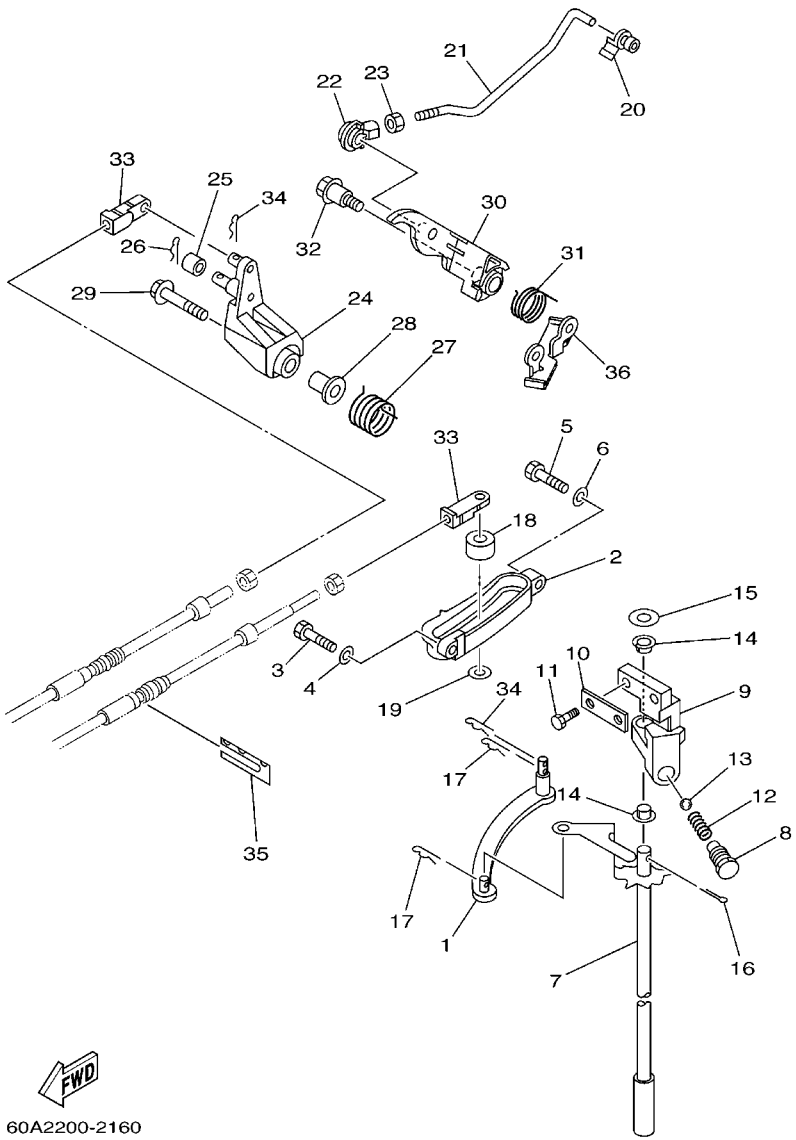

FIG. 16 CONTROL — CONTROL

REF. NO.	PART NO. CODIGO Nº	DESCRIPTION DESCRIPCION	60AA					REMARKS OBSERVACIONES
28	90387–06M45	COLLAR ESPACIADOR	1					
29	95895–06035	BOLT, FLANGE TORNILLO DE REBORDE	1					
30	62Y–42335–20	LEVER, ACCEL. CONTROL PALANCA ACELERADOR CONTROL	1					
31	62Y–44116–01	SPRING RESORTE	1					
32	90109–06M30	BOLT PERNO	1					
33	6G8–26363–00	END, WIRE 1 EXTREMO DE CABLE	2					
34	90468–18008	CLIP PRESILLA	2					
35	62Y–48538–00	CLAMP, CABLE 1 GRAMPA DE CABLE	1					
36	62Y–42159–01	STAY SOPORTE	1					

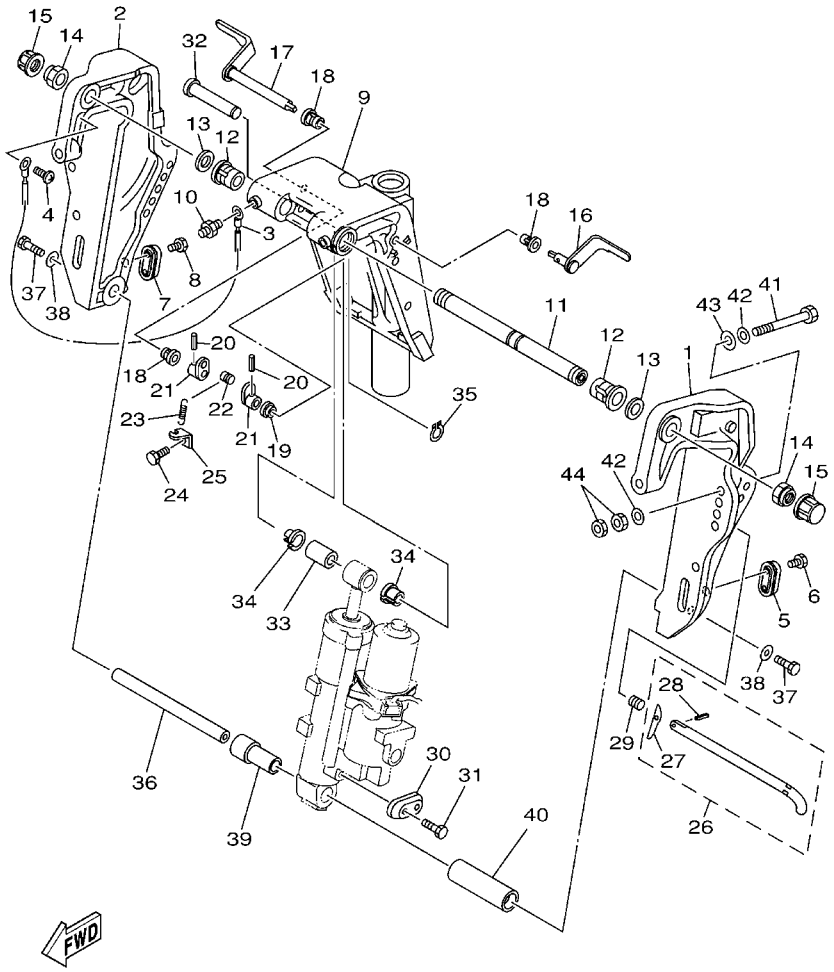

62Y0010-1210

FIG. 17 BRACKET 1 SOPORTE 1

REF. NO.	PART NO. CODIGO Nº	DESCRIPTION DESCRIPCION	60AA					REMARKS OBSERVACIONES
1	62Y–43111–00–8D	BRACKET, CLAMP 1 SOPORTE DE LA ABRAZADERA 1	1					
2	62Y–43112–00–8D	BRACKET, CLAMP 2 SOPORTE DE LA ABRAZADERA 2	1					
3	63D–82148–00	WIRE, LEAD 4 CABLE CONDUCTOR 4	1					
4	97885–06008	SCREW, PAN HEAD TORNILLO A MUESCA	1					
5	65W–45251–00	ANODE CATODE	1					
6	90101–06020	BOLT TORNILLO	2					
7	65W–45251–00	ANODE CATODE	1					
8	90101–06020	BOLT TORNILLO	2					
9	63D–43311–13–8D	BRACKET, SWIVEL 1 SOPORTE GIRATORIO 1	1					
10	93700–06M03	NIPPLE, GREASE BOQUILLA DE ENGRASAR	3					
11	63D–43131–01	BOLT, CLAMP BRACKET TORNILLO DE ABRAZADERA DEL SOP	1					
12	90386–22M15	BUSH BUJE	2					
13	90201–22016	WASHER, PLATE ARANDELA PLANA	2					
14	90185–22M11	NUT, SELF-LOCKING TUERCA AUTOBLOCANTE	2					
15	6G5–43145–01	CAP, CLAMP BRACKET TAPA	2					
16	6H5–43181–03	LEVER, TILT STOP PALANCA TOPE INCLINACION	1					
17	6H5–43185–03	LEVER, TILT STOP PALANCA TOPE INCLINACION	1					
18	90386–10M16	BUSH BUJE	3					
19	90386–10025	BUSH BUJE	1					
20	91690–30020	PIN, SPRING PASADOR DE RESORTE	2					
21	6G5–43148–00	COLLAR, DISTANCE COLLAR	2					
22	90249–06M19	PIN PASADOR	1					
23	90506–14M24	SPRING, TENSION RESORTE DE TENSION	1					
24	97095–06010	BOLT PERNO	1					
25	6G5–43144–00	HOOK, SPRING GANCHO	1					
26	688–43160–01	TILT ROD ASSY VARILLA DE BASCULACION COMPL.	1					
27	688–43165–00	.PLATE, TILT LOCK .PLACA DE TOPE, VARILLA SEGURID	1					

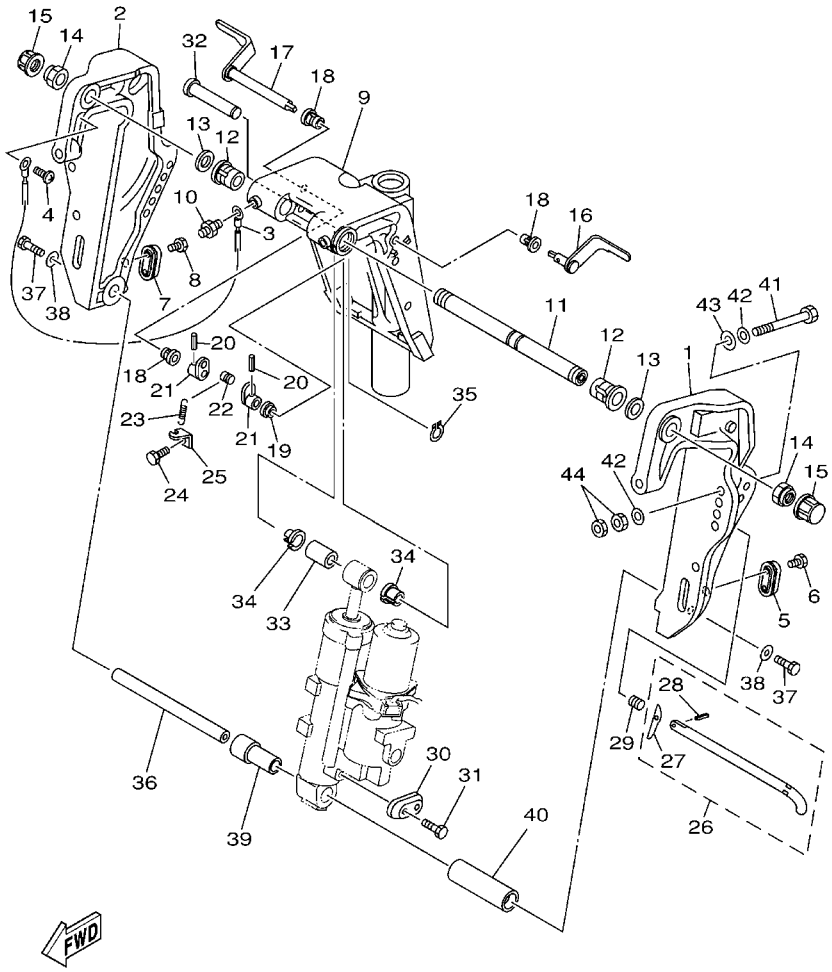

FIG. 17 BRACKET 1 SOPORTE 1

REF. NO.	PART NO. CODIGO Nº	DESCRIPTION DESCRIPCION	60AA					REMARKS OBSERVACIONES
28	91690–30012	.PIN, SPRING .PASADOR DE RESORTE	1					
29	90502–16M02	SPRING, CONICAL RESORTE CONICO	1					
30	65W–45251–00	ANODE CATODE	1					
31	90101–06020	BOLT TORNILLO	2					
32	6E5–43126–02	PIN, UPPER SHOCK MOUNT PASADOR DE AMORTIGUADOR SUPERI	1					
33	90386–18M92	BUSH BUJE	1					
34	90386–18M35	BUSH BUJE	2					
35	93410–18M02	CIRCLIP SEGURO	1					
36	62Y–43818–00	PIN, LOWER SHOCK MOUNT PASADOR AMORTIGUADOR INFERIOR	1					
37	90101–08017	BOLT TORNILLO	2					
38	90201–08062	WASHER, PLATE ARANDELA PLANA	2					
39	90387–18002	COLLAR ESPACIADOR	1					
40	90387–18003	COLLAR ESPACIADOR	1					
41	90101–12M65	BOLT TORNILLO	4					
42	92995–12200	WASHER ARANDELA	8					
43	90201–12426	WASHER, PLATE ARANDELA PLANA	4					
44	95380–12600	NUT TUERCA	8					

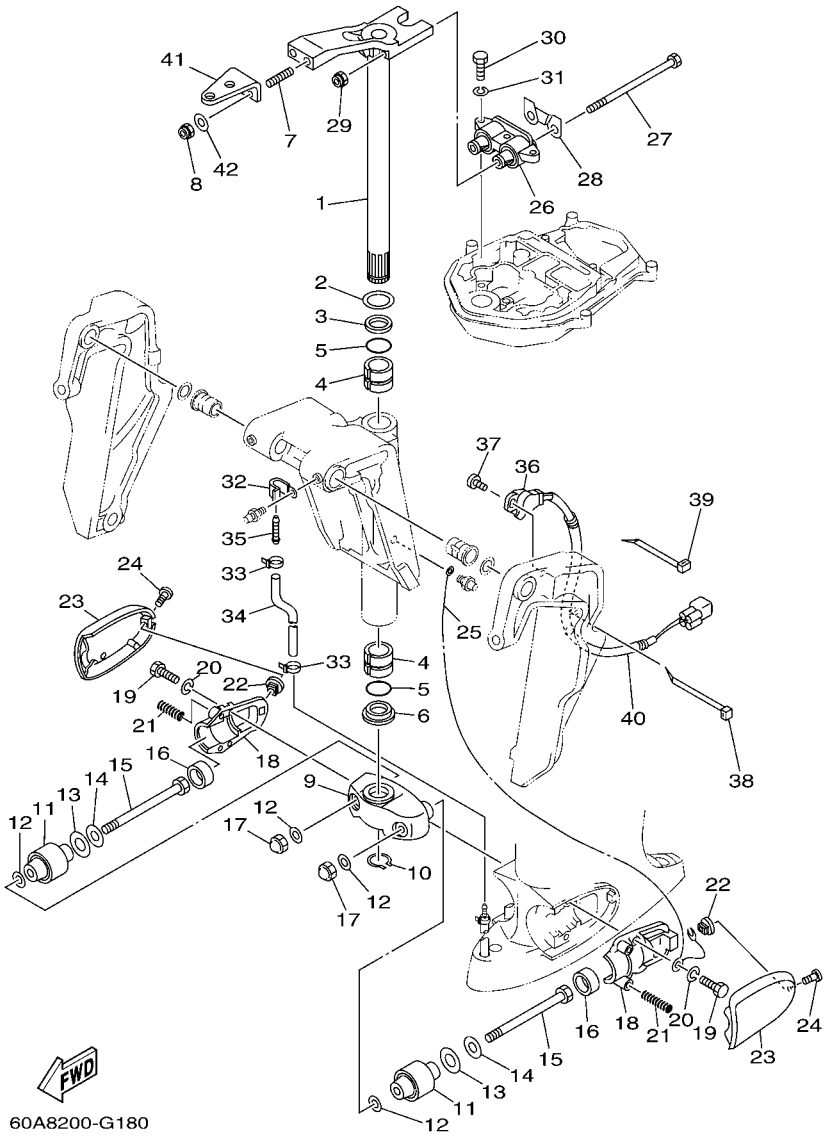

FIG. 18 BRACKET 2 SOPORTE 2

REF. NO.	PART NO. CODIGO Nº	DESCRIPTION DESCRIPCION	60AA					REMARKS OBSERVACIONES
1	63D–42510–12–8D	STEERING BRACKET ASSY SOPORTE DIRECCION COMPL.	1					
2	90201–30M00	WASHER, PLATE ARANDELA PLANA	1					
3	90386–30M78	BUSH BUJE	1					
4	90386–30M77	BUSH BUJE	2					
5	93210–29M94	O-RING ANILLO O	2					
6	90386–30M60	BUSH BUJE	1					
7	90116–10037	BOLT, STUD ESPARRAGO	2					
8	90185–10051	NUT, SELF-LOCKING TUERCA AUTOBLOCANTE	2					
9	663–44551–02–8D	HOUSING, LOWER MOUNT RUBBER CAJA AMORTIGUADOR INFERIOR HU	1					
10	93410–28M06	CIRCLIP SEGURO	1					
11	62Y–44555–00–94	MOUNT DAMPER, LOWER SIDE AMORTIGUADOR DE HULE LADO INFE	2					
12	90201–12M16	WASHER, PLATE ARANDELA PLANA	2					
13	90202–21100	WASHER, PLATE ARANDELA DE PLANA	2					
14	90201–13M19	WASHER, PLATE ARANDELA PLANA	2					
15	90109–12261	BOLT PERNO	2					
16	663–44575–00	DAMPER, LOWER MOUNT RUBBER AMORTIGUADOR INFERIOR	2					
17	95380–12800	NUT, CROWN TUERCA	2					
18	663–44552–01–94	HOUSING, LOWER MOUNT RUBBER CAJA AMORTIGUADOR INFERIOR HU	2					
19	97075–08025	BOLT PERNO	4					
20	92995–08100	WASHER ARANDELA	4					
21	90501–14M08	SPRING, COMPRESSION RESORTE DE COMPRESION	4					
22	90179–06066	NUT TUERCA	2					
23	62Y–44553–01–8D	COVER, LOWER MOUNT CUBIERTA,AMORTIGUADOR INFERIOR	2					
24	97885–06016	SCREW, PAN HEAD TORNILLO A MUESCA	2					
25	697–82127–01	WIRE, LEAD 2 CABLE CONDUCTOR 2	1					
26	67C–44514–00–94	MOUNT DAMPER, UPPER SIDE AMORTIGUADOR LADO SUPERIOR	1					
27	90101–08M15	BOLT TORNILLO	2					

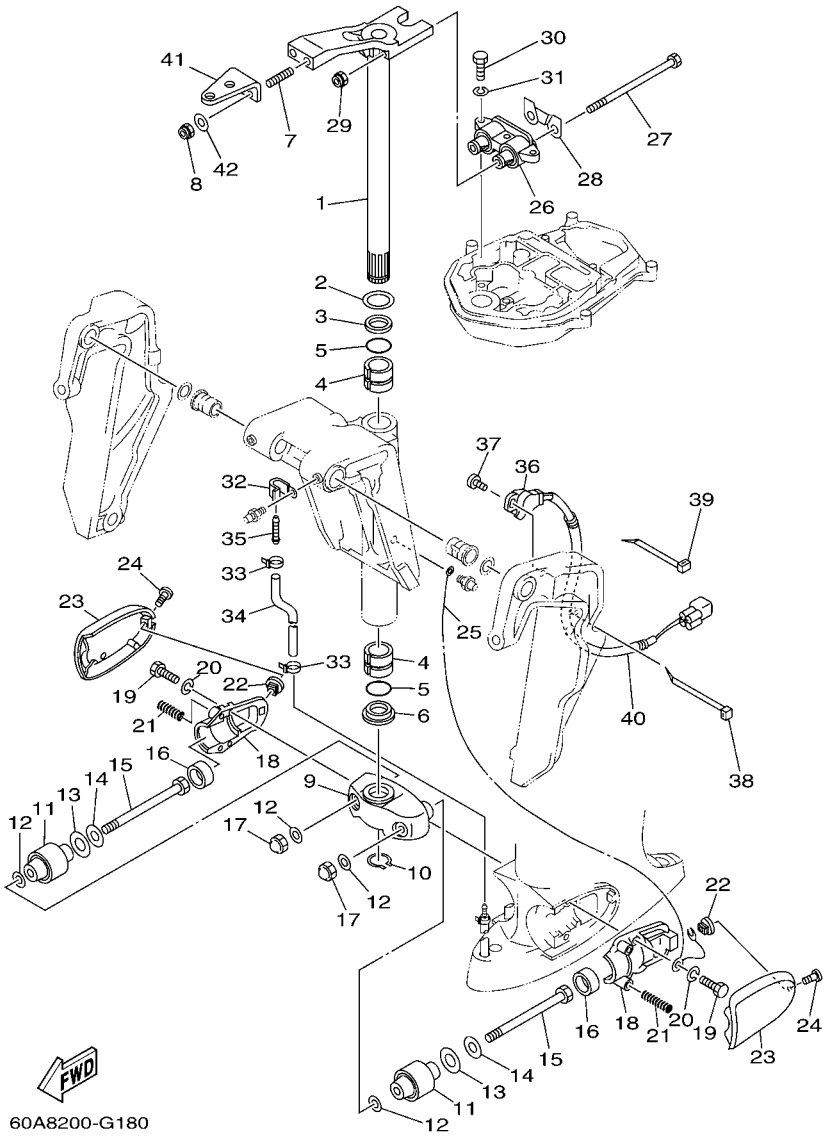

FIG. 18 BRACKET 2 SOPORTE 2

REF. NO.	PART NO. CODIGO Nº	DESCRIPTION DESCRIPCION	60AA					REMARKS OBSERVACIONES
28	66T–44526–30	PLATE PLACA 1	1					
29	90185–08045	NUT, SELF-LOCKING TUERCA AUTOBLOCANTE	2					
30	97075–08030	BOLT PERNO	3					
31	92995–08100	WASHER ARANDELA	3					
32	90465–06M86	CLAMP BRIDA	1					
33	90465–11M10	CLAMP BRIDA	2					
34	90445–07MF1	HOSE (L570) TUBO (L570)	1					
35	6E5–83558–00	END, NIPPLE EXTREMO DE NIPLE	1					
36	63D–83672–11	TRIM SENDER TRANSMISOR DE INCLINADOR	1					
37	97885–06016	SCREW, PAN HEAD TORNILLO A MUESCA	2					
38	90465–13M18	CLAMP BRIDA	1					
39	90465–11M10	CLAMP BRIDA	1					
40	90446–17M91	HOSE TUBO RESEIRADERO	1					
41	63D–48511–10	HOOK, STEERING GANCHO DIRECCION	1					
42	90201–10120	WASHER, PLATE ARANDELA PLANA	2					

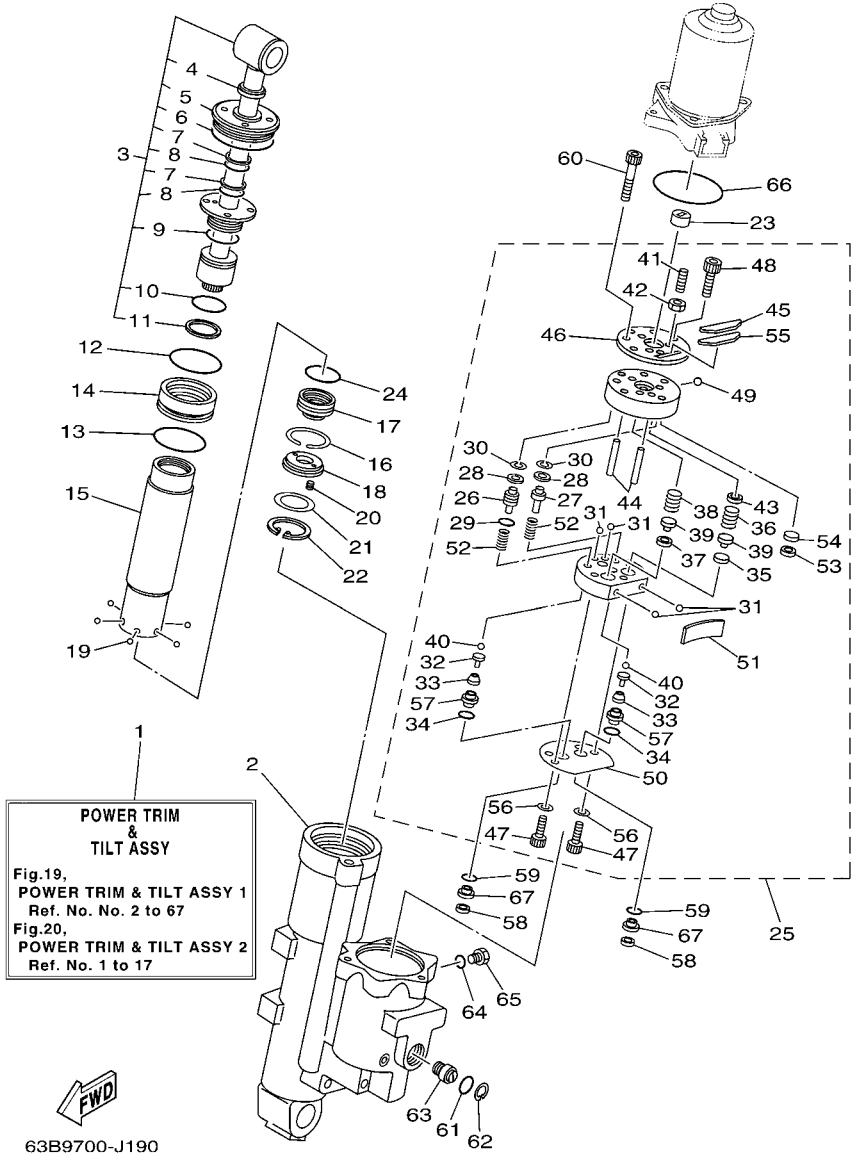

FIG. 19 POWER TRIM & TILT ASSY 1 COMPONER Y PODER VARILLA 1

REF. NO.	PART NO. CODIGO Nº	DESCRIPTION DESCRIPCION	60AA					REMARKS OBSERVACIONES
1	62Y–43800–01–8D	POWER TRIM & TILT ASSY ELEVADOR HIDRAULICO COMPL.	1					
2	62Y–4380K–01	CYLINDER, TILT SUB ASSY CILINDRO, INCLINACION	1					
3	62X–43810–01	TILT PISTON SUB ASSY ELEVADOR SUB-PISTON COMPL.	1					
4	62Y–43822–00	.SEAL, TRIM DUST .SELLO DE POLVO	1					
5	62X–43821–00	.SCREW, TRIM CYLINDER END .TORNILLO CILINDURO EXTREMO	1					
6	62X–43861–00	.O-RING .ANILLO EN O 1	1					
7	62X–43872–00	.RING, BACK UP .ANILLO	2					
8	6C5–43863–00	.O-RING .ANILLO EN O 3	2					
9	62X–43862–00	.O-RING .ANILLO EN O 2	1					
10	93210–29375	.O-RING .ANILLO O	1					
11	62X–43871–00	.RING, BACK UP .ANILLO	1					
12	93210–44383	O-RING ANILLO O	1					
13	93210–48214	O-RING ANILLO O	1					
14	62X–4388A–00	PISTON, TRIM PISTON	1					
15	62Y–22471–00	CYLINDER, SHOCK ABSORBER CILINDRO DE AMORTIGUADOR	1					
16	67F–43875–00	RING, SNAP ANILLO	1					
17	69W–4381B–00	FREE PISTON SUB ASSY SUB-PISTON COMPL	1					
18	62X–43899–00	PLATE STOPPER PLACA	1					
19	93503–16003	BALL ESFERA	6					
20	62X–4384H–00	SPRING RESORTE	2					
21	1UF–22434–00	PLATE, VALVE 1 PLATO DE VALVULA 1	1					
22	62X–43875–00	RING, SNAP ANILLO	1					
23	6H1–43831–10	CONNECTOR, SHAFT CONEXION EJE	1					
24	93210–29375	O-RING ANILLO O	1					
25	62Y–43830–01	GEAR PUMP ASSY ENGRANAJE BOMBA COMPL.	1					
26	69J–43841–00	.PISTON, SHUTTLE .PISTON	1					
27	69J–4384M–00	.PISTON, SHUTTLE 2 .PISTON 2	1					

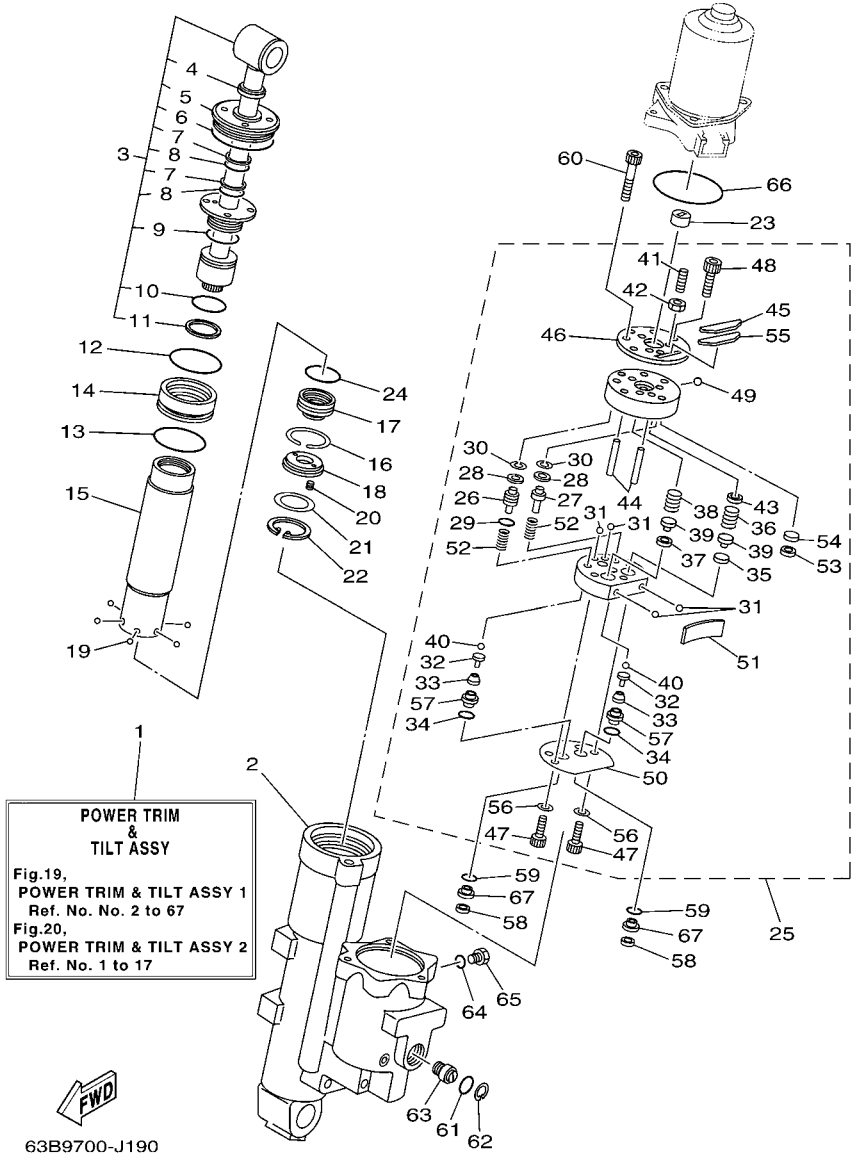

FIG. 19 POWER TRIM & TILT ASSY 1 COMPONER Y PODER VARILLA 1

REF. NO.	PART NO. CODIGO Nº	DESCRIPTION DESCRIPCION	60AA					REMARKS OBSERVACIONES
28	69A–4384F–00	.SEAL, MAIN VALVE .ASIENTO	2					
29	6H1–43883–00	.O-RING .ANILLO EN O 10	1					
30	99002–03600	.CLIP .PRESILLA REDONDA	2					
31	93505–32038	.BALL .BOLA	4					
32	65W–4386A–00	.PIN, ABSORBER VALVE .PASADOR VALVULA ABSORBER	2					
33	69J–43853–00	.SPRING, MAIN VALVE .RESORTE	2					
34	69J–4389J–00	.O-RING .ANILLO O	2					
35	6H1–4384G–11	.SEAL, RELIEF VALVE .ASIENTO	1					
36	62Y–43855–00	.SPRING, UP RELIEF .RESORTE SEGURIDAD SUPERIOR	1					
37	6H1–4384F–10	.SEAL, MAIN VALVE .ASIENTO	1					
38	6H1–43856–10	.SPRING, DOWN RELIEF .RESORTE SEGURIDAD	1					
39	6H1–43844–10	.PIN, VALVE SUPPORT .PASADOR VALVULA SOPORTE	2					
40	93505–32038	.BALL .BOLA	2					
41	92A08–03110	.SCREW SET .TORNILLO	1					
42	95302–03600	.NUT .TUERCA	1					
43	62Y–4382A–00	.ADAPTOR 1 .ADAPTADOR 1	1					
44	93604–26256	.PIN, DOWEL .PASADOR DE CLAVIJA	2					
45	62Y–43816–00	.FILTER 1 .FIELTRO 1	1					
46	62Y–4382L–00	.CAP, RELIEF VALVE .TAPA	1					
47	91318–05020	.BOLT .TORNILLO	2					
48	91318–05008	.BOLT .TORNILLO	2					
49	93501–08001	.BALL .BOLA	1					
50	69W–4384G–00	.SEAL, RELIEF VALVE .ASIENTO	1					
51	62Y–43854–00	.SPRING, MANUAL RELEASE .RESORTE DESCOPLO MANUAL	1					
52	69J–43894–00	.SPRING, SHUTTLE RETURN .RESORTE	2					
53	62Y–4387J–00	.WASHER, SPECIAL 2 .FIELTRO2	1					
54	62Y–22434–00	.PLATE, VALVE 1 .PLATO DE VALVULA 1	1					

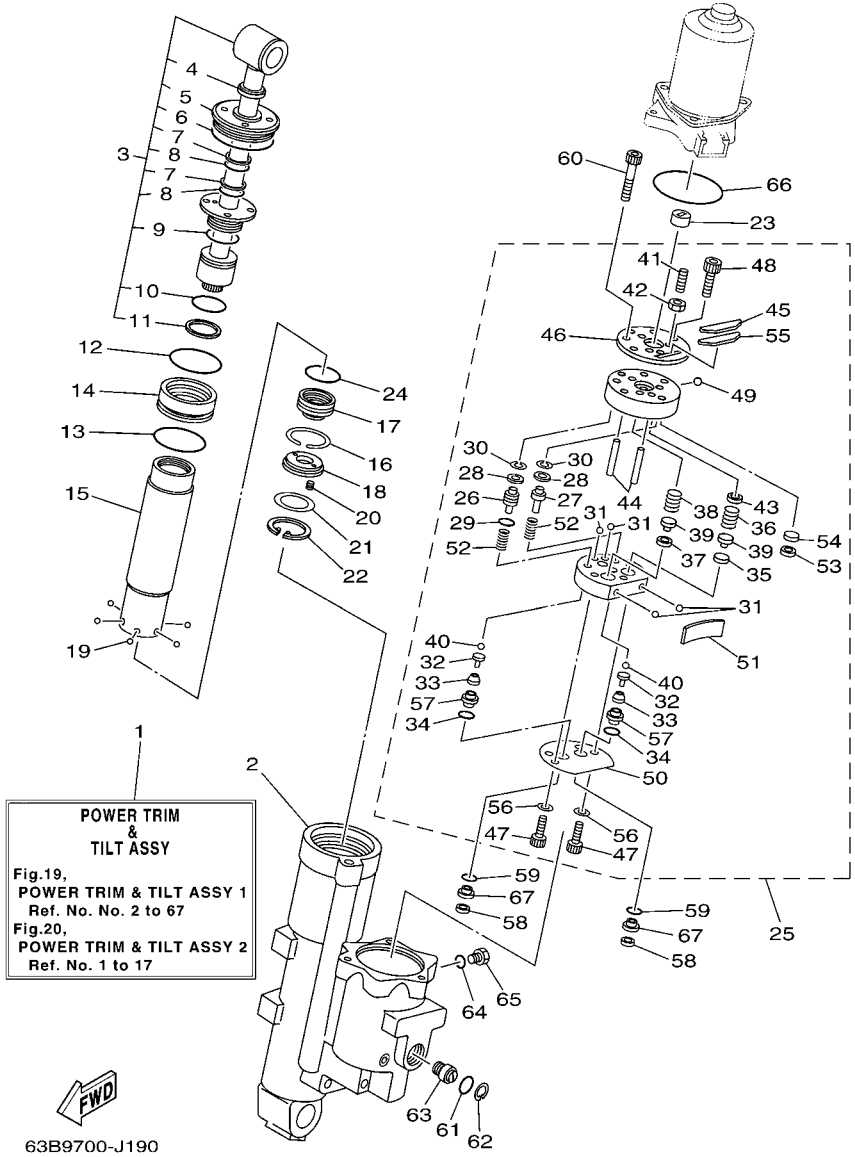

FIG. 19 POWER TRIM & TILT ASSY 1 COMPONER Y PODER VARILLA 1

REF. NO.	PART NO. CODIGO Nº	DESCRIPTION DESCRIPCION	60AA					REMARKS OBSERVACIONES
55	62Y–43871–00	.RING, BACK UP .ANILLO	1					
56	62Y–4387G–00	.WASHER .ARANDELA	2					
57	69J–43893–00	.WASHER .RONDANA	2					
58	6H1–43816–00	FILTER 1 FIELTRO 1	2					
59	69J–4389J–00	O-RING ANILLO O	2					
60	91318–06040	BOLT TORNILLO	3					
61	93210–18397	O-RING ANILLO O	1					
62	6H1–43875–00	RING, SNAP ANILLO	1					
63	62Y–43845–00	SCREW, MANUAL RELEASE TORNILLO DESCOPLO MANUAL	1					
64	93210–09165	O-RING ANILLO O	1					
65	6H1–43829–00	PLUG, RESERVOIR TAPON DEPOSITO	1					
66	62X–43865–00	O-RING ANILLO EN O 5	1					
67	69W–43899–01	PLATE STOPPER PLACA	2					

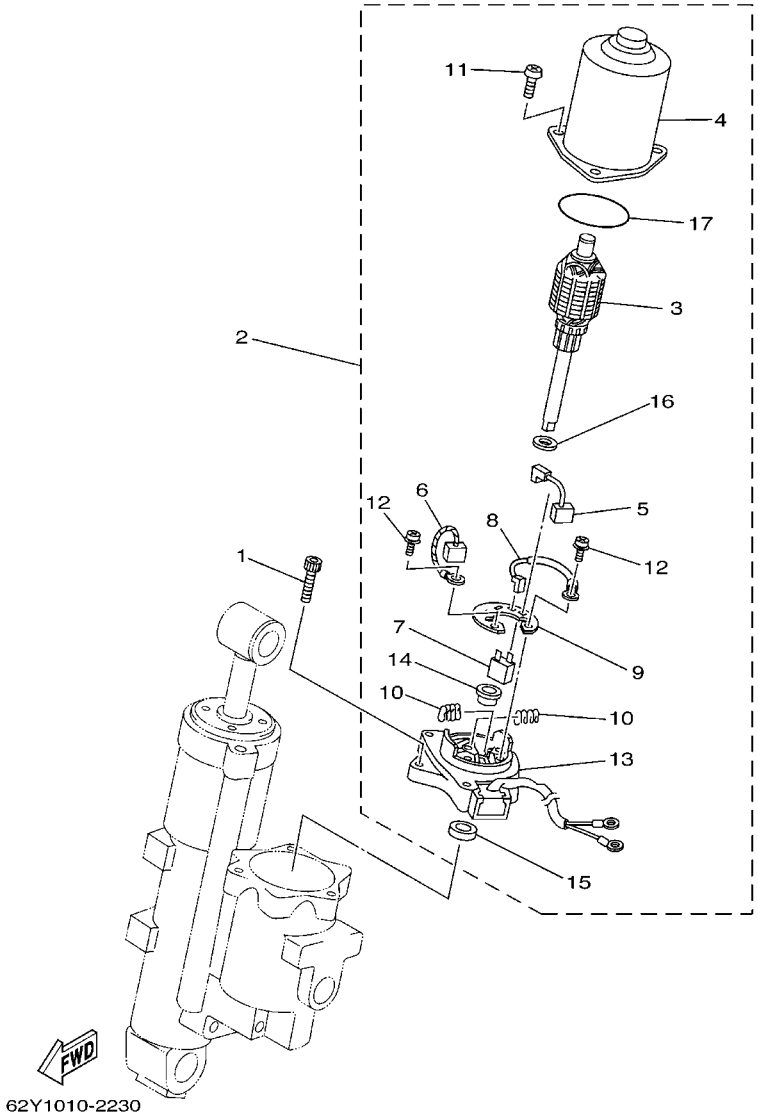

FIG. 20 POWER TRIM & TILT ASSY 2 COMPONER Y PODER VARILLA 2

REF. NO.	PART NO. CODIGO Nº	DESCRIPTION DESCRIPCION	60AA					REMARKS OBSERVACIONES
1	62X–43888–00	BOLT, SOCKET TORNILLO ENCASTRE	3					
2	62Y–43880–01	MOTOR ASSY MOTOR COMPL.	1					
3	62Y–43805–00	.ARMATURE ASSY .INDUCIDO COMPL.	1					
4	62X–43804–01	.STATOR ASSY .ESTATOR COMPL	1					
5	62Y–43892–00	.BRUSH 2 .ESCOBILLA 2	1					
6	62Y–43891–00	.BRUSH 1 .ESCOBILLA 1	1					
7	62Y–82181–01	.CIRCUIT BREAKER COMP. .RUPTOR DE CIRCUITO COMPL	1					
8	62X–43807–00	.WIRE SUB ASSY .CABLE COMPL.	1					
9	69W–4380F–00	.PLATE, BRUSH HOLDER .PLACA	1					
10	62X–4386K–00	.SPRING, BRUSH .RESORTE, ESCOBILLA	2					
11	97880–05020	.SCREW, PAN HEAD .TORNILLO DE CABEZA CON PLANA	3					
12	97602–04216	.SCREW, PAN HEAD WITH WASHER .TORNILLO CON RONDONA	2					
13	62Y–43881–00	.FRAME, END .CUADRO EXTERMO	1					
14	62X–4380H–00	.METAL .METAL	1					
15	93102–08414	.OIL SEAL .SELLO ACEITE	1					
16	90201–083J8	.WASHER, PLATE .ARANDELA PLANA	1					
17	93210–52449	.O-RING .ANILLO O	1					

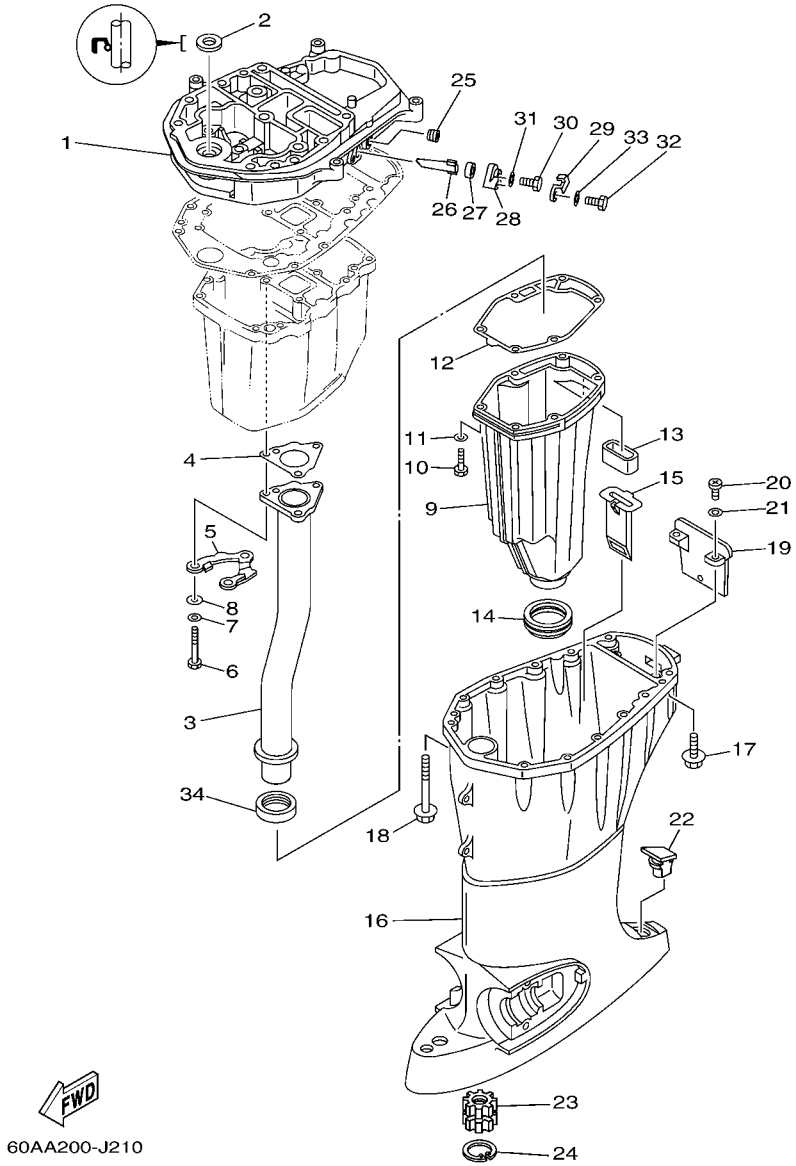

FIG. 21 UPPER CASING — FUNDA SUPERIOR

REF. NO.	PART NO. CODIGO Nº	DESCRIPTION DESCRIPCION	60AA					REMARKS OBSERVACIONES
1	64J–41137–03–CA	GUIDE, EXHAUST GUIA DE ESCAPE	1					
2	93103–18011	OIL SEAL SELLO ACEITE	1					
3	64J–41131–10	MANIFOLD, EXT. 1 TUBO MULTIPLE DE ESCAPE	1					
4	64J–41133–10	GASKET, EXHAUST MANIFOLD 1 EMPAQUE ESCAPE MULTIPLE	1					
5	64J–41116–00	PROTECTOR PROTECTOR	1					
6	97075–06050	BOLT PERNO	3					
7	92995–06600	WASHER ARANDELA	3					
8	90201–06015	WASHER, PLATE ARANDELA PLANA	3					
9	64J–14711–00–CA	MUFFLER 1 SILENCIADOR 1	1					
10	97075–06025	BOLT PERNO	6					
11	92995–06600	WASHER ARANDELA	6					
12	6BG–41134–00	GASKET, EXHAUST MANIFOLD EMPAQUE	1					
13	62Y–45127–00	SEAL SELLO DE GOMA	1					
14	663–45123–00	GASKET, MUFFLER EMPAQUE SILENCIADOR	1					
15	64J–77123–00	GUIDE 1 GUIA 1	1					
16	62Y–45111–21–8D	CASING, UPPER CAJA SUPERIOR	1					
17	90119–08102	BOLT, WITH WASHER TORNILLO CON ARANDELA	4					
18	90119–08132	BOLT, WITH WASHER TORNILLO CON ARANDELA	8					
19	62Y–45151–00	COVER, UPPER CASING CUBIERTA FUNDA SUPERIOR	1					
20	97880–05016	SCREW, PAN HEAD TORNILLO DE CABEZA CON PLANA	2					
21	92990–05600	WASHER, PLATE ARANDELA PLANA	2					
22	6C5–45155–00	CAP TAPA	1					
23	69W–45318–00	BUSHING, DRIVE SHAFT BUJE, EJE DE MANDO	1					
24	93420–36M01	CIRCLIP SEGURO	1					
25	68T–11112–00	PLUG, BLIND 1 TAPON	1					
26	62Y–11325–00	ANODE ANODO	1					
27	66M–11328–00	GROMMET, ANODE TAPON	1					

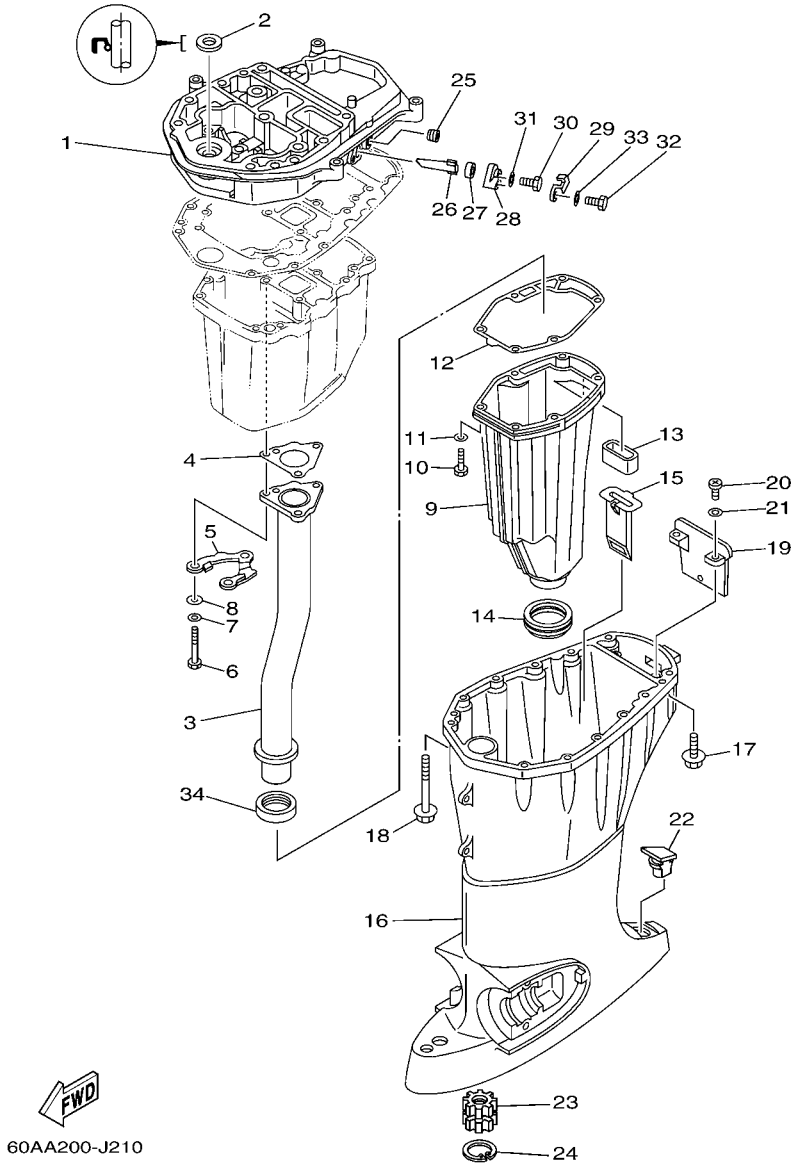

FIG. 21 UPPER CASING FUNDA SUPERIOR

REF. NO.	PART NO. CODIGO Nº	DESCRIPTION DESCRIPCION	60AA					REMARKS OBSERVACIONES
28	66M–11327–00–94	COVER, ANODE CUBIERTA DE ANODO	1					
29	66M–12535–00	PLATE EMPAQUETADURA	1					
30	97095–05012	BOLT PERNO	1					
31	92995–05600	WASHER ARANDELA	1					
32	97013–06020	BOLT PERNO	1					
33	92903–06600	WASHER, PLATE RONDANA SENCILLA	1					
34	64J–46132–10	GASKET 1 EMPAQUE 1	1					

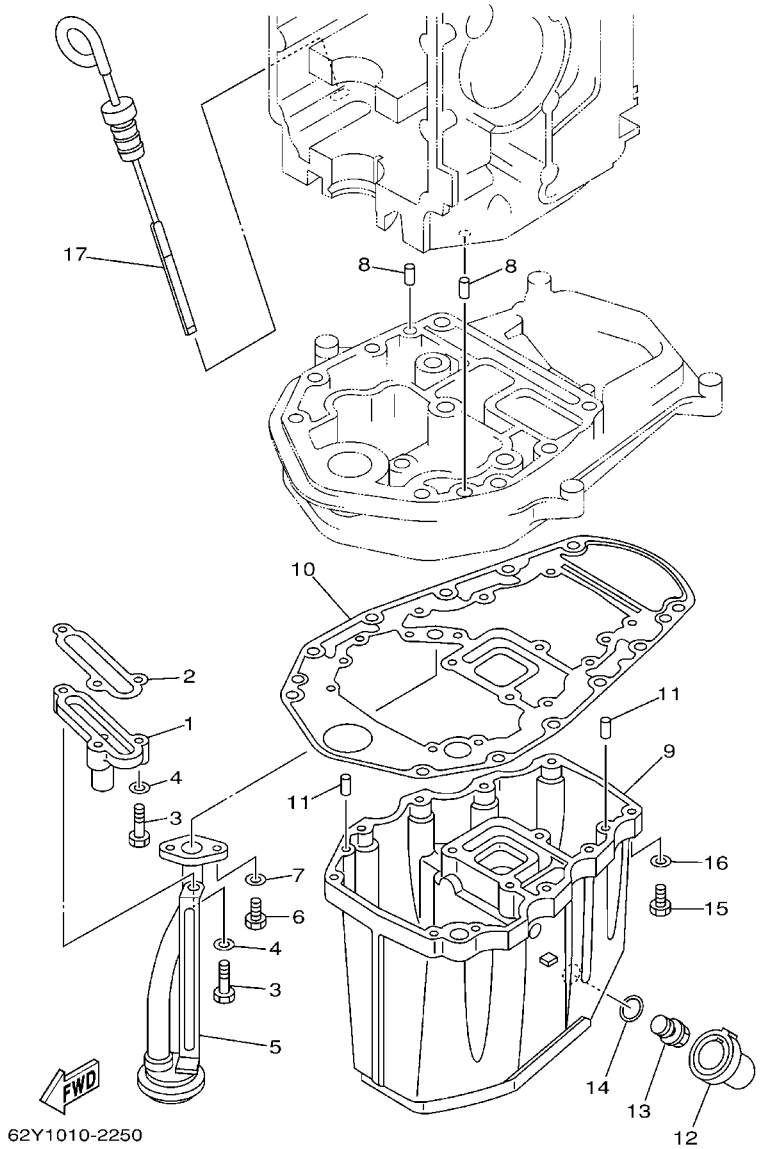

FIG. 22 OIL PAN

OIL PAN

REF. NO.	PART NO. CODIGO Nº	DESCRIPTION DESCRIPCION	60AA					REMARKS OBSERVACIONES
1	62Y–11575–00	RELIEF VALVE ASSY CONEXION, VARILLA EJE	1					
2	62Y–13475–00	GASKET EMPAQUE	1					
3	97013–06025	BOLT PERNO	3					
4	92903–06600	WASHER, PLATE RONDANA SENCILLA	3					
5	62Y–13411–00	STRAINER, OIL FILTRO DE ACEITE	1					
6	97013–06016	BOLT PERNO	2					
7	92903–06600	WASHER, PLATE RONDANA SENCILLA	2					
8	93608–12M05	PIN, DOWEL PASADOR DE CLAVIJA	2					
9	64J–15311–01–CA	OIL PAN BANDEJA DE ACEITE	1					
10	69W–15312–00	GASKET, OIL PAN EMPAQ BANDEJA DE ACEITE	1					Go to P/N : PE0-OM-160018
11	93606–12019	PIN, DOWEL PASADOR DE CLAVIJA	4					
12	62Y–15316–00	DAMPER 1 AMORTIGUADOR 1	1					
13	90340–14M06	PLUG, STRAIGHT SCREW TORNILLO, DE DRENAJE	1					
14	90430–14M09	GASKET JUNTA	1					
15	97075–06025	BOLT PERNO	10					
16	92995–06600	WASHER ARANDELA	10					
17	62Y–15362–00	PLUG, OIL LEVEL TAPON DEL NIVEL DE ACEITE	1					

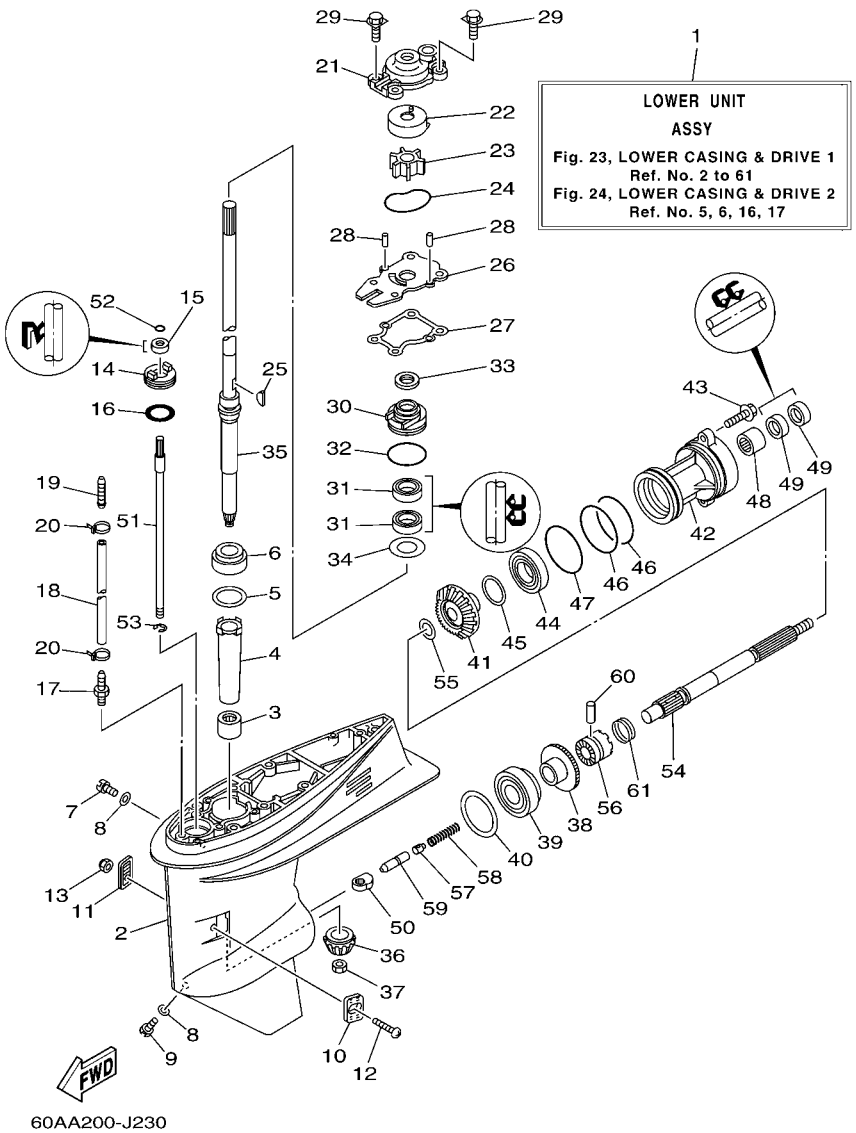

FIG. 23 LOWER CASING & DRIVE 1 IMPULSOR E INFERIOR 1

REF. NO.	PART NO. CODIGO Nº	DESCRIPTION DESCRIPCION	60AA					REMARKS OBSERVACIONES
1	62Y–45300–31–8D	LOWER UNIT ASSY CONJUNTO UNIDAD INFERIOR	1					
2	62Y–45301–00–8D	CASING, LOWER FUNDA INFERIOR COMPLETA	1					
3	93315–32224	BEARING COJINETE DE RODILLOS	1					
4	6H4–45536–00	SLEEVE, DRIVE SHAFT CAMISA EJE DE MANDO	1					
5	663–45587–01	SHIM (T:0.10MM) LAINA (T:0.10MM)	1					UR UR
	663–45587–10	SHIM (T:0.12MM) LAINA (T:0.12MM)	1					UR UR
	663–45587–20	SHIM (T:0.15MM) LAINA (T:0.15MM)	1					UR UR
	663–45587–30	SHIM (T:0.18MM) LAINA (T:0.18MM)	1					UR UR
	663–45587–40	SHIM (T:0.30MM) LAINA (T:0.30MM)	1					UR UR
	663–45587–50	SHIM (T:0.40MM) LAINA (T:0.40MM)	1					UR UR
	663–45587–60	SHIM (T:0.50MM) LAINA (T:0.50MM)	1					UR UR
6	93332–00001	BEARING COJINETE	1					
7	90340–08002	PLUG, STRAIGHT SCREW TORNILLO, DE DRENAJE	1					
8	90430–08020	GASKET JUNTA	2					
9	688–45341–10	PLUG, DRAIN TAPON, DREN	1					
10	63D–45214–00	COVER, WATER INLET 1 CUBIERTA ENTRADA AGUA 1	1					
11	63D–45215–00	COVER, WATER INLET 2 CUBIERTA ENTRADA AGUA 2	1					
12	90142–05M06	SCREW, COUNTERSUNK TORNILLO EMBUTIDO	1					
13	95380–05600	NUT TUERCA	1					
14	63D–45321–00	PLATE PLACA	1					
15	93106–09014	OIL SEAL SELLO ACEITE	1					
16	93210–33MG4	O-RING ANILLO O	1					
17	6E5–45378–00	NIPPLE, HOSE NIPLE MANGUERA	1					
18	90445–07M31	HOSE (L200) TUBO (L200)	1					
19	6E5–83558–10	END, NIPPLE EXTREMO DE NIPLE	1					
20	90465–11M10	CLAMP BRIDA	2					
21	63D–44311–00	HOUSING, WATER PUMP CAJA BOMBA DE AGUA	1					

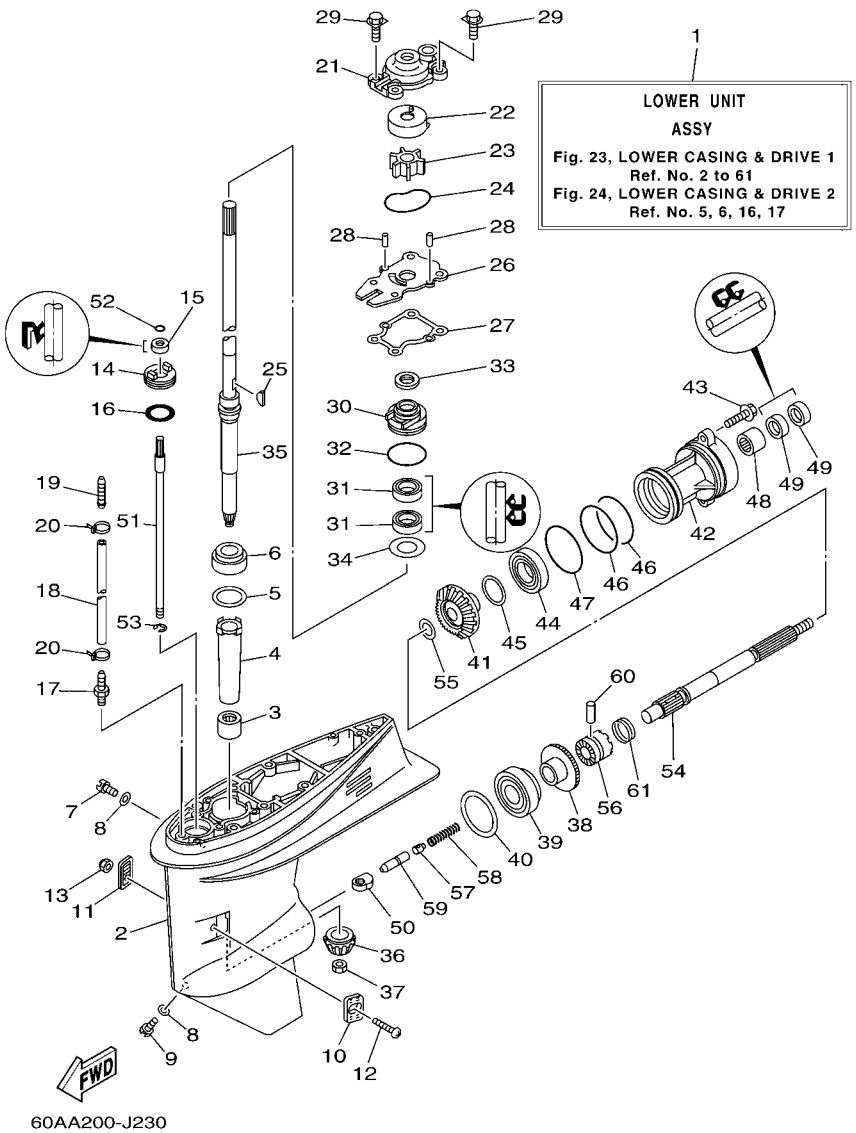

FIG. 23 LOWER CASING & DRIVE 1 IMPULSOR E INFERIOR 1

REF. NO.	PART NO. CODIGO Nº	DESCRIPTION DESCRIPCION	60AA					REMARKS OBSERVACIONES
22	63D–44322–40	INSERT, CARTRIDGE CARTUCHO	1					FOR CHROMATE FOR CHROMATE
23	6H3–44352–00	IMPELLER IMPULSOR	1					
24	93210–59MG7	O-RING ANILLO O	1					
25	90280–03024	KEY, WOODRUFF CUNA WOODRUFF	1					
26	63D–44323–40	OUTER PLATE, CARTRIDGE PLACA EXTERIOR DEL CARTUCHO	1					FOR CHROMATE FOR CHROMATE
27	63D–44316–00	GASKET, WATER PUMP EMPAQUE	1					
28	93604–08062	PIN, DOWEL PASADOR DE CLAVIJA	2					
29	90119–08M15	BOLT, WITH WASHER TORNILLO CON ARANDELA	4					
30	6BG–44341–00	HOUSING, WATER PUMP CAJA BOMBA DE AGUA	1					
31	93101–25M57	OIL SEAL SELLO ACEITE	2					
32	93210–48001	O-RING ANILLO O	1					
33	63D–45344–00	COVER, OIL SEAL CUBIERTA SELLO ACEITE	1					
34	90201–27M00	WASHER, PLATE ARANDELA PLANA	1					
35	62Y–45501–30	DRIVE SHAFT COMP. EJE DE MANDO COMPL.	1					
36	6H4–45551–01	PINION (13T) PINON (13T)	1					
37	90170–12138	NUT TUERCA	1					
38	6H4–45560–01	GEAR 1 (24T) ENGRANAJE 1 (24T)	1					
39	93332–00003	BEARING COJINETE	1					
40	663–45567–01	SHIM (T:0.10MM) LAINA (T:0.10MM)	1					UR UR
	663–45567–10	SHIM (T:0.12MM) LAINA (T:0.12MM)	1					UR UR
	663–45567–20	SHIM (T:0.15MM) LAINA (T:0.15MM)	1					UR UR
	663–45567–30	SHIM (T:0.18MM) LAINA (T:0.18MM)	1					UR UR
	663–45567–40	SHIM (T:0.30MM) LAINA (T:0.30MM)	1					UR UR
	663–45567–50	SHIM (T:0.40MM) LAINA (T:0.40MM)	1					UR UR
	663–45567–60	SHIM (T:0.50MM) LAINA (T:0.50MM)	1					UR UR
41	62Y–45571–00	GEAR 2 (24T) ENGRANAJE 2 (24T)	1					
42	63D–45361–02–8D	CAP, LOWER CASING FUNDA INFERIOR	1					

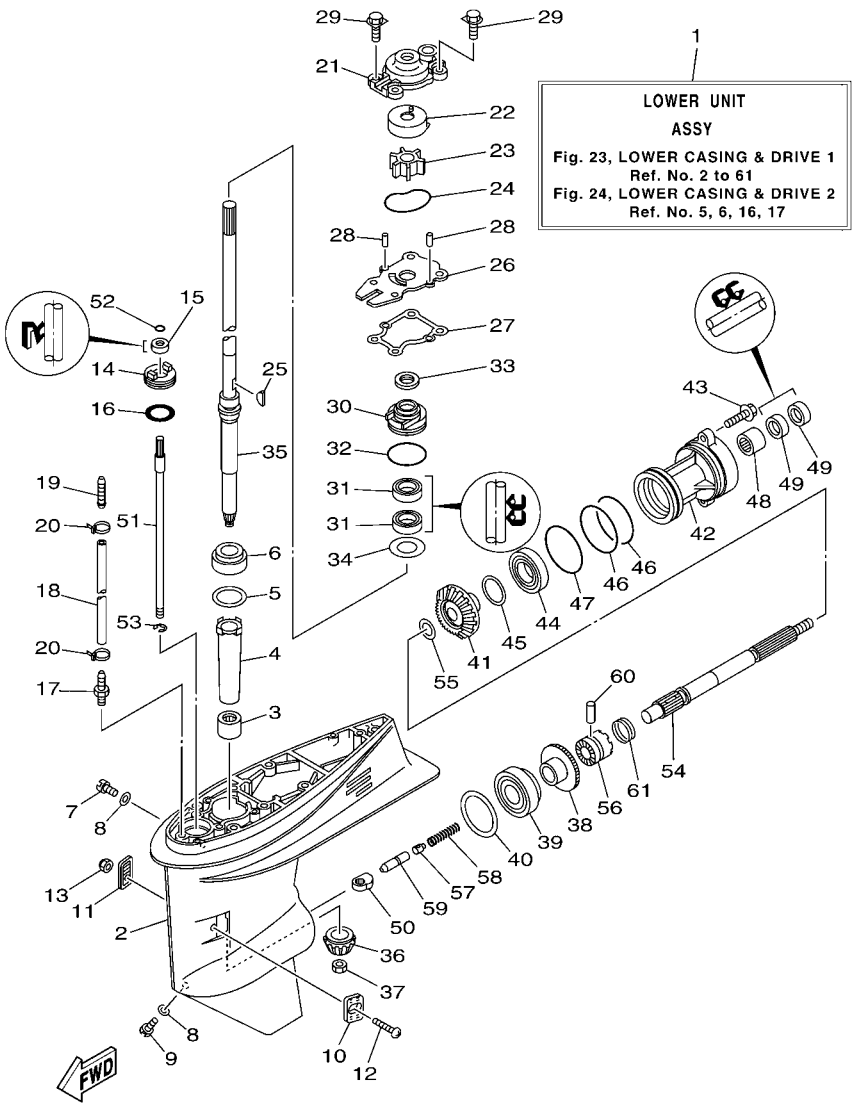

FIG. 23 LOWER CASING & DRIVE 1 IMPULSOR E INFERIOR 1

REF. NO.	PART NO. CODIGO Nº	DESCRIPTION DESCRIPCION	60AA					REMARKS OBSERVACIONES
43	90105–08148	BOLT, FLANGE TORNILLO	2					
44	93306–001U1	BEARING COJINETE	1					
45	63D–45577–00	SHIM (T:0.10MM) LAINA (T:0.10MM)	1					UR UR
	63D–45577–10	SHIM (T:0.12MM) LAINA (:0.12MM)	1					UR UR
	63D–45577–20	SHIM (T:0.15MM) LAINA (T:0.15MM)	1					UR UR
	63D–45577–30	SHIM (T:0.18MM) LAINA (T:0.18MM)	1					UR UR
	63D–45577–40	SHIM (T:0.30MM) LAINA (T:0.30MM)	1					UR UR
	63D–45577–50	SHIM (T:0.40MM) LAINA (T:0.40MM)	1					UR UR
	63D–45577–60	SHIM (T:0.50MM) LAINA (T:0.50MM)	1					UR UR
46	93210–74MG5	O-RING ANILLO O	2					
47	93210–69MG6	O-RING ANILLO O	1					
48	93317–22204	BEARING COJINETE	1					
49	93101–22M00	OIL SEAL SELLO ACEITE	2					
50	62Y–44151–00	CAM, SHIFT LEVA DE CAMBIO	1					
51	63D–44144–00	ROD, SHIFT VARILLA DE CAMBIO	1					
52	93210–07003	O-RING ANILLO O	1					
53	99001–08600	CIRCLIP PRESILLA REDONDA	1					
54	63D–45611–00	SHAFT, PROPELLER EJE PROPUSOR	1					
55	90201–22429	WASHER, PLATE ARANDELA PLANA	1					
56	62Y–45631–00	CLUTCH, DOG EMBRAGUE DE GARRA	1					
57	663–45634–00	SLIDE, SHIFT DESLIZADOR, CAMBIO	1					
58	90501–18001	SPRING, COMPRESSION RESORTE DE COMPRESION	1					
59	63D–45635–00	PLUNGER, SHIFT EMBOLO DE CAMBIO	1					
60	90250–06023	PIN, STRAIGHT PASADOR CILINDRICO	1					
61	67C–45633–00	RING, CROSS PIN ANILLO DE PASADOR	1					

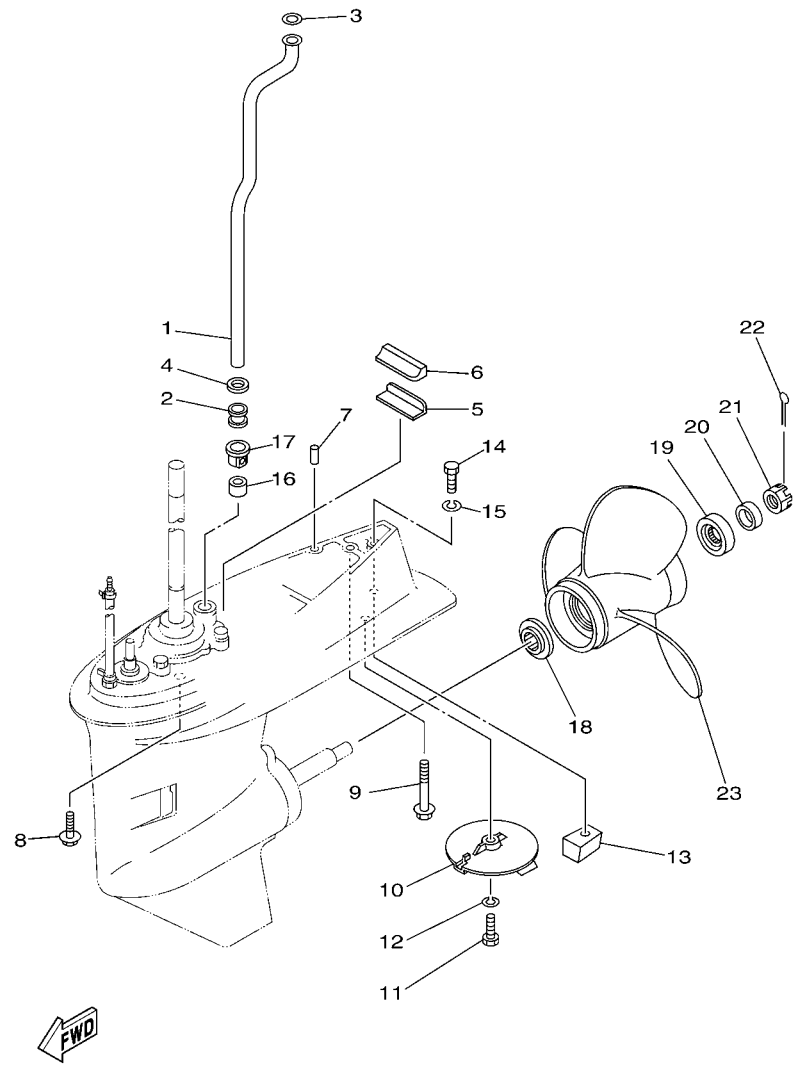

60A8200-G240

FIG. 24 LOWER CASING & DRIVE 2 IMPULSOR E INFERIOR 2

REF. NO.	PART NO. CODIGO Nº	DESCRIPTION DESCRIPCION	60AA					REMARKS OBSERVACIONES
1	62Y–44361–00	TUBE, WATER TUBO DE AGUA	1					
2	663–44367–00	DAMPER, WATER SEAL GOMA DEL SELLO DE AGUA	1					
3	90202–12060	WASHER, PLATE ARANDELA DE PLANA	1					
4	90430–12072	GASKET JUNTA	1					
5	663–45376–00–94	GUIDE, SEAL DAMPER GUIA DE SELLO GOMA	1					
6	63D–45375–00	DAMPER, SEAL GOMA DE SELLO	1					
7	93606–12019	PIN, DOWEL PASADOR DE CLAVIJA	2					
8	90119–10030	BOLT, WITH WASHER TORNILLO CON ARANDELA	4					
9	90119–08M84	BOLT, WITH WASHER TORNILLO CON ARANDELA	1					
10	67C–45371–00	TAB-TRIM QUILLA ESTABILIZADOR	1					
11	97095–08025	BOLT PERNO	1					
12	92995–08100	WASHER ARANDELA	1					
13	67C–45251–00	ANODE CATODE	1					
14	97095–08035	BOLT PERNO	1					
15	92995–08100	WASHER ARANDELA	1					
16	663–44366–00	DAMPER, WATER SEAL GOMA DEL SELLO DE AGUA	1					
17	63D–44312–00	COVER, WATER PUMP HOUSING CUBIERTA CAJA BOMBA DE AGUA	1					
18	663–45987–02	SPACER ESPACIADOR	1					
19	66T–45997–00	SPACER ESPACIADOR	1					
20	90389–22M01	BUSH BUJE	1					
21	90171–16011	NUT, CASTLE TUERCA ENTALLADA	1					
22	91490–30025	PIN. COTTER CHAVETA	1					
23	69W–45943–00–EL	PROPELLER (3X11"X15"-G) PROPELA (3X11"X15"-G)	1					UR UR
	69W–45945–00–EL	PROPELLER (3X11-1/8"X13"-G) PROPELA (3X11-1/8"X13"-G)	1					UR UR
	69W–45947–00–EL	PROPELLER (3X11-5/8"X11"-G) PROPELA (3X11-5/8"X11"-G)	1					UR UR
	69W–45952–00–EL	PROPELLER (3X11-3/8"X12"-G) PROPELA (3X11-3/8"X12"-G)	1					UR UR
	663–45941–01–EL	PROPELLER (3X10-3/4"X17"-G) PROPELA (3X10-3/4"X17"-G)	1					UR UR

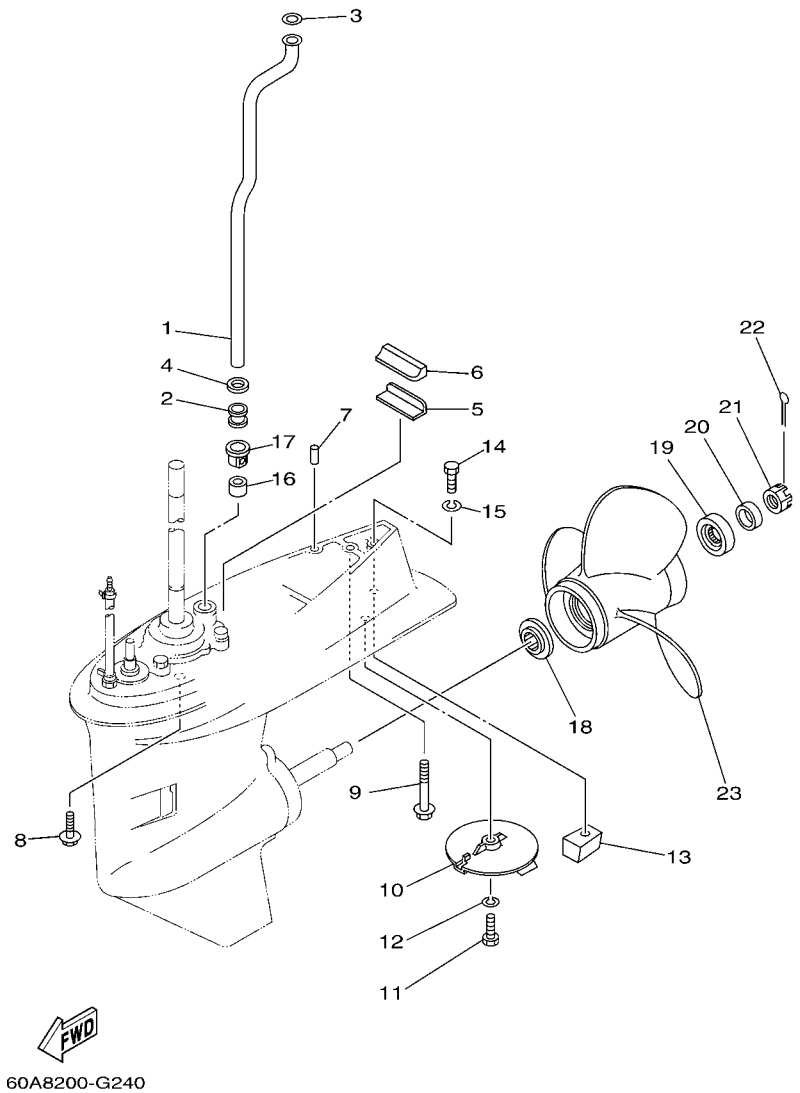

FIG. 24 LOWER CASING & DRIVE 2 IMPULSOR E INFERIOR 2

REF. NO.	PART NO. CODIGO Nº	DESCRIPTION DESCRIPCION	60AA					REMARKS OBSERVACIONES
23	663–45949–01–EL	PROPELLER (3X10-3/4"X16"-G) PROPELA (3X10-3/4"X16"-G)	1					UR UR
	663–45952–02–EL	PROPELLER (3X11-3/8"X12"-G) PROPELA (3X11-3/8"X12"-G)	1					UR UR
	663–45956–01–EL	PROPELLER (3X12-1/4"X9"-G) PROPELA (3X12-1/4"X9"-G)	1					UR UR
	663–45958–01–EL	PROPELLER (3X11-1/4"X14"-G) PROPELA (3X11-1/4"X14"-G)	1					UR UR
	6H5–45943–00–EL	PROPELLER (3X10"X15"-G) PROPELA (3X10"X15"-G)	1					UR WITH LIP CUP UR WITH LIP CUP
	6H5–45945–00–EL	PROPELLER (3X10-3/8"X13"-G) PROPELA (3X10-3/8"X13"-G)	1					UR WITH LIP CUP UR WITH LIP CUP
	6H5–45952–00–EL	PROPELLER (3X10-5/8"X12"-G) PROPELA (3X10-5/8"X12"-G)	1					UR WITH LIP CUP UR WITH LIP CUP
	6H5–45958–00–EL	PROPELLER (3X10-1/4"X14"-G) PROPELA (3X10-1/4"X14"-G)	1					UR WITH LIP CUP UR WITH LIP CUP
	663–45970–60–98	PROPELLER (3X11-3/4"X12"-G) PROPELA (3X11-3/4"X12"-G)	1					UR UR
	663–45972–60–98	PROPELLER (3X12"X11"-G) PROPELA (3X12"X11"-G)	1					UR UR
	663–45974–60–98	PROPELLER (3X11-1/2"X13"-G) PROPELA (3X11-1/2"X13"-G)	1					UR UR
	663–45930–00–98	PROPELLER (3X10-1/4"X14"-G) PROPELA (3X10-1/4"X14"-G)	1					UR UR
	663–45974–02–98	PROPELLER (3X10-5/8"X13"-G) PROPELA (3X10-5/8"X13"-G)	1					UR UR
	663–45976–00–98	PROPELLER (3X10-1/4"X15"-G) PROPELA (3X10-1/4"X15"-G)	1					UR UR
	663–45978–00–98	PROPELLER (3X10-1/4"X16"-G) PROPELA (3X10-1/4"X16"-G)	1					UR UR
	697–45970–00–98	PROPELLER (3X11-1/4"X14"-G) PROPELA (3X11-1/4"X14"-G)	1					UR UR

FIG. 25 FUEL TANK DEPOSITO DE COMBUSTIBLE

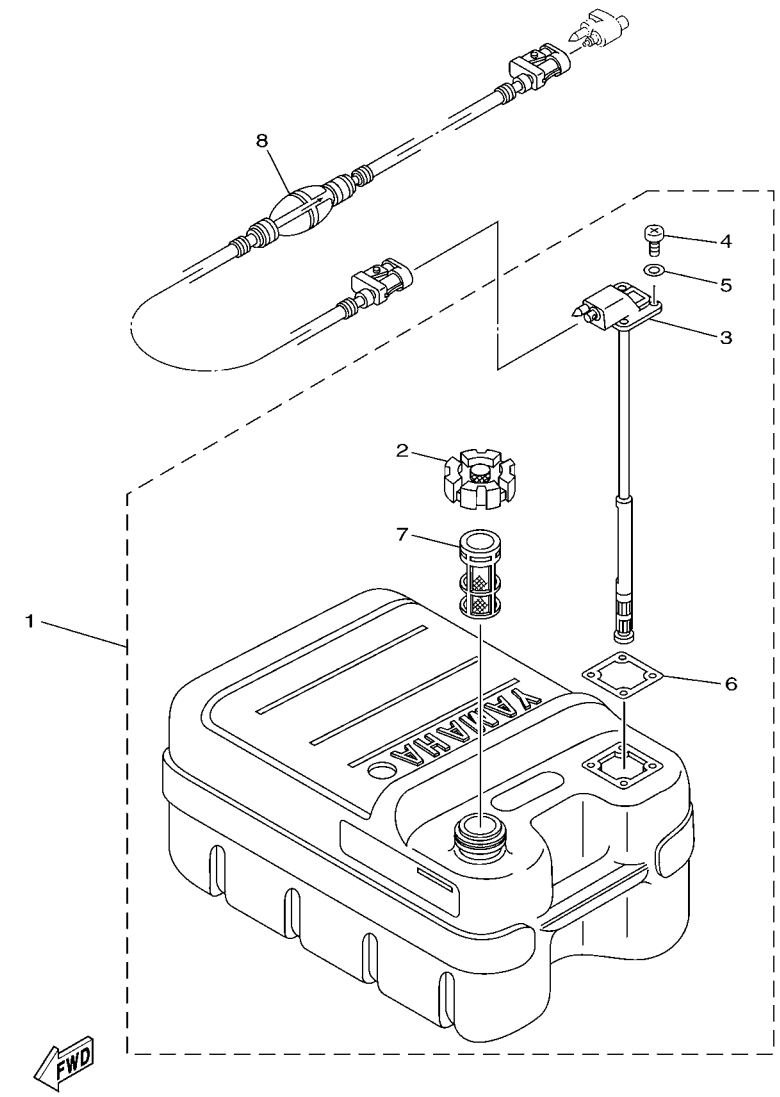

60AA200-J250

REF. NO.	PART NO. CODIGO Nº	DESCRIPTION DESCRIPCION	60AA					REMARKS OBSERVACIONES
1	6YJ–24201–10	FUEL TANK ASSY (24L) TANQUE DEL COMBUSTIBLE (24L)	1					AP AP
2	6YJ–24610–01	.CAP ASSY .TAPA COMPLETA	1					
3	6Y1–24260–12	.FUEL METER ASSY .MEDIDOR DE COMBUSTIBLE COMPL.	1					WITH INDICATOR WITH INDICATOR
4	90157–05M19	.SCREW, PAN HEAD .TORNILLO CABEZA CONICA PLANA	4					
5	6Y1–24329–00	.SEAL .SELLO	4					
6	6Y1–24268–00	.GASKET, FUEL METER .EMPAQ MEDIDOR DE COMBUSTIBLE	1					
7	6YJ–24167–00	.STRAINER .COLADOR	1					
8	6YL–24306–60	FUEL PIPE COMP. 1 TUBO COMBUST. COMPL 1	1					AP AP

FIG. 26 STEERING GUIDE DIRECCIONGUIAR

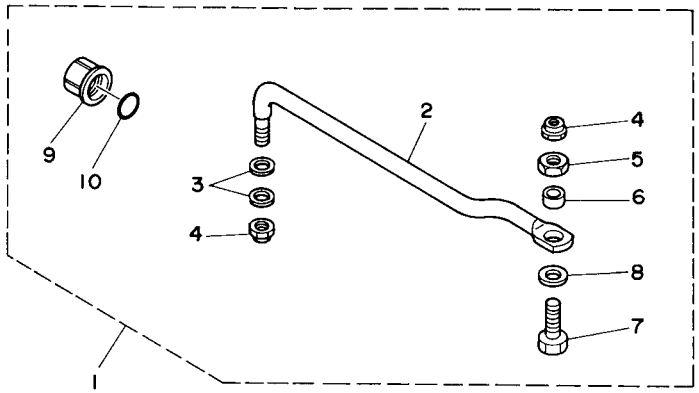

62Y0010-5200

REF. NO.	PART NO. CODIGO Nº	DESCRIPTION DESCRIPCION	60AA					REMARKS OBSERVACIONES
1	63D–61350–00	STEERING GUIDE ATTACHMENT KIT ESTUCHE ADITAMENTO GUIA DE TIM	1					AP AP
2	63D–61351–00	.ROD, STEERING LINK .VARILLA ESLABON DIRECCION	1					
3	90201–10M20	.WASHER, PLATE .ARANDELA PLANA	2					
4	90185–09M01	.NUT, SELF-LOCKING .TUERCA AUTOBLOCANTE	2					
5	90170–09M03	.NUT .TUERCA	1					
6	90387–10M42	.COLLAR .ESPACIADOR	1					
7	90101–09M01	.BOLT .TORNILLO	1					
8	90201–10M63	.WASHER, PLATE .ARANDELA PLANA	1					
9	6E5–43145–01	.CAP, CLAMP BRACKET .TAPA	1					
10	93210–16275	.O-RING .ANILLO O	1					

FIG. 27 REMOTE CONTROL BOX CONTROL REMOTO COMPLETO

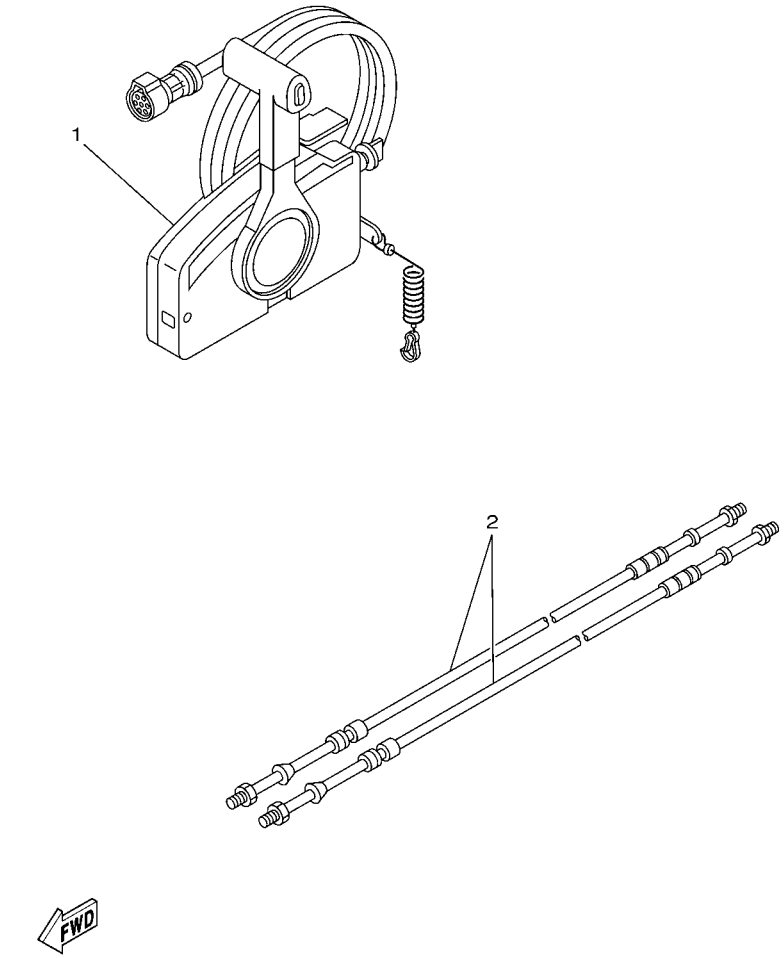

REF. NO.	PART NO. CODIGO Nº	DESCRIPTION DESCRIPCION	60AA					REMARKS OBSERVACIONES
1	703–48205–A5	REMOTE CONTROL ASSY (10P) REMOTO CONTROL COMPL. (10P)	1					AP WITH PT/T SW. AP WITH PT/T SW.
2	701–48320–50	CABLE, REMOTE CONTROL L=15F CABLE CONTROL REMOTO L=15F	2					

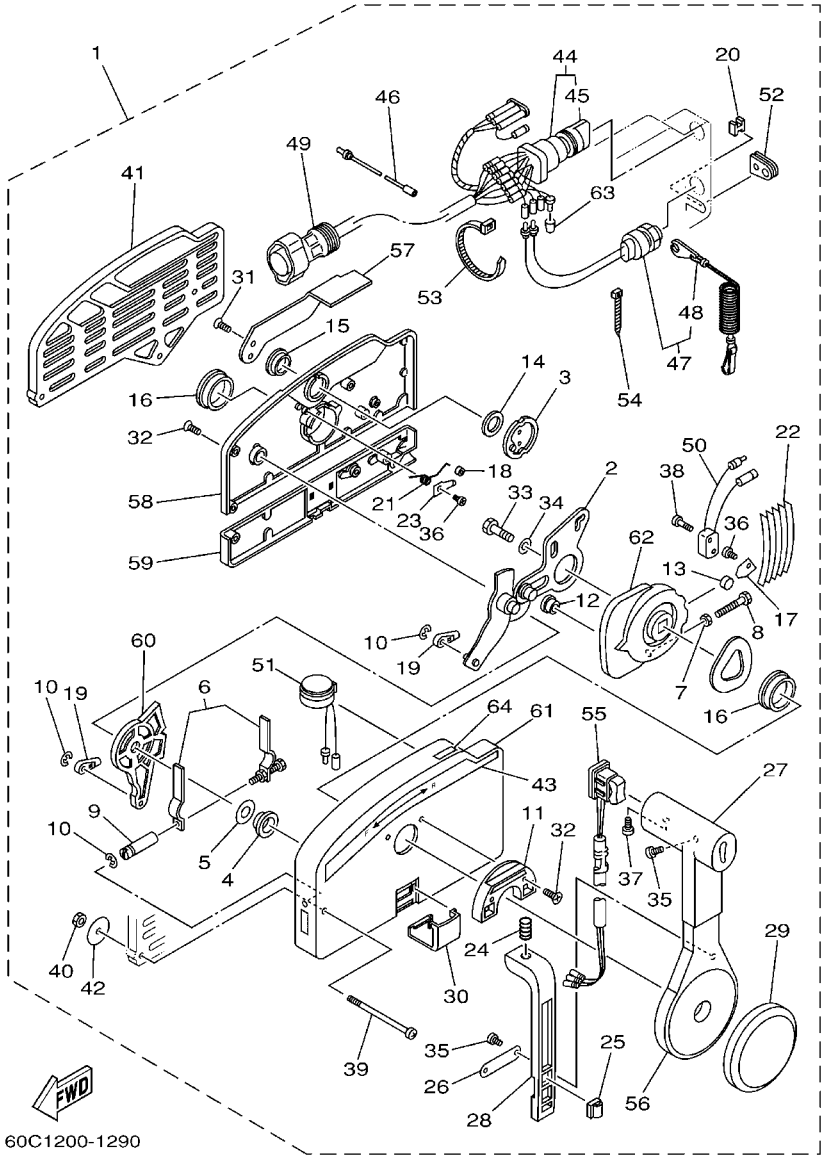

FIG. 28 REMOTE CONTROL ASSY — CONTROL REMOTO COMPL

REF. NO.	PART NO. CODIGO Nº	DESCRIPTION DESCRIPCION	60AA					REMARKS OBSERVACIONES
1	703–48205–A5	REMOTE CONTROL ASSY (10P) REMOTO CONTROL COMPL. (10P)	1					AP WITH PT/T SW. AP WITH PT/T SW.
2	703–48261–01	.ARM, THROTTLE .BRAZO ACELERADOR	1					
3	703–48153–00	.SHAFT, FREE ACCEL. .EJE	1					
4	703–48235–00	.BUSHING .BUJE	1					
5	703–48268–00	.SPACER .ESPACIADOR 3	1					
6	703–48264–00	.FRICTION, THROTTLE .FRICCION DE ACELERADOR	1					
7	95380–05600	.NUT .TUERCA	1					
8	97380–05025	.BOLT .TORNILLO HEXAGONAL	1					
9	703–48265–00	.SHAFT, FRICTION .EJE FRICCION	1					
10	93430–06024	.CIRCLIP .SEGURO	3					
11	703–48245–00	.PLATE, LOCK .PLACA CERRADURA	1					
12	703–48252–00	.ROLLER, CAM .RODILLO LEVA	1					
13	701–48248–00	.ROLLER, FREE ACCEL. .RODILLO ACELERADOR LIBRE	1					
14	703–48198–00	.WASHER, WAVE .RONDANA ONDULADA 3	1					
15	703–48243–00	.BUSHING .BUJE 3	1					
16	703–48236–00	.BUSHING 1 .BUJE	2					
17	703–48189–00	.RETAINER .RETENEDOR	1					
18	703–48234–00	.ROLLER, DETENT .RODILLO	1					
19	703–48345–01	.CABLE END, REMOTE CONTROL 2 .TERMINAL CABLE DE CONTROL REMO	2					
20	703–48358–00	.ANCHOR, CABLE .ABRAZADERA CABLE	1					
21	703–48244–00	.SPRING, FREE ACCEL. .RESORTE ACELERADOR LIBRE	1					
22	703–48238–00	.SPRING, DETENT .RESORTE	5					
23	703–48246–00	.SPACER .ESPACIADOR	1					
24	703–48227–00	.SPRING, NEUTRAL LOCK .RESORTE DE SEGURO	1					
25	703–82594–00	.CLAMP .GRAMPA	1					WITH PT/T SW. WITH PT/T SW.
26	703–48226–00	.PLATE, STOPPER .PLACA RETEN	1					
27	703–48222–00	.GRIP, CONTROL LEVER .MANGO DE PALANCA CONTROL	1					SINGLE SINGLE

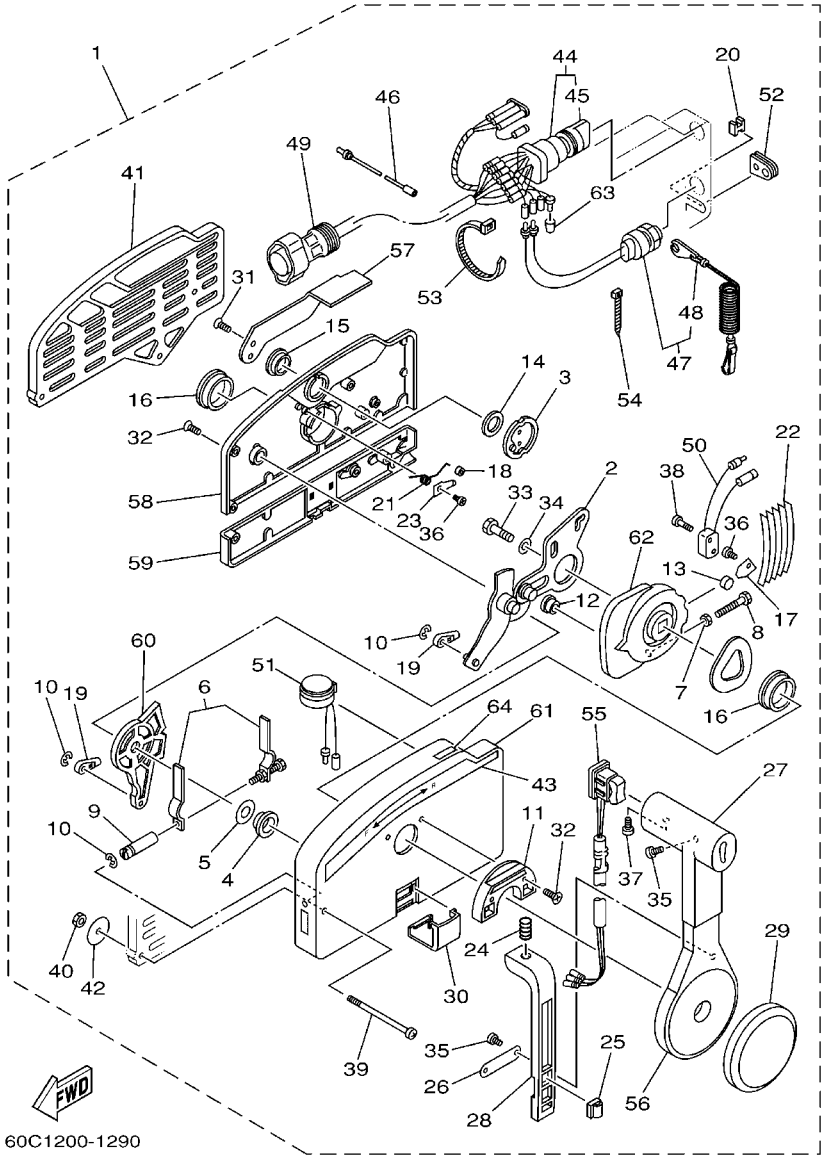

FIG. 28 REMOTE CONTROL ASSY — CONTROL REMOTO COMPL

REF. NO.	PART NO. CODIGO Nº	DESCRIPTION DESCRIPCION	60AA					REMARKS OBSERVACIONES
28	703–48223–00	.LOCK, NEUTRAL .CERRADURA NEUTRO	1					
29	703–48225–00	.COVER .CUBIERTA	1					
30	703–48219–00	.COVER, LEAD .CUBIERTA	1					
31	703–48281–00	.SCREW .TORNILLO 1	2					
32	703–48282–00	.SCREW .TORNILLO 2	7					
33	97380–08030	.BOLT .TORNILLO HEXAGONAL	1					
34	92990–08600	.WASHER, PLATE .ARANDELA PLANA	1					
35	98580–04010	.SCREW, PAN HEAD .TORNILLO DE CABEZA CRUZADA	3					
36	98580–04006	.SCREW, PAN HEAD .TORNILLO DE CABEZA CRUZADA	2					
37	98580–05010	.SCREW, PAN HEAD .TORNILLO DE CABEZA CRUZADA	1					
38	98580–03015	.SCREW, PAN HEAD .TORNILLO DE CABEZA CRUZADA	2					
39	703–48291–10	.SCREW (M6) .TORNILLO (M6)	3					
40	95380–06600	.NUT, HEXAGON .TUERCA	3					
41	703–48293–10	.SPACER, REMOTE CONTROL .ESPACIADOR	1					SINGLE SINGLE
42	701–48287–00	.WASHER .ARANDELA	3					
43	703–48215–00	.GRAPHIC .CALCOMANIA 1	1					
44	703–82510–12	.MAIN SWITCH ASSY .CONJUNTO DE LLAVE IGNICION	1					PRIME START PRIME START
45	676–82577–00	..CAP, KEY ..TAPA	1					
46	703–82531–00	.WIRE, LEAD (L70) .CABLE CONDUCTOR (L70)	1					
47	688–82575–01	.ENGINE STOP SWITCH ASSY .INTERRUPTOR DE PARADA COMPL	1					
48	682–82556–00	..LANYARD, STOP SWITCH ..RETENER	1					
49	688–8258A–20	.EXTENSION, WIRE HARNESS (4.9M) .EXTENSION, ARNES DE CABLES (4.	1					(10P) (10P)
50	703–82540–00	.NEUTRAL SWITCH ASSY .INTERRUPTOR NEUTRAL COMPL	1					
51	703–83383–B0	.BUZZER .ZUMBADOR	1					
52	703–48284–00	.GROMMET .TAPON	1					
53	703–82591–00	.BAND .BANDA	1					
54	703–82592–00	.BAND .BANDA	1					

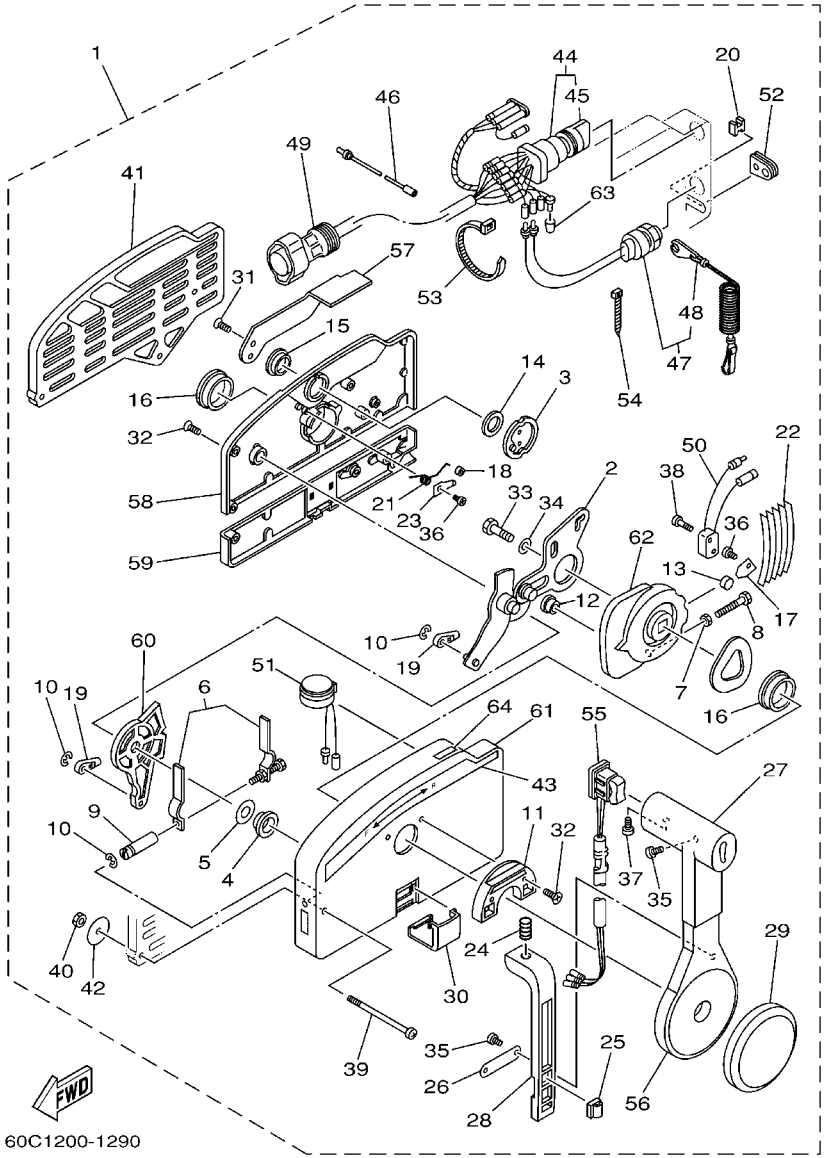

FIG. 28 REMOTE CONTROL ASSY — CONTROL REMOTO COMPL

REF. NO.	PART NO. CODIGO Nº	DESCRIPTION DESCRIPCION	60AA					REMARKS OBSERVACIONES
55	703–82563–02	.TRIM & TILT SWITCH ASSY .INTERRUPTOR DE INCLINACION	1					WITH PT/T SW. WITH PT/T SW.
56	703–48221–00	.LEVER, CONTROL .PALANCA CONTROL	1					
57	703–48152–00	.KNOB, FREE ACCEL. .PERILLA	1					
58	703–48212–00	.BACK PLATE 1 .PLACA TRASERA 1	1					
59	703–48213–00	.BACK PLATE 2 .PLACA TRASERA 2	1					
60	703–48271–00	.ARM, SHIFT .BRAZO CAMBIADOR	1					
61	703–48211–01	.HOUSING,1 .CAJA	1					
62	703–48232–00	.GEAR .ENGRANAJE 1	1					
63	703–82542–00	.CAP .TAPA	1					
64	703–48218–00	.GRAPHIC .CALCAMONIA	1					

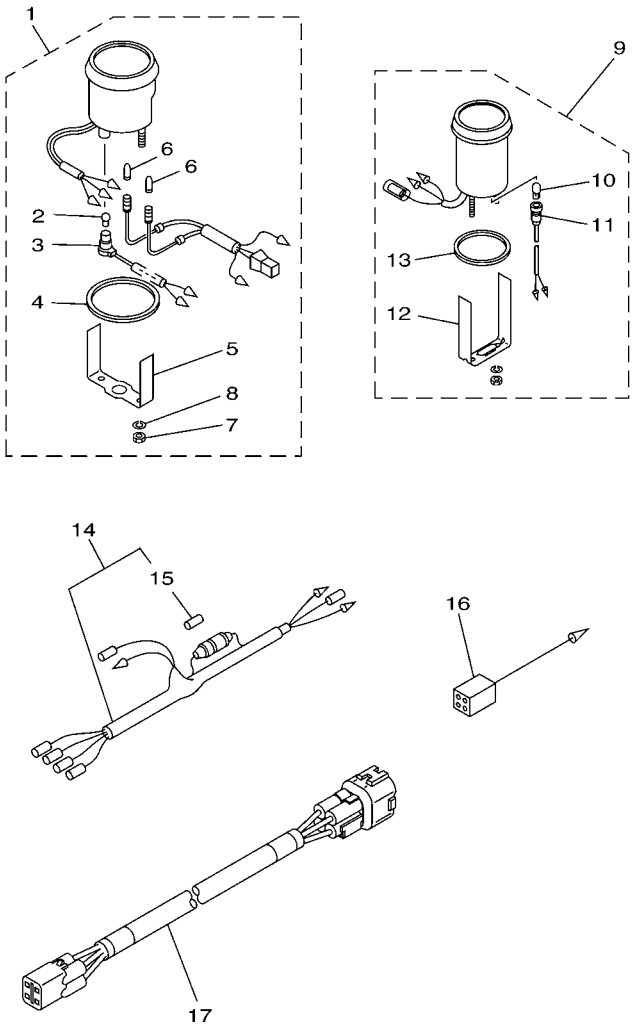

60A8200-G290

FIG. 29 METER MEDIDOR

REF. NO.	PART NO. CODIGO Nº	DESCRIPTION DESCRIPCION	60AA					REMARKS OBSERVACIONES
1	6Y7–83540–80	TACHOMETER ASSY TACOMETRO COMPLETO	1					AP WITH OIL/TEMP LAMP AP WITH OIL/TEMP LAMP
2	6Y5–83517–00	.BULB (T10, 12V-1.7W) .BOMBILLA (T10, 12V-1.7W)	1					
3	6Y5–83536–40	.SOCKET, METER .ENCASTRE DE MEDIDOR	1					
4	6Y5–83523–00	.DAMPER .AMORTIGUADOR	1					
5	6Y5–83514–00	.PLATE, FITTING .PLACA ACCESORIA	1					
6	6Y5–83518–00	.BULB (12V-1.7W T6.5) .BOMBILLA (12V-1.7W T6.5)	2					
7	95380–05600	.NUT .TUERCA	2					
8	92990–05100	.WASHER, SPRING .ARANDELA PLANA	2					
9	6Y7–83670–40	TRIM METER ASSY. MEDIDOR DE INCLINACION	1					AP AP
10	6Y5–83518–00	.BULB (12V-1.7W T6.5) .BOMBILLA (12V-1.7W T6.5)	1					
11	6Y5–83536–00	.SOCKET, METER .ENCASTRE DE MEDIDOR	1					
12	6Y5–83544–00	.PLATE, FITTING .PLACA ACCESORIA	1					
13	688–83664–00	.DAMPER .AMORTIGUADOR	1					
14	6Y5–83553–00	WIRE, LEAD (L=2.5M) CABLE CONDUCTOR (L=2.5M)	1					AP AP
15	1E6–82151–00	.FUSE (10A) .FUSIBLE (10A)	1					
16	6Y5–82117–00	WIRE, LEAD (BLACK) (L300) CABLE, CONDUCTOR (NEGRO)	1					AP AP
17	6Y5–83653–20	WIRE, LEAD (L=7.0M) CABLE CONDUCTOR (L=7.0M)	1					AP 4P,7M AP 4P,7M

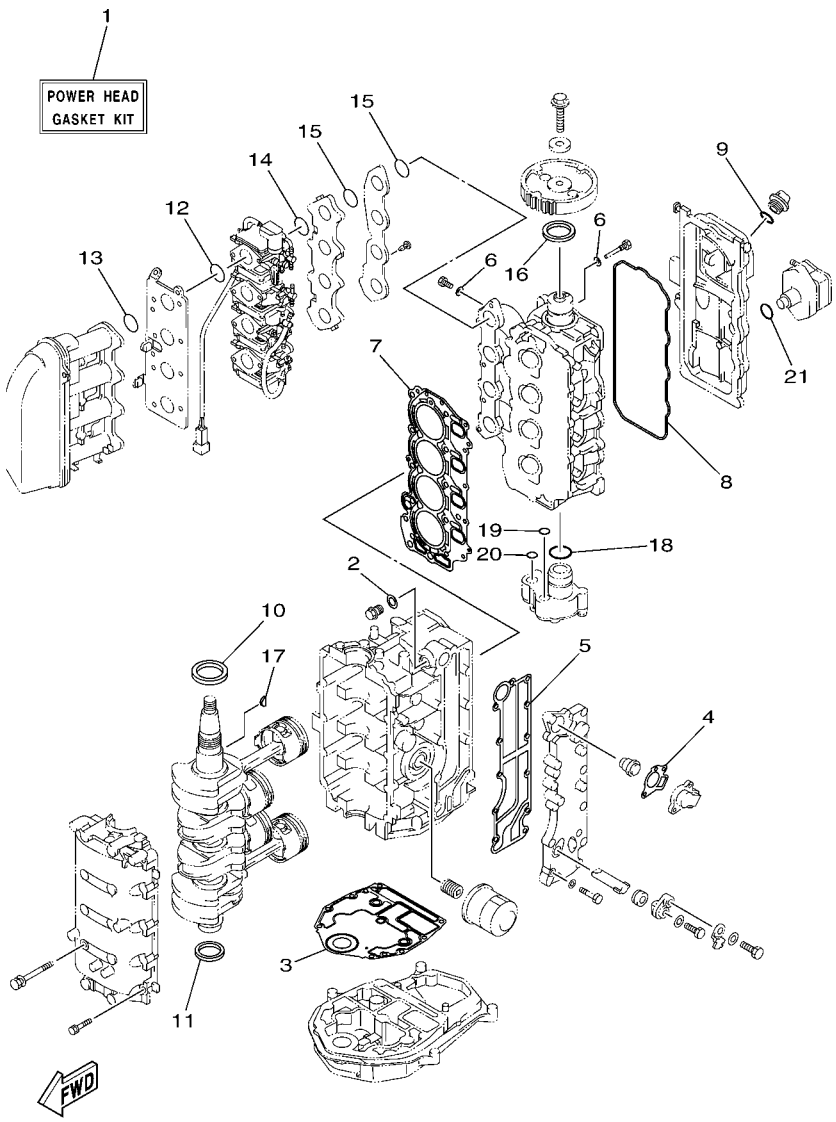

60AA200-J300

FIG. 30 REPAIR KIT 1 — ESTUCHE REPARATION 1

REF. NO.	PART NO. CODIGO Nº	DESCRIPTION DESCRIPCION	60AA					REMARKS OBSERVACIONES
1	60A–W0001–00	POWER HEAD GASKET KIT JUEGO DE EMPAQUE DE MOTOR	1					
2	90430–14115	.GASKET .JUNTA	1					
3	6BG–11351–00	.GASKET, CYLINDER .JUNTA, DE CILINDRO	1					
4	62Y–12414–00	.GASKET, COVER .EMPAQUE	1					
5	6C5–41114–00	.GASKET, EXHAUST OUTER COVER .EMPAQUE	1					
6	90430–06014	.GASKET .JUNTA	5					
7	62Y–11181–00	.GASKET, CYLINDER HEAD 1 .JUNTA, DE CULATA 1	1					
8	62Y–11356–00	.SEAL, CYLINDER 2 .RETEN ACEITE CILINDRO 2	1					
9	93210–24M79	.O-RING .ANILLO O	1					
10	93102–43M42	.OIL SEAL .SELLO ACEITE	1					
11	93101–35002	.OIL SEAL .SELLO ACEITE	1					
12	93210–35M86	.O-RING .ANILLO O	4					
13	93210–38MH3	.O-RING .ANILLO O	4					
14	93210–30MH4	.O-RING .ANILLO O	4					
15	93210–35M86	.O-RING .ANILLO O	8					
16	93102–37M40	.OIL SEAL .SELLO ACEITE	1					
17	90280–04M06	.KEY, WOODRUFF .CUNA WOODRUFF	1					
18	93210–33MH2	.O-RING .ANILLO O	1					
19	93210–12MG9	.O-RING .ANILLO O	1					
20	93210–14515	.O-RING .ANILLO O	1					
21	93210–24M79	.O-RING .ANILLO O	1					

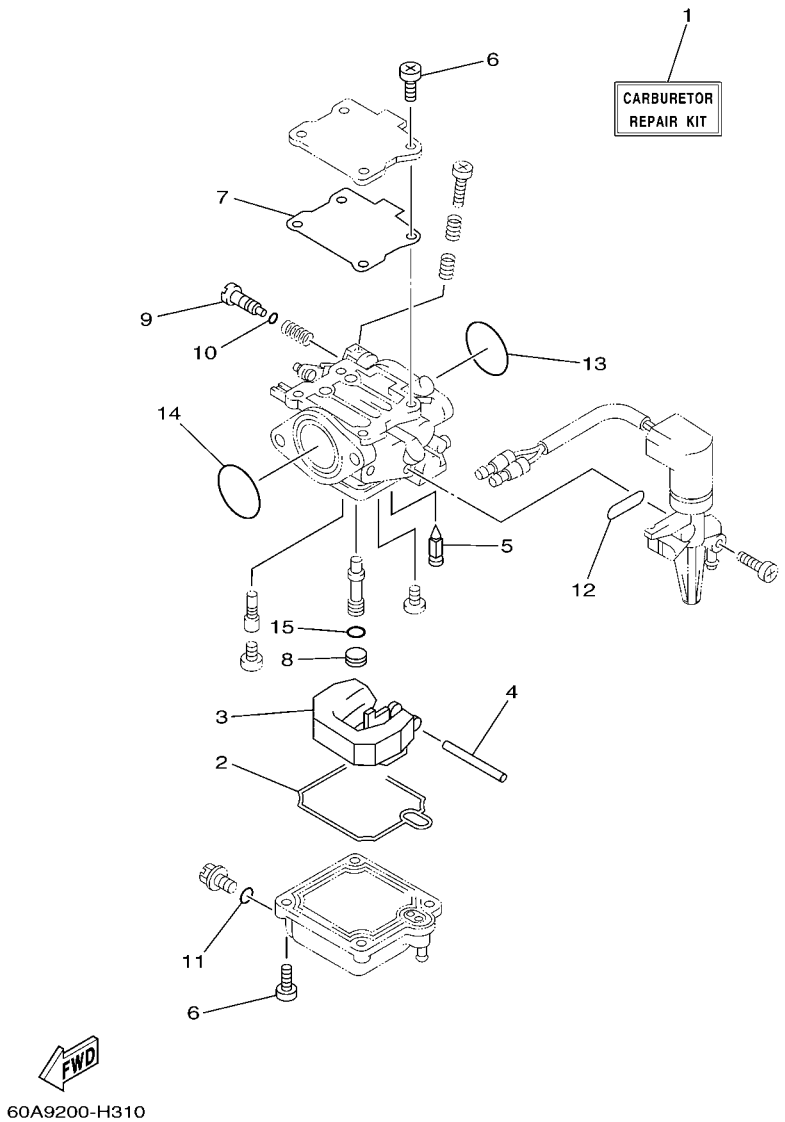

FIG. 31 REPAIR KIT 2 — ESTUCHE REPARATION 2

REF. NO.	PART NO. CODIGO Nº	DESCRIPTION DESCRIPCION	60AA					REMARKS OBSERVACIONES
1	62Y–W0093–11	CARBURETOR REPAIR KIT KIT REPARACION CARBURADOR	1					
2	62Y–14384–30	.GASKET, FLOAT CHAMBER .EMPAQUE DE CAMARA DE BOIA	1					
3	6L2–14385–00	.FLOAT .BOIA	1					
4	6E5–14386–01	.PIN, FLOAT .PASADOR DE BOIA	1					
5	62Y–14392–00	.VALVE, NEEDLE .VALVULA DE AGUJA	1					
6	62Y–14321–00	.SCREW, THROTTLE .TORNILLO DE OBTURADOR	8					
7	62Y–14399–30	.GASKET .EMPAQUE	1					
8	62Y–14355–30	.PLUG .TAPON	1					
9	62Y–14323–30	.SCREW, AIR ADJUSTING .TORNILLO DE AJUSTE DE AIRE	1					
10	2T4–14397–00	.O-RING .ANILLO O	1					
11	652–14397–00	.O-RING .ANILLO O	1					
12	62Y–14398–30	.GASKET .EMPAQUE	1					
13	93210–30MH4	.O-RING .ANILLO O	4					
14	93210–35M86	.O-RING .ANILLO O	4					
15	62Y–14227–00	.WASHER .EMPAQUE	1					

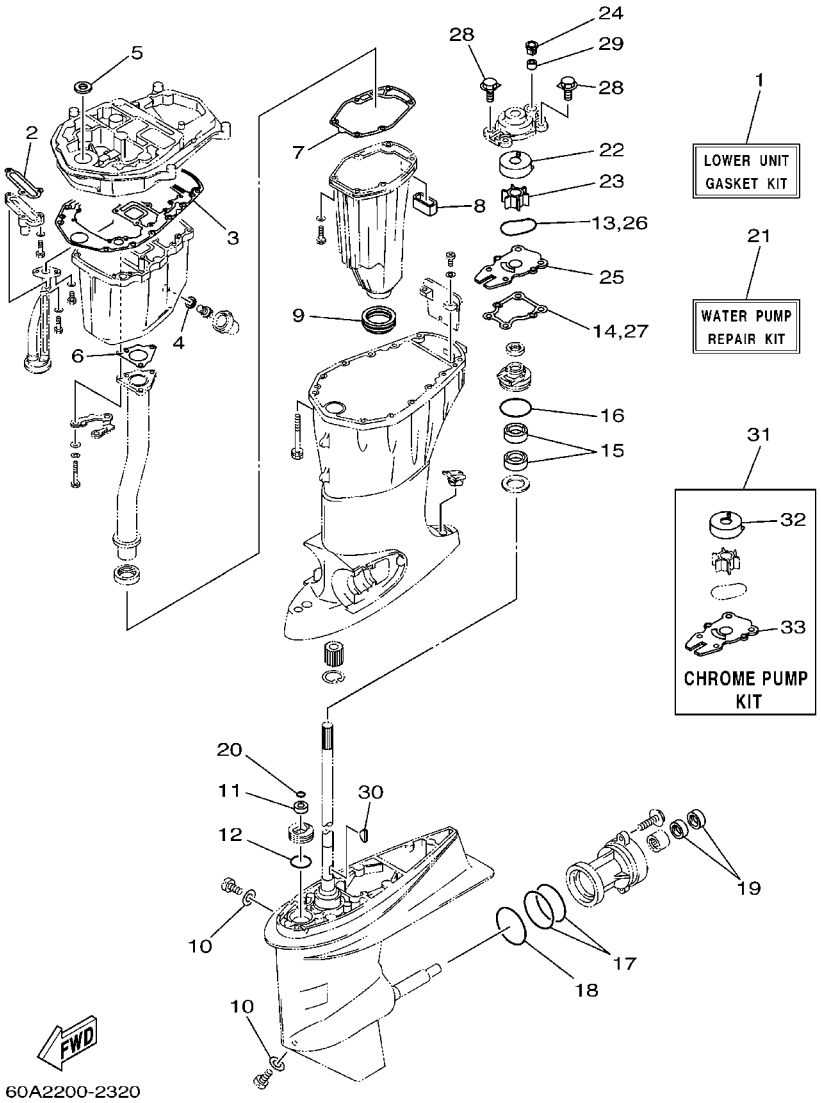

FIG. 32 REPAIR KIT 3 — ESTUCHE REPARATION 3

REF. NO.	PART NO. CODIGO Nº	DESCRIPTION DESCRIPCION	60AA					REMARKS OBSERVACIONES
1	60A–W0001–22	LOWER UNIT GASKET KIT JUEGO DE JUNTA UNIDAD INFERIOR	1					Go to P/N : PE0-OM-160018
2	62Y–13475–00	.GASKET .EMPAQUE	1					
3	69W–15312–00	.GASKET, OIL PAN .EMPAQ BANDEJA DE ACEITE	1					Go to P/N : PE0-OM-160018
4	90430–14M09	.GASKET .JUNTA	1					
5	93103–18011	.OIL SEAL .SELLO ACEITE	1					
6	64J–41133–10	.GASKET, EXHAUST MANIFOLD 1 .EMPAQUE ESCAPE MULTIPLE	1					
7	6BG–41134–00	.GASKET, EXHAUST MANIFOLD .EMPAQUE	1					
8	62Y–45127–00	.SEAL .SELLO DE GOMA	1					
9	663–45123–00	.GASKET, MUFFLER .EMPAQUE SILENCIADOR	1					
10	90430–08020	.GASKET .JUNTA	2					
11	93106–09014	.OIL SEAL .SELLO ACEITE	1					
12	93210–33MG4	.O-RING .ANILLO O	1					
13	93210–59MG7	.O-RING .ANILLO O	1					
14	63D–44316–00	.GASKET, WATER PUMP .EMPAQUE	1					
15	93101–25M57	.OIL SEAL .SELLO ACEITE	2					
16	93210–48001	.O-RING .ANILLO O	1					
17	93210–74MG5	.O-RING .ANILLO O	2					
18	93210–69MG6	.O-RING .ANILLO O	1					
19	93101–22M00	.OIL SEAL .SELLO ACEITE	2					
20	93210–07003	.O-RING .ANILLO O	1					
21	63D–W0078–01	WATER PUMP REPAIR KIT ESTUCHE REPARACION BOMBA AGUA	1					
22	63D–44322–00	.INSERT, CARTRIDGE .CARTUCHO	1					
23	6H3–44352–00	.IMPELLER .IMPULSOR	1					
24	63D–44312–00	.COVER, WATER PUMP HOUSING .CUBIERTA CAJA BOMBA DE AGUA	1					
25	63D–44323–00	.OUTER PLATE, CARTRIDGE .PLACA EXTERIOR DEL CARTUCHO	1					
26	93210–59MG7	.O-RING .ANILLO O	1					
27	63D–44316–00	.GASKET, WATER PUMP .EMPAQUE	1					

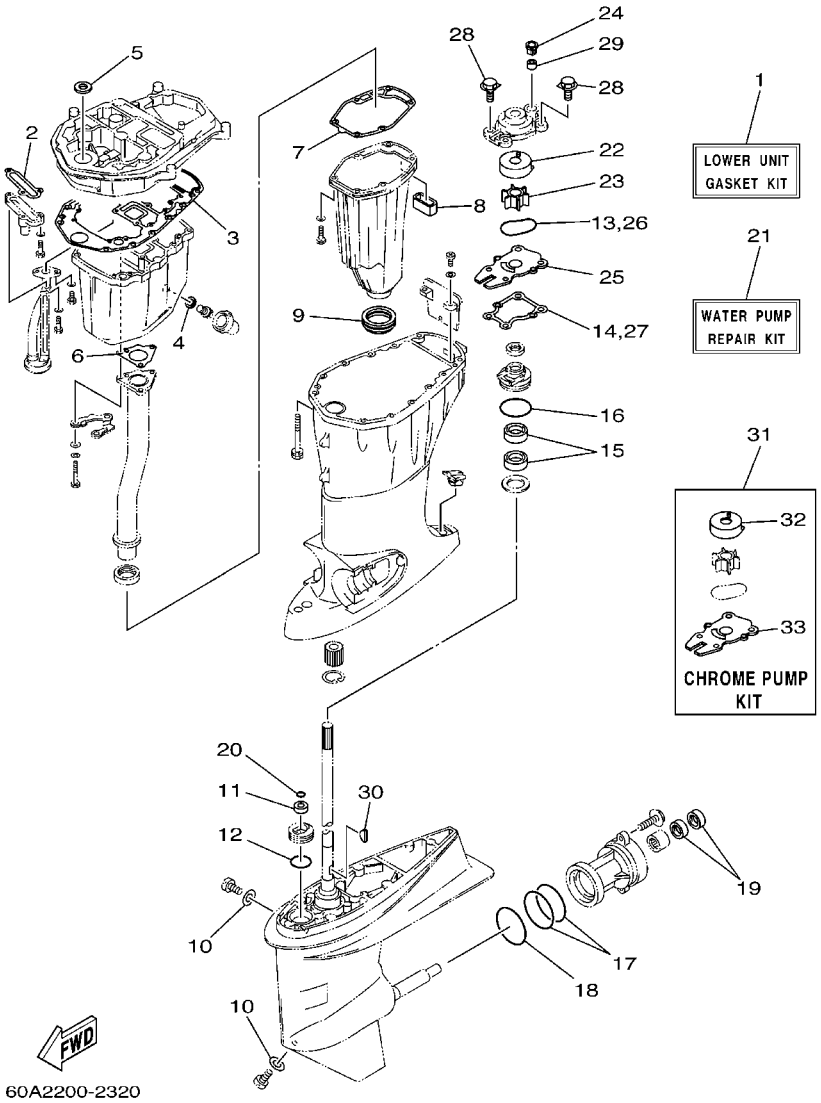

FIG. 32 REPAIR KIT 3 — ESTUCHE REPARATION 3

REF. NO.	PART NO. CODIGO Nº	DESCRIPTION DESCRIPCION	60AA					REMARKS OBSERVACIONES
28	90119–08M15	.BOLT, WITH WASHER .TORNILLO CON ARANDELA	4					
29	663–44366–00	.DAMPER, WATER SEAL .GOMA DEL SELLO DE AGUA	1					
30	90280–03024	.KEY, WOODRUFF .CUNA WOODRUFF	1					
31	63D–W0078–0A	CHROME PUMP KIT JUEGO DE BOMBA CROMO	1					
32	63D–44322–40	.INSERT, CARTRIDGE .CARTUCHO	1					
33	63D–44323–40	.OUTER PLATE, CARTRIDGE .PLACA EXTERIOR DEL CARTUCHO	1					

PARTS NEWS

YAMAHA MOTOR CO., LTD.
2500 SHINGAI IWATA SHIZUOKA JAPAN

News No.PE0-OM-160018 (1/2)

Date:2016/5/24

Signature:K. Tanaka

Cause : ☑ Revision Notice ☐ Correction ☐ Sales Unit Change ☐ Others

Model	F50D (See the"List of Models and CATALOGUE No's below.")
Subject	PARTS CATALOGUE CORRECTIONS
CATALOGUE NO.	See the"List of Models and CATALOGUE No's below."

Time of YPEC Revision Text, Illustration --> Jun./18/2015 PDF Replace --> Jun./18/2015

(YPEC = Yamaha Parts Electrical Catalogue = Website parts catalogue)

Applicable Engine Serial No.

MODEL NAME	MODEL CODE	Applicable Engine Serial No.
F50D	60A6-G	60A:1002686-

*1: Interchangeability

A	Old Parts →	Old Parts
	New Parts →	New Parts
B	Old Parts →	Old Parts
	New Parts →	New Parts
C	Old Parts →	Old Parts
	New Parts →	New Parts
	These parts are interchangeable with a set	

OIL PAN

LIST CORRECTION

Fig. No.	Ref. No.	OLD P/No.	NEW P/No.	DESCRIPTION	Q'TY	*Interchangeability	REMARKS
*1	10	69W-15312-00	61S-15312-00	GASKET, OIL PAN	1	B	*Part number revision

ILLUSTRATION CORRECTION

(OLD)

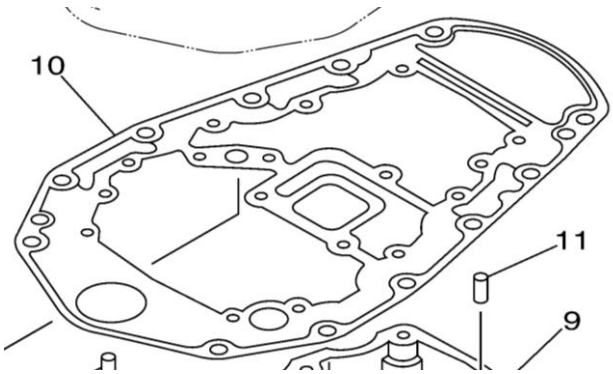

(NEW)

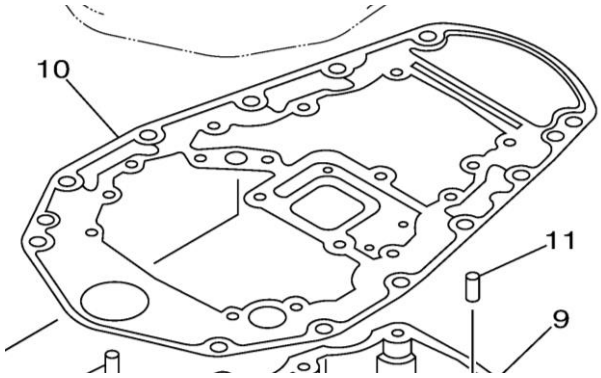

Parts Manager Check	Service Manager Check	Parts Manager File

YAMAHA MOTOR CO.,LTD
2500 Shingai Iwata Shizuoka 438-8501.Japan
Technical Publication Dept.

YAMAHA GENUINE Parts & Accessories

PARTS NEWS

YAMAHA
YAMAHA MOTOR CO., LTD.
2500 SHINGAI IWATA SHIZUOKA JAPAN

News No.PE0-OM-160018 (2/2)

Date:2016/5/24

Signature:K. Tanaka

Cause : ☑ Revision Notice ☐ Correction ☐ Sales Unit Change ☐ Others

Model	F50D (See the"List of Models and CATALOGUE No's below.")
Subject	PARTS CATALOGUE CORRECTIONS
CATALOGUE NO.	See the"List of Models and CATALOGUE No's below."

Time of YPEC Revision Text, Illustration --> Jun./18/2015 PDF Replace --> Jun./18/2015

(YPEC = Yamaha Parts Electrical Catalogue = Website parts catalogue)

REPAIR KIT 3

LIST CORRECTION

Fig. No.	Ref. No.	OLD P/No.	NEW P/No.	DESCRIPTION	Q'TY	*Interchangeability	REMARKS
*2	1	60A-W0001-2*	**60A-W0001-23**	LOWER UNIT GASKET KIT	1		***Part number revision**
	3	69W-15312-00	**61S-15312-00**	.GASKET, OIL PAN	1		

LIST of Models and CATALOGUE No's.

The applicable MODELS, MODEL CODES, and CATALOGUE No's are as follows.

MODEL NAME	MODEL CODE	MODEL YEAR	CATALOGUE NO.	Fig.No. *1	Fig.No. *2
F50DET	60A6	2006	1E60A-664E1	23	36
			1E60A-200S1	22	32
	60A7	2007	1F60A-664E1	23	36
			1F60A-200S1	22	32
	60A8	2008	1G60A-664E1	23	36
			1G60A-200S1	22	32
	60A9	2009	1H60A-664E1	23	36
			1H60A-200S1	22	32
	60AA	2010	1J60A-664E1	23	36
			1J60A-200S1	22	32
	60AB	2011	1K60A-664E1	22	35
			1K60A-200S1	21	31
	60AC	2012	1L60A-664E1	22	35
			1L60A-200S1	21	31
	60AD	Y2012	1L60A-664EA	22	35
			1L60A-200SA	21	31
	60AE	2013	1M60A-664E1	22	35
			1M60A-200S1	22	32
	60AF	2014	1N60A-664E1	22	35
			1N60A-200S1	22	32
	60AG	2015	1P60A-664E1	22	35
			1P60A-200S1	22	32

Thank you very much for your cooperation.

Parts Manager Check	Service Manager Check	Parts Manager File

YAMAHA MOTOR CO.,LTD
2500 Shingai Iwata Shizuoka 438-8501.Japan
Technical Publication Dept.

YAMAHA GENUINE Parts & Accessories

NUMERICAL INDEX
INDICE NUMERICO

PART NO. CODIGO Nº	REF. NO.
64J–11111–01–9S	4 – 2
68T–11112–00	21 – 25
62Y–11119–00	4 – 25
62Y–11133–30	4 – 3
62Y–11168–00	4 – 19
62Y–11181–00	4 – 13
	30 – 7
62Y–11191–01–9S	4 – 17
6G8–11197–01	4 – 7
62Y–11325–00	2 – 27
	21 – 26
6G8–11325–00	4 – 5
66M–11327–00–94	2 – 29
	21 – 28
66M–11328–00	2 – 28
	21 – 27
6BG–11351–00	2 – 10
	30 – 3
62Y–11356–00	4 – 22
	30 – 8
69W–11411–01	3 – 3
6C5–11416–00	3 – 4
6C5–11416–10	3 – 4
6C5–11416–20	3 – 4
6C5–11416–30	3 – 4
62Y–11536–10	8 – 13
62Y–11537–10	8 – 3
6H4–11545–00	10 – 17
62Y–11557–00	8 – 14
62Y–11575–00	22 – 1
62Y–11590–10	8 – 8
64J–11603–01	3 – 9
64J–11604–01	3 – 9
64J–11605–01	3 – 9
62Y–11631–10–96	3 – 8
62Y–11633–00	3 – 10
62Y–11635–10	3 – 8
62Y–11636–10	3 – 8
6C5–11650–00	3 – 5
6C5–11654–00	3 – 6
6C5–11656–00	3 – 7
6C5–11656–10	3 – 7
6C5–11656–20	3 – 7
6C5–11656–30	3 – 7
64J–12111–00	5 – 1
51Y–12114–00	5 – 4
62Y–12116–00	5 – 3
30X–12117–00	5 – 5

PART NO. CODIGO Nº	REF. NO.
30X–12118–00	5 – 6
51Y–12119–00	5 – 7
64J–12121–00	5 – 2
62Y–12138–60	4 – 30
62Y–12146–00	5 – 8
62Y–12151–00	5 – 9
62Y–12158–00	5 – 11
64J–12159–00	5 – 10
62Y–12171–00	8 – 2
62Y–12216–00	5 – 14
62Y–12231–00	5 – 15
64J–12238–00	5 – 12
64J–12279–00	5 – 13
6G8–12411–03	2 – 11
688–12412–00	2 – 12
6H3–12413–00–9S	2 – 13
62Y–12414–00	2 – 14
	30 – 4
62Y–12481–10	2 – 24
66M–12535–00	2 – 30
	21 – 29
6C5–12858–00	2 – 22
62Y–13131–01	9 – 22
69W–13300–00	8 – 17
62Y–13411–00	22 – 5
67F–13434–10	1 – 17
62Y–13437–62	10 – 20
5GH–13440–20	2 – 21
62Y–13448–00	6 – 43
62Y–13475–00	22 – 2
	32 – 2
62Y–13586–30	6 – 3
62Y–14157–30	7 – 14
62Y–14212–00	7 – 26
62Y–14227–00	7 – 34
	31 – 15
62Y–14243–00	7 – 32
62Y–14271–00	6 – 34
62Y–14291–30	6 – 25
62Y–14321–00	7 – 13
	31 – 6
62Y–14321–10	7 – 22
62Y–14323–30	7 – 20
	31 – 9
650–14327–01	6 – 2
62Y–1432A–01	7 – 36
62Y–14334–00	7 – 21
62Y–14341–30	7 – 16

PART NO. CODIGO Nº	REF. NO.
64J–14342–20	7 – 18
62Y–14343–57	7 – 17
62Y–14343–58	7 – 17
62Y–14343–62	7 – 17
62Y–14343–63	7 – 17
64J–14349–11	6 – 18
64J–14349–21	6 – 19
64J–14349–31	6 – 20
64J–14349–40	6 – 29
64J–14349–50	6 – 30
62Y–14355–30	7 – 19
	31 – 8
62Y–14369–30	6 – 1
62Y–14380–10	7 – 31
62Y–14380–20	7 – 31
62Y–14381–30	7 – 5
62Y–14381–40	7 – 6
62Y–14381–50	7 – 7
62Y–14381–61	7 – 8
62Y–14383–30	7 – 24
62Y–14384–30	7 – 9
	31 – 2
6L2–14385–00	7 – 10
	31 – 3
6E5–14386–01	7 – 11
	31 – 4
62Y–14392–00	7 – 12
	31 – 5
2T4–14397–00	7 – 23
	31 – 10
652–14397–00	7 – 25
	31 – 11
62Y–14398–30	7 – 29
	31 – 12
62Y–14399–30	7 – 15
	31 – 7
62Y–14440–00	6 – 4
62Y–14485–00	4 – 18
62Y–14567–30	7 – 30
62Y–14567–40	7 – 30
64J–14585–00	6 – 15
64J–14711–00–CA	21 – 9
62Y–14901–41	7 – 1
62Y–14902–41	7 – 2
62Y–14903–41	7 – 3
62Y–14904–42	7 – 4
64J–15100–00–9S	2 – 2
64J–15311–01–CA	22 – 9

PART NO. CODIGO Nº	REF. NO.
69W–15312–00	22 – 10
	32 – 3
62Y–15316–00	22 – 12
62Y–1531A–00	6 – 45
62Y–1532B–00	6 – 26
62Y–15362–00	22 – 17
6G8–15363–00	4 – 28
62Y–15373–10	6 – 46
1UF–22434–00	19 – 21
62Y–22434–00	19 – 54
62Y–22471–00	19 – 15
62Y–24135–00	6 – 33
6YJ–24167–00	25 – 7
6YJ–24201–10	25 – 1
6Y1–24260–12	25 – 3
6Y1–24268–00	25 – 6
6G1–24304–02	9 – 1
6YL–24306–60	25 – 8
62Y–24311–30	7 – 28
62Y–24312–00	6 – 7
62Y–24313–30	6 – 8
62Y–24313–40	6 – 9
62Y–24313–50	6 – 10
62Y–24313–61	6 – 11
62Y–24313–70	6 – 12
69W–24313–80	6 – 14
62Y–24313–90	7 – 35
62Y–24314–00	6 – 31
61N–24329–00	15 – 29
6Y1–24329–00	25 – 5
62Y–24374–01	9 – 27
62Y–24378–00	6 – 23
	6 – 32
688–24378–00	2 – 18
62Y–24410–04	9 – 18
62Y–24411–02	9 – 20
62Y–24415–01	9 – 19
62Y–24423–00	9 – 21
62Y–24444–01	9 – 24
62Y–24454–00	9 – 23
68V–24469–01	9 – 10
6C5–24471–00	9 – 25
65W–24474–00	9 – 29
68V–24521–01	9 – 8
64J–24560–00	9 – 6
61N–24563–00	9 – 7
62Y–24566–00	9 – 11
6YJ–24610–01	25 – 2

PART NO. CODIGO Nº	REF. NO.
6G8–26363–00	16 – 33
62Y–28100–00	9 – 33
62Y–41113–30–9S	2 – 23
6C5–41114–00	2 – 25
	30 – 5
64J–41116–00	21 – 5
64J–41131–10	21 – 3
64J–41133–10	21 – 4
	32 – 6
6BG–41134–00	21 – 12
	32 – 7
64J–41137–03–CA	21 – 1
6F5–41237–00	16 – 20
662–41237–01	16 – 22
62Y–41241–00	16 – 21
62Y–41262–30	6 – 13
62Y–42154–00	16 – 24
62Y–42159–01	16 – 36
62Y–42171–00	16 – 25
62Y–42335–20	16 – 30
63D–42510–12–8D	18 – 1
62Y–42610–30–8D	1 – 1
62Y–42613–01–8D	1 – 2
62Y–42615–10	1 – 15
61N–42628–00	1 – 16
62Y–42651–00	1 – 8
62Y–42652–00	1 – 4
62Y–42677–30	1 – 10
62Y–42678–30	1 – 11
62Y–42681–10	1 – 13
62Y–42682–10	1 – 14
62Y–42711–14–8D	15 – 1
62Y–42715–01	16 – 8
62Y–42716–00	15 – 7
65W–42717–00	15 – 2
6E5–42724–00	15 – 8
62Y–42725–30	15 – 17
688–42726–10	15 – 32
62Y–42727–00	15 – 18
6H3–42727–00	15 – 30
62Y–42738–01–8D	15 – 16
62Y–42741–00–8D	15 – 21
62Y–42748–00	15 – 37
6BG–42748–00	15 – 4
69M–42758–00	13 – 3
6AH–42794–40	15 – 39
6AH–42794–50	15 – 40
62Y–42815–00	15 – 10

PART NO. CODIGO Nº	REF. NO.
62Y–42828–00–8D	15 – 9
62Y–43111–00–8D	17 – 1
62Y–43112–00–8D	17 – 2
6E5–43126–02	17 – 32
63D–43131–01	17 – 11
6G5–43144–00	17 – 25
6E5–43145–01	26 – 9
6G5–43145–01	17 – 15
6G5–43148–00	17 – 21
688–43160–01	17 – 26
688–43165–00	17 – 27
6H5–43181–03	17 – 16
6H5–43185–03	17 – 17
63D–43311–13–8D	17 – 9
62Y–43800–01–8D	19 – 1
62X–43804–01	20 – 4
62Y–43805–00	20 – 3
62X–43807–00	20 – 8
69W–4380F–00	20 – 9
62X–4380H–00	20 – 14
62Y–4380K–01	19 – 2
62X–43810–01	19 – 3
62Y–43816–00	19 – 45
6H1–43816–00	19 – 58
62Y–43818–00	17 – 36
69W–4381B–00	19 – 17
62X–43821–00	19 – 5
62Y–43822–00	19 – 4
6H1–43829–00	19 – 65
62Y–4382A–00	19 – 43
62Y–4382L–00	19 – 46
62Y–43830–01	19 – 25
6H1–43831–10	19 – 23
69J–43841–00	19 – 26
6H1–43844–10	19 – 39
62Y–43845–00	19 – 63
69A–4384F–00	19 – 28
6H1–4384F–10	19 – 37
69W–4384G–00	19 – 50
6H1–4384G–11	19 – 35
62X–4384H–00	19 – 20
69J–4384M–00	19 – 27
69J–43853–00	19 – 33
62Y–43854–00	19 – 51
62Y–43855–00	19 – 36
6H1–43856–10	19 – 38
62X–43861–00	19 – 6
62X–43862–00	19 – 9

NUMERICAL INDEX
INDICE NUMERICO

PART NO. CODIGO Nº	REF. NO.
6C5–43863–00	19 – 8
62X–43865–00	19 – 66
65W–4386A–00	19 – 32
62X–4386K–00	20 – 10
62X–43871–00	19 – 11
62Y–43871–00	19 – 55
62X–43872–00	19 – 7
62X–43875–00	19 – 22
67F–43875–00	19 – 16
6H1–43875–00	19 – 62
62Y–4387G–00	19 – 56
62Y–4387J–00	19 – 53
62Y–43880–01	20 – 2
62Y–43881–00	20 – 13
6H1–43883–00	19 – 29
62X–43888–00	20 – 1
62X–4388A–00	19 – 14
62Y–43891–00	20 – 6
62Y–43892–00	20 – 5
69J–43893–00	19 – 57
69J–43894–00	19 – 52
62X–43899–00	19 – 18
69W–43899–01	19 – 67
69J–4389J–00	19 – 34
	19 – 59
62Y–44112–00	16 – 10
62Y–44116–01	16 – 31
62Y–44117–01–94	16 – 2
62Y–44118–00–94	16 – 9
62Y–44120–01	16 – 7
69W–44121–00	16 – 1
688–44122–00	16 – 18
62Y–44135–00	16 – 27
63D–44144–00	23 – 51
62Y–44151–00	23 – 50
63D–44311–00	23 – 21
63D–44312–00	24 – 17
	32 – 24
63D–44316–00	23 – 27
	32 – 14
	32 – 27
63D–44322–00	32 – 22
63D–44322–40	23 – 22
	32 – 32
63D–44323–00	32 – 25
63D–44323–40	23 – 26
	32 – 33
6BG–44341–00	23 – 30

PART NO. CODIGO Nº	REF. NO.
6H3–44352–00	23 – 23
	32 – 23
62Y–44361–00	24 – 1
663–44366–00	24 – 16
	32 – 29
663–44367–00	24 – 2
6BL–44391–00	15 – 3
67C–44514–00–94	18 – 26
66T–44526–30	18 – 28
663–44551–02–8D	18 – 9
663–44552–01–94	18 – 18
62Y–44553–01–8D	18 – 23
62Y–44555–00–94	18 – 11
663–44575–00	18 – 16
62Y–45111–21–8D	21 – 16
663–45123–00	21 – 14
	32 – 9
62Y–45127–00	21 – 13
	32 – 8
62Y–45151–00	21 – 19
6C5–45155–00	21 – 22
63D–45214–00	23 – 10
63D–45215–00	23 – 11
65W–45251–00	17 – 5
	17 – 7
	17 – 30
67C–45251–00	24 – 13
62Y–45300–31–8D	23 – 1
62Y–45301–00–8D	23 – 2
69W–45318–00	21 – 23
63D–45321–00	23 – 14
688–45341–10	23 – 9
63D–45344–00	23 – 33
63D–45361–02–8D	23 – 42
67C–45371–00	24 – 10
63D–45375–00	24 – 6
663–45376–00–94	24 – 5
6E5–45378–00	23 – 17
62Y–45501–30	23 – 35
6H4–45536–00	23 – 4
6H4–45551–01	23 – 36
6H4–45560–01	23 – 38
663–45567–01	23 – 40
663–45567–10	23 – 40
663–45567–20	23 – 40
663–45567–30	23 – 40
663–45567–40	23 – 40
663–45567–50	23 – 40

PART NO. CODIGO Nº	REF. NO.
663–45567–60	23 – 40
62Y–45571–00	23 – 41
63D–45577–00	23 – 45
63D–45577–10	23 – 45
63D–45577–20	23 – 45
63D–45577–30	23 – 45
63D–45577–40	23 – 45
63D–45577–50	23 – 45
63D–45577–60	23 – 45
663–45587–01	23 – 5
663–45587–10	23 – 5
663–45587–20	23 – 5
663–45587–30	23 – 5
663–45587–40	23 – 5
663–45587–50	23 – 5
663–45587–60	23 – 5
63D–45611–00	23 – 54
62Y–45631–00	23 – 56
67C–45633–00	23 – 61
663–45634–00	23 – 57
63D–45635–00	23 – 59
663–45930–00–98	24 – 23
663–45941–01–EL	24 – 23
69W–45943–00–EL	24 – 23
6H5–45943–00–EL	24 – 23
69W–45945–00–EL	24 – 23
6H5–45945–00–EL	24 – 23
69W–45947–00–EL	24 – 23
663–45949–01–EL	24 – 23
69W–45952–00–EL	24 – 23
6H5–45952–00–EL	24 – 23
663–45952–02–EL	24 – 23
663–45956–01–EL	24 – 23
6H5–45958–00–EL	24 – 23
663–45958–01–EL	24 – 23
697–45970–00–98	24 – 23
663–45970–60–98	24 – 23
663–45972–60–98	24 – 23
663–45974–02–98	24 – 23
663–45974–60–98	24 – 23
663–45976–00–98	24 – 23
663–45978–00–98	24 – 23
663–45987–02	24 – 18
66T–45997–00	24 – 19
64J–46132–10	21 – 34
62Y–46241–00	8 – 7
703–48152–00	28 – 57
703–48153–00	28 – 3

PART NO. CODIGO Nº	REF. NO.
703–48189–00	28 – 17
703–48198–00	28 – 14
703–48205–A5	27 – 1
	28 – 1
703–48211–01	28 – 61
703–48212–00	28 – 58
703–48213–00	28 – 59
703–48215–00	28 – 43
703–48218–00	28 – 64
703–48219–00	28 – 30
703–48221–00	28 – 56
703–48222–00	28 – 27
703–48223–00	28 – 28
703–48225–00	28 – 29
703–48226–00	28 – 26
703–48227–00	28 – 24
703–48232–00	28 – 62
703–48234–00	28 – 18
703–48235–00	28 – 4
703–48236–00	28 – 16
703–48238–00	28 – 22
703–48243–00	28 – 15
703–48244–00	28 – 21
703–48245–00	28 – 11
703–48246–00	28 – 23
701–48248–00	28 – 13
703–48252–00	28 – 12
703–48261–01	28 – 2
703–48264–00	28 – 6
703–48265–00	28 – 9
703–48268–00	28 – 5
703–48271–00	28 – 60
703–48281–00	28 – 31
703–48282–00	28 – 32
703–48284–00	28 – 52
701–48287–00	28 – 42
703–48291–10	28 – 39
703–48293–10	28 – 41
701–48320–50	27 – 2
703–48345–01	28 – 19
703–48358–00	28 – 20
63D–48511–10	18 – 41
62Y–48538–00	16 – 35
63D–61350–00	26 – 1
63D–61351–00	26 – 2
64J–77123–00	21 – 15
62Y–81337–11	10 – 13
6K7–81338–01	10 – 14

PART NO. CODIGO Nº	REF. NO.
69W–81800–00	14 – 1
6N7–81801–00	14 – 8
69W–81807–00	14 – 11
61A–81809–00	14 – 3
6N7–81810–00	14 – 5
6N7–81813–00	14 – 9
6N7–81820–00	14 – 10
62Y–81822–01–94	11 – 9
61A–81824–00	14 – 4
6K7–81826–11	14 – 14
6E5–8182A–10	14 – 17
6E5–8182E–10	14 – 15
6E5–8182F–10	14 – 16
6K7–8182G–10	14 – 6
6E5–8182K–10	14 – 18
6N7–81830–00	14 – 13
6N7–81840–00	14 – 7
6N7–81850–10	14 – 2
6N7–81857–00	14 – 12
6G1–81941–10	12 – 5
6L2–81945–00	12 – 7
62Y–81948–00	12 – 33
61A–81949–00	12 – 29
6H2–81949–01	12 – 28
6H1–81950–00	12 – 24
6G1–81952–00	12 – 6
64J–81960–10	12 – 10
6AH–81994–40	10 – 23
6AH–81994–50	10 – 24
6AH–81995–40	10 – 21
6AH–81995–50	10 – 22
6AG–81996–00	10 – 25
62Y–82105–00	12 – 16
6Y5–82117–00	29 – 16
6E5–82117–01	12 – 17
682–82119–01	12 – 30
697–82127–01	18 – 25
63D–82148–00	17 – 3
1E6–82151–00	29 – 15
663–82151–00	12 – 20
6G5–82152–00	12 – 18
62Y–82181–01	20 – 7
6A0–82317–00	12 – 34
663–82317–01	10 – 15
6G8–82370–30	11 – 8
62Y–82377–00	15 – 38
64J–82504–00	11 – 12
62Y–82509–00	6 – 27

PART NO. CODIGO Nº	REF. NO.
703–82510–12	28 – 44
703–82531–00	28 – 46
703–82540–00	28 – 50
703–82542–00	28 – 63
62Y–82544–00	6 – 28
64J–82553–00	13 – 5
682–82556–00	28 – 48
62Y–82560–01	11 – 13
703–82563–02	28 – 55
63D–82563–10	12 – 38
688–82575–01	28 – 47
676–82577–00	28 – 45
6E5–82587–00	12 – 39
6E9–82588–00	11 – 14
688–8258A–20	28 – 49
64J–82590–50	12 – 19
703–82591–00	28 – 53
703–82592–00	28 – 54
688–82594–00	12 – 21
703–82594–00	28 – 25
703–83383–B0	28 – 51
6Y5–83504–22	13 – 1
6Y5–83514–00	29 – 5
6Y5–83517–00	29 – 2
6Y5–83518–00	29 – 6
	29 – 10
64J–83519–00	13 – 4
6Y5–83523–00	29 – 4
6Y5–83536–00	29 – 11
6Y5–83536–40	29 – 3
6Y7–83540–80	29 – 1
6Y5–83544–00	29 – 12
6Y5–83553–00	29 – 14
6K3–83557–00	13 – 9
6E5–83558–00	18 – 35
6E5–83558–10	23 – 19
62Y–83614–00	12 – 40
62Y–83626–00	11 – 22
6Y5–83653–20	29 – 17
688–83664–00	29 – 13
6Y7–83670–40	29 – 9
63D–83672–11	18 – 36
64J–85510–00	10 – 2
64J–85516–00	13 – 2
64J–85540–11	12 – 1
69W–85550–10	10 – 1
62Y–85561–00–94	10 – 3
62Y–85570–00	11 – 1

NUMERICAL INDEX
INDICE NUMERICO

PART NO. CODIGO Nº	REF. NO.
62Y–85580–00	10 – 5
62Y–85599–00	11 – 17
60A–W0001–00	30 – 1
60A–W0001–22	32 – 1
62Y–W0070–10	1 – 12
63D–W0078–01	32 – 21
63D–W0078–0A	32 – 31
62Y–W0093–11	31 – 1
64J–W009A–03–9S	4 – 1
60A–W009B–01–9S	2 – 1
90101–06020	17 – 6
	17 – 8
	17 – 31
90101–06054	16 – 11
90101–08017	17 – 37
90101–08M15	18 – 27
90101–09M01	26 – 7
90101–12M65	17 – 41
90105–08148	23 – 43
90109–06M30	16 – 32
90109–06M64	8 – 12
90109–06M65	4 – 11
90109–06M80	15 – 26
90109–08M63	5 – 16
90109–12261	18 – 15
90116–08M14	11 – 19
90116–10037	18 – 7
90119–06025	8 – 21
90119–06M61	15 – 6
90119–06MA3	4 – 16
90119–06MA5	2 – 26
90119–08102	21 – 17
90119–08132	21 – 18
90119–08M01	2 – 4
90119–08M15	23 – 29
	32 – 28
90119–08M76	14 – 21
90119–08M77	14 – 22
90119–08M84	24 – 9
90119–09M00	4 – 15
90119–10030	24 – 8
90142–05M06	23 – 12
90157–05M19	25 – 4
90159–05M13	13 – 8
90159–06M08	11 – 18
90170–09M03	26 – 5
90170–12138	23 – 37
90170–20137	10 – 18

PART NO. CODIGO Nº	REF. NO.
90170–35008	8 – 15
90171–16011	24 – 21
90179–06066	18 – 22
90179–06M24	1 – 3
90185–08045	18 – 29
90185–09M01	26 – 4
90185–10051	18 – 8
90185–22M11	17 – 14
90201–06015	21 – 8
90201–06M05	12 – 13
90201–08062	17 – 38
90201–083J8	20 – 16
90201–10120	18 – 42
90201–10M06	8 – 5
90201–10M20	16 – 15
	26 – 3
90201–10M63	26 – 8
90201–12426	17 – 43
90201–12M16	12 – 36
	18 – 12
90201–13M19	18 – 14
90201–21M18	10 – 19
90201–22016	17 – 13
90201–22429	23 – 55
90201–27M00	23 – 34
90201–30M00	18 – 2
90202–07M07	16 – 19
90202–12060	24 – 3
90202–21100	18 – 13
90240–05M19	15 – 13
90249–05M30	15 – 11
90249–06M19	17 – 22
90249–07M29	8 – 10
90250–06023	23 – 60
90266–06M02	1 – 9
90280–03024	23 – 25
	32 – 30
90280–04M06	8 – 16
	30 – 17
90338–04M17	6 – 35
90338–05M03	15 – 31
90340–08002	23 – 7
90340–14M06	2 – 8
	22 – 13
90344–51003	2 – 7
90386–05002	15 – 14
90386–10025	17 – 19
90386–10M16	17 – 18

PART NO. CODIGO Nº	REF. NO.
90386–18M35	17 – 34
90386–18M92	17 – 33
90386–22M15	17 – 12
90386–30M60	18 – 6
90386–30M77	18 – 4
90386–30M78	18 – 3
90386–90M90	16 – 14
90387–06060	15 – 5
90387–06119	12 – 35
90387–06M15	6 – 37
90387–06M43	15 – 28
90387–06M45	16 – 28
90387–06M70	6 – 6
90387–10M42	26 – 6
90387–18002	17 – 39
90387–18003	17 – 40
90389–22M01	24 – 20
90430–06014	4 – 10
	4 – 12
	30 – 6
90430–08020	23 – 8
	32 – 10
90430–12072	24 – 4
90430–14115	2 – 9
	30 – 2
90430–14M09	22 – 14
	32 – 4
90445–07M31	23 – 18
90445–07MF1	18 – 34
90445–09068	2 – 17
90445–09095	2 – 19
90445–09104	2 – 15
90445–10020	9 – 4
90445–10M48	9 – 15
90446–17M91	18 – 40
90464–07M41	11 – 3
90464–09M43	15 – 36
90464–15M11	12 – 31
90465–06M86	18 – 32
90465–06M90	11 – 2
90465–11M10	2 – 20
	6 – 21
	6 – 44
	18 – 33
	18 – 39
	23 – 20
90465–13M11	12 – 23
	12 – 27

PART NO. CODIGO Nº	REF. NO.
90465–13M18	18 – 38
90465–13M24	12 – 22
	12 – 32
	13 – 10
90465–13M36	6 – 22
90465–13M97	10 – 9
90467–08M18	2 – 16
90467–09M17	9 – 5
	9 – 16
90467–10M04	9 – 17
	9 – 32
90468–18008	16 – 17
	16 – 34
90480–12072	10 – 16
90480–13M24	15 – 27
90480–25161	11 – 4
90501–12082	16 – 12
90501–14M08	18 – 21
90501–18001	23 – 58
90502–16M02	17 – 29
90506–14M24	17 – 23
90508–20018	8 – 9
91318–05008	19 – 48
91318–05020	19 – 47
91318–06040	19 – 60
91490–16010	15 – 12
	15 – 15
	16 – 26
91490–20015	16 – 16
91490–30025	24 – 22
91690–30012	17 – 28
91690–30020	17 – 20
92903–06600	2 – 6
	21 – 33
	22 – 4
	22 – 7
92907–04600	4 – 21
92990–05100	10 – 7
	29 – 8
92990–05600	10 – 8
	21 – 21
92990–06100	15 – 24
	15 – 34
92990–06600	10 – 11
	15 – 25
	15 – 35
92990–08100	11 – 21
92990–08600	28 – 34

PART NO. CODIGO Nº	REF. NO.
92995–05600	1 – 6
	2 – 32
	21 – 31
92995–06100	11 – 6
	12 – 3
92995–06600	2 – 34
	4 – 24
	4 – 27
	6 – 39
	6 – 41
	6 – 48
	9 – 3
	9 – 31
	11 – 7
	11 – 16
	12 – 4
	12 – 9
	12 – 12
	12 – 15
	12 – 26
	13 – 7
	15 – 20
	16 – 4
	16 – 6
	21 – 7
	21 – 11
	22 – 16
92995–08100	18 – 20
	18 – 31
	24 – 12
	24 – 15
92995–08600	9 – 13
	11 – 11
	14 – 20
92995–12200	17 – 42
92A08–03110	19 – 41
93101–22M00	23 – 49
	32 – 19
93101–25M57	23 – 31
	32 – 15
93101–35002	3 – 2
	30 – 11
93102–08414	20 – 15
93102–37M40	8 – 1
	30 – 16
93102–43M42	3 – 1
	30 – 10
93103–18011	21 – 2

PART NO. CODIGO Nº	REF. NO.
93103–18011	32 – 5
93106–09014	23 – 15
	32 – 11
93210–07003	23 – 52
	32 – 20
93210–09165	19 – 64
93210–12MG9	8 – 19
	30 – 19
93210–13M63	4 – 8
93210–14515	8 – 20
	30 – 20
93210–16275	26 – 10
93210–18397	19 – 61
93210–24M79	4 – 29
	9 – 28
	30 – 9
	30 – 21
93210–29375	19 – 10
	19 – 24
93210–29M94	18 – 5
93210–30MH4	6 – 16
	30 – 14
	31 – 13
93210–32738	9 – 9
93210–33MG4	23 – 16
	32 – 12
93210–33MH2	8 – 18
	30 – 18
93210–35M86	6 – 17
	6 – 36
	30 – 12
	30 – 15
	31 – 14
93210–38MH3	6 – 24
	30 – 13
93210–44383	19 – 12
93210–48001	23 – 32
	32 – 16
93210–48214	19 – 13
93210–52449	20 – 17
93210–59MG7	23 – 24
	32 – 13
	32 – 26
93210–69MG6	23 – 47
	32 – 18
93210–74MG5	23 – 46
	32 – 17
93306–001U1	23 – 44

NUMERICAL INDEX
INDICE NUMERICO

PART NO. CODIGO Nº	REF. NO.
93315–32224	23 – 3
93317–22204	23 – 48
93332–00001	23 – 6
93332–00003	23 – 39
93410–18M02	17 – 35
93410–28M06	18 – 10
93420–36M01	21 – 24
93430–06024	28 – 10
93450–09M01	4 – 4
93450–17129	3 – 11
93501–04M02	16 – 13
93501–08001	19 – 49
93503–16003	19 – 19
93505–32038	19 – 31
	19 – 40
93604–08062	23 – 28
93604–26256	19 – 44
93605–14143	8 – 4
93606–12019	2 – 3
	22 – 11
	24 – 7
93608–12M05	22 – 8
93608–16M16	6 – 42
93700–06M03	17 – 10
94701–00375	4 – 31
95023–06025	10 – 4
95302–03600	19 – 42
95380–05600	9 – 26
	23 – 13
	28 – 7
	29 – 7
95380–05700	16 – 23
95380–06600	15 – 22
	28 – 40
95380–08600	9 – 14
	11 – 20
95380–12600	17 – 44
95380–12800	18 – 17
95780–05300	1 – 7
95895–06025	12 – 37
95895–06035	16 – 29
95895–08020	8 – 11
95895–10040	8 – 6
97013–06016	22 – 6
97013–06020	21 – 32
97013–06025	22 – 3
97013–06035	2 – 5
97075–06025	21 – 10

PART NO. CODIGO Nº	REF. NO.
97075–06025	22 – 15
97075–06050	21 – 6
97075–08025	18 – 19
97075–08030	18 – 30
97095–05012	2 – 31
	21 – 30
97095–05016	1 – 5
97095–06010	4 – 9
	17 – 24
97095–06012	11 – 15
	12 – 14
	12 – 41
	13 – 6
97095–06014	12 – 8
97095–06016	6 – 47
97095–06020	2 – 33
	4 – 23
	4 – 26
	12 – 2
	12 – 25
	15 – 19
	16 – 3
97095–06025	6 – 40
	9 – 2
	16 – 5
97095–06030	6 – 38
	9 – 30
	11 – 5
97095–06040	12 – 11
97095–08014	9 – 12
97095–08016	14 – 19
97095–08025	24 – 11
97095–08035	11 – 10
	24 – 14
97380–05025	28 – 8
97380–08030	28 – 33
97595–06590	6 – 5
97602–04216	20 – 12
97880–05012	10 – 6
97880–05016	21 – 20
97880–05020	20 – 11
97880–05025	4 – 6
97880–06025	10 – 10
	15 – 23
	15 – 33
97885–06008	17 – 4
97885–06016	18 – 24
	18 – 37

PART NO. CODIGO Nº	REF. NO.
97890–04007	7 – 33
98507–04010	4 – 20
98580–03015	28 – 38
98580–04006	28 – 36
98580–04010	28 – 35
98580–05010	28 – 37
98980–04006	7 – 27
99001–08600	23 – 53
99002–03600	19 – 30
99530–08012	4 – 14
	10 – 12