YAMAHA

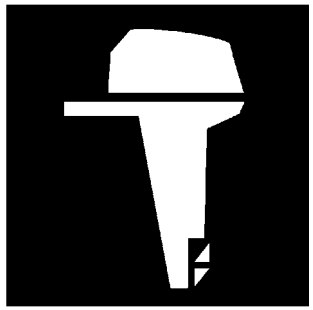

PARTS CATALOGUE
CATALOGUE DE PIECES DETACHEES

F250BET'11 (6BR3)
FL250BET'11 (6BS3)

1K6BR-300F1

( )

YAMAHA GENUINE Parts & Accessories

2015/7/24

NEWS NO.	DATE	COMMENT
PE0-OM-110016	Apr.,28,2011	MOD:FIG.2,3 LIST/ILLUSTRATION REVISION
PE0-OM-110021	May,16,2011	MOD:FIG.24 LIST/ILLUSTRATION REVISION
PE0-OM-130021	May,13,2013	MOD:FIG.2,3 LIST/ILLUSTRATION REVISION
PE0-OM-130037	Jul.,16,2013	COR:FIG.17 ELECTRICAL 1 ILLUSTRATION CORRECTION
PE0-OM-150021	Jul.,22,2015	MOD:F250B 14,21 LIST/ILLUSTRATION REVISION

F250BET/FL250BET
PARTS CATALOGUE
©2010 by Yamaha Motor Co., Ltd.
1st edition, June 2010
All rights reserved.
Any reprinting or unauthorized use
without the written permission of
Yamaha Motor Co., Ltd.
is expressly prohibited.
Printed in Japan.

F250BET/FL250BET
CATALOGUE DE PIECES DETACHEES
©2010 par Yamaha Motor Co., Ltd.
1re édition, juin 2010
Tous droits réservés
Toute réimpression ou utilisation
non autorisée sans la permission écrite
de la Yamaha Motor Co., Ltd.
est formellement interdite.
Imprimé au Japon

FOREWORD

This Parts Catalogue is related to the parts for the model(s) on the cover page. When you are ordering replacement parts, please refer to this Parts Catalogue and quote both part numbers and part names correctly.

1. Modifications or additions which have been made after the issue of the Parts Catalogue will be announced in the Parts News.
   It is advisable that you make the necessary corrections to the Parts Catalogue according to the Parts News.

2. Abbreviations
   The following abbreviations are used in this Parts Catalogue.

   "UR" Use specified parts number.
   "UN" Use as many as needed.
   "AP" Alternate Parts
   "LM" Locally Made (Parts need to be ordered locally)
   "F#" Frame No. (Applicable machine No.)
   "O/S" Over Size

3. The number of components for assembly
   - Parts, which are to be supplied in an assembly, are listed with a dot (.) in front of the part name as shown below.
   - The numeral appearing to the right of each component part indicates the quantity of parts for each assembly unit.

PART NO.	DESCRIPTION	Q'TY	REMARKS
2F5–83310–60	FRONT FLASHER LIGHT ASSY	2	
115–83311–60	.BULB (6V–18W)	1	

4. Applicable colours of graphics are represented in the "REMARKS" as shown below.

PART NO.	DESCRIPTION	Q'TY	REMARKS
2N4–24110–00–X5	FUEL TANK COMP.	2	MXR
3J1–24240–10	.GRAPHIC, FUEL TANK	1	FOR MXR

5. Note that the illustrations for reference in finding parts numbers are not to be used for assembling. When assembling, please use the applicable service manual.

6. The asterisk (*) before a reference number indicates modified items after the first edition.

7. Applicable Serial No.

   Engine Serial No.

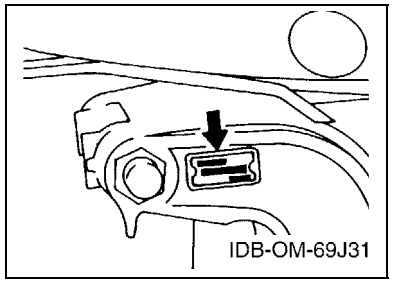

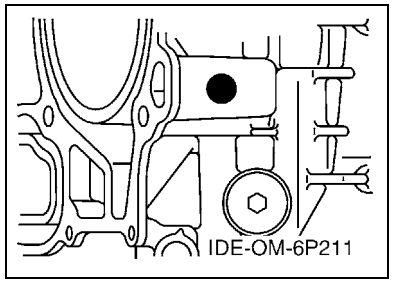

8. Applicable Engine Starting Serial No.

Model	Serial No.	Model	Serial No.
F250B	6P2-1034178	FL250B	6P3-1014090

9. Applicable Colour Code

Abbreviation	Colour Name	Colour Code
DBN1	DARK BLUISH GRAY 1	008D

10. Quantity Column Information

Column No.	Name Of Q'ty Column	Applicable Model
1	6BR3	F250BET
2	6BS3	FL250BET

AVANT–PROPOS

Ce catalogue de pièces détachées concerne les pièces pour le(s) modèle(s) indiqué(s) sur la page de couverture. Lorsque vous commandez des pièces de rechange, veuillez vous référer à ce catalogue de pieces détachées et indiquer clairement les numéros et les noms des pièces détachées.

1. Les modifications ou ajouts ayant été effectués après la parution du catalogue de pièces détachées seront décrits dans les Bulletins d'information concernant les pièces détachées.
   Il est recommandé que vous apportiez les corrections nécessaires au catalogue des pièces détachées en vous référant aux Bulletins d'information.

2. Abréviations
   Dans ce catalogue, les abréviations suivantes sont utilisées:

   "UR" Utiliser le numéro de pièces spécifié.
   "UN" Utiliser autant que nécessaire.
   "AP" Pièces de substitution
   "LM" Fabrication locale (les pièces doivent être commandées localement.)
   "F#" N° de cadre (applicable au N° de série)
   "O/S" Surdimensionné

3. Nombre de pièces d'un assemblage
   - Les pièces fournies comme composants d'un assemblage sont précédées d'un point (.) de la manière indiquée ci–dessous.
   - Le chiffre apparaissant à la droite de chaque composant indique la quantité de pièces pour chaque unité d'assemblage.

N° PIECES	DESCRIPTION	QTE	REMARQUES
2F5–83310–60	ENS. CLIGNOTANT AVANT	2	
115–83311–60	.AMPOULE (6V–18W)	1	

4. Les couleurs concernant les graphiques sont indiquées dans la colonne "REMARQUES", comme indiqué ci–dessous.

N° PIECES	DESCRIPTION	QTE	REMARQUES
2N4–24110–00–X5	RESERVOIR A ESSENCE.	2	MXR
3J1–24240–10	.GRAPHIQUE	1	POUR MXR

5. Veuillez noter que les illustrations sont indiquées à titre de référence pour trouver les numéros de pièces, non pour être utilisées lors de l'assemblage. Lors de l'assemblage, veuillez utiliser le manuel d'entretien adéquat.

6. L'astérisque (*) placé devant un numéro de référence indique des éléments qui ont été modifiés après la première édition.

7. N° de série applicable

   N° de Série du moteur

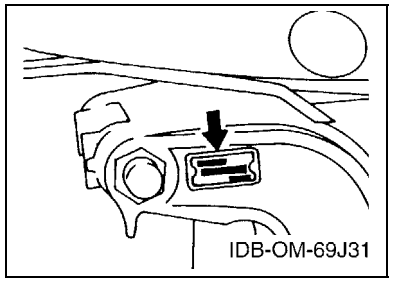

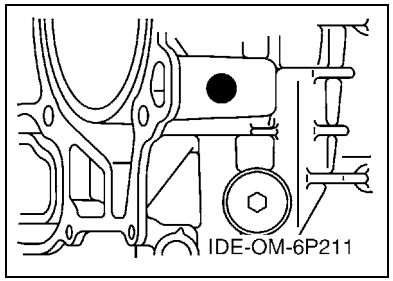

8. N° de série initial du moteur applicable

Modèle	N° de série	Modèle	N° de série
F250B	6P2-1034178	FL250B	6P3-1014090

9. Code couleur applicable

Abréviation	Nom de la couleur	Code couleur
DBN1	DARK BLUISH GRAY 1	008D

10. Informations relatives à la colonne Quantité

N° de la colonne	Nom de la colonne Qté	Modèle applicable
1	6BR3	F250BET
2	6BS3	FL250BET

CONTENTS

TOP COWLING 1
CYLINDER & CRANKCASE 1 2
CRANKSHAFT & PISTON 5
CYLINDER & CRANKCASE 2 6
CYLINDER & CRANKCASE 3 8
VALVE 10
INTAKE 1 13
INTAKE 2 15
THROTTLE BODY ASSY 1 16
THROTTLE BODY ASSY 2 17
THROTTLE BODY ASSY 3 18
FUEL INJECTION PUMP 1 19
FUEL INJECTION PUMP 2 21
FUEL 1 23
FUEL 2 25
GENERATOR 26
ELECTRICAL 1 27
ELECTRICAL 2 29
ELECTRICAL 3 32
STARTING MOTOR 33
BOTTOM COWLING 1 35
BOTTOM COWLING 2 38
CONTROL 39
BRACKET 1 40
BRACKET 2 42
POWER TRIM & TILT ASSY 1 44
POWER TRIM & TILT ASSY 2 47
UPPER CASING 48
OIL PAN 51
LOWER CASING & DRIVE 1 52
LOWER CASING & DRIVE 2 56
LOWER CASING & DRIVE 3 58
LOWER CASING & DRIVE 4 63
STEERING GUIDE 65
REPAIR KIT 1 66
REPAIR KIT 2 67

INDEX

NUMERICAL INDEX 69

TABLE DES MATIERES

CAPOT SUPERIEUR 1
CYLINDRE & CARTER 1 2
VILEBREQUIN & PISTON 5
CYLINDRE & CARTER 2 6
CYLINDRE & CARTER 3 8
SOUPAPE 10
ADMISSION 1 13
ADMISSION 2 15
CARTER D'ACCELERATEUR 1 16
CARTER D'ACCELERATEUR 2 17
CARTER D'ACCELERATEUR 3 18
POMPE A INJECTEUR 1 19
POMPE A INJECTEUR 2 21
CARBURANT 1 23
CARBURANT 2 25
GENERATRICE 26
PARTIE ELECTRIQUE 1 27
PARTIE ELECTRIQUE 2 29
PARTIE ELECTRIQUE 3 32
DEMARREUR ELECTRIQUE 33
CAPOT INFERIEUR 1 35
CAPOT INFERIEUR 2 38
COMMANDE 39
SUPPORT 1 40
SUPPORT 2 42
PUISSANCE PARER ET INCLINER 1 44
PUISSANCE PARER ET INCLINER 2 47
FOURREAU 48
VENTILATEUR D'HUILE 51
BOITIER D'HELICE TRANSMISSION1 52
BOITIER D'HELICE TRANSMISSION2 56
BOITIER D'HELICE TRANSMISSION3 58
BOITIER D'HELICE TRANSMISSION4 63
FIXATION DE DIRECTION 65
KITS DE REPARATION 1 66
KITS DE REPARATION 2 67

INDEX

INDEX NUMERIQUE 69

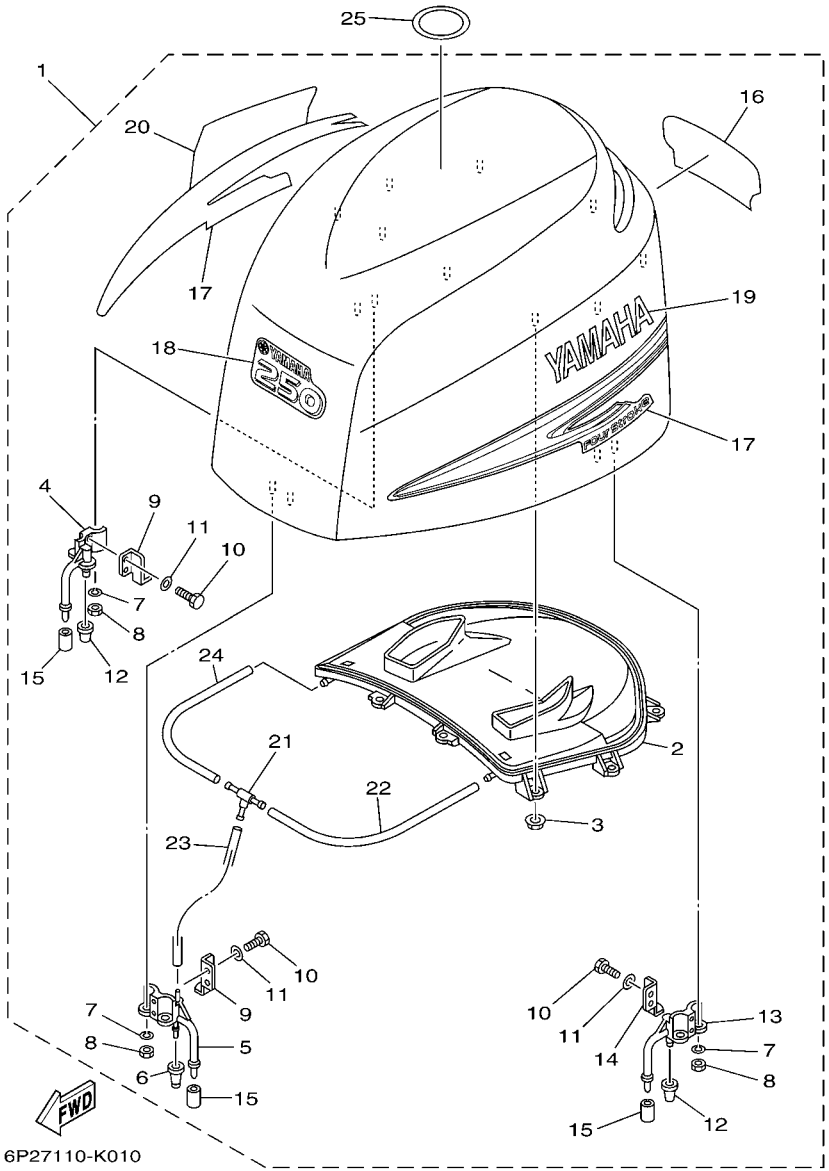

FIG. 1 TOP COWLING — CAPOT SUPERIEUR

REF. NO.	PART NO. N° PIECES	DESCRIPTION DESCRIPTION	6BR3	6BS3				REMARKS REMARQUES
1	6P2–42610–01	TOP COWLING ASSY CAPOT (ENS.)	1	1				
2	6P2–42613–00	.MOLDING, AIR DUCT .MANCHON A AIR	1	1				
3	90179–06M28	.NUT .ECROU	9	9				
4	68F–42647–01	.HOLDER, CLAMP BAND .SUPPORT, SANDOW DE SERRAGE	1	1				
5	69J–42647–01	.HOLDER, CLAMP BAND .SUPPORT, SANDOW DE SERRAGE	1	1				
6	69J–42663–00	.DAMPER .AMORTISSEUR	1	1				
7	92990–06100	.WASHER, SPRING .RONDELLE, GROWER	6	6				
8	95380–06600	.NUT, HEXAGON .ECROU	6	6				
9	60V–42651–01	.HOOK .CROCHET	2	2				
10	97095–06016	.BOLT .BOULON	6	6				
11	92995–06600	.WASHER .RONDELLE	6	6				
12	68F–42663–00	.DAMPER .AMORTISSEUR	2	2				
13	68F–42648–01	.HOLDER, CLAMP BAND .SUPPORT, SANDOW DE SERRAGE	1	1				
14	60V–42652–00	.HOOK .CROCHET	1	1				
15	67F–13448–00	.CAP .CAPUCHON	3	3				
16	6P2–42678–00	.GRAPHIC, REAR .ADHESIF, ARRIERE	1	1				
17	69J–W0070–00	.GRAPHIC SET .JEU DIEMBLEMES	1	1				
18	6P2–42677–00	.GRAPHIC, FRONT .ADHESIF, AVANT	1	1				
19	69J–42681–00	.MARK, COWLING .ADHESIF, CAPOT	1	1				
20	69J–42682–00	.MARK, COWLING .ADHESIF, CAPOT	1	1				
21	69J–24378–00	.PIPE, JOINT 3 .DURITE RACCORDEMENT 3	1	1				
22	90445–11M27	.HOSE (L240) .DURITE (L240)	1	1				
23	90445–11699	.HOSE (L500) .DURITE (L500)	1	1				
24	90445–11182	.HOSE (L300) .DURITE (L300)	1	1				
25	67F–13434–20	LABEL, CAUTION ETIQUETTE, ATTENTION	1	1				

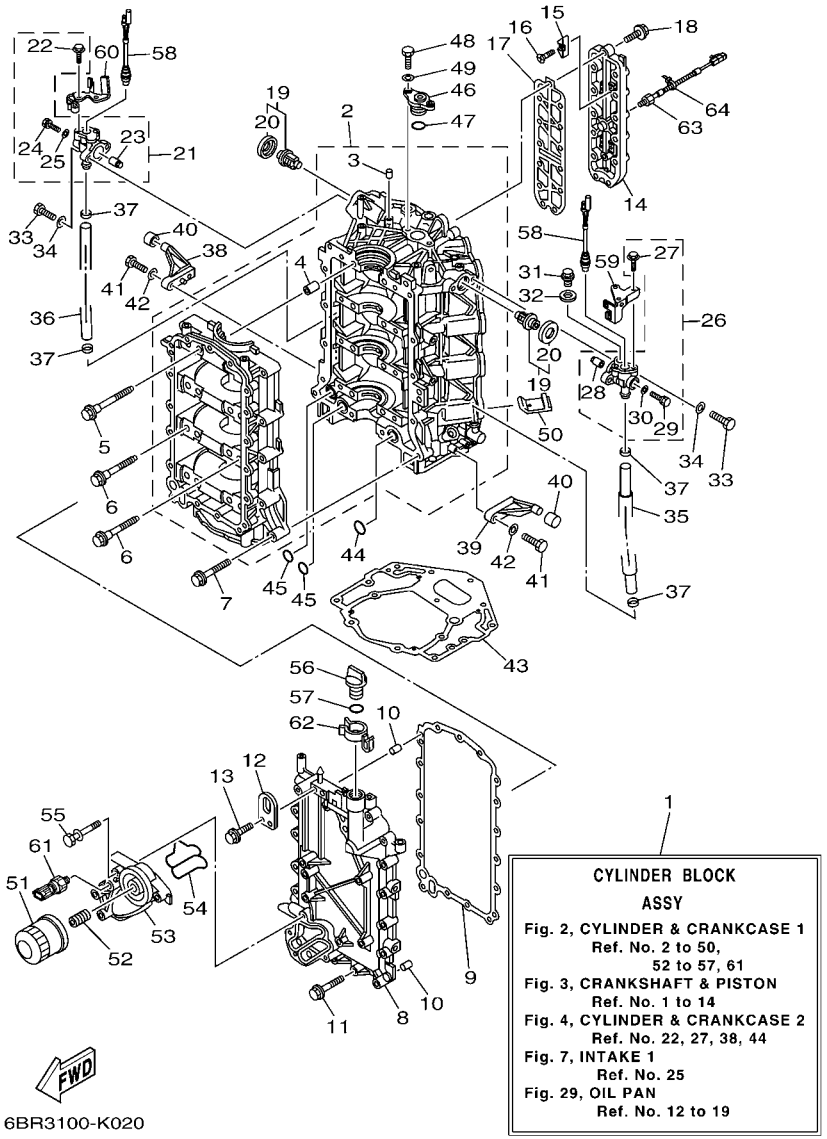

FIG. 2 CYLINDER & CRANKCASE 1 CYLINDRE & CARTER 1

REF. NO.	PART NO. N° PIECES	DESCRIPTION DESCRIPTION	6BR3	6BS3				REMARKS REMARQUES
1	6BR–W009B–01–9S	CYLINDER BLOCK ASSY CYLINDRE GROUPE (ENS.)	1	1				Go to P/N:PE0-OM-130021
2	6BR–15100–01–9S	CRANKCASE ASSY CARTER DE MOTEUR COMPLET	1	1				Go to P/N:PE0-OM-110016
3	93606–12019	.PIN, DOWEL .GOUPILLE	1	1				
4	91814–18001	.PIN, DOWEL .GOUJON, D'ASSEMBLAGE	8	8				
5	69J–15187–00	BOLT BOULON	8	8				
6	69J–15481–00	BOLT 1 BOULON 1	8	8				
7	90119–08M66	BOLT, WITH WASHER BOULON, AVEC RONDELLE	13	13				
8	6P2–15411–01–9S	COVER, CRANKCASE 1 COUVERCLE 1, CARTER MOTEUR	1	1				
9	69J–15451–00	GASKET, CRANKCASE COVER 1 JOINT, COUVERCLE DE CARTER 1	1	1				
10	93606–12019	PIN, DOWEL GOUPILLE	2	2				
11	90119–08009	BOLT, WITH WASHER BOULON, AVEC RONDELLE	17	17				
12	69J–11119–00	HANGER, ENGINE ANNEAU, LEVAGE	1	1				
13	90105–06M09	BOLT, FLANGE BOULON	2	2				
14	6P2–1131C–00–9S	COVER, JOINT COUVERCLE, RACCORDEMENT	1	1				
15	6E5–11325–00	ANODE ANODE	4	4				
16	98780–04015	SCREW, FLAT HEAD VIS A TETE FRAISEE	4	4				
17	6P2–1131B–00	GASKET, COVER JOINT, COUVERCLE	1	1				
18	90119–06MA4	BOLT, WITH WASHER BOULON, AVEC RONDELLE	13	13				
19	67F–12411–01	THERMOSTAT THERMOSTAT	2	2				
20	67F–12412–00	.SEAL, THERMOSTAT .JOINT, THERMOSTAT	1	1				
21	6P2–1240H–00–9S	ANODE ASSY ANODE COMPLET	1	1				
22	90109–06M80	.BOLT .BOULON	2	2				
23	6P3–11325–00	.ANODE .ANODE	1	1				
24	90105–05012	.BOLT, FLANGE .BOULON	1	1				
25	90430–05002	.GASKET .JOINT	1	1				
26	6P3–1240H–00–9S	ANODE ASSY ANODE COMPLET	1	1				
27	90109–06M80	.BOLT .BOULON	2	2				

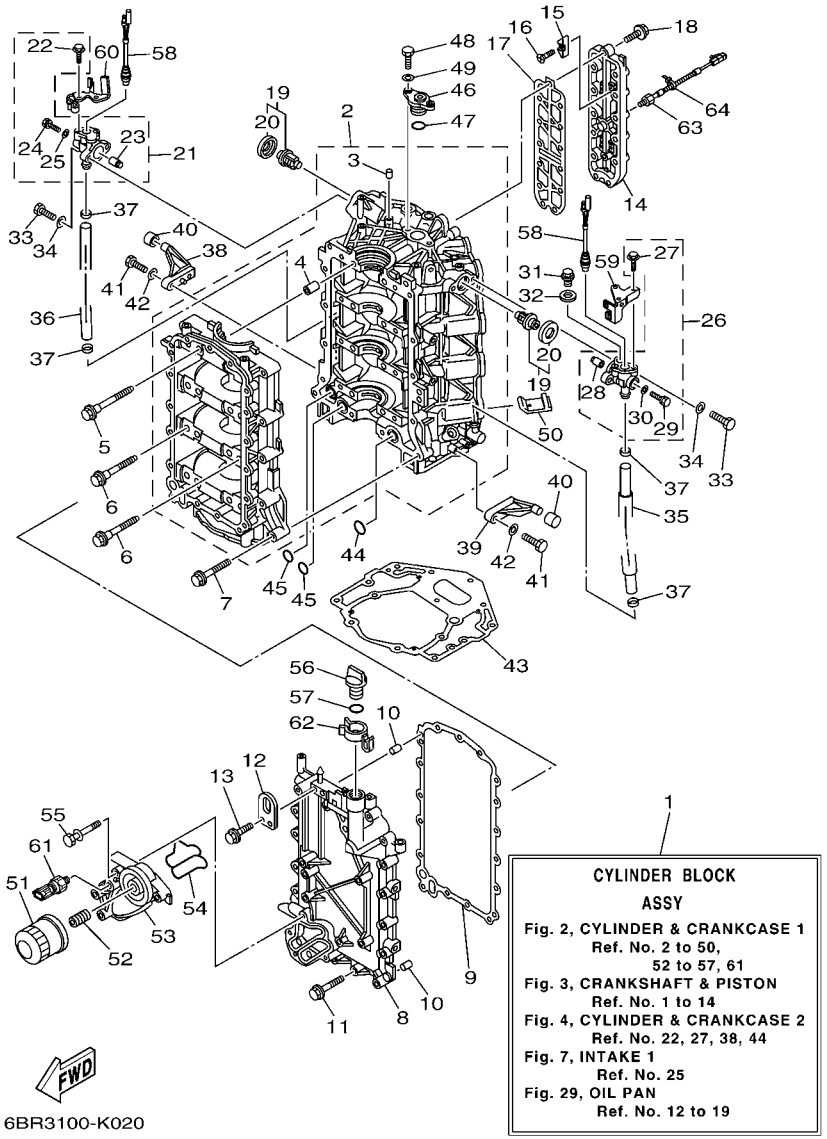

FIG. 2 CYLINDER & CRANKCASE 1 CYLINDRE & CARTER 1

REF. NO.	PART NO. N° PIECES	DESCRIPTION DESCRIPTION	6BR3	6BS3				REMARKS REMARQUES
28	6P3–11325–00	.ANODE .ANODE	1	1				
29	90105–05012	.BOLT, FLANGE .BOULON	1	1				
30	90430–05002	.GASKET .JOINT	1	1				
31	90340–14M06	PLUG, STRAIGHT SCREW PLOT, FILETE DROIT	1	1				
32	90430–14115	GASKET JOINT	1	1				
33	97095–06025	BOLT BOULON	4	4				
34	92995–06600	WASHER RONDELLE	4	4				
35	6P2–1243A–00	HOSE 1 DURITE 1	1	1				
36	69J–1243E–00	HOSE 2 DURITE 2	1	1				
37	90465–11M10	CLAMP BRIDE	4	4				
38	67F–42761–01	STOPPER PLAQUETTE	1	1				
39	6P2–42761–00	STOPPER PLAQUETTE	1	1				
40	68F–44533–01	DAMPER, UPPER MOUNT RUBBER COUVERCLE, SUSPENSION INFERIEU	2	2				
41	97095–06025	BOLT BOULON	4	4				
42	92995–06600	WASHER RONDELLE	4	4				
43	69J–11351–11	GASKET, CYLINDER JOINT, D'EMBASE	1	1				
44	93210–25552	O-RING JOINT TORIQUE	1	1				
45	93210–19MJ1	O-RING JOINT TORIQUE	2	2				
46	69J–11313–00	PLUG, BLIND PLOT, BORGNE	1	1				
47	93210–25647	O-RING JOINT TORIQUE	1	1				
48	97095–06020	BOLT BOULON	2	2				
49	92995–06600	WASHER RONDELLE	2	2				
50	69J–14664–00	GROMMET, WATER SHUT PASSE-FIL	2	2				
51	69J–13440–01	ELEMENT ASSY, OIL CLEANER ELEMENT, FILTRE A HUILE	1	1				
52	69J–12858–00	BOLT, UNION BOULON, RACCORD	1	1				
53	6BR–13446–00–9S	CONNECTOR CONNECTEUR	1	1				
54	6P2–13477–00	GASKET JOINT	1	1				

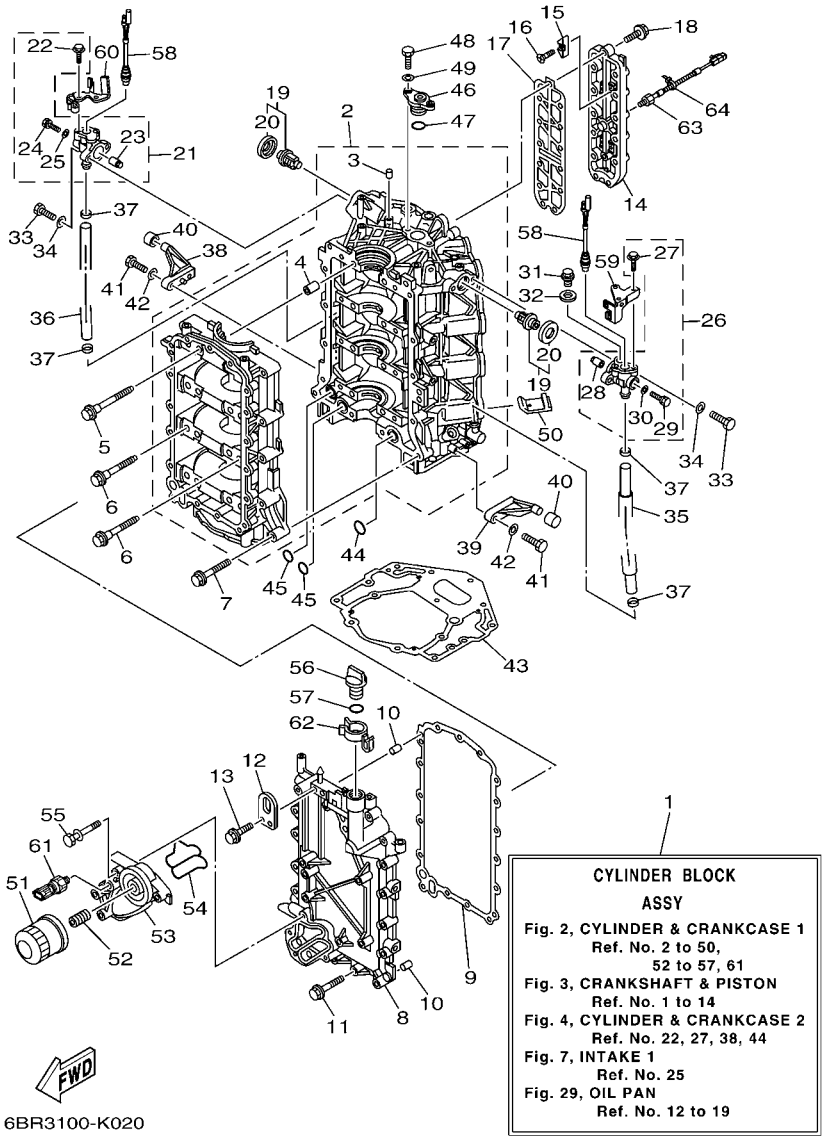

FIG. 2 CYLINDER & CRANKCASE 1 CYLINDRE & CARTER 1

REF. NO.	PART NO. N° PIECES	DESCRIPTION DESCRIPTION	6BR3	6BS3				REMARKS REMARQUES
55	90119–06025	BOLT, WITH WASHER BOULON, AVEC RONDELLE	5	5				
56	6G8–15363–00	PLUG, OIL PLOT, HUILE	1	1				
57	93210–24M79	O-RING JOINT TORIQUE	1	1				
58	6P2–82560–01	THERMO SWITCH ASSY THERMO-CONTACT COMPLET	2	2				
59	6P2–82588–00	PLATE PLAQUE	1	1				
60	6P2–82389–00	PLATE 2 PLAQUETTE 2	1	1				
61	6AW–83651–00	SENDER, OIL PRESSURE RACCORD, PRESSION D'HUILE	1	1				
62	6P2–83597–00	CLAMP COLLIER	1	1				
63	6P2–85780–00	SENSOR, KNOCK SONDE DE COGNEMENT	1	1				
64	90465–11M10	CLAMP BRIDE	1	1				

FIG. 3 CRANKSHAFT & PISTON VILEBREQUIN & PISTON

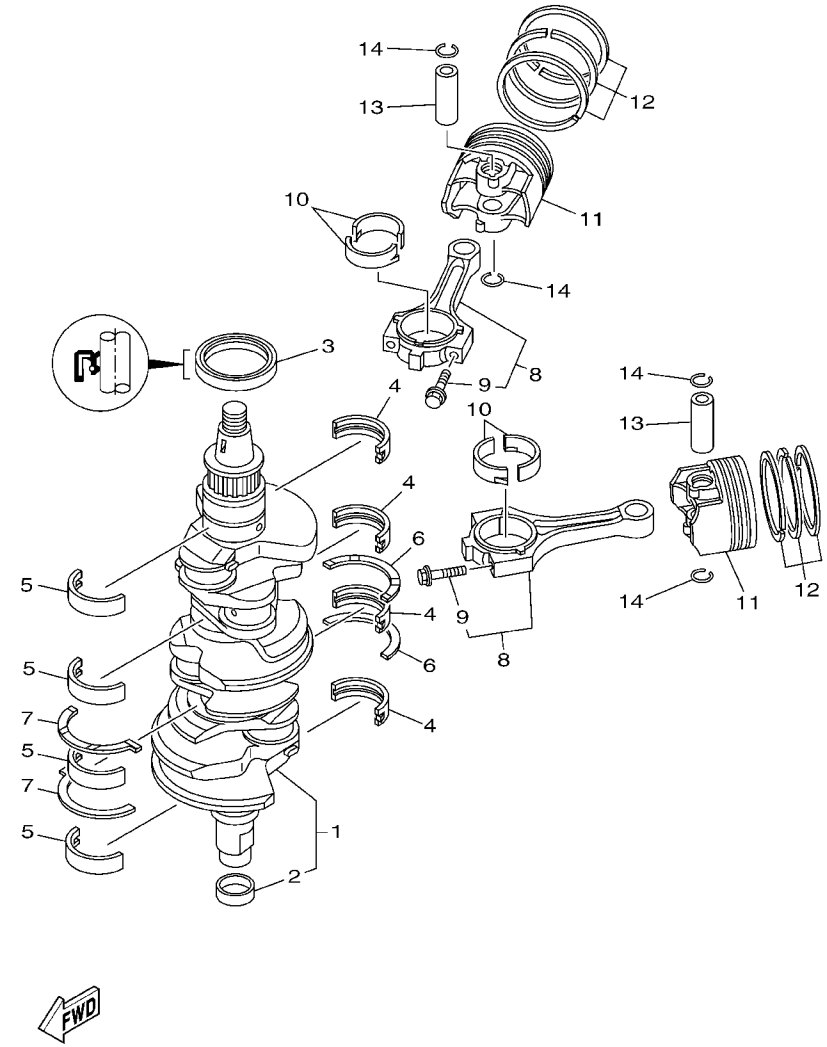

6P25110H0301

REF. NO.	PART NO. N° PIECES	DESCRIPTION DESCRIPTION	6BR3	6BS3				REMARKS REMARQUES
1	6P2–11410–01	CRANKSHAFT VILEBREQUIN COMPLET	1	1				
2	69J–11478–00	.COLLAR .COLLERETTE	1	1				
3	93102–63004	OIL SEAL JOINT SPY	1	1				
4	69J–11416–01	PLANE BEARING, CRANKSHAFT 1 COUSSINET DE VILEBREQUIN 1	4	4				UR #1 UR #1
	69J–11416–11	PLANE BEARING, CRANKSHAFT 1 COUSSINET DE VILEBREQUIN 1	4	4				UR #2 UR #2
	69J–11416–21	PLANE BEARING, CRANKSHAFT 1 COUSSINET DE VILEBREQUIN 1	4	4				UR #3 UR #3
5	69J–11417–01	PLANE BEARING, CRANKSHAFT 2 COUSSINET DE VILEBREQUIN 2	4	4				UR #1 Go to P/N:PE0-OM-130021 UR #1
	69J–11417–11	PLANE BEARING, CRANKSHAFT 2 COUSSINET DE VILEBREQUIN 2	4	4				UR #2 Go to P/N:PE0-OM-130021 UR #2
	69J–11417–21	PLANE BEARING, CRANKSHAFT 2 COUSSINET DE VILEBREQUIN 2	4	4				UR #3 Go to P/N:PE0-OM-130021 UR #3
6	6AW–11426–00	BEARING, THRUST 1 ROULEMENT DE BUTEE 1	2	2				Go to P/N:PE0-OM-130021
7	6AW–11427–00	BEARING, THRUST 2 ROULEMENT DE BUTEE 2	2	2				Go to P/N:PE0-OM-130021
8	69J–W1165–01	CONNECTING ROD ASSY BIELLE COMPLETTE	6	6				
9	69J–11654–00	.BOLT, CONNECTING ROD .BOULON, BIELLE	2	2				
10	69J–11656–00	PLANE BEARING, CONNECTING ROD ROULEMENT DE BIELLE	12	12				UR YELLOW UR YELLOW
	69J–11656–10	PLANE BEARING, CONNECTING ROD ROULEMENT DE BIELLE	12	12				UR GREEN UR GREEN
	69J–11656–20	PLANE BEARING, CONNECTING ROD ROULEMENT DE BIELLE	12	12				UR BLUE UR BLUE
11	6P2–11631–01–93	PISTON (STD) PISTON (STD)	6	6				
12	63P–11603–01	PISTON RING SET (STD) JEU DE SEGMENTS (STD)	6	6				
13	69J–11633–00	PIN, PISTON AXE, PISTON	6	6				
14	69J–11634–01	CLIP, PISTON PIN AGRAFE, AXE DE PISTON	12	12				

PARTS NEWS

YAMAHA
YAMAHA MOTOR CO., LTD.
2500 SHINGAI IWATA SHIZUOKA JAPAN

News No. PE0-OM-110016(1/2)

Date:April 28, 2011

Signature: S. Ishibashi

Cause : ☑ Revision Notice ☐ Correction ☐ Sales Unit Change ☐ Others

Model	F250BET (6BR3) / FL250BET (6BS3)
Subject	PARTS CATALOGUE CORRECTIONS
CATALOGUE NO.	1K6BR-100E1 / 1K6BR-300F1

Time of YPEC Revision Text, Illustration --> Jun./15/2011 PDF Replace --> Jun./15/2011
(YPEC = Yamaha Parts Electrical Catalogue = Website parts catalogue)

Applicable Engine Serial No.

MODEL NAME	MODEL CODE	Applicable Engine Serial No.
F250B	6BR3	6P2:1035161-
FL250B	6BS3	6P3:1014345-

*1: Interchangeability

A	Old Parts →	Old Parts
	New Parts →	New Parts
B	Old Parts →	Old Parts
	New Parts →	New Parts
C	Old Parts →	Old Parts
	New Parts →	New Parts
	These parts are interchangeable with a set	

1. LIST CORRECTION

FIG.2 CYLINDER & CRANKCASE 1

Fig. No.	Ref. No.	OLD P/No.	NEW P/No.	PART NAME	Q'TY	*Interchangeability	REMARKS
2	1	6BR-W009B-00-9S	6BR-W009B-01-9S	CYLINDER BLOCK ASSY	1	B	*Part number revision
	2	6BR-15100-00-9S	6BR-15100-01-9S	CRANKCASE ASSY	1	B	

FIG.3 CRANKSHAFT & PISTON

3	5	69J-11417-01	-	PLANE BEARING, CRANKSHAFT 2	3 --> 4		UR #1	*Q'TY change
		69J-11417-11	-	PLANE BEARING, CRANKSHAFT 2	3 --> 4		UR #2	
		69J-11417-21	-	PLANE BEARING, CRANKSHAFT 2	3 --> 4		UR #3	
	6	69J-11426-01	6AW-11426-00	BEARING, THRUST 1	1 --> 2		~~UR #1~~	*Part number revision *Q'TY change
		~~69J-11426-11~~	-	~~BEARING, THRUST 1~~	~~1~~		~~UR #2~~	*Deleted Parts
		~~69J-11426-21~~	-	~~BEARING, THRUST 1~~	~~1~~		~~UR #3~~	
	7	69J-11427-00	6AW-11427-00	BEARING, THRUST 2	2			*Part number revision

Parts Manager Check	Service Manager Check	Parts Manager File

YAMAHA MOTOR CO.,LTD
2500 Shingai Iwata Shizuoka 438-8501.Japan
Technical Publication Dept.

YAMAHA GENUINE Parts & Accessories

PARTS NEWS

News No. PE0-OM-110016(2/2)

Date:April 28, 2011

Signature:S. Ishibashi

Cause : ☑ Revision Notice ☐ Correction ☐ Sales Unit Change ☐ Others

Model	F250BET (6BR3) / FL250BET (6BS3)
Subject	PARTS CATALOGUE CORRECTIONS
CATALOGUE NO.	1K6BR-100E1 / 1K6BR-300F1
Time of YPEC Revision Text, Illustration --> Jun./15/2011 PDF Replace --> Jun./15/2011 (YPEC = Yamaha Parts Electrical Catalogue = Website parts catalogue)	

2. ILLUSTRATION CORRECTION

FIG.3 CRANKSHAFT & PISTON

(OLD)

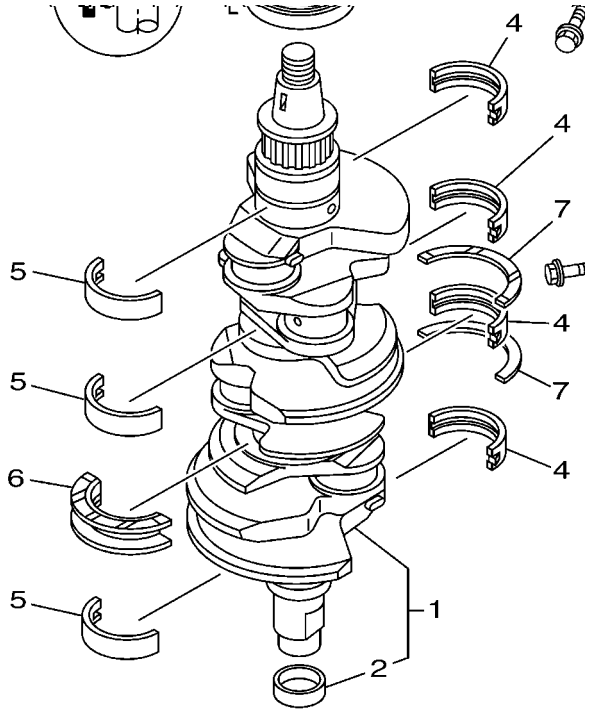

(NEW)

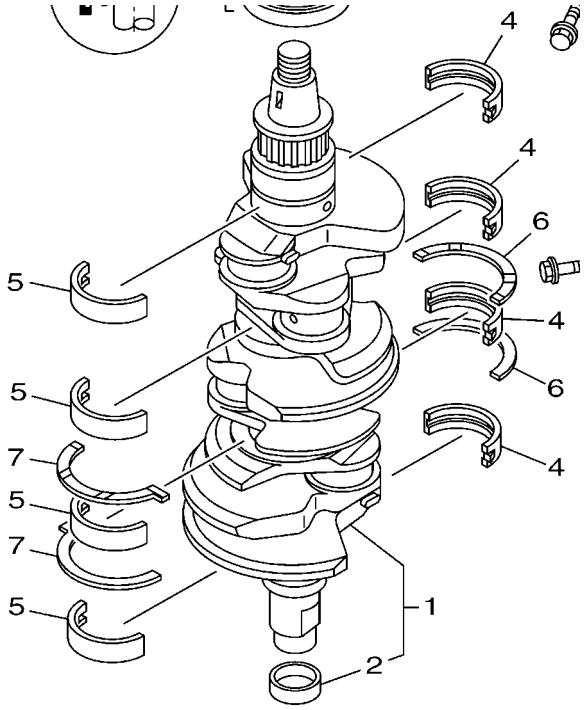

Thank you very much for your cooperation.

Parts Manager Check	Service Manager Check	Parts Manager File

YAMAHA MOTOR CO.,LTD
2500 Shingai Iwata Shizuoka 438-8501.Japan
Technical Publication Dept.

PARTS NEWS

YAMAHA
YAMAHA MOTOR CO., LTD.
2500 SHINGAI IWATA SHIZUOKA JAPAN

News No. PE0-OM-130021(1/2)

Date:2013/5/13

Signature:S.Ishibashi

Cause : ☑ Revision Notice ☐ Correction ☐ Sales Unit Change ☐ Others

Model	F250BET (6BR3) / FL250BET (6BS3)
Subject	PARTS CATALOGUE CORRECTIONS
CATALOGUE NO.	1K6BR-100E1 / 1K6BR-300F1

Time of YPEC Revision Text, Illustration --> Jun./10/2013 PDF Replace --> Jun./10/2013
(YPEC = Yamaha Parts Electrical Catalogue = Website parts catalogue)

Applicable Engine Serial No.

MODEL NAME	MODEL CODE	Applicable Engine Serial No.
F250B	6BR3	6P2:1037812-
FL250B	6BS3	6P3:1014711-

*1: Interchangeability

A	Old Parts →	Old Parts
	New Parts →	New Parts
B	Old Parts →	Old Parts
	New Parts →	New Parts
C	Old Parts →	Old Parts
	New Parts →	New Parts
○–○	These parts are interchangeable with a set	

1. LIST CORRECTION

FIG.2 CYLINDER & CRANKCASE 1

Fig. No.	Ref. No.	OLD P/No.	NEW P/No.	PART NAME	Q'TY	*Interchangeability	REMARKS
2	1	6BR-W009B-01-9S	**6BR-W009B-00-9S**	CYLINDER BLOCK ASSY	1	**B**	***Part number revision**

FIG.3 CRANKSHAFT & PISTON

3	5	69J-11417-01	**-**	PLANE BEARING, CRANKSHAFT 2	4 --> **3**	○	UR #1	***Q'TY change**
		69J-11417-11	**-**	PLANE BEARING, CRANKSHAFT 2	4 --> **3**		UR #2	
		69J-11417-21	**-**	PLANE BEARING, CRANKSHAFT 2	4 --> **3**		UR #3	
	6	6AW-11426-00	**69J-11426-01**	BEARING, THRUST 1	2 --> **1**	○	**UR #1**	***Part number revision** ***Q'TY change**
		-	**69J-11426-11**	BEARING, THRUST 1	**1**		**UR #2**	***Added Parts**
		-	**69J-11426-21**	BEARING, THRUST 1	**1**		**UR #3**	
	7	6AW-11427-00	**69J-11427-00**	BEARING, THRUST 2	2	○		***Part number revision**

Parts Manager Check	Service Manager Check	Parts Manager File

YAMAHA MOTOR CO.,LTD
2500 Shingai Iwata Shizuoka 438-8501.Japan
Technical Publication Dept.

YAMAHA GENUINE Parts & Accessories

PARTS NEWS

News No. PE0-OM-130021(2/2)

Date:2013/5/13

Signature:S.Ishibashi

Cause : ☑ Revision Notice ☐ Correction ☐ Sales Unit Change ☐ Others

Model	F250BET (6BR3) / FL250BET (6BS3)
Subject	PARTS CATALOGUE CORRECTIONS
CATALOGUE NO.	1K6BR-100E1 / 1K6BR-300F1
Time of YPEC Revision Text, Illustration --> Jun./10/2013 PDF Replace --> Jun./10/2013 (YPEC = Yamaha Parts Electrical Catalogue = Website parts catalogue)	

2. ILLUSTRATION CORRECTION

FIG.3 CRANKSHAFT & PISTON

(OLD)

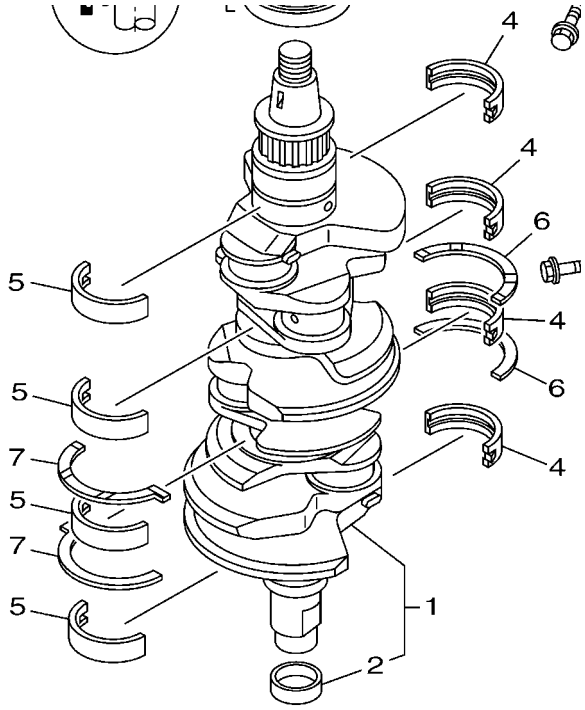

(NEW)

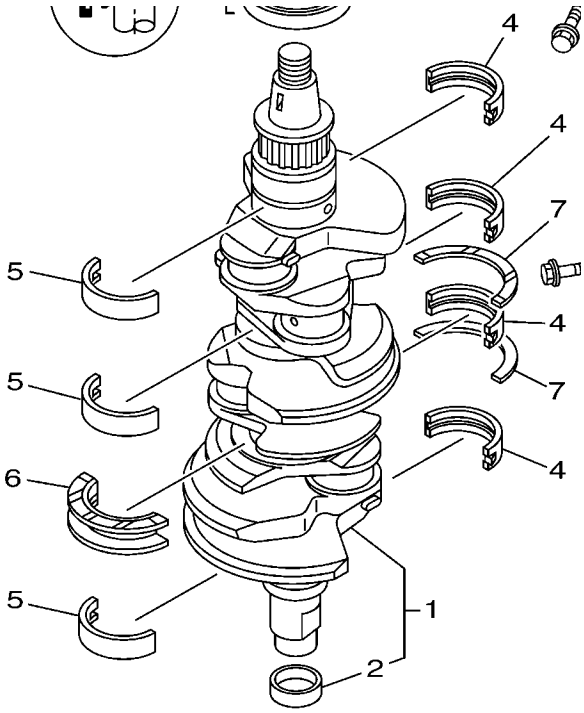

Thank you very much for your cooperation.

Parts Manager Check	Service Manager Check	Parts Manager File

YAMAHA MOTOR CO.,LTD
2500 Shingai Iwata Shizuoka 438-8501.Japan
Technical Publication Dept.

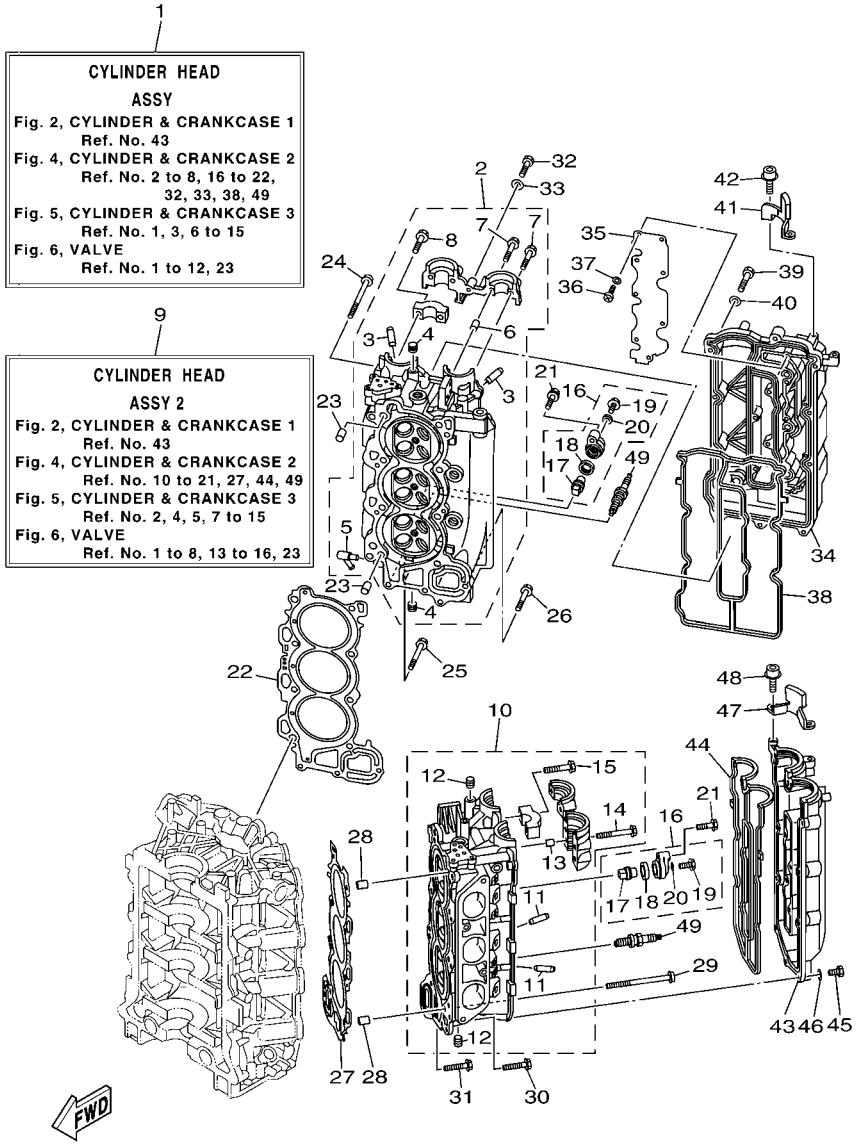

6BR3100-K040

FIG. 4 CYLINDER & CRANKCASE 2 CYLINDRE & CARTER 2

REF. NO.	PART NO. N° PIECES	DESCRIPTION DESCRIPTION	6BR3	6BS3				REMARKS REMARQUES
1	6P2–W009A–02–9S	CYLINDER HEAD ASSY CULASSE (ENS.)	1	1				
2	6P2–11110–01	CYLINDER HEAD ASSY JEU DE CULASSE	1	1				
3	69J–11133–10	.GUIDE, VALVE 1 .GUIDE, SOUPAPE 1	12	12				
4	90344–51019	.PLUG, TAPER SCREW .PLOT, FILETE CONIQUE	7	7				
5	676–11372–00	.NIPPLE, HOSE .RACCORD, TUYAU	1	1				
6	91809–08006	.PIN, DOWEL .GOUJON, D'ASSEMBLAGE	2	2				
7	90119–07001	.BOLT, WITH WASHER .BOULON, AVEC RONDELLE	4	4				
8	90119–07234	.BOLT, WITH WASHER .BOULON, AVEC RONDELLE	14	14				
9	6P2–W009C–02–9S	CYLINDER HEAD ASSY 2 CULASSE 2	1	1				
10	6P2–11120–01	CYLINDER HEAD ASSY 2 CULASSE 2	1	1				
11	69J–11133–10	.GUIDE, VALVE 1 .GUIDE, SOUPAPE 1	12	12				
12	90344–51019	.PLUG, TAPER SCREW .PLOT, FILETE CONIQUE	3	3				
13	91809–08006	.PIN, DOWEL .GOUJON, D'ASSEMBLAGE	4	4				
14	90119–07235	.BOLT/WASHER-CAM CAPS .BOULON, AVEC RONDELLE	6	6				
15	90119–07234	.BOLT, WITH WASHER .BOULON, AVEC RONDELLE	12	12				
16	69J–11301–00	ANODE COVER ASSY COUVERCLE ANODE (ENS.)	4	4				
17	67F–11325–01	.ANODE .ANODE	1	1				
18	67F–11328–00	.GROMMET, ANODE .PASSE-FIL	1	1				
19	90105–06M07	.BOLT, FLANGE .BOULON	1	1				
20	90430–06M03	.GASKET .JOINT	1	1				
21	97575–08540	BOLT, WITH WASHER VIS HEXAGONAL AVC RONDELLE	4	4				
22	6P2–11181–00	GASKET, CYLINDER HEAD 1 JOINT, DE CULASSE 1	1	1				
23	90387–10M08	COLLAR COLLERETTE	2	2				
24	90155–10004	SCREW, FLAT FILLISTER VIS, TETE OVALE PLATE	8	8				
25	90119–08M91	BOLT, WITH WASHER BOULON, AVEC RONDELLE	2	2				
26	90119–08021	BOLT, WITH WASHER BOULON, AVEC RONDELLE	1	1				
27	6P2–11182–00	GASKET, CYLINDER HEAD 2 JOINT, CULASSE 2	1	1				

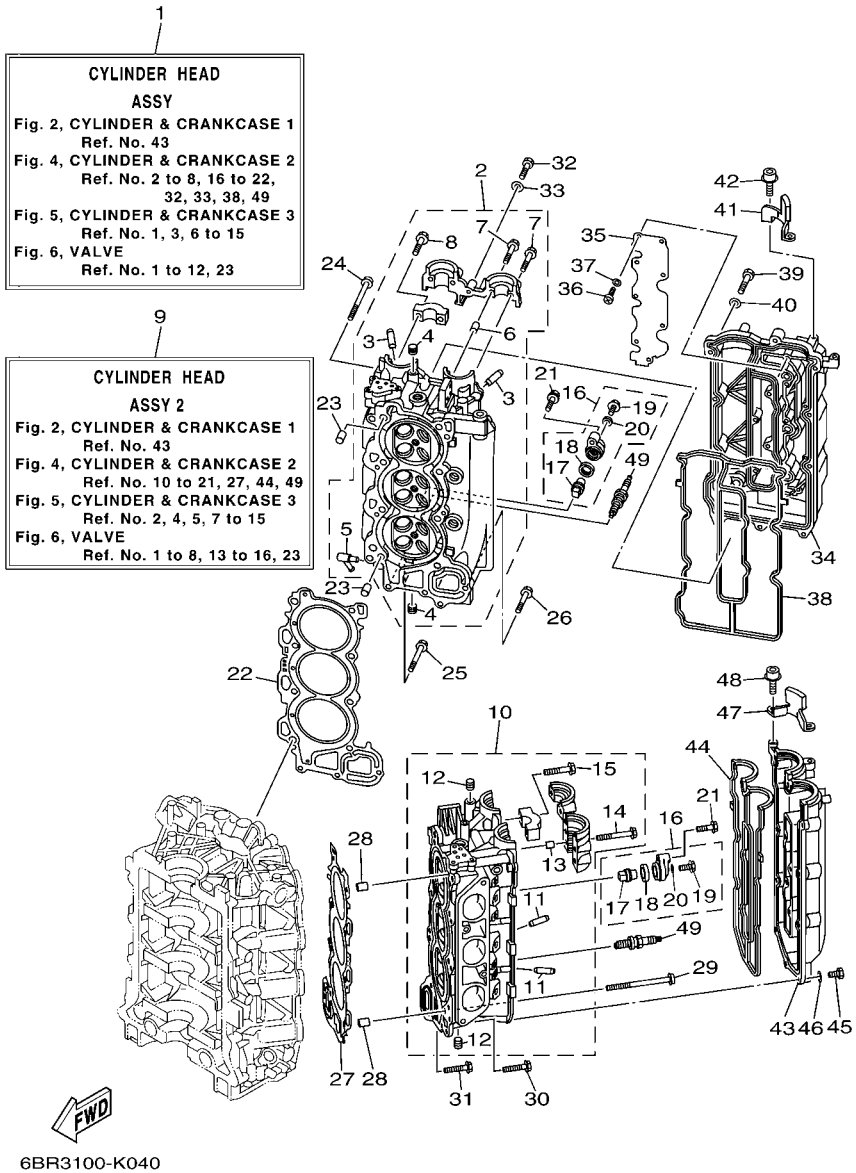

6BR3100-K040

FIG. 4 CYLINDER & CRANKCASE 2 CYLINDRE & CARTER 2

REF. NO.	PART NO. N° PIECES	DESCRIPTION DESCRIPTION	6BR3	6BS3				REMARKS REMARQUES
28	90387–10M08	COLLAR COLLERETTE	2	2				
29	90155–10004	SCREW, FLAT FILLISTER VIS, TETE OVALE PLATE	8	8				
30	90119–08M91	BOLT, WITH WASHER BOULON, AVEC RONDELLE	2	2				
31	90119–08021	BOLT, WITH WASHER BOULON, AVEC RONDELLE	1	1				
32	97095–06030	BOLT BOULON	1	1				
33	92995–06600	WASHER RONDELLE	1	1				
34	6P2–11191–00–9S	COVER, CYLINDER HEAD 1 COUVERCLE, CULASSE 1	1	1				
35	6P2–11135–00	PLATE, BREATHER 3 PLAQUE, RENIFLARD 3	1	1				
36	98507–04008	SCREW, PAN HEAD VIS, TETE TRONCONIQUE	9	9				
37	92907–04600	WASHER RONDELLE	9	9				
38	6P2–11193–00	GASKET, HEAD COVER 1 JOINT, COUVERCLE DE CULASSE 1	1	1				
39	97095–06030	BOLT BOULON	14	14				
40	92995–06600	WASHER RONDELLE	14	14				
41	6P2–15142–00	GUIDE 1 GUIDE 1	1	1				
42	90110–06150	BOLT, HEXAGON SOCKET HEAD BOULON, TETE HEXAGONALE CREUSE	2	2				
43	6P2–11192–00–9S	COVER, CYLINDER HEAD 2 COUVERCLE, CULASSE 2	1	1				
44	6P2–11194–00	GASKET, HEAD COVER 2 JOINT, COUVERCLE DE CULASSE 2	1	1				
45	97095–06030	BOLT BOULON	14	14				
46	92995–06600	WASHER RONDELLE	14	14				
47	6P2–15143–00	GUIDE GUIDE	1	1				
48	90110–06150	BOLT, HEXAGON SOCKET HEAD BOULON, TETE HEXAGONALE CREUSE	2	2				
49	94702–00400	PLUG, SPARK (NGK LFR6A-11) BOUGIE D'ALLUMAGE(NGK LFR6A-11	6	6				

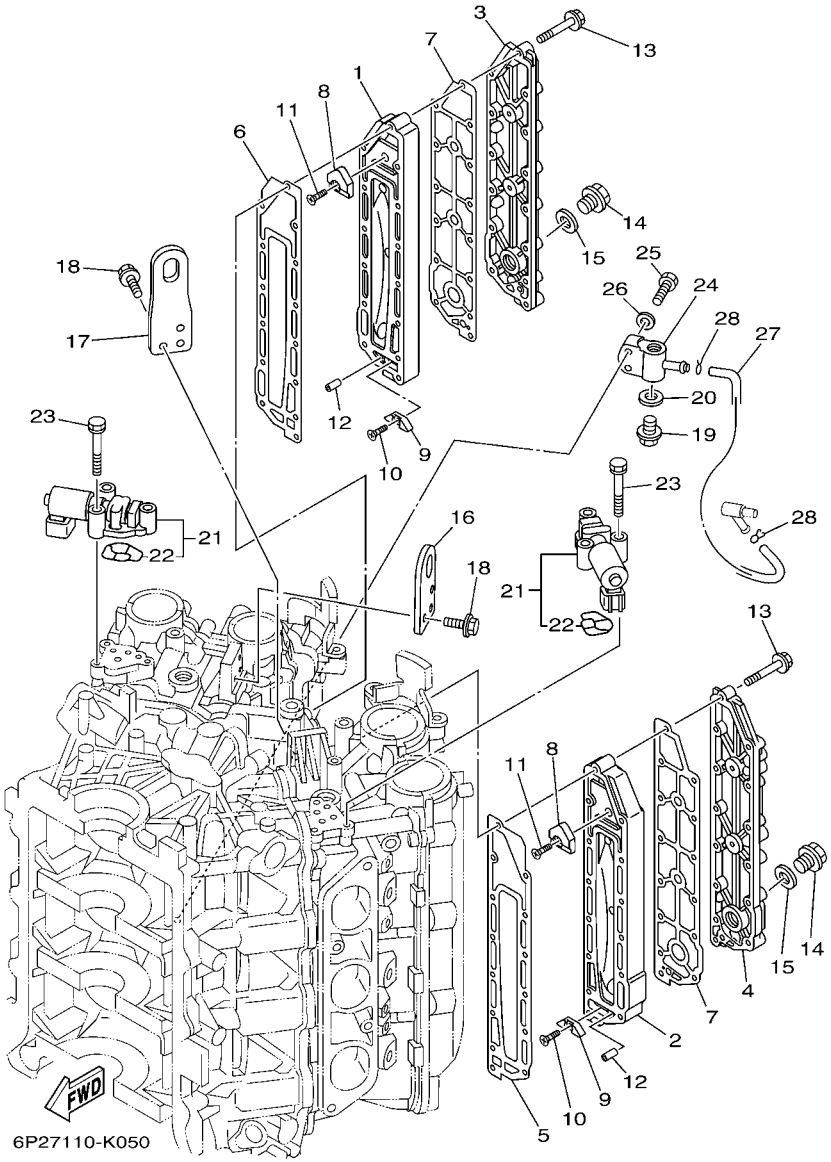

FIG. 5 CYLINDER & CRANKCASE 3 CYLINDRE & CARTER 3

REF. NO.	PART NO. N° PIECES	DESCRIPTION DESCRIPTION	6BR3	6BS3				REMARKS REMARQUES
1	69J–41111–01–9S	INNER COVER, EXHAUST PLAQUE, ECHAPPEMENT	1	1				
2	69J–41121–01–9S	INNER COVER,EXHAUST PLAQUE, ECHAPPEMENT	1	1				
3	69J–41113–02–9S	OUTER COVER, EXHAUST COUVERCLE, ECHAPPEMENT	1	1				
4	69J–41123–02–9S	OUTER COVER, EXHAUST COUVERCLE, ECHAPPEMENT	1	1				
5	6P2–41112–00	GASKET, EXHAUST INNER COVER JOINT, PLAQUE D'ECHAPPEMENT	1	1				
6	6P2–41122–00	GASKET, EXHAUST INNER COVER JOINT, PLAQUE D'EHAPPEMENT	1	1				
7	6P2–41114–00	GASKET, EXHAUST OUTER COVER JOINT, COUVERCLE D'ECHAPPEMENT	2	2				
8	6P2–11325–00	ANODE ANODE	2	2				
9	6E5–11325–00	ANODE ANODE	2	2				
10	98780–04015	SCREW, FLAT HEAD VIS A TETE FRAISEE	2	2				
11	90151–06M02	SCREW, COUNTERSUNK VIS, TETE NOYEE	2	2				
12	91690–40010	PIN, SPRING AGRAFFE	2	2				
13	90119–06027	BOLT, WITH WASHER BOULON, AVEC RONDELLE	28	28				
14	90340–18M09	PLUG, STRAIGHT SCREW PLOT, FILETE DROIT	2	2				
15	90430–18130	GASKET JOINT	2	2				
16	6P2–11119–00	HANGER, ENGINE ANNEAU, LEVAGE	1	1				
17	6P2–1111E–00	HANGER, ENGINE 2 ANNEAU, LEVAGE 2	1	1				
18	90105–06M09	BOLT, FLANGE BOULON	6	6				
19	90340–14M06	PLUG, STRAIGHT SCREW PLOT, FILETE DROIT	1	1				
20	90430–14115	GASKET JOINT	1	1				
21	6P2–86120–00	SOLENOID VALVE ASSY SOLENOIDE	2	2				
22	6P2–12403–00	.FILTER .ELEMENT	1	1				
23	90119–06MA6	BOLT, WITH WASHER BOULON, AVEC RONDELLE	6	6				
24	6P2–83652–00	CONNECTOR CONNECTEUR	1	1				
25	97095–06030	BOLT BOULON	2	2				
26	92995–06600	WASHER RONDELLE	2	2				
27	6H4–24311–00	PIPE, FUEL 1 DURITE A ESSENCE	1	1				

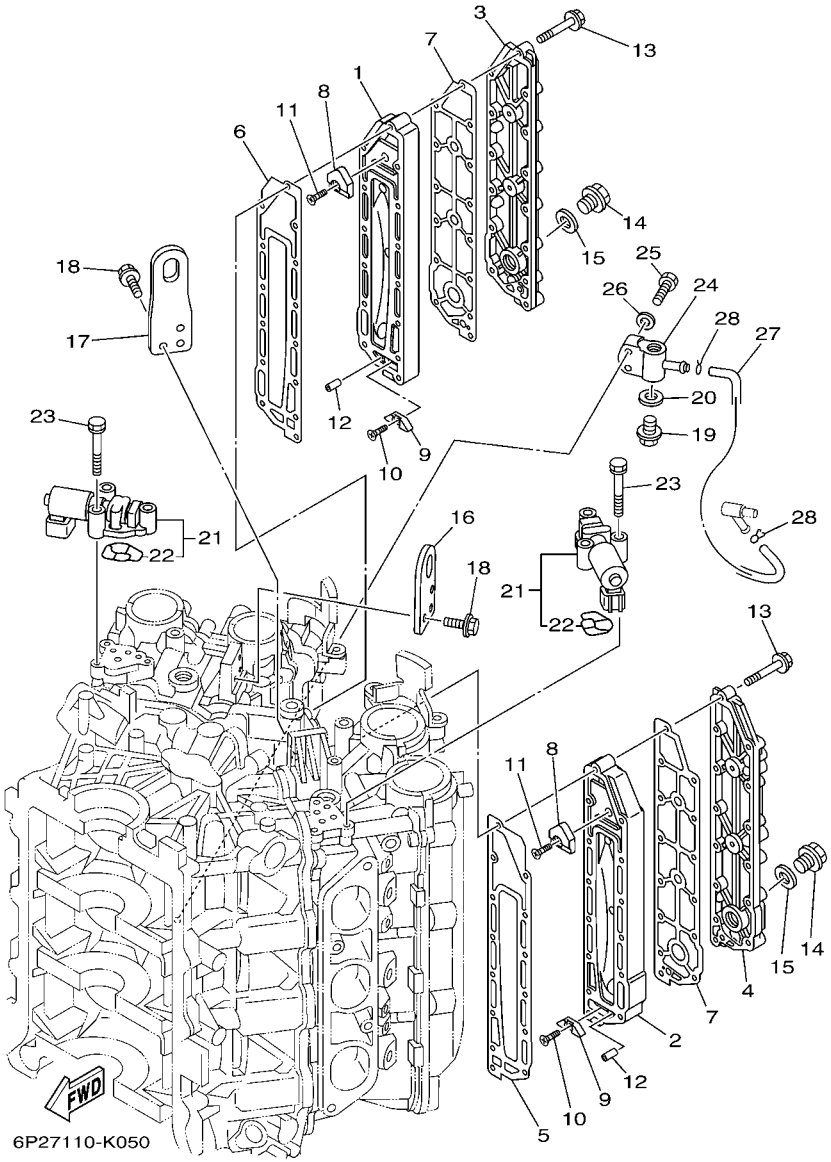

FIG. 5 CYLINDER & CRANKCASE 3 CYLINDRE & CARTER 3

REF. NO.	PART NO. N° PIECES	DESCRIPTION DESCRIPTION	6BR3	6BS3				REMARKS REMARQUES
28	90467–08M18	CLIP JONC	2	2				

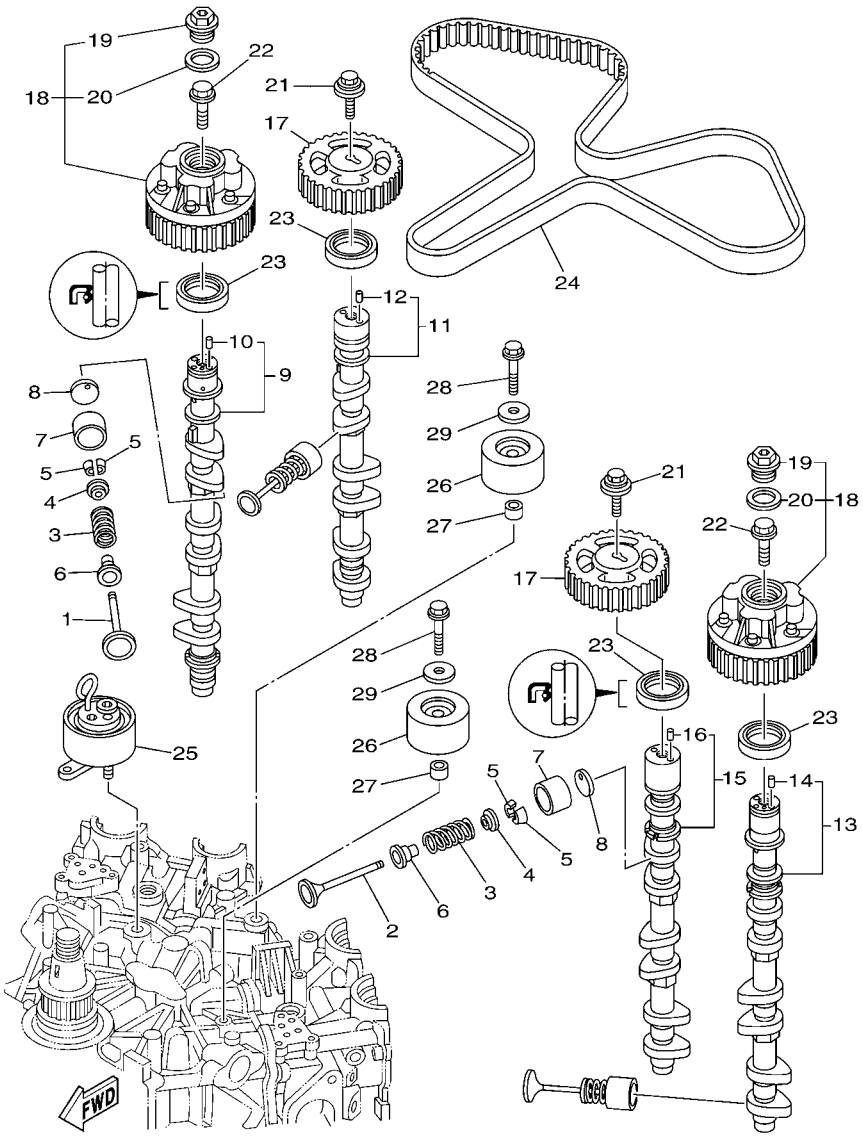

6P24100-G061

FIG. 6 VALVE SOUPAPE

REF. NO.	PART NO. N° PIECES	DESCRIPTION DESCRIPTION	6BR3	6BS3				REMARKS REMARQUES
1	6P2–12111–00	VALVE, INTAKE SOUPAPE, ADMISSION	12	12				
2	6P2–12121–00	VALVE, EXHAUST SOUPAPE, ECHAPPEMENT	12	12				
3	69J–12113–01	SPRING, VALVE INNER RESSORT DE SOUPAPE, INTERNE	24	24				
4	69J–12117–01	RETAINER, VALVE SPRING BUTEE DE RESSORT DE SOUPAPE	24	24				
5	69J–12118–00	COTTER, VALVE FRAISE, SOUPAPE	48	48				
6	69J–12119–00	SEAL, VALVE STEM JOINT, QUEUE DE SOUPAPE	24	24				
7	69J–12153–00	LIFTER, VALVE LEVE-SOUPAPE	24	24				
8	6S1–12168–00	PAD, ADJUSTING (2.320) PASTILLE, REGLAGE (2.320)	24	24				UR UR
	6S1–12168–10	PAD, ADJUSTING (2.340) PASTILLE, REGLAGE (2.340)	24	24				UR UR
	6S1–12168–20	PAD, ADJUSTING (2.360) PASTILLE, REGLAGE (2.360)	24	24				UR UR
	6S1–12168–30	PAD, ADJUSTING (2.380) PASTILLE, REGLAGE (2.380)	24	24				UR UR
	6S1–12168–40	PAD, ADJUSTING (2.400) PASTILLE, REGLAGE (2.400)	24	24				UR UR
	6S1–12168–50	PAD, ADJUSTING (2.420) PASTILLE, REGLAGE (2.420)	24	24				UR UR
	6S1–12168–60	PAD, ADJUSTING (2.440) PASTILLE, REGLAGE (2.440)	24	24				UR UR
	6S1–12168–70	PAD, ADJUSTING (2.460) PASTILLE, REGLAGE (2.460)	24	24				UR UR
	6S1–12168–80	PAD, ADJUSTING (2.480) PASTILLE, REGLAGE (2.480)	24	24				UR UR
	6S1–12168–90	PAD, ADJUSTING (2.500) PASTILLE, REGLAGE (2.500)	24	24				UR UR
	6S1–12168–A0	PAD, ADJUSTING (2.520) PASTILLE, REGLAGE (2.520)	24	24				UR UR
	6S1–12168–B0	PAD, ADJUSTING (2.540) PASTILLE, REGLAGE (2.540)	24	24				UR UR
	6S1–12168–C0	PAD, ADJUSTING (2.560) PASTILLE, REGLAGE (2.560)	24	24				UR UR
	6S1–12168–D0	PAD, ADJUSTING (2.580) PASTILLE, REGLAGE (2.580)	24	24				UR UR
	6S1–12168–E0	PAD, ADJUSTING (2.600) PASTILLE, REGLAGE (2.600)	24	24				UR UR
	6S1–12168–F0	PAD, ADJUSTING (2.620) PASTILLE, REGLAGE (2.620)	24	24				UR UR
	6S1–12168–G0	PAD, ADJUSTING (2.640) PASTILLE, REGLAGE (2.640)	24	24				UR UR
	6S1–12168–H0	PAD, ADJUSTING (2.660) PASTILLE, REGLAGE (2.660)	24	24				UR UR
	6S1–12168–J0	PAD, ADJUSTING (2.680) PASTILLE, REGLAGE (2.680)	24	24				UR UR
	6S1–12168–K0	PAD, ADJUSTING (2.700) PASTILLE, REGLAGE (2.700)	24	24				UR UR

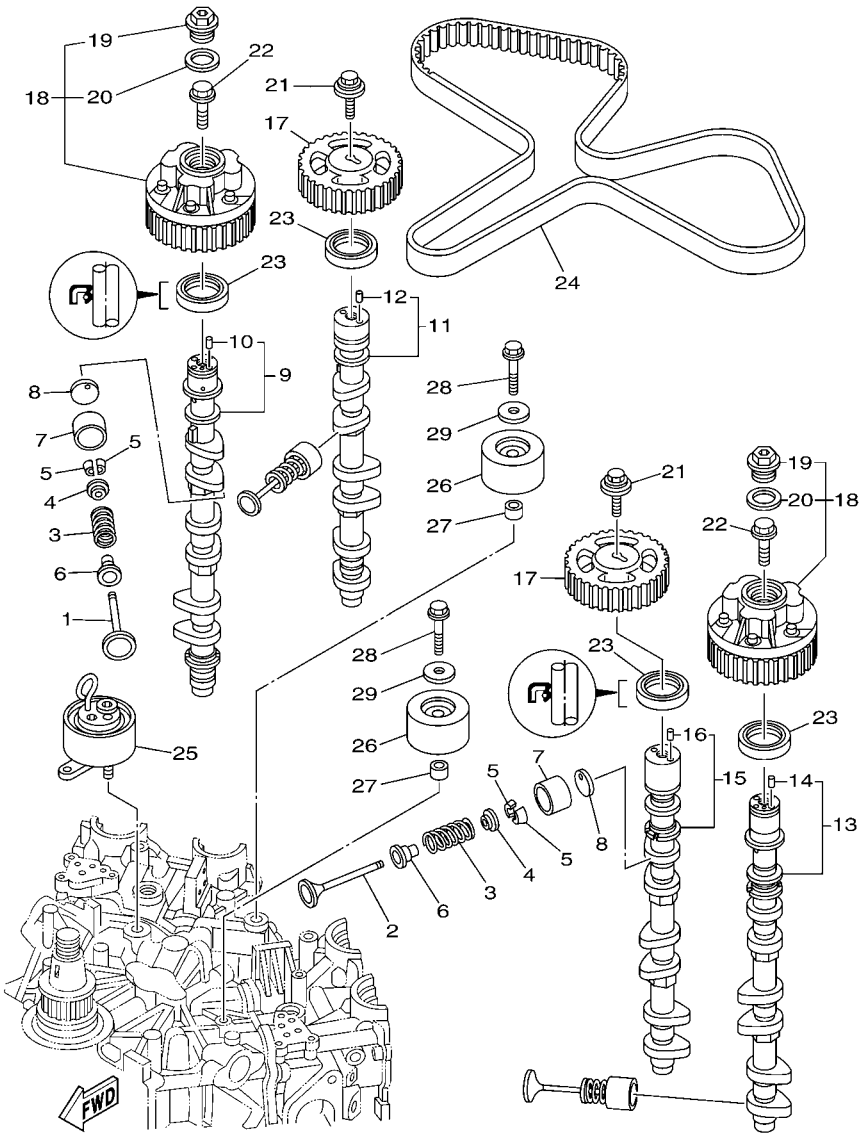

6P24100-G061

FIG. 6 VALVE SOUPAPE

REF. NO.	PART NO. N° PIECES	DESCRIPTION DESCRIPTION	6BR3	6BS3				REMARKS REMARQUES
8	6S1–12168–L0	PAD, ADJUSTING (2.720) PASTILLE, REGLAGE (2.720)	24	24				UR UR
	6S1–12168–M0	PAD, ADJUSTING (2.740) PASTILLE, REGLAGE (2.740)	24	24				UR UR
	6S1–12168–N0	PAD, ADJUSTING (2.760) PASTILLE, REGLAGE (2.760)	24	24				UR UR
	6S1–12168–P0	PAD, ADJUSTING (2.780) PASTILLE, REGLAGE (2.780)	24	24				UR UR
	6S1–12168–R0	PAD, ADJUSTING (2.800) PASTILLE, REGLAGE (2.800)	24	24				UR UR
	6S1–12168–S0	PAD, ADJUSTING (2.820) PASTILLE, REGLAGE (2.820)	24	24				UR UR
	6S1–12168–T0	PAD, ADJUSTING (2.840) PASTILLE, REGLAGE (2.840)	24	24				UR UR
	6S1–12168–U0	PAD, ADJUSTING (2.860) PASTILLE, REGLAGE (2.860)	24	24				UR UR
	6S1–12168–V0	PAD, ADJUSTING (2.880) PASTILLE, REGLAGE (2.880)	24	24				UR UR
	6S1–12168–W0	PAD, ADJUSTING (2.900) PASTILLE, REGLAGE (2.900)	24	24				UR UR
	6S1–12168–X0	PAD, ADJUSTING (2.920) PASTILLE, REGLAGE (2.920)	24	24				UR UR
	6S1–12168–Y0	PAD, ADJUSTING (2.940) PASTILLE, REGLAGE (2.940)	24	24				UR UR
	6S1–12169–00	PAD, ADJUSTING (2.960) PASTILLE, REGLAGE (2.960)	24	24				UR UR
9	6P2–12171–02	CAMSHAFT 1 ARBRE A CAMES 1	1	1				
10	93605–10108	.PIN, DOWEL .AXE	1	1				
11	6P2–12181–01	CAMSHAFT 2 ARBRE A CAMES 2	1	1				
12	93605–10108	.PIN, DOWEL .AXE	1	1				
13	6P2–12172–02	CAMSHAFT 3 ARBRE A CAMES 3	1	1				
14	93605–10108	.PIN, DOWEL .AXE	1	1				
15	6P2–12182–01	CAMSHAFT 4 ARBRE A CAMES 4	1	1				
16	93605–10108	.PIN, DOWEL .AXE	1	1				
17	6P2–11537–01	GEAR, DRIVEN PIGNON SECONDAIRE	2	2				
18	6P2–12645–10	PULLEY ASSY 1 POULIE COMPLET 1	2	2				
19	6P2–12623–00	.BOLT .BOULON	1	1				
20	6P2–12663–00	.GASKET .JOINT	1	1				
21	68V–12157–00	BOLT BOULON	2	2				
22	6P2–12615–00	BOLT BOULON	2	2				

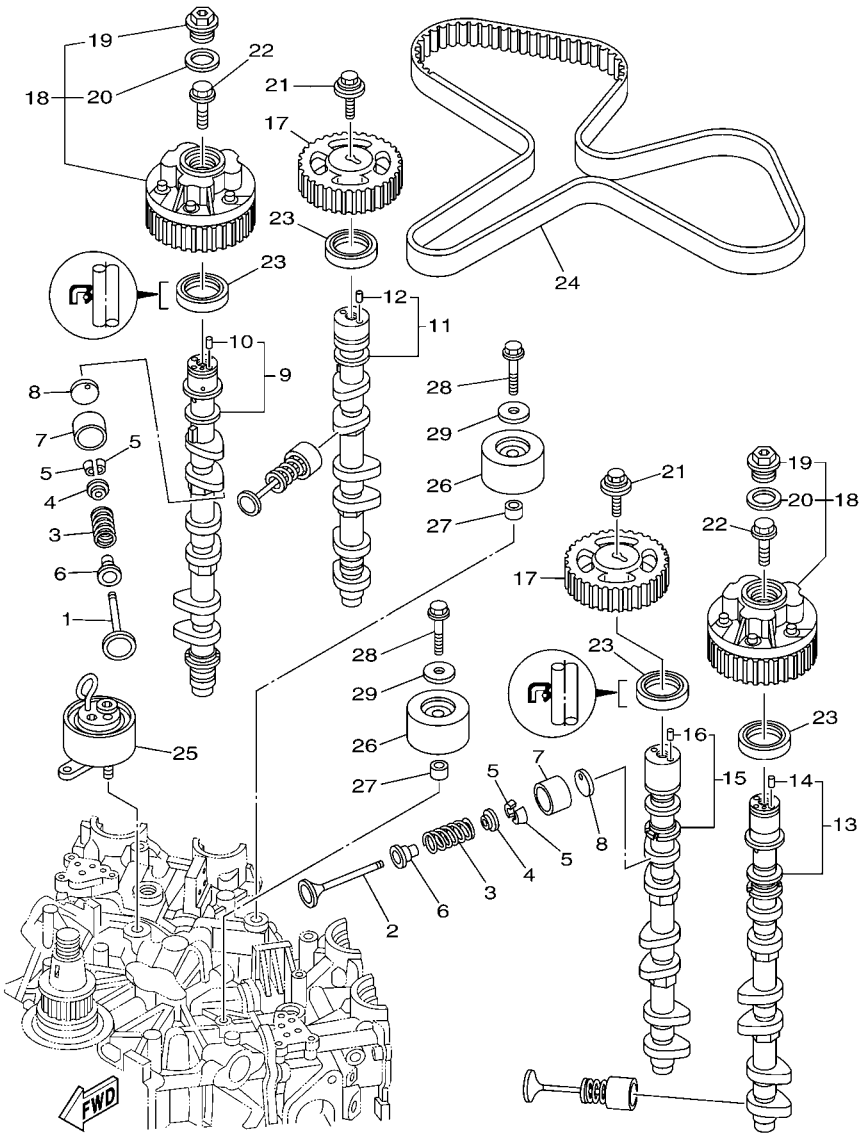

6P24100-G061

FIG. 6 VALVE SOUPAPE

REF. NO.	PART NO. N° PIECES	DESCRIPTION DESCRIPTION	6BR3	6BS3				REMARKS REMARQUES
23	93102–38008	OIL SEAL JOINT SPY	4	4				
24	6P2–46241–00	BELT COURROIE TRAPEZOIDALE	1	1				
25	6P2–11590–00	TENSIONER ASSY TENDEUR (ENS.)	1	1				
26	6P2–15512–00	GEAR, IDLER 1 PIGNON, INTERMEDIAIRE 1	2	2				
27	90387–10M08	COLLAR COLLERETTE	2	2				
28	90119–10M07	BOLT, WITH WASHER BOULON, AVEC RONDELLE	2	2				
29	90201–10M01	WASHER, PLATE RONDELLE, PLATE	2	2				

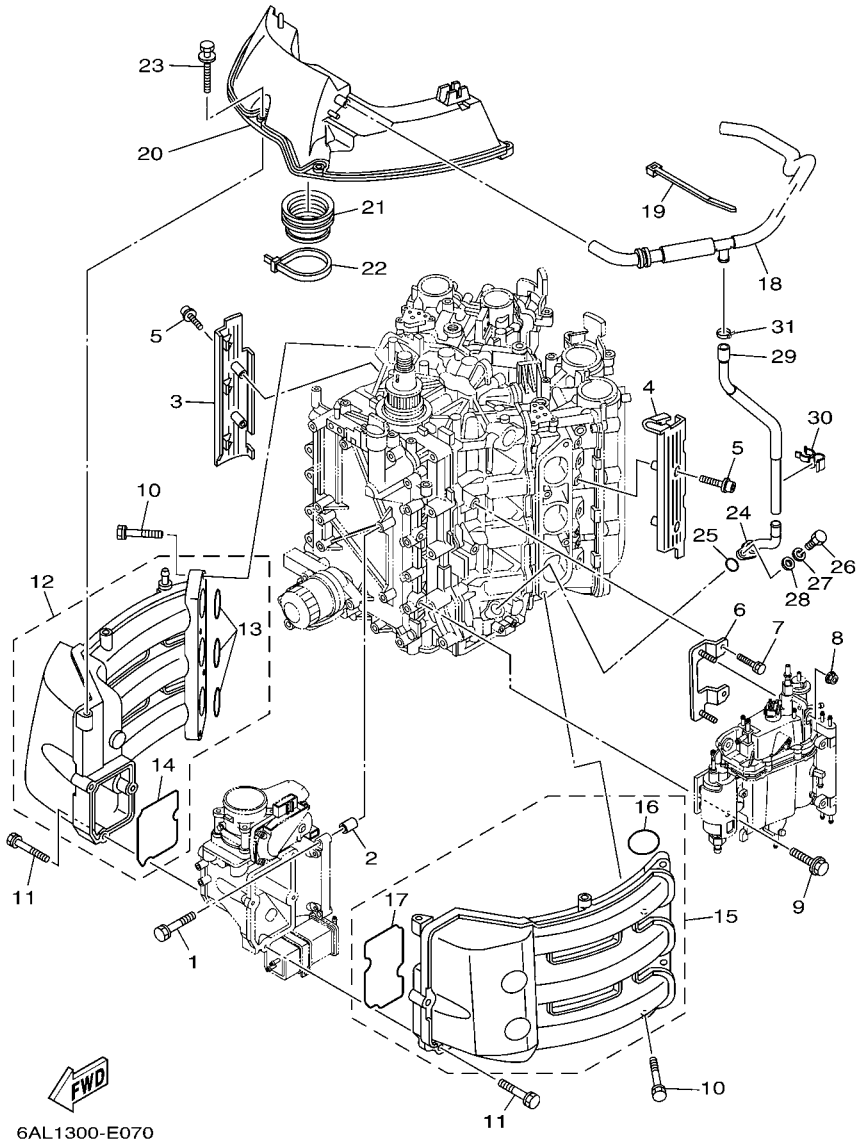

FIG. 7 INTAKE 1 — ADMISSION 1

REF. NO.	PART NO. N° PIECES	DESCRIPTION DESCRIPTION	6BR3	6BS3				REMARKS REMARQUES
1	97575–08540	BOLT, WITH WASHER VIS HEXAGONAL AVC RONDELLE	4	4				
2	99530–10114	PIN, DOWEL GOUJON, D'ASSEMBLAGE	2	2				
3	6P2–13564–00	COVER, MANIFOLD COUVERCLE, TUBULURE	1	1				
4	6P2–13594–00	COVER, MANIFOLD 2 COUVERCLE, TUBULURE 2	1	1				
5	90110–06038	BOLT, HEXAGON SOCKET HEAD BOULON, TETE HEXAGONALE CREUSE	4	4				
6	6P2–24422–00	PLATE PLAQUETTE	1	1				
7	97575–06516	BOLT, WITH WASHER VIS HEXAGONAL AVC RONDELLE	2	2				
8	90179–06M28	NUT ECROU	2	2				
9	90119–06M24	BOLT, WITH WASHER BOULON, AVEC RONDELLE	2	2				
10	97575–08540	BOLT, WITH WASHER VIS HEXAGONAL AVC RONDELLE	8	8				
11	90119–06MA6	BOLT, WITH WASHER BOULON, AVEC RONDELLE	7	7				
12	6P2–13641–00	MANIFOLD 1 TUBULURE 1	1	1				
13	6P2–13645–00	.GASKET, MANIFOLD 1 .JOINT, TUBULURE 1	3	3				
14	6P2–13646–00	.GASKET, MANIFOLD 2 .JOINT, TUBULURE 2	1	1				
15	6P2–13642–00	MANIFOLD 2 TUBULURE 2	1	1				
16	6P2–13645–00	.GASKET, MANIFOLD 1 .JOINT, TUBULURE 1	3	3				
17	6P2–13647–00	.GASKET, MANIFOLD 3 .JOINT, TUBULURE 3	1	1				
18	6P2–15373–01	PIPE, BREATHER DURITE DE RENIFLARD	1	1				
19	90465–13M18	CLAMP BRIDE	1	1				
20	6P2–14440–00	SILENCER ASSY, INTAKE SIENCIEUX D'ADMISSION	1	1				
21	6P2–1441J–00	PIPE, SILENCER DURITE, DE SILENCIEUX	1	1				
22	90464–99004	CLAMP BRIDE	1	1				
23	90119–06M35	BOLT, WITH WASHER BOULON, AVEC RONDELLE	4	4				
24	6P2–11372–00	NIPPLE, HOSE RACCORD, TUYAU	1	1				
25	93210–19MJ3	O-RING JOINT TORIQUE	1	1				
26	97095–06020	BOLT BOULON	1	1				
27	92995–06100	WASHER, SPRING RONDELLE, GROWER	1	1				

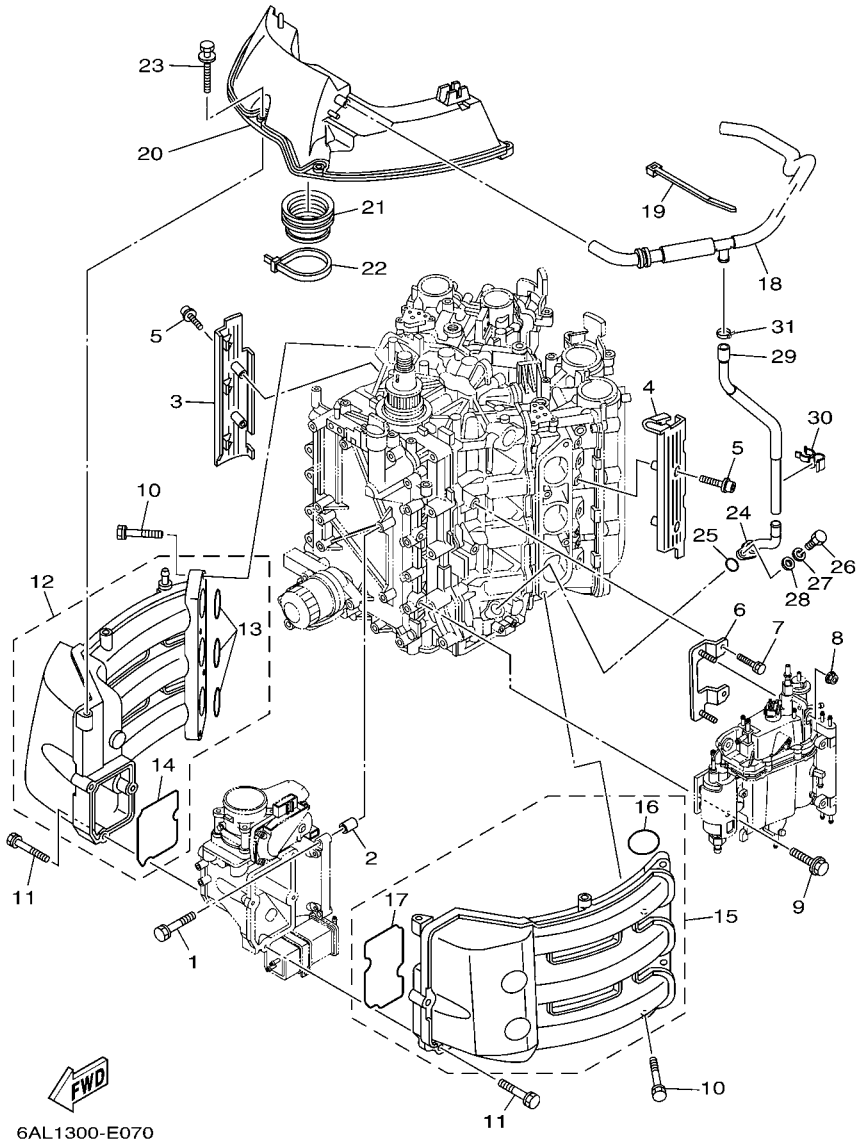

FIG. 7 INTAKE 1 — ADMISSION 1

REF. NO.	PART NO. N° PIECES	DESCRIPTION DESCRIPTION	6BR3	6BS3				REMARKS REMARQUES
28	92995–06600	WASHER RONDELLE	1	1				
29	6P2–11377–00	HOSE DURITE	1	1				
30	90464–20011	CLAMP BRIDE	1	1				
31	90465–11M10	CLAMP BRIDE	1	1				

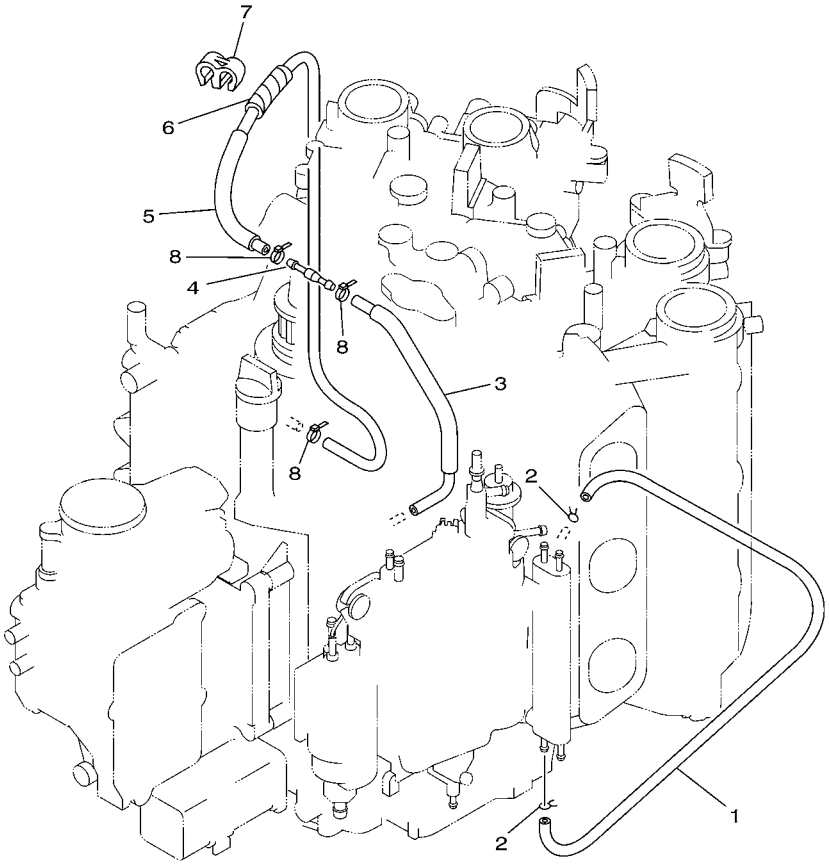

6P21110-D081

FIG. 8 INTAKE 2 — ADMISSION 2

REF. NO.	PART NO. N° PIECES	DESCRIPTION DESCRIPTION	6BR3	6BS3				REMARKS REMARQUES
1	90445–09120	HOSE (L600) DURITE (L600)	1	1				
2	90467–09M03	CLIP JONC	2	2				
3	6P2–12482–00	PIPE 2 DURITE 2	1	1				
4	6E5–21744–00	BREATHER RENIFLARD	1	1				
5	6P2–12483–00	PIPE 3 DURITE 3	1	1				
6	90446–10M01	HOSE (L60) DURITE (L60)	1	1				
7	90464–09M21	CLAMP BRIDE	1	1				
8	90465–11M10	CLAMP BRIDE	3	3				

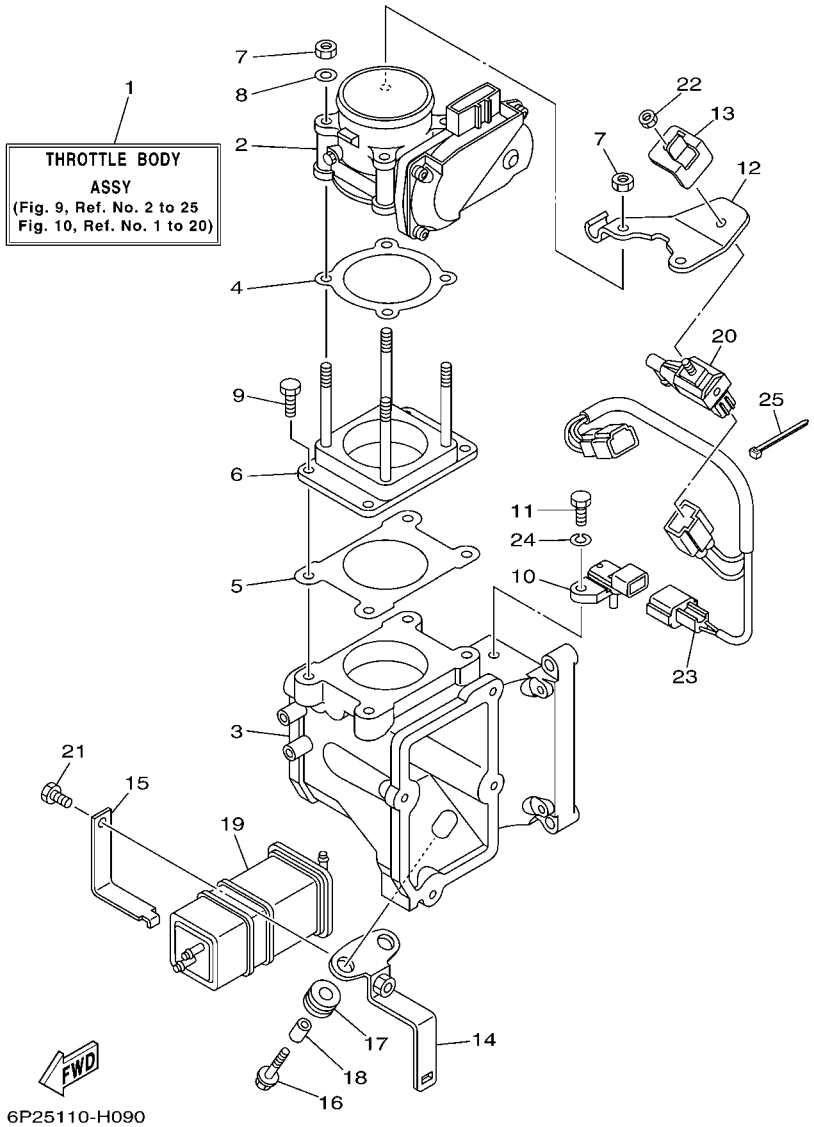

FIG. 9 THROTTLE BODY ASSY 1 CARTER D'ACCELERATEUR 1

REF. NO.	PART NO. N° PIECES	DESCRIPTION DESCRIPTION	6BR3	6BS3				REMARKS REMARQUES
1	6P2–13750–00	THROTTLE BODY ASSY CARTER D'ACCELERATEUR COMPLET	1	1				
2	6P2–13751–00	BODY, THROTTLE 1 CARTER 1	1	1				
3	6P2–13711–00	MIXING BODY CHAMBRE DE MELANGE	1	1				
4	6P2–13556–00	GASKET, MANIFOLD JOINT, TUBULURE	1	1				
5	6P2–13557–00	GASKET JOINT	1	1				
6	6P2–14360–00	THROTTLE DAMPER ASSY AMORIISSEUR D'ACCELERATEUR	1	1				
7	6P2–13588–00	NUT ECROU	4	4				
8	6P2–13578–00	WASHER RONDELLE	2	2				
9	6P2–14496–00	BOLT BOULON	4	4				
10	6P2–82380–00	SENSOR, PRESSURE SONDE DE PRESSION	1	1				
11	6P2–13573–00	BOLT 1 BOULON 1	1	1				
12	6P2–14255–00	PLATE PLAQUE	1	1				
13	6P2–14159–00	CLIP JONC	1	1				
14	6P2–2134X–00	BRACKET, CANISTER SUPPORT	1	1				
15	6P2–2419A–00	HOLDER SUPPORT	1	1				
16	90119–06M59	BOLT, WITH WASHER BOULON, AVEC RONDELLE	2	2				
17	90480–10M23	GROMMET PASSE-FIL	2	2				
18	90387–06M60	COLLAR COLLERETTE	2	2				
19	6P2–24170–00	CANISTER ASSY BANDE, RASERVOIR A ESSENCE	1	1				
20	6C5–86120–00	SOLENOID VALVE ASSY SOLENOIDE	1	1				
21	6P2–13574–00	BOLT 2 BOULON 2	1	1				
22	69J–14164–00	NUT, HOLDING ECROU, FIXATION	1	1				
23	6P2–8258A–00	EXTENSION, WIRE HARNESS EXTENSION, FAISCEAU DE FILS	1	1				
24	68V–14356–00	WASHER, SPRING RONDELLE	1	1				
25	68V–2481H–00	CLAMP BRIDE	1	1				

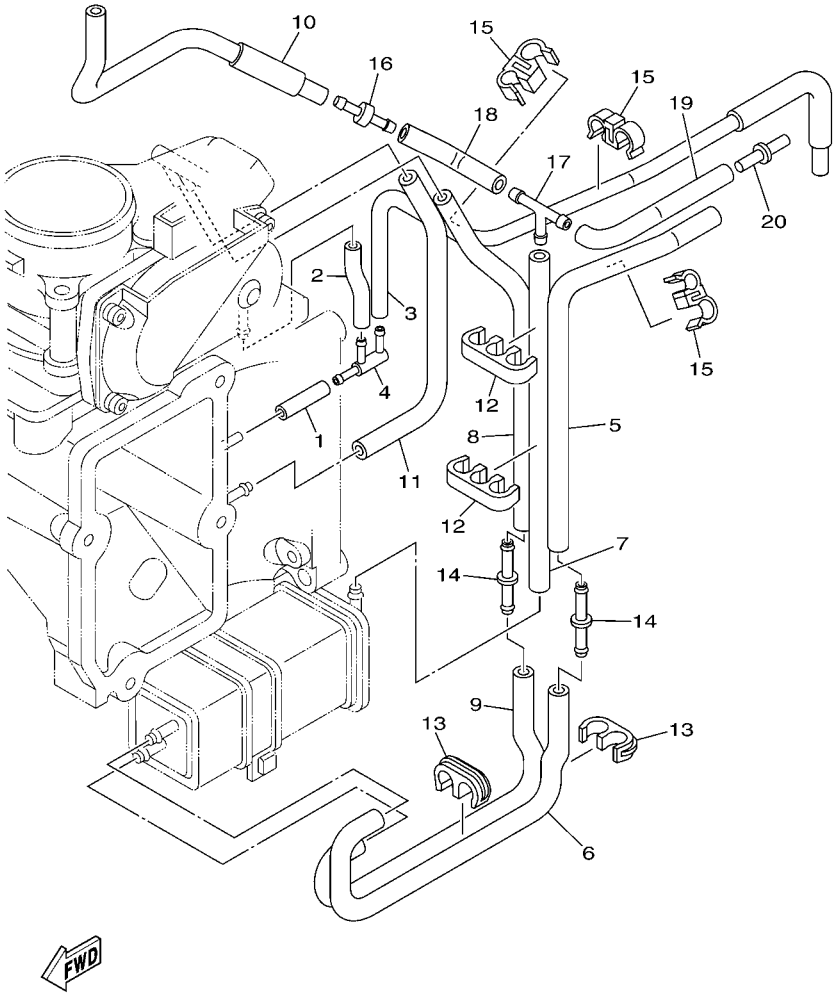

FIG. 10 THROTTLE BODY ASSY 2 CARTER D'ACCELERATEUR 2

REF. NO.	PART NO. N° PIECES	DESCRIPTION DESCRIPTION	6BR3	6BS3				REMARKS REMARQUES
1	6P2–14349–00	PIPE DURITE	1	1				
2	6P2–13533–00	HOSE, VACUUM SENSING 4 DURITE 4	1	1				
3	6P2–13532–00	HOSE, VACUUM SENSING 3 DURITE 3	1	1				
4	6P2–13595–00	JOINT RACCORD	1	1				
5	6P2–1475A–00	PIPE 1 DURITE 1	1	1				
6	6P2–1475E–00	PIPE 2 DURITE	1	1				
7	6P2–13545–00	HOSE 1 DURITE 1	1	1				
8	6P2–1475F–00	PIPE 3 DURITE 3	1	1				
9	6P2–1475G–00	PIPE 4 DURITE 4	1	1				
10	6P2–13546–00	HOSE 2 DURITE 2	1	1				
11	6P2–2416A–00	HOSE DURITE	1	1				
12	6P2–24135–00	CLAMP 1 COLLIER 1	2	2				
13	6P2–24136–00	CLAMP 2 COLLIER 2	2	2				
14	6P2–13758–00	PIPE, JOINT DURITE	2	2				
15	6P2–24137–00	CLAMP 3 COLLIER 3	3	3				
16	6E5–21744–00	BREATHER RENIFLARD	1	1				
17	688–24378–00	PIPE, JOINT 3 DURITE RACCORDEMENT 3	1	1				
18	6P2–13547–00	HOSE 3 DURITE 3	1	1				
19	6P2–13548–00	HOSE, AIR 4 DURITE, A AIR 4	1	1				
20	6P2–24376–00	PIPE, JOINT 1 DURITE 1, RACCORDEMENT	1	1				

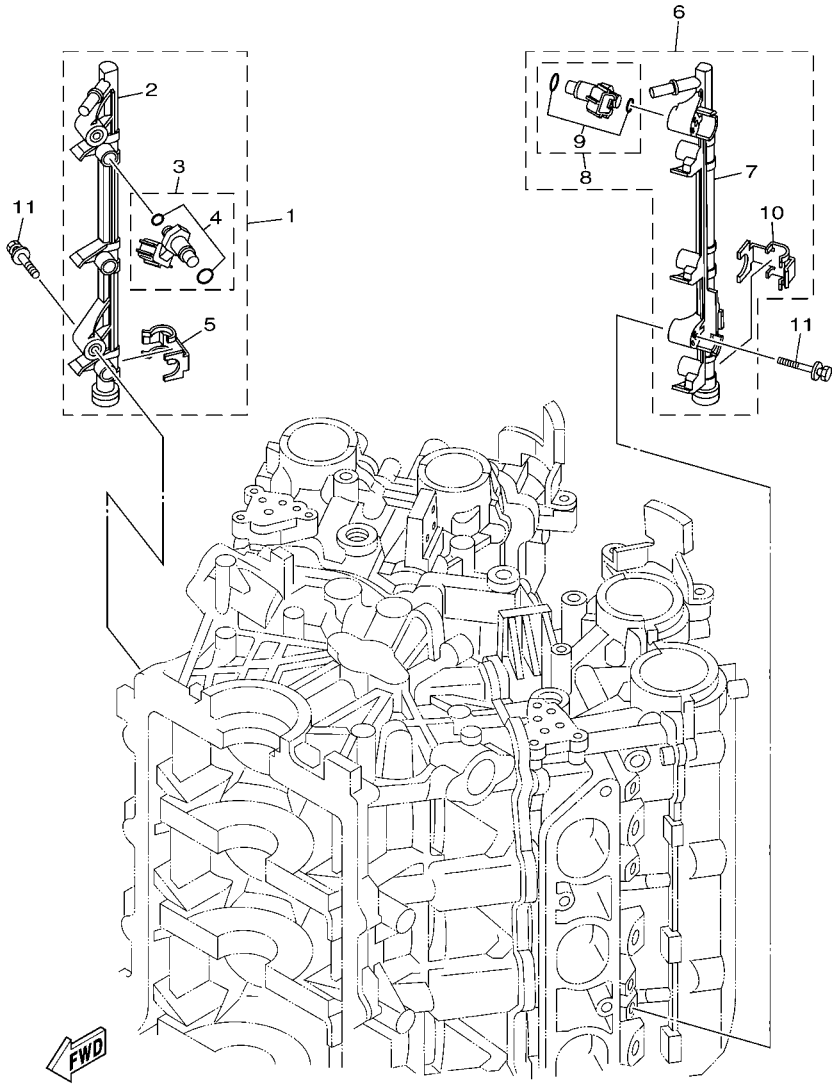

6P23100-F110

FIG. 11 THROTTLE BODY ASSY 3 CARTER D'ACCELERATEUR 3

REF. NO.	PART NO. N° PIECES	DESCRIPTION DESCRIPTION	6BR3	6BS3				REMARKS REMARQUES
1	6P2–13160–10	DELIVERY PIPE ASSY 1 ENS. TUBE DE REFOULEMENT 1	1	1				
2	6P2–13161–00	.PIPE, DELIVERY 1 .DURITE REFOULEMENT 1	1	1				
3	6P2–13761–10	.INJECTOR .INJECTEUR	3	3				
4	6C5–1410B–00	..PACKING KIT ..POCHETTE DE JOINTS	1	1				
5	6P2–13577–00	.CLIP .AGRAFE	3	3				
6	6P2–13170–10	DELIVERY PIPE ASSY 2 ENS. TUBE DE REFOULEMENT 2	1	1				
7	6P2–13171–00	.PIPE, DELIVERY 2 .DURITE REFOULEMENT	1	1				
8	6P2–13761–10	.INJECTOR .INJECTEUR	3	3				
9	6C5–1410B–00	..PACKING KIT ..POCHETTE DE JOINTS	1	1				
10	6P2–13577–00	.CLIP .AGRAFE	3	3				
11	90119–06122	BOLT, WITH WASHER BOULON, AVEC RONDELLE	4	4				

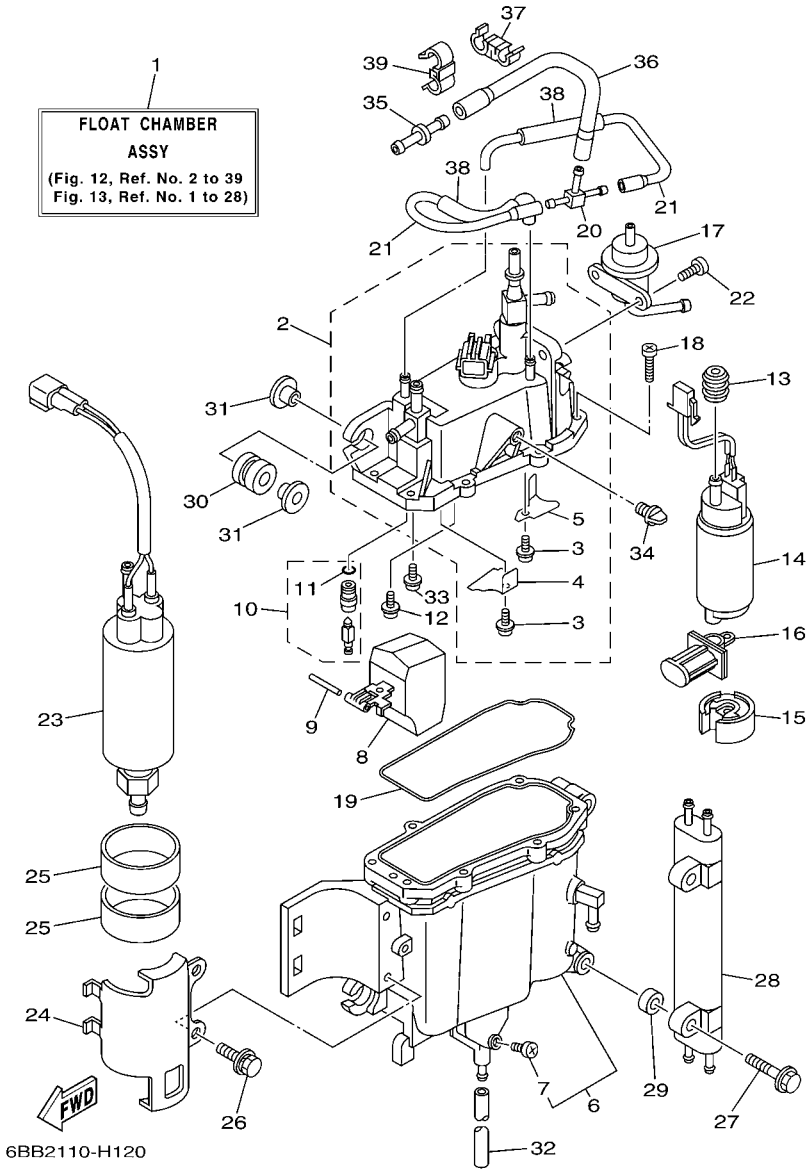

FIG. 12 FUEL INJECTION PUMP 1 POMPE A INJECTEUR 1

REF. NO.	PART NO. N° PIECES	DESCRIPTION DESCRIPTION	6BR3	6BS3				REMARKS REMARQUES
1	6P2–14180–04	FLOAT CHAMBER ASSY CUVE DE FLOTTEUR	1	1				
2	6P2–14182–00	COVER, FLOAT CHAMBER COUVERCLE, CUVE DE FLOTTEUR	1	1				
3	4SV–24453–00	.SCREW .VIS	2	2				
4	6P2–2411T–00	.PLATE 2 .PLAQUE 2	1	1				
5	63P–2411R–00	.PLATE 1 .PLAQUE 1	1	1				
6	6P2–14181–00	BODY, FLOAT CHAMBER 1 CORPS, CUVE DE FLOTTEUR 1	1	1				
7	6P2–14191–00	.PLUG, DRAIN .PLOT, VIDANGE	1	1				
8	6P2–14985–00	FLOAT FLOTTEUR	1	1				
9	6P2–14386–00	PIN, FLOAT AXE, FLOTTEUR	1	1				
10	6P2–14546–00	VALVE, NEEDLE POINTEAU	1	1				
11	6P2–13769–00	.O-RING .JOINT TORIQUE	1	1				
12	4SV–24453–00	SCREW VIS	1	1				
13	68V–13781–10	DAMPER, PUMP AMORTISSEUR, POMPE	1	1				
14	6P2–13907–00	FUEL PUMP COMP. POMPE A CARBURANT COMP.	1	1				
15	63P–13784–00	COVER, PUMP COUVERCLE, POMPE	1	1				
16	63P–13915–00	FILTER FILTRE	1	1				
17	6P2–13906–00	REGULATOR, PRESSURE REGULATEUR DE PRESSION	1	1				
18	63P–14567–00	SCREW VIS	7	7				
19	6P2–14984–00	GASKET, FLOAT CHAMBER JOINT, CUVE DE FLOTTEUR	1	1				
20	69J–24379–00	PIPE, JOINT 4 DURITE RACCORDEMENT 4	1	1				
21	63P–14148–00	PIPE DURITE	2	2				
22	68V–14564–00	SCREW VIS	2	2				
23	69J–24410–02	FUEL PUMP ASSY POMPE A ESSENCE	1	1				
24	6P2–24491–00	BRACKET, FUEL PUMP SUPPORT, POMPE A ESSENCE	1	1				
25	69J–24492–00	BUSH, FUEL PUMP BAGUE	2	2				
26	6P2–24592–00	BOLT BOLTE	2	2				
27	6P2–14446–00	BOLT BOULON	2	2				

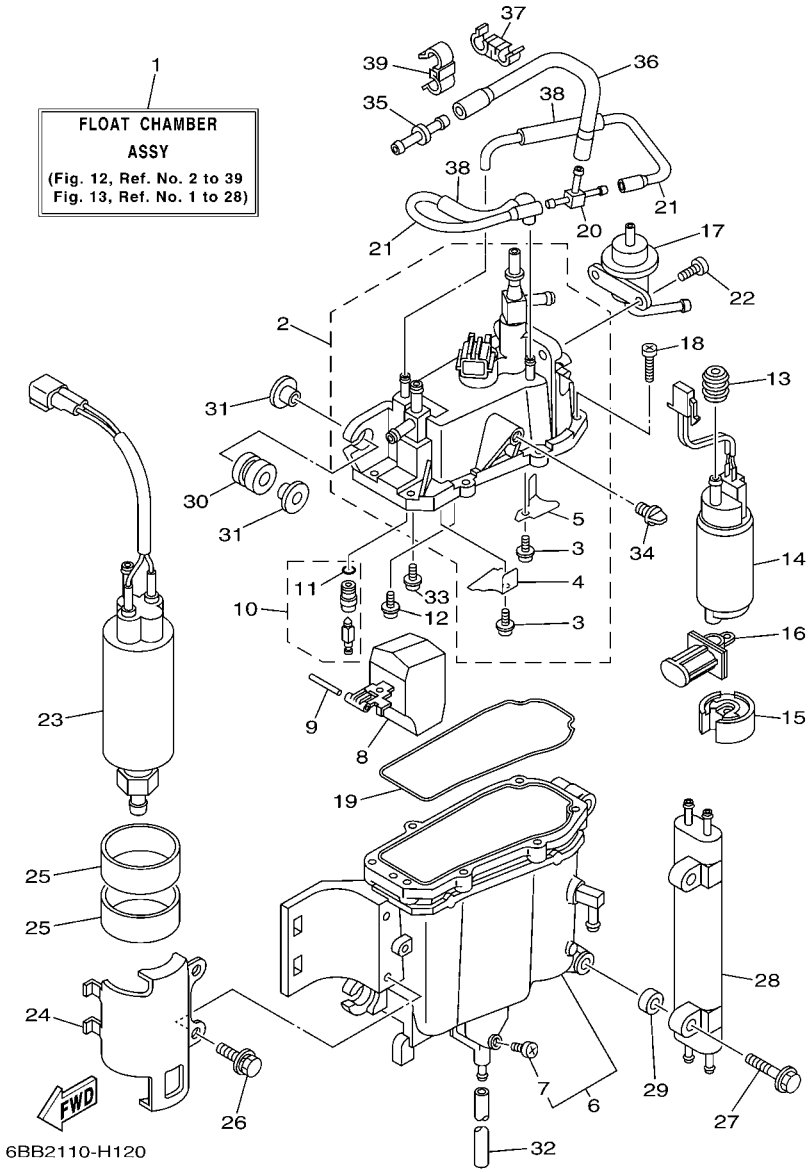

FIG. 12 FUEL INJECTION PUMP 1 POMPE A INJECTEUR 1

REF. NO.	PART NO. N° PIECES	DESCRIPTION DESCRIPTION	6BR3	6BS3				REMARKS REMARQUES
28	69J–21841–02	COOLER RADIATEUR	1	1				
29	68V–14265–00	COLLAR COLLERETTE	2	2				
30	69J–13593–00	DAMPER AMORTISSEUR	4	4				
31	69J–13716–00	COLLAR COLLERETTE	8	8				
32	6P2–14149–00	PIPE DURITE	1	1				
33	98507–04008	SCREW, PAN HEAD VIS, TETE TRONCONIQUE	1	1				
34	69J–14225–01	CAP COUVERCLE	1	1				
35	6P2–1410F–00	NIPPLE 1 RACCORD 1	1	1				
36	6P2–14197–00	PIPE DURITE	1	1				
37	6P2–2417J–00	CLAMP 2 COLLIER 2	1	1				
38	6P2–24321–00	PIPE 10 DURITE 10	2	2				
39	6P2–2417K–00	CLAMP 3 COLLIER 3	1	1				

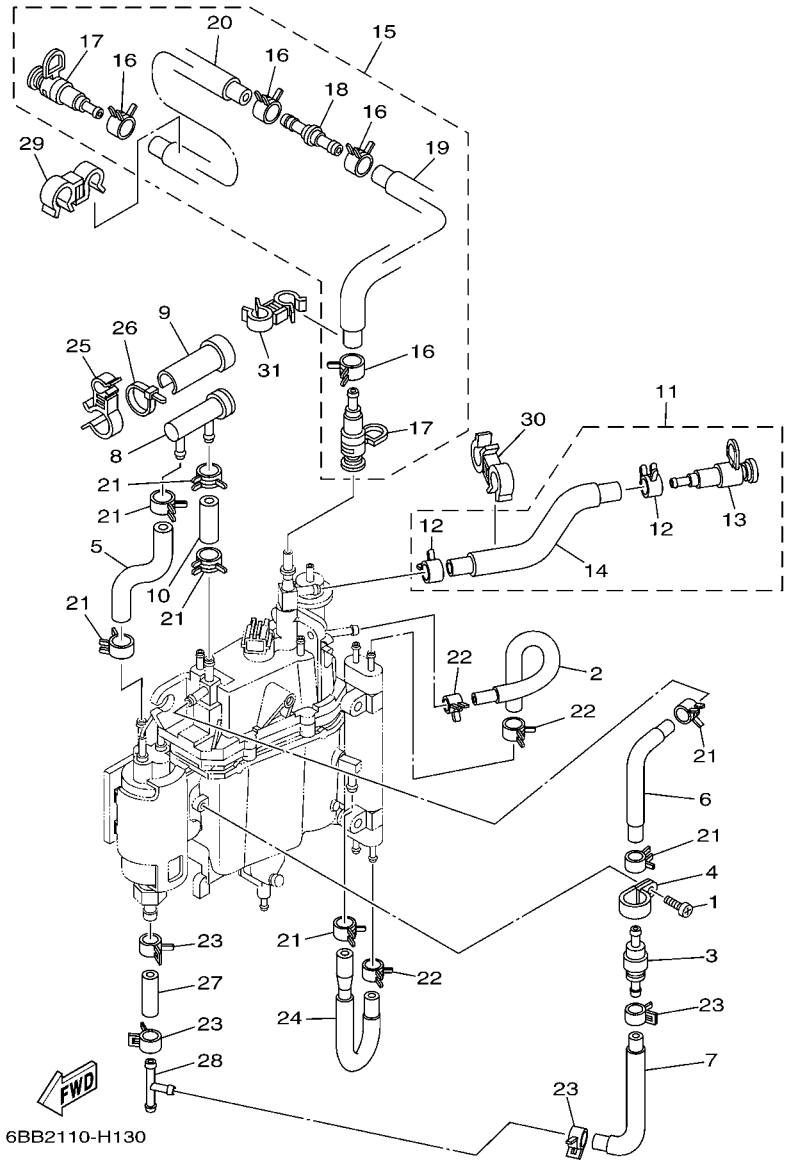

FIG. 13 FUEL INJECTION PUMP 2 POMPE A INJECTEUR 2

REF. NO.	PART NO. N° PIECES	DESCRIPTION DESCRIPTION	6BR3	6BS3				REMARKS REMARQUES
1	98580–05008	SCREW, PAN HEAD VIS	1	1				
2	6P2–13976–00	PIPE, FUEL 6 TUBE 6, CARBURANT	1	1				
3	69J–24460–00	RELIEF VALVE ASSY SOUPAPE DE SECURITE COMPLET	1	1				
4	6P2–24367–00	CLAMP, FUEL PIPE 2 COLLIER DE DURITE A ESSENCE	1	1				
5	6P2–24324–00	PIPE 13 DURITE 13	1	1				
6	6P2–24322–00	PIPE 11 DURITE 11	1	1				
7	6P2–24323–00	PIPE 12 DURITE 12	1	1				
8	69J–24501–10	FILTER, FUEL FILTRE	1	1				
9	69J–24599–10	CAP CAPUCHON	1	1				
10	69J–24325–00	PIPE 14 DURITE 14	1	1				
11	6P2–1257A–10	HOSE ASSY 1 ENS. MANGUERA 1	1	1				
12	68V–13577–00	.CLIP .AGRAFE	2	2				
13	60E–24300–01	.FUEL PIPE JOINT .DURITE RACCORDEMT. A ESSENCE	1	1				
14	6P2–13974–10	.PIPE, FUEL 4 .TUBE 4, CARBURANT	1	1				
15	6P2–1257E–10	HOSE ASSY 2 ENS. MANGUERA 2	1	1				
16	68V–13577–00	.CLIP .AGRAFE	4	4				
17	60E–24300–01	.FUEL PIPE JOINT .DURITE RACCORDEMT. A ESSENCE	2	2				
18	6P2–24461–10	.PIPE, JOINT .DURITE, RACCORDEMENT	1	1				
19	6P2–13973–10	.PIPE, FUEL 3 .TUBE 3, CARBURANT	1	1				
20	6P2–13972–10	.PIPE, FUEL 2 .TUBE 2, CARBURANT	1	1				
21	68V–13577–00	CLIP AGRAFE	7	7				
22	68V–24519–00	CLIP JONC	3	3				
23	69J–14137–00	CLIP JONC	4	4				
24	6P2–24315–00	PIPE 5 DURITE 5	1	1				
25	6P2–2417H–00	CLAMP 1 COLLIER 1	1	1				
26	68V–2481H–00	CLAMP BRIDE	1	1				
27	6P2–24317–00	PIPE 7 DURITE 7	1	1				

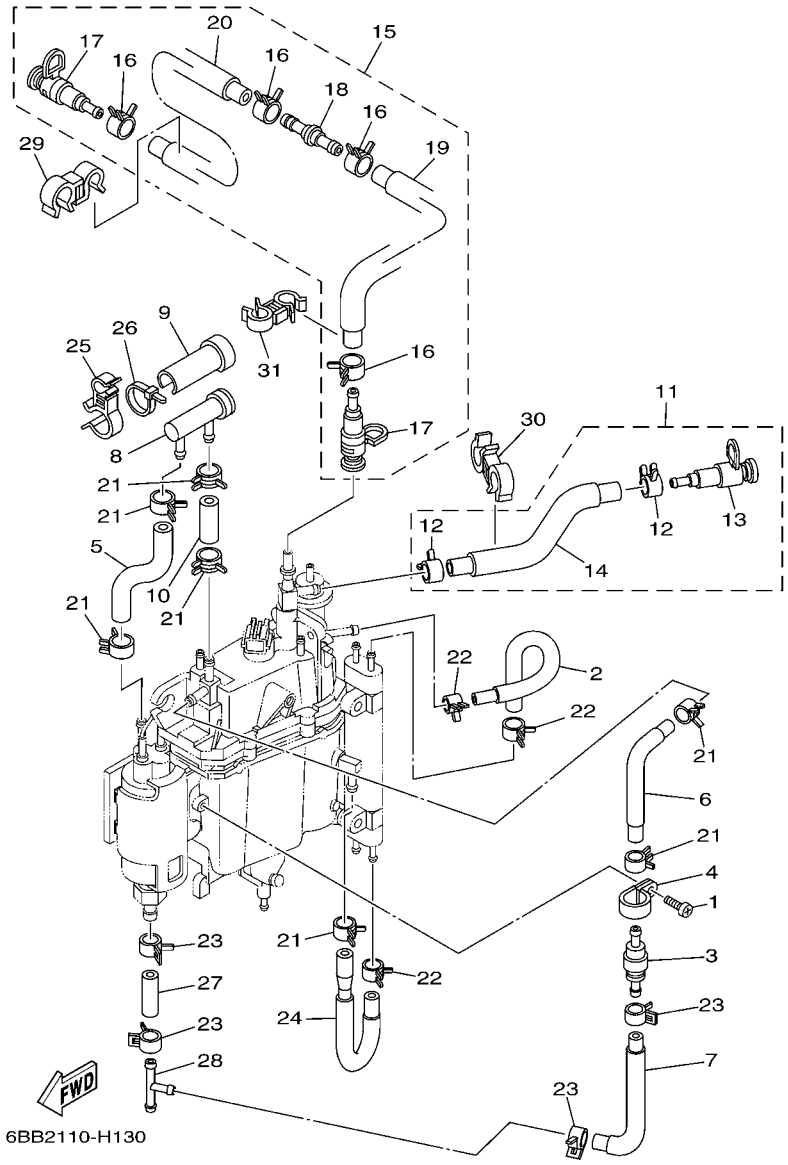

FIG. 13 FUEL INJECTION PUMP 2 POMPE A INJECTEUR 2

REF. NO.	PART NO. N° PIECES	DESCRIPTION DESCRIPTION	6BR3	6BS3				REMARKS REMARQUES
28	6E5–24378–00	PIPE, JOINT 3 DURITE, RACCORDEMENT 3	1	1				
29	90464–12010	CLAMP BRIDE	1	1				
30	90464–18005	CLAMP BRIDE	1	1				
31	90464–12009	CLAMP BRIDE	1	1				

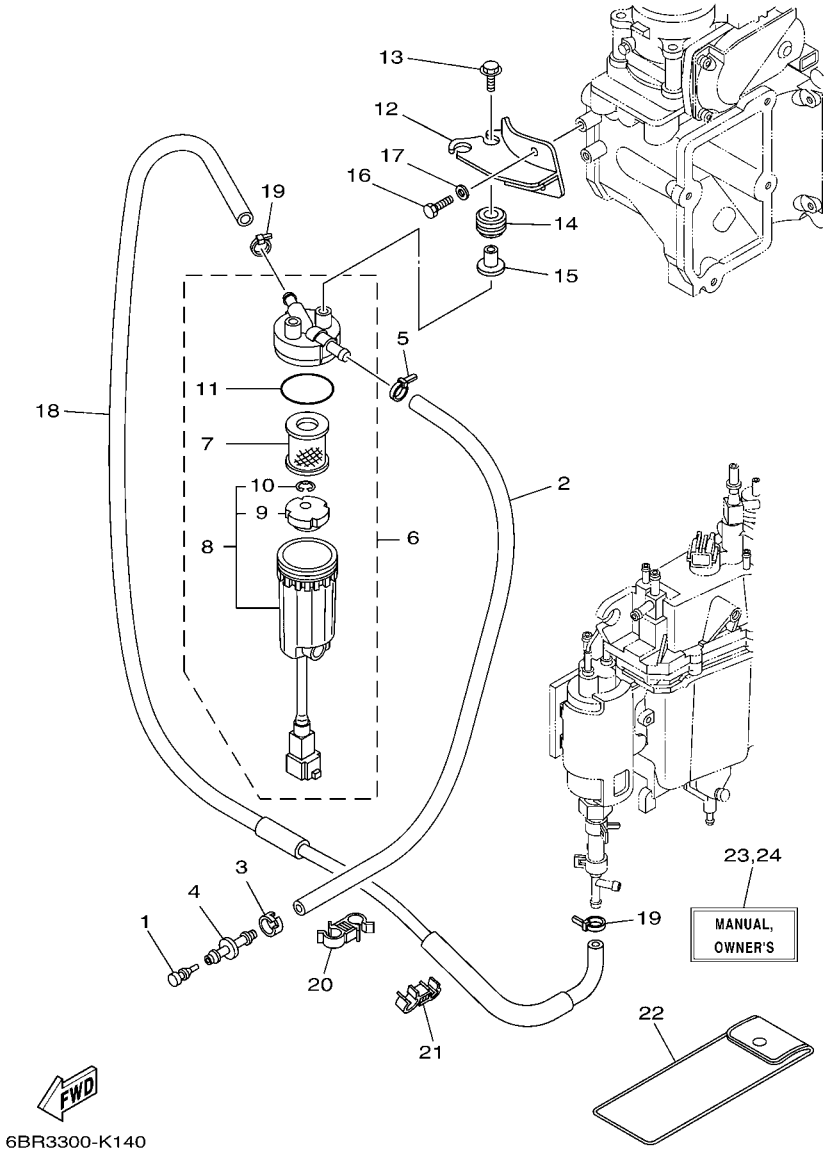

FIG. 14 FUEL 1 — CARBURANT 1

REF. NO.	PART NO. N° PIECES	DESCRIPTION DESCRIPTION	6BR3	6BS3				REMARKS REMARQUES
1	689–85547–00	DAMPER AMORTISSEUR	1	1				
2	6P2–24314–00	PIPE 4 DURITE 4	1	1				Go to P/N : PE0-OM-150021
3	6E5–24351–51	BAND 1 COLLIER 1	1	1				
4	6AW–24377–00	PIPE, JOINT 2 DURITE RACCORDEMENT 2	1	1				Go to P/N : PE0-OM-150021
5	90465–11M10	CLAMP BRIDE	1	1				
6	6P3–24560–01	FILTER ASSY ENS FILTRE	1	1				
7	6P3–24563–00	.ELEMENT, FILTER .ELEMENT, FILTRE	1	1				
8	6P3–24562–02	.CUP, FILTER .CUVETTE, FILTRE	1	1				
9	6P3–24469–00	..FLOAT, WATER LEVEL ..FLOTTEUR	1	1				
10	6P3–24519–00	..CLIP ..JONC	1	1				
11	6P3–24564–00	.GASKET .JOINT	1	1				
12	6P2–24566–11	BRACKET, FILTER SUPPORT, FILTRE	1	1				
13	90119–06M17	BOLT, WITH WASHER BOULON, AVEC RONDELLE	2	2				
14	90480–14018	GROMMET PASSE-FIL	2	2				
15	90387–06M60	COLLAR COLLERETTE	2	2				
16	97095–06014	BOLT BOULON	2	2				
17	92995–06600	WASHER RONDELLE	2	2				
18	6P2–24313–10	PIPE 3 DURITE 3	1	1				
19	90465–11M10	CLAMP BRIDE	2	2				
20	90464–12009	CLAMP BRIDE	1	1				
21	90464–12010	CLAMP BRIDE	1	1				
22	69J–28100–01	TOOL KIT TROUSSE A OUTILS	1	1				AP AP
23	6BR–28199–73–E0	MANUAL,OWNER'S MANUEL D'UTILISATION	1	1				UR (E) UR (E)
	6BR–28199–73–F0	MANUAL,OWNER'S MANUEL D'UTILISATION	1	1				UR (F) UR (F)
	6BR–28199–73–S0	MANUAL,OWNER'S MANUEL D'UTILISATION	1	1				UR (ES) UR (ES)
	6BR–28199–73–G0	MANUAL,OWNER'S MANUEL D'UTILISATION	1	1				UR (D) UR (D)
	6BR–28199–73–D0	MANUAL,OWNER'S MANUEL D'UTILISATION	1	1				UR (NL) UR (NL)

PARTS NEWS

YAMAHA MOTOR CO., LTD.
2500 SHINGAI IWATA SHIZUOKA JAPAN

News No.PE0-OM-150021

Date:2015/7/22

Signature:S.Ishibashi

Cause : ☑ Revision Notice ☐ Correction ☐ Sales Unit Change ☐ Others

Model	F250BET (6BR3)
Subject	PARTS CATALOGUE CORRECTIONS
CATALOGUE NO.	1K6BR-100E1 / 1K6BR-300F1

Time of YPEC Revision Text, Illustration --> Aug./22/2015 PDF Replace --> Aug./22/2015

(YPEC = Yamaha Parts Electrical Catalogue = Website parts catalogue)

Applicable Engine Serial No.

MODEL NAME	MODEL CODE	Applicable Engine Serial No.
F250B	6BR3	6P2:1035794-

*1: Interchangeability

A	Old Parts → Old Parts New Parts → New Parts	
B	Old Parts → Old Parts New Parts → New Parts	
C	Old Parts → Old Parts New Parts → New Parts	
○	These parts are interchangeable with a set	

FIG.14 FUEL 1

1 .LIST CORRECTION

Fig. No.	Ref. No.	OLD P/No.	NEW P/No.	DESCRIPTION	Q'TY	*Interchangeability	REMARKS
14	2	6P2-24314-00	6BR-24311-00	~~PIPE 4~~ PIPE FUEL 1	1	○	*Part number revision *Part name change
	4	6AW-24377-00	6AW-24377-01	PIPE, JOINT 2	1	○	*Part number revision

FIG.21 BOTTOM COWLING 1

1 .LIST CORRECTION

21	7	6BR-42725-00	6BR-42725-01	GROMMET	1	○	*Part number revision

2. ILLUSTRATION CORRECTION

(OLD)

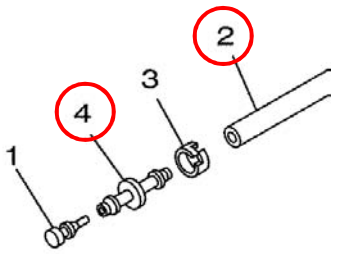

(NEW)

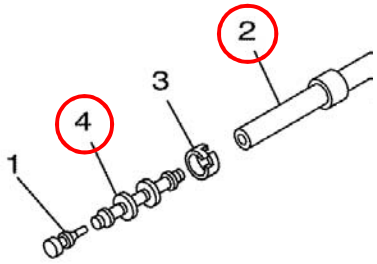

Thank you very much for your cooperation.

Parts Manager Check	Service Manager Check	Parts Manager File

YAMAHA MOTOR CO.,LTD
2500 Shingai Iwata Shizuoka 438-8501.Japan
Technical Publication Dept.

YAMAHA GENUINE Parts & Accessories

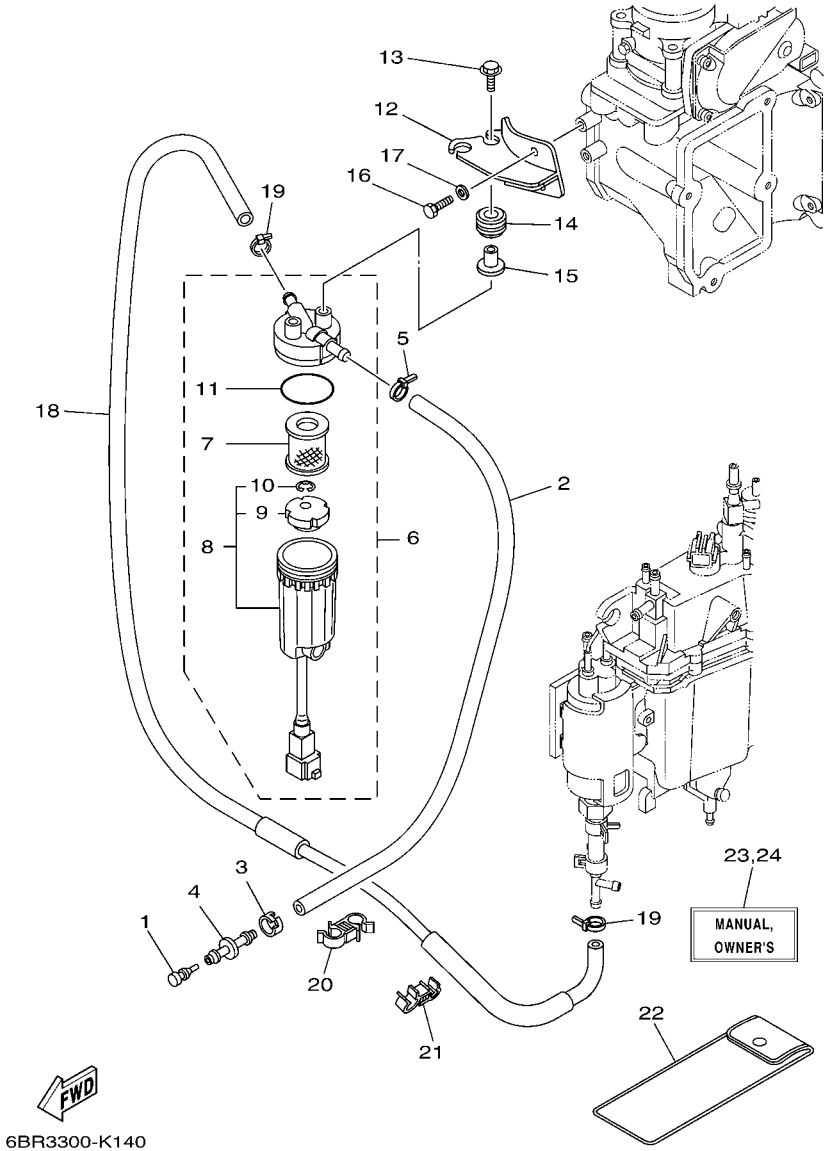

FIG. 14 FUEL 1 — CARBURANT 1

REF. NO.	PART NO. N° PIECES	DESCRIPTION DESCRIPTION	6BR3	6BS3				REMARKS REMARQUES
23	6BR–28199–73–H0	MANUAL,OWNER'S MANUEL D'UTILISATION	1	1				UR (I) UR (I)
24	6BR–28199–83–K0	MANUAL,OWNER'S MANUEL D'UTILISATION	1	1				UR (DK) UR (DK)
	6BR–28199–83–R0	MANUAL,OWNER'S MANUEL D'UTILISATION	1	1				UR (GR) UR (GR)
	6BR–28199–83–P0	MANUAL,OWNER'S MANUEL D'UTILISATION	1	1				UR (P) UR (P)
	6BR–28199–83–N0	MANUAL,OWNER'S MANUEL D'UTILISATION	1	1				UR (N) UR (N)
	6BR–28199–83–M0	MANUAL,OWNER'S MANUEL D'UTILISATION	1	1				UR (S) UR (S)
	6BR–28199–83–L0	MANUAL,OWNER'S MANUEL D'UTILISATION	1	1				UR (SF) UR (SF)

FIG. 15 FUEL 2 — CARBURANT 2

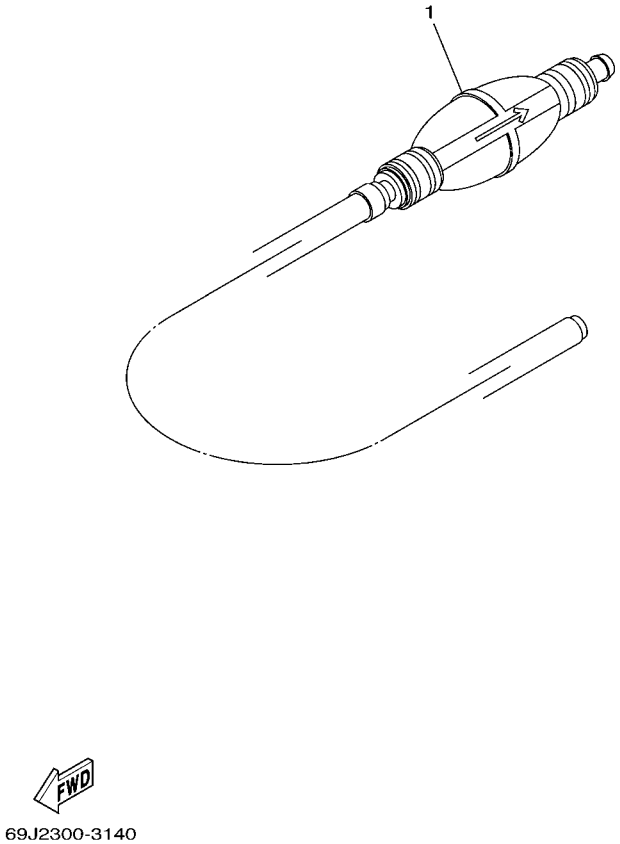

REF. NO.	PART NO. N° PIECES	DESCRIPTION DESCRIPTION	6BR3	6BS3				REMARKS REMARQUES
1	6YK–24307–42	FUEL PIPE COMP. 2 DURITE A ESSENCE 2	1	1				AP AP

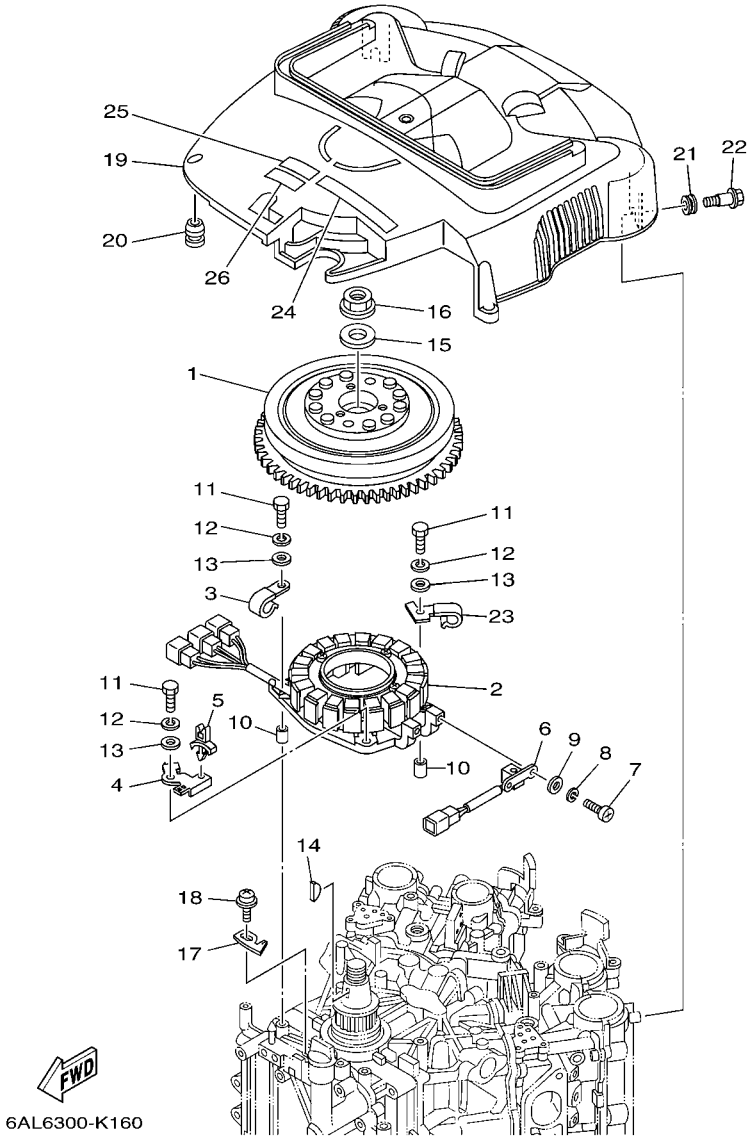

FIG. 16 GENERATOR GENERATRICE

REF. NO.	PART NO. N° PIECES	DESCRIPTION DESCRIPTION	6BR3	6BS3				REMARKS REMARQUES
1	6P2–81450–00	ROTOR ASSY ROTOR COMPLET	1	1				
2	6P2–81460–00	BASE ASSY ENS. FLASQUE	1	1				
3	90462–08032	CLAMP BRIDE	1	1				
4	6P2–8257V–00	PLATE, CONNECTOR PLAQUE, CONNECTEUR	1	1				
5	90464–06001	CLAMP BRIDE	1	1				
6	6P2–85580–00	COIL, PULSER BOBINE, PULSEUR	1	1				
7	97880–05012	SCREW, PAN HEAD VIS, TETE TRONCONIQUE	2	2				
8	92990–05100	WASHER, SPRING RONDELLE, GROWER	2	2				
9	92990–05600	WASHER, PLATE RONDELLE, PLATE	2	2				
10	99530–08012	PIN, DOWEL GOUJON, D'ASSEMBLAGE	2	2				
11	97095–06035	BOLT BOULON	4	4				
12	92995–06100	WASHER, SPRING RONDELLE, GROWER	4	4				
13	92995–06600	WASHER RONDELLE	4	4				
14	90280–05015	KEY, WOODRUFF CLAVETTE, DEMI-LUNE	1	1				
15	90201–24014	WASHER, PLATE RONDELLE, PLATE	1	1				
16	90179–24002	NUT ECROU	1	1				
17	6P2–81332–00	PLATE, TIMING PLATEAU, ALLUMAGE	1	1				
18	97985–06210	SCREW, WITH WASHER VIS, AVEC RONDELLE	1	1				
19	6P2–81337–00	COVER, FLYWHEEL COUVERCLE, VOLANT	1	1				
20	663–82317–01	DAMPER, IGNITION COIL AMORTISSEUR, BOBINE D'ALLUM	4	4				
21	90480–12314	GROMMET PASSE-FIL	2	2				
22	90109–06MA1	BOLT BOULON	2	2				
23	6P2–81128–00	CLAMP BRIDE	1	1				
24	60L–13437–62	MARK, CAUTION MAKER	1	1				
25	6AH–81994–40	LABEL, SAFETY ETIQUETTE, SECURITE	1	1				
26	6AH–81994–50	LABEL, SAFETY ETIQUETTE, SECURITE	1	1				

FIG. 17 ELECTRICAL 1 PARTIE ELECTRIQUE 1

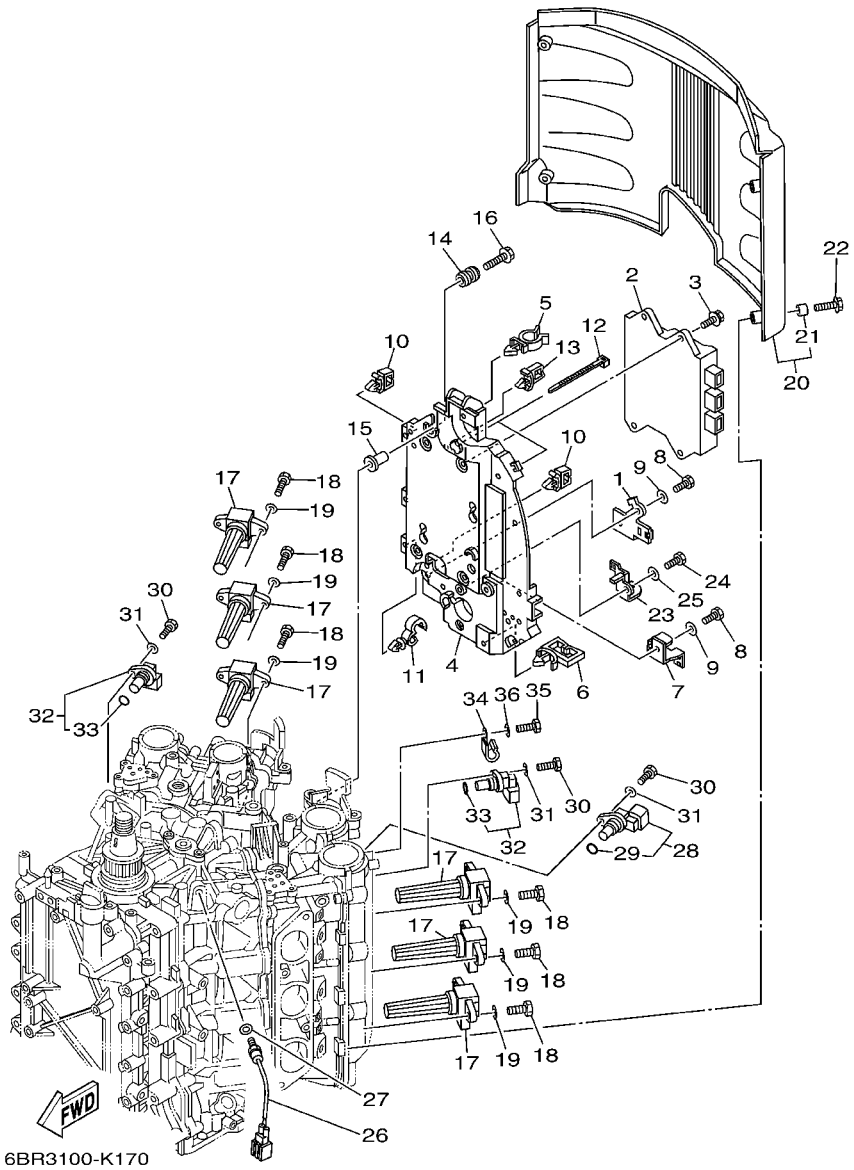

REF. NO.	PART NO. N° PIECES	DESCRIPTION DESCRIPTION	6BR3	6BS3				REMARKS REMARQUES
1	6P2–8257V–00	PLATE, CONNECTOR PLAQUE, CONNECTEUR	1	1				
2	6BR–8591A–10	ENGINE CONTROL UNIT ASSY BLOC DE CONTROL	1	1				
3	90119–06M82	BOLT, WITH WASHER BOULON, AVEC RONDELLE	4	4				
4	6BR–82316–00	BRACKET, IGNITION COIL SUPPORT, BOBINE D'ALLUMAGE	1	1				
5	90464–19M45	CLAMP BRIDE	1	1				
6	90464–23199	CLAMP BRIDE	1	1				
7	6BR–81845–00	PLATE PLAQUE	1	1				
8	97095–06016	BOLT BOULON	2	2				
9	92995–06600	WASHER RONDELLE	2	2				
10	90464–11121	CLAMP BRIDE	4	4				
11	90464–13249	CLAMP BRIDE	2	2				
12	90465–14M66	CLAMP BRIDE	2	2				
13	90464–08004	CLAMP BRIDE	1	1				
14	6A0–82317–00	DAMPER, IGNITION COIL AMORTISSEUR, BOBINE D'ALLUM	4	4				
15	90387–06119	COLLAR COLLERETTE	4	4				
16	90119–06M59	BOLT, WITH WASHER BOULON, AVEC RONDELLE	4	4				
17	6P2–82310–01	IGNITION COIL ASSY BOBINE D'ALLUMAGE	6	6				
18	97095–06020	BOLT BOULON	12	12				
19	92995–06600	WASHER RONDELLE	12	12				
20	6P2–82314–00	COVER, IGNITION COIL COUVERCLE, BOBINE D'ALLUMAGE	1	1				
21	90387–06044	.COLLAR .COLLERETTE	4	4				
22	90119–06M92	BOLT, WITH WASHER BOULON, AVEC RONDELLE	4	4				
23	6BR–82388–00	PLATE PLAQUETTE	1	1				
24	97095–06016	BOLT BOULON	1	1				
25	92995–06600	WASHER RONDELLE	1	1				
26	61A–85790–00	THERMOSENSOR ASSY SENSITOMETRE	1	1				
27	92990–10600	WASHER, PLATE RONDELLE, PLATE	1	1				

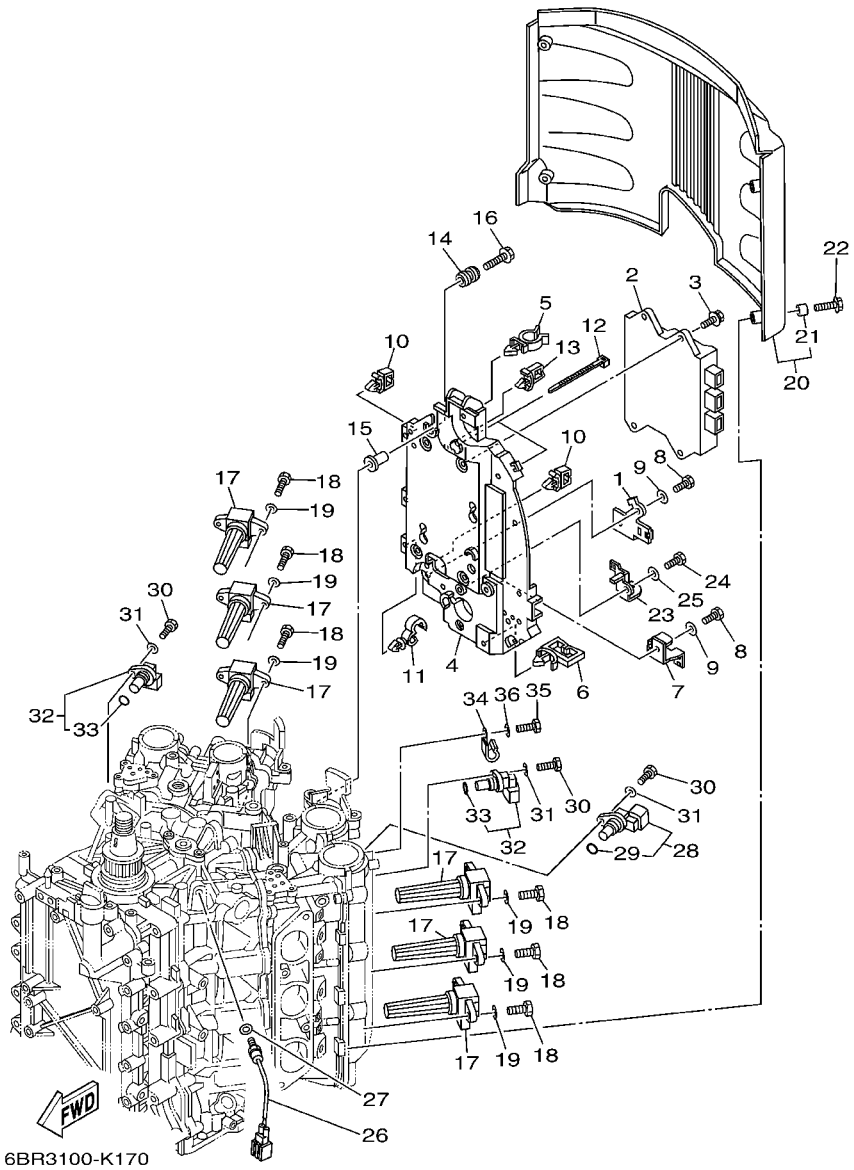

FIG. 17 ELECTRICAL 1 — PARTIE ELECTRIQUE 1

REF. NO.	PART NO. N° PIECES	DESCRIPTION DESCRIPTION	6BR3	6BS3				REMARKS REMARQUES
28	6P2–85896–00	SENSOR, CAM POSITION SONDE DE CAME	1	1				
29	6P2–85075–00	.O-RING .JOINT TORIQUE	1	1				
30	97095–06020	BOLT BOULON	3	3				
31	92995–06600	WASHER RONDELLE	3	3				
32	6P2–85897–00	SENSOR, CAM POSITION 2 SONDE DE CAME 2	2	2				
33	6P2–85075–00	.O-RING .JOINT TORIQUE	1	1				
34	90462–08032	CLAMP BRIDE	1	1				
35	97095–06012	BOLT BOULON	1	1				
36	92995–06600	WASHER RONDELLE	1	1				

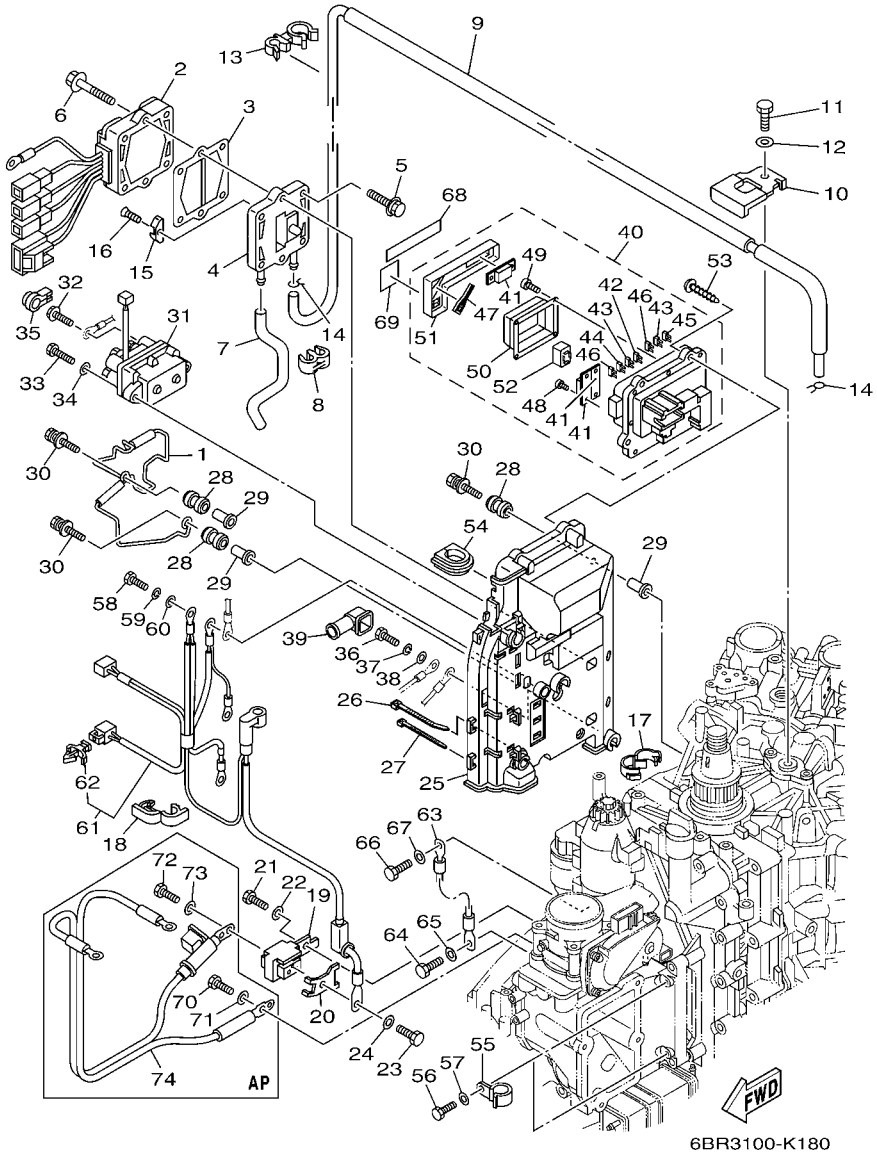

FIG. 18 ELECTRICAL 2 — PARTIE ELECTRIQUE 2

REF. NO.	PART NO. N° PIECES	DESCRIPTION DESCRIPTION	6BR3	6BS3				REMARKS REMARQUES
1	6P2–81614–00	PROTECTOR PROTECTEUR	1	1				
2	6P2–81960–02	RECTIFIER & REGULATOR ASSY REDRESSEUR REGULATEUR CPLT	1	1				
3	60V–81975–A0	PLATE, RECTIFIER FITTING PLAQUE, FIXATION DU REDRESSEUR	1	1				
4	6P2–81972–00–9S	COVER, RECTIFIER COUVERCLE, REDRESSEUR	1	1				
5	90119–06MA3	BOLT, WITH WASHER BOULON, AVEC RONDELLE	4	4				
6	90119–06MA5	BOLT, WITH WASHER BOULON, AVEC RONDELLE	2	2				
7	90445–09034	HOSE DURITE	1	1				
8	90464–09M21	CLAMP BRIDE	1	1				
9	6P2–12481–00	PIPE 1 DURITE 1	1	1				
10	6P2–12491–00	CLAMP 1 COLLIER 1	1	1				
11	97095–06012	BOLT BOULON	1	1				
12	92995–06600	WASHER RONDELLE	1	1				
13	90464–21002	CLAMP BRIDE	2	2				
14	90467–08M18	CLIP JONC	2	2				
15	6E5–11325–00	ANODE ANODE	1	1				
16	98780–04015	SCREW, FLAT HEAD VIS A TETE FRAISEE	1	1				
17	90464–25005	CLAMP BRIDE	1	1				
18	90464–18004	CLAMP BRIDE	8	8				
19	6BR–81925–00	TERMINAL BORNE	1	1				
20	6BR–81218–00	TERMINAL BORNE	1	1				
21	97095–08020	BOLT BOULON	1	1				
22	92995–08600	WASHER RONDELLE	1	1				
23	97095–06016	BOLT BOULON	1	1				
24	92995–06600	WASHER RONDELLE	1	1				
25	6P2–81948–00	BRACKET SUPPORT	1	1				
26	90465–13M18	CLAMP BRIDE	5	5				
27	90465–14M66	CLAMP BRIDE	3	3				

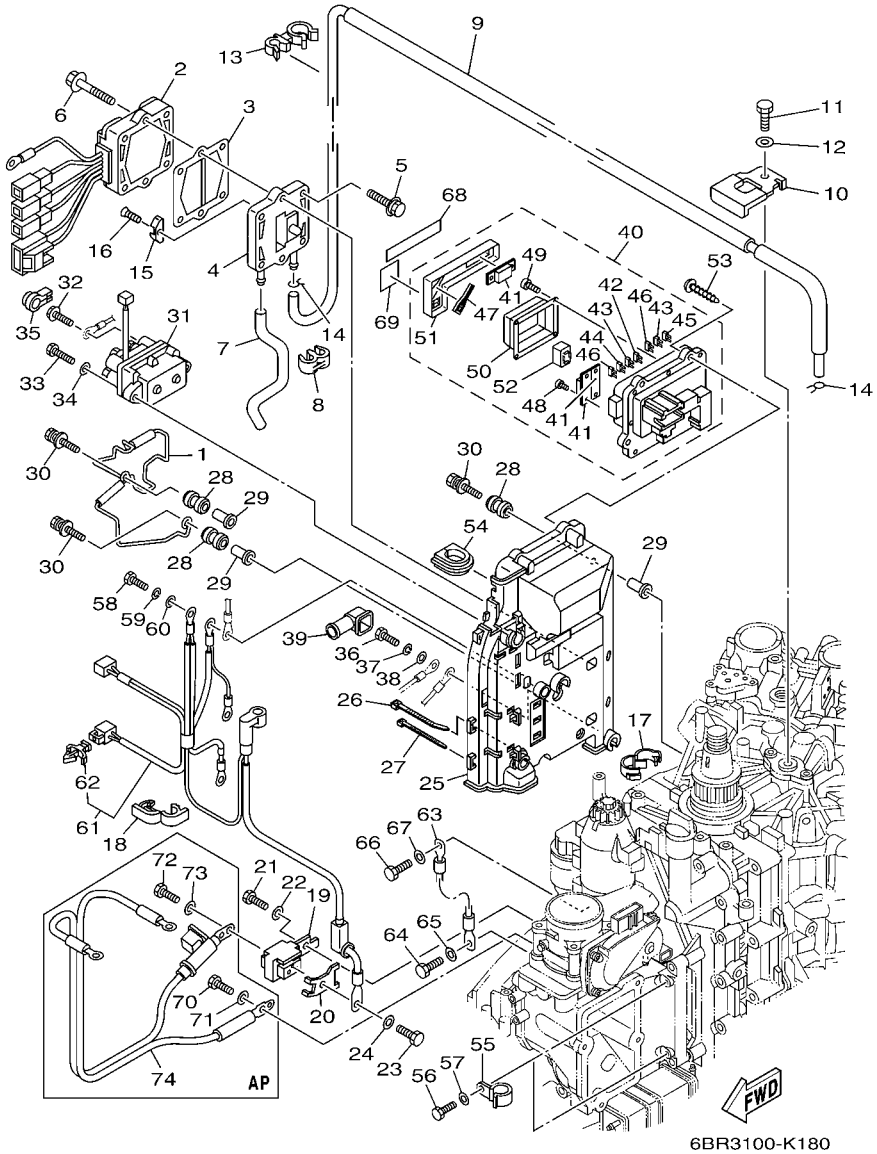

FIG. 18 ELECTRICAL 2 PARTIE ELECTRIQUE 2

REF. NO.	PART NO. N° PIECES	DESCRIPTION DESCRIPTION	6BR3	6BS3				REMARKS REMARQUES
28	6A0–82317–00	DAMPER, IGNITION COIL AMORTISSEUR, BOBINE D'ALLUM	5	5				
29	90387–06119	COLLAR COLLERETTE	5	5				
30	90119–06M95	BOLT, WITH WASHER BOULON, AVEC RONDELLE	5	5				
31	6AW–81950–00	RELAY ASSY RELAIS COMPLET	1	1				
32	97595–06610	BOLT, WITH WASHER VIS HEXAGONAL AVC RONDELLE	2	2				
33	97013–06025	BOLT BOULON	2	2				
34	92903–06600	WASHER, PLATE RONDELLE, PLATE	2	2				
35	6P2–8183X–00	CAP, TERMINAL COUVERCLE, BORNE	2	2				
36	97095–06020	BOLT BOULON	1	1				
37	92995–06100	WASHER, SPRING RONDELLE, GROWER	1	1				
38	92995–06600	WASHER RONDELLE	1	1				
39	6P2–82119–00	COVER, LEAD WIRE GARNITURE, FIL	1	1				
40	6BR–82170–00	FUSE BOX ASSY BOITE A FUSIBLES	1	1				
41	6P2–82151–00	.FUSE (60A) .FUSIBLE (60A)	3	3				
42	67F–82151–00	.FUSE (20A) .FUSIBLE (20A)	2	2				
43	67F–82151–10	.FUSE (30A) .FUSIBLE (30A)	3	3				
44	67F–82151–20	.FUSE (5A) .FUSIBLE (5A)	2	2				
45	67F–82151–40	.FUSE (10A) .FUSIBLE (10A)	2	2				
46	67F–82151–50	.FUSE (15A) .FUSIBLE (15A)	3	3				
47	67F–2812A–00	.PULLER, FUSE .TENDEUR, FUSIBLE	1	1				
48	68F–82846–00	.SCREW, PAN HEAD (M5) .VIS, TETE TRONCONIQUE (M5)	4	4				
49	6P2–82113–00	.SCREW .VIS	4	4				
50	6P2–81639–00	.RELAY COVER .COUVERCLE	1	1				
51	6P2–85544–00	.CASE .BOITIER	1	1				
52	68F–8195A–00	.RELAY ASSY .RELAIS COMPLET	5	5				
53	97780–50620	SCREW, TAPPING VIS, TETE BOMBEE	4	4				
54	6P2–81336–00	GROMMET OEILLET CAOUTCHOUC	1	1				

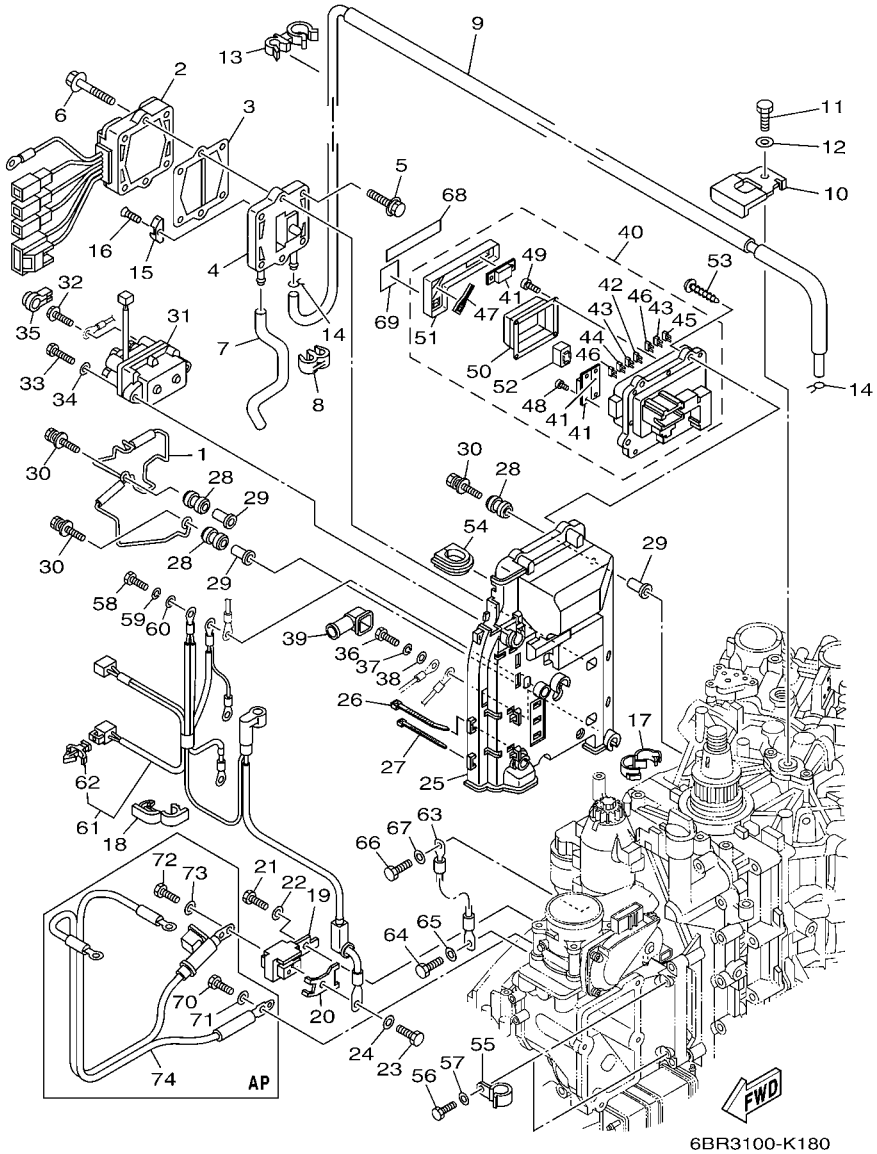

FIG. 18 ELECTRICAL 2 PARTIE ELECTRIQUE 2

REF. NO.	PART NO. N° PIECES	DESCRIPTION DESCRIPTION	6BR3	6BS3				REMARKS REMARQUES
55	90462–08026	CLAMP BRIDE	2	2				
56	97095–06016	BOLT BOULON	2	2				
57	92995–06600	WASHER RONDELLE	2	2				
58	97095–06020	BOLT BOULON	3	3				
59	92995–06100	WASHER, SPRING RONDELLE, GROWER	3	3				
60	92995–06600	WASHER RONDELLE	3	3				
61	6BR–8259M–00	WIRE HARNESS ASSY 2 FAISCEAU DE FILS	1	1				
62	90464–09M47	.CLAMP .BRIDE	1	1				
63	6BR–82117–00	WIRE, LEAD FIL	1	1				
64	97095–06016	BOLT BOULON	1	1				
65	92995–06600	WASHER RONDELLE	1	1				
66	97095–08020	BOLT BOULON	1	1				
67	92995–08600	WASHER RONDELLE	1	1				
68	6BR–81919–20	GRAPHIC, REGULATOR ADHESIF, REGULATEUR	1	1				
69	6P2–81919–31	GRAPHIC, REGULATOR ADHESIF, REGULATEUR	1	1				
70	97095–08016	BOLT BOULON	1	1				AP AP
71	92995–08600	WASHER RONDELLE	1	1				AP AP
72	97095–06016	BOLT BOULON	2	2				AP AP
73	92995–06600	WASHER RONDELLE	2	2				AP AP
74	6BR–82105–00	WIRE HARNESS FAISCEAU DE FILS	1	1				AP AP

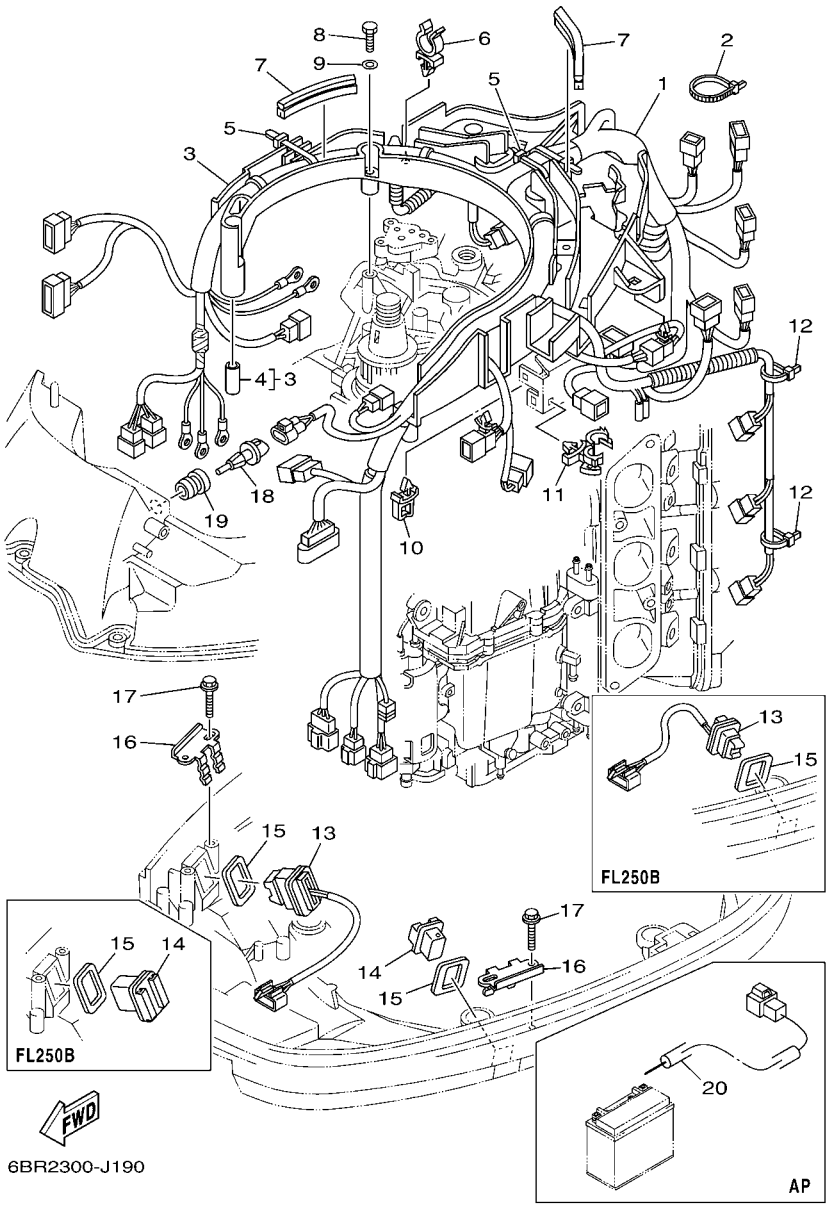

FIG. 19 ELECTRICAL 3 PARTIE ELECTRIQUE 3

REF. NO.	PART NO. N° PIECES	DESCRIPTION DESCRIPTION	6BR3	6BS3				REMARKS REMARQUES
1	6BR–82590–00	WIRE HARNESS ASSY FAISCEAU DE FILS COMPLET	1	1				
2	90465–14M66	CLAMP BRIDE	1	1				
3	6P2–82589–00	PROTECTER, WIRE HARNESS PROTECTEUR, FAISCEAU DE FILS	1	1				
4	90387–06M26	.COLLAR .COLLERETTE	6	6				
5	90465–14M66	CLAMP BRIDE	2	2				
6	90464–19M45	CLAMP BRIDE	4	4				
7	6P2–85722–00	INSULATOR ISOLATEUR	2	2				
8	97095–06035	BOLT BOULON	6	6				
9	92995–06600	WASHER RONDELLE	6	6				
10	90464–06001	CLAMP BRIDE	1	1				
11	90464–18246	CLAMP BRIDE	1	1				
12	90465–13M18	CLAMP BRIDE	3	3				
13	6BR–82563–00	TRIM & TILT SWITCH ASSY INCLINER ET PARER COMMUTATEUR	1	1				
14	69J–42723–00–8D	COVER, BOTTOM COUVERCLE	1	1				
15	69J–82587–00	GASKET JOINT	2	2				
16	69J–83614–10	BRACKET SUPPORT	2	2				
17	90109–06M86	BOLT BOULON	4	4				
18	63P–85886–00	SENSOR, AIR TEMPERATURE SONDE	1	1				
19	63P–14435–00	GROMMET RONDELLE CAOUTCHOUC	1	1				
20	69J–81949–02	WIRE, LEAD (ISOLATOR, 3.8M) FIL (ISOLATOR, 3.8M)	1	1				AP AP

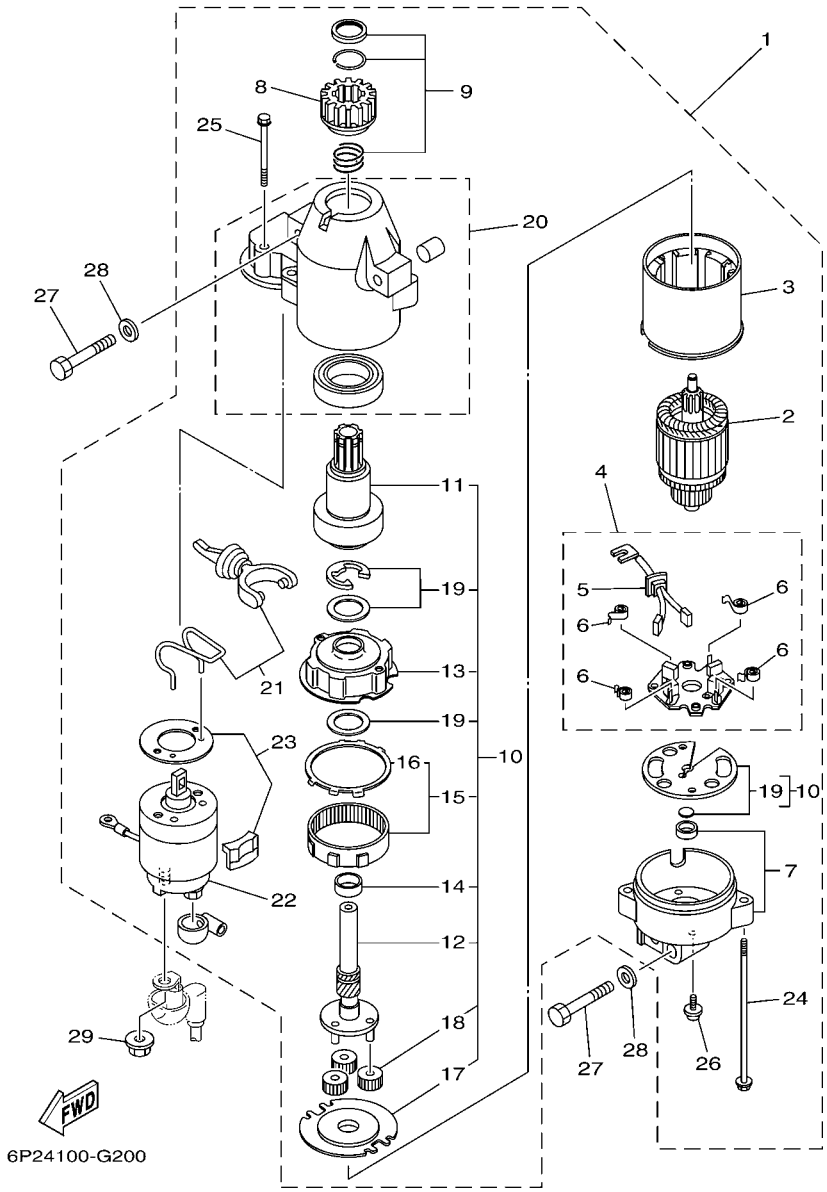

FIG. 20 STARTING MOTOR DEMARREUR ELECTRIQUE

REF. NO.	PART NO. N° PIECES	DESCRIPTION DESCRIPTION	6BR3	6BS3				REMARKS REMARQUES
1	6BR–81800–00	STARTING MOTOR ASSY DEMARREUR ELECTRIQUE COMPLET	1	1				
2	67F–81850–00	.ARMATURE ASSY .INDUIT	1	1				
3	67F–81810–00	.STATOR ASSY .STATOR COMPLET	1	1				
4	69J–81840–00	.BRUSH HOLDER ASSY .SUPPORT DE CHARBON	1	1				
5	69J–81801–00	..BRUSH SET ..CHARBON	1	1				
6	67F–81813–00	..SPRING, BRUSH ..RESSORT, DE CHARBON	4	4				
7	67F–81820–00	.REAR BRACKET ASSY .SUPPORT ARRIERE COMPLET	1	1				
8	67F–81808–00	.PINION ASSY .PIGNON	1	1				
9	67F–81857–00	.PINION STOPPER SET .BUTEE PIGNON	1	1				
10	67F–81807–00	.GEAR ASSY, STARTING MOTOR .PIGNON, DEMARREUR ELECTRIQUE	1	1				
11	67F–81832–00	..CLUTCH, OVER RUN ..EMBRAYAGE, ROUE LIBRE	1	1				
12	67F–81836–00	..SHAFT, PINION ..AXE, PIGNON	1	1				
13	67F–81821–00	..BRACKET, CENTER 1 ..SUPPORT, CENTRE 1	1	1				
14	67F–81841–00	..BEARING ..ROULEMENT	1	1				
15	67F–81891–00	..GEAR, RING ..ROUE DENTEE	1	1				
16	67F–8183R–00	...GASKET ...JOINT	1	1				
17	67F–81830–00	..BRACKET, CENTER 2 ..SUPPORT, CENTRE 2	1	1				
18	60V–8183T–00	..GEAR, IDLER ..PIGNON, INTERMEDIAIRE	3	3				
19	67F–81809–00	..WASHER KIT ..JEU DE RONDELLES	1	1				
20	69J–81842–00	.COVER .COUVERCLE	1	1				
21	69J–81839–00	.LEVER ASSY .LEVIER COMPLET	1	1				
22	63P–81941–00	.STARTER RELAY ASSY .LANCEUR RELAIS (ENS.)	1	1				
23	69J–81869–00	.COVER, DUST .COUVERCLE, POUSSIERE	1	1				
24	6K7–81826–11	.BOLT .BOULON	2	2				
25	69J–81828–00	.BOLT 2 .RONDELLE, BUTEE 2	2	2				
26	67F–81846–00	.SCREW .VIS	2	2				
27	97013–08045	BOLT BOULON	3	3				

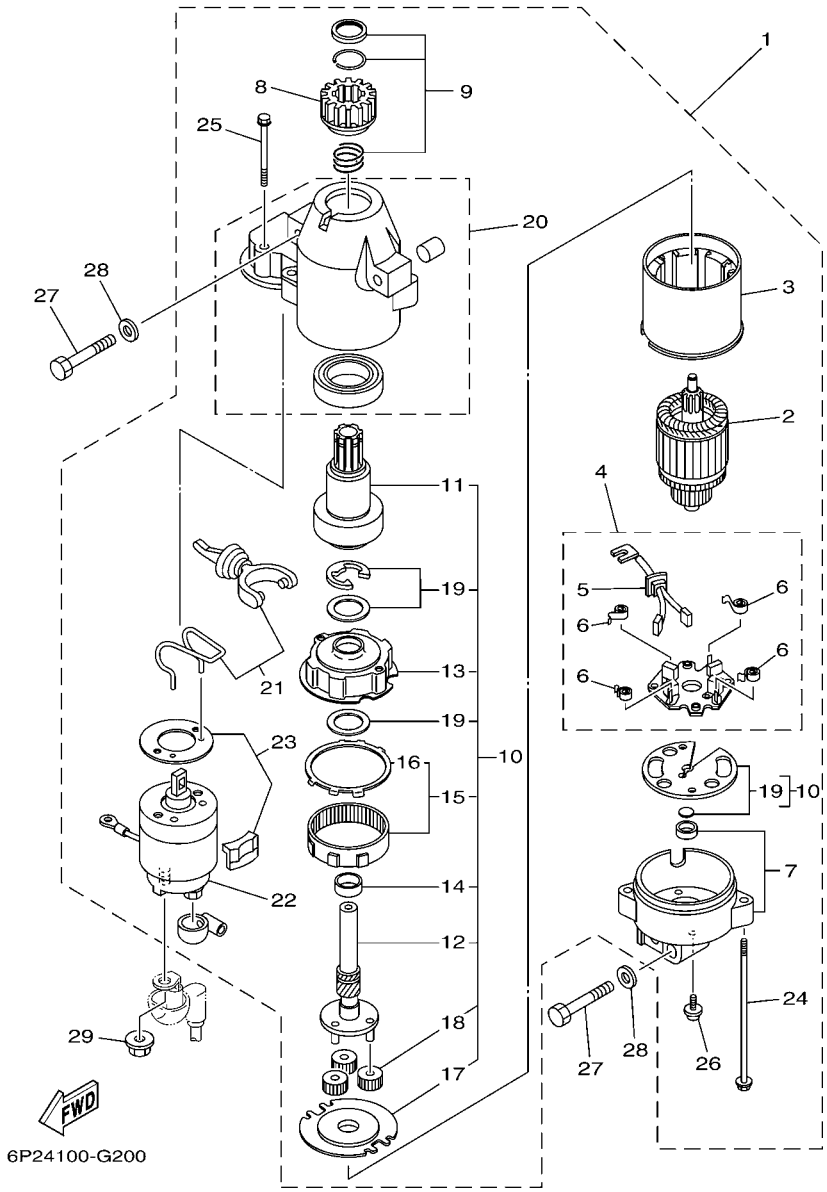

FIG. 20 STARTING MOTOR DEMARREUR ELECTRIQUE

REF. NO.	PART NO. N° PIECES	DESCRIPTION DESCRIPTION	6BR3	6BS3				REMARKS REMARQUES
28	92903–08600	WASHER, PLATE RONDELLE, PLATE	3	3				
29	90179–08003	NUT ECROU	1	1				

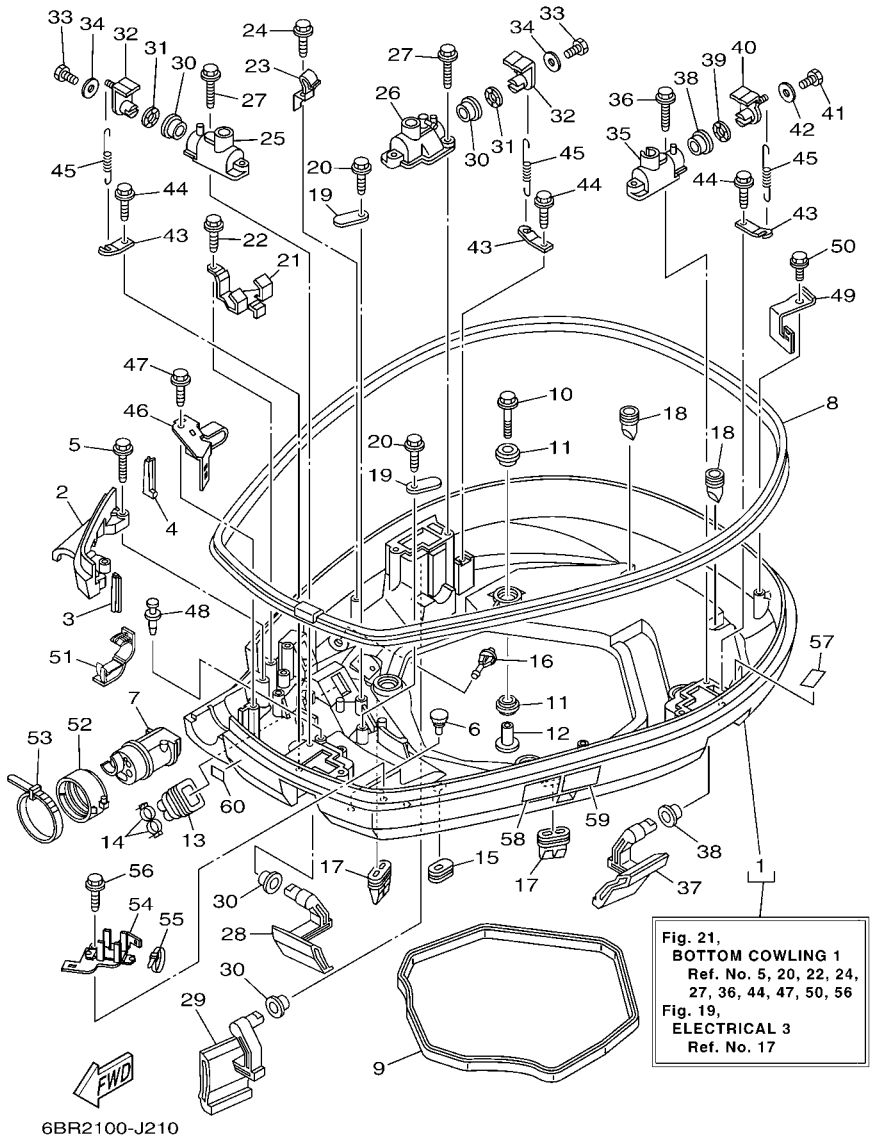

FIG. 21 BOTTOM COWLING 1 CAPOT INFERIEUR 1

REF. NO.	PART NO. N° PIECES	DESCRIPTION DESCRIPTION	6BR3	6BS3				REMARKS REMARQUES
1	6BR–42710–00–8D	BOTTOM COWLING ASSY ENS. EMBASE	1	1				
2	6P2–42738–00–8D	PLATE, FITTING ETRIER	1	1				
3	6P2–42717–00	RUBBER, SEAL 2 JOINT EN CAOUTCHOUC 2	1	1				
4	6P2–42718–00	RUBBER, SEAL 3 JOINT	1	1				
5	90109–06M82	BOLT BOULON	2	2				
6	6H4–42748–00	GROMMET PASSE-FIL	2	2				
7	6BR–42725–00	GROMMET PASSE-FIL	1	1				Go to P/N : PE0-OM-150021
8	6P2–42615–00	SEAL JOINT	1	1				
9	69J–42716–00	RUBBER, SEAL 1 JOINT EN CAOUTCHOUC 1	1	1				
10	90119–08M22	BOLT, WITH WASHER BOULON, AVEC RONDELLE	4	4				
11	90480–22M81	GROMMET PASSE-FIL	8	8				
12	90387–08M37	COLLAR COLLERETTE	4	4				
13	6H1–42726–21	GROMMET PASSE-FIL	1	1				
14	90465–11M10	CLAMP BRIDE	2	2				
15	61A–42727–00	GROMMET PASSE-FIL	1	1				
16	6P2–44391–00	NIPPLE, HOSE RACCORD D'ESSENCE	1	1				
17	69J–42717–00	RUBBER, SEAL 2 JOINT EN CAOUTCHOUC 2	2	2				
18	61A–42717–00	RUBBER, SEAL 2 JOINT EN CAOUTCHOUC 2	2	2				
19	6E5–82588–00	PLATE PLAQUE	2	2				
20	90109–06M81	BOLT BOULON	2	2				
21	6BR–42829–00	PLATE, CLAMP 2 PLAQUE, PRESSE 2	1					F250B F250B
22	90109–06M86	BOLT BOULON	1					F250B F250B
23	90462–08080	CLAMP BRIDE	1	1				
24	90109–06M86	BOLT BOULON	1	1				
25	69J–42828–02–8D	PLATE, CLAMP PLAQUE, PRESSE	1	1				
26	6P2–42828–00–8D	PLATE, CLAMP PLAQUE, PRESSE	1	1				
27	90109–06M82	BOLT BOULON	4	4				

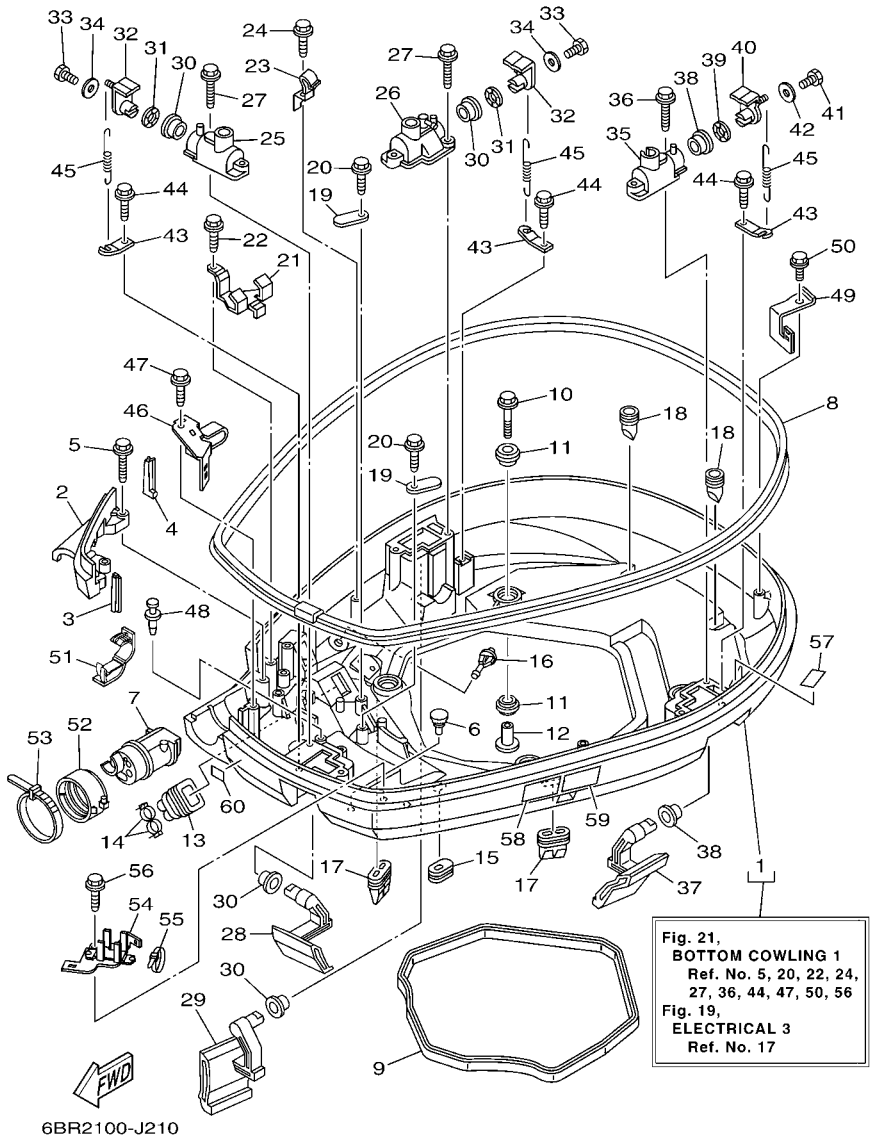

FIG. 21 BOTTOM COWLING 1 CAPOT INFERIEUR 1

REF. NO.	PART NO. N° PIECES	DESCRIPTION DESCRIPTION	6BR3	6BS3				REMARKS REMARQUES
28	69J–42815–00–8D	LEVER, CLAMP LEVIER, PRESSE	1	1				
29	69J–42817–00–8D	LEVER, CLAMP LEVIER, PRESSE	1	1				
30	90386–15M73	BUSH DOUILLE	4	4				
31	90206–15M18	WASHER, WAVE RONDELLE, ONDULEE	2	2				
32	63P–42818–01	LEVER, CLAMP LEVIER, PRESSE	2	2				
33	97095–06020	BOLT BOULON	2	2				
34	90201–06068	WASHER, PLATE RONDELLE, PLATE	2	2				
35	68F–42828–10–8D	PLATE, CLAMP PLAQUE, PRESSE	1	1				
36	90109–06M82	BOLT BOULON	2	2				
37	69J–42816–00–8D	LEVER, CLAMP LEVIER, PRESSE	1	1				
38	90386–15M73	BUSH DOUILLE	2	2				
39	90206–15M18	WASHER, WAVE RONDELLE, ONDULEE	1	1				
40	68V–42818–01	LEVER, CLAMP LEVIER, PRESSE	1	1				
41	97095–06020	BOLT BOULON	1	1				
42	90201–06068	WASHER, PLATE RONDELLE, PLATE	1	1				
43	64D–43144–00	HOOK, SPRING CROCHET	3	3				
44	90109–06M86	BOLT BOULON	3	3				
45	90506–18M40	SPRING, TENSION RESSORT, TENSION	3	3				
46	6BR–42743–00	BRACKET SUPPORT	1	1				
47	90109–06M82	BOLT BOULON	1	1				
48	90269–05005	RIVET RIVET	2	2				
49	69J–8366G–02	BRACKET 3 SUPPORT 3	1	1				
50	90109–06M86	BOLT BOULON	1	1				
51	90464–18001	CLAMP BRIDE	1	1				
52	68F–42753–00	FASTNER ATTACHE	1	1				AP AP
53	90464–20258	CLAMP BRIDE	1	1				AP AP
54	6BR–82594–00	CLAMP BRIDE	1	1				

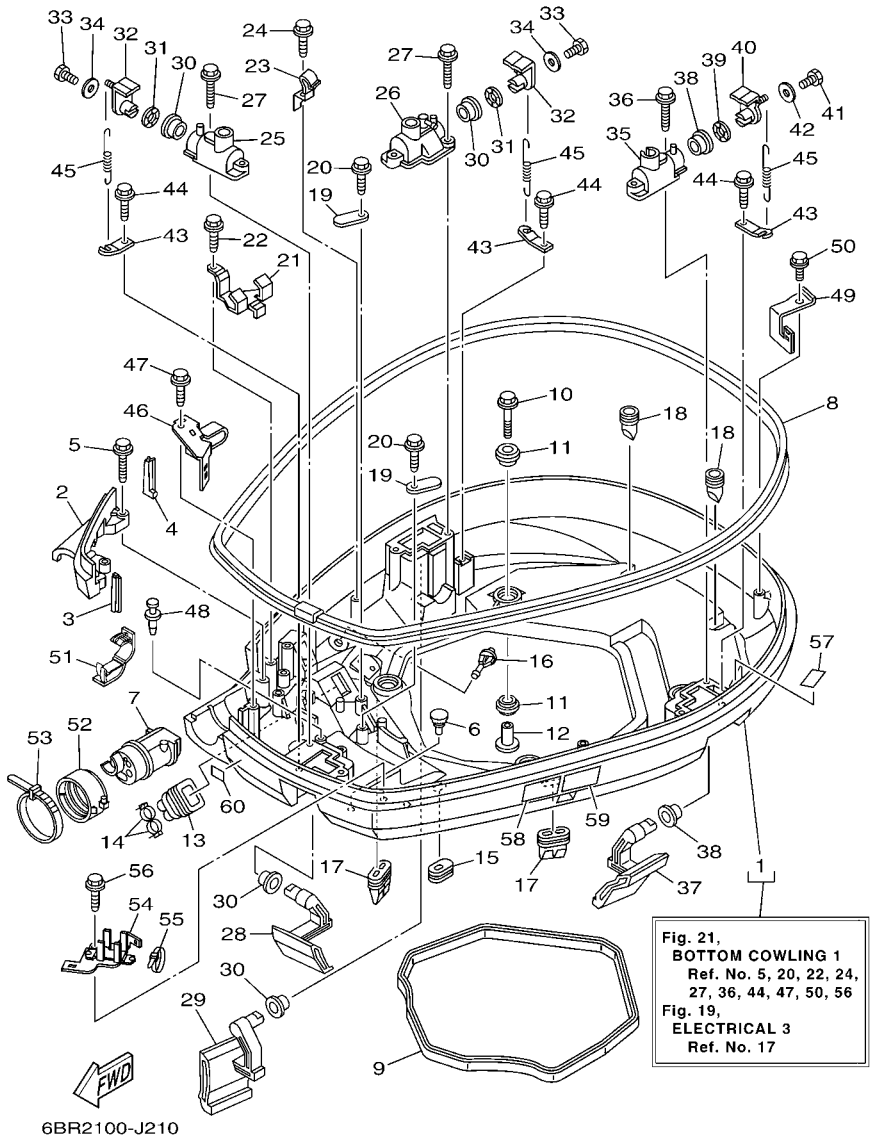

FIG. 21 BOTTOM COWLING 1 CAPOT INFERIEUR 1

REF. NO.	PART NO. N° PIECES	DESCRIPTION DESCRIPTION	6BR3	6BS3				REMARKS REMARQUES
55	90465–13M24	CLAMP BRIDE	1	1				
56	90109–06M86	BOLT BOULON	1	1				
57	68V–82377–00	LABEL ETIQUETTE	1	1				
58	6AH–42794–40	LABEL, WARNING (GENERAL) ETIQUETTE, AVERTISSEMENT	1	1				
59	6AH–42794–50	LABEL, WARNING (GENERAL) ETIQUETTE, AVERTISSEMENT	1	1				
60	6AH–81996–00	MARK MARQUE	1	1				

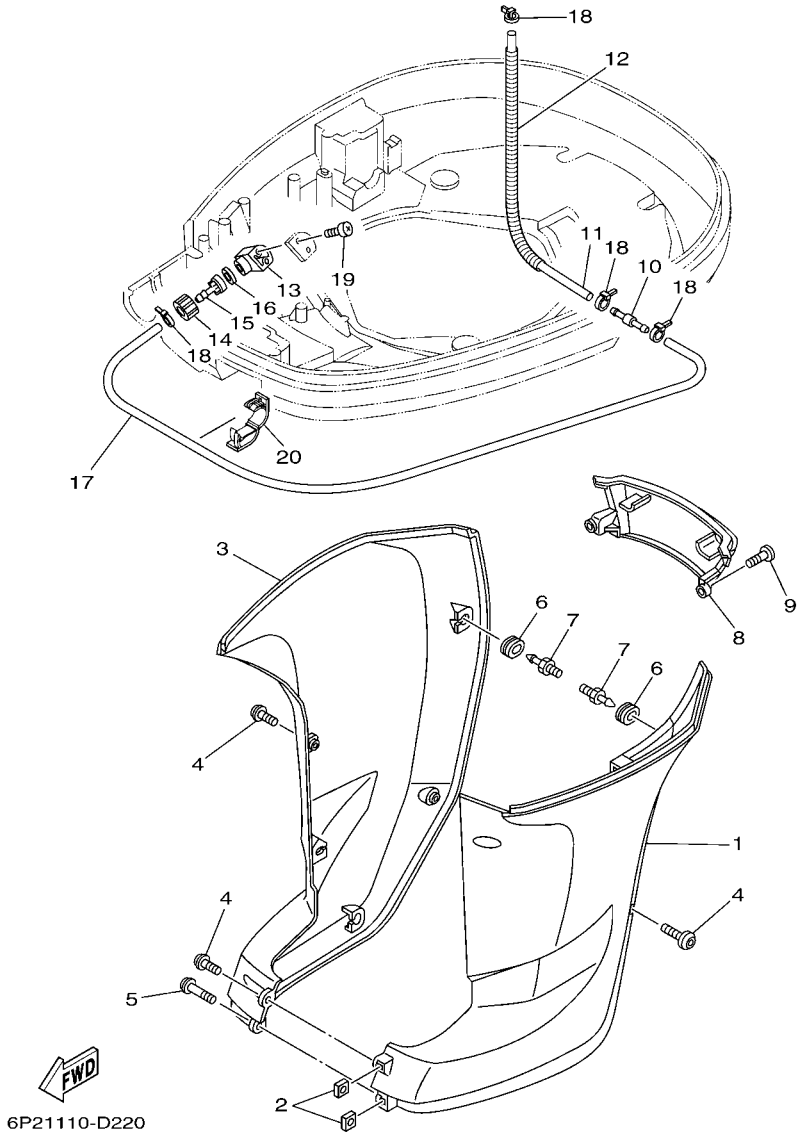

FIG. 22 BOTTOM COWLING 2 CAPOT INFERIEUR 2

REF. NO.	PART NO. N° PIECES	DESCRIPTION DESCRIPTION	6BR3	6BS3				REMARKS REMARQUES
1	69J–42741–00–8D	APRON CAPOT LATERAL	1	1				
2	90173–06001	NUT, SQUARE ECROU, CARRE	2	2				
3	69J–42771–00–8D	APRON CAPOT LATERAL	1	1				
4	90111–06111	BOLT,HEX. SOCKET BUTTON BOULON	5	5				
5	90111–06113	BOLT,HEX. SOCKET BUTTON BOULON	1	1				
6	90480–14M17	GROMMET PASSE-FIL	6	6				
7	69J–42774–10	STAY, APRON 1 COUSSINET	6	6				
8	69J–45151–00–8D	COVER, UPPER CASING CAPUCHON, FOURREAU	1	1				
9	90111–06111	BOLT,HEX. SOCKET BUTTON BOULON	2	2				
10	6E5–24379–00	PIPE, JOINT 4 DURITE RACCORDEMENT 4	1	1				
11	90445–11M47	HOSE (L370) DURITE (L370)	1	1				
12	90447–13009	TUBE DURITE	1	1				
13	68T–12572–00	ADAPTER ADAPTATEUR	1	1				
14	6R3–12581–00	JOINT, HOSE 1 JOINT DE TUYAU	1	1				
15	6R3–12582–00	JOINT, HOSE 2 RACCORD DE TUYAU 1	1	1				
16	6R3–12583–00	GASKET, HOSE JOINT JOINT	1	1				
17	90445–11028	HOSE (L1050) DURITE (L1050)	1	1				
18	90465–11M10	CLAMP BRIDE	4	4				
19	97780–60520	SCREW, TAPPING VIS, TETE BOMBEE	2	2				
20	90464–18004	CLAMP BRIDE	3	3				

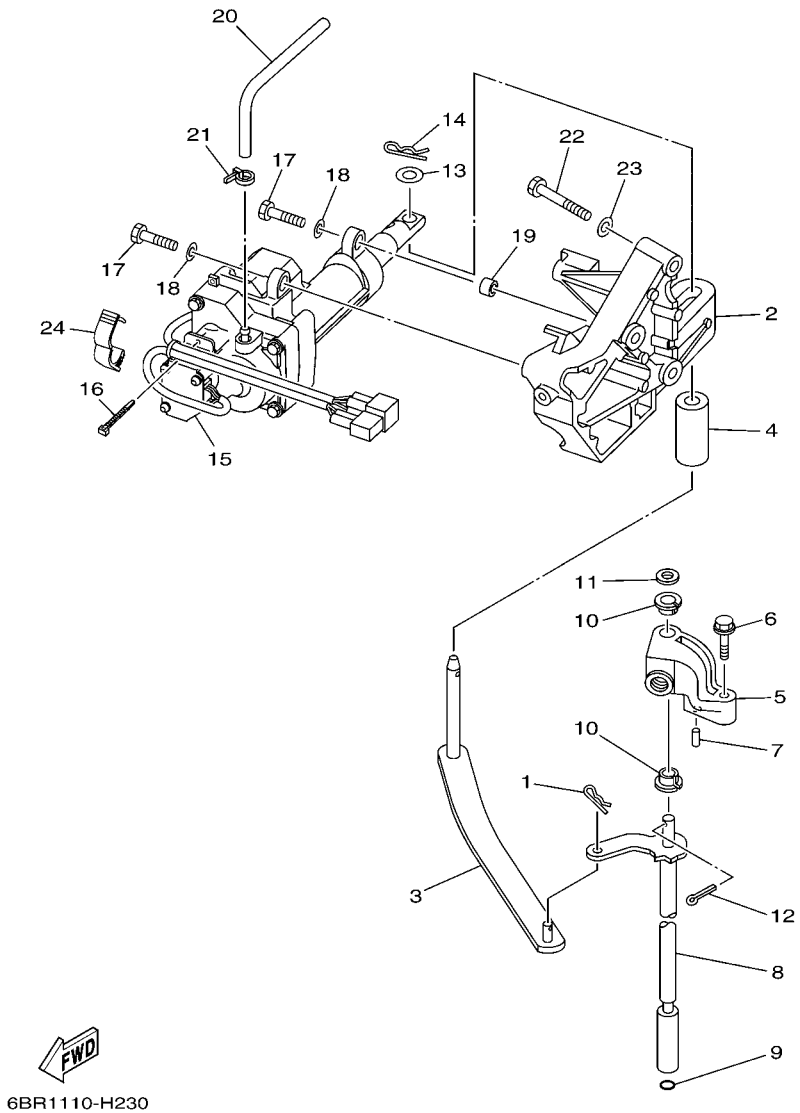

6BR1110-H230

FIG. 23 CONTROL COMMANDE

REF. NO.	PART NO. N° PIECES	DESCRIPTION DESCRIPTION	6BR3	6BS3				REMARKS REMARQUES
1	90468–18008	CLIP JONC	1	1				
2	6BR–44176–00–94	BRACKET SUPPORT	1	1				
3	6BR–44121–00	LEVER, SHIFT ROD LEVIER, TIGE D'INVERSION	1	1				
4	6BR–44122–00	BUSHING, SHIFT ROD LEVER DOUILLE, LEVIER D'EMBRAYAGE	1	1				
5	69J–44118–00	BRACKET SUPPORT	1	1				
6	97575–06535	BOLT, WITH WASHER VIS HEXAGONAL AVC RONDELLE	1	1				
7	91690–30010	PIN, SPRING AGRAFFE	1	1				
8	6BR–44120–00	HANDLE GEAR SHIFT ASSY LEVIER D'EMBRAYAGE	1	1				X(25.3") X(25.3")
	6BR–44120–10	HANDLE GEAR SHIFT ASSY LEVIER D'EMBRAYAGE	1	1				U(30.3") U(30.3")
9	93210–09165	O-RING JOINT TORIQUE	1	1				
10	90386–90M90	BUSH DOUILLE	2	2				
11	90201–09M02	WASHER, PLATE RONDELLE, PLATE	1	1				
12	91490–20015	PIN. COTTER GOUPILLE	1	1				
13	90201–11008	WASHER, PLATE RONDELLE, PLATE	1	1				
14	90468–180A0	CLIP JONC	1	1				
15	6AW–4820A–10	ACTUATOR UNIT ACTUATOR UNIT	1	1				
16	90465–11M10	CLAMP BRIDE	1	1				
17	97080–08030	BOLT BOULON	4	4				
18	92900–08600	WASHER RONDELLE	4	4				
19	90387–08M31	COLLAR COLLERETTE	2	2				
20	6BR–24314–00	PIPE 4 DURITE 4	1	1				
21	90465–11M10	CLAMP BRIDE	1	1				
22	97013–08045	BOLT BOULON	3	3				
23	92903–08600	WASHER, PLATE RONDELLE, PLATE	3	3				
24	90464–18004	CLAMP BRIDE	1	1				

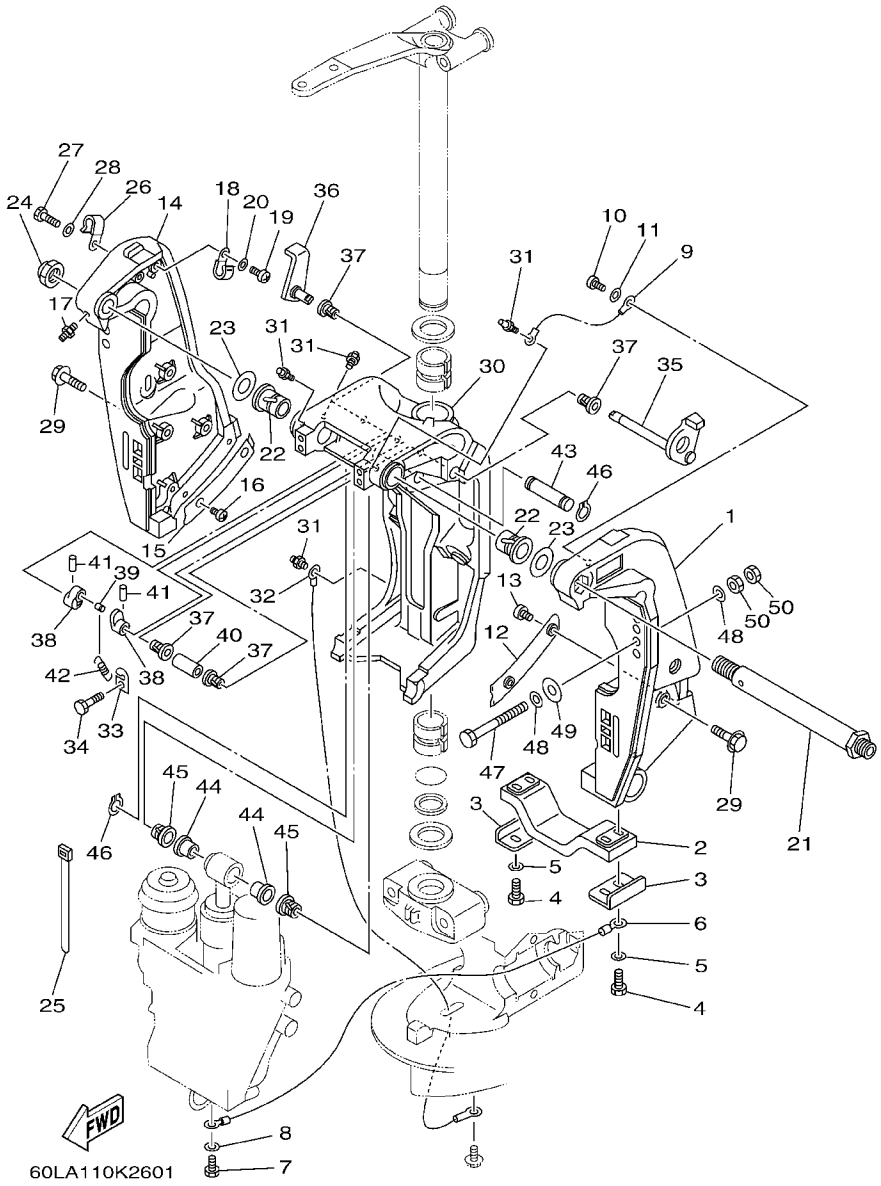

FIG. 24 BRACKET 1 SUPPORT 1

REF. NO.	PART NO. N° PIECES	DESCRIPTION DESCRIPTION	6BR3	6BS3				REMARKS REMARQUES
1	69J–43111–01–8D	BRACKET, CLAMP 1 PRESSE 1	1	1				
2	6G5–45251–02	ANODE ANODE	1	1				
3	6G5–44526–00	PLATE PLAQUE	2	2				
4	97095–06025	BOLT BOULON	4	4				
5	92995–06600	WASHER RONDELLE	4	4				
6	6H1–82148–00	WIRE, LEAD 4 FIL 4	1	1				
7	97095–06010	BOLT BOULON	1	1				
8	92995–06600	WASHER RONDELLE	1	1				
9	6E5–82148–00	WIRE, LEAD 4 FIL 4	1	1				
10	97885–06012	SCREW, PAN HEAD VIS, A ENCOCHE	1	1				
11	92995–06600	WASHER RONDELLE	1	1				
12	61A–43132–00	WASHER, FRICTION RONDELLE, FRICTION	1	1				
13	97885–06010	SCREW, PAN HEAD VIS, A ENCOCHE	2	2				
14	69J–43112–01–8D	BRACKET, CLAMP 2 PRESSE 2	1	1				
15	61A–43133–00	WASHER,FRICTION RONDELLE	1	1				
16	97885–06010	SCREW, PAN HEAD VIS, A ENCOCHE	2	2				
17	93700–06M03	NIPPLE, GREASE PION	1	1				
18	90465–08M83	CLAMP BRIDE	1	1				
19	97885–06012	SCREW, PAN HEAD VIS, A ENCOCHE	1	1				
20	92995–06600	WASHER RONDELLE	1	1				
21	6R3–43131–00	BOLT, CLAMP BRACKET BOULON, PRESSE	1	1				
22	90386–25M31	BUSH DOUILLE	2	2				
23	90201–26M59	WASHER, PLATE RONDELLE, PLATE	2	2				
24	90185–22M11	NUT, SELF-LOCKING ECROU,AUTO-BLOQUANT	1	1				
25	90465–11M10	CLAMP BRIDE	4	4				
26	90465–08M83	CLAMP BRIDE	1	1				
27	97095–06014	BOLT BOULON	1	1				

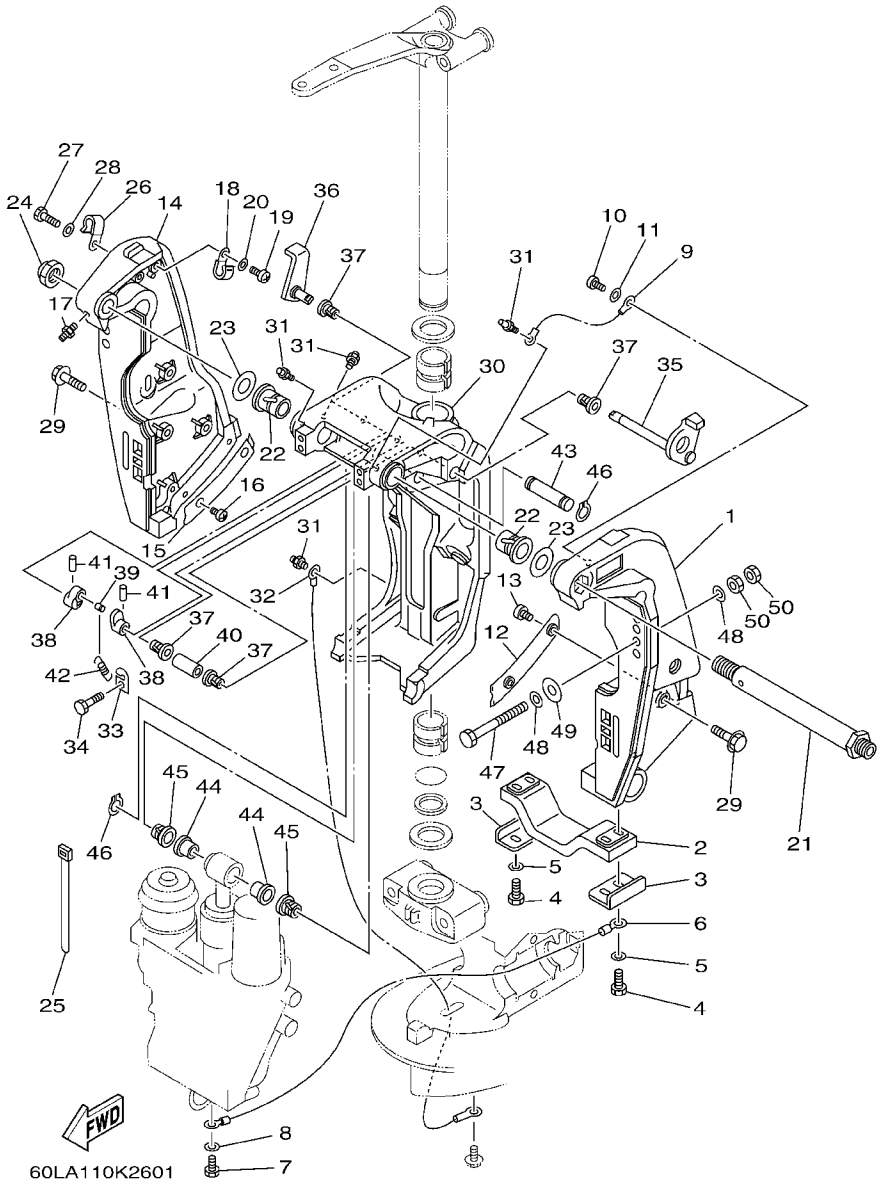

FIG. 24 BRACKET 1 SUPPORT 1

REF. NO.	PART NO. N° PIECES	DESCRIPTION DESCRIPTION	6BR3	6BS3				REMARKS REMARQUES
28	92995–06600	WASHER RONDELLE	1	1				
29	90119–10024	BOLT, WITH WASHER BOULON, AVEC RONDELLE	8	8				
30	61A–43311–21–8D	BRACKET, SWIVEL 1 SUPPORT, PIVOT 1	1	1				
31	93700–06M03	NIPPLE, GREASE PION	5	5				
32	69J–82147–00	WIRE, LEAD 5 FIL 5	1	1				
33	6G5–43144–00	HOOK, SPRING CROCHET	1	1				
34	97095–06010	BOLT BOULON	1	1				
35	61A–43181–01	LEVER, TILT STOP 1 LEVIER VERROUILLAGE RELEVAGE 1	1	1				
36	6G5–43185–02	LEVER, TILT STOP 2 LEVIER VERROUILLAGE RELEVAGE 2	1	1				
37	90386–10M16	BUSH DOUILLE	4	4				
38	6G5–43148–00	COLLAR, DISTANCE ENTRETOISE	2	2				
39	90249–06M19	PIN GOUPILLE	1	1				
40	90387–10M05	COLLAR COLLERETTE	1	1				
41	91690–30020	PIN, SPRING AGRAFFE	2	2				
42	90506–16003	SPRING, TENSION RESSORT, TENSION	1	1				
43	6E5–43126–10	PIN, UPPER SHOCK MOUNT AXE, SUPERIEUR AMORTISSEUR	1	1				Go to P/N:PE0-OM-110021
44	90386–18M63	BUSH DOUILLE	2	2				
45	90386–18M14	BUSH DOUILLE	2	2				
46	93410–18M02	CIRCLIP CLIPS	2	2				Go to P/N:PE0-OM-110021
47	90101–12M05	BOLT (L:130MM) BOULON (L:130MM)	4	4				
48	90201–13M01	WASHER, PLATE RONDELLE, PLATE	8	8				
49	90201–12M05	WASHER, PLATE RONDELLE, PLATE	4	4				
50	95380–12600	NUT ECROU	8	8				

PARTS NEWS

YAMAHA
YAMAHA MOTOR CO., LTD.
2500 SHINGAI IWATA SHIZUOKA JAPAN

News No. PE0-OM-110021

Date:May 16,2011

Signature:S. Ishibashi

Cause : ☑ Revision Notice ☐ Correction ☐ Sales Unit Change ☐ Others

Model	F250BET (6BR3) / FL250BET (6BS3)
Subject	PARTS CATALOGUE CORRECTIONS
CATALOGUE NO.	1K6BR-100E1 / 1K6BR-300F1

Time of YPEC Revision Text, Illustration --> Jun./20/2011 PDF Replace --> Jun./20/2011
(YPEC = Yamaha Parts Electrical Catalogue = Website parts catalogue)

Applicable Engine Serial No.

MODEL NAME	MODEL CODE	Applicable Engine Serial No.
F250B	6BR3	6P2:1034832-
FL250B	6BS3	6P3:1014277-

*1: Interchangeability

A	Old Parts → Old Parts New Parts → New Parts	
B	Old Parts → Old Parts New Parts → New Parts	
C	Old Parts → Old Parts New Parts → New Parts	
○	These parts are interchangeable with a set	

FIG.24 BRACKET 1

1. LIST CORRECTION

Fig. No.	Ref. No.	OLD P/No.	NEW P/No.	PART NAME	Q'TY	*Interchangeability	REMARKS
24	43	6E5-43126-02	6E5-43126-10	PIN, UPPER SHOCK MOUNT	1	○	*Part number revision
	46	93410-18M02	-	CIRCLIP	1 --> 2	○	*Q'TY change

2. ILLUSTRATION CORRECTION

(OLD)

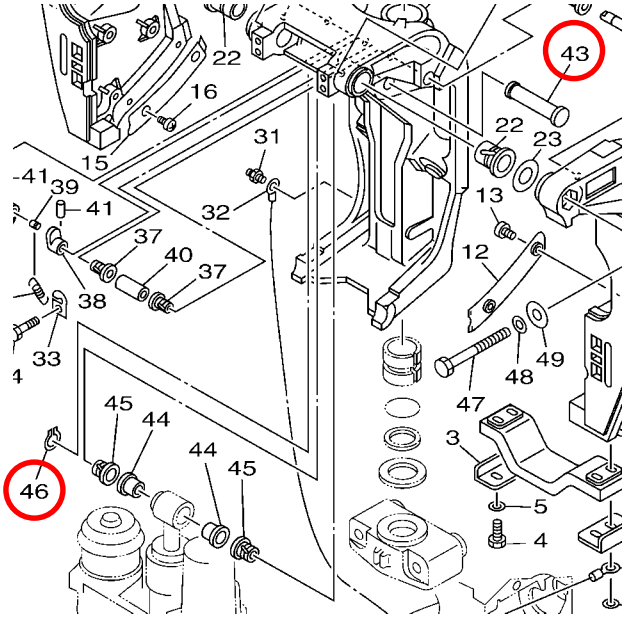

(NEW)

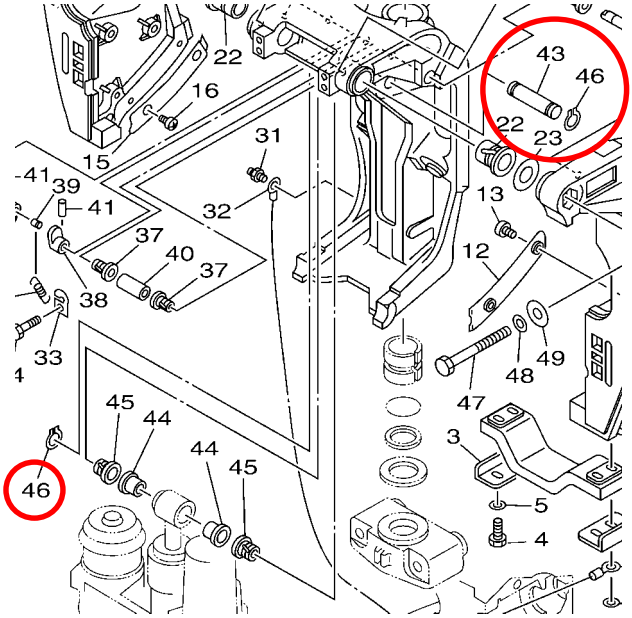

Thank you very much for your cooperation.

Parts Manager Check	Service Manager Check	Parts Manager File

YAMAHA MOTOR CO.,LTD
2500 Shingai Iwata Shizuoka 438-8501.Japan
Technical Publication Dept.

YAMAHA GENUINE Parts & Accessories

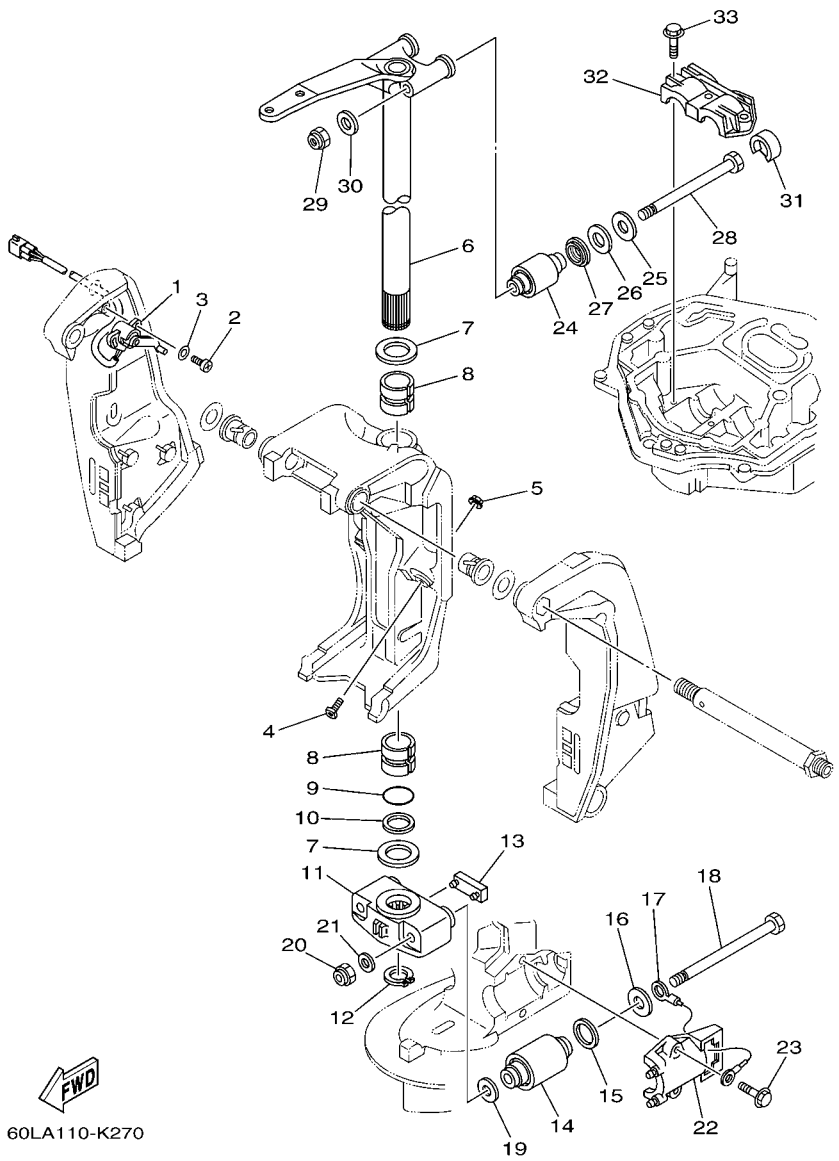

FIG. 25 BRACKET 2 SUPPORT 2

REF. NO.	PART NO. N° PIECES	DESCRIPTION DESCRIPTION	6BR3	6BS3				REMARKS REMARQUES
1	69J–83672–11	TRIM SENDER INCLINER RACCORD	1	1				
2	97885–06016	SCREW, PAN HEAD VIS, A ENCOCHE	2	2				
3	92995–06600	WASHER RONDELLE	2	2				
4	61A–43376–00	BOLT, THRUST RECEIVER BOULON	2	2				
5	95780–10300	NUT, FLANGE ECROU	2	2				
6	69J–42510–00–8D	STEERING BRACKET ASSY DIRECTION SUPPORT (ENS.)	1	1				
7	90201–40M00	WASHER, PLATE RONDELLE, PLATE	2	2				
8	90386–39M89	BUSH DOUILLE	2	2				
9	93210–35321	O-RING JOINT TORIQUE	1	1				
10	90202–40M47	WASHER, PLATE RONDELLE, PLATE	1	1				
11	69J–44551–00–8D	HOUSING, LOWER MOUNT RUBBER 1 BOITIER, SILENT-BLOC INFERIEUR	1	1				
12	93410–37M04	CIRCLIP CLIPS	1	1				
13	61A–44575–00	DAMPER, LOWER MOUNT RUBBER SILENT-BLOC, INFERIEUR	1	1				
14	60X–44555–00	MOUNT DAMPER, LOWER SIDE SILENT-BLOC, INFERIEUR LATERAL	2	2				
15	90202–32M19	WASHER, PLATE RONDELLE, PLATE	2	2				
16	90201–16016	WASHER, PLATE RONDELLE, PLATE	2	2				
17	6E5–82149–00	WIRE, LEAD 3 FIL 3	1	1				
18	90101–14002	BOLT BOULON	2	2				
19	90201–15M58	WASHER, PLATE RONDELLE, PLATE	2	2				
20	90185–14M00	NUT, SELF-LOCKING ECROU,AUTO-BLOQUANT	2	2				
21	92995–14600	WASHER RONDELLE	2	2				
22	61A–44552–01–CA	HOUSING, LOWER MOUNT RUBBER 2 BOITIER, SILENT-BLOC INFERIEUR	2	2				
23	90119–10024	BOLT, WITH WASHER BOULON, AVEC RONDELLE	4	4				
24	69J–44514–00	MOUNT DAMPER, UPPER SIDE SILENT-BLOC, SUPERIEUR LATERAL	2	2				
25	90201–16015	WASHER, PLATE RONDELLE, PLATE	2	2				
26	90202–28M46	WASHER, PLATE RONDELLE, PLATE	2	2				
27	69J–44532–00	STOPPER, UPPER MOUNT PLAQUETTE	2	2				

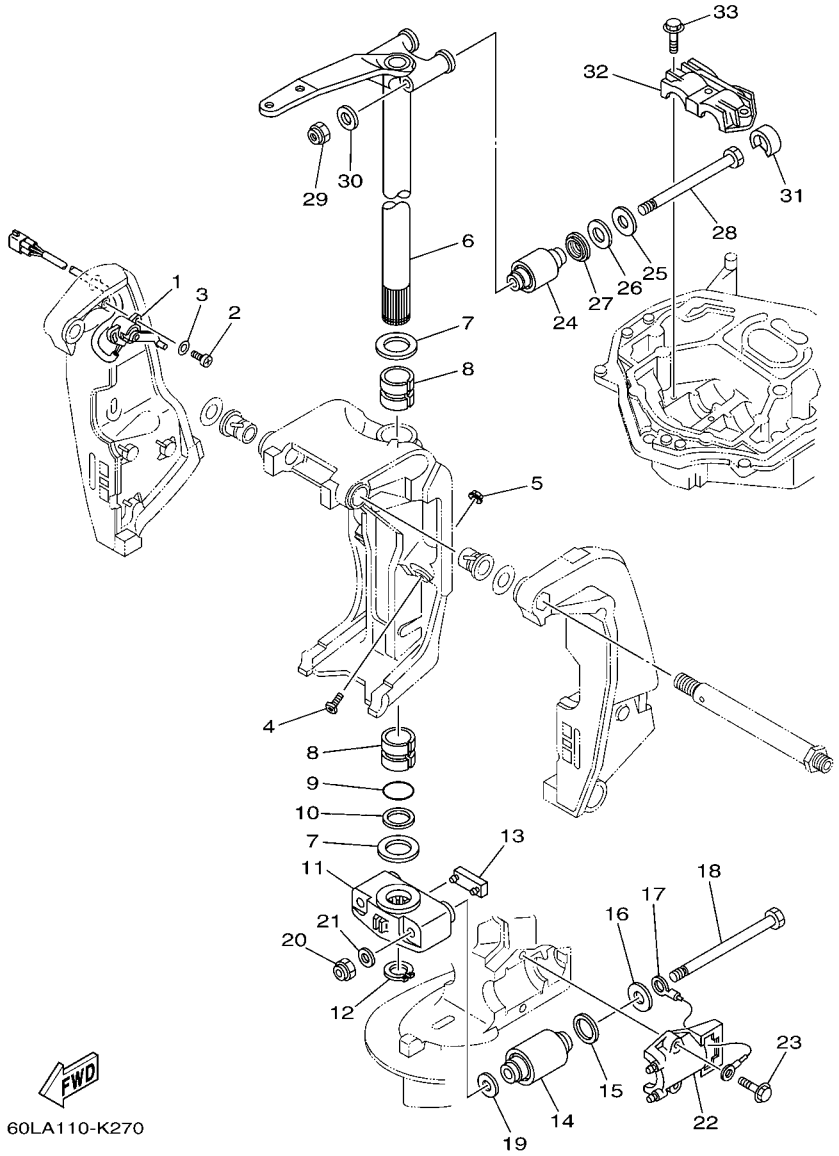

FIG. 25 BRACKET 2 SUPPORT 2

REF. NO.	PART NO. N° PIECES	DESCRIPTION DESCRIPTION	6BR3	6BS3				REMARKS REMARQUES
28	90101–14003	BOLT BOULON	2	2				
29	90185–14M00	NUT, SELF-LOCKING ECROU,AUTO-BLOQUANT	2	2				
30	92995–14600	WASHER RONDELLE	2	2				
31	69J–44533–00	DAMPER, UPPER MOUNT RUBBER COUVERCLE, SUSPENSION INFERIEU	2	2				
32	61A–44511–01	COVER, UPPER MOUNT COUVERCLE, SUSPENSION SUPERIEU	1	1				
33	90119–10024	BOLT, WITH WASHER BOULON, AVEC RONDELLE	3	3				

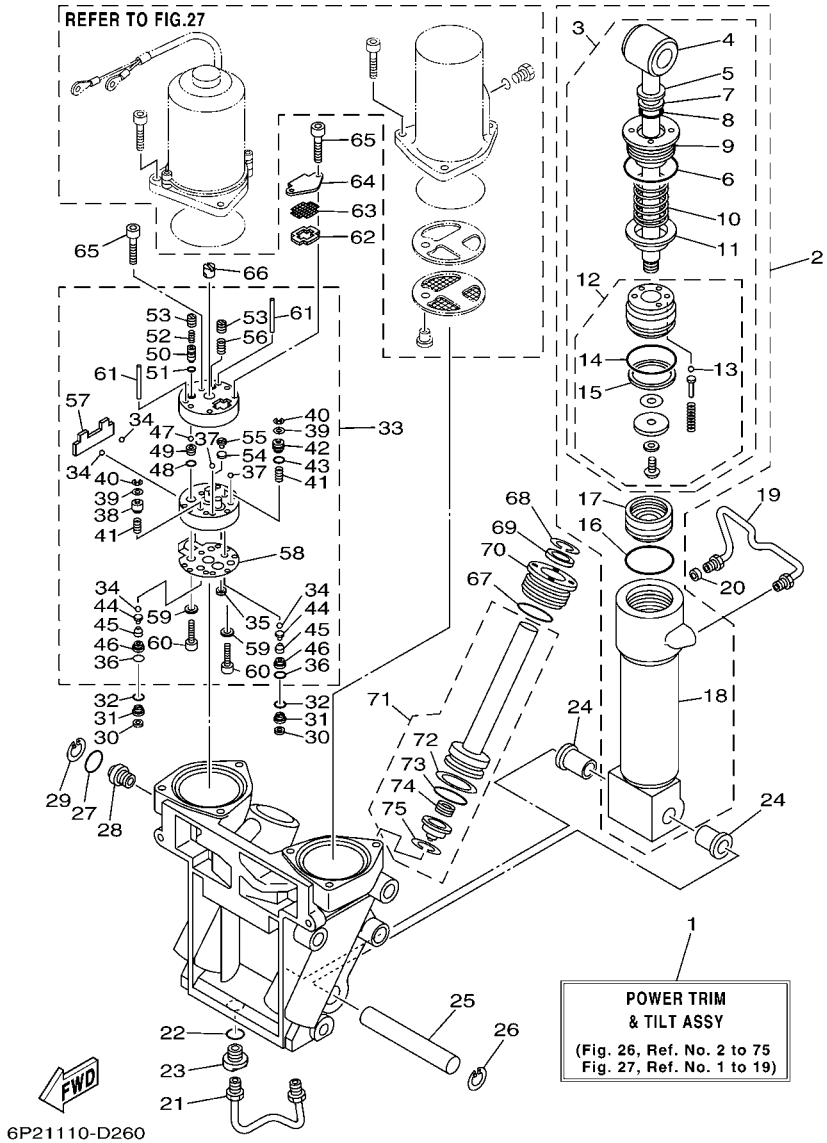

FIG. 26 POWER TRIM & TILT ASSY 1 PUISSANCE PARER ET INCLINER 1

REF. NO.	PART NO. N° PIECES	DESCRIPTION DESCRIPTION	6BR3	6BS3				REMARKS REMARQUES
1	69J–43800–04–8D	POWER TRIM & TILT ASSY PUISSANCE PARER ET INCLINER (E	1	1				
2	6CE–43840–00	POWER TILT ASSY PUISSANCE INCLINER (ENS.)	1	1				
3	6CE–43810–00	.TILT PISTON SUB ASSY .INCLINER PISTON AUXILIAIRE(ENS	1	1				
4	69J–43801–01	..ROD ..TIGE	1	1				
5	93106–19N50	..OIL SEAL ..JOINT SPY	1	1				
6	6H1–43861–00	..O-RING ..JOINT TORIQUE	1	1				
7	6H1–43872–00	..RING, BACK UP ..RESSORT	1	1				
8	61A–4389H–00	..O-RING ..JOINT TORIQUE	1	1				
9	61A–43811–00	..SCREW, CYLINDER END ..VIS, CYLINDRE RACCORD	1	1				
10	69J–4384H–00	..SPRING ..RESSORT	1	1				
11	69J–4382E–00	..ADAPTOR 2 ..ADAPTEUR 2	1	1				
12	6CE–4380P–00	..PISTON SUB ASSY ..PISTON AUXILIAIRE (ENS.)	1	1				
13	93505–32038	...BALL ...BILLE	5	5				
14	61A–43861–00	...O-RING ...JOINT TORIQUE	1	1				
15	61A–43871–00	...RING, BACK UP ...SEGMENT	1	1				
16	61A–43861–00	.O-RING .JOINT TORIQUE	1	1				
17	6H1–43814–00	.PISTON, FREE .PISTON	1	1				
18	61A–43813–01	.CYLINDER, TILT .CYLINDRE	1	1				
19	61A–43835–01	PIPE TUYAU	1	1				
20	69J–4388J–00	PLUG 2 BOUCHON 2	1	1				
21	69J–43833–00	PIPE TUYAU	1	1				
22	93210–17239	O-RING JOINT TORIQUE	1	1				
23	69J–4388E–01	BOLT ,SCREW VIS	1	1				
24	90386–18M14	BUSH DOUILLE	2	2				
25	61A–43818–00	PIN, LOWER SHOCK MOUNT AXE, INFERIEUR AMORTISSEUR	1	1				
26	61A–43876–00	RING, SNAP RESSORT	1	1				
27	93210–18397	O-RING JOINT TORIQUE	1	1				

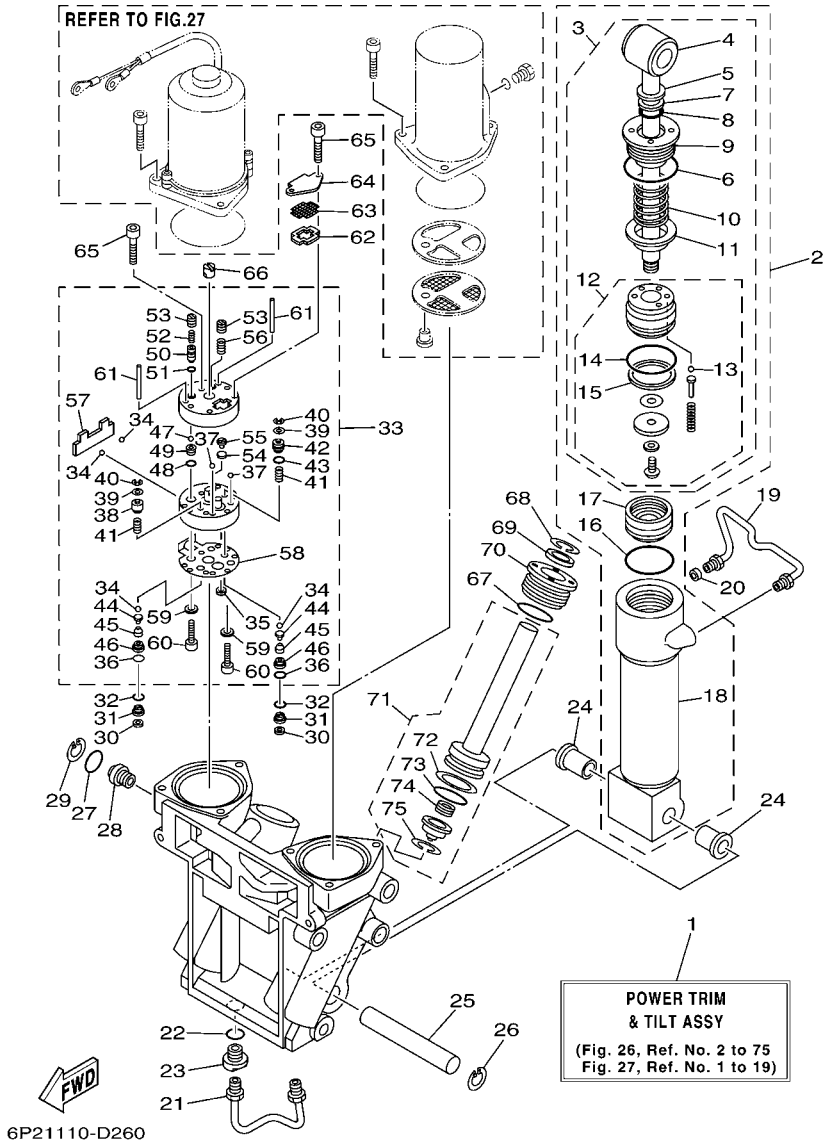

FIG. 26 POWER TRIM & TILT ASSY 1 PUISSANCE PARER ET INCLINER 1

REF. NO.	PART NO. N° PIECES	DESCRIPTION DESCRIPTION	6BR3	6BS3				REMARKS REMARQUES
28	69J–43845–00	SCREW, MANUAL RELEASE VIS	1	1				
29	6H1–43875–00	RING, SNAP RESSORT	1	1				
30	69J–4381C–00	FILTER 3 FILTRE 3	2	2				
31	69J–43899–01	PLATE STOPPER PLAQUETTE	2	2				
32	69J–4389J–00	O-RING JOINT TORIQUE	2	2				
33	69J–43830–01	GEAR PUMP ASSY POMPE A PIGNON (ENS.)	1	1				
34	93505–32038	.BALL .BILLE	4	4				
35	69J–4381C–00	.FILTER 3 .FILTRE 3	1	1				
36	69J–4389J–00	.O-RING .JOINT TORIQUE	2	2				
37	93503–16003	.BALL .BILLES	2	2				
38	6CJ–4384M–00	.PISTON, SHUTTLE 2 .PISTON 2	1	1				
39	69A–4384F–00	.SEAL, MAIN VALVE .JOINT	2	2				
40	99002–03600	.CLIP .CIRCLIP	2	2				
41	69J–43894–00	.SPRING, SHUTTLE RETURN .RESSORT	2	2				
42	6CJ–43841–00	.PISTON, SHUTTLE .PISTON	1	1				
43	6H1–43883–00	.O-RING .JOINT TORIQUE	1	1				
44	60V–4386A–00	.PIN, ABSORBER VALVE .GOUPILLE, SOUPAPE	2	2				
45	69J–43853–00	.SPRING, MAIN VALVE .RESSORT	2	2				
46	6CJ–43893–00	.WASHER .RONDELLE	2	2				
47	93501–08001	.BALL .BILLE	2	2				
48	93210–08391	.O-RING .JOINT TORIQUE	1	1				
49	69J–43851–00	.SEAT, RELIEF VALVE .SIEGE	1	1				
50	6CJ–43844–00	.PIN, VALVE SUPPORT .GOUPILLE	1	1				
51	93210–064A5	.O-RING .JOINT TORIQUE	1	1				
52	69J–43855–00	.SPRING, UP RELIEF .RESSORT	1	1				
53	6CJ–43843–00	.SCREW, VALVE LOCK .VIS	2	2				
54	6H1–4384G–11	.SEAL, RELIEF VALVE .JOINT	1	1				

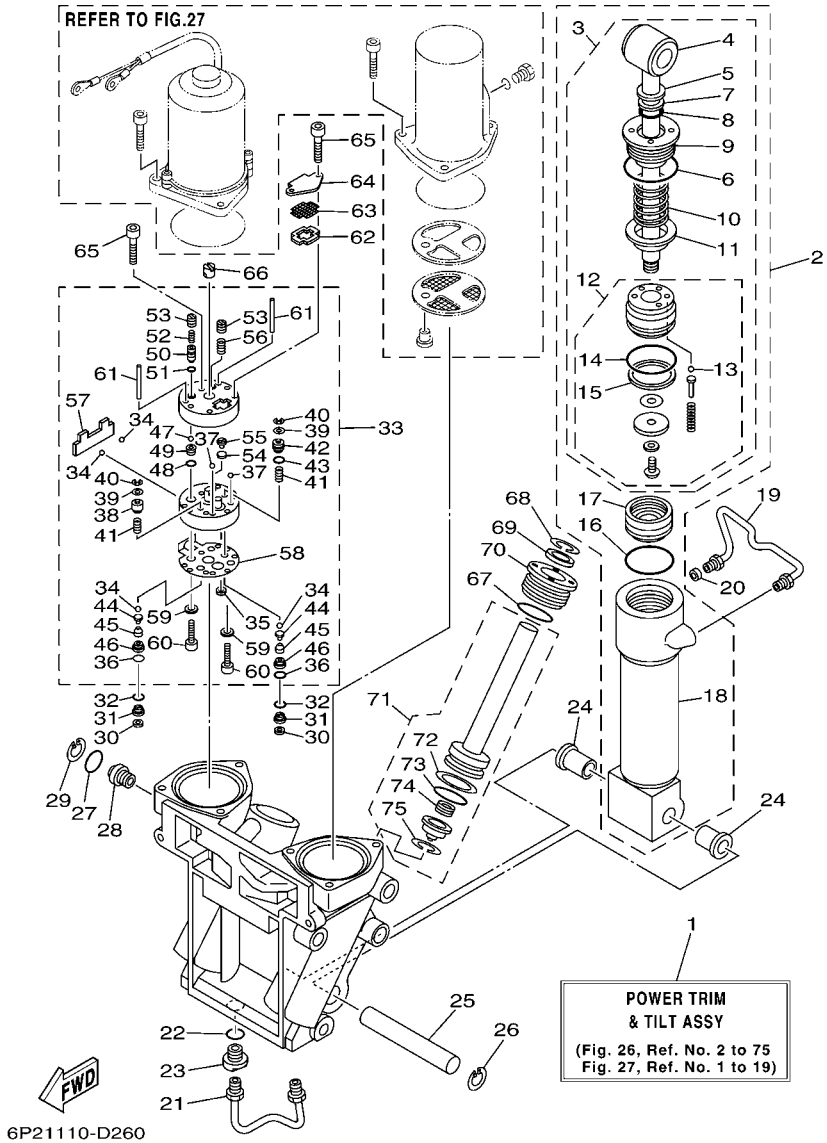

FIG. 26 POWER TRIM & TILT ASSY 1 PUISSANCE PARER ET INCLINER 1

REF. NO.	PART NO. N° PIECES	DESCRIPTION DESCRIPTION	6BR3	6BS3				REMARKS REMARQUES
55	6H1–43844–10	.PIN, VALVE SUPPORT .GOUPILLE	1	1				
56	6H1–43856–10	.SPRING, DOWN RELIEF .RESSORT	1	1				
57	69J–43854–00	.SPRING, MANUAL RELEASE .RESSORT	1	1				
58	69J–4384G–00	.SEAL, RELIEF VALVE .JOINT	1	1				
59	CS3–4387G–00	.WASHER .RONDELLE	2	2				
60	91318–05025	.BOLT .BOULON	2	2				
61	93604–35236	.PIN, DOWEL .CLAVETTE	2	2				
62	69J–43871–00	RING, BACK UP SEGMENT	1	1				
63	69J–43816–00	FILTER 1 FILTRE 1	1	1				
64	69J–4381J–00	PLATE PLAQUE	1	1				
65	91318–05040	BOLT BOULON	3	3				
66	69J–43831–00	CONNECTOR, SHAFT RACCORD	1	1				
67	61A–43861–00	O-RING JOINT TORIQUE	2	2				
68	6T4–43875–01	RING, SNAP RESSORT	2	2				
69	61A–43822–00	SEAL, TRIM DUST JOINT	2	2				
70	61A–43821–00	SCREW, TRIM CYLINDER END VIS	2	2				
71	69J–43820–00	TRIM PISTON SUB ASSY PARER PISTON AUXILIAIRE (ENS.)	2	2				
72	61A–43874–00	.RING, BACK UP .RESSORT	1	1				
73	61A–43864–00	.O-RING .JOINT TORIQUE	1	1				
74	61A–4384H–10	.SPRING .RESSORT	1	1				
75	61A–43875–10	.RING, SNAP .RESSORT	1	1				

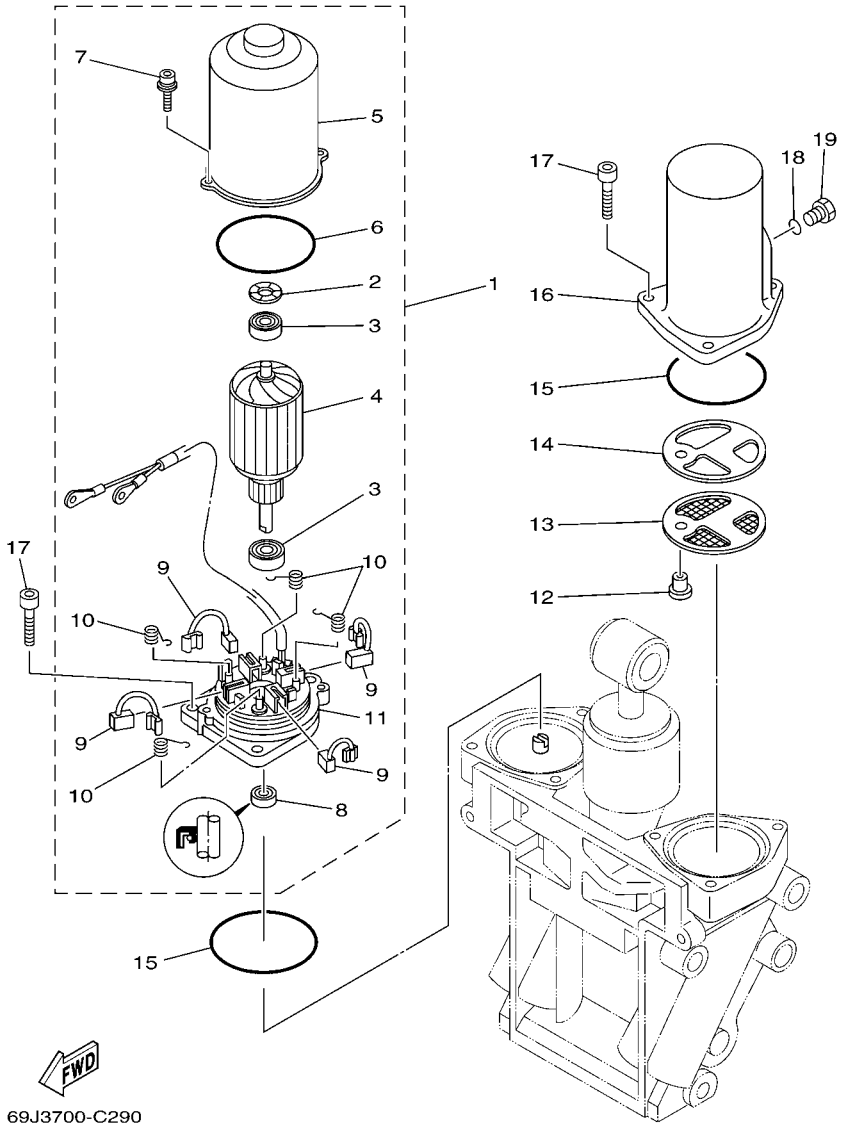

FIG. 27 POWER TRIM & TILT ASSY 2 PUISSANCE PARER ET INCLINER 2

REF. NO.	PART NO. N° PIECES	DESCRIPTION DESCRIPTION	6BR3	6BS3				REMARKS REMARQUES
1	69J–43880–01	MOTOR ASSY MOTEUR (ENS.)	1	1				
2	90206–14N50	.WASHER, WAVE .RONDELLE, ONDULEE	1	1				
3	93399–999T6	.BEARING .ROULEMENT	2	2				
4	69J–43805–00	.ARMATURE ASSY .INDUIT (ENS.)	1	1				
5	69J–43804–00	.STATOR ASSY .STATOR (ENS.)	1	1				
6	69J–43861–00	.O-RING .JOINT TORIQUE	1	1				
7	69J–43886–00	.BOLT .BOULON	2	2				
8	69J–43882–00	.OIL SEAL .JOINT SPI	1	1				
9	69J–43891–00	.BRUSH 1 .BALAI 1	4	4				
10	69J–4386K–00	.SPRING, BRUSH .RESSORT, BALAI	4	4				
11	69J–43881–01	.FRAME, END .BATI	1	1				
12	69J–4388H–00	PLUG BOUCHON	1	1				
13	69J–43817–00	FILTER 2 FILTRE 2	1	1				
14	69J–4388F–00	SPACER ENTRETOISE	1	1				
15	6H1–43869–00	O-RING JOINT TORIQUE	2	2				
16	69J–43828–00	BODY, RESERVOIR CORPS	1	1				
17	69J–43888–00	BOLT, SOCKET BOULON	6	6				
18	93210–09165	O-RING JOINT TORIQUE	1	1				
19	6H1–43829–00	PLUG, RESERVOIR BOUCHON	1	1				

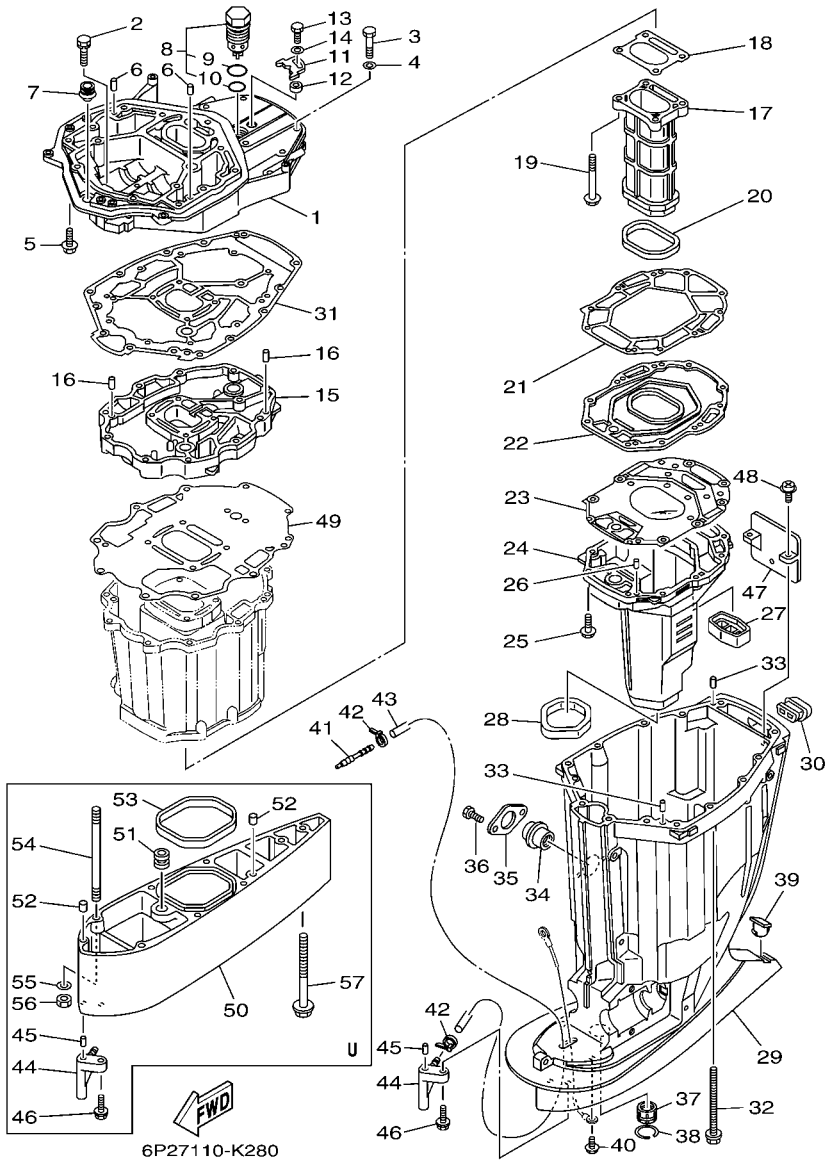

FIG. 28 UPPER CASING FOURREAU

REF. NO.	PART NO. N° PIECES	DESCRIPTION DESCRIPTION	6BR3	6BS3				REMARKS REMARQUES
1	69J–41137–10–CA	GUIDE, EXHAUST COLLECTEUR D'ECHAPPEMENT	1	1				
2	90119–08102	BOLT, WITH WASHER BOULON, AVEC RONDELLE	2	2				
3	97075–10045	BOLT BOULON	7	7				
4	92995–10600	WASHER RONDELLE	7	7				
5	97575–10535	BOLT, WITH WASHER VIS HEXAGONAL AVC RONDELLE	7	7				
6	93608–16M16	PIN, DOWEL AXE	2	2				
7	6E5–42724–00	GROMMET PASSE-FIL	1	1				
8	6AW–11371–10	PRESSURE CONTROL VALVE ASSY SOUPAPE, COMMANDE DE PRESSION	1	1				
9	93210–347A1	.O-RING .JOINT TORIQUE	1	1				
10	93210–28543	.O-RING .JOINT TORIQUE	1	1				
11	69J–12233–00	PLATE, GUIDE STOPPER 1 PLAQUE, GUIDE BUTEE 1	1	1				
12	90387–06037	COLLAR COLLERETTE	1	1				
13	97095–06020	BOLT BOULON	1	1				
14	92995–06600	WASHER RONDELLE	1	1				
15	69J–41131–11–CA	MANIFOLD, EXT. 1 PIPE D'ECHAPPEMENT	1	1				
16	93608–16M16	PIN, DOWEL AXE	2	2				
17	69J–41132–20–9S	MANIFOLD, EXHAUST PIPE D'ECHAPPEMENT	1	1				
18	6P2–41134–00	GASKET, EXHAUST MANIFOLD JOINT, PIPE D'ECHAPPEMENT	1	1				
19	97575–08590	BOLT, WITH WASHER VIS HEXAGONAL AVC RONDELLE	4	4				
20	69J–41138–00	SEAL, EXT. 1 JOINT DE GROUPE 1	1	1				
21	69J–41135–A0	GASKET, EXHAUST MANIFOLD JOINT, PIPE D'ECHAPPEMENT	1	1				
22	69J–45181–10–9S	PLATE PLAQUETTE	1	1				
23	6S1–41136–00	GASKET, EXHAUST MANIFOLD 4 JOINT, PIPE D'ECHAPPEMENT 4	1	1				
24	69J–14711–20–9S	MUFFLER 1 POT D'ECHAPPEMENT 1	1	1				
25	97575–08535	BOLT, WITH WASHER VIS HEXAGONAL AVC RONDELLE	10	10				
26	93606–19M23	PIN, DOWEL GOUPILLE	2	2				
27	69J–45127–00	SEAL JOINT	1	1				

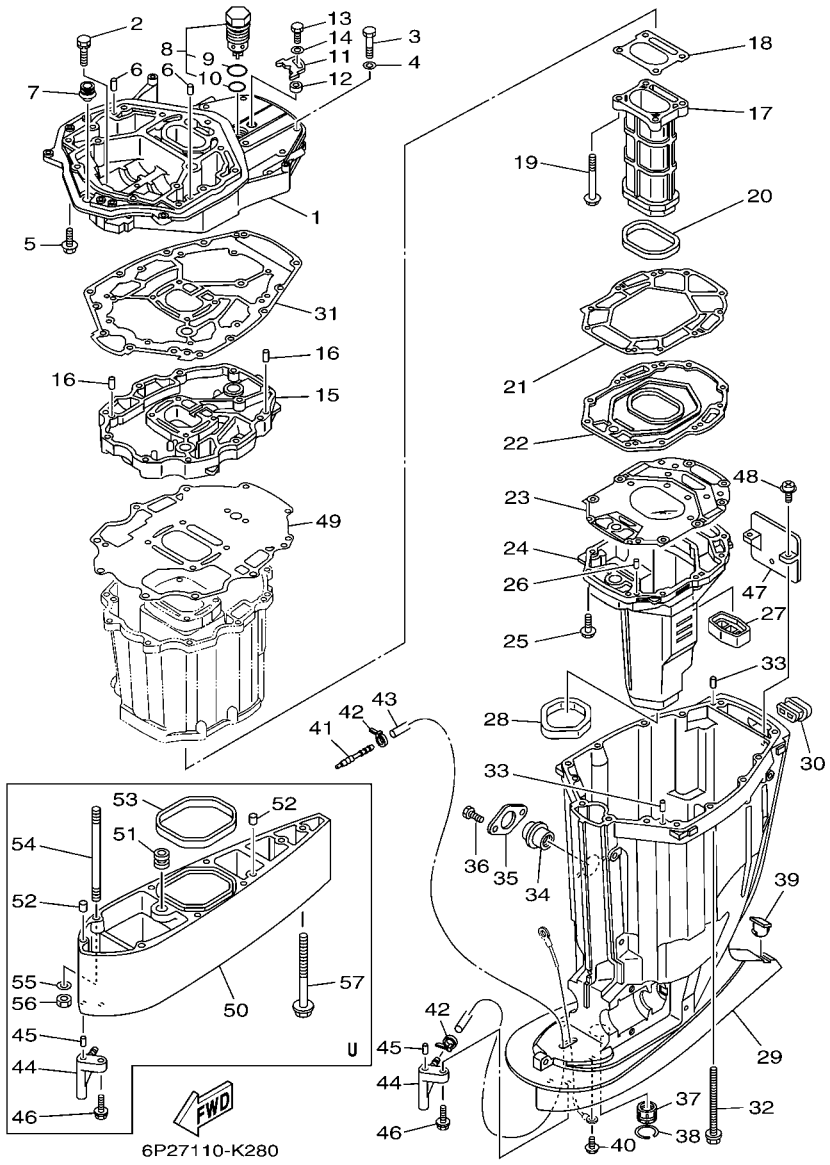

FIG. 28 UPPER CASING FOURREAU

REF. NO.	PART NO. N° PIECES	DESCRIPTION DESCRIPTION	6BR3	6BS3				REMARKS REMARQUES
28	69J–45123–00	GASKET, MUFFLER JOINT, POT DE DETENTE	1	1				
29	69J–45111–10–8D	CASING, UPPER FOURREAU	1	1				
30	69J–42769–00	SEAL, RUBBER BOURRELET, CAOUTCHOUC	1	1				
31	69J–45113–20	GASKET, UPPER CASING JOINT, TUBE D'ARBRE	1	1				
32	90119–10007	BOLT, WITH WASHER BOULON, AVEC RONDELLE	6	6				
33	93608–16M16	PIN, DOWEL AXE	2	2				
34	69J–15316–00	DAMPER 1 AMORTISSEUR 1	1	1				
35	69J–45152–10	COVER, UPPER CASING 2 CAPUCHON FOURREAU	1	1				
36	97095–06014	BOLT BOULON	2	2				
37	69J–45318–01	BUSHING, DRIVE SHAFT DOUILLE, ARBRE MOTEUR	1	1				
38	93420–36M01	CIRCLIP CIRCLIP, TYPE S	1	1				
39	61A–45155–00	CAP CAPUCHON	1	1				
40	95895–06010	BOLT, FLANGE BOULON	1	1				
41	6E5–83558–00	END, NIPPLE RACCORD DE NIPPLE	1	1				
42	90465–11M10	CLAMP BRIDE	2	2				
43	90445–07010	HOSE (L1330) DURITE (L1330)	1	1				X(25.3") X(25.3")
	90445–07012	HOSE (L1457) DURITE (L1457)	1	1				U(30.3") U(30.3")
44	61A–45378–00	NIPPLE, HOSE RACCORD, TUYAU	1	1				
45	93606–12019	PIN, DOWEL GOUPILLE	1	1				
46	90119–06M17	BOLT, WITH WASHER BOULON, AVEC RONDELLE	1	1				
47	69J–14624–01	COVER, EXHAUST CACHE D'ECHAPPEMENT	1	1				
48	97980–06216	SCREW, WITH WASHER VIS, AVEC RONDELLE	2	2				
49	69J–15312–01	GASKET, OIL PAN JOINT DE VENTILATEUR D'HUILE	1	1				
50	69J–45211–02–8D	EXTENSION EXTENSION	1	1				U(30.3") U(30.3")
51	6E5–44366–00	DAMPER, WATER SEAL 2 JOINT, TUBE D'EAU 2	1	1				U(30.3") U(30.3")
52	93608–12M05	PIN, DOWEL AXE	2	2				U(30.3") U(30.3")
53	69J–45159–00	DAMPER CAOUTCHOUC, JOINT	1	1				U(30.3") U(30.3")

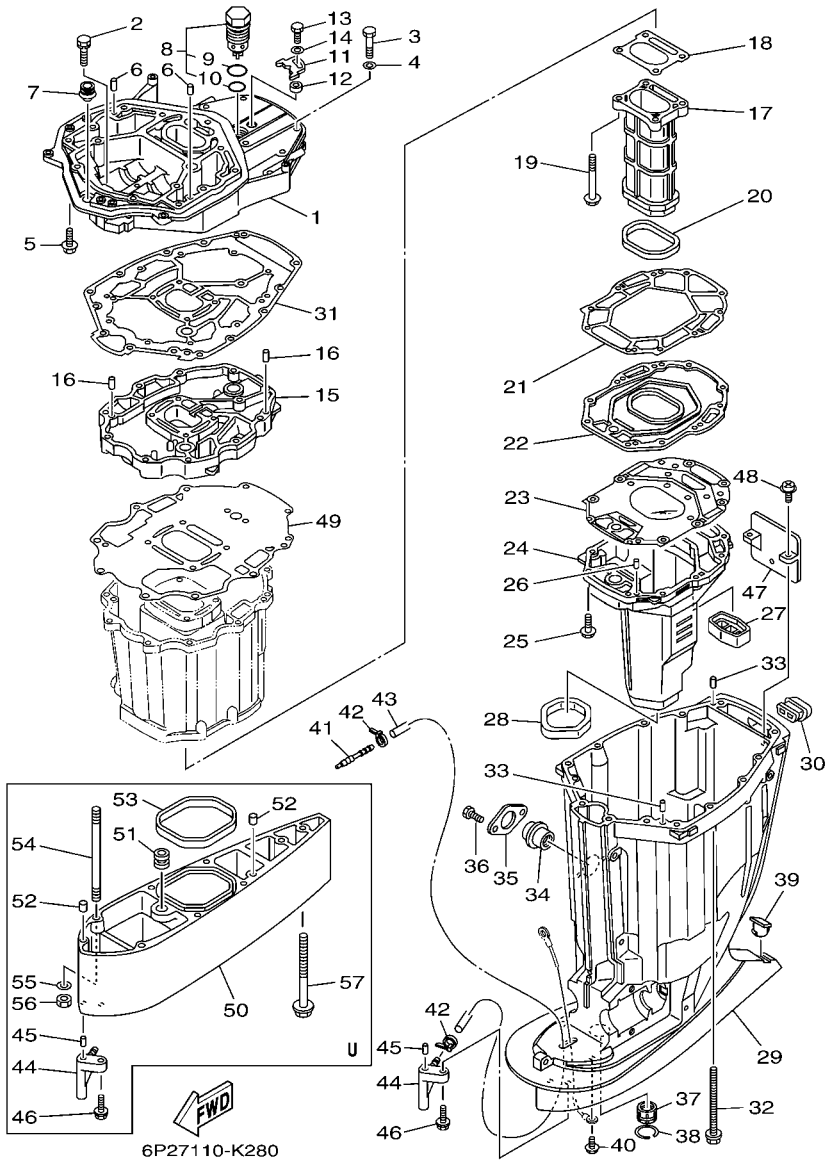

FIG. 28 UPPER CASING FOURREAU

REF. NO.	PART NO. N° PIECES	DESCRIPTION DESCRIPTION	6BR3	6BS3				REMARKS REMARQUES
54	90116–10012	BOLT, STUD GOUJON	6	6				U(30.3") U(30.3")
55	92995–10600	WASHER RONDELLE	6	6				U(30.3") U(30.3")
56	95380–10600	NUT ECROU	6	6				U(30.3") U(30.3")
57	90119–10009	BOLT, WITH WASHER BOULON, AVEC RONDELLE	1	1				U(30.3") U(30.3")

FIG. 29 OIL PAN — VENTILATEUR D'HUILE

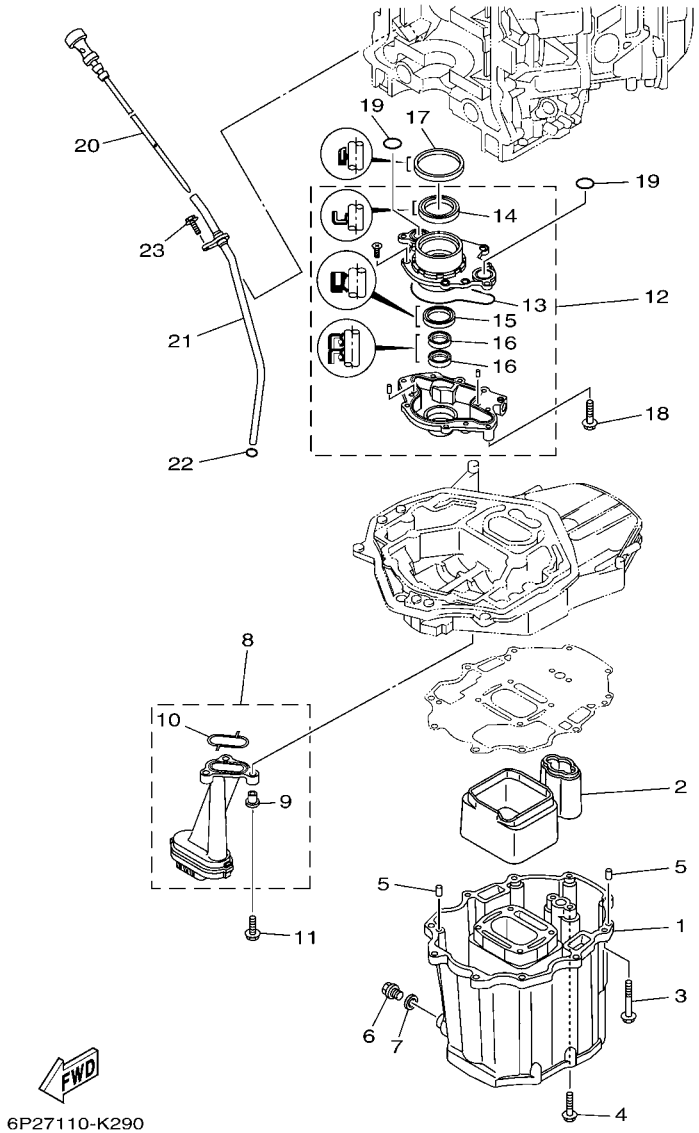

REF. NO.	PART NO. N° PIECES	DESCRIPTION DESCRIPTION	6BR3	6BS3				REMARKS REMARQUES
1	69J–15311–00–CA	OIL PAN VENTILATEUR D'HUILE	1	1				
2	69J–15761–00	SEAL, RUBBER 1 JOINT CAOUTCHOUC 1	1	1				
3	97575–08560	BOLT, WITH WASHER VIS HEXAGONAL AVC RONDELLE	10	10				
4	97575–08535	BOLT, WITH WASHER VIS HEXAGONAL AVC RONDELLE	2	2				
5	93608–16M16	PIN, DOWEL AXE	2	2				
6	90340–14M06	PLUG, STRAIGHT SCREW PLOT, FILETE DROIT	1	1				
7	90430–14M09	GASKET JOINT	1	1				
8	69J–13411–00	STRAINER, OIL FILTRE, HUILE	1	1				
9	90387–06263	.COLLAR .COLLERETTE	3	3				
10	69J–13415–00	.SEAL, OIL STRAINER .JOINT, FILTRE A HUILE	1	1				
11	95812–06025	BOLT, FLANGE BOULON	3	3				
12	69J–13300–02	OIL PUMP ASSY POMPE A HUILE COMPLETE	1	1				
13	69J–13329–00	.GASKET, PUMP COVER .JOINT, COUVERCLE DE POMPE	1	1				
14	69J–13338–00	.OIL SEAL .JOINT SPY	1	1				
15	6AW–13119–00	.OIL SEAL .JOINT SPY	1	1				
16	69J–13631–00	.OIL SEAL .JOINT SPY	2	2				
17	69J–11355–00	SEAL, CYLINDER 1 JOINT, SPY CYLINDRE	1	1				
18	97575–06540	BOLT, WITH WASHER VIS HEXAGONAL AVC RONDELLE	4	4				
19	93210–25552	O-RING JOINT TORIQUE	2	2				
20	6P2–15362–10	PLUG, OIL LEVEL PLOT, NIVEAU D'HUILE	1	1				
21	6P2–15377–10	GUIDE, INLET GUIDE D'ADMISSION	1	1				
22	93210–19MJ3	O-RING JOINT TORIQUE	1	1				
23	95895–06016	BOLT, FLANGE BOULON	1	1				

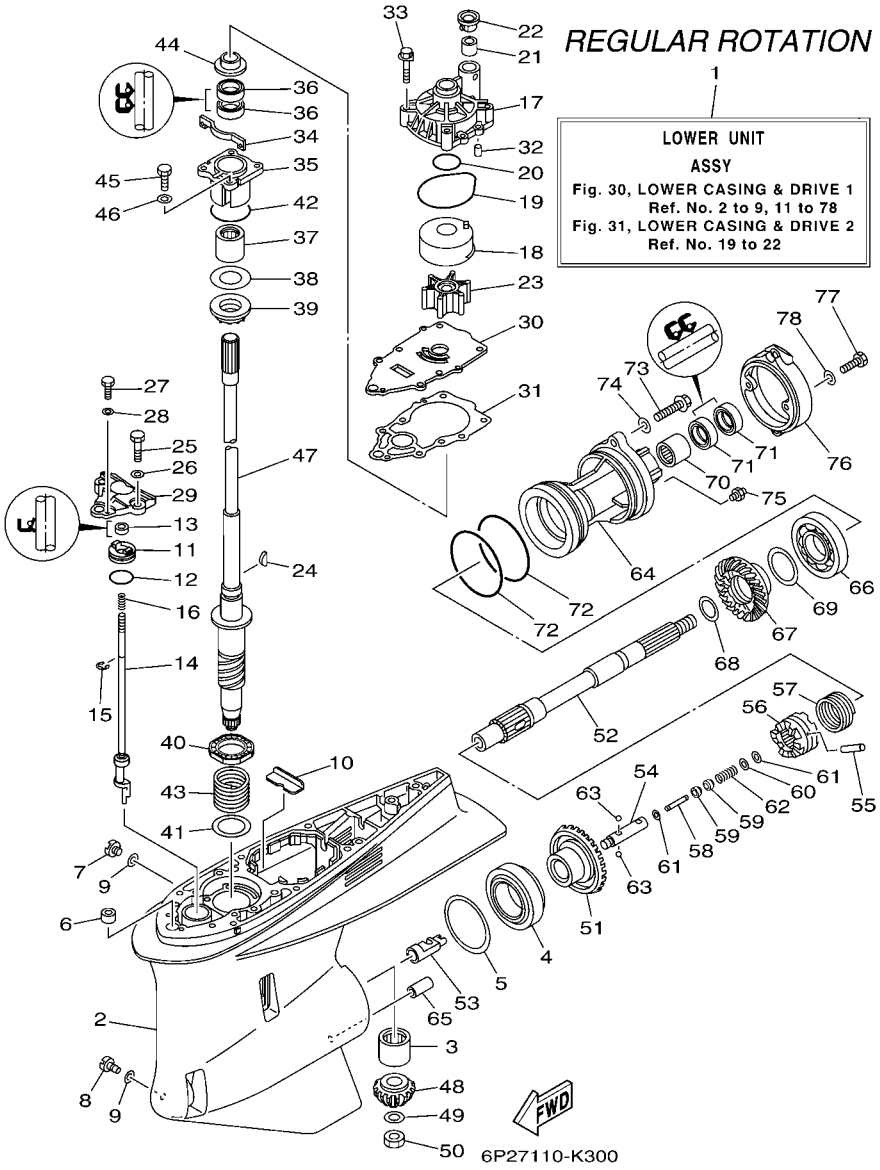

FIG. 30 LOWER CASING & DRIVE 1 BOITIER D'HELICE TRANSMISSION1

REF. NO.	PART NO. N° PIECES	DESCRIPTION DESCRIPTION	6BR3	6BS3				REMARKS REMARQUES
1	6P2–45300–40–8D	LOWER UNIT ASSY UNITE INFERIEURE (ENS.)	1					X(25.3"),RH X(25.3"),RH
	6P2–45300–50–8D	LOWER UNIT ASSY UNITE INFERIEURE (ENS.)	1					U(30.3"),RH U(30.3"),RH
2	6P2–45301–10–8D	CASING, LOWER BEQUILLE	1					
3	93311–83280	BEARING ROULEMENT	1					
4	93332–000W1	BEARING ROULEMENT	1					
5	61A–45567–00	SHIM (T:0.10MM) CALE (T:0.10MM)	1					UR UR
	61A–45567–10	SHIM (T:0.12MM) CALE (T:0.12MM)	1					UR UR
	61A–45567–20	SHIM (T:0.15MM) CALE (T:0.15MM)	1					UR UR
	61A–45567–30	SHIM (T:0.18MM) CALE (T:0.18MM)	1					UR UR
	61A–45567–40	SHIM (T:0.30MM) CALE (T:0.30MM)	1					UR UR
	61A–45567–50	SHIM (T:0.40MM) CALE (T:0.40MM)	1					UR UR
	61A–45567–60	SHIM (T:0.50MM) CALE (T:0.50MM)	1					UR UR
6	663–44366–00	DAMPER, WATER SEAL 2 JOINT, TUBE D'EAU 2	1					
7	90340–08002	PLUG, STRAIGHT SCREW PLOT, FILETE DROIT	1					
8	688–45341–10	PLUG, DRAIN BOUCHON DE VIDANGE	1					
9	90430–08020	GASKET JOINT	2					
10	61A–45376–00	GUIDE, SEAL DAMPER BUTEE, JOINT CAOUTCHOUC	1					
11	65N–45321–00	PLATE PLAQUETTE	1					
12	93210–33M49	O-RING JOINT TORIQUE	1					
13	93106–09014	OIL SEAL JOINT SPY	1					
14	6P2–44150–00	SHIFT CAM ASSY CAME D'INVERSION	1					
15	99001–08600	CIRCLIP CIRCLIP	1					
16	90501–11M10	SPRING, COMPRESSION RESSORT, COMPRESSION	1					
17	61A–44311–01	HOUSING, WATER PUMP CORPS, POMPE A EAU	1					
18	61A–44322–02	INSERT, CARTRIDGE CUVETTE	1					
19	93210–86M38	O-RING JOINT TORIQUE	1					
20	93210–37160	O-RING JOINT TORIQUE	1					

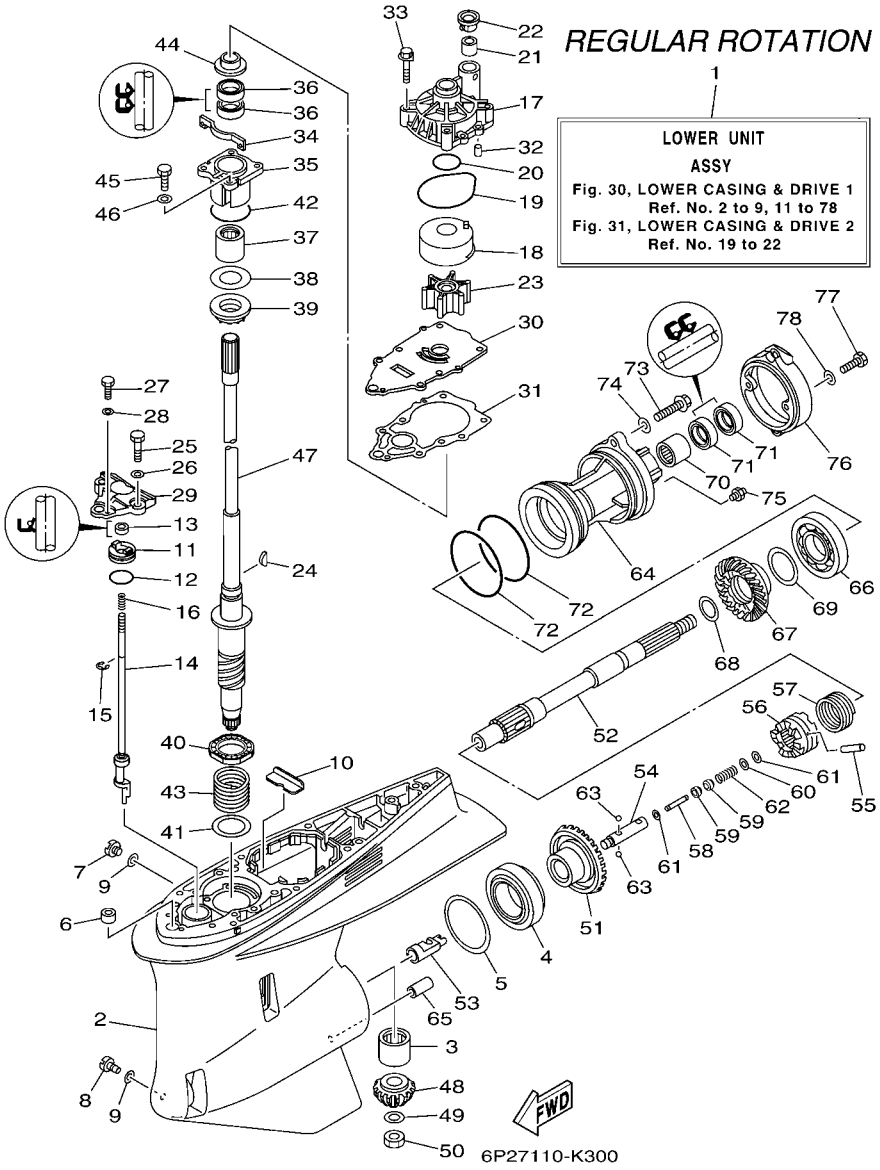

FIG. 30 LOWER CASING & DRIVE 1 BOITIER D'HELICE TRANSMISSION1

REF. NO.	PART NO. N° PIECES	DESCRIPTION DESCRIPTION	6BR3	6BS3				REMARKS REMARQUES
21	6E5–44365–00	DAMPER, WATER SEAL 1 JOINT, TUBE D'EAU 1	1					
22	6E5–44312–00	COVER, WATER PUMP HOUSING COUVERCLE	1					
23	6E5–44352–01	IMPELLER TURBINE	1					
24	90280–04M05	KEY, WOODRUFF CLAVETTE, DEMI-LUNE	1					
25	97095–08030	BOLT BOULON	2					
26	92995–08600	WASHER RONDELLE	2					
27	97095–06016	BOLT BOULON	1					
28	92995–06600	WASHER RONDELLE	1					
29	60X–44312–00	COVER, WATER PUMP HOUSING COUVERCLE	1					
30	6P2–44323–00	OUTER PLATE, CARTRIDGE PLAQUE EXTERIEURE	1					
31	60X–44315–A0	GASKET, WATER PUMP JOINT, POMPE A EAU	1					
32	93606–12019	PIN, DOWEL GOUPILLE	2					
33	90119–08M14	BOLT, WITH WASHER BOULON, AVEC RONDELLE	4					
34	6P2–45723–00	PLATE, SEAL PLAQUE, JOINT	1					
35	6P2–45331–00–9S	HOUSING, BEARING FLASQUE, ROULEMENT	1					
36	93101–28M16	OIL SEAL JOINT SPY	2					
37	93317–330U2	BEARING ROULEMENT	1					
38	61A–45587–00	SHIM (T:0.10MM) CALE (T:0.10MM)	1					UR UR
	61A–45587–10	SHIM (T:0.12MM) CALE (T:0.12MM)	1					UR UR
	61A–45587–20	SHIM (T:0.15MM) CALE (T:0.15MM)	1					UR UR
	61A–45587–30	SHIM (T:0.18MM) CALE (T:0.18MM)	1					UR UR
	61A–45587–40	SHIM (T:0.30MM) CALE (T:0.30MM)	1					UR UR
	61A–45587–50	SHIM (T:0.40MM) CALE (T:0.40MM)	1					UR UR
	61A–45587–60	SHIM (T:0.50MM) CALE (T:0.50MM)	1					UR UR
39	93341–930U9	BEARING CERVEAUX DE DIRECTION	1					
40	93341–34019	BEARING CERVEAUX DE DIRECTION	1					
41	90201–42014	WASHER, PLATE RONDELLE, PLATE	1					

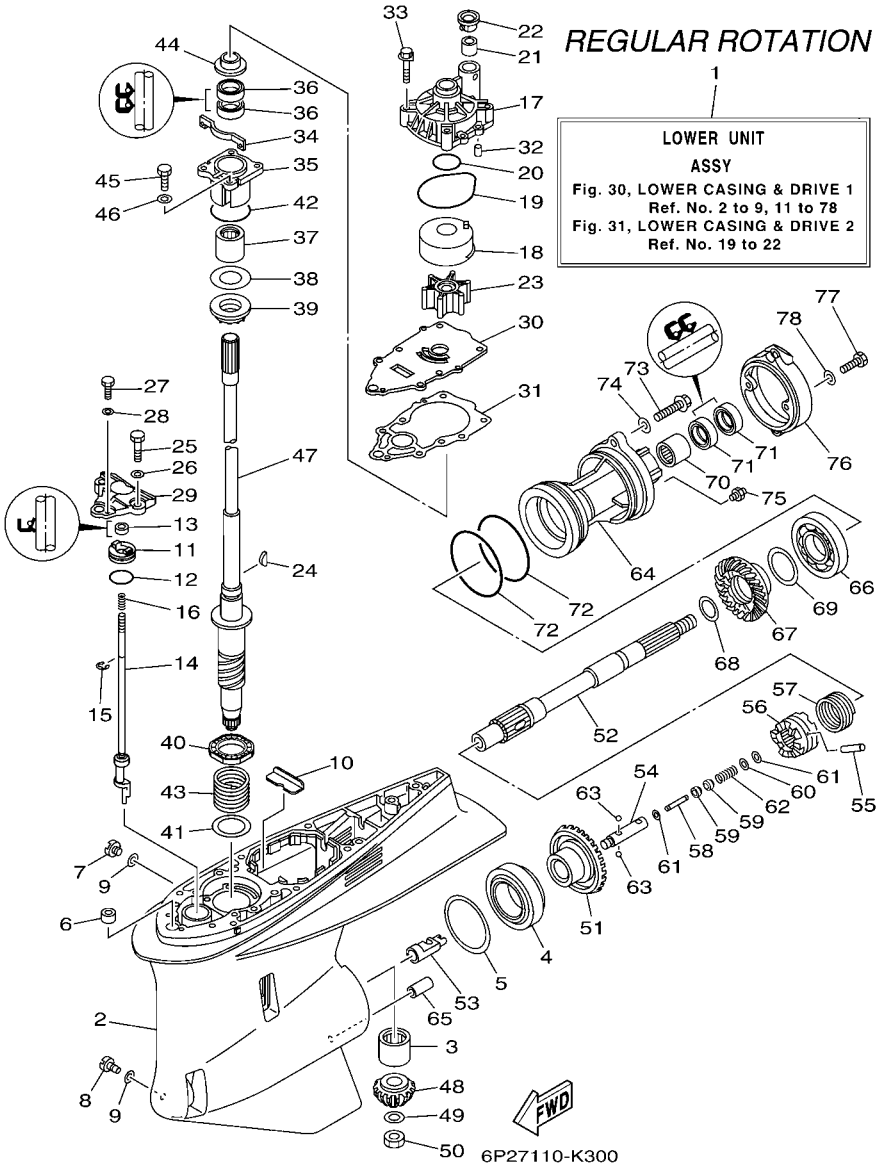

FIG. 30 LOWER CASING & DRIVE 1 BOITIER D'HELICE TRANSMISSION1

REF. NO.	PART NO. N° PIECES	DESCRIPTION DESCRIPTION	6BR3	6BS3				REMARKS REMARQUES
42	93210–55M14	O-RING JOINT TORIQUE	1					
43	90501–450A2	SPRING, COMPRESSION RESSORT, COMPRESSION	1					
44	6E5–45344–00	COVER, OIL SEAL FLASQE, JOINT D'HUILE	1					
45	97095–08025	BOLT BOULON	4					
46	92995–08600	WASHER RONDELLE	4					
47	6P2–45501–00	DRIVE SHAFT COMP. ARBRE MOTEUR COMP.	1					X(25.3") X(25.3")
	6P2–45501–10	DRIVE SHAFT COMP. ARBRE MOTEUR COMP.	1					U(30.3") U(30.3")
48	6P2–45551–01	PINION (15T) PIGNON D'ATTAQUE (15D)	1					
49	90201–16M00	WASHER, PLATE RONDELLE, PLATE	1					
50	90170–16M19	NUT ECROU	1					
51	6P2–45560–00	GEAR 1 (30T) PIGNON 1 (30T)	1					
52	69J–45611–00	SHAFT, PROPELLER ARBRE, HELICE	1					
53	61A–45641–02	SHIFTER EMBRAYAGE	1					
54	61A–45634–01	SLIDE, SHIFT CONTRE-POUSSOIR	1					
55	61A–45632–00	PIN, CROSS GOUPILLE DE CRABOT	1					
56	69J–45631–00	CLUTCH, DOG CRABOT	1					
57	61A–45633–00	RING, CROSS PIN JONC, GOUPILLE CRABOT	1					
58	6H1–45668–00	SHAFT, FREE 1 AXE 1	1					
59	61A–45635–00	PLUNGER, SHIFT POUSSOIR D'EMBRAYAGE	2					
60	90201–02M00	WASHER, PLATE RONDELLE, PLATE	1					
61	90183–02M03	NUT, SPRING ECROU, RESSORT	2					
62	90501–10M77	SPRING, COMPRESSION RESSORT, COMPRESSION	1					
63	93501–04011	BALL BILLE	2					
64	6D0–45332–00–CA	HOUSING, BEARING FLASQUE, ROULEMENT	1					
65	99590–10114	PIN, DOWEL GOUJON, D'ASSEMBLAGE	1					
66	93306–210U0	BEARING ROULEMENT	1					
67	6P2–45571–00	GEAR 2 (30T) PIGNON 2 (30T)	1					

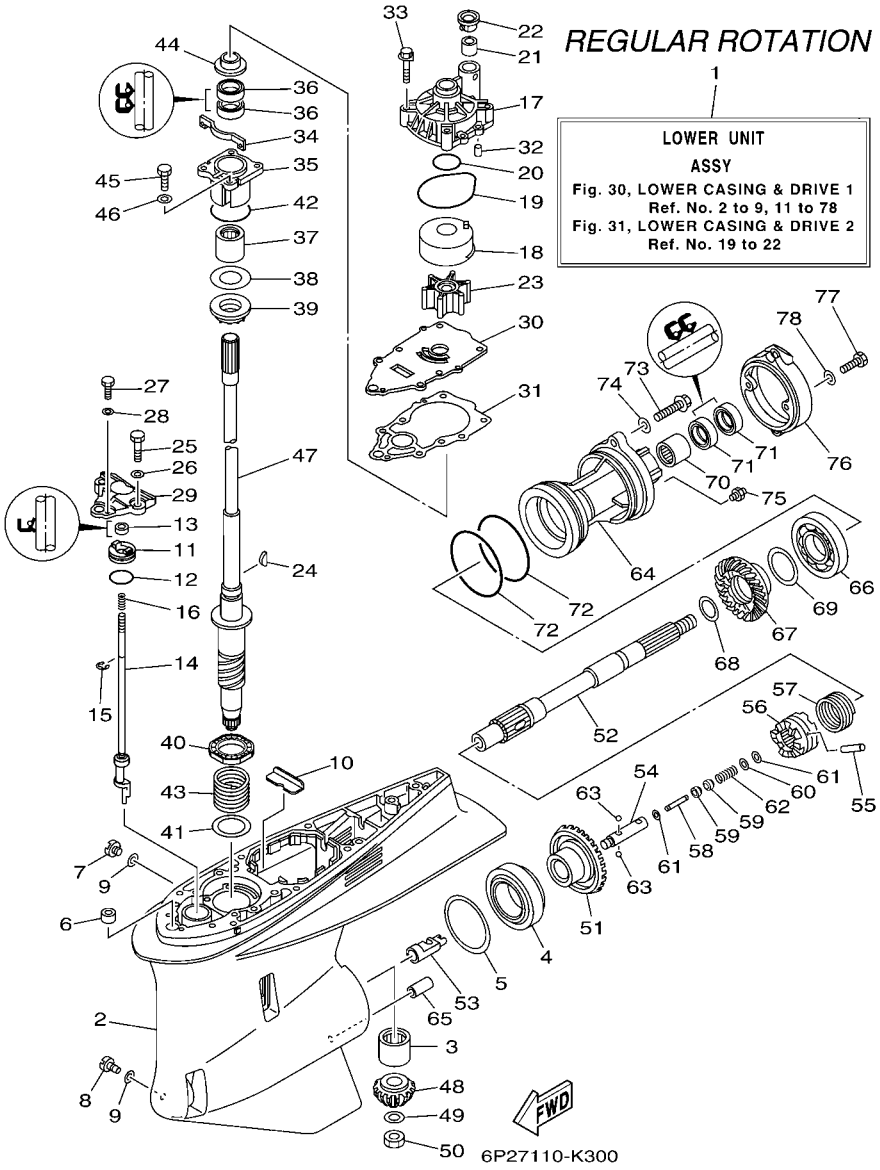

FIG. 30 LOWER CASING & DRIVE 1 BOITIER D'HELICE TRANSMISSION1

REF. NO.	PART NO. N° PIECES	DESCRIPTION DESCRIPTION	6BR3	6BS3				REMARKS REMARQUES
68	6P2–45578–00	SHIM (T:1.80MM) CALE (T:1.80MM)	1					UR UR
	6P2–45578–10	SHIM (T:1.90MM) CALE (T:1.90MM)	1					UR UR
	6P2–45578–20	SHIM (T:2.00MM) CALE (T:2.00MM)	1					UR UR
	6P2–45578–30	SHIM (T:2.10MM) CALE (T:2.10MM)	1					UR UR
	6P2–45578–40	SHIM (T:2.20MM) CALE (T:2.20MM)	1					UR UR
69	61A–45577–00	SHIM (T:0.10MM) CALE (T:0.10MM)	1					UR UR
	61A–45577–10	SHIM (T:0.12MM) CALE (T:0.12MM)	1					UR UR
	61A–45577–20	SHIM (T:0.15MM) CALE (T:0.15MM)	1					UR UR
	61A–45577–30	SHIM (T:0.18MM) CALE (T:0.18MM)	1					UR UR
	61A–45577–40	SHIM (T:0.30MM) CALE (T:0.30MM)	1					UR UR
	61A–45577–50	SHIM (T:0.40MM) CALE (T:0.40MM)	1					UR UR
	61A–45577–60	SHIM (T:0.50MM) CALE (T:0.50MM)	1					UR UR
70	93315–43064	BEARING ROULEMENT	1					
71	93101–30002	OIL SEAL JOINT SPY	2					
72	93211–04384	O-RING JOINT TORIQUE	2					
73	90105–08049	BOLT, FLANGE BOULON	2					
74	90201–08023	WASHER, PLATE RONDELLE, PLATE	2					
75	93700–09M00	NIPPLE, GREASE PION	1					
76	6D0–45361–00–8D	CAP, LOWER CASING COUVERCLE, BOITIER D'HELICE	1					
77	97095–08020	BOLT BOULON	2					
78	92995–08600	WASHER RONDELLE	2					

FIG. 31 LOWER CASING & DRIVE 2 BOITIER D'HELICE TRANSMISSION2

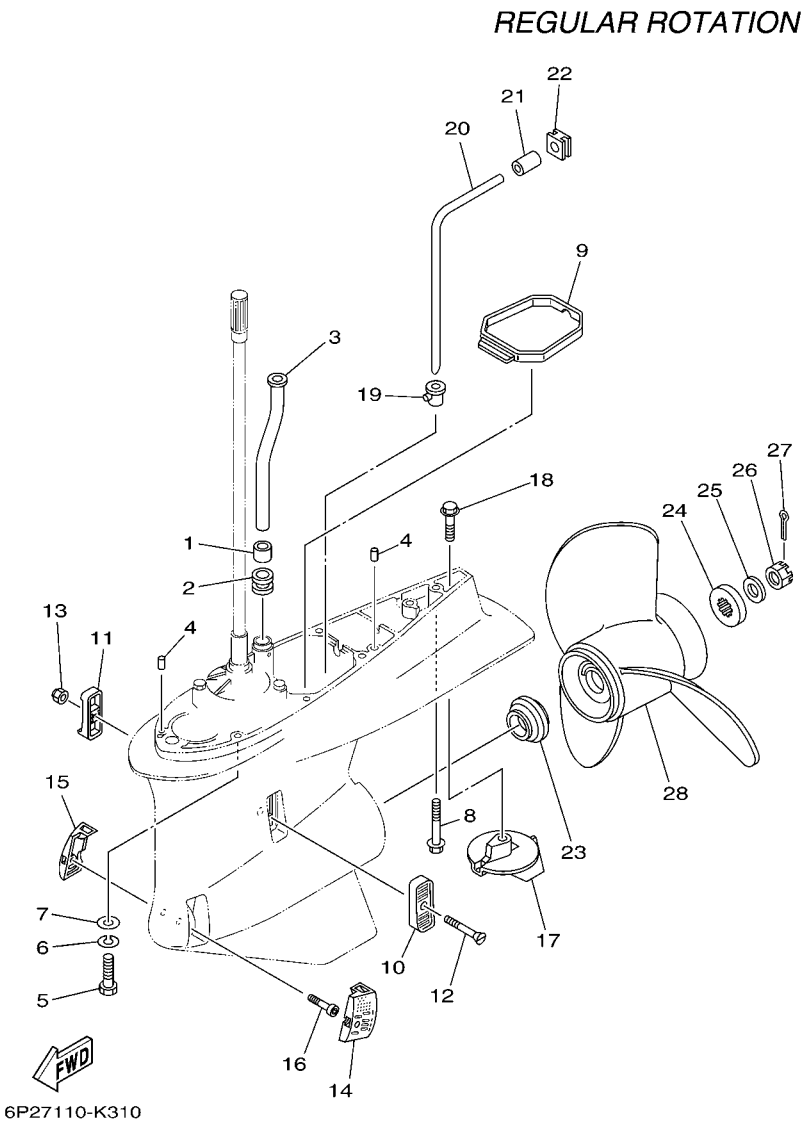

REF. NO.	PART NO. N° PIECES	DESCRIPTION DESCRIPTION	6BR3	6BS3				REMARKS REMARQUES
1	6E5–44365–00	DAMPER, WATER SEAL 1 JOINT, TUBE D'EAU 1	1					
2	6E5–44366–00	DAMPER, WATER SEAL 2 JOINT, TUBE D'EAU 2	1					
3	6S1–44361–01	TUBE, WATER 1 TUBE D'EAU 1	1					X(25.3") X(25.3")
	6S1–44361–11	TUBE, WATER 1 TUBE D'EAU 1	1					U(30.3") U(30.3")
4	93608–12M05	PIN, DOWEL AXE	2					
5	97095–10045	BOLT BOULON	7					X(25.3") X(25.3")
6	92995–10100	WASHER RONDELLE	7					X(25.3") X(25.3")
7	92995–10600	WASHER RONDELLE	7					X(25.3") X(25.3")
8	90119–10MA2	BOLT, WITH WASHER BOULON, AVEC RONDELLE	1					X(25.3") X(25.3")
	90119–10008	BOLT, WITH WASHER BOULON, AVEC RONDELLE	1					U(30.3") U(30.3")
9	6D0–45375–00	DAMPER, SEAL BOURRELET, CAOUTCHOUC	1					
10	6P2–45214–00	COVER, WATER INLET 1 GRILLE, ENTREE D'EAU 1	1					
11	6P2–45215–00	COVER, WATER INLET 2 GRILLE, ENTREE D'EAU 2	1					
12	90152–05M08	SCREW, COUNTERSUNK VIS, TETE NOYEE	1					
13	90185–05002	NUT, NYLON ECROU,AUTO-BLOQUANT	1					
14	6P2–45224–00	COVER, WATER INLET 3 GRILLE, ENTREE D'EAU 3	1					
15	6P2–45225–00	COVER, WATER INLET 4 GRILLE, ENTREE D'EAU 4	1					
16	90110–05039	BOLT, HEXAGON SOCKET HEAD BOULON, TETE HEXAGONALE CREUSE	1					
17	61A–45371–00	TAB-TRIM ANODE DERIVE	1					
18	90105–10M00	BOLT, FLANGE BOULON	1					
19	6D0–44367–00	DAMPER, WATER SEAL 3 JOINT TUBE D'EAU 3	1					
20	6D0–44362–01	TUBE, WATER 2 TUBE D'EAU 2	1					
21	6D0–44365–00	DAMPER, WATER SEAL 1 JOINT, TUBE D'EAU 1	1					
22	6D0–44366–00	DAMPER, WATER SEAL 2 JOINT, TUBE D'EAU 2	1					
23	69J–45987–00	SPACER 1 ENTRETOISE 1	1					
24	688–45997–01	SPACER 2 ENTRETOISE 2	1					
25	92990–18200	WASHER RONDELLE, PLATE	1					

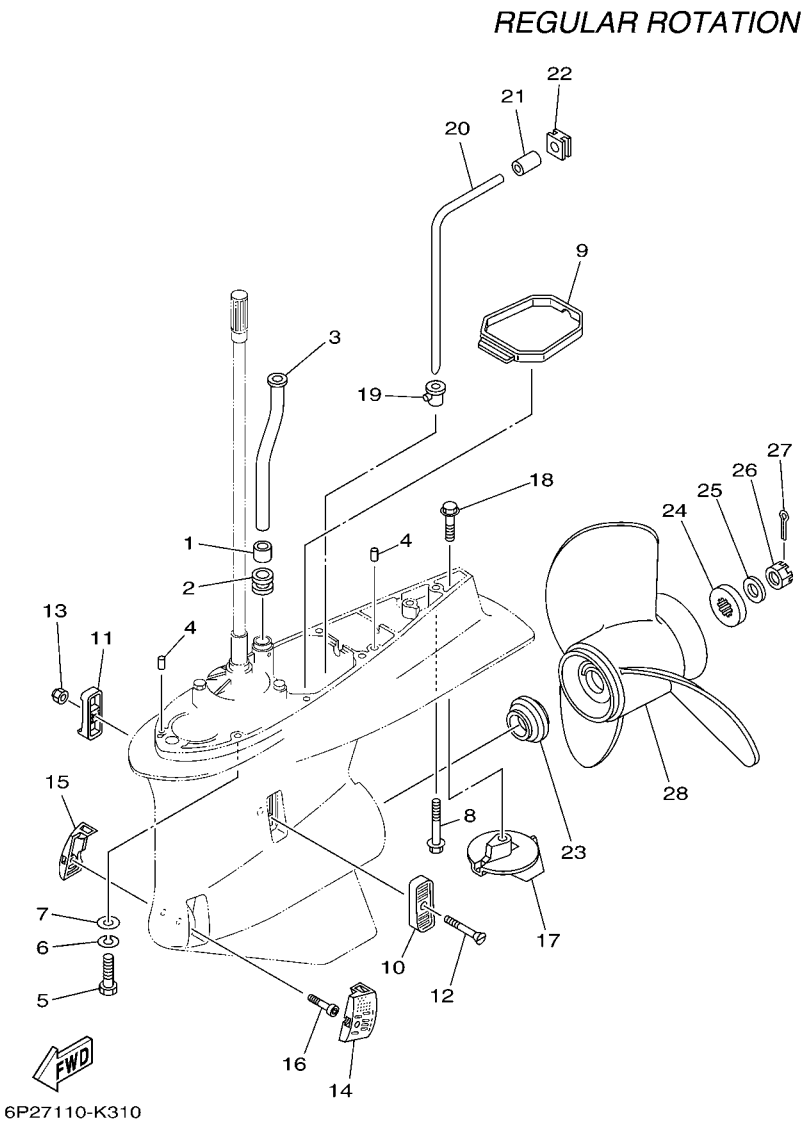

FIG. 31 LOWER CASING & DRIVE 2 BOITIER D'HELICE TRANSMISSION2

REF. NO.	PART NO. N° PIECES	DESCRIPTION DESCRIPTION	6BR3	6BS3				REMARKS REMARQUES
26	90171–18M04	NUT, CASTLE ECROU, CRENELE	1					
27	91490–40030	PIN. COTTER GOUPILLE	1					
28	6G5–45970–02–98	PROPELLER (3X15-1/4"X15"-M) HELICE (3X15-1/4"X15"-M)	1					UR UR
	6G5–45972–02–98	PROPELLER (3X13-3/4"X21"-M) HELICE (3X13-3/4"X21"-M)	1					UR UR
	6G5–45974–03–98	PROPELLER (3X13-3/4"X19"-M2) HELICE (3X13-3/4"X19"-M2)	1					UR UR
	6G5–45978–03–98	PROPELLER (3X13-3/4"X17"-M2) HELICE (3X13-3/4"X17"-M2)	1					UR UR
	61A–45972–00–98	PROPELLER (3X14-1/2"X21"-T) HELICE (3X14-1/2"X21"-T)	1					UR UR
	61A–45974–00–98	PROPELLER (3X14-1/2"X19"-T) HELICE (3X14-1/2"X19"-T)	1					UR UR
	61A–45978–00–98	PROPELLER (3X15"X17"-T) HELICE (3X15"X17"-T)	1					UR UR
	6R4–45970–A1	PROPELLER (3X15-1/4"X19"-M) HELICE (3X15-1/4"X19"-M)	1					UR UR
	6R4–45972–A0	PROPELLER (3X14-7/8"X21"-M) HELICE (3X14-7/8"X21"-M)	1					UR UR
	6R4–45974–A0	PROPELLER (3X14-1/2"X23"-M) HELICE (3X14-1/2"X23"-M)	1					UR UR
	6R4–45976–A0	PROPELLER (3X14-1/2"X15"-M) HELICE (3X14-1/2"X15"-M)	1					UR UR
	6R4–45978–A0	PROPELLER (3X15-1/4"X17"-M) HELICE (3X15-1/4"X17"-M)	1					UR UR
	6D0–45970–00	PROPELLER (3X15-1/4"X19"-T) HELICE (3X15-1/4"X19"-T)	1					UR UR
	6D0–45972–00	PROPELLER (3X15"X21"-T) HELICE (3X15"X21"-T)	1					UR UR
	6D0–45978–00	PROPELLER (3X15-1/2"X17"-T) HELICE (3X15-1/2"X17"-T)	1					UR UR
	6BR–45B70–00	PROPELLER (4X15"X21"-T) HELICE (4X15"X21"-T)	1					UR UR
	6BR–45B72–00	PROPELLER (4X15"X22"-T) HELICE (4X15"X22"-T)	1					UR UR
	6BR–45B74–00	PROPELLER (4X15"X23"-T) HELICE (4X15"X23"-T)	1					UR UR

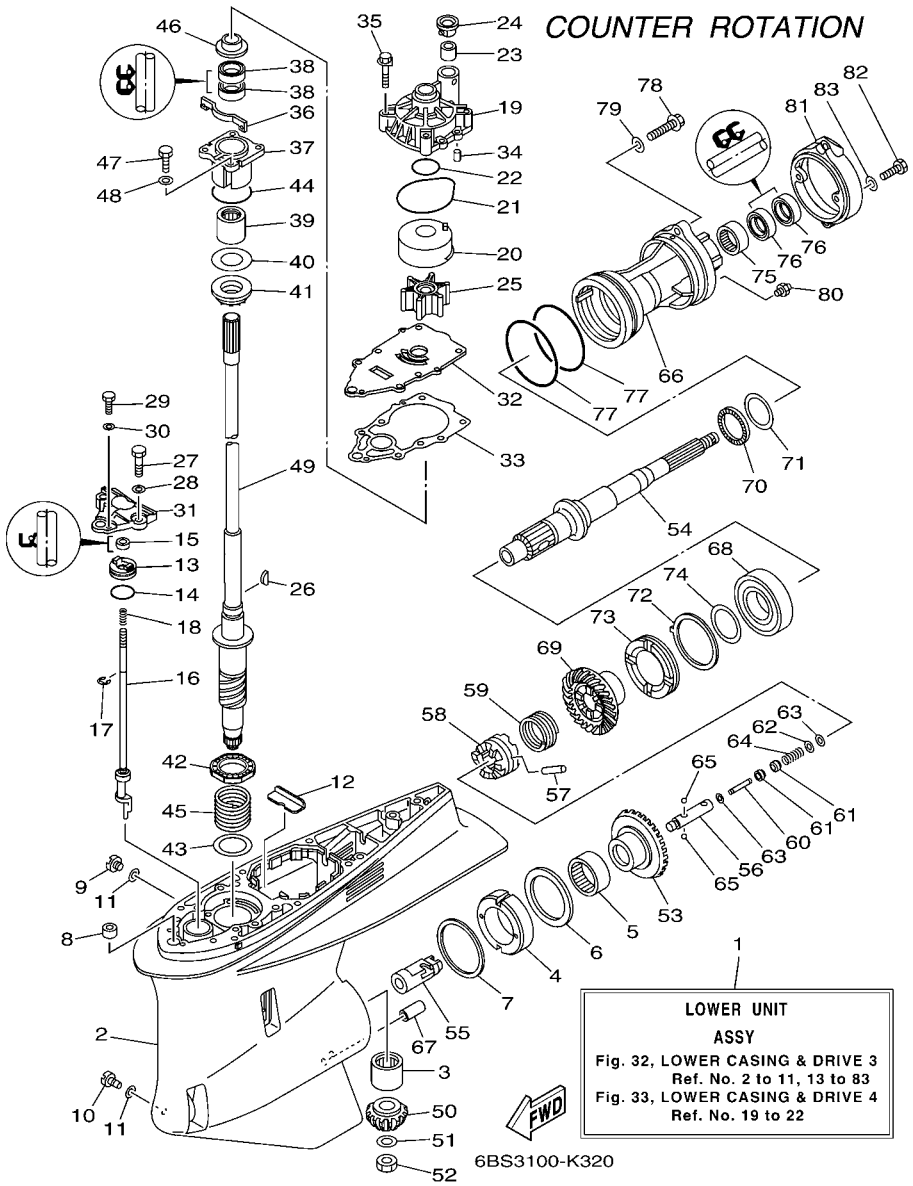

FIG. 32 LOWER CASING & DRIVE 3 BOITIER D'HELICE TRANSMISSION3

REF. NO.	PART NO. N° PIECES	DESCRIPTION DESCRIPTION	6BR3	6BS3				REMARKS REMARQUES
1	6P3–45300–40–8D	LOWER UNIT ASSY UNITE INFERIEURE (ENS.)		1				X(25.3"),LH X(25.3"),LH
	6P3–45300–50–8D	LOWER UNIT ASSY UNITE INFERIEURE (ENS.)		1				U(30.3"),LH U(30.3"),LH
2	6P2–45301–10–8D	CASING, LOWER BEQUILLE		1				
3	93311–83280	BEARING ROULEMENT		1				
4	61B–45538–01	SPACER 1 ENTRETOISE		1				
5	93315–660W3	BEARING ROULEMENT		1				
6	93341–670V0	BEARING CERVEAUX DE DIRECTION		1				
7	61A–45567–00	SHIM (T:0.10MM) CALE (T:0.10MM)		1				UR UR
	61A–45567–10	SHIM (T:0.12MM) CALE (T:0.12MM)		1				UR UR
	61A–45567–20	SHIM (T:0.15MM) CALE (T:0.15MM)		1				UR UR
	61A–45567–30	SHIM (T:0.18MM) CALE (T:0.18MM)		1				UR UR
	61A–45567–40	SHIM (T:0.30MM) CALE (T:0.30MM)		1				UR UR
	61A–45567–50	SHIM (T:0.40MM) CALE (T:0.40MM)		1				UR UR
	61A–45567–60	SHIM (T:0.50MM) CALE (T:0.50MM)		1				UR UR
8	663–44366–00	DAMPER, WATER SEAL 2 JOINT, TUBE D'EAU 2		1				
9	90340–08002	PLUG, STRAIGHT SCREW PLOT, FILETE DROIT		1				
10	688–45341–10	PLUG, DRAIN BOUCHON DE VIDANGE		1				
11	90430–08020	GASKET JOINT		2				
12	61A–45376–00	GUIDE, SEAL DAMPER BUTEE, JOINT CAOUTCHOUC		1				
13	65N–45321–00	PLATE PLAQUETTE		1				
14	93210–33M49	O-RING JOINT TORIQUE		1				
15	93106–09014	OIL SEAL JOINT SPY		1				
16	6P3–44150–00	SHIFT CAM ASSY CAME D'INVERSION		1				
17	99001–08600	CIRCLIP CIRCLIP		1				
18	90501–11M10	SPRING, COMPRESSION RESSORT, COMPRESSION		1				
19	61A–44311–01	HOUSING, WATER PUMP CORPS, POMPE A EAU		1				
20	61A–44322–02	INSERT, CARTRIDGE CUVETTE		1				

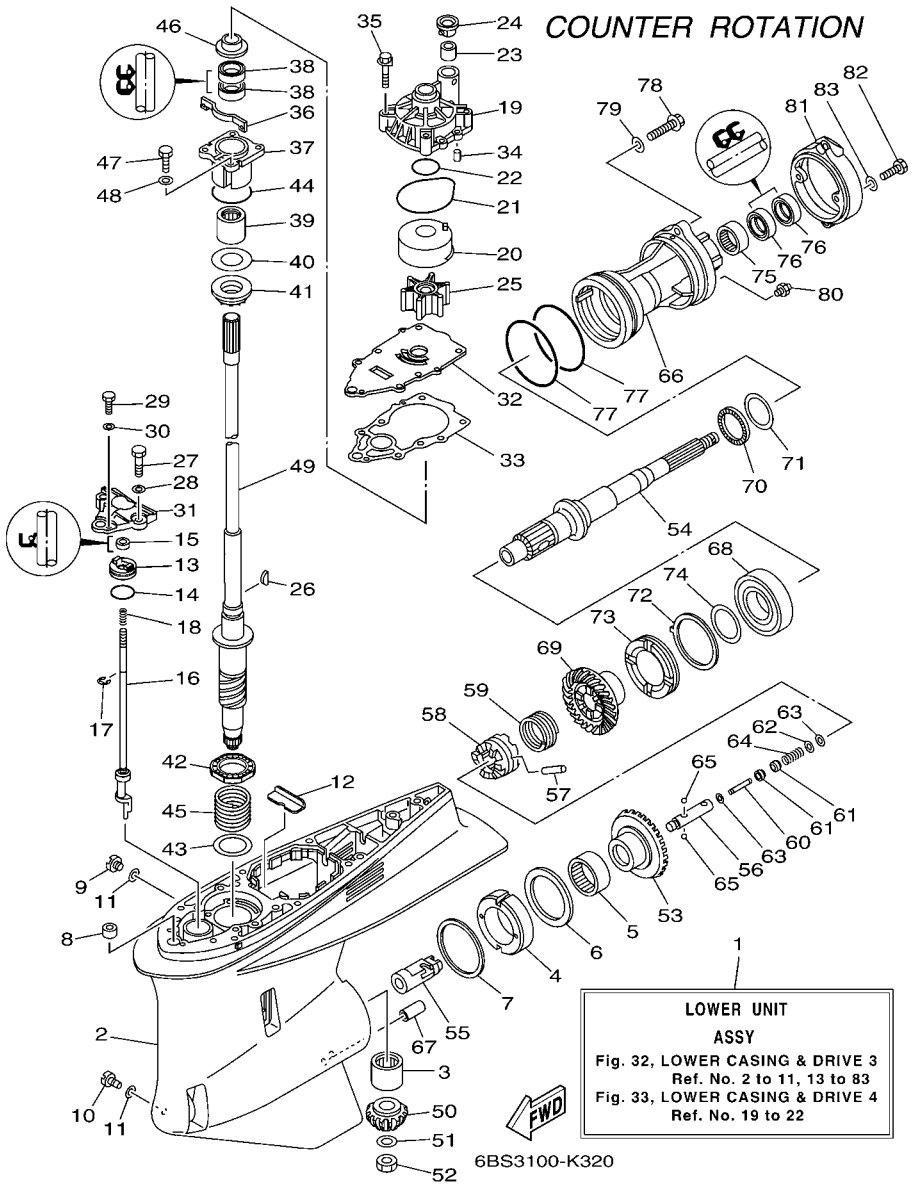

FIG. 32 LOWER CASING & DRIVE 3 BOITIER D'HELICE TRANSMISSION3

REF. NO.	PART NO. N° PIECES	DESCRIPTION DESCRIPTION	6BR3	6BS3				REMARKS REMARQUES
21	93210–86M38	O-RING JOINT TORIQUE		1				
22	93210–37160	O-RING JOINT TORIQUE		1				
23	6E5–44365–00	DAMPER, WATER SEAL 1 JOINT, TUBE D'EAU 1		1				
24	6E5–44312–00	COVER, WATER PUMP HOUSING COUVERCLE		1				
25	6E5–44352–01	IMPELLER TURBINE		1				
26	90280–04M05	KEY, WOODRUFF CLAVETTE, DEMI-LUNE		1				
27	97095–08030	BOLT BOULON		2				
28	92995–08600	WASHER RONDELLE		2				
29	97095–06016	BOLT BOULON		1				
30	92995–06600	WASHER RONDELLE		1				
31	60X–44312–00	COVER, WATER PUMP HOUSING COUVERCLE		1				
32	6P2–44323–00	OUTER PLATE, CARTRIDGE PLAQUE EXTERIEURE		1				
33	60X–44315–A0	GASKET, WATER PUMP JOINT, POMPE A EAU		1				
34	93606–12019	PIN, DOWEL GOUPILLE		2				
35	90119–08M14	BOLT, WITH WASHER BOULON, AVEC RONDELLE		4				
36	6P2–45723–00	PLATE, SEAL PLAQUE, JOINT		1				
37	6P2–45331–00–9S	HOUSING, BEARING FLASQUE, ROULEMENT		1				
38	93101–28M16	OIL SEAL JOINT SPY		2				
39	93317–330U2	BEARING ROULEMENT		1				
40	61A–45587–00	SHIM (T:0.10MM) CALE (T:0.10MM)		1				UR UR
	61A–45587–10	SHIM (T:0.12MM) CALE (T:0.12MM)		1				UR UR
	61A–45587–20	SHIM (T:0.15MM) CALE (T:0.15MM)		1				UR UR
	61A–45587–30	SHIM (T:0.18MM) CALE (T:0.18MM)		1				UR UR
	61A–45587–40	SHIM (T:0.30MM) CALE (T:0.30MM)		1				UR UR
	61A–45587–50	SHIM (T:0.40MM) CALE (T:0.40MM)		1				UR UR
	61A–45587–60	SHIM (T:0.50MM) CALE (T:0.50MM)		1				UR UR
41	93341–930U9	BEARING CERVEAUX DE DIRECTION		1				

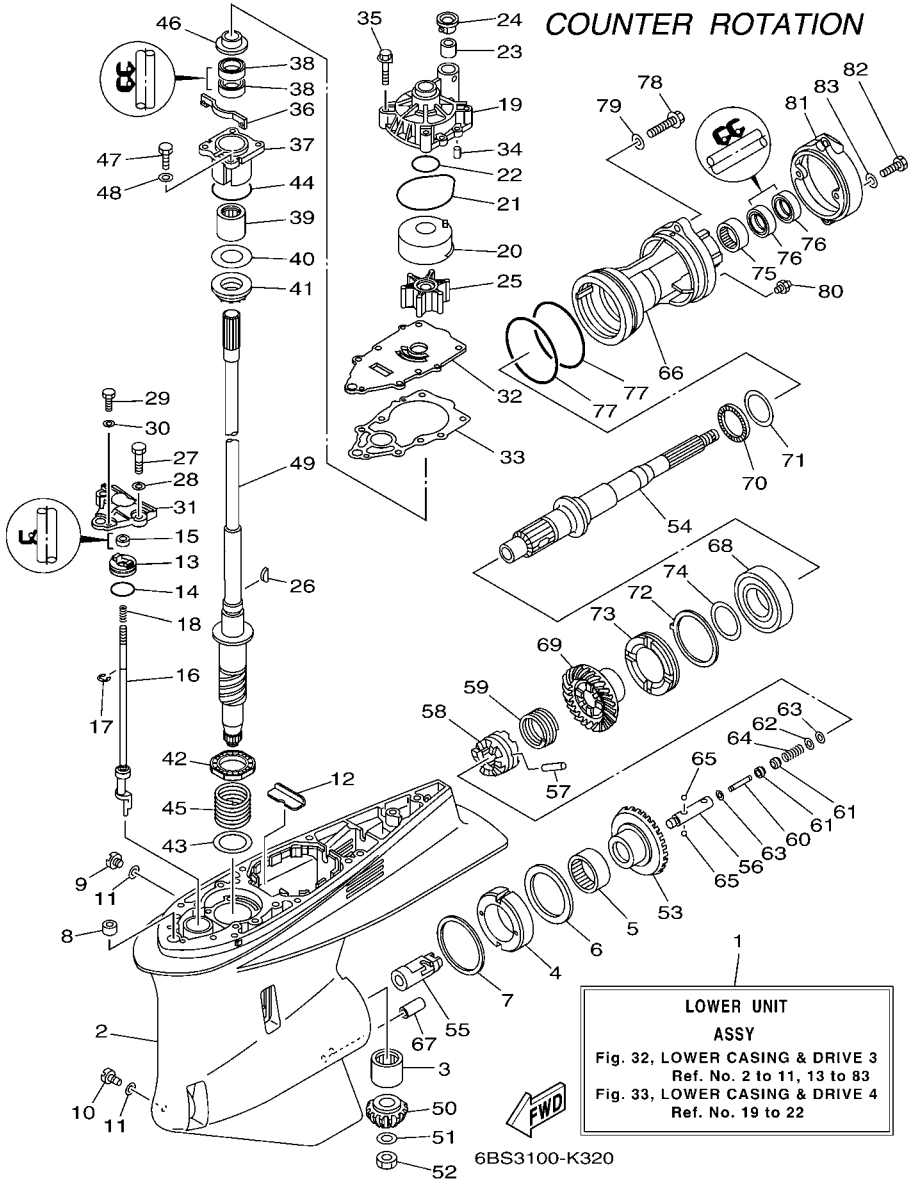

FIG. 32 LOWER CASING & DRIVE 3 BOITIER D'HELICE TRANSMISSION3

REF. NO.	PART NO. N° PIECES	DESCRIPTION DESCRIPTION	6BR3	6BS3				REMARKS REMARQUES
42	93341–34019	BEARING CERVEAUX DE DIRECTION		1				
43	90201–42014	WASHER, PLATE RONDELLE, PLATE		1				
44	93210–55M14	O-RING JOINT TORIQUE		1				
45	90501–450A2	SPRING, COMPRESSION RESSORT, COMPRESSION		1				
46	6E5–45344–00	COVER, OIL SEAL FLASQE, JOINT D'HUILE		1				
47	97095–08025	BOLT BOULON		4				
48	92995–08600	WASHER RONDELLE		4				
49	6P2–45501–00	DRIVE SHAFT COMP. ARBRE MOTEUR COMP.		1				X(25.3") X(25.3")
	6P2–45501–10	DRIVE SHAFT COMP. ARBRE MOTEUR COMP.		1				U(30.3") U(30.3")
50	6P2–45551–01	PINION (15T) PIGNON D'ATTAQUE (15D)		1				
51	90201–16M00	WASHER, PLATE RONDELLE, PLATE		1				
52	90170–16M19	NUT ECROU		1				
53	6P3–45560–00	GEAR 1 (30T) PIGNON 1 (30T)		1				
54	69K–45611–00	SHAFT, PROPELLER ARBRE, HELICE		1				
55	61B–45641–01	SHIFTER EMBRAYAGE		1				
56	61A–45634–01	SLIDE, SHIFT CONTRE-POUSSOIR		1				
57	61A–45632–00	PIN, CROSS GOUPILLE DE CRABOT		1				
58	69J–45631–00	CLUTCH, DOG CRABOT		1				
59	61A–45633–00	RING, CROSS PIN JONC, GOUPILLE CRABOT		1				
60	6H1–45668–00	SHAFT, FREE 1 AXE 1		1				
61	61A–45635–00	PLUNGER, SHIFT POUSSOIR D'EMBRAYAGE		2				
62	90201–02M00	WASHER, PLATE RONDELLE, PLATE		1				
63	90183–02M03	NUT, SPRING ECROU, RESSORT		2				
64	90501–10M77	SPRING, COMPRESSION RESSORT, COMPRESSION		1				
65	93501–04011	BALL BILLE		2				
66	6D1–45332–00–CA	HOUSING, BEARING FLASQUE, ROULEMENT		1				
67	99590–10114	PIN, DOWEL GOUJON, D'ASSEMBLAGE		1				

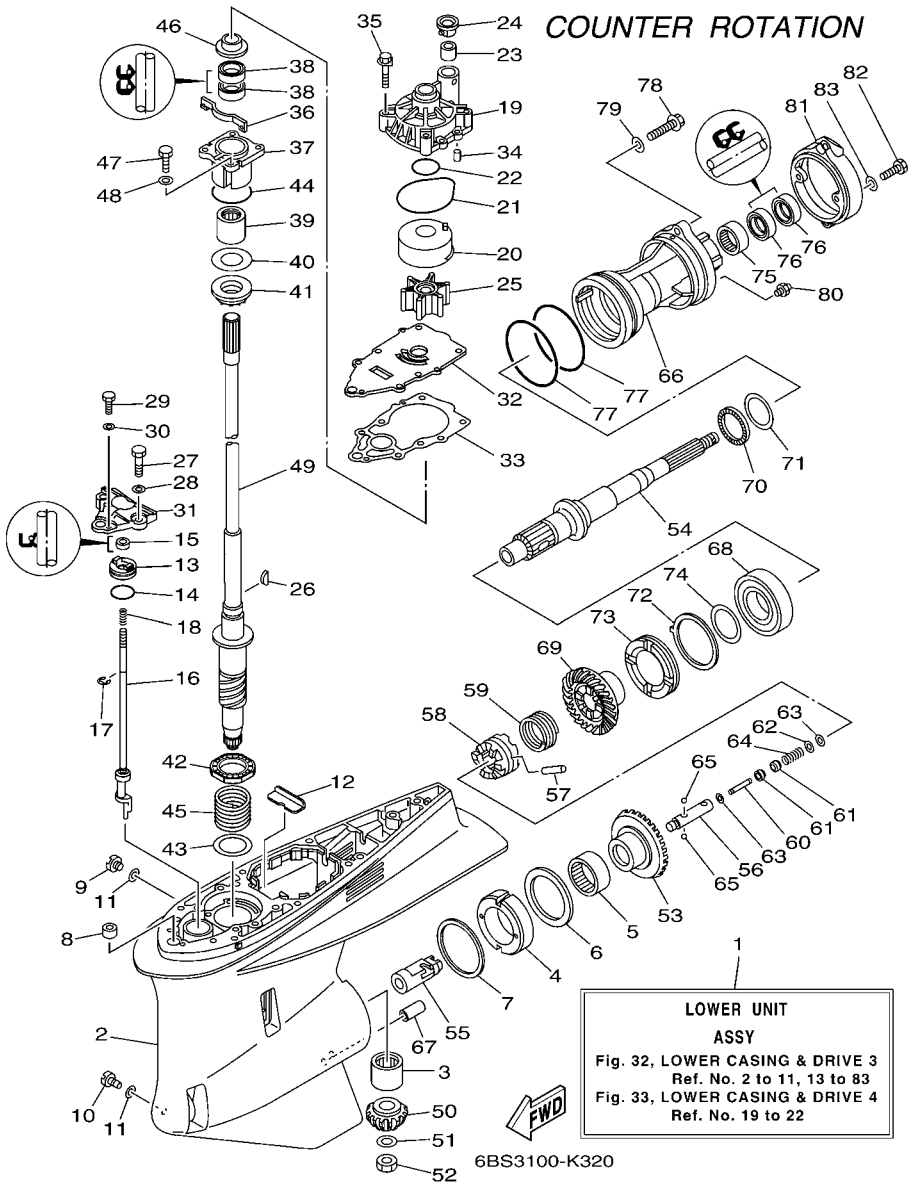

FIG. 32 LOWER CASING & DRIVE 3 BOITIER D'HELICE TRANSMISSION3

REF. NO.	PART NO. N° PIECES	DESCRIPTION DESCRIPTION	6BR3	6BS3				REMARKS REMARQUES
68	93332–00048	BEARING ROULEMENT		1				
69	6P3–45571–00	GEAR 2 (30T) PIGNON 2 (30T)		1				
70	93341–440U5	BEARING CERVEAUX DE DIRECTION		1				
71	6K1–45578–01	SHIM (T:0.10MM) CALE (T:0.10MM)		1				UR UR
	6K1–45578–10	SHIM (T:0.12MM) CALE (T:0.12MM)		1				UR UR
	6K1–45578–20	SHIM (T:0.15MM) CALE (T:0.15MM)		1				UR UR
	6K1–45578–30	SHIM (T:0.18MM) CALE (T:0.18MM)		1				UR UR
	6K1–45578–40	SHIM (T:0.30MM) CALE (T:0.30MM)		1				UR UR
	6K1–45578–50	SHIM (T:0.40MM) CALE (T:0.40MM)		1				UR UR
	6K1–45578–60	SHIM (T:0.50MM) CALE (T:0.50MM)		1				UR UR
72	61B–45383–00	WASHER, CLAW FREIN D'ECROU		1				
73	69K–45384–00	NUT ECROU		1				
74	69K–45577–00	SHIM (T:0.10MM) CALE (T:0.10MM)		1				UR UR
	69K–45577–10	SHIM (T:0.12MM) CALE (T:0.12MM)		1				UR UR
	69K–45577–20	SHIM (T:0.15MM) CALE (T:0.15MM)		1				UR UR
	69K–45577–30	SHIM (T:0.18MM) CALE (T:0.18MM)		1				UR UR
	69K–45577–40	SHIM (T:0.30MM) CALE (T:0.30MM)		1				UR UR
	69K–45577–50	SHIM (T:0.40MM) CALE (T:0.40MM)		1				UR UR
	69K–45577–60	SHIM (T:0.50MM) CALE (T:0.50MM)		1				UR UR
75	93315–43064	BEARING ROULEMENT		1				
76	93101–30002	OIL SEAL JOINT SPY		2				
77	93211–04384	O-RING JOINT TORIQUE		2				
78	90105–08049	BOLT, FLANGE BOULON		2				
79	90201–08023	WASHER, PLATE RONDELLE, PLATE		2				
80	93700–09M00	NIPPLE, GREASE PION		1				
81	6D0–45361–00–8D	CAP, LOWER CASING COUVERCLE, BOITIER D'HELICE		1				
82	97095–08020	BOLT BOULON		2				

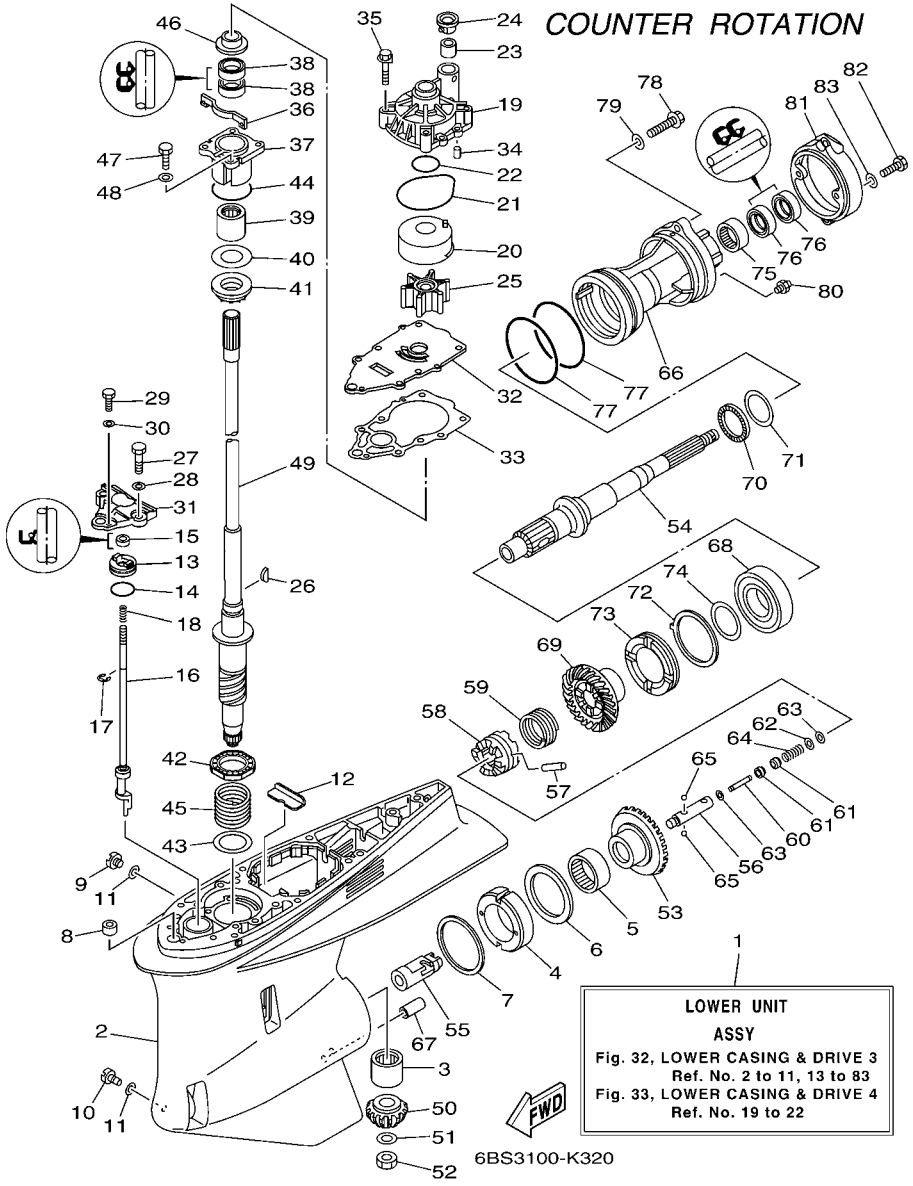

FIG. 32 LOWER CASING & DRIVE 3 BOITIER D'HELICE TRANSMISSION3

REF. NO.	PART NO. N° PIECES	DESCRIPTION DESCRIPTION	6BR3	6BS3				REMARKS REMARQUES
83	92995–08600	WASHER RONDELLE		2				

FIG. 33 LOWER CASING & DRIVE 4 BOITIER D'HELICE TRANSMISSION4

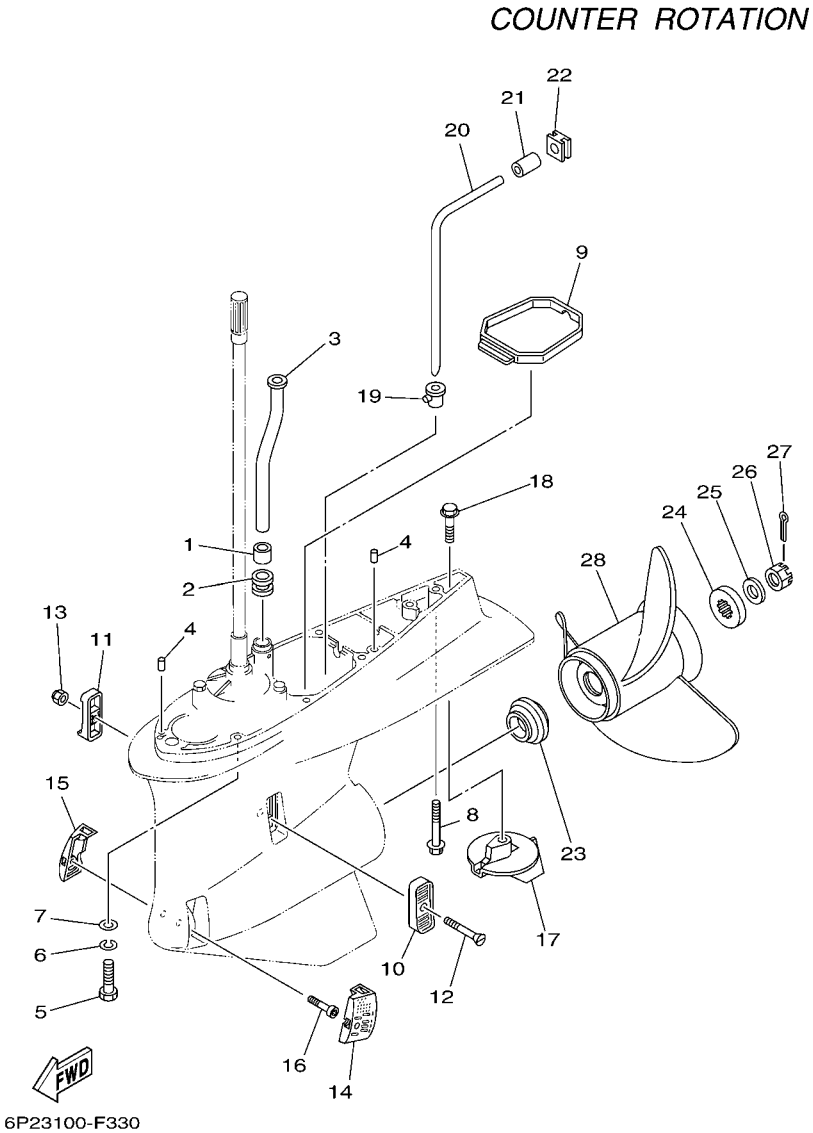

REF. NO.	PART NO. N° PIECES	DESCRIPTION DESCRIPTION	6BR3	6BS3				REMARKS REMARQUES
1	6E5–44365–00	DAMPER, WATER SEAL 1 JOINT, TUBE D'EAU 1		1				
2	6E5–44366–00	DAMPER, WATER SEAL 2 JOINT, TUBE D'EAU 2		1				
3	6S1–44361–01	TUBE, WATER 1 TUBE D'EAU 1		1				X(25.3") X(25.3")
	6S1–44361–11	TUBE, WATER 1 TUBE D'EAU 1		1				U(30.3") U(30.3")
4	93608–12M05	PIN, DOWEL AXE		2				
5	97095–10045	BOLT BOULON		7				X(25.3") X(25.3")
6	92995–10100	WASHER RONDELLE		7				X(25.3") X(25.3")
7	92995–10600	WASHER RONDELLE		7				X(25.3") X(25.3")
8	90119–10MA2	BOLT, WITH WASHER BOULON, AVEC RONDELLE		1				X(25.3") X(25.3")
	90119–10008	BOLT, WITH WASHER BOULON, AVEC RONDELLE		1				U(30.3") U(30.3")
9	6D0–45375–00	DAMPER, SEAL BOURRELET, CAOUTCHOUC		1				
10	6P2–45214–00	COVER, WATER INLET 1 GRILLE, ENTREE D'EAU 1		1				
11	6P2–45215–00	COVER, WATER INLET 2 GRILLE, ENTREE D'EAU 2		1				
12	90152–05M08	SCREW, COUNTERSUNK VIS, TETE NOYEE		1				
13	90185–05002	NUT, NYLON ECROU,AUTO-BLOQUANT		1				
14	6P2–45224–00	COVER, WATER INLET 3 GRILLE, ENTREE D'EAU 3		1				
15	6P2–45225–00	COVER, WATER INLET 4 GRILLE, ENTREE D'EAU 4		1				
16	90110–05039	BOLT, HEXAGON SOCKET HEAD BOULON, TETE HEXAGONALE CREUSE		1				
17	61A–45371–00	TAB-TRIM ANODE DERIVE		1				
18	90105–10M00	BOLT, FLANGE BOULON		1				
19	6D0–44367–00	DAMPER, WATER SEAL 3 JOINT TUBE D'EAU 3		1				
20	6D0–44362–01	TUBE, WATER 2 TUBE D'EAU 2		1				
21	6D0–44365–00	DAMPER, WATER SEAL 1 JOINT, TUBE D'EAU 1		1				
22	6D0–44366–00	DAMPER, WATER SEAL 2 JOINT, TUBE D'EAU 2		1				
23	69J–45987–00	SPACER 1 ENTRETOISE 1		1				
24	688–45997–01	SPACER 2 ENTRETOISE 2		1				
25	92990–18200	WASHER RONDELLE, PLATE		1				

FIG. 33 LOWER CASING & DRIVE 4 BOITIER D'HELICE TRANSMISSION4

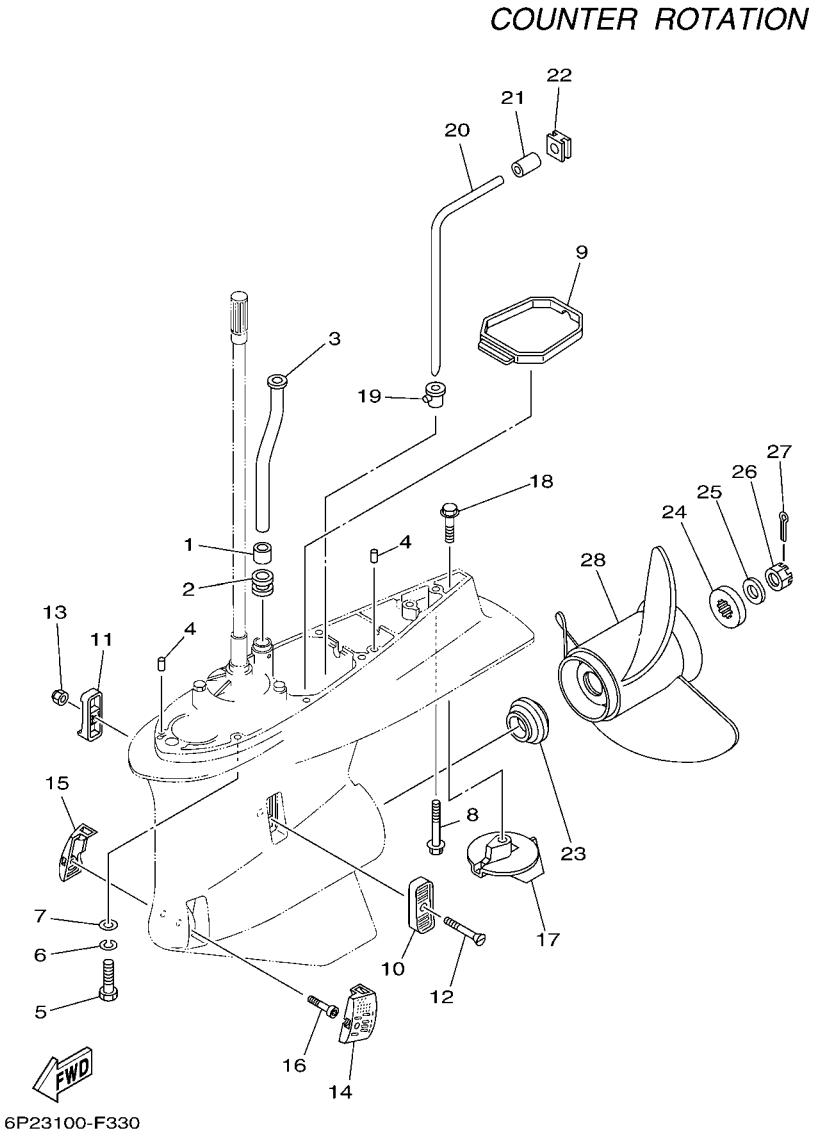

REF. NO.	PART NO. N° PIECES	DESCRIPTION DESCRIPTION	6BR3	6BS3				REMARKS REMARQUES
26	90171–18M04	NUT, CASTLE ECROU, CRENELE		1				
27	91490–40030	PIN. COTTER GOUPILLE		1				
28	6K1–45970–01–98	PROPELLER (3X15-1/4"X15"-ML) HELICE (3X15-1/4"X15"-ML)		1				UR UR
	6K1–45972–01–98	PROPELLER (3X13-3/4"X21"-ML) HELICE (3X13-3/4"X21"-ML)		1				UR UR
	6K1–45974–02–98	PROPELLER (3X13-3/4"X19"-ML1) HELICE (3X13-3/4"X19"-ML1)		1				UR UR
	6K1–45978–02–98	PROPELLER (3X13-3/4"X17"-ML1) HELICE (3X13-3/4"X17"-ML1)		1				UR UR
	61B–45972–00–98	PROPELLER (3X14-1/2"X21"-TL) HELICE (3X14-1/2"X21"-TL)		1				UR UR
	61B–45974–00–98	PROPELLER (3X14-1/2"X19"-TL) HELICE (3X14-1/2"X19"-TL)		1				UR UR
	61B–45978–00–98	PROPELLER (3X15"X17"-TL) HELICE (3X15"X17"-TL)		1				UR UR
	6R1–45970–A1	PROPELLER (3X15-1/4"X19"-ML) HELICE (3X15-1/4"X19"-ML)		1				UR UR
	6R1–45972–A0	PROPELLER (3X14-7/8"X21"-ML) HELICE (3X14-7/8"X21"-ML)		1				UR UR
	6R1–45974–A0	PROPELLER (3X14-1/2"X23"-ML) HELICE (3X14-1/2"X23"-ML)		1				UR UR
	6R1–45976–A0	PROPELLER (3X15-1/4"X15"-ML) HELICE (3X15-1/4"X15"-ML)		1				UR UR
	6R1–45978–A0	PROPELLER (3X15-1/4"X17"-ML) HELICE (3X15-1/4"X17"-ML)		1				UR UR
	6D1–45970–00	PROPELLER (3X15-1/4"X19"-TL) HELICE (3X15-1/4"X19"-TL)		1				UR UR
	6D1–45972–00	PROPELLER (3X15"X21"-TL) HELICE (3X15"X21"-TL)		1				UR UR
	6D1–45978–00	PROPELLER (3X15-1/2"X17"-TL) HELICE (3X15-1/2"X17"-TL)		1				UR UR
	6BS–45B70–00	PROPELLER (4X15"X21"-TL) HELICE (4X15"X21"-TL)		1				UR UR
	6BS–45B72–00	PROPELLER (4X15"X22"-TL) HELICE (4X15"X22"-TL)		1				UR UR
	6BS–45B74–00	PROPELLER (4X15"X23"-TL) HELICE (4X15"X23"-TL)		1				UR UR

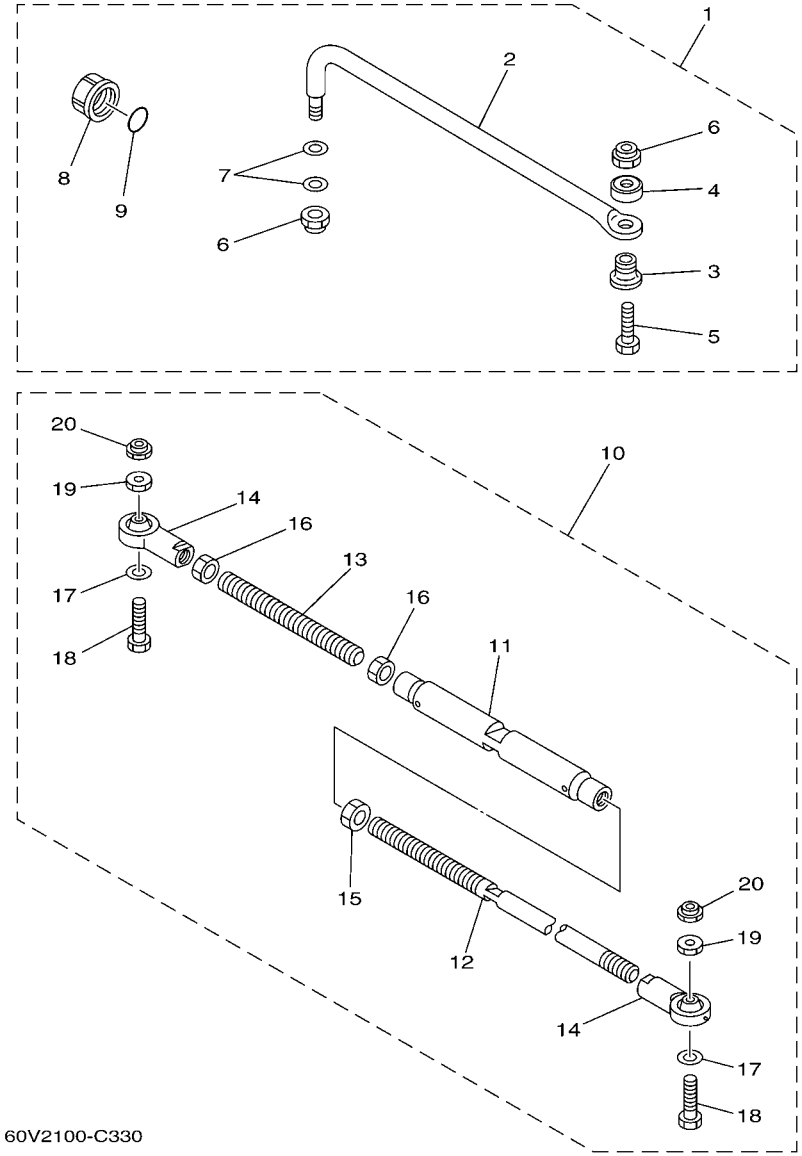

FIG. 34 STEERING GUIDE FIXATION DE DIRECTION

REF. NO.	PART NO. N° PIECES	DESCRIPTION DESCRIPTION	6BR3	6BS3				REMARKS REMARQUES
1	6E5–61350–02	STEERING GUIDE ATTACHMENT KIT FIXATIONS DE DIRECTION	1					AP AP
2	6E5–61351–01	.ROD, STEERING LINK .RENVOI DE DIRECTION	1					
3	90387–10M61	.COLLAR .COLLERETTE	1					
4	90560–12M01	.SPACER .ENTRETOISE	1					
5	6E5–61355–00	.BOLT .BOULON	1					
6	90185–09M01	.NUT, SELF-LOCKING .ECROU,AUTO-BLOQUANT	2					
7	90201–10M20	.WASHER, PLATE .RONDELLE, PLATE	2					
8	6E5–43145–01	.CAP, CLAMP BRACKET .CAPUCHON, PRESSE	1					
9	93210–16275	.O-RING .JOINT TORIQUE	1					
10	6E5–61301–01	TWIN KIT (L:600-800MM) JUMELE KIT (L:600-800MM)		1				AP AP
11	6E5–61313–00	.ADJUSTER .TENDEUR		1				
12	6E5–61311–11	.TIE BAR .BARRE D'ACCOUPLEMENT		1				
13	6E5–61315–00	.TIE BAR .BARRE D'ACCOUPLEMENT		1				
14	6E5–61303–00	.STEERING AXLE COMP. .AXLE COMP.		2				
15	90170–14M06	.NUT .ECROU		1				
16	95380–14700	.NUT .ECROU		2				
17	90201–10M76	.WASHER, PLATE .RONDELLE, PLATE		2				
18	90101–09M70	.BOLT .BOULON		2				
19	90170–09M05	.NUT .ECROU		2				
20	90185–09M01	.NUT, SELF-LOCKING .ECROU,AUTO-BLOQUANT		2				

FIG. 35 REPAIR KIT 1 KITS DE REPARATION 1

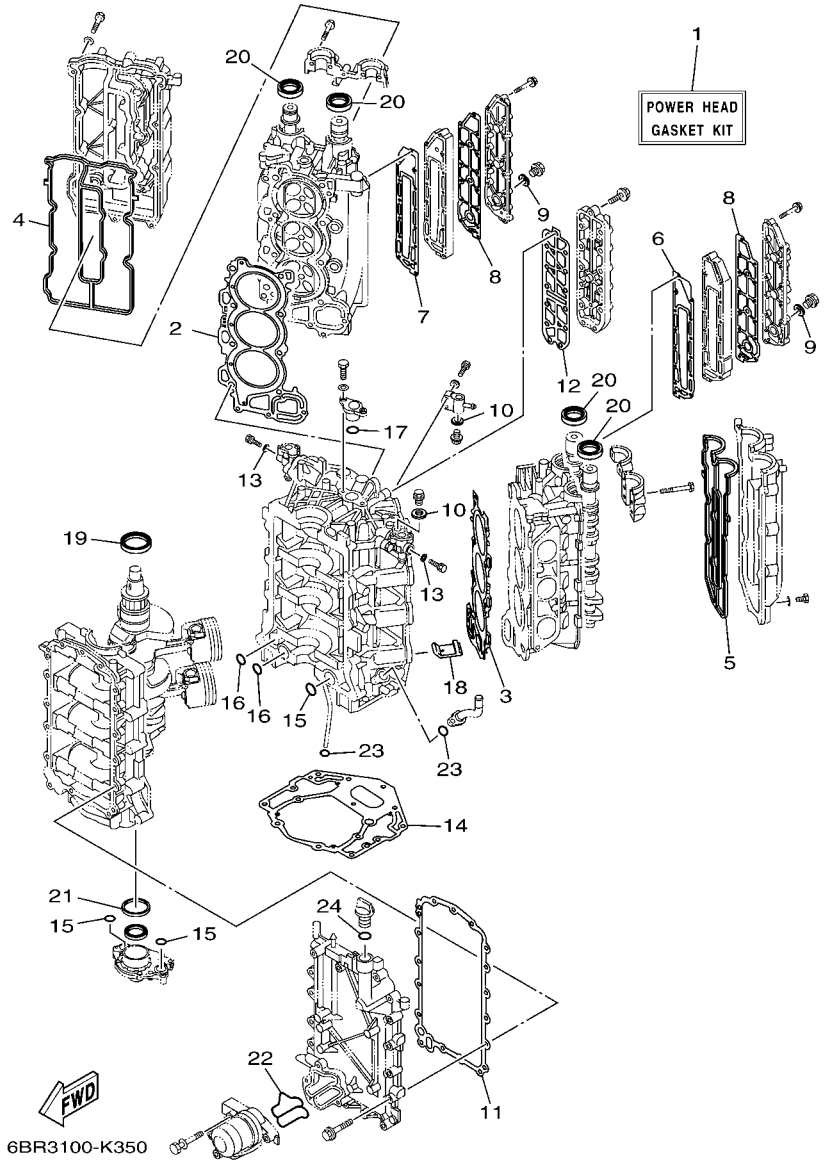

REF. NO.	PART NO. N° PIECES	DESCRIPTION DESCRIPTION	6BR3	6BS3				REMARKS REMARQUES
1	6P2–W0001–01	POWER HEAD GASKET KIT POCHETTE DE JINTS TETE MOTRICE	1	1				
2	6P2–11181–00	.GASKET, CYLINDER HEAD 1 .JOINT, DE CULASSE 1	1	1				
3	6P2–11182–00	.GASKET, CYLINDER HEAD 2 .JOINT, CULASSE 2	1	1				
4	6P2–11193–00	.GASKET, HEAD COVER 1 .JOINT, COUVERCLE DE CULASSE 1	1	1				
5	6P2–11194–00	.GASKET, HEAD COVER 2 .JOINT, COUVERCLE DE CULASSE 2	1	1				
6	6P2–41112–00	.GASKET, EXHAUST INNER COVER .JOINT, PLAQUE D'ECHAPPEMENT	1	1				
7	6P2–41122–00	.GASKET, EXHAUST INNER COVER .JOINT, PLAQUE D'EHAPPEMENT	1	1				
8	6P2–41114–00	.GASKET, EXHAUST OUTER COVER .JOINT, COUVERCLE D'ECHAPPEMENT	2	2				
9	90430–18130	.GASKET .JOINT	2	2				
10	90430–14115	.GASKET .JOINT	2	2				
11	69J–15451–00	.GASKET, CRANKCASE COVER 1 .JOINT, COUVERCLE DE CARTER 1	1	1				
12	6P2–1131B–00	.GASKET, COVER .JOINT, COUVERCLE	1	1				
13	90430–05002	.GASKET .JOINT	2	2				
14	69J–11351–11	.GASKET, CYLINDER .JOINT, D'EMBASE	1	1				
15	93210–25552	.O-RING .JOINT TORIQUE	3	3				
16	93210–19MJ1	.O-RING .JOINT TORIQUE	2	2				
17	93210–25647	.O-RING .JOINT TORIQUE	1	1				
18	69J–14664–00	.GROMMET, WATER SHUT .PASSE-FIL	2	2				
19	93102–63004	.OIL SEAL .JOINT SPY	1	1				
20	93102–38008	.OIL SEAL .JOINT SPY	4	4				
21	69J–11355–00	.SEAL, CYLINDER 1 .JOINT, SPY CYLINDRE	1	1				
22	6P2–13477–00	.GASKET .JOINT	1	1				
23	93210–19MJ3	.O-RING .JOINT TORIQUE	2	2				
24	93210–24M79	.O-RING .JOINT TORIQUE	1	1				

FIG. 36 REPAIR KIT 2 — KITS DE REPARATION 2

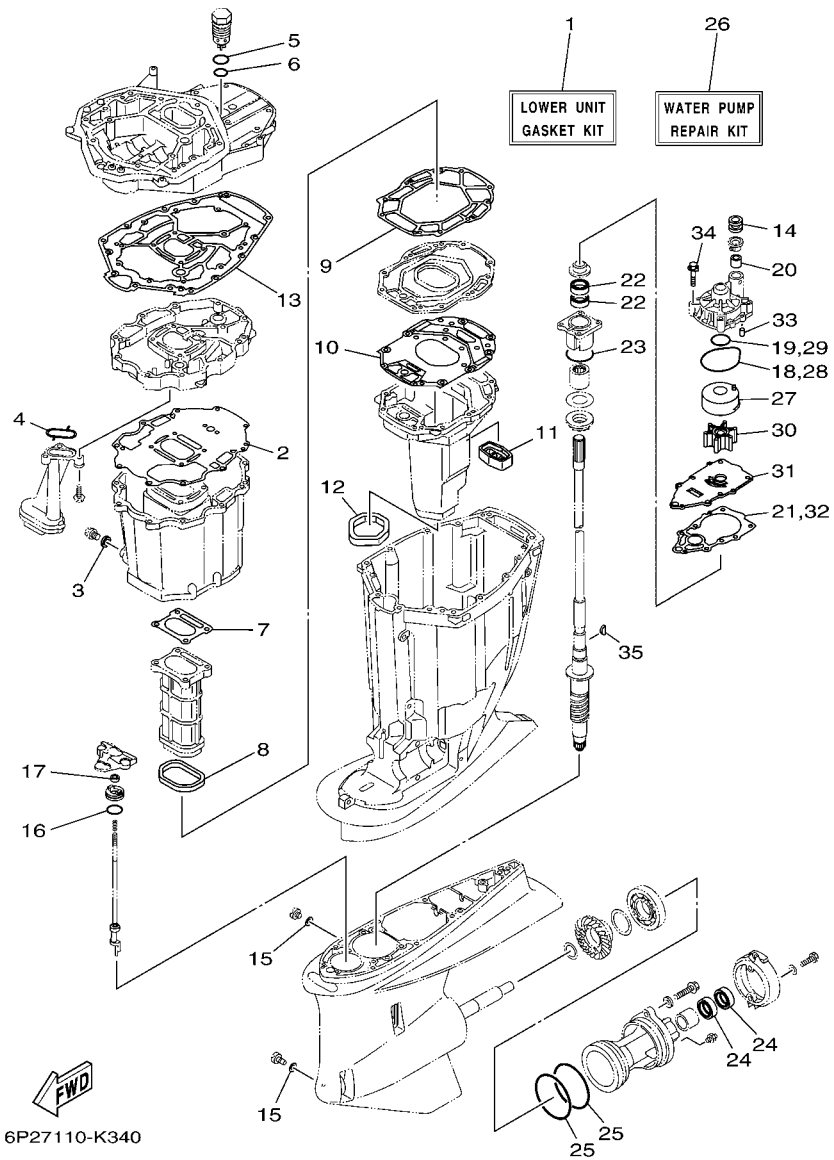

REF. NO.	PART NO. N° PIECES	DESCRIPTION DESCRIPTION	6BR3	6BS3				REMARKS REMARQUES
1	6P2–W0001–30	LOWER UNIT GASKET KIT POCHETTE DE JOINTS EMBASE	1	1				
2	69J–15312–01	.GASKET, OIL PAN .JOINT DE VENTILATEUR D'HUILE	1	1				
3	90430–14M09	.GASKET .JOINT	1	1				
4	69J–13415–00	.SEAL, OIL STRAINER .JOINT, FILTRE A HUILE	1	1				
5	93210–347A1	.O-RING .JOINT TORIQUE	1	1				
6	93210–28543	.O-RING .JOINT TORIQUE	1	1				
7	6P2–41134–00	.GASKET, EXHAUST MANIFOLD .JOINT, PIPE D'ECHAPPEMENT	1	1				
8	69J–41138–00	.SEAL, EXT. 1 .JOINT DE GROUPE 1	1	1				
9	69J–41135–A0	.GASKET, EXHAUST MANIFOLD .JOINT, PIPE D'ECHAPPEMENT	1	1				
10	6S1–41136–00	.GASKET, EXHAUST MANIFOLD 4 .JOINT, PIPE D'ECHAPPEMENT 4	1	1				
11	69J–45127–00	.SEAL .JOINT	1	1				
12	69J–45123–00	.GASKET, MUFFLER .JOINT, POT DE DETENTE	1	1				
13	69J–45113–20	.GASKET, UPPER CASING .JOINT, TUBE D'ARBRE	1	1				
14	6E5–44366–00	.DAMPER, WATER SEAL 2 .JOINT, TUBE D'EAU 2	1	1				
15	90430–08020	.GASKET .JOINT	2	2				
16	93210–33M49	.O-RING .JOINT TORIQUE	1	1				
17	93106–09014	.OIL SEAL .JOINT SPY	1	1				
18	93210–86M38	.O-RING .JOINT TORIQUE	1	1				
19	93210–37160	.O-RING .JOINT TORIQUE	1	1				
20	6E5–44365–00	.DAMPER, WATER SEAL 1 .JOINT, TUBE D'EAU 1	1	1				
21	60X–44315–A0	.GASKET, WATER PUMP .JOINT, POMPE A EAU	1	1				
22	93101–28M16	.OIL SEAL .JOINT SPY	2	2				
23	93210–55M14	.O-RING .JOINT TORIQUE	1	1				
24	93101–30002	.OIL SEAL .JOINT SPY	2	2				
25	93211–04384	.O-RING .JOINT TORIQUE	2	2				
26	6P2–W0078–00	WATER PUMP REPAIR KIT KIT DE REPARATION DE LA POMPE	1	1				
27	61A–44322–02	.INSERT, CARTRIDGE .CUVETTE	1	1				

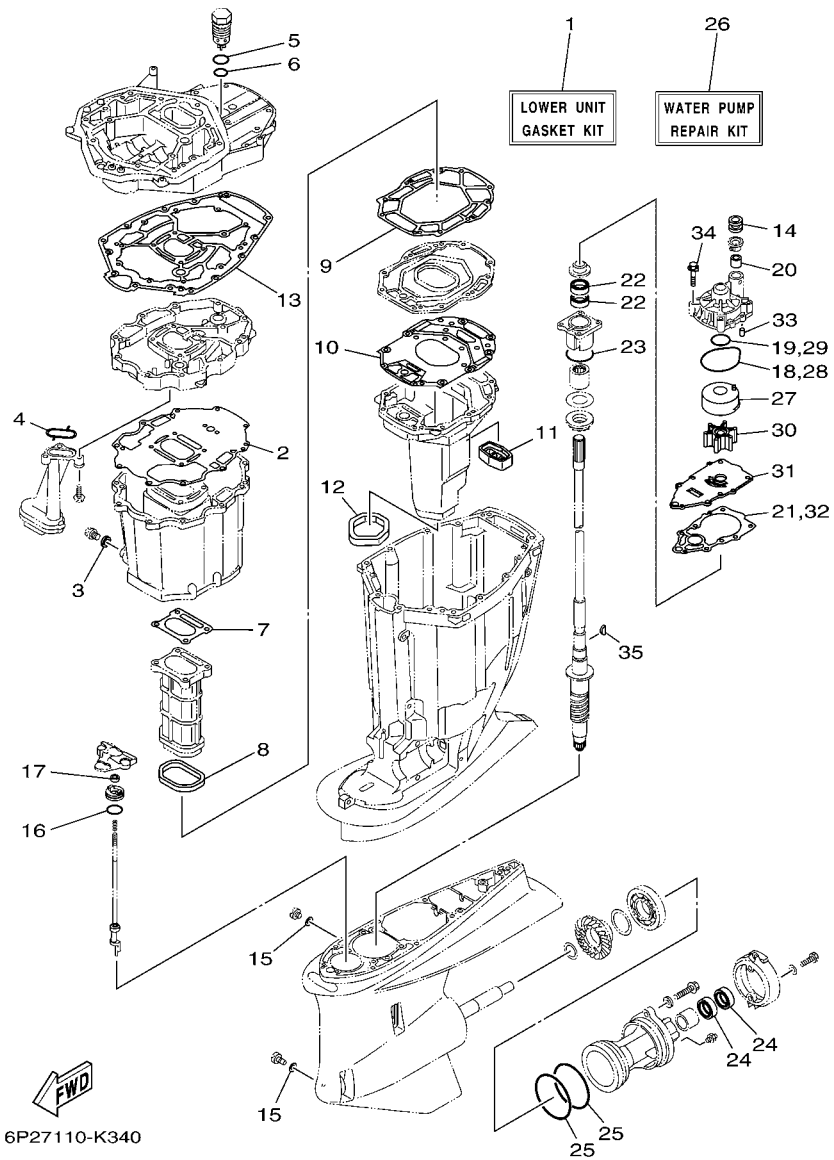

FIG. 36 REPAIR KIT 2 — KITS DE REPARATION 2

REF. NO.	PART NO. N° PIECES	DESCRIPTION DESCRIPTION	6BR3	6BS3				REMARKS REMARQUES
28	93210–86M38	.O-RING .JOINT TORIQUE	1	1				
29	93210–37160	.O-RING .JOINT TORIQUE	1	1				
30	6E5–44352–01	.IMPELLER .TURBINE	1	1				
31	6P2–44323–00	.OUTER PLATE, CARTRIDGE .PLAQUE EXTERIEURE	1	1				
32	60X–44315–A0	.GASKET, WATER PUMP .JOINT, POMPE A EAU	1	1				
33	93606–12019	.PIN, DOWEL .GOUPILLE	2	2				
34	90119–08M14	.BOLT, WITH WASHER .BOULON, AVEC RONDELLE	4	4				
35	90280–04M05	.KEY, WOODRUFF .CLAVETTE, DEMI-LUNE	1	1				

PART NO. N° PIECES	REF. NO.
6P2–11110–01	4 – 2
69J–11119–00	2 – 12
6P2–11119–00	5 – 16
6P2–1111E–00	5 – 17
6P2–11120–01	4 – 10
69J–11133–10	4 – 3
	4 – 11
6P2–11135–00	4 – 35
6P2–11181–00	4 – 22
	35 – 2
6P2–11182–00	4 – 27
	35 – 3
6P2–11191–00–9S	4 – 34
6P2–11192–00–9S	4 – 43
6P2–11193–00	4 – 38
	35 – 4
6P2–11194–00	4 – 44
	35 – 5
69J–11301–00	4 – 16
69J–11313–00	2 – 46
6P2–1131B–00	2 – 17
	35 – 12
6P2–1131C–00–9S	2 – 14
6E5–11325–00	2 – 15
	5 – 9
	18 – 15
6P2–11325–00	5 – 8
6P3–11325–00	2 – 23
	2 – 28
67F–11325–01	4 – 17
67F–11328–00	4 – 18
69J–11351–11	2 – 43
	35 – 14
69J–11355–00	29 – 17
	35 – 21
6AW–11371–10	28 – 8
676–11372–00	4 – 5
6P2–11372–00	7 – 24
6P2–11377–00	7 – 29
6P2–11410–01	3 – 1
69J–11416–01	3 – 4
69J–11416–11	3 – 4
69J–11416–21	3 – 4
69J–11417–01	3 – 5
69J–11417–11	3 – 5
69J–11417–21	3 – 5
69J–11426–01	3 – 6
69J–11426–11	3 – 6

PART NO. N° PIECES	REF. NO.
69J–11426–21	3 – 6
69J–11427–00	3 – 7
69J–11478–00	3 – 2
6P2–11537–01	6 – 17
6P2–11590–00	6 – 25
63P–11603–01	3 – 12
6P2–11631–01–93	3 – 11
69J–11633–00	3 – 13
69J–11634–01	3 – 14
69J–11654–00	3 – 9
69J–11656–00	3 – 10
69J–11656–10	3 – 10
69J–11656–20	3 – 10
6P2–12111–00	6 – 1
69J–12113–01	6 – 3
69J–12117–01	6 – 4
69J–12118–00	6 – 5
69J–12119–00	6 – 6
6P2–12121–00	6 – 2
69J–12153–00	6 – 7
68V–12157–00	6 – 21
6S1–12168–00	6 – 8
6S1–12168–10	6 – 8
6S1–12168–20	6 – 8
6S1–12168–30	6 – 8
6S1–12168–40	6 – 8
6S1–12168–50	6 – 8
6S1–12168–60	6 – 8
6S1–12168–70	6 – 8
6S1–12168–80	6 – 8
6S1–12168–90	6 – 8
6S1–12168–A0	6 – 8
6S1–12168–B0	6 – 8
6S1–12168–C0	6 – 8
6S1–12168–D0	6 – 8
6S1–12168–E0	6 – 8
6S1–12168–F0	6 – 8
6S1–12168–G0	6 – 8
6S1–12168–H0	6 – 8
6S1–12168–J0	6 – 8
6S1–12168–K0	6 – 8
6S1–12168–L0	6 – 8
6S1–12168–M0	6 – 8
6S1–12168–N0	6 – 8
6S1–12168–P0	6 – 8
6S1–12168–R0	6 – 8
6S1–12168–S0	6 – 8
6S1–12168–T0	6 – 8

PART NO. N° PIECES	REF. NO.
6S1–12168–U0	6 – 8
6S1–12168–V0	6 – 8
6S1–12168–W0	6 – 8
6S1–12168–X0	6 – 8
6S1–12168–Y0	6 – 8
6S1–12169–00	6 – 8
6P2–12171–02	6 – 9
6P2–12172–02	6 – 13
6P2–12181–01	6 – 11
6P2–12182–01	6 – 15
69J–12233–00	28 – 11
6P2–12403–00	5 – 22
6P2–1240H–00–9S	2 – 21
6P3–1240H–00–9S	2 – 26
67F–12411–01	2 – 19
67F–12412–00	2 – 20
6P2–1243A–00	2 – 35
69J–1243E–00	2 – 36
6P2–12481–00	18 – 9
6P2–12482–00	8 – 3
6P2–12483–00	8 – 5
6P2–12491–00	18 – 10
68T–12572–00	22 – 13
6P2–1257A–10	13 – 11
6P2–1257E–10	13 – 15
6R3–12581–00	22 – 14
6R3–12582–00	22 – 15
6R3–12583–00	22 – 16
6P2–12615–00	6 – 22
6P2–12623–00	6 – 19
6P2–12645–10	6 – 18
6P2–12663–00	6 – 20
69J–12858–00	2 – 52
6AW–13119–00	29 – 15
6P2–13160–10	11 – 1
6P2–13161–00	11 – 2
6P2–13170–10	11 – 6
6P2–13171–00	11 – 7
69J–13300–02	29 – 12
69J–13329–00	29 – 13
69J–13338–00	29 – 14
69J–13411–00	29 – 8
69J–13415–00	29 – 10
	36 – 4
67F–13434–20	1 – 25
60L–13437–62	16 – 24
69J–13440–01	2 – 51
6BR–13446–00–9S	2 – 53

PART NO. N° PIECES	REF. NO.
67F–13448–00	1 – 15
6P2–13477–00	2 – 54
	35 – 22
6P2–13532–00	10 – 3
6P2–13533–00	10 – 2
6P2–13545–00	10 – 7
6P2–13546–00	10 – 10
6P2–13547–00	10 – 18
6P2–13548–00	10 – 19
6P2–13556–00	9 – 4
6P2–13557–00	9 – 5
6P2–13564–00	7 – 3
6P2–13573–00	9 – 11
6P2–13574–00	9 – 21
68V–13577–00	13 – 12
	13 – 16
	13 – 21
6P2–13577–00	11 – 5
	11 – 10
6P2–13578–00	9 – 8
6P2–13588–00	9 – 7
69J–13593–00	12 – 30
6P2–13594–00	7 – 4
6P2–13595–00	10 – 4
69J–13631–00	29 – 16
6P2–13641–00	7 – 12
6P2–13642–00	7 – 15
6P2–13645–00	7 – 13
	7 – 16
6P2–13646–00	7 – 14
6P2–13647–00	7 – 17
6P2–13711–00	9 – 3
69J–13716–00	12 – 31
6P2–13750–00	9 – 1
6P2–13751–00	9 – 2
6P2–13758–00	10 – 14
6P2–13761–10	11 – 3
	11 – 8
6P2–13769–00	12 – 11
68V–13781–10	12 – 13
63P–13784–00	12 – 15
6P2–13906–00	12 – 17
6P2–13907–00	12 – 14
63P–13915–00	12 – 16
6P2–13972–10	13 – 20
6P2–13973–10	13 – 19
6P2–13974–10	13 – 14
6P2–13976–00	13 – 2

PART NO. N° PIECES	REF. NO.
6C5–1410B–00	11 – 4
	11 – 9
6P2–1410F–00	12 – 35
69J–14137–00	13 – 23
63P–14148–00	12 – 21
6P2–14149–00	12 – 32
6P2–14159–00	9 – 13
69J–14164–00	9 – 22
6P2–14180–04	12 – 1
6P2–14181–00	12 – 6
6P2–14182–00	12 – 2
6P2–14191–00	12 – 7
6P2–14197–00	12 – 36
69J–14225–01	12 – 34
6P2–14255–00	9 – 12
68V–14265–00	12 – 29
6P2–14349–00	10 – 1
68V–14356–00	9 – 24
6P2–14360–00	9 – 6
6P2–14386–00	12 – 9
6P2–1441J–00	7 – 21
63P–14435–00	19 – 19
6P2–14440–00	7 – 20
6P2–14446–00	12 – 27
6P2–14496–00	9 – 9
6P2–14546–00	12 – 10
68V–14564–00	12 – 22
63P–14567–00	12 – 18
69J–14624–01	28 – 47
69J–14664–00	2 – 50
	35 – 18
69J–14711–20–9S	28 – 24
6P2–1475A–00	10 – 5
6P2–1475E–00	10 – 6
6P2–1475F–00	10 – 8
6P2–1475G–00	10 – 9
6P2–14984–00	12 – 19
6P2–14985–00	12 – 8
6BR–15100–00–9S	2 – 2
6P2–15142–00	4 – 41
6P2–15143–00	4 – 47
69J–15187–00	2 – 5
69J–15311–00–CA	29 – 1
69J–15312–01	28 – 49
	36 – 2
69J–15316–00	28 – 34
6P2–15362–10	29 – 20
6G8–15363–00	2 – 56

PART NO. N° PIECES	REF. NO.
6P2–15373–01	7 – 18
6P2–15377–10	29 – 21
6P2–15411–01–9S	2 – 8
69J–15451–00	2 – 9
	35 – 11
69J–15481–00	2 – 6
6P2–15512–00	6 – 26
69J–15761–00	29 – 2
6P2–2134X–00	9 – 14
6E5–21744–00	8 – 4
	10 – 16
69J–21841–02	12 – 28
63P–2411R–00	12 – 5
6P2–2411T–00	12 – 4
6P2–24135–00	10 – 12
6P2–24136–00	10 – 13
6P2–24137–00	10 – 15
6P2–2416A–00	10 – 11
6P2–24170–00	9 – 19
6P2–2417H–00	13 – 25
6P2–2417J–00	12 – 37
6P2–2417K–00	12 – 39
6P2–2419A–00	9 – 15
60E–24300–01	13 – 13
	13 – 17
6YK–24307–42	15 – 1
6H4–24311–00	5 – 27
6P2–24313–10	14 – 18
6BR–24314–00	23 – 20
6P2–24314–00	14 – 2
6P2–24315–00	13 – 24
6P2–24317–00	13 – 27
6P2–24321–00	12 – 38
6P2–24322–00	13 – 6
6P2–24323–00	13 – 7
6P2–24324–00	13 – 5
69J–24325–00	13 – 10
6E5–24351–51	14 – 3
6P2–24367–00	13 – 4
6P2–24376–00	10 – 20
6AW–24377–00	14 – 4
688–24378–00	10 – 17
69J–24378–00	1 – 21
6E5–24378–00	13 – 28
69J–24379–00	12 – 20
6E5–24379–00	22 – 10
69J–24410–02	12 – 23
6P2–24422–00	7 – 6

NUMERICAL INDEX
INDEX NUMERIQUE

PART NO. N° PIECES	REF. NO.
4SV–24453–00	12 – 3
	12 – 12
69J–24460–00	13 – 3
6P2–24461–10	13 – 18
6P3–24469–00	14 – 9
6P2–24491–00	12 – 24
69J–24492–00	12 – 25
69J–24501–10	13 – 8
68V–24519–00	13 – 22
6P3–24519–00	14 – 10
6P3–24560–01	14 – 6
6P3–24562–02	14 – 8
6P3–24563–00	14 – 7
6P3–24564–00	14 – 11
6P2–24566–11	14 – 12
6P2–24592–00	12 – 26
69J–24599–10	13 – 9
68V–2481H–00	9 – 25
	13 – 26
69J–28100–01	14 – 22
67F–2812A–00	18 – 47
6BR–28199–73–D0	14 – 23
6BR–28199–73–E0	14 – 23
6BR–28199–73–F0	14 – 23
6BR–28199–73–G0	14 – 23
6BR–28199–73–H0	14 – 23
6BR–28199–73–S0	14 – 23
6BR–28199–83–K0	14 – 24
6BR–28199–83–L0	14 – 24
6BR–28199–83–M0	14 – 24
6BR–28199–83–N0	14 – 24
6BR–28199–83–P0	14 – 24
6BR–28199–83–R0	14 – 24
69J–41111–01–9S	5 – 1
6P2–41112–00	5 – 5
	35 – 6
69J–41113–02–9S	5 – 3
6P2–41114–00	5 – 7
	35 – 8
69J–41121–01–9S	5 – 2
6P2–41122–00	5 – 6
	35 – 7
69J–41123–02–9S	5 – 4
69J–41131–11–CA	28 – 15
69J–41132–20–9S	28 – 17
6P2–41134–00	28 – 18
	36 – 7
69J–41135–A0	28 – 21

PART NO. N° PIECES	REF. NO.
69J–41135–A0	36 – 9
6S1–41136–00	28 – 23
	36 – 10
69J–41137–10–CA	28 – 1
69J–41138–00	28 – 20
	36 – 8
69J–42510–00–8D	25 – 6
6P2–42610–01	1 – 1
6P2–42613–00	1 – 2
6P2–42615–00	21 – 8
68F–42647–01	1 – 4
69J–42647–01	1 – 5
68F–42648–01	1 – 13
60V–42651–01	1 – 9
60V–42652–00	1 – 14
68F–42663–00	1 – 12
69J–42663–00	1 – 6
6P2–42677–00	1 – 18
6P2–42678–00	1 – 16
69J–42681–00	1 – 19
69J–42682–00	1 – 20
6BR–42710–00–8D	21 – 1
69J–42716–00	21 – 9
61A–42717–00	21 – 18
69J–42717–00	21 – 17
6P2–42717–00	21 – 3
6P2–42718–00	21 – 4
69J–42723–00–8D	19 – 14
6E5–42724–00	28 – 7
6BR–42725–00	21 – 7
6H1–42726–21	21 – 13
61A–42727–00	21 – 15
6P2–42738–00–8D	21 – 2
69J–42741–00–8D	22 – 1
6BR–42743–00	21 – 46
6H4–42748–00	21 – 6
68F–42753–00	21 – 52
6P2–42761–00	2 – 39
67F–42761–01	2 – 38
69J–42769–00	28 – 30
69J–42771–00–8D	22 – 3
69J–42774–10	22 – 7
6AH–42794–40	21 – 58
6AH–42794–50	21 – 59
69J–42815–00–8D	21 – 28
69J–42816–00–8D	21 – 37
69J–42817–00–8D	21 – 29
63P–42818–01	21 – 32

PART NO. N° PIECES	REF. NO.
68V–42818–01	21 – 40
6P2–42828–00–8D	21 – 26
69J–42828–02–8D	21 – 25
68F–42828–10–8D	21 – 35
6BR–42829–00	21 – 21
69J–43111–01–8D	24 – 1
69J–43112–01–8D	24 – 14
6E5–43126–02	24 – 43
6R3–43131–00	24 – 21
61A–43132–00	24 – 12
61A–43133–00	24 – 15
64D–43144–00	21 – 43
6G5–43144–00	24 – 33
6E5–43145–01	34 – 8
6G5–43148–00	24 – 38
61A–43181–01	24 – 35
6G5–43185–02	24 – 36
61A–43311–21–8D	24 – 30
61A–43376–00	25 – 4
69J–43800–04–8D	26 – 1
69J–43801–01	26 – 4
69J–43804–00	27 – 5
69J–43805–00	27 – 4
6CE–4380P–00	26 – 12
6CE–43810–00	26 – 3
61A–43811–00	26 – 9
61A–43813–01	26 – 18
6H1–43814–00	26 – 17
69J–43816–00	26 – 63
69J–43817–00	27 – 13
61A–43818–00	26 – 25
69J–4381C–00	26 – 30
	26 – 35
69J–4381J–00	26 – 64
69J–43820–00	26 – 71
61A–43821–00	26 – 70
61A–43822–00	26 – 69
69J–43828–00	27 – 16
6H1–43829–00	27 – 19
69J–4382E–00	26 – 11
69J–43830–01	26 – 33
69J–43831–00	26 – 66
69J–43833–00	26 – 21
61A–43835–01	26 – 19
6CE–43840–00	26 – 2
6CJ–43841–00	26 – 42
6CJ–43843–00	26 – 53
6CJ–43844–00	26 – 50

PART NO. N° PIECES	REF. NO.
6H1–43844–10	26 – 55
69J–43845–00	26 – 28
69A–4384F–00	26 – 39
69J–4384G–00	26 – 58
6H1–4384G–11	26 – 54
69J–4384H–00	26 – 10
61A–4384H–10	26 – 74
6CJ–4384M–00	26 – 38
69J–43851–00	26 – 49
69J–43853–00	26 – 45
69J–43854–00	26 – 57
69J–43855–00	26 – 52
6H1–43856–10	26 – 56
61A–43861–00	26 – 14
	26 – 16
	26 – 67
69J–43861–00	27 – 6
6H1–43861–00	26 – 6
61A–43864–00	26 – 73
6H1–43869–00	27 – 15
60V–4386A–00	26 – 44
69J–4386K–00	27 – 10
61A–43871–00	26 – 15
69J–43871–00	26 – 62
6H1–43872–00	26 – 7
61A–43874–00	26 – 72
6H1–43875–00	26 – 29
6T4–43875–01	26 – 68
61A–43875–10	26 – 75
61A–43876–00	26 – 26
CS3–4387G–00	26 – 59
69J–43880–01	27 – 1
69J–43881–01	27 – 11
69J–43882–00	27 – 8
6H1–43883–00	26 – 43
69J–43886–00	27 – 7
69J–43888–00	27 – 17
69J–4388E–01	26 – 23
69J–4388F–00	27 – 14
69J–4388H–00	27 – 12
69J–4388J–00	26 – 20
69J–43891–00	27 – 9
6CJ–43893–00	26 – 46
69J–43894–00	26 – 41
69J–43899–01	26 – 31
61A–4389H–00	26 – 8
69J–4389J–00	26 – 32
	26 – 36

PART NO. N° PIECES	REF. NO.
69J–44118–00	23 – 5
6BR–44120–00	23 – 8
6BR–44120–10	23 – 8
6BR–44121–00	23 – 3
6BR–44122–00	23 – 4
6P2–44150–00	30 – 14
6P3–44150–00	32 – 16
6BR–44176–00–94	23 – 2
61A–44311–01	30 – 17
	32 – 19
60X–44312–00	30 – 29
	32 – 31
6E5–44312–00	30 – 22
	32 – 24
60X–44315–A0	30 – 31
	32 – 33
	36 – 21
	36 – 32
61A–44322–02	30 – 18
	32 – 20
	36 – 27
6P2–44323–00	30 – 30
	32 – 32
	36 – 31
6E5–44352–01	30 – 23
	32 – 25
	36 – 30
6S1–44361–01	31 – 3
	33 – 3
6S1–44361–11	31 – 3
	33 – 3
6D0–44362–01	31 – 20
	33 – 20
6D0–44365–00	31 – 21
	33 – 21
6E5–44365–00	30 – 21
	31 – 1
	32 – 23
	33 – 1
	36 – 20
663–44366–00	30 – 6
	32 – 8
6D0–44366–00	31 – 22
	33 – 22
6E5–44366–00	28 – 51
	31 – 2
	33 – 2
	36 – 14

PART NO. N° PIECES	REF. NO.
6D0–44367–00	31 – 19
	33 – 19
6P2–44391–00	21 – 16
61A–44511–01	25 – 32
69J–44514–00	25 – 24
6G5–44526–00	24 – 3
69J–44532–00	25 – 27
69J–44533–00	25 – 31
68F–44533–01	2 – 40
69J–44551–00–8D	25 – 11
61A–44552–01–CA	25 – 22
60X–44555–00	25 – 14
61A–44575–00	25 – 13
69J–45111–10–8D	28 – 29
69J–45113–20	28 – 31
	36 – 13
69J–45123–00	28 – 28
	36 – 12
69J–45127–00	28 – 27
	36 – 11
69J–45151–00–8D	22 – 8
69J–45152–10	28 – 35
61A–45155–00	28 – 39
69J–45159–00	28 – 53
69J–45181–10–9S	28 – 22
69J–45211–02–8D	28 – 50
6P2–45214–00	31 – 10
	33 – 10
6P2–45215–00	31 – 11
	33 – 11
6P2–45224–00	31 – 14
	33 – 14
6P2–45225–00	31 – 15
	33 – 15
6G5–45251–02	24 – 2
6P2–45300–40–8D	30 – 1
6P3–45300–40–8D	32 – 1
6P2–45300–50–8D	30 – 1
6P3–45300–50–8D	32 – 1
6P2–45301–10–8D	30 – 2
	32 – 2
69J–45318–01	28 – 37
65N–45321–00	30 – 11
	32 – 13
6P2–45331–00–9S	30 – 35
	32 – 37
6D0–45332–00–CA	30 – 64
6D1–45332–00–CA	32 – 66

NUMERICAL INDEX
INDEX NUMERIQUE

PART NO. N° PIECES	REF. NO.
688–45341–10	30 – 8
	32 – 10
6E5–45344–00	30 – 44
	32 – 46
6D0–45361–00–8D	30 – 76
	32 – 81
61A–45371–00	31 – 17
	33 – 17
6D0–45375–00	31 – 9
	33 – 9
61A–45376–00	30 – 10
	32 – 12
61A–45378–00	28 – 44
61B–45383–00	32 – 72
69K–45384–00	32 – 73
6P2–45501–00	30 – 47
	32 – 49
6P2–45501–10	30 – 47
	32 – 49
61B–45538–01	32 – 4
6P2–45551–01	30 – 48
	32 – 50
6P2–45560–00	30 – 51
6P3–45560–00	32 – 53
61A–45567–00	30 – 5
	32 – 7
61A–45567–10	30 – 5
	32 – 7
61A–45567–20	30 – 5
	32 – 7
61A–45567–30	30 – 5
	32 – 7
61A–45567–40	30 – 5
	32 – 7
61A–45567–50	30 – 5
	32 – 7
61A–45567–60	30 – 5
	32 – 7
6P2–45571–00	30 – 67
6P3–45571–00	32 – 69
61A–45577–00	30 – 69
69K–45577–00	32 – 74
61A–45577–10	30 – 69
69K–45577–10	32 – 74
61A–45577–20	30 – 69
69K–45577–20	32 – 74
61A–45577–30	30 – 69
69K–45577–30	32 – 74

PART NO. N° PIECES	REF. NO.
61A–45577–40	30 – 69
69K–45577–40	32 – 74
61A–45577–50	30 – 69
69K–45577–50	32 – 74
61A–45577–60	30 – 69
69K–45577–60	32 – 74
6P2–45578–00	30 – 68
6K1–45578–01	32 – 71
6K1–45578–10	32 – 71
6P2–45578–10	30 – 68
6K1–45578–20	32 – 71
6P2–45578–20	30 – 68
6K1–45578–30	32 – 71
6P2–45578–30	30 – 68
6K1–45578–40	32 – 71
6P2–45578–40	30 – 68
6K1–45578–50	32 – 71
6K1–45578–60	32 – 71
61A–45587–00	30 – 38
	32 – 40
61A–45587–10	30 – 38
	32 – 40
61A–45587–20	30 – 38
	32 – 40
61A–45587–30	30 – 38
	32 – 40
61A–45587–40	30 – 38
	32 – 40
61A–45587–50	30 – 38
	32 – 40
61A–45587–60	30 – 38
	32 – 40
69J–45611–00	30 – 52
69K–45611–00	32 – 54
69J–45631–00	30 – 56
	32 – 58
61A–45632–00	30 – 55
	32 – 57
61A–45633–00	30 – 57
	32 – 59
61A–45634–01	30 – 54
	32 – 56
61A–45635–00	30 – 59
	32 – 61
61B–45641–01	32 – 55
61A–45641–02	30 – 53
6H1–45668–00	30 – 58
	32 – 60

PART NO. N° PIECES	REF. NO.
6P2–45723–00	30 – 34
	32 – 36
6D0–45970–00	31 – 28
6D1–45970–00	33 – 28
6K1–45970–01–98	33 – 28
6G5–45970–02–98	31 – 28
6R1–45970–A1	33 – 28
6R4–45970–A1	31 – 28
6D0–45972–00	31 – 28
6D1–45972–00	33 – 28
61A–45972–00–98	31 – 28
61B–45972–00–98	33 – 28
6K1–45972–01–98	33 – 28
6G5–45972–02–98	31 – 28
6R1–45972–A0	33 – 28
6R4–45972–A0	31 – 28
61A–45974–00–98	31 – 28
61B–45974–00–98	33 – 28
6K1–45974–02–98	33 – 28
6G5–45974–03–98	31 – 28
6R1–45974–A0	33 – 28
6R4–45974–A0	31 – 28
6R1–45976–A0	33 – 28
6R4–45976–A0	31 – 28
6D0–45978–00	31 – 28
6D1–45978–00	33 – 28
61A–45978–00–98	31 – 28
61B–45978–00–98	33 – 28
6K1–45978–02–98	33 – 28
6G5–45978–03–98	31 – 28
6R1–45978–A0	33 – 28
6R4–45978–A0	31 – 28
69J–45987–00	31 – 23
	33 – 23
688–45997–01	31 – 24
	33 – 24
6BR–45B70–00	31 – 28
6BS–45B70–00	33 – 28
6BR–45B72–00	31 – 28
6BS–45B72–00	33 – 28
6BR–45B74–00	31 – 28
6BS–45B74–00	33 – 28
6P2–46241–00	6 – 24
6AW–4820A–10	23 – 15
6E5–61301–01	34 – 10
6E5–61303–00	34 – 14
6E5–61311–11	34 – 12
6E5–61313–00	34 – 11

PART NO. N° PIECES	REF. NO.
6E5–61315–00	34 – 13
6E5–61350–02	34 – 1
6E5–61351–01	34 – 2
6E5–61355–00	34 – 5
6P2–81128–00	16 – 23
6BR–81218–00	18 – 20
6P2–81332–00	16 – 17
6P2–81336–00	18 – 54
6P2–81337–00	16 – 19
6P2–81450–00	16 – 1
6P2–81460–00	16 – 2
6P2–81614–00	18 – 1
6P2–81639–00	18 – 50
6BR–81800–00	20 – 1
69J–81801–00	20 – 5
67F–81807–00	20 – 10
67F–81808–00	20 – 8
67F–81809–00	20 – 19
67F–81810–00	20 – 3
67F–81813–00	20 – 6
67F–81820–00	20 – 7
67F–81821–00	20 – 13
6K7–81826–11	20 – 24
69J–81828–00	20 – 25
67F–81830–00	20 – 17
67F–81832–00	20 – 11
67F–81836–00	20 – 12
69J–81839–00	20 – 21
67F–8183R–00	20 – 16
60V–8183T–00	20 – 18
6P2–8183X–00	18 – 35
69J–81840–00	20 – 4
67F–81841–00	20 – 14
69J–81842–00	20 – 20
6BR–81845–00	17 – 7
67F–81846–00	20 – 26
67F–81850–00	20 – 2
67F–81857–00	20 – 9
69J–81869–00	20 – 23
67F–81891–00	20 – 15
6BR–81919–20	18 – 68
6P2–81919–31	18 – 69
6BR–81925–00	18 – 19
63P–81941–00	20 – 22
6P2–81948–00	18 – 25
69J–81949–02	19 – 20
6AW–81950–00	18 – 31
68F–8195A–00	18 – 52

PART NO. N° PIECES	REF. NO.
6P2–81960–02	18 – 2
6P2–81972–00–9S	18 – 4
60V–81975–A0	18 – 3
6AH–81994–40	16 – 25
6AH–81994–50	16 – 26
6AH–81996–00	21 – 60
6BR–82105–00	18 – 74
6P2–82113–00	18 – 49
6BR–82117–00	18 – 63
6P2–82119–00	18 – 39
69J–82147–00	24 – 32
6E5–82148–00	24 – 9
6H1–82148–00	24 – 6
6E5–82149–00	25 – 17
67F–82151–00	18 – 42
6P2–82151–00	18 – 41
67F–82151–10	18 – 43
67F–82151–20	18 – 44
67F–82151–40	18 – 45
67F–82151–50	18 – 46
6BR–82170–00	18 – 40
6P2–82310–01	17 – 17
6P2–82314–00	17 – 20
6BR–82316–00	17 – 4
6A0–82317–00	17 – 14
	18 – 28
663–82317–01	16 – 20
68V–82377–00	21 – 57
6P2–82380–00	9 – 10
6BR–82388–00	17 – 23
6P2–82389–00	2 – 60
6P2–82560–01	2 – 58
6BR–82563–00	19 – 13
6P2–8257V–00	16 – 4
	17 – 1
69J–82587–00	19 – 15
6E5–82588–00	21 – 19
6P2–82588–00	2 – 59
6P2–82589–00	19 – 3
6P2–8258A–00	9 – 23
6BR–82590–00	19 – 1
6BR–82594–00	21 – 54
6BR–8259M–00	18 – 61
68F–82846–00	18 – 48
6E5–83558–00	28 – 41
6P2–83597–00	2 – 62
69J–83614–10	19 – 16
6AW–83651–00	2 – 61

PART NO. N° PIECES	REF. NO.
6P2–83652–00	5 – 24
69J–8366G–02	21 – 49
69J–83672–11	25 – 1
6P2–85075–00	17 – 29
	17 – 33
6P2–85544–00	18 – 51
689–85547–00	14 – 1
6P2–85580–00	16 – 6
6P2–85722–00	19 – 7
6P2–85780–00	2 – 63
61A–85790–00	17 – 26
63P–85886–00	19 – 18
6P2–85896–00	17 – 28
6P2–85897–00	17 – 32
6BR–8591A–10	17 – 2
6C5–86120–00	9 – 20
6P2–86120–00	5 – 21
6P2–W0001–01	35 – 1
6P2–W0001–30	36 – 1
69J–W0070–00	1 – 17
6P2–W0078–00	36 – 26
6P2–W009A–02–9S	4 – 1
6BR–W009B–00–9S	2 – 1
6P2–W009C–02–9S	4 – 9
69J–W1165–01	3 – 8
90101–09M70	34 – 18
90101–12M05	24 – 47
90101–14002	25 – 18
90101–14003	25 – 28
90105–05012	2 – 24
	2 – 29
90105–06M07	4 – 19
90105–06M09	2 – 13
	5 – 18
90105–08049	30 – 73
	32 – 78
90105–10M00	31 – 18
	33 – 18
90109–06M80	2 – 22
	2 – 27
90109–06M81	21 – 20
90109–06M82	21 – 5
	21 – 27
	21 – 36
	21 – 47
90109–06M86	19 – 17
	21 – 22
	21 – 24

NUMERICAL INDEX
INDEX NUMERIQUE

PART NO. N° PIECES	REF. NO.
90109–06M86	21 – 44
	21 – 50
	21 – 56
90109–06MA1	16 – 22
90110–05039	31 – 16
	33 – 16
90110–06038	7 – 5
90110–06150	4 – 42
	4 – 48
90111–06111	22 – 4
	22 – 9
90111–06113	22 – 5
90116–10012	28 – 54
90119–06025	2 – 55
90119–06027	5 – 13
90119–06122	11 – 11
90119–06M17	14 – 13
	28 – 46
90119–06M24	7 – 9
90119–06M35	7 – 23
90119–06M59	9 – 16
	17 – 16
90119–06M82	17 – 3
90119–06M92	17 – 22
90119–06M95	18 – 30
90119–06MA3	18 – 5
90119–06MA4	2 – 18
90119–06MA5	18 – 6
90119–06MA6	5 – 23
	7 – 11
90119–07001	4 – 7
90119–07234	4 – 8
	4 – 15
90119–07235	4 – 14
90119–08009	2 – 11
90119–08021	4 – 26
	4 – 31
90119–08102	28 – 2
90119–08M14	30 – 33
	32 – 35
	36 – 34
90119–08M22	21 – 10
90119–08M66	2 – 7
90119–08M91	4 – 25
	4 – 30
90119–10007	28 – 32
90119–10008	31 – 8
	33 – 8

PART NO. N° PIECES	REF. NO.
90119–10009	28 – 57
90119–10024	24 – 29
	25 – 23
	25 – 33
90119–10M07	6 – 28
90119–10MA2	31 – 8
	33 – 8
90151–06M02	5 – 11
90152–05M08	31 – 12
	33 – 12
90155–10004	4 – 24
	4 – 29
90170–09M05	34 – 19
90170–14M06	34 – 15
90170–16M19	30 – 50
	32 – 52
90171–18M04	31 – 26
	33 – 26
90173–06001	22 – 2
90179–06M28	1 – 3
	7 – 8
90179–08003	20 – 29
90179–24002	16 – 16
90183–02M03	30 – 61
	32 – 63
90185–05002	31 – 13
	33 – 13
90185–09M01	34 – 6
	34 – 20
90185–14M00	25 – 20
	25 – 29
90185–22M11	24 – 24
90201–02M00	30 – 60
	32 – 62
90201–06068	21 – 34
	21 – 42
90201–08023	30 – 74
	32 – 79
90201–09M02	23 – 11
90201–10M01	6 – 29
90201–10M20	34 – 7
90201–10M76	34 – 17
90201–11008	23 – 13
90201–12M05	24 – 49
90201–13M01	24 – 48
90201–15M58	25 – 19
90201–16015	25 – 25
90201–16016	25 – 16

PART NO. N° PIECES	REF. NO.
90201–16M00	30 – 49
	32 – 51
90201–24014	16 – 15
90201–26M59	24 – 23
90201–40M00	25 – 7
90201–42014	30 – 41
	32 – 43
90202–28M46	25 – 26
90202–32M19	25 – 15
90202–40M47	25 – 10
90206–14N50	27 – 2
90206–15M18	21 – 31
	21 – 39
90249–06M19	24 – 39
90269–05005	21 – 48
90280–04M05	30 – 24
	32 – 26
	36 – 35
90280–05015	16 – 14
90340–08002	30 – 7
	32 – 9
90340–14M06	2 – 31
	5 – 19
	29 – 6
90340–18M09	5 – 14
90344–51019	4 – 4
	4 – 12
90386–10M16	24 – 37
90386–15M73	21 – 30
	21 – 38
90386–18M14	24 – 45
	26 – 24
90386–18M63	24 – 44
90386–25M31	24 – 22
90386–39M89	25 – 8
90386–90M90	23 – 10
90387–06037	28 – 12
90387–06044	17 – 21
90387–06119	17 – 15
	18 – 29
90387–06263	29 – 9
90387–06M26	19 – 4
90387–06M60	9 – 18
	14 – 15
90387–08M31	23 – 19
90387–08M37	21 – 12
90387–10M05	24 – 40
90387–10M08	4 – 23

PART NO. N° PIECES	REF. NO.
90387–10M08	4 – 28
	6 – 27
90387–10M61	34 – 3
90430–05002	2 – 25
	2 – 30
	35 – 13
90430–06M03	4 – 20
90430–08020	30 – 9
	32 – 11
	36 – 15
90430–14115	2 – 32
	5 – 20
	35 – 10
90430–14M09	29 – 7
	36 – 3
90430–18130	5 – 15
	35 – 9
90445–07010	28 – 43
90445–07012	28 – 43
90445–09034	18 – 7
90445–09120	8 – 1
90445–11028	22 – 17
90445–11182	1 – 24
90445–11699	1 – 23
90445–11M27	1 – 22
90445–11M47	22 – 11
90446–10M01	8 – 6
90447–13009	22 – 12
90462–08026	18 – 55
90462–08032	16 – 3
	17 – 34
90462–08080	21 – 23
90464–06001	16 – 5
	19 – 10
90464–08004	17 – 13
90464–09M21	8 – 7
	18 – 8
90464–09M47	18 – 62
90464–11121	17 – 10
90464–12009	13 – 31
	14 – 20
90464–12010	13 – 29
	14 – 21
90464–13249	17 – 11
90464–18001	21 – 51
90464–18004	18 – 18
	22 – 20
	23 – 24

PART NO. N° PIECES	REF. NO.
90464–18005	13 – 30
90464–18246	19 – 11
90464–19M45	17 – 5
	19 – 6
90464–20011	7 – 30
90464–20258	21 – 53
90464–21002	18 – 13
90464–23199	17 – 6
90464–25005	18 – 17
90464–99004	7 – 22
90465–08M83	24 – 18
	24 – 26
90465–11M10	2 – 37
	2 – 64
	7 – 31
	8 – 8
	14 – 5
	14 – 19
	21 – 14
	22 – 18
	23 – 16
	23 – 21
	24 – 25
	28 – 42
90465–13M18	7 – 19
	18 – 26
	19 – 12
90465–13M24	21 – 55
90465–14M66	17 – 12
	18 – 27
	19 – 2
	19 – 5
90467–08M18	5 – 28
	18 – 14
90467–09M03	8 – 2
90468–18008	23 – 1
90468–180A0	23 – 14
90480–10M23	9 – 17
90480–12314	16 – 21
90480–14018	14 – 14
90480–14M17	22 – 6
90480–22M81	21 – 11
90501–10M77	30 – 62
	32 – 64
90501–11M10	30 – 16
	32 – 18
90501–450A2	30 – 43
	32 – 45

PART NO. N° PIECES	REF. NO.
90506–16003	24 – 42
90506–18M40	21 – 45
90560–12M01	34 – 4
91318–05025	26 – 60
91318–05040	26 – 65
91490–20015	23 – 12
91490–40030	31 – 27
	33 – 27
91690–30010	23 – 7
91690–30020	24 – 41
91690–40010	5 – 12
91809–08006	4 – 6
	4 – 13
91814–18001	2 – 4
92900–08600	23 – 18
92903–06600	18 – 34
92903–08600	20 – 28
	23 – 23
92907–04600	4 – 37
92990–05100	16 – 8
92990–05600	16 – 9
92990–06100	1 – 7
92990–10600	17 – 27
92990–18200	31 – 25
	33 – 25
92995–06100	7 – 27
	16 – 12
	18 – 37
	18 – 59
92995–06600	1 – 11
	2 – 34
	2 – 42
	2 – 49
	4 – 33
	4 – 40
	4 – 46
	5 – 26
	7 – 28
	14 – 17
	16 – 13
	17 – 9
	17 – 19
	17 – 25
	17 – 31
	17 – 36
	18 – 12
	18 – 24
	18 – 38

NUMERICAL INDEX
INDEX NUMERIQUE

PART NO. N° PIECES	REF. NO.
92995–06600	18 – 57
	18 – 60
	18 – 65
	18 – 73
	19 – 9
	24 – 5
	24 – 8
	24 – 11
	24 – 20
	24 – 28
	25 – 3
	28 – 14
	30 – 28
	32 – 30
92995–08600	18 – 22
	18 – 67
	18 – 71
	30 – 26
	30 – 46
	30 – 78
	32 – 28
	32 – 48
	32 – 83
92995–10100	31 – 6
	33 – 6
92995–10600	28 – 4
	28 – 55
	31 – 7
	33 – 7
92995–14600	25 – 21
	25 – 30
93101–28M16	30 – 36
	32 – 38
	36 – 22
93101–30002	30 – 71
	32 – 76
	36 – 24
93102–38008	6 – 23
	35 – 20
93102–63004	3 – 3
	35 – 19
93106–09014	30 – 13
	32 – 15
	36 – 17
93106–19N50	26 – 5
93210–064A5	26 – 51
93210–08391	26 – 48
93210–09165	23 – 9

PART NO. N° PIECES	REF. NO.
93210–09165	27 – 18
93210–16275	34 – 9
93210–17239	26 – 22
93210–18397	26 – 27
93210–19MJ1	2 – 45
	35 – 16
93210–19MJ3	7 – 25
	29 – 22
	35 – 23
93210–24M79	2 – 57
	35 – 24
93210–25552	2 – 44
	29 – 19
	35 – 15
93210–25647	2 – 47
	35 – 17
93210–28543	28 – 10
	36 – 6
93210–33M49	30 – 12
	32 – 14
	36 – 16
93210–347A1	28 – 9
	36 – 5
93210–35321	25 – 9
93210–37160	30 – 20
	32 – 22
	36 – 19
	36 – 29
93210–55M14	30 – 42
	32 – 44
	36 – 23
93210–86M38	30 – 19
	32 – 21
	36 – 18
	36 – 28
93211–04384	30 – 72
	32 – 77
	36 – 25
93306–210U0	30 – 66
93311–83280	30 – 3
	32 – 3
93315–43064	30 – 70
	32 – 75
93315–660W3	32 – 5
93317–330U2	30 – 37
	32 – 39
93332–00048	32 – 68
93332–000W1	30 – 4

PART NO. N° PIECES	REF. NO.
93341–34019	30 – 40
	32 – 42
93341–440U5	32 – 70
93341–670V0	32 – 6
93341–930U9	30 – 39
	32 – 41
93399–999T6	27 – 3
93410–18M02	24 – 46
93410–37M04	25 – 12
93420–36M01	28 – 38
93501–04011	30 – 63
	32 – 65
93501–08001	26 – 47
93503–16003	26 – 37
93505–32038	26 – 13
	26 – 34
93604–35236	26 – 61
93605–10108	6 – 10
	6 – 12
	6 – 14
	6 – 16
93606–12019	2 – 3
	2 – 10
	28 – 45
	30 – 32
	32 – 34
	36 – 33
93606–19M23	28 – 26
93608–12M05	28 – 52
	31 – 4
	33 – 4
93608–16M16	28 – 6
	28 – 16
	28 – 33
	29 – 5
93700–06M03	24 – 17
	24 – 31
93700–09M00	30 – 75
	32 – 80
94702–00400	4 – 49
95380–06600	1 – 8
95380–10600	28 – 56
95380–12600	24 – 50
95380–14700	34 – 16
95780–10300	25 – 5
95812–06025	29 – 11
95895–06010	28 – 40
95895–06016	29 – 23

PART NO. N° PIECES	REF. NO.
97013–06025	18 – 33
97013–08045	20 – 27
	23 – 22
97075–10045	28 – 3
97080–08030	23 – 17
97095–06010	24 – 7
	24 – 34
97095–06012	17 – 35
	18 – 11
97095–06014	14 – 16
	24 – 27
	28 – 36
97095–06016	1 – 10
	17 – 8
	17 – 24
	18 – 23
	18 – 56
	18 – 64
	18 – 72
	30 – 27
	32 – 29
97095–06020	2 – 48
	7 – 26
	17 – 18
	17 – 30
	18 – 36
	18 – 58
	21 – 33
	21 – 41
	28 – 13
97095–06025	2 – 33
	2 – 41
	24 – 4
97095–06030	4 – 32
	4 – 39
	4 – 45
	5 – 25
97095–06035	16 – 11
	19 – 8
97095–08016	18 – 70
97095–08020	18 – 21
	18 – 66
	30 – 77
	32 – 82
97095–08025	30 – 45
	32 – 47
97095–08030	30 – 25
	32 – 27

PART NO. N° PIECES	REF. NO.
97095–10045	31 – 5
	33 – 5
97575–06516	7 – 7
97575–06535	23 – 6
97575–06540	29 – 18
97575–08535	28 – 25
	29 – 4
97575–08540	4 – 21
	7 – 1
	7 – 10
97575–08560	29 – 3
97575–08590	28 – 19
97575–10535	28 – 5
97595–06610	18 – 32
97780–50620	18 – 53
97780–60520	22 – 19
97880–05012	16 – 7
97885–06010	24 – 13
	24 – 16
97885–06012	24 – 10
	24 – 19
97885–06016	25 – 2
97980–06216	28 – 48
97985–06210	16 – 18
98507–04008	4 – 36
	12 – 33
98580–05008	13 – 1
98780–04015	2 – 16
	5 – 10
	18 – 16
99001–08600	30 – 15
	32 – 17
99002–03600	26 – 40
99530–08012	16 – 10
99530–10114	7 – 2
99590–10114	30 – 65
	32 – 67

PART NO. N° PIECES	REF. NO.