YAMAHA

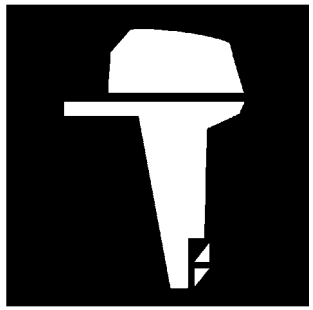

PARTS CATALOGUE
CATALOGUE DE PIECES DETACHEES

F2.5AMH'11 (69M9)

1K69M-300F1

( )

YAMAHA GENUINE Parts & Accessories

F2.5AMH
PARTS CATALOGUE
©2010 by Yamaha Motor Co., Ltd.
1st edition, July 2010
All rights reserved.
Any reprinting or unauthorized use
without the written permission of
Yamaha Motor Co., Ltd.
is expressly prohibited.
Printed in Japan.

F2.5AMH
CATALOGUE DE PIECES DETACHEES
©2010 par Yamaha Motor Co., Ltd.
1re édition, juillet 2010
Tous droits réservés
Toute réimpression ou utilisation
non autorisée sans la permission écrite
de la Yamaha Motor Co., Ltd.
est formellement interdite.
Imprimé au Japon

FOREWORD

This Parts Catalogue is related to the parts for the model(s) on the cover page. When you are ordering replacement parts, please refer to this Parts Catalogue and quote both part numbers and part names correctly.

1. Modifications or additions which have been made after the issue of the Parts Catalogue will be announced in the Parts News.
   It is advisable that you make the necessary corrections to the Parts Catalogue according to the Parts News.

2. Abbreviations
   The following abbreviations are used in this Parts Catalogue.

   "UR" Use specified parts number.
   "UN" Use as many as needed.
   "AP" Alternate Parts
   "LM" Locally Made (Parts need to be ordered locally)
   "F#" Frame No. (Applicable machine No.)
   "O/S" Over Size

3. The number of components for assembly
   - Parts, which are to be supplied in an assembly, are listed with a dot (.) in front of the part name as shown below.
   - The numeral appearing to the right of each component part indicates the quantity of parts for each assembly unit.

PART NO.	DESCRIPTION	Q'TY	REMARKS
2F5–83310–60	FRONT FLASHER LIGHT ASSY	2	
115–83311–60	.BULB (6V–18W)	1	

4. Applicable colours of graphics are represented in the "REMARKS" as shown below.

PART NO.	DESCRIPTION	Q'TY	REMARKS
2N4–24110–00–X5	FUEL TANK COMP.	2	MXR
3J1–24240–10	.GRAPHIC, FUEL TANK	1	FOR MXR

5. Note that the illustrations for reference in finding parts numbers are not to be used for assembling. When assembling, please use the applicable service manual.

6. The asterisk (*) before a reference number indicates modified items after the first edition.

7. Applicable Serial No.

   Engine Serial No.

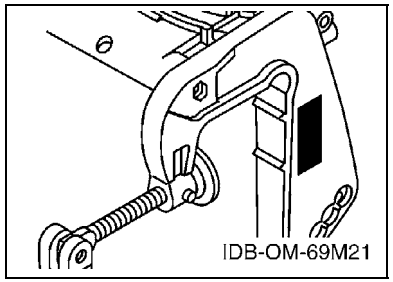

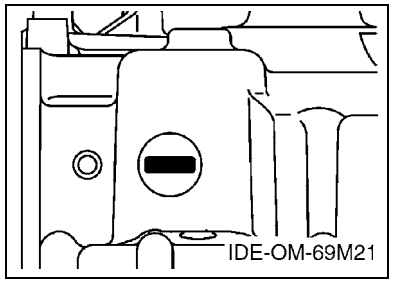

8. Applicable Engine Starting Serial No.

Model	Serial No.	Model	Serial No.
F2.5A	69M-1065755		

9. Applicable Colour Code

Abbreviation	Colour Name	Colour Code
DBNM2	DARK BLUISH GRAY METALLIC 2	004D

10. Quantity Column Information

Column No.	Name Of Q'ty Column	Applicable Model
1	69M9	F2.5AMH

AVANT–PROPOS

Ce catalogue de pièces détachées concerne les pièces pour le(s) modèle(s) indiqué(s) sur la page de couverture. Lorsque vous commandez des pièces de rechange, veuillez vous référer à ce catalogue de pieces détachées et indiquer clairement les numéros et les noms des pièces détachées.

1. Les modifications ou ajouts ayant été effectués après la parution du catalogue de pièces détachées seront décrits dans les Bulletins d'information concernant les pièces détachées.
   Il est recommandé que vous apportiez les corrections nécessaires au catalogue des pièces détachées en vous référant aux Bulletins d'information.

2. Abréviations
   Dans ce catalogue, les abréviations suivantes sont utilisées:

   "UR" Utiliser le numéro de pièces spécifié.
   "UN" Utiliser autant que nécessaire.
   "AP" Pièces de substitution
   "LM" Fabrication locale (les pièces doivent être commandées localement.)
   "F#" N° de cadre (applicable au N° de série)
   "O/S" Surdimensionné

3. Nombre de pièces d'un assemblage
   - Les pièces fournies comme composants d'un assemblage sont précédées d'un point (.) de la manière indiquée ci–dessous.
   - Le chiffre apparaissant à la droite de chaque composant indique la quantité de pièces pour chaque unité d'assemblage.

N° PIECES	DESCRIPTION	QTE	REMARQUES
2F5–83310–60	ENS. CLIGNOTANT AVANT	2	
115–83311–60	.AMPOULE (6V–18W)	1	

4. Les couleurs concernant les graphiques sont indiquées dans la colonne "REMARQUES", comme indiqué ci–dessous.

N° PIECES	DESCRIPTION	QTE	REMARQUES
2N4–24110–00–X5	RESERVOIR A ESSENCE.	2	MXR
3J1–24240–10	.GRAPHIQUE	1	POUR MXR

5. Veuillez noter que les illustrations sont indiquées à titre de référence pour trouver les numéros de pièces, non pour être utilisées lors de l'assemblage. Lors de l'assemblage, veuillez utiliser le manuel d'entretien adéquat.

6. L'astérisque (*) placé devant un numéro de référence indique des éléments qui ont été modifiés après la première édition.

7. N° de série applicable

   N° de Série du moteur

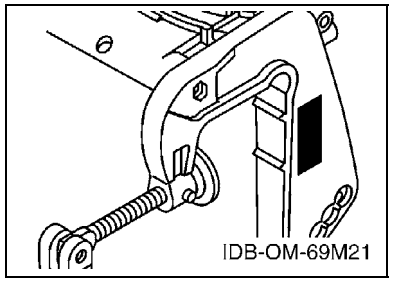

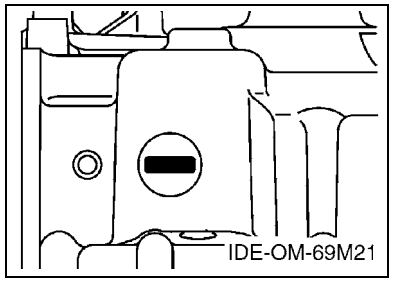

8. N° de série initial du moteur applicable

Modèle	N° de série	Modèle	N° de série
F2.5A	69M-1065755		

9. Code couleur applicable

Abréviation	Nom de la couleur	Code couleur
DBNM2	DARK BLUISH GRAY METALLIC 2	004D

10. Informations relatives à la colonne Quantité

N° de la colonne	Nom de la colonne Qté	Modèle applicable
1	69M9	F2.5AMH

CONTENTS

TOP COWLING 1
CYLINDER & CRANKCASE 1 2
CRANKSHAFT & PISTON 3
CYLINDER & CRANKCASE 2 4
VALVE 6
INTAKE 7
CARBURETOR 8
FUEL 9
STARTER 11
GENERATOR 12
BOTTOM COWLING 13
STEERING 14
CONTROL 15
BRACKET 16
UPPER CASING 18
LOWER CASING & DRIVE 1 19
LOWER CASING & DRIVE 2 21
REPAIR KIT 1 22
REPAIR KIT 2 23
REPAIR KIT 3 24

INDEX

NUMERICAL INDEX 25

TABLE DES MATIERES

CAPOT SUPERIEUR 1
CYLINDRE & CARTER 1 2
VILEBREQUIN & PISTON 3
CYLINDRE & CARTER 2 4
SOUPAPE 6
ADMISSION 7
CARBURATEUR 8
CARBURANT 9
DEMARREUR 11
GENERATRICE 12
CAPOT INFERIEUR 13
DIRECTION 14
COMMANDE 15
SUPPORT 16
FOURREAU 18
BOITIER D'HELICE TRANSMISSION1 19
BOITIER D'HELICE TRANSMISSION2 21
KITS DE REPARATION 1 22
KITS DE REPARATION 2 23
KITS DE PEPARATION 3 24

INDEX

INDEX NUMERIQUE 25

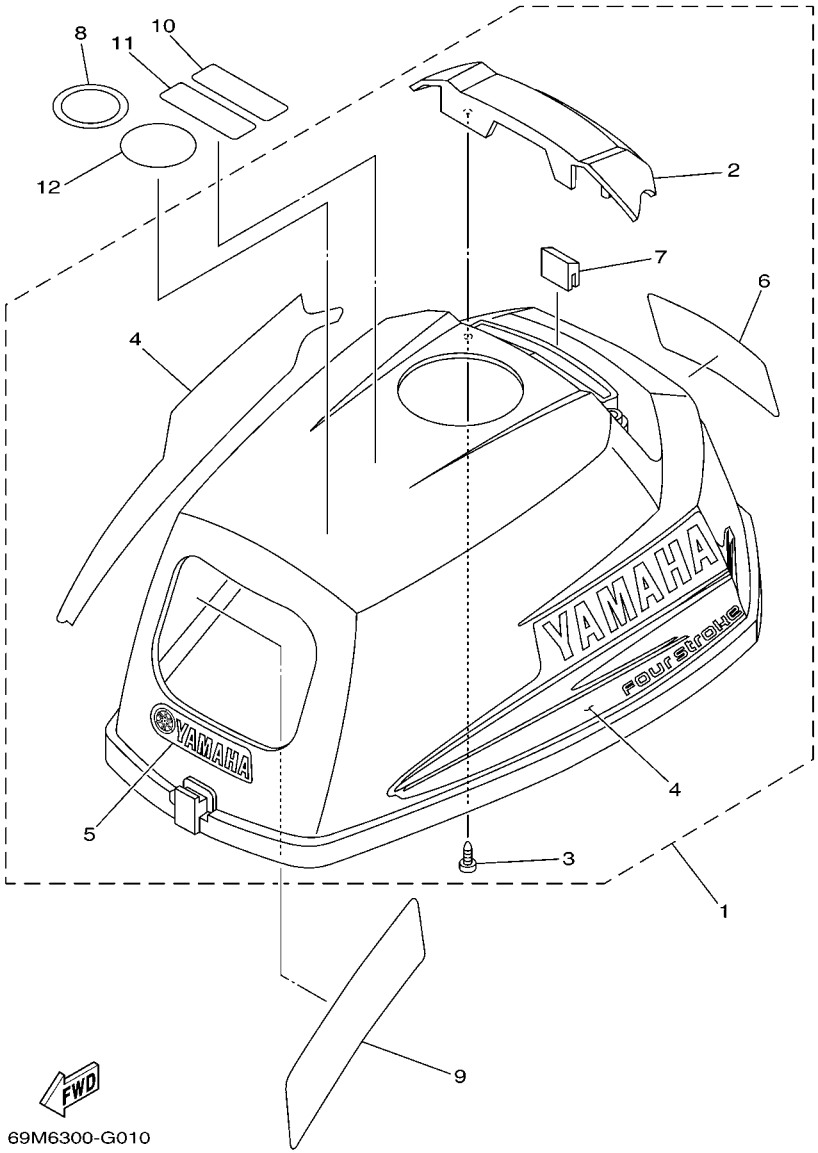

FIG. 1 TOP COWLING — CAPOT SUPERIEUR

REF. NO.	PART NO. N° PIECES	DESCRIPTION DESCRIPTION	69M9					REMARKS REMARQUES
1	69M–G2610–10–4D	TOP COWLING ASSY CAPOT (ENS.)	1					
2	69M–G2613–00	.MOLDING, AIR DUCT .MANCHON A AIR	1					
3	97780–40012	.SCREW, TAPPING .VIS, TETE BOMBEE	2					
4	69M–WG070–00	.GRAPHIC SET .JEU DIEMBLEMES	1					
5	69M–G2677–00	.GRAPHIC, FRONT .ADHESIF, AVANT	1					
6	69M–G2678–10	.GRAPHIC, REAR .ADHESIF, ARRIERE	1					
7	69M–42662–00	.DAMPER .AMORTISSEUR	1					
8	60R–E3434–00	LABEL, CAUTION ETIQUETTE, ATTENTION	1					
9	69M–E4427–60	LABEL, INSTRUCTION ETIQUETTE, INSTRUCTION	1					
10	6S7–42698–40	LABEL, WARNING (FUEL) ETIQUETTE, AVERTISSEMENT	1					
11	6S7–42698–50	LABEL, WARNING (FUEL) ETIQUETTE, AVERTISSEMENT	1					
12	60R–F415E–00	LABEL, CAUTION ETIQUETTE, RECOMMANDATION	1					

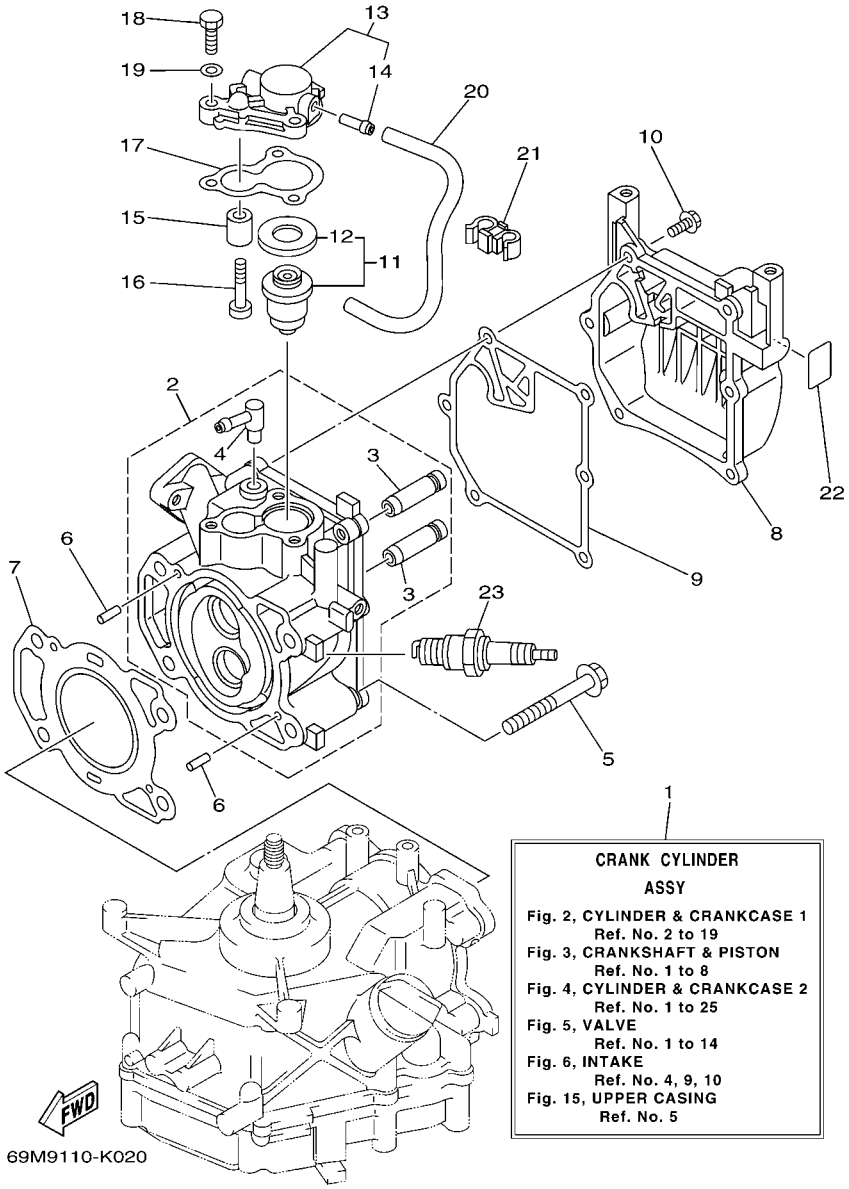

FIG. 2 CYLINDER & CRANKCASE 1 CYLINDRE & CARTER 1

REF. NO.	PART NO. N° PIECES	DESCRIPTION DESCRIPTION	69M9					REMARKS REMARQUES
1	69M–WE090–01–1S	CRANK CYLINDER ASSY EMBIELLAGE CYLINDRE (ENS.)	1					
2	69M–E1111–01–1S	HEAD, CYLINDER 1 CULASSE	1					
3	67D–11133–10	.GUIDE, VALVE 1 .GUIDE, SOUPAPE 1	2					
4	676–11372–00	.NIPPLE, HOSE .RACCORD, TUYAU	1					
5	90105–08M36	BOLT, FLANGE BOULON	4					
6	93604–12M07	PIN, DOWEL CLAVETTE	2					
7	69M–11181–00	GASKET, CYLINDER HEAD 1 JOINT, DE CULASSE 1	1					
8	69M–E1191–00–1S	COVER, CYLINDER HEAD 1 COUVERCLE, CULASSE 1	1					
9	69M–11193–A0	GASKET, HEAD COVER 1 JOINT, COUVERCLE DE CULASSE 1	1					
10	90105–06039	BOLT, FLANGE BOULON	6					
11	69M–12411–01	THERMOSTAT THERMOSTAT	1					
12	688–12412–00	.SEAL, THERMOSTAT .JOINT, THERMOSTAT	1					
13	69M–E2413–00–1S	COVER, THERMOSTAT COUVERCLE, THERMOSTAT	1					
14	650–24378–00	.PIPE, JOINT 4 .DURITE RACCORDEMENT 3	1					
15	68D–E1325–00	ANODE ANODE	1					
16	97880–05025	SCREW, PAN HEAD VIS, TETE TRONCONIQUE	1					
17	68D–E2414–A0	GASKET, COVER JOINT, COUVERCLE	1					
18	97095–06020	BOLT BOULON	3					
19	92995–06600	WASHER RONDELLE	3					
20	90445–09808	HOSE (L240) DURITE (L240)	1					
21	90464–09013	CLAMP BRIDE	1					
22	67D–42791–10	MARK 1 ETIQUETTE 1	1					
23	94702–00248	PLUG, SPARK (NGK BR6HS) BOUGIE D,ALLUMAGE (NGK BR6HS)	1					

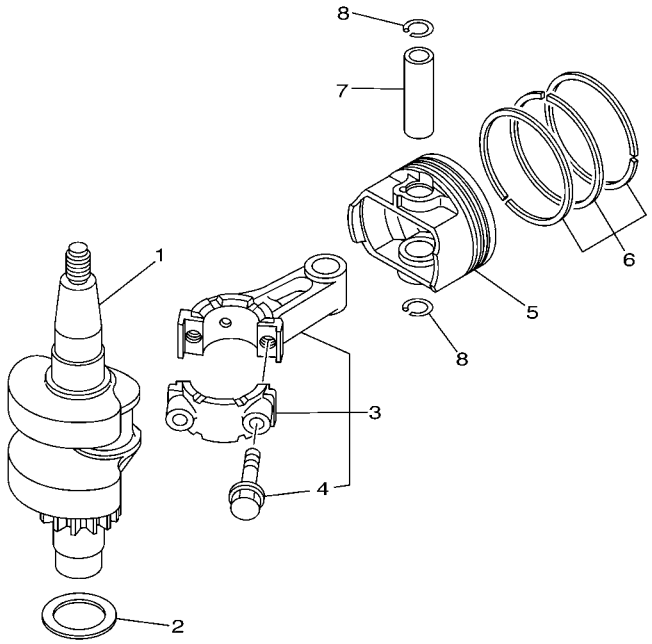

69M1010-3030

FIG. 3 CRANKSHAFT & PISTON VILEBREQUIN & PISTON

REF. NO.	PART NO. N° PIECES	DESCRIPTION DESCRIPTION	69M9					REMARKS REMARQUES
1	69M–11400–00	CRANKSHAFT ASSY VILEBREQUIN COMPLET	1					
2	90201–23008	WASHER, PLATE RONDELLE, PLATE	1					
3	69M–11650–00	CONNECTING ROD ASSY BIELLE COMPLETTE	1					
4	7FK–11654–00	.BOLT, CONNECTING ROD .BOULON, BIELLE	2					
5	69M–E1631–01–96	PISTON (STD) PISTON (STD)	1					
	69M–E1635–01	PISTON (0.25MM O/S) PISTON (0.25MM O/S)	1					AP AP
	69M–E1636–01	PISTON (0.50MM O/S) PISTON (0.50MM O/S)	1					AP AP
6	69M–E1603–01	PISTON RING SET (STD) JEU DE SEGMENTS (STD)	1					
	69M–E1604–01	PISTON RING SET (0.25MM O/S) JEU DE SEGMENTS (0.25MM O/S)	1					AP AP
	69M–E1605–01	PISTON RING SET (0.50MM O/S) JEU DE SEGMENTS (0.50MM O/S)	1					AP AP
7	69M–E1633–00	PIN, PISTON AXE, PISTON	1					
8	93450–13130	CIRCLIP CIRCLIP, TYPE S	2					

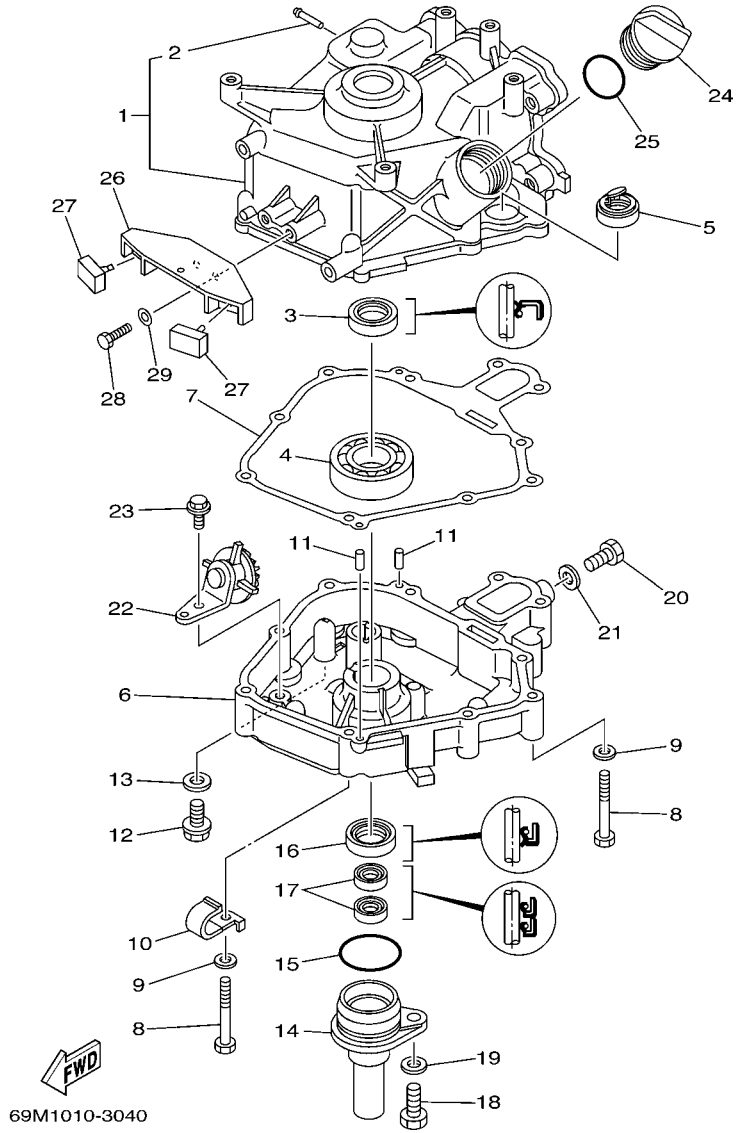

FIG. 4 CYLINDER & CRANKCASE 2 CYLINDRE & CARTER 2

REF. NO.	PART NO. N° PIECES	DESCRIPTION DESCRIPTION	69M9					REMARKS REMARQUES
1	69M–E1311–00–1S	CYLINDER 1 CYLINDRE 1	1					
2	6H1–14485–00	.PIPE, JOINT .DURITE	1					
3	93102–20108	OIL SEAL JOINT SPY	1					
4	93306–272Y2	BEARING ROULEMENT	1					
5	69M–15361–00	GAUGE, LEVEL JAUGE A HUILE	1					
6	69M–E5111–00–1S	CRANKCASE 1 CARTER DE MOTEUR	1					
7	69M–11351–A0	GASKET, CYLINDER JOINT, D'EMBASE	1					
8	97013–06045	BOLT BOULON	10					
9	92903–06600	WASHER, PLATE RONDELLE, PLATE	10					
10	90465–08M99	CLAMP BRIDE	1					
11	93604–12M07	PIN, DOWEL CLAVETTE	2					
12	90105–08M76	BOLT, FLANGE BOULON	1					
13	90201–08818	WASHER, PLATE RONDELLE, PLATE	1					
14	69M–E5396–00–5B	HOUSING, OIL SEAL LOGEMENT DE JOINT SPY	1					
15	93210–35537	O-RING JOINT TORIQUE	1					
16	93102–20108	OIL SEAL JOINT SPY	1					
17	93102–09004	OIL SEAL JOINT SPY	2					
18	97095–08020	BOLT BOULON	1					
19	92995–08600	WASHER RONDELLE	1					
20	97095–08014	BOLT BOULON	1					
21	90430–08800	GASKET JOINT	1					
22	69M–E3102–00	GEAR UNIT ASSY PIGNON	1					
23	95817–06012	BOLT, FLANGE BOULON, A COLLERETTE	1					
24	69M–E5363–00	PLUG, OIL PLOT, HUILE	1					
25	93210–24M79	O-RING JOINT TORIQUE	1					
26	69M–G2743–00	BRACKET SUPPORT	1					
27	6G8–44532–00	STOPPER, UPPER MOUNT PLAQUETTE	2					

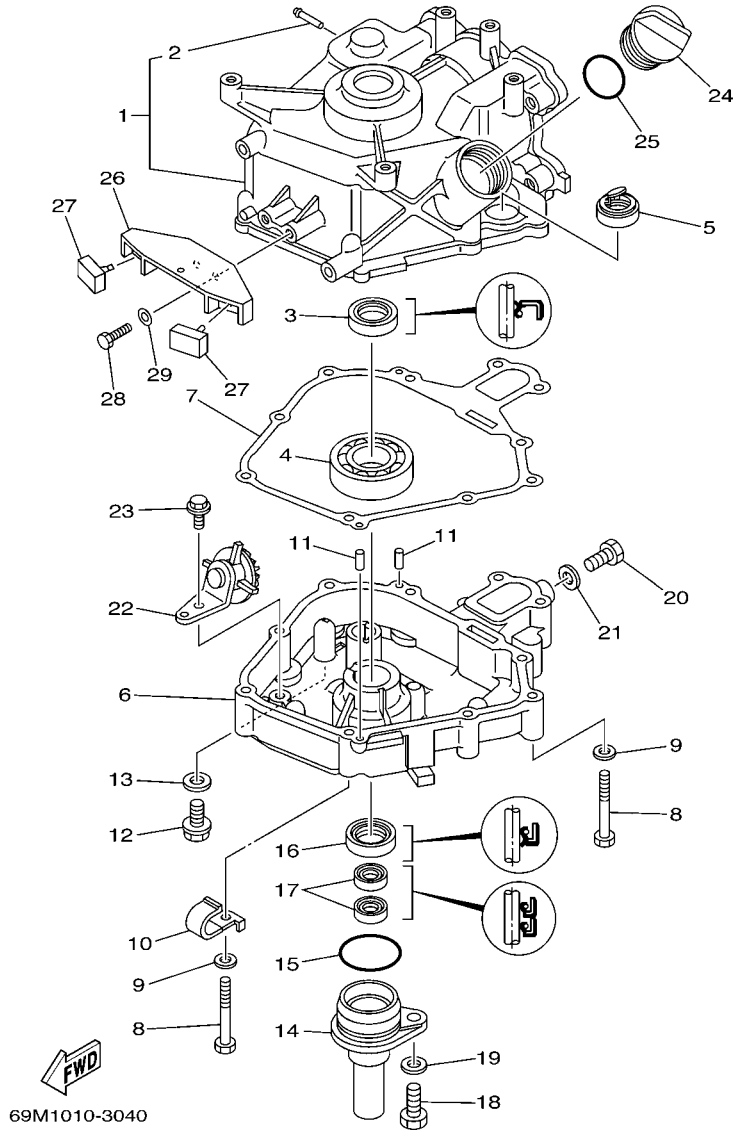

FIG. 4 CYLINDER & CRANKCASE 2 CYLINDRE & CARTER 2

REF. NO.	PART NO. N° PIECES	DESCRIPTION DESCRIPTION	69M9					REMARKS REMARQUES
28	97095–06020	BOLT BOULON	2					
29	92995–06600	WASHER RONDELLE	2					

FIG. 5 VALVE SOUPAPE

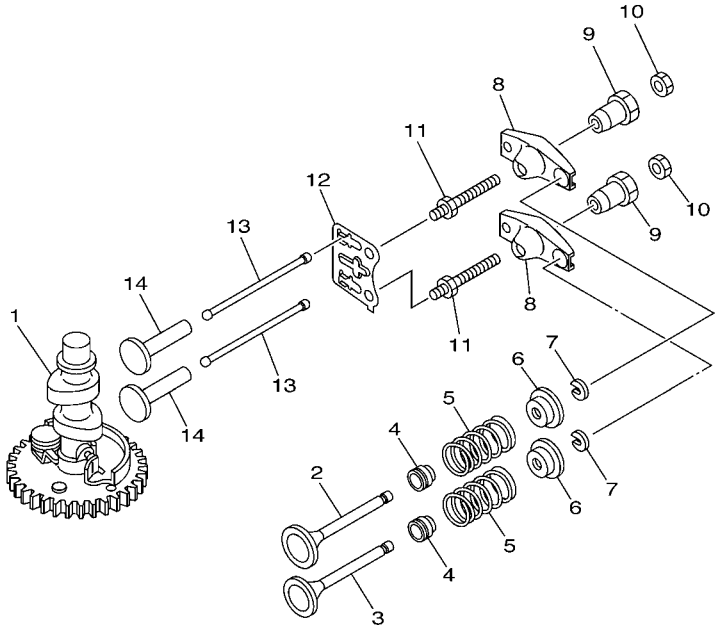

69M1010-3050

REF. NO.	PART NO. N° PIECES	DESCRIPTION DESCRIPTION	69M9					REMARKS REMARQUES
1	69M–12170–01	CAMSHAFT ASSY 1 ENS ARBRE A CAMES 1	1					
2	6AU–12111–00	VALVE, INTAKE SOUPAPE, ADMISSION	1					
3	6AU–12121–00	VALVE, EXHAUST SOUPAPE, ECHAPPEMENT	1					
4	51Y–12119–00	SEAL, VALVE STEM JOINT, QUEUE DE SOUPAPE	2					
5	68D–E2113–00	SPRING, VALVE INNER RESSORT DE SOUPAPE, INTERNE	2					
6	7NJ–12117–00	RETAINER, VALVE SPRING BUTEE DE RESSORT DE SOUPAPE	2					
7	7NJ–12118–00	COTTER, VALVE FRAISE, SOUPAPE	2					
8	67D–12151–00	ARM, VALVE ROCKER CULBUTEUR	2					
9	7FK–12165–00	PIVOT, ROCKER ARM PIVOT, CULBUTEUR	2					
10	7FK–12158–00	NUT, LOCK CONTRE-ECROU	2					
11	67D–12157–00	BOLT BOULON	2					
12	69M–E2155–00	GUIDE, PUSH ROD GUIDE, TIGE-POUSSOIR	1					
13	69M–12154–00	ROD, VALVE PUSH TIGE DE LEVE-SOUPAPE	2					
14	JA9–12153–00	LIFTER, VALVE LEVE-SOUPAPE	2					

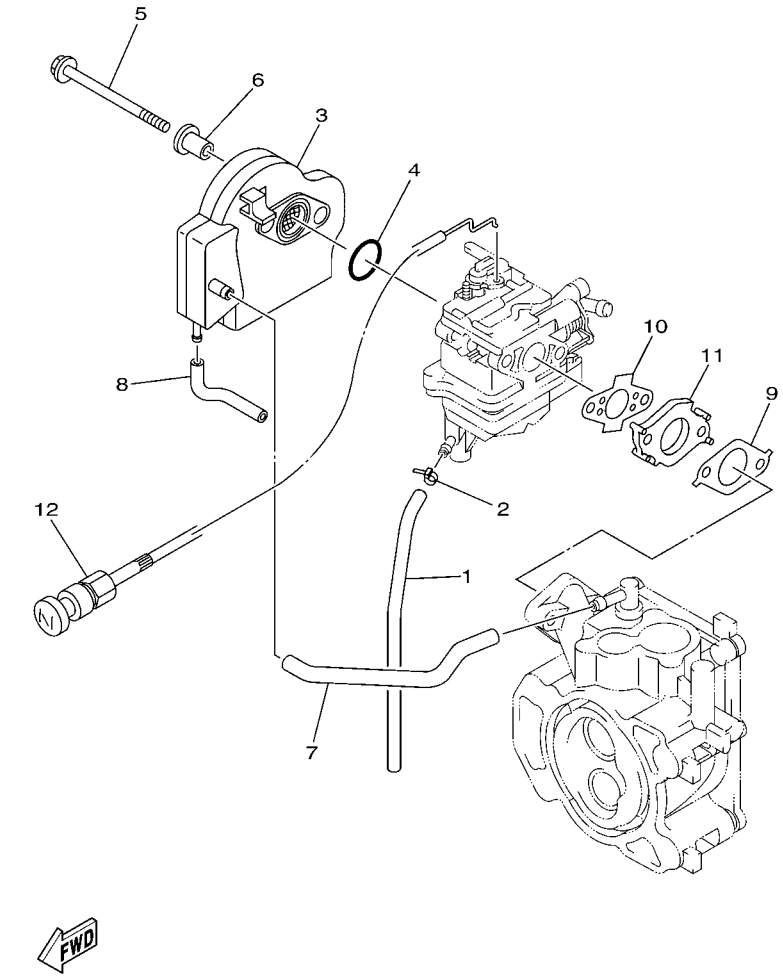

FIG. 6 INTAKE — ADMISSION

REF. NO.	PART NO. N° PIECES	DESCRIPTION DESCRIPTION	69M9					REMARKS REMARQUES
1	69M–E4148–00	PIPE DURITE	1					
2	90465–11M10	CLAMP BRIDE	1					
3	69M–14440–01	SILENCER ASSY, INTAKE SIENCIEUX D'ADMISSION	1					
4	93210–20M65	O-RING JOINT TORIQUE	1					
5	97595–06575	BOLT, WITH WASHER VIS HEXAGONAL AVC RONDELLE	2					
6	90387–06076	COLLAR COLLERETTE	2					
7	69M–E2483–00	PIPE 3 DURITE 3	1					
8	90445–07805	HOSE (L70) DURITE (L70)	1					
9	69M–E3645–A0	GASKET, MANIFOLD 1 JOINT, TUBULURE 1	1					
10	69M–E3646–A0	GASKET, MANIFOLD 2 JOINT, TUBULURE 2	1					
11	69M–E3647–00	GASKET, MANIFOLD 3 JOINT, TUBULURE 3	1					
12	69M–F6330–02	STARTER CABLE ASSY CABLE DE STARTER	1					

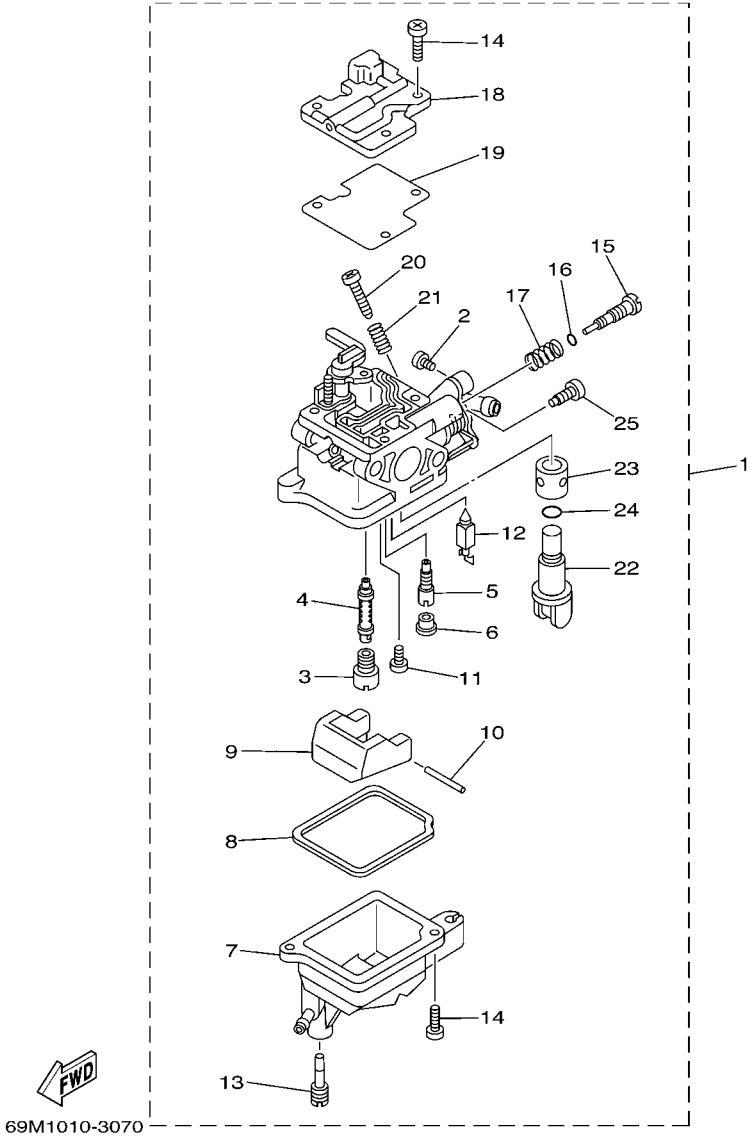

FIG. 7 CARBURETOR CARBURATEUR

REF. NO.	PART NO. N° PIECES	DESCRIPTION DESCRIPTION	69M9					REMARKS REMARQUES
1	69M–14301–21	CARBURETOR ASSY 1 CARBURATEUR COMPLET 1	1					
2	97890–04007	.SCREW, PAN HEAD .VIS, CRUCIFORME	2					
3	69M–14343–31	.JET, MAIN (# 62) .GICLEUR, PRINCIPAL (# 62)	1					
4	69M–14341–00	.NOZZLE, MAIN .PUITS D'AIGUILLE	1					
5	69M–14342–68	.JET, PILOT (#37) .GICLEUR, RALENTI (#37)	1					
6	69M–14966–00	.BUSH .BAGUE	1					
7	69M–14381–00	.BODY, FLOAT CHAMBER .CORPS, CUVE DE FLOTTEUR	1					
8	69M–14984–00	.GASKET, FLOAT CHAMBER .JOINT, CUVE DE FLOTTEUR	1					
9	69M–14385–00	.FLOAT .FLOTTEUR	1					
10	6A1–14386–00	.PIN, FLOAT .AXE, FLOTTEUR	1					
11	98580–03005	.SCREW, PAN HEAD .VIS	1					
12	62Y–14392–00	.VALVE, NEEDLE .POINTEAU	1					
13	69M–14991–00	.SCREW .VIS	1					
14	98580–04010	.SCREW, PAN HEAD .VIS	5					
15	69M–14323–20	.SCREW, AIR ADJUSTING .VIS DE DOSEUR D'AIR	1					
16	2T4–14397–00	.O-RING .JOINT TORIQUE	1					
17	62Y–14334–00	.SPRING, AIR ADJUSTING .RESSORT, VIS DE DOSEUR D'AIR	1					
18	69M–14527–00	.PLATE .PLAQUE	1					
19	69M–14536–00	.GASKET .JOINT	1					
20	69W–14321–00	.SCREW, THROTTLE .VIS, ACCELERATEUR	1					
21	62Y–14212–00	.SPRING, PILOT ADJUSTING .RESSORT, VIS DE RALENTI	1					
22	69M–24524–00	.LEVER, COCK .LEVIER, ROBINET	1					
23	69M–24523–00	.VALVE .SOUPAPE	1					
24	69M–24533–00	.O-RING .JOINT TORIQUE	1					
25	69M–24535–00	.SCREW, LEVER FITTING .VIS, FIXATION DE LEVIER	1					

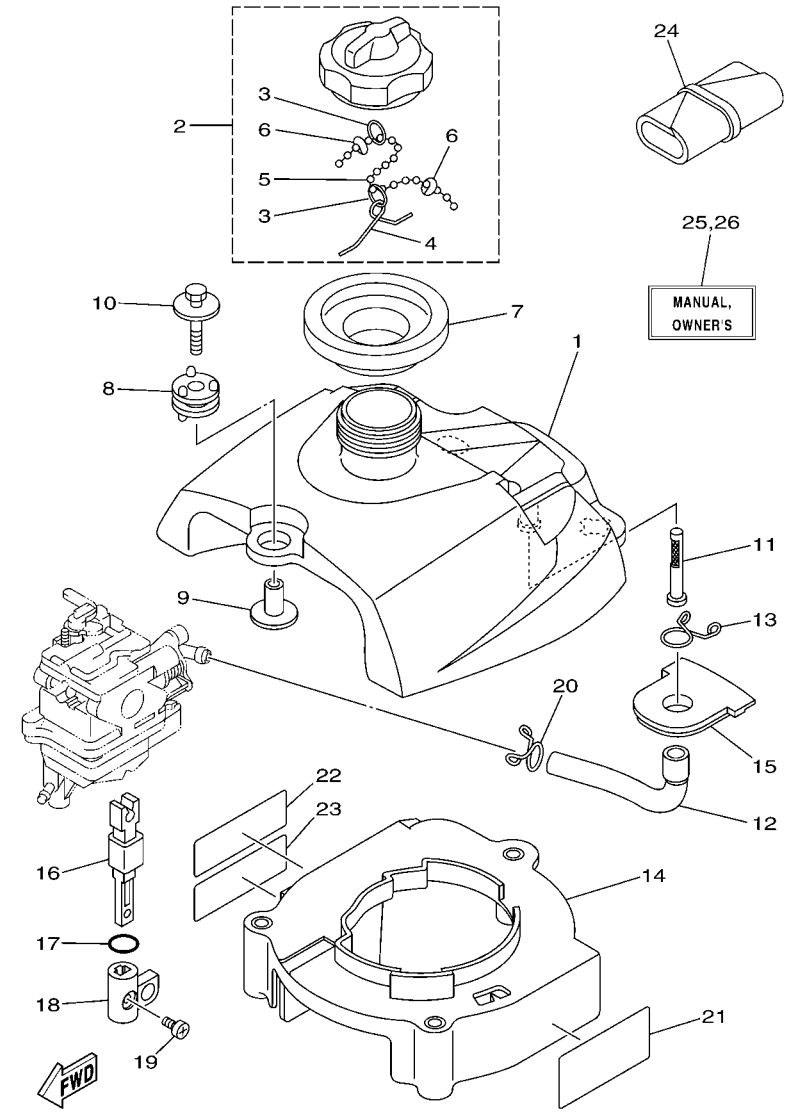

FIG. 8 FUEL CARBURANT

REF. NO.	PART NO. N° PIECES	DESCRIPTION DESCRIPTION	69M9					REMARKS REMARQUES
1	69M–F4111–01	TANK, FUEL RESERVOIR, A ESSENCE	1					
2	68D–24610–00	CAP ASSY BOUCHON	1					
3	90468–100A0	.CLIP .JONC	2					
4	624–24634–00	.HOOK, CHAIN BALL .ATTACHE	1					
5	69M–24633–00	.CHAIN, BALL .CHANE DE BALLE	1					
6	67D–21757–00	.WASHER, SPECIAL 1 .RONDELLE, SPECIALE 1	2					
7	69M–24641–01	GASKET, CAP 1 JOINT 1, BOUCHON	1					
8	69M–F4375–00	GROMMET OEILLET CAOUTCHOUC	3					
9	90387–06176	COLLAR COLLERETTE	3					
10	90119–06098	BOLT, WITH WASHER BOULON, AVEC RONDELLE	3					
11	6L5–24251–00	STRAINER 1 FILTRE 1	1					
12	69M–F4311–00	PIPE, FUEL 1 DURITE A ESSENCE	1					
13	90467–13M13	CLIP JONC	1					
14	69M–F4191–00	BRACKET, FUEL TANK 1 SUPPORT 1, RESERVOIR A ESSENCE	1					
15	69M–F4181–00	DAMPER, LOCATING 1 SILENT-BLOC 1	1					
16	69M–24554–00	SHAFT, COCK AXE, MANETTE DU ROBINET	1					
17	93210–13M43	O-RING JOINT TORIQUE	1					
18	69M–24575–00	LEVER, FUEL CHANGE LEVIER, D'ESSENCE	1					
19	90159–05M12	SCREW, WITH WASHER VIS, AVEC RONDELLE	1					
20	90467–11M08	CLIP JONC	1					
21	69M–E3437–60	MARK, CAUTION MAKER	1					
22	6AH–81994–40	LABEL, SAFETY ETIQUETTE, SECURITE	1					
23	6AH–81994–50	LABEL, SAFETY ETIQUETTE, SECURITE	1					
24	69M–F8100–00	TOOL KIT TROUSSE A OUTILS	1					AP AP
25	69M–F8199–78–E0	MANUAL,OWNER'S MANUEL D'UTILISATION	1					UR (E) UR (E)
	69M–F8199–78–F0	MANUAL,OWNER'S MANUEL D'UTILISATION	1					UR (F) UR (F)
	69M–F8199–78–S0	MANUAL,OWNER'S MANUEL D'UTILISATION	1					UR (ES) UR (ES)

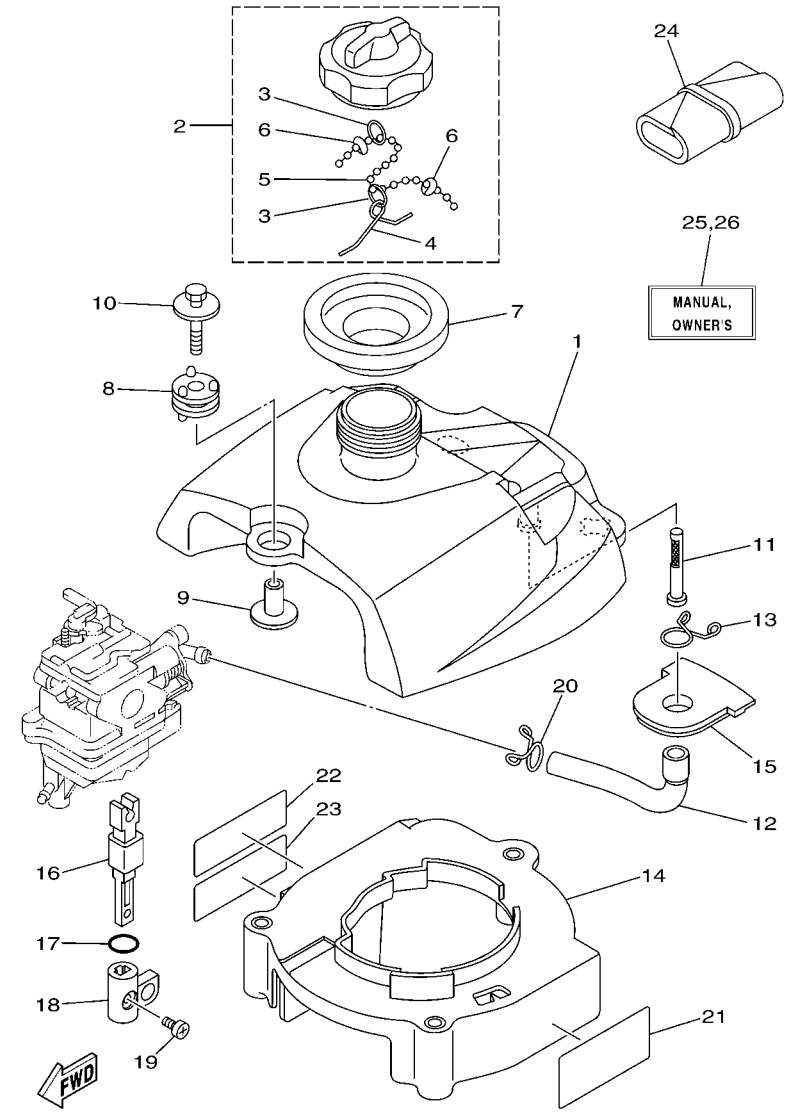

69M9300-K080

FIG. 8 FUEL CARBURANT

REF. NO.	PART NO. N° PIECES	DESCRIPTION DESCRIPTION	69M9					REMARKS REMARQUES
25	69M–F8199–78–G0	MANUAL,OWNER'S MANUEL D'UTILISATION	1					UR (D) UR (D)
	69M–F8199–78–D0	MANUAL,OWNER'S MANUEL D'UTILISATION	1					UR (NL) UR (NL)
	69M–F8199–78–H0	MANUAL,OWNER'S MANUEL D'UTILISATION	1					UR (I) UR (I)
26	69M–F8199–88–K0	MANUAL,OWNER'S MANUEL D'UTILISATION	1					UR (DK) UR (DK)
	69M–F8199–88–R0	MANUAL,OWNER'S MANUEL D'UTILISATION	1					UR (GR) UR (GR)
	69M–F8199–88–P0	MANUAL,OWNER'S MANUEL D'UTILISATION	1					UR (P) UR (P)
	69M–F8199–88–N0	MANUAL,OWNER'S MANUEL D'UTILISATION	1					UR (N) UR (N)
	69M–F8199–88–M0	MANUAL,OWNER'S MANUEL D'UTILISATION	1					UR (S) UR (S)
	69M–F8199–88–L0	MANUAL,OWNER'S MANUEL D'UTILISATION	1					UR (SF) UR (SF)

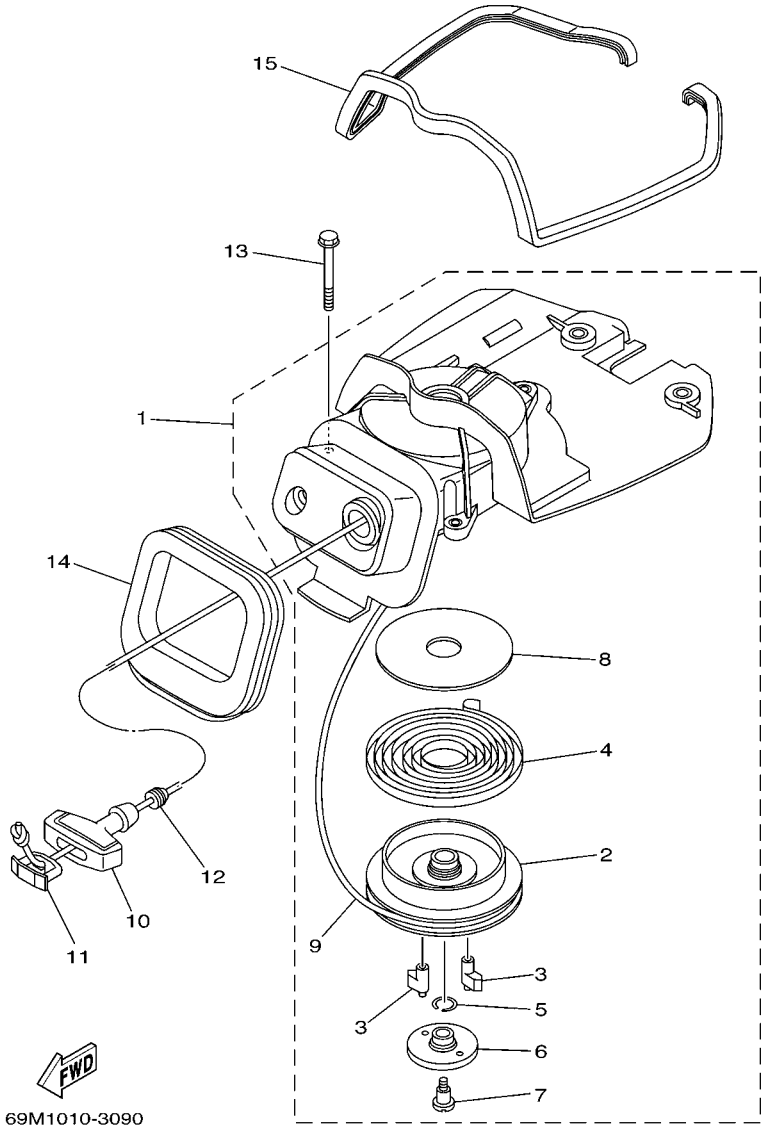

FIG. 9 STARTER DEMARREUR

REF. NO.	PART NO. N° PIECES	DESCRIPTION DESCRIPTION	69M9					REMARKS REMARQUES
1	69M–15710–00	STARTER ASSY DEMARREUR COMPLET	1					
2	69M–15714–00	.DRUM, SHEAVE .TAMBOUR, POULIE	1					
3	69M–15741–00	.PAWL, DRIVE .CLIQUET, ENTRAINEMENT	2					
4	67D–15713–00	.SPRING, STARTER .RESSORT DE DEMARREUR	1					
5	67D–15705–00	.SPRING, DRIVE PAWL .RESSORT DE CLIQUET	1					
6	69M–15735–00	.GUIDE, CAM .COULISSEAU	1					
7	69M–15793–00	.SCREW .VIS	1					
8	69M–15739–00	.WASHER, THRUST .RONDELLE, DE BUTEE	1					
9	69M–15751–00	.WIRE, STARTER (L:1500MM) .CABLE DE DEMARREUR (L:1500MM)	1					
10	6G1–15755–00	HANDLE, STARTER POIGNEE, DE DEMARREUR	1					
11	6G1–15779–00	COVER COUVERCLE	1					
12	69M–E5789–00	DAMPER AMORTISSEUR	1					
13	97595–06560	BOLT, WITH WASHER VIS HEXAGONAL AVC RONDELLE	3					
14	69M–15762–00	SEAL, RUBBER 2 JOINT CAOUTCHOUC 2	1					
15	69M–24182–00	DAMPER, LOCATING 2 SILENT-BLOC	1					

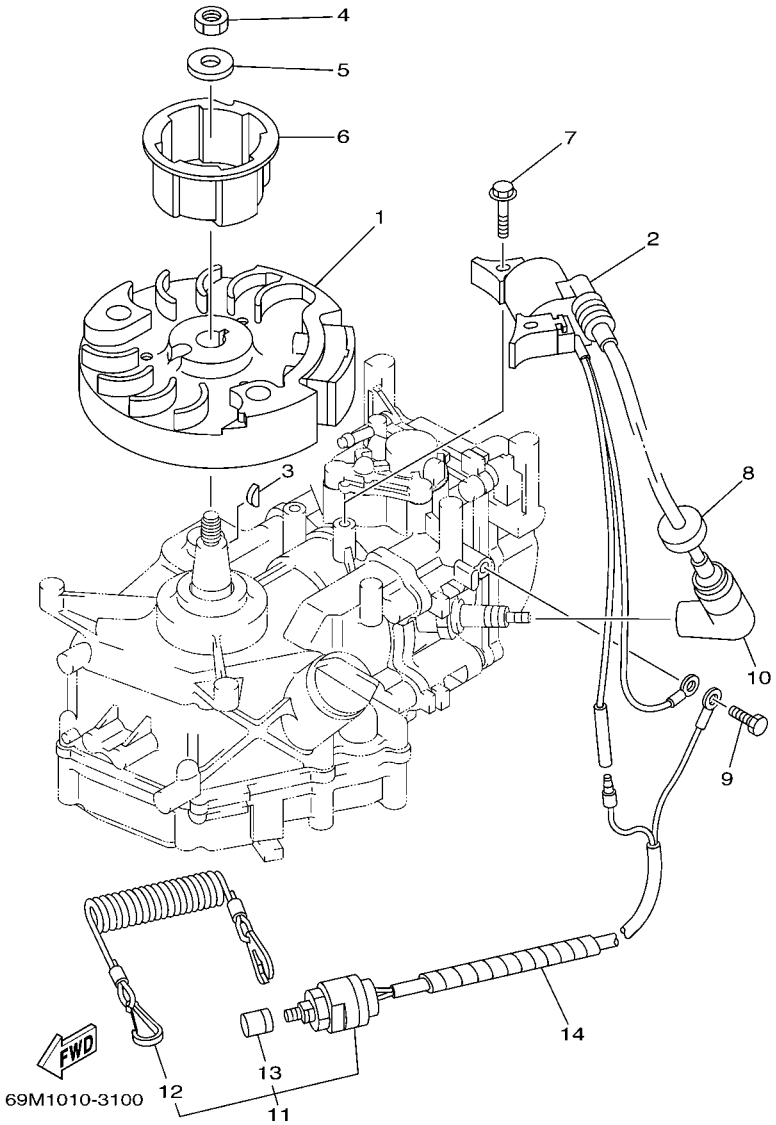

FIG. 10 GENERATOR GENERATRICE

REF. NO.	PART NO. N° PIECES	DESCRIPTION DESCRIPTION	69M9					REMARKS REMARQUES
1	69M–85650–00	ROTOR ASSY ROTOR COMPLET	1					
2	69M–85640–00	T.C.I. UNIT ASSY ENS. BLOC T.C.I.	1					
3	90280–04M06	KEY, WOODRUFF CLAVETTE, DEMI-LUNE	1					
4	90170–10M33	NUT ECROU	1					
5	90201–105A2	WASHER, PLATE RONDELLE, PLATE	1					
6	69M–15723–00	PULLEY, STARTER POULIE DE DEMARREUR	1					
7	90105–06M24	BOLT, FLANGE BOULON	2					
8	90480–25161	GROMMET PASSE-FIL	1					
9	97095–06012	BOLT BOULON	1					
10	6E3–82370–21	PLUG CAP ASSY ANTIPARASITE	1					
11	65W–82575–01	ENGINE STOP SWITCH ASSY COUPE CIRCUIT CPLT	1					
12	682–82556–00	.LANYARD, STOP SWITCH .PLAQUETTE	1					
13	689–8257Y–00	.CAP .COUVERCLE	1					
14	90446–06M90	HOSE (L120) DURITE (L120)	1					

FIG. 11 BOTTOM COWLING CAPOT INFERIEUR

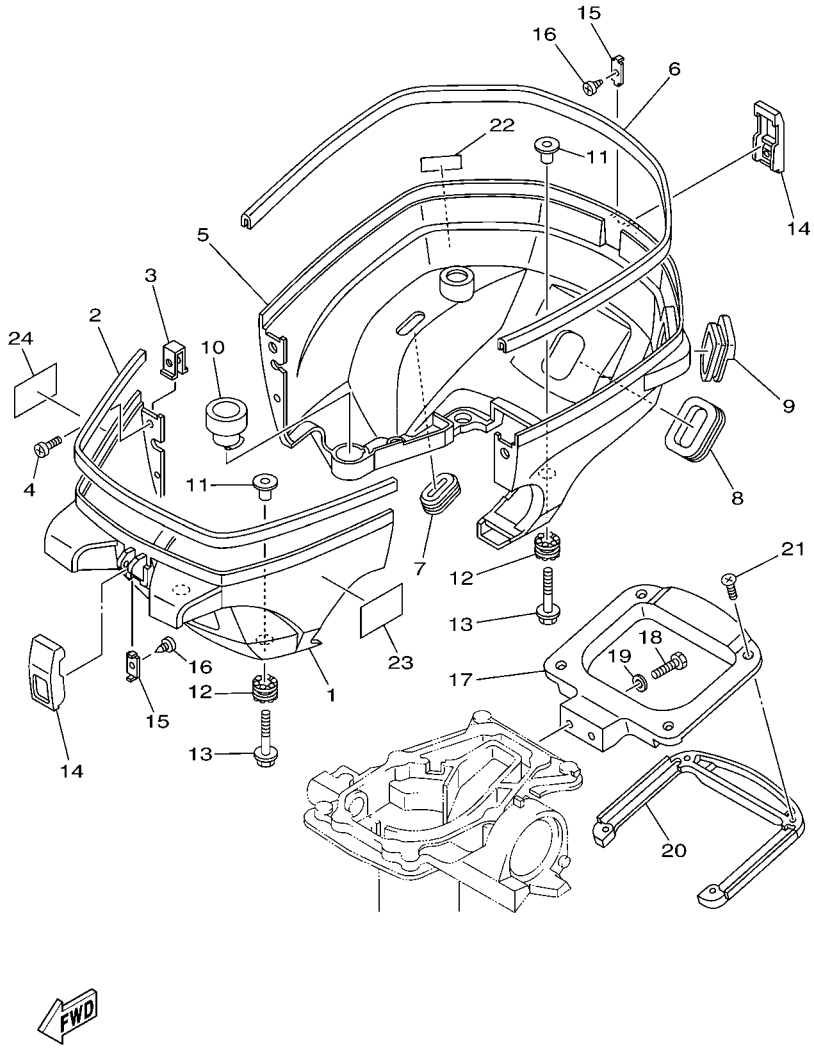

REF. NO.	PART NO. N° PIECES	DESCRIPTION DESCRIPTION	69M9					REMARKS REMARQUES
1	69M–G2711–00–4D	COWLING, BOTTOM 1 CUVETTE 1	1					
2	69M–42628–00	SEAL JOINT	1					
3	6L5–42774–00	STAY, APRON 1 COUSSINET	2					
4	90157–05013	SCREW, PAN HEAD VIS, TETE TRONCONIQUE	2					
5	69M–G2712–00	COWLING, BOTTOM 2 CUVETTE 2	1					
6	69M–42629–00	SEAL JOINT	1					
7	69M–G2727–00	GROMMET PASSE-FIL	1					
8	69M–G2724–00	GROMMET PASSE-FIL	1					
9	69M–G2725–00	GROMMET PASSE-FIL	1					
10	69M–E5316–00	DAMPER 1 AMORTISSEUR 1	1					
11	69M–42758–01	COLLAR ENTRETOISE	4					
12	69M–G2768–00	DAMPER AMORTISSEUR	4					
13	90119–06M17	BOLT, WITH WASHER BOULON, AVEC RONDELLE	4					
14	6L5–42647–00	HOLDER, CLAMP BAND SUPPORT, SANDOW DE SERRAGE	2					
15	6L5–42823–00	PLATE, STOP PLAQUE	2					
16	90167–03M02	SCREW, TAPPING VIS, TETE FRAISEE	2					
17	69M–G2731–00–4D	CARRYING HANDLE POIGNEE DE PORTAGE	1					
18	97095–06020	BOLT BOULON	2					
19	92995–06600	WASHER RONDELLE	2					
20	69M–G2735–00	PROTECTOR PROTECTEUR	1					
21	90161–04003	SCREW, TAPPING VIS, TETE FRAISEE	4					
22	69M–F4591–00	EMBLEM, FUEL COCK ADHESIF	1					
23	6S7–42794–40	LABEL, WARNING (GENERAL) ETIQUETTE, AVERTISSEMENT	1					
24	6S7–42794–50	LABEL, WARNING (GENERAL) ETIQUETTE, AVERTISSEMENT	1					

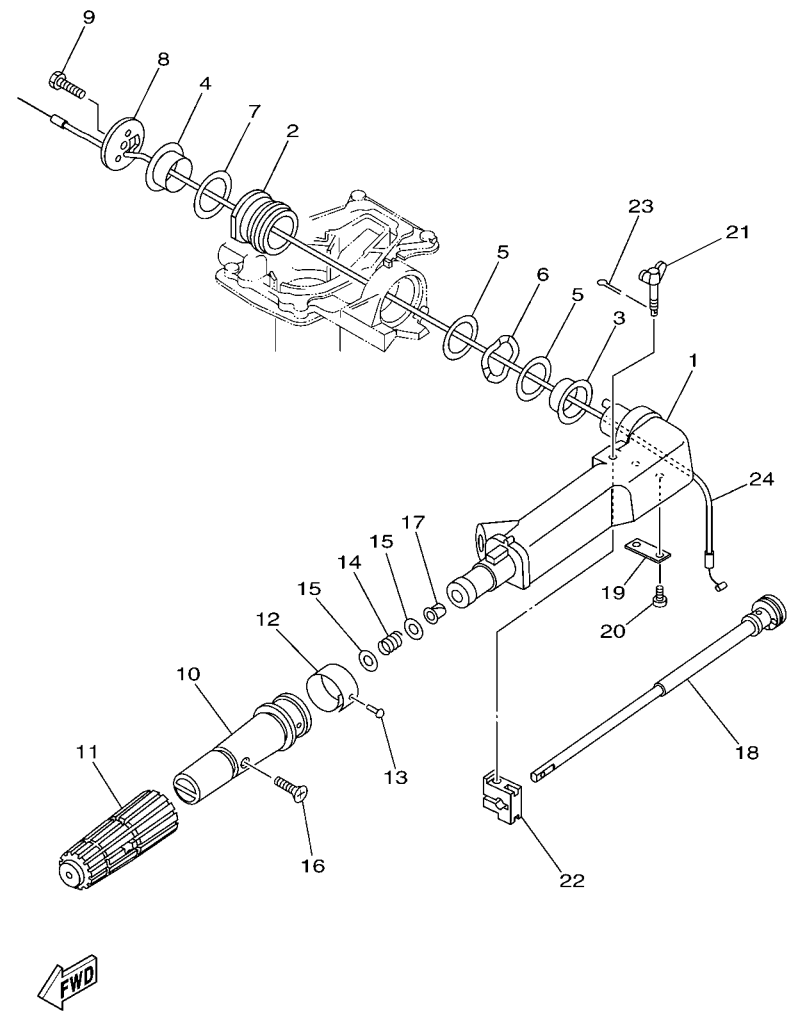

69M5100-F120

FIG. 12 STEERING DIRECTION

REF. NO.	PART NO. N° PIECES	DESCRIPTION DESCRIPTION	69M9					REMARKS REMARQUES
1	69M–G2111–00–4D	HANDLE, STEERING POIGNEE	1					
2	67D–42129–00	BUSHING, RUBBER DOUILLE, CAOUTCHOUC	1					
3	68D–G2171–00	BUSHING COUSSINET	1					
4	68D–G2172–00	BUSHING 2 DOUILLE 2	1					
5	68D–G2181–00	WASHER RONDELLE	2					
6	69M–G2188–00	WASHER, WAVE RONDELLE, ONDULEE	1					
7	68D–G2182–00	WASHER 2 RONDELLE 2	1					
8	68D–G2131–01	COVER, HANDLE STEERING COUVERCLE	1					
9	97075–08025	BOLT BOULON	1					
10	69M–G2119–10	GRIP, STEERING HANDLE POIGNEE, BARRE FRANCHE	1					
11	6N0–G2177–00	RUBBER, HANDLE CAOUTCHOUC, POIGNEE	1					
12	69M–G2137–00	INDICATOR, THROTTLE INDICATEUR, ACCELERATION	1					
13	90269–02M09	RIVET RIVET	1					
14	90501–23800	SPRING, COMPRESSION RESSORT, COMPRESSION	1					
15	90201–10M02	WASHER, PLATE RONDELLE, PLATE	2					
16	90152–05011	SCREW, COUNTERSUNK VIS, TETE NOYEE	1					
17	90386–08032	BUSH DOUILLE	1					
18	6G1–42138–01	LEVER, THROTTLE LEVIER, ACCELERATEUR	1					
19	68D–G2159–00	STAY SUPPORT	1					
20	97885–05012	SCREW, PAN HEAD VIS, A ENCOCHE	2					
21	6G1–42125–01	BOLT, FRICTION ADJUSTING BOULON	1					
22	6G1–42126–00	FRICTION, STEERING HANDLE GRIP CUVETTE, POIGNEE DE DIRECTION	1					
23	91490–16010	PIN. COTTER GOUPILLE	1					
24	69M–F6301–10	THROTTLE CABLE ASSY CABLE D'ACCELERATEUR	1					

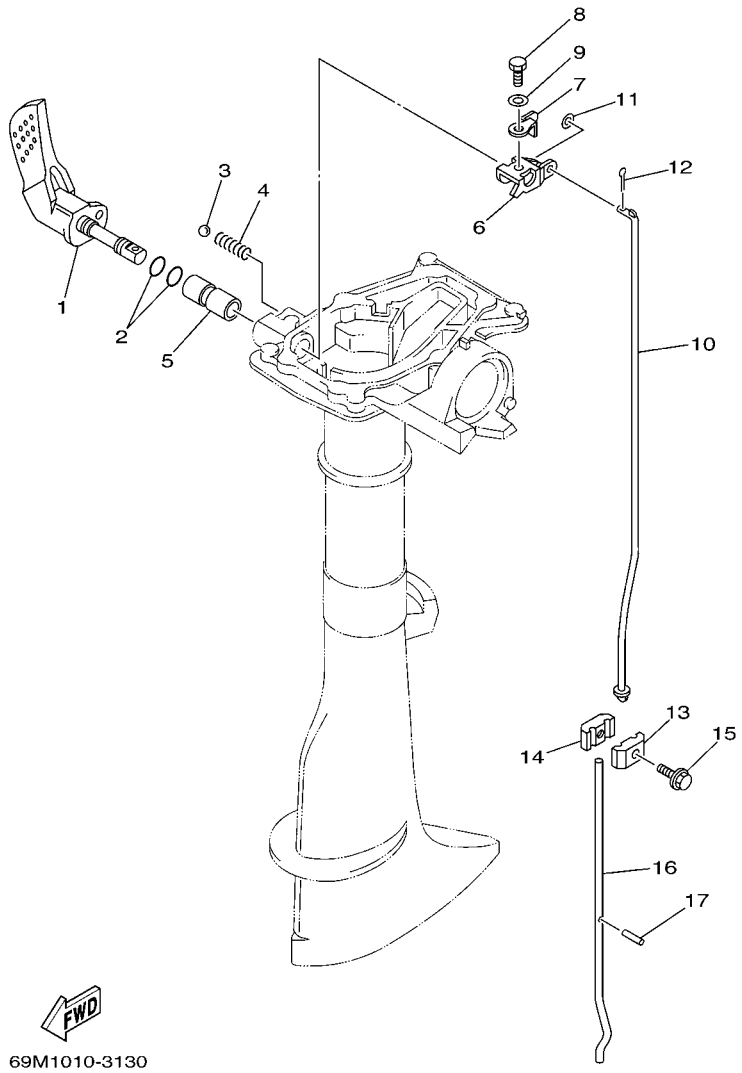

FIG. 13 CONTROL COMMANDE

REF. NO.	PART NO. N° PIECES	DESCRIPTION DESCRIPTION	69M9					REMARKS REMARQUES
1	69M–G4111–00	HANDLE, GEAR SHIFT POIGNEE, LEVIER D'EMBRAYAGE	1					
2	93210–09350	O-RING JOINT TORIQUE	2					
3	93505–16024	BALL BILLE	1					
4	90501–12802	SPRING, COMPRESSION RESSORT, COMPRESSION	1					
5	68D–G4122–01	BUSHING, SHIFT ROD LEVER DOUILLE, LEVIER D'EMBRAYAGE	1					
6	69M–G4121–00	LEVER, SHIFT ROD LEVIER, TIGE D'INVERSION	1					
7	69M–44126–00	WASHER, SHIFT ROD LEVER RONDELLE, TIGE D'INVERSION LEV	1					
8	97095–05012	BOLT BOULON	1					
9	92995–05600	WASHER RONDELLE	1					
10	69M–44143–00	ROD, SHIFT TIGE D'EMBRAYAGE	1					
11	92990–05600	WASHER, PLATE RONDELLE, PLATE	1					
12	91490–16010	PIN. COTTER GOUPILLE	1					
13	6N0–G4145–10	CONNECTOR, SHIFT ROD CONNECTEUR, TIGE D'INVERSION	1					
14	6N0–G4146–10	CONNECTOR, SHIFT ROD CONNECTEUR, TIGE D'INVERSION	1					
15	90119–06ME0	BOLT, WITH WASHER BOULON, AVEC RONDELLE	1					
16	6L5–44144–00	ROD, SHIFT TIGE D'EMBRAYAGE	1					S(17.0") S(17.0")
	6L5–44144–10	ROD, SHIFT TIGE D'EMBRAYAGE	1					L(22.0") L(22.0")
17	91609–25014	PIN, SPRING AXE DE RESSORT	1					

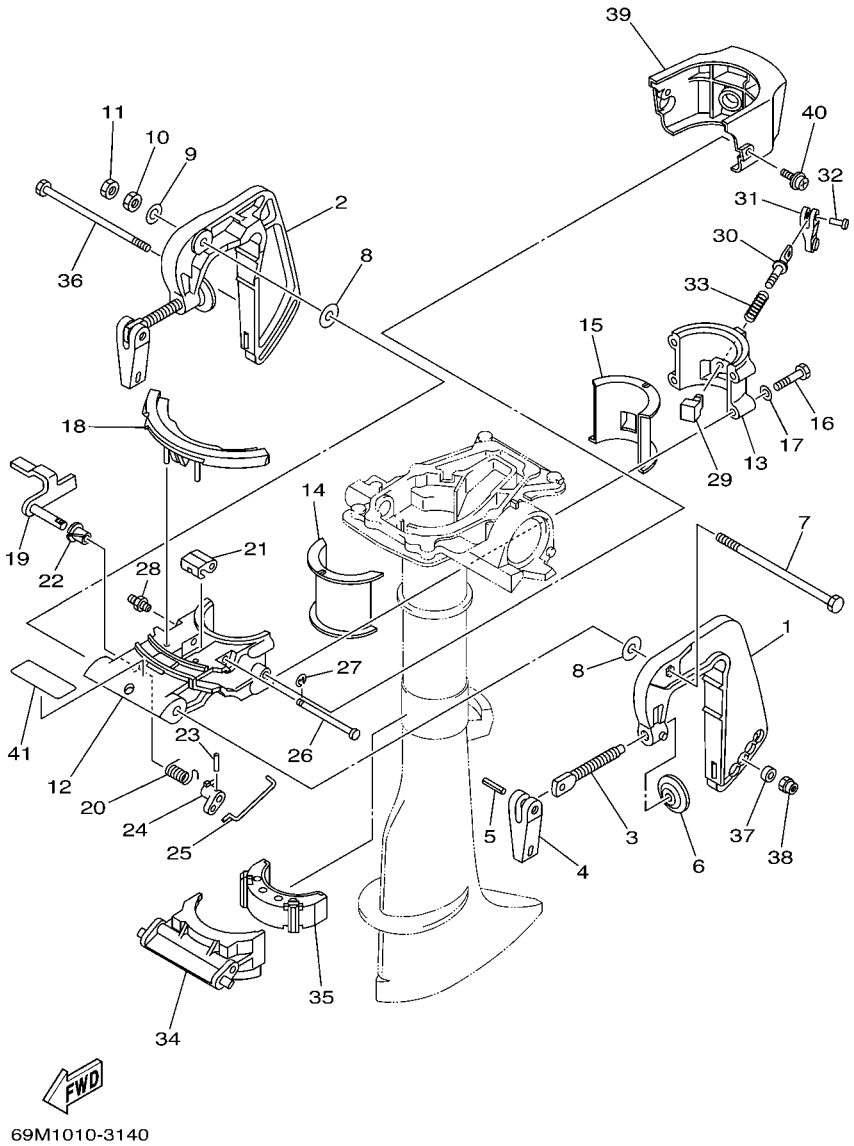

FIG. 14 BRACKET SUPPORT

REF. NO.	PART NO. N° PIECES	DESCRIPTION DESCRIPTION	69M9					REMARKS REMARQUES
1	69M–G3111–00–4D	BRACKET, CLAMP 1 PRESSE 1	1					
2	69M–G3112–00–4D	BRACKET, CLAMP 2 PRESSE 2	1					
3	6E0–43116–01	SCREW, TRANSOM CLAMP VIS DE PRESSE	2					
4	69M–G3118–00	HANDLE, TRANSOM CLAMP POIGNEE DE VIS DE PRESSE	2					
5	90243–04M01	PIN GOUPILLE	2					
6	620–43114–00	PAD, TRANSOM CLAMP RONDELLE D'APPUI	2					
7	90101–08M07	BOLT BOULON	1					
8	90202–08022	WASHER, PLATE RONDELLE, PLATE	2					
9	92990–08200	WASHER, PLAIN RONDELLE, PLATE	1					
10	95380–08600	NUT ECROU	1					
11	95380–08700	NUT ECROU	1					
12	69M–G3311–01–4D	BRACKET, SWIVEL 1 SUPPORT, PIVOT 1	1					
13	69M–G3312–00–4D	BRACKET, SWIVEL 2 SUPPORT, PIVOT 2	1					
14	69M–G2537–00	BUSHING, PIVOT SHAFT COUSSINET	1					
15	69M–G2538–00	BUSHING, PIVOT SHAFT COUSSINET	1					
16	97075–06030	BOLT BOULON	4					
17	92995–06600	WASHER RONDELLE	4					
18	69M–43679–00	STOPPER, HOOK BUTEE	1					
19	69M–43180–00	TILT STOP LEVER ASSY LEVIER, VERROUILLAGE RELEVAGE	1					
20	69M–G3188–00	SPRING RESSORT	1					
21	69M–G3186–00	LEVER LEVIER	1					
22	90386–08032	BUSH DOUILLE	1					
23	91690–20010	PIN, SPRING AGRAFFE	1					
24	69M–G3185–00	LEVER, TILT STOP 2 LEVIER VERROUILLAGE RELEVAGE 2	1					
25	69M–G3164–00	ROD, TILT LOCK TIGE	1					
26	69M–G3166–00	PIN GOUPILLE	1					
27	99080–04600	CIRCLIP CIRCLIP	1					

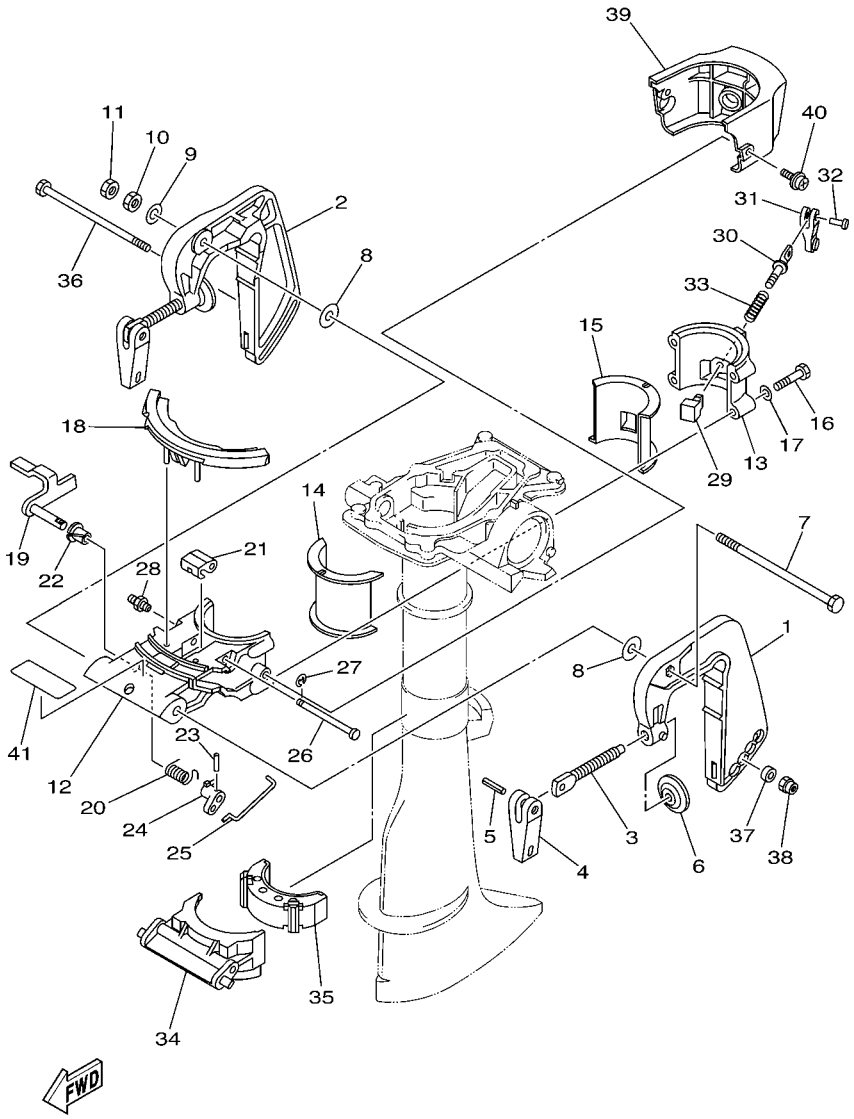

FIG. 14 BRACKET SUPPORT

REF. NO.	PART NO. N° PIECES	DESCRIPTION DESCRIPTION	69M9					REMARKS REMARQUES
28	93700–06M03	NIPPLE, GREASE PION	1					
29	69M–42528–00	PLATE, FRICTION PLAQUE, FRICTION	1					
30	69M–42529–00	SCREW, FRICTION PIECE VIS, PIECE DE FRICTION	1					
31	68D–G2561–01	KNOB, STEERING LOCK BOUTON	1					
32	90266–04M05	RIVET RIVET	1					
33	90501–12803	SPRING, COMPRESSION RESSORT, COMPRESSION	1					
34	69M–G3351–00	RECEIVER, THRUST SILENT-BLOC, BUTEE	1					
35	69M–44557–00	MOUNT DAMPER, LOWER FRONT SILENT-BLOC, INFERIEUR AVANT	1					
36	90101–06030	BOLT BOULON	1					
37	90201–06040	WASHER, PLATE RONDELLE, PLATE	1					
38	95780–06300	NUT, FLANGE ECROU	1					
39	69M–G3318–00	COVER CAPUCHON	1					
40	90159–06M11	SCREW, WITH WASHER VIS, AVEC RONDELLE	2					
41	69M–G3691–00	INDICATOR, TILT ETIQUETTE, RELEVAGE	1					

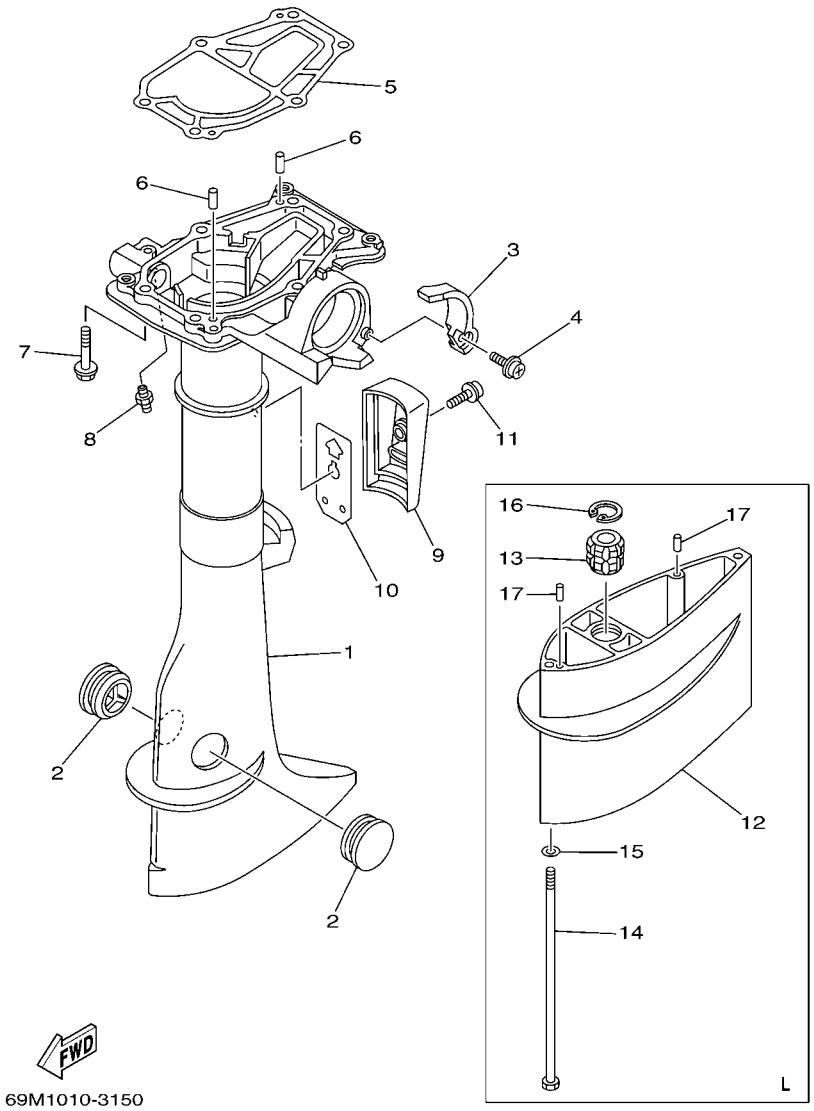

FIG. 15 UPPER CASING FOURREAU

REF. NO.	PART NO. N° PIECES	DESCRIPTION DESCRIPTION	69M9					REMARKS REMARQUES
1	69M–G5111–00–4D	CASING, UPPER FOURREAU	1					
2	647–45151–01	COVER, UPPER CASING CAPUCHON, FOURREAU	2					
3	69M–G5152–00	COVER, UPPER CASING 2 CAPUCHON FOURREAU	1					
4	90159–05M12	SCREW, WITH WASHER VIS, AVEC RONDELLE	1					
5	69M–45113–A0	GASKET, UPPER CASING JOINT, TUBE D'ARBRE	1					
6	93604–12M07	PIN, DOWEL CLAVETTE	2					
7	97575–06535	BOLT, WITH WASHER VIS HEXAGONAL AVC RONDELLE	6					
8	93700–06M03	NIPPLE, GREASE PION	1					
9	69M–G5151–00	COVER, UPPER CASING CAPUCHON, FOURREAU	1					
10	69M–G5115–00	GASKET, UPPER CASING JOINT, TUBE D'ARBRE	1					
11	90159–06M11	SCREW, WITH WASHER VIS, AVEC RONDELLE	1					
12	69M–G5211–00–4D	EXTENSION EXTENSION	1					L(22.0") L(22.0")
13	6L5–45318–00	BUSHING, DRIVE SHAFT DOUILLE, ARBRE MOTEUR	1					L(22.0") L(22.0")
14	90101–06M18	BOLT BOULON	3					L(22.0") L(22.0")
15	92990–06600	WASHER, PLATE RONDELLE, PLATE	3					L(22.0") L(22.0")
16	93420–22M03	CIRCLIP CIRCLIP, TYPE S	1					L(22.0") L(22.0")
17	93604–12M07	PIN, DOWEL CLAVETTE	2					L(22.0") L(22.0")

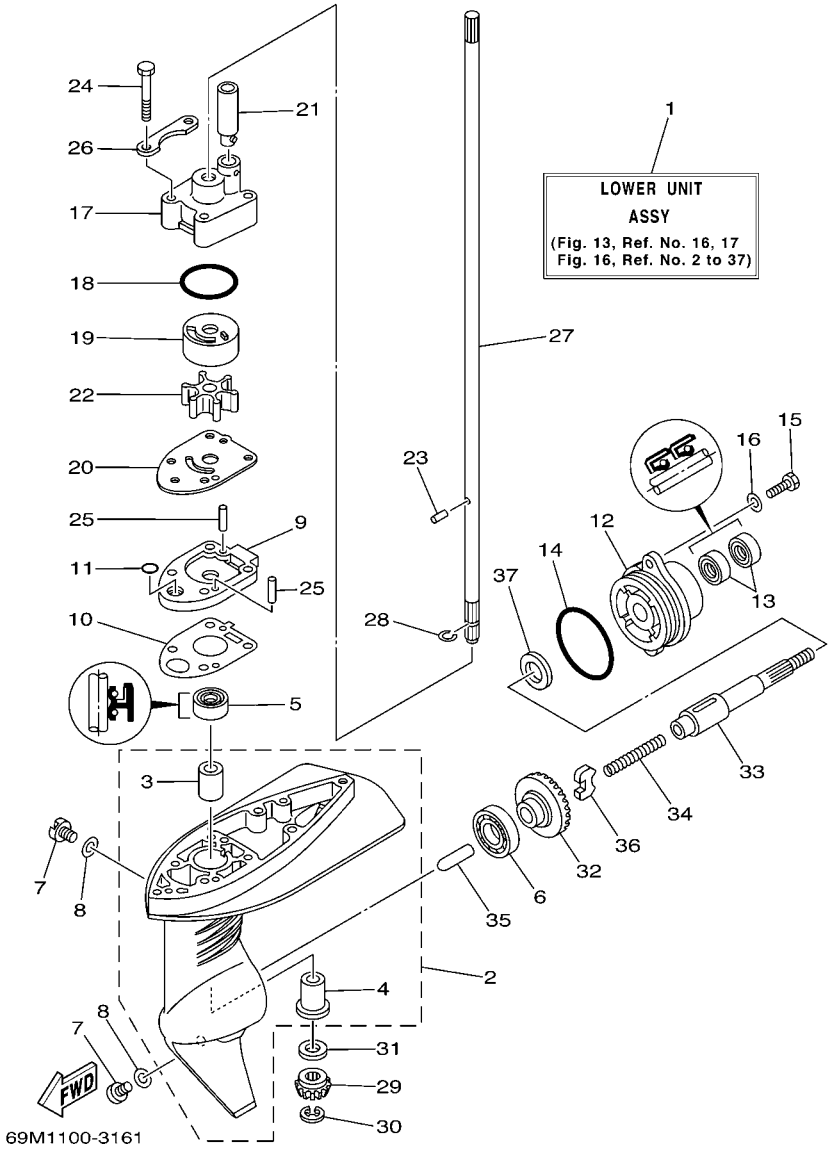

FIG. 16 LOWER CASING & DRIVE 1 BOITIER D'HELICE TRANSMISSION1

REF. NO.	PART NO. N° PIECES	DESCRIPTION DESCRIPTION	69M9					REMARKS REMARQUES
1	69M–G5300–01–4D	LOWER UNIT ASSY UNITE INFERIEURE (ENS.)	1					S(17.0") S(17.0")
	69M–G5300–11–4D	LOWER UNIT ASSY UNITE INFERIEURE (ENS.)	1					L(22.0") L(22.0")
2	69M–G5311–00–4D	CASING, LOWER BOITIER D'HELICE	1					
3	6L5–45316–09	.BUSHING, DRIVE SHAFT .DOUILLE, ARBRE MOTEUR	1					
4	6L5–45317–09	.BUSHING, DRIVE SHAFT .DOUILLE, ARBRE MOTEUR	1					
5	93103–09M41	OIL SEAL JOINT SPY	1					
6	93316–003Y0	BEARING ROULEMENT	1					
7	90340–08002	PLUG, STRAIGHT SCREW PLOT, FILETE DROIT	2					
8	90430–08020	GASKET JOINT	2					
9	69M–G5321–00–94	PLATE PLAQUETTE	1					
10	69M–G5315–A0	PACKING, LOWER CASING JOINT, BOITIER D'HELICE	1					
11	93210–05001	O-RING JOINT TORIQUE	1					
12	69M–G5361–00–4D	CAP, LOWER CASING COUVERCLE, BOITIER D'HELICE	1					
13	93101–13M12	OIL SEAL JOINT SPY	2					
14	93210–48214	O-RING JOINT TORIQUE	1					
15	97095–06016	BOLT BOULON	2					
16	92995–06600	WASHER RONDELLE	2					
17	69M–G4311–00	HOUSING, WATER PUMP CORPS, POMPE A EAU	1					
18	93210–33M85	O-RING JOINT TORIQUE	1					
19	6L5–44322–00	INSERT, CARTRIDGE CUVETTE	1					
20	69M–G4323–00	OUTER PLATE, CARTRIDGE PLAQUE EXTERIEURE	1					
21	6E0–44366–00	DAMPER, WATER SEAL 2 JOINT, TUBE D'EAU 2	1					
22	6L5–44352–00	IMPELLER TURBINE	1					
23	93604–07M13	PIN, DOWEL CLAVETTE	1					
24	97095–06040	BOLT BOULON	4					
25	93604–18080	PIN, DOWEL CLAVETTE	2					
26	69M–G4328–00	PLATE PLAQUETTE	2					

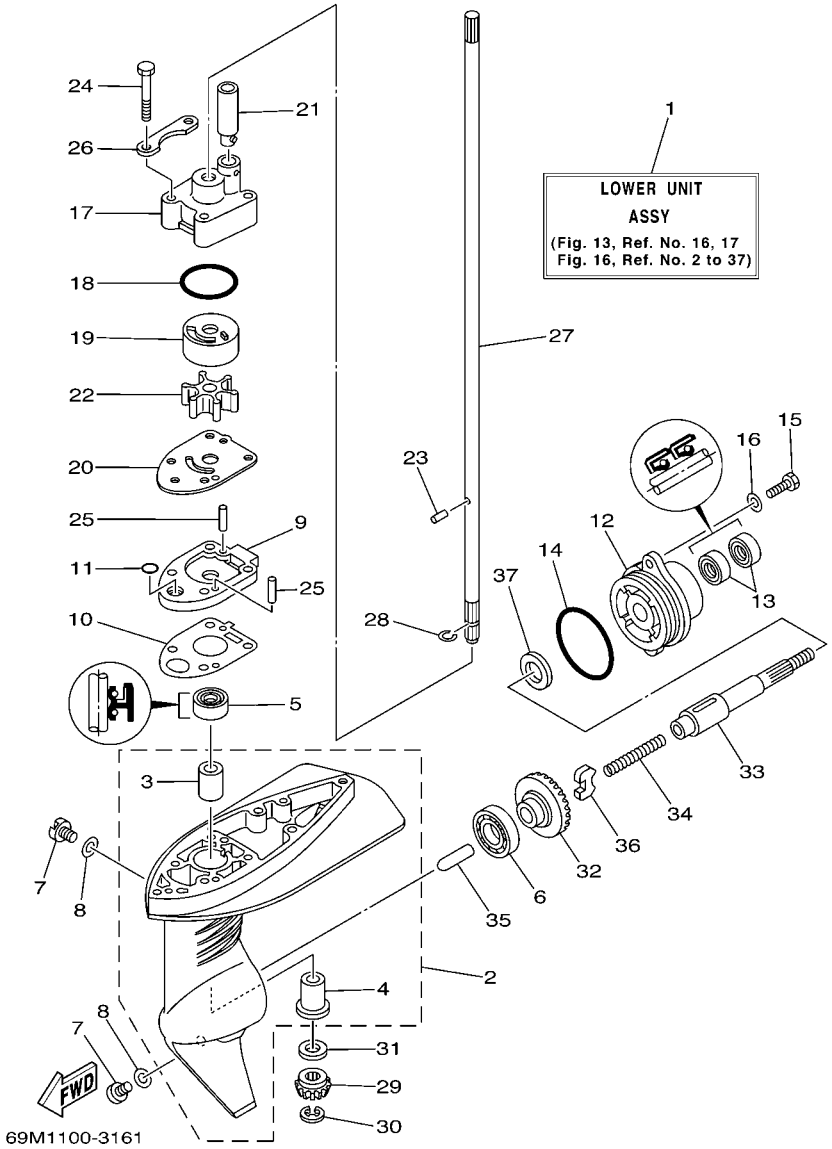

FIG. 16 LOWER CASING & DRIVE 1 BOITIER D'HELICE TRANSMISSION1

REF. NO.	PART NO. N° PIECES	DESCRIPTION DESCRIPTION	69M9					REMARKS REMARQUES
27	69M–G5511–00	SHAFT, DRIVE ARBRE, MOTEUR	1					S(17.0") S(17.0")
	69M–G5511–10	SHAFT, DRIVE ARBRE, MOTEUR	1					L(22.0") L(22.0")
28	93440–08819	CIRCLIP CIRCLIP	1					
29	69M–G5551–00	PINION (13T) PIGNON D'ATTAQUE (13D)	1					
30	99001–06600	CIRCLIP CIRCLIP	1					
31	6L5–45533–00–20	SHIM (T:2.0MM) CALE (T:2.0MM)	1					UR UR
	6L5–45533–00–21	SHIM (T:2.1MM) CALE (T:2.1MM)	1					UR UR
	6L5–45533–00–22	SHIM (T:2.2MM) CALE (T:2.2MM)	1					UR UR
	6L5–45533–00–23	SHIM (T:2.3MM) CALE (T:2.3MM)	1					UR UR
32	69M–G5560–00	GEAR 1 (27T) PIGNON 1 (27T)	1					
33	69M–G5611–00	SHAFT, PROPELLER ARBRE, HELICE	1					
34	90501–10064	SPRING, COMPRESSION RESSORT, COMPRESSION	1					
35	69M–G5635–00	PLUNGER, SHIFT POUSSOIR D'EMBRAYAGE	1					
36	6L5–45631–00	CLUTCH, DOG CRABOT	1					
37	90201–13198	WASHER, PLATE RONDELLE, PLATE	1					

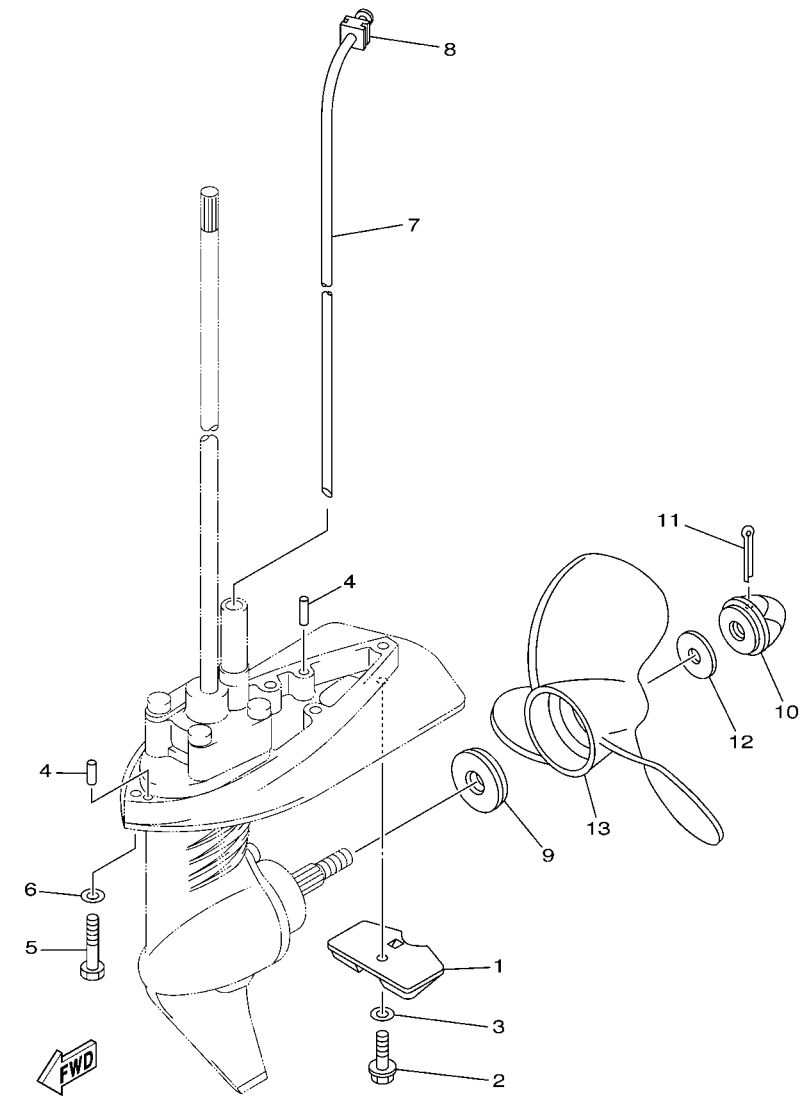

FIG. 17 LOWER CASING & DRIVE 2 BOITIER D'HELICE TRANSMISSION2

REF. NO.	PART NO. N° PIECES	DESCRIPTION DESCRIPTION	69M9					REMARKS REMARQUES
1	68D–G5251–00	ANODE ANODE	1					
2	95895–06020	BOLT, FLANGE BOULON	1					
3	92990–06300	WASHER, INTERNAL TOOTH RONDELLE, DENTURE INTERNE	1					
4	93604–12M07	PIN, DOWEL CLAVETTE	2					
5	97095–06030	BOLT BOULON	3					S(17.0") S(17.0")
6	92995–06600	WASHER RONDELLE	3					S(17.0") S(17.0")
7	69M–44361–00	TUBE, WATER 1 TUBE D'EAU 1	1					S(17.0") S(17.0")
	69M–44361–10	TUBE, WATER 1 TUBE D'EAU 1	1					L(22.0") L(22.0")
8	68D–G4365–00	DAMPER, WATER SEAL 1 JOINT, TUBE D'EAU 1	1					
9	68D–G5987–00	SPACER 1 ENTRETOISE 1	1					
10	6L5–45616–00	NUT, PROPELLER CONE, HELICE	1					
11	91490–25030	PIN. COTTER GOUPILLE	1					
12	90201–08M54	WASHER, PLATE RONDELLE, PLATE	1					
13	6L5–45943–00–EL	PROPELLER (3X7-1/4"X6"-BS) HELICE (3X7-1/4"X6"-BS)	1					UR UR
	6L5–45945–00–EL	PROPELLER (3X7-1/4"X7-1/4"-BS) HELICE (3X7-1/4"X7-1/4"-BS)	1					UR UR
	6L5–45947–00–EL	PROPELLER (3X7-1/4"X8-1/4"-BS) HELICE (3X7-1/4"X8-1/4"-BS)	1					UR UR
	6L5–45949–00–EL	PROPELLER (3X7-1/4"X5"-BS) HELICE (3X7-1/4"X5"-BS)	1					UR UR
	6L5–45952–00–EL	PROPELLER (3X7-1/4"X5-1/2"-BS) HELICE (3X7-1/4"X5-1/2"-BS)	1					UR UR

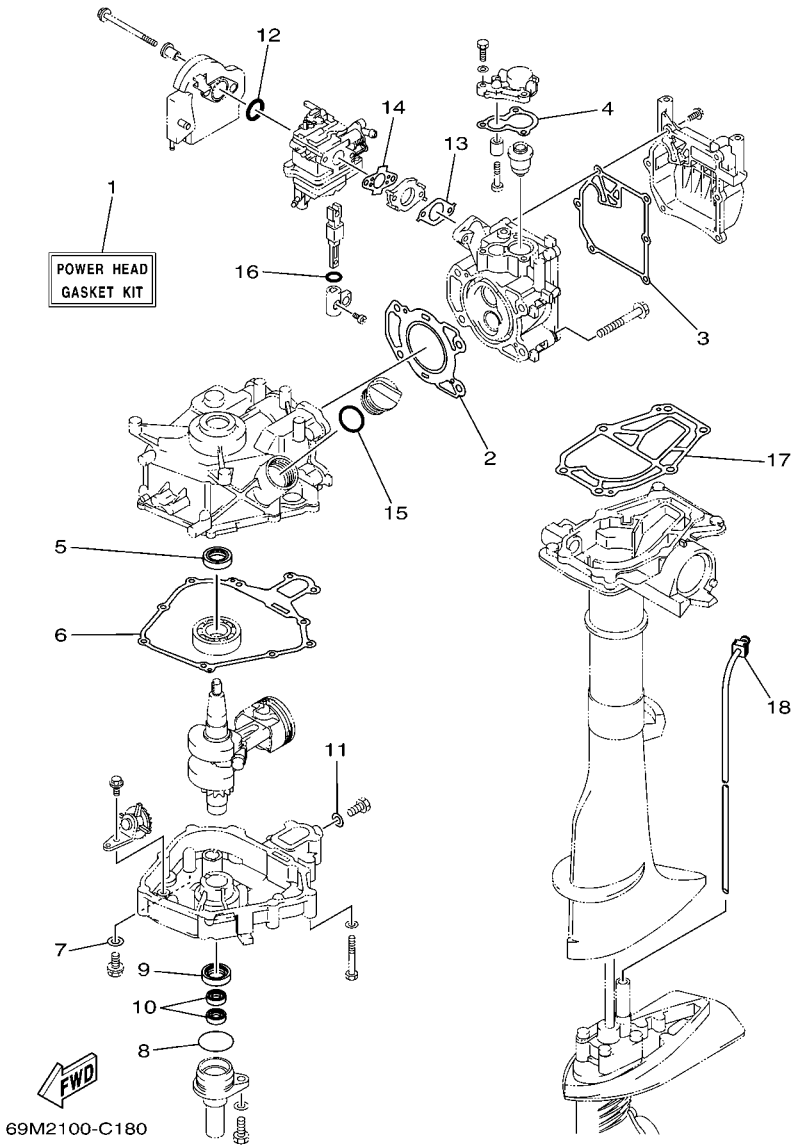

FIG. 18 REPAIR KIT 1 — KITS DE REPARATION 1

REF. NO.	PART NO. N° PIECES	DESCRIPTION DESCRIPTION	69M9					REMARKS REMARQUES
1	69M–WE001–00	POWER HEAD GASKET KIT POCHETTE DE JINTS TETE MOTRICE	1					
2	69M–11181–00	.GASKET, CYLINDER HEAD 1 .JOINT, DE CULASSE 1	1					
3	69M–11193–A0	.GASKET, HEAD COVER 1 .JOINT, COUVERCLE DE CULASSE 1	1					
4	68D–E2414–A0	.GASKET, COVER .JOINT, COUVERCLE	1					
5	93102–20108	.OIL SEAL .JOINT SPY	1					
6	69M–11351–A0	.GASKET, CYLINDER .JOINT, D'EMBASE	1					
7	90201–08818	.WASHER, PLATE .RONDELLE, PLATE	1					
8	93210–35537	.O-RING .JOINT TORIQUE	1					
9	93102–20108	.OIL SEAL .JOINT SPY	1					
10	93102–09004	.OIL SEAL .JOINT SPY	2					
11	90430–08800	.GASKET .JOINT	1					
12	93210–20M65	.O-RING .JOINT TORIQUE	1					
13	69M–E3645–A0	.GASKET, MANIFOLD 1 .JOINT, TUBULURE 1	1					
14	69M–E3646–A0	.GASKET, MANIFOLD 2 .JOINT, TUBULURE 2	1					
15	93210–24M79	.O-RING .JOINT TORIQUE	1					
16	93210–13M43	.O-RING .JOINT TORIQUE	1					
17	69M–45113–A0	.GASKET, UPPER CASING .JOINT, TUBE D'ARBRE	1					
18	68D–G4365–00	.DAMPER, WATER SEAL 1 .JOINT, TUBE D'EAU 1	1					

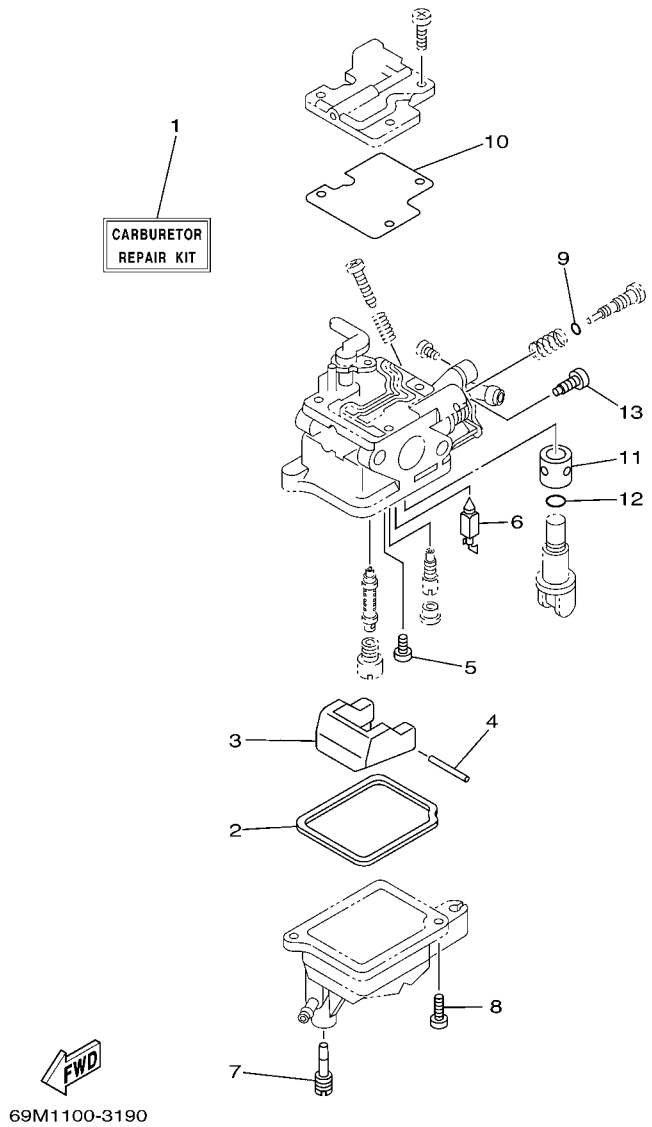

FIG. 19 REPAIR KIT 2 — KITS DE REPARATION 2

REF. NO.	PART NO. N° PIECES	DESCRIPTION DESCRIPTION	69M9					REMARKS REMARQUES
1	69M–W0093–00	CARBURETOR REPAIR KIT KIT DE REPARATION CARBURATEUR	1					
2	69M–14984–00	.GASKET, FLOAT CHAMBER .JOINT, CUVE DE FLOTTEUR	1					
3	69M–14385–00	.FLOAT .FLOTTEUR	1					
4	6A1–14386–00	.PIN, FLOAT .AXE, FLOTTEUR	1					
5	98580–03005	.SCREW, PAN HEAD .VIS	1					
6	62Y–14392–00	.VALVE, NEEDLE .POINTEAU	1					
7	69M–14991–00	.SCREW .VIS	1					
8	98580–04010	.SCREW, PAN HEAD .VIS	2					
9	2T4–14397–00	.O-RING .JOINT TORIQUE	1					
10	69M–14536–00	.GASKET .JOINT	1					
11	69M–24523–00	.VALVE .SOUPAPE	1					
12	69M–24533–00	.O-RING .JOINT TORIQUE	1					
13	69M–24535–00	.SCREW, LEVER FITTING .VIS, FIXATION DE LEVIER	1					

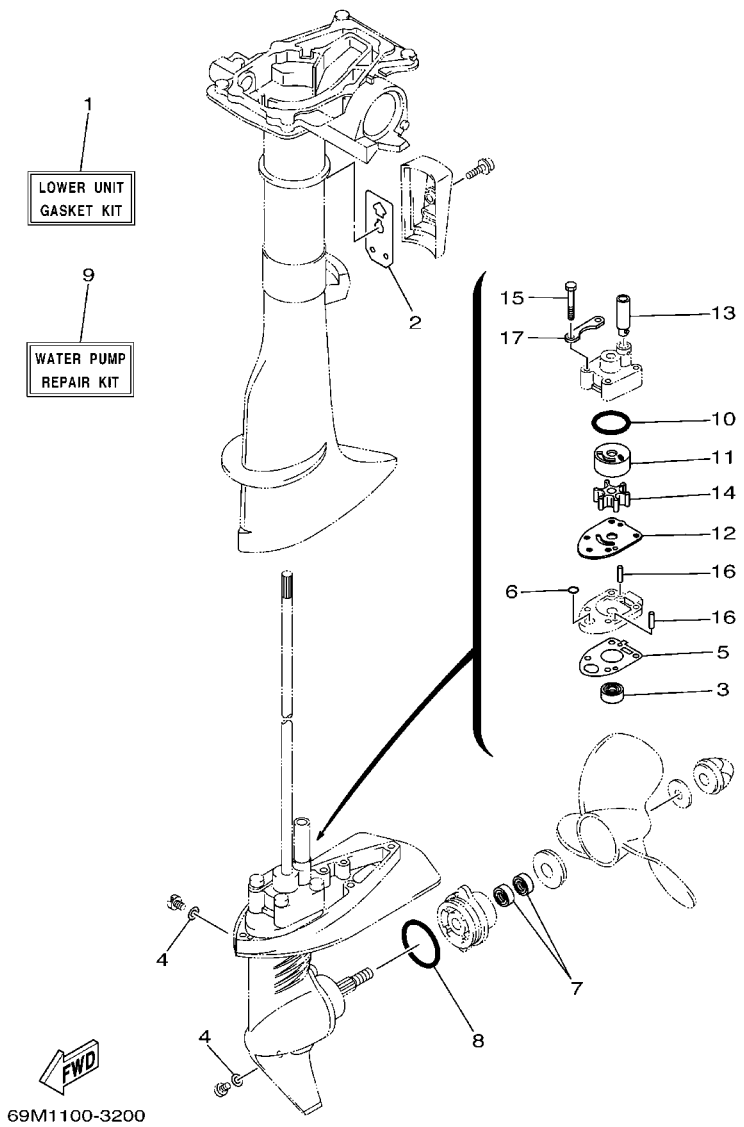

FIG. 20 REPAIR KIT 3 — KITS DE PEPARATION 3

REF. NO.	PART NO. N° PIECES	DESCRIPTION DESCRIPTION	69M9					REMARKS REMARQUES
1	69M–WG001–20	LOWER UNIT GASKET KIT POCHETTE DE JOINTS EMBASE	1					
2	69M–G5115–00	.GASKET, UPPER CASING .JOINT, TUBE D'ARBRE	1					
3	93103–09M41	.OIL SEAL .JOINT SPY	1					
4	90430–08020	.GASKET .JOINT	2					
5	69M–G5315–A0	.PACKING, LOWER CASING .JOINT, BOITIER D'HELICE	1					
6	93210–05001	.O-RING .JOINT TORIQUE	1					
7	93101–13M12	.OIL SEAL .JOINT SPY	2					
8	93210–48214	.O-RING .JOINT TORIQUE	1					
9	69M–WG078–00	WATER PUMP REPAIR KIT KIT DE REPARATION DE LA POMPE	1					
10	93210–33M85	.O-RING .JOINT TORIQUE	1					
11	6L5–44322–00	.INSERT, CARTRIDGE .CUVETTE	1					
12	69M–G4323–00	.OUTER PLATE, CARTRIDGE .PLAQUE EXTERIEURE	1					
13	6E0–44366–00	.DAMPER, WATER SEAL 2 .JOINT, TUBE D'EAU 2	1					
14	6L5–44352–00	.IMPELLER .TURBINE	1					
15	97095–06040	.BOLT .BOULON	4					
16	93604–18080	.PIN, DOWEL .CLAVETTE	2					
17	69M–G4328–00	.PLATE .PLAQUETTE	2					

NUMERICAL INDEX
INDEX NUMERIQUE

PART NO. N° PIECES	REF. NO.
67D–11133–10	2 – 3
69M–11181–00	2 – 7
	18 – 2
69M–11193–A0	2 – 9
	18 – 3
69M–11351–A0	4 – 7
	18 – 6
676–11372–00	2 – 4
69M–11400–00	3 – 1
69M–11650–00	3 – 3
7FK–11654–00	3 – 4
6AU–12111–00	5 – 2
7NJ–12117–00	5 – 6
7NJ–12118–00	5 – 7
51Y–12119–00	5 – 4
6AU–12121–00	5 – 3
67D–12151–00	5 – 8
JA9–12153–00	5 – 14
69M–12154–00	5 – 13
67D–12157–00	5 – 11
7FK–12158–00	5 – 10
7FK–12165–00	5 – 9
69M–12170–01	5 – 1
69M–12411–01	2 – 11
688–12412–00	2 – 12
62Y–14212–00	7 – 21
69M–14301–21	7 – 1
69W–14321–00	7 – 20
69M–14323–20	7 – 15
62Y–14334–00	7 – 17
69M–14341–00	7 – 4
69M–14342–68	7 – 5
69M–14343–31	7 – 3
69M–14381–00	7 – 7
69M–14385–00	7 – 9
	19 – 3
6A1–14386–00	7 – 10
	19 – 4
62Y–14392–00	7 – 12
	19 – 6
2T4–14397–00	7 – 16
	19 – 9
69M–14440–01	6 – 3
6H1–14485–00	4 – 2
69M–14527–00	7 – 18
69M–14536–00	7 – 19
	19 – 10
69M–14966–00	7 – 6

PART NO. N° PIECES	REF. NO.
69M–14984–00	7 – 8
	19 – 2
69M–14991–00	7 – 13
	19 – 7
69M–15361–00	4 – 5
67D–15705–00	9 – 5
69M–15710–00	9 – 1
67D–15713–00	9 – 4
69M–15714–00	9 – 2
69M–15723–00	10 – 6
69M–15735–00	9 – 6
69M–15739–00	9 – 8
69M–15741–00	9 – 3
69M–15751–00	9 – 9
6G1–15755–00	9 – 10
69M–15762–00	9 – 14
6G1–15779–00	9 – 11
69M–15793–00	9 – 7
67D–21757–00	8 – 6
69M–24182–00	9 – 15
6L5–24251–00	8 – 11
650–24378–00	2 – 14
69M–24523–00	7 – 23
	19 – 11
69M–24524–00	7 – 22
69M–24533–00	7 – 24
	19 – 12
69M–24535–00	7 – 25
	19 – 13
69M–24554–00	8 – 16
69M–24575–00	8 – 18
68D–24610–00	8 – 2
69M–24633–00	8 – 5
624–24634–00	8 – 4
69M–24641–01	8 – 7
6G1–42125–01	12 – 21
6G1–42126–00	12 – 22
67D–42129–00	12 – 2
6G1–42138–01	12 – 18
69M–42528–00	14 – 29
69M–42529–00	14 – 30
69M–42628–00	11 – 2
69M–42629–00	11 – 6
6L5–42647–00	11 – 14
69M–42662–00	1 – 7
6S7–42698–40	1 – 10
6S7–42698–50	1 – 11
69M–42758–01	11 – 11

PART NO. N° PIECES	REF. NO.
6L5–42774–00	11 – 3
67D–42791–10	2 – 22
6S7–42794–40	11 – 23
6S7–42794–50	11 – 24
6L5–42823–00	11 – 15
620–43114–00	14 – 6
6E0–43116–01	14 – 3
69M–43180–00	14 – 19
69M–43679–00	14 – 18
69M–44126–00	13 – 7
69M–44143–00	13 – 10
6L5–44144–00	13 – 16
6L5–44144–10	13 – 16
6L5–44322–00	16 – 19
	20 – 11
6L5–44352–00	16 – 22
	20 – 14
69M–44361–00	17 – 7
69M–44361–10	17 – 7
6E0–44366–00	16 – 21
	20 – 13
6G8–44532–00	4 – 27
69M–44557–00	14 – 35
69M–45113–A0	15 – 5
	18 – 17
647–45151–01	15 – 2
6L5–45316–09	16 – 3
6L5–45317–09	16 – 4
6L5–45318–00	15 – 13
6L5–45533–00–20	16 – 31
6L5–45533–00–21	16 – 31
6L5–45533–00–22	16 – 31
6L5–45533–00–23	16 – 31
6L5–45616–00	17 – 10
6L5–45631–00	16 – 36
6L5–45943–00–EL	17 – 13
6L5–45945–00–EL	17 – 13
6L5–45947–00–EL	17 – 13
6L5–45949–00–EL	17 – 13
6L5–45952–00–EL	17 – 13
6AH–81994–40	8 – 22
6AH–81994–50	8 – 23
6E3–82370–21	10 – 10
682–82556–00	10 – 12
65W–82575–01	10 – 11
689–8257Y–00	10 – 13
69M–85640–00	10 – 2
69M–85650–00	10 – 1

PART NO. N° PIECES	REF. NO.
69M–E1111–01–1S	2 – 2
69M–E1191–00–1S	2 – 8
69M–E1311–00–1S	4 – 1
68D–E1325–00	2 – 15
69M–E1603–01	3 – 6
69M–E1604–01	3 – 6
69M–E1605–01	3 – 6
69M–E1631–01–96	3 – 5
69M–E1633–00	3 – 7
69M–E1635–01	3 – 5
69M–E1636–01	3 – 5
68D–E2113–00	5 – 5
69M–E2155–00	5 – 12
69M–E2413–00–1S	2 – 13
68D–E2414–A0	2 – 17
	18 – 4
69M–E2483–00	6 – 7
69M–E3102–00	4 – 22
60R–E3434–00	1 – 8
69M–E3437–60	8 – 21
69M–E3645–A0	6 – 9
	18 – 13
69M–E3646–A0	6 – 10
	18 – 14
69M–E3647–00	6 – 11
69M–E4148–00	6 – 1
69M–E4427–60	1 – 9
69M–E5111–00–1S	4 – 6
69M–E5316–00	11 – 10
69M–E5363–00	4 – 24
69M–E5396–00–5B	4 – 14
69M–E5789–00	9 – 12
69M–F4111–01	8 – 1
60R–F415E–00	1 – 12
69M–F4181–00	8 – 15
69M–F4191–00	8 – 14
69M–F4311–00	8 – 12
69M–F4375–00	8 – 8
69M–F4591–00	11 – 22
69M–F6301–10	12 – 24
69M–F6330–02	6 – 12
69M–F8100–00	8 – 24
69M–F8199–78–D0	8 – 25
69M–F8199–78–E0	8 – 25
69M–F8199–78–F0	8 – 25
69M–F8199–78–G0	8 – 25
69M–F8199–78–H0	8 – 25
69M–F8199–78–S0	8 – 25

PART NO. N° PIECES	REF. NO.
69M–F8199–88–K0	8 – 26
69M–F8199–88–L0	8 – 26
69M–F8199–88–M0	8 – 26
69M–F8199–88–N0	8 – 26
69M–F8199–88–P0	8 – 26
69M–F8199–88–R0	8 – 26
69M–G2111–00–4D	12 – 1
69M–G2119–10	12 – 10
68D–G2131–01	12 – 8
69M–G2137–00	12 – 12
68D–G2159–00	12 – 19
68D–G2171–00	12 – 3
68D–G2172–00	12 – 4
6N0–G2177–00	12 – 11
68D–G2181–00	12 – 5
68D–G2182–00	12 – 7
69M–G2188–00	12 – 6
69M–G2537–00	14 – 14
69M–G2538–00	14 – 15
68D–G2561–01	14 – 31
69M–G2610–10–4D	1 – 1
69M–G2613–00	1 – 2
69M–G2677–00	1 – 5
69M–G2678–10	1 – 6
69M–G2711–00–4D	11 – 1
69M–G2712–00	11 – 5
69M–G2724–00	11 – 8
69M–G2725–00	11 – 9
69M–G2727–00	11 – 7
69M–G2731–00–4D	11 – 17
69M–G2735–00	11 – 20
69M–G2743–00	4 – 26
69M–G2768–00	11 – 12
69M–G3111–00–4D	14 – 1
69M–G3112–00–4D	14 – 2
69M–G3118–00	14 – 4
69M–G3164–00	14 – 25
69M–G3166–00	14 – 26
69M–G3185–00	14 – 24
69M–G3186–00	14 – 21
69M–G3188–00	14 – 20
69M–G3311–01–4D	14 – 12
69M–G3312–00–4D	14 – 13
69M–G3318–00	14 – 39
69M–G3351–00	14 – 34
69M–G3691–00	14 – 41
69M–G4111–00	13 – 1
69M–G4121–00	13 – 6

PART NO. N° PIECES	REF. NO.
68D–G4122–01	13 – 5
6N0–G4145–10	13 – 13
6N0–G4146–10	13 – 14
69M–G4311–00	16 – 17
69M–G4323–00	16 – 20
	20 – 12
69M–G4328–00	16 – 26
	20 – 17
68D–G4365–00	17 – 8
	18 – 18
69M–G5111–00–4D	15 – 1
69M–G5115–00	15 – 10
	20 – 2
69M–G5151–00	15 – 9
69M–G5152–00	15 – 3
69M–G5211–00–4D	15 – 12
68D–G5251–00	17 – 1
69M–G5300–01–4D	16 – 1
69M–G5300–11–4D	16 – 1
69M–G5311–00–4D	16 – 2
69M–G5315–A0	16 – 10
	20 – 5
69M–G5321–00–94	16 – 9
69M–G5361–00–4D	16 – 12
69M–G5511–00	16 – 27
69M–G5511–10	16 – 27
69M–G5551–00	16 – 29
69M–G5560–00	16 – 32
69M–G5611–00	16 – 33
69M–G5635–00	16 – 35
68D–G5987–00	17 – 9
69M–W0093–00	19 – 1
69M–WE001–00	18 – 1
69M–WE090–01–1S	2 – 1
69M–WG001–20	20 – 1
69M–WG070–00	1 – 4
69M–WG078–00	20 – 9
90101–06030	14 – 36
90101–06M18	15 – 14
90101–08M07	14 – 7
90105–06039	2 – 10
90105–06M24	10 – 7
90105–08M36	2 – 5
90105–08M76	4 – 12
90119–06098	8 – 10
90119–06M17	11 – 13
90119–06ME0	13 – 15
90152–05011	12 – 16

NUMERICAL INDEX
INDEX NUMERIQUE

PART NO. N° PIECES	REF. NO.
90157–05013	11 – 4
90159–05M12	8 – 19
	15 – 4
90159–06M11	14 – 40
	15 – 11
90161–04003	11 – 21
90167–03M02	11 – 16
90170–10M33	10 – 4
90201–06040	14 – 37
90201–08818	4 – 13
	18 – 7
90201–08M54	17 – 12
90201–105A2	10 – 5
90201–10M02	12 – 15
90201–13198	16 – 37
90201–23008	3 – 2
90202–08022	14 – 8
90243–04M01	14 – 5
90266–04M05	14 – 32
90269–02M09	12 – 13
90280–04M06	10 – 3
90340–08002	16 – 7
90386–08032	12 – 17
	14 – 22
90387–06076	6 – 6
90387–06176	8 – 9
90430–08020	16 – 8
	20 – 4
90430–08800	4 – 21
	18 – 11
90445–07805	6 – 8
90445–09808	2 – 20
90446–06M90	10 – 14
90464–09013	2 – 21
90465–08M99	4 – 10
90465–11M10	6 – 2
90467–11M08	8 – 20
90467–13M13	8 – 13
90468–100A0	8 – 3
90480–25161	10 – 8
90501–10064	16 – 34
90501–12802	13 – 4
90501–12803	14 – 33
90501–23800	12 – 14
91490–16010	12 – 23
	13 – 12
91490–25030	17 – 11
91609–25014	13 – 17

PART NO. N° PIECES	REF. NO.
91690–20010	14 – 23
92903–06600	4 – 9
92990–05600	13 – 11
92990–06300	17 – 3
92990–06600	15 – 15
92990–08200	14 – 9
92995–05600	13 – 9
92995–06600	2 – 19
	4 – 29
	11 – 19
	14 – 17
	16 – 16
	17 – 6
92995–08600	4 – 19
93101–13M12	16 – 13
	20 – 7
93102–09004	4 – 17
	18 – 10
93102–20108	4 – 3
	4 – 16
	18 – 5
	18 – 9
93103–09M41	16 – 5
	20 – 3
93210–05001	16 – 11
	20 – 6
93210–09350	13 – 2
93210–13M43	8 – 17
	18 – 16
93210–20M65	6 – 4
	18 – 12
93210–24M79	4 – 25
	18 – 15
93210–33M85	16 – 18
	20 – 10
93210–35537	4 – 15
	18 – 8
93210–48214	16 – 14
	20 – 8
93306–272Y2	4 – 4
93316–003Y0	16 – 6
93420–22M03	15 – 16
93440–08819	16 – 28
93450–13130	3 – 8
93505–16024	13 – 3
93604–07M13	16 – 23
93604–12M07	2 – 6
	4 – 11

PART NO. N° PIECES	REF. NO.
93604–12M07	15 – 6
	15 – 17
	17 – 4
93604–18080	16 – 25
	20 – 16
93700–06M03	14 – 28
	15 – 8
94702–00248	2 – 23
95380–08600	14 – 10
95380–08700	14 – 11
95780–06300	14 – 38
95817–06012	4 – 23
95895–06020	17 – 2
97013–06045	4 – 8
97075–06030	14 – 16
97075–08025	12 – 9
97095–05012	13 – 8
97095–06012	10 – 9
97095–06016	16 – 15
97095–06020	2 – 18
	4 – 28
	11 – 18
97095–06030	17 – 5
97095–06040	16 – 24
	20 – 15
97095–08014	4 – 20
97095–08020	4 – 18
97575–06535	15 – 7
97595–06560	9 – 13
97595–06575	6 – 5
97780–40012	1 – 3
97880–05025	2 – 16
97885–05012	12 – 20
97890–04007	7 – 2
98580–03005	7 – 11
	19 – 5
98580–04010	7 – 14
	19 – 8
99001–06600	16 – 30
99080–04600	14 – 27

PART NO. N° PIECES	REF. NO.

PART NO. N° PIECES	REF. NO.

PART NO. N° PIECES	REF. NO.