YAMAHA

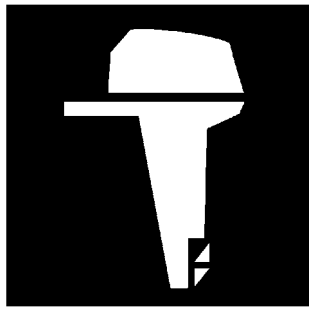

PARTS CATALOGUE
CATALOGUE DE PIECES DETACHEES

F25D'11 (6BP3)

1K6BP-300F1

( )

YAMAHA
GENUINE
Parts & Accessories

F25D
PARTS CATALOGUE
©2010 by Yamaha Motor Co., Ltd.
1st edition, June 2010
All rights reserved.
Any reprinting or unauthorized use
without the written permission of
Yamaha Motor Co., Ltd.
is expressly prohibited.
Printed in Japan.

F25D
CATALOGUE DE PIECES DETACHEES
©2010 par Yamaha Motor Co., Ltd.
1re édition, juin 2010
Tous droits réservés
Toute réimpression ou utilisation
non autorisée sans la permission écrite
de la Yamaha Motor Co., Ltd.
est formellement interdite.
Imprimé au Japon

FOREWORD

This Parts Catalogue is related to the parts for the model(s) on the cover page. When you are ordering replacement parts, please refer to this Parts Catalogue and quote both part numbers and part names correctly.

1. Modifications or additions which have been made after the issue of the Parts Catalogue will be announced in the Parts News.
   It is advisable that you make the necessary corrections to the Parts Catalogue according to the Parts News.

2. Abbreviations
   The following abbreviations are used in this Parts Catalogue.

   "UR" Use specified parts number.
   "UN" Use as many as needed.
   "AP" Alternate Parts
   "LM" Locally Made (Parts need to be ordered locally)
   "F#" Frame No. (Applicable machine No.)
   "O/S" Over Size

3. The number of components for assembly
   - Parts, which are to be supplied in an assembly, are listed with a dot (.) in front of the part name as shown below.
   - The numeral appearing to the right of each component part indicates the quantity of parts for each assembly unit.

PART NO.	DESCRIPTION	Q'TY	REMARKS
2F5–83310–60	FRONT FLASHER LIGHT ASSY	2	
115–83311–60	.BULB (6V–18W)	1	

4. Applicable colours of graphics are represented in the "REMARKS" as shown below.

PART NO.	DESCRIPTION	Q'TY	REMARKS
2N4–24110–00–X5	FUEL TANK COMP.	2	MXR
3J1–24240–10	.GRAPHIC, FUEL TANK	1	FOR MXR

5. Note that the illustrations for reference in finding parts numbers are not to be used for assembling. When assembling, please use the applicable service manual.

6. The asterisk (*) before a reference number indicates modified items after the first edition.

7. Applicable Serial No.

   Engine Serial No.

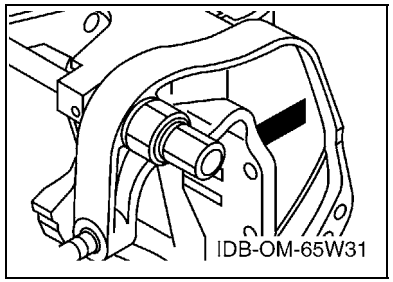

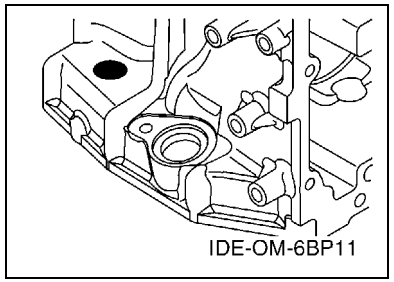

8. Applicable Engine Starting Serial No.

Model	Serial No.	Model	Serial No.
F25D	6BPK-1006960		

9. Applicable Colour Code

Abbreviation	Colour Name	Colour Code
DBNM2	DARK BLUISH GRAY METALLIC 2	004D

10. Quantity Column Information

Column No.	Name Of Q'ty Column	Applicable Model
1	ET	F25DET
2	E	F25DE
3	MH	F25DMH

AVANT–PROPOS

Ce catalogue de pièces détachées concerne les pièces pour le(s) modèle(s) indiqué(s) sur la page de couverture. Lorsque vous commandez des pièces de rechange, veuillez vous référer à ce catalogue de pieces détachées et indiquer clairement les numéros et les noms des pièces détachées.

1. Les modifications ou ajouts ayant été effectués après la parution du catalogue de pièces détachées seront décrits dans les Bulletins d'information concernant les pièces détachées.
   Il est recommandé que vous apportiez les corrections nécessaires au catalogue des pièces détachées en vous référant aux Bulletins d'information.

2. Abréviations
   Dans ce catalogue, les abréviations suivantes sont utilisées:

   "UR" Utiliser le numéro de pièces spécifié.
   "UN" Utiliser autant que nécessaire.
   "AP" Pièces de substitution
   "LM" Fabrication locale (les pièces doivent être commandées localement.)
   "F#" N° de cadre (applicable au N° de série)
   "O/S" Surdimensionné

3. Nombre de pièces d'un assemblage
   - Les pièces fournies comme composants d'un assemblage sont précédées d'un point (.) de la manière indiquée ci–dessous.
   - Le chiffre apparaissant à la droite de chaque composant indique la quantité de pièces pour chaque unité d'assemblage.

N° PIECES	DESCRIPTION	QTE	REMARQUES
2F5–83310–60	ENS. CLIGNOTANT AVANT	2	
115–83311–60	.AMPOULE (6V–18W)	1	

4. Les couleurs concernant les graphiques sont indiquées dans la colonne "REMARQUES", comme indiqué ci–dessous.

N° PIECES	DESCRIPTION	QTE	REMARQUES
2N4–24110–00–X5	RESERVOIR A ESSENCE.	2	MXR
3J1–24240–10	.GRAPHIQUE	1	POUR MXR

5. Veuillez noter que les illustrations sont indiquées à titre de référence pour trouver les numéros de pièces, non pour être utilisées lors de l'assemblage. Lors de l'assemblage, veuillez utiliser le manuel d'entretien adéquat.

6. L'astérisque (*) placé devant un numéro de référence indique des éléments qui ont été modifiés après la première édition.

7. N° de série applicable

   N° de Série du moteur

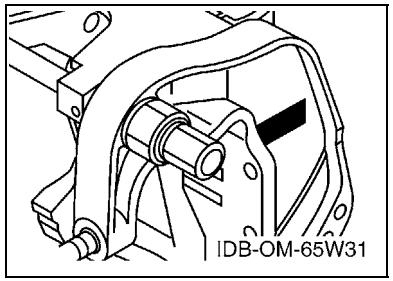

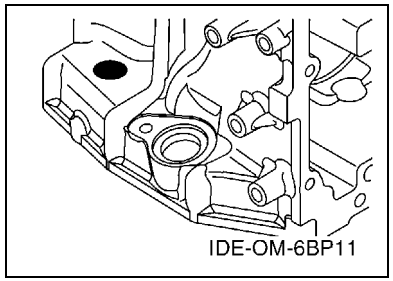

8. N° de série initial du moteur applicable

Modèle	N° de série	Modèle	N° de série
F25D	6BPK-1006960		

9. Code couleur applicable

Abréviation	Nom de la couleur	Code couleur
DBNM2	DARK BLUISH GRAY METALLIC 2	004D

10. Informations relatives à la colonne Quantité

N° de la colonne	Nom de la colonne Qté	Modèle applicable
1	ET	F25DET
2	E	F25DE
3	MH	F25DMH

CONTENTS

TOP COWLING 1
CYLINDER & CRANKCASE 1 2
CRANKSHAFT & PISTON 4
CYLINDER & CRANKCASE 2 5
VALVE 7
INTAKE 8
CARBURETOR 9
OIL PUMP 11
FUEL 12
STARTER 14
GENERATOR 16
ELECTRICAL 1 17
ELECTRICAL 2 18
ELECTRICAL 3 19
ELECTRICAL 4 20
ELECTRICAL 5 21
STARTING MOTOR 22
BOTTOM COWLING 1 23
BOTTOM COWLING 2 25
STEERING 26
STEERING FRICTION 28
CONTROL 1 29
CONTROL 2 31
REMO CON ATTACHMENT 33
BRACKET 1 35
BRACKET 2 37
BRACKET 3 40
POWER TRIM & TILT ASSY 42
UPPER CASING 45
OIL PAN 46
LOWER CASING & DRIVE 1 47
LOWER CASING & DRIVE 2 50
FUEL TANK 1 51
FUEL TANK 2 52
STEERING GUIDE 53
REMOTE CONTROL BOX 54
REMOTE CONTROL ASSY 55
REPAIR KIT 1 58
REPAIR KIT 2 59
REPAIR KIT 3 60

INDEX

NUMERICAL INDEX 62

TABLE DES MATIERES

CAPOT SUPERIEUR 1
CYLINDRE & CARTER 1 2
VILEBREQUIN & PISTON 4
CYLINDRE & CARTER 2 5
SOUPAPE 7
ADMISSION 8
CARBURATEUR 9
POMPE A HUILE 11
CARBURANT 12
DEMARREUR 14
GENERATRICE 16
PARTIE ELECTRIQUE 1 17
PARTIE ELECTRIQUE 2 18
PARTIE ELECTRIQUE 3 19
PARTIE ELECTRIQUE 4 20
PARTIE ELECTRIQUE 5 21
DEMARREUR ELECTRIQUE 22
CAPOT INFERIEUR 1 23
CAPOT INFERIEUR 2 25
DIRECTION 26
CUVETTE POIGNEE DE DIRECTION 28
COMMANDE 1 29
COMMANDE 2 31
COMMANDE A DISTANCE 33
SUPPORT 1 35
SUPPORT 2 37
SUPPORT 3 40
PUISSANCE PARER ET INCLINER 42
FOURREAU 45
VENTILATEUR D'HUILE 46
BOITIER D'HELICE TRANSMISSION1 47
BOITIER D'HELICE TRANSMISSION2 50
RESERVOIR A CARBURANT 1 51
RESERVOIR A CARBURANT 2 52
FIXATION DE DIRECTION 53
BOITIER DE COMMANDE A DISTANCE 54
BOITIER DE COMMANDE A DISTANCE 55
KITS DE REPARATION 1 58
KITS DE REPARATION 2 59
KITS DE PEPARATION 3 60

INDEX

INDEX NUMERIQUE 62

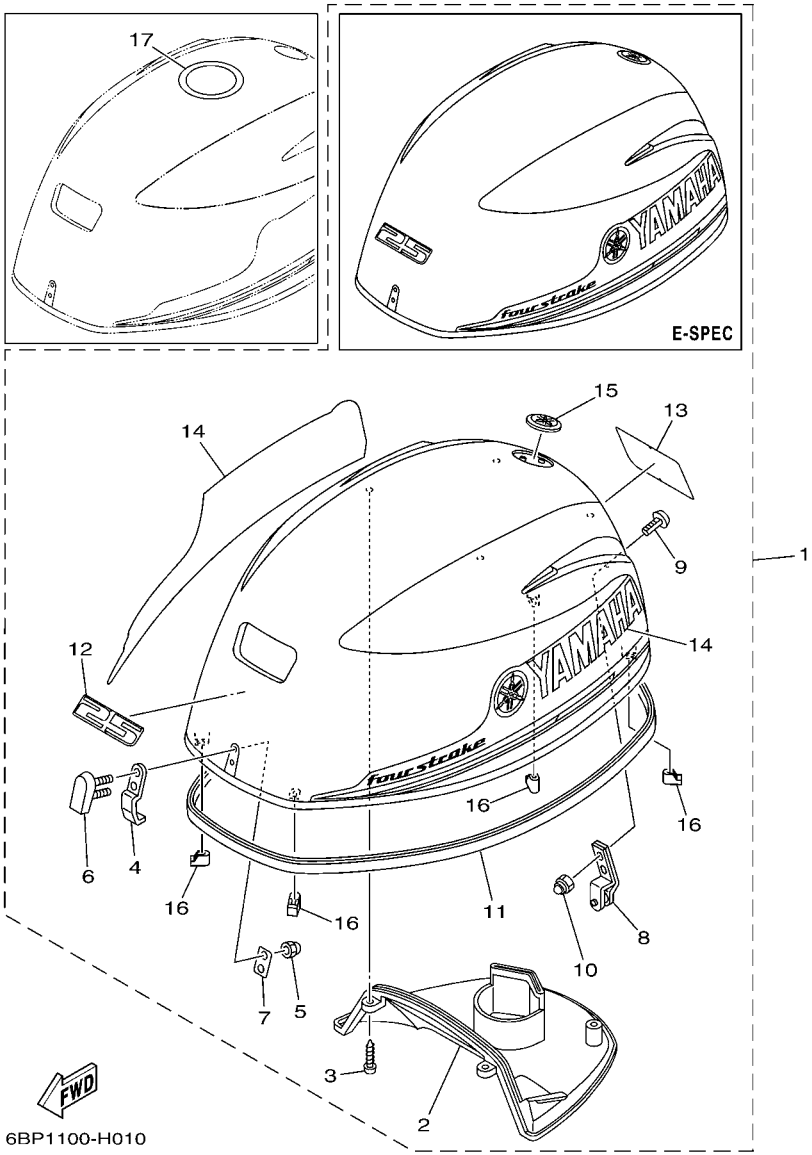

FIG. 1 TOP COWLING — CAPOT SUPERIEUR

REF. NO.	PART NO. N° PIECES	DESCRIPTION DESCRIPTION	ET	E	MH			REMARKS REMARQUES
1	6BP–42610–10	TOP COWLING ASSY CAPOT (ENS.)	1	1				
	6BP–42610–00	TOP COWLING ASSY CAPOT (ENS.)			1			
2	6BL–42613–00	.MOLDING, AIR DUCT .MANCHON A AIR	1	1	1			
3	97780–50616	.SCREW, TAPPING .VIS, TETE BOMBEE	4	4	4			
4	6BL–42651–00	.HOOK .CROCHET	1	1	1			
5	95380–05800	.NUT .ECROU	2	2	2			
6	6BG–42851–00	.COVER, CLAMP .COUVERCLE, BRIDE	1	1	1			
7	6BG–42649–00	.HOLDER, CLAMP BAND .SUPPORT, SANDOW DE SERRAGE	1	1	1			
8	6BL–42652–00	.HOOK .CROCHET	1	1	1			
9	90109–06047	.BOLT .BOULON	2	2	2			
10	90185–06M05	.NUT, SELF-LOCKING .ECROU,AUTO-BLOQUANT	2	2	2			
11	6CJ–42615–00	.SEAL .JOINT	1	1	1			
12	6BP–42677–00	.GRAPHIC, FRONT .ADHESIF, AVANT	1	1	1			
13	6BP–42678–00	.GRAPHIC, REAR .ADHESIF, ARRIERE	1	1	1			
14	6BP–W0070–00	.GRAPHIC SET .JEU DIEMBLEMES	1	1	1			
15	6AH–42697–01	.TUNING FORK MARK .MARQUE, YAMAHA	1	1	1			
16	6BG–42662–00	.DAMPER .AMORTISSEUR	4	4	4			
17	67F–13434–20	LABEL, CAUTION ETIQUETTE, ATTENTION	1	1	1			

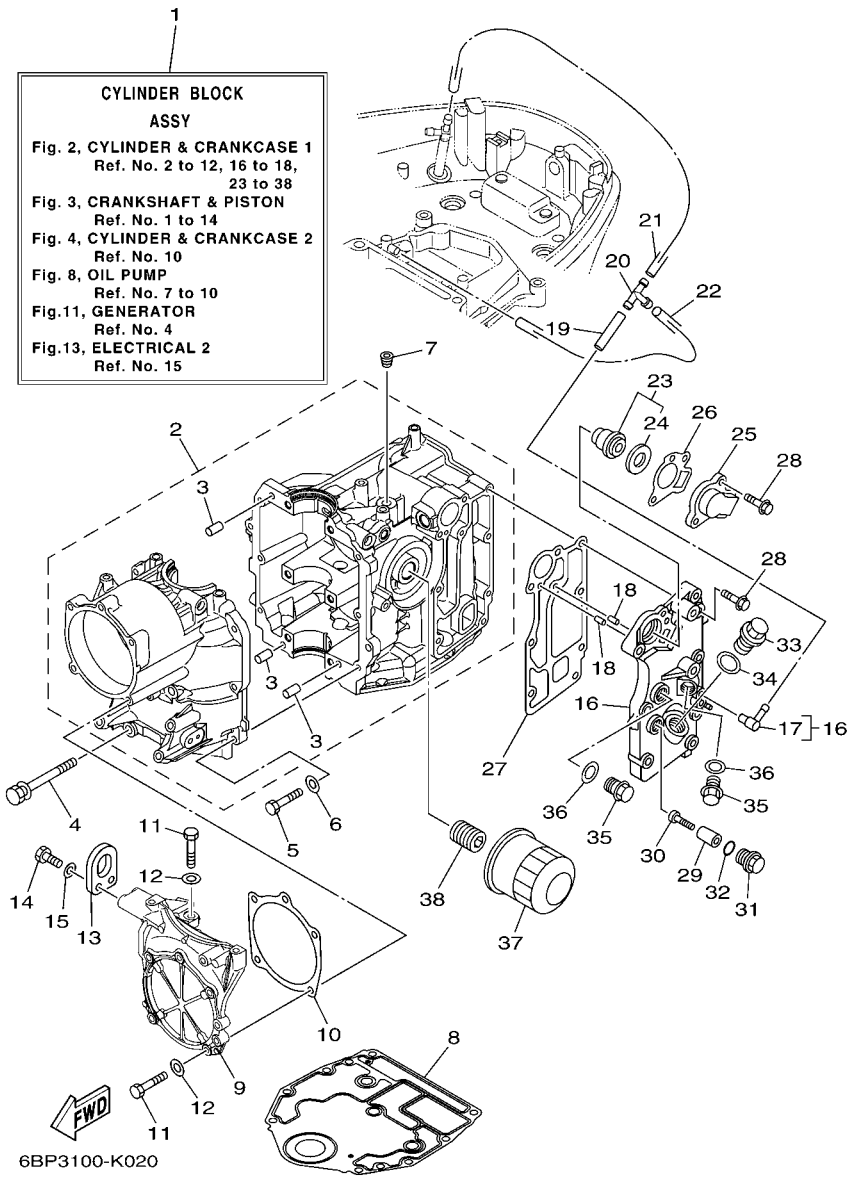

FIG. 2 CYLINDER & CRANKCASE 1 CYLINDRE & CARTER 1

REF. NO.	PART NO. N° PIECES	DESCRIPTION DESCRIPTION	ET	E	MH			REMARKS REMARQUES
1	6BL–W009B–00–1S	CYLINDER BLOCK ASSY CYLINDRE GROUPE (ENS.)	1	1	1			
2	6BL–15100–01	CRANKCASE ASSY CARTER DE MOTEUR COMPLET	1	1	1			
3	93606–12019	.PIN, DOWEL .GOUPILLE	3	3	3			
4	90119–08M01	BOLT, WITH WASHER BOULON, AVEC RONDELLE	6	6	6			
5	97013–06025	BOLT BOULON	7	7	7			
6	92903–06600	WASHER, PLATE RONDELLE, PLATE	7	7	7			
7	90344–51003	PLUG, TAPER SCREW PLOT, FILETE CONIQUE	1	1	1			
8	6BG–11351–00	GASKET, CYLINDER JOINT, D'EMBASE	1	1	1			
9	6BL–15121–00–1S	CRANKCASE 2 CARTER DE MOTEUR	1	1	1			
10	6BL–15663–00	SEAL JOINT	1	1	1			
11	97013–06025	BOLT BOULON	6	6	6			
12	92903–06600	WASHER, PLATE RONDELLE, PLATE	6	6	6			
13	62Y–11119–00	HANGER, ENGINE ANNEAU, LEVAGE	1	1	1			
14	97095–06020	BOLT BOULON	2	2	2			
15	92995–06600	WASHER RONDELLE	2	2	2			
16	6BL–41113–00–1S	OUTER COVER, EXHAUST COUVERCLE, ECHAPPEMENT	1	1	1			
17	676–11372–00	.NIPPLE, HOSE .RACCORD, TUYAU	1	1	1			
18	93604–10M03	PIN, DOWEL CLAVETTE	2	2	2			
19	90445–09057	HOSE (L43) DURITE (L43)	1	1	1			
20	688–24378–00	PIPE, JOINT 3 DURITE RACCORDEMENT 3	1	1	1			
21	90445–09251	HOSE (L350) DURITE (L350)	1	1	1			
22	90445–09104	HOSE (L300) DURITE (L300)	1	1	1			
23	6G8–12411–03	THERMOSTAT THERMOSTAT	1	1	1			
24	688–12412–00	.SEAL, THERMOSTAT .JOINT, THERMOSTAT	1	1	1			
25	6C5–12413–00–9S	COVER, THERMOSTAT COUVERCLE, THERMOSTAT	1	1	1			
26	62Y–12414–00	GASKET, COVER JOINT, COUVERCLE	1	1	1			
27	6BL–41114–00	GASKET, EXHAUST OUTER COVER JOINT, COUVERCLE D'ECHAPPEMENT	1	1	1			

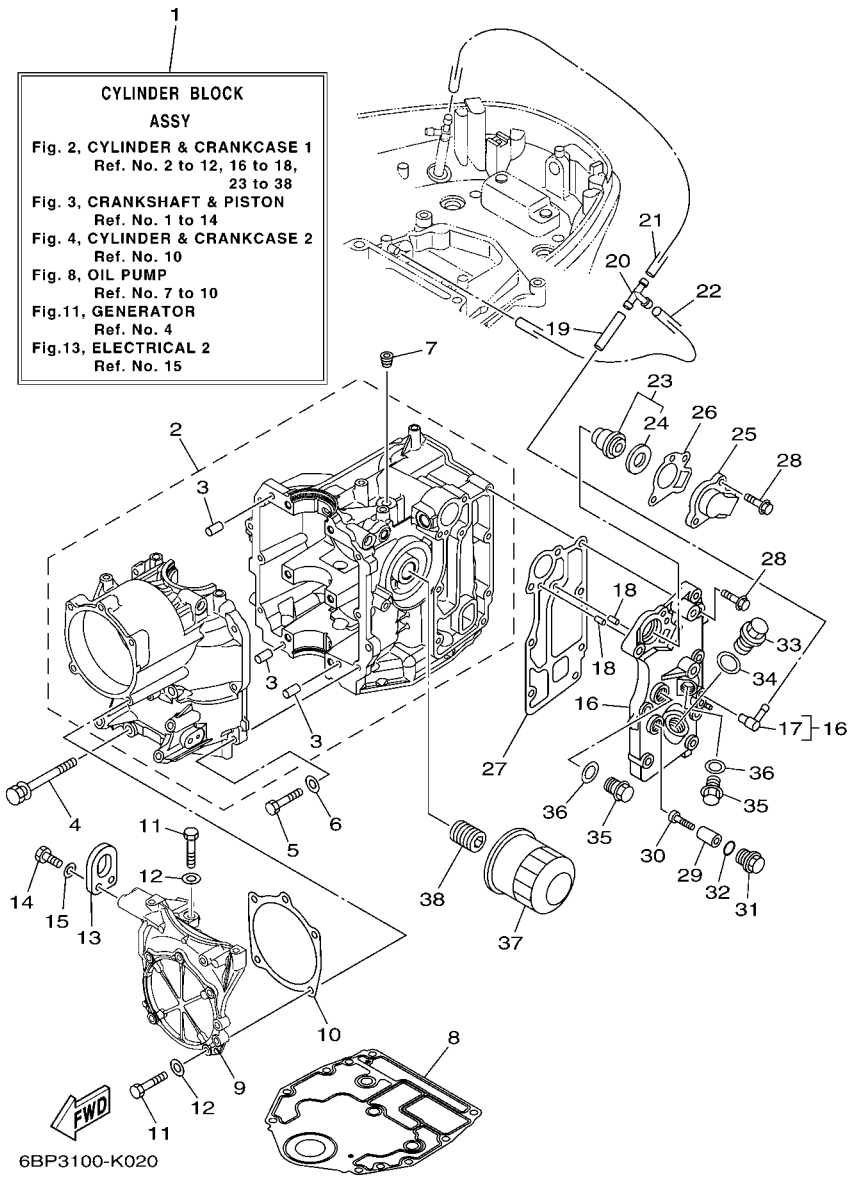

FIG. 2 CYLINDER & CRANKCASE 1 CYLINDRE & CARTER 1

REF. NO.	PART NO. N° PIECES	DESCRIPTION DESCRIPTION	ET	E	MH			REMARKS REMARQUES
28	90119–06MA5	BOLT, WITH WASHER BOULON, AVEC RONDELLE	8	8	8			
29	6G8–11325–00	ANODE ANODE	1	1	1			
30	97880–05025	SCREW, PAN HEAD VIS, TETE TRONCONIQUE	1	1	1			
31	6G8–11197–01	PLUG, BLIND PLOT, BORGNE	1	1	1			
32	93210–13M63	O-RING JOINT TORIQUE	1	1	1			
33	90340–18M09	PLUG, STRAIGHT SCREW PLOT, FILETE DROIT	1	1	1			
34	90430–18130	GASKET JOINT	1	1	1			
35	90340–14M06	PLUG, STRAIGHT SCREW PLOT, FILETE DROIT	2	2	2			
36	90430–14115	GASKET JOINT	2	2	2			
37	5GH–13440–20	ELEMENT ASSY, OIL CLEANER ELEMENT, FILTRE A HUILE	1	1	1			
38	6C5–12858–00	BOLT, UNION BOULON, RACCORD	1	1	1			

FIG. 3 CRANKSHAFT & PISTON VILEBREQUIN & PISTON

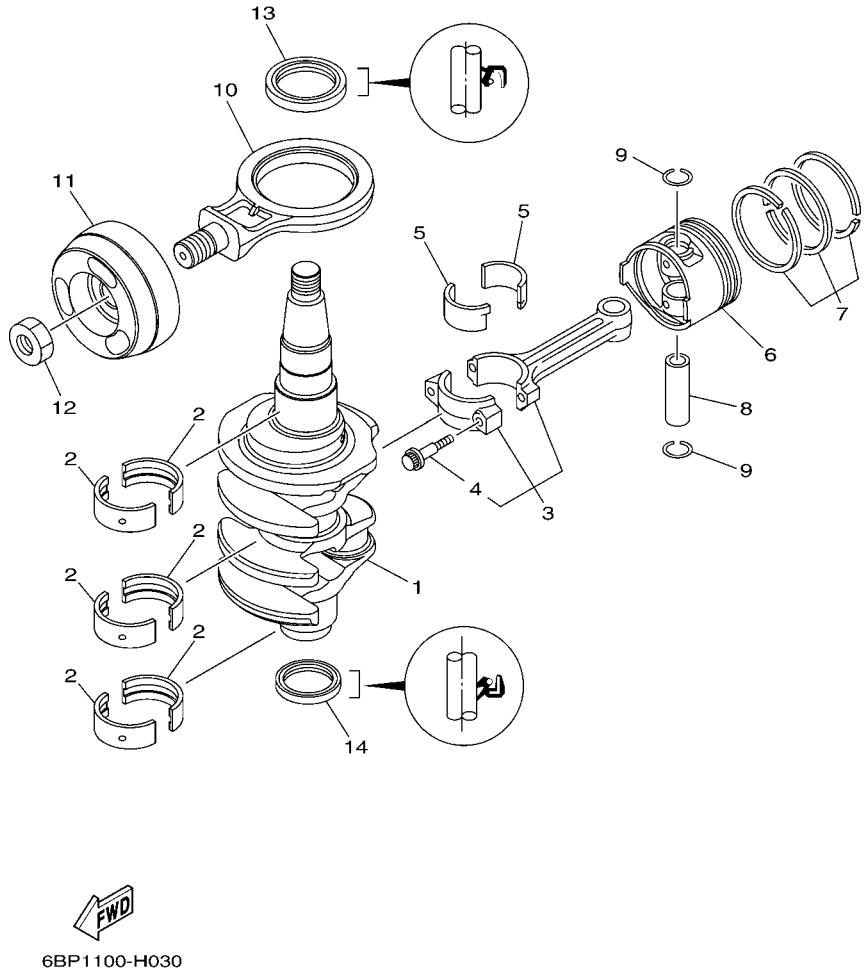

REF. NO.	PART NO. N° PIECES	DESCRIPTION DESCRIPTION	ET	E	MH			REMARKS REMARQUES
1	6BL–11411–00	CRANKSHAFT VILEBREQUIN COMPLET	1	1	1			
2	6BG–11416–10	PLANE BEARING, CRANKSHAFT 1 COUSSINET DE VILEBREQUIN 1	6	6	6			UR RED UR RED
	6BG–11416–20	PLANE BEARING, CRANKSHAFT 1 COUSSINET DE VILEBREQUIN 1	6	6	6			UR PINK UR PINK
	6BG–11416–30	PLANE BEARING, CRANKSHAFT 1 COUSSINET DE VILEBREQUIN 1	6	6	6			UR GREEN UR GREEN
3	6C5–11650–00	CONNECTING ROD ASSY BIELLE COMPLETTE	2	2	2			
4	6C5–11654–00	.BOLT, CONNECTING ROD .BOULON, BIELLE	2	2	2			
5	6CJ–11656–20	PLANE BEARING, CONNECTING ROD ROULEMENT DE BIELLE	4	4	4			UR PINK UR PINK
	6CJ–11656–30	PLANE BEARING, CONNECTING ROD ROULEMENT DE BIELLE	4	4	4			UR GREEN UR GREEN
	6CJ–11656–10	PLANE BEARING, CONNECTING ROD ROULEMENT DE BIELLE	4	4	4			UR RED UR RED
6	69W–11631–01–97	PISTON (STD) PISTON (STD)	2	2	2			
	69W–11635–01	PISTON (0.25MM O/S) PISTON (0.25MM O/S)	2	2	2			AP AP
	69W–11636–01	PISTON (0.50MM O/S) PISTON (0.50MM O/S)	2	2	2			AP AP
7	67C–11603–00	PISTON RING SET (STD) JEU DE SEGMENTS (STD)	2	2	2			
	67C–11604–00	PISTON RING SET (0.25MM O/S) JEU DE SEGMENTS (0.25MM O/S)	2	2	2			AP AP
	67C–11605–00	PISTON RING SET (0.50MM O/S) JEU DE SEGMENTS (0.50MM O/S)	2	2	2			AP AP
8	62Y–11633–00	PIN, PISTON AXE, PISTON	2	2	2			
9	93450–17129	CIRCLIP CIRCLIP, TYPE S	4	4	4			
10	6BL–11665–00	CONNECTING ROD ASSY 3 BIELLE COMPLETE	1	1	1			
11	6BL–11642–00	PISTON 2 (STD) PISTON 2 (STD)	1	1	1			
12	90170–20137	NUT ECROU	1	1	1			
13	93102–43M42	OIL SEAL JOINT SPY	1	1	1			
14	93101–35002	OIL SEAL JOINT SPY	1	1	1			

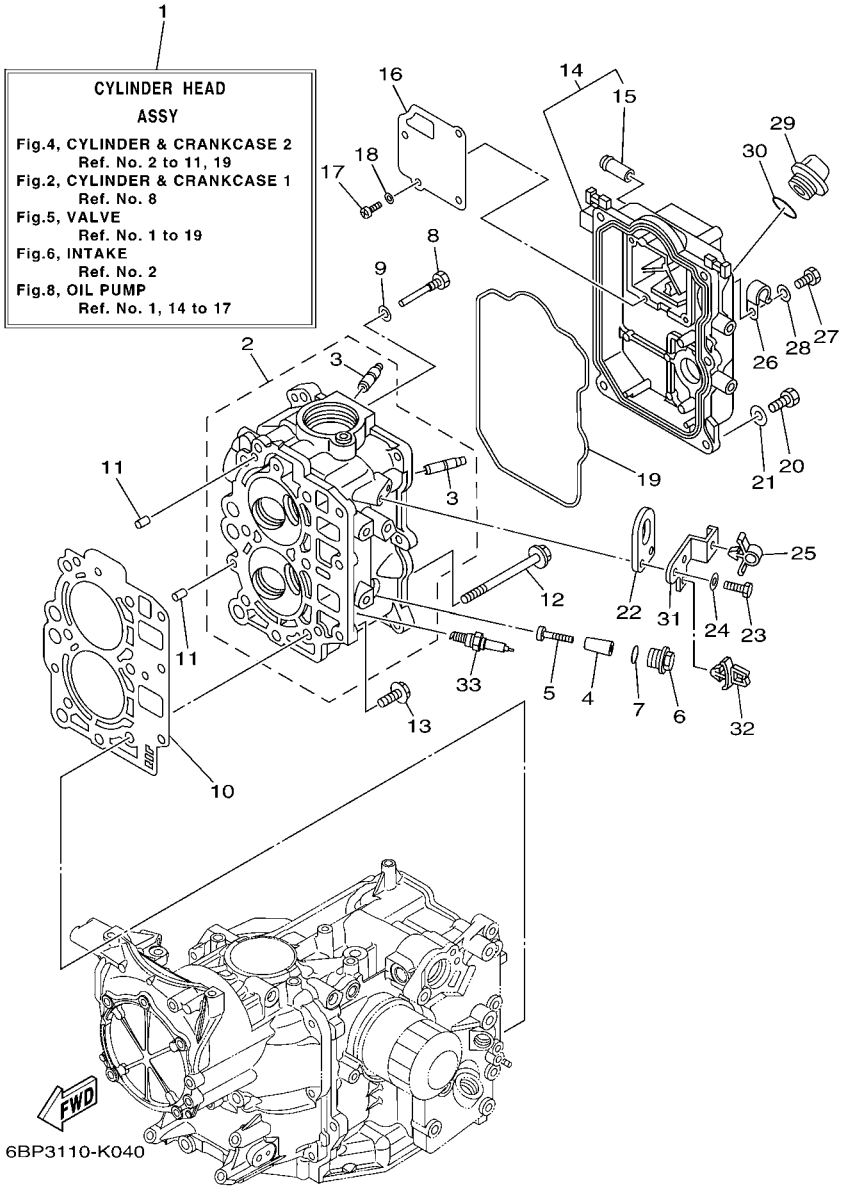

FIG. 4 CYLINDER & CRANKCASE 2 CYLINDRE & CARTER 2

REF. NO.	PART NO. N° PIECES	DESCRIPTION DESCRIPTION	ET	E	MH			REMARKS REMARQUES
1	6BL–W009A–00–1S	CYLINDER HEAD ASSY CULASSE (ENS.)	1	1	1			
2	6BL–11111–00–1S	HEAD, CYLINDER 1 CULASSE	1	1	1			
3	62Y–11133–30	.GUIDE, VALVE 1 .GUIDE, SOUPAPE 1	4	4	4			
4	6BL–11325–00	ANODE ANODE	2	2	2			
5	98980–05035	SCREW, BIND VIS, DE PRESSION	2	2	2			
6	6G8–11197–01	PLUG, BLIND PLOT, BORGNE	2	2	2			
7	93210–13M63	O-RING JOINT TORIQUE	2	2	2			
8	90109–06M65	BOLT BOULON	1	1	1			
9	90430–06014	GASKET JOINT	1	1	1			
10	6BL–11181–00	GASKET, CYLINDER HEAD 1 JOINT, DE CULASSE 1	1	1	1			
11	93606–12019	PIN, DOWEL GOUPILLE	2	2	2			
12	90105–09005	BOLT, FLANGE BOULON	6	6	6			
13	90119–06MA3	BOLT, WITH WASHER BOULON, AVEC RONDELLE	3	3	3			
14	6BL–11191–00–1S	COVER, CYLINDER HEAD 1 COUVERCLE, CULASSE 1	1	1	1			
15	62Y–14485–00	.PIPE, JOINT .DURITE	1	1	1			
16	6BG–11168–00	COVER, BREATHER COUVERCLE, RENIFLARD	1	1	1			
17	98507–04010	SCREW, PAN HEAD VIS, TETE TRONCONIQUE	4	4	4			
18	92907–04600	WASHER RONDELLE	4	4	4			
19	6BL–11356–00	SEAL, CYLINDER 2 JOINT, SPY CYLINDRE	1	1	1			
20	97095–06020	BOLT BOULON	5	5	5			
21	92995–06600	WASHER RONDELLE	5	5	5			
22	62Y–11119–00	HANGER, ENGINE ANNEAU, LEVAGE	1	1	1			
23	97095–06020	BOLT BOULON	2	2	2			
24	92995–06600	WASHER RONDELLE	2	2	2			
25	90464–09023	CLAMP BRIDE	1	1	1			
26	90465–08M83	CLAMP BRIDE	1	1	1			
27	97095–06012	BOLT BOULON	1	1	1			

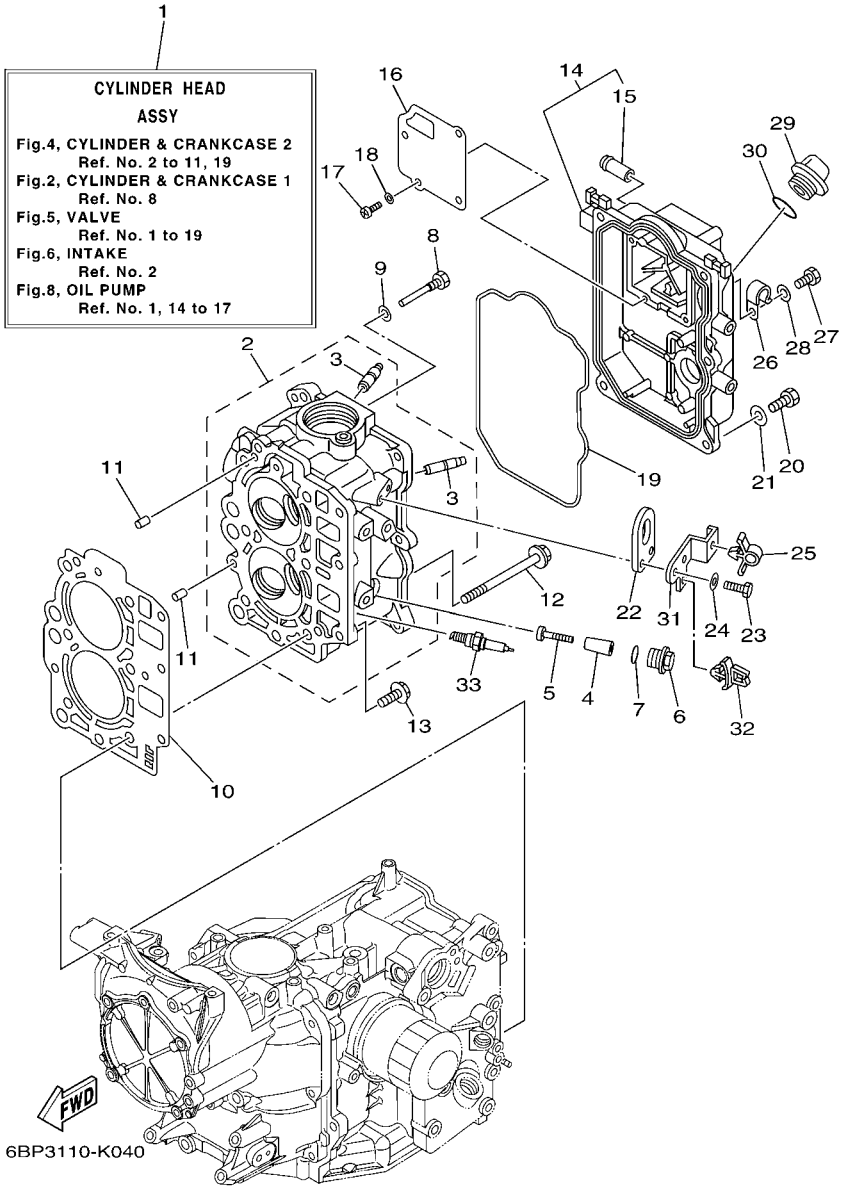

FIG. 4 CYLINDER & CRANKCASE 2 CYLINDRE & CARTER 2

REF. NO.	PART NO. N° PIECES	DESCRIPTION DESCRIPTION	ET	E	MH			REMARKS REMARQUES
28	92995–06600	WASHER RONDELLE	1	1	1			
29	6G8–15363–00	PLUG, OIL PLOT, HUILE	1	1	1			
30	93210–24M79	O-RING JOINT TORIQUE	1	1	1			
31	6BL–82398–00	PLATE 3 PLAQUETTE 3	1	1	1			
32	90464–06001	CLAMP BRIDE	1	1	1			
33	94702–00418	PLUG, SPARK (NGK DPR6EB) BOUGIE D,ALLUMAGE (NGK DPR6EB)	2	2	2			

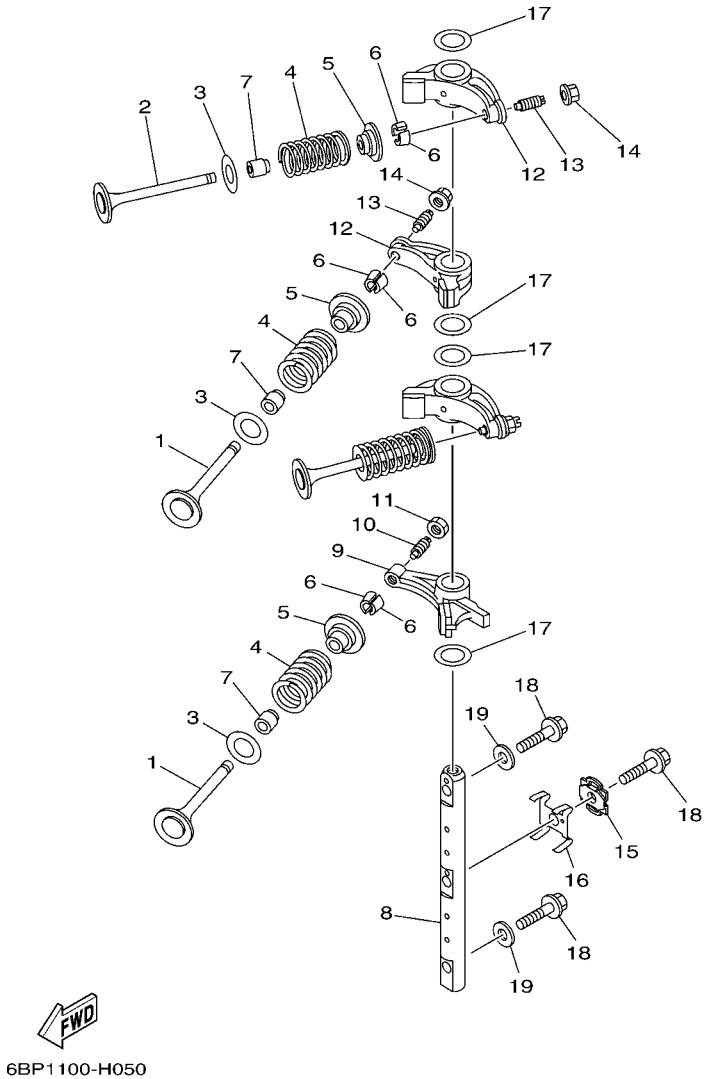

FIG. 5 VALVE SOUPAPE

REF. NO.	PART NO. N° PIECES	DESCRIPTION DESCRIPTION	ET	E	MH			REMARKS REMARQUES
1	69W–12111–00	VALVE, INTAKE SOUPAPE, ADMISSION	2	2	2			
2	69W–12121–00	VALVE, EXHAUST SOUPAPE, ECHAPPEMENT	2	2	2			
3	62Y–12116–00	SEAT, VALVE SPRING SIEGE, RESSORT DE SOUPAPE	4	4	4			
4	51Y–12114–00	SPRING, VALVE OUTER RESSORT DE SOUPAPE, EXTERNE	4	4	4			
5	30X–12117–00	RETAINER, VALVE SPRING BUTEE DE RESSORT DE SOUPAPE	4	4	4			
6	30X–12118–00	COTTER, VALVE FRAISE, SOUPAPE	8	8	8			
7	51Y–12119–00	SEAL, VALVE STEM JOINT, QUEUE DE SOUPAPE	4	4	4			
8	6BL–12146–00	SHAFT, ROCKER AXE, CULBUTEUR	1	1	1			
9	62Y–12151–00	ARM, VALVE ROCKER CULBUTEUR	1	1	1			
10	64J–12159–00	SCREW, VALVE ADJUSTING VIS, REGLAGE DE SOUPAPE	1	1	1			
11	62Y–12158–00	NUT, LOCK CONTRE-ECROU	1	1	1			
12	6C5–12151–00	ARM, VALVE ROCKER CULBUTEUR	3	3	3			
13	6C5–12159–00	SCREW, VALVE ADJUSTING VIS, REGLAGE DE SOUPAPE	3	3	3			
14	6C5–12158–00	NUT, LOCK CONTRE-ECROU	3	3	3			
15	6BL–12231–00	GUIDE, STOPPER 1 GUIDE, BUTEE 1	1	1	1			
16	6BL–12233–00	PLATE, GUIDE STOPPER 1 PLAQUE, GUIDE BUTEE 1	1	1	1			
17	90201–16014	WASHER, PLATE RONDELLE, PLATE	4	4	4			
18	90105–08060	BOLT, FLANGE BOULON	3	3	3			
19	92990–08200	WASHER, PLAIN RONDELLE, PLATE	2	2	2			

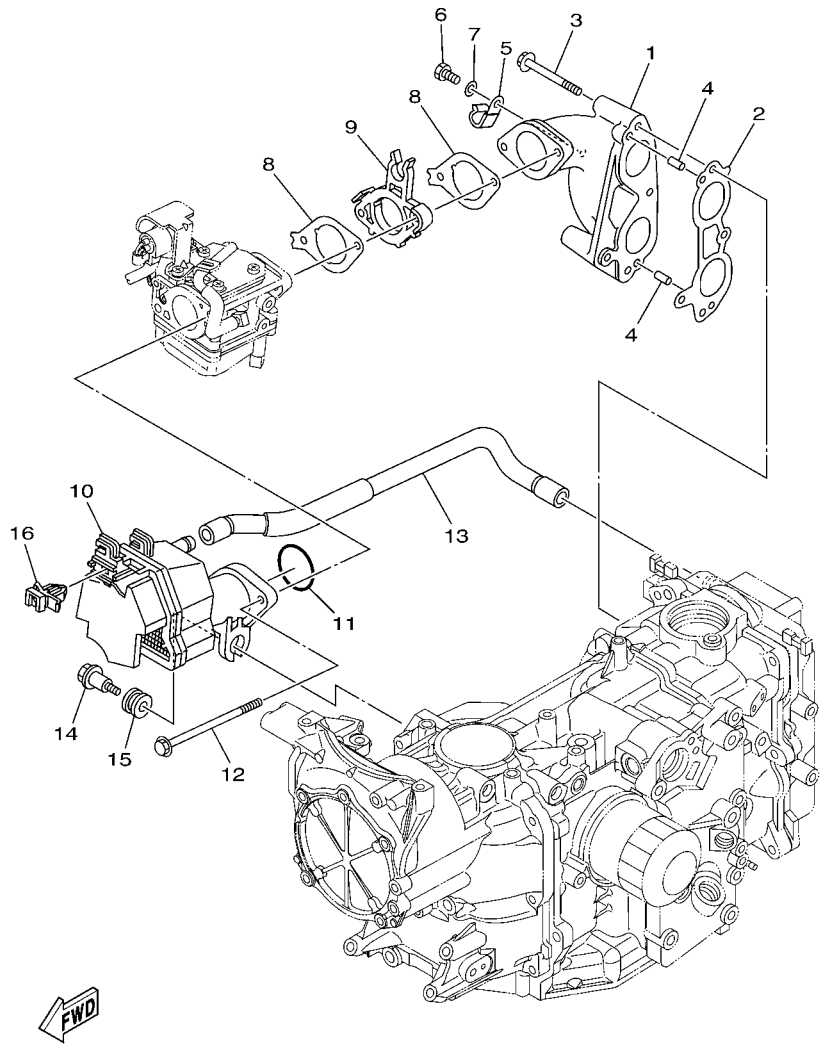

6BP1100-H060

FIG. 6 INTAKE ADMISSION

REF. NO.	PART NO. N° PIECES	DESCRIPTION DESCRIPTION	ET	E	MH			REMARKS REMARQUES
1	6BL–13641–00–94	MANIFOLD 1 TUBULURE 1	1	1	1			
2	6BL–13645–00	GASKET, MANIFOLD 1 JOINT, TUBULURE 1	1	1	1			
3	97595–06555	BOLT, WITH WASHER VIS HEXAGONAL AVC RONDELLE	4	4	4			
4	91690–50014	PIN, SPRING AGRAFFE	2	2	2			
5	90465–08M83	CLAMP BRIDE	1	1	1			
6	97095–06016	BOLT BOULON	1	1	1			
7	92995–06600	WASHER RONDELLE	1	1	1			
8	6BL–13646–00	GASKET, MANIFOLD 2 JOINT, TUBULURE 2	2	2	2			
9	6BL–14271–00	INSULATOR ISOLATEUR	1	1	1			
10	6BL–14440–00	SILENCER ASSY, INTAKE SIENCIEUX D'ADMISSION	1	1	1			
11	93210–39ME4	O-RING JOINT TORIQUE	1	1	1			
12	95895–06100	BOLT, FLANGE BOULON	2	2	2			
13	6BL–15373–00	PIPE, BREATHER DURITE DE RENIFLARD	1	1	1			
14	90109–06MA1	BOLT BOULON	1	1	1			
15	90480–16616	GROMMET PASSE-FIL	1	1	1			
16	90464–09M47	CLAMP BRIDE	1	1	1			

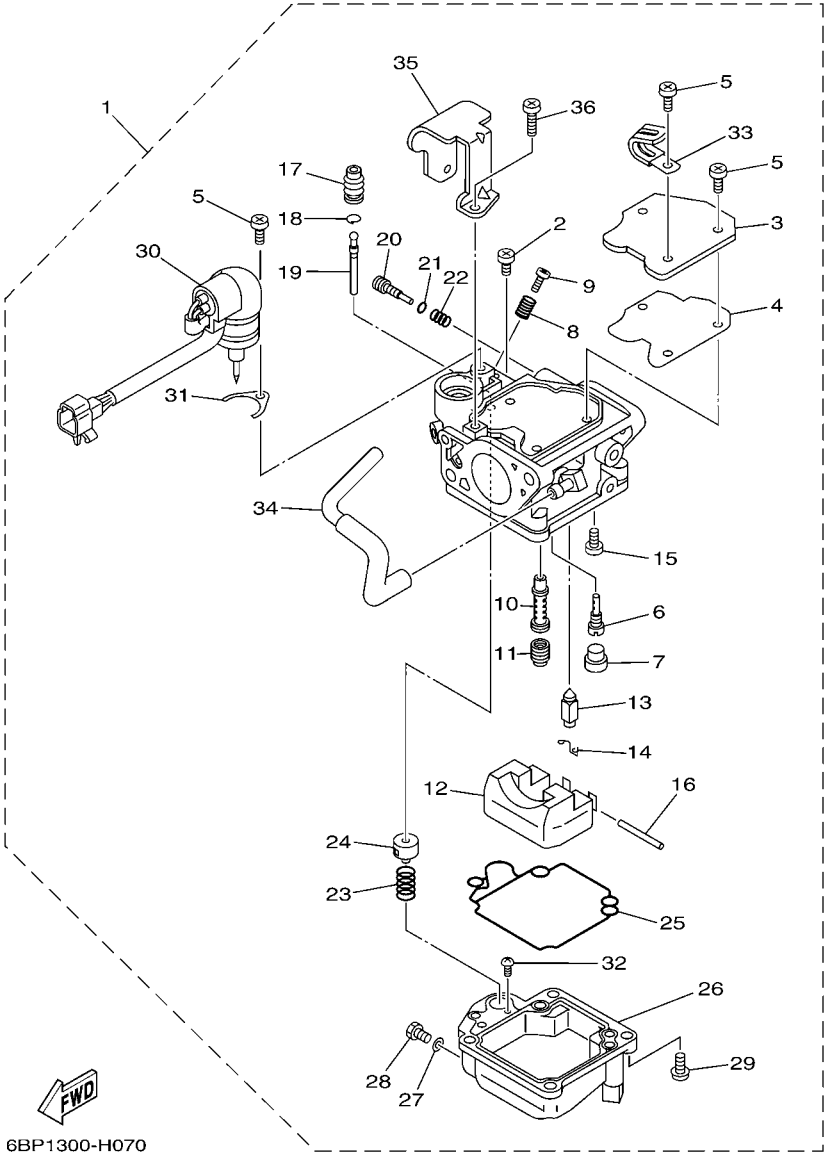

FIG. 7 CARBURETOR CARBURATEUR

REF. NO.	PART NO. N° PIECES	DESCRIPTION DESCRIPTION	ET	E	MH			REMARKS REMARQUES
1	6BL–14301–10	CARBURETOR ASSY 1 CARBURATEUR COMPLET 1	1	1	1			
2	98580–04006	.SCREW, PAN HEAD .VIS	1	1	1			
3	65W–14572–00	.PLATE .PLAQUE	1	1	1			
4	65W–14126–10	.GASKET .JOINT	1	1	1			
5	97803–04010	.SCREW, PAN HEAD .VIS, CRUCIFORME	4	4	4			
6	676–14948–05	.JET (#45) .GICLEUR (#45)	1	1	1			
7	679–14966–00	.RUBBER CAP .CAOUTCHOUC CASQUILLO	1	1	1			
8	90501–10326	.SPRING, COMPRESSION .RESSORT, COMPRESSION	1	1	1			
9	63V–14523–00	.SCREW, STOP .VIS, BUTEE	1	1	1			
10	65W–14947–90	.JET, NEEDLE .GICLEUR DE STARTER	1	1	1			
11	6BL–14943–28	.JET, MAIN (#105) .GICLEUR, PRINCIPAL (#105)	1	1	1			
12	63V–14985–00	.FLOAT .FLOTTEUR	1	1	1			
13	6AH–14546–00	.VALVE, NEEDLE .POINTEAU	1	1	1			
14	663–14159–00	.CLIP .JONC	1	1	1			
15	98580–04008	.SCREW, PAN HEAD .VIS	1	1	1			
16	6H4–14548–00	.PIN, FLOAT ARM .AXE, BRAS DE FLOTTEUR	1	1	1			
17	65W–14373–02	.COVER, PLUNGER CAP .COUVERCLE DE PLONGEUR	1	1	1			
18	65W–1439G–00	.CLIP 1 .JONC 1	1	1	1			
19	65W–14379–00	.ROD, STARTER .TRINGLE, STARTER	1	1	1			
20	67C–14923–20	.SCREW, PILOT .VIS, RALENTI	1	1	1			
21	67C–14397–00	.O-RING .JOINT TORIQUE	1	1	1			
22	67C–14555–00	.SPRING .RESSORT	1	1	1			
23	65W–14335–00	.SPRING, PLUNGER .RESSORT, PLONGEUR	1	1	1			
24	65W–14371–00	.PLUNGER, STARTER .PLONGEUR, STARTER	1	1	1			
25	65W–14384–00	.GASKET, FLOAT CHAMBER .JOINT, CUVE DE FLOTTEUR	1	1	1			
26	65W–14980–20	.BODY, FLOAT CHAMBER .CORPS, CUVE DE FLOTTEUR	1	1	1			
27	65W–14398–00	.GASKET .JOINT	1	1	1			

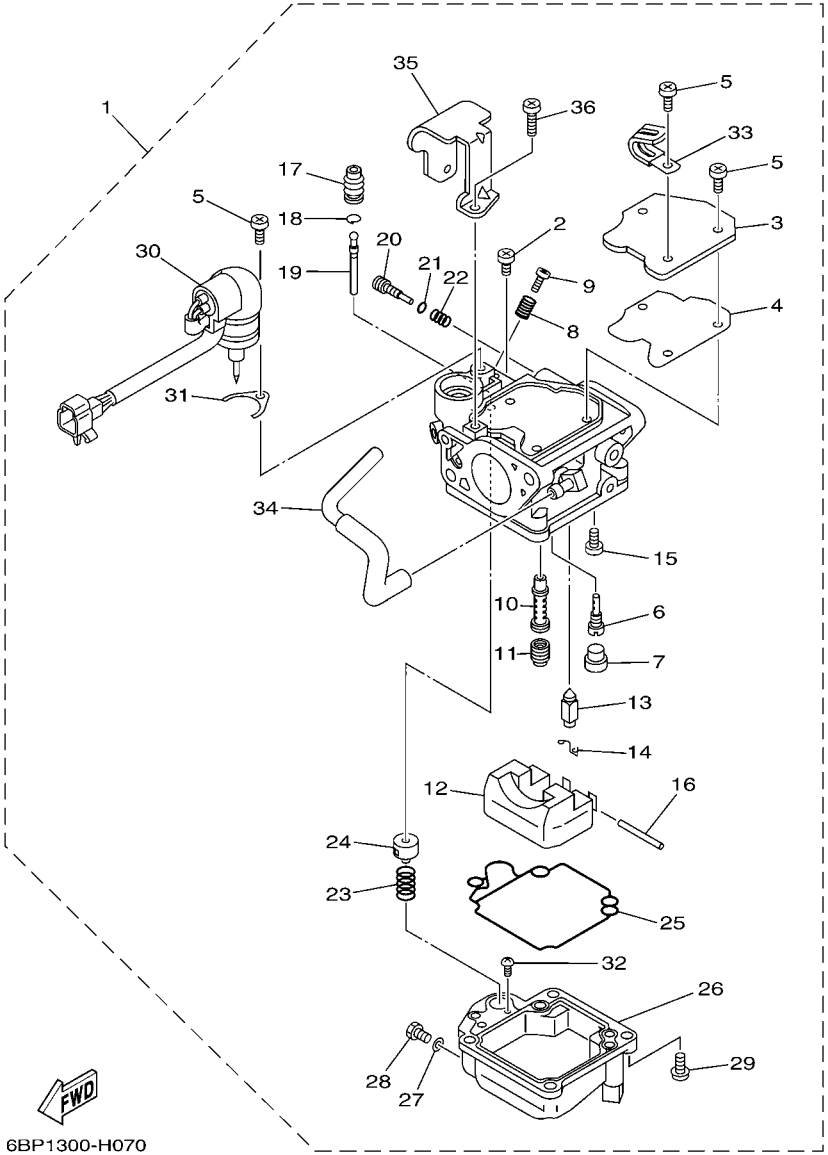

FIG. 7 CARBURETOR CARBURATEUR

REF. NO.	PART NO. N° PIECES	DESCRIPTION DESCRIPTION	ET	E	MH			REMARKS REMARQUES
28	65W–14992–00	.SCREW, DRAIN .BOUCHON, PURGE	1	1	1			
29	97980–04114	.SCREW, WITH WASHER .VIS, AVEC RONDELLE	4	4	4			
30	6BL–14380–00	.PRIME STARTER ASSY .STARTER AUTOMATIQUE	1	1	1			
31	65W–14346–00	.PLATE .PLAQUE	1	1	1			
32	67C–14567–00	.SCREW .VIS	1	1	1			
33	67F–14255–00	.PLATE .PLAQUE	1	1	1			
34	65W–14807–00	.HOSE COMP. .DURITE (ENS.)	1	1	1			
35	6BL–14346–00	.PLATE .PLAQUE	1	1	1			
36	97980–04108	.SCREW, WITH WASHER .VIS, AVEC RONDELLE	2	2	2			

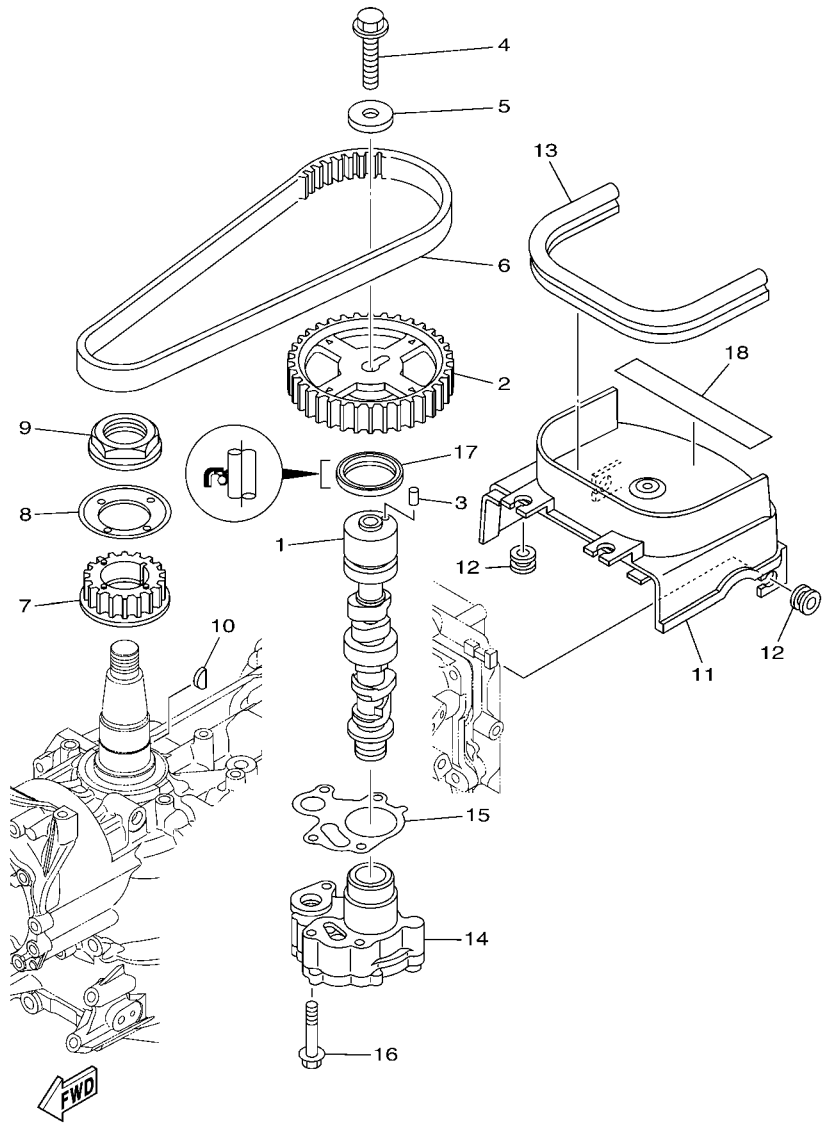

6BP1300-H080

FIG. 8 OIL PUMP — POMPE A HUILE

REF. NO.	PART NO. N° PIECES	DESCRIPTION DESCRIPTION	ET	E	MH			REMARKS REMARQUES
1	6BL–12171–00	CAMSHAFT 1 ARBRE A CAMES 1	1	1				
	6BL–12170–00	CAMSHAFT ASSY 1 ENS ARBRE A CAMES 1			1			
2	6C5–11537–00	GEAR, DRIVEN PIGNON SECONDAIRE	1	1	1			
3	93605–17002	PIN, DOWEL AXE	1	1	1			
4	95817–10035	BOLT, FLANGE BOULON, A COLLERETTE	1	1	1			
5	90201–10144	WASHER, PLATE RONDELLE, PLATE	1	1	1			
6	6C5–46241–00	BELT COURROIE TRAPEZOIDALE	1	1	1			
7	6C5–11536–00	GEAR, DRIVE ENGRENAGE, MENANT	1	1	1			
8	62Y–11557–00	WASHER 1 RONDELLE 1	1	1	1			
9	90179–35001	NUT ECROU	1	1	1			
10	90280–03M01	KEY, WOODRUFF CLAVETTE, DEMI-LUNE	1	1	1			
11	6BL–46297–00	COVER, DUST COUVERCLE, POUSSIERE	1	1	1			
12	90480–12314	GROMMET PASSE-FIL	4	4	4			
13	6BL–42617–00	DAMPER, FORM BOURRELET, CAOUTCHOUC	1	1	1			
14	6BL–13300–00	OIL PUMP ASSY POMPE A HUILE COMPLETE	1	1	1			
15	6C5–13329–00	GASKET, PUMP COVER JOINT, COUVERCLE DE POMPE	1	1	1			
16	90119–06025	BOLT, WITH WASHER BOULON, AVEC RONDELLE	4	4	4			
17	93102–37M40	OIL SEAL JOINT SPY	1	1	1			
18	6BP–13437–60	MARK, CAUTION MAKER	1	1	1			

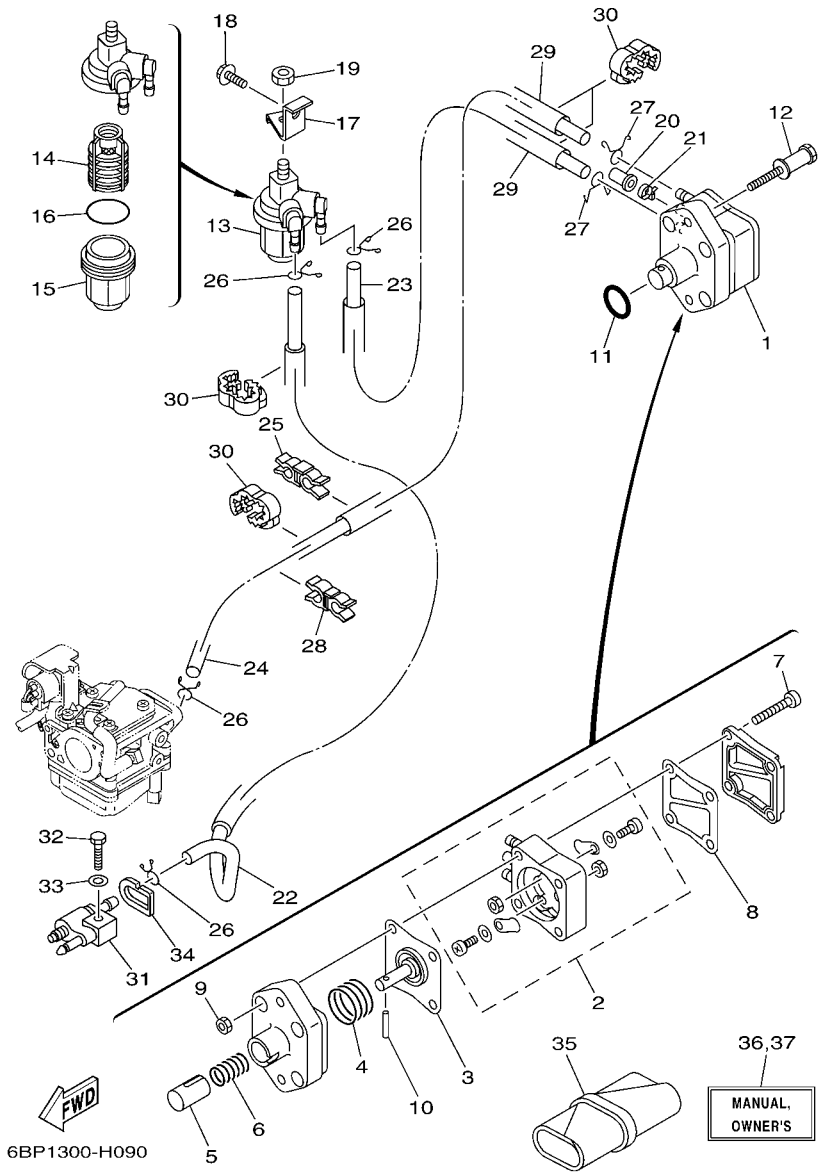

FIG. 9 FUEL CARBURANT

REF. NO.	PART NO. N° PIECES	DESCRIPTION DESCRIPTION	ET	E	MH			REMARKS REMARQUES
1	62Y–24410–04	FUEL PUMP ASSY POMPE A ESSENCE	1	1	1			
2	62Y–24415–01	.BODY 4 .CORPS 4	1	1	1			
3	62Y–24411–02	.DIAPHRAGM .DIAPHRAGME	1	1	1			
4	62Y–24423–00	.SPRING, DIAPHRAGM .RESSORT, DIAPHRAGME	1	1	1			
5	62Y–13131–01	.PLUNGER .PLONGEUR	1	1	1			
6	62Y–24454–00	.SPRING .RESSORT	1	1	1			
7	62Y–24444–01	.SCREW .VIS	4	4	4			
8	6C5–24471–00	.DIAPHRAGM .DIAPHRAGME	1	1	1			
9	95380–05600	.NUT .ECROU	4	4	4			
10	62Y–24374–01	.PIN .PIN	1	1	1			
11	93210–24M79	O-RING JOINT TORIQUE	1	1	1			
12	90109–06266	BOLT BOULON	2	2	2			
13	61N–24560–00	FILTER ASSY ENS FILTRE	1	1	1			
14	61N–24563–00	.ELEMENT, FILTER .ELEMENT, FILTRE	1	1	1			
15	61N–24521–00	.CUP, FILTER .CUVETTE, FILTRE	1	1	1			
16	93210–32738	.O-RING .JOINT TORIQUE	1	1	1			
17	6D5–24566–00	BRACKET, FILTER SUPPORT, FILTRE	1	1	1			
18	95895–08016	BOLT, FLANGE BOULON	1	1	1			
19	95380–08600	NUT ECROU	1	1	1			
20	6BL–24481–00	PLUG COUVERCLE	1	1	1			
21	90465–11M10	CLAMP BRIDE	1	1	1			
22	6BL–24311–00	PIPE, FUEL 1 DURITE A ESSENCE	1	1	1			
23	90445–10M20	HOSE (L150) DURITE (L150)	1	1	1			
24	90445–10MG7	HOSE (L350) DURITE (L350)	1	1	1			
25	90464–10M59	CLAMP BRIDE	1	1	1			
26	90467–09M17	CLIP JONC	4	4	4			
27	90467–10M04	CLIP JONC	2	2	2			

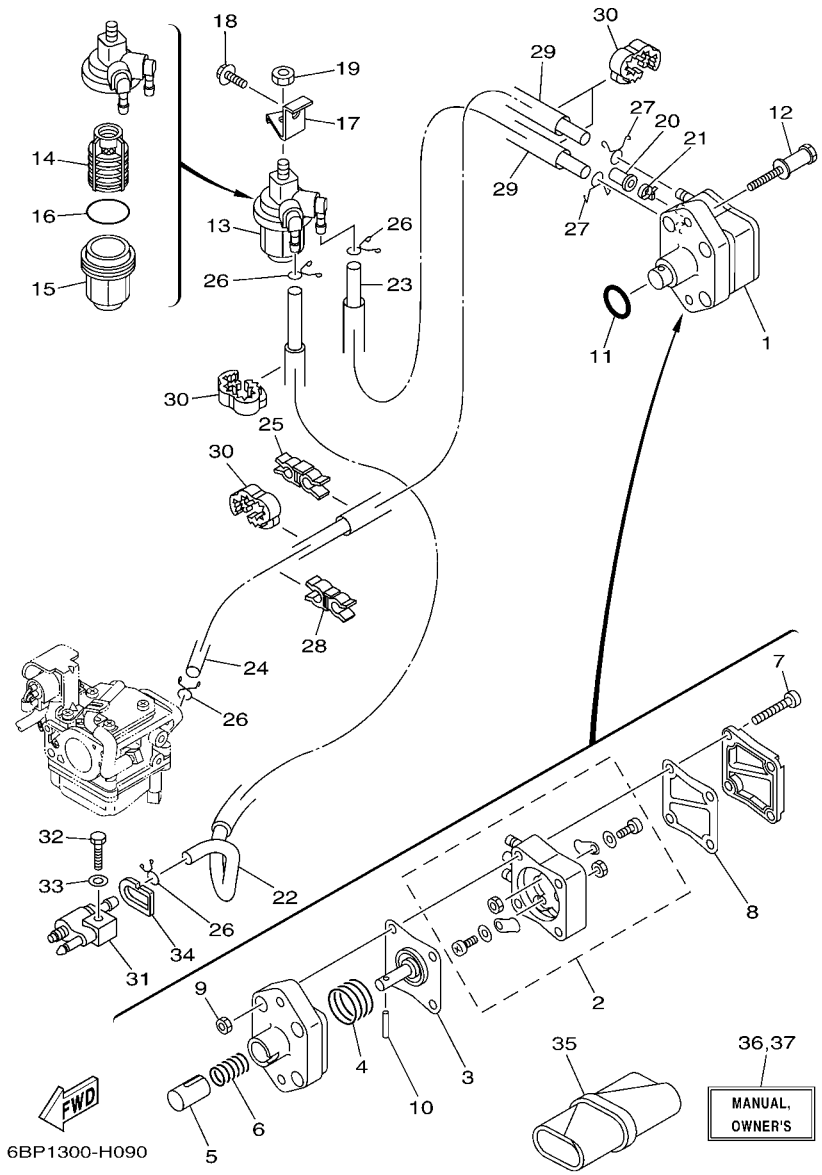

FIG. 9 FUEL CARBURANT

REF. NO.	PART NO. N° PIECES	DESCRIPTION DESCRIPTION	ET	E	MH			REMARKS REMARQUES
28	90464–11009	CLAMP BRIDE	1	1	1			
29	90446–15003	HOSE (L100) DURITE (L100)	2	2	2			
30	90464–13227	CLAMP BRIDE	4	4	4			
31	6G1–24304–02	FUEL PIPE JOINT COMP. 1 DURITE RACCORDEMT. A ESSENCE	1	1	1			
32	97095–06025	BOLT BOULON	1	1	1			
33	92995–06600	WASHER RONDELLE	1	1	1			
34	61N–24329–00	SEAL JOINT	1	1	1			
35	62Y–28100–00	TOOL KIT TROUSSE A OUTILS	1	1	1			AP AP
36	6BP–28199–73–E0	MANUAL,OWNER'S MANUEL D'UTILISATION	1	1	1			UR (E) UR (E)
	6BP–28199–73–F0	MANUAL,OWNER'S MANUEL D'UTILISATION	1	1	1			UR (F) UR (F)
	6BP–28199–73–S0	MANUAL,OWNER'S MANUEL D'UTILISATION	1	1	1			UR (ES) UR (ES)
	6BP–28199–73–G0	MANUAL,OWNER'S MANUEL D'UTILISATION	1	1	1			UR (D) UR (D)
	6BP–28199–73–D0	MANUAL,OWNER'S MANUEL D'UTILISATION	1	1	1			UR (NL) UR (NL)
	6BP–28199–73–H0	MANUAL,OWNER'S MANUEL D'UTILISATION	1	1	1			UR (I) UR (I)
37	6BP–28199–83–K0	MANUAL,OWNER'S MANUEL D'UTILISATION	1	1	1			UR (DK) UR (DK)
	6BP–28199–83–R0	MANUAL,OWNER'S MANUEL D'UTILISATION	1	1	1			UR (GR) UR (GR)
	6BP–28199–83–P0	MANUAL,OWNER'S MANUEL D'UTILISATION	1	1	1			UR (P) UR (P)
	6BP–28199–83–N0	MANUAL,OWNER'S MANUEL D'UTILISATION	1	1	1			UR (N) UR (N)
	6BP–28199–83–M0	MANUAL,OWNER'S MANUEL D'UTILISATION	1	1	1			UR (S) UR (S)
	6BP–28199–83–L0	MANUAL,OWNER'S MANUEL D'UTILISATION	1	1	1			UR (SF) UR (SF)

FIG. 10 STARTER DEMARREUR

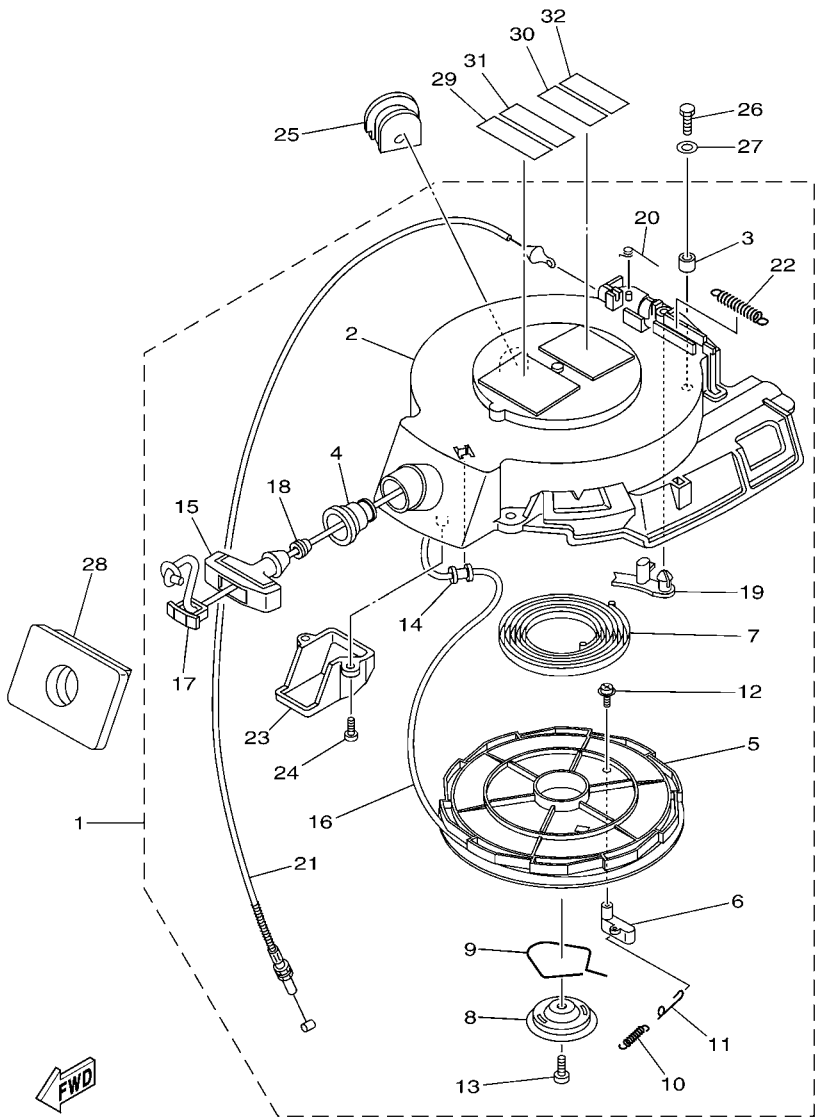

6BP1300-H100

*1:CUT FROM 50M ROLLS,PART NO.90790-48194,CUTTING LENGTH 2.1M

*1:A PRELEVER SUR BOBINE 50M ,REFERENCE 90790-48194, LONGUEUR DE COUPE 2.1M

REF. NO.	PART NO. N° PIECES	DESCRIPTION DESCRIPTION	ET	E	MH			REMARKS REMARQUES
1	6BL–15710–00	STARTER ASSY DEMARREUR COMPLET			1			
2	6BL–15711–00	.CASE, STARTER .CARTER DE DEMARREUR			1			
3	67D–15764–00	.COLLAR 1 .COLLERETTE 1			3			
4	6AH–15795–00	.GUIDE, ROPE .GUIDE DE CABLE			1			
5	6BL–15714–00	.DRUM, SHEAVE .TAMBOUR, POULIE			1			
6	6AH–15741–10	.PAWL, DRIVE .CLIQUET, ENTRAINEMENT			1			
7	66T–15713–00	.SPRING, STARTER .RESSORT DE DEMARREUR			1			
8	66T–15716–00	.PLATE, DRIVE .PLAQUE, ENTRAINEMENT			1			
9	66T–15705–00	.SPRING, DRIVE PAWL .RESSORT DE CLIQUET			1			
10	66T–15767–00	.SPRING .RESSORT			1			
11	66T–15784–00	.SPRING, RETURN .RESSORT, RAPPEL			1			
12	6BL–15793–00	.SCREW .VIS			1			
13	68T–15793–00	.SCREW .VIS			1			
14	6BL–15764–00	.COLLAR 1 .COLLERETTE 1			1			
15	689–15755–01	.HANDLE, STARTER .POIGNEE, DE DEMARREUR			1			
16	*	.WIRE, STARTER (L:2100MM) .CABLE DE DEMARREUR (L:2100MM)			1			*1 *1
17	6F5–15779–02	.COVER .COUVERCLE			1			
18	6A0–15789–00	.DAMPER .AMORTISSEUR			1			
19	68T–15794–00	.STOPPER .BUTEE			1			
20	66T–15734–00	.SPRING, RETURN .RESSORT, RAPPEL			1			
21	6BL–15770–00	.CABLE COMP., STARTER STOP .CABLE, BUTEE DE DEMAR			1			
22	66T–15731–00	.SPRING, RETURN .RESSORT, RAPPEL			1			
23	6BL–15782–00	.COVER, SHEAVE .COUVERCLE, POULIE			1			
24	6AH–15793–00	.SCREW .VIS			2			
25	6BL–15357–00	GROMMET RONDELLE CAOUTCHOUC			1			
26	97095–06020	BOLT BOULON			3			
27	92995–06600	WASHER RONDELLE			3			

FIG. 10 STARTER DEMARREUR

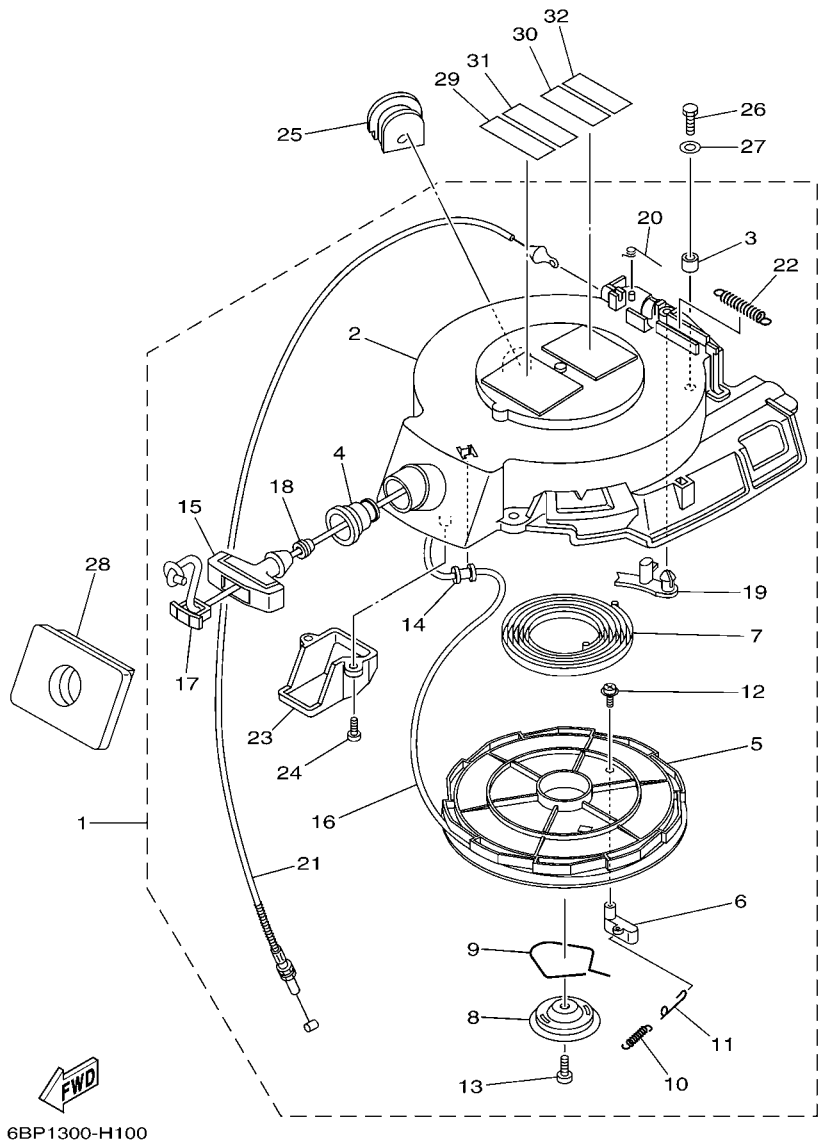

*1:CUT FROM 50M ROLLS,PART NO.90790-48194,CUTTING LENGTH 2.1M

*1:A PRELEVER SUR BOBINE 50M ,REFERENCE 90790-48194,
LONGUEUR DE COUPE 2.1M

REF. NO.	PART NO. N° PIECES	DESCRIPTION DESCRIPTION	ET	E	MH			REMARKS REMARQUES
28	6BL–15762–00	SEAL, RUBBER 2 JOINT CAOUTCHOUC 2			1			
29	6AH–81994–40	LABEL, SAFETY ETIQUETTE, SECURITE			1			
30	6AH–81995–40	LABEL, WARNING ETIQUETTE, AVERTISSEMENT			1			
31	6AH–81994–50	LABEL, SAFETY ETIQUETTE, SECURITE			1			
32	6AH–81995–50	LABEL, WARNING ETIQUETTE, AVERTISSEMENT			1			

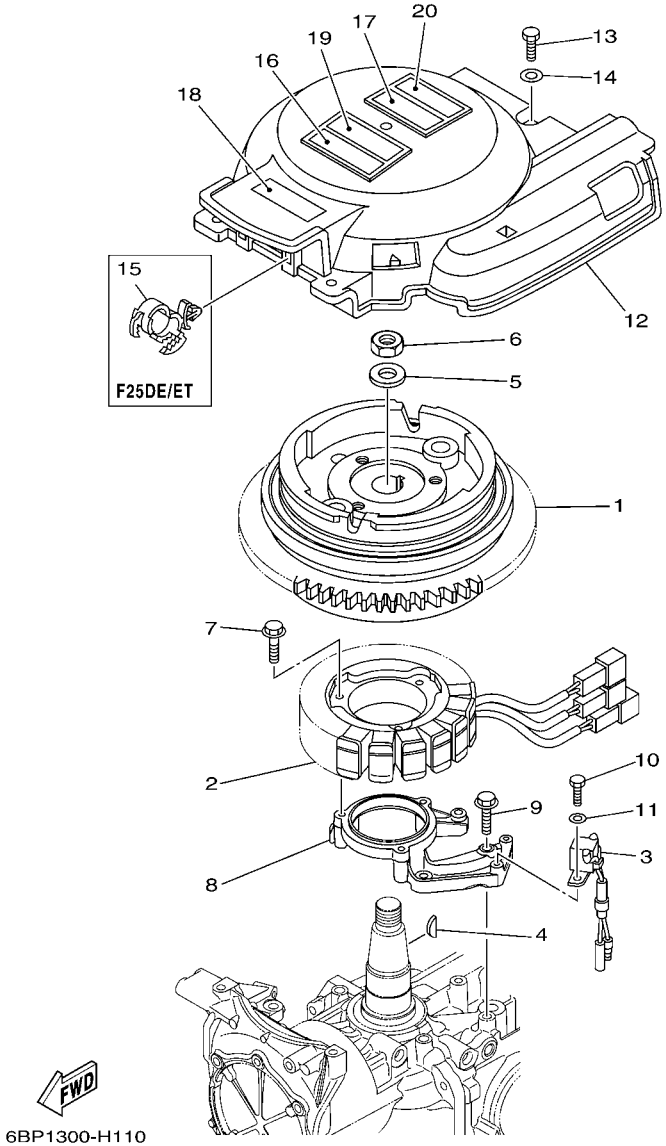

FIG. 11 GENERATOR GENERATRICE

REF. NO.	PART NO. N° PIECES	DESCRIPTION DESCRIPTION	ET	E	MH			REMARKS REMARQUES
1	6BL–85550–00	ROTOR ASSY ROTOR CPLT	1	1				
	6BL–85550–10	ROTOR ASSY ROTOR CPLT			1			
2	6BL–85510–00	STATOR ASSY STATOR CPLT	1	1				
	6BL–85510–10	STATOR ASSY STATOR CPLT			1			
3	6AH–85580–00	COIL, PULSER BOBINE, PULSEUR	1	1	1			
4	6H4–11545–00	KEY, WOODRUFF CLAVETTE, DEMI-LUNE	1	1	1			
5	90201–21M18	WASHER, PLATE RONDELLE, PLATE	1	1	1			
6	90170–20137	NUT ECROU	1	1	1			
7	95023–06030	BOLT BOULON, A COLLERETTE	3	3	3			
8	6BG–85561–00–94	BASE, MAGNETO BASE, MAGNETO	1	1	1			
9	95023–06025	BOLT BOULON, A COLLERETTE	4	4	4			
10	97095–05016	BOLT BOULON	2	2	2			
11	92995–05600	WASHER RONDELLE	2	2	2			
12	6BL–81337–00	COVER, FLYWHEEL COUVERCLE, VOLANT	1	1				
13	97095–06020	BOLT BOULON	3	3				
14	92995–06600	WASHER RONDELLE	3	3				
15	90464–12183	CLAMP BRIDE	2	2				
16	6AH–81994–40	LABEL, SAFETY ETIQUETTE, SECURITE	1	1				
17	6AH–81995–40	LABEL, WARNING ETIQUETTE, AVERTISSEMENT	1	1				
18	6AG–81996–00	MARK MARQUE	1	1				
19	6AH–81994–50	LABEL, SAFETY ETIQUETTE, SECURITE	1	1				
20	6AH–81995–50	LABEL, WARNING ETIQUETTE, AVERTISSEMENT	1	1				

FIG. 12 ELECTRICAL 1 PARTIE ELECTRIQUE 1

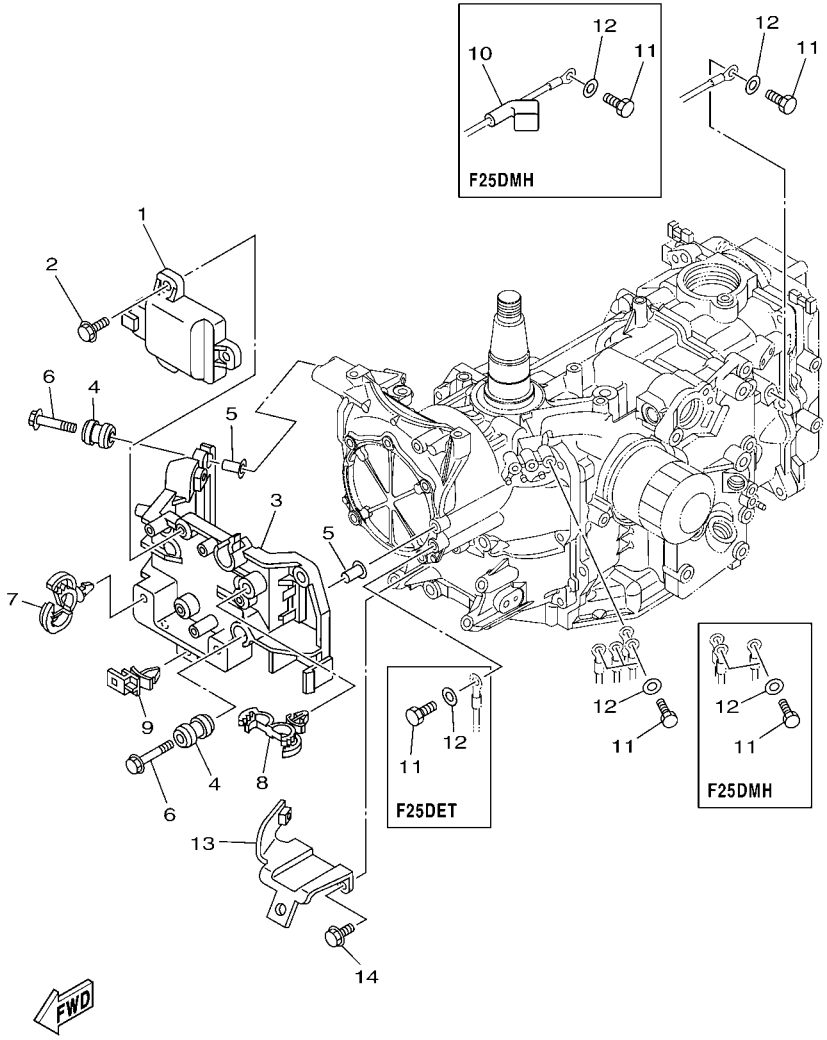

REF. NO.	PART NO. N° PIECES	DESCRIPTION DESCRIPTION	ET	E	MH			REMARKS REMARQUES
1	6BL–85540–00	C.D.I. UNIT ASSY BLOC C.D.I.	1	1	1			
2	97575–06520	BOLT, WITH WASHER VIS HEXAGONAL AVC RONDELLE	3	3	3			
3	6BL–81948–00	BRACKET SUPPORT	1	1	1			
4	6A0–82317–00	DAMPER, IGNITION COIL AMORTISSEUR, BOBINE D'ALLUM	4	4	4			
5	90387–06119	COLLAR COLLERETTE	4	4	4			
6	95895–06030	BOLT, FLANGE BOULON	4	4	4			
7	90464–12183	CLAMP BRIDE	2					
	90464–13249	CLAMP BRIDE		2	2			
8	90464–18246	CLAMP BRIDE	2	2				
9	90464–12002	CLAMP BRIDE	1	1	1			
10	6BL–82119–00	COVER, LEAD WIRE GARNITURE, FIL			1			
11	97095–06016	BOLT BOULON	5					
	97095–06016	BOLT BOULON		4				
	97095–06016	BOLT BOULON			3			
12	92995–06600	WASHER RONDELLE	5					
	92995–06600	WASHER RONDELLE		4				
	92995–06600	WASHER RONDELLE			3			
13	6BL–82554–00	STAY, NEUTRAL SWITCH SUPPORT, CONT DE POINT-MORT	1	1	1			
14	95895–06014	BOLT, FLANGE BOULON	2	2	2			

FIG. 13 ELECTRICAL 2 — PARTIE ELECTRIQUE 2

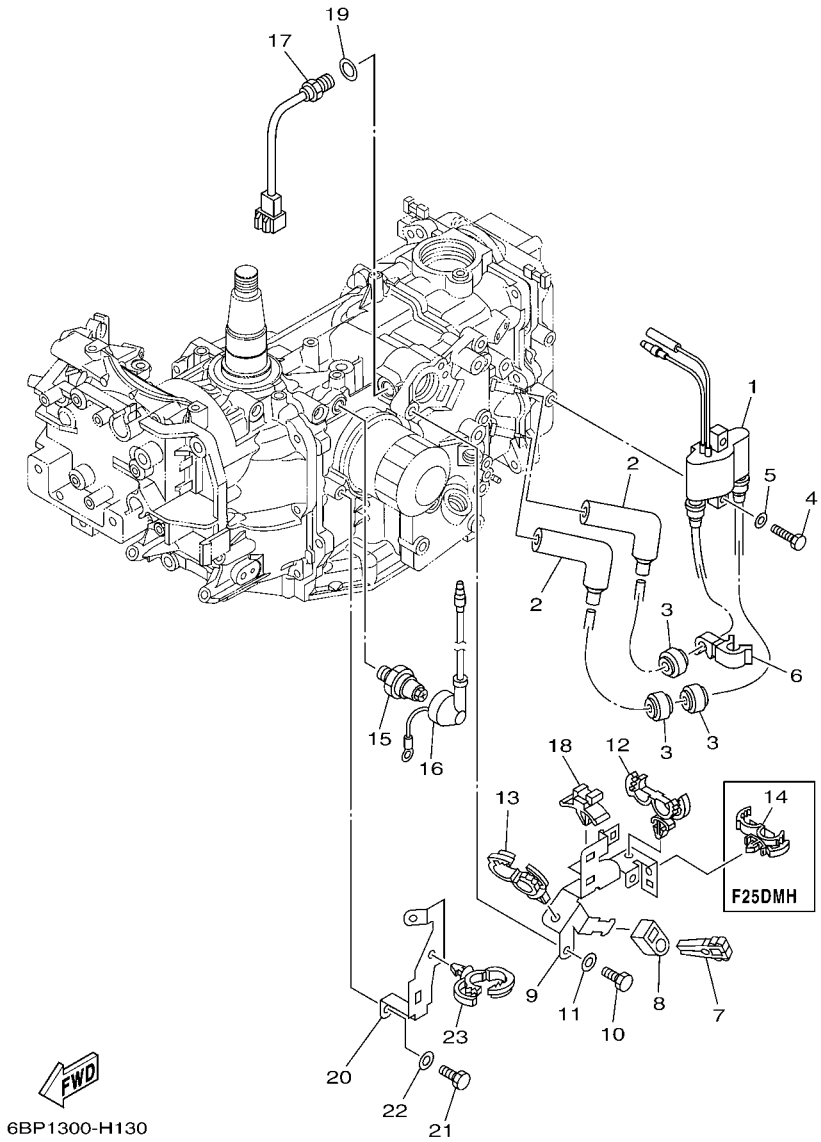

REF. NO.	PART NO. N° PIECES	DESCRIPTION DESCRIPTION	ET	E	MH			REMARKS REMARQUES
1	6F5–85570–13	IGNITION COIL ASSY BOBINE D'ALLUMAGE (ENS.)	1	1	1			
2	6AH–82370–00	PLUG CAP ASSY ANTIPARASITE	2	2	2			
3	90480–25003	GROMMET PASSE-FIL	3	3	3			
4	97095–06025	BOLT BOULON	2	2	2			
5	92995–06600	WASHER RONDELLE	2	2	2			
6	90464–09018	CLAMP BRIDE	1	1	1			
7	67F–2812A–00	PULLER, FUSE TENDEUR, FUSIBLE	1	1				
8	67C–82155–00	BAND COLLIER	1	1				
9	6BL–8339X–00	CLAMP, CORD COLLIER, CORDON	1	1	1			
10	97095–06016	BOLT BOULON	2	2	2			
11	92995–06600	WASHER RONDELLE	2	2	2			
12	90464–18246	CLAMP BRIDE	1	1	1			
13	90464–20181	CLAMP BRIDE	1	1	1			
14	90464–18246	CLAMP BRIDE			1			
15	64J–82504–00	OIL PRESSURE SWITCH ASSY CONTACTEUR DE PRESSION D'HUILE	1	1	1			
16	68V–81315–00	LEAD WIRE ASSY FIL	1	1	1			
17	6CJ–85790–00	THERMOSENSOR ASSY SENSITOMETRE	1	1	1			
18	90464–09M47	CLAMP BRIDE	1	1	1			
19	90430–14115	GASKET JOINT	1	1	1			
20	6BL–82389–00	PLATE 2 PLAQUETTE 2	1	1	1			
21	97095–06016	BOLT BOULON	2	2	2			
22	92995–06600	WASHER RONDELLE	2	2	2			
23	90464–20181	CLAMP BRIDE	1	1	1			

FIG. 14 ELECTRICAL 3 PARTIE ELECTRIQUE 3

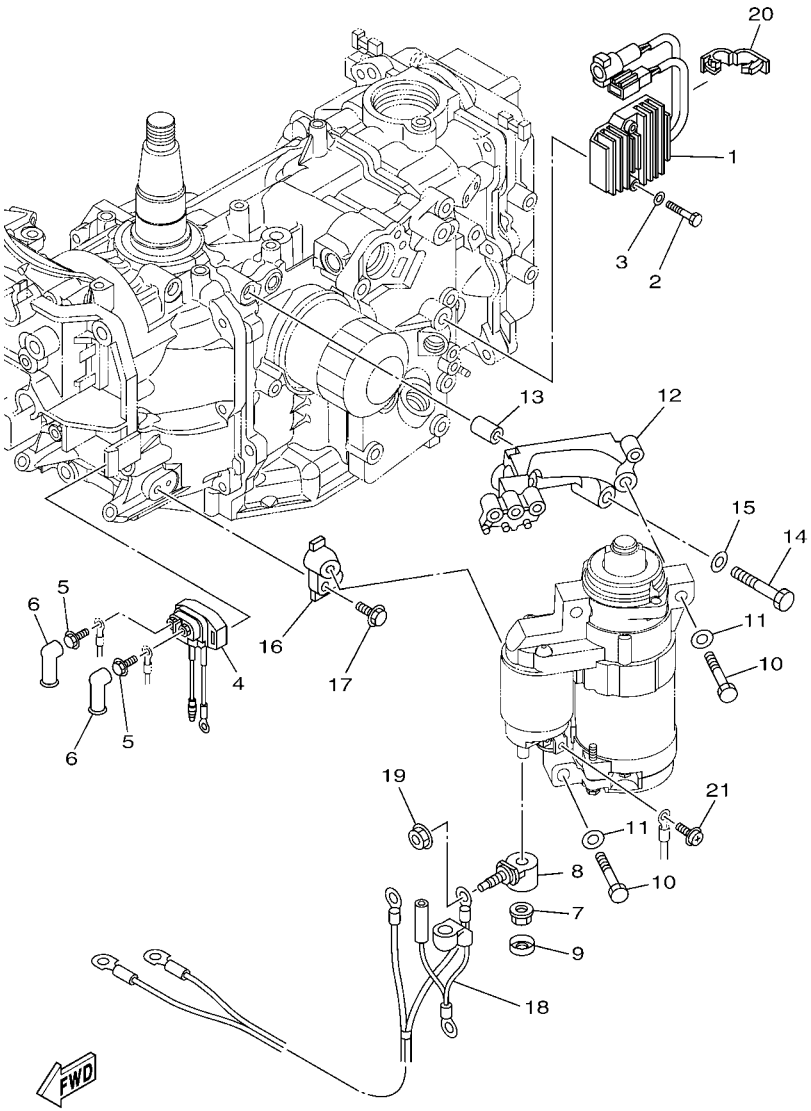

REF. NO.	PART NO. N° PIECES	DESCRIPTION DESCRIPTION	ET	E	MH			REMARKS REMARQUES
1	6BL–81960–00	RECTIFIER & REGULATOR ASSY REDRESSEUR REGULATEUR CPLT	1	1				
2	97095–06040	BOLT BOULON	2	2				
3	92995–06600	WASHER RONDELLE	2	2				
4	68T–81940–00	STARTER RELAY ASSY LANCEUR RELAIS (ENS.)	1	1				
5	97595–06610	BOLT, WITH WASHER VIS HEXAGONAL AVC RONDELLE	2	2				
6	6G5–82119–10	COVER, LEAD WIRE GARNITURE, FIL	2	2				
7	6BL–8182A–00	NUT ECROU	1	1				
8	6BL–81925–00	TERMINAL BORNE	1	1				
9	6BL–8183X–00	CAP, TERMINAL COUVERCLE, BORNE	1	1				
10	97013–08045	BOLT BOULON	3	3				
11	92903–08600	WASHER, PLATE RONDELLE, PLATE	3	3				
12	6BL–81822–00	BRACKET, STARTING MOTOR SUPPORT, DEMARREUR ELECTRIQUE	1	1	1			
13	99590–10114	PIN, DOWEL GOUJON, D'ASSEMBLAGE	2	2	2			
14	97013–08045	BOLT BOULON	2	2	2			
15	92903–08600	WASHER, PLATE RONDELLE, PLATE	2	2	2			
16	6BL–81823–00	STAY, STARTING MOTOR SUPPORT	1	1				
17	97575–06520	BOLT, WITH WASHER VIS HEXAGONAL AVC RONDELLE	1	1				
18	6BL–82105–00	WIRE HARNESS FAISCEAU DE FILS	1	1				
19	90179–08003	NUT ECROU	1	1				
20	90464–18001	CLAMP BRIDE	1	1				
21	90159–05M12	SCREW, WITH WASHER VIS, AVEC RONDELLE	1	1				

FIG. 15 ELECTRICAL 4 — PARTIE ELECTRIQUE 4

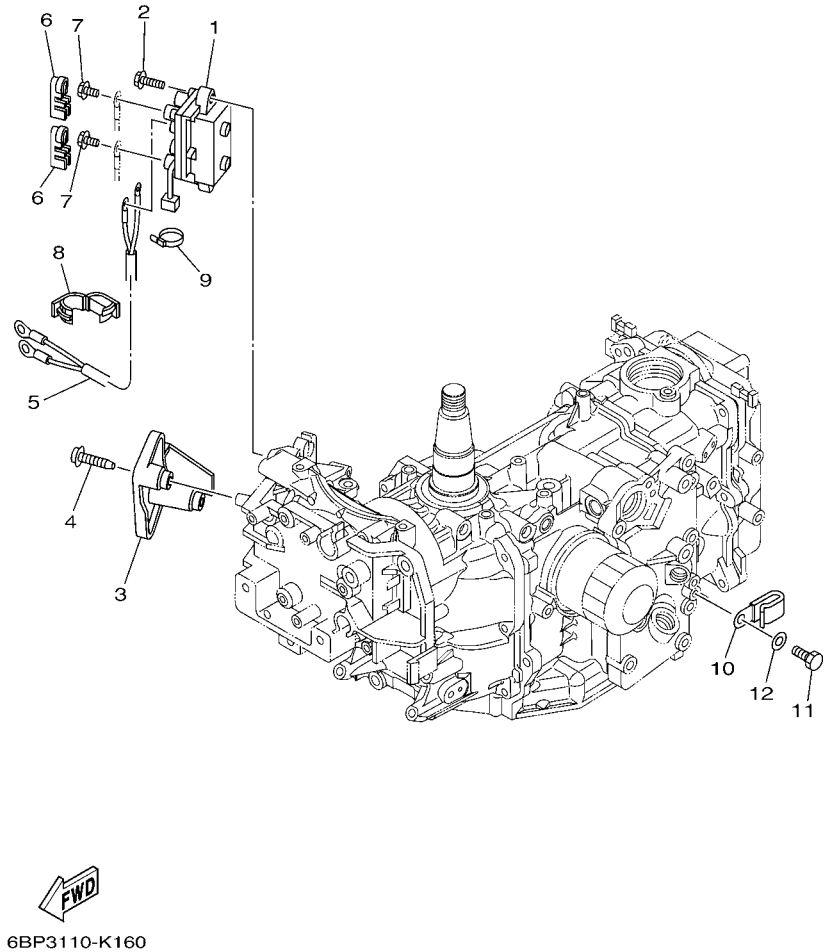

REF. NO.	PART NO. N° PIECES	DESCRIPTION DESCRIPTION	ET	E	MH			REMARKS REMARQUES
1	63P–81950–00	RELAY ASSY RELAIS COMPLET	1					
2	97575–06520	BOLT, WITH WASHER VIS HEXAGONAL AVC RONDELLE	2					
3	6BL–81942–00	COVER COUVERCLE	1					
4	90167–05009	SCREW, TAPPING VIS, TETE FRAISEE	2					
5	6BL–81949–00	WIRE, LEAD FIL	1					
6	6P2–8183X–00	CAP, TERMINAL COUVERCLE, BORNE	2					
7	97595–06610	BOLT, WITH WASHER VIS HEXAGONAL AVC RONDELLE	2					
8	90464–18001	CLAMP BRIDE	1					
9	90465–11M10	CLAMP BRIDE	1					
10	90465–06M90	CLAMP BRIDE	1					
11	97095–06016	BOLT BOULON	1					
12	92995–06600	WASHER RONDELLE	1					

FIG. 16 ELECTRICAL 5 PARTIE ELECTRIQUE 5

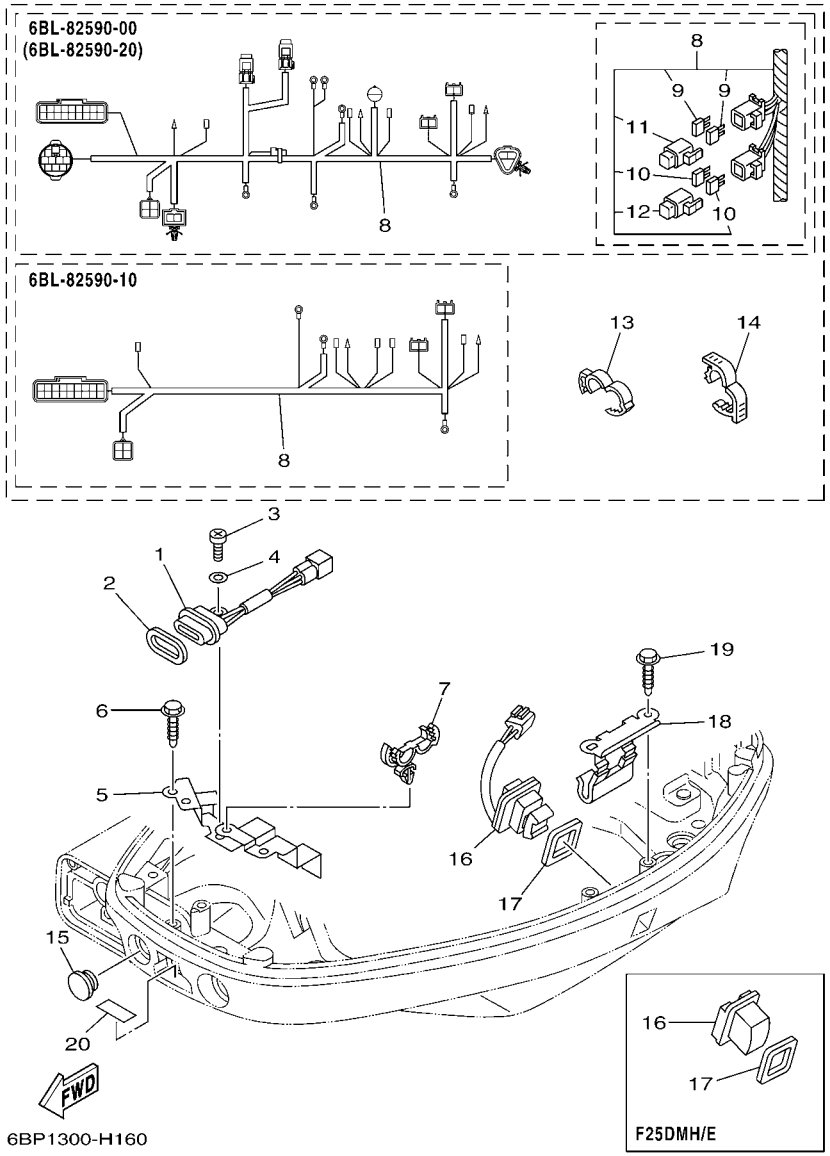

REF. NO.	PART NO. N° PIECES	DESCRIPTION DESCRIPTION	ET	E	MH			REMARKS REMARQUES
1	62Y–84301–00	PILOT LIGHT ASSY 1 LAMPE-TEMOIN 1	1	1	1			
2	6H4–83589–00	GASKET GARNITURE	1	1	1			
3	97885–06012	SCREW, PAN HEAD VIS, A ENCOCHE	1	1	1			
4	92995–06600	WASHER RONDELLE	1	1	1			
5	6BL–82388–00	PLATE PLAQUETTE	1	1	1			
6	90109–06M86	BOLT BOULON	2	2	2			
7	90464–18246	CLAMP BRIDE	1	1				
8	6BL–82590–00	WIRE HARNESS ASSY FAISCEAU DE FILS COMPLET	1					
	6BL–82590–20	WIRE HARNESS ASSY FAISCEAU DE FILS COMPLET		1				
	6BL–82590–10	WIRE HARNESS ASSY FAISCEAU DE FILS COMPLET			1			
9	67F–82151–00	.FUSE (20A) .FUSIBLE (20A)	2	2				
10	67F–82151–10	.FUSE (30A) .FUSIBLE (30A)	2	2				
11	67F–8215B–10	.CAP (YELLOW) .BOUCHON (YELLOW)	1	1				
12	67F–8215B–20	.CAP (GREEN) .BOUCHON (GREEN)	1	1				
13	90464–16001	CLAMP BRIDE	1					
	90464–18001	CLAMP BRIDE		1	1			
14	90464–18001	CLAMP BRIDE	1	1				
	90464–09010	CLAMP BRIDE			1			
15	6G1–42725–00	GROMMET PASSE-FIL	1	1	1			
16	69J–82563–00	TRIM & TILT SWITCH ASSY INCLINER ET PARER COMMUTATEUR	1					
	69J–42723–00–8D	COVER, BOTTOM COUVERCLE		1	1			
17	69J–82587–00	GASKET JOINT	1	1	1			
18	63P–83614–01	BRACKET SUPPORT	1	1	1			
19	90109–06M86	BOLT BOULON	2	2	2			
20	67C–85415–00	MARK, SIGNAL LAMP ETIQUETTE	1	1	1			

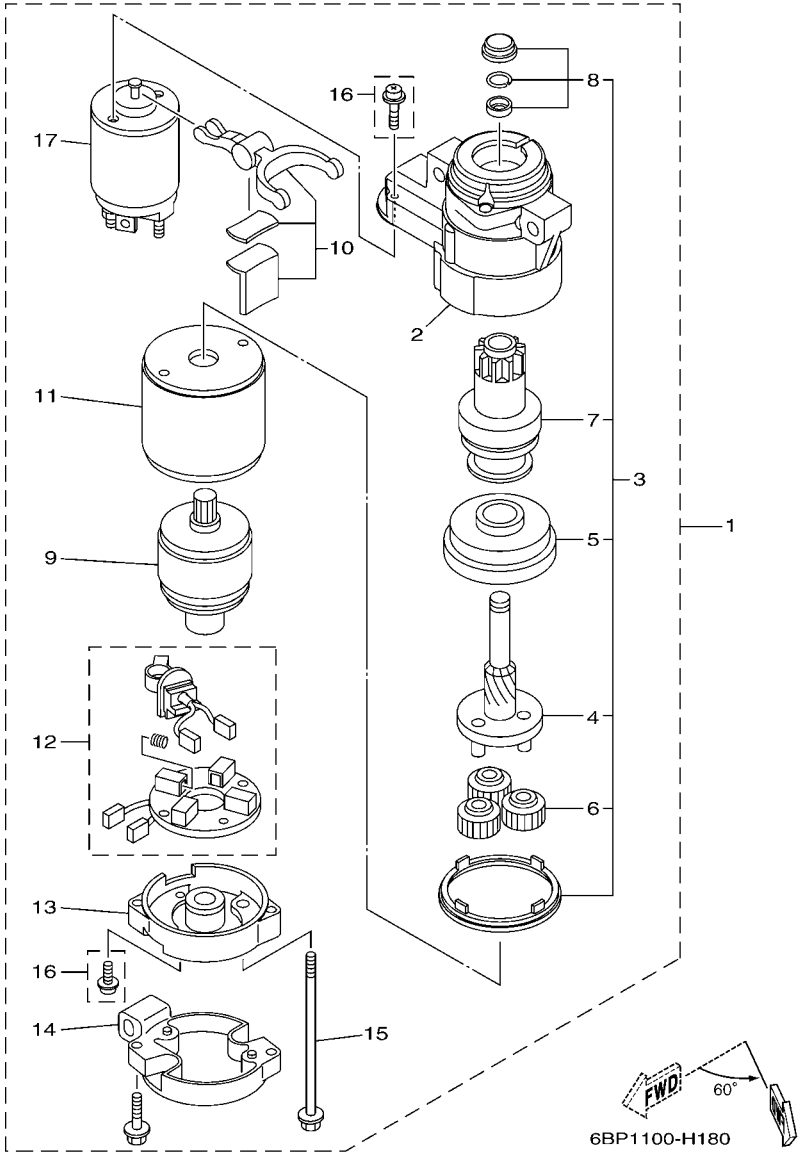

FIG. 17 STARTING MOTOR DEMARREUR ELECTRIQUE

REF. NO.	PART NO. N° PIECES	DESCRIPTION DESCRIPTION	ET	E	MH			REMARKS REMARQUES
1	6BG–81800–00	STARTING MOTOR ASSY DEMARREUR ELECTRIQUE COMPLET	1	1				
2	6BG–81830–00	.FRONT BRACKET ASSY .SUPPORT AVANT	1	1				
3	6BG–81807–00	.GEAR ASSY, STARTING MOTOR .PIGNON, DEMARREUR ELECTRIQUE	1	1				
4	6BG–81836–00	..SPRING, LEVER ..RESSORT, LEVIER	1	1				
5	6BG–81891–00	..GEAR, RING ..ROUE DENTEE	1	1				
6	6AW–8183T–00	..GEAR, IDLER ..PIGNON, INTERMEDIAIRE	3	3				
7	6BG–81832–00	..CLUTCH, OVER RUN ..EMBRAYAGE, ROUE LIBRE	1	1				
8	6BG–81857–00	..RETAINER ..ARRETOIR	1	1				
9	6BG–81850–00	.ARMATURE ASSY .INDUIT	1	1				
10	6BG–81839–00	.LEVER ASSY .LEVIER COMPLET	1	1				
11	6BG–81810–00	.STATOR ASSY .STATOR COMPLET	1	1				
12	6BG–81840–00	.BRUSH HOLDER ASSY .SUPPORT DE CHARBON	1	1				
13	6BG–81820–00	.REAR BRACKET ASSY .SUPPORT ARRIERE COMPLET	1	1				
14	6BG–8182J–00	.BRACKET COMPLETE .SUPPORTE COMPLETE	1	1				
15	6BG–81826–00	.BOLT .BOULON	2	2				
16	6BG–81846–00	.SCREW SET .VIS	1	1				
17	6BG–81941–00	.STARTER RELAY ASSY .LANCEUR RELAIS (ENS.)	1	1				

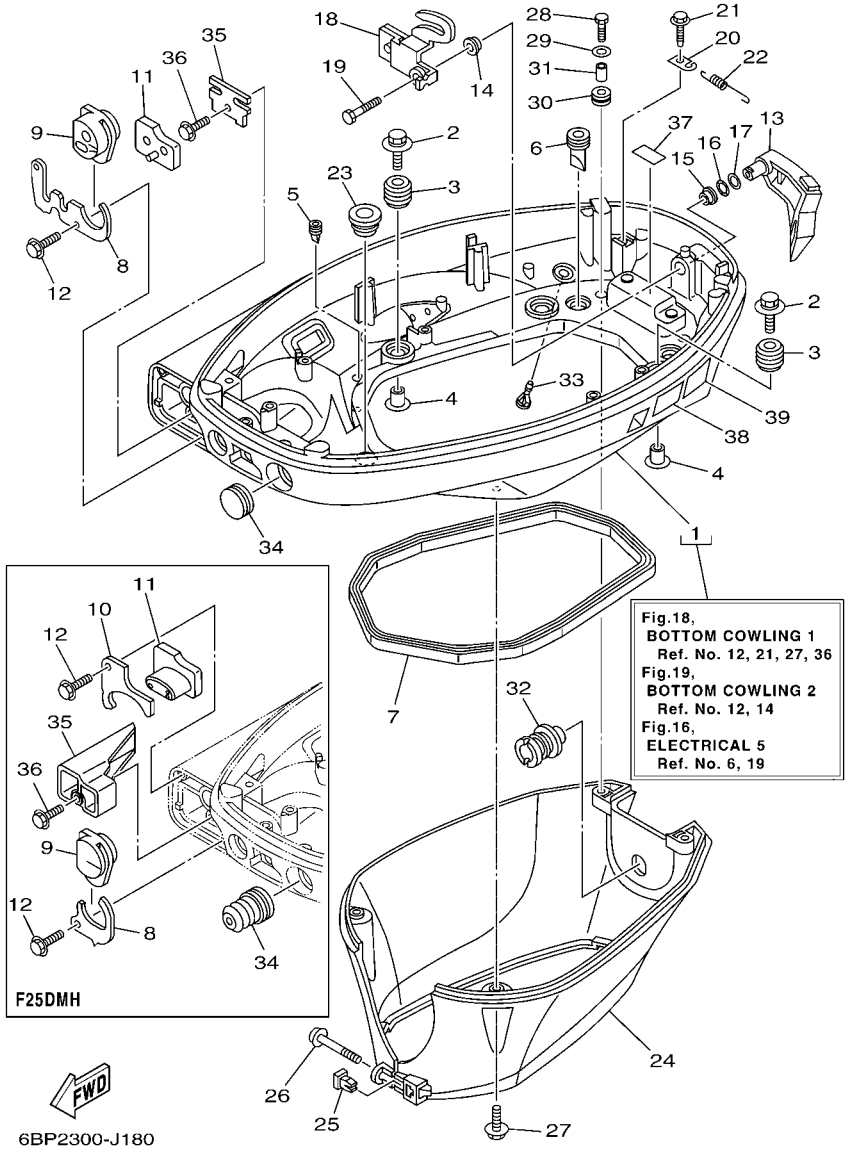

FIG. 18 BOTTOM COWLING 1 CAPOT INFERIEUR 1

REF. NO.	PART NO. N° PIECES	DESCRIPTION DESCRIPTION	ET	E	MH			REMARKS REMARQUES
1	6BP–42710–00–4D	BOTTOM COWLING ASSY ENS. EMBASE	1	1	1			
2	90119–06M61	BOLT, WITH WASHER BOULON, AVEC RONDELLE	4	4	4			
3	6BG–42748–00	GROMMET PASSE-FIL	4	4	4			
4	90387–06060	COLLAR COLLERETTE	4	4	4			
5	65W–42717–00	RUBBER, SEAL 2 JOINT EN CAOUTCHOUC 2	2	2	2			
6	61A–42717–00	RUBBER, SEAL 2 JOINT EN CAOUTCHOUC 2	2	2	2			
7	62Y–42716–00	RUBBER, SEAL 1 JOINT EN CAOUTCHOUC 1	1	1	1			
8	6BL–42761–00	STOPPER PLAQUETTE	1	1				
	6BL–42761–10	STOPPER PLAQUETTE			1			
9	6BL–42725–01	GROMMET PASSE-FIL	1	1				
	6BL–42725–10	GROMMET PASSE-FIL			1			
10	6BL–42762–10	STOPPER PLAQUETTE			1			
11	6BL–42727–00	GROMMET PASSE-FIL	1	1				
	6BL–42727–10	GROMMET PASSE-FIL			1			
12	90109–06M86	BOLT BOULON	2	2	2			
13	6BL–42815–00–4D	LEVER, CLAMP LEVIER, PRESSE	1	1	1			
14	90386–12M37	BUSH DOUILLE	1	1	1			
15	90386–12MA2	BUSH DOUILLE	1	1	1			
16	90206–12052	WASHER, WAVE RONDELLE, ONDULEE	1	1	1			
17	90201–12M07	WASHER, PLATE RONDELLE, PLATE	1	1	1			
18	6BG–42816–00	LEVER, CLAMP LEVIER, PRESSE	1	1	1			
19	97095–06012	BOLT BOULON	1	1	1			
20	66T–43144–00	HOOK, SPRING CROCHET	1	1	1			
21	90109–06M86	BOLT BOULON	1	1	1			
22	90506–18023	SPRING, TENSION RESSORT, TENSION	1	1	1			
23	68U–42727–00	GROMMET PASSE-FIL	1	1	1			
24	6BP–42741–00	APRON CAPOT LATERAL	1	1	1			

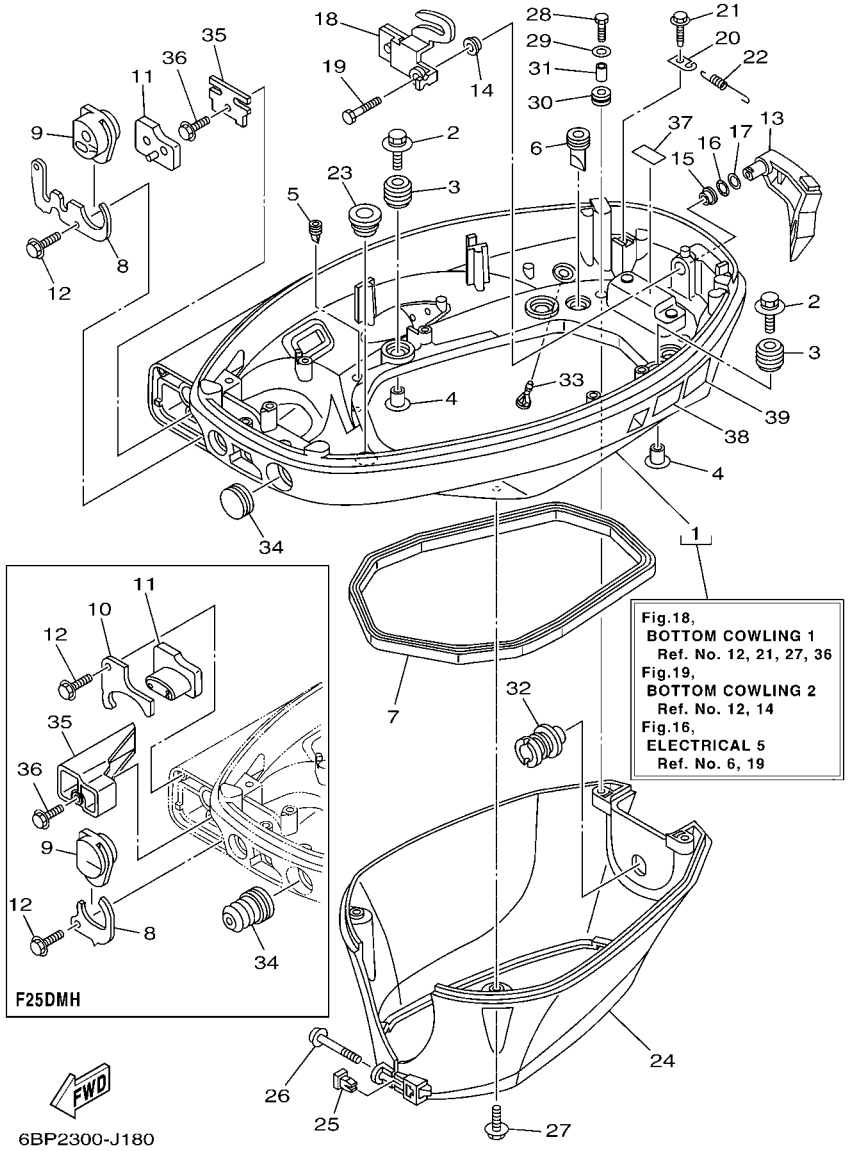

FIG. 18 BOTTOM COWLING 1 CAPOT INFERIEUR 1

REF. NO.	PART NO. N° PIECES	DESCRIPTION DESCRIPTION	ET	E	MH			REMARKS REMARQUES
25	60V–42756–00	STAY, CLAMP SUPPORT, COLLIER	1	1	1			
26	97980–04245	SCREW, WITH WASHER VIS, AVEC RONDELLE	1	1	1			
27	90109–06M86	BOLT BOULON	2	2	2			
28	97095–06014	BOLT BOULON	2	2	2			
29	92995–06600	WASHER RONDELLE	2	2	2			
30	90480–13M24	GROMMET PASSE-FIL	2	2	2			
31	90387–06M43	COLLAR COLLERETTE	2	2	2			
32	6BP–42769–00	SEAL, RUBBER BOURRELET, CAOUTCHOUC	1	1	1			
33	6BL–44391–00	NIPPLE, HOSE RACCORD D'ESSENCE	1	1	1			
34	65W–42726–10	GROMMET PASSE-FIL	1	1				
	65W–42726–00	GROMMET PASSE-FIL			1			
35	6BL–48538–00	CLAMP, CABLE 1 COLLIER	1	1				
	6BL–42735–00	PROTECTOR PROTECTEUR			1			
36	90109–06M86	BOLT BOULON	1	1	1			
37	6C5–82377–00	LABEL ETIQUETTE	1	1	1			
38	6AH–42794–40	LABEL, WARNING (GENERAL) ETIQUETTE, AVERTISSEMENT	1	1	1			
39	6AH–42794–50	LABEL, WARNING (GENERAL) ETIQUETTE, AVERTISSEMENT	1	1	1			

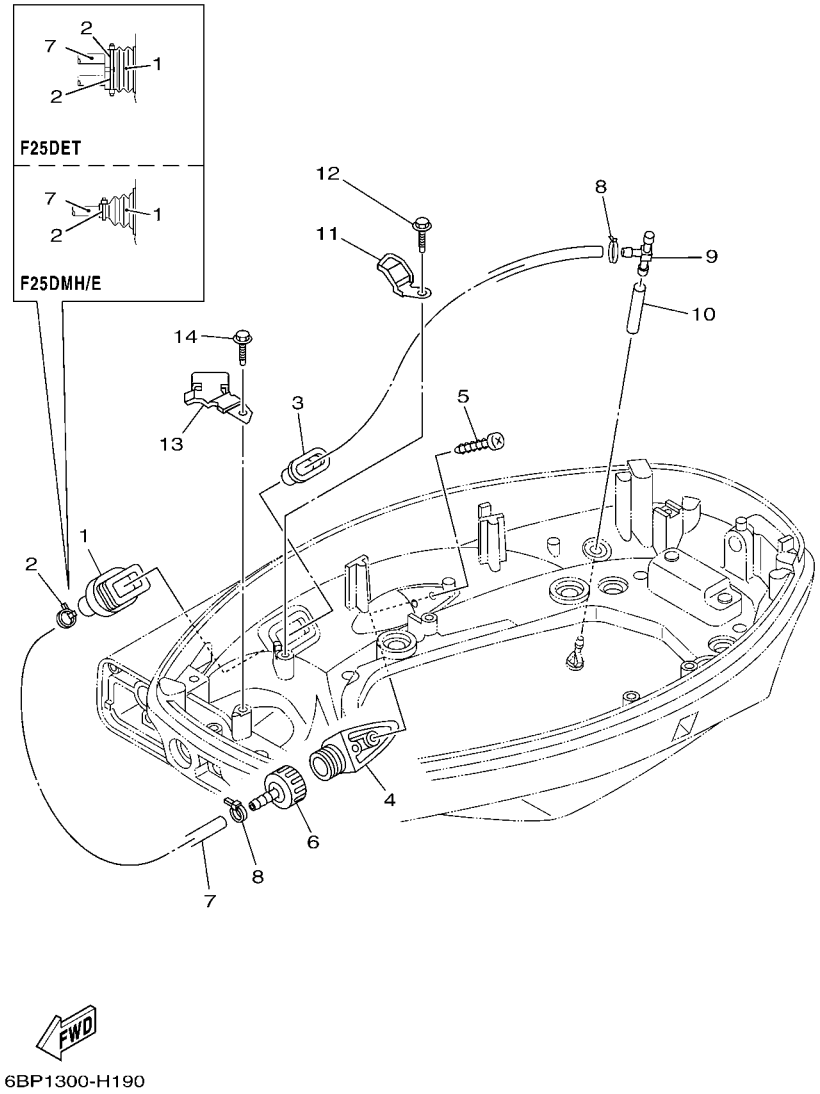

FIG. 19 BOTTOM COWLING 2 CAPOT INFERIEUR 2

REF. NO.	PART NO. N° PIECES	DESCRIPTION DESCRIPTION	ET	E	MH			REMARKS REMARQUES
1	6H1–42726–21	GROMMET PASSE-FIL	1					
	6BG–42724–00	GROMMET PASSE-FIL		1	1			
2	90465–11M10	CLAMP BRIDE	2					
	90465–11M10	CLAMP BRIDE		1	1			
3	6BG–42384–00	SEAL, CAP JOINT, CAPUCHON	1	1	1			
4	6AW–12572–00	ADAPTER ADAPTATEUR	1	1	1			
5	97780–60520	SCREW, TAPPING VIS, TETE BOMBEE	2	2	2			
6	6R3–12580–00	JOINT ASSY ARTICULER (ENS.)	1	1	1			
7	90445–11153	HOSE (L460) DURITE (L460)	1	1	1			
8	90465–11M10	CLAMP BRIDE	2	2	2			
9	6C5–24378–00	PIPE, JOINT 3 DURITE RACCORDEMENT 3	1	1	1			
10	90445–09057	HOSE (L43) DURITE (L43)	1	1	1			
11	6BL–24396–00	PLATE PLAQUE	1	1	1			
12	90109–06M86	BOLT BOULON	1	1	1			
13	6BL–24364–00	STAY SUPPORT	1	1	1			
14	90109–06M86	BOLT BOULON	1	1	1			

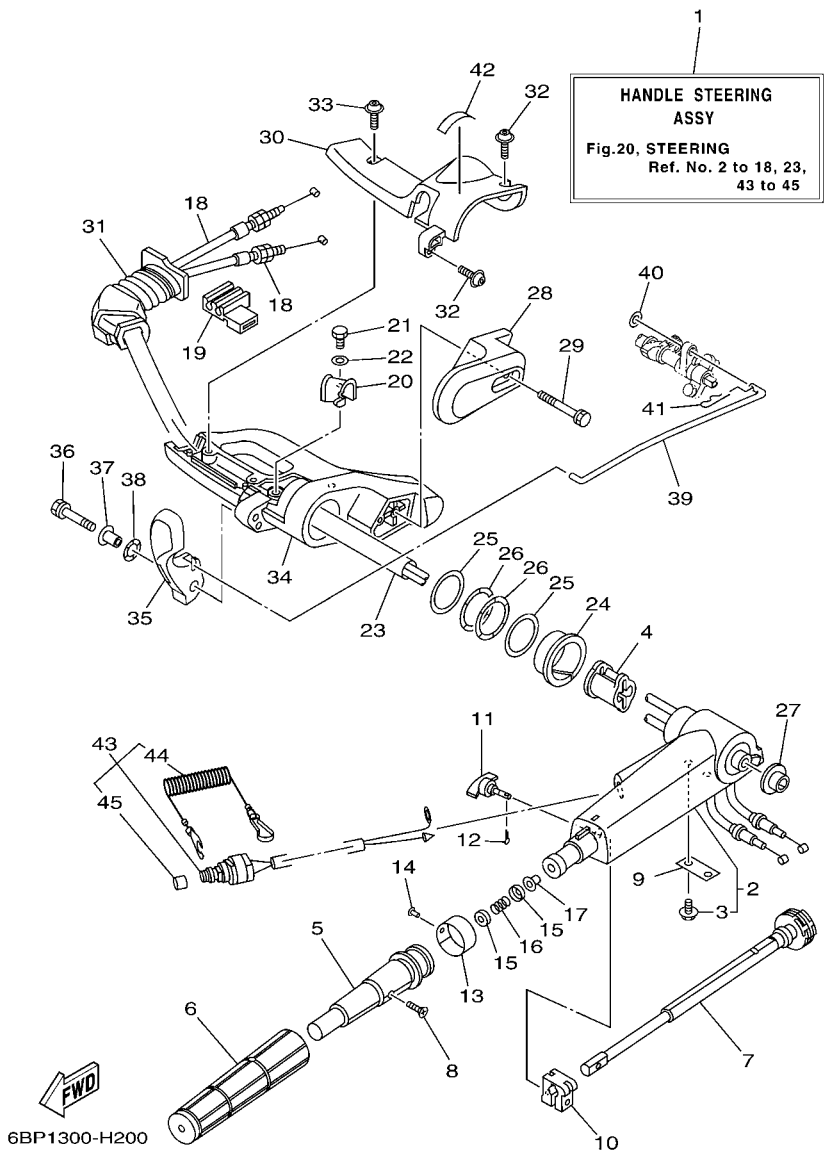

FIG. 20 STEERING DIRECTION

REF. NO.	PART NO. N° PIECES	DESCRIPTION DESCRIPTION	ET	E	MH			REMARKS REMARQUES
1	6BP–W0084–00–4D	HANDLE STEERING ASSY BARRE FRANCHE (ENS.)			1			
2	6AH–42101–01–4D	HANDLE, STEERING POIGNEE			1			
3	90109–06M86	.BOLT .BOULON			2			
4	6AH–26288–00	GROMMET, CABLE OEILLET DE CABLE			1			
5	66M–42119–01	GRIP, STEERING HANDLE POIGNEE, BARRE FRANCHE			1			
6	67D–42177–00	RUBBER, HANDLE CAOUTCHOUC, POIGNEE			1			
7	65W–42138–00	LEVER, THROTTLE LEVIER, ACCELERATEUR			1			
8	90152–05011	SCREW, COUNTERSUNK VIS, TETE NOYEE			1			
9	65W–42159–00	STAY SUPPORT			1			
10	6G1–42126–00	FRICTION, STEERING HANDLE GRIP CUVETTE, POIGNEE DE DIRECTION			1			
11	65W–42125–00	BOLT, FRICTION ADJUSTING BOULON			1			
12	91490–16010	PIN. COTTER GOUPILLE			1			
13	6J0–42137–00	INDICATOR, THROTTLE INDICATEUR, ACCELERATION			1			
14	90269–02M09	RIVET RIVET			1			
15	6X4–44188–00	WASHER RONDELLE			2			
16	90501–23215	SPRING, COMPRESSION RESSORT, COMPRESSION			1			
17	90386–08004	BUSH DOUILLE			1			
18	6BP–26311–00	CABLE, THROTTLE 1 CABLE 1, ACCELERATEUR			2			
19	6BP–26316–00	BOOT, THROTTLE CABLE SOUFFLET, CABLE D'ACCELERATEUR			1			
20	6AH–44554–00	PLATE PLAQUETTE			1			
21	97095–06014	BOLT BOULON			1			
22	92995–06600	WASHER RONDELLE			1			
23	6AH–2634E–00	PROTECTOR 1 PROTECTEUR 1			1			
24	90386–45001	BUSH DOUILLE			1			
25	90201–39008	WASHER, PLATE RONDELLE, PLATE			2			
26	90206–39001	WASHER, WAVE RONDELLE, ONDULEE			2			
27	90381–20001	BUSH, SOLID DOUILLE, SOLIDE			1			

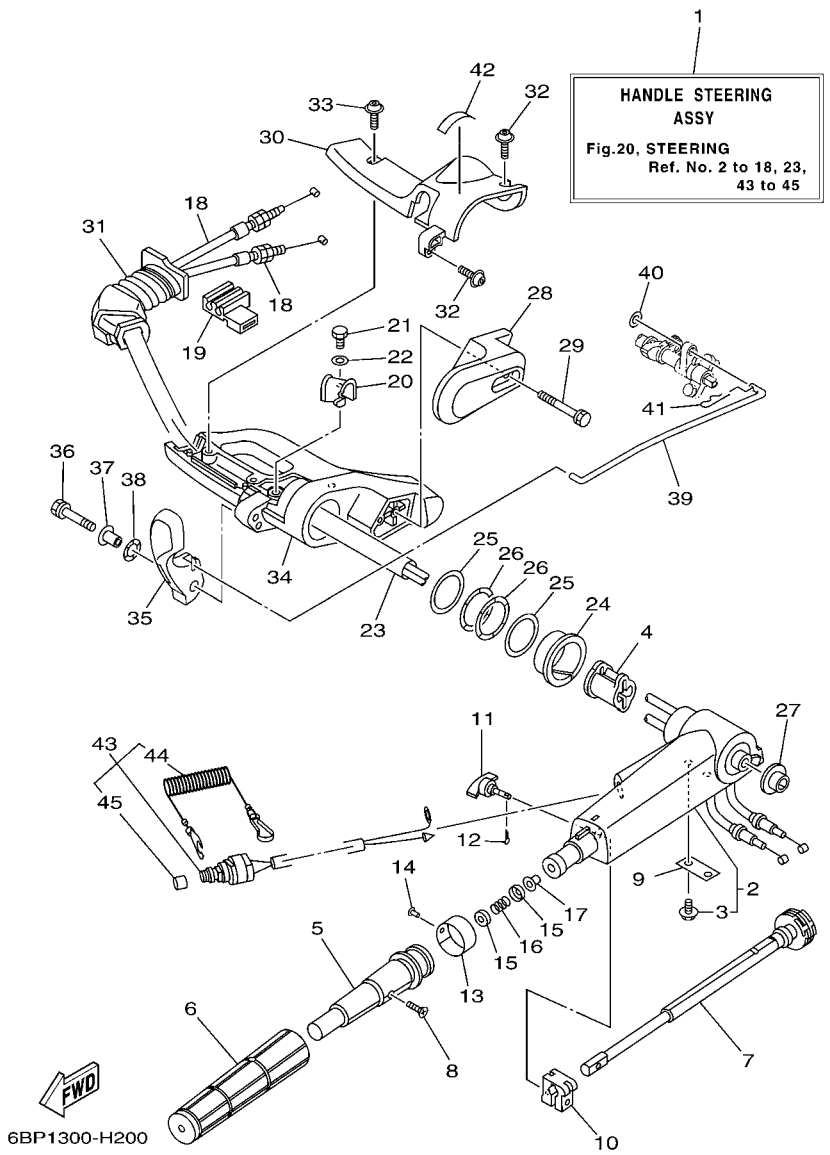

FIG. 20 STEERING DIRECTION

REF. NO.	PART NO. N° PIECES	DESCRIPTION DESCRIPTION	ET	E	MH			REMARKS REMARQUES
28	6AH–42131–00–4D	COVER, HANDLE STEERING COUVERCLE			1			
29	97595–06555	BOLT, WITH WASHER VIS HEXAGONAL AVC RONDELLE			2			
30	6BL–42532–00	COVER COUVERCLE			1			
31	6BL–42131–00	COVER, HANDLE STEERING COUVERCLE			1			
32	90111–06072	BOLT,HEX. SOCKET BUTTON BOULON			3			
33	90111–06072	BOLT,HEX. SOCKET BUTTON BOULON			1			
34	6BL–42121–00–4D	BRACKET SUPPORT			1			
35	6AH–44111–00	HANDLE, GEAR SHIFT POIGNEE, LEVIER D'EMBRAYAGE			1			
36	90119–06M05	BOLT, WITH WASHER BOULON, AVEC RONDELLE			1			
37	90387–06M86	COLLAR COLLERETTE			1			
38	90206–15M18	WASHER, WAVE RONDELLE, ONDULEE			1			
39	6BL–44124–00	LINK, SHIFT ROD BIELLETTE			1			
40	92990–06200	WASHER, PLAIN RONDELLE, PLATE			1			
41	90468–18008	CLIP JONC			1			
42	6G8–44191–00	INDICATOR, SHIFT ETIQUETTE, EMBRAYAGE			1			
43	6BL–82575–00	ENGINE STOP SWITCH ASSY COUPE CIRCUIT CPLT			1			
44	682–82556–00	.LANYARD, STOP SWITCH .PLAQUETTE			1			
45	689–8257Y–00	.CAP .COUVERCLE			1			

FIG. 21 STEERING FRICTION CUVETTE POIGNEE DE DIRECTION

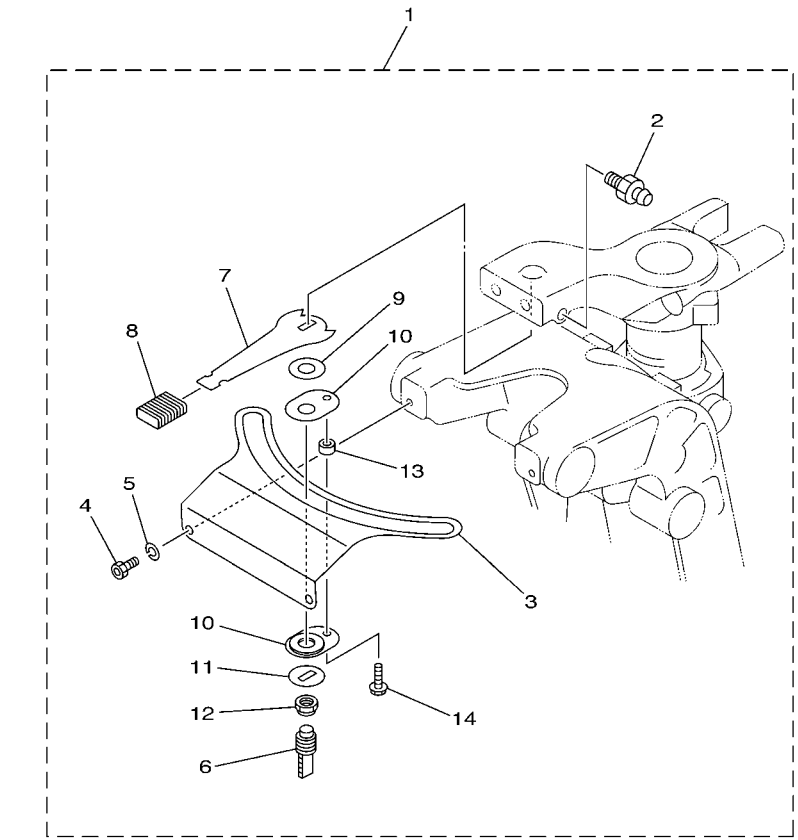

65W1010-2180

REF. NO.	PART NO. N° PIECES	DESCRIPTION DESCRIPTION	ET	E	MH			REMARKS REMARQUES
1	65W–42508–00	STEERING FRICTION ASSY DIRECTION FRICTION (ENS.)			1			
2	93700–06M03	.NIPPLE, GREASE .PION			1			
3	65W–42527–00	.PLATE, FRICTION .PLAQUE, FRICTION			1			
4	90109–06M88	.BOLT .BOULON			2			
5	92990–06100	.WASHER, SPRING .RONDELLE, GROWER			2			
6	65W–42562–00	.SHAFT, STEERING LOCK .ARBRE,ANTIVOL DE DIRECTION			1			
7	65W–42561–00	.KNOB, STEERING LOCK .BOUTON			1			
8	689–43633–00	.COVER, TILT LEVER .COUVERCLE			1			
9	90202–10M56	.WASHER, PLATE .RONDELLE, PLATE			1			
10	65W–42528–00	.PLATE, FRICTION .PLAQUE, FRICTION			2			
11	90209–10M26	.WASHER .RONDELLE			1			
12	90185–10M14	.NUT, SELF-LOCKING .ECROU,AUTO-BLOQUANT			1			
13	90387–05M11	.COLLAR .COLLERETTE			1			
14	90109–05M89	.BOLT .BOULON			1			

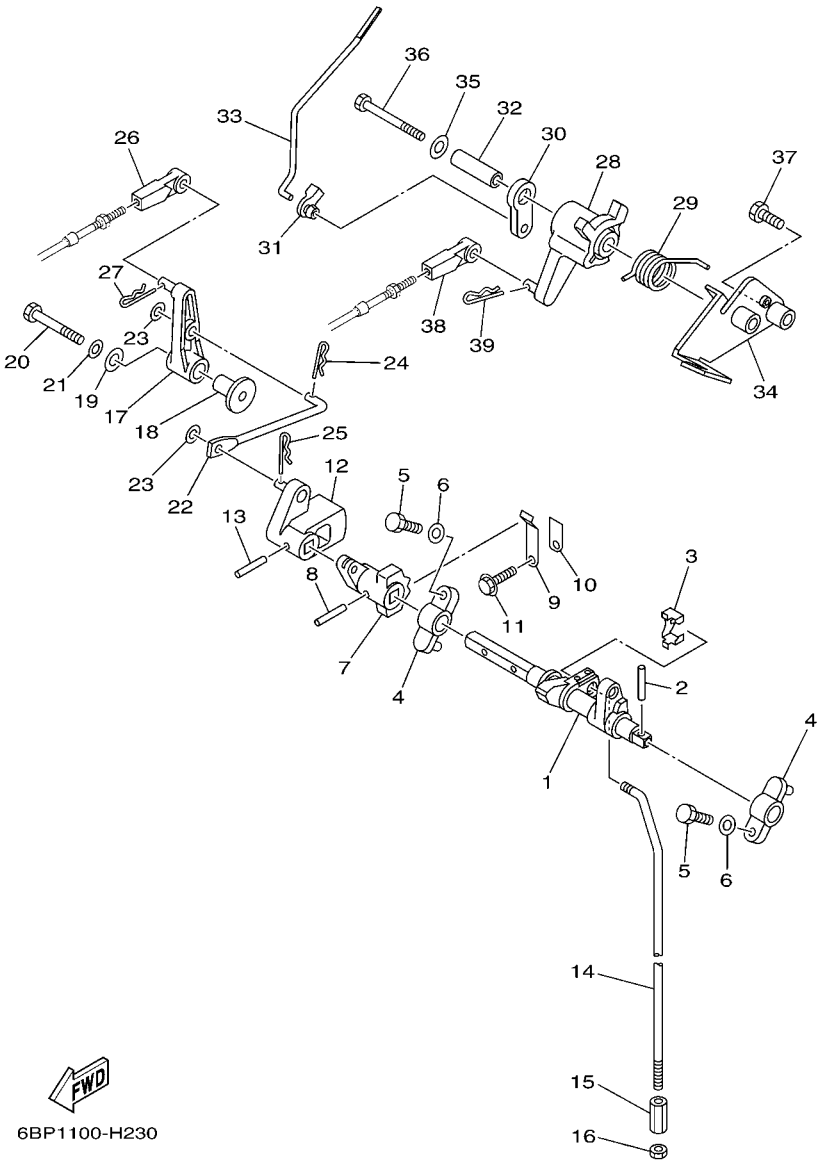

FIG. 22 CONTROL 1 COMMANDE 1

REF. NO.	PART NO. N° PIECES	DESCRIPTION DESCRIPTION	ET	E	MH			REMARKS REMARQUES
1	6BL–44121–00	LEVER, SHIFT ROD LEVIER, TIGE D'INVERSION	1	1				
2	90254–03M05	PIN, SPRING RIVET, TETE TRONCONIQUE	1	1				
3	6AH–26364–00	END, CABLE 2 EMBOUT, DE CABLE	1	1				
4	6G1–41662–01–94	BRACKET 2 SUPPORT 2	2	2				
5	97095–06020	BOLT BOULON	2	2				
6	92995–06600	WASHER RONDELLE	2	2				
7	6BL–44173–00	LEVER, SHIFT CONTROL POIGNEE, INVERSION	1	1				
8	90254–03M05	PIN, SPRING RIVET, TETE TRONCONIQUE	1	1				
9	65W–44116–00	SPRING RESSORT	1	1				
10	66R–44114–00	STOPPER PLAQUETTE	1	1				
11	95895–06014	BOLT, FLANGE BOULON	1	1				
12	6BL–44142–00	JOINT AXE	1	1				
13	90254–03M05	PIN, SPRING RIVET, TETE TRONCONIQUE	1	1				
14	6BP–44143–00	ROD, SHIFT TIGE D'EMBRAYAGE		1				S(16.6") S(16.6")
	6BP–44143–10	ROD, SHIFT TIGE D'EMBRAYAGE	1	1				L(21.6") L(21.6")
15	90170–06015	NUT ECROU	1	1				
16	95380–06700	NUT ECROU	1	1				
17	6BL–44125–00	LEVER, SHIFT ROD LEVIER, TIGE D'INVERSION	1	1				
18	90387–06M86	COLLAR COLLERETTE	1	1				
19	90201–06M31	WASHER, PLATE RONDELLE, PLATE	1	1				
20	97095–06035	BOLT BOULON	1	1				
21	92995–06600	WASHER RONDELLE	1	1				
22	6BL–44192–00	LINK, SHIFT ROD BIELLETTE	1	1				
23	90201–05M06	WASHER, PLATE RONDELLE, PLATE	2	2				
24	90468–10005	CLIP JONC	1	1				
25	90468–18001	CLIP JONC	1	1				
26	663–48344–00	CABLE END, REMOTE CONTROL CHAPE CABLE	1	1				

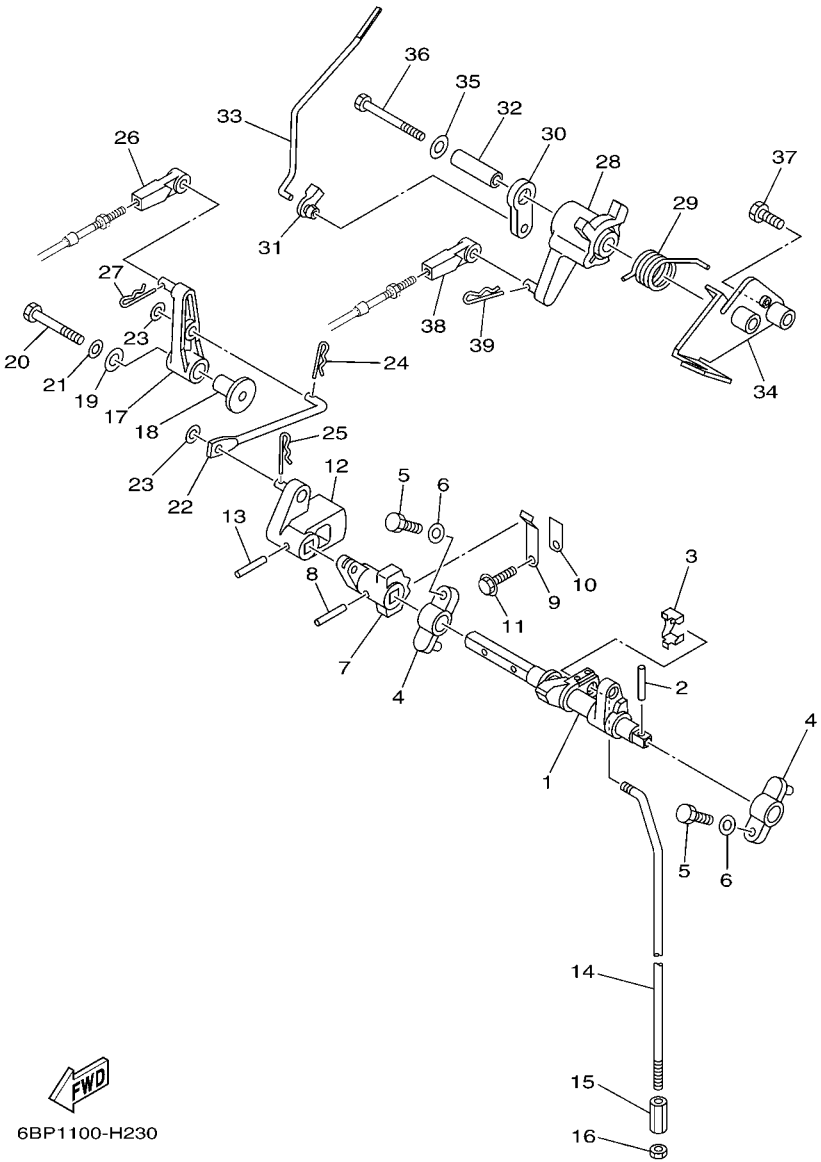

FIG. 22 CONTROL 1 — COMMANDE 1

REF. NO.	PART NO. N° PIECES	DESCRIPTION DESCRIPTION	ET	E	MH			REMARKS REMARQUES
27	90468–18008	CLIP JONC	1	1				
28	6BL–41638–00	PULLEY POULIE	1	1				
29	90508–20040	SPRING, TORSION RESSORT, TORSION	1	1				
30	65W–41283–00	LEVER, FREE ACCEL. LEVIER	1	1				
31	6J8–41262–00	JOINT, CHOKE LEVER RACCORD, LEVIER DE STARTER	1	1				
32	90387–06139	COLLAR COLLERETTE	1	1				
33	6BL–41211–00	LINK, ACCEL. BIELLETTE, ACCELERATION	1	1				
34	6BL–14571–10	BRACKET, THROTTLE SUPPORT, ACCELERATEUR	1	1				
35	90201–06M31	WASHER, PLATE RONDELLE, PLATE	1	1				
36	97095–06065	BOLT BOULON	1	1				
37	97095–06025	BOLT BOULON	1	1				
38	663–48344–00	CABLE END, REMOTE CONTROL CHAPE CABLE	1	1				
39	90468–18008	CLIP JONC	1	1				

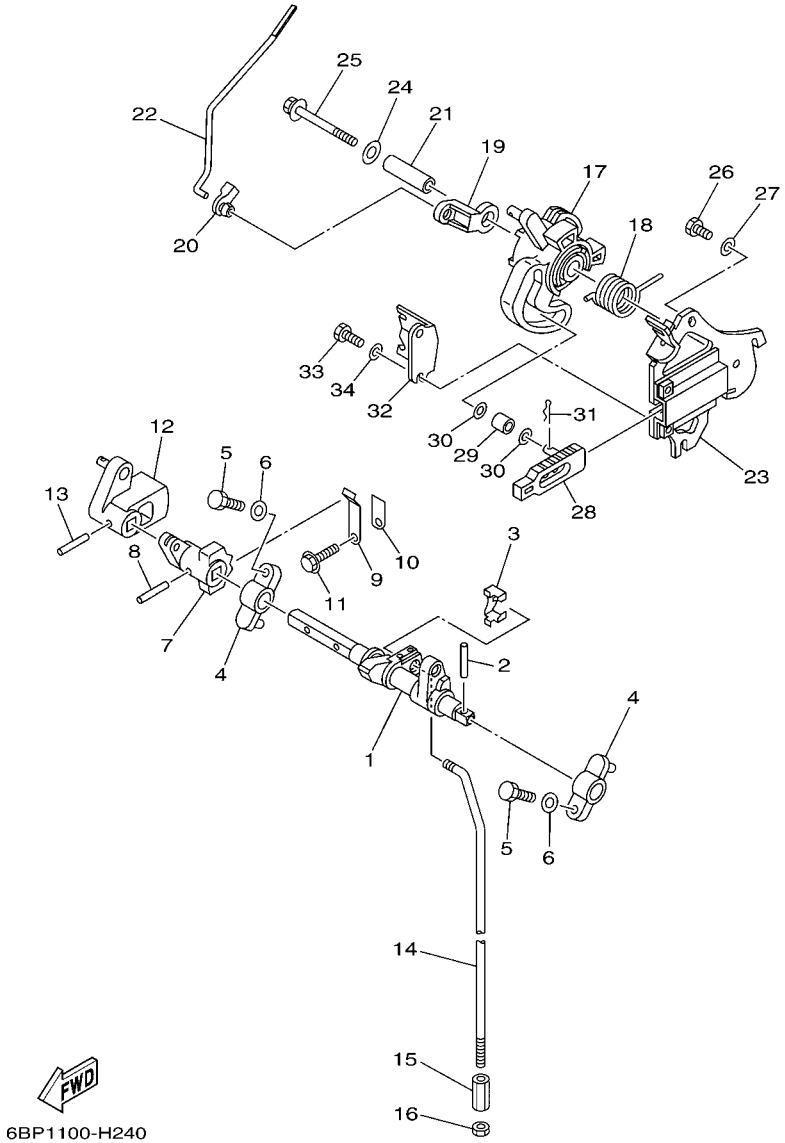

FIG. 23 CONTROL 2 — COMMANDE 2

REF. NO.	PART NO. N° PIECES	DESCRIPTION DESCRIPTION	ET	E	MH			REMARKS REMARQUES
1	6BL–44121–00	LEVER, SHIFT ROD LEVIER, TIGE D'INVERSION			1			
2	90254–03M05	PIN, SPRING RIVET, TETE TRONCONIQUE			1			
3	6AH–26364–00	END, CABLE 2 EMBOUT, DE CABLE			1			
4	6G1–41662–01–94	BRACKET 2 SUPPORT 2			2			
5	97095–06020	BOLT BOULON			2			
6	92995–06600	WASHER RONDELLE			2			
7	6BL–44173–00	LEVER, SHIFT CONTROL POIGNEE, INVERSION			1			
8	90254–03M05	PIN, SPRING RIVET, TETE TRONCONIQUE			1			
9	65W–44116–00	SPRING RESSORT			1			
10	66R–44114–00	STOPPER PLAQUETTE			1			
11	95895–06014	BOLT, FLANGE BOULON			1			
12	6BL–44142–00	JOINT AXE			1			
13	90254–03M05	PIN, SPRING RIVET, TETE TRONCONIQUE			1			
14	6BP–44143–00	ROD, SHIFT TIGE D'EMBRAYAGE			1			S(16.6") S(16.6")
	6BP–44143–10	ROD, SHIFT TIGE D'EMBRAYAGE			1			L(21.6") L(21.6")
15	90170–06015	NUT ECROU			1			
16	95380–06700	NUT ECROU			1			
17	6AH–41638–00	PULLEY POULIE			1			
18	90508–20M44	SPRING, TORSION RESSORT, TORSION			1			
19	6BL–41283–00	LEVER, FREE ACCEL. LEVIER			1			
20	6J8–41262–00	JOINT, CHOKE LEVER RACCORD, LEVIER DE STARTER			1			
21	90387–06139	COLLAR COLLERETTE			1			
22	6BP–41211–00	LINK, ACCEL. BIELLETTE, ACCELERATION			1			
23	6BL–14571–00	BRACKET, THROTTLE SUPPORT, ACCELERATEUR			1			
24	90201–06M31	WASHER, PLATE RONDELLE, PLATE			1			
25	97595–06555	BOLT, WITH WASHER VIS HEXAGONAL AVC RONDELLE			1			
26	97095–06014	BOLT BOULON			2			

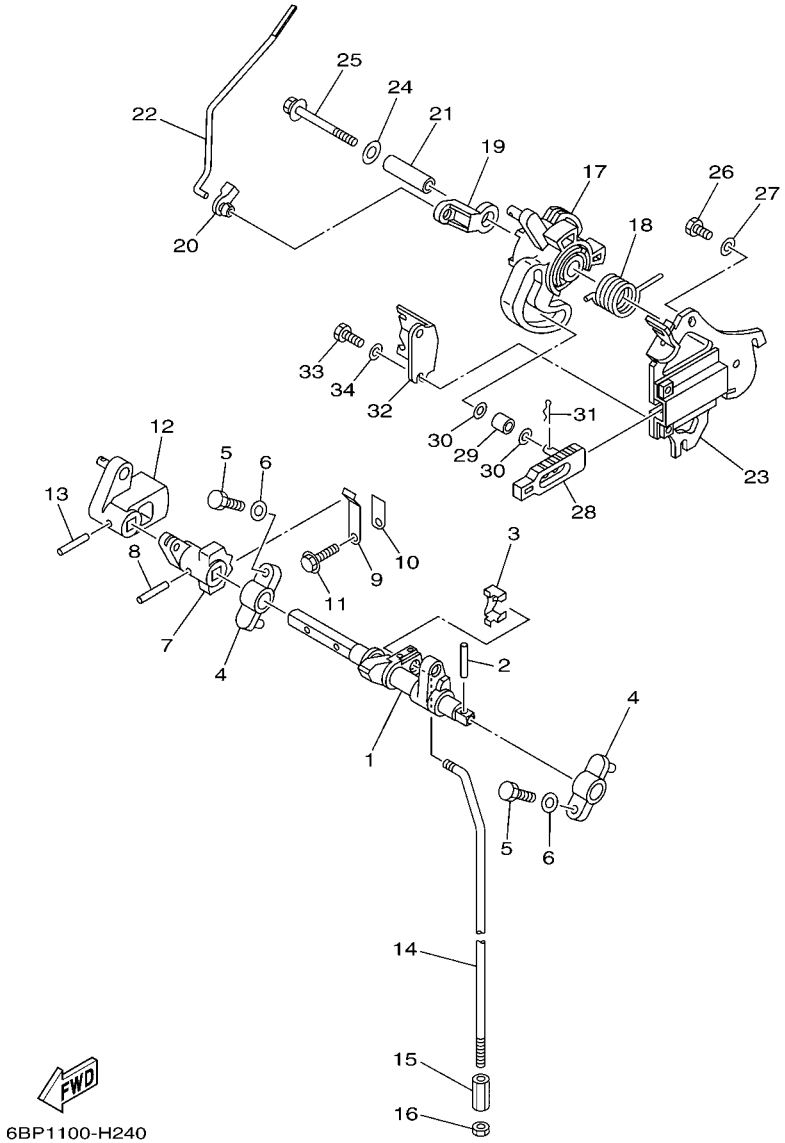

FIG. 23 CONTROL 2 — COMMANDE 2

REF. NO.	PART NO. N° PIECES	DESCRIPTION DESCRIPTION	ET	E	MH			REMARKS REMARQUES
27	92995–06600	WASHER RONDELLE			2			
28	6AH–44167–00	PLUNGER, SHIFT CAM POUSSOIR D'EMBRAYAGE			1			
29	62Y–42171–00	BUSHING COUSSINET			1			
30	90201–05M04	WASHER, PLATE RONDELLE, PLATE			2			
31	90468–10005	CLIP JONC			1			
32	6AH–14497–00	STAY, THROTTLE WIRE SUPPORT DE BOISSEAU			1			
33	97095–06014	BOLT BOULON			2			
34	92995–06600	WASHER RONDELLE			2			

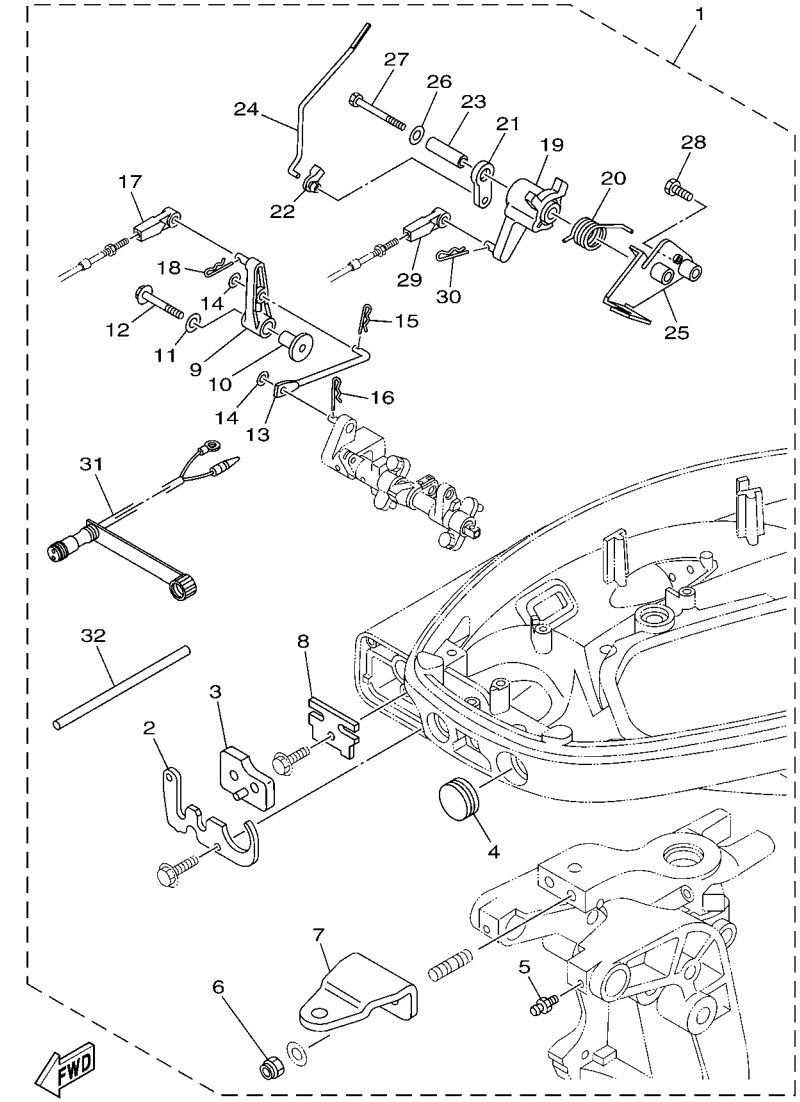

6BP1100-H250

FIG. 24 REMO CON ATTACHMENT COMMANDE A DISTANCE

REF. NO.	PART NO. N° PIECES	DESCRIPTION DESCRIPTION	ET	E	MH			REMARKS REMARQUES
1	6BL–48501–00	REMOTE CONT. ATTACHMENT ASSY. COMMANDE A DISTANCE (KIT)			1			AP AP
2	6BL–42761–00	.STOPPER .PLAQUETTE			1			
3	6BL–42727–00	.GROMMET .PASSE-FIL			1			
4	65W–42726–10	.GROMMET .PASSE-FIL			1			
5	93700–06M03	.NIPPLE, GREASE .PION			2			
6	90185–10051	.NUT, SELF-LOCKING .ECROU,AUTO-BLOQUANT			2			
7	65W–48511–00	.HOOK, STEERING .ATTACHE, DIRECTION			1			
8	6BL–48538–00	.CLAMP, CABLE 1 .COLLIER			1			
9	6BL–44125–00	.LEVER, SHIFT ROD .LEVIER, TIGE D'INVERSION			1			
10	90387–06M86	.COLLAR .COLLERETTE			1			
11	90201–06M31	.WASHER, PLATE .RONDELLE, PLATE			1			
12	97595–06535	.BOLT, WITH WASHER .VIS HEXAGONAL AVC RONDELLE			1			
13	6BL–44192–00	.LINK, SHIFT ROD .BIELLETTE			1			
14	90201–05M06	.WASHER, PLATE .RONDELLE, PLATE			2			
15	90468–10005	.CLIP .JONC			1			
16	90468–18001	.CLIP .JONC			1			
17	663–48344–00	.CABLE END, REMOTE CONTROL .CHAPE CABLE			1			
18	90468–18008	.CLIP .JONC			1			
19	6BL–41638–00	.PULLEY .POULIE			1			
20	90508–20040	.SPRING, TORSION .RESSORT, TORSION			1			
21	65W–41283–00	.LEVER, FREE ACCEL. .LEVIER			1			
22	6J8–41262–00	.JOINT, CHOKE LEVER .RACCORD, LEVIER DE STARTER			1			
23	90387–06139	.COLLAR .COLLERETTE			1			
24	6BL–41211–00	.LINK, ACCEL. .BIELLETTE, ACCELERATION			1			
25	6BL–14571–10	.BRACKET, THROTTLE .SUPPORT, ACCELERATEUR			1			
26	90201–06M31	.WASHER, PLATE .RONDELLE, PLATE			1			
27	97095–06065	.BOLT .BOULON			1			

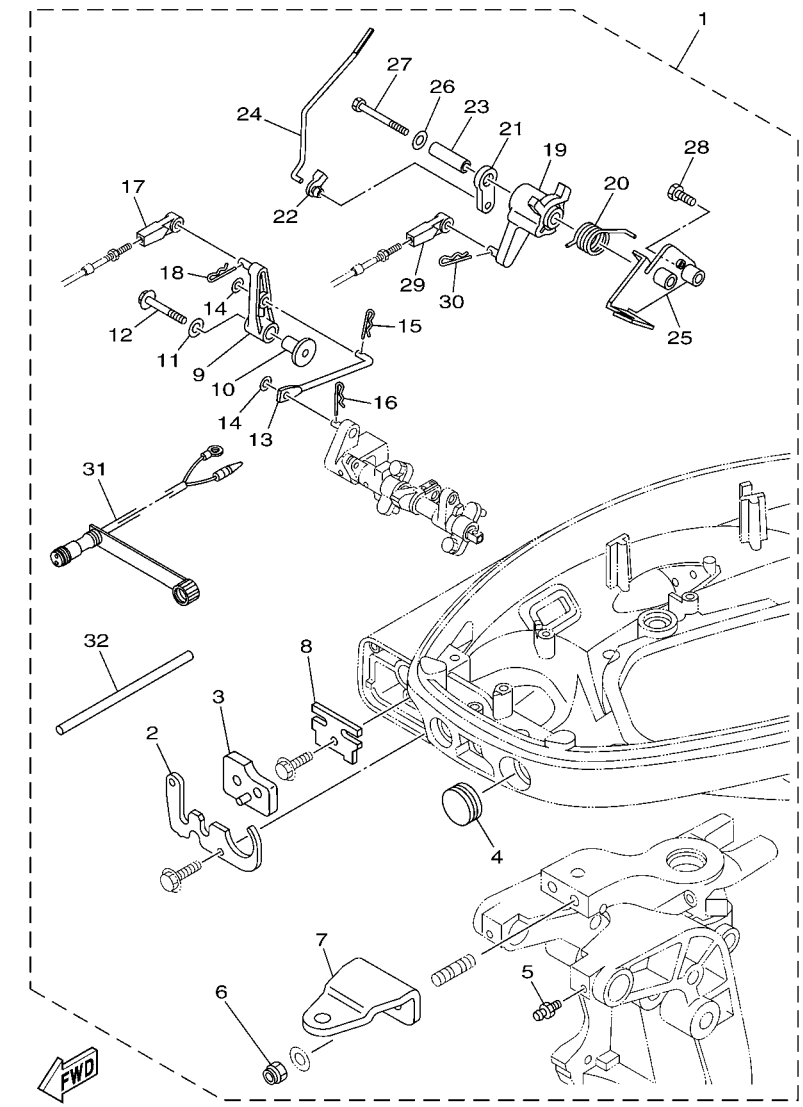

6BP1100-H250

FIG. 24 REMO CON ATTACHMENT COMMANDE A DISTANCE

REF. NO.	PART NO. N° PIECES	DESCRIPTION DESCRIPTION	ET	E	MH			REMARKS REMARQUES
28	97095–06025	.BOLT .BOULON			1			
29	663–48344–00	.CABLE END, REMOTE CONTROL .CHAPE CABLE			1			
30	90468–18008	.CLIP .JONC			1			
31	6D5–84340–00	.SOCKET CORD ASSY 1 .DOUILLE			1			
32	90446–09M42	.HOSE (L160) .DURITE (L160)			2			

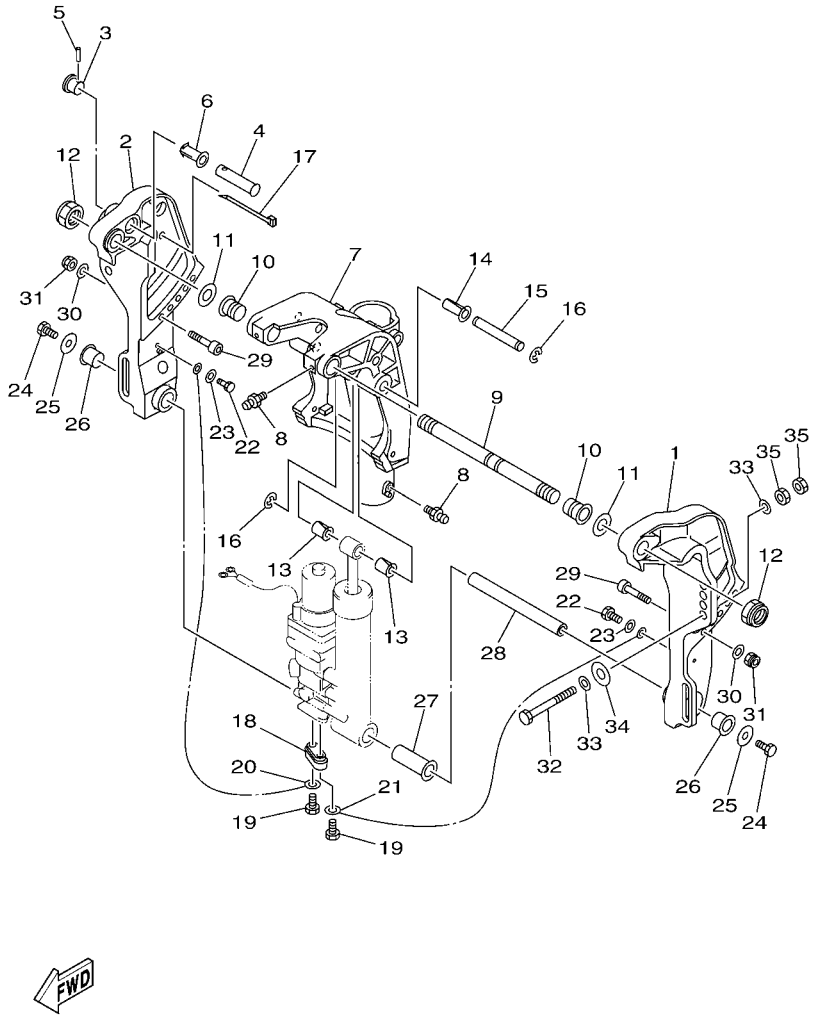

FIG. 25 BRACKET 1 SUPPORT 1

REF. NO.	PART NO. N° PIECES	DESCRIPTION DESCRIPTION	ET	E	MH			REMARKS REMARQUES
1	65W–43111–10–4D	BRACKET, CLAMP 1 PRESSE 1	1					
2	65W–43112–10–4D	BRACKET, CLAMP 2 PRESSE 2	1					
3	65W–43192–00	KNOB, STOPPER BOUTON, BUTEE DE RELEVAGE	1					
4	65W–43191–00	SHAFT, STOPPER AXE, BUTEE	1					
5	91690–30018	PIN, SPRING AGRAFFE	1					
6	90386–14MA1	BUSH DOUILLE	1					
7	65W–43311–10–4D	BRACKET, SWIVEL 1 SUPPORT, PIVOT 1	1					L(21.6") L(21.6")
8	93700–06M03	NIPPLE, GREASE PION	3					
9	63D–43131–01	BOLT, CLAMP BRACKET BOULON, PRESSE	1					
10	90386–22M15	BUSH DOUILLE	2					
11	90201–22M03	WASHER, PLATE RONDELLE, PLATE	2					
12	90185–22043	NUT, SELF-LOCKING ECROU,AUTO-BLOQUANT	2					
13	90386–12MA0	BUSH DOUILLE	2					
14	90386–12M98	BUSH DOUILLE	1					
15	90249–12M38	PIN GOUPILLE	1					
16	99080–10600	CIRCLIP CIRCLIP	2					
17	90465–13M11	CLAMP BRIDE	2					
18	65W–45251–00	ANODE ANODE	1					
19	90101–06020	BOLT BOULON	2					
20	6H1–82148–00	WIRE, LEAD 4 FIL 4	1					
21	6U0–82127–00	WIRE, LEAD 2 FIL 2	1					
22	97095–06014	BOLT BOULON	2					
23	92995–06600	WASHER RONDELLE	2					
24	97080–08016	BOLT BOULON	2					
25	90201–08M00	WASHER, PLATE RONDELLE, PLATE	2					
26	90386–18M44	BUSH DOUILLE	2					
27	90386–18MA0	BUSH DOUILLE	1					

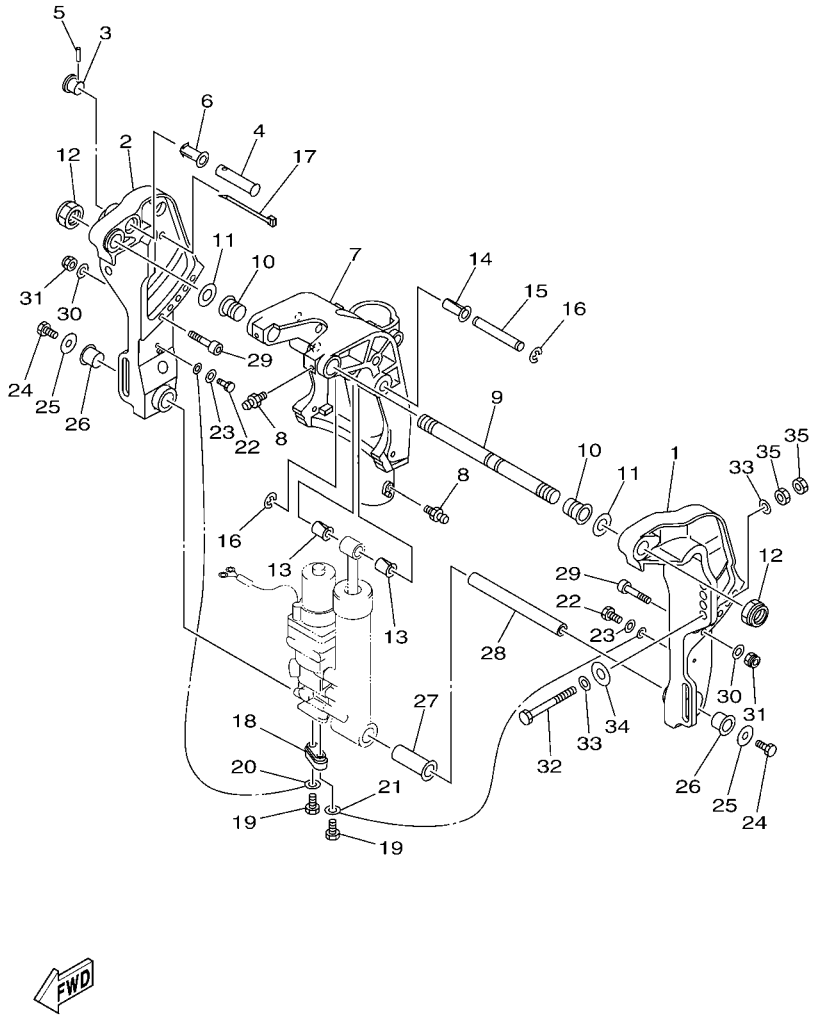

FIG. 25 BRACKET 1 SUPPORT 1

REF. NO.	PART NO. N° PIECES	DESCRIPTION DESCRIPTION	ET	E	MH			REMARKS REMARQUES
28	90249–18M35	PIN GOUPILLE	1					
29	90110–10M02	BOLT, HEXAGON SOCKET HEAD BOULON, TETE HEXAGONALE CREUSE	2					
30	92995–10600	WASHER RONDELLE	2					
31	90185–10M13	NUT, SELF-LOCKING ECROU,AUTO-BLOQUANT	2					
32	90101–12M65	BOLT BOULON	4					
33	92995–12200	WASHER RONDELLE	8					
34	90201–12426	WASHER, PLATE RONDELLE, PLATE	4					
35	95380–12600	NUT ECROU	8					

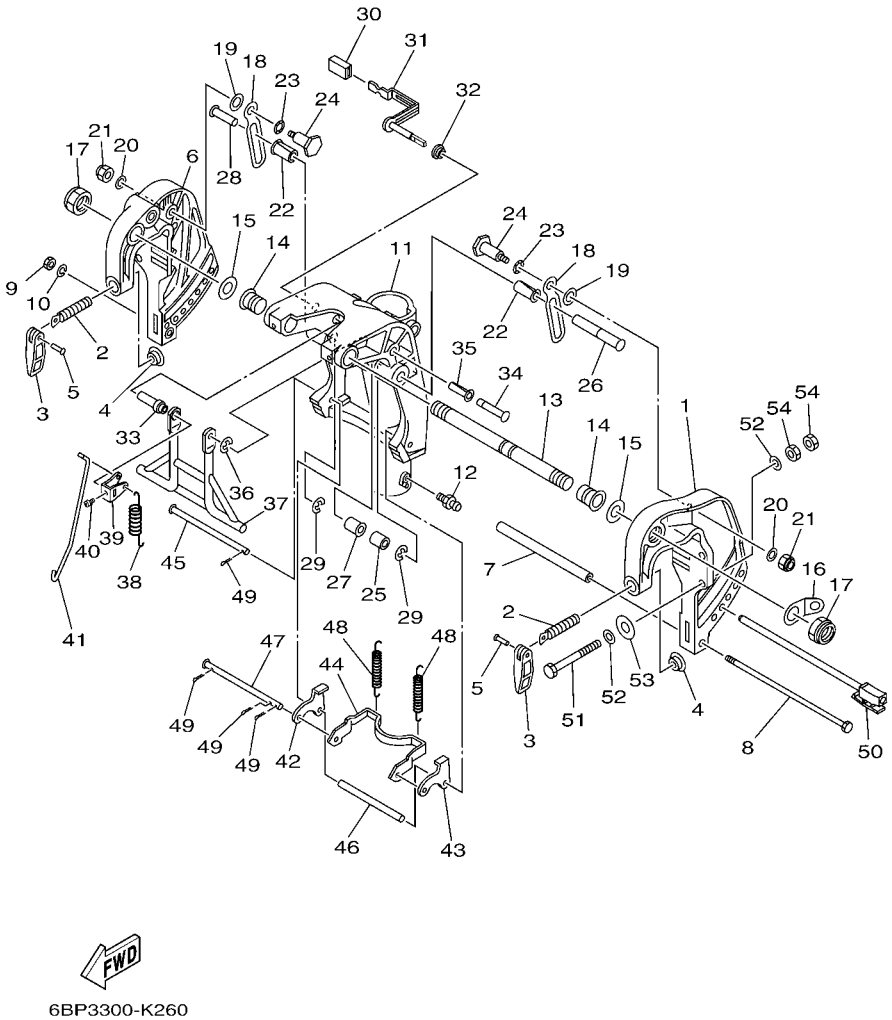

FIG. 26 BRACKET 2 SUPPORT 2

REF. NO.	PART NO. N° PIECES	DESCRIPTION DESCRIPTION	ET	E	MH			REMARKS REMARQUES
1	66T–43111–01–4D	BRACKET, CLAMP 1 PRESSE 1		1	1			
2	90149–14M12	SCREW VIS		2	2			
3	663–43118–01–4D	HANDLE, TRANSOM CLAMP POIGNEE DE VIS DE PRESSE		2	2			
4	648–43114–01	PAD, TRANSOM CLAMP RONDELLE D'APPUI		2	2			
5	90243–04007	PIN GOUPILLE		2	2			
6	66T–43112–01–4D	BRACKET, CLAMP 2 PRESSE 2		1	1			
7	90387–08M29	COLLAR COLLERETTE		1	1			
8	90101–08M76	BOLT BOULON		1	1			
9	95380–08600	NUT ECROU		1	1			
10	92990–08100	WASHER, SPRING RONDELLE, GROWER		1	1			
11	65W–43311–00–4D	BRACKET, SWIVEL 1 SUPPORT, PIVOT 1		1	1			S(16.6") S(16.6")
	65W–43311–10–4D	BRACKET, SWIVEL 1 SUPPORT, PIVOT 1		1	1			L(21.6") L(21.6")
12	93700–06M03	NIPPLE, GREASE PION		3				
	93700–06M03	NIPPLE, GREASE PION			1			
13	63D–43131–01	BOLT, CLAMP BRACKET BOULON, PRESSE		1	1			
14	90386–22M15	BUSH DOUILLE		2	2			
15	90201–22M03	WASHER, PLATE RONDELLE, PLATE		2	2			
16	6J8–43113–01	PLATE, CLAMP BRACKET PLAQUETTE, PRESSE		1	1			
17	90185–22043	NUT, SELF-LOCKING ECROU,AUTO-BLOQUANT		2	2			
18	66T–43627–00	STOPPER PLAQUETTE		2	2			
19	90202–12031	WASHER, PLATE RONDELLE, PLATE		2	2			
20	90201–08M07	WASHER, PLATE RONDELLE, PLATE		2	2			
21	90185–08057	NUT, SELF-LOCKING ECROU,AUTO-BLOQUANT		2	2			
22	90386–12M98	BUSH DOUILLE		2	2			
23	90206–12M00	WASHER, WAVE RONDELLE, ONDULEE		2	2			
24	90109–08M90	BOLT BOULON		2	2			
25	90387–12M04	COLLAR COLLERETTE		1	1			

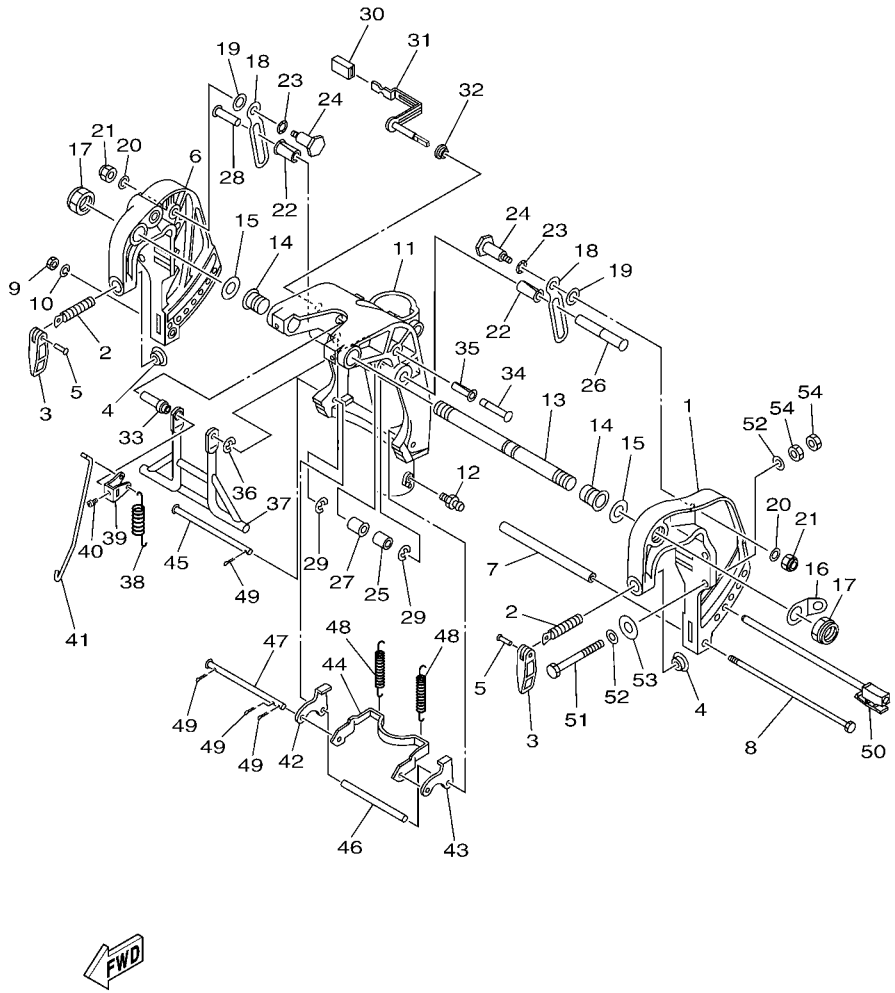

FIG. 26 BRACKET 2 SUPPORT 2

REF. NO.	PART NO. N° PIECES	DESCRIPTION DESCRIPTION	ET	E	MH			REMARKS REMARQUES
26	90249–12M39	PIN GOUPILLE		1	1			
27	90386–12MA0	BUSH DOUILLE		1	1			
28	90249–12M34	PIN GOUPILLE		1	1			
29	99080–10600	CIRCLIP CIRCLIP		2	2			
30	682–43318–01	COVER CAPUCHON		1	1			
31	65W–43630–11	TILT LEVER ASSY LEVIER D'INCLINAISON		1	1			
32	90386–07MA2	BUSH DOUILLE		1	1			
33	90387–07M05	COLLAR COLLERETTE		1	1			
34	90249–10M31	PIN GOUPILLE		1	1			
35	90386–10M99	BUSH DOUILLE		1	1			
36	99080–08600	CIRCLIP CIRCLIP		1	1			
37	66T–43350–02	RECEIVER ASSY RECEIVER ASSY		1	1			
38	90506–20M37	SPRING, TENSION RESSORT, TENSION		1	1			
39	66T–43631–11	LEVER, TILT LEVIER, INCLINAISON		1	1			
40	90157–05014	SCREW, PAN HEAD VIS, TETE TRONCONIQUE		1	1			
41	65W–43616–00	ROD, TILT LOCK TIGE		1	1			
42	65W–43614–01	PLATE, TILT LOCK ETRIER, VERROUILLAGE MARCHE AR		1	1			
43	65W–43615–01	PLATE, TILT LOCK ETRIER, VERROUILLAGE MARCHE AR		1	1			
44	65W–43613–00	ARM, TILT LOCK GUIDE		1	1			
45	90249–07M32	PIN GOUPILLE		1	1			
46	90387–07M29	COLLAR COLLERETTE		1	1			
47	90249–07M33	PIN GOUPILLE		1	1			
48	90506–30M00	SPRING, TENSION RESSORT, TENSION		2	2			
49	91490–20012	PIN. COTTER GOUPILLE		4	4			
50	65W–43160–00	TILT ROD ASSY BROCHE D'INCLINAISON (ENS.)		1	1			
51	90101–10M58	BOLT BOULON		4				
52	92995–10600	WASHER RONDELLE		8				

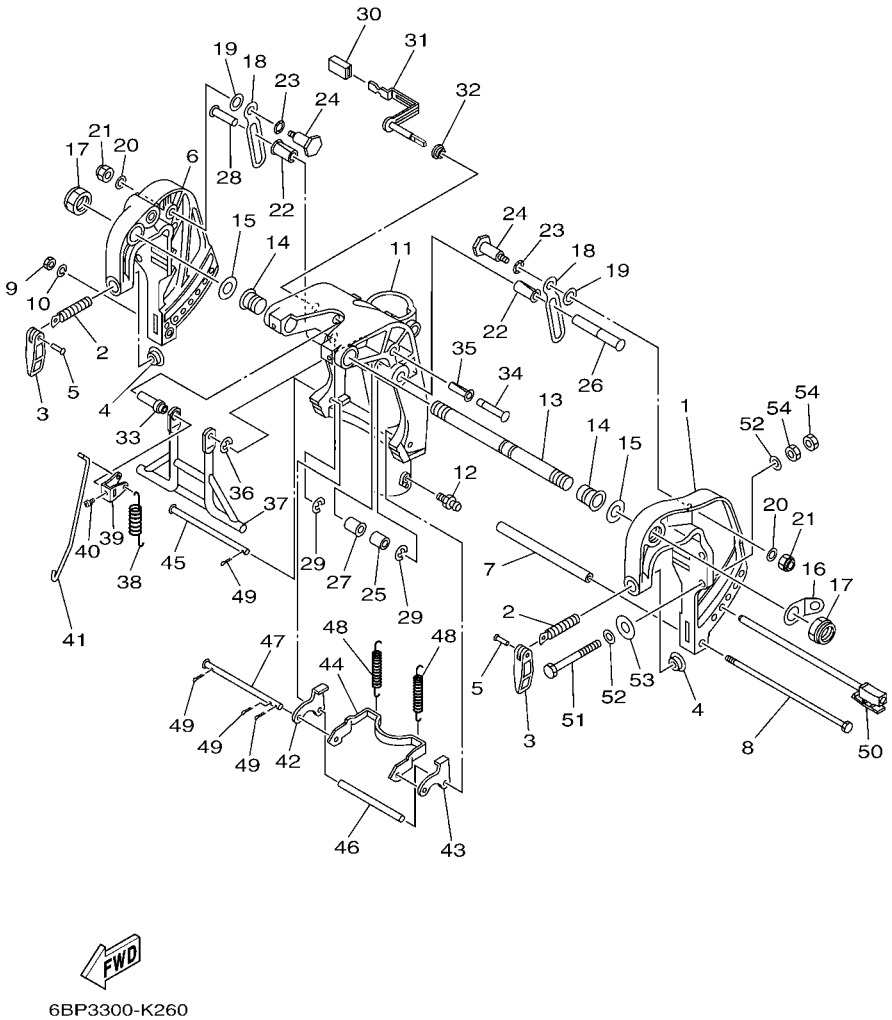

FIG. 26 BRACKET 2 SUPPORT 2

REF. NO.	PART NO. N° PIECES	DESCRIPTION DESCRIPTION	ET	E	MH			REMARKS REMARQUES
53	90201–12426	WASHER, PLATE RONDELLE, PLATE		4				
54	95380–10600	NUT ECROU		8				

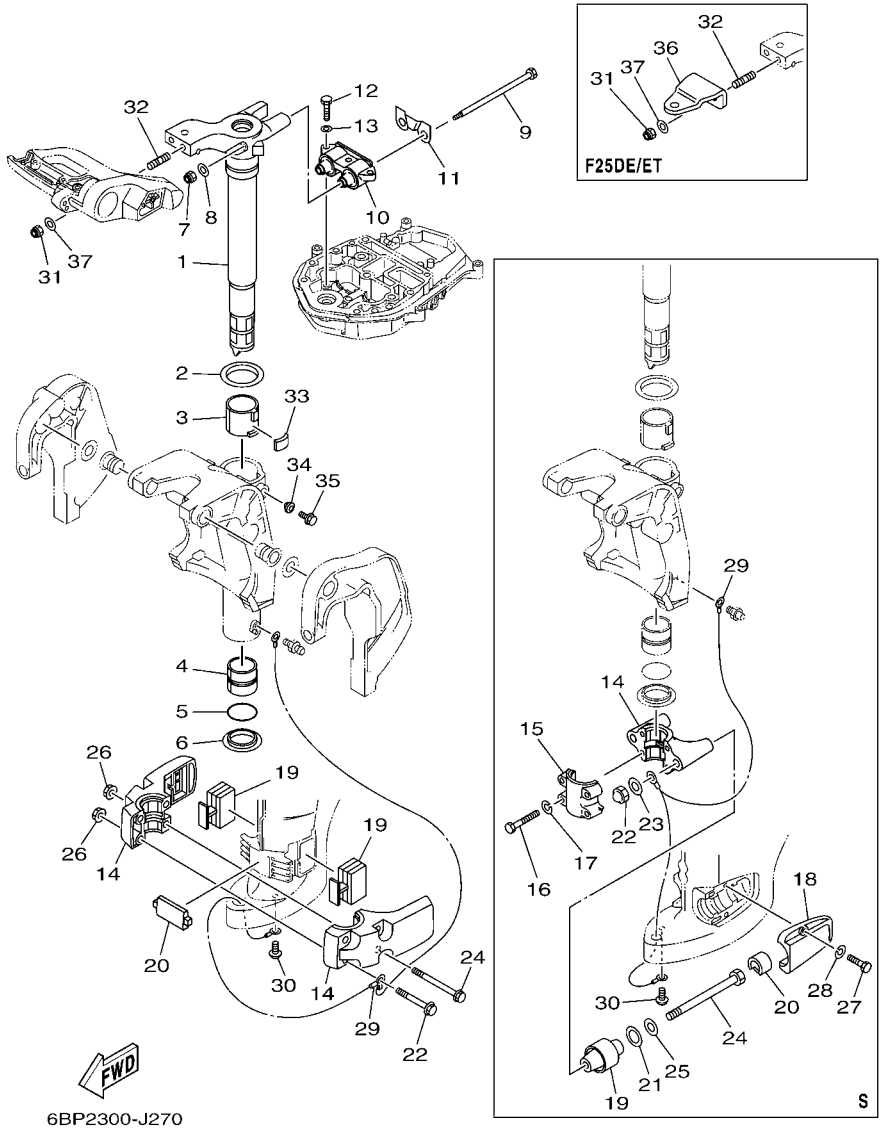

FIG. 27 BRACKET 3 SUPPORT 3

REF. NO.	PART NO. N° PIECES	DESCRIPTION DESCRIPTION	ET	E	MH			REMARKS REMARQUES
1	65W–42511–01–4D	BRACKET, STEERING CADRE, DIRECTION		1	1			S(16.6") S(16.6")
	65W–42511–11–4D	BRACKET, STEERING CADRE, DIRECTION	1	1	1			L(21.6") L(21.6")
2	90209–52M00	WASHER RONDELLE	1	1	1			
3	90386–52M02	BUSH DOUILLE	1	1	1			
4	90386–44M03	BUSH DOUILLE	1	1	1			
5	93210–43MJ0	O-RING JOINT TORIQUE	1	1	1			
6	90386–44M99	BUSH DOUILLE	1	1	1			
7	90185–08045	NUT, SELF-LOCKING ECROU,AUTO-BLOQUANT	2	2	2			
8	92995–08200	WASHER RONDELLE	2	2	2			
9	90101–08M86	BOLT BOULON	2	2	2			
10	67C–44514–20–94	MOUNT DAMPER, UPPER SIDE SILENT-BLOC, SUPERIEUR LATERAL	1	1	1			
11	66T–44526–30	PLATE PLAQUE	1	1	1			
12	97075–08030	BOLT BOULON	3	3	3			
13	92995–08600	WASHER RONDELLE	3	3	3			
14	6BP–44551–00–4D	HOUSING, LOWER MOUNT RUBBER 1 BOITIER, SILENT-BLOC INFERIEUR		1	1			S(16.6") S(16.6")
	65W–44551–11–4D	HOUSING, LOWER MOUNT RUBBER 1 BOITIER, SILENT-BLOC INFERIEUR	2	2	2			L(21.6") L(21.6")
15	6BP–44552–00–4D	HOUSING, LOWER MOUNT RUBBER 2 BOITIER, SILENT-BLOC INFERIEUR		1	1			S(16.6") S(16.6")
16	97095–08045	BOLT BOULON		4	4			S(16.6") S(16.6")
17	92995–08100	WASHER RONDELLE		4	4			S(16.6") S(16.6")
18	63D–44552–01–4D	HOUSING, LOWER MOUNT RUBBER 2 BOITIER, SILENT-BLOC INFERIEUR		2	2			S(16.6") S(16.6")
19	6BP–44555–00	MOUNT DAMPER, LOWER SIDE SILENT-BLOC, INFERIEUR LATERAL		2	2			S(16.6") S(16.6")
	65W–44555–00	MOUNT DAMPER, LOWER SIDE SILENT-BLOC, INFERIEUR LATERAL	2	2	2			L(21.6") L(21.6")
20	64J–44575–00	DAMPER, LOWER MOUNT RUBBER SILENT-BLOC, INFERIEUR		2	2			S(16.6") S(16.6")
	65W–44575–01	DAMPER, LOWER MOUNT RUBBER SILENT-BLOC, INFERIEUR	1	1	1			L(21.6") L(21.6")
21	90202–25M04	WASHER, PLATE RONDELLE, PLATE		2	2			S(16.6") S(16.6")
22	95380–12800	NUT, CROWN ECROU, BORGNE		2	2			S(16.6") S(16.6")
	97575–10580	BOLT, WITH WASHER VIS HEXAGONAL AVC RONDELLE	2	2	2			L(21.6") L(21.6")

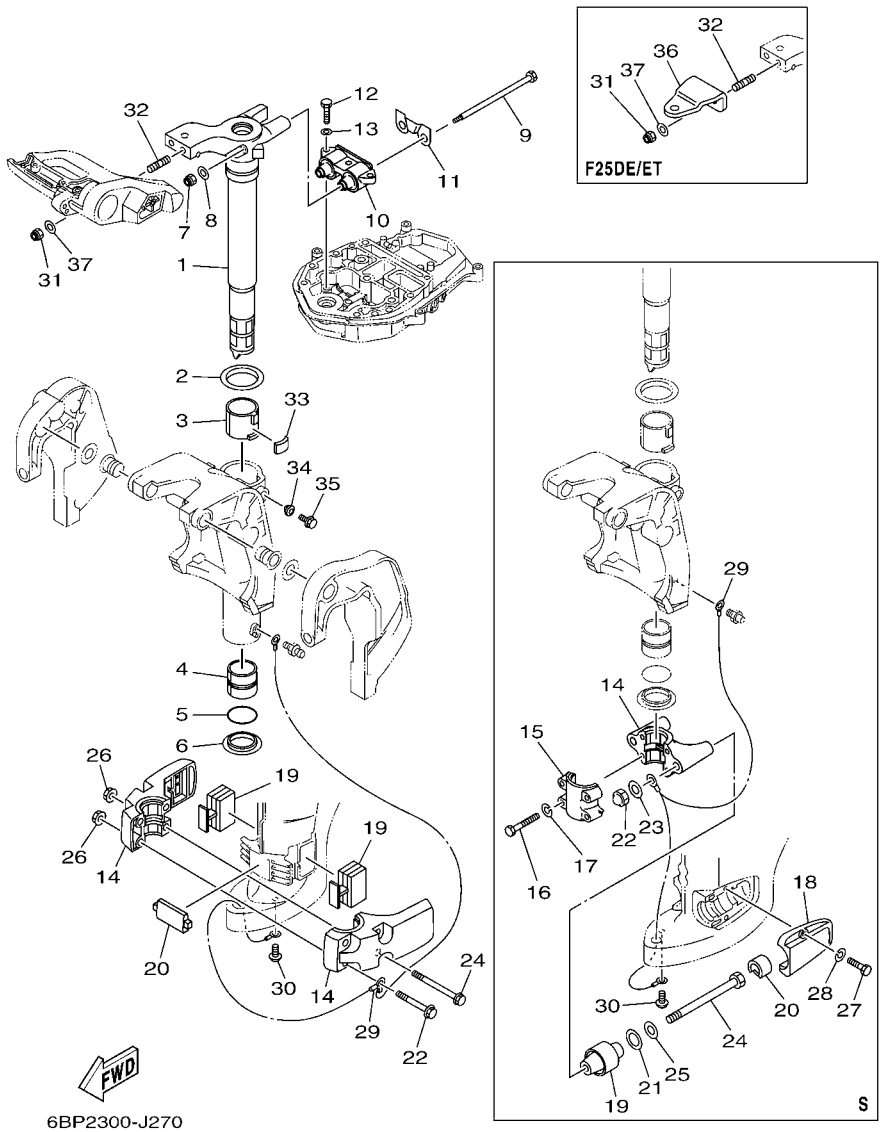

FIG. 27 BRACKET 3 SUPPORT 3

REF. NO.	PART NO. N° PIECES	DESCRIPTION DESCRIPTION	ET	E	MH			REMARKS REMARQUES
23	90201–12M16	WASHER, PLATE RONDELLE, PLATE		2	2			S(16.6") S(16.6")
24	90109–12MA3	BOLT BOULON		2	2			S(16.6") S(16.6")
	90119–10M14	BOLT, WITH WASHER BOULON, AVEC RONDELLE	2	2	2			L(21.6") L(21.6")
25	90201–13M19	WASHER, PLATE RONDELLE, PLATE		2	2			S(16.6") S(16.6")
26	90179–10M33	NUT ECROU	4	4	4			L(21.6") L(21.6")
27	97075–08030	BOLT BOULON		4	4			S(16.6") S(16.6")
28	92995–08100	WASHER RONDELLE		4	4			S(16.6") S(16.6")
29	63D–82127–00	WIRE, LEAD 2 FIL 2		1	1			S(16.6") S(16.6")
	65W–82127–10	WIRE, LEAD 2 FIL 2	1	1	1			L(21.6") L(21.6")
30	97885–06008	SCREW, PAN HEAD VIS, A ENCOCHE	1	1	1			
31	90185–10051	NUT, SELF-LOCKING ECROU,AUTO-BLOQUANT	2	2	2			
32	90116–10M70	BOLT, STUD GOUJON	2	2	2			
33	648–42528–00	PLATE, FRICTION PLAQUE, FRICTION	1	1	1			
34	65W–43373–00	SEAL, DAMPER JOINT	1	1	1			
35	90105–08M76	BOLT, FLANGE BOULON	1	1	1			
36	65W–48511–00	HOOK, STEERING ATTACHE, DIRECTION	1	1				
37	90201–10120	WASHER, PLATE RONDELLE, PLATE	2	2				
	92995–10600	WASHER RONDELLE			2			

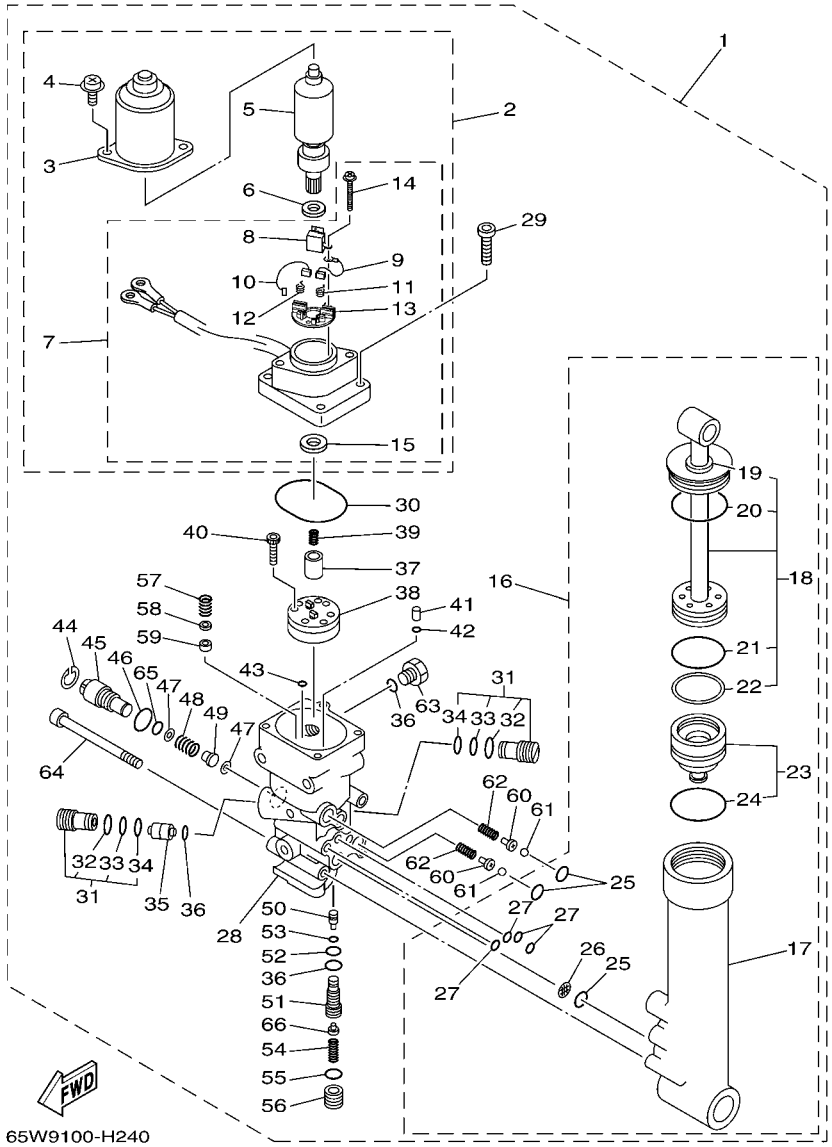

FIG. 28 POWER TRIM & TILT ASSY PUISSANCE PARER ET INCLINER

REF. NO.	PART NO. N° PIECES	DESCRIPTION DESCRIPTION	ET	E	MH			REMARKS REMARQUES
1	65W–43800–03–4D	POWER TRIM & TILT ASSY PUISSANCE PARER ET INCLINER (E	1					
2	65W–43880–01	.MOTOR ASSY .MOTEUR (ENS.)	1					
3	65W–43804–01	..STATOR ASSY ..STATOR (ENS.)	1					
4	65W–43887–01	..BOLT ..BOULON	2					
5	65W–43805–01	..ARMATURE ASSY ..INDUIT (ENS.)	1					
6	65W–4387G–00	..WASHER ..RONDELLE	1					
7	65W–43881–01	..FRAME, END ..BATI	1					
8	65W–82181–00	...CIRCUIT BREAKER COMP. ...RUPTEUR COMPLET	1					
9	65W–43892–01	...BRUSH 2 ...BALAI 2	1					
10	65W–43891–01	...BRUSH 1 ...BALAI 1	1					
11	65W–4386K–01	...SPRING, BRUSH ...RESSORT, BALAI	1					
12	65W–4386L–00	...SPRING, BRUSH 2 ...RESSORT, BALAI 2	1					
13	65W–4380F–01	...PLATE, BRUSH HOLDER ...PLAQUE	1					
14	65W–43879–01	...SCREW, WITH WASHER ...VIS, AVEC RONDELLE	2					
15	65W–43882–01	...OIL SEAL ...JOINT SPI	1					
16	65W–43840–00	.POWER TILT ASSY .PUISSANCE INCLINER (ENS.)	1					
17	65W–4380K–00	..CYLINDER, TILT SUB ASSY ..CYLINDRE	1					
18	65W–43810–00	..TILT PISTON SUB ASSY ..INCLINER PISTON AUXILIAIRE(ENS	1					
19	65W–43812–00	...SEAL, DUST ...JOINT	1					
20	65W–43865–00	...O-RING ...JOINT TORIQUE	1					
21	6H1–43861–10	...O-RING ...JOINT TORIQUE	1					
22	65W–43871–00	...RING, BACK UP ...SEGMENT	1					
23	65W–4381B–00	..FREE PISTON SUB ASSY ..PISTON AUXILIAIRE (ENS.)	1					
24	6H1–43861–10	...O-RING ...JOINT TORIQUE	1					
25	93210–11368	..O-RING ..JOINT TORIQUE	3					
26	6H1–43816–00	..FILTER 1 ..FILTRE 1	1					
27	93210–064A5	..O-RING ..JOINT TORIQUE	4					

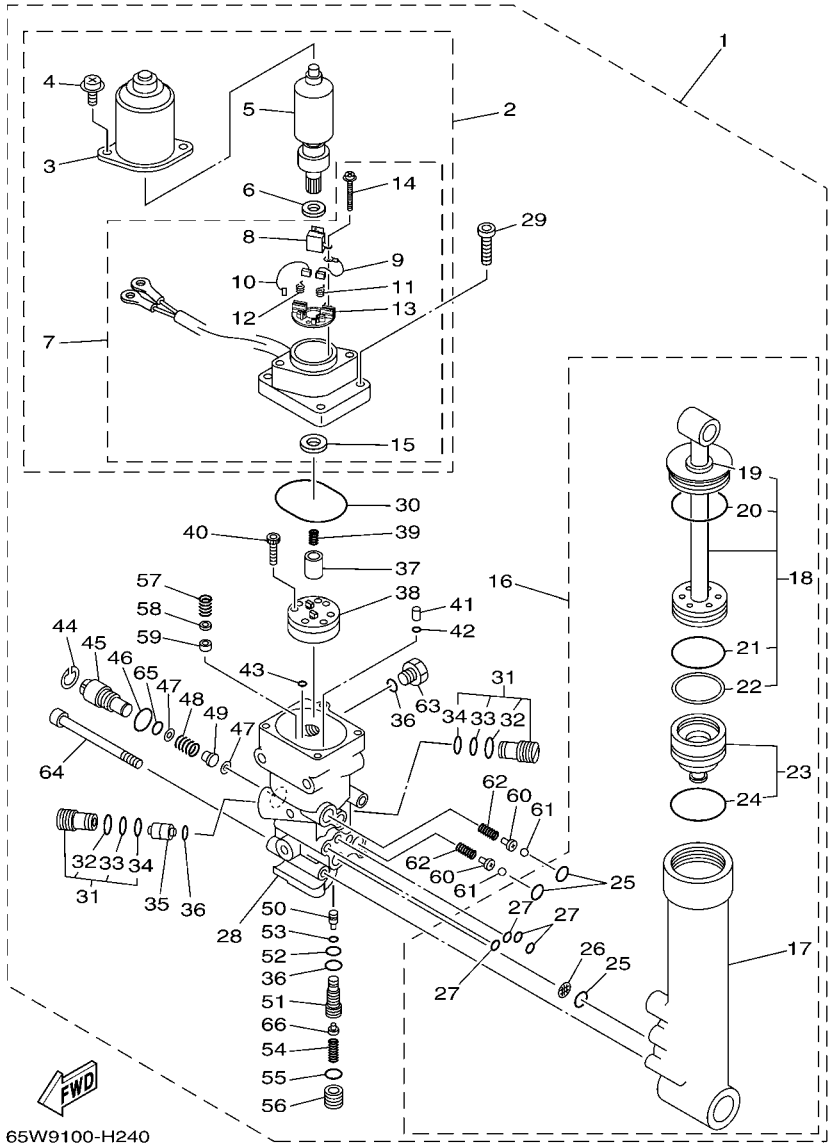

FIG. 28 POWER TRIM & TILT ASSY PUISSANCE PARER ET INCLINER

REF. NO.	PART NO. N° PIECES	DESCRIPTION DESCRIPTION	ET	E	MH			REMARKS REMARQUES
28	65W–4380L–00	.HOUSING, TRIM & TILT SUB ASSY .CARTER	1					
29	65W–43888–00	.BOLT, SOCKET .BOULON	4					
30	93210–50768	.O-RING .JOINT TORIQUE	1					
31	6T4–43802–03	.VALVE SUB ASSY .CLAPET AUXILIAIRE (ENS.)	2					
32	6H1–43866–00	..O-RING ..JOINT TORIQUE	1					
33	93210–10M74	..O-RING ..JOINT TORIQUE	1					
34	93210–12N52	..O-RING ..JOINT TORIQUE	1					
35	62X–43841–00	.PISTON, SHUTTLE .PISTON	1					
36	93210–09165	.O-RING .JOINT TORIQUE	3					
37	65W–43831–00	.CONNECTOR, SHAFT .RACCORD	1					
38	65W–43830–00	.GEAR PUMP ASSY .POMPE A PIGNON (ENS.)	1					
39	6T4–43853–00	.SPRING, MAIN VALVE .RESSORT	1					
40	91318–04025	.BOLT .BOULON	4					
41	65W–43817–00	.FILTER 2 .FILTRE 2	2					
42	93210–04N50	.O-RING .JOINT TORIQUE	2					
43	93210–04N51	.O-RING .JOINT TORIQUE	2					
44	6H1–43875–00	.RING, SNAP .RESSORT	1					
45	6H1–43845–00	.SCREW, MANUAL RELEASE .VIS	1					
46	93210–18397	.O-RING .JOINT TORIQUE	1					
47	6H1–43847–00	.SEAT, MANUAL VALVE .SIEGE	2					
48	65W–43854–00	.SPRING, MANUAL RELEASE .RESSORT	1					
49	65W–4382A–00	.ADAPTOR 1 .ADAPTEUR 1	1					
50	65W–43844–00	.PIN, VALVE SUPPORT .GOUPILLE	1					
51	65W–43851–00	.SEAT, RELIEF VALVE .SIEGE	1					
52	93210–08006	.O-RING .JOINT TORIQUE	1					
53	93210–03478	.O-RING .JOINT TORIQUE	1					
54	65W–43855–00	.SPRING, UP RELIEF .RESSORT	1					

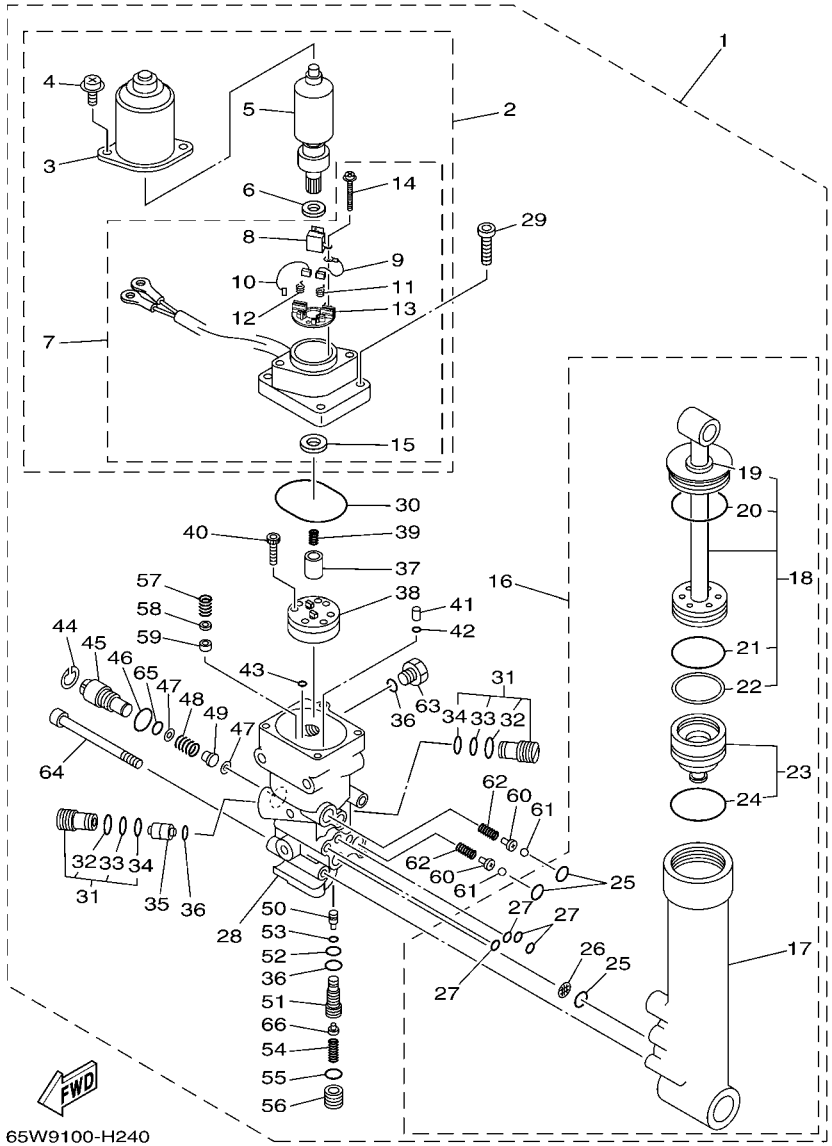

FIG. 28 POWER TRIM & TILT ASSY PUISSANCE PARER ET INCLINER

REF. NO.	PART NO. N° PIECES	DESCRIPTION DESCRIPTION	ET	E	MH			REMARKS REMARQUES
55	93210–11073	.O-RING .JOINT TORIQUE	1					
56	65W–43843–00	.SCREW, VALVE LOCK .VIS	1					
57	6H1–43856–10	.SPRING, DOWN RELIEF .RESSORT	1					
58	6H1–43844–10	.PIN, VALVE SUPPORT .GOUPILLE	1					
59	6H1–4384F–10	.SEAL, MAIN VALVE .JOINT	1					
60	65W–4386A–00	.PIN, ABSORBER VALVE .GOUPILLE, SOUPAPE	2					
61	93501–08001	.BALL .BILLE	2					
62	65W–43853–00	.SPRING, MAIN VALVE .RESSORT	2					
63	6H1–43829–00	.PLUG, RESERVOIR .BOUCHON	1					
64	62X–43878–00	.BOLT, SOCKET .BOULON	3					
65	93210–10M74	.O-RING .JOINT TORIQUE	1					
66	6T4–43808–00	.SEAT VALVE COMP. 1 .SIEGE VALVE COMP. 1	1					

FIG. 29 UPPER CASING FOURREAU

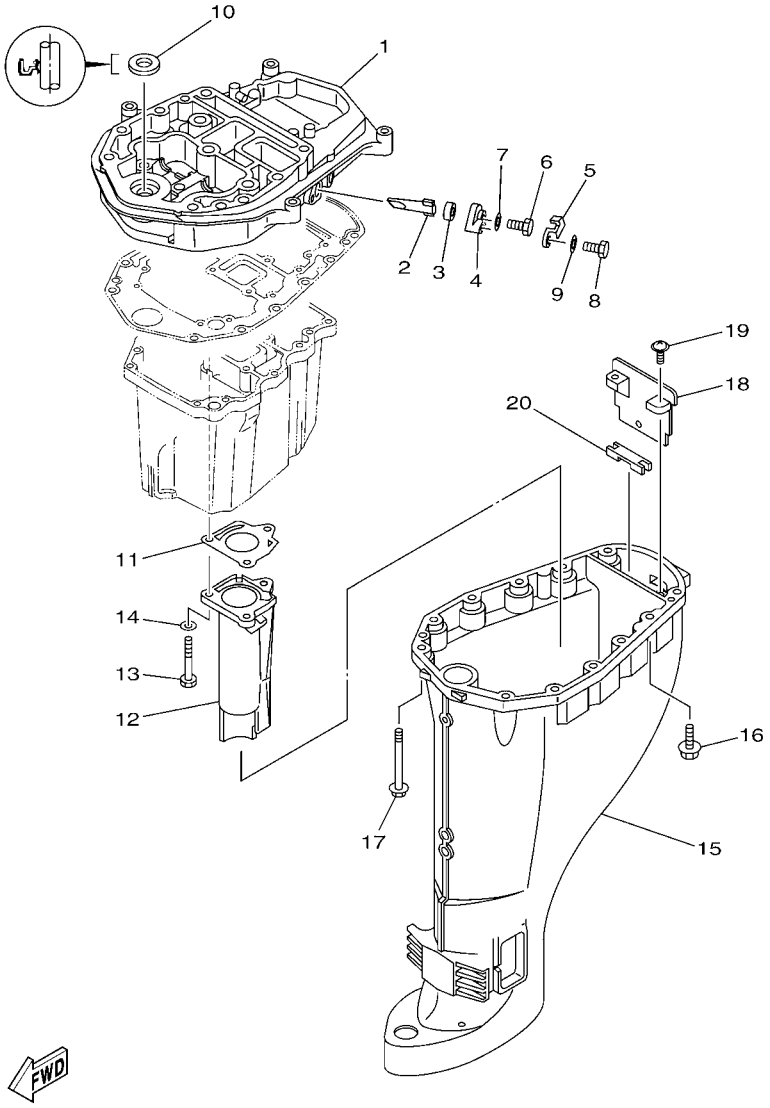

6BP3110-K300

REF. NO.	PART NO. N° PIECES	DESCRIPTION DESCRIPTION	ET	E	MH			REMARKS REMARQUES
1	67C–41137–13–CA	GUIDE, EXHAUST COLLECTEUR D'ECHAPPEMENT	1	1	1			
2	62Y–11325–00	ANODE ANODE	1	1	1			
3	66M–11328–00	GROMMET, ANODE PASSE-FIL	1	1	1			
4	66M–11327–00–94	COVER, ANODE COUVERCLE ANODE	1	1	1			
5	66M–12535–00	PLATE PLAQUE	1	1	1			
6	97095–05012	BOLT BOULON	1	1	1			
7	92995–05600	WASHER RONDELLE	1	1	1			
8	97013–06020	BOLT BOULON	1	1	1			
9	92903–06600	WASHER, PLATE RONDELLE, PLATE	1	1	1			
10	93110–16004	OIL SEAL JOINT SPY	1	1	1			
11	67C–41133–00	GASKET, EXHAUST MANIFOLD 1 JOINT, PIPE D'ECHAPPEMENT	1	1	1			
12	68U–41131–00–CA	MANIFOLD, EXT. 1 PIPE D'ECHAPPEMENT	1	1	1			
13	97075–06050	BOLT BOULON	3	3	3			
14	92995–06600	WASHER RONDELLE	3	3	3			
15	6BP–45111–00–4D	CASING, UPPER FOURREAU		1	1			S(16.6") S(16.6")
	6D5–45111–10–4D	CASING, UPPER FOURREAU	1	1	1			L(21.6") L(21.6")
16	90119–08102	BOLT, WITH WASHER BOULON, AVEC RONDELLE	4	4	4			
17	90119–08132	BOLT, WITH WASHER BOULON, AVEC RONDELLE	8	8	8			
18	65W–45151–00	COVER, UPPER CASING CAPUCHON, FOURREAU	1	1	1			
19	97980–05216	SCREW, WITH WASHER VIS, AVEC RONDELLE	2	2	2			
20	65W–45128–00	SEAL 2 JOINT 2	1	1	1			

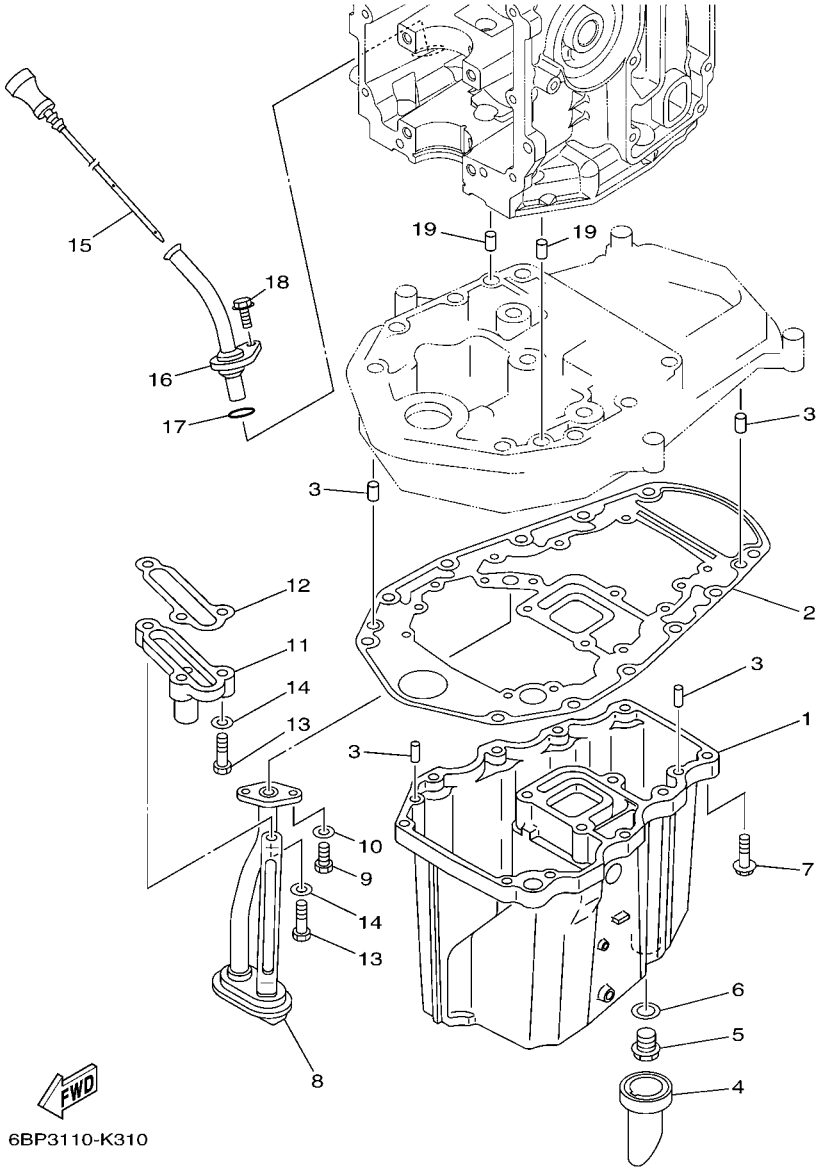

FIG. 30 OIL PAN — VENTILATEUR D'HUILE

REF. NO.	PART NO. N° PIECES	DESCRIPTION DESCRIPTION	ET	E	MH			REMARKS REMARQUES
1	65W–15311–03–CA	OIL PAN VENTILATEUR D'HUILE	1	1	1			
2	69W–15312–00	GASKET, OIL PAN JOINT DE VENTILATEUR D'HUILE	1	1	1			
3	93606–12019	PIN, DOWEL GOUPILLE	4	4	4			
4	65W–15316–00	DAMPER 1 AMORTISSEUR 1	1	1	1			
5	90340–14M06	PLUG, STRAIGHT SCREW PLOT, FILETE DROIT	1	1	1			
6	90430–14M09	GASKET JOINT	1	1	1			
7	97575–06525	BOLT, WITH WASHER VIS HEXAGONAL AVC RONDELLE	10	10	10			
8	65W–13411–00	STRAINER, OIL FILTRE, HUILE	1	1	1			
9	97013–06016	BOLT BOULON	2	2	2			
10	92903–06600	WASHER, PLATE RONDELLE, PLATE	2	2	2			
11	6BG–11576–00–94	BODY, RELIEF CORPS DE SECURITE	1	1	1			
12	62Y–13475–00	GASKET JOINT	1	1	1			
13	97013–06025	BOLT BOULON	3	3	3			
14	92903–06600	WASHER, PLATE RONDELLE, PLATE	3	3	3			
15	6BL–15362–00	PLUG, OIL LEVEL PLOT, NIVEAU D'HUILE	1	1	1			
16	6BL–15377–00	GUIDE, INLET GUIDE D'ADMISSION	1	1	1			
17	93210–19MJ3	O-RING JOINT TORIQUE	1	1	1			
18	95895–06016	BOLT, FLANGE BOULON	1	1	1			
19	93608–12M05	PIN, DOWEL AXE	2	2	2			

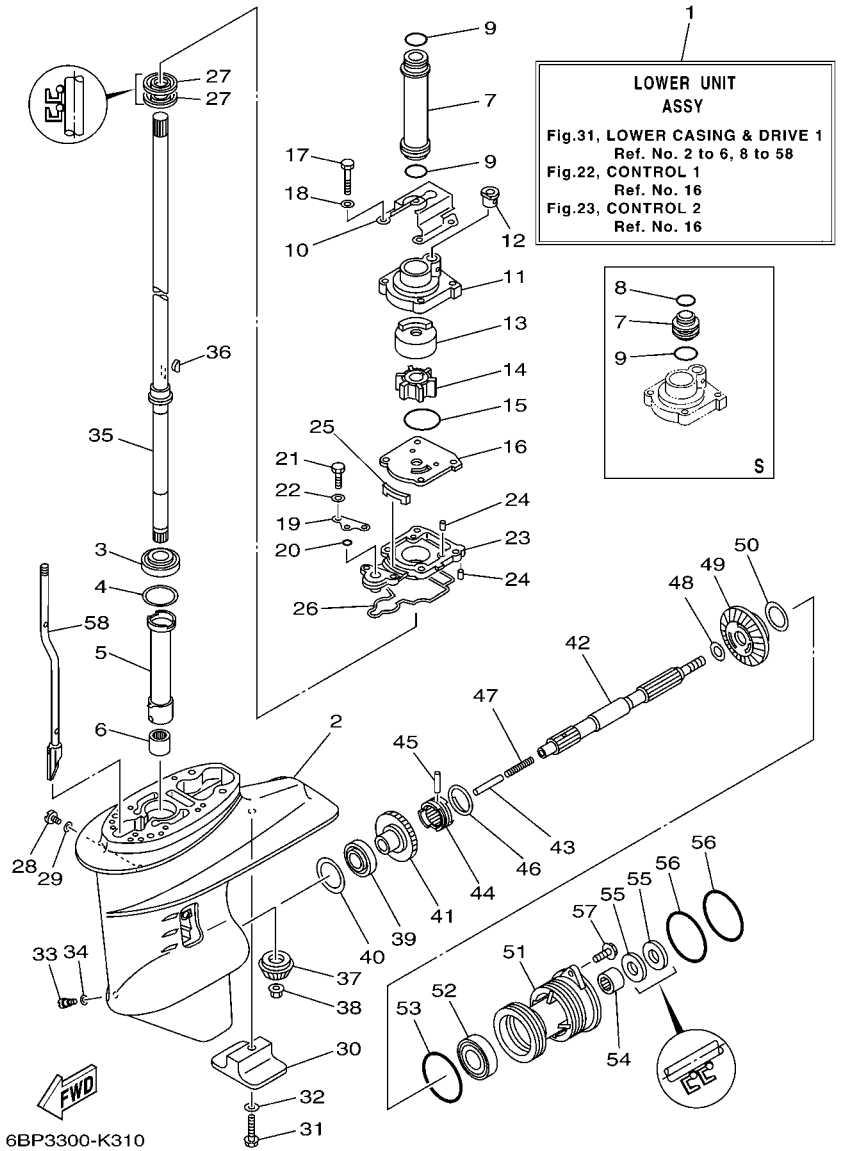

FIG. 31 LOWER CASING & DRIVE 1 BOITIER D'HELICE TRANSMISSION1

REF. NO.	PART NO. N° PIECES	DESCRIPTION DESCRIPTION	ET	E	MH			REMARKS REMARQUES
1	65W–45300–01–4D	LOWER UNIT ASSY UNITE INFERIEURE (ENS.)		1	1			S(16.6") S(16.6")
	65W–45300–11–4D	LOWER UNIT ASSY UNITE INFERIEURE (ENS.)	1	1	1			L(21.6") L(21.6")
2	61N–45311–02–4D	CASING, LOWER BOITIER D'HELICE	1	1	1			
3	93332–000W5	BEARING ROULEMENT	1	1	1			
4	61N–45587–00	SHIM (T:0.7MM) CALE (T:0.7MM)	1	1	1			UR UR
	61N–45587–10	SHIM (T:1.0MM) CALE (T:1.0MM)	1	1	1			UR UR
	61N–45587–20	SHIM (T:1.1MM) CALE (T:1.1MM)	1	1	1			UR UR
	61N–45587–30	SHIM (T:1.2MM) CALE (T:1.2MM)	1	1	1			UR UR
	61N–45587–40	SHIM (T:1.3MM) CALE (T:1.3MM)	1	1	1			UR UR
	61N–45587–50	SHIM (T:1.4MM) CALE (T:1.4MM)	1	1	1			UR UR
	61N–45587–60	SHIM (T:1.5MM) CALE (T:1.5MM)	1	1	1			UR UR
	61N–45587–70	SHIM (T:1.6MM) CALE (T:1.6MM)	1	1	1			UR UR
5	61N–45536–00	SLEEVE, DRIVE SHAFT MANCHON, ARBRE MOTEUR	1	1	1			
6	93315–220V7	BEARING ROULEMENT	1	1	1			
7	61N–44362–00	TUBE, WATER 2 TUBE D'EAU 2		1	1			S(16.6") S(16.6")
	61N–44362–10	TUBE, WATER 2 TUBE D'EAU 2	1	1	1			L(21.6") L(21.6")
8	93210–22164	O-RING JOINT TORIQUE		1	1			S(16.6") S(16.6")
9	93210–26130	O-RING JOINT TORIQUE		1	1			S(16.6") S(16.6")
	93210–26130	O-RING JOINT TORIQUE	2	2	2			L(21.6") L(21.6")
10	65W–44328–11	PLATE PLAQUETTE	1	1	1			L(21.6") L(21.6")
11	61N–44311–01	HOUSING, WATER PUMP CORPS, POMPE A EAU	1	1	1			
12	6L2–44367–00	DAMPER, WATER SEAL 3 JOINT TUBE D'EAU 3	1	1	1			
13	61N–44322–01	INSERT, CARTRIDGE CUVETTE	1	1	1			
14	6H4–44352–02	IMPELLER TURBINE	1	1	1			
15	93210–45161	O-RING JOINT TORIQUE	1	1	1			
16	61N–44323–00	OUTER PLATE, CARTRIDGE PLAQUE EXTERIEURE	1	1	1			
17	97095–06040	BOLT BOULON	4	4	4			

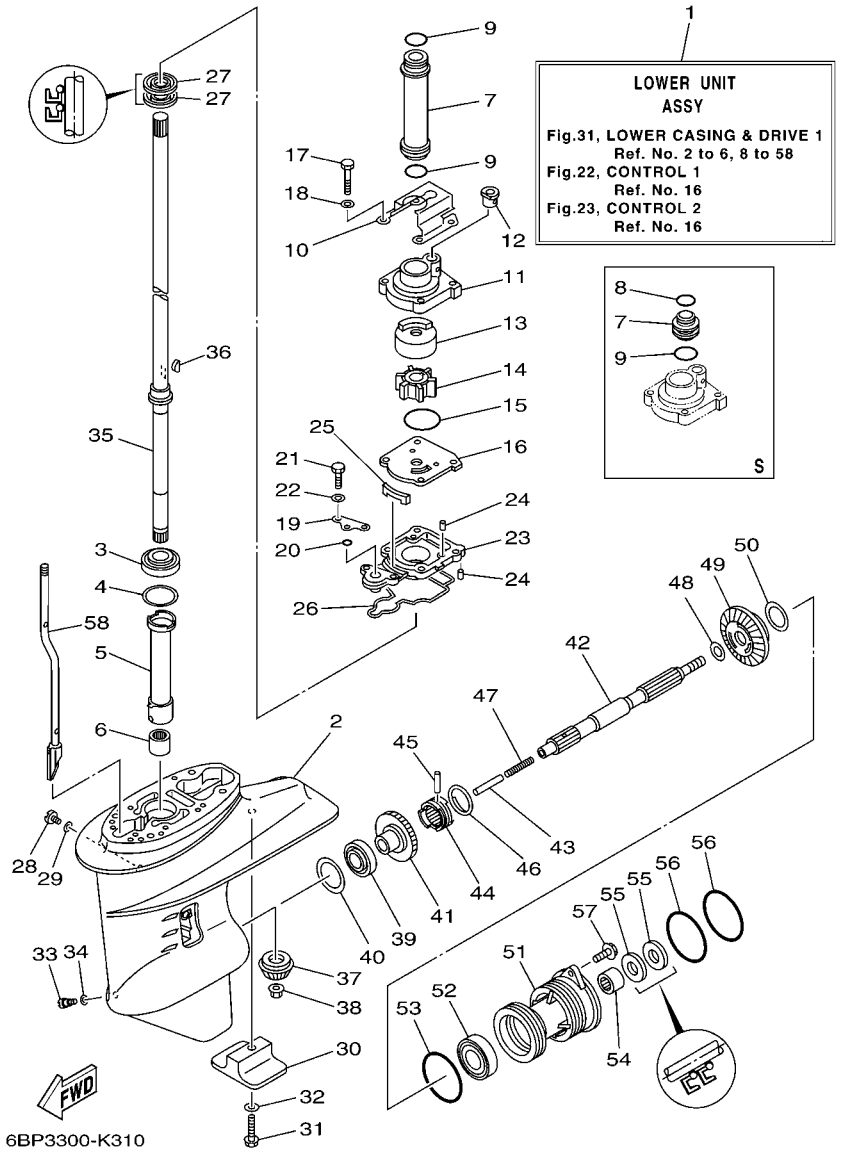

FIG. 31 LOWER CASING & DRIVE 1 BOITIER D'HELICE TRANSMISSION1

REF. NO.	PART NO. N° PIECES	DESCRIPTION DESCRIPTION	ET	E	MH			REMARKS REMARQUES
18	92995–06600	WASHER RONDELLE	4	4	4			
19	65W–44176–00	BRACKET SUPPORT	1	1	1			
20	93210–06ME6	O-RING JOINT TORIQUE	1	1	1			
21	97095–06025	BOLT BOULON	2	2	2			
22	92995–06600	WASHER RONDELLE	2	2	2			
23	65W–45331–00–CA	HOUSING, BEARING FLASQUE, ROULEMENT	1	1	1			
24	93604–10M03	PIN, DOWEL CLAVETTE	3	3	3			
25	61N–45127–00	SEAL JOINT	1	1	1			
26	61N–45315–00	PACKING, LOWER CASING JOINT, BOITIER D'HELICE	1	1	1			
27	93101–22067	OIL SEAL JOINT SPY	2	2	2			
28	90340–08002	PLUG, STRAIGHT SCREW PLOT, FILETE DROIT	1	1	1			
29	90430–08020	GASKET JOINT	1	1	1			
30	61N–45251–01	ANODE ANODE	1	1	1			
31	95895–06035	BOLT, FLANGE BOULON	1	1	1			
32	92990–06300	WASHER, INTERNAL TOOTH RONDELLE, DENTURE INTERNE	1	1	1			
33	688–45341–10	PLUG, DRAIN BOUCHON DE VIDANGE	1	1	1			
34	90430–08020	GASKET JOINT	1	1	1			
35	61N–45510–00	DRIVE SHAFT ASSY ARBRE MOTEUR (ENS.)		1	1			S(16.6") S(16.6")
	61N–45510–10	DRIVE SHAFT ASSY ARBRE MOTEUR (ENS.)	1	1	1			L(21.6") L(21.6")
36	90280–03024	KEY, WOODRUFF CLAVETTE, DEMI-LUNE	1	1	1			
37	61N–45551–00	PINION (13T) PIGNON D'ATTAQUE (13D)	1	1	1			
38	90179–10M14	NUT ECROU	1	1	1			
39	93332–00005	BEARING ROULEMENT	1	1	1			
40	6L2–45567–00	SHIM (T:1.0MM) CALE (T;1.0MM)	1	1	1			UR UR
	6L2–45567–10	SHIM (T:1.1MM) CALE (T:1.1MM)	1	1	1			UR UR
	6L2–45567–20	SHIM (T:1.2MM) CALE (T:1.2MM)	1	1	1			UR UR
	6L2–45567–30	SHIM (T:1.3MM) CALE (T:1.3MM)	1	1	1			UR UR

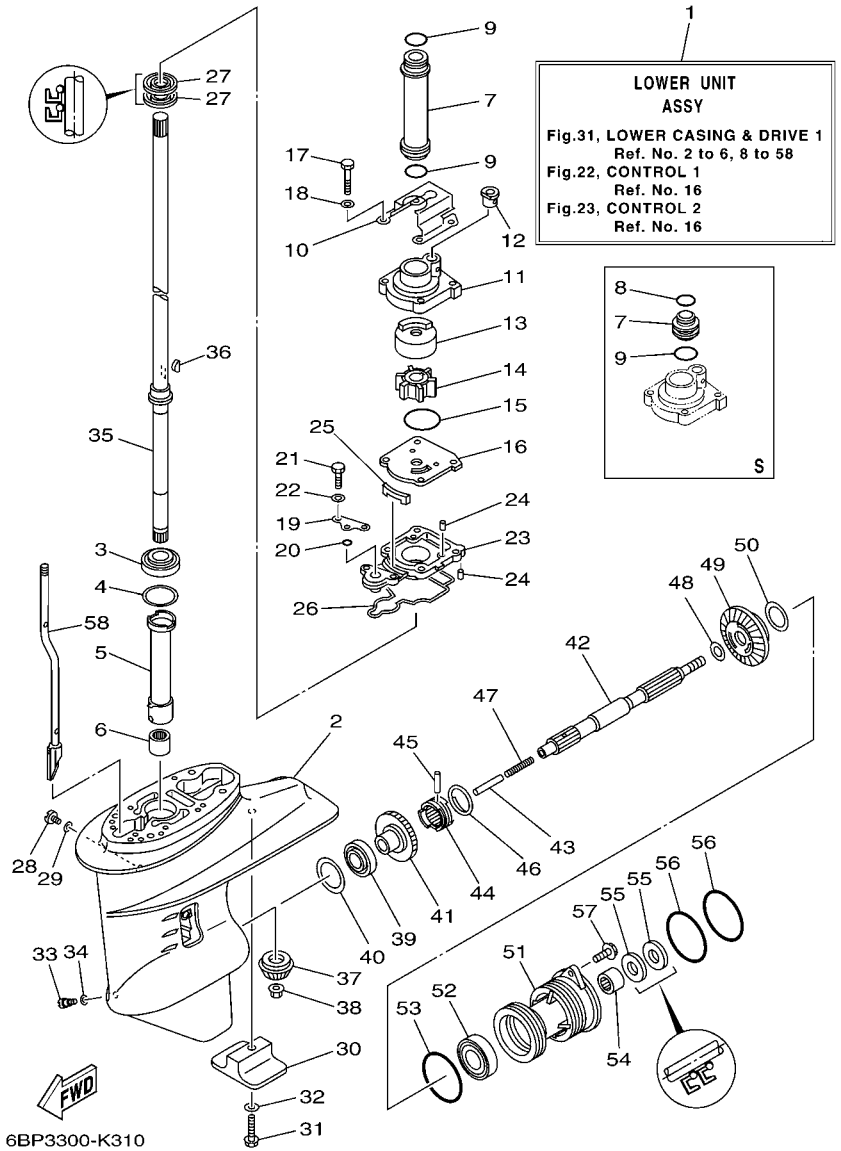

FIG. 31 LOWER CASING & DRIVE 1 BOITIER D'HELICE TRANSMISSION1

REF. NO.	PART NO. N° PIECES	DESCRIPTION DESCRIPTION	ET	E	MH			REMARKS REMARQUES
40	6L2–45567–40	SHIM (T:1.4MM) CALE (T:1.4MM)	1	1	1			UR UR
41	61N–45560–10	GEAR 1 (27T) PIGNON 1 (27T)	1	1	1			
42	65W–45611–00	SHAFT, PROPELLER ARBRE, HELICE	1	1	1			
43	648–45635–00	PLUNGER, SHIFT POUSSOIR D'EMBRAYAGE	1	1	1			
44	664–45631–02	CLUTCH, DOG CRABOT	1	1	1			
45	90250–05010	PIN, STRAIGHT GOUPILLE, DROITE	1	1	1			
46	648–45633–00	RING, CROSS PIN JONC, GOUPILLE CRABOT	1	1	1			
47	90501–10065	SPRING, COMPRESSION RESSORT, COMPRESSION	1	1	1			
48	90201–20417	WASHER, PLATE RONDELLE, PLATE	1	1	1			
49	61N–45571–00	GEAR 2 (27T) PIGNON 2 (27T)	1	1	1			
50	6L2–45577–00	SHIM (T:1.0MM) CALE (T:1.0MM)	1	1	1			UR UR
	6L2–45577–10	SHIM (T:1.1MM) CALE (T:1.1MM)	1	1	1			UR UR
	6L2–45577–20	SHIM (T:1.2MM) CALE (T:1.2MM)	1	1	1			UR UR
	6L2–45577–30	SHIM (T:1.3MM) CALE (T:1.3MM)	1	1	1			UR UR
51	61N–45361–01–4D	CAP, LOWER CASING COUVERCLE, BOITIER D'HELICE	1	1	1			
52	93306–00612	BEARING ROULEMENT	1	1	1			
53	93210–64ME7	O-RING JOINT TORIQUE	1	1	1			
54	93315–22004	BEARING ROULEMENT	1	1	1			
55	93101–20M07	OIL SEAL JOINT SPY	2	2	2			
56	93210–65M50	O-RING JOINT TORIQUE	2	2	2			
57	97575–06520	BOLT, WITH WASHER VIS HEXAGONAL AVC RONDELLE	2	2	2			
58	65W–44150–01	SHIFT CAM ASSY CAME D'INVERSION		1	1			S(16.6") S(16.6")
	65W–44150–11	SHIFT CAM ASSY CAME D'INVERSION	1	1	1			L(21.6") L(21.6")

FIG. 32 LOWER CASING & DRIVE 2 BOITIER D'HELICE TRANSMISSION2

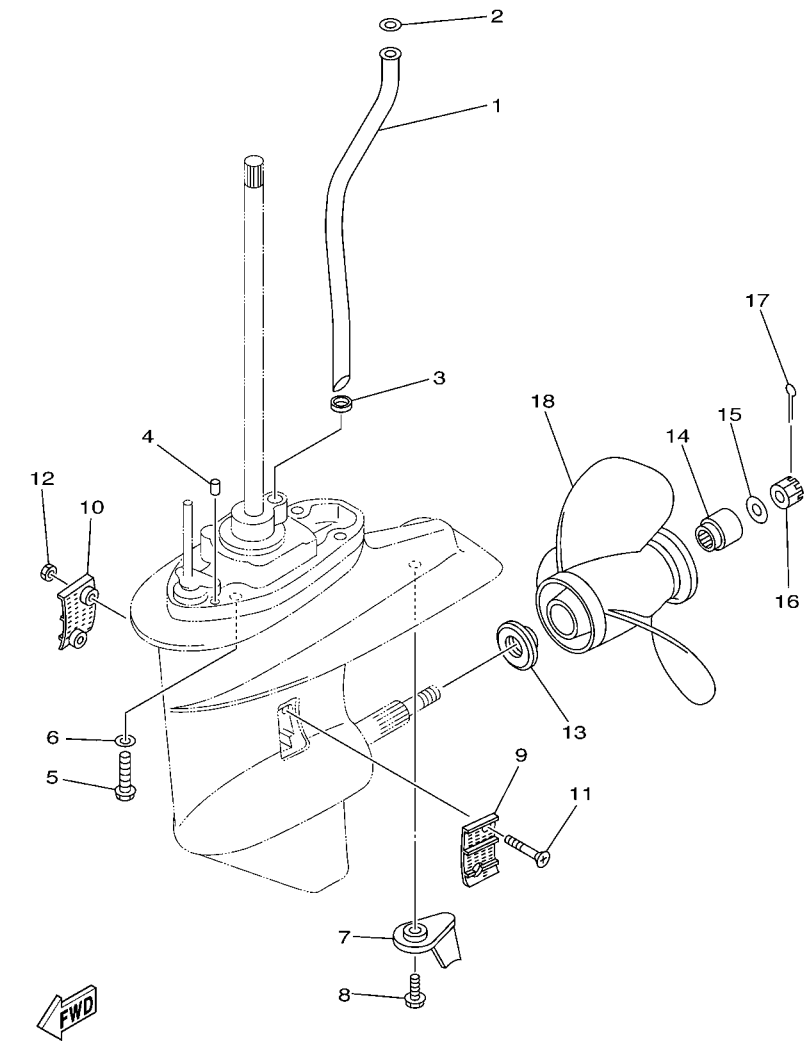

REF. NO.	PART NO. N° PIECES	DESCRIPTION DESCRIPTION	ET	E	MH			REMARKS REMARQUES
1	65W–44361–02	TUBE, WATER 1 TUBE D'EAU 1		1	1			S(16.6") S(16.6")
	65W–44361–12	TUBE, WATER 1 TUBE D'EAU 1	1	1	1			L(21.6") L(21.6")
2	90202–12060	WASHER, PLATE RONDELLE, PLATE	1	1	1			
3	90430–10002	GASKET JOINT	1	1	1			
4	93606–11M24	PIN, DOWEL GOUPILLE	2	2	2			
5	90105–10M12	BOLT, FLANGE BOULON	4	4	4			
6	92995–10600	WASHER RONDELLE	4	4	4			
7	61N–45371–00	TAB-TRIM ANODE DERIVE	1	1	1			
8	90119–06M48	BOLT, WITH WASHER BOULON, AVEC RONDELLE	1	1	1			
9	6L2–45214–00	COVER, WATER INLET 1 GRILLE, ENTREE D'EAU 1	1	1	1			
10	6L2–45215–00	COVER, WATER INLET 2 GRILLE, ENTREE D'EAU 2	1	1	1			
11	90151–05M05	SCREW, COUNTERSUNK VIS, TETE NOYEE	2	2	2			
12	90185–05002	NUT, NYLON ECROU,AUTO-BLOQUANT	2	2	2			
13	6L2–45987–01	SPACER 1 ENTRETOISE 1	1	1	1			
14	689–45997–00	SPACER 2 ENTRETOISE 2	1	1	1			
15	92990–14200	WASHER, PLAIN RONDELLE, PLATE	1	1	1			
16	90171–14013	NUT, CASTLE ECROU, CRENELE	1	1	1			
17	91490–30022	PIN. COTTER GOUPILLE	1	1	1			
18	664–45941–01–EL	PROPELLER (3X9-7/8"X9"-F) HELICE (3X9-7/8"X9"-F)	1	1	1			UR UR
	664–45943–01–EL	PROPELLER (3X9-7/8"X8"-F) HELICE (3X9-7/8"X8"-F)	1	1	1			UR UR
	664–45945–00–EL	PROPELLER (3X9-7/8"X10-1/2"-F) HELICE (3X9-7/8"X10-1/2"-F)	1	1	1			UR UR
	664–45947–01–EL	PROPELLER (3X9-7/8"X11-1/4"-F) HELICE (3X9-7/8"X11-1/4"-F)	1	1	1			UR UR
	664–45949–02–EL	PROPELLER (3X9-7/8"X13"-F) HELICE (3X9-7/8"X13"-F)	1	1	1			UR UR
	664–45952–00–EL	PROPELLER (3X9-7/8"X14"-F) HELICE (3X9-7/8"X14"-F)	1	1	1			UR UR
	664–45954–01–EL	PROPELLER (3X9-7/8"X12"-F) HELICE (3X9-7/8"X12"-F)	1	1	1			UR UR
	664–45970–00–98	PROPELLER (3X9-1/8"X13"-F) HELICE (3X9-1/8"X13"-F)	1	1	1			UR UR
	664–45972–00–98	PROPELLER (3X9-1/8"X12"-F) HELICE (3X9-1/8"X12"-F)	1	1	1			UR UR

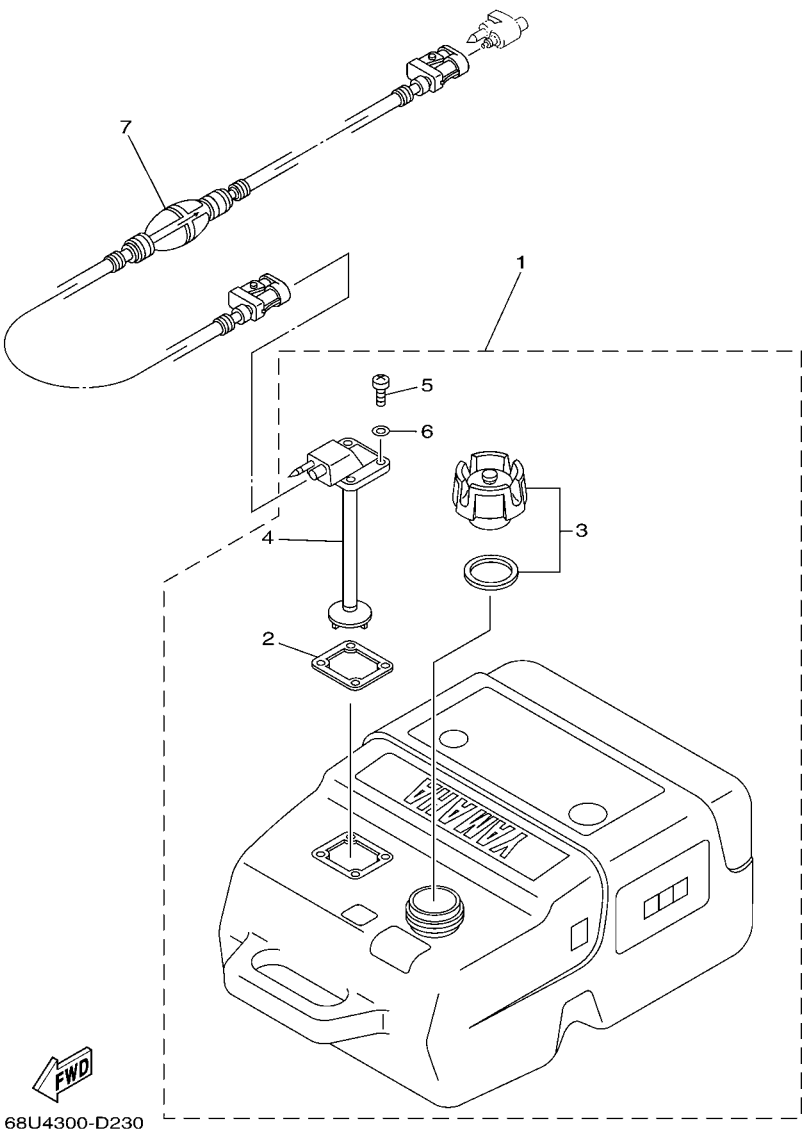

FIG. 33 FUEL TANK 1 — RESERVOIR A CARBURANT 1

REF. NO.	PART NO. N° PIECES	DESCRIPTION DESCRIPTION	ET	E	MH			REMARKS REMARQUES
1	6YK–24201–03	FUEL TANK ASSY (25L) RESERVOIR A ESSENCE (ENS.) 25L	1	1	1			AP EXCEPT FOR RUS AP EXCEPT FOR RUS
2	6YL–24268–01	.GASKET, FUEL METER .JOINT, JAUGE A CARBURANT	1	1	1			
3	6YK–24610–01	.CAP ASSY .BOUCHON	1	1	1			
4	6YK–24260–01	.FUEL METER ASSY .INDICATEUR DE CARBURANT	1	1	1			
5	90157–05M16	.SCREW, PAN HEAD .VIS, TETE TRONCONIQUE	4	4	4			
6	6YL–24329–00	.SEAL .JOINT	4	4	4			
7	6YL–24306–54	FUEL PIPE COMP. 1 DURITE A ESSENCE 1	1	1	1			AP EXCEPT FOR RUS AP EXCEPT FOR RUS

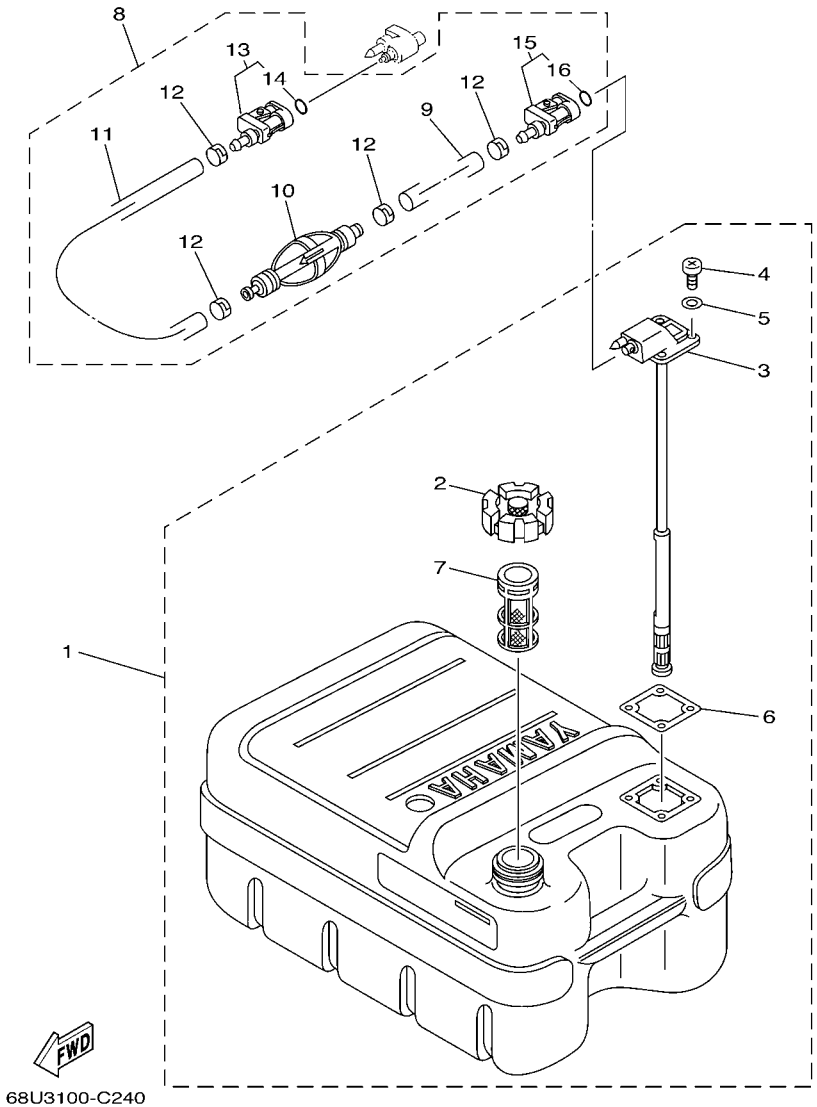

FIG. 34 FUEL TANK 2 — RESERVOIR A CARBURANT 2

REF. NO.	PART NO. N° PIECES	DESCRIPTION DESCRIPTION	ET	E	MH			REMARKS REMARQUES
1	6YJ–24201–10	FUEL TANK ASSY (24L) RESERVOIR A ESSENCE (ENS.):24L		1	1			AP FOR RUS AP FOR RUS
2	6YJ–24610–01	.CAP ASSY .BOUCHON		1	1			
3	6Y1–24260–12	.FUEL METER ASSY .INDICATEUR DE CARBURANT		1	1			WITH INDICATOR WITH INDICATOR
4	90157–05M19	.SCREW, PAN HEAD .VIS, TETE TRONCONIQUE		4	4			
5	6Y1–24329–00	.SEAL .JOINT		4	4			
6	6Y1–24268–00	.GASKET, FUEL METER .JOINT, JAUGE A CARBURANT		1	1			
7	6YJ–24167–00	.STRAINER .FILTRE		1	1			
8	61J–24306–04	FUEL PIPE COMP. 1 DURITE A ESSENCE 1		1	1			AP FOR RUS AP FOR RUS
9	90445–11M06	.HOSE (L2050) .DURITE (L2050)		1	1			
10	61J–24360–00	.PRIMER PUMP ASSY .POMPE D'AMORCAGE		1	1			
11	90445–11M05	.HOSE (L850) .DURITE (L850)		1	1			
12	650–24351–01	.BAND 1 .COLLIER 1		4	4			
13	6G1–24305–05	.FUEL PIPE JOINT COMP. 2 .DURITE RACCORDEMT. A ESSENCE		1	1			
14	93210–08287	..O-RING ..JOINT TORIQUE		1	1			
15	6Y1–24305–06	.FUEL PIPE JOINT COMP. 2 .DURITE RACCORDEMT. A ESSENCE		1	1			
16	93210–08287	..O-RING ..JOINT TORIQUE		1	1			

FIG. 35 STEERING GUIDE FIXATION DE DIRECTION

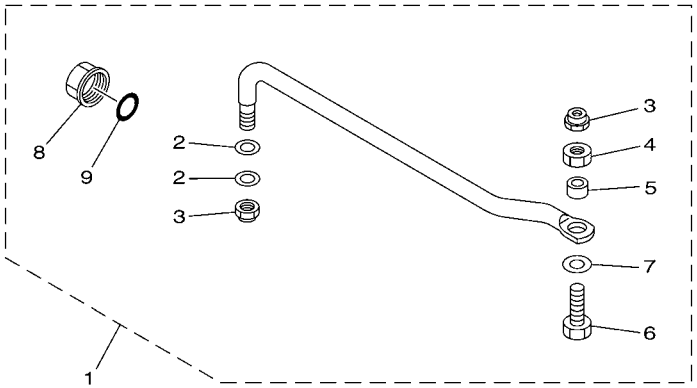

6BG1100-H340

REF. NO.	PART NO. N° PIECES	DESCRIPTION DESCRIPTION	ET	E	MH			REMARKS REMARQUES
1	6BG–61350–00	STEERING GUIDE ATTACHMENT KIT FIXATIONS DE DIRECTION	1	1	1			AP AP
2	90201–10M20	.WASHER, PLATE .RONDELLE, PLATE	2	2	2			
3	90185–09M01	.NUT, SELF-LOCKING .ECROU,AUTO-BLOQUANT	2	2	2			
4	90170–09M03	.NUT .ECROU	1	1	1			
5	90387–10M42	.COLLAR .COLLERETTE	1	1	1			
6	90101–09M01	.BOLT .BOULON	1	1	1			
7	90201–10M63	.WASHER, PLATE .RONDELLE, PLATE	1	1	1			
8	6E5–43145–01	.CAP, CLAMP BRACKET .CAPUCHON, PRESSE	1	1	1			
9	93210–16275	.O-RING .JOINT TORIQUE	1	1	1			

FIG. 36 REMOTE CONTROL BOX BOITIER DE COMMANDE A DISTANCE

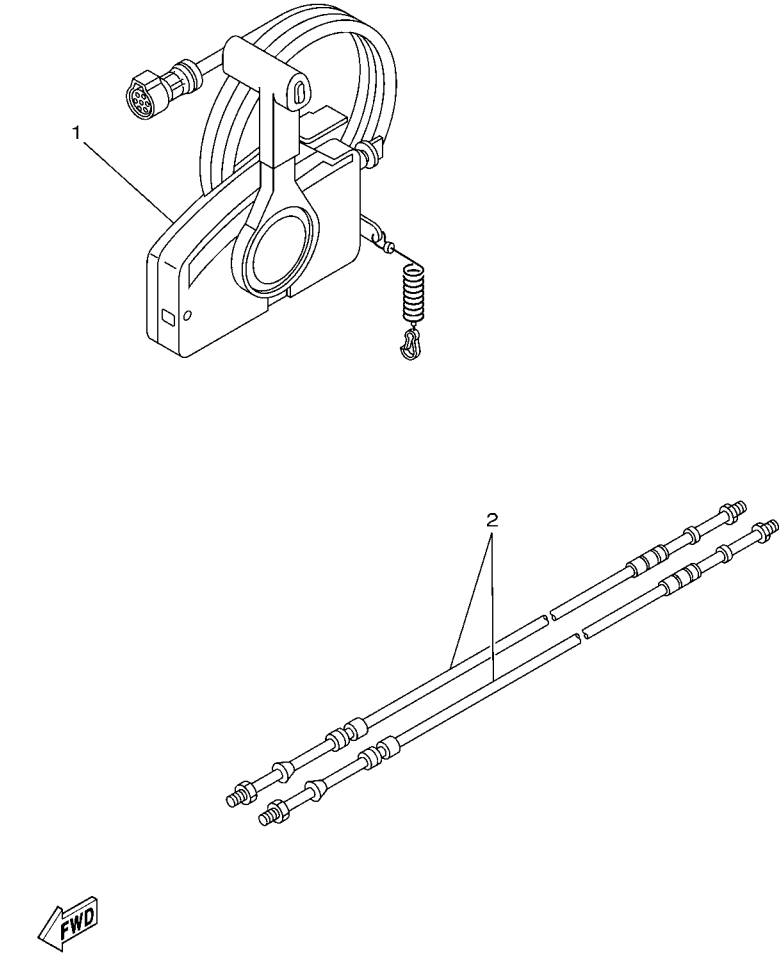

67M0100-8280

REF. NO.	PART NO. N° PIECES	DESCRIPTION DESCRIPTION	ET	E	MH			REMARKS REMARQUES
1	703–48205–A6	REMOTE CONTROL ASSY (10P) BOITIER DE COMMANDE A DISTANCE	1					AP WITH PT/T SW. AP WITH PT/T SW.
	703–48201–A4	REMOTE CONTROL ASSY (10P) BOITIER DE COMMANDE A DISTANCE		1				AP WITHOUT PT/T SW. AP WITHOUT PT/T SW.
2	701–48310–90	CABLE, REMOTE CONTROL L=11F CABLE, COMMANDE A DISTANCE:11F	2	2				UR UR
	701–48320–00	CABLE, REMOTE CONTROL L=12F CABLE, COMMANDE A DISTANCE:12F	2	2				UR UR
	701–48320–20	CABLE, REMOTE CONTROL L=13F CABLE, COMMANDE A DISTANCE:13F	2	2				UR UR
	701–48320–50	CABLE, REMOTE CONTROL L=15F CABLE, COMMANDE A DISTANCE:15F	2	2				UR UR

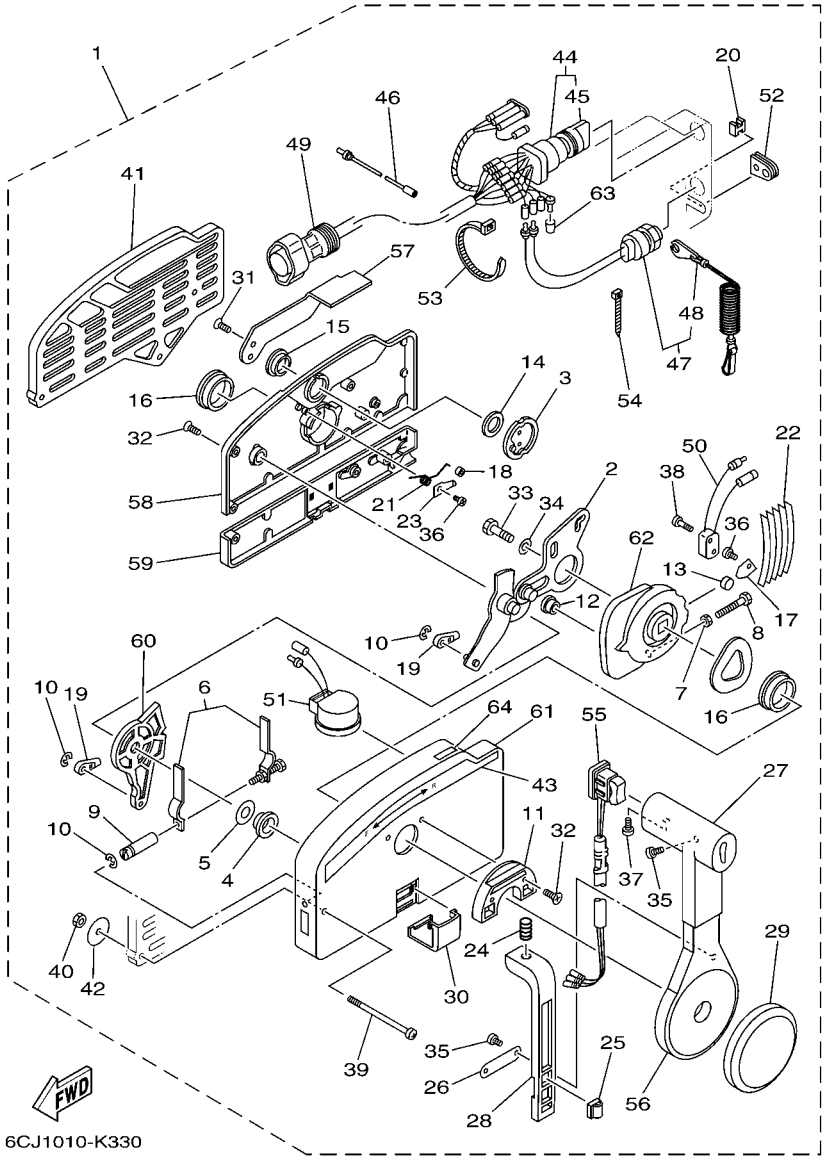

FIG. 37 REMOTE CONTROL ASSY — BOITIER DE COMMANDE A DISTANCE

REF. NO.	PART NO. N° PIECES	DESCRIPTION DESCRIPTION	ET	E	MH			REMARKS REMARQUES
1	703–48205–A6	REMOTE CONTROL ASSY (10P) BOITIER DE COMMANDE A DISTANCE	1					AP WITH PT/T SW. AP WITH PT/T SW.
	703–48201–A4	REMOTE CONTROL ASSY (10P) BOITIER DE COMMANDE A DISTANCE		1				AP WITHOUT PT/T SW. AP WITHOUT PT/T SW.
2	703–48261–01	.ARM, THROTTLE .BRAS, ACCELERATION	1	1				
3	703–48153–00	.SHAFT, FREE ACCEL. .AXE	1	1				
4	703–48235–00	.BUSHING .COUSSINET	1	1				
5	703–48268–00	.SPACER .ENTRETOISE	1	1				
6	703–48264–00	.FRICTION, THROTTLE .FRICTION, ACCELERATION	1	1				
7	95380–05600	.NUT .ECROU	1	1				
8	97380–05025	.BOLT .BOULON, HEXAGONAL	1	1				
9	703–48265–00	.SHAFT, FRICTION .AXE, COPILOTE	1	1				
10	93430–06024	.CIRCLIP .CLIPS	3	3				
11	703–48245–00	.PLATE, LOCK .PLAQUE, VERROU	1	1				
12	703–48252–00	.ROLLER, CAM .POULIE	1	1				
13	701–48248–00	.ROLLER, FREE ACCEL. .POULIE	1	1				
14	703–48198–00	.WASHER, WAVE .RONDELLE, ELASTIQUE ONDULEE	1	1				
15	703–48243–00	.BUSHING .COUSSINET	1	1				
16	703–48236–00	.BUSHING 1 .POULIE	2	2				
17	703–48189–00	.RETAINER .FLASQUE	1	1				
18	703–48234–00	.ROLLER, DETENT .POULIE	1	1				
19	703–48345–01	.CABLE END, REMOTE CONTROL 2 .CHAPE CABLE	2	2				
20	703–48358–00	.ANCHOR, CABLE .COLLIER	1	1				
21	703–48244–00	.SPRING, FREE ACCEL. .RESSORT	1	1				
22	703–48238–00	.SPRING, DETENT .RESSORT	5	5				
23	703–48246–00	.SPACER .ENTRETOISE	1	1				
24	703–48227–00	.SPRING, NEUTRAL LOCK .RESSORT	1	1				
25	703–82594–00	.CLAMP .BRIDE	1					WITH PT/T SW. WITH PT/T SW.
26	703–48226–00	.PLATE, STOPPER .PLAQUETTE	1	1				

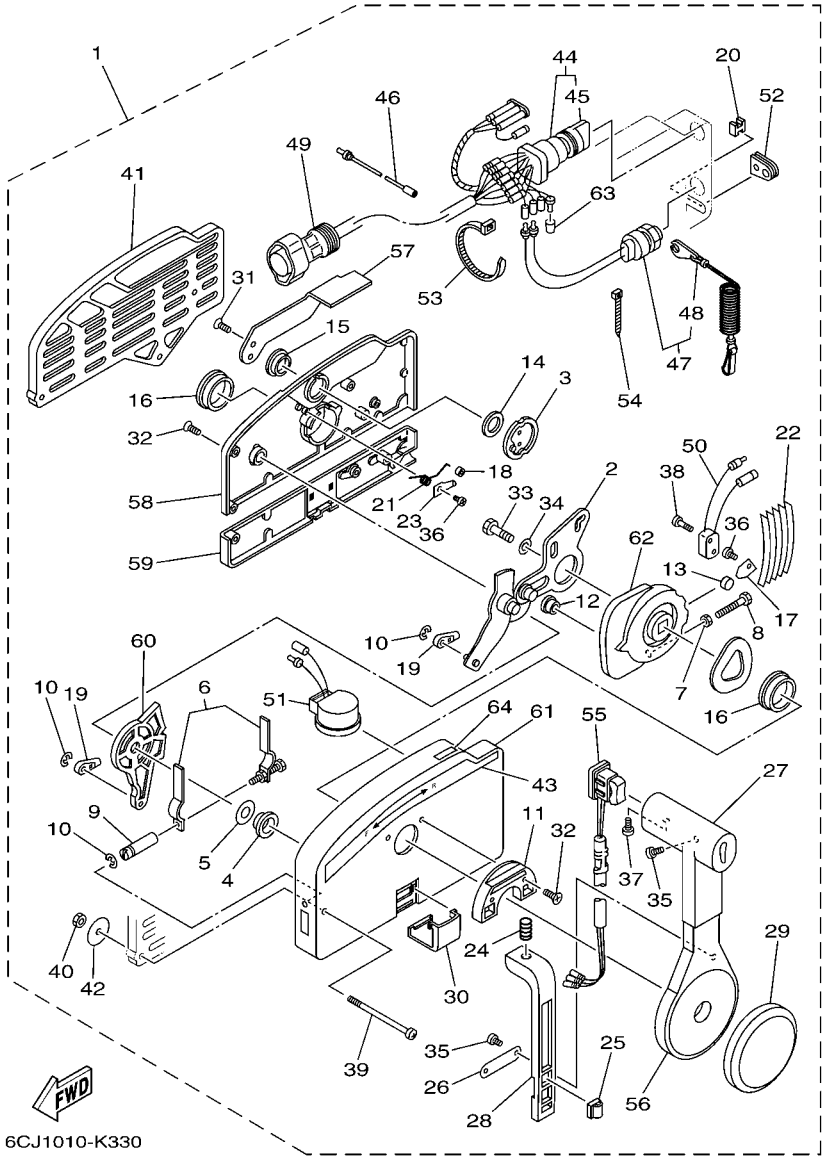

6CJ1010-K330

FIG. 37 REMOTE CONTROL ASSY — BOITIER DE COMMANDE A DISTANCE

REF. NO.	PART NO. N° PIECES	DESCRIPTION DESCRIPTION	ET	E	MH			REMARKS REMARQUES
27	703–48222–00	.GRIP, CONTROL LEVER .POIGNEE, COMMANDE LEVIER	1	1				SINGLE SINGLE
28	703–48223–00	.LOCK, NEUTRAL .VERROU, NEUTRAL	1	1				
29	703–48225–00	.COVER .COUVERCLE	1	1				
30	703–48219–00	.COVER, LEAD .COUVERCLE	1	1				
31	703–48281–00	.SCREW .VIS	2	2				
32	703–48282–00	.SCREW .VIS	7	7				
33	97380–08030	.BOLT .BOULON, HEXAGONAL	1	1				
34	92990–08600	.WASHER, PLATE .RONDELLE, PLATE	1	1				
35	98580–04010	.SCREW, PAN HEAD .VIS	3	3				
36	98580–04006	.SCREW, PAN HEAD .VIS	2	2				
37	98580–05010	.SCREW, PAN HEAD .VIS	1	1				
38	98580–03015	.SCREW, PAN HEAD .VIS	2	2				
39	703–48291–10	.SCREW (M6) .VIS (M6)	3	3				
40	95380–06600	.NUT, HEXAGON .ECROU	3	3				
41	703–48293–10	.SPACER, REMOTE CONTROL .ENTRETOISE	1	1				SINGLE SINGLE
42	701–48287–00	.WASHER .RONDELLE	3	3				
43	703–48215–00	.GRAPHIC .ADHESIF	1	1				
44	703–82510–12	.MAIN SWITCH ASSY .CONTACTEUR A CLEF COMPLET	1	1				PRIME START PRIME START
45	676–82577–00	..CAP, KEY ..CABOCHON	1	1				
46	703–82531–00	.WIRE, LEAD (L70) .FIL (L70)	1	1				
47	688–82575–01	.ENGINE STOP SWITCH ASSY .COUPE CIRCUIT CPLT	1	1				
48	682–82556–00	..LANYARD, STOP SWITCH ..PLAQUETTE	1	1				
49	688–8258A–20	.EXTENSION, WIRE HARNESS (4.9M) .EXTENSION, FAISCEAU DE FILS (4	1	1				(10P) (10P)
50	703–82540–00	.NEUTRAL SWITCH ASSY .CONTACTEUR DE POINT-MORT	1	1				
51	703–83383–B0	.BUZZER .RONFLEUR	1	1				
52	703–48284–00	.GROMMET .PASSE-FIL	1	1				
53	703–82591–00	.BAND .COLLIER	1	1				

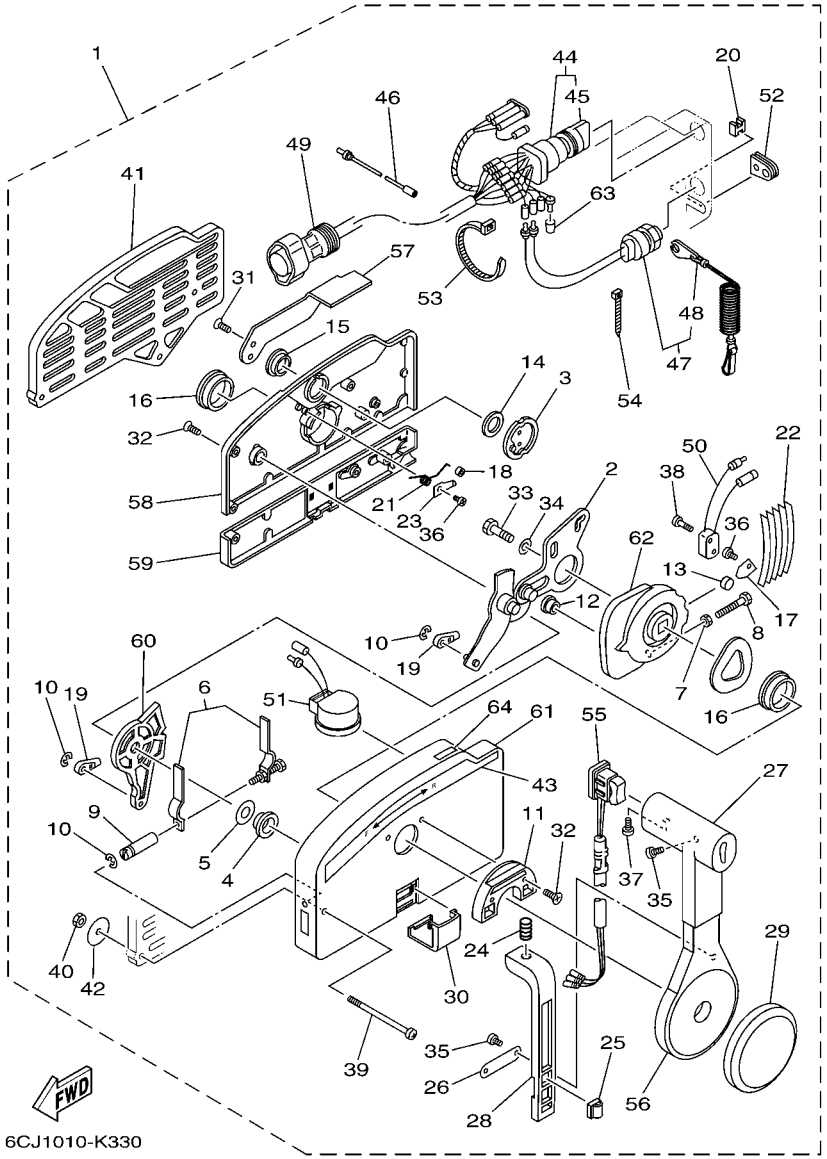

6CJ1010-K330

FIG. 37 REMOTE CONTROL ASSY BOITIER DE COMMANDE A DISTANCE

REF. NO.	PART NO. N° PIECES	DESCRIPTION DESCRIPTION	ET	E	MH			REMARKS REMARQUES
54	703–82592–00	.BAND .COLLIER	1	1				
55	703–82563–02	.TRIM & TILT SWITCH ASSY .INCLINER ET PARER COMMUTATEUR	1					WITH PT/T SW. WITH PT/T SW.
	703–48224–00	.COVER, CONTROL LEVER .COUVERCLE		1				WITHOUT PT/T SW. WITHOUT PT/T SW.
56	703–48221–00	.LEVER, CONTROL .LEVIER, COMMANDE	1	1				
57	703–48152–00	.KNOB, FREE ACCEL. .BOUTON	1	1				
58	703–48212–00	.BACK PLATE 1 .PLAQUETTE 1	1	1				
59	703–48213–00	.BACK PLATE 2 .PLAQUETTE 2	1	1				
60	703–48271–00	.ARM, SHIFT .BRAS	1	1				
61	703–48211–02	.HOUSING,1 .CORPS	1	1				
62	703–48232–00	.GEAR .PIGNON	1	1				
63	703–82542–00	.CAP .COUVERCLE	1					FOR 703-48205-A6 FOR 703-48205-A6
	703–82542–00	.CAP .COUVERCLE		3				FOR 703-48201-A4 FOR 703-48201-A4
64	703–48218–00	.GRAPHIC .ADHESIF	1	1				

FIG. 38 REPAIR KIT 1 — KITS DE REPARATION 1

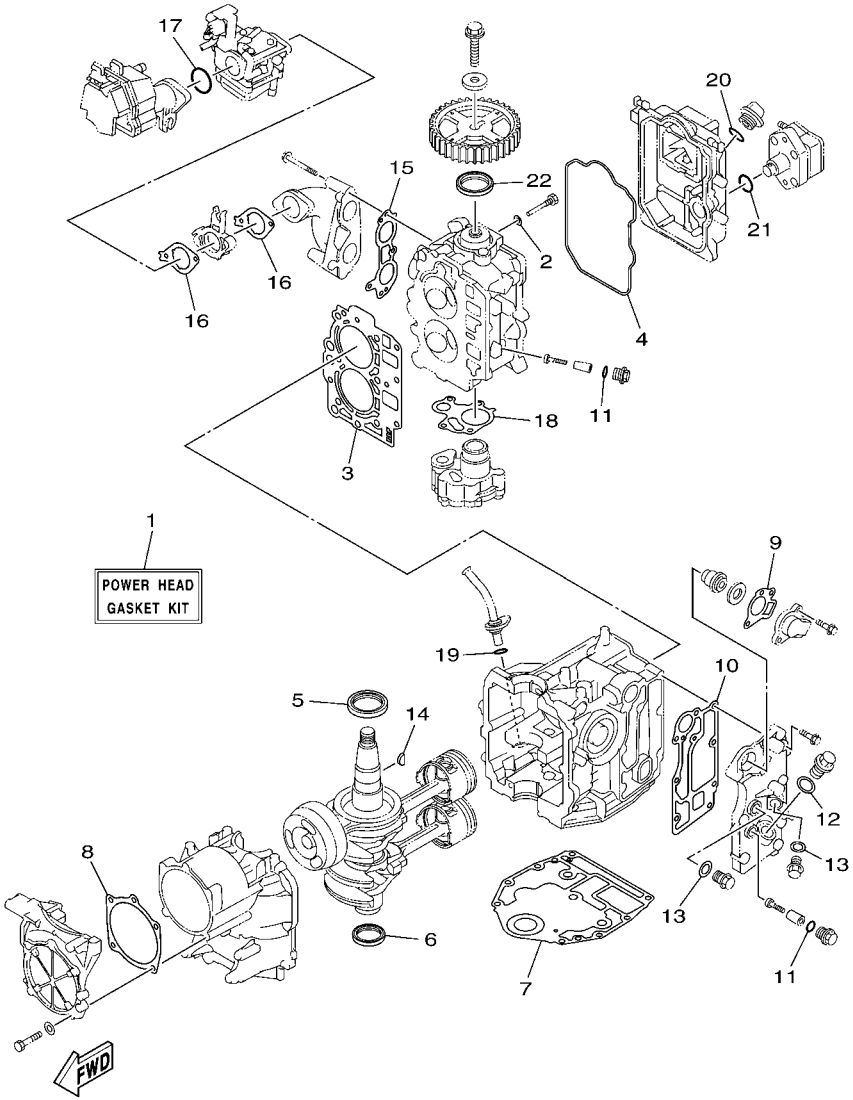

6BP1100-H380

REF. NO.	PART NO. N° PIECES	DESCRIPTION DESCRIPTION	ET	E	MH			REMARKS REMARQUES
1	6BL–W0001–00	POWER HEAD GASKET KIT POCHETTE DE JINTS TETE MOTRICE	1	1	1			
2	90430–06014	.GASKET .JOINT	1	1	1			
3	6BL–11181–00	.GASKET, CYLINDER HEAD 1 .JOINT, DE CULASSE 1	1	1	1			
4	6BL–11356–00	.SEAL, CYLINDER 2 .JOINT, SPY CYLINDRE	1	1	1			
5	93102–43M42	.OIL SEAL .JOINT SPY	1	1	1			
6	93101–35002	.OIL SEAL .JOINT SPY	1	1	1			
7	6BG–11351–00	.GASKET, CYLINDER .JOINT, D'EMBASE	1	1	1			
8	6BL–15663–00	.SEAL .JOINT	1	1	1			
9	62Y–12414–00	.GASKET, COVER .JOINT, COUVERCLE	1	1	1			
10	6BL–41114–00	.GASKET, EXHAUST OUTER COVER .JOINT, COUVERCLE D'ECHAPPEMENT	1	1	1			
11	93210–13M63	.O-RING .JOINT TORIQUE	3	3	3			
12	90430–18130	.GASKET .JOINT	1	1	1			
13	90430–14115	.GASKET .JOINT	2	2	2			
14	90280–03M01	.KEY, WOODRUFF .CLAVETTE, DEMI-LUNE	1	1	1			
15	6BL–13645–00	.GASKET, MANIFOLD 1 .JOINT, TUBULURE 1	1	1	1			
16	6BL–13646–00	.GASKET, MANIFOLD 2 .JOINT, TUBULURE 2	2	2	2			
17	93210–39ME4	.O-RING .JOINT TORIQUE	1	1	1			
18	6C5–13329–00	.GASKET, PUMP COVER .JOINT, COUVERCLE DE POMPE	1	1	1			
19	93210–19MJ3	.O-RING .JOINT TORIQUE	1	1	1			
20	93210–24M79	.O-RING .JOINT TORIQUE	1	1	1			
21	93210–24M79	.O-RING .JOINT TORIQUE	1	1	1			
22	93102–37M40	.OIL SEAL .JOINT SPY	1	1	1			

FIG. 39 REPAIR KIT 2 — KITS DE REPARATION 2

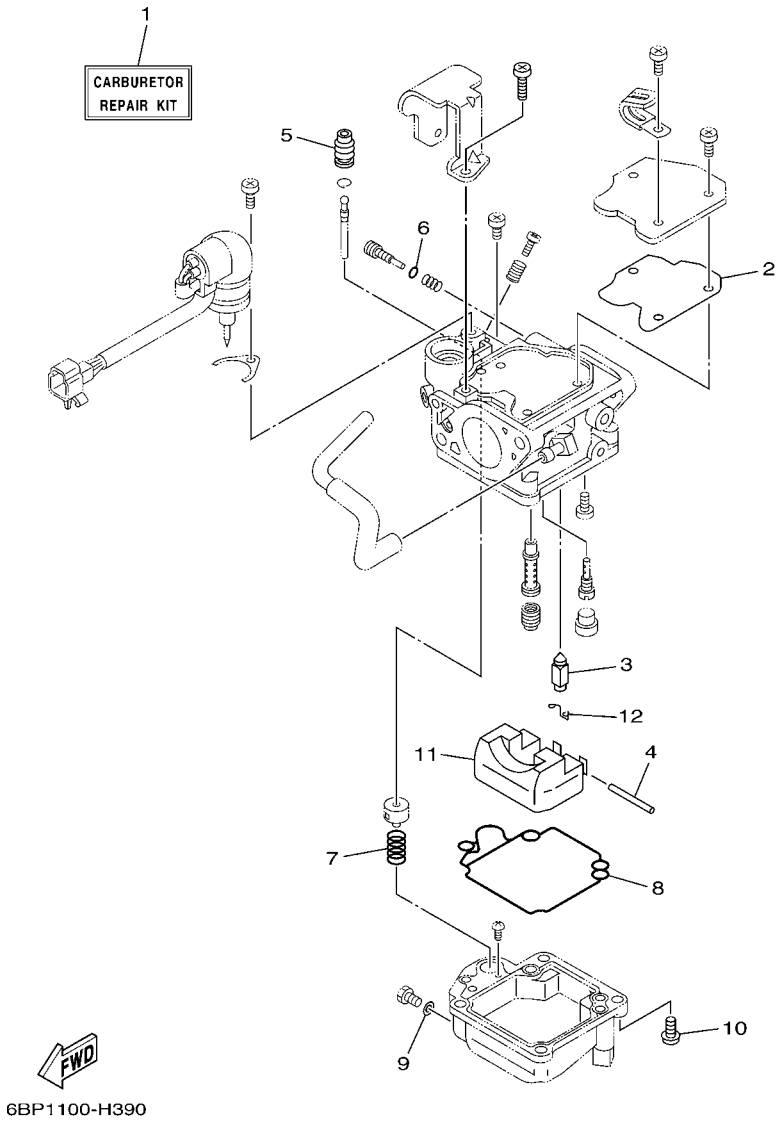

REF. NO.	PART NO. N° PIECES	DESCRIPTION DESCRIPTION	ET	E	MH			REMARKS REMARQUES
1	6BL–W0093–00	CARBURETOR REPAIR KIT KIT DE REPARATION CARBURATEUR	1	1	1			
2	65W–14126–10	.GASKET .JOINT	1	1	1			
3	6AH–14546–00	.VALVE, NEEDLE .POINTEAU	1	1	1			
4	6H4–14548–00	.PIN, FLOAT ARM .AXE, BRAS DE FLOTTEUR	1	1	1			
5	65W–14373–02	.COVER, PLUNGER CAP .COUVERCLE DE PLONGEUR	1	1	1			
6	67C–14397–00	.O-RING .JOINT TORIQUE	1	1	1			
7	65W–14335–00	.SPRING, PLUNGER .RESSORT, PLONGEUR	1	1	1			
8	65W–14384–00	.GASKET, FLOAT CHAMBER .JOINT, CUVE DE FLOTTEUR	1	1	1			
9	65W–14398–00	.GASKET .JOINT	1	1	1			
10	97980–04114	.SCREW, WITH WASHER .VIS, AVEC RONDELLE	4	4	4			
11	63V–14985–00	.FLOAT .FLOTTEUR	1	1	1			
12	663–14159–00	.CLIP .JONC	1	1	1			

FIG. 40 REPAIR KIT 3 — KITS DE PEPARATION 3

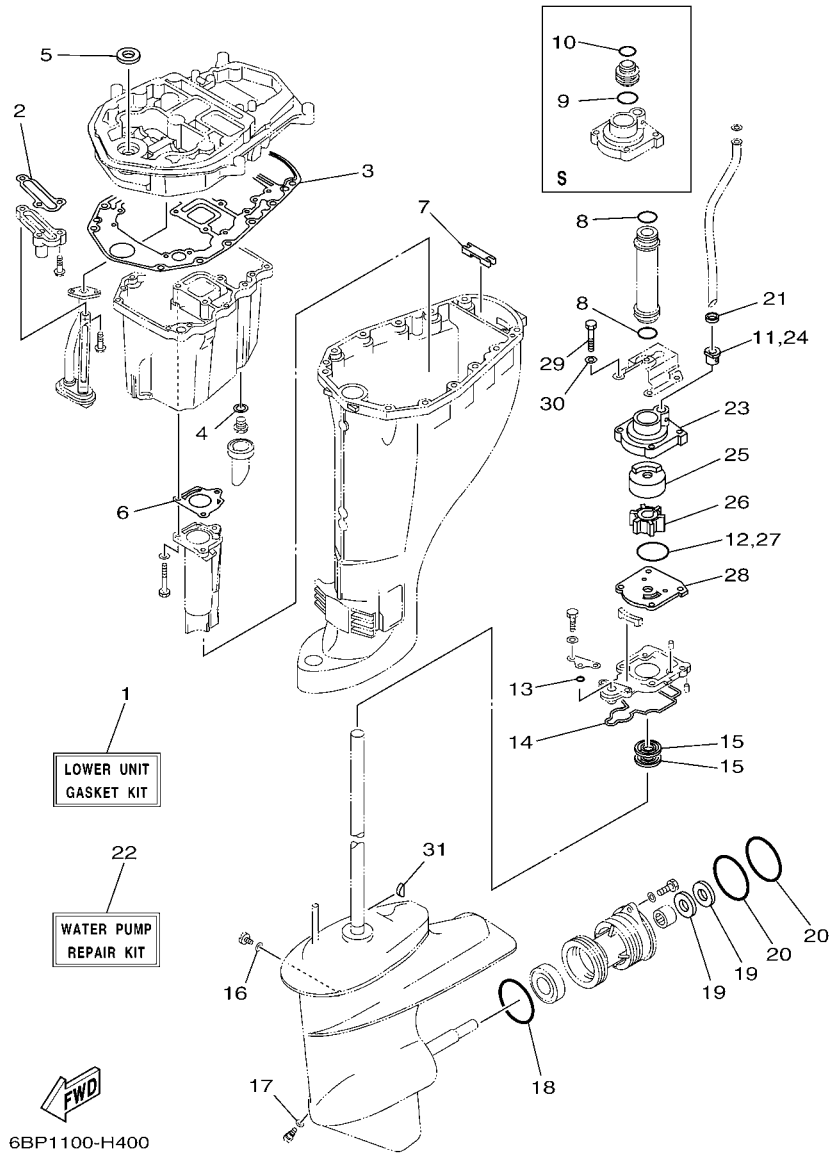

REF. NO.	PART NO. N° PIECES	DESCRIPTION DESCRIPTION	ET	E	MH			REMARKS REMARQUES
1	65W–W0001–23	LOWER UNIT GASKET KIT POCHETTE DE JOINTS EMBASE	1	1	1			
2	62Y–13475–00	.GASKET .JOINT	1	1	1			
3	69W–15312–00	.GASKET, OIL PAN .JOINT DE VENTILATEUR D'HUILE	1	1	1			
4	90430–14M09	.GASKET .JOINT	1	1	1			
5	93110–16004	.OIL SEAL .JOINT SPY	1	1	1			
6	67C–41133–00	.GASKET, EXHAUST MANIFOLD 1 .JOINT, PIPE D'ECHAPPEMENT	1	1	1			
7	65W–45128–00	.SEAL 2 .JOINT 2	1	1	1			
8	93210–26130	.O-RING .JOINT TORIQUE	2	2	2			L(21.6") L(21.6")
9	93210–26130	.O-RING .JOINT TORIQUE	1	1	1			S(16.6") S(16.6")
10	93210–22164	.O-RING .JOINT TORIQUE	1	1	1			S(16.6") S(16.6")
11	6L2–44367–00	.DAMPER, WATER SEAL 3 .JOINT TUBE D'EAU 3	1	1	1			
12	93210–45161	.O-RING .JOINT TORIQUE	1	1	1			
13	93210–06ME6	.O-RING .JOINT TORIQUE	1	1	1			
14	61N–45315–00	.PACKING, LOWER CASING .JOINT, BOITIER D'HELICE	1	1	1			
15	93101–22067	.OIL SEAL .JOINT SPY	2	2	2			
16	90430–08020	.GASKET .JOINT	1	1	1			
17	90430–08020	.GASKET .JOINT	1	1	1			
18	93210–64ME7	.O-RING .JOINT TORIQUE	1	1	1			
19	93101–20M07	.OIL SEAL .JOINT SPY	2	2	2			
20	93210–65M50	.O-RING .JOINT TORIQUE	2	2	2			
21	90430–10002	.GASKET .JOINT	1	1	1			
22	61N–W0078–11	WATER PUMP REPAIR KIT KIT DE REPARATION DE LA POMPE	1	1	1			
23	61N–44311–01	.HOUSING, WATER PUMP .CORPS, POMPE A EAU	1	1	1			
24	6L2–44367–00	.DAMPER, WATER SEAL 3 .JOINT TUBE D'EAU 3	1	1	1			
25	61N–44322–01	.INSERT, CARTRIDGE .CUVETTE	1	1	1			
26	6H4–44352–02	.IMPELLER .TURBINE	1	1	1			
27	93210–45161	.O-RING .JOINT TORIQUE	1	1	1			

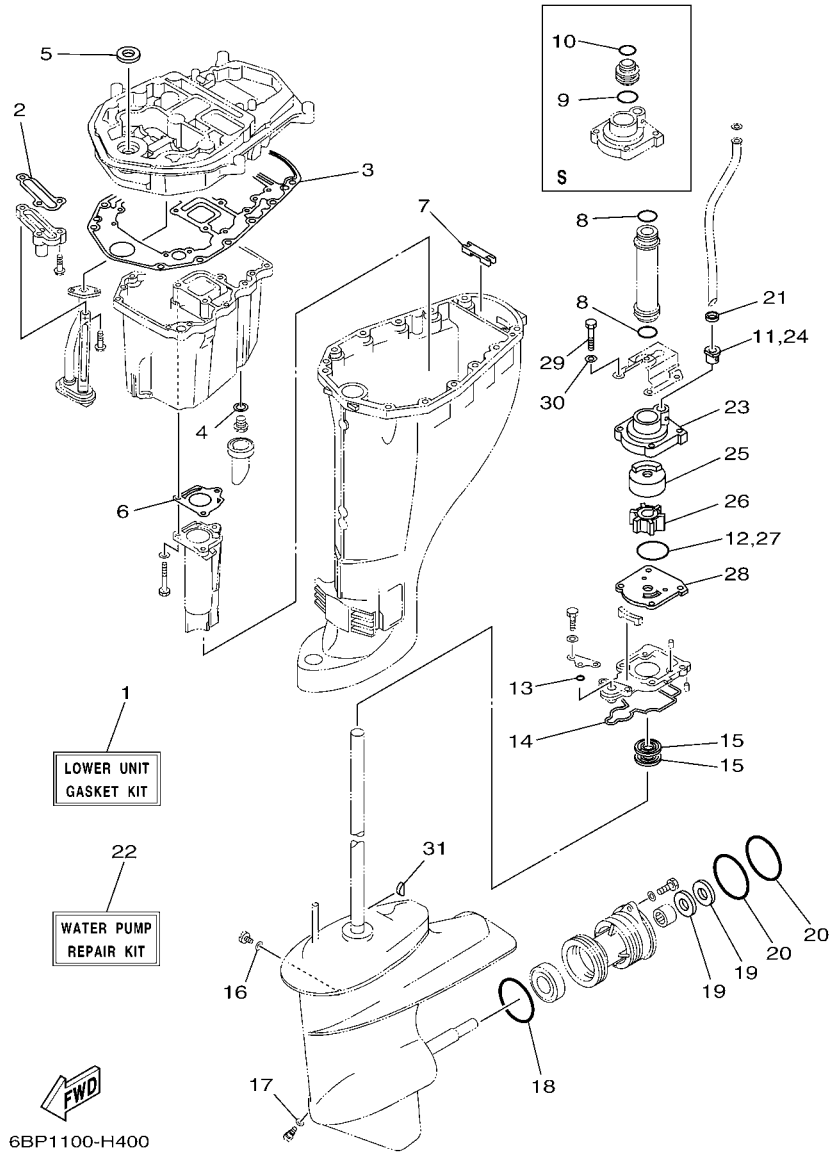

FIG. 40 REPAIR KIT 3 — KITS DE PEPARATION 3

REF. NO.	PART NO. N° PIECES	DESCRIPTION DESCRIPTION	ET	E	MH			REMARKS REMARQUES
28	61N–44323–00	.OUTER PLATE, CARTRIDGE .PLAQUE EXTERIEURE	1	1	1			
29	97095–06040	.BOLT .BOULON	4	4	4			
30	92995–06600	.WASHER .RONDELLE	4	4	4			
31	90280–03024	.KEY, WOODRUFF .CLAVETTE, DEMI-LUNE	1	1	1			

NUMERICAL INDEX
INDEX NUMERIQUE

PART NO. N° PIECES	REF. NO.
6BL–11111–00–1S	4 – 2
62Y–11119–00	2 – 13
	4 – 22
62Y–11133–30	4 – 3
6BG–11168–00	4 – 16
6BL–11181–00	4 – 10
	38 – 3
6BL–11191–00–1S	4 – 14
6G8–11197–01	2 – 31
	4 – 6
62Y–11325–00	29 – 2
6BL–11325–00	4 – 4
6G8–11325–00	2 – 29
66M–11327–00–94	29 – 4
66M–11328–00	29 – 3
6BG–11351–00	2 – 8
	38 – 7
6BL–11356–00	4 – 19
	38 – 4
676–11372–00	2 – 17
6BL–11411–00	3 – 1
6BG–11416–10	3 – 2
6BG–11416–20	3 – 2
6BG–11416–30	3 – 2
6C5–11536–00	8 – 7
6C5–11537–00	8 – 2
6H4–11545–00	11 – 4
62Y–11557–00	8 – 8
6BG–11576–00–94	30 – 11
67C–11603–00	3 – 7
67C–11604–00	3 – 7
67C–11605–00	3 – 7
69W–11631–01–97	3 – 6
62Y–11633–00	3 – 8
69W–11635–01	3 – 6
69W–11636–01	3 – 6
6BL–11642–00	3 – 11
6C5–11650–00	3 – 3
6C5–11654–00	3 – 4
6CJ–11656–10	3 – 5
6CJ–11656–20	3 – 5
6CJ–11656–30	3 – 5
6BL–11665–00	3 – 10
69W–12111–00	5 – 1
51Y–12114–00	5 – 4
62Y–12116–00	5 – 3
30X–12117–00	5 – 5
30X–12118–00	5 – 6

PART NO. N° PIECES	REF. NO.
51Y–12119–00	5 – 7
69W–12121–00	5 – 2
6BL–12146–00	5 – 8
62Y–12151–00	5 – 9
6C5–12151–00	5 – 12
62Y–12158–00	5 – 11
6C5–12158–00	5 – 14
64J–12159–00	5 – 10
6C5–12159–00	5 – 13
6BL–12170–00	8 – 1
6BL–12171–00	8 – 1
6BL–12231–00	5 – 15
6BL–12233–00	5 – 16
6G8–12411–03	2 – 23
688–12412–00	2 – 24
6C5–12413–00–9S	2 – 25
62Y–12414–00	2 – 26
	38 – 9
66M–12535–00	29 – 5
6AW–12572–00	19 – 4
6R3–12580–00	19 – 6
6C5–12858–00	2 – 38
62Y–13131–01	9 – 5
6BL–13300–00	8 – 14
6C5–13329–00	8 – 15
	38 – 18
65W–13411–00	30 – 8
67F–13434–20	1 – 17
6BP–13437–60	8 – 18
5GH–13440–20	2 – 37
62Y–13475–00	30 – 12
	40 – 2
6BL–13641–00–94	6 – 1
6BL–13645–00	6 – 2
	38 – 15
6BL–13646–00	6 – 8
	38 – 16
65W–14126–10	7 – 4
	39 – 2
663–14159–00	7 – 14
	39 – 12
67F–14255–00	7 – 33
6BL–14271–00	6 – 9
6BL–14301–10	7 – 1
65W–14335–00	7 – 23
	39 – 7
65W–14346–00	7 – 31
6BL–14346–00	7 – 35

PART NO. N° PIECES	REF. NO.
65W–14371–00	7 – 24
65W–14373–02	7 – 17
	39 – 5
65W–14379–00	7 – 19
6BL–14380–00	7 – 30
65W–14384–00	7 – 25
	39 – 8
67C–14397–00	7 – 21
	39 – 6
65W–14398–00	7 – 27
	39 – 9
65W–1439G–00	7 – 18
6BL–14440–00	6 – 10
62Y–14485–00	4 – 15
6AH–14497–00	23 – 32
63V–14523–00	7 – 9
6AH–14546–00	7 – 13
	39 – 3
6H4–14548–00	7 – 16
	39 – 4
67C–14555–00	7 – 22
67C–14567–00	7 – 32
6BL–14571–00	23 – 23
6BL–14571–10	22 – 34
	24 – 25
65W–14572–00	7 – 3
65W–14807–00	7 – 34
67C–14923–20	7 – 20
6BL–14943–28	7 – 11
65W–14947–90	7 – 10
676–14948–05	7 – 6
679–14966–00	7 – 7
65W–14980–20	7 – 26
63V–14985–00	7 – 12
	39 – 11
65W–14992–00	7 – 28
6BL–15100–01	2 – 2
6BL–15121–00–1S	2 – 9
65W–15311–03–CA	30 – 1
69W–15312–00	30 – 2
	40 – 3
65W–15316–00	30 – 4
6BL–15357–00	10 – 25
6BL–15362–00	30 – 15
6G8–15363–00	4 – 29
6BL–15373–00	6 – 13
6BL–15377–00	30 – 16
6BL–15663–00	2 – 10

PART NO. N° PIECES	REF. NO.
6BL–15663–00	38 – 8
66T–15705–00	10 – 9
6BL–15710–00	10 – 1
6BL–15711–00	10 – 2
66T–15713–00	10 – 7
6BL–15714–00	10 – 5
66T–15716–00	10 – 8
66T–15731–00	10 – 22
66T–15734–00	10 – 20
6AH–15741–10	10 – 6
689–15755–01	10 – 15
6BL–15762–00	10 – 28
67D–15764–00	10 – 3
6BL–15764–00	10 – 14
66T–15767–00	10 – 10
6BL–15770–00	10 – 21
6F5–15779–02	10 – 17
6BL–15782–00	10 – 23
66T–15784–00	10 – 11
6A0–15789–00	10 – 18
68T–15793–00	10 – 13
6AH–15793–00	10 – 24
6BL–15793–00	10 – 12
68T–15794–00	10 – 19
6AH–15795–00	10 – 4
6YJ–24167–00	34 – 7
6YK–24201–03	33 – 1
6YJ–24201–10	34 – 1
6YK–24260–01	33 – 4
6Y1–24260–12	34 – 3
6Y1–24268–00	34 – 6
6YL–24268–01	33 – 2
6G1–24304–02	9 – 31
6G1–24305–05	34 – 13
6Y1–24305–06	34 – 15
61J–24306–04	34 – 8
6YL–24306–54	33 – 7
6BL–24311–00	9 – 22
61N–24329–00	9 – 34
6Y1–24329–00	34 – 5
6YL–24329–00	33 – 6
650–24351–01	34 – 12
61J–24360–00	34 – 10
6BL–24364–00	19 – 13
62Y–24374–01	9 – 10
688–24378–00	2 – 20
6C5–24378–00	19 – 9
6BL–24396–00	19 – 11

PART NO. N° PIECES	REF. NO.
62Y–24410–04	9 – 1
62Y–24411–02	9 – 3
62Y–24415–01	9 – 2
62Y–24423–00	9 – 4
62Y–24444–01	9 – 7
62Y–24454–00	9 – 6
6C5–24471–00	9 – 8
6BL–24481–00	9 – 20
61N–24521–00	9 – 15
61N–24560–00	9 – 13
61N–24563–00	9 – 14
6D5–24566–00	9 – 17
6YJ–24610–01	34 – 2
6YK–24610–01	33 – 3
6AH–26288–00	20 – 4
6BP–26311–00	20 – 18
6BP–26316–00	20 – 19
6AH–2634E–00	20 – 23
6AH–26364–00	22 – 3
	23 – 3
62Y–28100–00	9 – 35
67F–2812A–00	13 – 7
6BP–28199–73–D0	9 – 36
6BP–28199–73–E0	9 – 36
6BP–28199–73–F0	9 – 36
6BP–28199–73–G0	9 – 36
6BP–28199–73–H0	9 – 36
6BP–28199–73–S0	9 – 36
6BP–28199–83–K0	9 – 37
6BP–28199–83–L0	9 – 37
6BP–28199–83–M0	9 – 37
6BP–28199–83–N0	9 – 37
6BP–28199–83–P0	9 – 37
6BP–28199–83–R0	9 – 37
6BL–41113–00–1S	2 – 16
6BL–41114–00	2 – 27
	38 – 10
68U–41131–00–CA	29 – 12
67C–41133–00	29 – 11
	40 – 6
67C–41137–13–CA	29 – 1
6BL–41211–00	22 – 33
	24 – 24
6BP–41211–00	23 – 22
6J8–41262–00	22 – 31
	23 – 20
	24 – 22
65W–41283–00	22 – 30

PART NO. N° PIECES	REF. NO.
65W–41283–00	24 – 21
6BL–41283–00	23 – 19
6AH–41638–00	23 – 17
6BL–41638–00	22 – 28
	24 – 19
6G1–41662–01–94	22 – 4
	23 – 4
6AH–42101–01–4D	20 – 2
66M–42119–01	20 – 5
6BL–42121–00–4D	20 – 34
65W–42125–00	20 – 11
6G1–42126–00	20 – 10
6BL–42131–00	20 – 31
6AH–42131–00–4D	20 – 28
6J0–42137–00	20 – 13
65W–42138–00	20 – 7
65W–42159–00	20 – 9
62Y–42171–00	23 – 29
67D–42177–00	20 – 6
6BG–42384–00	19 – 3
65W–42508–00	21 – 1
65W–42511–01–4D	27 – 1
65W–42511–11–4D	27 – 1
65W–42527–00	21 – 3
648–42528–00	27 – 33
65W–42528–00	21 – 10
6BL–42532–00	20 – 30
65W–42561–00	21 – 7
65W–42562–00	21 – 6
6BP–42610–00	1 – 1
6BP–42610–10	1 – 1
6BL–42613–00	1 – 2
6CJ–42615–00	1 – 11
6BL–42617–00	8 – 13
6BG–42649–00	1 – 7
6BL–42651–00	1 – 4
6BL–42652–00	1 – 8
6BG–42662–00	1 – 16
6BP–42677–00	1 – 12
6BP–42678–00	1 – 13
6AH–42697–01	1 – 15
6BP–42710–00–4D	18 – 1
62Y–42716–00	18 – 7
61A–42717–00	18 – 6
65W–42717–00	18 – 5
69J–42723–00–8D	16 – 16
6BG–42724–00	19 – 1
6G1–42725–00	16 – 15

NUMERICAL INDEX
INDEX NUMERIQUE

PART NO. N° PIECES	REF. NO.
6BL–42725–01	18 – 9
6BL–42725–10	18 – 9
65W–42726–00	18 – 34
65W–42726–10	18 – 34
	24 – 4
6H1–42726–21	19 – 1
68U–42727–00	18 – 23
6BL–42727–00	18 – 11
	24 – 3
6BL–42727–10	18 – 11
6BL–42735–00	18 – 35
6BP–42741–00	18 – 24
6BG–42748–00	18 – 3
60V–42756–00	18 – 25
6BL–42761–00	18 – 8
	24 – 2
6BL–42761–10	18 – 8
6BL–42762–10	18 – 10
6BP–42769–00	18 – 32
6AH–42794–40	18 – 38
6AH–42794–50	18 – 39
6BL–42815–00–4D	18 – 13
6BG–42816–00	18 – 18
6BG–42851–00	1 – 6
66T–43111–01–4D	26 – 1
65W–43111–10–4D	25 – 1
66T–43112–01–4D	26 – 6
65W–43112–10–4D	25 – 2
6J8–43113–01	26 – 16
648–43114–01	26 – 4
663–43118–01–4D	26 – 3
63D–43131–01	25 – 9
	26 – 13
66T–43144–00	18 – 20
6E5–43145–01	35 – 8
65W–43160–00	26 – 50
65W–43191–00	25 – 4
65W–43192–00	25 – 3
65W–43311–00–4D	26 – 11
65W–43311–10–4D	25 – 7
	26 – 11
682–43318–01	26 – 30
66T–43350–02	26 – 37
65W–43373–00	27 – 34
65W–43613–00	26 – 44
65W–43614–01	26 – 42
65W–43615–01	26 – 43
65W–43616–00	26 – 41

PART NO. N° PIECES	REF. NO.
66T–43627–00	26 – 18
65W–43630–11	26 – 31
66T–43631–11	26 – 39
689–43633–00	21 – 8
65W–43800–03–4D	28 – 1
6T4–43802–03	28 – 31
65W–43804–01	28 – 3
65W–43805–01	28 – 5
6T4–43808–00	28 – 66
65W–4380F–01	28 – 13
65W–4380K–00	28 – 17
65W–4380L–00	28 – 28
65W–43810–00	28 – 18
65W–43812–00	28 – 19
6H1–43816–00	28 – 26
65W–43817–00	28 – 41
65W–4381B–00	28 – 23
6H1–43829–00	28 – 63
65W–4382A–00	28 – 49
65W–43830–00	28 – 38
65W–43831–00	28 – 37
65W–43840–00	28 – 16
62X–43841–00	28 – 35
65W–43843–00	28 – 56
65W–43844–00	28 – 50
6H1–43844–10	28 – 58
6H1–43845–00	28 – 45
6H1–43847–00	28 – 47
6H1–4384F–10	28 – 59
65W–43851–00	28 – 51
65W–43853–00	28 – 62
6T4–43853–00	28 – 39
65W–43854–00	28 – 48
65W–43855–00	28 – 54
6H1–43856–10	28 – 57
6H1–43861–10	28 – 21
	28 – 24
65W–43865–00	28 – 20
6H1–43866–00	28 – 32
65W–4386A–00	28 – 60
65W–4386K–01	28 – 11
65W–4386L–00	28 – 12
65W–43871–00	28 – 22
6H1–43875–00	28 – 44
62X–43878–00	28 – 64
65W–43879–01	28 – 14
65W–4387G–00	28 – 6
65W–43880–01	28 – 2

PART NO. N° PIECES	REF. NO.
65W–43881–01	28 – 7
65W–43882–01	28 – 15
65W–43887–01	28 – 4
65W–43888–00	28 – 29
65W–43891–01	28 – 10
65W–43892–01	28 – 9
6AH–44111–00	20 – 35
66R–44114–00	22 – 10
	23 – 10
65W–44116–00	22 – 9
	23 – 9
6BL–44121–00	22 – 1
	23 – 1
6BL–44124–00	20 – 39
6BL–44125–00	22 – 17
	24 – 9
6BL–44142–00	22 – 12
	23 – 12
6BP–44143–00	22 – 14
	23 – 14
6BP–44143–10	22 – 14
	23 – 14
65W–44150–01	31 – 58
65W–44150–11	31 – 58
6AH–44167–00	23 – 28
6BL–44173–00	22 – 7
	23 – 7
65W–44176–00	31 – 19
6X4–44188–00	20 – 15
6G8–44191–00	20 – 42
6BL–44192–00	22 – 22
	24 – 13
61N–44311–01	31 – 11
	40 – 23
61N–44322–01	31 – 13
	40 – 25
61N–44323–00	31 – 16
	40 – 28
65W–44328–11	31 – 10
6H4–44352–02	31 – 14
	40 – 26
65W–44361–02	32 – 1
65W–44361–12	32 – 1
61N–44362–00	31 – 7
61N–44362–10	31 – 7
6L2–44367–00	31 – 12
	40 – 11
	40 – 24

PART NO. N° PIECES	REF. NO.
6BL–44391–00	18 – 33
67C–44514–20–94	27 – 10
66T–44526–30	27 – 11
6BP–44551–00–4D	27 – 14
65W–44551–11–4D	27 – 14
6BP–44552–00–4D	27 – 15
63D–44552–01–4D	27 – 18
6AH–44554–00	20 – 20
65W–44555–00	27 – 19
6BP–44555–00	27 – 19
64J–44575–00	27 – 20
65W–44575–01	27 – 20
6BP–45111–00–4D	29 – 15
6D5–45111–10–4D	29 – 15
61N–45127–00	31 – 25
65W–45128–00	29 – 20
	40 – 7
65W–45151–00	29 – 18
6L2–45214–00	32 – 9
6L2–45215–00	32 – 10
65W–45251–00	25 – 18
61N–45251–01	31 – 30
65W–45300–01–4D	31 – 1
65W–45300–11–4D	31 – 1
61N–45311–02–4D	31 – 2
61N–45315–00	31 – 26
	40 – 14
65W–45331–00–CA	31 – 23
688–45341–10	31 – 33
61N–45361–01–4D	31 – 51
61N–45371–00	32 – 7
61N–45510–00	31 – 35
61N–45510–10	31 – 35
61N–45536–00	31 – 5
61N–45551–00	31 – 37
61N–45560–10	31 – 41
6L2–45567–00	31 – 40
6L2–45567–10	31 – 40
6L2–45567–20	31 – 40
6L2–45567–30	31 – 40
6L2–45567–40	31 – 40
61N–45571–00	31 – 49
6L2–45577–00	31 – 50
6L2–45577–10	31 – 50
6L2–45577–20	31 – 50
6L2–45577–30	31 – 50
61N–45587–00	31 – 4
61N–45587–10	31 – 4

PART NO. N° PIECES	REF. NO.
61N–45587–20	31 – 4
61N–45587–30	31 – 4
61N–45587–40	31 – 4
61N–45587–50	31 – 4
61N–45587–60	31 – 4
61N–45587–70	31 – 4
65W–45611–00	31 – 42
664–45631–02	31 – 44
648–45633–00	31 – 46
648–45635–00	31 – 43
664–45941–01–EL	32 – 18
664–45943–01–EL	32 – 18
664–45945–00–EL	32 – 18
664–45947–01–EL	32 – 18
664–45949–02–EL	32 – 18
664–45952–00–EL	32 – 18
664–45954–01–EL	32 – 18
664–45970–00–98	32 – 18
664–45972–00–98	32 – 18
6L2–45987–01	32 – 13
689–45997–00	32 – 14
6C5–46241–00	8 – 6
6BL–46297–00	8 – 11
703–48152–00	37 – 57
703–48153–00	37 – 3
703–48189–00	37 – 17
703–48198–00	37 – 14
703–48201–A4	36 – 1
	37 – 1
703–48205–A6	36 – 1
	37 – 1
703–48211–02	37 – 61
703–48212–00	37 – 58
703–48213–00	37 – 59
703–48215–00	37 – 43
703–48218–00	37 – 64
703–48219–00	37 – 30
703–48221–00	37 – 56
703–48222–00	37 – 27
703–48223–00	37 – 28
703–48224–00	37 – 55
703–48225–00	37 – 29
703–48226–00	37 – 26
703–48227–00	37 – 24
703–48232–00	37 – 62
703–48234–00	37 – 18
703–48235–00	37 – 4
703–48236–00	37 – 16

PART NO. N° PIECES	REF. NO.
703–48238–00	37 – 22
703–48243–00	37 – 15
703–48244–00	37 – 21
703–48245–00	37 – 11
703–48246–00	37 – 23
701–48248–00	37 – 13
703–48252–00	37 – 12
703–48261–01	37 – 2
703–48264–00	37 – 6
703–48265–00	37 – 9
703–48268–00	37 – 5
703–48271–00	37 – 60
703–48281–00	37 – 31
703–48282–00	37 – 32
703–48284–00	37 – 52
701–48287–00	37 – 42
703–48291–10	37 – 39
703–48293–10	37 – 41
701–48310–90	36 – 2
701–48320–00	36 – 2
701–48320–20	36 – 2
701–48320–50	36 – 2
663–48344–00	22 – 26
	22 – 38
	24 – 17
	24 – 29
703–48345–01	37 – 19
703–48358–00	37 – 20
6BL–48501–00	24 – 1
65W–48511–00	24 – 7
	27 – 36
6BL–48538–00	18 – 35
	24 – 8
6BG–61350–00	35 – 1
68V–81315–00	13 – 16
6BL–81337–00	11 – 12
6BG–81800–00	17 – 1
6BG–81807–00	17 – 3
6BG–81810–00	17 – 11
6BG–81820–00	17 – 13
6BL–81822–00	14 – 12
6BL–81823–00	14 – 16
6BG–81826–00	17 – 15
6BL–8182A–00	14 – 7
6BG–8182J–00	17 – 14
6BG–81830–00	17 – 2
6BG–81832–00	17 – 7
6BG–81836–00	17 – 4

NUMERICAL INDEX
INDEX NUMERIQUE

PART NO. N° PIECES	REF. NO.
6BG–81839–00	17 – 10
6AW–8183T–00	17 – 6
6BL–8183X–00	14 – 9
6P2–8183X–00	15 – 6
6BG–81840–00	17 – 12
6BG–81846–00	17 – 16
6BG–81850–00	17 – 9
6BG–81857–00	17 – 8
6BG–81891–00	17 – 5
6BL–81925–00	14 – 8
68T–81940–00	14 – 4
6BG–81941–00	17 – 17
6BL–81942–00	15 – 3
6BL–81948–00	12 – 3
6BL–81949–00	15 – 5
63P–81950–00	15 – 1
6BL–81960–00	14 – 1
6AH–81994–40	10 – 29
	11 – 16
6AH–81994–50	10 – 31
	11 – 19
6AH–81995–40	10 – 30
	11 – 17
6AH–81995–50	10 – 32
	11 – 20
6AG–81996–00	11 – 18
6BL–82105–00	14 – 18
6BL–82119–00	12 – 10
6G5–82119–10	14 – 6
63D–82127–00	27 – 29
6U0–82127–00	25 – 21
65W–82127–10	27 – 29
6H1–82148–00	25 – 20
67F–82151–00	16 – 9
67F–82151–10	16 – 10
67C–82155–00	13 – 8
67F–8215B–10	16 – 11
67F–8215B–20	16 – 12
65W–82181–00	28 – 8
6A0–82317–00	12 – 4
6AH–82370–00	13 – 2
6C5–82377–00	18 – 37
6BL–82388–00	16 – 5
6BL–82389–00	13 – 20
6BL–82398–00	4 – 31
64J–82504–00	13 – 15
703–82510–12	37 – 44
703–82531–00	37 – 46

PART NO. N° PIECES	REF. NO.
703–82540–00	37 – 50
703–82542–00	37 – 63
	37 – 63
6BL–82554–00	12 – 13
682–82556–00	20 – 44
	37 – 48
69J–82563–00	16 – 16
703–82563–02	37 – 55
6BL–82575–00	20 – 43
688–82575–01	37 – 47
676–82577–00	37 – 45
689–8257Y–00	20 – 45
69J–82587–00	16 – 17
688–8258A–20	37 – 49
6BL–82590–00	16 – 8
6BL–82590–10	16 – 8
6BL–82590–20	16 – 8
703–82591–00	37 – 53
703–82592–00	37 – 54
703–82594–00	37 – 25
703–83383–B0	37 – 51
6BL–8339X–00	13 – 9
6H4–83589–00	16 – 2
63P–83614–01	16 – 18
62Y–84301–00	16 – 1
6D5–84340–00	24 – 31
67C–85415–00	16 – 20
6BL–85510–00	11 – 2
6BL–85510–10	11 – 2
6BL–85540–00	12 – 1
6BL–85550–00	11 – 1
6BL–85550–10	11 – 1
6BG–85561–00–94	11 – 8
6F5–85570–13	13 – 1
6AH–85580–00	11 – 3
6CJ–85790–00	13 – 17
6BL–W0001–00	38 – 1
65W–W0001–23	40 – 1
6BP–W0070–00	1 – 14
61N–W0078–11	40 – 22
6BP–W0084–00–4D	20 – 1
6BL–W0093–00	39 – 1
6BL–W009A–00–1S	4 – 1
6BL–W009B–00–1S	2 – 1
90101–06020	25 – 19
90101–08M76	26 – 8
90101–08M86	27 – 9
90101–09M01	35 – 6

PART NO. N° PIECES	REF. NO.
90101–10M58	26 – 51
90101–12M65	25 – 32
90105–08060	5 – 18
90105–08M76	27 – 35
90105–09005	4 – 12
90105–10M12	32 – 5
90109–05M89	21 – 14
90109–06047	1 – 9
90109–06266	9 – 12
90109–06M65	4 – 8
90109–06M86	16 – 6
	16 – 19
	18 – 12
	18 – 21
	18 – 27
	18 – 36
	19 – 12
	19 – 14
	20 – 3
90109–06M88	21 – 4
90109–06MA1	6 – 14
90109–08M90	26 – 24
90109–12MA3	27 – 24
90110–10M02	25 – 29
90111–06072	20 – 32
	20 – 33
90116–10M70	27 – 32
90119–06025	8 – 16
90119–06M05	20 – 36
90119–06M48	32 – 8
90119–06M61	18 – 2
90119–06MA3	4 – 13
90119–06MA5	2 – 28
90119–08102	29 – 16
90119–08132	29 – 17
90119–08M01	2 – 4
90119–10M14	27 – 24
90149–14M12	26 – 2
90151–05M05	32 – 11
90152–05011	20 – 8
90157–05014	26 – 40
90157–05M16	33 – 5
90157–05M19	34 – 4
90159–05M12	14 – 21
90167–05009	15 – 4
90170–06015	22 – 15
	23 – 15
90170–09M03	35 – 4

PART NO. N° PIECES	REF. NO.
90170–20137	3 – 12
	11 – 6
90171–14013	32 – 16
90179–08003	14 – 19
90179–10M14	31 – 38
90179–10M33	27 – 26
90179–35001	8 – 9
90185–05002	32 – 12
90185–06M05	1 – 10
90185–08045	27 – 7
90185–08057	26 – 21
90185–09M01	35 – 3
90185–10051	24 – 6
	27 – 31
90185–10M13	25 – 31
90185–10M14	21 – 12
90185–22043	25 – 12
	26 – 17
90201–05M04	23 – 30
90201–05M06	22 – 23
	24 – 14
90201–06M31	22 – 19
	22 – 35
	23 – 24
	24 – 11
	24 – 26
90201–08M00	25 – 25
90201–08M07	26 – 20
90201–10120	27 – 37
90201–10144	8 – 5
90201–10M20	35 – 2
90201–10M63	35 – 7
90201–12426	25 – 34
	26 – 53
90201–12M07	18 – 17
90201–12M16	27 – 23
90201–13M19	27 – 25
90201–16014	5 – 17
90201–20417	31 – 48
90201–21M18	11 – 5
90201–22M03	25 – 11
	26 – 15
90201–39008	20 – 25
90202–10M56	21 – 9
90202–12031	26 – 19
90202–12060	32 – 2
90202–25M04	27 – 21
90206–12052	18 – 16

PART NO. N° PIECES	REF. NO.
90206–12M00	26 – 23
90206–15M18	20 – 38
90206–39001	20 – 26
90209–10M26	21 – 11
90209–52M00	27 – 2
90243–04007	26 – 5
90249–07M32	26 – 45
90249–07M33	26 – 47
90249–10M31	26 – 34
90249–12M34	26 – 28
90249–12M38	25 – 15
90249–12M39	26 – 26
90249–18M35	25 – 28
90250–05010	31 – 45
90254–03M05	22 – 2
	22 – 8
	22 – 13
	23 – 2
	23 – 8
	23 – 13
90269–02M09	20 – 14
90280–03024	31 – 36
	40 – 31
90280–03M01	8 – 10
	38 – 14
90340–08002	31 – 28
90340–14M06	2 – 35
	30 – 5
90340–18M09	2 – 33
90344–51003	2 – 7
90381–20001	20 – 27
90386–07MA2	26 – 32
90386–08004	20 – 17
90386–10M99	26 – 35
90386–12M37	18 – 14
90386–12M98	25 – 14
	26 – 22
90386–12MA0	25 – 13
	26 – 27
90386–12MA2	18 – 15
90386–14MA1	25 – 6
90386–18M44	25 – 26
90386–18MA0	25 – 27
90386–22M15	25 – 10
	26 – 14
90386–44M03	27 – 4
90386–44M99	27 – 6
90386–45001	20 – 24

PART NO. N° PIECES	REF. NO.
90386–52M02	27 – 3
90387–05M11	21 – 13
90387–06060	18 – 4
90387–06119	12 – 5
90387–06139	22 – 32
	23 – 21
	24 – 23
90387–06M43	18 – 31
90387–06M86	20 – 37
	22 – 18
	24 – 10
90387–07M05	26 – 33
90387–07M29	26 – 46
90387–08M29	26 – 7
90387–10M42	35 – 5
90387–12M04	26 – 25
90430–06014	4 – 9
	38 – 2
90430–08020	31 – 29
	31 – 34
	40 – 16
	40 – 17
90430–10002	32 – 3
	40 – 21
90430–14115	2 – 36
	13 – 19
	38 – 13
90430–14M09	30 – 6
	40 – 4
90430–18130	2 – 34
	38 – 12
90445–09057	2 – 19
	19 – 10
90445–09104	2 – 22
90445–09251	2 – 21
90445–10M20	9 – 23
90445–10MG7	9 – 24
90445–11153	19 – 7
90445–11M05	34 – 11
90445–11M06	34 – 9
90446–09M42	24 – 32
90446–15003	9 – 29
90464–06001	4 – 32
90464–09010	16 – 14
90464–09018	13 – 6
90464–09023	4 – 25
90464–09M47	6 – 16
	13 – 18

NUMERICAL INDEX
INDEX NUMERIQUE

PART NO. N° PIECES	REF. NO.
90464–10M59	9 – 25
90464–11009	9 – 28
90464–12002	12 – 9
90464–12183	11 – 15
	12 – 7
90464–13227	9 – 30
90464–13249	12 – 7
90464–16001	16 – 13
90464–18001	14 – 20
	15 – 8
	16 – 13
	16 – 14
90464–18246	12 – 8
	13 – 12
	13 – 14
	16 – 7
90464–20181	13 – 13
	13 – 23
90465–06M90	15 – 10
90465–08M83	4 – 26
	6 – 5
90465–11M10	9 – 21
	15 – 9
	19 – 2
	19 – 2
	19 – 8
90465–13M11	25 – 17
90467–09M17	9 – 26
90467–10M04	9 – 27
90468–10005	22 – 24
	23 – 31
	24 – 15
90468–18001	22 – 25
	24 – 16
90468–18008	20 – 41
	22 – 27
	22 – 39
	24 – 18
	24 – 30
90480–12314	8 – 12
90480–13M24	18 – 30
90480–16616	6 – 15
90480–25003	13 – 3
90501–10065	31 – 47
90501–10326	7 – 8
90501–23215	20 – 16
90506–18023	18 – 22
90506–20M37	26 – 38

PART NO. N° PIECES	REF. NO.
90506–30M00	26 – 48
90508–20040	22 – 29
	24 – 20
90508–20M44	23 – 18
91318–04025	28 – 40
91490–16010	20 – 12
91490–20012	26 – 49
91490–30022	32 – 17
91690–30018	25 – 5
91690–50014	6 – 4
92903–06600	2 – 6
	2 – 12
	29 – 9
	30 – 10
	30 – 14
92903–08600	14 – 11
	14 – 15
92907–04600	4 – 18
92990–06100	21 – 5
92990–06200	20 – 40
92990–06300	31 – 32
92990–08100	26 – 10
92990–08200	5 – 19
92990–08600	37 – 34
92990–14200	32 – 15
92995–05600	11 – 11
	29 – 7
92995–06600	2 – 15
	4 – 21
	4 – 24
	4 – 28
	6 – 7
	9 – 33
	10 – 27
	11 – 14
	12 – 12
	12 – 12
	12 – 12
	13 – 5
	13 – 11
	13 – 22
	14 – 3
	15 – 12
	16 – 4
	18 – 29
	20 – 22
	22 – 6
	22 – 21

PART NO. N° PIECES	REF. NO.
92995–06600	23 – 6
	23 – 27
	23 – 34
	25 – 23
	29 – 14
	31 – 18
	31 – 22
	40 – 30
92995–08100	27 – 17
	27 – 28
92995–08200	27 – 8
92995–08600	27 – 13
92995–10600	25 – 30
	26 – 52
	27 – 37
	32 – 6
92995–12200	25 – 33
93101–20M07	31 – 55
	40 – 19
93101–22067	31 – 27
	40 – 15
93101–35002	3 – 14
	38 – 6
93102–37M40	8 – 17
	38 – 22
93102–43M42	3 – 13
	38 – 5
93110–16004	29 – 10
	40 – 5
93210–03478	28 – 53
93210–04N50	28 – 42
93210–04N51	28 – 43
93210–064A5	28 – 27
93210–06ME6	31 – 20
	40 – 13
93210–08006	28 – 52
93210–08287	34 – 14
	34 – 16
93210–09165	28 – 36
93210–10M74	28 – 33
	28 – 65
93210–11073	28 – 55
93210–11368	28 – 25
93210–12N52	28 – 34
93210–13M63	2 – 32
	4 – 7
	38 – 11
93210–16275	35 – 9

PART NO. N° PIECES	REF. NO.
93210–18397	28 – 46
93210–19MJ3	30 – 17
	38 – 19
93210–22164	31 – 8
	40 – 10
93210–24M79	4 – 30
	9 – 11
	38 – 20
	38 – 21
93210–26130	31 – 9
	31 – 9
	40 – 8
	40 – 9
93210–32738	9 – 16
93210–39ME4	6 – 11
	38 – 17
93210–43MJ0	27 – 5
93210–45161	31 – 15
	40 – 12
	40 – 27
93210–50768	28 – 30
93210–64ME7	31 – 53
	40 – 18
93210–65M50	31 – 56
	40 – 20
93306–00612	31 – 52
93315–22004	31 – 54
93315–220V7	31 – 6
93332–00005	31 – 39
93332–000W5	31 – 3
93430–06024	37 – 10
93450–17129	3 – 9
93501–08001	28 – 61
93604–10M03	2 – 18
	31 – 24
93605–17002	8 – 3
93606–11M24	32 – 4
93606–12019	2 – 3
	4 – 11
	30 – 3
93608–12M05	30 – 19
93700–06M03	21 – 2
	24 – 5
	25 – 8
	26 – 12
	26 – 12
94702–00418	4 – 33
95023–06025	11 – 9

PART NO. N° PIECES	REF. NO.
95023–06030	11 – 7
95380–05600	9 – 9
	37 – 7
95380–05800	1 – 5
95380–06600	37 – 40
95380–06700	22 – 16
	23 – 16
95380–08600	9 – 19
	26 – 9
95380–10600	26 – 54
95380–12600	25 – 35
95380–12800	27 – 22
95817–10035	8 – 4
95895–06014	12 – 14
	22 – 11
	23 – 11
95895–06016	30 – 18
95895–06030	12 – 6
95895–06035	31 – 31
95895–06100	6 – 12
95895–08016	9 – 18
97013–06016	30 – 9
97013–06020	29 – 8
97013–06025	2 – 5
	2 – 11
	30 – 13
97013–08045	14 – 10
	14 – 14
97075–06050	29 – 13
97075–08030	27 – 12
	27 – 27
97080–08016	25 – 24
97095–05012	29 – 6
97095–05016	11 – 10
97095–06012	4 – 27
	18 – 19
97095–06014	18 – 28
	20 – 21
	23 – 26
	23 – 33
	25 – 22
97095–06016	6 – 6
	12 – 11
	12 – 11
	12 – 11
	13 – 10
	13 – 21
	15 – 11

PART NO. N° PIECES	REF. NO.
97095–06020	2 – 14
	4 – 20
	4 – 23
	10 – 26
	11 – 13
	22 – 5
	23 – 5
97095–06025	9 – 32
	13 – 4
	22 – 37
	24 – 28
	31 – 21
97095–06035	22 – 20
97095–06040	14 – 2
	31 – 17
	40 – 29
97095–06065	22 – 36
	24 – 27
97095–08045	27 – 16
97380–05025	37 – 8
97380–08030	37 – 33
97575–06520	12 – 2
	14 – 17
	15 – 2
	31 – 57
97575–06525	30 – 7
97575–10580	27 – 22
97595–06535	24 – 12
97595–06555	6 – 3
	20 – 29
	23 – 25
97595–06610	14 – 5
	15 – 7
97780–50616	1 – 3
97780–60520	19 – 5
97803–04010	7 – 5
97880–05025	2 – 30
97885–06008	27 – 30
97885–06012	16 – 3
97980–04108	7 – 36
97980–04114	7 – 29
	39 – 10
97980–04245	18 – 26
97980–05216	29 – 19
98507–04010	4 – 17
98580–03015	37 – 38
98580–04006	7 – 2
	37 – 36

NUMERICAL INDEX
INDEX NUMERIQUE

PART NO. N° PIECES	REF. NO.	PART NO. N° PIECES	REF. NO.	PART NO. N° PIECES	REF. NO.	PART NO. N° PIECES	REF. NO.	PART NO. N° PIECES	REF. NO.	PART NO. N° PIECES	REF. NO.
98580–04008	7 – 15										
98580–04010	37 – 35										
98580–05010	37 – 37										
98980–05035	4 – 5										
99080–08600	26 – 36										
99080–10600	25 – 16										
	26 – 29										
99590–10114	14 – 13										