YAMAHA

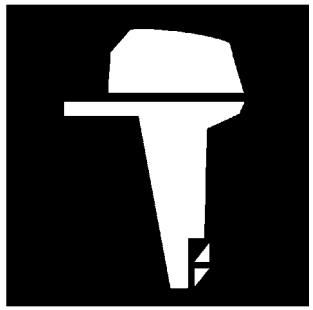

PARTS CATALOGUE
CATALOGUE DE PIECES DETACHEES

F40D'11 (6AK6)
F50F'11 (6C17)
F60C'11 (6C57)

1K6C1-300F1

( )

YAMAHA GENUINE Parts & Accessories

2015/9/9

NEWS NO.	DATE	COMMENT
PE0-OM-110001	Jan.,6,2011	COR:FIG.25 PTT LIST/ILLUSTRATION CORRECTION
PE0-OM-110047	Dec.,22,2011	MOD:FIG.6 INTAKE 1 LIST REVISION
PE0-OM-120001	Jan.,18,2012	MOD:FIG.19 BOTTOM COWLING 2 LIST/ILLUSTRATION REVISION
PE0-OM-120027	April,11,2012	MOD: FIG.11 FUEL 1 LIST/ILLUSTRATION REVISION
PE0-OM-150022	Sep.,1,2015	COR:FUEL INJECTION PUMP 1 ILLUSTRATION CORRECTION

F40D
F50F/F60C
PARTS CATALOGUE
©2010 by Yamaha Motor Co., Ltd.
1st edition, June 2010
All rights reserved.
Any reprinting or unauthorized use
without the written permission of
Yamaha Motor Co., Ltd.
is expressly prohibited.
Printed in Japan.

F40D
F50F/F60C
CATALOGUE DE PIECES DETACHEES
©2010 par Yamaha Motor Co., Ltd.
1re édition, juin 2010
Tous droits réservés
Toute réimpression ou utilisation
non autorisée sans la permission écrite
de la Yamaha Motor Co., Ltd.
est formellement interdite.
Imprimé au Japon

FOREWORD

This Parts Catalogue is related to the parts for the model(s) on the cover page. When you are ordering replacement parts, please refer to this Parts Catalogue and quote both part numbers and part names correctly.

1. Modifications or additions which have been made after the issue of the Parts Catalogue will be announced in the Parts News.
   It is advisable that you make the necessary corrections to the Parts Catalogue according to the Parts News.

2. Abbreviations
   The following abbreviations are used in this Parts Catalogue.

   "UR" Use specified parts number.
   "UN" Use as many as needed.
   "AP" Alternate Parts
   "LM" Locally Made (Parts need to be ordered locally)
   "F#" Frame No. (Applicable machine No.)
   "O/S" Over Size

3. The number of components for assembly
   - Parts, which are to be supplied in an assembly, are listed with a dot (.) in front of the part name as shown below.
   - The numeral appearing to the right of each component part indicates the quantity of parts for each assembly unit.

PART NO.	DESCRIPTION	Q'TY	REMARKS
2F5–83310–60	FRONT FLASHER LIGHT ASSY	2	
115–83311–60	.BULB (6V–18W)	1	

4. Applicable colours of graphics are represented in the "REMARKS" as shown below.

PART NO.	DESCRIPTION	Q'TY	REMARKS
2N4–24110–00–X5	FUEL TANK COMP.	2	MXR
3J1–24240–10	.GRAPHIC, FUEL TANK	1	FOR MXR

5. Note that the illustrations for reference in finding parts numbers are not to be used for assembling. When assembling, please use the applicable service manual.

6. The asterisk (*) before a reference number indicates modified items after the first edition.

7. Applicable Serial No.

   Engine Serial No.

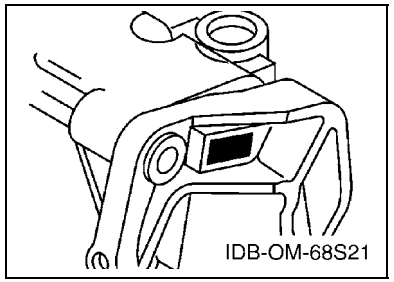

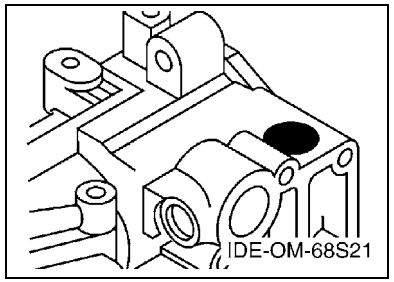

8. Applicable Engine Starting Serial No.

Model	Serial No.	Model	Serial No.
F40D	6AK-1007683	F50F	6C1-1035323
F60C	6C5-1043043		

9. Applicable Colour Code

Abbreviation	Colour Name	Colour Code
DBN1	DARK BLUISH GRAY 1	008D

10. Quantity Column Information

Column No.	Name Of Q'ty Column	Applicable Model
1	ED	F50FED
2	ET	F40DET,F50FET,F60CET

AVANT–PROPOS

Ce catalogue de pièces détachées concerne les pièces pour le(s) modèle(s) indiqué(s) sur la page de couverture. Lorsque vous commandez des pièces de rechange, veuillez vous référer à ce catalogue de pieces détachées et indiquer clairement les numéros et les noms des pièces détachées.

1. Les modifications ou ajouts ayant été effectués après la parution du catalogue de pièces détachées seront décrits dans les Bulletins d'information concernant les pièces détachées.
   Il est recommandé que vous apportiez les corrections nécessaires au catalogue des pièces détachées en vous référant aux Bulletins d'information.

2. Abréviations
   Dans ce catalogue, les abréviations suivantes sont utilisées:

   "UR" Utiliser le numéro de pièces spécifié.
   "UN" Utiliser autant que nécessaire.
   "AP" Pièces de substitution
   "LM" Fabrication locale (les pièces doivent être commandées localement.)
   "F#" N° de cadre (applicable au N° de série)
   "O/S" Surdimensionné

3. Nombre de pièces d'un assemblage
   - Les pièces fournies comme composants d'un assemblage sont précédées d'un point (.) de la manière indiquée ci–dessous.
   - Le chiffre apparaissant à la droite de chaque composant indique la quantité de pièces pour chaque unité d'assemblage.

N° PIECES	DESCRIPTION	QTE	REMARQUES
2F5–83310–60	ENS. CLIGNOTANT AVANT	2	
115–83311–60	.AMPOULE (6V–18W)	1	

4. Les couleurs concernant les graphiques sont indiquées dans la colonne "REMARQUES", comme indiqué ci–dessous.

N° PIECES	DESCRIPTION	QTE	REMARQUES
2N4–24110–00–X5	RESERVOIR A ESSENCE.	2	MXR
3J1–24240–10	.GRAPHIQUE	1	POUR MXR

5. Veuillez noter que les illustrations sont indiquées à titre de référence pour trouver les numéros de pièces, non pour être utilisées lors de l'assemblage. Lors de l'assemblage, veuillez utiliser le manuel d'entretien adéquat.

6. L'astérisque (*) placé devant un numéro de référence indique des éléments qui ont été modifiés après la première édition.

7. N° de série applicable

   N° de Série du moteur

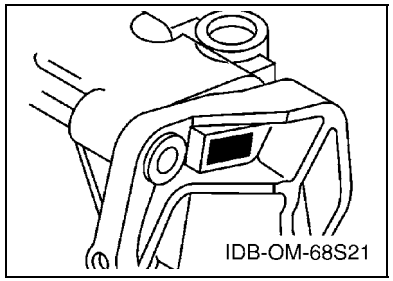

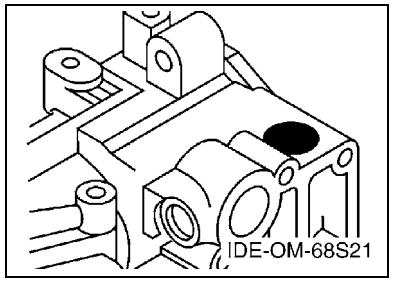

8. N° de série initial du moteur applicable

Modèle	N° de série	Modèle	N° de série
F40D	6AK-1007683	F50F	6C1-1035323
F60C	6C5-1043043		

9. Code couleur applicable

Abréviation	Nom de la couleur	Code couleur
DBN1	DARK BLUISH GRAY 1	008D

10. Informations relatives à la colonne Quantité

N° de la colonne	Nom de la colonne Qté	Modèle applicable
1	ED	F50FED
2	ET	F40DET,F50FET,F60CET

CONTENTS

TOP COWLING 1
CYLINDER & CRANKCASE 1 2
CRANKSHAFT & PISTON 4
CYLINDER & CRANKCASE 2 5
VALVE 7
INTAKE 1 8
INTAKE 2 9
FUEL INJECTION PUMP 1 10
FUEL INJECTION PUMP 2 11
OIL PUMP 12
FUEL 13
GENERATOR 15
ELECTRICAL 1 16
ELECTRICAL 2 17
ELECTRICAL 3 19
ELECTRICAL 4 21
STARTING MOTOR 22
BOTTOM COWLING 1 23
BOTTOM COWLING 2 25
CONTROL 26
BRACKET 1 28
BRACKET 2 30
BRACKET 3 32
POWER TRIM & TILT ASSY 1 34
POWER TRIM & TILT ASSY 2 37
UPPER CASING 38
OIL PAN 39
LOWER CASING & DRIVE 1 40
LOWER CASING & DRIVE 2 43
FUEL TANK 45
STEERING GUIDE 46
OPTIONAL PARTS 47
REPAIR KIT 1 48
REPAIR KIT 2 49

INDEX

NUMERICAL INDEX 51

TABLE DES MATIERES

CAPOT SUPERIEUR 1
CYLINDRE & CARTER 1 2
VILEBREQUIN & PISTON 4
CYLINDRE & CARTER 2 5
SOUPAPE 7
ADMISSION 1 8
ADMISSION 2 9
POMPE A INJECTEUR 1 10
POMPE A INJECTEUR 2 11
POMPE A HUILE 12
CARBURANT 13
GENERATRICE 15
PARTIE ELECTRIQUE 1 16
PARTIE ELECTRIQUE 2 17
PARTIE ELECTRIQUE 3 19
PARTIE ELECTRIQUE 4 21
DEMARREUR ELECTRIQUE 22
CAPOT INFERIEUR 1 23
CAPOT INFERIEUR 2 25
COMMANDE 26
SUPPORT 1 28
SUPPORT 2 30
SUPPORT 3 32
PUISSANCE PARER ET INCLINER 1 34
PUISSANCE PARER ET INCLINER 2 37
FOURREAU 38
VENTILATEUR D'HUILE 39
BOITIER D'HELICE TRANSMISSION1 40
BOITIER D'HELICE TRANSMISSION2 43
RESERVOIR A CARBURANT 45
FIXATION DE DIRECTION 46
PIECES OPTIONNELLES 47
KITS DE REPARATION 1 48
KITS DE REPARATION 2 49

INDEX

INDEX NUMERIQUE 51

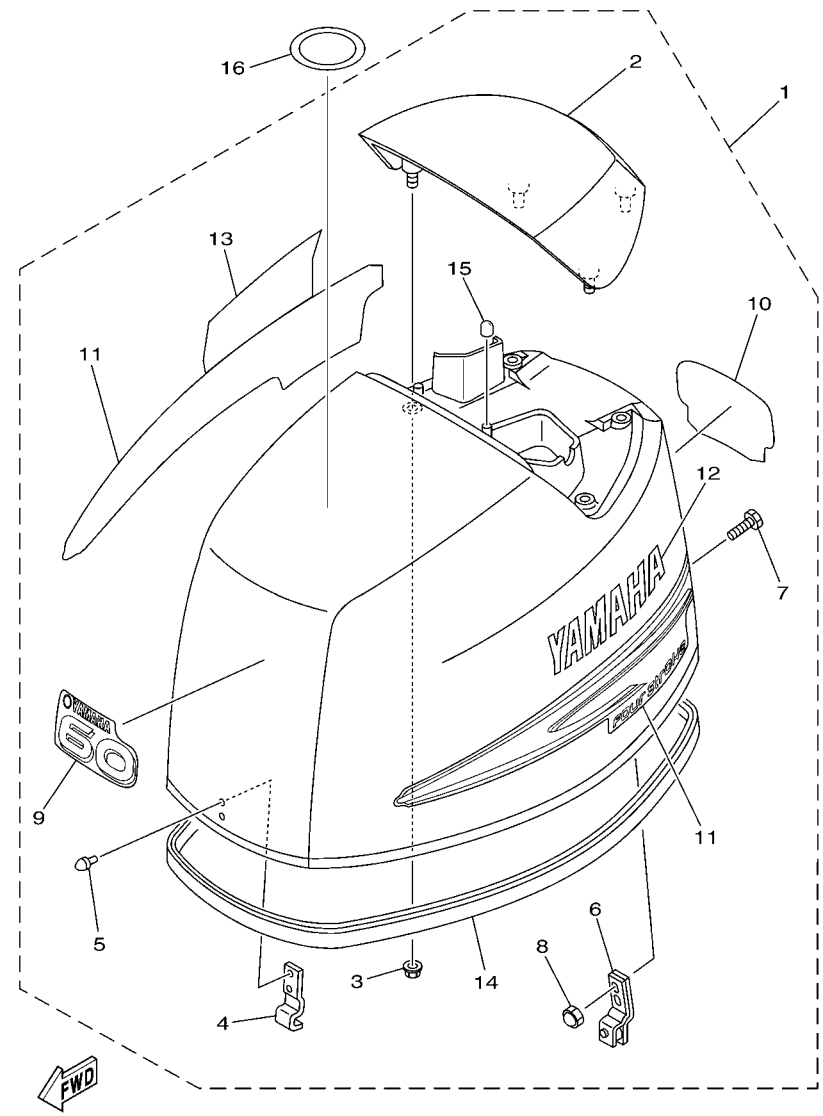

6C11010-D010

FIG. 1 TOP COWLING — CAPOT SUPERIEUR

REF. NO.	PART NO. N° PIECES	DESCRIPTION DESCRIPTION	ED	ET				REMARKS REMARQUES
1	6C1–42610–00	TOP COWLING ASSY CAPOT (ENS.)	1	1				F50F F50F
	6C5–42610–00	TOP COWLING ASSY CAPOT (ENS.)		1				F60C F60C
	6AK–42610–00	TOP COWLING ASSY CAPOT (ENS.)		1				F40D F40D
2	67C–42613–00–8D	.MOLDING, AIR DUCT .MANCHON A AIR	1	1				
3	90179–06029	.NUT .ECROU	4	4				
4	6C5–42651–00	.HOOK .CROCHET	1	1				
5	90266–06M02	.RIVET .RIVET	2	2				
6	67C–42652–02	.HOOK .CROCHET	1	1				
7	90109–06047	.BOLT .BOULON	2	2				
8	90185–06M05	.NUT, SELF-LOCKING .ECROU,AUTO-BLOQUANT	2	2				
9	62Y–42677–30	.GRAPHIC, FRONT .ADHESIF, AVANT	1	1				F50F F50F
	69W–42677–00	.GRAPHIC, FRONT .ADHESIF, AVANT		1				F60C F60C
	62Y–42677–50	.GRAPHIC, FRONT .ADHESIF, AVANT		1				F40D F40D
10	6C1–42678–00	.GRAPHIC, REAR .ADHESIF, ARRIERE	1	1				F50F F50F
	6C5–42678–00	.GRAPHIC, REAR .ADHESIF, ARRIERE		1				F60C F60C
	6AK–42678–00	.GRAPHIC, REAR .ADHESIF, ARRIERE		1				F40D F40D
11	69W–W0070–00	.GRAPHIC SET .JEU DIEMBLEMES	1	1				
12	69W–42681–00	.MARK, COWLING .ADHESIF, CAPOT	1	1				
13	69W–42682–00	.MARK, COWLING .ADHESIF, CAPOT	1	1				
14	6C5–42615–00	.SEAL .JOINT	1	1				
15	69W–13448–00	.CAP .CAPUCHON	2	2				
16	67F–13434–20	LABEL, CAUTION ETIQUETTE, ATTENTION	1	1				

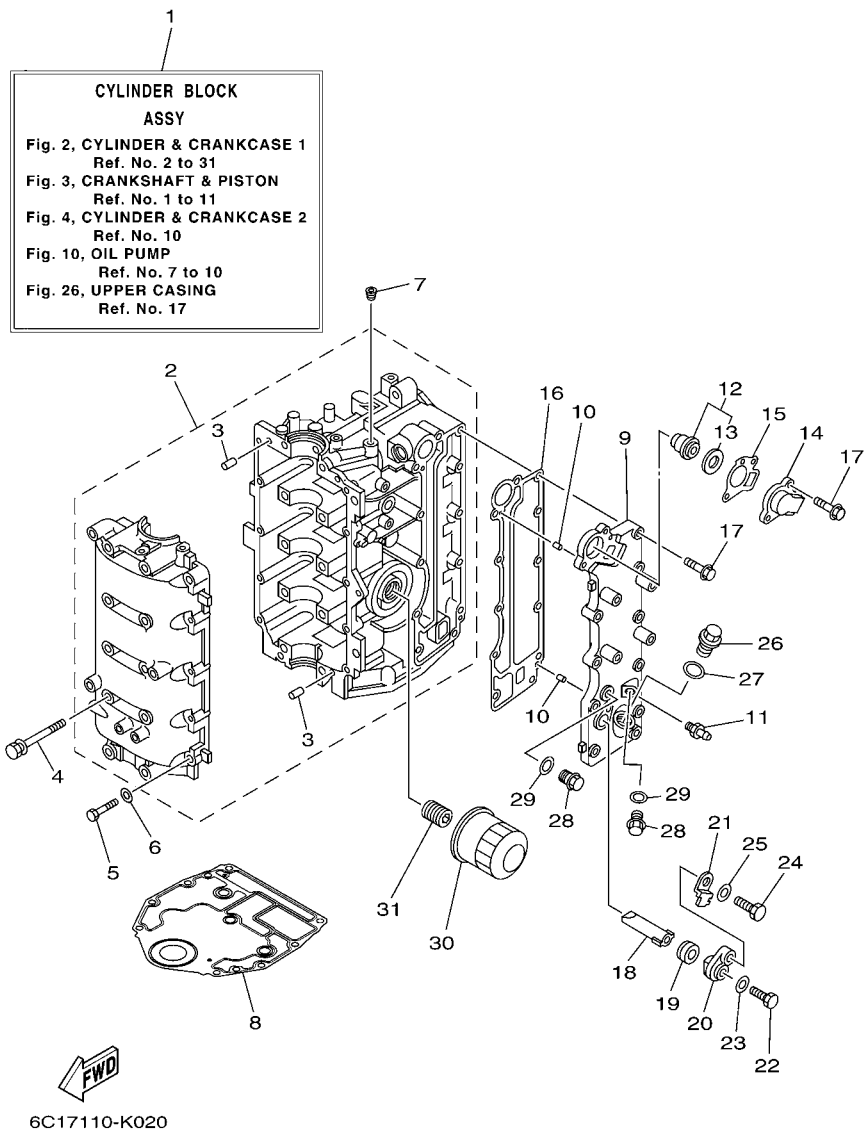

FIG. 2 CYLINDER & CRANKCASE 1 CYLINDRE & CARTER 1

REF. NO.	PART NO. N° PIECES	DESCRIPTION DESCRIPTION	ED	ET				REMARKS REMARQUES
1	6C5–W009B–04–9S	CYLINDER BLOCK ASSY CYLINDRE GROUPE (ENS.)	1	1				
2	6C5–15100–11	CRANKCASE ASSY CARTER DE MOTEUR COMPLET	1	1				
3	93606–12019	.PIN, DOWEL .GOUPILLE	4	4				
4	90119–08154	BOLT, WITH WASHER BOULON, AVEC RONDELLE	10	10				
5	97013–06035	BOLT BOULON	10	10				
6	92903–06600	WASHER, PLATE RONDELLE, PLATE	10	10				
7	90344–51003	PLUG, TAPER SCREW PLOT, FILETE CONIQUE	1	1				
8	6BG–11351–00	GASKET, CYLINDER JOINT, D'EMBASE	1	1				
9	6C5–41113–11–9S	OUTER COVER, EXHAUST COUVERCLE, ECHAPPEMENT	1	1				
10	93604–10M03	PIN, DOWEL CLAVETTE	2	2				
11	62Y–12481–10	PIPE 1 DURITE 1	1	1				
12	6G8–12411–03	THERMOSTAT THERMOSTAT	1	1				
13	688–12412–00	.SEAL, THERMOSTAT .JOINT, THERMOSTAT	1	1				
14	6C5–12413–00–9S	COVER, THERMOSTAT COUVERCLE, THERMOSTAT	1	1				
15	62Y–12414–00	GASKET, COVER JOINT, COUVERCLE	1	1				
16	6C5–41114–10	GASKET, EXHAUST OUTER COVER JOINT, COUVERCLE D'ECHAPPEMENT	1	1				
17	90119–06MA5	BOLT, WITH WASHER BOULON, AVEC RONDELLE	12	12				
18	62Y–11325–00	ANODE ANODE	1	1				
19	66M–11328–00	GROMMET, ANODE PASSE-FIL	1	1				
20	66M–11327–00–94	COVER, ANODE COUVERCLE ANODE	1	1				
21	66M–12535–00	PLATE PLAQUE	1	1				
22	97095–05012	BOLT BOULON	1	1				
23	92995–05600	WASHER RONDELLE	1	1				
24	97095–06020	BOLT BOULON	1	1				
25	92995–06600	WASHER RONDELLE	1	1				
26	90340–18M09	PLUG, STRAIGHT SCREW PLOT, FILETE DROIT	1	1				
27	90430–18130	GASKET JOINT	1	1				

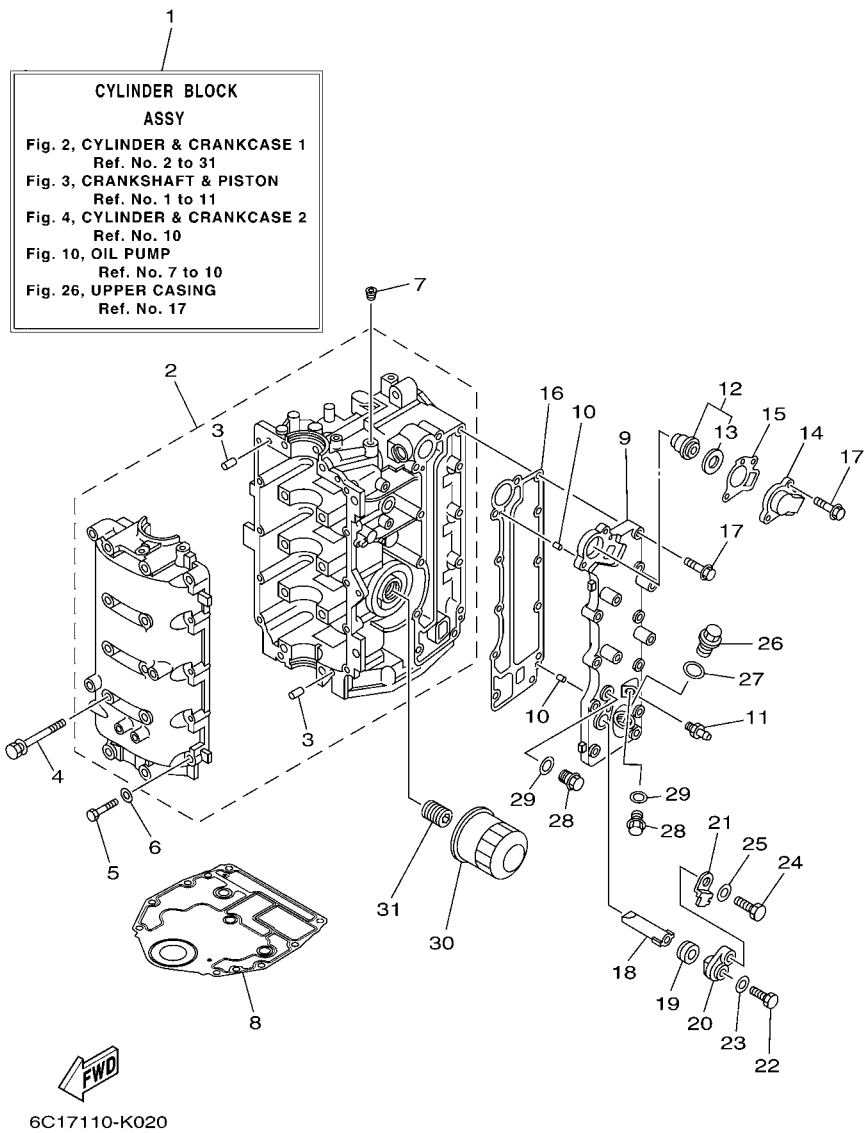

FIG. 2 CYLINDER & CRANKCASE 1 CYLINDRE & CARTER 1

REF. NO.	PART NO. N° PIECES	DESCRIPTION DESCRIPTION	ED	ET				REMARKS REMARQUES
28	90340–14M06	PLUG, STRAIGHT SCREW PLOT, FILETE DROIT	2	2				
29	90430–14115	GASKET JOINT	2	2				
30	5GH–13440–20	ELEMENT ASSY, OIL CLEANER ELEMENT, FILTRE A HUILE	1	1				
31	6C5–12858–00	BOLT, UNION BOULON, RACCORD	1	1				

FIG. 3 CRANKSHAFT & PISTON VILEBREQUIN & PISTON

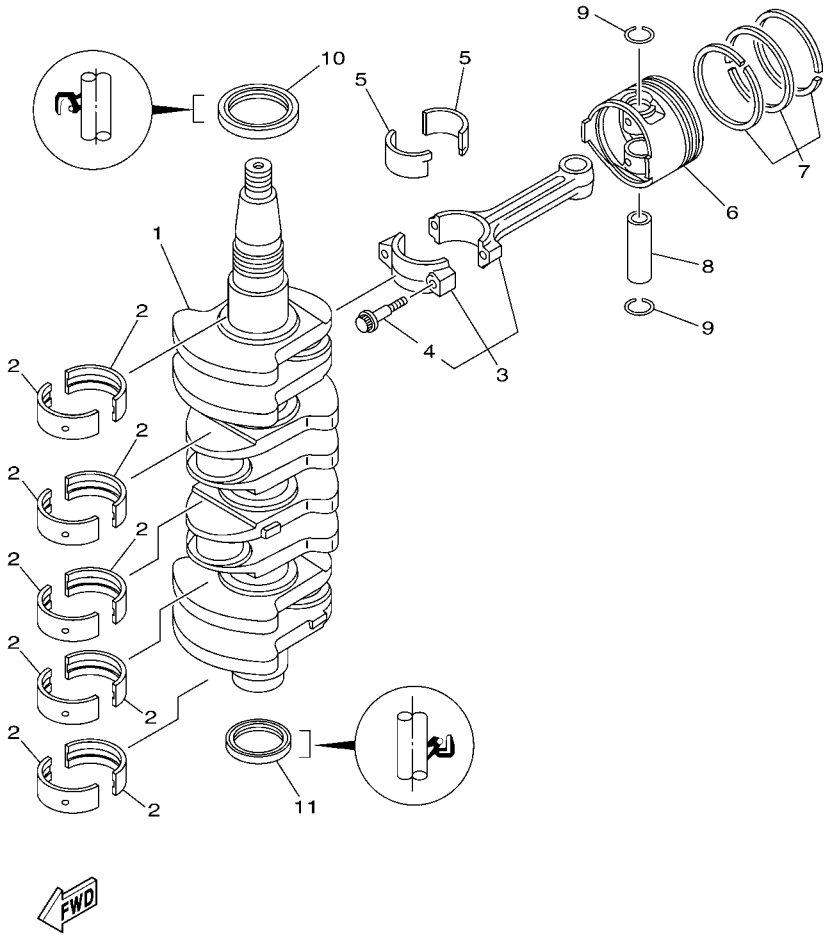

REF. NO.	PART NO. N° PIECES	DESCRIPTION DESCRIPTION	ED	ET				REMARKS REMARQUES
1	6C5–11411–01	CRANKSHAFT VILEBREQUIN COMPLET	1	1				
2	6BG–11416–00	PLANE BEARING, CRANKSHAFT 1 COUSSINET DE VILEBREQUIN 1	10	10				UR YELLOW UR YELLOW
	6BG–11416–10	PLANE BEARING, CRANKSHAFT 1 COUSSINET DE VILEBREQUIN 1	10	10				UR RED UR RED
	6BG–11416–20	PLANE BEARING, CRANKSHAFT 1 COUSSINET DE VILEBREQUIN 1	10	10				UR PINK UR PINK
	6BG–11416–30	PLANE BEARING, CRANKSHAFT 1 COUSSINET DE VILEBREQUIN 1	10	10				UR GREEN UR GREEN
3	6C5–11650–00	CONNECTING ROD ASSY BIELLE COMPLETTE	4	4				
4	6C5–11654–00	.BOLT, CONNECTING ROD .BOULON, BIELLE	2	2				
5	6CJ–11656–00	PLANE BEARING, CONNECTING ROD ROULEMENT DE BIELLE	8	8				UR YELLOW UR YELLOW
	6CJ–11656–10	PLANE BEARING, CONNECTING ROD ROULEMENT DE BIELLE	8	8				UR RED UR RED
	6CJ–11656–20	PLANE BEARING, CONNECTING ROD ROULEMENT DE BIELLE	8	8				UR PINK UR PINK
	6CJ–11656–30	PLANE BEARING, CONNECTING ROD ROULEMENT DE BIELLE	8	8				UR GREEN UR GREEN
6	69W–11631–01–97	PISTON (STD) PISTON (STD)	4	4				
	69W–11635–01	PISTON (0.25MM O/S) PISTON (0.25MM O/S)	4	4				AP AP
	69W–11636–01	PISTON (0.50MM O/S) PISTON (0.50MM O/S)	4	4				AP AP
7	67C–11603–00	PISTON RING SET (STD) JEU DE SEGMENTS (STD)	4	4				
	67C–11604–00	PISTON RING SET (0.25MM O/S) JEU DE SEGMENTS (0.25MM O/S)	4	4				AP AP
	67C–11605–00	PISTON RING SET (0.50MM O/S) JEU DE SEGMENTS (0.50MM O/S)	4	4				AP AP
8	62Y–11633–00	PIN, PISTON AXE, PISTON	4	4				
9	93450–17129	CIRCLIP CIRCLIP, TYPE S	8	8				
10	93102–43M42	OIL SEAL JOINT SPY	1	1				
11	93101–35002	OIL SEAL JOINT SPY	1	1				

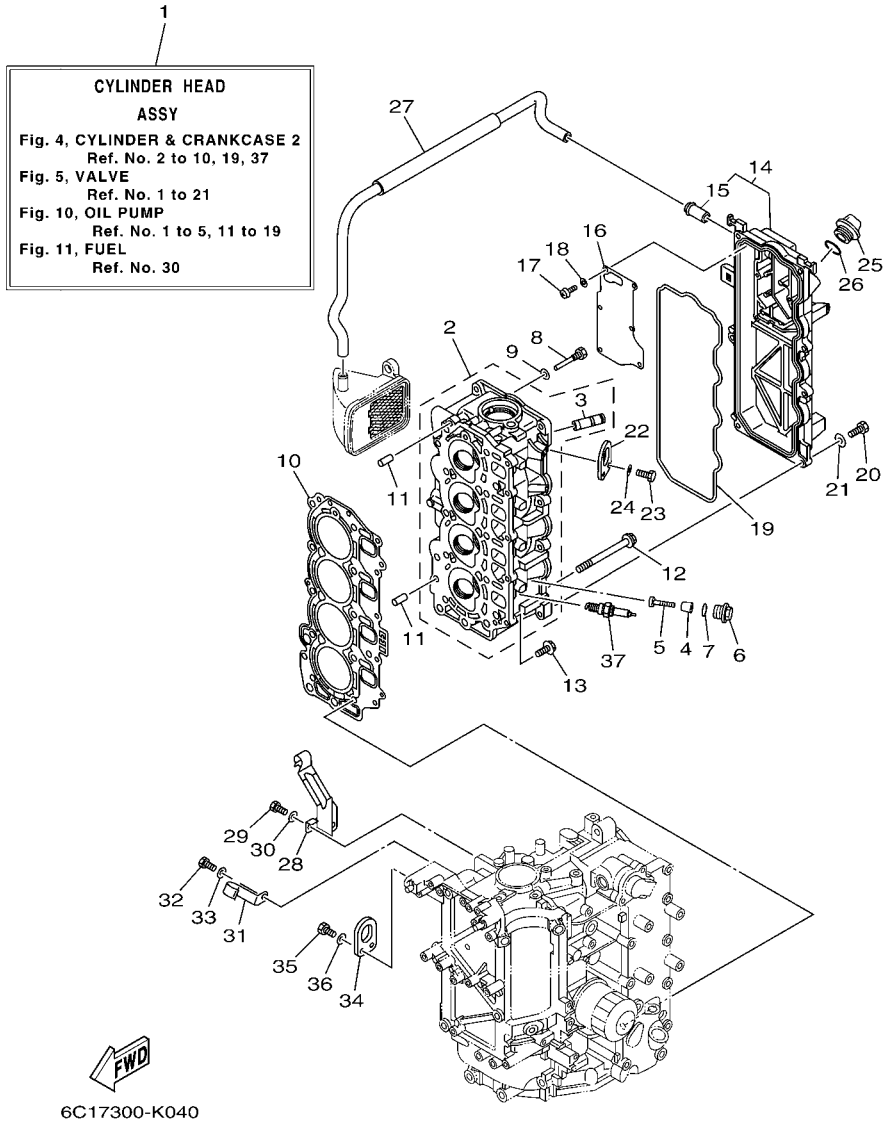

FIG. 4 CYLINDER & CRANKCASE 2 CYLINDRE & CARTER 2

REF. NO.	PART NO. N° PIECES	DESCRIPTION DESCRIPTION	ED	ET				REMARKS REMARQUES
1	6C5–W009A–12–9S	CYLINDER HEAD ASSY CULASSE (ENS.)	1	1				
2	6C5–11111–01–9S	HEAD, CYLINDER 1 CULASSE	1	1				
3	62Y–11133–30	.GUIDE, VALVE 1 .GUIDE, SOUPAPE 1	8	8				
4	6G8–11325–00	ANODE ANODE	4	4				
5	97880–05025	SCREW, PAN HEAD VIS, TETE TRONCONIQUE	4	4				
6	6G8–11197–01	PLUG, BLIND PLOT, BORGNE	4	4				
7	93210–13M63	O-RING JOINT TORIQUE	4	4				
8	90109–06M65	BOLT BOULON	1	1				
9	90430–06014	GASKET JOINT	1	1				
10	6C5–11181–01	GASKET, CYLINDER HEAD 1 JOINT, DE CULASSE 1	1	1				
11	99530–08012	PIN, DOWEL GOUJON, D'ASSEMBLAGE	2	2				
12	90105–09005	BOLT, FLANGE BOULON	10	10				
13	90119–06MA3	BOLT, WITH WASHER BOULON, AVEC RONDELLE	5	5				
14	6C5–11191–01–9S	COVER, CYLINDER HEAD 1 COUVERCLE, CULASSE 1	1	1				
15	62Y–14485–00	.PIPE, JOINT .DURITE	1	1				
16	6C5–11168–00	COVER, BREATHER COUVERCLE, RENIFLARD	1	1				
17	98507–04010	SCREW, PAN HEAD VIS, TETE TRONCONIQUE	6	6				
18	92907–04600	WASHER RONDELLE	6	6				
19	62Y–11356–00	SEAL, CYLINDER 2 JOINT, SPY CYLINDRE	1	1				
20	97095–06020	BOLT BOULON	7	7				
21	92995–06600	WASHER RONDELLE	7	7				
22	62Y–11119–00	HANGER, ENGINE ANNEAU, LEVAGE	1	1				
23	97095–06020	BOLT BOULON	2	2				
24	92995–06600	WASHER RONDELLE	2	2				
25	6G8–15363–00	PLUG, OIL PLOT, HUILE	1	1				
26	93210–24M79	O-RING JOINT TORIQUE	1	1				
27	6C5–1531A–01	HOSE, BREATHER 1 DURITE DE RENIFLARD 1	1	1				

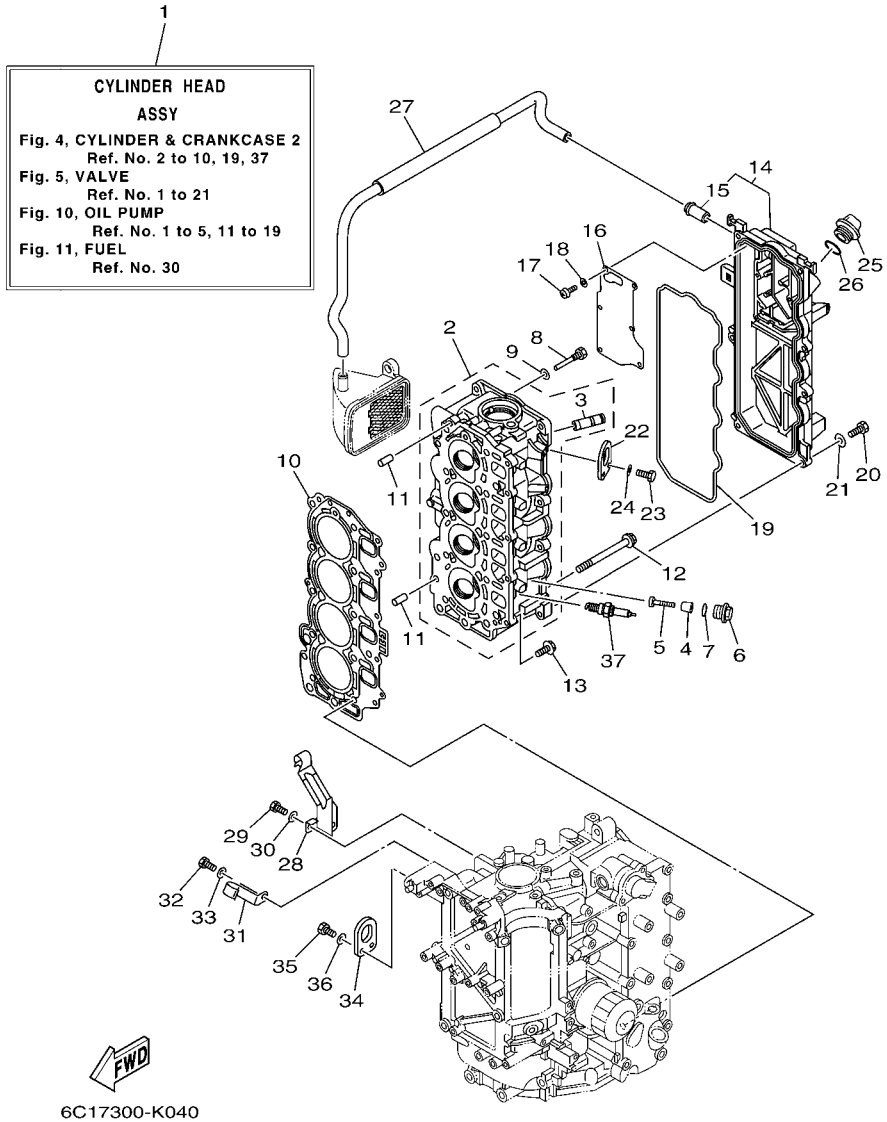

FIG. 4 CYLINDER & CRANKCASE 2 CYLINDRE & CARTER 2

REF. NO.	PART NO. N° PIECES	DESCRIPTION DESCRIPTION	ED	ET				REMARKS REMARQUES
28	6C5–15378–00	HOLDER SUPPORT	1	1				
29	97095–06014	BOLT BOULON	1	1				
30	92995–06600	WASHER RONDELLE	1	1				
31	6C5–15378–11	HOLDER SUPPORT	1	1				
32	97095–06014	BOLT BOULON	1	1				
33	92995–06600	WASHER RONDELLE	1	1				
34	62Y–11119–00	HANGER, ENGINE ANNEAU, LEVAGE	1	1				
35	97095–06020	BOLT BOULON	2	2				
36	92995–06600	WASHER RONDELLE	2	2				
37	94702–00418	PLUG, SPARK (NGK DPR6EB) BOUGIE D,ALLUMAGE (NGK DPR6EB)	4	4				

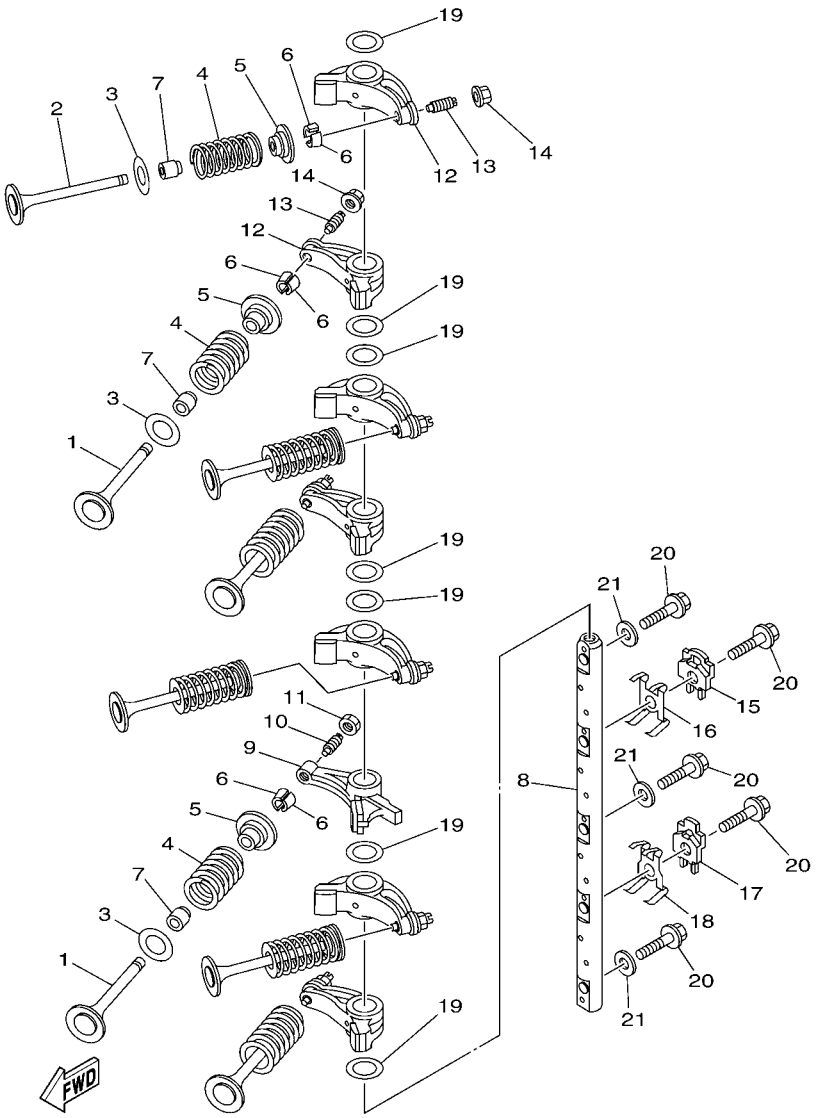

6C12100-E050

FIG. 5 VALVE SOUPAPE

REF. NO.	PART NO. N° PIECES	DESCRIPTION DESCRIPTION	ED	ET				REMARKS REMARQUES
1	69W–12111–00	VALVE, INTAKE SOUPAPE, ADMISSION	4	4				
2	69W–12121–00	VALVE, EXHAUST SOUPAPE, ECHAPPEMENT	4	4				
3	62Y–12116–00	SEAT, VALVE SPRING SIEGE, RESSORT DE SOUPAPE	8	8				
4	51Y–12114–00	SPRING, VALVE OUTER RESSORT DE SOUPAPE, EXTERNE	8	8				
5	30X–12117–00	RETAINER, VALVE SPRING BUTEE DE RESSORT DE SOUPAPE	8	8				
6	30X–12118–00	COTTER, VALVE FRAISE, SOUPAPE	16	16				
7	51Y–12119–00	SEAL, VALVE STEM JOINT, QUEUE DE SOUPAPE	8	8				
8	6C5–12146–00	SHAFT, ROCKER AXE, CULBUTEUR	1	1				
9	62Y–12151–00	ARM, VALVE ROCKER CULBUTEUR	1	1				
10	64J–12159–00	SCREW, VALVE ADJUSTING VIS, REGLAGE DE SOUPAPE	1	1				
11	62Y–12158–00	NUT, LOCK CONTRE-ECROU	1	1				
12	6C5–12151–00	ARM, VALVE ROCKER CULBUTEUR	7	7				
13	6C5–12159–00	SCREW, VALVE ADJUSTING VIS, REGLAGE DE SOUPAPE	7	7				
14	6C5–12158–00	NUT, LOCK CONTRE-ECROU	7	7				
15	6C5–12231–00	GUIDE, STOPPER 1 GUIDE, BUTEE 1	1	1				
16	6C5–12233–00	PLATE, GUIDE STOPPER 1 PLAQUE, GUIDE BUTEE 1	1	1				
17	6C5–12241–00	GUIDE, STOPPER 2 GUIDE, BUTEE 2	1	1				
18	6C5–12243–00	PLATE, GUIDE STOPPER 2 PLAQUE, GUIDE BUTEE 2	1	1				
19	90201–16014	WASHER, PLATE RONDELLE, PLATE	7	7				
20	90105–08060	BOLT, FLANGE BOULON	5	5				
21	92990–08200	WASHER, PLAIN RONDELLE, PLATE	3	3				

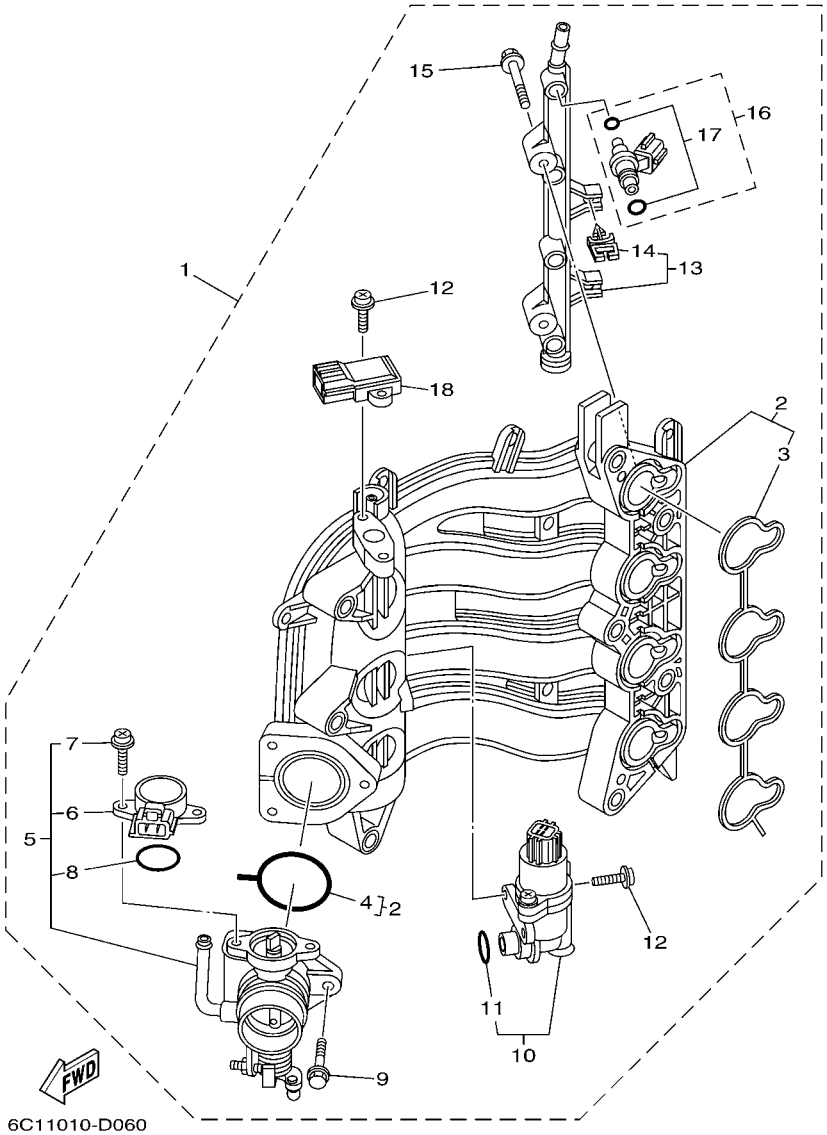

FIG. 6 INTAKE 1 — ADMISSION 1

REF. NO.	PART NO. N° PIECES	DESCRIPTION DESCRIPTION	ED	ET				REMARKS REMARQUES
1	6C5–14200–00	INTAKE ASSY ADMISSION (ENS.)	1	1				
2	6C5–13641–00	.MANIFOLD 1 .TUBULURE 1	1	1				
3	6C5–13645–00	..GASKET, MANIFOLD 1 ..JOINT, TUBULURE 1	1	1				
4	6C5–13557–00	..GASKET ..JOINT	1	1				
5	6C5–13750–00	.THROTTLE BODY ASSY .CARTER D'ACCELERATEUR COMPLET	1	1				
6	6C5–85885–00	..THROTTLE SENSOR ASSY ..SENSITOMETRE (ENS.)	1	1				
7	6C5–81145–00	..SCREW 1 ..VIS 1	2	2				
8	6C5–8182L–00	..O-RING 1 ..JOINT TORIQUE 1	1	1				
9	6C5–14496–00	.BOLT .BOULON	3	3				
10	6C5–13105–01	.CONTROL VALVE ASSY .SOUPAPE DE CONTROLE COMPLET	1	1				
11	6C5–1319C–00	..O-RING ..JOINT TORIQUE	1	1				
12	6C5–81146–00	.SCREW 2 .VIS 2	4	4				
13	6C5–13161–00	.PIPE, DELIVERY 1 .DURITE REFOULEMENT 1	1	1				
14	90464–07M56	..CLAMP ..BRIDE	2	2				
15	6C5–14446–00	.BOLT .BOULON	2	2				
16	6C5–13761–00	.INJECTOR .INJECTEUR	4	4				
17	6C5–1410B–00	..PACKING KIT ..POCHETTE DE JOINTS	1	1				
18	68F–83688–00	.SENSOR ASSY .SONDE (ENS.)	1	1				

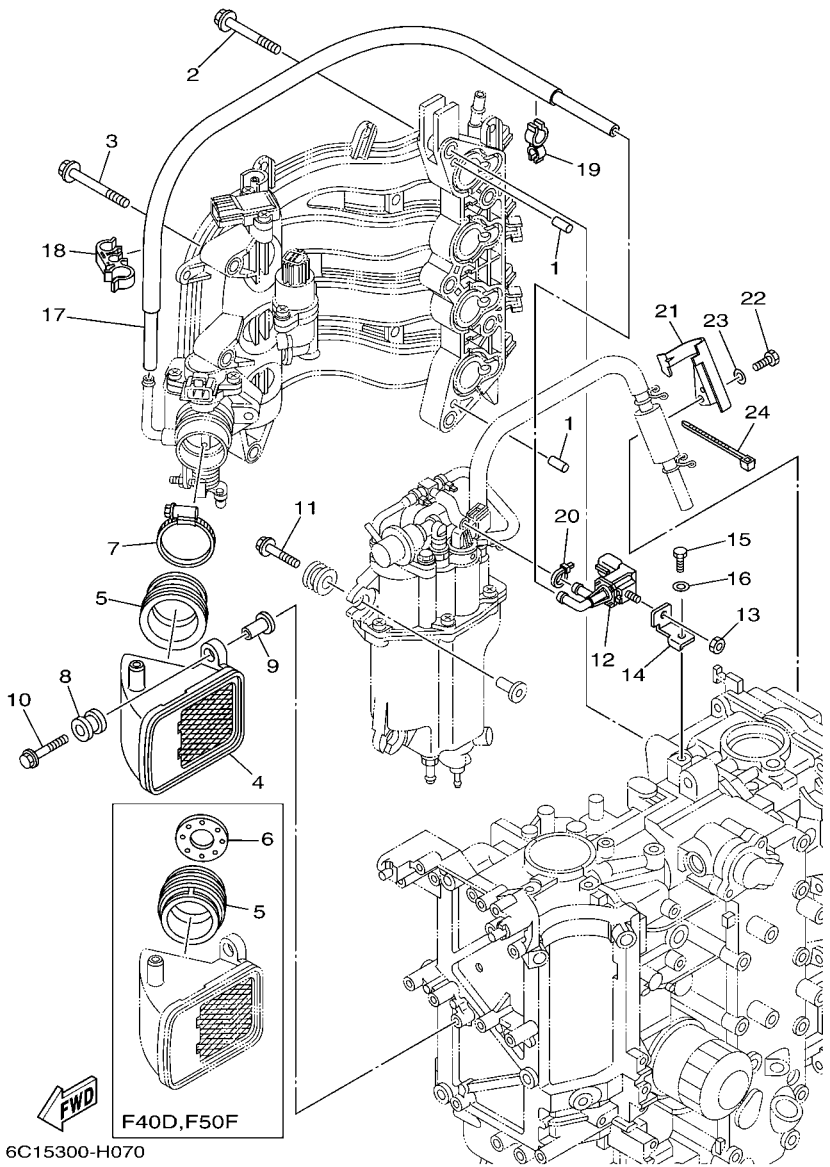

FIG. 7 INTAKE 2 — ADMISSION 2

REF. NO.	PART NO. N° PIECES	DESCRIPTION DESCRIPTION	ED	ET				REMARKS REMARQUES
1	93608–12M05	PIN, DOWEL AXE	2	2				
2	90119–08069	BOLT, WITH WASHER BOULON, AVEC RONDELLE	5	5				
3	90119–06087	BOLT, WITH WASHER BOULON, AVEC RONDELLE	3	3				
4	6C5–14440–00	SILENCER ASSY, INTAKE SIENCIEUX D'ADMISSION	1	1				
5	6C1–14453–01	JOINT, AIR CLEANER 1 RACCORD, FILTRE A AIR 1	1	1				F40D,F50F F40D,F50F
	6C5–14453–01	JOINT, AIR CLEANER 1 RACCORD, FILTRE A AIR 1		1				F60C F60C
6	6C1–14477–00	PLATE PLAQUE	1	1				F50F F50F
	6AK–14477–01	PLATE PLAQUE		1				F40D F40D
7	90450–50001	HOSE CLAMP ASSY BRIDE, DE DURITE	1	1				
8	6A0–82317–00	DAMPER, IGNITION COIL AMORTISSEUR, BOBINE D'ALLUM	2	2				
9	90387–06119	COLLAR COLLERETTE	2	2				
10	90119–06106	BOLT, WITH WASHER BOULON, AVEC RONDELLE	2	2				
11	90119–06M61	BOLT, WITH WASHER BOULON, AVEC RONDELLE	3	3				
12	6C5–86120–00	SOLENOID VALVE ASSY SOLENOIDE	1	1				
13	95380–06600	NUT, HEXAGON ECROU	1	1				
14	6C5–86112–00	STAY, SOLENOID SUPPORT, SOLENOIDE	1	1				
15	97095–06016	BOLT BOULON	1	1				
16	92995–06600	WASHER RONDELLE	1	1				
17	6C5–12576–00	HOSE 1 TUYAU 1	1	1				
18	90464–15008	CLAMP BRIDE	1	1				
19	90464–12006	CLAMP BRIDE	1	1				
20	90465–11M10	CLAMP BRIDE	1	1				
21	6C5–13428–01	BRACKET, STRAINER 1 SUPPORT, FILTRE 1	1	1				
22	97095–06016	BOLT BOULON	1	1				
23	92995–06600	WASHER RONDELLE	1	1				
24	90465–13M18	CLAMP BRIDE	1	1				

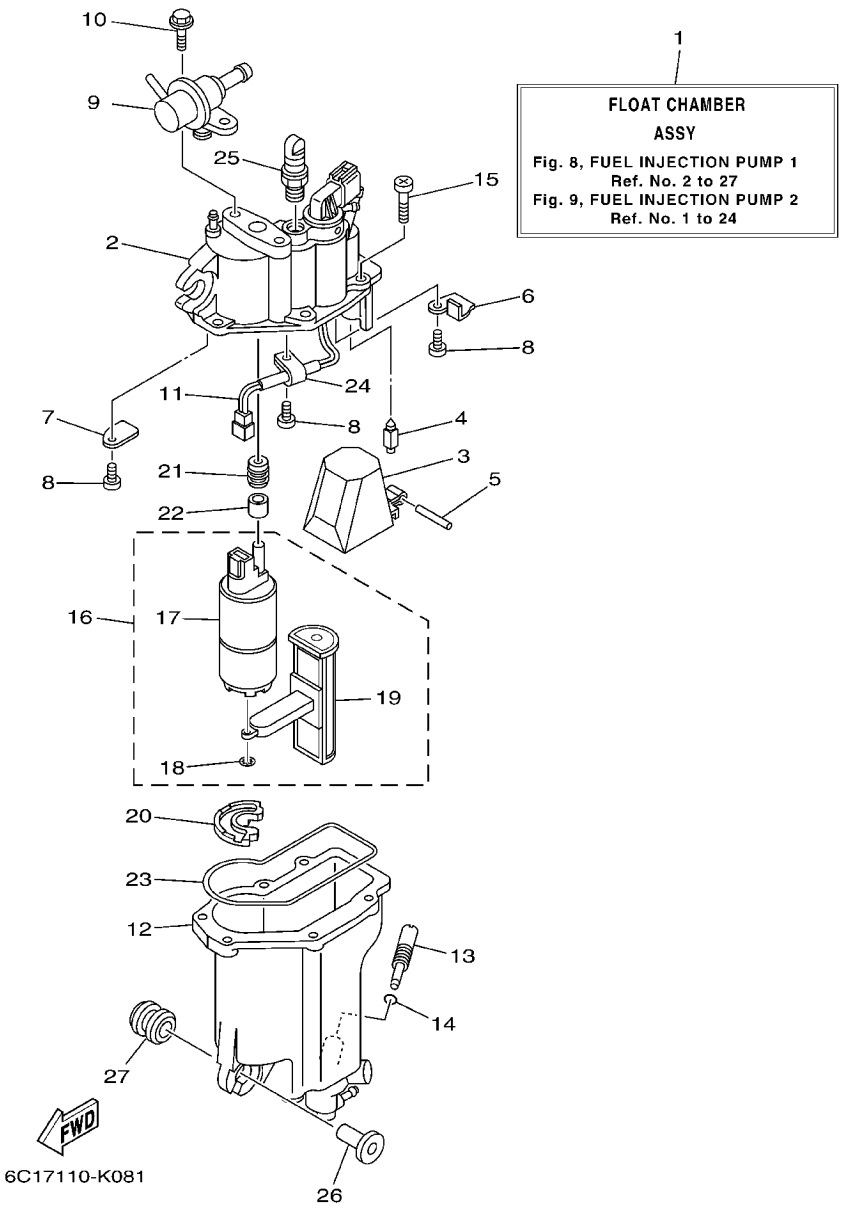

FIG. 8 FUEL INJECTION PUMP 1 POMPE A INJECTEUR 1

REF. NO.	PART NO. N° PIECES	DESCRIPTION DESCRIPTION	ED	ET				REMARKS REMARQUES
1	6C5–14180–00	FLOAT CHAMBER ASSY CUVE DE FLOTTEUR	1	1				
2	6CJ–14182–00	COVER, FLOAT CHAMBER COUVERCLE, CUVE DE FLOTTEUR	1	1				
3	6C5–14985–00	FLOAT FLOTTEUR	1	1				
4	6C5–14546–00	VALVE, NEEDLE POINTEAU	1	1				
5	6C5–14386–00	PIN, FLOAT AXE, FLOTTEUR	1	1				
6	6C5–2441R–00	PLATE, BAFFLE 1 SEPARATEUR 1	1	1				
7	6C5–2441T–00	PLATE, BAFFLE 2 SEPARATEUR 2	1	1				
8	6C5–24453–00	SCREW VIS	3	3				
9	6C5–13906–01	REGULATOR, PRESSURE REGULATEUR DE PRESSION	1	1				
10	6C5–24592–00	BOLT BOLTE	2	2				
11	6C5–87226–00	WIRE HARNESS ASSY ENS. FAISCEAU ELECTRIQUE	1	1				
12	6CJ–14960–00	BODY ASSY CARTER (ENS.)	1	1				
13	6C5–14191–00	PLUG, DRAIN PLOT, VIDANGE	1	1				
14	6C5–14397–00	O-RING JOINT TORIQUE	1	1				
15	6C5–14567–00	SCREW VIS	6	6				
16	6C5–13910–00	FUEL PUMP ASSY POMPE A ESSENCE COMPLET	1	1				
17	6C5–13907–00	.FUEL PUMP COMP. .POMPE A CARBURANT COMP.	1	1				
18	6C5–14127–00	.CLIP .JONC	1	1				
19	6C5–13915–00	.FILTER .FILTRE	1	1				
20	6C5–13593–00	DAMPER AMORTISSEUR	1	1				
21	6C5–13781–00	DAMPER, PUMP AMORTISSEUR, POMPE	1	1				
22	6C5–13716–00	COLLAR COLLERETTE	1	1				
23	6C5–14984–00	GASKET, FLOAT CHAMBER JOINT, CUVE DE FLOTTEUR	1	1				
24	6C5–21337–00	CLAMP, CABLE COLLIER, CABLE	1	1				
25	6C5–14225–00	CAP COUVERCLE	1	1				
26	90387–06M69	COLLAR COLLERETTE	3	3				
27	90480–09M12	GROMMET PASSE-FIL	3	3				

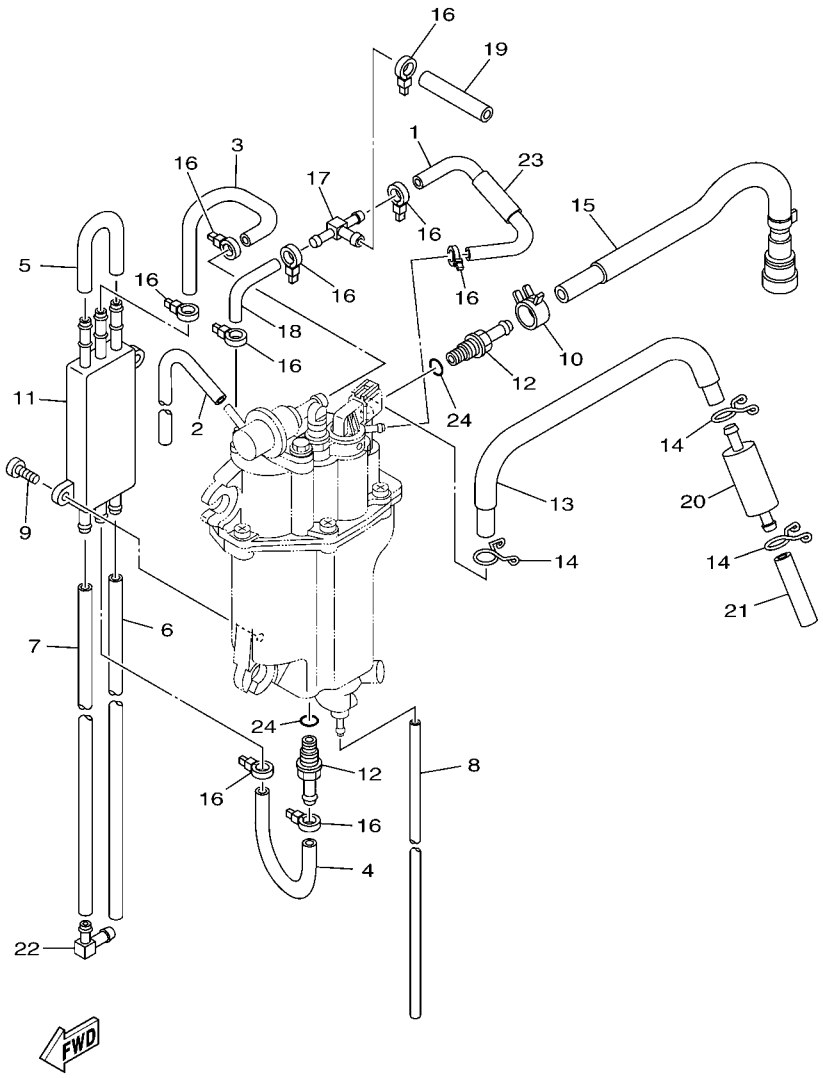

6C17110-K090

FIG. 9 FUEL INJECTION PUMP 2 POMPE A INJECTEUR 2

REF. NO.	PART NO. N° PIECES	DESCRIPTION DESCRIPTION	ED	ET				REMARKS REMARQUES
1	6C5–13546–00	HOSE 2 DURITE 2	1	1				
2	6C5–13542–00	HOSE, VACUUM SENSING 1 DURITE 1	1	1				
3	6C5–24321–00	PIPE 10 DURITE 10	1	1				
4	6C5–24322–00	PIPE 11 DURITE 11	1	1				
5	6C5–24323–00	PIPE 12 DURITE 12	1	1				
6	6CJ–24324–00	PIPE 13 DURITE 13	1	1				
7	6CJ–24325–00	PIPE 14 DURITE 14	1	1				
8	6BG–14149–00	PIPE DURITE	1	1				
9	6C5–24444–00	SCREW VIS	2	2				
10	6C5–13577–00	CLIP AGRAFE	1	1				
11	6C5–21841–00	COOLER RADIATEUR	1	1				
12	6C5–14251–00	NIPPLE RACCORD	2	2				
13	6C5–14148–00	PIPE DURITE	1	1				
14	6C5–24387–00	CLIP SANDOW	3	3				
15	6C5–13974–00	PIPE, FUEL 4 TUBE 4, CARBURANT	1	1				
16	90465–11M10	CLAMP BRIDE	9	9				
17	6C5–24379–00	PIPE, JOINT 4 DURITE RACCORDEMENT 4	1	1				
18	6C5–13545–00	HOSE 1 DURITE 1	1	1				
19	6C5–13547–00	HOSE 3 DURITE 3	1	1				
20	6C5–24251–00	STRAINER 1 FILTRE 1	1	1				
21	6C5–2451B–00	HOSE, FUEL INLET DURITE	1	1				
22	6C5–1410F–00	CONNECTOR CONNECTEUR	1	1				
23	6C5–13548–00	HOSE, AIR 4 DURITE, A AIR 4	1	1				
24	6C5–13739–00	O-RING JOINT TORIQUE	2	2				

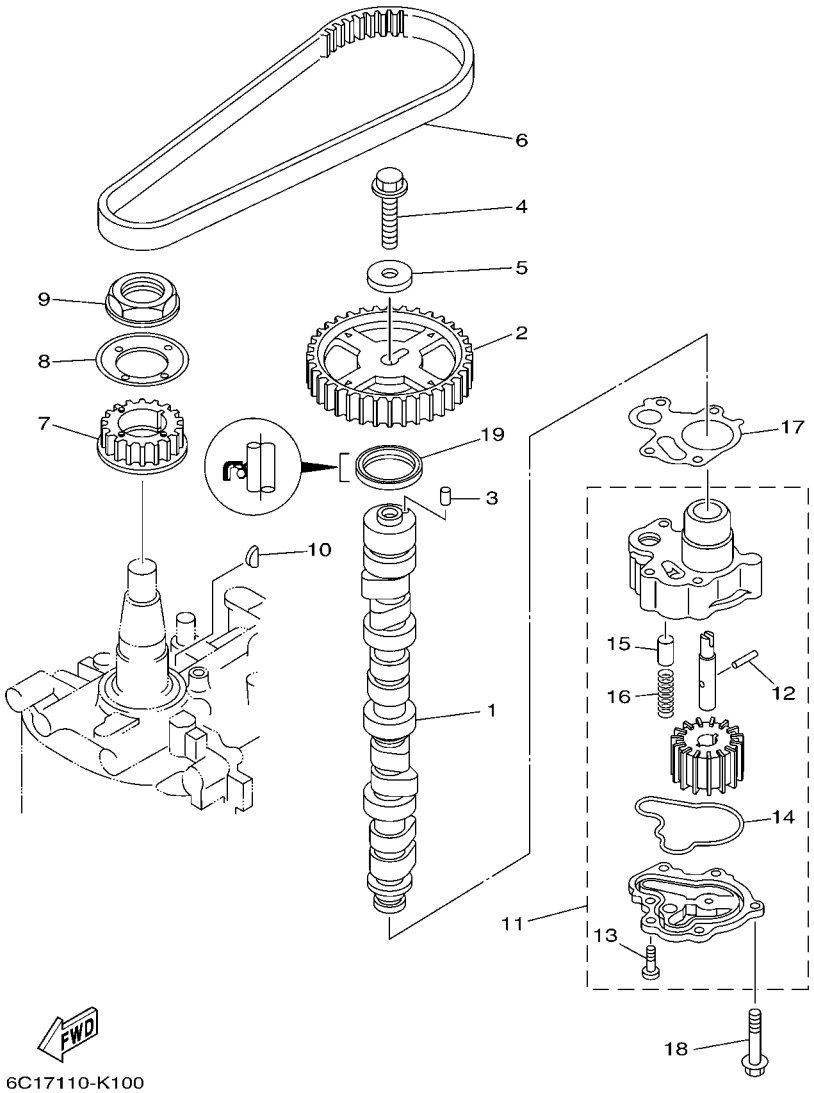

FIG. 10 OIL PUMP POMPE A HUILE

REF. NO.	PART NO. N° PIECES	DESCRIPTION DESCRIPTION	ED	ET				REMARKS REMARQUES
1	6C5–12171–00	CAMSHAFT 1 ARBRE A CAMES 1	1	1				
2	6C5–11537–00	GEAR, DRIVEN PIGNON SECONDAIRE	1	1				
3	93605–17002	PIN, DOWEL AXE	1	1				
4	95817–10035	BOLT, FLANGE BOULON, A COLLERETTE	1	1				
5	90201–10144	WASHER, PLATE RONDELLE, PLATE	1	1				
6	6C5–46241–00	BELT COURROIE TRAPEZOIDALE	1	1				
7	6C5–11536–00	GEAR, DRIVE ENGRENAGE, MENANT	1	1				
8	62Y–11557–00	WASHER 1 RONDELLE 1	1	1				
9	90179–35001	NUT ECROU	1	1				
10	90280–03M01	KEY, WOODRUFF CLAVETTE, DEMI-LUNE	1	1				
11	6C5–13300–00	OIL PUMP ASSY POMPE A HUILE COMPLETE	1	1				
12	93603–17070	.PIN, DOWEL .CLAVETTE	1	1				
13	98580–06016	.SCREW, PAN HEAD .VIS	2	2				
14	6C5–13142–00	.GASKET .JOINT	1	1				
15	6G8–11577–00	.PLUNGER, RELIEF .PLONGEUR DE SECURITE	1	1				
16	90501–6C500	.SPRING, COMPRESSION .RESSORT, COMPRESSION	1	1				
17	6C5–13329–00	GASKET, PUMP COVER JOINT, COUVERCLE DE POMPE	1	1				
18	90119–06025	BOLT, WITH WASHER BOULON, AVEC RONDELLE	4	4				
19	93102–37M40	OIL SEAL JOINT SPY	1	1				

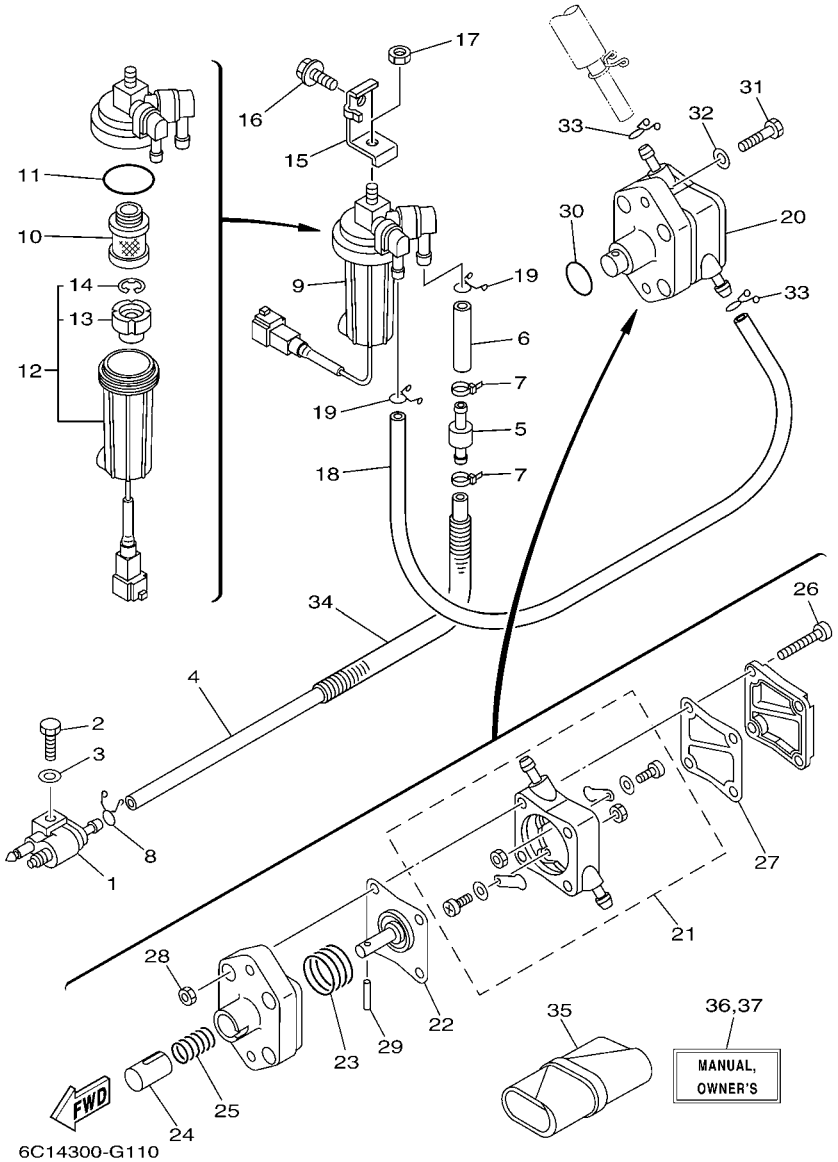

FIG. 11 FUEL CARBURANT

REF. NO.	PART NO. N° PIECES	DESCRIPTION DESCRIPTION	ED	ET				REMARKS REMARQUES
1	6G1–24304–02	FUEL PIPE JOINT COMP. 1 DURITE RACCORDEMT. A ESSENCE	1	1				
2	97095–06025	BOLT BOULON	1	1				
3	92995–06600	WASHER RONDELLE	1	1				
4	6C5–2247A–00	HOSE 1 DURITE 1	1	1				
5	67F–24377–00	PIPE, JOINT 2 DURITE RACCORDEMENT 2	1	1				
6	90445–13M02	HOSE (L40) DURITE (L40)	1	1				
7	90465–11M10	CLAMP BRIDE	2	2				
8	90467–09M17	CLIP JONC	1	1				
9	6D8–24560–00	FILTER ASSY ENS FILTRE	1	1				
10	6D8–24563–00	.ELEMENT, FILTER .ELEMENT, FILTRE	1	1				
11	6D8–24564–00	.GASKET .JOINT	1	1				
12	6D8–24562–00	.CUP, FILTER .CUVETTE, FILTRE	1	1				
13	6D8–24469–00	..FLOAT, WATER LEVEL ..FLOTTEUR	1	1				
14	6D8–24519–00	..CLIP ..JONC	1	1				
15	6C5–24566–01	BRACKET, FILTER SUPPORT, FILTRE	1	1				Go to P/N : PE0-OM-120027
16	95895–08016	BOLT, FLANGE BOULON	1	1				Go to P/N : PE0-OM-120027
17	95380–08600	NUT ECROU	1	1				
18	90445–13M36	HOSE (L350) DURITE (L350)	1	1				
19	90467–10M04	CLIP JONC	2	2				
20	6C5–24410–00	FUEL PUMP ASSY POMPE A ESSENCE	1	1				
21	6C5–24415–00	.BODY 4 .CORPS 4	1	1				
22	62Y–24411–02	.DIAPHRAGM .DIAPHRAGME	1	1				
23	62Y–24423–00	.SPRING, DIAPHRAGM .RESSORT, DIAPHRAGME	1	1				
24	62Y–13131–00	.PLUNGER .PLONGEUR	1	1				
25	62Y–24454–00	.SPRING .RESSORT	1	1				
26	62Y–24444–01	.SCREW .VIS	4	4				
27	6C5–24471–00	.DIAPHRAGM .DIAPHRAGME	1	1				

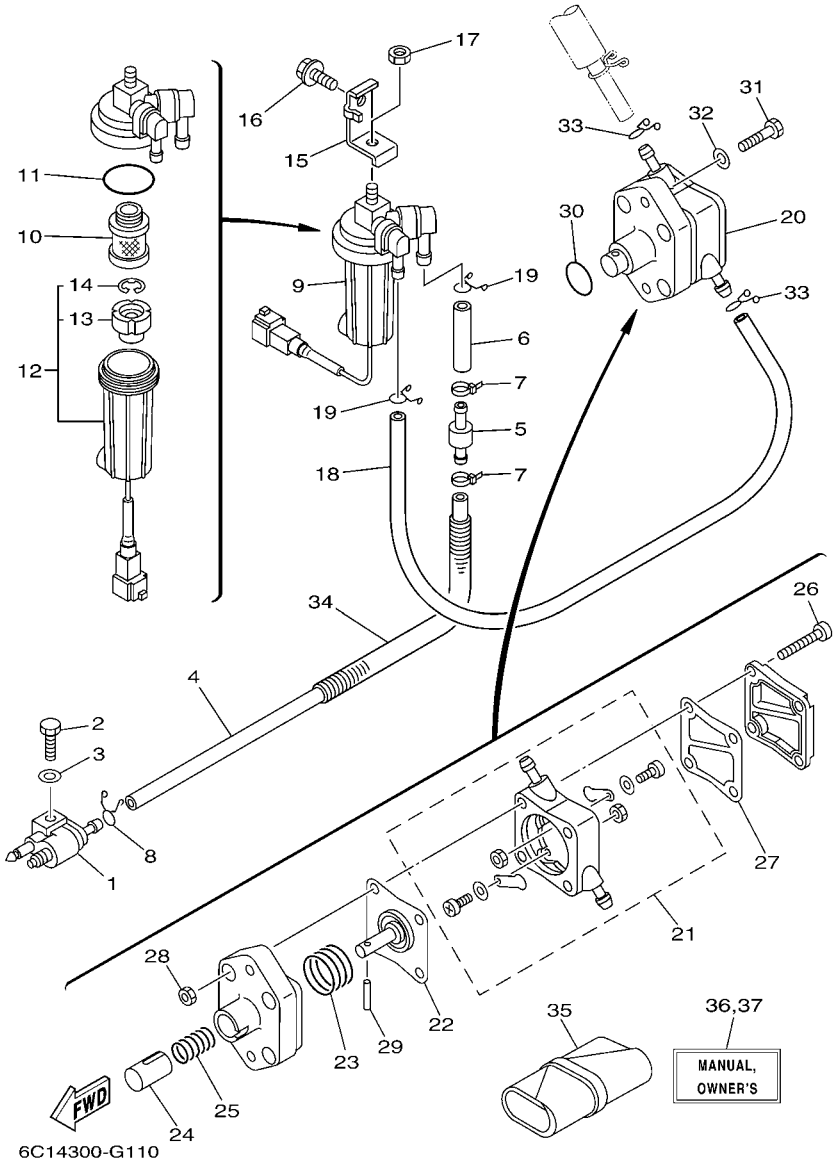

FIG. 11 FUEL CARBURANT

REF. NO.	PART NO. N° PIECES	DESCRIPTION DESCRIPTION	ED	ET				REMARKS REMARQUES
28	95380–05600	.NUT .ECROU	4	4				
29	62Y–24374–01	.PIN .PIN	1	1				
30	93210–24M79	O-RING JOINT TORIQUE	1	1				
31	97095–06030	BOLT BOULON	2	2				
32	92995–06600	WASHER RONDELLE	2	2				
33	90467–10M04	CLIP JONC	2	2				
34	90446–14M62	HOSE (L320) DURITE (L320)	1	1				
35	6C5–28100–00	TOOL KIT TROUSSE A OUTILS	1	1				AP AP
36	6C1–28199–77–E0	MANUAL,OWNER'S MANUEL D'UTILISATION	1	1				UR (E) UR (E)
	6C1–28199–77–F0	MANUAL,OWNER'S MANUEL D'UTILISATION	1	1				UR (F) UR (F)
	6C1–28199–77–S0	MANUAL,OWNER'S MANUEL D'UTILISATION	1	1				UR (ES) UR (ES)
	6C1–28199–77–G0	MANUAL,OWNER'S MANUEL D'UTILISATION	1	1				UR (D) UR (D)
	6C1–28199–77–D0	MANUAL,OWNER'S MANUEL D'UTILISATION	1	1				UR (NL) UR (NL)
	6C1–28199–77–H0	MANUAL,OWNER'S MANUEL D'UTILISATION	1	1				UR (I) UR (I)
37	6C1–28199–87–K0	MANUAL,OWNER'S MANUEL D'UTILISATION	1	1				UR (DK) UR (DK)
	6C1–28199–87–R0	MANUAL,OWNER'S MANUEL D'UTILISATION	1	1				UR (GR) UR (GR)
	6C1–28199–87–P0	MANUAL,OWNER'S MANUEL D'UTILISATION	1	1				UR (P) UR (P)
	6C1–28199–87–N0	MANUAL,OWNER'S MANUEL D'UTILISATION	1	1				UR (N) UR (N)
	6C1–28199–87–M0	MANUAL,OWNER'S MANUEL D'UTILISATION	1	1				UR (S) UR (S)
	6C1–28199–87–L0	MANUAL,OWNER'S MANUEL D'UTILISATION	1	1				UR (SF) UR (SF)

PARTS NEWS

YAMAHA
YAMAHA MOTOR CO., LTD.
2500 SHINGAI IWATA SHIZUOKA JAPAN

News No. PE0-OM-120027

Date:2012/4/11

Signature:S.Ishibashi

Cause : ☑ Revision Notice ☐ Correction ☐ Sales Unit Change ☐ Others

Model	F40D / F50F / FT50G / F60C / FT60D
Subject	PARTS CATALOGUE CORRECTIONS
CATALOGUE NO.	1K6C1-300F1, 1K6C2-300F1

Time of YPEC Revision Text, Illustration --> May/15/2012 PDF Replace --> May/15/2012

(YPEC = Yamaha Parts Electrical Catalogue = Website parts catalogue)

Applicable Engine Serial No.

MODEL NAME	MODEL CODE	Applicable Engine Serial No.
F40D	6AK6	6AK:1008864-
F50F	6C17	6C1:1038272-
FT50G	6C27	6C2:1011172-
F60C	6C57	6C5:1045936-
FT60D	6C67	6C6:1017301-

*1: Interchangeability

A	Old Parts →	Old Parts
	New Parts →	New Parts
B	Old Parts →	Old Parts
	New Parts →	New Parts
C	Old Parts →	Old Parts
	New Parts →	New Parts
O	These parts are interchangeable with a set	

FIG.11 FUEL

1.LIST CORRECTION

Fig. No.	Ref. No.	OLD P/No.	NEW P/No.	DESCRIPTION	Q'TY	*Interchangeability	REMARKS
11	15	6C5-24566-01	6C5-24566-10	BRACKET, FILTER	1	O	*Part number revision
	16	95895-08016	90119-08148	BOLT, WITH WASHER	1	O	
	38	-	90480-16013	GROMMET	1	O	*Added Parts
	39	-	90480-10M58	GROMMET	1	O	
	40	-	90387-08095	COLLAR	1	O	

2. ILLUSTRATION CORRECTION

(OLD)

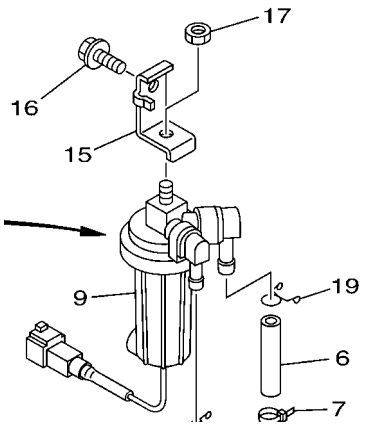

(NEW)

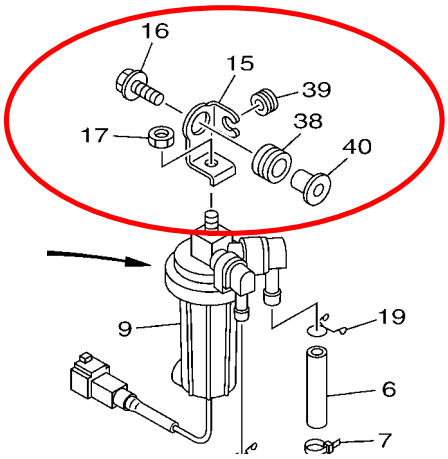

Thank you very much for your cooperation.

Parts Manager Check	Service Manager Check	Parts Manager File

YAMAHA MOTOR CO.,LTD
2500 Shingai Iwata Shizuoka 438-8501.Japan
Technical Publication Dept.

YAMAHA GENUINE Parts & Accessories

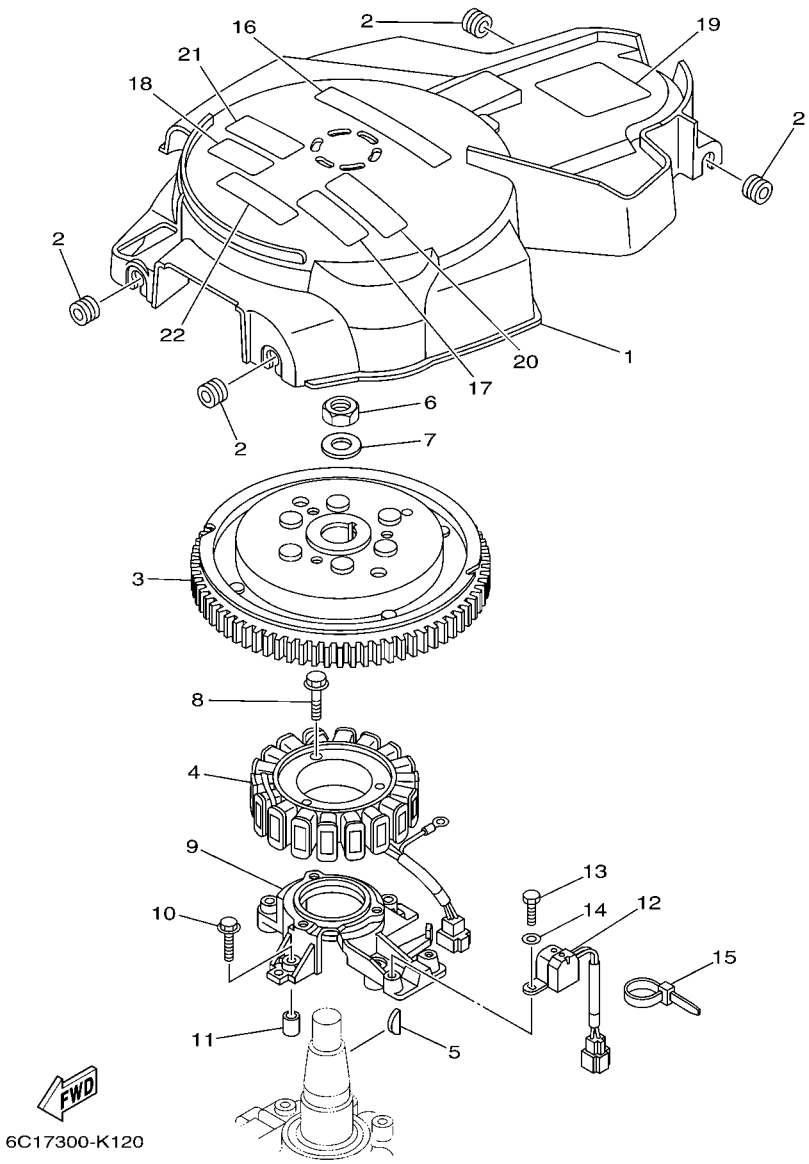

FIG. 12 GENERATOR GENERATRICE

REF. NO.	PART NO. N° PIECES	DESCRIPTION DESCRIPTION	ED	ET				REMARKS REMARQUES
1	6C5–81337–00	COVER, FLYWHEEL COUVERCLE, VOLANT	1	1				
2	90480–12314	GROMMET PASSE-FIL	4	4				
3	6C5–81450–00	ROTOR ASSY ROTOR COMPLET	1	1				
4	6C5–81410–00	STATOR ASSY STATOR COMPLET	1	1				
5	6H4–11545–00	KEY, WOODRUFF CLAVETTE, DEMI-LUNE	1	1				
6	90170–20137	NUT ECROU	1	1				
7	90201–21M18	WASHER, PLATE RONDELLE, PLATE	1	1				
8	95023–06030	BOLT BOULON, A COLLERETTE	3	3				
9	6C5–85561–00	BASE, MAGNETO BASE, MAGNETO	1	1				
10	95023–06030	BOLT BOULON, A COLLERETTE	4	4				
11	99530–08012	PIN, DOWEL GOUJON, D'ASSEMBLAGE	2	2				
12	62Y–85580–00	COIL, PULSER BOBINE, PULSEUR	1	1				
13	97095–05012	BOLT BOULON	2	2				
14	92995–05600	WASHER RONDELLE	2	2				
15	90465–13M97	CLAMP BRIDE	1	1				
16	6C5–13437–62	MARK, CAUTION MAKER	1	1				
17	6AH–81995–40	LABEL, WARNING ETIQUETTE, AVERTISSEMENT	1	1				
18	6AH–81995–50	LABEL, WARNING ETIQUETTE, AVERTISSEMENT	1	1				
19	62Y–83626–00	MARK 6 MARK 6	1	1				
20	6AH–81994–40	LABEL, SAFETY ETIQUETTE, SECURITE	1	1				
21	6AH–81994–50	LABEL, SAFETY ETIQUETTE, SECURITE	1	1				
22	6AG–81996–00	MARK MARQUE	1	1				

FIG. 13 ELECTRICAL 1 PARTIE ELECTRIQUE 1

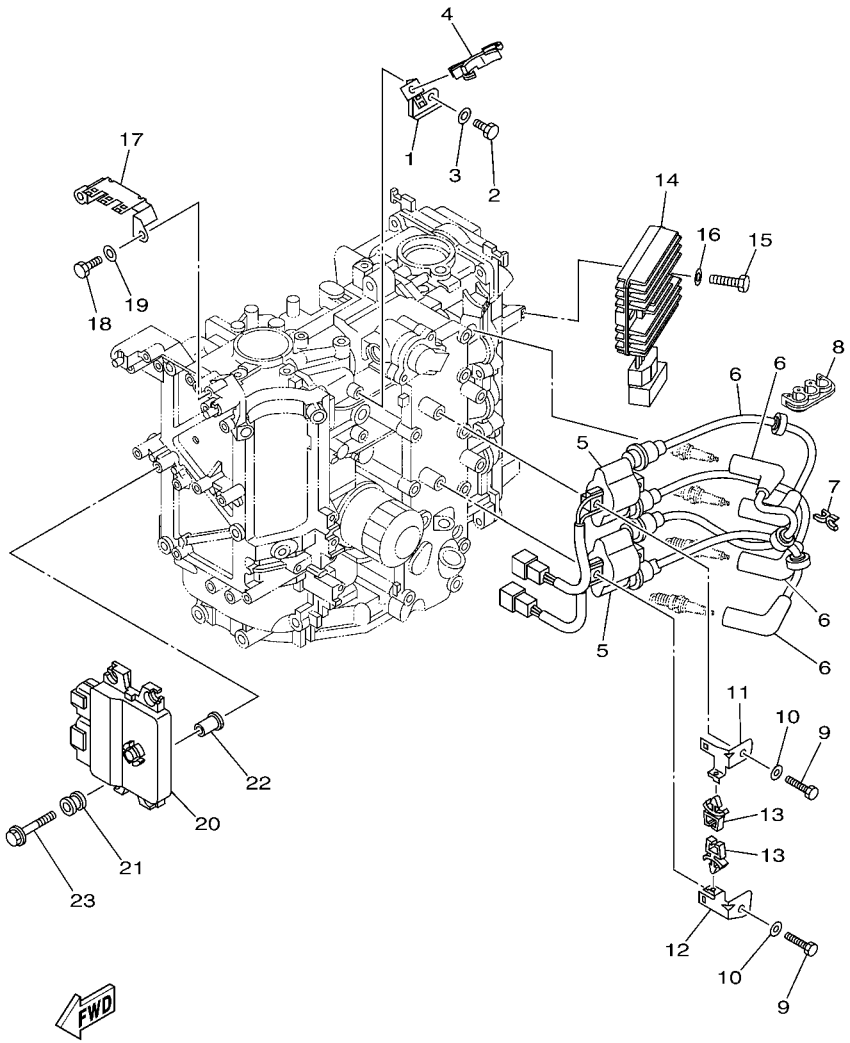

REF. NO.	PART NO. N° PIECES	DESCRIPTION DESCRIPTION	ED	ET				REMARKS REMARQUES
1	6C5–85525–00	PLATE PLAQUE	1	1				
2	97095–06014	BOLT BOULON	1	1				
3	92995–06600	WASHER RONDELLE	1	1				
4	90464–18246	CLAMP BRIDE	1	1				
5	63P–82310–01	IGNITION COIL ASSY BOBINE D'ALLUMAGE	2	2				
6	6C5–82340–01	HIGH TENSION CORD ASSY 1 CABLE HAUTE TENSION 1	4	4				
7	90464–07M41	CLAMP BRIDE	2	2				
8	90464–07M05	CLAMP BRIDE	1	1				
9	97095–06025	BOLT BOULON	4	4				
10	92995–06600	WASHER RONDELLE	4	4				
11	6C5–82316–01	BRACKET, IGNITION COIL SUPPORT, BOBINE D'ALLUMAGE	1	1				
12	6C5–82316–11	BRACKET, IGNITION COIL SUPPORT, BOBINE D'ALLUMAGE	1	1				
13	90464–06001	CLAMP BRIDE	2	2				
14	68V–81960–10	RECTIFIER & REGULATOR ASSY REDRESSEUR REGULATEUR CPLT	1	1				
15	97095–06025	BOLT BOULON	2	2				
16	92995–06600	WASHER RONDELLE	2	2				
17	6C5–82171–00	STAY, FUSE BOX SUPPORT, BOITE A FUSIBLES	1	1				
18	97095–06014	BOLT BOULON	2	2				
19	92995–06600	WASHER RONDELLE	2	2				
20	6C1–8591A–22	ENGINE CONTROL UNIT ASSY BLOC DE CONTROL	1	1				F50F F50F
	6C5–8591A–22	ENGINE CONTROL UNIT ASSY BLOC DE CONTROL		1				F60C F60C
	6AK–8591A–02	ENGINE CONTROL UNIT ASSY BLOC DE CONTROL		1				F40D F40D
21	6C5–82317–00	DAMPER, IGNITION COIL AMORTISSEUR, BOBINE D'ALLUM	4	4				
22	90387–06119	COLLAR COLLERETTE	4	4				
23	90119–06M59	BOLT, WITH WASHER BOULON, AVEC RONDELLE	4	4				

FIG. 14 ELECTRICAL 2 PARTIE ELECTRIQUE 2

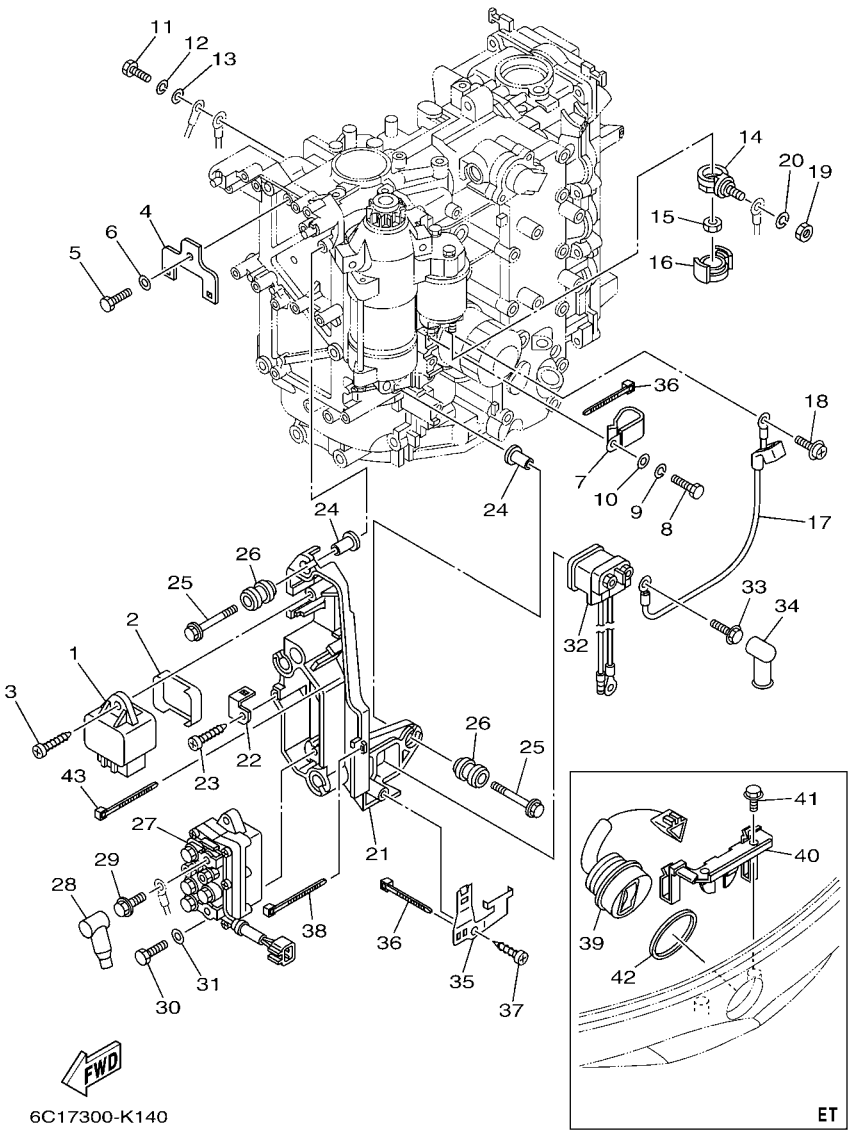

REF. NO.	PART NO. N° PIECES	DESCRIPTION DESCRIPTION	ED	ET				REMARKS REMARQUES
1	60E–81950–00	RELAY ASSY RELAIS COMPLET	1	1				
2	6C5–81336–00	GROMMET OEILLET CAOUTCHOUC	1	1				
3	97780–60620	SCREW, TAPPING VIS, TETE BOMBEE	1	1				
4	6C5–8257V–00	PLATE, CONNECTOR PLAQUE, CONNECTEUR	1	1				
5	97095–06014	BOLT BOULON	1	1				
6	92995–06600	WASHER RONDELLE	1	1				
7	90465–05M87	CLAMP BRIDE	1	1				
8	97095–06020	BOLT BOULON	4	4				
9	92995–06100	WASHER, SPRING RONDELLE, GROWER	4	4				
10	92995–06600	WASHER RONDELLE	4	4				
11	97095–06020	BOLT BOULON	1	1				
12	92995–06100	WASHER, SPRING RONDELLE, GROWER	1	1				
13	92995–06600	WASHER RONDELLE	1	1				
14	60V–81925–00	TERMINAL BORNE	1	1				
15	90179–08003	NUT ECROU	1	1				
16	68F–82582–00	COVER, WIRE HARNESS COUVERCLE, FAISCEAU DE FILS	1	1				
17	6C5–81815–00	CORD, STARTER MOTOR FIL, DEMARREUR ELECTRIQUE	1	1				
18	90159–04005	SCREW, WITH WASHER VIS, AVEC RONDELLE	1	1				
19	95333–08600	NUT ECROU	1	1				
20	92903–08100	WASHER, SPRING RONDELLE, GROWER	1	1				
21	6C5–81948–00	BRACKET SUPPORT	1	1				
22	6C5–85548–00	HOLDER SUPPORT	1	1				
23	97780–60620	SCREW, TAPPING VIS, TETE BOMBEE	1	1				
24	90387–06119	COLLAR COLLERETTE	4	4				
25	90119–06M59	BOLT, WITH WASHER BOULON, AVEC RONDELLE	4	4				
26	6A0–82317–00	DAMPER, IGNITION COIL AMORTISSEUR, BOBINE D'ALLUM	4	4				
27	63P–81950–00	RELAY ASSY RELAIS COMPLET		1				

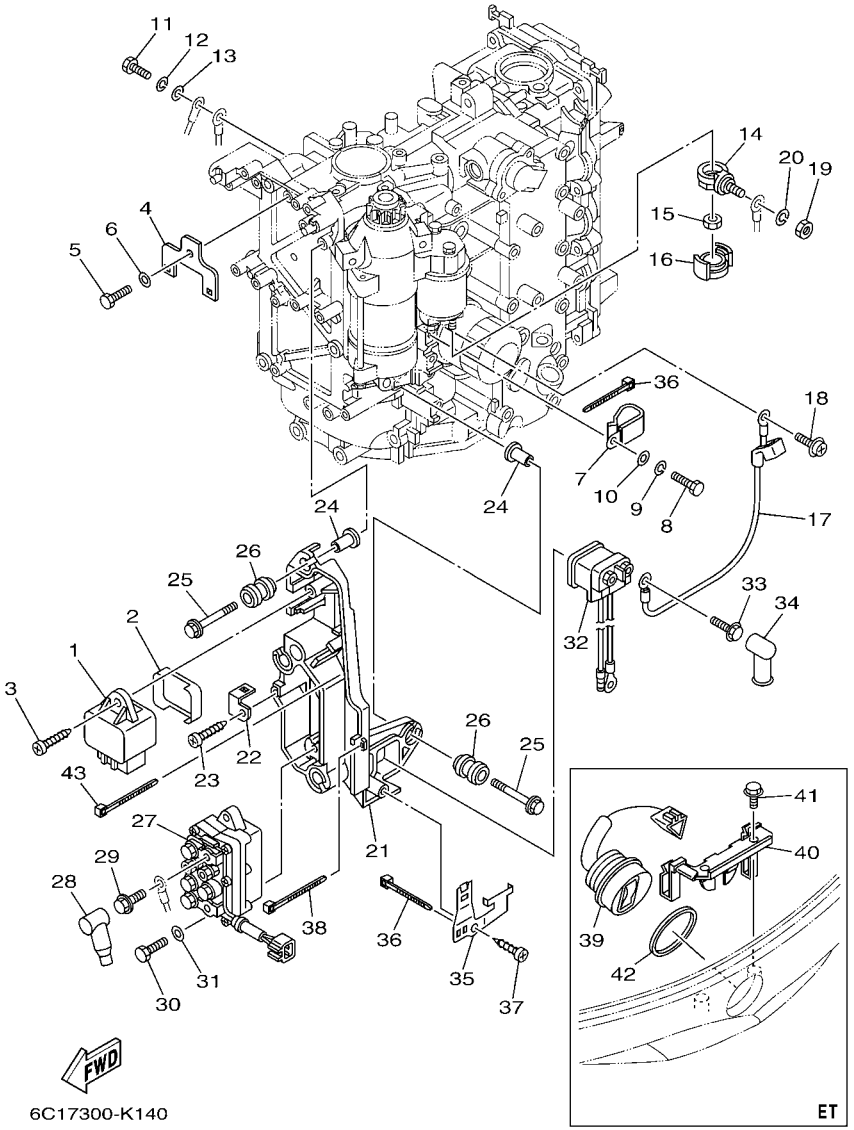

FIG. 14 ELECTRICAL 2 — PARTIE ELECTRIQUE 2

REF. NO.	PART NO. N° PIECES	DESCRIPTION DESCRIPTION	ED	ET				REMARKS REMARQUES
28	682–82119–01	COVER, LEAD WIRE GARNITURE, FIL		2				
29	97595–06610	BOLT, WITH WASHER VIS HEXAGONAL AVC RONDELLE		2				
30	97095–06020	BOLT BOULON		2				
31	92995–06600	WASHER RONDELLE		2				
32	68V–8194A–00	RELAY RELAIS	1	1				
33	97595–06610	BOLT, WITH WASHER VIS HEXAGONAL AVC RONDELLE	2	2				
34	6G5–82119–00	COVER, LEAD WIRE GARNITURE, FIL	2	2				
35	6C5–81953–00	STAY, RELAY SUPPORT, RELAIS	1	1				
36	90465–11M10	CLAMP BRIDE	2	2				
37	97780–60620	SCREW, TAPPING VIS, TETE BOMBEE	1	1				
38	90465–13M97	CLAMP BRIDE	1	1				
39	63D–82563–10	TRIM & TILT SWITCH ASSY INCLINER ET PARER COMMUTATEUR		1				
40	6C5–83614–01	BRACKET SUPPORT		1				
41	90109–06M86	BOLT BOULON	1					
	90109–06M86	BOLT BOULON		2				
42	6E5–82587–00	GASKET JOINT		1				
43	90465–13M97	CLAMP BRIDE	2	2				

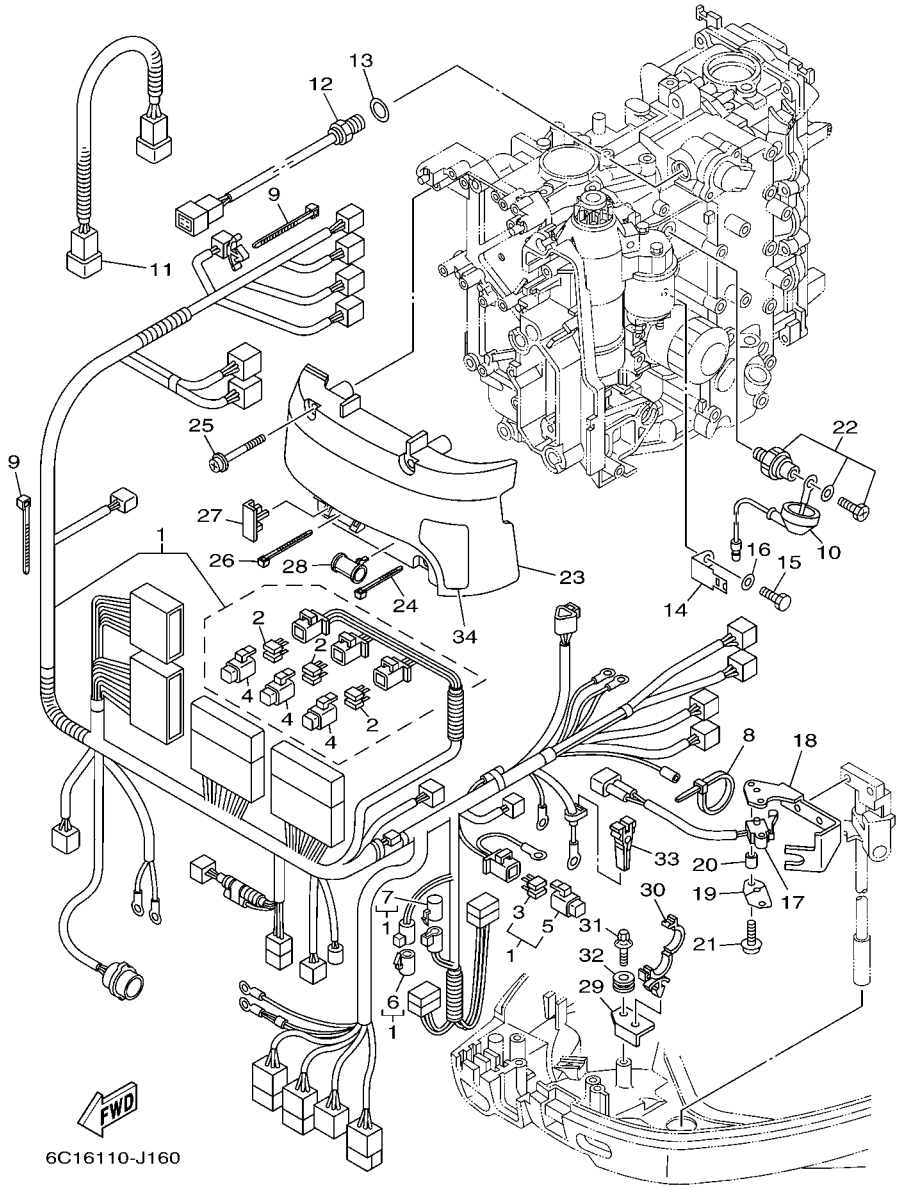

FIG. 15 ELECTRICAL 3 — PARTIE ELECTRIQUE 3

REF. NO.	PART NO. N° PIECES	DESCRIPTION DESCRIPTION	ED	ET				REMARKS REMARQUES
1	6C5–82590–50	WIRE HARNESS ASSY FAISCEAU DE FILS COMPLET	1					
	6C5–82590–40	WIRE HARNESS ASSY FAISCEAU DE FILS COMPLET		1				
2	67F–82151–00	.FUSE (20A) .FUSIBLE (20A)	6	6				
3	67F–82151–10	.FUSE (30A) .FUSIBLE (30A)	2	2				
4	67F–8215B–10	.CAP (YELLOW) .BOUCHON (YELLOW)	3	3				
5	67F–8215B–20	.CAP (GREEN) .BOUCHON (GREEN)	1	1				
6	6P2–82582–00	.CAP 1 (FEMALE) .BOUCHON 1 (FEMME)		1				FOR 6C5-82590-40 FOR 6C5-82590-40
7	6P2–82582–10	.CAP 1 (MALE) .BOUCHON 1 (MALE)		1				FOR 6C5-82590-40 FOR 6C5-82590-40
8	90465–13M24	CLAMP BRIDE	1	1				
9	90465–13M11	CLAMP BRIDE	2	2				
10	68V–81315–00	LEAD WIRE ASSY FIL	1	1				
11	6C5–82553–00	EXTENSION, WIRE LEAD EXTENSION, FAISCEAU	1	1				
12	6CJ–85790–00	THERMOSENSOR ASSY SENSITOMETRE	1	1				
13	90430–14115	GASKET JOINT	1	1				
14	6C5–82388–00	PLATE PLAQUETTE	1	1				
15	97095–06014	BOLT BOULON	1	1				
16	92995–06600	WASHER RONDELLE	1	1				
17	60V–8259F–00	SWITCH ASSY COMMUTATEUR	1	1				
18	6C5–82554–01	STAY, NEUTRAL SWITCH SUPPORT, CONT DE POINT-MORT	1	1				
19	61A–82588–01	PLATE PLAQUE	1	1				
20	90387–04001	COLLAR COLLERETTE	1	1				
21	97985–04116	SCREW, WITH WASHER VIS, AVEC RONDELLE	2	2				
22	64J–82504–00	OIL PRESSURE SWITCH ASSY CONTACTEUR DE PRESSION D'HUILE	1	1				
23	6C5–81942–00	COVER COUVERCLE	1	1				
24	90465–13M39	CLAMP BRIDE	1	1				
25	90159–06M14	SCREW, WITH WASHER VIS, AVEC RONDELLE	4	4				
26	90465–13M24	CLAMP BRIDE	1	1				

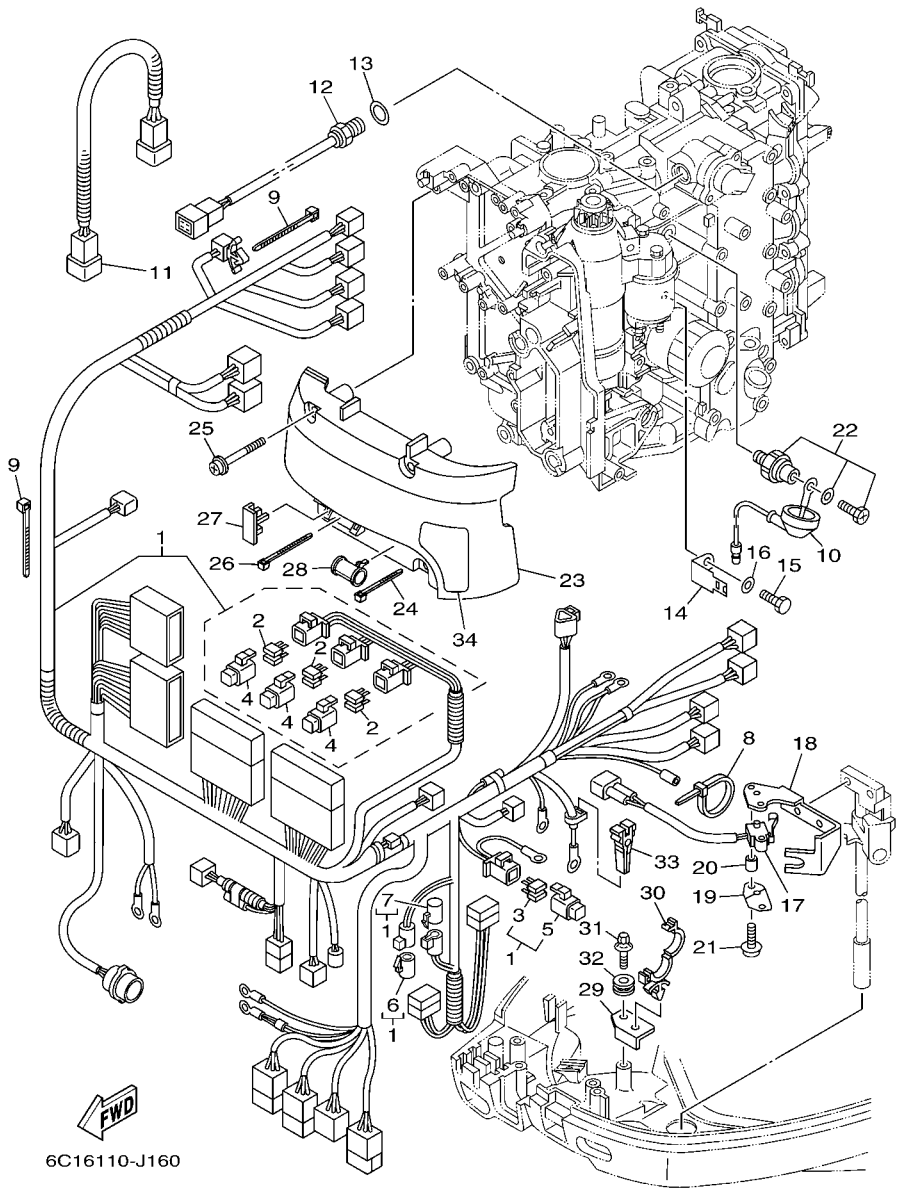

FIG. 15 ELECTRICAL 3 — PARTIE ELECTRIQUE 3

REF. NO.	PART NO. N° PIECES	DESCRIPTION DESCRIPTION	ED	ET				REMARKS REMARQUES
27	6C5–82176–00	DAMPER AMORTISSEUR	2	2				
28	6C5–8252R–00	DAMPER AMORTISSEUR	1	1				
29	6C5–42811–00	STAY SUPPORT	1	1				
30	90464–18007	CLAMP BRIDE	1	1				
31	90119–06077	BOLT, WITH WASHER BOULON, AVEC RONDELLE	1	1				
32	90480–13598	GROMMET PASSE-FIL	1	1				
33	67F–2812A–00	PULLER, FUSE TENDEUR, FUSIBLE	1	1				
34	6C5–81919–00	GRAPHIC, REGULATOR ADHESIF, REGULATEUR	1	1				

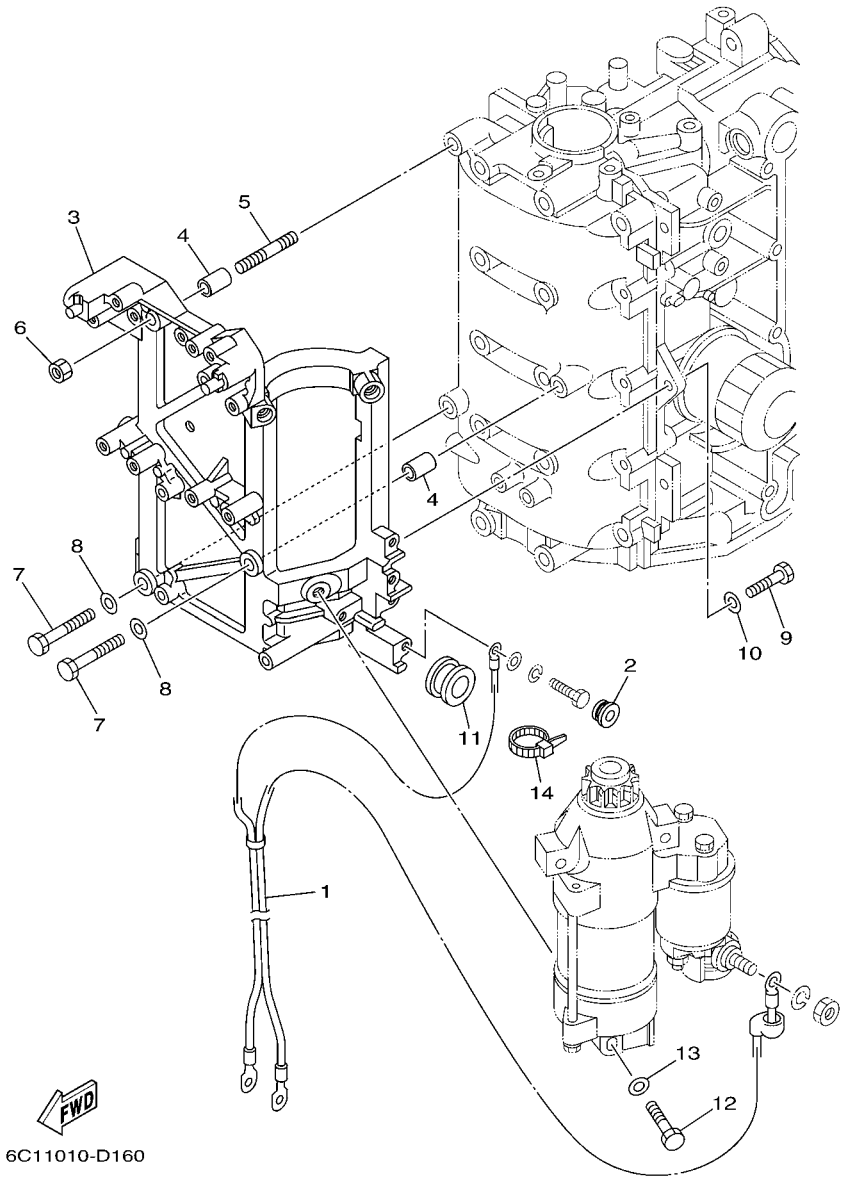

FIG. 16 ELECTRICAL 4 — PARTIE ELECTRIQUE 4

REF. NO.	PART NO. N° PIECES	DESCRIPTION DESCRIPTION	ED	ET				REMARKS REMARQUES
1	6C5–82105–00	WIRE HARNESS FAISCEAU DE FILS	1	1				
2	90480–12072	GROMMET PASSE-FIL	1	1				
3	6C5–81822–00–94	BRACKET, STARTING MOTOR SUPPORT, DEMARREUR ELECTRIQUE	1	1				
4	99590–10114	PIN, DOWEL GOUJON, D'ASSEMBLAGE	2	2				
5	95680–08330	BOLT, STUD GOUJON	1	1				
6	95380–08600	NUT ECROU	1	1				
7	97095–08035	BOLT BOULON	2	2				
8	92995–08600	WASHER RONDELLE	2	2				
9	97095–08025	BOLT BOULON	2	2				
10	92995–08600	WASHER RONDELLE	2	2				
11	90480–24003	GROMMET PASSE-FIL	1	1				
12	97013–08045	BOLT BOULON	3	3				
13	92903–08600	WASHER, PLATE RONDELLE, PLATE	3	3				
14	90465–13M18	CLAMP BRIDE	1	1				

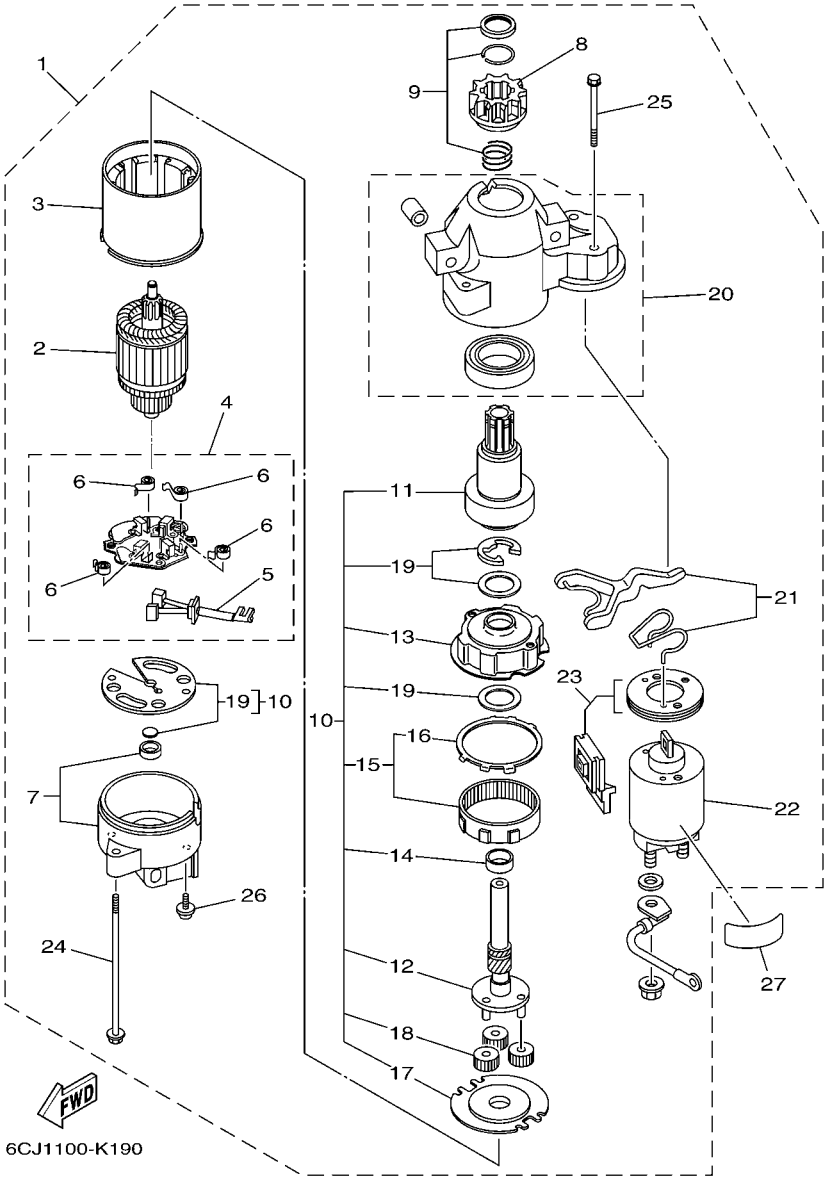

FIG. 17 STARTING MOTOR DEMARREUR ELECTRIQUE

REF. NO.	PART NO. N° PIECES	DESCRIPTION DESCRIPTION	ED	ET				REMARKS REMARQUES
1	6CJ–81800–00	STARTING MOTOR ASSY DEMARREUR ELECTRIQUE COMPLET	1	1				
2	67F–81850–00	.ARMATURE ASSY .INDUIT	1	1				
3	67F–81810–00	.STATOR ASSY .STATOR COMPLET	1	1				
4	69J–81840–00	.BRUSH HOLDER ASSY .SUPPORT DE CHARBON	1	1				
5	69J–81801–00	..BRUSH SET ..CHARBON	1	1				
6	67F–81813–00	..SPRING, BRUSH ..RESSORT, DE CHARBON	4	4				
7	68F–81820–00	.REAR BRACKET ASSY .SUPPORT ARRIERE COMPLET	1	1				
8	67F–81808–00	.PINION ASSY .PIGNON	1	1				
9	67F–81857–00	.PINION STOPPER SET .BUTEE PIGNON	1	1				
10	67F–81807–00	.GEAR ASSY, STARTING MOTOR .PIGNON, DEMARREUR ELECTRIQUE	1	1				
11	67F–81832–00	..CLUTCH, OVER RUN ..EMBRAYAGE, ROUE LIBRE	1	1				
12	67F–81836–00	..SHAFT, PINION ..AXE, PIGNON	1	1				
13	67F–81821–00	..BRACKET, CENTER 1 ..SUPPORT, CENTRE 1	1	1				
14	67F–81841–00	..BEARING ..ROULEMENT	1	1				
15	67F–81891–00	..GEAR, RING ..ROUE DENTEE	1	1				
16	67F–8183R–00	...GASKET ...JOINT	1	1				
17	67F–81830–00	..BRACKET, CENTER 2 ..SUPPORT, CENTRE 2	1	1				
18	60V–8183T–00	..GEAR, IDLER ..PIGNON, INTERMEDIAIRE	3	3				
19	67F–81809–00	..WASHER KIT ..JEU DE RONDELLES	1	1				
20	60X–81842–00	.COVER .COUVERCLE	1	1				
21	6C5–81839–00	.LEVER ASSY .LEVIER COMPLET	1	1				
22	6C5–81941–00	.STARTER RELAY ASSY .LANCEUR RELAIS (ENS.)	1	1				
23	6C5–81869–00	.COVER, DUST .COUVERCLE, POUSSIERE	1	1				
24	6K7–81826–11	.BOLT .BOULON	2	2				
25	69J–81828–00	.BOLT 2 .RONDELLE, BUTEE 2	2	2				
26	67F–81846–00	.SCREW .VIS	2	2				
27	67F–83627–01	LABEL, CAUTION 7 ETIQUETTE, RECOMMANDATION 7	1	1				

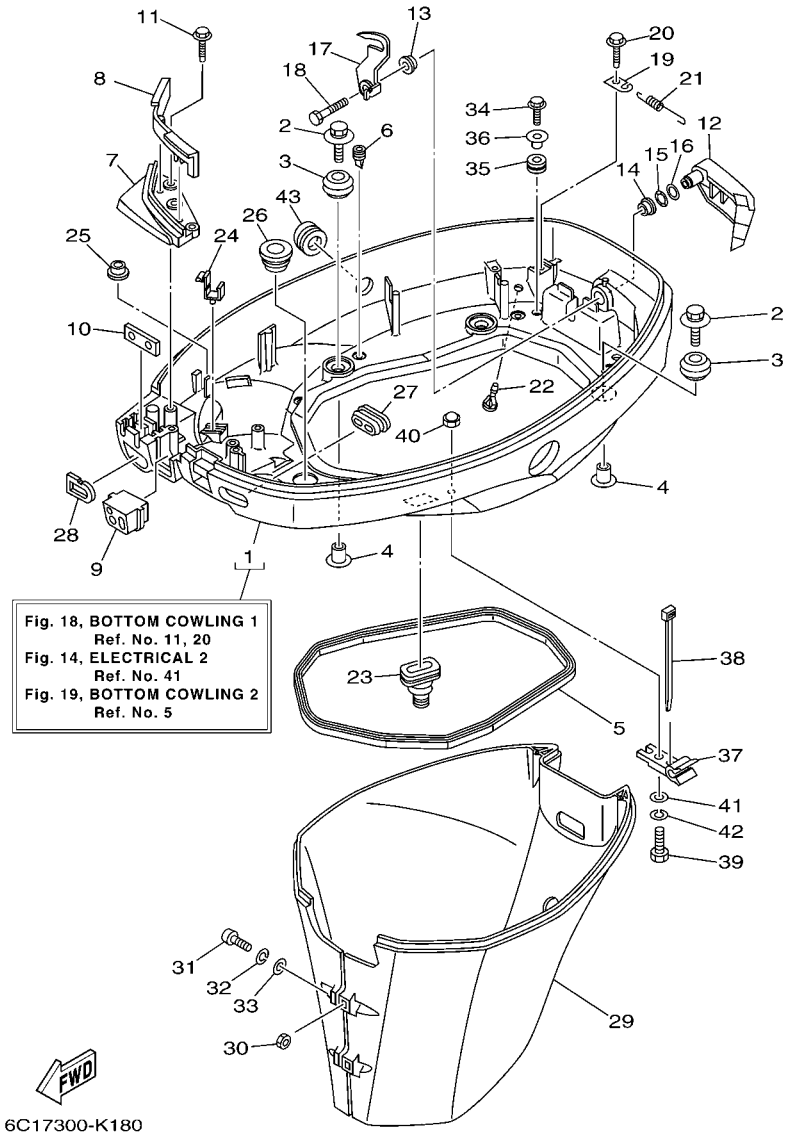

FIG. 18 BOTTOM COWLING 1 CAPOT INFERIEUR 1

REF. NO.	PART NO. N° PIECES	DESCRIPTION DESCRIPTION	ED	ET				REMARKS REMARQUES
1	6C5–42710–00–8D	BOTTOM COWLING ASSY ENS. EMBASE	1					
	6C5–42710–10–8D	BOTTOM COWLING ASSY ENS. EMBASE		1				
2	90119–06M61	BOLT, WITH WASHER BOULON, AVEC RONDELLE	4	4				
3	6BG–42748–00	GROMMET PASSE-FIL	4	4				
4	90387–06060	COLLAR COLLERETTE	4	4				
5	62Y–42716–00	RUBBER, SEAL 1 JOINT EN CAOUTCHOUC 1	1	1				
6	65W–42717–00	RUBBER, SEAL 2 JOINT EN CAOUTCHOUC 2	4	4				
7	6C5–42738–00–8D	PLATE, FITTING ETRIER	1	1				
8	6C5–42718–00	RUBBER, SEAL 3 JOINT	1	1				
9	6C5–42725–30	GROMMET PASSE-FIL	1	1				
10	62Y–42727–00	GROMMET PASSE-FIL	1	1				
11	90109–06M81	BOLT BOULON	3	3				
12	67C–42815–00–8D	LEVER, CLAMP LEVIER, PRESSE	1	1				
13	90386–12M37	BUSH DOUILLE	1	1				
14	90386–12MA2	BUSH DOUILLE	1	1				
15	90206–12052	WASHER, WAVE RONDELLE, ONDULEE	1	1				
16	90201–12M07	WASHER, PLATE RONDELLE, PLATE	1	1				
17	67C–42816–01	LEVER, CLAMP LEVIER, PRESSE	1	1				
18	97095–06014	BOLT BOULON	1	1				
19	66T–43144–00	HOOK, SPRING CROCHET	1	1				
20	90109–06M86	BOLT BOULON	1	1				
21	90506–18M40	SPRING, TENSION RESSORT, TENSION	1	1				
22	6BL–44391–00	NIPPLE, HOSE RACCORD D'ESSENCE	1	1				
23	6BG–42724–00	GROMMET PASSE-FIL	1	1				
24	90464–09M13	CLAMP BRIDE	1	1				
25	6E7–82317–00	DAMPER, IGNITION COIL AMORTISSEUR, BOBINE D'ALLUM	1	1				
26	68U–42727–00	GROMMET PASSE-FIL	1	1				

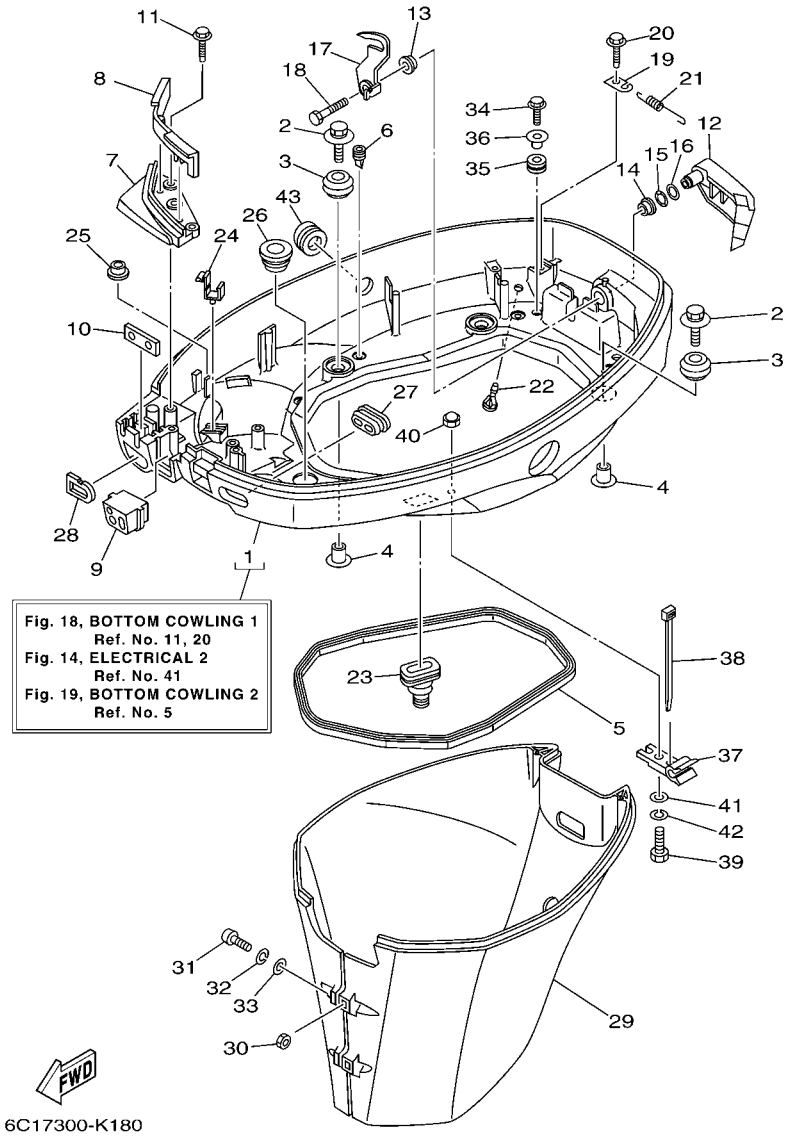

FIG. 18 BOTTOM COWLING 1 CAPOT INFERIEUR 1

REF. NO.	PART NO. N° PIECES	DESCRIPTION DESCRIPTION	ED	ET				REMARKS REMARQUES
27	6H3–42727–00	GROMMET PASSE-FIL	1	1				
28	61N–24329–00	SEAL JOINT	1	1				
29	67C–42741–10–8D	APRON CAPOT LATERAL	1	1				
30	95380–06600	NUT, HEXAGON ECROU	2	2				
31	97880–06025	SCREW, PAN HEAD VIS, TETE TRONCONIQUE	2	2				
32	92990–06100	WASHER, SPRING RONDELLE, GROWER	2	2				
33	92990–06600	WASHER, PLATE RONDELLE, PLATE	2	2				
34	90109–06M80	BOLT BOULON	2	2				
35	90480–13M24	GROMMET PASSE-FIL	2	2				
36	90387–06M43	COLLAR COLLERETTE	2	2				
37	90464–09M49	CLAMP BRIDE	1	1				
38	90465–11M10	CLAMP BRIDE	2	2				
39	97095–06020	BOLT BOULON	1	1				
40	95380–06800	NUT ECROU	1	1				
41	92990–06600	WASHER, PLATE RONDELLE, PLATE	1	1				
42	92995–06100	WASHER, SPRING RONDELLE, GROWER	1	1				
43	6C5–42726–00	GROMMET PASSE-FIL	1	1				

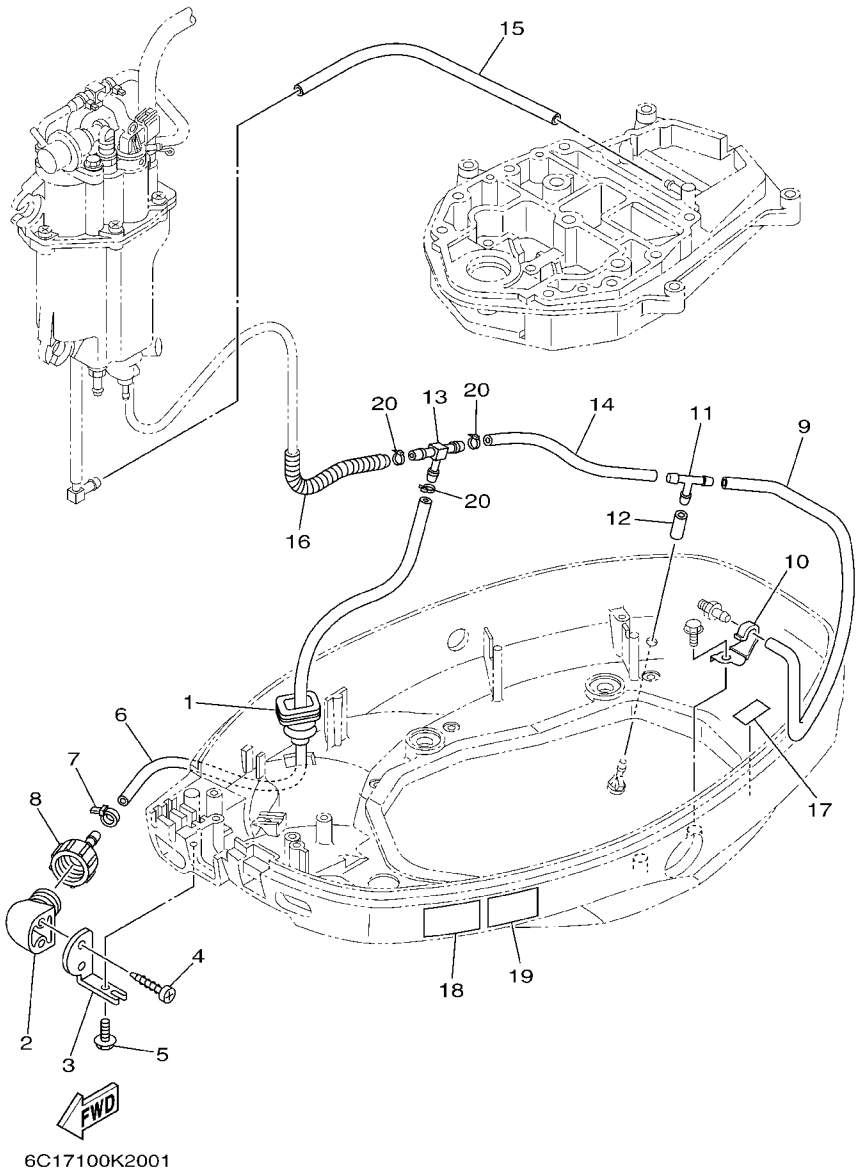

FIG. 19 BOTTOM COWLING 2 CAPOT INFERIEUR 2

REF. NO.	PART NO. N° PIECES	DESCRIPTION DESCRIPTION	ED	ET				REMARKS REMARQUES
1	65W–42724–10	GROMMET PASSE-FIL	1	1				
2	68T–12572–00	ADAPTER ADAPTATEUR	1	1				
3	69W–12535–00	PLATE PLAQUE	1	1				
4	90167–06002	SCREW, TAPPING VIS, TETE FRAISEE	2	2				
5	90109–06M80	BOLT BOULON	1	1				
6	6C5–24312–00	PIPE 2 DURITE 2	1	1				
7	90465–11M10	CLAMP BRIDE	1	1				
8	6R3–12580–00	JOINT ASSY ARTICULER (ENS.)	1	1				
9	90445–09226	HOSE (L390) DURITE (L390)	1	1				
10	90462–08031	CLAMP BRIDE	1	1				
11	688–24378–00	PIPE, JOINT 3 DURITE RACCORDEMENT 3	1	1				
12	90445–09220	HOSE (L30) DURITE (L30)	1	1				
13	6C5–24378–00	PIPE, JOINT 3 DURITE RACCORDEMENT 3	1	1				
14	90445–09091	HOSE (L135) DURITE (L135)	1	1				
15	90445–09304	HOSE (L310) DURITE (L310)	1	1				
16	90447–10006	TUBE DURITE	1	1				
17	6C5–82377–00	LABEL ETIQUETTE	1	1				
18	6AH–42794–40	LABEL, WARNING (GENERAL) ETIQUETTE, AVERTISSEMENT	1	1				
19	6AH–42794–50	LABEL, WARNING (GENERAL) ETIQUETTE, AVERTISSEMENT	1	1				
20	90465–11M10	CLAMP BRIDE	3	3				Go to P/N : PE0-OM-120001

PARTS NEWS

YAMAHA
YAMAHA MOTOR CO., LTD.
2500 SHINGAI IWATA SHIZUOKA JAPAN

News No. PE0-OM-120001(1/2)

Date:January 18, 2012

Signature:S. Ishibashi

Cause : ☑ Revision Notice ☐ Correction ☐ Sales Unit Change ☐ Others

Model	F40D / F50,F50F / T50,FT50G / F60,F60C / T60,FT60D
Subject	PARTS CATALOGUE CORRECTIONS
CATALOGUE NO.	See the"List of Models and CATALOGUE No's below."
Time of YPEC Revision	Text, Illustration --> Feb./15/2012 PDF Replace --> Feb./15/2012

(YPEC = Yamaha Parts Electrical Catalogue = Website parts catalogue)

Applicable Engine Serial No.

MODEL NAME	MODEL CODE	ApplicableEngine Serial No.
F40D	6AK6	6AK:1007652-1009617
F50,F50F	6C17	6C1:1035091-1042223
T50,FT50G	6C27	6C2:1009948-1012252
F60,F60C	6C57	6C5:1042843-1049207
F60C	6DP1	6DP:1000101-1000176
T60,FT60D	6C67	6C6:1015771-1018351

*1: Interchangeability

A	Old Parts → Old Parts New Parts → New Parts	
B	Old Parts → Old Parts New Parts → New Parts	
C	Old Parts → Old Parts New Parts → New Parts	
	These parts are interchangeable with a set	

BOTTOM COWLING 2

1.LIST CORRECTION

Fig.No.	Ref.No.	PART No.	DESCRIPTION	Q'TY	REMARKS
*1	*2	**90465-11M10**	**CLAMP**	**3**	***Added Parts**

2. ILLUSTRATION CORRECTION

(OLD)

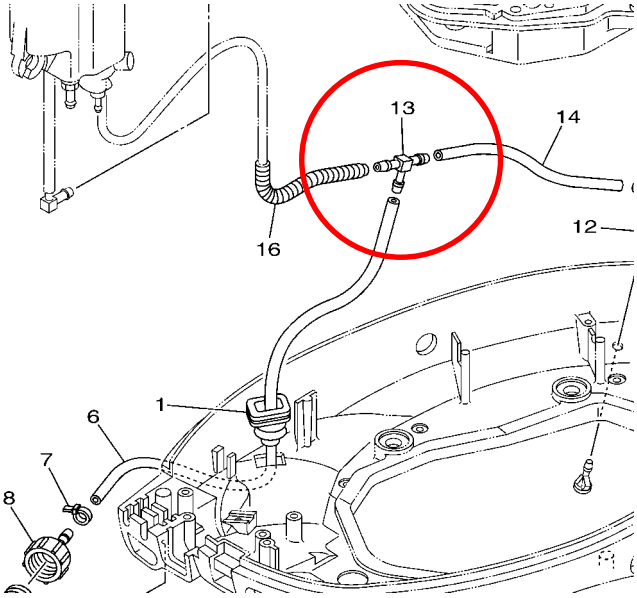

(NEW)

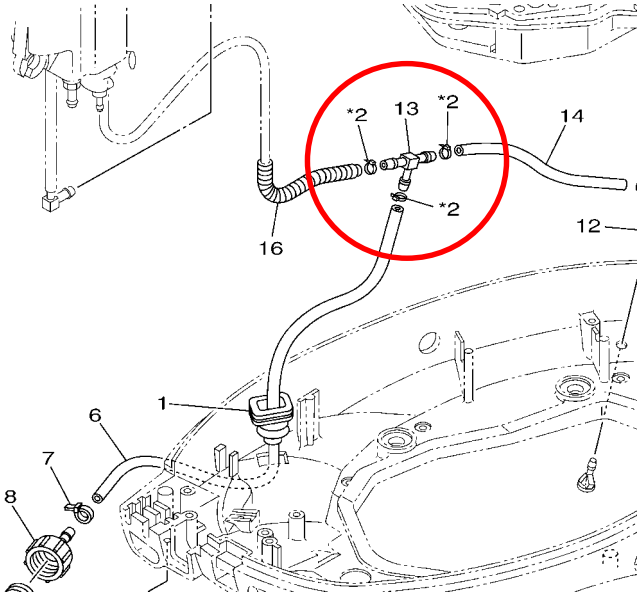

Parts Manager Check	Service Manager Check	Parts Manager File

YAMAHA MOTOR CO.,LTD
2500 Shingai Iwata Shizuoka 438-8501.Japan
Technical Publication Dept.

YAMAHA GENUINE Parts & Accessories

PARTS NEWS

YAMAHA
YAMAHA MOTOR CO., LTD.
2500 SHINGAI IWATA SHIZUOKA JAPAN

News No. PE0-OM-120001(2/2)

Date:January 18, 2012

Signature:S. Ishibashi

Cause : ☑ Revision Notice ☐ Correction ☐ Sales Unit Change ☐ Others

Model	F40D / F50,F50F / T50,FT50G / F60,F60C / T60,FT60D
Subject	PARTS CATALOGUE CORRECTIONS
CATALOGUE NO.	See the"List of Models and CATALOGUE No's below."
Time of YPEC Revision	Text, Illustration --> Feb./15/2012 PDF Replace --> Feb./15/2012
(YPEC = Yamaha Parts Electrical Catalogue = Website parts catalogue)	

BOTTOM COWLING 2

3.LIST of Models and CATALOGUE No's.

The applicable MODELS, MODEL CODES, and CATALOGUE No's are as follows.

MODEL NAME	MODEL CODE	MODEL YEAR	CATALOGUE NO.	Fig.No. *1	Ref.No. *2
F50/H,F50FET/EHT F60/H,F60CET/EHT	6C17 6C57	2011	1K6C1-100E1	20	20
F50TR	6C17	2011	1K6C1-110E1	20	19
F60TR	6C57	2011	1K6C5-110E1	20	19
F40DET F50FET/ED F60CET	6AK6 6C17 6C57	2011	1K6C1-300F1	19	20
F50FET F60CET	6C17 6C57	2011	1K6C1-370E1	19	20
F50FET/EHD F60CET	6C17 6C57	2011	1K6C1-415M1	19	19
T50 T60,FT60DET/EHT	6C27 6C67	2011	1K6C2-100E1	20	20
T50TR	6C27	2011	1K6C2-110E1	20	19
T60TR	6C67	2011	1K6C6-110E1	20	19
FT50GET FT60DET	6C27 6C67	2011	1K6C2-300F1	19	20
FT50GET FT60DET	6C27 6C67	2011	1K6C2-516E1	19	20
F60CET	6DP1	2011	1K6DP-280P1	20	18

Thank you very much for your cooperation.

Parts Manager Check	Service Manager Check	Parts Manager File

YAMAHA MOTOR CO.,LTD
2500 Shingai Iwata Shizuoka 438-8501.Japan
Technical Publication Dept.

YAMAHA GENUINE Parts & Accessories

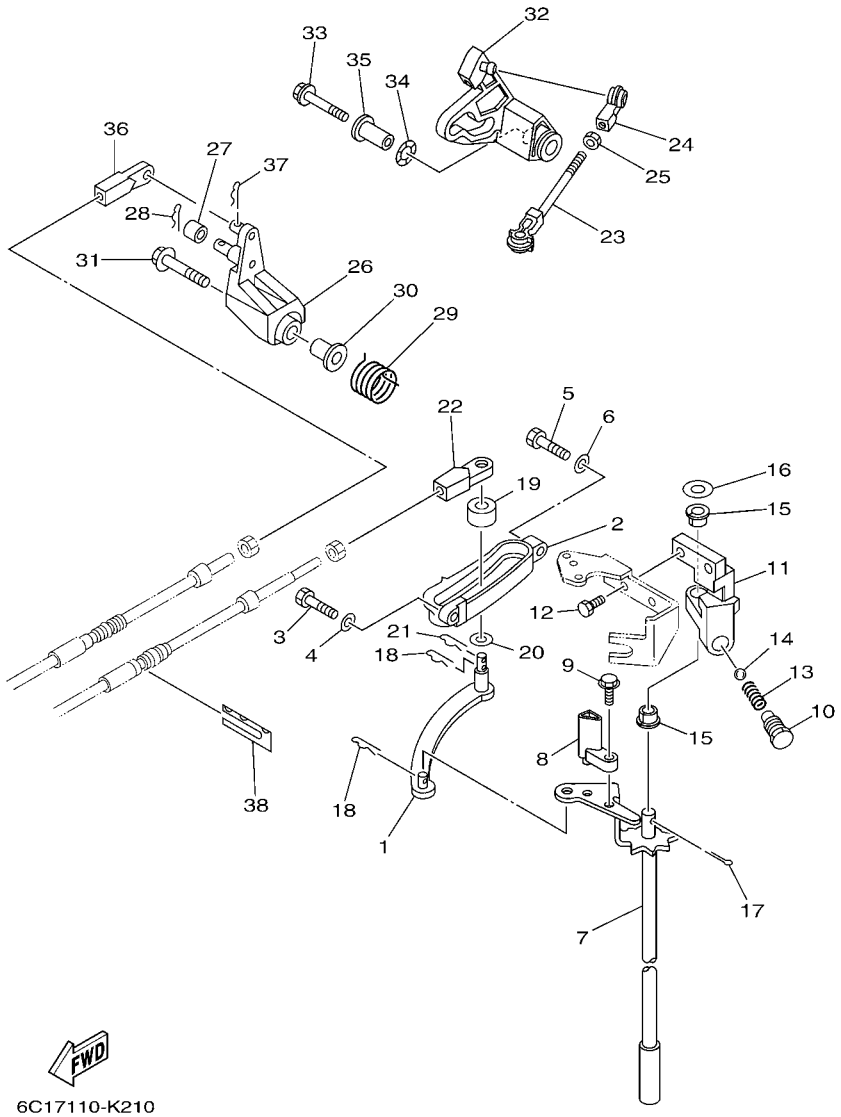

FIG. 20 CONTROL COMMANDE

REF. NO.	PART NO. N° PIECES	DESCRIPTION DESCRIPTION	ED	ET				REMARKS REMARQUES
1	69W–44121–00	LEVER, SHIFT ROD LEVIER, TIGE D'INVERSION	1	1				
2	62Y–44117–01–94	BRACKET SUPPORT	1	1				
3	97095–06020	BOLT BOULON	1	1				
4	92995–06600	WASHER RONDELLE	1	1				
5	97095–06025	BOLT BOULON	1	1				
6	92995–06600	WASHER RONDELLE	1	1				
7	6C5–44120–01	HANDLE GEAR SHIFT ASSY LEVIER D'EMBRAYAGE	1	1				L(20.7") L(20.7")
8	6C5–44122–00	BUSHING, SHIFT ROD LEVER DOUILLE, LEVIER D'EMBRAYAGE	1	1				
9	97595–05514	BOLT, WITH WASHER VIS HEXAGONAL AVC RONDELLE	1	1				
10	62Y–42715–01	BUSHING COUSSINET	1	1				
11	62Y–44118–00–94	BRACKET SUPPORT	1	1				
12	90101–06054	BOLT BOULON	2	2				
13	90501–12082	SPRING, COMPRESSION RESSORT, COMPRESSION	1	1				
14	93501–04M02	BALL BILLE	1	1				
15	90386–90M90	BUSH DOUILLE	2	2				
16	90201–10M20	WASHER, PLATE RONDELLE, PLATE	1	1				
17	91490–20015	PIN. COTTER GOUPILLE	1	1				
18	90468–18008	CLIP JONC	2	2				
19	688–44122–00	BUSHING, SHIFT ROD LEVER DOUILLE, LEVIER D'EMBRAYAGE	1	1				
20	90202–07M07	WASHER, PLATE RONDELLE, PLATE	1	1				
21	90468–18008	CLIP JONC	1	1				
22	69W–48344–00	CABLE END, REMOTE CONTROL CHAPE CABLE	1	1				
23	688–41211–01	LINK, ACCEL. BIELLETTE, ACCELERATION	1	1				
24	6H4–41237–00	JOINT, LINK RACCORD	1	1				
25	95380–05700	NUT ECROU	1	1				
26	62Y–42154–00	LEVER, THROTTLE CONTROL LEVIER DE COMMANDE D'AVANCE	1	1				
27	6C5–42171–00	BUSHING COUSSINET	1	1				

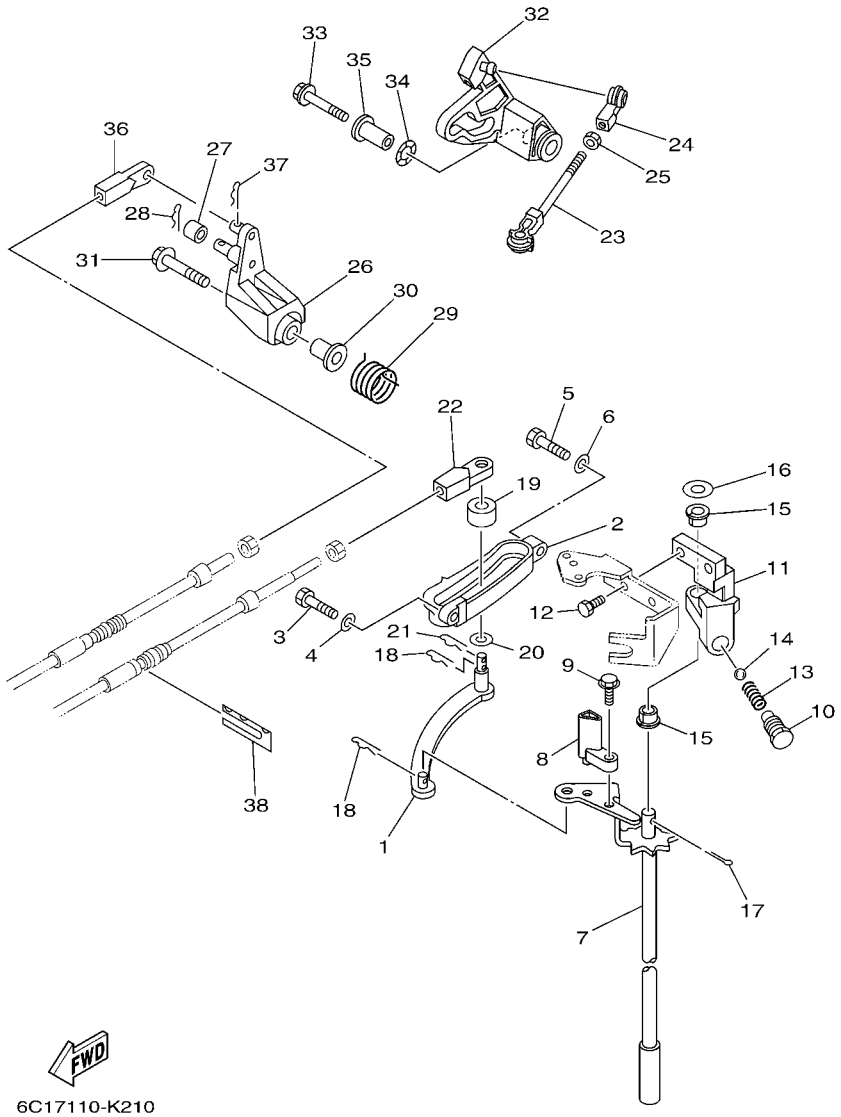

FIG. 20 CONTROL COMMANDE

REF. NO.	PART NO. N° PIECES	DESCRIPTION DESCRIPTION	ED	ET				REMARKS REMARQUES
28	91490–16010	PIN. COTTER GOUPILLE	1	1				
29	62Y–44135–00	SPRING RESSORT	1	1				
30	90387–06M45	COLLAR COLLERETTE	1	1				
31	90119–06106	BOLT, WITH WASHER BOULON, AVEC RONDELLE	1	1				
32	6C5–42335–00	LEVER, ACCEL. CONTROL LEVIER, ACCELERATION	1	1				
33	95895–06035	BOLT, FLANGE BOULON	1	1				
34	90206–10M04	WASHER, WAVE RONDELLE, ONDULEE	1	1				
35	90387–06M82	COLLAR COLLERETTE	1	1				
36	69W–48344–00	CABLE END, REMOTE CONTROL CHAPE CABLE	1	1				
37	90468–18008	CLIP JONC	1	1				
38	62Y–48538–00	CLAMP, CABLE 1 COLLIER	1	1				

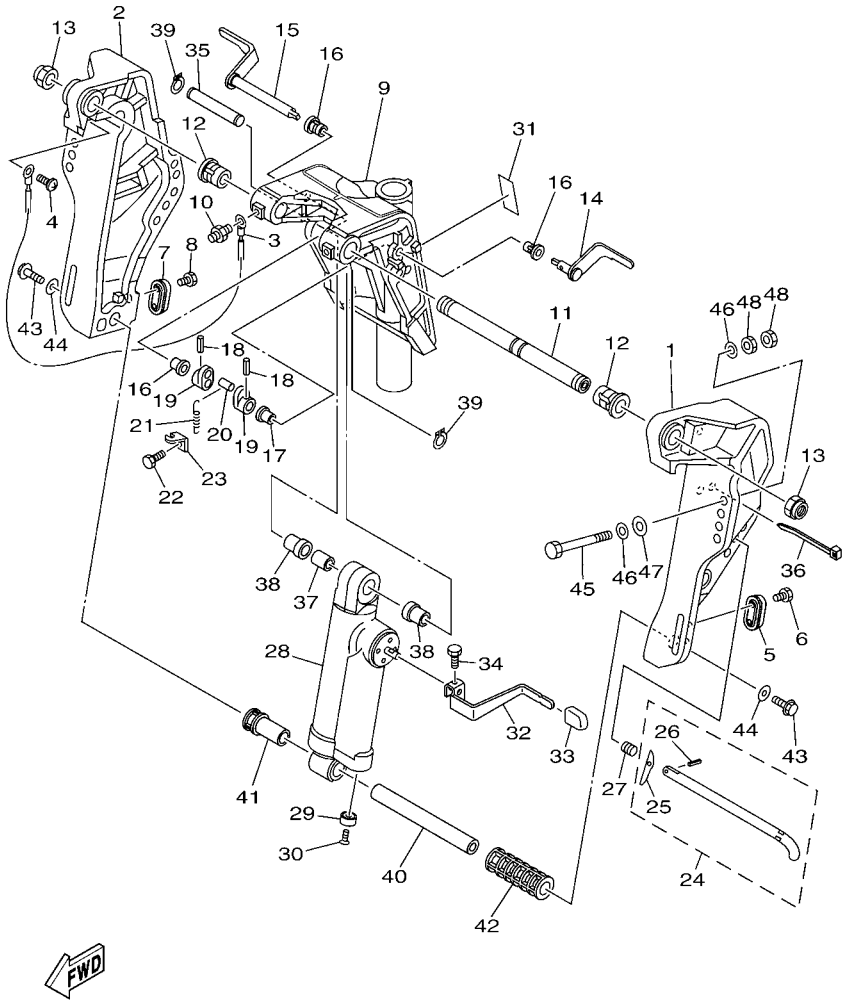

FIG. 21 BRACKET 1 SUPPORT 1

REF. NO.	PART NO. N° PIECES	DESCRIPTION DESCRIPTION	ED	ET				REMARKS REMARQUES
1	6C1–43111–00–8D	BRACKET, CLAMP 1 PRESSE 1	1					
2	6C1–43112–00–8D	BRACKET, CLAMP 2 PRESSE 2	1					
3	6E5–82148–00	WIRE, LEAD 4 FIL 4	1					
4	97885–06008	SCREW, PAN HEAD VIS, A ENCOCHE	1					
5	65W–45251–00	ANODE ANODE	1					
6	90101–06020	BOLT BOULON	2					
7	65W–45251–00	ANODE ANODE	1					
8	90101–06020	BOLT BOULON	2					
9	6C5–43311–01–8D	BRACKET, SWIVEL 1 SUPPORT, PIVOT 1	1					
10	93700–06M03	NIPPLE, GREASE PION	3					
11	63D–43131–01	BOLT, CLAMP BRACKET BOULON, PRESSE	1					
12	90386–22MA4	BUSH DOUILLE	2					
13	90185–22M11	NUT, SELF-LOCKING ECROU,AUTO-BLOQUANT	2					
14	6C5–43181–00	LEVER, TILT STOP 1 LEVIER VERROUILLAGE RELEVAGE 1	1					
15	6C5–43185–00	LEVER, TILT STOP 2 LEVIER VERROUILLAGE RELEVAGE 2	1					
16	90386–10M16	BUSH DOUILLE	3					
17	90386–10025	BUSH DOUILLE	1					
18	91690–30020	PIN, SPRING AGRAFFE	2					
19	6G5–43148–00	COLLAR, DISTANCE ENTRETOISE	2					
20	90249–06M19	PIN GOUPILLE	1					
21	90506–14M24	SPRING, TENSION RESSORT, TENSION	1					
22	97095–06010	BOLT BOULON	1					
23	6G5–43144–00	HOOK, SPRING CROCHET	1					
24	688–43160–01	TILT ROD ASSY BROCHE D'INCLINAISON (ENS.)	1					
25	688–43165–00	.PLATE, TILT LOCK .TAQUET, BROCHE INCLINAISON	1					
26	91690–30012	.PIN, SPRING .AGRAFFE	1					
27	90502–16M02	SPRING, CONICAL RESSORT, CONIQUE	1					

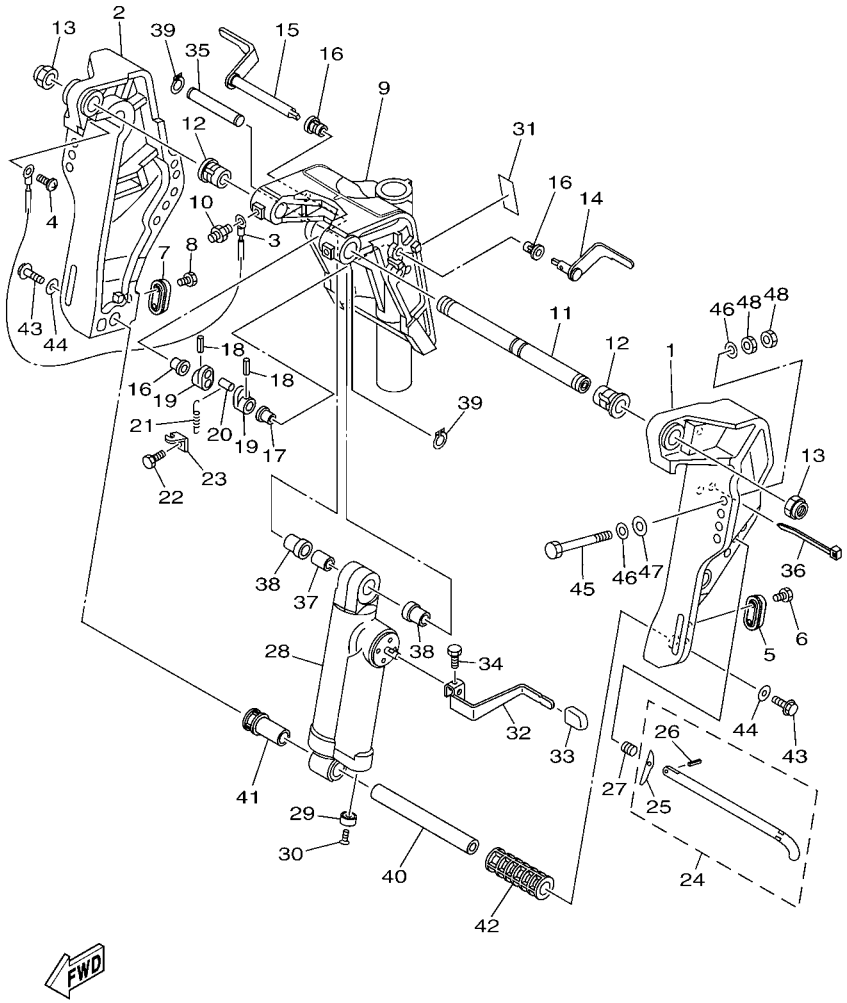

FIG. 21 BRACKET 1 SUPPORT 1

REF. NO.	PART NO. N° PIECES	DESCRIPTION DESCRIPTION	ED	ET				REMARKS REMARQUES
28	64J–43107–01–8D	SHOCK ABSORBER SUB-ASSY AMORTISSEUR (ENS.)	1					
29	663–45251–00	ANODE ANODE	1					
30	90152–06M01	SCREW, COUNTERSUNK VIS, TETE NOYEE	1					
31	63D–43691–00	INDICATOR, TILT ETIQUETTE, RELEVAGE	1					
32	6C1–43631–00	LEVER, TILT LEVIER, INCLINAISON	1					
33	682–43318–01	COVER CAPUCHON	1					
34	97095–06010	BOLT BOULON	1					
35	69D–43126–00	PIN, UPPER SHOCK MOUNT AXE, SUPERIEUR AMORTISSEUR	1					
36	90464–76001	CLAMP BRIDE	1					
37	90387–16003	COLLAR COLLERETTE	1					
38	90387–16004	COLLAR COLLERETTE	2					
39	93410–16006	CIRCLIP CLIPS	2					
40	6CJ–43818–00	PIN, LOWER SHOCK MOUNT AXE, INFERIEUR AMORTISSEUR	1					
41	6C5–43833–00	PIPE TUYAU	1					
42	6C5–43834–00	PIPE TUYAU	1					
43	97575–10530	BOLT, WITH WASHER VIS HEXAGONAL AVC RONDELLE	2					
44	90201–10060	WASHER, PLATE RONDELLE, PLATE	2					
45	90101–12M65	BOLT BOULON	4					
46	92995–12200	WASHER RONDELLE	8					
47	90201–12426	WASHER, PLATE RONDELLE, PLATE	4					
48	95380–12600	NUT ECROU	8					

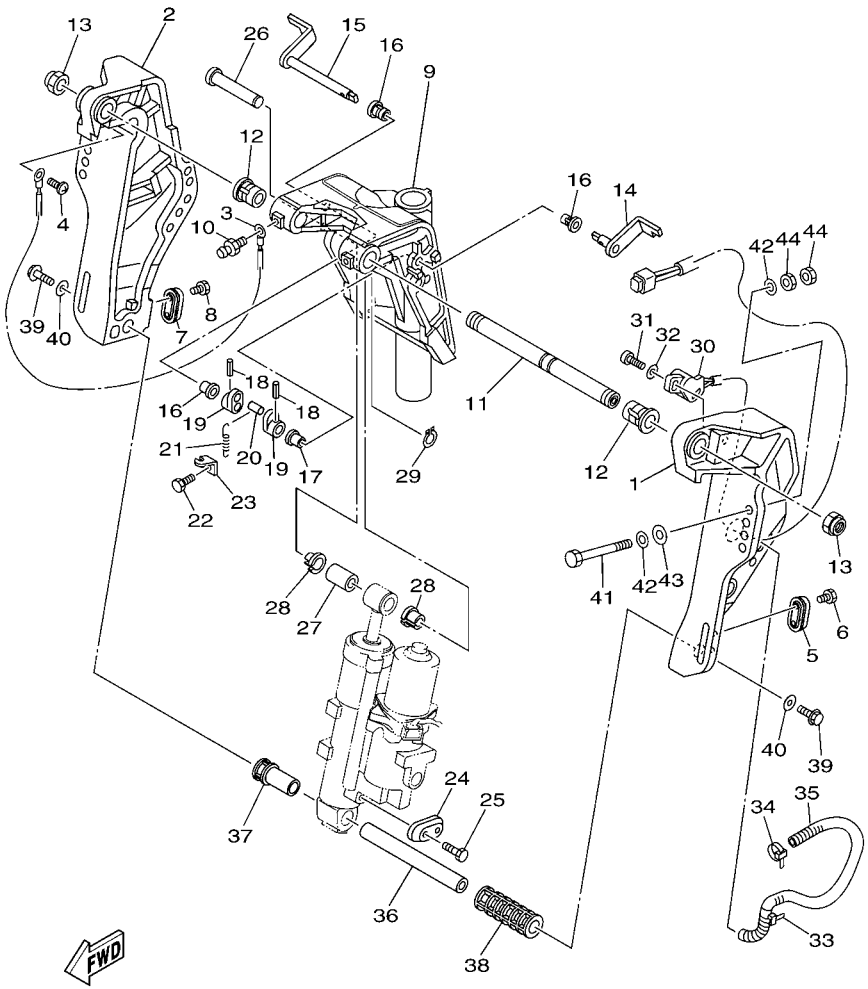

FIG. 22 BRACKET 2 SUPPORT 2

REF. NO.	PART NO. N° PIECES	DESCRIPTION DESCRIPTION	ED	ET				REMARKS REMARQUES
1	6C5–43111–01–8D	BRACKET, CLAMP 1 PRESSE 1		1				
2	6C5–43112–01–8D	BRACKET, CLAMP 2 PRESSE 2		1				
3	6E5–82148–00	WIRE, LEAD 4 FIL 4		1				
4	97885–06008	SCREW, PAN HEAD VIS, A ENCOCHE		1				
5	65W–45251–00	ANODE ANODE		1				
6	90101–06020	BOLT BOULON		2				
7	65W–45251–00	ANODE ANODE		1				
8	90101–06020	BOLT BOULON		2				
9	6C5–43311–01–8D	BRACKET, SWIVEL 1 SUPPORT, PIVOT 1		1				
10	93700–06M03	NIPPLE, GREASE PION		3				
11	63D–43131–01	BOLT, CLAMP BRACKET BOULON, PRESSE		1				
12	90386–22MA4	BUSH DOUILLE		2				
13	90185–22M11	NUT, SELF-LOCKING ECROU,AUTO-BLOQUANT		2				
14	6C5–43181–00	LEVER, TILT STOP 1 LEVIER VERROUILLAGE RELEVAGE 1		1				
15	6C5–43185–00	LEVER, TILT STOP 2 LEVIER VERROUILLAGE RELEVAGE 2		1				
16	90386–10M16	BUSH DOUILLE		3				
17	90386–10025	BUSH DOUILLE		1				
18	91690–30020	PIN, SPRING AGRAFFE		2				
19	6G5–43148–00	COLLAR, DISTANCE ENTRETOISE		2				
20	90249–06M19	PIN GOUPILLE		1				
21	90506–14M24	SPRING, TENSION RESSORT, TENSION		1				
22	97095–06010	BOLT BOULON		1				
23	6G5–43144–00	HOOK, SPRING CROCHET		1				
24	65W–45251–00	ANODE ANODE		1				
25	90101–06020	BOLT BOULON		2				
26	6E5–43126–02	PIN, UPPER SHOCK MOUNT AXE, SUPERIEUR AMORTISSEUR		1				
27	90386–18M92	BUSH DOUILLE		1				

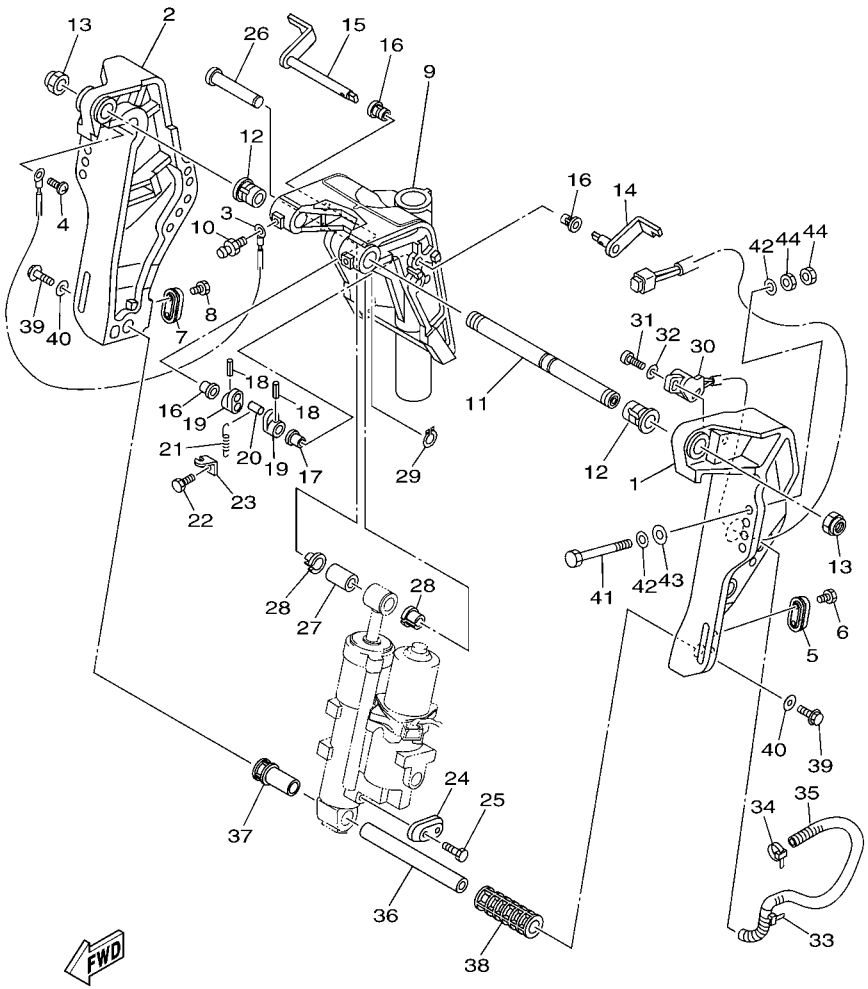

FIG. 22 BRACKET 2 SUPPORT 2

REF. NO.	PART NO. N° PIECES	DESCRIPTION DESCRIPTION	ED	ET				REMARKS REMARQUES
28	90386–18M35	BUSH DOUILLE		2				
29	93410–18M02	CIRCLIP CLIPS		1				
30	63D–83672–11	TRIM SENDER INCLINER RACCORD		1				
31	97885–06016	SCREW, PAN HEAD VIS, A ENCOCHE		2				
32	92995–06600	WASHER RONDELLE		2				
33	90464–76001	CLAMP BRIDE		1				
34	90465–11M10	CLAMP BRIDE		1				
35	90447–19009	TUBE DURITE		1				
36	6CJ–43818–00	PIN, LOWER SHOCK MOUNT AXE, INFERIEUR AMORTISSEUR		1				
37	6C5–43833–00	PIPE TUYAU		1				
38	6C5–43834–00	PIPE TUYAU		1				
39	97575–10530	BOLT, WITH WASHER VIS HEXAGONAL AVC RONDELLE		2				
40	90201–10060	WASHER, PLATE RONDELLE, PLATE		2				
41	90101–12M65	BOLT BOULON		4				
42	92995–12200	WASHER RONDELLE		8				
43	90201–12426	WASHER, PLATE RONDELLE, PLATE		4				
44	95380–12600	NUT ECROU		8				

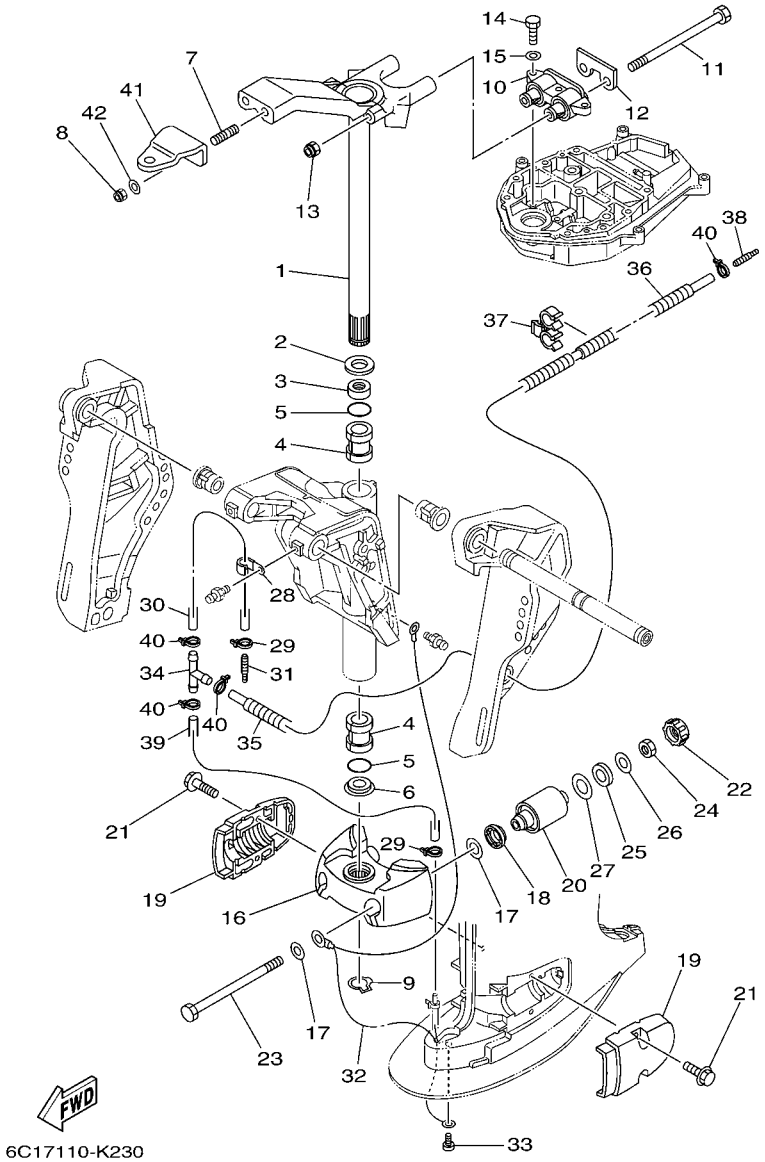

FIG. 23 BRACKET 3 SUPPORT 3

REF. NO.	PART NO. N° PIECES	DESCRIPTION DESCRIPTION	ED	ET				REMARKS REMARQUES
1	69W–42510–01–8D	STEERING BRACKET ASSY DIRECTION SUPPORT (ENS.)	1	1				
2	90201–30M00	WASHER, PLATE RONDELLE, PLATE	1	1				
3	90386–30M78	BUSH DOUILLE	1	1				
4	90386–30M77	BUSH DOUILLE	2	2				
5	93210–29M94	O-RING JOINT TORIQUE	2	2				
6	90386–30M60	BUSH DOUILLE	1	1				
7	90116–10038	BOLT, STUD GOUJON	2	2				
8	90185–10051	NUT, SELF-LOCKING ECROU,AUTO-BLOQUANT	2	2				
9	93410–28M06	CIRCLIP CLIPS	1	1				
10	69W–44514–00–94	MOUNT DAMPER, UPPER SIDE SILENT-BLOC, SUPERIEUR LATERAL	1	1				L(20.7") L(20.7")
11	90101–08M15	BOLT BOULON	2	2				
12	69W–44526–01	PLATE PLAQUE	1	1				
13	90185–08045	NUT, SELF-LOCKING ECROU,AUTO-BLOQUANT	2	2				
14	97075–08030	BOLT BOULON	3	3				
15	92995–08600	WASHER RONDELLE	3	3				
16	6C5–44551–00–8D	HOUSING, LOWER MOUNT RUBBER 1 BOITIER, SILENT-BLOC INFERIEUR	1	1				
17	90201–12M16	WASHER, PLATE RONDELLE, PLATE	4	4				
18	6C5–43885–00	GROMMET PASSE-FIL	2	2				
19	6C5–44552–00–8D	HOUSING, LOWER MOUNT RUBBER 2 BOITIER, SILENT-BLOC INFERIEUR	2	2				
20	69W–44555–00–94	MOUNT DAMPER, LOWER SIDE SILENT-BLOC, INFERIEUR LATERAL	2	2				
21	90119–08131	BOLT, WITH WASHER BOULON, AVEC RONDELLE	4	4				
22	6C5–44575–00	DAMPER, LOWER MOUNT RUBBER SILENT-BLOC, INFERIEUR	2	2				
23	90109–12MA3	BOLT BOULON	2	2				
24	95380–12700	NUT ECROU	2	2				
25	90202–21100	WASHER, PLATE RONDELLE, PLATE	2	2				
26	90201–13M19	WASHER, PLATE RONDELLE, PLATE	2	2				
27	90201–22M05	WASHER, PLATE RONDELLE, PLATE	2	2				

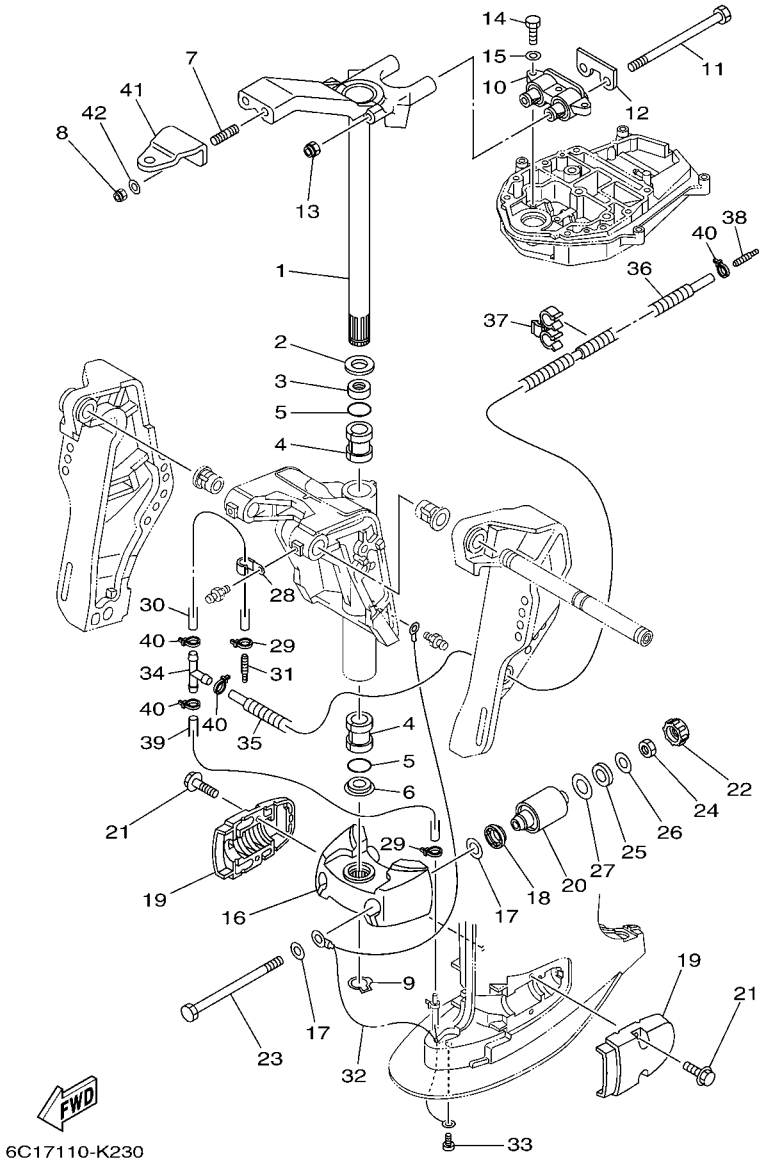

FIG. 23 BRACKET 3 SUPPORT 3

REF. NO.	PART NO. N° PIECES	DESCRIPTION DESCRIPTION	ED	ET				REMARKS REMARQUES
28	90465–06M86	CLAMP BRIDE	1	1				
29	90465–11M10	CLAMP BRIDE	2	2				
30	90445–07MF2	HOSE (L250) DURITE (L250)	1	1				
31	6E5–83558–00	END, NIPPLE RACCORD DE NIPPLE	1	1				
32	67C–82127–10	WIRE, LEAD 2 FIL 2	1	1				
33	97885–06008	SCREW, PAN HEAD VIS, A ENCOCHE	1	1				
34	90413–05014	WAY 3 RAINURE 3	1	1				
35	6C5–44385–01	HOSE, WATER 1 TUBE D'EAU 1	1	1				
36	90447–07001	HOSE, WITH SPRING (L400) DURITE, AVEC RESSORT (L400)	1	1				
37	90464–10006	CLAMP BRIDE	1	1				
38	6E5–83558–00	END, NIPPLE RACCORD DE NIPPLE	1	1				
39	90445–07M30	HOSE (L450) DURITE (L450)	1	1				
40	90465–11M10	CLAMP BRIDE	4	4				
41	65W–48511–10	HOOK, STEERING ATTACHE, DIRECTION	1	1				
42	90201–10120	WASHER, PLATE RONDELLE, PLATE	2	2				

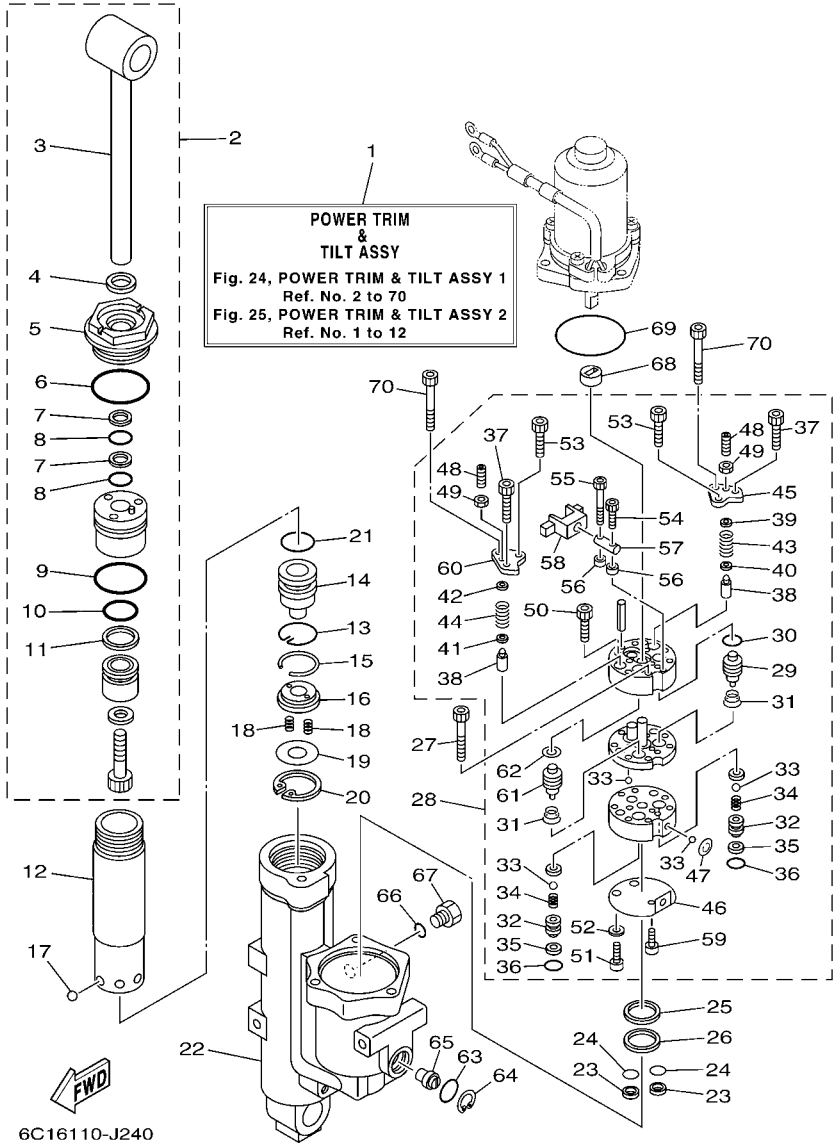

FIG. 24 POWER TRIM & TILT ASSY 1 PUISSANCE PARER ET INCLINER 1

REF. NO.	PART NO. N° PIECES	DESCRIPTION DESCRIPTION	ED	ET				REMARKS REMARQUES
1	6C5–43800–01–8D	POWER TRIM & TILT ASSY PUISSANCE PARER ET INCLINER (E		1				
2	6C5–43810–00	TILT PISTON SUB ASSY INCLINER PISTON AUXILIAIRE(ENS		1				
3	6C5–43801–00	.ROD .TIGE		1				
4	62Y–43822–00	.SEAL, TRIM DUST .JOINT		1				
5	6C5–43821–00	.SCREW, TRIM CYLINDER END .VIS		1				
6	62Y–43863–00	.O-RING .JOINT TORIQUE		1				
7	62X–43872–00	.RING, BACK UP .RESSORT		2				
8	6C5–43863–00	.O-RING .JOINT TORIQUE		2				
9	6C5–43862–00	.O-RING .JOINT TORIQUE		1				
10	6C5–43861–00	.O-RING .JOINT TORIQUE		1				
11	6C5–43871–00	.RING, BACK UP .SEGMENT		1				
12	6C5–22471–00	CYLINDER, SHOCK ABSORBER CYLINDRE, AMORTISSEUR		1				
13	6C5–43875–00	RING, SNAP RESSORT		1				
14	6C5–4381B–00	FREE PISTON SUB ASSY PISTON AUXILIAIRE (ENS.)		1				
15	93450–32116	CIRCLIP CIRCLIP, TYPE S		1				
16	6C5–43899–00	PLATE STOPPER PLAQUETTE		1				
17	93503–16003	BALL BILLES		6				
18	62X–4384H–00	SPRING RESSORT		2				
19	6C5–22435–00	PLATE, VALVE 2 PLAQUE, CLAPET 2		1				
20	99009–32500	CIRCLIP CIRCLIP		1				
21	6C5–43861–00	O-RING JOINT TORIQUE		1				
22	6C5–4380K–00	CYLINDER, TILT SUB ASSY CYLINDRE		1				
23	6C5–43817–10	FILTER 2 FILTRE 2		2				
24	69J–4389J–00	O-RING JOINT TORIQUE		2				
25	6C5–43816–00	FILTER 1 FILTRE 1		1				
26	6C5–4380G–00	PLATE PLAQUE		1				
27	91312–05045	BOLT BOULON		2				

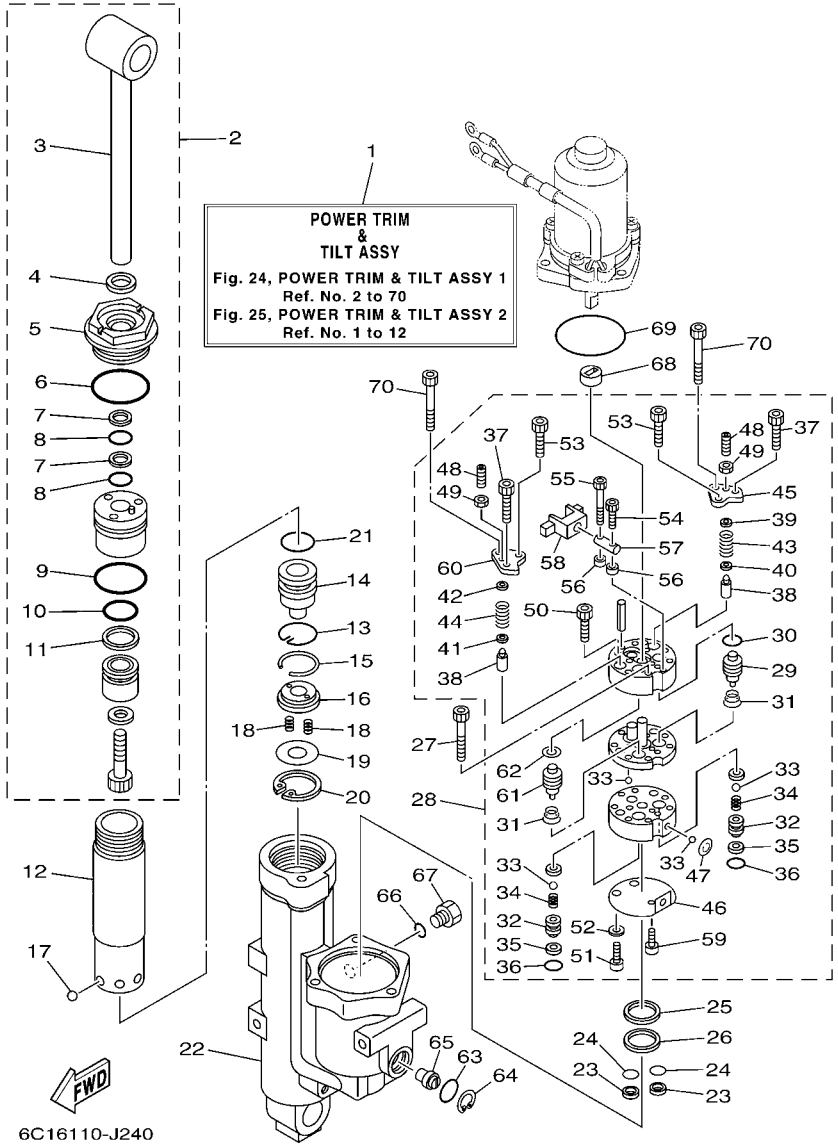

FIG. 24 POWER TRIM & TILT ASSY 1 PUISSANCE PARER ET INCLINER 1

REF. NO.	PART NO. N° PIECES	DESCRIPTION DESCRIPTION	ED	ET				REMARKS REMARQUES
28	6C5–43830–00	GEAR PUMP ASSY POMPE A PIGNON (ENS.)		1				
29	6C6–43841–00	.PISTON, SHUTTLE .PISTON		1				
30	6H1–43883–00	.O-RING .JOINT TORIQUE		1				
31	6C6–43894–00	.SPRING, SHUTTLE RETURN .RESSORT		2				
32	6C6–4382E–00	.ADAPTOR 2 .ADAPTEUR 2		2				
33	93505–32038	.BALL .BILLE		6				
34	6C6–43853–00	.SPRING, MAIN VALVE .RESSORT		2				
35	6C6–4387G–00	.WASHER .RONDELLE		2				
36	69J–4389J–00	.O-RING .JOINT TORIQUE		2				
37	91312–05030	.BOLT .BOULON		2				
38	6C5–43851–00	.SEAT, RELIEF VALVE .SIEGE		2				
39	6C5–4381K–00	.HOLDER .SUPPORT		1				
40	6C5–43893–00	.WASHER .RONDELLE		1				
41	6C6–43893–00	.WASHER .RONDELLE		1				
42	6C6–4381K–00	.HOLDER .SUPPORT		1				
43	6C5–43855–00	.SPRING, UP RELIEF .RESSORT		1				
44	6C5–43856–00	.SPRING, DOWN RELIEF .RESSORT		1				
45	6C5–4382K–00	.CAP, RELIEF VALVE .CHAPEAU		1				
46	6C5–43895–00	.SEAT, RELIEF VALVE .SIEGE		1				
47	6C5–43854–00	.SPRING, MANUAL RELEASE .RESSORT		1				
48	92A08–03110	.SCREW SET .VIS		2				
49	95302–03600	.NUT .ECROU		2				
50	91312–05025	.BOLT .BOULON		2				
51	6C6–43878–00	.BOLT, SOCKET .BOULON		2				
52	62Y–4387G–00	.WASHER .RONDELLE		2				
53	91312–04030	.BOLT .BOULON		2				
54	91312–03016	.BOLT .BOULON		1				

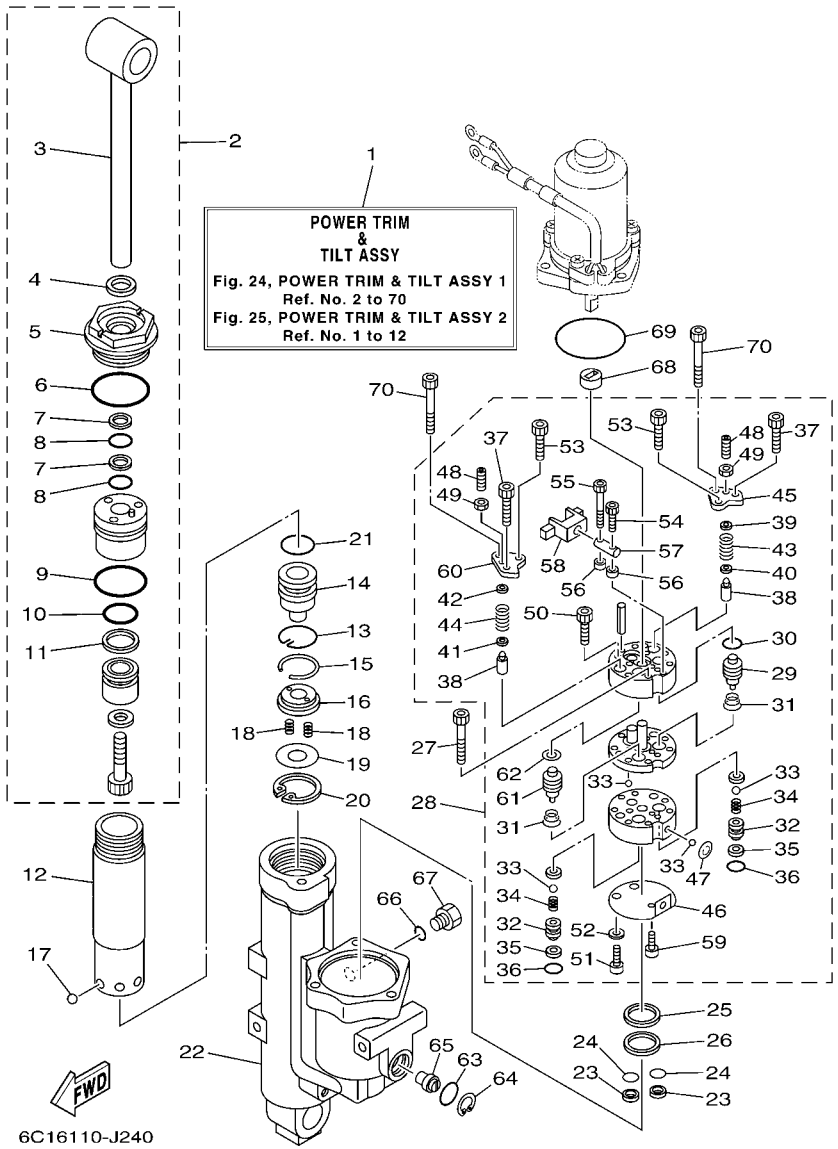

FIG. 24 POWER TRIM & TILT ASSY 1 PUISSANCE PARER ET INCLINER 1

REF. NO.	PART NO. N° PIECES	DESCRIPTION DESCRIPTION	ED	ET				REMARKS REMARQUES
55	6C6–4388E–00	.PLUG, TAPER SCREW .BOUCHON		1				
56	6C6–4388F–00	.SPACER .ENTRETOISE		2				
57	6C6–4386G–00	.PIN, STRAIGHT 2 .RESSORT 2		1				
58	6C6–4386E–00	.LEVER 1 .LEVIER 1		1				
59	91312–03005	.BOLT .BOULON		1				
60	6C5–4382L–00	.CAP, RELIEF VALVE .CAPUCHON		1				
61	6C5–43841–00	.PISTON, SHUTTLE .PISTON		1				
62	6C5–43872–00	.RING, BACK UP .RESSORT		1				
63	93210–18397	O-RING JOINT TORIQUE		1				
64	6H1–43875–00	RING, SNAP RESSORT		1				
65	6C5–43845–00	SCREW, MANUAL RELEASE VIS		1				
66	93210–09165	O-RING JOINT TORIQUE		1				
67	6H1–43829–00	PLUG, RESERVOIR BOUCHON		1				
68	6C5–43831–00	CONNECTOR, SHAFT RACCORD		1				
69	93210–64488	O-RING JOINT TORIQUE		1				
70	91312–05050	BOLT BOULON		2				

FIG. 25 POWER TRIM & TILT ASSY 2 PUISSANCE PARER ET INCLINER 2

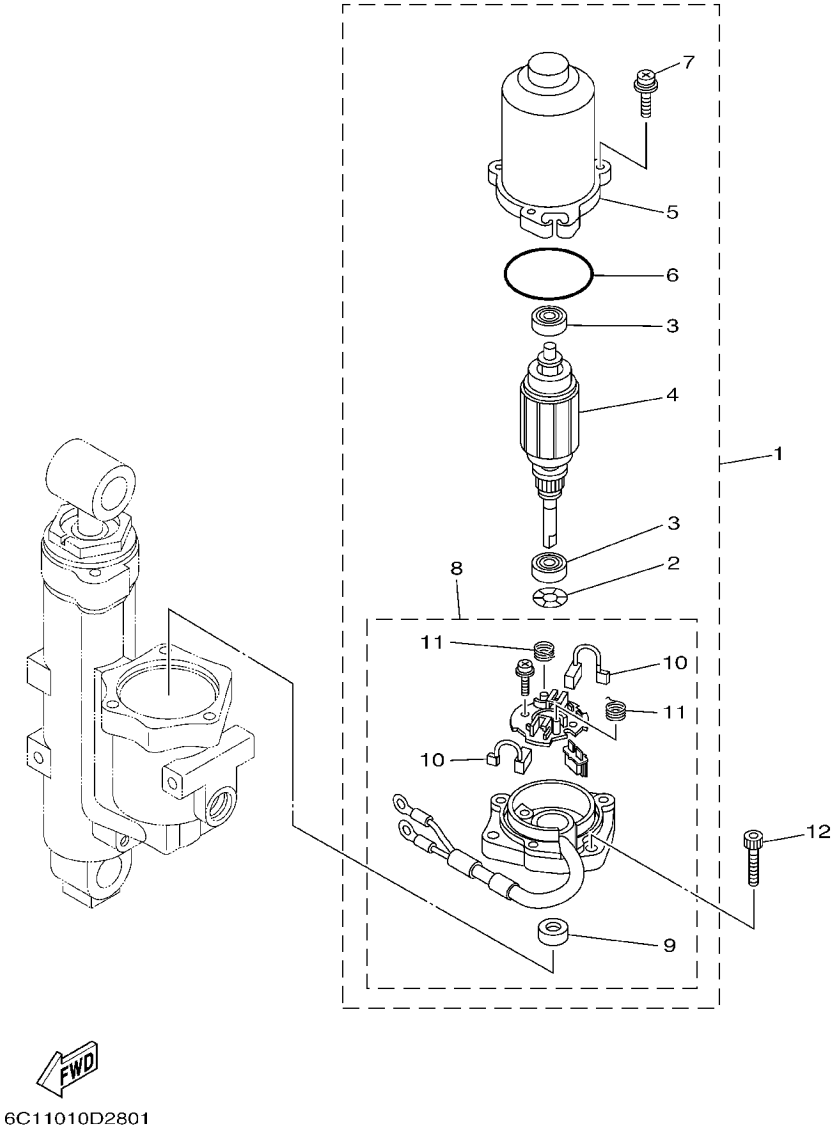

REF. NO.	PART NO. N° PIECES	DESCRIPTION DESCRIPTION	ED	ET				REMARKS REMARQUES
1	6C5–43880–01	MOTOR ASSY MOTEUR (ENS.)		1				
2	90206–08N51	.WASHER, WAVE .RONDELLE, ONDULEE		1				
3	93399–999T8	.BEARING .ROULEMENT		2				
4	6C5–43805–00	.ARMATURE ASSY .INDUIT (ENS.)		1				
5	6C5–43804–01	.STATOR ASSY .STATOR (ENS.)		1				
6	6C5–43869–00	.O-RING .JOINT TORIQUE		1				
7	6C5–43879–00	.SCREW, WITH WASHER .VIS, AVEC RONDELLE		3				
8	6C5–43881–01	.FRAME, END .BATI		1				WITH CIRCUIT BREAKER WITH CIRCUIT BREAKER
9	6C5–43882–00	..OIL SEAL ..JOINT SPI		1				
10	6C5–43891–00	..BRUSH 1 ..BALAI 1		2				
11	6C5–4386K–00	..SPRING, BRUSH ..RESSORT, BALAI		2				
12	62X–43888–00	BOLT, SOCKET BOULON		3				

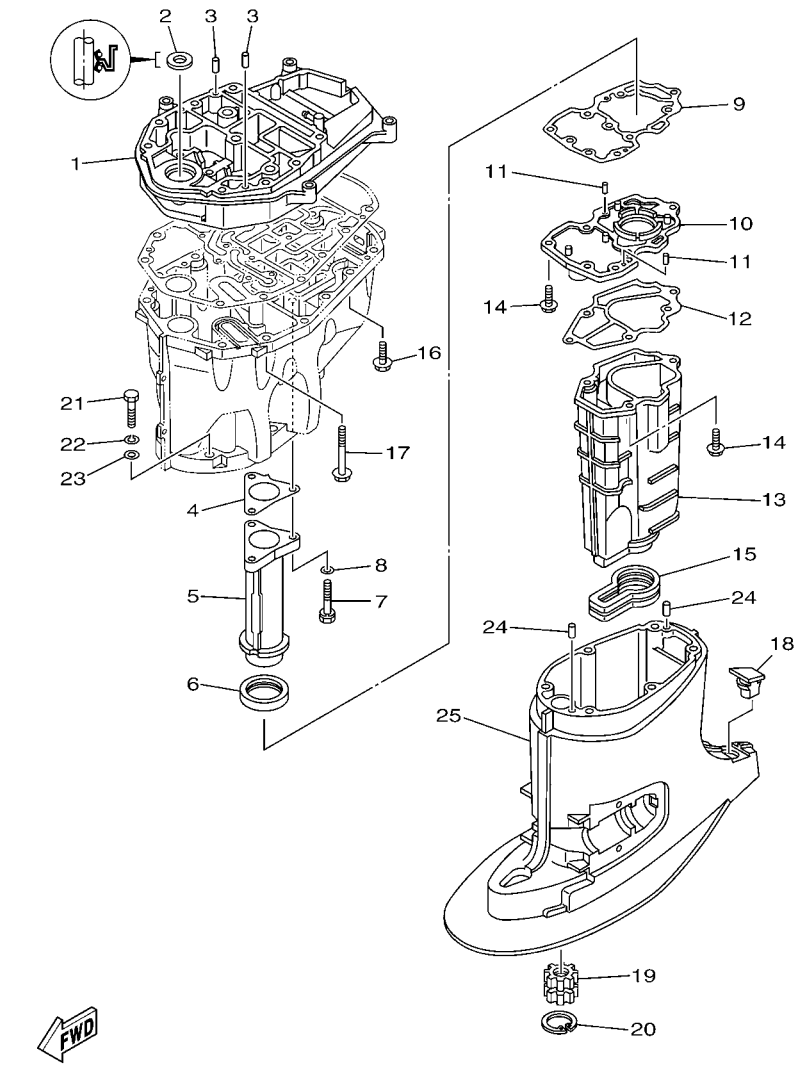

6C17110-K260

FIG. 26 UPPER CASING FOURREAU

REF. NO.	PART NO. N° PIECES	DESCRIPTION DESCRIPTION	ED	ET				REMARKS REMARQUES
1	6C5–41137–01–CA	GUIDE, EXHAUST COLLECTEUR D'ECHAPPEMENT	1	1				
2	93103–18011	OIL SEAL JOINT SPY	1	1				
3	93608–12M05	PIN, DOWEL AXE	2	2				
4	6C5–41133–00	GASKET, EXHAUST MANIFOLD 1 JOINT, PIPE D'ECHAPPEMENT	1	1				
5	6C5–41131–00–CA	MANIFOLD, EXT. 1 PIPE D'ECHAPPEMENT	1	1				
6	6C5–46132–00	GASKET 1 JOINT 1	1	1				
7	90119–06261	BOLT, WITH WASHER BOULON, AVEC RONDELLE	3	3				
8	90201–06015	WASHER, PLATE RONDELLE, PLATE	3	3				
9	6C5–41134–00	GASKET, EXHAUST MANIFOLD JOINT, PIPE D'ECHAPPEMENT	1	1				
10	6C5–45181–00–CA	PLATE PLAQUETTE	1	1				
11	93604–10M03	PIN, DOWEL CLAVETTE	2	2				
12	6C5–41135–00	GASKET, EXHAUST MANIFOLD JOINT, PIPE D'ECHAPPEMENT	1	1				
13	6C5–14711–00–CA	MUFFLER 1 POT D'ECHAPPEMENT 1	1	1				
14	97575–06525	BOLT, WITH WASHER VIS HEXAGONAL AVC RONDELLE	6	6				
15	6C5–45123–00	GASKET, MUFFLER JOINT, POT DE DETENTE	1	1				
16	90119–08102	BOLT, WITH WASHER BOULON, AVEC RONDELLE	4	4				
17	90119–08132	BOLT, WITH WASHER BOULON, AVEC RONDELLE	8	8				
18	6C5–45155–00	CAP CAPUCHON	1	1				
19	69W–45318–00	BUSHING, DRIVE SHAFT DOUILLE, ARBRE MOTEUR	1	1				
20	93420–36M01	CIRCLIP CIRCLIP, TYPE S	1	1				
21	97075–10045	BOLT BOULON	6	6				
22	92995–10100	WASHER RONDELLE	6	6				
23	92995–10600	WASHER RONDELLE	6	6				
24	93606–12019	PIN, DOWEL GOUPILLE	2	2				
25	6C5–45111–00–8D	CASING, UPPER FOURREAU	1	1				

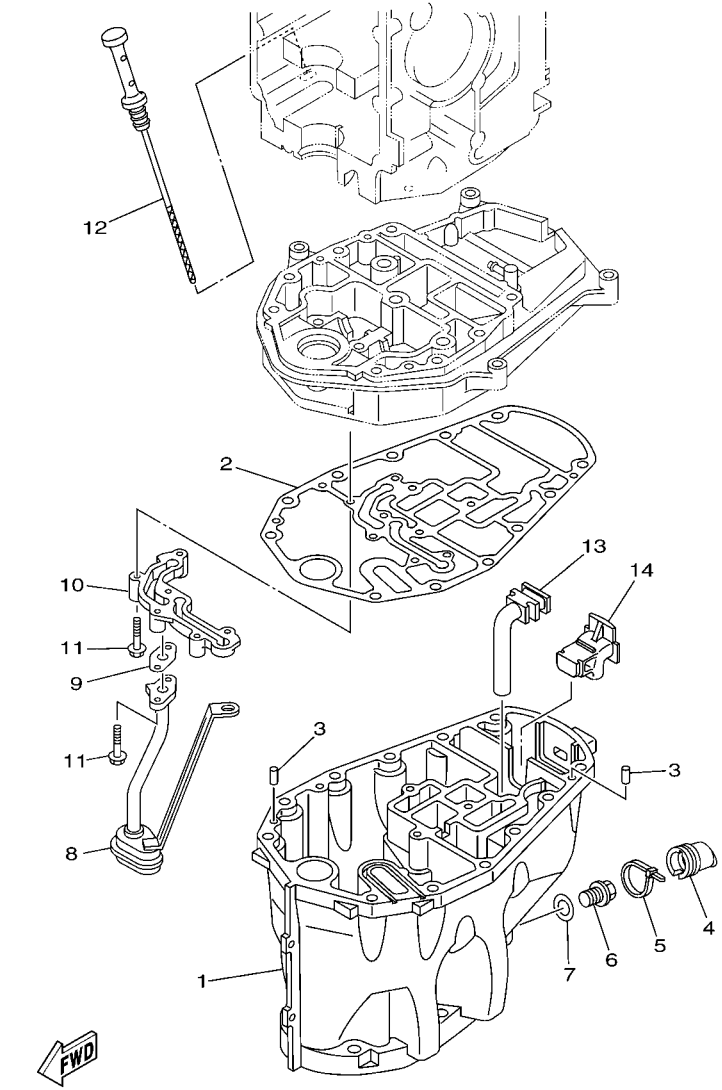

FIG. 27 OIL PAN — VENTILATEUR D'HUILE

REF. NO.	PART NO. N° PIECES	DESCRIPTION DESCRIPTION	ED	ET				REMARKS REMARQUES
1	6C5–15311–01–CA	OIL PAN VENTILATEUR D'HUILE	1	1				
2	6C5–15312–01	GASKET, OIL PAN JOINT DE VENTILATEUR D'HUILE	1	1				
3	93606–12019	PIN, DOWEL GOUPILLE	2	2				
4	6CJ–15316–00	DAMPER 1 AMORTISSEUR 1	1	1				
5	90465–11M59	CLAMP BRIDE	1	1				
6	90340–14M06	PLUG, STRAIGHT SCREW PLOT, FILETE DROIT	1	1				
7	90430–14M09	GASKET JOINT	1	1				
8	6CJ–13411–00	STRAINER, OIL FILTRE, HUILE	1	1				
9	6C5–13414–01	GASKET, STRAINER COVER JOINT, COUVERCLE DE FILTRE	1	1				
10	6CJ–15333–00	COVER COUVERCLE	1	1				
11	95812–06035	BOLT, FLANGE BOULON	6	6				
12	6C5–15362–00	PLUG, OIL LEVEL PLOT, NIVEAU D'HUILE	1	1				
13	6C5–45135–01	PIPE TUYAU	1	1				
14	6C5–45136–01	PIPE DURITE	1	1				

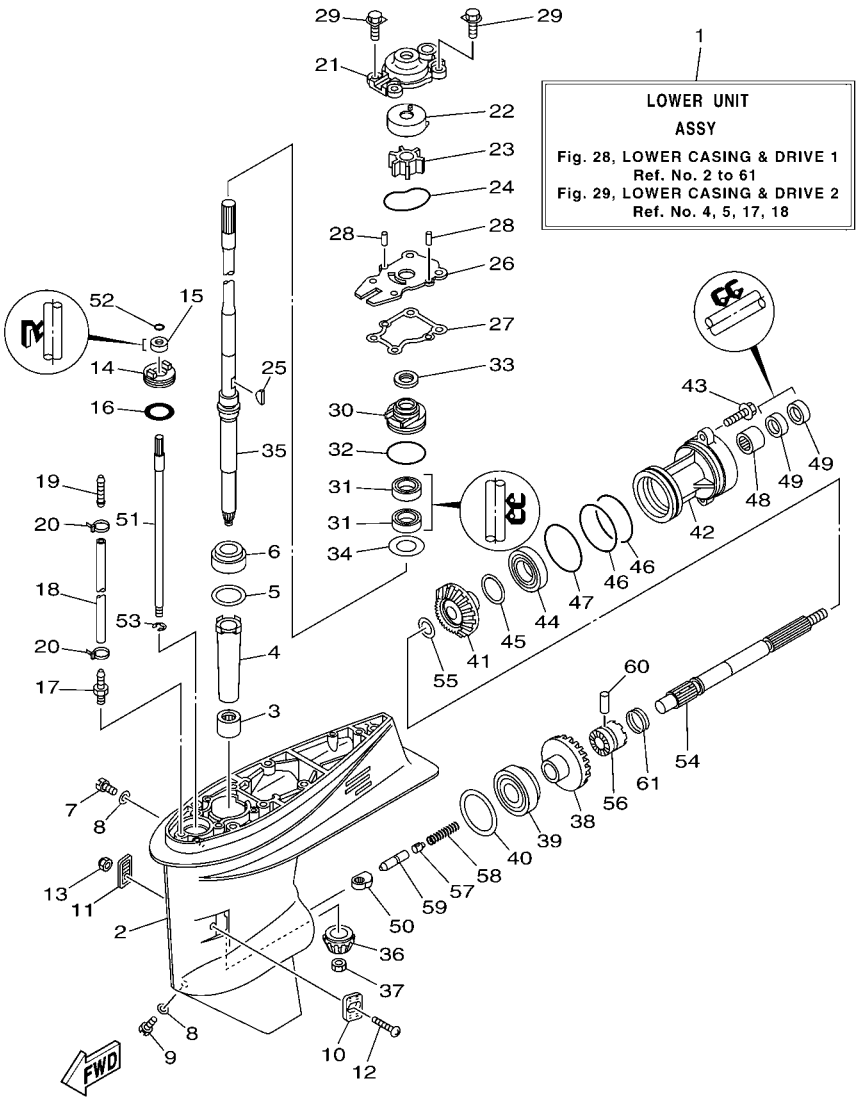

FIG. 28 LOWER CASING & DRIVE 1 BOITIER D'HELICE TRANSMISSION1

REF. NO.	PART NO. N° PIECES	DESCRIPTION DESCRIPTION	ED	ET				REMARKS REMARQUES
1	69W–45300–01–8D	LOWER UNIT ASSY UNITE INFERIEURE (ENS.)	1	1				L(20.7") L(20.7")
2	69W–45301–00–8D	CASING, LOWER BEQUILLE	1	1				
3	93315–32224	BEARING ROULEMENT	1	1				
4	6H4–45536–00	SLEEVE, DRIVE SHAFT MANCHON, ARBRE MOTEUR	1	1				
5	663–45587–01	SHIM (T:0.10MM) CALE (T:0.10MM)	1	1				UR UR
	663–45587–10	SHIM (T:0.12MM) CALE (T:0.12MM)	1	1				UR UR
	663–45587–20	SHIM (T:0.15MM) CALE (T:0.15MM)	1	1				UR UR
	663–45587–30	SHIM (T:0.18MM) CALE (T:0.18MM)	1	1				UR UR
	663–45587–40	SHIM (T:0.30MM) CALE (T:0.30MM)	1	1				UR UR
	663–45587–50	SHIM (T:0.40MM) CALE (T:0.40MM)	1	1				UR UR
	663–45587–60	SHIM (T:0.50MM) CALE (T:0.50MM)	1	1				UR UR
6	93332–00001	BEARING ROULEMENT	1	1				
7	90340–08002	PLUG, STRAIGHT SCREW PLOT, FILETE DROIT	1	1				
8	90430–08020	GASKET JOINT	2	2				
9	688–45341–10	PLUG, DRAIN BOUCHON DE VIDANGE	1	1				
10	63D–45214–00	COVER, WATER INLET 1 GRILLE, ENTREE D'EAU 1	1	1				
11	63D–45215–00	COVER, WATER INLET 2 GRILLE, ENTREE D'EAU 2	1	1				
12	90142–05M06	SCREW, COUNTERSUNK VIS, TETE NOYEE	1	1				
13	95380–05600	NUT ECROU	1	1				
14	63D–45321–00	PLATE PLAQUETTE	1	1				
15	93106–09014	OIL SEAL JOINT SPY	1	1				
16	93210–33MG4	O-RING JOINT TORIQUE	1	1				
17	6E5–45378–00	NIPPLE, HOSE RACCORD, TUYAU	1	1				
18	90445–07ME8	HOSE (L80) DURITE (L80)	1	1				L(20.7") L(20.7")
19	6E5–83558–10	END, NIPPLE RACCORD DE NIPPLE	1	1				
20	90465–11M10	CLAMP BRIDE	2	2				
21	63D–44311–00	HOUSING, WATER PUMP CORPS, POMPE A EAU	1	1				

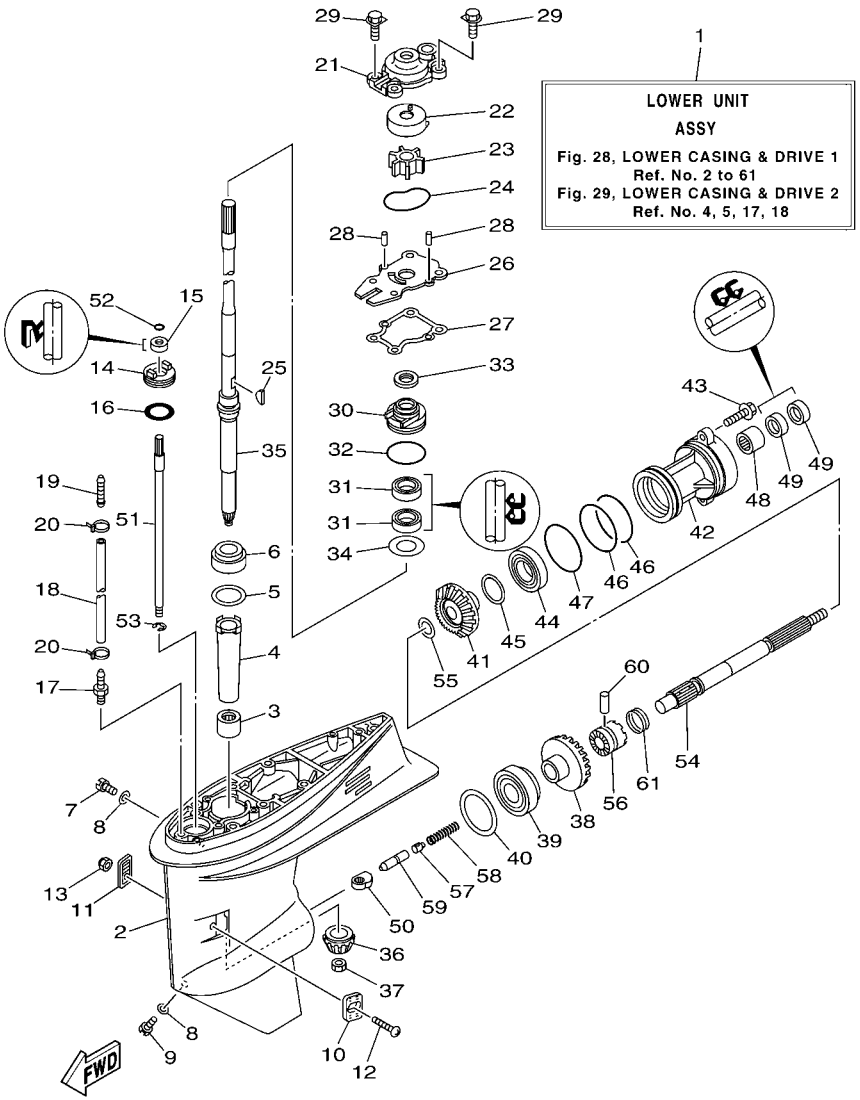

FIG. 28 LOWER CASING & DRIVE 1 BOITIER D'HELICE TRANSMISSION1

REF. NO.	PART NO. N° PIECES	DESCRIPTION DESCRIPTION	ED	ET				REMARKS REMARQUES
22	63D–44322–00	INSERT, CARTRIDGE CUVETTE	1	1				
23	6H3–44352–00	IMPELLER TURBINE	1	1				
24	93210–59MG7	O-RING JOINT TORIQUE	1	1				
25	90280–03024	KEY, WOODRUFF CLAVETTE, DEMI-LUNE	1	1				
26	63D–44323–00	OUTER PLATE, CARTRIDGE PLAQUE EXTERIEURE	1	1				
27	63D–44316–00	GASKET, WATER PUMP JOINT, POMPE A EAU	1	1				
28	93604–08062	PIN, DOWEL CLAVETTE	2	2				
29	90119–08M15	BOLT, WITH WASHER BOULON, AVEC RONDELLE	4	4				
30	6BG–44341–00	HOUSING, WATER PUMP CORPS, POMPE A EAU	1	1				
31	93101–25M57	OIL SEAL JOINT SPY	2	2				
32	93210–48001	O-RING JOINT TORIQUE	1	1				
33	63D–45344–00	COVER, OIL SEAL FLASQE, JOINT D'HUILE	1	1				
34	90201–27M00	WASHER, PLATE RONDELLE, PLATE	1	1				
35	69W–45501–00	DRIVE SHAFT COMP. ARBRE MOTEUR COMP.	1	1				L(20.7") L(20.7")
36	69W–45551–00	PINION (13T) PIGNON D'ATTAQUE (13D)	1	1				
37	90170–12138	NUT ECROU	1	1				
38	69W–45560–00	GEAR 1 (24T) PIGNON 1 (24T)	1	1				
39	93332–00092	BEARING ROULEMENT	1	1				
40	663–45567–01	SHIM (T:0.10MM) CALE (T:0.10MM)	1	1				UR UR
	663–45567–10	SHIM (T:0.12MM) CALE (T:0.12MM)	1	1				UR UR
	663–45567–20	SHIM (T:0.15MM) CALE (T:0.15MM)	1	1				UR UR
	663–45567–30	SHIM (T:0.18MM) CALE (T:0.18MM)	1	1				UR UR
	663–45567–40	SHIM (T:0.30MM) CALE (T:0.30MM)	1	1				UR UR
	663–45567–50	SHIM (T:0.40MM) CALE (T:0.40MM)	1	1				UR UR
	663–45567–60	SHIM (T:0.50MM) CALE (T:0.50MM)	1	1				UR UR
41	62Y–45571–00	GEAR 2 (24T) PIGNON 2 (24T)	1	1				
42	63D–45361–02–8D	CAP, LOWER CASING COUVERCLE, BOITIER D'HELICE	1	1				

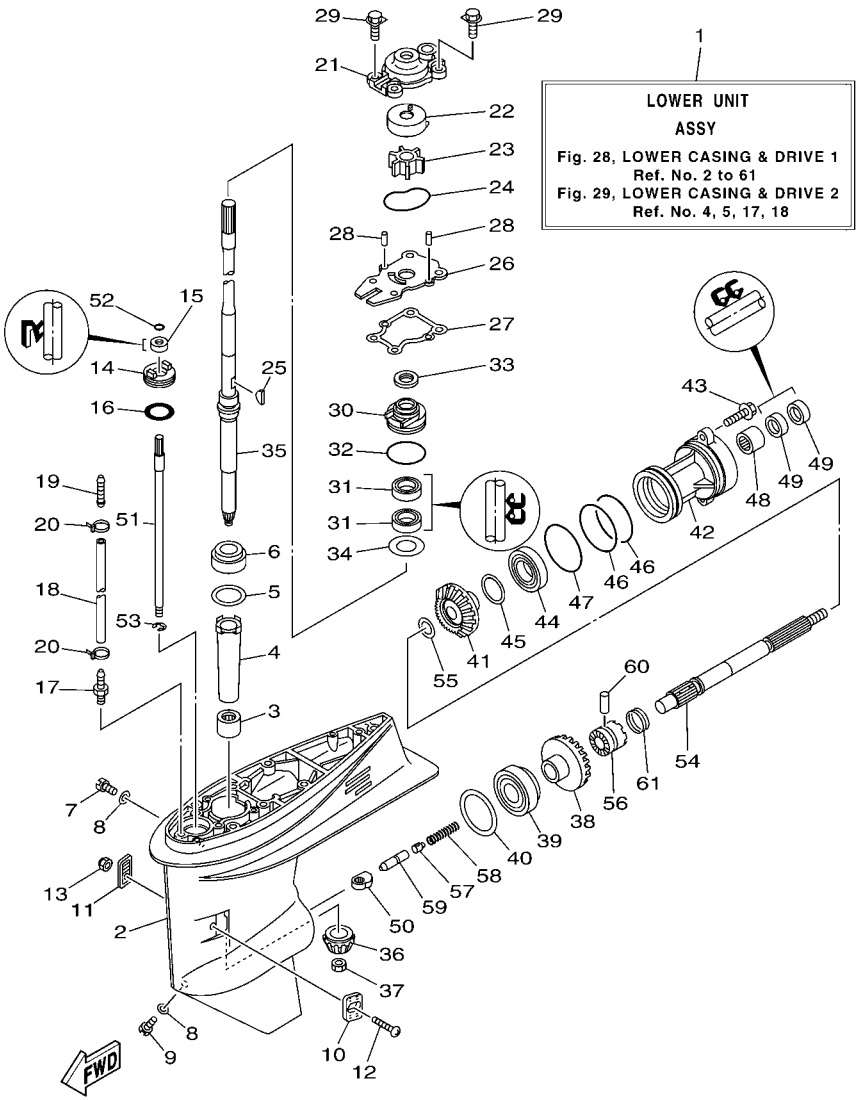

FIG. 28 LOWER CASING & DRIVE 1 BOITIER D'HELICE TRANSMISSION1

REF. NO.	PART NO. N° PIECES	DESCRIPTION DESCRIPTION	ED	ET				REMARKS REMARQUES
43	90105–08M61	BOLT, FLANGE BOULON	2	2				
44	93306–001U1	BEARING ROULEMENT	1	1				
45	63D–45577–00	SHIM (T:0.10MM) CALE (T:0.10MM)	1	1				UR UR
	63D–45577–10	SHIM (T:0.12MM) CALE (T:0.12MM)	1	1				UR UR
	63D–45577–20	SHIM (T:0.15MM) CALE (T:0.15MM)	1	1				UR UR
	63D–45577–30	SHIM (T:0.18MM) CALE (T:0.18MM)	1	1				UR UR
	63D–45577–40	SHIM (T:0.30MM) CALE (T:0.30MM)	1	1				UR UR
	63D–45577–50	SHIM (T:0.40MM) CALE (T:0.40MM)	1	1				UR UR
	63D–45577–60	SHIM (T:0.50MM) CALE (T:0.50MM)	1	1				UR UR
46	93210–74MG5	O-RING JOINT TORIQUE	2	2				
47	93210–69MG6	O-RING JOINT TORIQUE	1	1				
48	93317–22204	BEARING ROULEMENT	1	1				
49	93101–22M00	OIL SEAL JOINT SPY	2	2				
50	62Y–44151–00	CAM, SHIFT CAME, INVERSION	1	1				
51	63D–44144–00	ROD, SHIFT TIGE D'EMBRAYAGE	1	1				
52	93210–07003	O-RING JOINT TORIQUE	1	1				
53	99001–08600	CIRCLIP CIRCLIP	1	1				
54	63D–45611–00	SHAFT, PROPELLER ARBRE, HELICE	1	1				
55	90201–22008	WASHER, PLATE RONDELLE, PLATE	1	1				
56	62Y–45631–00	CLUTCH, DOG CRABOT	1	1				
57	663–45634–00	SLIDE, SHIFT CONTRE-POUSSOIR	1	1				
58	90501–18001	SPRING, COMPRESSION RESSORT, COMPRESSION	1	1				
59	63D–45635–00	PLUNGER, SHIFT POUSSOIR D'EMBRAYAGE	1	1				
60	90250–06023	PIN, STRAIGHT GOUPILLE, DROITE	1	1				
61	67C–45633–00	RING, CROSS PIN JONC, GOUPILLE CRABOT	1	1				

FIG. 29 LOWER CASING & DRIVE 2 BOITIER D'HELICE TRANSMISSION2

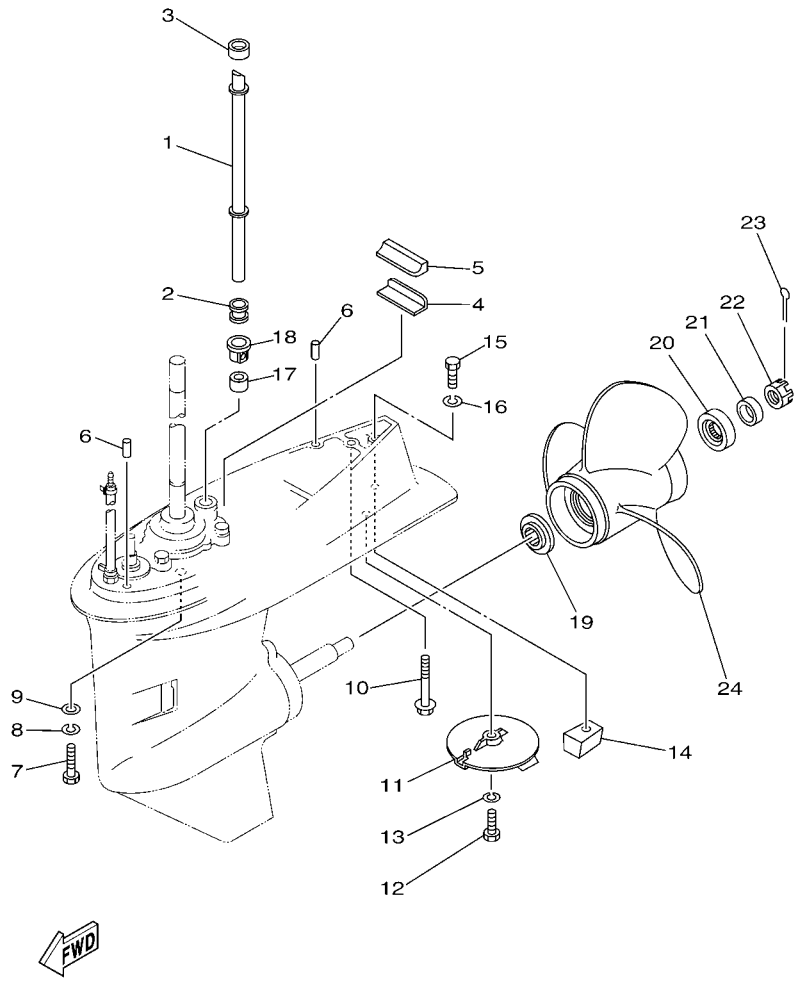

REF. NO.	PART NO. N° PIECES	DESCRIPTION DESCRIPTION	ED	ET				REMARKS REMARQUES
1	6C5–44361–00	TUBE, WATER 1 TUBE D'EAU 1	1	1				L(20.7") L(20.7")
2	663–44367–00	DAMPER, WATER SEAL 3 JOINT TUBE D'EAU 3	1	1				
3	663–44366–00	DAMPER, WATER SEAL 2 JOINT, TUBE D'EAU 2	1	1				
4	663–45376–00	GUIDE, SEAL DAMPER BUTEE, JOINT CAOUTCHOUC	1	1				
5	63D–45375–00	DAMPER, SEAL BOURRELET, CAOUTCHOUC	1	1				
6	93606–12019	PIN, DOWEL GOUPILLE	2	2				
7	97075–10040	BOLT BOULON	4	4				L(20.7") L(20.7")
8	92995–10100	WASHER RONDELLE	4	4				L(20.7") L(20.7")
9	92995–10600	WASHER RONDELLE	4	4				L(20.7") L(20.7")
10	90119–08M84	BOLT, WITH WASHER BOULON, AVEC RONDELLE	1	1				L(20.7") L(20.7")
11	67C–45371–00	TAB-TRIM ANODE DERIVE	1	1				
12	97095–08025	BOLT BOULON	1	1				
13	92995–08100	WASHER RONDELLE	1	1				
14	67C–45251–00	ANODE ANODE	1	1				
15	97095–08035	BOLT BOULON	1	1				
16	92995–08100	WASHER RONDELLE	1	1				
17	663–44366–00	DAMPER, WATER SEAL 2 JOINT, TUBE D'EAU 2	1	1				
18	63D–44312–00	COVER, WATER PUMP HOUSING COUVERCLE	1	1				
19	663–45987–02	SPACER 1 ENTRETOISE 1	1	1				
20	66T–45997–00	SPACER 2 ENTRETOISE 2	1	1				
21	90389–22M01	BUSH DOUILLE	1	1				
22	90171–16011	NUT, CASTLE ECROU, CRENELE	1	1				
23	91490–30025	PIN. COTTER GOUPILLE	1	1				
24	69W–45943–00–EL	PROPELLER (3X11"X15"-G) HELICE (3X11"X15"-G)	1	1				UR UR
	69W–45945–00–EL	PROPELLER (3X11-1/8"X13"-G) HELICE (3X11-1/8"X13"-G)	1	1				UR UR
	69W–45947–00–EL	PROPELLER (3X11-5/8"X11"-G) HELICE (3X11-5/8"X11"-G)	1	1				UR UR
	69W–45952–00–EL	PROPELLER (3X11-3/8"X12"-G) HELICE (3X11-3/8"X12"-G)	1	1				UR UR

FIG. 29 LOWER CASING & DRIVE 2 BOITIER D'HELICE TRANSMISSION2

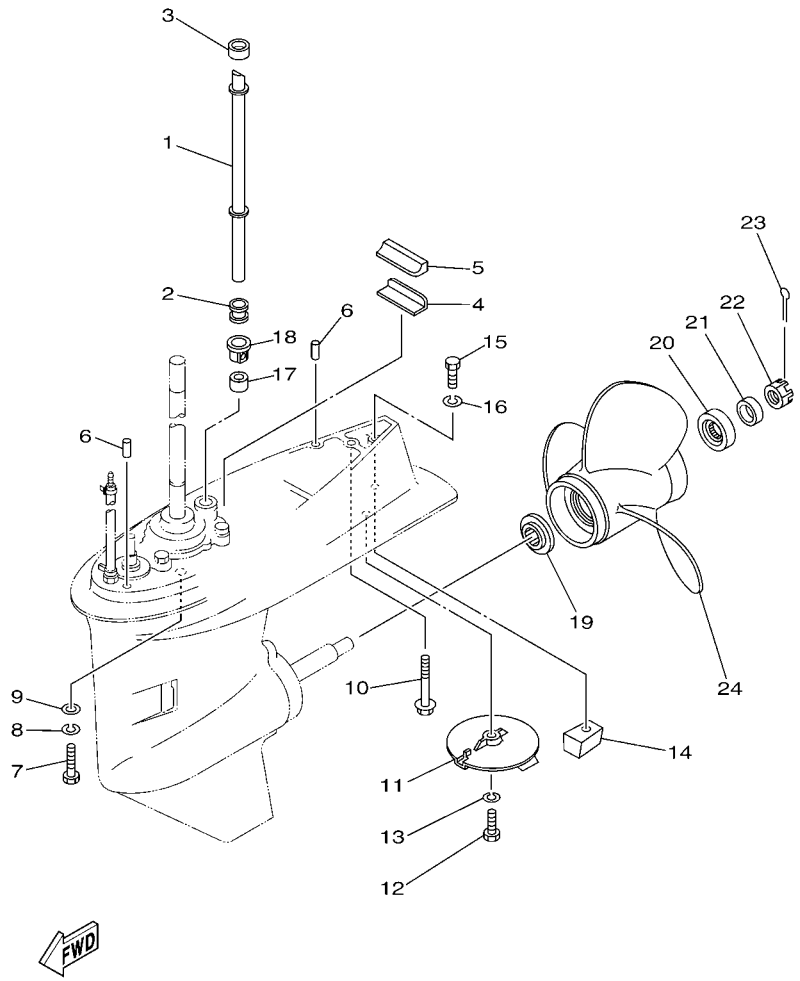

REF. NO.	PART NO. N° PIECES	DESCRIPTION DESCRIPTION	ED	ET				REMARKS REMARQUES
24	663–45941–01–EL	PROPELLER (3X10-3/4"X17"-G) HELICE (3X10-3/4"X17"-G)	1	1				UR UR
	663–45949–01–EL	PROPELLER (3X10-3/4"X16"-G) HELICE (3X10-3/4"X16"-G)	1	1				UR UR
	663–45952–02–EL	PROPELLER (3X11-3/8"X12"-G) HELICE (3X11-3/8"X12"-G)	1	1				UR UR
	663–45956–01–EL	PROPELLER (3X12-1/4"X9"-G) HELICE (3X12-1/4"X9"-G)	1	1				UR UR
	663–45958–01–EL	PROPELLER (3X11-1/4"X14"-G) HELICE (3X11-1/4"X14"-G)	1	1				UR UR
	6H5–45943–00–EL	PROPELLER (3X10"X15"-G) HELICE (3X10"X15"-G)	1	1				UR WITH LIP CUP UR WITH LIP CUP
	6H5–45945–00–EL	PROPELLER (3X10-3/8"X13"-G) HELICE (3X10-3/8"X13"-G)	1	1				UR WITH LIP CUP UR WITH LIP CUP
	6H5–45952–00–EL	PROPELLER (3X10-5/8"X12"-G) HELICE (3X10-5/8"X12"-G)	1	1				UR WITH LIP CUP UR WITH LIP CUP
	6H5–45958–00–EL	PROPELLER (3X10-1/4"X14"-G) HELICE (3X10-1/4"X14"-G)	1	1				UR WITH LIP CUP UR WITH LIP CUP
	663–45970–60–98	PROPELLER (3X11-3/4"X12"-G) HELICE (3X11-3/4"X12"-G)	1	1				UR UR
	663–45972–60–98	PROPELLER (3X12"X11"-G) HELICE (3X12"X11"-G)	1	1				UR UR
	663–45974–60–98	PROPELLER (3X11-1/2"X13"-G) HELICE (3X11-1/2"X13"-G)	1	1				UR UR
	697–45970–00–98	PROPELLER (3X11-1/4"X14"-G) HELICE (3X11-1/4"X14"-G)	1	1				UR UR
	663–45930–00–98	PROPELLER (3X10-1/4"X14"-G) HELICE (3X10-1/4"X14"-G)	1	1				UR UR
	663–45974–02–98	PROPELLER (3X10-5/8"X13"-G) HELICE (3X10-5/8"X13"-G)	1	1				UR UR
	663–45976–00–98	PROPELLER (3X10-1/4"X15"-G) HELICE (3X10-1/4"X15"-G)	1	1				UR UR
	663–45978–00–98	PROPELLER (3X10-1/4"X16"-G) HELICE (3X10-1/4"X16"-G)	1	1				UR UR

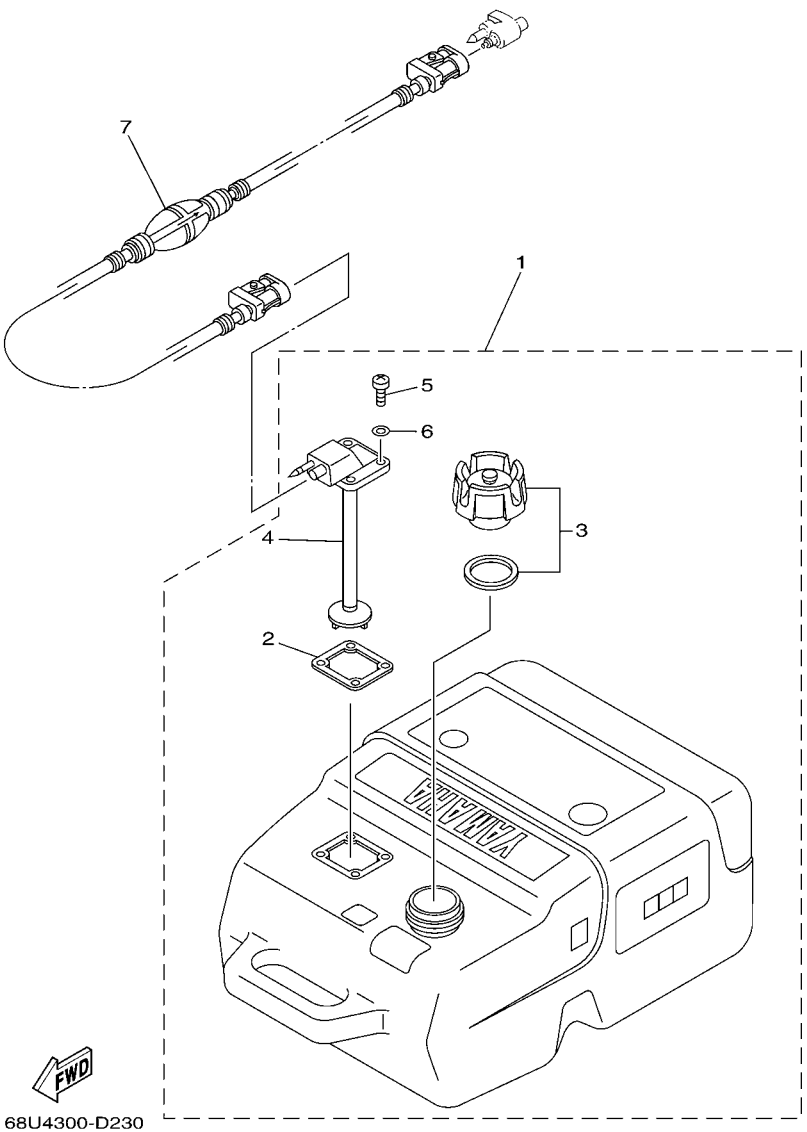

FIG. 30 FUEL TANK — RESERVOIR A CARBURANT

REF. NO.	PART NO. N° PIECES	DESCRIPTION DESCRIPTION	ED	ET				REMARKS REMARQUES
1	6YK–24201–03	FUEL TANK ASSY (25L) RESERVOIR A ESSENCE (ENS.) 25L	1	1				AP AP
2	6YL–24268–01	.GASKET, FUEL METER .JOINT, JAUGE A CARBURANT	1	1				
3	6YK–24610–01	.CAP ASSY .BOUCHON	1	1				
4	6YK–24260–01	.FUEL METER ASSY .INDICATEUR DE CARBURANT	1	1				
5	90157–05M16	.SCREW, PAN HEAD .VIS, TETE TRONCONIQUE	4	4				
6	6YL–24329–00	.SEAL .JOINT	4	4				
7	6YL–24306–54	FUEL PIPE COMP. 1 DURITE A ESSENCE 1	1	1				AP AP

FIG. 31 STEERING GUIDE FIXATION DE DIRECTION

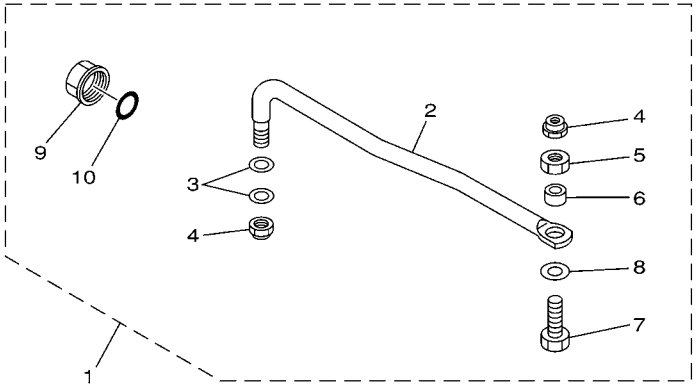

65W0010-8210

REF. NO.	PART NO. N° PIECES	DESCRIPTION DESCRIPTION	ED	ET				REMARKS REMARQUES
1	65W–61350–00	STEERING GUIDE ATTACHMENT KIT FIXATIONS DE DIRECTION	1	1				AP AP
2	65W–61351–00	.ROD, STEERING LINK .RENVOI DE DIRECTION	1	1				
3	90201–10M20	.WASHER, PLATE .RONDELLE, PLATE	2	2				
4	90185–09M01	.NUT, SELF-LOCKING .ECROU,AUTO-BLOQUANT	2	2				
5	90170–09M03	.NUT .ECROU	1	1				
6	90387–10M42	.COLLAR .COLLERETTE	1	1				
7	90101–09M01	.BOLT .BOULON	1	1				
8	90201–10M63	.WASHER, PLATE .RONDELLE, PLATE	1	1				
9	6E5–43145–01	.CAP, CLAMP BRACKET .CAPUCHON, PRESSE	1	1				
10	93210–16275	.O-RING .JOINT TORIQUE	1	1				

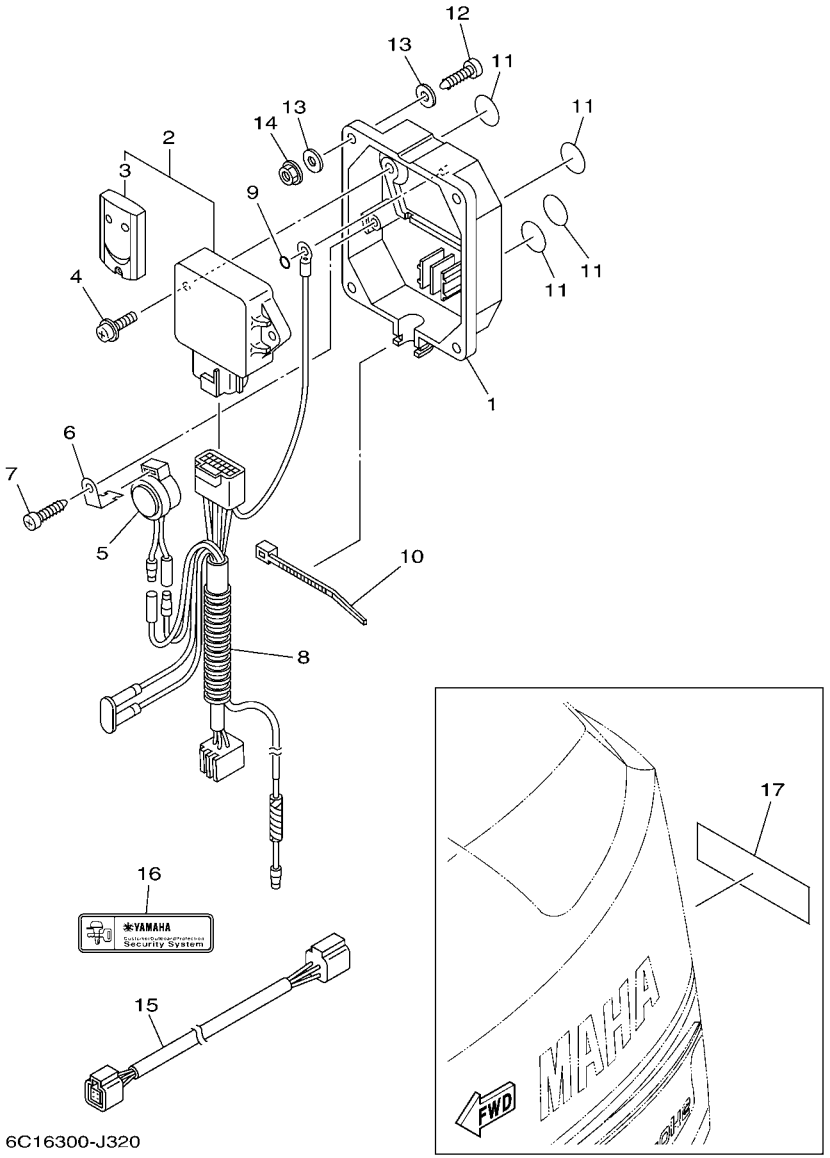

FIG. 32 OPTIONAL PARTS PIECES OPTIONNELLES

REF. NO.	PART NO. N° PIECES	DESCRIPTION DESCRIPTION	ED	ET				REMARKS REMARQUES
1	6Y8–86267–00	CASE COMPLETE 1 CARTER (ENS.) 1	1	1				
2	6Y8–86260–02	REMOTE CONTROL UNIT ASSY UNITE DE TELECOMMANDE (ENS.)	1	1				
3	6AA–86261–00	.TRANSMITTER COMP .TRANSMETTEUR	2	2				
4	97980–06216	SCREW, WITH WASHER VIS, AVEC RONDELLE	2	2				
5	6X4–83383–00	BUZZER RONFLEUR	1	1				
6	6X4–83386–00	STAY, BUZZER SUPPOR, RONFLEUR	1	1				
7	97780–60620	SCREW, TAPPING VIS, TETE BOMBEE	1	1				
8	6Y8–82509–10	WIRE, SUB LEAD FIL, SECONDAIRE	1	1				
9	93210–04279	O-RING JOINT TORIQUE	1	1				
10	90465–11M10	CLAMP BRIDE	1	1				
11	6Y8–8454G–00	PATCH 1 TAMPON 1	4	4				
12	90167–06M00	SCREW, TAPPING VIS, TETE FRAISEE	4	4				UR UR
	97880–06035	SCREW, PAN HEAD VIS, TETE TRONCONIQUE	4	4				UR UR
13	90201–06M30	WASHER, PLATE RONDELLE, PLATE	8	8				
14	95780–06300	NUT, FLANGE ECROU	4	4				
15	6Y8–82521–11	2FT PIGTAIL BUS FIL	1	1				
16	6Y8–48277–00	STICKER 1 ETIQUETTE 1	1	1				
17	6Y8–48277–00	STICKER 1 ETIQUETTE 1	1	1				

FIG. 33 REPAIR KIT 1 KITS DE REPARATION 1

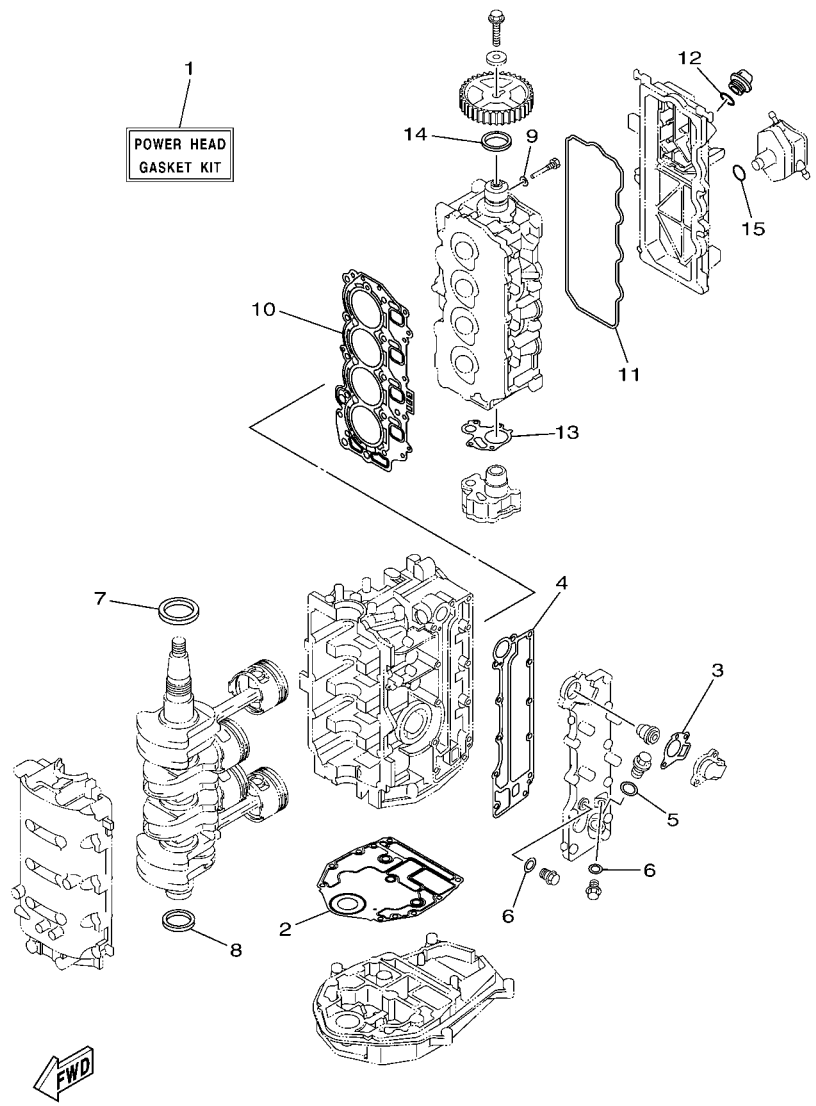

6C16110-J310

REF. NO.	PART NO. N° PIECES	DESCRIPTION DESCRIPTION	ED	ET				REMARKS REMARQUES
1	6C5–W0001–02	POWER HEAD GASKET KIT POCHETTE DE JINTS TETE MOTRICE	1	1				
2	6BG–11351–00	.GASKET, CYLINDER .JOINT, D'EMBASE	1	1				
3	62Y–12414–00	.GASKET, COVER .JOINT, COUVERCLE	1	1				
4	6C5–41114–10	.GASKET, EXHAUST OUTER COVER .JOINT, COUVERCLE D'ECHAPPEMENT	1	1				
5	90430–18130	.GASKET .JOINT	1	1				
6	90430–14115	.GASKET .JOINT	2	2				
7	93102–43M42	.OIL SEAL .JOINT SPY	1	1				
8	93101–35002	.OIL SEAL .JOINT SPY	1	1				
9	90430–06014	.GASKET .JOINT	1	1				
10	6C5–11181–01	.GASKET, CYLINDER HEAD 1 .JOINT, DE CULASSE 1	1	1				
11	62Y–11356–00	.SEAL, CYLINDER 2 .JOINT, SPY CYLINDRE	1	1				
12	93210–24M79	.O-RING .JOINT TORIQUE	1	1				
13	6C5–13329–00	.GASKET, PUMP COVER .JOINT, COUVERCLE DE POMPE	1	1				
14	93102–37M40	.OIL SEAL .JOINT SPY	1	1				
15	93210–24M79	.O-RING .JOINT TORIQUE	1	1				

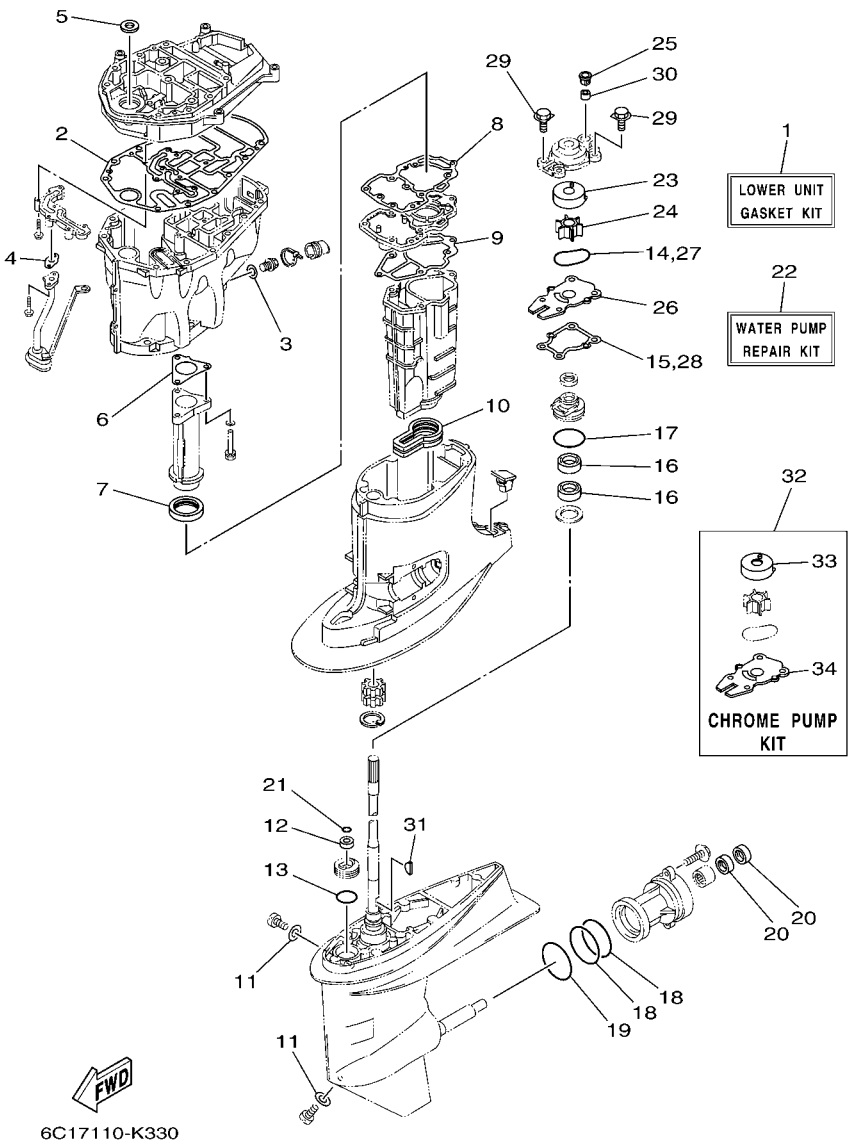

FIG. 34 REPAIR KIT 2 — KITS DE REPARATION 2

REF. NO.	PART NO. N° PIECES	DESCRIPTION DESCRIPTION	ED	ET				REMARKS REMARQUES
1	6C5–W0001–21	LOWER UNIT GASKET KIT POCHETTE DE JOINTS EMBASE	1	1				
2	6C5–15312–01	.GASKET, OIL PAN .JOINT DE VENTILATEUR D'HUILE	1	1				
3	90430–14M09	.GASKET .JOINT	1	1				
4	6C5–13414–01	.GASKET, STRAINER COVER .JOINT, COUVERCLE DE FILTRE	1	1				
5	93103–18011	.OIL SEAL .JOINT SPY	1	1				
6	6C5–41133–00	.GASKET, EXHAUST MANIFOLD 1 .JOINT, PIPE D'ECHAPPEMENT	1	1				
7	6C5–46132–00	.GASKET 1 .JOINT 1	1	1				
8	6C5–41134–00	.GASKET, EXHAUST MANIFOLD .JOINT, PIPE D'ECHAPPEMENT	1	1				
9	6C5–41135–00	.GASKET, EXHAUST MANIFOLD .JOINT, PIPE D'ECHAPPEMENT	1	1				
10	6C5–45123–00	.GASKET, MUFFLER .JOINT, POT DE DETENTE	1	1				
11	90430–08020	.GASKET .JOINT	2	2				
12	93106–09014	.OIL SEAL .JOINT SPY	1	1				
13	93210–33MG4	.O-RING .JOINT TORIQUE	1	1				
14	93210–59MG7	.O-RING .JOINT TORIQUE	1	1				
15	63D–44316–00	.GASKET, WATER PUMP .JOINT, POMPE A EAU	1	1				
16	93101–25M57	.OIL SEAL .JOINT SPY	2	2				
17	93210–48001	.O-RING .JOINT TORIQUE	1	1				
18	93210–74MG5	.O-RING .JOINT TORIQUE	2	2				
19	93210–69MG6	.O-RING .JOINT TORIQUE	1	1				
20	93101–22M00	.OIL SEAL .JOINT SPY	2	2				
21	93210–07003	.O-RING .JOINT TORIQUE	1	1				
22	63D–W0078–01	WATER PUMP REPAIR KIT KIT DE REPARATION DE LA POMPE	1	1				
23	63D–44322–00	.INSERT, CARTRIDGE .CUVETTE	1	1				
24	6H3–44352–00	.IMPELLER .TURBINE	1	1				
25	63D–44312–00	.COVER, WATER PUMP HOUSING .COUVERCLE	1	1				
26	63D–44323–00	.OUTER PLATE, CARTRIDGE .PLAQUE EXTERIEURE	1	1				
27	93210–59MG7	.O-RING .JOINT TORIQUE	1	1				

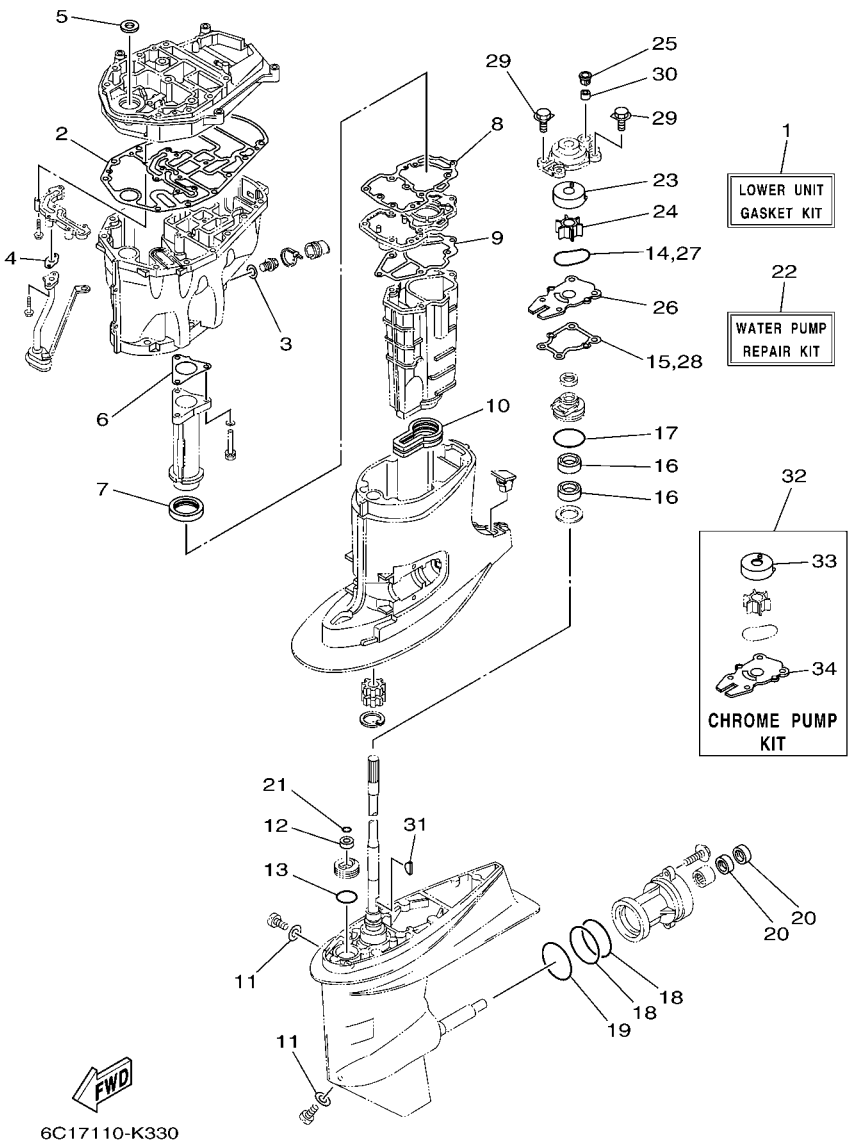

FIG. 34 REPAIR KIT 2 — KITS DE REPARATION 2

REF. NO.	PART NO. N° PIECES	DESCRIPTION DESCRIPTION	ED	ET				REMARKS REMARQUES
28	63D–44316–00	.GASKET, WATER PUMP .JOINT, POMPE A EAU	1	1				
29	90119–08M15	.BOLT, WITH WASHER .BOULON, AVEC RONDELLE	4	4				
30	663–44366–00	.DAMPER, WATER SEAL 2 .JOINT, TUBE D'EAU 2	1	1				
31	90280–03024	.KEY, WOODRUFF .CLAVETTE, DEMI-LUNE	1	1				
32	63D–W0078–0A	CHROME PUMP KIT KIT DE POMPE A EAU CHROMEE	1	1				
33	63D–44322–40	.INSERT, CARTRIDGE .CUVETTE	1	1				
34	63D–44323–40	.OUTER PLATE, CARTRIDGE .PLAQUE EXTERIEURE	1	1				

NUMERICAL INDEX
INDEX NUMERIQUE

PART NO. N° PIECES	REF. NO.
6C5–11111–01–9S	4 – 2
62Y–11119–00	4 – 22
	4 – 34
62Y–11133–30	4 – 3
6C5–11168–00	4 – 16
6C5–11181–01	4 – 10
	33 – 10
6C5–11191–01–9S	4 – 14
6G8–11197–01	4 – 6
62Y–11325–00	2 – 18
6G8–11325–00	4 – 4
66M–11327–00–94	2 – 20
66M–11328–00	2 – 19
6BG–11351–00	2 – 8
	33 – 2
62Y–11356–00	4 – 19
	33 – 11
6C5–11411–01	3 – 1
6BG–11416–00	3 – 2
6BG–11416–10	3 – 2
6BG–11416–20	3 – 2
6BG–11416–30	3 – 2
6C5–11536–00	10 – 7
6C5–11537–00	10 – 2
6H4–11545–00	12 – 5
62Y–11557–00	10 – 8
6G8–11577–00	10 – 15
67C–11603–00	3 – 7
67C–11604–00	3 – 7
67C–11605–00	3 – 7
69W–11631–01–97	3 – 6
62Y–11633–00	3 – 8
69W–11635–01	3 – 6
69W–11636–01	3 – 6
6C5–11650–00	3 – 3
6C5–11654–00	3 – 4
6CJ–11656–00	3 – 5
6CJ–11656–10	3 – 5
6CJ–11656–20	3 – 5
6CJ–11656–30	3 – 5
69W–12111–00	5 – 1
51Y–12114–00	5 – 4
62Y–12116–00	5 – 3
30X–12117–00	5 – 5
30X–12118–00	5 – 6
51Y–12119–00	5 – 7
69W–12121–00	5 – 2
6C5–12146–00	5 – 8

PART NO. N° PIECES	REF. NO.
62Y–12151–00	5 – 9
6C5–12151–00	5 – 12
62Y–12158–00	5 – 11
6C5–12158–00	5 – 14
64J–12159–00	5 – 10
6C5–12159–00	5 – 13
6C5–12171–00	10 – 1
6C5–12231–00	5 – 15
6C5–12233–00	5 – 16
6C5–12241–00	5 – 17
6C5–12243–00	5 – 18
6G8–12411–03	2 – 12
688–12412–00	2 – 13
6C5–12413–00–9S	2 – 14
62Y–12414–00	2 – 15
	33 – 3
62Y–12481–10	2 – 11
66M–12535–00	2 – 21
69W–12535–00	19 – 3
68T–12572–00	19 – 2
6C5–12576–00	7 – 17
6R3–12580–00	19 – 8
6C5–12858–00	2 – 31
6C5–13105–01	6 – 10
62Y–13131–00	11 – 24
6C5–13142–00	10 – 14
6C5–13161–00	6 – 13
6C5–13300–00	10 – 11
6C5–13329–00	10 – 17
	33 – 13
6CJ–13411–00	27 – 8
6C5–13414–01	27 – 9
	34 – 4
6C5–13428–01	7 – 21
67F–13434–20	1 – 16
6C5–13437–62	12 – 16
5GH–13440–20	2 – 30
69W–13448–00	1 – 15
6C5–13542–00	9 – 2
6C5–13545–00	9 – 18
6C5–13546–00	9 – 1
6C5–13547–00	9 – 19
6C5–13548–00	9 – 23
6C5–13557–00	6 – 4
6C5–13577–00	9 – 10
6C5–13593–00	8 – 20
6C5–13641–00	6 – 2
6C5–13645–00	6 – 3

PART NO. N° PIECES	REF. NO.
6C5–13716–00	8 – 22
6C5–13739–00	9 – 24
6C5–13750–00	6 – 5
6C5–13761–00	6 – 16
6C5–13781–00	8 – 21
6C5–13906–01	8 – 9
6C5–13907–00	8 – 17
6C5–13910–00	8 – 16
6C5–13915–00	8 – 19
6C5–13974–00	9 – 15
6C5–1410B–00	6 – 17
6C5–1410F–00	9 – 22
6C5–14127–00	8 – 18
6C5–14148–00	9 – 13
6BG–14149–00	9 – 8
6C5–14180–00	8 – 1
6CJ–14182–00	8 – 2
6C5–14191–00	8 – 13
6C5–14200–00	6 – 1
6C5–14225–00	8 – 25
6C5–14251–00	9 – 12
6C5–14386–00	8 – 5
6C5–14397–00	6 – 11
	8 – 14
6C5–14440–00	7 – 4
6C5–14446–00	6 – 15
6C1–14453–01	7 – 5
6C5–14453–01	7 – 5
6C1–14477–00	7 – 6
6AK–14477–01	7 – 6
62Y–14485–00	4 – 15
6C5–14496–00	6 – 9
6C5–14546–00	8 – 4
6C5–14567–00	8 – 15
6C5–14711–00–CA	26 – 13
6CJ–14960–00	8 – 12
6C5–14984–00	8 – 23
6C5–14985–00	8 – 3
6C5–15100–11	2 – 2
6C5–15311–01–CA	27 – 1
6C5–15312–01	27 – 2
	34 – 2
6CJ–15316–00	27 – 4
6C5–1531A–01	4 – 27
6CJ–15333–00	27 – 10
6C5–15362–00	27 – 12
6G8–15363–00	4 – 25
6C5–15378–00	4 – 28

PART NO. N° PIECES	REF. NO.
6C5–15378–11	4 – 31
6C5–21337–00	8 – 24
6C5–21841–00	9 – 11
6C5–22435–00	24 – 19
6C5–22471–00	24 – 12
6C5–2247A–00	11 – 4
6YK–24201–03	30 – 1
6C5–24251–00	9 – 20
6YK–24260–01	30 – 4
6YL–24268–01	30 – 2
6G1–24304–02	11 – 1
6YL–24306–54	30 – 7
6C5–24312–00	19 – 6
6C5–24321–00	9 – 3
6C5–24322–00	9 – 4
6C5–24323–00	9 – 5
6CJ–24324–00	9 – 6
6CJ–24325–00	9 – 7
61N–24329–00	18 – 28
6YL–24329–00	30 – 6
62Y–24374–01	11 – 29
67F–24377–00	11 – 5
688–24378–00	19 – 11
6C5–24378–00	19 – 13
6C5–24379–00	9 – 17
6C5–24387–00	9 – 14
6C5–24410–00	11 – 20
62Y–24411–02	11 – 22
6C5–24415–00	11 – 21
6C5–2441R–00	8 – 6
6C5–2441T–00	8 – 7
62Y–24423–00	11 – 23
6C5–24444–00	9 – 9
62Y–24444–01	11 – 26
6C5–24453–00	8 – 8
62Y–24454–00	11 – 25
6D8–24469–00	11 – 13
6C5–24471–00	11 – 27
6D8–24519–00	11 – 14
6C5–2451B–00	9 – 21
6D8–24560–00	11 – 9
6D8–24562–00	11 – 12
6D8–24563–00	11 – 10
6D8–24564–00	11 – 11
6C5–24566–01	11 – 15
6C5–24592–00	8 – 10
6YK–24610–01	30 – 3
6C5–28100–00	11 – 35

PART NO. N° PIECES	REF. NO.
67F–2812A–00	15 – 33
6C1–28199–77–D0	11 – 36
6C1–28199–77–E0	11 – 36
6C1–28199–77–F0	11 – 36
6C1–28199–77–G0	11 – 36
6C1–28199–77–H0	11 – 36
6C1–28199–77–S0	11 – 36
6C1–28199–87–K0	11 – 37
6C1–28199–87–L0	11 – 37
6C1–28199–87–M0	11 – 37
6C1–28199–87–N0	11 – 37
6C1–28199–87–P0	11 – 37
6C1–28199–87–R0	11 – 37
6C5–41113–11–9S	2 – 9
6C5–41114–10	2 – 16
	33 – 4
6C5–41131–00–CA	26 – 5
6C5–41133–00	26 – 4
	34 – 6
6C5–41134–00	26 – 9
	34 – 8
6C5–41135–00	26 – 12
	34 – 9
6C5–41137–01–CA	26 – 1
688–41211–01	20 – 23
6H4–41237–00	20 – 24
62Y–42154–00	20 – 26
6C5–42171–00	20 – 27
6C5–42335–00	20 – 32
69W–42510–01–8D	23 – 1
6AK–42610–00	1 – 1
6C1–42610–00	1 – 1
6C5–42610–00	1 – 1
67C–42613–00–8D	1 – 2
6C5–42615–00	1 – 14
6C5–42651–00	1 – 4
67C–42652–02	1 – 6
69W–42677–00	1 – 9
62Y–42677–30	1 – 9
62Y–42677–50	1 – 9
6AK–42678–00	1 – 10
6C1–42678–00	1 – 10
6C5–42678–00	1 – 10
69W–42681–00	1 – 12
69W–42682–00	1 – 13
6C5–42710–00–8D	18 – 1
6C5–42710–10–8D	18 – 1
62Y–42715–01	20 – 10

PART NO. N° PIECES	REF. NO.
62Y–42716–00	18 – 5
65W–42717–00	18 – 6
6C5–42718–00	18 – 8
6BG–42724–00	18 – 23
65W–42724–10	19 – 1
6C5–42725–30	18 – 9
6C5–42726–00	18 – 43
62Y–42727–00	18 – 10
68U–42727–00	18 – 26
6H3–42727–00	18 – 27
6C5–42738–00–8D	18 – 7
67C–42741–10–8D	18 – 29
6BG–42748–00	18 – 3
6AH–42794–40	19 – 18
6AH–42794–50	19 – 19
6C5–42811–00	15 – 29
67C–42815–00–8D	18 – 12
67C–42816–01	18 – 17
64J–43107–01–8D	21 – 28
6C1–43111–00–8D	21 – 1
6C5–43111–01–8D	22 – 1
6C1–43112–00–8D	21 – 2
6C5–43112–01–8D	22 – 2
69D–43126–00	21 – 35
6E5–43126–02	22 – 26
63D–43131–01	21 – 11
	22 – 11
66T–43144–00	18 – 19
6G5–43144–00	21 – 23
	22 – 23
6E5–43145–01	31 – 9
6G5–43148–00	21 – 19
	22 – 19
688–43160–01	21 – 24
688–43165–00	21 – 25
6C5–43181–00	21 – 14
	22 – 14
6C5–43185–00	21 – 15
	22 – 15
6C5–43311–01–8D	21 – 9
	22 – 9
682–43318–01	21 – 33
6C1–43631–00	21 – 32
63D–43691–00	21 – 31
6C5–43800–01–8D	24 – 1
6C5–43801–00	24 – 3
6C5–43804–01	25 – 5
6C5–43805–00	25 – 4

NUMERICAL INDEX
INDEX NUMERIQUE

PART NO. N° PIECES	REF. NO.
6C5–4380G–00	24 – 26
6C5–4380K–00	24 – 22
6C5–43810–00	24 – 2
6C5–43816–00	24 – 25
6C5–43817–10	24 – 23
6CJ–43818–00	21 – 40
	22 – 36
6C5–4381B–00	24 – 14
6C5–4381K–00	24 – 39
6C6–4381K–00	24 – 42
6C5–43821–00	24 – 5
62Y–43822–00	24 – 4
6H1–43829–00	24 – 67
6C6–4382E–00	24 – 32
6C5–4382K–00	24 – 45
6C5–4382L–00	24 – 60
6C5–43830–00	24 – 28
6C5–43831–00	24 – 68
6C5–43833–00	21 – 41
	22 – 37
6C5–43834–00	21 – 42
	22 – 38
6C5–43841–00	24 – 61
6C6–43841–00	24 – 29
6C5–43845–00	24 – 65
62X–4384H–00	24 – 18
6C5–43851–00	24 – 38
6C6–43853–00	24 – 34
6C5–43854–00	24 – 47
6C5–43855–00	24 – 43
6C5–43856–00	24 – 44
6C5–43861–00	24 – 10
	24 – 21
6C5–43862–00	24 – 9
62Y–43863–00	24 – 6
6C5–43863–00	24 – 8
6C5–43869–00	25 – 6
6C6–4386E–00	24 – 58
6C6–4386G–00	24 – 57
6C5–4386K–00	25 – 10
6C5–43871–00	24 – 11
62X–43872–00	24 – 7
6C5–43872–00	24 – 62
6C5–43875–00	24 – 13
6H1–43875–00	24 – 64
6C6–43878–00	24 – 51
6C5–43879–00	25 – 7
62Y–4387G–00	24 – 52

PART NO. N° PIECES	REF. NO.
6C6–4387G–00	24 – 35
6C5–43880–01	25 – 1
6C5–43881–01	25 – 11
6C5–43882–00	25 – 8
6H1–43883–00	24 – 30
6C5–43885–00	23 – 18
62X–43888–00	25 – 12
6C6–4388E–00	24 – 55
6C6–4388F–00	24 – 56
6C5–43891–00	25 – 9
6C5–43893–00	24 – 40
6C6–43893–00	24 – 41
6C6–43894–00	24 – 31
6C5–43895–00	24 – 46
6C5–43899–00	24 – 16
69J–4389J–00	24 – 24
	24 – 36
62Y–44117–01–94	20 – 2
62Y–44118–00–94	20 – 11
6C5–44120–01	20 – 7
69W–44121–00	20 – 1
688–44122–00	20 – 19
6C5–44122–00	20 – 8
62Y–44135–00	20 – 29
63D–44144–00	28 – 51
62Y–44151–00	28 – 50
63D–44311–00	28 – 21
63D–44312–00	29 – 18
	34 – 25
63D–44316–00	28 – 27
	34 – 15
	34 – 28
63D–44322–00	28 – 22
	34 – 23
63D–44322–40	34 – 33
63D–44323–00	28 – 26
	34 – 26
63D–44323–40	34 – 34
6BG–44341–00	28 – 30
6H3–44352–00	28 – 23
	34 – 24
6C5–44361–00	29 – 1
663–44366–00	29 – 3
	29 – 17
	34 – 30
663–44367–00	29 – 2
6C5–44385–01	23 – 35
6BL–44391–00	18 – 22

PART NO. N° PIECES	REF. NO.
69W–44514–00–94	23 – 10
69W–44526–01	23 – 12
6C5–44551–00–8D	23 – 16
6C5–44552–00–8D	23 – 19
69W–44555–00–94	23 – 20
6C5–44575–00	23 – 22
6C5–45111–00–8D	26 – 25
6C5–45123–00	26 – 15
	34 – 10
6C5–45135–01	27 – 13
6C5–45136–01	27 – 14
6C5–45155–00	26 – 18
6C5–45181–00–CA	26 – 10
63D–45214–00	28 – 10
63D–45215–00	28 – 11
65W–45251–00	21 – 5
	21 – 7
	22 – 5
	22 – 7
	22 – 24
663–45251–00	21 – 29
67C–45251–00	29 – 14
69W–45300–01–8D	28 – 1
69W–45301–00–8D	28 – 2
69W–45318–00	26 – 19
63D–45321–00	28 – 14
688–45341–10	28 – 9
63D–45344–00	28 – 33
63D–45361–02–8D	28 – 42
67C–45371–00	29 – 11
63D–45375–00	29 – 5
663–45376–00	29 – 4
6E5–45378–00	28 – 17
69W–45501–00	28 – 35
6H4–45536–00	28 – 4
69W–45551–00	28 – 36
69W–45560–00	28 – 38
663–45567–01	28 – 40
663–45567–10	28 – 40
663–45567–20	28 – 40
663–45567–30	28 – 40
663–45567–40	28 – 40
663–45567–50	28 – 40
663–45567–60	28 – 40
62Y–45571–00	28 – 41
63D–45577–00	28 – 45
63D–45577–10	28 – 45
63D–45577–20	28 – 45

PART NO. N° PIECES	REF. NO.
63D–45577–30	28 – 45
63D–45577–40	28 – 45
63D–45577–50	28 – 45
63D–45577–60	28 – 45
663–45587–01	28 – 5
663–45587–10	28 – 5
663–45587–20	28 – 5
663–45587–30	28 – 5
663–45587–40	28 – 5
663–45587–50	28 – 5
663–45587–60	28 – 5
63D–45611–00	28 – 54
62Y–45631–00	28 – 56
67C–45633–00	28 – 61
663–45634–00	28 – 57
63D–45635–00	28 – 59
663–45930–00–98	29 – 24
663–45941–01–EL	29 – 24
69W–45943–00–EL	29 – 24
6H5–45943–00–EL	29 – 24
69W–45945–00–EL	29 – 24
6H5–45945–00–EL	29 – 24
69W–45947–00–EL	29 – 24
663–45949–01–EL	29 – 24
69W–45952–00–EL	29 – 24
6H5–45952–00–EL	29 – 24
663–45952–02–EL	29 – 24
663–45956–01–EL	29 – 24
6H5–45958–00–EL	29 – 24
663–45958–01–EL	29 – 24
697–45970–00–98	29 – 24
663–45970–60–98	29 – 24
663–45972–60–98	29 – 24
663–45974–02–98	29 – 24
663–45974–60–98	29 – 24
663–45976–00–98	29 – 24
663–45978–00–98	29 – 24
663–45987–02	29 – 19
66T–45997–00	29 – 20
6C5–46132–00	26 – 6
	34 – 7
6C5–46241–00	10 – 6
6Y8–48277–00	32 – 16
	32 – 17
69W–48344–00	20 – 22
	20 – 36
65W–48511–10	23 – 41
62Y–48538–00	20 – 38

PART NO. N° PIECES	REF. NO.
65W–61350–00	31 – 1
65W–61351–00	31 – 2
6C5–81145–00	6 – 7
6C5–81146–00	6 – 12
68V–81315–00	15 – 10
6C5–81336–00	14 – 2
6C5–81337–00	12 – 1
6C5–81410–00	12 – 4
6C5–81450–00	12 – 3
6CJ–81800–00	17 – 1
69J–81801–00	17 – 5
67F–81807–00	17 – 10
67F–81808–00	17 – 8
67F–81809–00	17 – 19
67F–81810–00	17 – 3
67F–81813–00	17 – 6
6C5–81815–00	14 – 17
68F–81820–00	17 – 7
67F–81821–00	17 – 13
6C5–81822–00–94	16 – 3
6K7–81826–11	17 – 24
69J–81828–00	17 – 25
6C5–8182L–00	6 – 8
67F–81830–00	17 – 17
67F–81832–00	17 – 11
67F–81836–00	17 – 12
6C5–81839–00	17 – 21
67F–8183R–00	17 – 16
60V–8183T–00	17 – 18
69J–81840–00	17 – 4
67F–81841–00	17 – 14
60X–81842–00	17 – 20
67F–81846–00	17 – 26
67F–81850–00	17 – 2
67F–81857–00	17 – 9
6C5–81869–00	17 – 23
67F–81891–00	17 – 15
6C5–81919–00	15 – 34
60V–81925–00	14 – 14
6C5–81941–00	17 – 22
6C5–81942–00	15 – 23
6C5–81948–00	14 – 21
68V–8194A–00	14 – 32
60E–81950–00	14 – 1
63P–81950–00	14 – 27
6C5–81953–00	14 – 35
68V–81960–10	13 – 14
6AH–81994–40	12 – 20

PART NO. N° PIECES	REF. NO.
6AH–81994–50	12 – 21
6AH–81995–40	12 – 17
6AH–81995–50	12 – 18
6AG–81996–00	12 – 22
6C5–82105–00	16 – 1
6G5–82119–00	14 – 34
682–82119–01	14 – 28
67C–82127–10	23 – 32
6E5–82148–00	21 – 3
	22 – 3
67F–82151–00	15 – 2
67F–82151–10	15 – 3
67F–8215B–10	15 – 4
67F–8215B–20	15 – 5
6C5–82171–00	13 – 17
6C5–82176–00	15 – 27
63P–82310–01	13 – 5
6C5–82316–01	13 – 11
6C5–82316–11	13 – 12
6A0–82317–00	7 – 8
	14 – 26
6C5–82317–00	13 – 21
6E7–82317–00	18 – 25
6C5–82340–01	13 – 6
6C5–82377–00	19 – 17
6C5–82388–00	15 – 14
64J–82504–00	15 – 22
6Y8–82509–10	32 – 8
6Y8–82521–11	32 – 15
6C5–8252R–00	15 – 28
6C5–82553–00	15 – 11
6C5–82554–01	15 – 18
63D–82563–10	14 – 39
6C5–8257V–00	14 – 4
68F–82582–00	14 – 16
6P2–82582–00	15 – 6
6P2–82582–10	15 – 7
6E5–82587–00	14 – 42
61A–82588–01	15 – 19
6C5–82590–40	15 – 1
6C5–82590–50	15 – 1
60V–8259F–00	15 – 17
6X4–83383–00	32 – 5
6X4–83386–00	32 – 6
6E5–83558–00	23 – 31
	23 – 38
6E5–83558–10	28 – 19
6C5–83614–01	14 – 40

NUMERICAL INDEX
INDEX NUMERIQUE

PART NO. N° PIECES	REF. NO.
62Y–83626–00	12 – 19
67F–83627–01	17 – 27
63D–83672–11	22 – 30
68F–83688–00	6 – 18
6Y8–8454G–00	32 – 11
6C5–85525–00	13 – 1
6C5–85548–00	14 – 22
6C5–85561–00	12 – 9
62Y–85580–00	12 – 12
6CJ–85790–00	15 – 12
6C5–85885–00	6 – 6
6AK–8591A–02	13 – 20
6C1–8591A–22	13 – 20
6C5–8591A–22	13 – 20
6C5–86112–00	7 – 14
6C5–86120–00	7 – 12
6Y8–86260–02	32 – 2
6AA–86261–00	32 – 3
6Y8–86267–00	32 – 1
6C5–87226–00	8 – 11
6C5–W0001–02	33 – 1
6C5–W0001–21	34 – 1
69W–W0070–00	1 – 11
63D–W0078–01	34 – 22
63D–W0078–0A	34 – 32
6C5–W009A–12–9S	4 – 1
6C5–W009B–04–9S	2 – 1
90101–06020	21 – 6
	21 – 8
	22 – 6
	22 – 8
	22 – 25
90101–06054	20 – 12
90101–08M15	23 – 11
90101–09M01	31 – 7
90101–12M65	21 – 45
	22 – 41
90105–08060	5 – 20
90105–08M61	28 – 43
90105–09005	4 – 12
90109–06047	1 – 7
90109–06M65	4 – 8
90109–06M80	18 – 34
	19 – 5
90109–06M81	18 – 11
90109–06M86	14 – 41
	14 – 41
	18 – 20

PART NO. N° PIECES	REF. NO.
90109–12MA3	23 – 23
90116–10038	23 – 7
90119–06025	10 – 18
90119–06077	15 – 31
90119–06087	7 – 3
90119–06106	7 – 10
	20 – 31
90119–06261	26 – 7
90119–06M59	13 – 23
	14 – 25
90119–06M61	7 – 11
	18 – 2
90119–06MA3	4 – 13
90119–06MA5	2 – 17
90119–08069	7 – 2
90119–08102	26 – 16
90119–08131	23 – 21
90119–08132	26 – 17
90119–08154	2 – 4
90119–08M15	28 – 29
	34 – 29
90119–08M84	29 – 10
90142–05M06	28 – 12
90152–06M01	21 – 30
90157–05M16	30 – 5
90159–04005	14 – 18
90159–06M14	15 – 25
90167–06002	19 – 4
90167–06M00	32 – 12
90170–09M03	31 – 5
90170–12138	28 – 37
90170–20137	12 – 6
90171–16011	29 – 22
90179–06029	1 – 3
90179–08003	14 – 15
90179–35001	10 – 9
90185–06M05	1 – 8
90185–08045	23 – 13
90185–09M01	31 – 4
90185–10051	23 – 8
90185–22M11	21 – 13
	22 – 13
90201–06015	26 – 8
90201–06M30	32 – 13
90201–10060	21 – 44
	22 – 40
90201–10120	23 – 42
90201–10144	10 – 5

PART NO. N° PIECES	REF. NO.
90201–10M20	20 – 16
	31 – 3
90201–10M63	31 – 8
90201–12426	21 – 47
	22 – 43
90201–12M07	18 – 16
90201–12M16	23 – 17
90201–13M19	23 – 26
90201–16014	5 – 19
90201–21M18	12 – 7
90201–22008	28 – 55
90201–22M05	23 – 27
90201–27M00	28 – 34
90201–30M00	23 – 2
90202–07M07	20 – 20
90202–21100	23 – 25
90206–08N51	25 – 2
90206–10M04	20 – 34
90206–12052	18 – 15
90249–06M19	21 – 20
	22 – 20
90250–06023	28 – 60
90266–06M02	1 – 5
90280–03024	28 – 25
	34 – 31
90280–03M01	10 – 10
90340–08002	28 – 7
90340–14M06	2 – 28
	27 – 6
90340–18M09	2 – 26
90344–51003	2 – 7
90386–10025	21 – 17
	22 – 17
90386–10M16	21 – 16
	22 – 16
90386–12M37	18 – 13
90386–12MA2	18 – 14
90386–18M35	22 – 28
90386–18M92	22 – 27
90386–22MA4	21 – 12
	22 – 12
90386–30M60	23 – 6
90386–30M77	23 – 4
90386–30M78	23 – 3
90386–90M90	20 – 15
90387–04001	15 – 20
90387–06060	18 – 4
90387–06119	7 – 9

PART NO. N° PIECES	REF. NO.
90387–06119	13 – 22
	14 – 24
90387–06M43	18 – 36
90387–06M45	20 – 30
90387–06M69	8 – 26
90387–06M82	20 – 35
90387–10M42	31 – 6
90387–16003	21 – 37
90387–16004	21 – 38
90389–22M01	29 – 21
90413–05014	23 – 34
90430–06014	4 – 9
	33 – 9
90430–08020	28 – 8
	34 – 11
90430–14115	2 – 29
	15 – 13
	33 – 6
90430–14M09	27 – 7
	34 – 3
90430–18130	2 – 27
	33 – 5
90445–07M30	23 – 39
90445–07ME8	28 – 18
90445–07MF2	23 – 30
90445–09091	19 – 14
90445–09220	19 – 12
90445–09226	19 – 9
90445–09304	19 – 15
90445–13M02	11 – 6
90445–13M36	11 – 18
90446–14M62	11 – 34
90447–07001	23 – 36
90447–10006	19 – 16
90447–19009	22 – 35
90450–50001	7 – 7
90462–08031	19 – 10
90464–06001	13 – 13
90464–07M05	13 – 8
90464–07M41	13 – 7
90464–07M56	6 – 14
90464–09M13	18 – 24
90464–09M49	18 – 37
90464–10006	23 – 37
90464–12006	7 – 19
90464–15008	7 – 18
90464–18007	15 – 30
90464–18246	13 – 4

PART NO. N° PIECES	REF. NO.
90464–76001	21 – 36
	22 – 33
90465–05M87	14 – 7
90465–06M86	23 – 28
90465–11M10	7 – 20
	9 – 16
	11 – 7
	14 – 36
	18 – 38
	19 – 7
	22 – 34
	23 – 29
	23 – 40
	28 – 20
	32 – 10
90465–11M59	27 – 5
90465–13M11	15 – 9
90465–13M18	7 – 24
	16 – 14
90465–13M24	15 – 8
	15 – 26
90465–13M39	15 – 24
90465–13M97	12 – 15
	14 – 38
	14 – 43
90467–09M17	11 – 8
90467–10M04	11 – 19
	11 – 33
90468–18008	20 – 18
	20 – 21
	20 – 37
90480–09M12	8 – 27
90480–12072	16 – 2
90480–12314	12 – 2
90480–13598	15 – 32
90480–13M24	18 – 35
90480–24003	16 – 11
90501–12082	20 – 13
90501–18001	28 – 58
90501–6C500	10 – 16
90502–16M02	21 – 27
90506–14M24	21 – 21
	22 – 21
90506–18M40	18 – 21
91312–03005	24 – 59
91312–03016	24 – 54
91312–04030	24 – 53
91312–05025	24 – 50

PART NO. N° PIECES	REF. NO.
91312–05030	24 – 37
91312–05045	24 – 27
91312–05050	24 – 70
91490–16010	20 – 28
91490–20015	20 – 17
91490–30025	29 – 23
91690–30012	21 – 26
91690–30020	21 – 18
	22 – 18
92903–06600	2 – 6
92903–08100	14 – 20
92903–08600	16 – 13
92907–04600	4 – 18
92990–06100	18 – 32
92990–06600	18 – 33
	18 – 41
92990–08200	5 – 21
92995–05600	2 – 23
	12 – 14
92995–06100	14 – 9
	14 – 12
	18 – 42
92995–06600	2 – 25
	4 – 21
	4 – 24
	4 – 30
	4 – 33
	4 – 36
	7 – 16
	7 – 23
	11 – 3
	11 – 32
	13 – 3
	13 – 10
	13 – 16
	13 – 19
	14 – 6
	14 – 10
	14 – 13
	14 – 31
	15 – 16
	20 – 4
	20 – 6
	22 – 32
92995–08100	29 – 13
	29 – 16
92995–08600	16 – 8
	16 – 10

NUMERICAL INDEX
INDEX NUMERIQUE

PART NO. N° PIECES	REF. NO.
92995–08600	23 – 15
92995–10100	26 – 22
	29 – 8
92995–10600	26 – 23
	29 – 9
92995–12200	21 – 46
	22 – 42
92A08–03110	24 – 48
93101–22M00	28 – 49
	34 – 20
93101–25M57	28 – 31
	34 – 16
93101–35002	3 – 11
	33 – 8
93102–37M40	10 – 19
	33 – 14
93102–43M42	3 – 10
	33 – 7
93103–18011	26 – 2
	34 – 5
93106–09014	28 – 15
	34 – 12
93210–04279	32 – 9
93210–07003	28 – 52
	34 – 21
93210–09165	24 – 66
93210–13M63	4 – 7
93210–16275	31 – 10
93210–18397	24 – 63
93210–24M79	4 – 26
	11 – 30
	33 – 12
	33 – 15
93210–29M94	23 – 5
93210–33MG4	28 – 16
	34 – 13
93210–48001	28 – 32
	34 – 17
93210–59MG7	28 – 24
	34 – 14
	34 – 27
93210–64488	24 – 69
93210–69MG6	28 – 47
	34 – 19
93210–74MG5	28 – 46
	34 – 18
93306–001U1	28 – 44
93315–32224	28 – 3

PART NO. N° PIECES	REF. NO.
93317–22204	28 – 48
93332–00001	28 – 6
93332–00092	28 – 39
93399–999T8	25 – 3
93410–16006	21 – 39
93410–18M02	22 – 29
93410–28M06	23 – 9
93420–36M01	26 – 20
93450–17129	3 – 9
93450–32116	24 – 15
93501–04M02	20 – 14
93503–16003	24 – 17
93505–32038	24 – 33
93603–17070	10 – 12
93604–08062	28 – 28
93604–10M03	2 – 10
	26 – 11
93605–17002	10 – 3
93606–12019	2 – 3
	26 – 24
	27 – 3
	29 – 6
93608–12M05	7 – 1
	26 – 3
93700–06M03	21 – 10
	22 – 10
94702–00418	4 – 37
95023–06030	12 – 8
	12 – 10
95302–03600	24 – 49
95333–08600	14 – 19
95380–05600	11 – 28
	28 – 13
95380–05700	20 – 25
95380–06600	7 – 13
	18 – 30
95380–06800	18 – 40
95380–08600	11 – 17
	16 – 6
95380–12600	21 – 48
	22 – 44
95380–12700	23 – 24
95680–08330	16 – 5
95780–06300	32 – 14
95812–06035	27 – 11
95817–10035	10 – 4
95895–06035	20 – 33
95895–08016	11 – 16

PART NO. N° PIECES	REF. NO.
97013–06035	2 – 5
97013–08045	16 – 12
97075–08030	23 – 14
97075–10040	29 – 7
97075–10045	26 – 21
97095–05012	2 – 22
	12 – 13
97095–06010	21 – 22
	21 – 34
	22 – 22
97095–06014	4 – 29
	4 – 32
	13 – 2
	13 – 18
	14 – 5
	15 – 15
	18 – 18
97095–06016	7 – 15
	7 – 22
97095–06020	2 – 24
	4 – 20
	4 – 23
	4 – 35
	14 – 8
	14 – 11
	14 – 30
	18 – 39
	20 – 3
97095–06025	11 – 2
	13 – 9
	13 – 15
	20 – 5
97095–06030	11 – 31
97095–08025	16 – 9
	29 – 12
97095–08035	16 – 7
	29 – 15
97575–06525	26 – 14
97575–10530	21 – 43
	22 – 39
97595–05514	20 – 9
97595–06610	14 – 29
	14 – 33
97780–60620	14 – 3
	14 – 23
	14 – 37
	32 – 7
97880–05025	4 – 5

PART NO. N° PIECES	REF. NO.
97880–06025	18 – 31
97880–06035	32 – 12
97885–06008	21 – 4
	22 – 4
	23 – 33
97885–06016	22 – 31
97980–06216	32 – 4
97985–04116	15 – 21
98507–04010	4 – 17
98580–06016	10 – 13
99001–08600	28 – 53
99009–32500	24 – 20
99530–08012	4 – 11
	12 – 11
99590–10114	16 – 4

PART NO. N° PIECES	REF. NO.

PART NO. N° PIECES	REF. NO.