YAMAHA

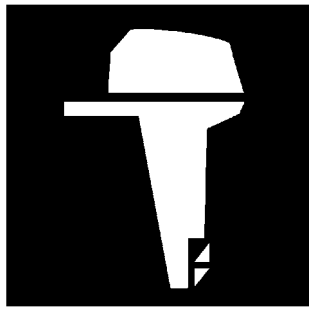

PARTS CATALOGUE
CATALOGUE DE PIECES DETACHEES

F8CMH'11 (60R7)

1K60R-300F1

( )

YAMAHA
GENUINE
Parts & Accessories

F8CMH
PARTS CATALOGUE
©2010 by Yamaha Motor Co., Ltd.
1st edition, July 2010
All rights reserved.
Any reprinting or unauthorized use
without the written permission of
Yamaha Motor Co., Ltd.
is expressly prohibited.
Printed in Japan.

F8CMH
CATALOGUE DE PIECES DETACHEES
©2010 par Yamaha Motor Co., Ltd.
1re édition, juillet 2010
Tous droits réservés
Toute réimpression ou utilisation
non autorisée sans la permission écrite
de la Yamaha Motor Co., Ltd.
est formellement interdite.
Imprimé au Japon

FOREWORD

This Parts Catalogue is related to the parts for the model(s) on the cover page. When you are ordering replacement parts, please refer to this Parts Catalogue and quote both part numbers and part names correctly.

1. Modifications or additions which have been made after the issue of the Parts Catalogue will be announced in the Parts News.
   It is advisable that you make the necessary corrections to the Parts Catalogue according to the Parts News.

2. Abbreviations
   The following abbreviations are used in this Parts Catalogue.

   "UR" Use specified parts number.
   "UN" Use as many as needed.
   "AP" Alternate Parts
   "LM" Locally Made (Parts need to be ordered locally)
   "F#" Frame No. (Applicable machine No.)
   "O/S" Over Size

3. The number of components for assembly
   - Parts, which are to be supplied in an assembly, are listed with a dot (.) in front of the part name as shown below.
   - The numeral appearing to the right of each component part indicates the quantity of parts for each assembly unit.

PART NO.	DESCRIPTION	Q'TY	REMARKS
2F5–83310–60	FRONT FLASHER LIGHT ASSY	2	
115–83311–60	.BULB (6V–18W)	1	

4. Applicable colours of graphics are represented in the "REMARKS" as shown below.

PART NO.	DESCRIPTION	Q'TY	REMARKS
2N4–24110–00–X5	FUEL TANK COMP.	2	MXR
3J1–24240–10	.GRAPHIC, FUEL TANK	1	FOR MXR

5. Note that the illustrations for reference in finding parts numbers are not to be used for assembling. When assembling, please use the applicable service manual.

6. The asterisk (*) before a reference number indicates modified items after the first edition.

7. Applicable Serial No.

   Engine Serial No.

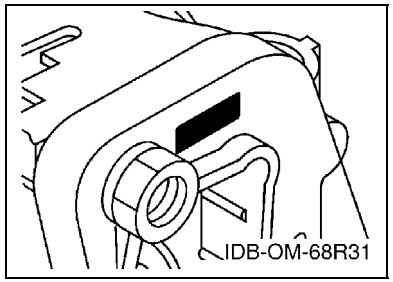

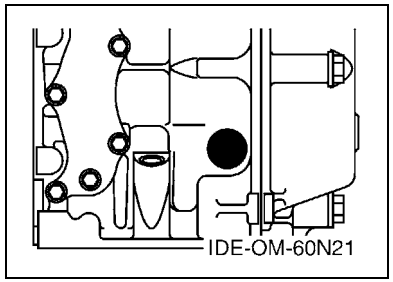

8. Applicable Engine Starting Serial No.

Model	Serial No.	Model	Serial No.
F8C	60R-1027737		

9. Applicable Colour Code

Abbreviation	Colour Name	Colour Code
DBNM2	DARK BLUISH GRAY METALLIC 2	004D

10. Quantity Column Information

Column No.	Name Of Q'ty Column	Applicable Model
1	60R7	F8CMH

AVANT–PROPOS

Ce catalogue de pièces détachées concerne les pièces pour le(s) modèle(s) indiqué(s) sur la page de couverture. Lorsque vous commandez des pièces de rechange, veuillez vous référer à ce catalogue de pieces détachées et indiquer clairement les numéros et les noms des pièces détachées.

1. Les modifications ou ajouts ayant été effectués après la parution du catalogue de pièces détachées seront décrits dans les Bulletins d'information concernant les pièces détachées.
   Il est recommandé que vous apportiez les corrections nécessaires au catalogue des pièces détachées en vous référant aux Bulletins d'information.

2. Abréviations
   Dans ce catalogue, les abréviations suivantes sont utilisées:

   "UR" Utiliser le numéro de pièces spécifié.
   "UN" Utiliser autant que nécessaire.
   "AP" Pièces de substitution
   "LM" Fabrication locale (les pièces doivent être commandées localement.)
   "F#" N° de cadre (applicable au N° de série)
   "O/S" Surdimensionné

3. Nombre de pièces d'un assemblage
   - Les pièces fournies comme composants d'un assemblage sont précédées d'un point (.) de la manière indiquée ci–dessous.
   - Le chiffre apparaissant à la droite de chaque composant indique la quantité de pièces pour chaque unité d'assemblage.

N° PIECES	DESCRIPTION	QTE	REMARQUES
2F5–83310–60	ENS. CLIGNOTANT AVANT	2	
115–83311–60	.AMPOULE (6V–18W)	1	

4. Les couleurs concernant les graphiques sont indiquées dans la colonne "REMARQUES", comme indiqué ci–dessous.

N° PIECES	DESCRIPTION	QTE	REMARQUES
2N4–24110–00–X5	RESERVOIR A ESSENCE.	2	MXR
3J1–24240–10	.GRAPHIQUE	1	POUR MXR

5. Veuillez noter que les illustrations sont indiquées à titre de référence pour trouver les numéros de pièces, non pour être utilisées lors de l'assemblage. Lors de l'assemblage, veuillez utiliser le manuel d'entretien adéquat.

6. L'astérisque (*) placé devant un numéro de référence indique des éléments qui ont été modifiés après la première édition.

7. N° de série applicable

   N° de Série du moteur

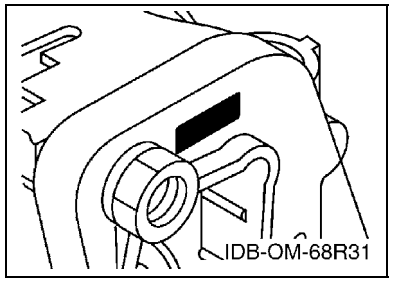

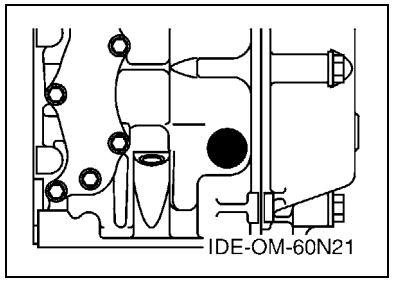

8. N° de série initial du moteur applicable

Modèle	N° de série	Modèle	N° de série
F8C	60R-1027737		

9. Code couleur applicable

Abréviation	Nom de la couleur	Code couleur
DBNM2	DARK BLUISH GRAY METALLIC 2	004D

10. Informations relatives à la colonne Quantité

N° de la colonne	Nom de la colonne Qté	Modèle applicable
1	60R7	F8CMH

CONTENTS

TOP COWLING 1
CYLINDER & CRANKCASE 1 2
CRANKSHAFT & PISTON 3
CYLINDER & CRANKCASE 2 4
VALVE 5
INTAKE 6
CARBURETOR 7
OIL PUMP 8
FUEL 9
STARTER 11
GENERATOR 13
ELECTRICAL 1 14
ELECTRICAL 2 15
BOTTOM COWLING 16
STEERING 18
CONTROL 19
REMO CON ATTACHMENT 21
BRACKET 1 22
BRACKET 2 24
UPPER CASING 25
OIL PAN 26
LOWER CASING & DRIVE 1 27
LOWER CASING & DRIVE 2 30
FUEL TANK 31
STEERING GUIDE 32
OPTIONAL PARTS 1 33
OPTIONAL PARTS 2 35
REPAIR KIT 1 36
REPAIR KIT 2 37
REPAIR KIT 3 38

INDEX

NUMERICAL INDEX 39

TABLE DES MATIERES

CAPOT SUPERIEUR 1
CYLINDRE & CARTER 1 2
VILEBREQUIN & PISTON 3
CYLINDRE & CARTER 2 4
SOUPAPE 5
ADMISSION 6
CARBURATEUR 7
POMPE A HUILE 8
CARBURANT 9
DEMARREUR 11
GENERATRICE 13
PARTIE ELECTRIQUE 1 14
PARTIE ELECTRIQUE 2 15
CAPOT INFERIEUR 16
DIRECTION 18
COMMANDE 19
COMMANDE A DISTANCE 21
SUPPORT 1 22
SUPPORT 2 24
FOURREAU 25
VENTILATEUR D'HUILE 26
BOITIER D'HELICE TRANSMISSION1 27
BOITIER D'HELICE TRANSMISSION2 30
RESERVOIR A CARBURANT 31
FIXATION DE DIRECTION 32
PIECES OPTIONNELLES 1 33
PIECES OPTIONNELLES 2 35
KITS DE REPARATION 1 36
KITS DE REPARATION 2 37
KITS DE PEPARATION 3 38

INDEX

INDEX NUMERIQUE 39

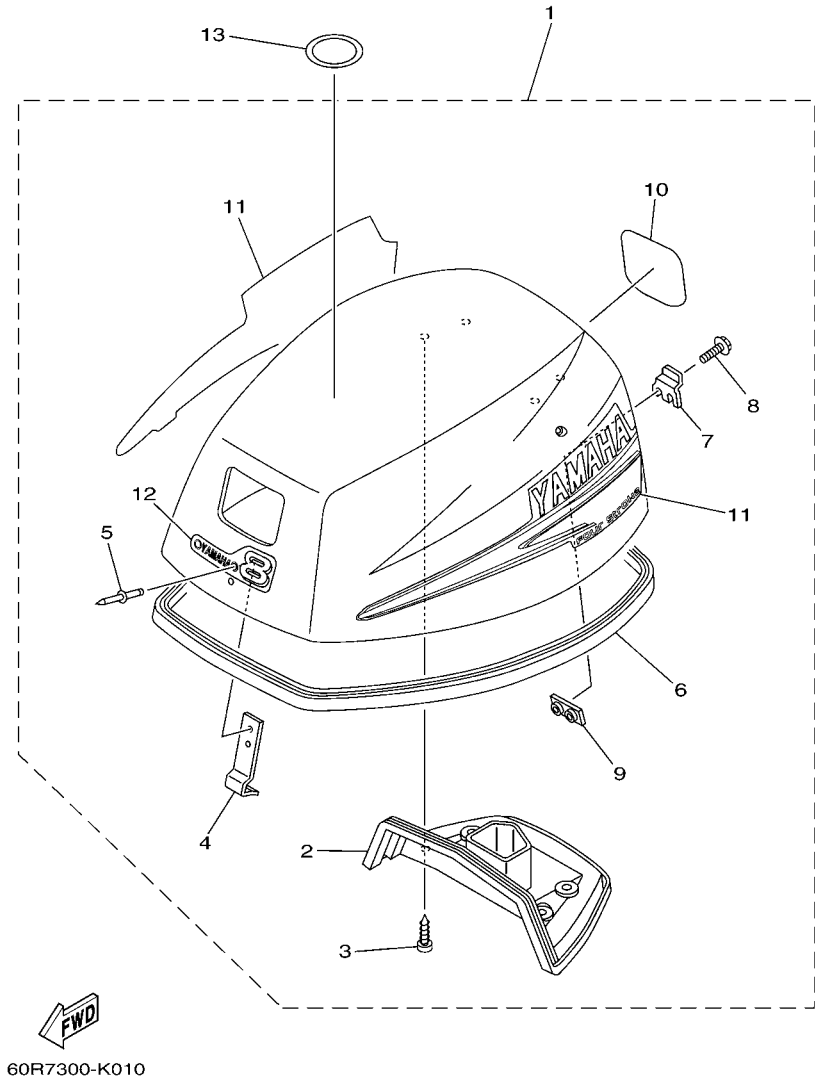

FIG. 1 TOP COWLING — CAPOT SUPERIEUR

REF. NO.	PART NO. N° PIECES	DESCRIPTION DESCRIPTION	60R7					REMARKS REMARQUES
1	60R–G2610–00–4D	TOP COWLING ASSY CAPOT (ENS.)	1					
2	60R–G2613–00	.MOLDING, AIR DUCT .MANCHON A AIR	1					
3	97780–60516	.SCREW, TAPPING .VIS, TETE BOMBEE	4					
4	6G1–42651–02	.HOOK .CROCHET	1					
5	90266–04M04	.RIVET .RIVET	2					
6	60R–42615–00	.SEAL .JOINT	1					
7	60R–42652–00	.HOOK .CROCHET	1					
8	97595–05514	.BOLT, WITH WASHER .VIS HEXAGONAL AVC RONDELLE	2					
9	68T–42649–00	.HOLDER, CLAMP BAND .SUPPORT, SANDOW DE SERRAGE	1					
10	68T–42678–20	.GRAPHIC, REAR .ADHESIF, ARRIERE	1					
11	68T–W0070–60	.GRAPHIC SET .JEU DIEMBLEMES	1					
12	68T–42677–00	.GRAPHIC, FRONT .ADHESIF, AVANT	1					
13	60R–E3434–00	LABEL, CAUTION ETIQUETTE, ATTENTION	1					

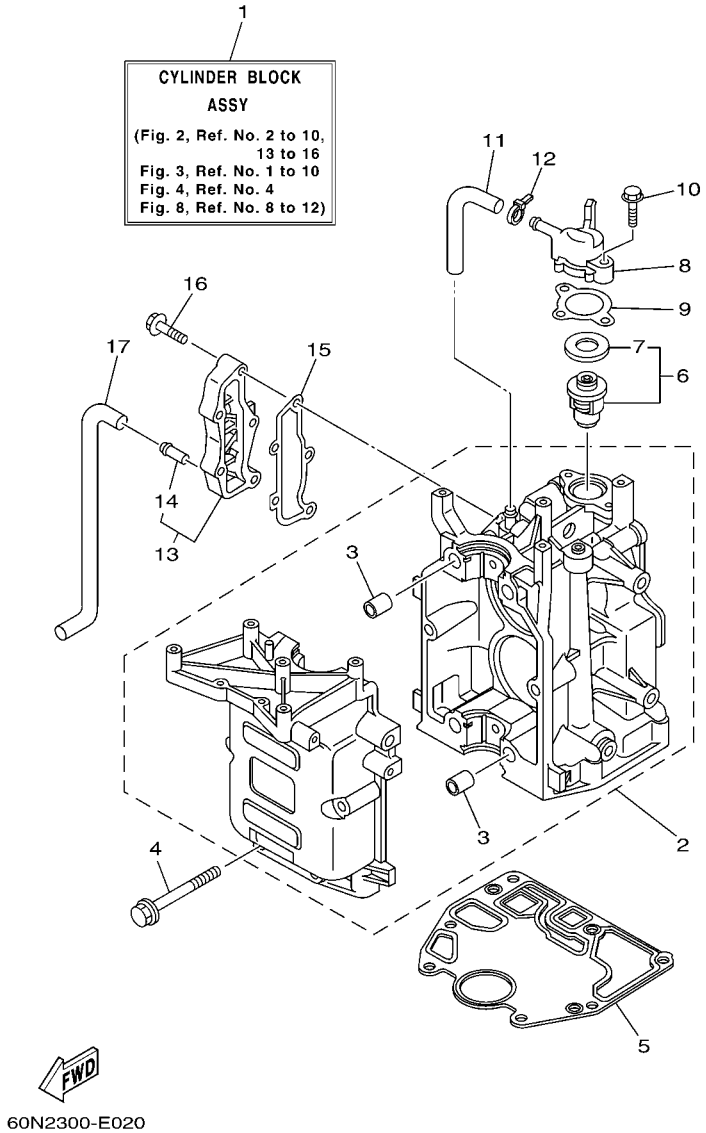

60N2300-E020

FIG. 2 CYLINDER & CRANKCASE 1 CYLINDRE & CARTER 1

REF. NO.	PART NO. N° PIECES	DESCRIPTION DESCRIPTION	60R7					REMARKS REMARQUES
1	60R–WE09B–00–1S	CYLINDER BLOCK ASSY CYLINDRE GROUPE (ENS.)	1					
2	60R–E5100–00–1S	CRANKCASE ASSY CARTER DE MOTEUR COMPLET	1					
3	91812–12001	.PIN, DOWEL .GOUJON, D'ASSEMBLAGE	4					
4	90119–08M29	BOLT, WITH WASHER BOULON, AVEC RONDELLE	6					
5	68T–11351–00	GASKET, CYLINDER JOINT, D'EMBASE	1					
6	66M–12411–01	THERMOSTAT THERMOSTAT	1					
7	688–12412–00	.SEAL, THERMOSTAT .JOINT, THERMOSTAT	1					
8	68T–12413–00–1S	COVER, THERMOSTAT COUVERCLE, THERMOSTAT	1					
9	60R–E2414–A0	GASKET, COVER JOINT, COUVERCLE	1					
10	90119–06MA2	BOLT, WITH WASHER BOULON, AVEC RONDELLE	2					
11	60R–E2481–00	PIPE 1 DURITE 1	1					
12	90465–11M10	CLAMP BRIDE	1					
13	60R–G1113–00–1S	OUTER COVER, EXHAUST COUVERCLE, ECHAPPEMENT	1					
14	6E9–24378–00	.PIPE, JOINT 3 .DURITE RACCORDEMENT 3	1					
15	68T–41114–A0	GASKET, EXHAUST OUTER COVER JOINT, COUVERCLE D'ECHAPPEMENT	1					
16	90119–06MA3	BOLT, WITH WASHER BOULON, AVEC RONDELLE	5					
17	60R–E2482–00	PIPE 2 DURITE 2	1					

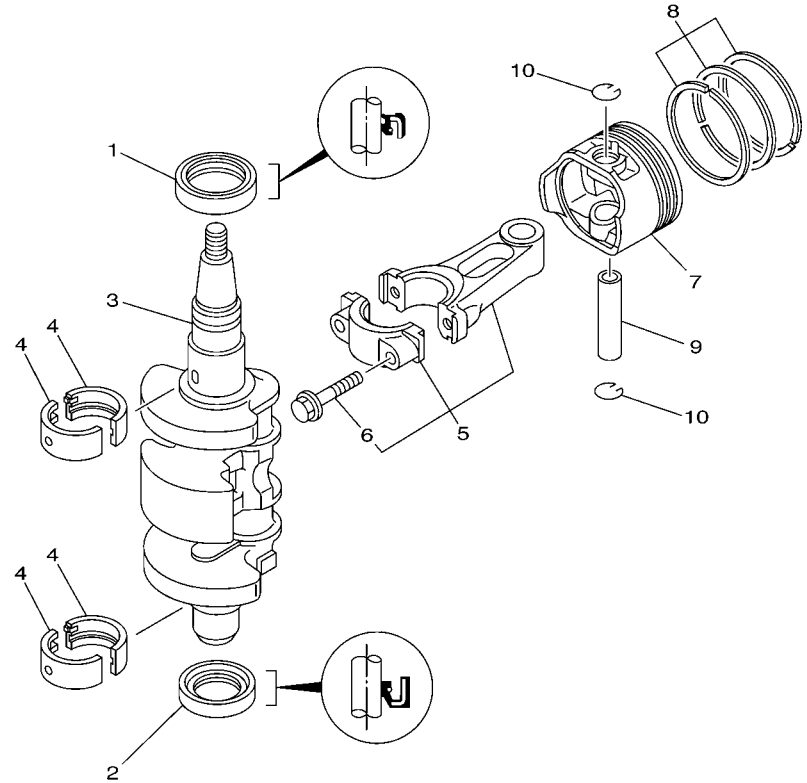

68R0010-0031

FIG. 3 CRANKSHAFT & PISTON VILEBREQUIN & PISTON

REF. NO.	PART NO. N° PIECES	DESCRIPTION DESCRIPTION	60R7					REMARKS REMARQUES
1	93102–30M22	OIL SEAL JOINT SPY	1					
2	93101–25M69	OIL SEAL JOINT SPY	1					
3	60R–E1411–00	CRANKSHAFT VILEBREQUIN COMPLET	1					
4	68T–11416–01	PLANE BEARING, CRANKSHAFT 1 COUSSINET DE VILEBREQUIN 1	4					UR BROWN UR BROWN
	68T–11416–11	PLANE BEARING, CRANKSHAFT 1 COUSSINET DE VILEBREQUIN 1	4					UR BLACK UR BLACK
	68T–11416–21	PLANE BEARING, CRANKSHAFT 1 COUSSINET DE VILEBREQUIN 1	4					UR BLUE UR BLUE
5	68T–11650–00	CONNECTING ROD ASSY BIELLE COMPLETTE	2					
6	67D–11654–00	.BOLT, CONNECTING ROD .BOULON, BIELLE	2					
7	60R–E1631–00–96	PISTON (STD) PISTON (STD)	2					
	60R–E1635–00	PISTON (0.25MM O/S) PISTON (0.25MM O/S)	2					AP AP
	60R–E1636–00	PISTON (0.50MM O/S) PISTON (0.50MM O/S)	2					AP AP
8	60R–E1603–00	PISTON RING SET (STD) JEU DE SEGMENTS (STD)	2					
	60R–E1604–00	PISTON RING SET (0.25MM O/S) JEU DE SEGMENTS (0.25MM O/S)	2					AP AP
	60R–E1605–00	PISTON RING SET (0.50MM O/S) JEU DE SEGMENTS (0.50MM O/S)	2					AP AP
9	60R–E1633–00	PIN, PISTON AXE, PISTON	2					
10	93450–15023	CIRCLIP CIRCLIP, TYPE S	4					

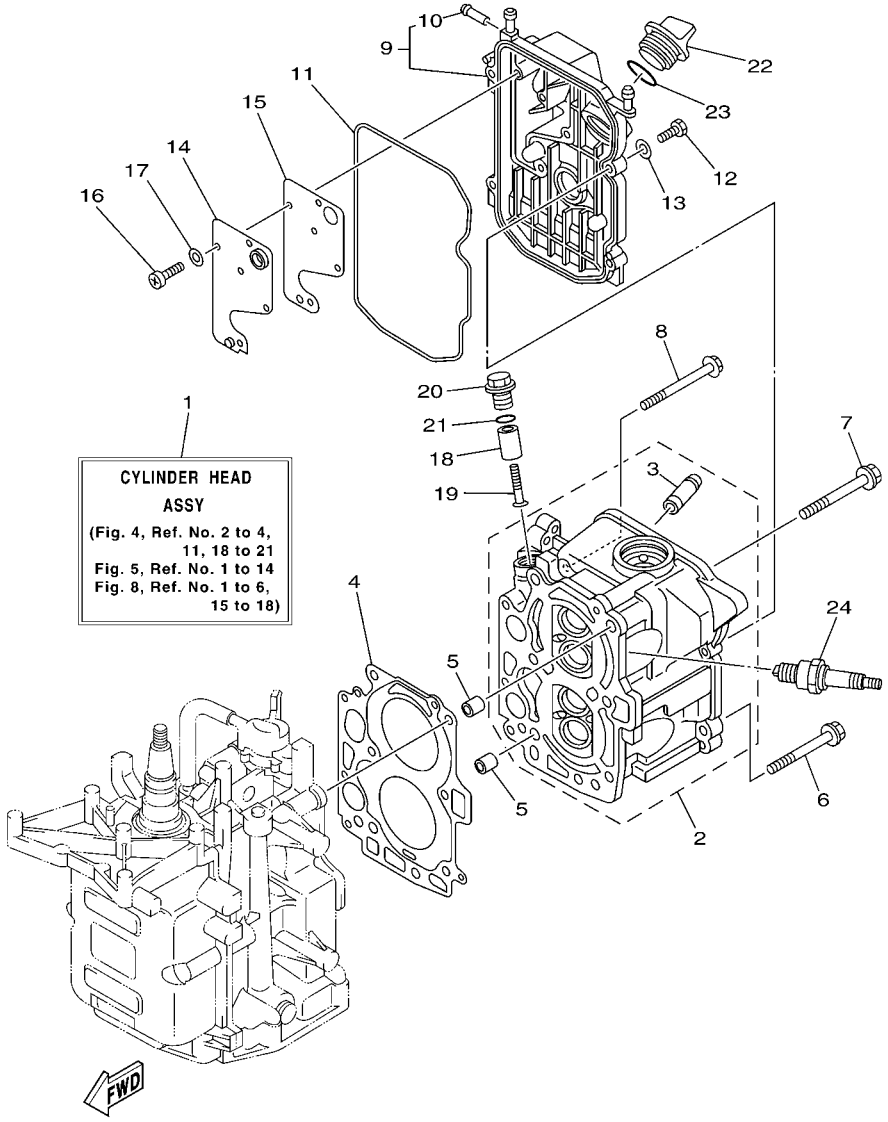

FIG. 4 CYLINDER & CRANKCASE 2 CYLINDRE & CARTER 2

REF. NO.	PART NO. N° PIECES	DESCRIPTION DESCRIPTION	60R7					REMARKS REMARQUES
1	60R–WE09A–01–1S	CYLINDER HEAD ASSY CULASSE (ENS.)	1					
2	60R–E1111–00–1S	HEAD, CYLINDER 1 CULASSE	1					
3	67D–11133–10	.GUIDE, VALVE 1 .GUIDE, SOUPAPE 1	4					
4	68T–11181–00	GASKET, CYLINDER HEAD 1 JOINT, DE CULASSE 1	1					
5	99510–10114	PIN, DOWEL GOUJON, D'ASSEMBLAGE	2					
6	90105–08M36	BOLT, FLANGE BOULON	2					
7	90105–08M78	BOLT, FLANGE BOULON	4					
8	90119–06049	BOLT, WITH WASHER BOULON, AVEC RONDELLE	3					
9	60R–E1191–00–1S	COVER, CYLINDER HEAD 1 COUVERCLE, CULASSE 1	1					
10	650–24378–00	.PIPE, JOINT 4 .DURITE RACCORDEMENT 3	1					
11	68T–11356–00	SEAL, CYLINDER 2 JOINT, SPY CYLINDRE	1					
12	97095–06020	BOLT BOULON	4					
13	92995–06600	WASHER RONDELLE	4					
14	68T–11168–00	COVER, BREATHER COUVERCLE, RENIFLARD	1					
15	68T–11169–A0	GASKET, BREATHER COVER JOINT, COUVERCLE DE RENIFLARD	1					
16	98507–04010	SCREW, PAN HEAD VIS, TETE TRONCONIQUE	5					
17	92907–04600	WASHER RONDELLE	5					
18	6G8–11325–00	ANODE ANODE	1					
19	97880–05025	SCREW, PAN HEAD VIS, TETE TRONCONIQUE	1					
20	6G8–11197–01	PLUG, BLIND PLOT, BORGNE	1					
21	93210–13M63	O-RING JOINT TORIQUE	1					
22	69M–E5363–00	PLUG, OIL PLOT, HUILE	1					
23	93210–24M79	O-RING JOINT TORIQUE	1					
24	94702–00274	PLUG, SPARK (NGK BR6HS-10) BOUGIE D'ALLUMAGE(NGK BR6HS-10	2					

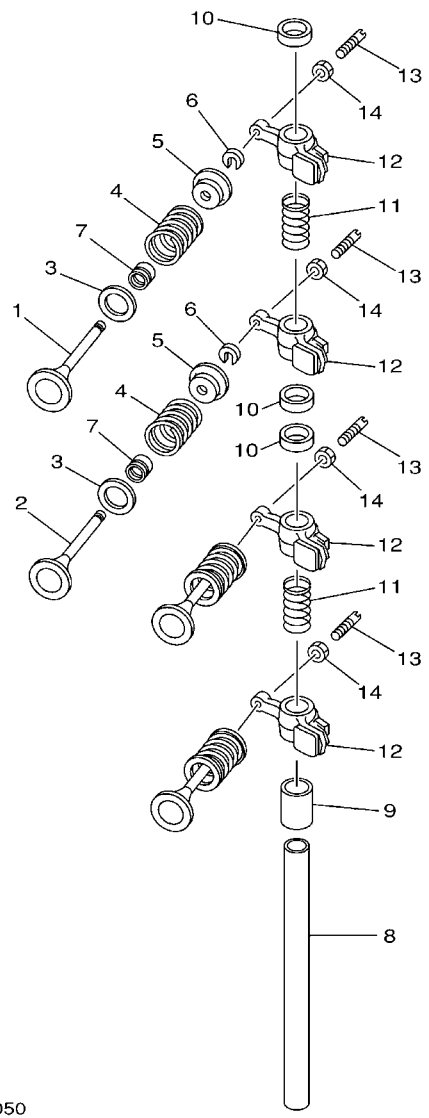

68R0010-0050

FIG. 5 VALVE SOUPAPE

REF. NO.	PART NO. N° PIECES	DESCRIPTION DESCRIPTION	60R7					REMARKS REMARQUES
1	6AU–12111–00	VALVE, INTAKE SOUPAPE, ADMISSION	2					
2	6AU–12121–00	VALVE, EXHAUST SOUPAPE, ECHAPPEMENT	2					
3	68T–12116–00	SEAT, VALVE SPRING SIEGE, RESSORT DE SOUPAPE	4					
4	60R–12113–00	SPRING, VALVE INNER RESSORT DE SOUPAPE, INTERNE	4					
5	7NJ–12117–00	RETAINER, VALVE SPRING BUTEE DE RESSORT DE SOUPAPE	4					
6	7NJ–12118–00	COTTER, VALVE FRAISE, SOUPAPE	4					
7	51Y–12119–00	SEAL, VALVE STEM JOINT, QUEUE DE SOUPAPE	4					
8	68T–12146–00	SHAFT, ROCKER AXE, CULBUTEUR	1					
9	90387–13M56	COLLAR COLLERETTE	1					
10	90387–14M03	COLLAR COLLERETTE	3					
11	90501–12M40	SPRING, COMPRESSION RESSORT, COMPRESSION	2					
12	68T–12151–00	ARM, VALVE ROCKER CULBUTEUR	4					
13	6G8–12159–00	SCREW, VALVE ADJUSTING VIS, REGLAGE DE SOUPAPE	4					
14	6G8–12158–00	NUT, LOCK CONTRE-ECROU	4					

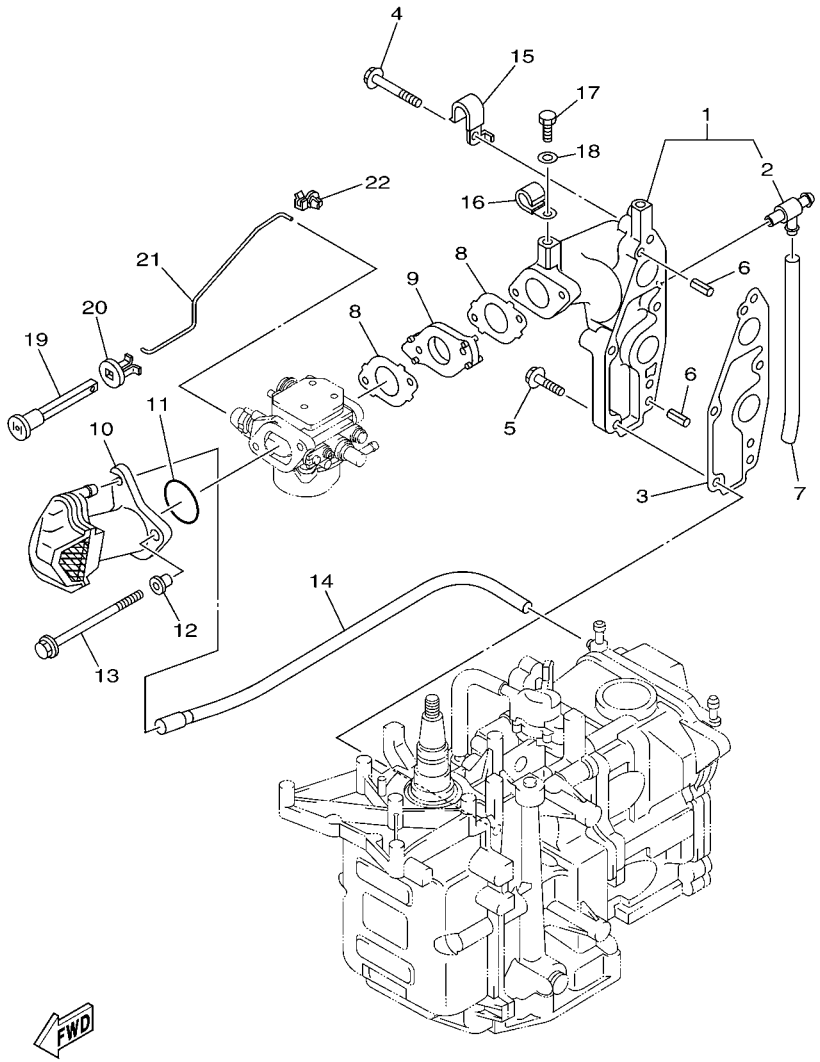

60N4300-G060

FIG. 6 INTAKE — ADMISSION

REF. NO.	PART NO. N° PIECES	DESCRIPTION DESCRIPTION	60R7					REMARKS REMARQUES
1	60R–E3641–20–1S	MANIFOLD 1 TUBULURE 1	1					FLUSHING KIT FLUSHING KIT
2	67F–12482–00	.PIPE 2 .DURITE 2	1					
3	68T–13645–00	GASKET, MANIFOLD 1 JOINT, TUBULURE 1	1					
4	90119–06MA5	BOLT, WITH WASHER BOULON, AVEC RONDELLE	3					
5	90119–06MA3	BOLT, WITH WASHER BOULON, AVEC RONDELLE	2					
6	91690–50014	PIN, SPRING AGRAFFE	2					
7	90445–09812	HOSE (L93) DURITE (L93)	1					FLUSHING KIT FLUSHING KIT
8	60R–E3646–A0	GASKET, MANIFOLD 2 JOINT, TUBULURE 2	2					
9	68T–14271–00	INSULATOR ISOLATEUR	1					
10	60R–E4440–00	SILENCER ASSY, INTAKE SIENCIEUX D'ADMISSION	1					
11	93210–31MJ5	O-RING JOINT TORIQUE	1					
12	90387–06M70	COLLAR COLLERETTE	2					
13	97595–06585	BOLT, WITH WASHER VIS HEXAGONAL AVC RONDELLE	2					
14	60R–E2483–00	PIPE 3 DURITE 3	1					
15	90465–08M99	CLAMP BRIDE	1					
16	90465–08M83	CLAMP BRIDE	1					FLUSHING KIT FLUSHING KIT
17	97095–06010	BOLT BOULON	1					FLUSHING KIT FLUSHING KIT
18	92995–06600	WASHER RONDELLE	1					FLUSHING KIT FLUSHING KIT
19	6H4–41271–02	KNOB, CHOKE BOUTON DE STARTER	1					
20	689–41273–00	GROMMET PASSE-FIL	1					
21	68T–41256–00	ROD, CHOKE 1 TRINGLE 1, STARTER	1					
22	6J8–41262–00	JOINT, CHOKE LEVER RACCORD, LEVIER DE STARTER	1					

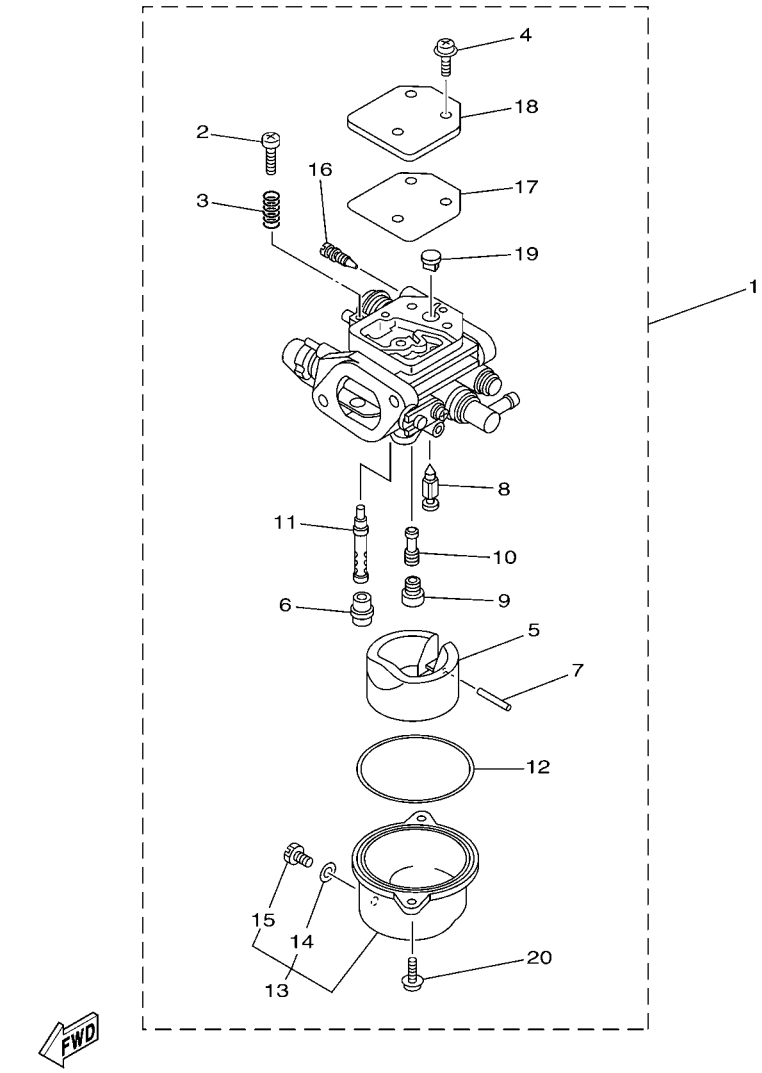

FIG. 7 CARBURETOR CARBURATEUR

REF. NO.	PART NO. N° PIECES	DESCRIPTION DESCRIPTION	60R7					REMARKS REMARQUES
1	68T–14301–00	CARBURETOR ASSY 1 CARBURATEUR COMPLET 1	1					FOR RUS FOR RUS
	68T–14301–20	CARBURETOR ASSY 1 CARBURATEUR COMPLET 1	1					EXCEPT FOR RUS EXCEPT FOR RUS
2	6E5–14321–00	.SCREW, THROTTLE .VIS, ACCELERATEUR	1					
3	6J8–14334–00	.SPRING, THROTTLE .RESSORT, ACCELERATEUR	1					
4	97980–04110	.SCREW, WITH WASHER .VIS, AVEC RONDELLE	3					
5	68T–14385–00	.FLOAT .FLOTTEUR	1					
6	67D–14966–00	.RUBBER CAP .CAOUTCHOUC CASQUILLO	1					
7	67D–14386–00	.PIN, FLOAT .AXE, FLOTTEUR	1					
8	68T–14546–00	.VALVE, NEEDLE .POINTEAU	1					
9	68T–1492E–37	.JET, MAIN (#74) .GICLEUR, PRINCIPAL (#74)	1					
10	68T–1492F–1K	.JET, AIR SLOW (#39) .GICLEUR, AIR (#39)	1					
11	68T–1492A–00	.NOZZLE, MAIN .PUITS D'AIGUILLE	1					
12	67D–14984–00	.GASKET, FLOAT CHAMBER .JOINT, CUVE DE FLOTTEUR	1					
13	68T–14981–00	.BODY, FLOAT CHAMBER .CORPS, CUVE DE FLOTTEUR	1					
14	6J8–14959–00	..GASKET ..JOINT	1					
15	66T–14991–00	..PLUG, DRAIN ..BOUCHON DE VIDANGE	1					
16	67D–14323–00	.SCREW, AIR ADJUSTING .VIS DE DOSEUR D'AIR	1					FOR 68T-14301-00 FOR 68T-14301-00
	68T–14323–20	.SCREW, AIR ADJUSTING .VIS DE DOSEUR D'AIR	1					FOR 68T-14301-20 FOR 68T-14301-20
17	67D–14536–00	.GASKET .JOINT	1					
18	67D–14527–00	.PLATE .PLAQUE	1					
19	68T–14126–00	.PLUG .PLOT	1					
20	97980–04112	.SCREW, WITH WASHER .VIS, AVEC RONDELLE	2					

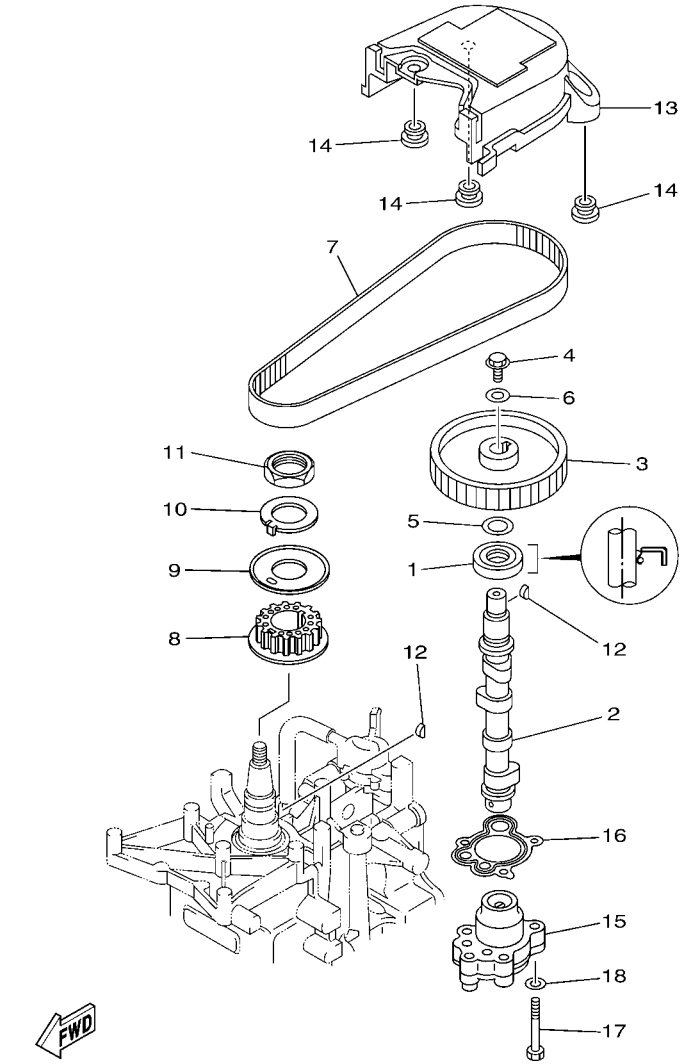

6AU4300-K080

FIG. 8 OIL PUMP — POMPE A HUILE

REF. NO.	PART NO. N° PIECES	DESCRIPTION DESCRIPTION	60R7					REMARKS REMARQUES
1	93102–18M21	OIL SEAL JOINT SPY	1					
2	60R–E2171–00	CAMSHAFT 1 ARBRE A CAMES 1	1					
3	60R–E1537–00–94	GEAR, DRIVEN PIGNON SECONDAIRE	1					
4	90105–06M14	BOLT FLANGE BOULON	1					
5	90201–13201	WASHER, PLATE RONDELLE, PLATE	1					
6	90201–06M94	WASHER, PLATE RONDELLE, PLATE	1					
7	60R–G6241–00	BELT COURROIE TRAPEZOIDALE	1					
8	60R–E1536–00	GEAR, DRIVE ENGRENAGE, MENANT	1					
9	68T–11557–00	WASHER 1 RONDELLE 1	1					
10	6G8–11587–01	WASHER, LOCK RONDELLE, FREIN	1					
11	90170–24M09	NUT ECROU	1					
12	90280–03M01	KEY, WOODRUFF CLAVETTE, DEMI-LUNE	2					
13	60R–G6297–00	COVER, DUST COUVERCLE, POUSSIERE	1					
14	90480–10627	GROMMET PASSE-FIL	3					
15	68T–13300–00	OIL PUMP ASSY POMPE A HUILE COMPLETE	1					
16	68T–13329–00	GASKET, PUMP COVER JOINT, COUVERCLE DE POMPE	1					
17	97095–06030	BOLT BOULON	3					
18	92995–06600	WASHER RONDELLE	3					

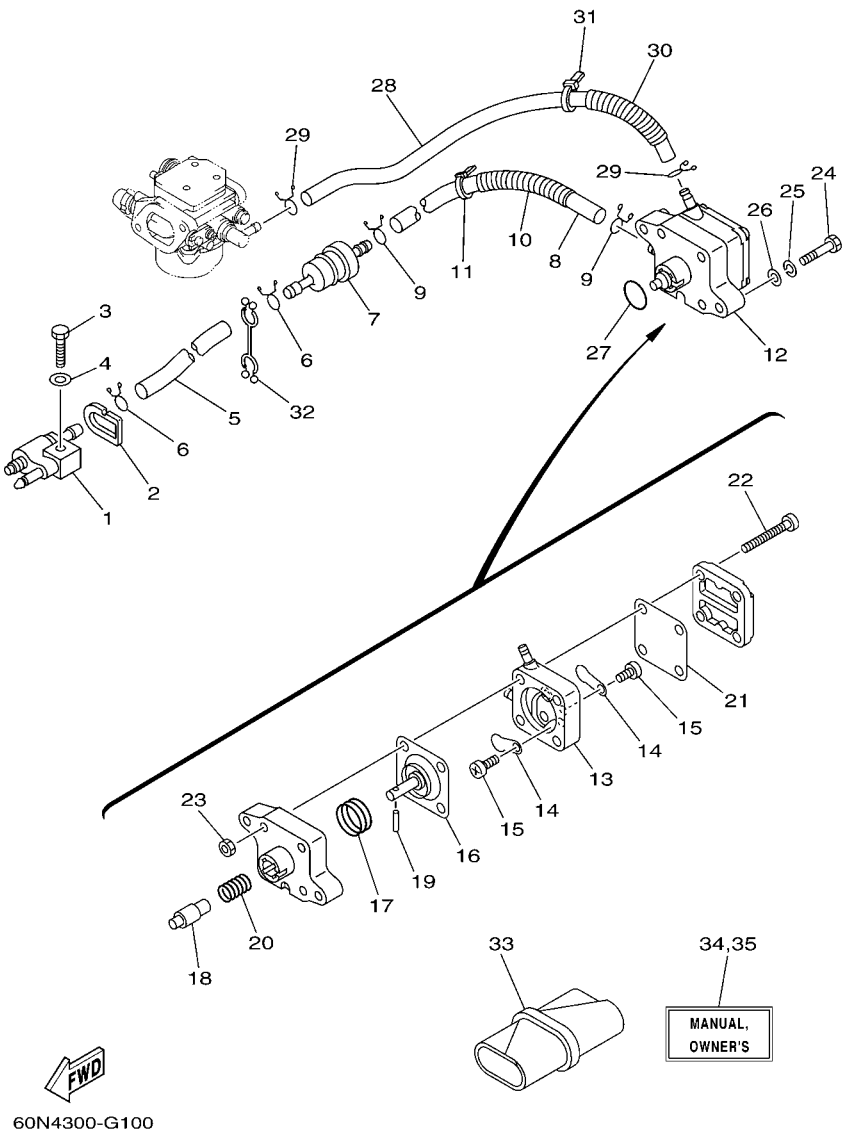

FIG. 9 FUEL CARBURANT

REF. NO.	PART NO. N° PIECES	DESCRIPTION DESCRIPTION	60R7					REMARKS REMARQUES
1	6G1–24304–02	FUEL PIPE JOINT COMP. 1 DURITE RACCORDEMT. A ESSENCE	1					
2	60R–F4329–00	SEAL JOINT	1					
3	97095–06025	BOLT BOULON	1					
4	92995–06600	WASHER RONDELLE	1					
5	90445–10809	HOSE (L295) DURITE (L295)	1					
6	90467–09M09	CLIP JONC	2					
7	68T–24251–01	STRAINER 1 FILTRE 1	1					
8	90445–10811	HOSE (L170) DURITE (L170)	1					
9	90467–09M09	CLIP JONC	2					
10	90446–14M66	HOSE (L40) DURITE (L40)	1					
11	90465–11M10	CLAMP BRIDE	1					
12	68T–24410–01	FUEL PUMP ASSY POMPE A ESSENCE	1					
13	66M–24413–01	.BODY 2 .CORPS 2	1					
14	6A0–24421–01	.VALVE, CHECK .SOUPAPE, RETENUE	2					
15	6E7–14325–00	.SCREW, PAN HEAD .VIS TETE CONIQUE	2					
16	66M–24411–01	.DIAPHRAGM .DIAPHRAGME	1					
17	66M–24423–00	.SPRING, DIAPHRAGM .RESSORT, DIAPHRAGME	1					
18	66M–13131–00	.PLUNGER .PLONGEUR	1					
19	66M–24374–00	.PIN .GOUPILLE	1					
20	66M–24454–00	.SPRING .RESSORT	1					
21	66M–24471–01	.DIAPHRAGM .DIAPHRAGME	1					
22	66M–24444–00	.SCREW .VIS	4					
23	95380–04600	.NUT .ECROU	4					
24	97095–06030	BOLT BOULON	2					
25	92995–06100	WASHER, SPRING RONDELLE, GROWER	2					
26	92995–06600	WASHER RONDELLE	2					
27	93210–20M65	O-RING JOINT TORIQUE	1					

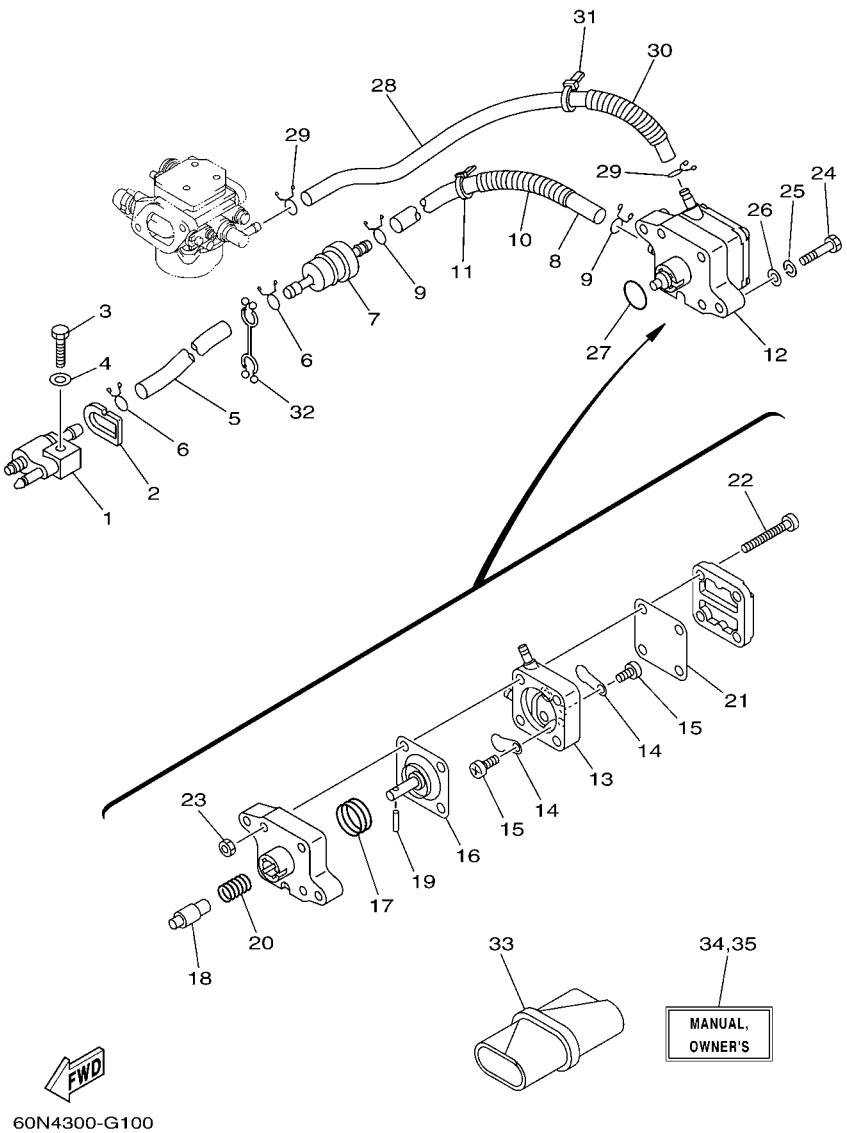

FIG. 9 FUEL CARBURANT

REF. NO.	PART NO. N° PIECES	DESCRIPTION DESCRIPTION	60R7					REMARKS REMARQUES
28	90445–10810	HOSE (L280) DURITE (L280)	1					
29	90467–09M09	CLIP JONC	2					
30	90446–14M66	HOSE (L40) DURITE (L40)	1					
31	90465–11M10	CLAMP BRIDE	1					
32	90464–10M53	CLAMP BRIDE	1					
33	68T–28100–00	TOOL KIT TROUSSE A OUTILS	1					AP AP
34	60R–F8199–76–E0	MANUAL,OWNER'S MANUEL D'UTILISATION	1					UR (E) UR (E)
	60R–F8199–76–F0	MANUAL,OWNER'S MANUEL D'UTILISATION	1					UR (F) UR (F)
	60R–F8199–76–S0	MANUAL,OWNER'S MANUEL D'UTILISATION	1					UR (ES) UR (ES)
	60R–F8199–76–G0	MANUAL,OWNER'S MANUEL D'UTILISATION	1					UR (D) UR (D)
	60R–F8199–76–D0	MANUAL,OWNER'S MANUEL D'UTILISATION	1					UR (NL) UR (NL)
	60R–F8199–76–H0	MANUAL,OWNER'S MANUEL D'UTILISATION	1					UR (I) UR (I)
35	60R–F8199–86–K0	MANUAL,OWNER'S MANUEL D'UTILISATION	1					UR (DK) UR (DK)
	60R–F8199–86–R0	MANUAL,OWNER'S MANUEL D'UTILISATION	1					UR (GR) UR (GR)
	60R–F8199–86–P0	MANUAL,OWNER'S MANUEL D'UTILISATION	1					UR (P) UR (P)
	60R–F8199–86–N0	MANUAL,OWNER'S MANUEL D'UTILISATION	1					UR (N) UR (N)
	60R–F8199–86–M0	MANUAL,OWNER'S MANUEL D'UTILISATION	1					UR (S) UR (S)
	60R–F8199–86–L0	MANUAL,OWNER'S MANUEL D'UTILISATION	1					UR (SF) UR (SF)

FIG. 10 STARTER DEMARREUR

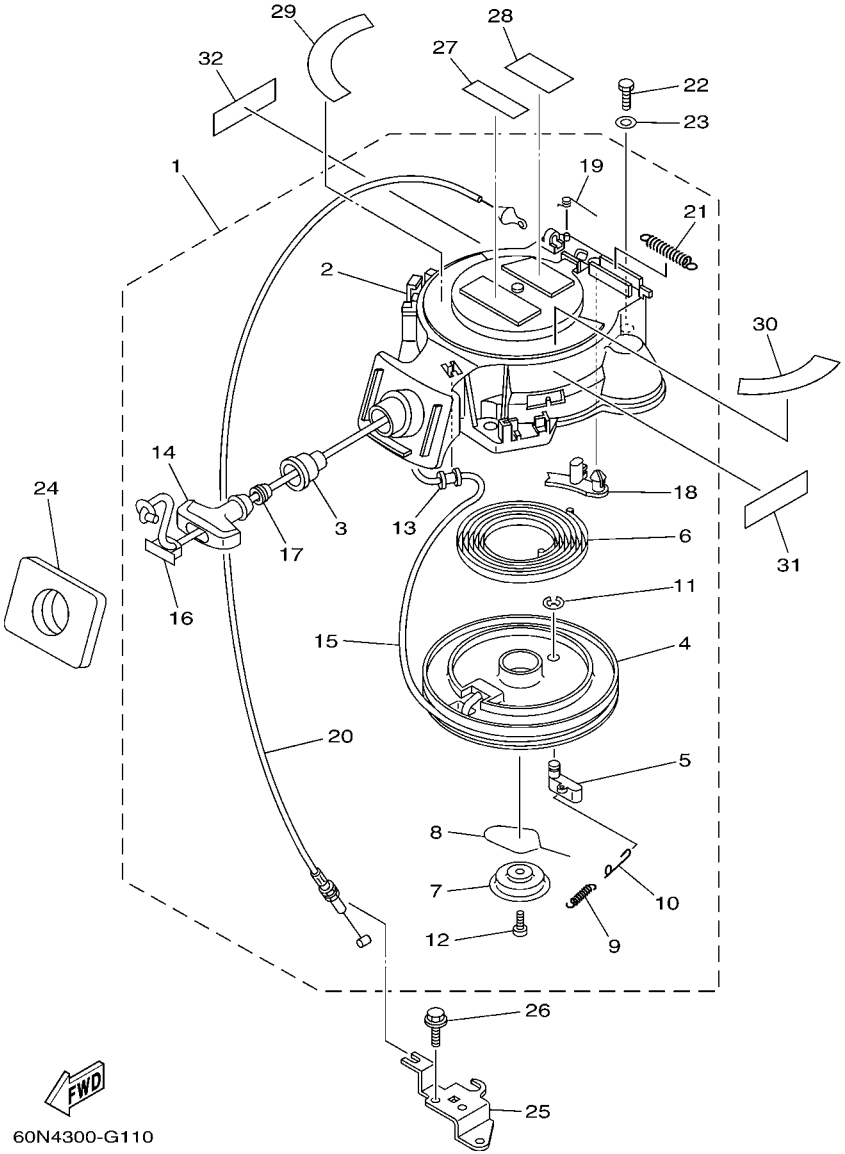

*1:CUT FROM 50M ROLLS,PART NO.90890-44373,CUTTING LENGTH 1.8M

*1:A PRELEVER SUR BOBINE 50M ,REFERENCE 90890-44373,
LONGUEUR DE COUPE 1.8M

REF. NO.	PART NO. N° PIECES	DESCRIPTION DESCRIPTION	60R7					REMARKS REMARQUES
1	68T–15710–13	STARTER ASSY DEMARREUR COMPLET	1					
2	68T–15711–03	.CASE, STARTER .CARTER DE DEMARREUR	1					
3	68T–15795–00	.GUIDE, ROPE .GUIDE DE CABLE	1					
4	63V–15714–00	.DRUM, SHEAVE .TAMBOUR, POULIE	1					
5	63V–15741–00	.PAWL, DRIVE .CLIQUET, ENTRAINEMENT	1					
6	63V–15713–00	.SPRING, STARTER .RESSORT DE DEMARREUR	1					
7	68T–15716–00	.PLATE, DRIVE .PLAQUE, ENTRAINEMENT	1					
8	63V–15705–01	.SPRING, DRIVE PAWL .RESSORT DE CLIQUET	1					
9	63V–15767–01	.SPRING .RESSORT	1					
10	68T–15784–00	.SPRING, RETURN .RESSORT, RAPPEL	1					
11	63V–15744–00	.CIRCLIP .CIRCLIP	1					
12	68T–15793–00	.SCREW .VIS	1					
13	68T–15764–00	.COLLAR 1 .COLLERETTE 1	1					
14	6G1–15755–00	.HANDLE, STARTER .POIGNEE, DE DEMARREUR	1					
15	*	.WIRE, STARTER (L:1800MM) .CABLE DE DEMARREUR (L:1800MM)	1					*1 *1
16	6G1–15779–00	.COVER .COUVERCLE	1					
17	6A0–15789–00	.DAMPER .AMORTISSEUR	1					
18	68T–15794–00	.STOPPER .BUTEE	1					
19	66T–15734–00	.SPRING, RETURN .RESSORT, RAPPEL	1					
20	68T–15770–00	.CABLE COMP., STARTER STOP .CABLE, BUTEE DE DEMAR	1					
21	66T–15731–00	.SPRING, RETURN .RESSORT, RAPPEL	1					
22	97095–06020	BOLT BOULON	3					
23	92995–06600	WASHER RONDELLE	3					
24	68T–15762–00	SEAL, RUBBER 2 JOINT CAOUTCHOUC 2	1					
25	68T–15774–10	STAY 4 SUPPORT 4	1					
26	90109–06M86	BOLT BOULON	2					
27	6AH–81995–40	LABEL, WARNING ETIQUETTE, AVERTISSEMENT	1					

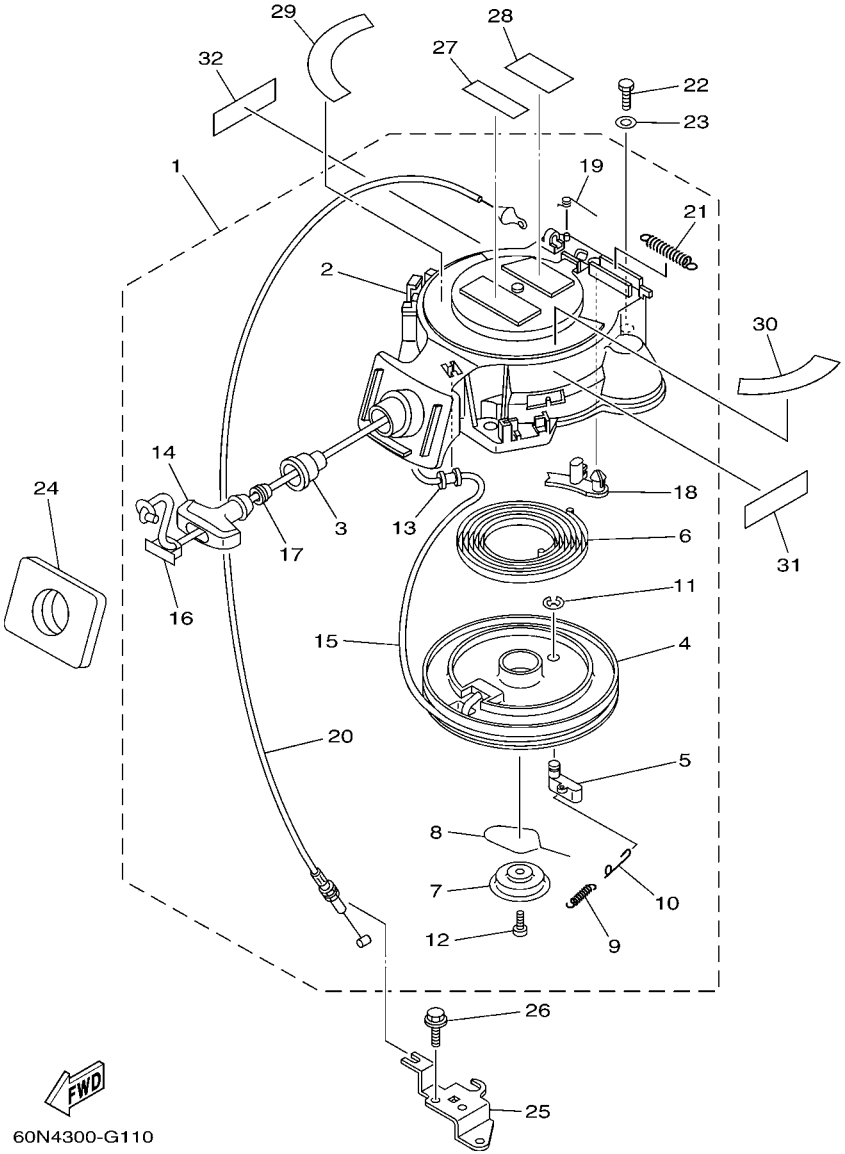

*1:CUT FROM 50M ROLLS,PART NO.90890-44373,CUTTING LENGTH 1.8M

*1:A PRELEVER SUR BOBINE 50M ,REFERENCE 90890-44373,
LONGUEUR DE COUPE 1.8M

FIG. 10 STARTER DEMARREUR

REF. NO.	PART NO. N° PIECES	DESCRIPTION DESCRIPTION	60R7					REMARKS REMARQUES
28	6AH–81995–50	LABEL, WARNING ETIQUETTE, AVERTISSEMENT	1					
29	60R–E3437–61	MARK, CAUTION MAKER	1					
30	60R–H5711–60	MARK, CAUTION MAKER	1					
31	6AH–81994–40	LABEL, SAFETY ETIQUETTE, SECURITE	1					
32	6AH–81994–50	LABEL, SAFETY ETIQUETTE, SECURITE	1					

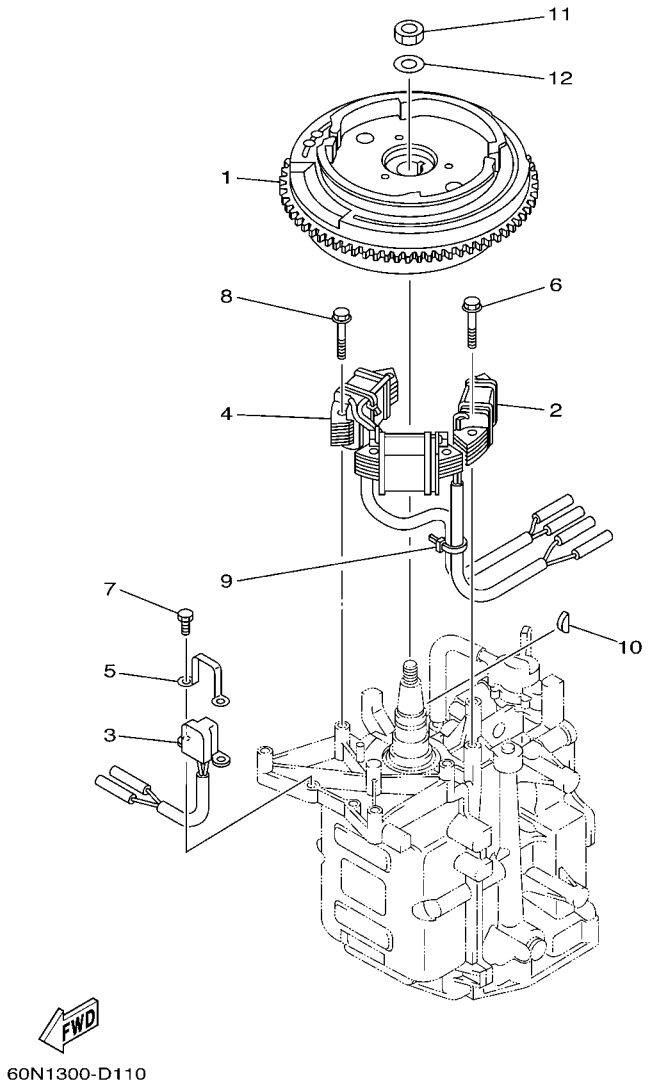

FIG. 11 GENERATOR GENERATRICE

REF. NO.	PART NO. N° PIECES	DESCRIPTION DESCRIPTION	60R7					REMARKS REMARQUES
1	68T–85550–11	ROTOR ASSY ROTOR CPLT	1					
2	68T–85520–00	COIL, CHARGE BOBINE, CHARGE	1					
3	68T–85580–01	COIL, PULSER BOBINE, PULSEUR	1					
4	68T–85533–10	COIL, LIGHTING BOBINE, ECLAIRAGE	1					
5	6H2–85582–00	ATTACHMENT, PULSER SUPPORT, PULSEUR	1					
6	90119–06014	BOLT, WITH WASHER BOULON, AVEC RONDELLE	2					
7	97095–05010	BOLT BOULON	2					
8	90119–06MA1	BOLT, WITH WASHER BOULON, AVEC RONDELLE	4					
9	90465–11M10	CLAMP BRIDE	1					
10	90280–04M06	KEY, WOODRUFF CLAVETTE, DEMI-LUNE	1					
11	90170–12066	NUT ECROU	1					
12	90201–12472	WASHER, PLATE RONDELLE, PLATE	1					

FIG. 12 ELECTRICAL 1 PARTIE ELECTRIQUE 1

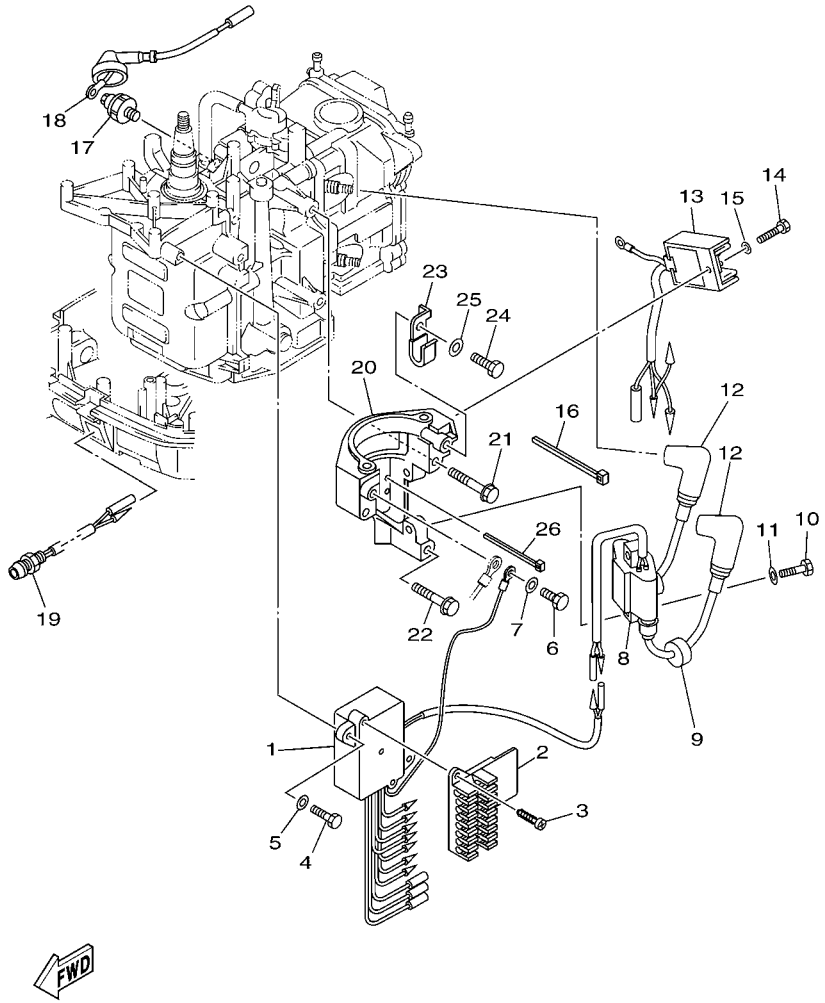

60N4300-G130

REF. NO.	PART NO. N° PIECES	DESCRIPTION DESCRIPTION	60R7					REMARKS REMARQUES
1	68T–85540–00	C.D.I. UNIT ASSY BLOC C.D.I.	1					
2	68T–82522–00	CLAMP, COUPLER BRIDE, DE CONNECTEUR	1					
3	97780–40512	SCREW, TAPPING VIS, TETE BOMBEE	2					
4	97095–06020	BOLT BOULON	2					
5	92995–06600	WASHER RONDELLE	2					
6	97095–06012	BOLT BOULON	1					
7	92995–06600	WASHER RONDELLE	1					
8	680–85570–02	IGNITION COIL ASSY BOBINE D'ALLUMAGE (ENS.)	1					
9	90480–25161	GROMMET PASSE-FIL	2					
10	97095–06025	BOLT BOULON	2					
11	92995–06600	WASHER RONDELLE	2					
12	6E3–82370–21	PLUG CAP ASSY ANTIPARASITE	2					
13	68T–81960–00	RECTIFIER & REGULATOR ASSY REDRESSEUR REGULATEUR CPLT	1					
14	97095–06012	BOLT BOULON	1					
15	92995–06600	WASHER RONDELLE	1					
16	90465–11M10	CLAMP BRIDE	1					
17	67F–82504–00	OIL PRESSURE SWITCH ASSY CONTACTEUR DE PRESSION D'HUILE	1					
18	68T–82127–10	WIRE, LEAD 2 FIL 2	1					
19	68T–85410–00	EMERGENCY SIGNAL LIGHT ASSY FEU DE DETRESSE	1					
20	68T–81822–01–94	BRACKET, STARTING MOTOR SUPPORT, DEMARREUR ELECTRIQUE	1					
21	90119–08046	BOLT, WITH WASHER BOULON, AVEC RONDELLE	2					
22	90119–08020	BOLT, WITH WASHER BOULON, AVEC RONDELLE	1					
23	90465–08M99	CLAMP BRIDE	1					
24	97095–06012	BOLT BOULON	1					
25	92995–06600	WASHER RONDELLE	1					
26	90465–11M10	CLAMP BRIDE	1					

FIG. 13 ELECTRICAL 2 PARTIE ELECTRIQUE 2

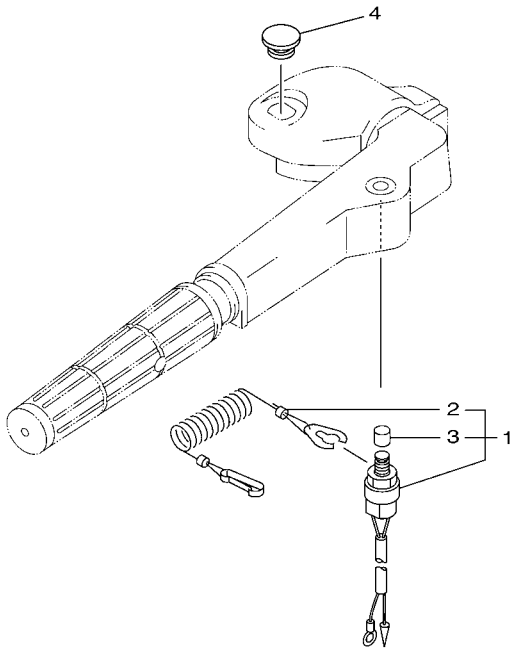

6AU1300-G140

REF. NO.	PART NO. N° PIECES	DESCRIPTION DESCRIPTION	60R7					REMARKS REMARQUES
1	65W–82575–01	ENGINE STOP SWITCH ASSY COUPE CIRCUIT CPLT	1					
2	682–82556–00	.LANYARD, STOP SWITCH .PLAQUETTE	1					
3	689–8257Y–00	.CAP .COUVERCLE	1					
4	6G1–42725–00	GROMMET PASSE-FIL	1					

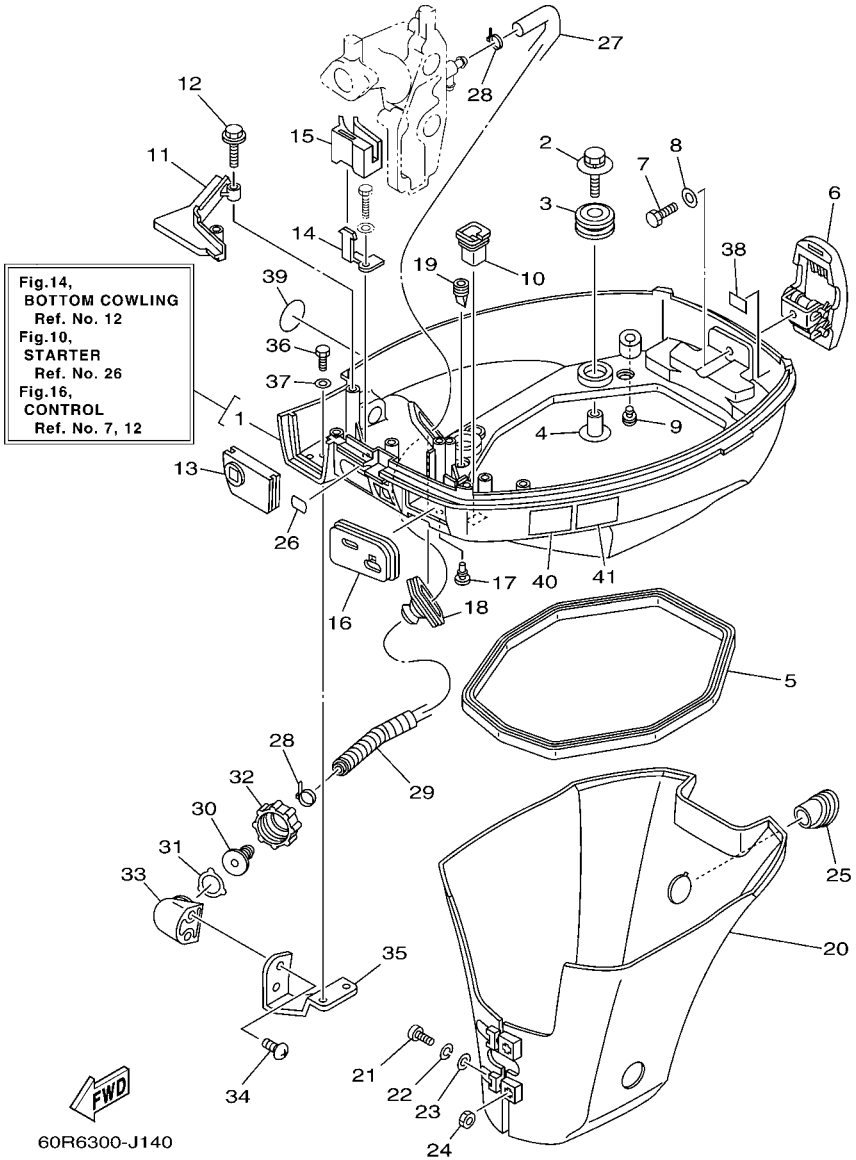

FIG. 14 BOTTOM COWLING CAPOT INFERIEUR

REF. NO.	PART NO. N° PIECES	DESCRIPTION DESCRIPTION	60R7					REMARKS REMARQUES
1	60R–G2710–00–4D	BOTTOM COWLING ASSY ENS. EMBASE	1					WITH TAPPING BOLT WITH TAPPING BOLT
2	68F–85119–00	BOLT BOULON	4					
3	90480–21M82	GROMMET PASSE-FIL	4					
4	90387–06176	COLLAR COLLERETTE	4					
5	68T–42716–10	RUBBER, SEAL 1 JOINT EN CAOUTCHOUC 1	1					
6	68T–42801–00	COWLING CLAMP COMP. BRIDE DE CAPOT COMP.	1					
7	97095–06012	BOLT BOULON	1					
8	92995–06600	WASHER RONDELLE	1					
9	6BL–44391–00	NIPPLE, HOSE RACCORD D'ESSENCE	1					
10	682–42727–00	GROMMET PASSE-FIL	1					
11	68T–42738–00–4D	PLATE, FITTING ETRIER	1					
12	90109–06M81	BOLT BOULON	2					
13	68T–42725–00	GROMMET PASSE-FIL	1					
14	68T–26393–00	HOLDER SUPPORT	1					
15	68T–26367–00	PROTECTOR PROTECTEUR	1					
16	60R–G2724–00	GROMMET PASSE-FIL	1					
17	90480–06M19	GROMMET PASSE-FIL	1					
18	688–42726–10	GROMMET PASSE-FIL	1					FLUSHING KIT FLUSHING KIT
19	60S–G2717–00	RUBBER, SEAL 2 JOINT EN CAOUTCHOUC 2	2					
20	60R–G2741–00	APRON CAPOT LATERAL	1					
21	97885–06030	SCREW, PAN HEAD VIS, A ENCOCHE	2					
22	92995–06100	WASHER, SPRING RONDELLE, GROWER	2					
23	92995–06600	WASHER RONDELLE	2					
24	95380–06600	NUT, HEXAGON ECROU	2					
25	68T–42717–00	RUBBER, SEAL 2 JOINT EN CAOUTCHOUC 2	1					
26	60R–H4342–00	SEAT, EMBLEM SIEGE, EMBLEME	1					
27	60S–E2481–00	PIPE 1 DURITE 1	1					FLUSHING KIT FLUSHING KIT

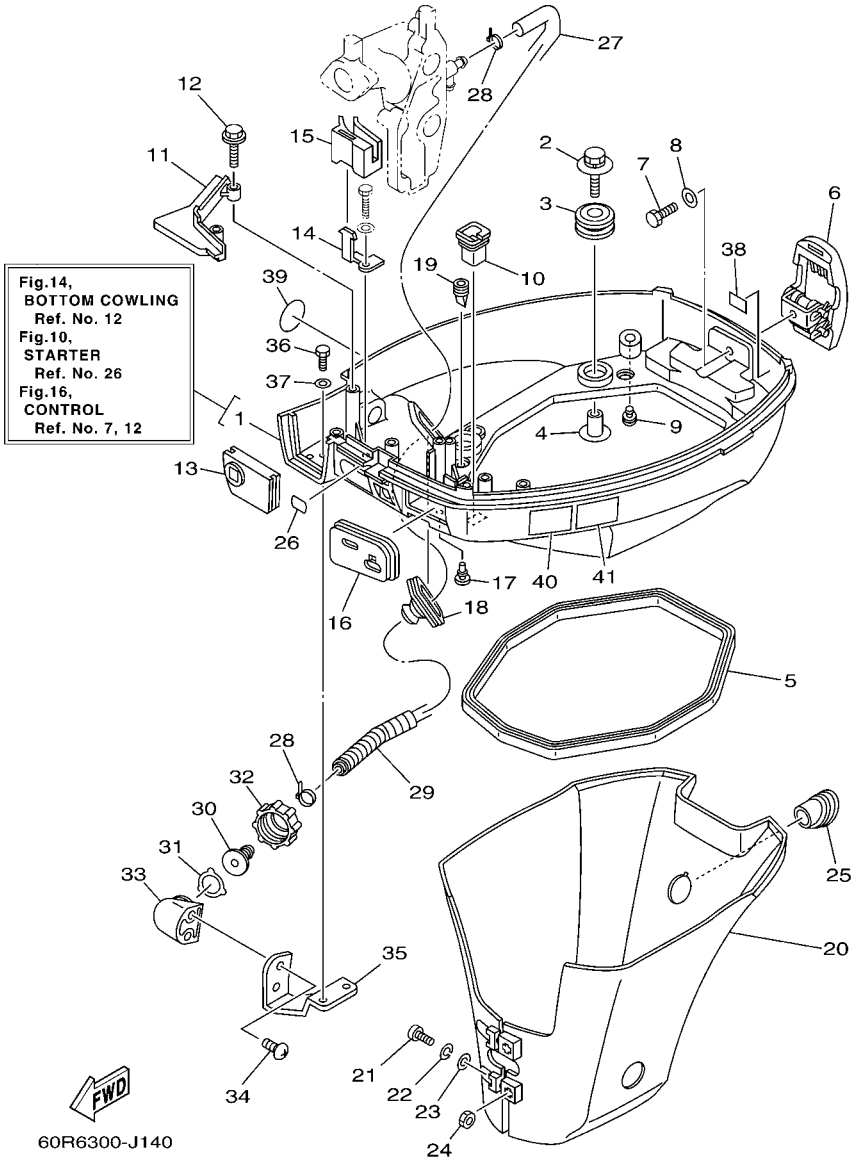

FIG. 14 BOTTOM COWLING CAPOT INFERIEUR

REF. NO.	PART NO. N° PIECES	DESCRIPTION DESCRIPTION	60R7					REMARKS REMARQUES
28	90465–11M10	CLAMP BRIDE	2					FLUSHING KIT FLUSHING KIT
29	90447–13M00	TUBE DURITE	1					FLUSHING KIT FLUSHING KIT
30	6R3–12582–00	JOINT, HOSE 2 RACCORD DE TUYAU 1	1					FLUSHING KIT FLUSHING KIT
31	6R3–12583–00	GASKET, HOSE JOINT JOINT	1					FLUSHING KIT FLUSHING KIT
32	6R3–12581–00	JOINT, HOSE 1 JOINT DE TUYAU	1					FLUSHING KIT FLUSHING KIT
33	68T–12572–00	ADAPTER ADAPTATEUR	1					FLUSHING KIT FLUSHING KIT
34	90167–06002	SCREW, TAPPING VIS, TETE FRAISEE	2					FLUSHING KIT FLUSHING KIT
35	68T–12535–00	PLATE PLAQUE	1					FLUSHING KIT FLUSHING KIT
36	97095–06012	BOLT BOULON	2					FLUSHING KIT FLUSHING KIT
37	92995–06600	WASHER RONDELLE	2					FLUSHING KIT FLUSHING KIT
38	6H8–42791–10	MARK 1 ETIQUETTE 1	1					
39	60R–F415E–00	LABEL, CAUTION ETIQUETTE, RECOMMANDATION	1					EXCEPT FOR RUS EXCEPT FOR RUS
40	6AH–42794–40	LABEL, WARNING (GENERAL) ETIQUETTE, AVERTISSEMENT	1					
41	6AH–42794–50	LABEL, WARNING (GENERAL) ETIQUETTE, AVERTISSEMENT	1					

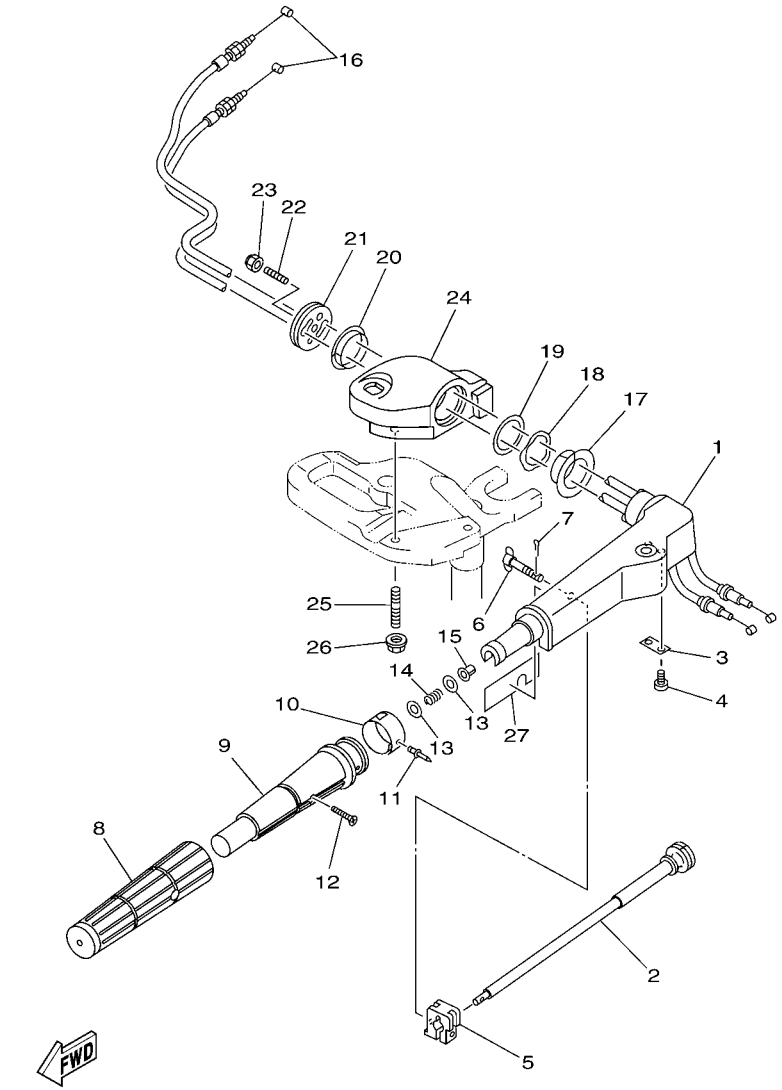

FIG. 15 STEERING DIRECTION

REF. NO.	PART NO. N° PIECES	DESCRIPTION DESCRIPTION	60R7					REMARKS REMARQUES
1	60R–G2111–00–4D	HANDLE, STEERING POIGNEE	1					
2	6G1–42138–01	LEVER, THROTTLE LEVIER, ACCELERATEUR	1					
3	68D–G2159–00	STAY SUPPORT	1					
4	97885–05012	SCREW, PAN HEAD VIS, A ENCOCHE	2					
5	6G1–42126–00	FRICTION, STEERING HANDLE GRIP CUVETTE, POIGNEE DE DIRECTION	1					
6	6G1–42125–01	BOLT, FRICTION ADJUSTING BOULON	1					
7	91490–16010	PIN. COTTER GOUPILLE	1					
8	68D–G2177–10	RUBBER, HANDLE CAOUTCHOUC, POIGNEE	1					
9	68D–G2119–01	GRIP, STEERING HANDLE POIGNEE, BARRE FRANCHE	1					
10	60R–G2137–00	INDICATOR, THROTTLE INDICATEUR, ACCELERATION	1					
11	90269–02M09	RIVET RIVET	1					
12	90152–05011	SCREW, COUNTERSUNK VIS, TETE NOYEE	1					
13	90201–10M02	WASHER, PLATE RONDELLE, PLATE	2					
14	90501–23800	SPRING, COMPRESSION RESSORT, COMPRESSION	1					
15	90386–08032	BUSH DOUILLE	1					
16	60R–F6301–00	THROTTLE CABLE ASSY CABLE D'ACCELERATEUR	2					
17	90386–34M97	BUSH DOUILLE	1					
18	90206–36M21	WASHER, WAVE RONDELLE, ONDULEE	1					
19	90202–36M55	WASHER, PLATE RONDELLE, PLATE	1					
20	90386–33M96	BUSH DOUILLE	1					
21	68T–42131–01	COVER, HANDLE STEERING COUVERCLE	1					
22	90116–08015	BOLT, STUD GOUJON	1					
23	90185–08057	NUT, SELF-LOCKING ECROU,AUTO-BLOQUANT	1					
24	60R–G2121–00–4D	BRACKET SUPPORT	1					
25	90116–10040	BOLT, STUD GOUJON	2					
26	90179–10M33	NUT ECROU	2					
27	60R–E571Y–60	MARK, CAUTION MAKER	1					

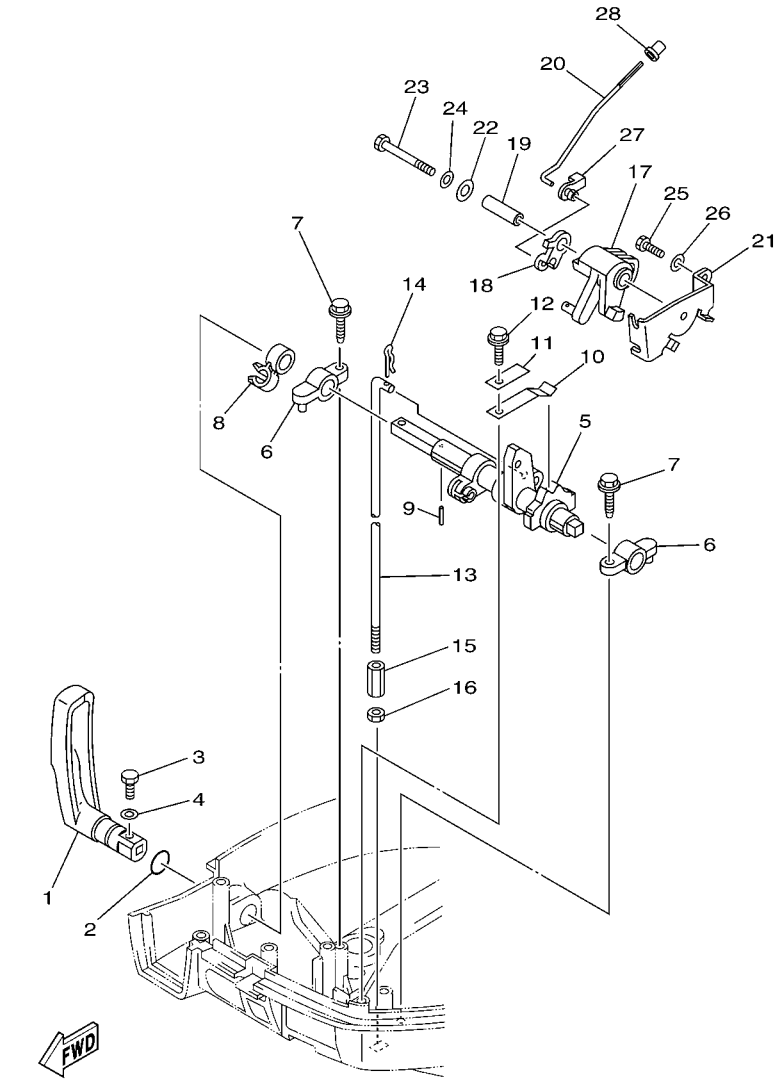

60N4300-G170

FIG. 16 CONTROL — COMMANDE

REF. NO.	PART NO. N° PIECES	DESCRIPTION DESCRIPTION	60R7					REMARKS REMARQUES
1	60R–G4111–00	HANDLE, GEAR SHIFT POIGNEE, LEVIER D'EMBRAYAGE	1					
2	93210–12327	O-RING JOINT TORIQUE	1					
3	97095–05016	BOLT BOULON	1					
4	92995–05600	WASHER RONDELLE	1					
5	68T–44121–02	LEVER, SHIFT ROD LEVIER, TIGE D'INVERSION	1					
6	6G1–41662–01–94	BRACKET 2 SUPPORT 2	2					
7	90109–06M81	BOLT BOULON	2					
8	90464–10M60	CLAMP BRIDE	1					
9	91690–30014	PIN, SPRING AGRAFFE	1					
10	65W–44116–00	SPRING RESSORT	1					
11	66R–44114–00	STOPPER PLAQUETTE	1					
12	90109–06M86	BOLT BOULON	1					
13	60R–G4143–00	ROD, SHIFT TIGE D'EMBRAYAGE	1					S(17.1") S(17.1")
	60R–G4143–10	ROD, SHIFT TIGE D'EMBRAYAGE	1					L(22.1") L(22.1")
14	90468–18001	CLIP JONC	1					
15	90170–06015	NUT ECROU	1					
16	95380–06700	NUT ECROU	1					
17	68T–41638–00	PULLEY POULIE	1					
18	68T–41283–00	LEVER, FREE ACCEL. LEVIER	1					
19	90387–06M59	COLLAR COLLERETTE	1					
20	68T–41211–00	LINK, ACCEL. BIELLETTE, ACCELERATION	1					
21	68T–14497–00	STAY, THROTTLE WIRE SUPPORT DE BOISSEAU	1					
22	90201–06M62	WASHER, PLATE RONDELLE, PLATE	1					
23	97095–06045	BOLT BOULON	1					
24	92995–06600	WASHER RONDELLE	1					
25	97095–06012	BOLT BOULON	1					
26	92995–06600	WASHER RONDELLE	1					

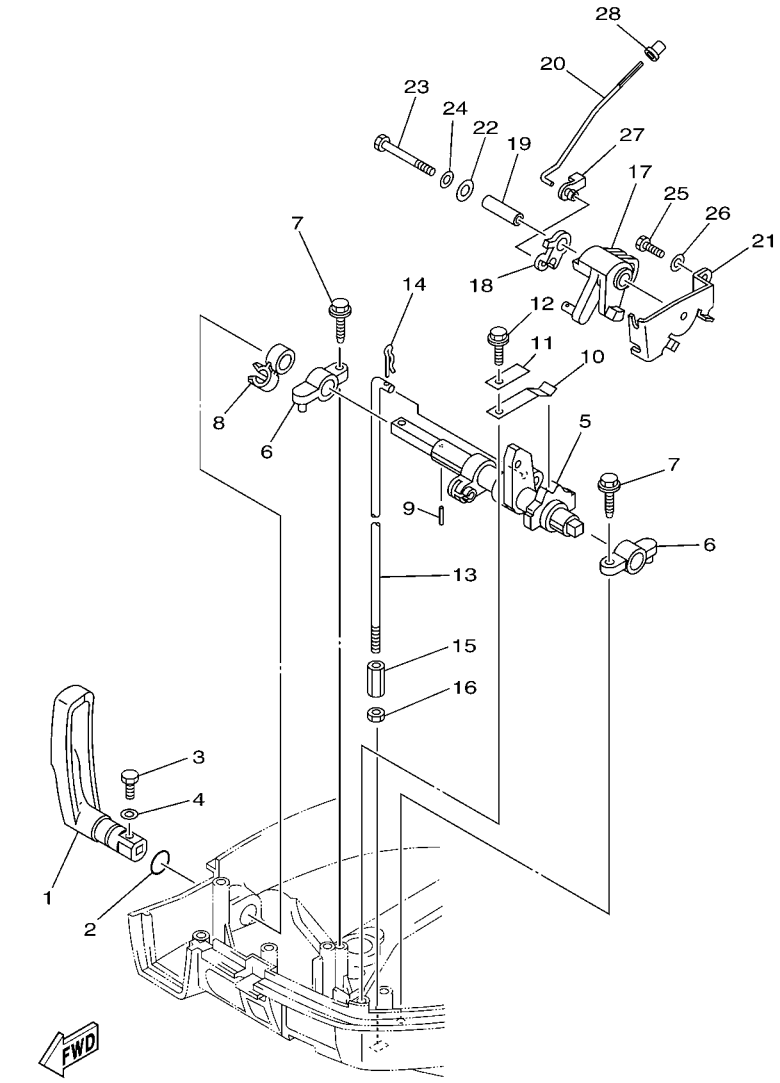

60N4300-G170

FIG. 16 CONTROL COMMANDE

REF. NO.	PART NO. N° PIECES	DESCRIPTION DESCRIPTION	60R7					REMARKS REMARQUES
27	661–41262–02	JOINT, CHOKE LEVER RACCORD, LEVIER DE STARTER	1					
28	647–14395–60	CAP, OVERFLOW PIPE COUVRE DE DURITE REFOULEMENT	1					

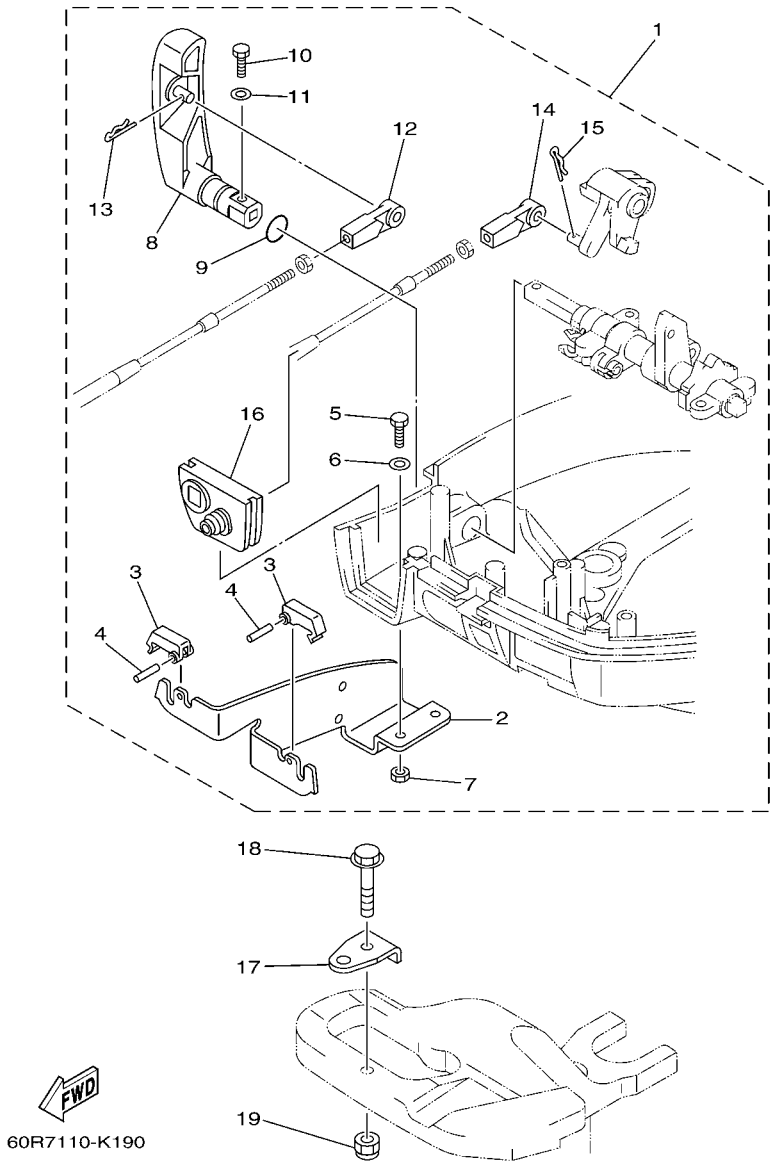

FIG. 17 REMO CON ATTACHMENT COMMANDE A DISTANCE

REF. NO.	PART NO. N° PIECES	DESCRIPTION DESCRIPTION	60R7					REMARKS REMARQUES
1	60R–G8501–00	REMOTE CONT. ATTACHMENT ASSY. COMMANDE A DISTANCE (KIT)	1					AP AP
2	68T–48531–00	.BRACKET, REMOTE CONTROL 1 .ETRIER 1, COMMANDE A DISTANCE	1					
3	682–48538–50	.CLAMP, CABLE 1 .COLLIER	2					
4	91690–30012	.PIN, SPRING .AGRAFFE	2					
5	97095–06012	.BOLT .BOULON	2					
6	92995–06600	.WASHER .RONDELLE	2					
7	95380–06600	.NUT, HEXAGON .ECROU	2					
8	60R–G4111–10	.HANDLE, GEAR SHIFT .POIGNEE, LEVIER D'EMBRAYAGE	1					
9	93210–12327	.O-RING .JOINT TORIQUE	1					
10	97095–05016	.BOLT .BOULON	1					
11	92995–05600	.WASHER .RONDELLE	1					
12	663–48344–00	.CABLE END, REMOTE CONTROL .CHAPE CABLE	1					
13	90468–18008	.CLIP .JONC	1					
14	663–48344–00	.CABLE END, REMOTE CONTROL .CHAPE CABLE	1					
15	90468–18008	.CLIP .JONC	1					
16	68T–42725–10	.GROMMET .PASSE-FIL	1					
17	63V–48511–01	HOOK, STEERING ATTACHE, DIRECTION	1					AP AP
18	97575–08535	BOLT, WITH WASHER VIS HEXAGONAL AVC RONDELLE	1					AP AP
19	90185–08057	NUT, SELF-LOCKING ECROU,AUTO-BLOQUANT	1					AP AP

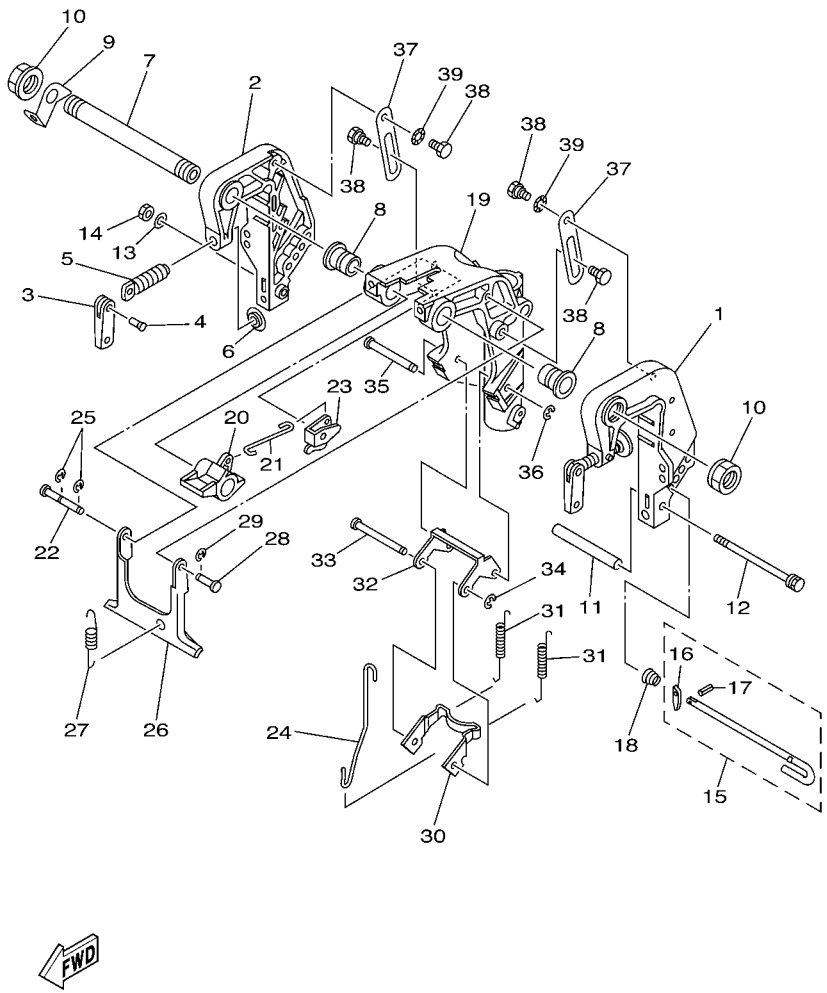

68R3110-C200

FIG. 18 BRACKET 1 SUPPORT 1

REF. NO.	PART NO. N° PIECES	DESCRIPTION DESCRIPTION	60R7					REMARKS REMARQUES
1	60R–G3111–01–4D	BRACKET, CLAMP 1 PRESSE 1	1					
2	60R–G3112–01–4D	BRACKET, CLAMP 2 PRESSE 2	1					
3	6L8–G3118–01	HANDLE, TRANSOM CLAMP POIGNEE DE VIS DE PRESSE	2					
4	90243–04M01	PIN GOUPILLE	2					
5	6E7–43116–00	SCREW, TRANSOM CLAMP VIS DE PRESSE	2					
6	648–43114–01	PAD, TRANSOM CLAMP RONDELLE D'APPUI	2					
7	63V–43131–10	BOLT, CLAMP BRACKET (L:283MM) BOULON, PRESSE (L:283MM)	1					FOR RIDE GUIDE FOR RIDE GUIDE
8	90386–22MA4	BUSH DOUILLE	2					
9	66R–43113–00	PLATE, CLAMP BRACKET PLAQUETTE, PRESSE	1					
10	90185–22043	NUT, SELF-LOCKING ECROU,AUTO-BLOQUANT	2					
11	90387–06M13	COLLAR COLLERETTE	1					
12	90101–06M18	BOLT BOULON	1					
13	92990–06600	WASHER, PLATE RONDELLE, PLATE	1					
14	95380–06700	NUT ECROU	1					
15	6L2–43160–01	TILT ROD ASSY BROCHE D'INCLINAISON (ENS.)	1					
16	689–43165–00	.PLATE, TILT LOCK .TAQUET, BROCHE INCLINAISON	1					
17	91690–30008	.PIN, SPRING .AGRAFFE	1					
18	90502–10M07	SPRING, CONICAL RESSORT, CONIQUE	1					
19	60R–G3311–00–4D	BRACKET, SWIVEL 1 SUPPORT, PIVOT 1	1					S(17.1") S(17.1")
	60R–G3311–10–4D	BRACKET, SWIVEL 1 SUPPORT, PIVOT 1	1					L(22.1") L(22.1")
20	60R–G3631–00	LEVER, TILT LEVIER, INCLINAISON	1					
21	60R–G3616–00	ROD, TILT LOCK TIGE	1					
22	68T–43646–00	SHAFT, LEVER AXE, LEIVER	1					
23	68T–43641–00	LEVER, TILT LEVIER, INCLINAISON	1					
24	68T–43617–00	ROD, TILT LOCK TIGE	1					
25	99080–05600	CIRCLIP CIRCLIP	2					
26	68T–43350–00	RECEIVER ASSY RECEIVER ASSY	1					

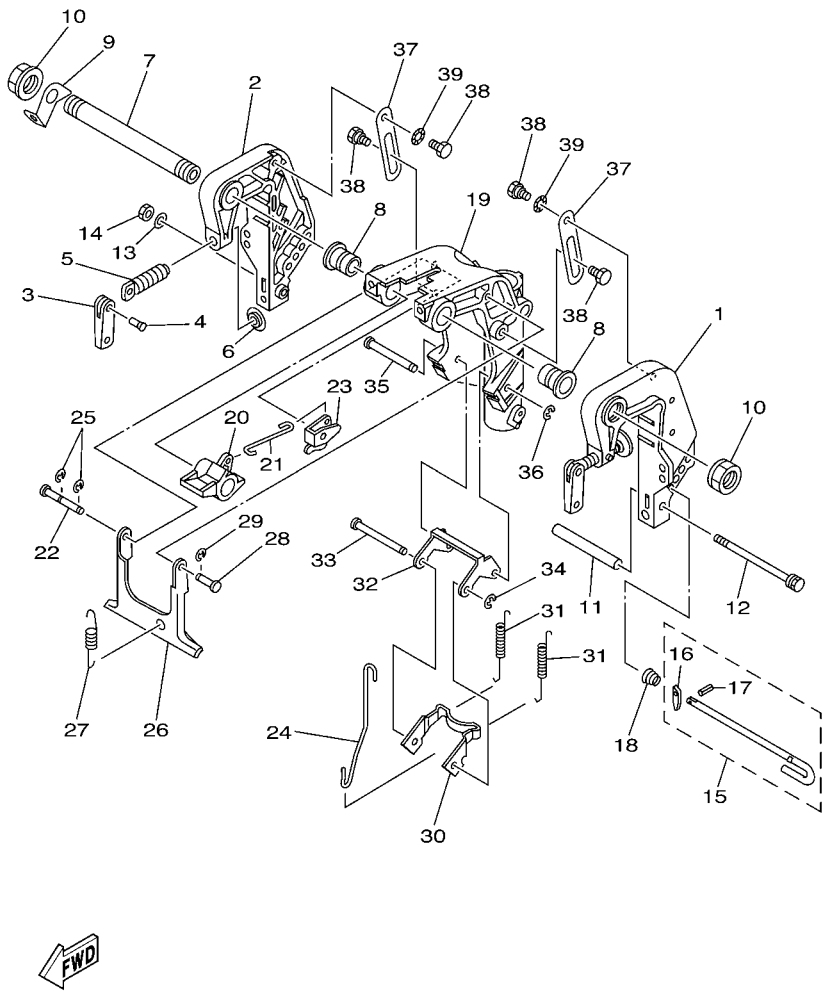

68R3110-C200

FIG. 18 BRACKET 1 SUPPORT 1

REF. NO.	PART NO. N° PIECES	DESCRIPTION DESCRIPTION	60R7					REMARKS REMARQUES
27	90506–18M41	SPRING, TENSION RESSORT, TENSION	1					S(17.1") S(17.1")
	90506–20005	SPRING, TENSION RESSORT, TENSION	1					L(22.1") L(22.1")
28	63V–43191–00	SHAFT, STOPPER AXE, BUTEE	1					
29	99080–05600	CIRCLIP CIRCLIP	1					
30	68T–43614–00	PLATE, TILT LOCK ETRIER, VERROUILLAGE MARCHE AR	1					
31	90506–20806	SPRING, TENSION RESSORT, TENSION	2					S(17.1") S(17.1")
	90506–23803	SPRING, TENSION RESSORT, TENSION	2					L(22.1") L(22.1")
32	68T–43615–00	PLATE, TILT LOCK ETRIER, VERROUILLAGE MARCHE AR	1					
33	68T–43611–00	SHAFT, TILT LOCK AXE, VERROUILLAGE MARCHE AR	1					
34	93430–04M03	CIRCLIP CLIPS	1					
35	68T–43659–00	SHAFT, REVERSE LOCK AXE, VERROUILLAGE MARCHE AR	1					
36	99080–05600	CIRCLIP CIRCLIP	1					
37	68T–43627–00	STOPPER PLAQUETTE	2					
38	90109–06M84	BOLT BOULON	4					
39	90206–10M24	WASHER, WAVE RONDELLE, ONDULEE	2					

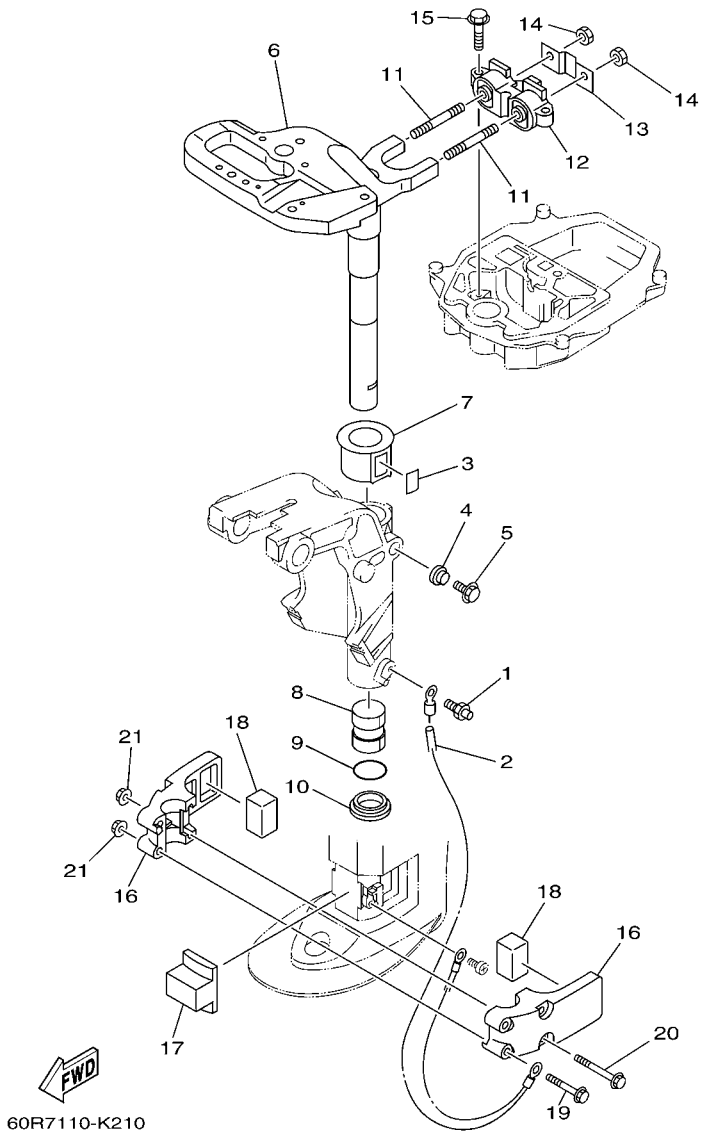

FIG. 19 BRACKET 2 SUPPORT 2

REF. NO.	PART NO. N° PIECES	DESCRIPTION DESCRIPTION	60R7					REMARKS REMARQUES
1	93700–06M03	NIPPLE, GREASE PION	1					
2	68T–82127–00	WIRE, LEAD 2 FIL 2	1					
3	63V–42528–00	PLATE, FRICTION PLAQUE, FRICTION	1					
4	689–43373–01	SEAL, DAMPER JOINT	1					
5	90105–06M07	BOLT, FLANGE BOULON	1					
6	60R–G2511–01–4D	BRACKET, STEERING CADRE, DIRECTION	1					S(17.1") S(17.1")
	60R–G2511–11–4D	BRACKET, STEERING CADRE, DIRECTION	1					L(22.1") L(22.1")
7	63V–42537–00	BUSHING, PIVOT SHAFT COUSSINET	1					
8	90386–30048	BUSH DOUILLE	1					
9	93210–29M94	O-RING JOINT TORIQUE	1					
10	90386–30M60	BUSH DOUILLE	1					
11	90116–08M54	BOLT, STUD GOUJON	2					
12	68T–44517–00	MOUNT RUBBER SILENT-BLOC	1					
13	68T–44526–00	PLATE PLAQUE	1					
14	95380–08600	NUT ECROU	2					
15	97575–06525	BOLT, WITH WASHER VIS HEXAGONAL AVC RONDELLE	2					
16	68T–44551–00–4D	HOUSING, LOWER MOUNT RUBBER 1 BOITIER, SILENT-BLOC INFERIEUR	2					
17	60R–G4557–00	MOUNT DAMPER, LOWER FRONT SILENT-BLOC, INFERIEUR AVANT	1					
18	60R–G4555–00	MOUNT DAMPER, LOWER SIDE SILENT-BLOC, INFERIEUR LATERAL	2					
19	90119–06012	BOLT, WITH WASHER BOULON, AVEC RONDELLE	2					
20	90119–06013	BOLT, WITH WASHER BOULON, AVEC RONDELLE	2					
21	90179–06M28	NUT ECROU	4					

FIG. 20 UPPER CASING FOURREAU

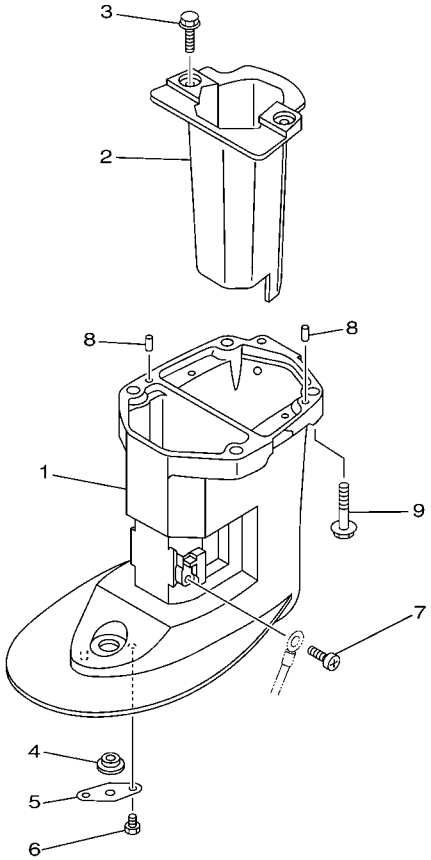

6AU4110-K250

REF. NO.	PART NO. N° PIECES	DESCRIPTION DESCRIPTION	60R7					REMARKS REMARQUES
1	60R–G5111–00–4D	CASING, UPPER FOURREAU	1					S(17.1") S(17.1")
	60R–G5111–10–4D	CASING, UPPER FOURREAU	1					L(22.1") L(22.1")
2	60R–E4711–00–CA	MUFFLER 1 POT D'ECHAPPEMENT 1	1					
3	97575–06514	BOLT, WITH WASHER VIS HEXAGONAL AVC RONDELLE	2					
4	90480–14M54	GROMMET PASSE-FIL	1					
5	68T–45321–00	PLATE PLAQUETTE	1					
6	97095–06008	BOLT BOULON	1					
7	97885–05008	SCREW, PAN HEAD VIS, A ENCOCHE	1					
8	93604–12M07	PIN, DOWEL CLAVETTE	2					
9	97575–08535	BOLT, WITH WASHER VIS HEXAGONAL AVC RONDELLE	4					

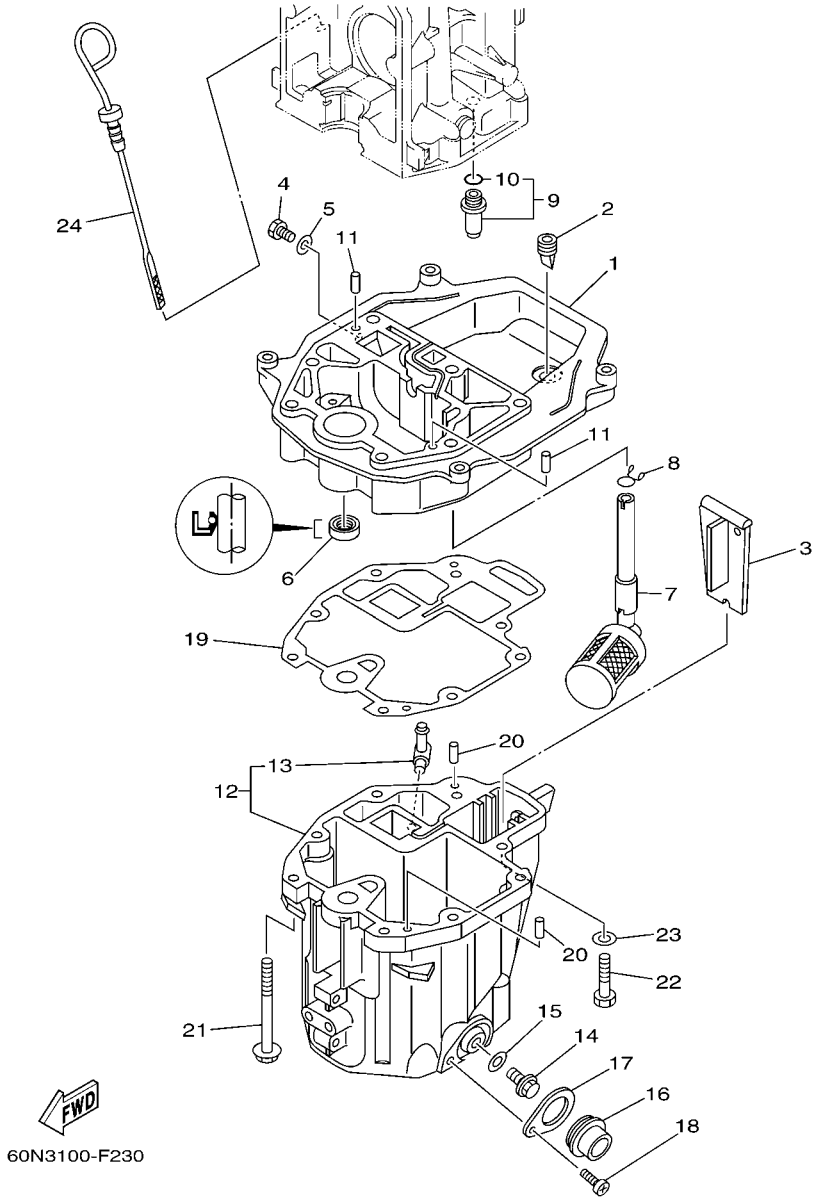

FIG. 21 OIL PAN — VENTILATEUR D'HUILE

REF. NO.	PART NO. N° PIECES	DESCRIPTION DESCRIPTION	60R7					REMARKS REMARQUES
1	60R–G1137–00–94	GUIDE, EXHAUST COLLECTEUR D'ECHAPPEMENT	1					
2	60S–G2717–00	RUBBER, SEAL 2 JOINT EN CAOUTCHOUC 2	1					
3	60R–G5181–00	PLATE PLAQUETTE	1					
4	97095–08014	BOLT BOULON	1					
5	90430–08800	GASKET JOINT	1					
6	93101–12M70	OIL SEAL JOINT SPY	1					
7	68T–13421–01	STRAINER 2 FILTRE 2	1					
8	90467–11M08	CLIP JONC	1					
9	6G8–11575–00	RELIEF VALVE ASSY SOUPAPE DE RENTREE D'AIR	1					
10	93210–12M62	.O-RING .JOINT TORIQUE	1					
11	93606–19M23	PIN, DOWEL GOUPILLE	2					
12	60R–E5311–00–5B	OIL PAN VENTILATEUR D'HUILE	1					
13	6H1–11372–00	.NIPPLE, HOSE .RACCORD, TUYAU	1					
14	90340–10M10	PLUG, STRAIGHT SCREW PLOT, FILETE DROIT	1					
15	90430–10M11	GASKET JOINT	1					
16	60R–E5316–00	DAMPER 1 AMORTISSEUR 1	1					
17	68T–15317–00	SPACER, ENGINE MOUNT ENTRETOISE DE SUPPORT	1					
18	97885–05008	SCREW, PAN HEAD VIS, A ENCOCHE	1					
19	68T–13475–00	GASKET JOINT	1					
20	93604–12M07	PIN, DOWEL CLAVETTE	2					
21	90119–08005	BOLT, WITH WASHER BOULON, AVEC RONDELLE	6					
22	97075–08030	BOLT BOULON	2					
23	92995–08600	WASHER RONDELLE	2					
24	68T–15362–00	PLUG, OIL LEVEL PLOT, NIVEAU D'HUILE	1					

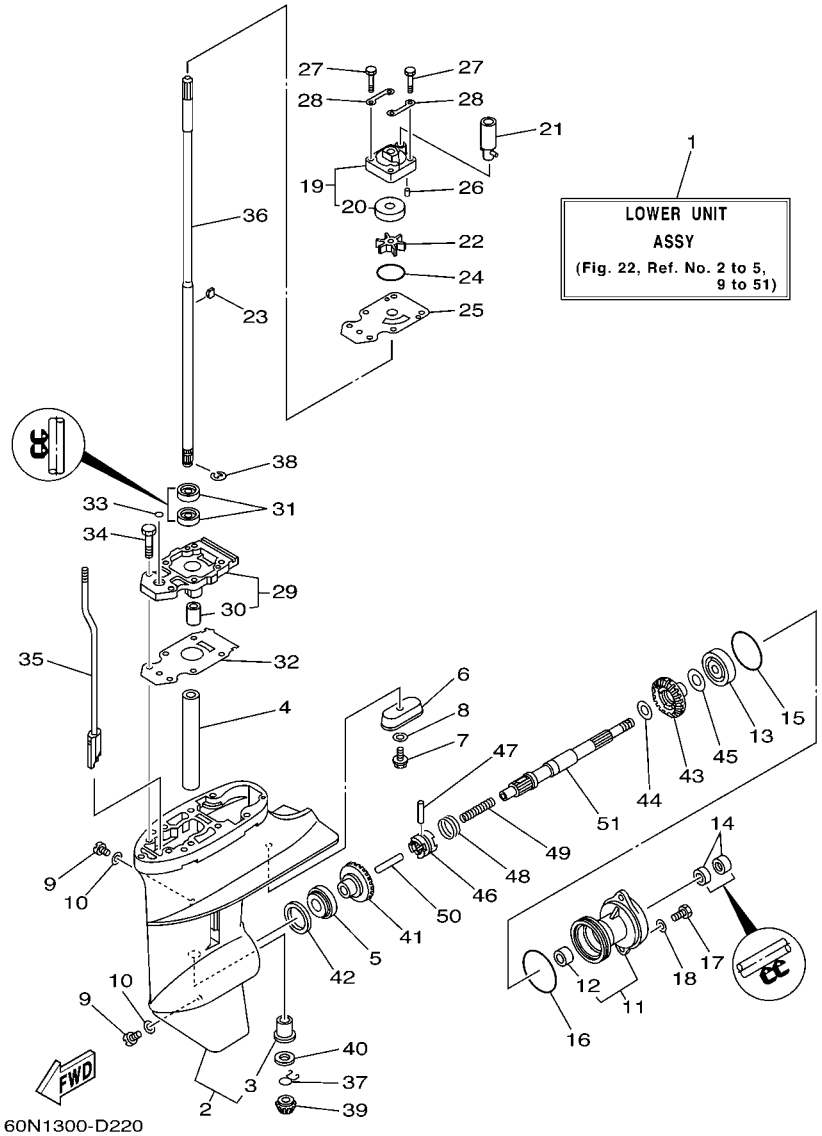

FIG. 22 LOWER CASING & DRIVE 1 BOITIER D'HELICE TRANSMISSION1

REF. NO.	PART NO. N° PIECES	DESCRIPTION DESCRIPTION	60R7					REMARKS REMARQUES
1	60R–G5300–00–4D	LOWER UNIT ASSY UNITE INFERIEURE (ENS.)	1					S(17.1") S(17.1")
	60R–G5300–10–4D	LOWER UNIT ASSY UNITE INFERIEURE (ENS.)	1					L(22.1") L(22.1")
2	60R–G5311–00–4D	CASING, LOWER BOITIER D'HELICE	1					
3	6G1–45317–09	.BUSHING, DRIVE SHAFT .DOUILLE, ARBRE MOTEUR	1					
4	90387–14M49	COLLAR COLLERETTE	1					
5	93306–004YH	BEARING ROULEMENT	1					
6	68T–45251–00	ANODE ANODE	1					
7	95895–06016	BOLT, FLANGE BOULON	1					
8	92990–06300	WASHER, INTERNAL TOOTH RONDELLE, DENTURE INTERNE	1					
9	90340–08002	PLUG, STRAIGHT SCREW PLOT, FILETE DROIT	2					
10	90430–08020	GASKET JOINT	2					
11	6N0–G5361–00–4D	CAP, LOWER CASING COUVERCLE, BOITIER D'HELICE	1					
12	6G1–45362–09	.BUSHING .COUSSINET	1					
13	93306–004YH	BEARING ROULEMENT	1					
14	93101–15074	OIL SEAL JOINT SPY	2					
15	93210–49046	O-RING JOINT TORIQUE	1					
16	93210–53M08	O-RING JOINT TORIQUE	1					
17	97095–06016	BOLT BOULON	2					
18	92995–06600	WASHER RONDELLE	2					
19	63V–44301–00	WATER PUMP HOUSING COMP. CARTER, POMPE A EAU (ENS)	1					
20	63V–44322–00	.INSERT, CARTRIDGE .CUVETTE	1					
21	68T–44366–00	DAMPER, WATER SEAL 2 JOINT, TUBE D'EAU 2	1					
22	68T–44352–00	IMPELLER TURBINE	1					
23	664–44338–00	KEY, WOODRUFF CLAVETTE, VOLANT	1					
24	93210–44398	O-RING JOINT TORIQUE	1					
25	68T–44323–00	OUTER PLATE, CARTRIDGE PLAQUE EXTERIEURE	1					
26	93604–12M07	PIN, DOWEL CLAVETTE	2					

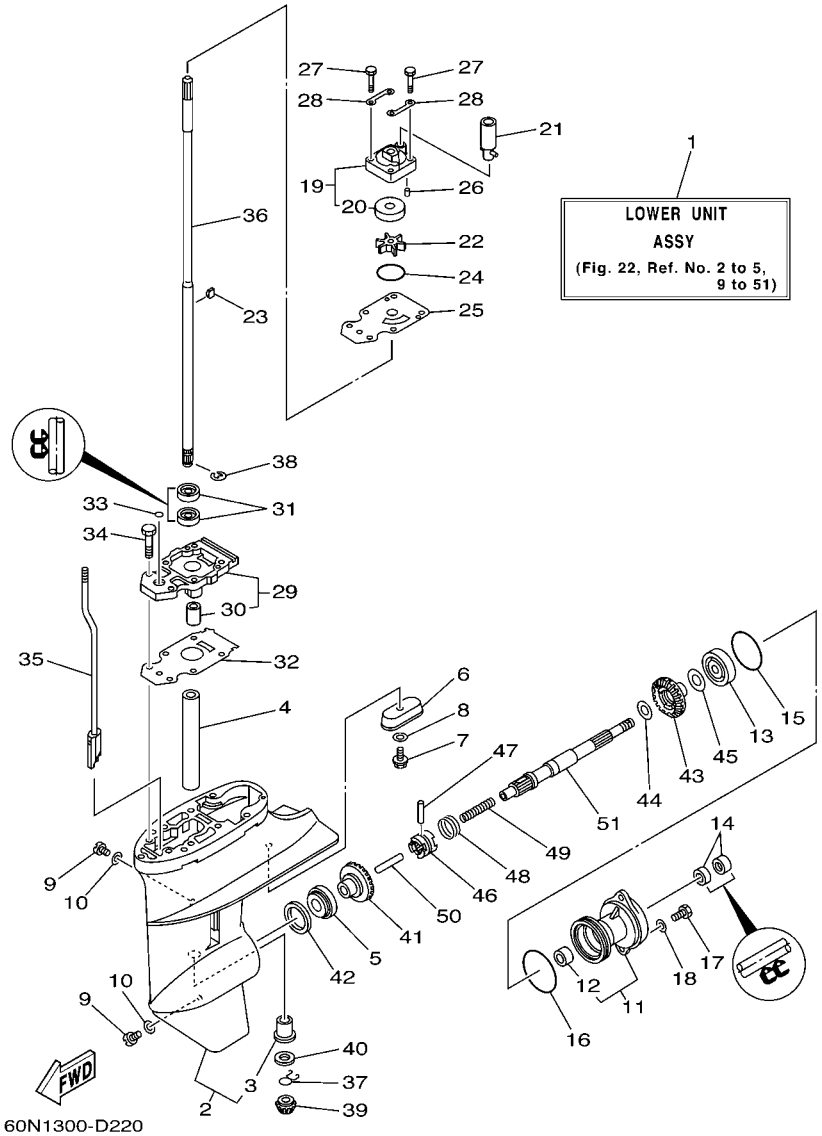

FIG. 22 LOWER CASING & DRIVE 1 BOITIER D'HELICE TRANSMISSION1

REF. NO.	PART NO. N° PIECES	DESCRIPTION DESCRIPTION	60R7					REMARKS REMARQUES
27	97080–08045	BOLT BOULON	4					
28	63V–44328–00	PLATE PLAQUETTE	2					
29	60R–G5331–00–5B	HOUSING, BEARING FLASQUE, ROULEMENT	1					
30	6G1–45316–09	.BUSHING, DRIVE SHAFT .DOUILLE, ARBRE MOTEUR	1					
31	93101–11M23	OIL SEAL JOINT SPY	2					
32	68T–45315–A0	PACKING, LOWER CASING JOINT, BOITIER D'HELICE	1					
33	93210–06ME6	O-RING JOINT TORIQUE	1					
34	97080–08025	BOLT BOULON	2					
35	60R–G4150–00	SHIFT CAM ASSY CAME D'INVERSION	1					
36	60R–G5511–00	SHAFT, DRIVE ARBRE, MOTEUR	1					S(17.1") S(17.1")
	60R–G5511–10	SHAFT, DRIVE ARBRE, MOTEUR	1					L(22.1") L(22.1")
37	90467–09M05	CLIP JONC	1					
38	99001–07600	CIRCLIP CIRCLIP	1					
39	6N0–G5551–A0	PINION (13T) PIGNON D'ATTAQUE (13D)	1					
40	6G1–45533–00	SHIM (T:1.90MM) CALE (T:1.90MM)	1					UR UR
	6G1–45533–10	SHIM (T:2.00MM) CALE (T:2.00MM)	1					UR UR
	6G1–45533–20	SHIM (T:2.10MM) CALE (T:2.10MM)	1					UR UR
	6G1–45533–30	SHIM (T:2.20MM) CALE (T:2.20MM)	1					UR UR
41	60R–G5560–00	GEAR 1 (27T) PIGNON 1 (27T)	1					
42	664–45587–01	SHIM (T:0.10MM) CALE (T:0.10MM)	1					UR UR
	664–45587–10	SHIM (T:0.12MM) CALE (T:0.12MM)	1					UR UR
	664–45587–20	SHIM (T:0.15MM) CALE (T:0.15MM)	1					UR UR
	664–45587–30	SHIM (T:0.18MM) CALE (T:0.18MM)	1					UR UR
	664–45587–40	SHIM (T:0.30MM) CALE (T:0.30MM)	1					UR UR
	664–45587–50	SHIM (T:0.40MM) CALE (T:0.40MM)	1					UR UR
	664–45587–60	SHIM (T:0.50MM) CALE (T:0.50MM)	1					UR UR
43	60R–G5571–00	GEAR 2 (27T) PIGNON 2 (27T)	1					

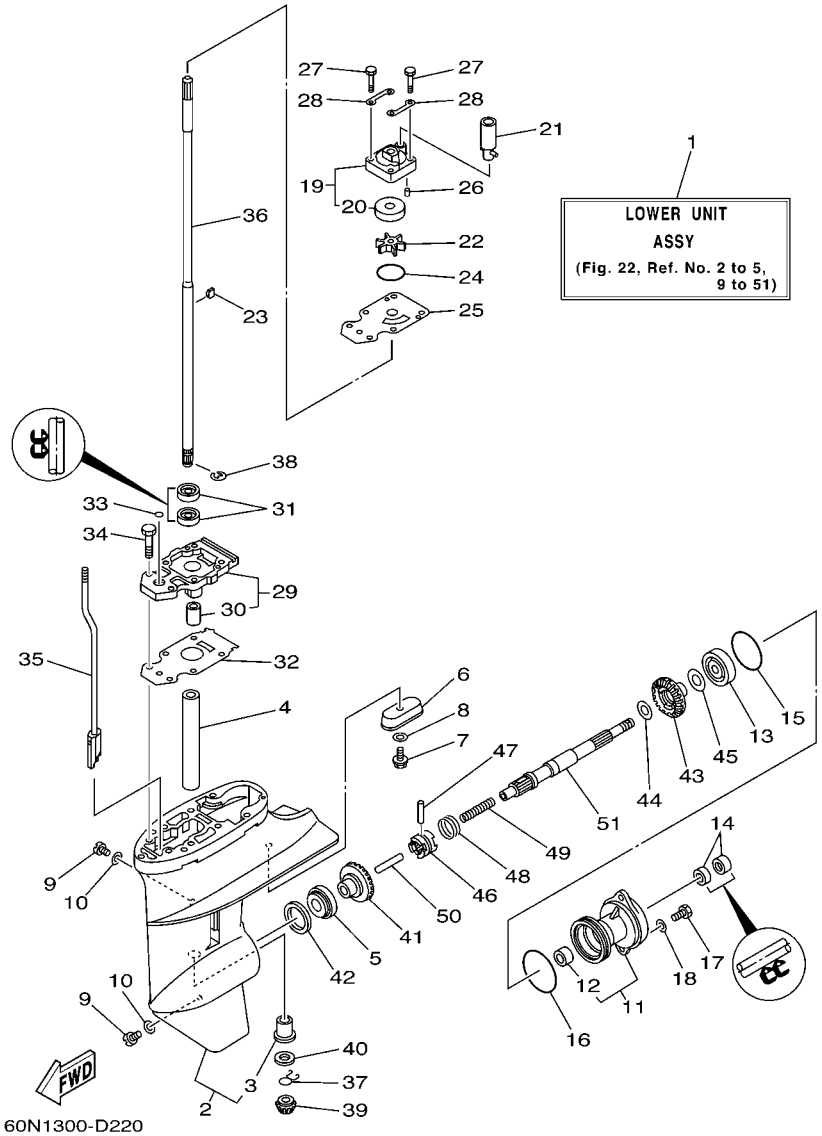

FIG. 22 LOWER CASING & DRIVE 1 BOITIER D'HELICE TRANSMISSION1

REF. NO.	PART NO. N° PIECES	DESCRIPTION DESCRIPTION	60R7					REMARKS REMARQUES
44	90201–15M89	WASHER, PLATE RONDELLE, PLATE	1					
45	647–45567–00	SHIM (T:0.10MM) CALE (T:0.10MM)	1					UN UN
46	68T–45631–00	CLUTCH, DOG CRABOT	1					
47	6G1–45632–00	PIN, CROSS GOUPILLE DE CRABOT	1					
48	654–45633–00	RING, CROSS PIN JONC, GOUPILLE CRABOT	1					
49	90501–12M05	SPRING, COMPRESSION RESSORT, COMPRESSION	1					
50	6G1–45635–00	PLUNGER, SHIFT POUSSOIR D'EMBRAYAGE	1					
51	68T–45611–00	SHAFT, PROPELLER ARBRE, HELICE	1					

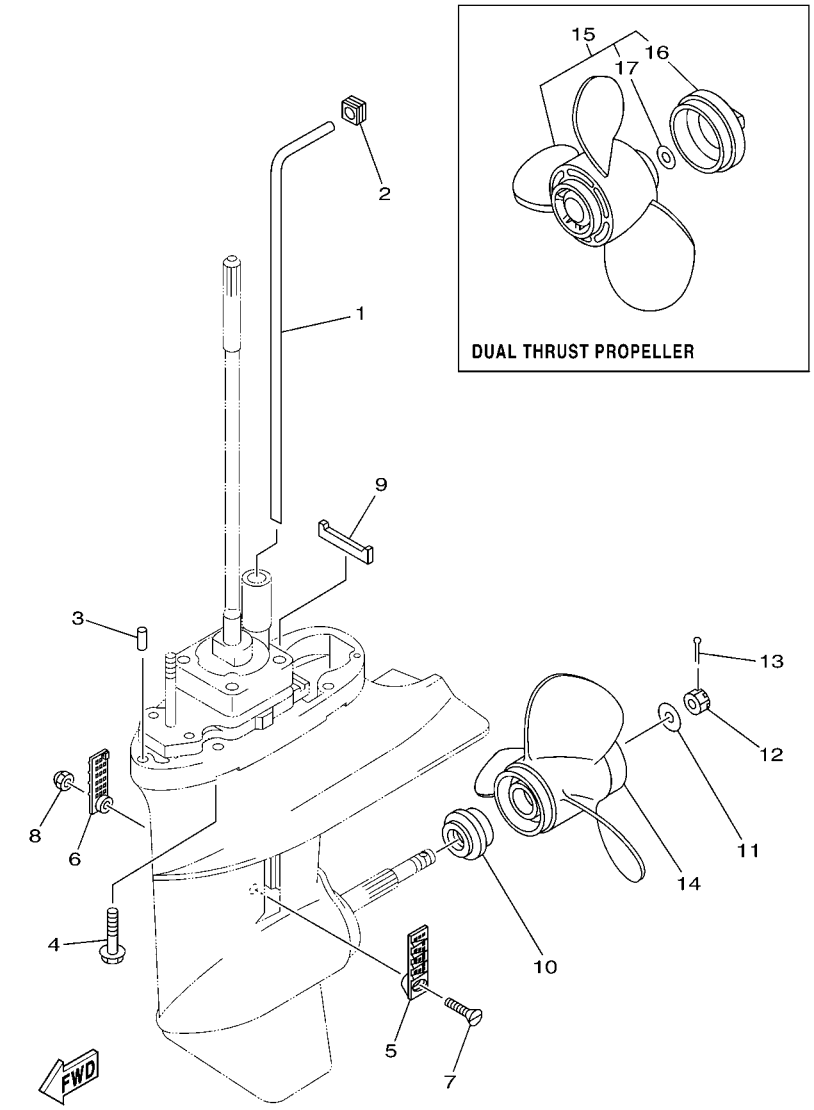

FIG. 23 LOWER CASING & DRIVE 2 BOITIER D'HELICE TRANSMISSION2

REF. NO.	PART NO. N° PIECES	DESCRIPTION DESCRIPTION	60R7					REMARKS REMARQUES
1	68T–44361–00	TUBE, WATER 1 TUBE D'EAU 1	1					S(17.1") S(17.1")
	68T–44361–10	TUBE, WATER 1 TUBE D'EAU 1	1					L(22.1") L(22.1")
2	63V–44365–10	DAMPER, WATER SEAL 1 JOINT, TUBE D'EAU 1	1					
3	93604–12M07	PIN, DOWEL CLAVETTE	2					
4	97575–08535	BOLT, WITH WASHER VIS HEXAGONAL AVC RONDELLE	4					
5	6G1–45214–00	COVER, WATER INLET 1 GRILLE, ENTREE D'EAU 1	1					
6	6G1–45215–00	COVER, WATER INLET 2 GRILLE, ENTREE D'EAU 2	1					
7	90152–05M03	SCREW, COUNTERSUNK VIS, TETE NOYEE	1					
8	90185–05002	NUT, NYLON ECROU,AUTO-BLOQUANT	1					
9	63V–45375–00	DAMPER, SEAL BOURRELET, CAOUTCHOUC	1					
10	6N0–G5987–10	SPACER 1 ENTRETOISE 1	1					
11	90201–10M01	WASHER, PLATE RONDELLE, PLATE	1					
12	90171–10M01	NUT, CASTLE ECROU, CRENELE	1					
13	91490–30020	PIN. COTTER GOUPILLE	1					
14	6G1–45941–00–EL	PROPELLER (3X8-1/2"X8-1/2"-N) HELICE (3X8-1/2"X8-1/2"-N)	1					UR UR
	6G1–45943–00–EL	PROPELLER (3X8-1/2"X7-1/2"-N) HELICE (3X8-1/2"X7-1/2"-N)	1					UR UR
	6G1–45947–00–EL	PROPELLER (3X8-1/2"X6-1/2"-N) HELICE (3X8-1/2"X6-1/2"-N)	1					UR UR
	6G1–45952–00–EL	PROPELLER (3X8-1/2"X8"-N) HELICE (3X8-1/2"X8"-N)	1					UR UR
15	6G1–W4591–01–EL	PROPELLER (3X9"X7"-N) HELICE (3X9"X7"-N)	1					UR UR
	6G1–W4592–00–EL	PROPELLER (3X9"X5"-N) HELICE (3X9"X5"-N)	1					UR UR
16	6G1–45616–01	.NUT, PROPELLER .CONE, HELICE	1					
17	90201–10M02	.WASHER, PLATE .RONDELLE, PLATE	1					

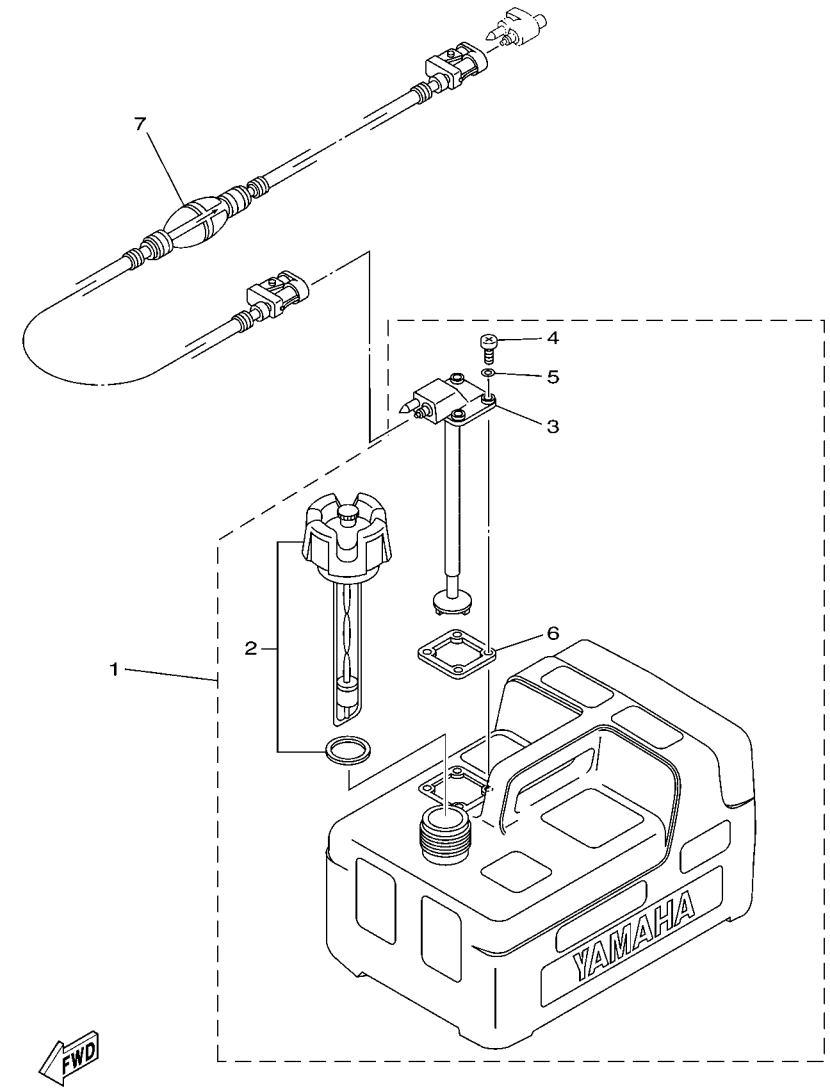

66M4100-D270

FIG. 24 FUEL TANK — RESERVOIR A CARBURANT

REF. NO.	PART NO. N° PIECES	DESCRIPTION DESCRIPTION	60R7					REMARKS REMARQUES
1	6YL–24201–05	FUEL TANK ASSY (12L) RESERVOIR A ESSENCE (ENS.) 12L	1					AP AP
2	6YL–24610–01	.CAP ASSY .BOUCHON	1					
3	6YL–24260–01	.FUEL METER ASSY .INDICATEUR DE CARBURANT	1					
4	90157–05M16	.SCREW, PAN HEAD .VIS, TETE TRONCONIQUE	4					
5	6YL–24329–00	.SEAL .JOINT	4					
6	6YL–24268–01	.GASKET, FUEL METER .JOINT, JAUGE A CARBURANT	1					
7	6YL–24306–54	FUEL PIPE COMP. 1 DURITE A ESSENCE 1	1					AP AP

FIG. 25 STEERING GUIDE FIXATION DE DIRECTION

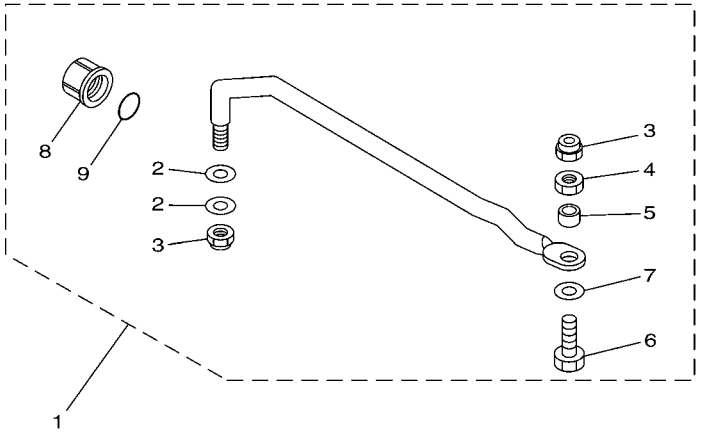

6AU1100-G300

REF. NO.	PART NO. N° PIECES	DESCRIPTION DESCRIPTION	60R7					REMARKS REMARQUES
1	68T–61350–10	STEERING GUIDE ATTACHMENT KIT FIXATIONS DE DIRECTION	1					AP AP
2	90201–10M20	.WASHER, PLATE .RONDELLE, PLATE	2					
3	90185–09M01	.NUT, SELF-LOCKING .ECROU,AUTO-BLOQUANT	2					
4	90170–09M03	.NUT .ECROU	1					
5	90387–10M42	.COLLAR .COLLERETTE	1					
6	6E5–61355–00	.BOLT .BOULON	1					
7	90201–10M63	.WASHER, PLATE .RONDELLE, PLATE	1					
8	6E5–43145–01	.CAP, CLAMP BRACKET .CAPUCHON, PRESSE	1					
9	93210–16275	.O-RING .JOINT TORIQUE	1					

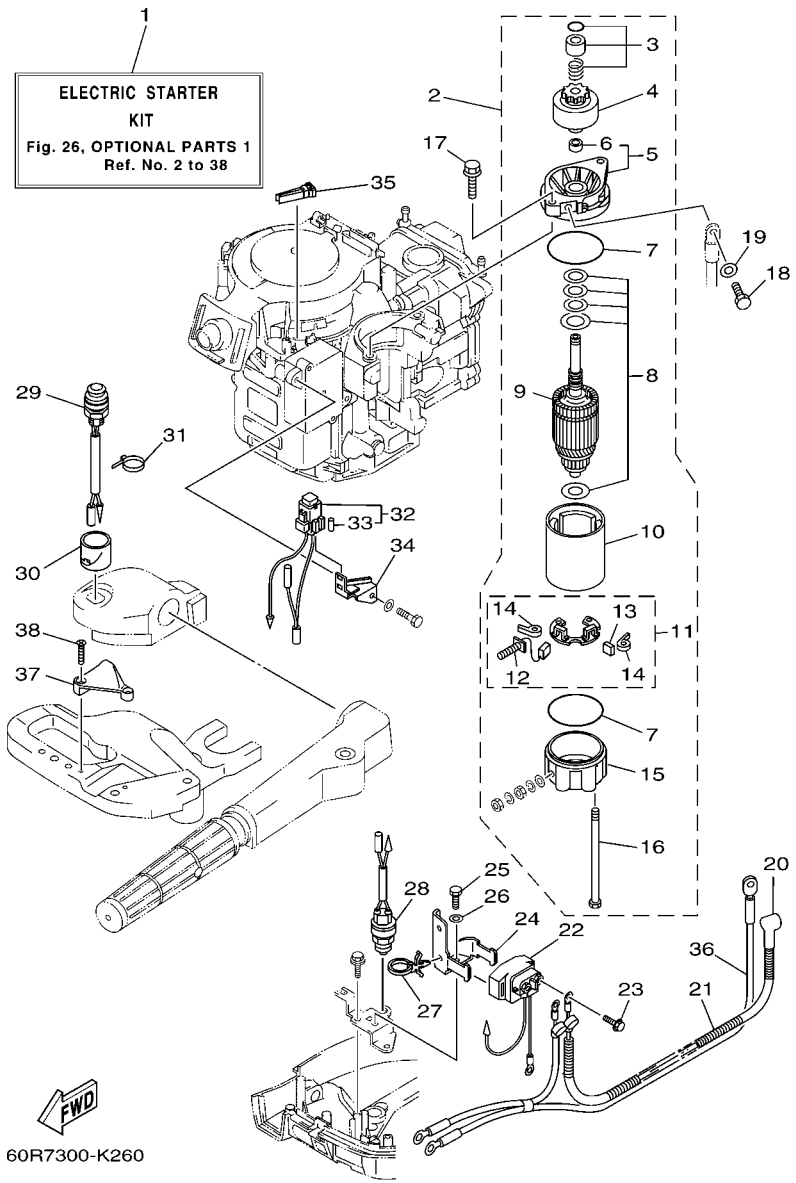

FIG. 26 OPTIONAL PARTS 1 PIECES OPTIONNELLES 1

REF. NO.	PART NO. N° PIECES	DESCRIPTION DESCRIPTION	60R7					REMARKS REMARQUES
1	68R–W8180–01	ELECTRIC STARTER KIT KIT DEMARREUR ELECTRIQUE	1					AP AP
2	68T–81800–00	STARTING MOTOR ASSY DEMARREUR ELECTRIQUE COMPLET	1					
3	68T–81857–00	.RETAINER .ARRETOIR	1					
4	689–81807–12	.GEAR ASSY, STARTING MOTOR .PIGNON, DEMARREUR ELECTRIQUE	1					
5	6F5–81830–10	.FRONT BRACKET ASSY .SUPPORT AVANT	1					
6	689–81831–00	..METAL, FRONT ..METAL, AVANT	1					
7	689–81847–11	.O-RING .JOINT TORIQUE	2					
8	689–81809–11	.WASHER KIT .JEU DE RONDELLES	1					
9	689–81850–11	.ARMATURE ASSY .INDUIT	1					
10	689–81810–11	.STATOR ASSY .STATOR COMPLET	1					
11	689–81840–11	.BRUSH HOLDER ASSY .SUPPORT DE CHARBON	1					
12	689–81811–11	..BRUSH 1 ..CHARBON 1	1					
13	689–81812–11	..BRUSH 2 ..CHARBON 2	1					
14	689–81813–10	..SPRING, BRUSH ..RESSORT, DE CHARBON	2					
15	689–81820–11	.REAR BRACKET ASSY .SUPPORT ARRIERE COMPLET	1					
16	689–81826–10	.BOLT .BOULON	2					
17	90119–08M76	BOLT, WITH WASHER BOULON, AVEC RONDELLE	2					
18	97095–08016	BOLT BOULON	1					
19	92995–08600	WASHER RONDELLE	1					
20	6G8–82117–00	WIRE, LEAD FIL	1					
21	90446–10M86	HOSE (L140) DURITE (L140)	1					
22	68T–81940–00	STARTER RELAY ASSY LANCEUR RELAIS (ENS.)	1					
23	97595–06610	BOLT, WITH WASHER VIS HEXAGONAL AVC RONDELLE	2					
24	68T–81945–01	PLATE, SWITCH FITTING PLAQUE, FIXATION DU RELAIS	1					
25	97095–06012	BOLT BOULON	1					
26	92995–06600	WASHER RONDELLE	1					
27	90465–12M56	CLAMP BRIDE	1					

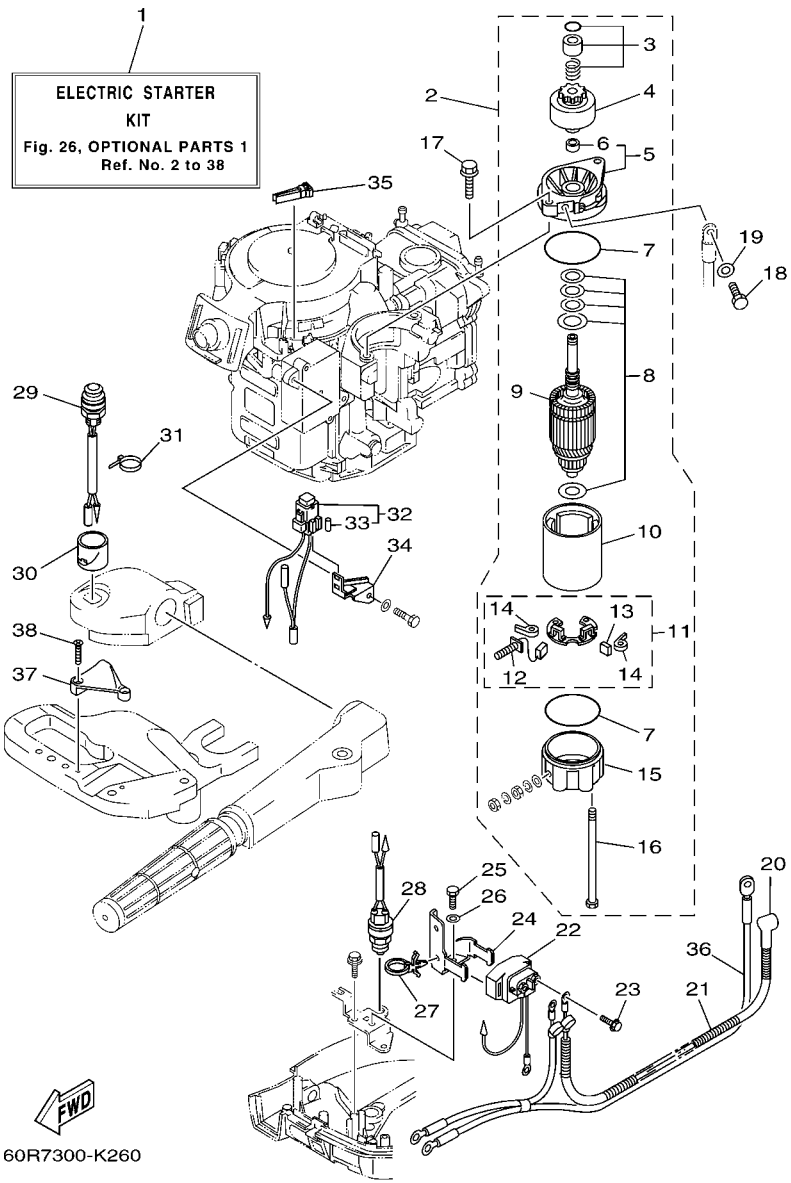

FIG. 26 OPTIONAL PARTS 1 PIECES OPTIONNELLES 1

REF. NO.	PART NO. N° PIECES	DESCRIPTION DESCRIPTION	60R7					REMARKS REMARQUES
28	6F5–82540–01	NEUTRAL SWITCH ASSY CONTACTEUR DE POINT-MORT	1					
29	68T–81870–00	STARTING SWITCH ASSY CONTACT A CLEF	1					
30	68T–81821–00	COVER, SWITCH COUVERCLE, COMMUTATEUR	1					
31	90465–11M10	CLAMP BRIDE	1					
32	68T–82150–00	FUSE HOLDER ASSY SUPPORT DE FUSIBLE	1					
33	66V–82151–00	.FUSE (10A-BL) .FUSIBLE (10A-BL)	2					
34	68T–82171–01	STAY, FUSE BOX SUPPORT, BOITE A FUSIBLES	1					
35	67F–2812A–00	PULLER, FUSE TENDEUR, FUSIBLE	1					
36	68T–82105–00	WIRE HARNESS (L: 2.1M) FAISCEAU DE FILS (L: 2.1M)	1					
37	68T–82594–00	CLAMP BRIDE	1					
38	90151–05003	SCREW, COUNTERSUNK VIS, TETE NOYEE	2					

FIG. 27 OPTIONAL PARTS 2 PIECES OPTIONNELLES 2

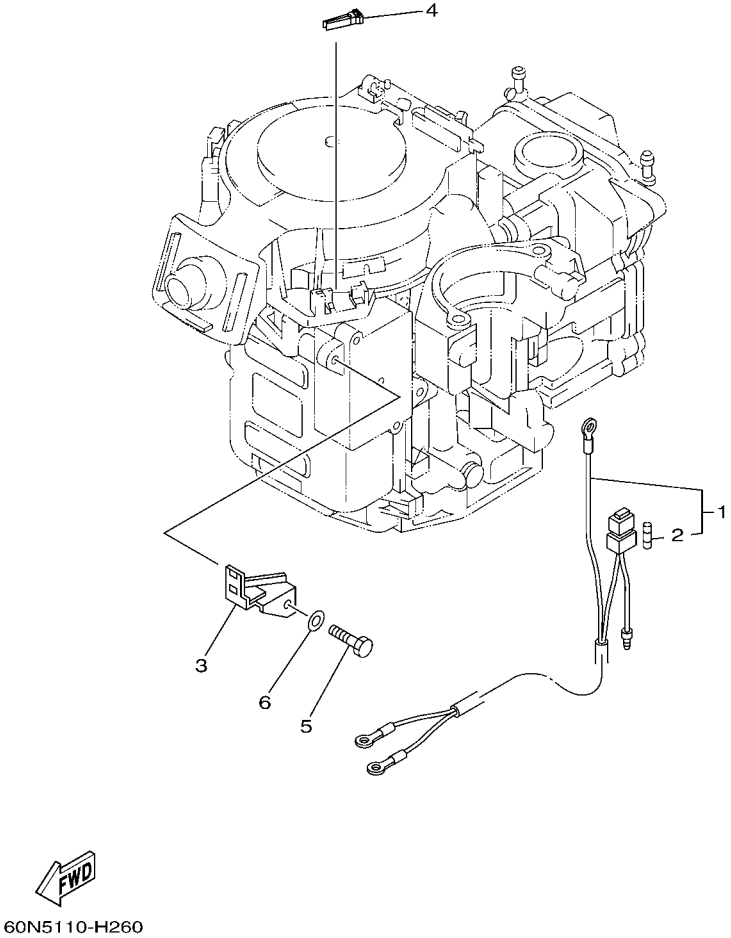

REF. NO.	PART NO. N° PIECES	DESCRIPTION DESCRIPTION	60R7					REMARKS REMARQUES
1	68T–81949–00	WIRE, LEAD FIL	1					AP AP
2	66V–82151–00	.FUSE (10A-BL) .FUSIBLE (10A-BL)	2					
3	68T–82171–01	STAY, FUSE BOX SUPPORT, BOITE A FUSIBLES	1					AP AP
4	67F–2812A–00	PULLER, FUSE TENDEUR, FUSIBLE	1					AP AP
5	97095–06012	BOLT BOULON	1					AP AP
6	92995–06600	WASHER RONDELLE	1					AP AP

FIG. 28 REPAIR KIT 1 — KITS DE REPARATION 1

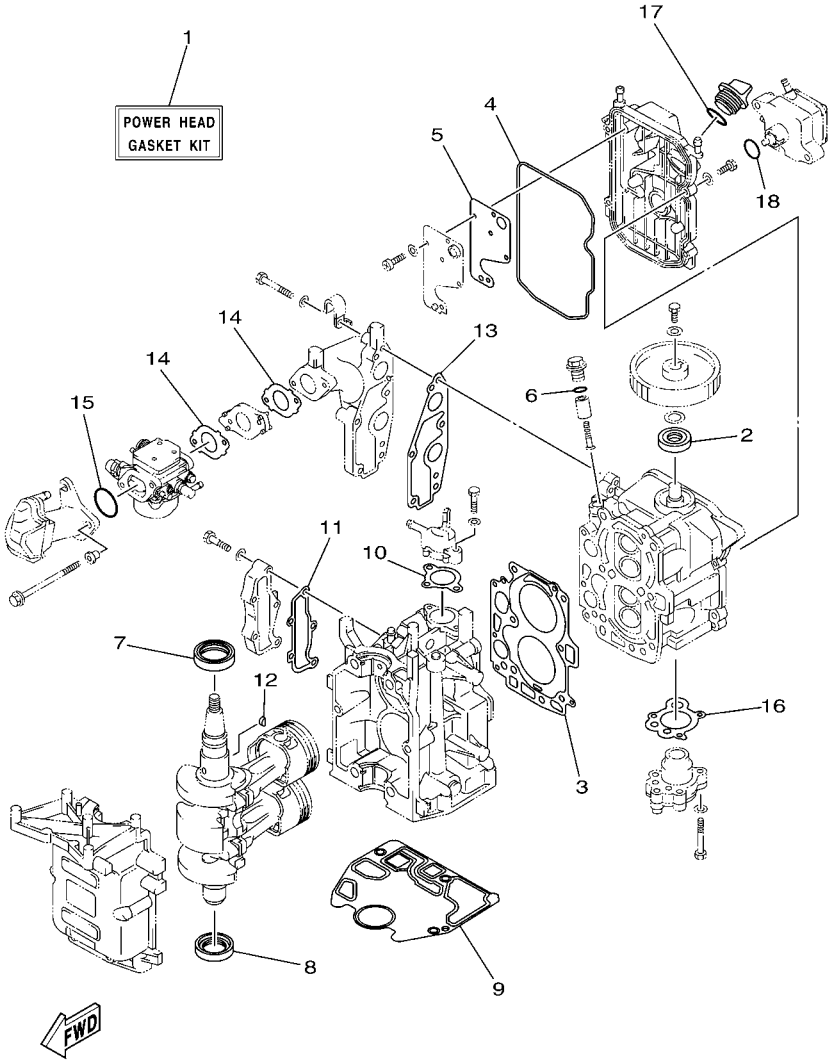

60N4300-G290

REF. NO.	PART NO. N° PIECES	DESCRIPTION DESCRIPTION	60R7					REMARKS REMARQUES
1	68T–W0001–00	POWER HEAD GASKET KIT POCHETTE DE JINTS TETE MOTRICE	1					
2	93102–18M21	.OIL SEAL .JOINT SPY	1					
3	68T–11181–00	.GASKET, CYLINDER HEAD 1 .JOINT, DE CULASSE 1	1					
4	68T–11356–00	.SEAL, CYLINDER 2 .JOINT, SPY CYLINDRE	1					
5	68T–11169–A0	.GASKET, BREATHER COVER .JOINT, COUVERCLE DE RENIFLARD	1					
6	93210–13M63	.O-RING .JOINT TORIQUE	1					
7	93102–30M22	.OIL SEAL .JOINT SPY	1					
8	93101–25M69	.OIL SEAL .JOINT SPY	1					
9	68T–11351–00	.GASKET, CYLINDER .JOINT, D'EMBASE	1					
10	60R–E2414–A0	.GASKET, COVER .JOINT, COUVERCLE	1					
11	68T–41114–A0	.GASKET, EXHAUST OUTER COVER .JOINT, COUVERCLE D'ECHAPPEMENT	1					
12	90280–03M01	.KEY, WOODRUFF .CLAVETTE, DEMI-LUNE	1					
13	68T–13645–00	.GASKET, MANIFOLD 1 .JOINT, TUBULURE 1	1					
14	60R–E3646–A0	.GASKET, MANIFOLD 2 .JOINT, TUBULURE 2	2					
15	93210–31MJ5	.O-RING .JOINT TORIQUE	1					
16	68T–13329–00	.GASKET, PUMP COVER .JOINT, COUVERCLE DE POMPE	1					
17	93210–24M79	.O-RING .JOINT TORIQUE	1					
18	93210–20M65	.O-RING .JOINT TORIQUE	1					

FIG. 29 REPAIR KIT 2 — KITS DE REPARATION 2

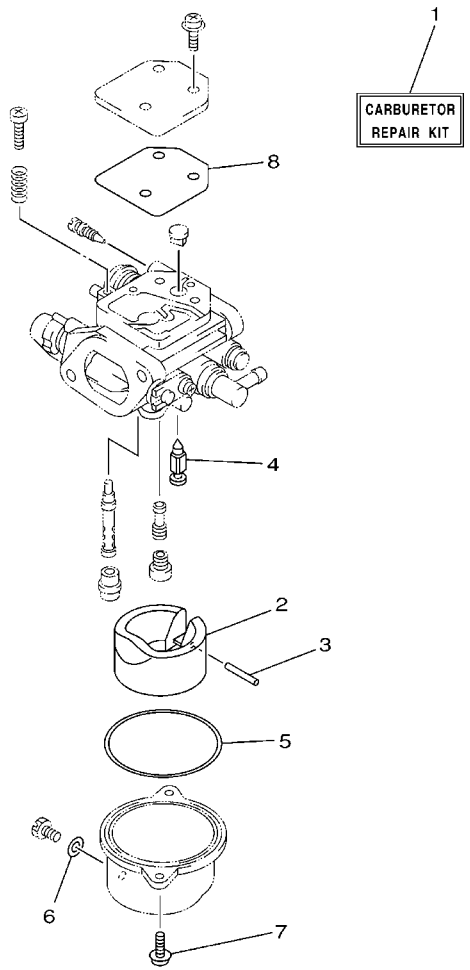

68R0100-0260

REF. NO.	PART NO. N° PIECES	DESCRIPTION DESCRIPTION	60R7					REMARKS REMARQUES
1	68T–W0093–00	CARBURETOR REPAIR KIT KIT DE REPARATION CARBURATEUR	1					
2	68T–14385–00	.FLOAT .FLOTTEUR	1					
3	67D–14386–00	.PIN, FLOAT .AXE, FLOTTEUR	1					
4	68T–14546–00	.VALVE, NEEDLE .POINTEAU	1					
5	67D–14984–00	.GASKET, FLOAT CHAMBER .JOINT, CUVE DE FLOTTEUR	1					
6	6J8–14959–00	.GASKET .JOINT	1					
7	97980–04112	.SCREW, WITH WASHER .VIS, AVEC RONDELLE	2					
8	67D–14536–00	.GASKET .JOINT	1					

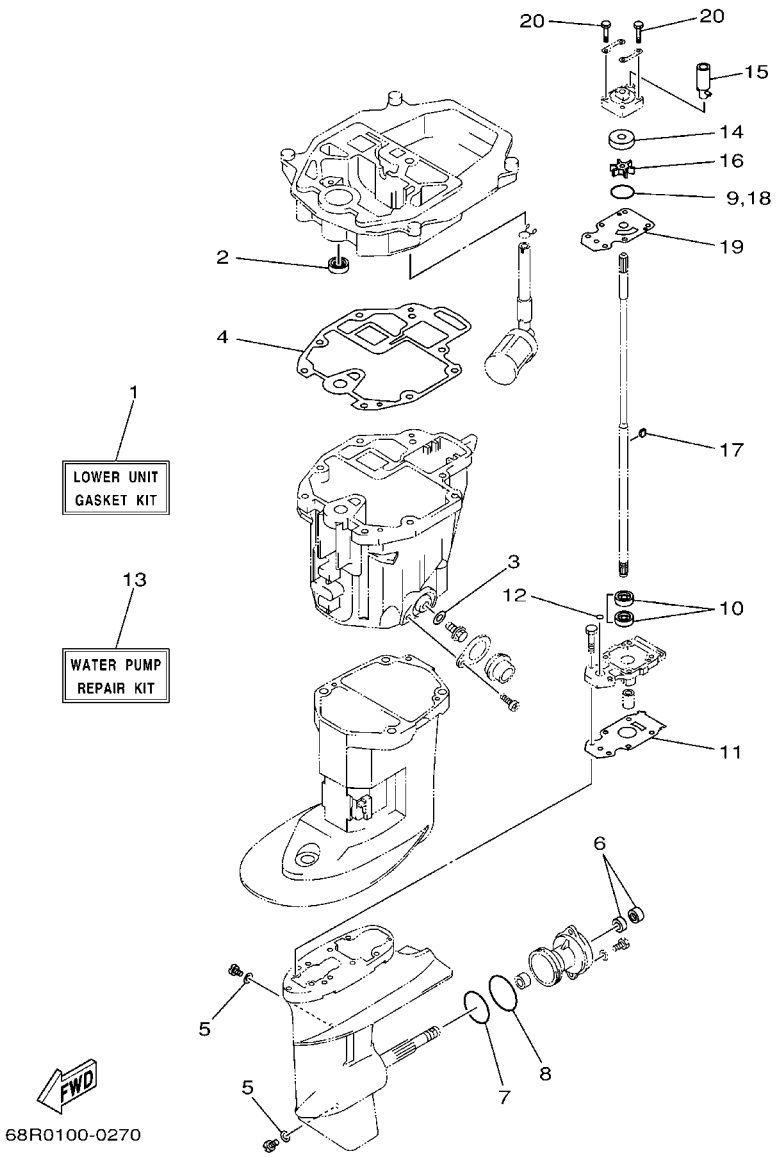

FIG. 30 REPAIR KIT 3 — KITS DE PEPARATION 3

REF. NO.	PART NO. N° PIECES	DESCRIPTION DESCRIPTION	60R7					REMARKS REMARQUES
1	68T–W0001–20	LOWER UNIT GASKET KIT POCHETTE DE JOINTS EMBASE	1					
2	93101–12M70	.OIL SEAL .JOINT SPY	1					
3	90430–10M11	.GASKET .JOINT	1					
4	68T–13475–00	.GASKET .JOINT	1					
5	90430–08020	.GASKET .JOINT	2					
6	93101–15074	.OIL SEAL .JOINT SPY	2					
7	93210–49046	.O-RING .JOINT TORIQUE	1					
8	93210–53M08	.O-RING .JOINT TORIQUE	1					
9	93210–44398	.O-RING .JOINT TORIQUE	1					
10	93101–11M23	.OIL SEAL .JOINT SPY	2					
11	68T–45315–A0	.PACKING, LOWER CASING .JOINT, BOITIER D'HELICE	1					
12	93210–06ME6	.O-RING .JOINT TORIQUE	1					
13	68T–W0078–00	WATER PUMP REPAIR KIT KIT DE REPARATION DE LA POMPE	1					
14	63V–44322–00	.INSERT, CARTRIDGE .CUVETTE	1					
15	68T–44366–00	.DAMPER, WATER SEAL 2 .JOINT, TUBE D'EAU 2	1					
16	68T–44352–00	.IMPELLER .TURBINE	1					
17	664–44338–00	.KEY, WOODRUFF .CLAVETTE, VOLANT	1					
18	93210–44398	.O-RING .JOINT TORIQUE	1					
19	68T–44323–00	.OUTER PLATE, CARTRIDGE .PLAQUE EXTERIEURE	1					
20	97080–08045	.BOLT .BOULON	4					

NUMERICAL INDEX
INDEX NUMERIQUE

PART NO. N° PIECES	REF. NO.
67D–11133–10	4 – 3
68T–11168–00	4 – 14
68T–11169–A0	4 – 15
	28 – 5
68T–11181–00	4 – 4
	28 – 3
6G8–11197–01	4 – 20
6G8–11325–00	4 – 18
68T–11351–00	2 – 5
	28 – 9
68T–11356–00	4 – 11
	28 – 4
6H1–11372–00	21 – 13
68T–11416–01	3 – 4
68T–11416–11	3 – 4
68T–11416–21	3 – 4
68T–11557–00	8 – 9
6G8–11575–00	21 – 9
6G8–11587–01	8 – 10
68T–11650–00	3 – 5
67D–11654–00	3 – 6
6AU–12111–00	5 – 1
60R–12113–00	5 – 4
68T–12116–00	5 – 3
7NJ–12117–00	5 – 5
7NJ–12118–00	5 – 6
51Y–12119–00	5 – 7
6AU–12121–00	5 – 2
68T–12146–00	5 – 8
68T–12151–00	5 – 12
6G8–12158–00	5 – 14
6G8–12159–00	5 – 13
66M–12411–01	2 – 6
688–12412–00	2 – 7
68T–12413–00–1S	2 – 8
67F–12482–00	6 – 2
68T–12535–00	14 – 35
68T–12572–00	14 – 33
6R3–12581–00	14 – 32
6R3–12582–00	14 – 30
6R3–12583–00	14 – 31
66M–13131–00	9 – 18
68T–13300–00	8 – 15
68T–13329–00	8 – 16
	28 – 16
68T–13421–01	21 – 7
68T–13475–00	21 – 19
	30 – 4

PART NO. N° PIECES	REF. NO.
68T–13645–00	6 – 3
	28 – 13
68T–14126–00	7 – 19
68T–14271–00	6 – 9
68T–14301–00	7 – 1
68T–14301–20	7 – 1
6E5–14321–00	7 – 2
67D–14323–00	7 – 16
68T–14323–20	7 – 16
6E7–14325–00	9 – 15
6J8–14334–00	7 – 3
68T–14385–00	7 – 5
	29 – 2
67D–14386–00	7 – 7
	29 – 3
647–14395–60	16 – 28
68T–14497–00	16 – 21
67D–14527–00	7 – 18
67D–14536–00	7 – 17
	29 – 8
68T–14546–00	7 – 8
	29 – 4
68T–1492A–00	7 – 11
68T–1492E–37	7 – 9
68T–1492F–1K	7 – 10
6J8–14959–00	7 – 14
	29 – 6
67D–14966–00	7 – 6
68T–14981–00	7 – 13
67D–14984–00	7 – 12
	29 – 5
66T–14991–00	7 – 15
68T–15317–00	21 – 17
68T–15362–00	21 – 24
63V–15705–01	10 – 8
68T–15710–13	10 – 1
68T–15711–03	10 – 2
63V–15713–00	10 – 6
63V–15714–00	10 – 4
68T–15716–00	10 – 7
66T–15731–00	10 – 21
66T–15734–00	10 – 19
63V–15741–00	10 – 5
63V–15744–00	10 – 11
6G1–15755–00	10 – 14
68T–15762–00	10 – 24
68T–15764–00	10 – 13
63V–15767–01	10 – 9

PART NO. N° PIECES	REF. NO.
68T–15770–00	10 – 20
68T–15774–10	10 – 25
6G1–15779–00	10 – 16
68T–15784–00	10 – 10
6A0–15789–00	10 – 17
68T–15793–00	10 – 12
68T–15794–00	10 – 18
68T–15795–00	10 – 3
6YL–24201–05	24 – 1
68T–24251–01	9 – 7
6YL–24260–01	24 – 3
6YL–24268–01	24 – 6
6G1–24304–02	9 – 1
6YL–24306–54	24 – 7
6YL–24329–00	24 – 5
66M–24374–00	9 – 19
650–24378–00	4 – 10
6E9–24378–00	2 – 14
68T–24410–01	9 – 12
66M–24411–01	9 – 16
66M–24413–01	9 – 13
6A0–24421–01	9 – 14
66M–24423–00	9 – 17
66M–24444–00	9 – 22
66M–24454–00	9 – 20
66M–24471–01	9 – 21
6YL–24610–01	24 – 2
68T–26367–00	14 – 15
68T–26393–00	14 – 14
68T–28100–00	9 – 33
67F–2812A–00	26 – 35
	27 – 4
68T–41114–A0	2 – 15
	28 – 11
68T–41211–00	16 – 20
68T–41256–00	6 – 21
6J8–41262–00	6 – 22
661–41262–02	16 – 27
6H4–41271–02	6 – 19
689–41273–00	6 – 20
68T–41283–00	16 – 18
68T–41638–00	16 – 17
6G1–41662–01–94	16 – 6
6G1–42125–01	15 – 6
6G1–42126–00	15 – 5
68T–42131–01	15 – 21
6G1–42138–01	15 – 2
63V–42528–00	19 – 3

PART NO. N° PIECES	REF. NO.
63V–42537–00	19 – 7
60R–42615–00	1 – 6
68T–42649–00	1 – 9
6G1–42651–02	1 – 4
60R–42652–00	1 – 7
68T–42677–00	1 – 12
68T–42678–20	1 – 10
68T–42716–10	14 – 5
68T–42717–00	14 – 25
68T–42725–00	14 – 13
6G1–42725–00	13 – 4
68T–42725–10	17 – 16
688–42726–10	14 – 18
682–42727–00	14 – 10
68T–42738–00–4D	14 – 11
6H8–42791–10	14 – 38
6AH–42794–40	14 – 40
6AH–42794–50	14 – 41
68T–42801–00	14 – 6
66R–43113–00	18 – 9
648–43114–01	18 – 6
6E7–43116–00	18 – 5
63V–43131–10	18 – 7
6E5–43145–01	25 – 8
6L2–43160–01	18 – 15
689–43165–00	18 – 16
63V–43191–00	18 – 28
68T–43350–00	18 – 26
689–43373–01	19 – 4
68T–43611–00	18 – 33
68T–43614–00	18 – 30
68T–43615–00	18 – 32
68T–43617–00	18 – 24
68T–43627–00	18 – 37
68T–43641–00	18 – 23
68T–43646–00	18 – 22
68T–43659–00	18 – 35
66R–44114–00	16 – 11
65W–44116–00	16 – 10
68T–44121–02	16 – 5
63V–44301–00	22 – 19
63V–44322–00	22 – 20
	30 – 14
68T–44323–00	22 – 25
	30 – 19
63V–44328–00	22 – 28
664–44338–00	22 – 23
	30 – 17

PART NO. N° PIECES	REF. NO.
68T–44352–00	22 – 22
	30 – 16
68T–44361–00	23 – 1
68T–44361–10	23 – 1
63V–44365–10	23 – 2
68T–44366–00	22 – 21
	30 – 15
6BL–44391–00	14 – 9
68T–44517–00	19 – 12
68T–44526–00	19 – 13
68T–44551–00–4D	19 – 16
6G1–45214–00	23 – 5
6G1–45215–00	23 – 6
68T–45251–00	22 – 6
68T–45315–A0	22 – 32
	30 – 11
6G1–45316–09	22 – 30
6G1–45317–09	22 – 3
68T–45321–00	20 – 5
6G1–45362–09	22 – 12
63V–45375–00	23 – 9
6G1–45533–00	22 – 40
6G1–45533–10	22 – 40
6G1–45533–20	22 – 40
6G1–45533–30	22 – 40
647–45567–00	22 – 45
664–45587–01	22 – 42
664–45587–10	22 – 42
664–45587–20	22 – 42
664–45587–30	22 – 42
664–45587–40	22 – 42
664–45587–50	22 – 42
664–45587–60	22 – 42
68T–45611–00	22 – 51
6G1–45616–01	23 – 16
68T–45631–00	22 – 46
6G1–45632–00	22 – 47
654–45633–00	22 – 48
6G1–45635–00	22 – 50
6G1–45941–00–EL	23 – 14
6G1–45943–00–EL	23 – 14
6G1–45947–00–EL	23 – 14
6G1–45952–00–EL	23 – 14
663–48344–00	17 – 12
	17 – 14
63V–48511–01	17 – 17
68T–48531–00	17 – 2
682–48538–50	17 – 3

PART NO. N° PIECES	REF. NO.
68T–61350–10	25 – 1
6E5–61355–00	25 – 6
68T–81800–00	26 – 2
689–81807–12	26 – 4
689–81809–11	26 – 8
689–81810–11	26 – 10
689–81811–11	26 – 12
689–81812–11	26 – 13
689–81813–10	26 – 14
689–81820–11	26 – 15
68T–81821–00	26 – 30
68T–81822–01–94	12 – 20
689–81826–10	26 – 16
6F5–81830–10	26 – 5
689–81831–00	26 – 6
689–81840–11	26 – 11
689–81847–11	26 – 7
689–81850–11	26 – 9
68T–81857–00	26 – 3
68T–81870–00	26 – 29
68T–81940–00	26 – 22
68T–81945–01	26 – 24
68T–81949–00	27 – 1
68T–81960–00	12 – 13
6AH–81994–40	10 – 31
6AH–81994–50	10 – 32
6AH–81995–40	10 – 27
6AH–81995–50	10 – 28
68T–82105–00	26 – 36
6G8–82117–00	26 – 20
68T–82127–00	19 – 2
68T–82127–10	12 – 18
68T–82150–00	26 – 32
66V–82151–00	26 – 33
	27 – 2
68T–82171–01	26 – 34
	27 – 3
6E3–82370–21	12 – 12
67F–82504–00	12 – 17
68T–82522–00	12 – 2
6F5–82540–01	26 – 28
682–82556–00	13 – 2
65W–82575–01	13 – 1
689–8257Y–00	13 – 3
68T–82594–00	26 – 37
68F–85119–00	14 – 2
68T–85410–00	12 – 19
68T–85520–00	11 – 2

NUMERICAL INDEX
INDEX NUMERIQUE

PART NO. N° PIECES	REF. NO.
68T–85533–10	11 – 4
68T–85540–00	12 – 1
68T–85550–11	11 – 1
680–85570–02	12 – 8
68T–85580–01	11 – 3
6H2–85582–00	11 – 5
60R–E1111–00–1S	4 – 2
60R–E1191–00–1S	4 – 9
60R–E1411–00	3 – 3
60R–E1536–00	8 – 8
60R–E1537–00–94	8 – 3
60R–E1603–00	3 – 8
60R–E1604–00	3 – 8
60R–E1605–00	3 – 8
60R–E1631–00–96	3 – 7
60R–E1633–00	3 – 9
60R–E1635–00	3 – 7
60R–E1636–00	3 – 7
60R–E2171–00	8 – 2
60R–E2414–A0	2 – 9
	28 – 10
60R–E2481–00	2 – 11
60S–E2481–00	14 – 27
60R–E2482–00	2 – 17
60R–E2483–00	6 – 14
60R–E3434–00	1 – 13
60R–E3437–61	10 – 29
60R–E3641–20–1S	6 – 1
60R–E3646–A0	6 – 8
	28 – 14
60R–E4440–00	6 – 10
60R–E4711–00–CA	20 – 2
60R–E5100–00–1S	2 – 2
60R–E5311–00–5B	21 – 12
60R–E5316–00	21 – 16
69M–E5363–00	4 – 22
60R–E571Y–60	15 – 27
60R–F415E–00	14 – 39
60R–F4329–00	9 – 2
60R–F6301–00	15 – 16
60R–F8199–76–D0	9 – 34
60R–F8199–76–E0	9 – 34
60R–F8199–76–F0	9 – 34
60R–F8199–76–G0	9 – 34
60R–F8199–76–H0	9 – 34
60R–F8199–76–S0	9 – 34
60R–F8199–86–K0	9 – 35
60R–F8199–86–L0	9 – 35

PART NO. N° PIECES	REF. NO.
60R–F8199–86–M0	9 – 35
60R–F8199–86–N0	9 – 35
60R–F8199–86–P0	9 – 35
60R–F8199–86–R0	9 – 35
60R–G1113–00–1S	2 – 13
60R–G1137–00–94	21 – 1
60R–G2111–00–4D	15 – 1
68D–G2119–01	15 – 9
60R–G2121–00–4D	15 – 24
60R–G2137–00	15 – 10
68D–G2159–00	15 – 3
68D–G2177–10	15 – 8
60R–G2511–01–4D	19 – 6
60R–G2511–11–4D	19 – 6
60R–G2610–00–4D	1 – 1
60R–G2613–00	1 – 2
60R–G2710–00–4D	14 – 1
60S–G2717–00	14 – 19
	21 – 2
60R–G2724–00	14 – 16
60R–G2741–00	14 – 20
60R–G3111–01–4D	18 – 1
60R–G3112–01–4D	18 – 2
6L8–G3118–01	18 – 3
60R–G3311–00–4D	18 – 19
60R–G3311–10–4D	18 – 19
60R–G3616–00	18 – 21
60R–G3631–00	18 – 20
60R–G4111–00	16 – 1
60R–G4111–10	17 – 8
60R–G4143–00	16 – 13
60R–G4143–10	16 – 13
60R–G4150–00	22 – 35
60R–G4555–00	19 – 18
60R–G4557–00	19 – 17
60R–G5111–00–4D	20 – 1
60R–G5111–10–4D	20 – 1
60R–G5181–00	21 – 3
60R–G5300–00–4D	22 – 1
60R–G5300–10–4D	22 – 1
60R–G5311–00–4D	22 – 2
60R–G5331–00–5B	22 – 29
6N0–G5361–00–4D	22 – 11
60R–G5511–00	22 – 36
60R–G5511–10	22 – 36
6N0–G5551–A0	22 – 39
60R–G5560–00	22 – 41
60R–G5571–00	22 – 43

PART NO. N° PIECES	REF. NO.
6N0–G5987–10	23 – 10
60R–G6241–00	8 – 7
60R–G6297–00	8 – 13
60R–G8501–00	17 – 1
60R–H4342–00	14 – 26
60R–H5711–60	10 – 30
68T–W0001–00	28 – 1
68T–W0001–20	30 – 1
68T–W0070–60	1 – 11
68T–W0078–00	30 – 13
68T–W0093–00	29 – 1
6G1–W4591–01–EL	23 – 15
6G1–W4592–00–EL	23 – 15
68R–W8180–01	26 – 1
60R–WE09A–01–1S	4 – 1
60R–WE09B–00–1S	2 – 1
90101–06M18	18 – 12
90105–06M07	19 – 5
90105–06M14	8 – 4
90105–08M36	4 – 6
90105–08M78	4 – 7
90109–06M81	14 – 12
	16 – 7
90109–06M84	18 – 38
90109–06M86	10 – 26
	16 – 12
90116–08015	15 – 22
90116–08M54	19 – 11
90116–10040	15 – 25
90119–06012	19 – 19
90119–06013	19 – 20
90119–06014	11 – 6
90119–06049	4 – 8
90119–06MA1	11 – 8
90119–06MA2	2 – 10
90119–06MA3	2 – 16
	6 – 5
90119–06MA5	6 – 4
90119–08005	21 – 21
90119–08020	12 – 22
90119–08046	12 – 21
90119–08M29	2 – 4
90119–08M76	26 – 17
90151–05003	26 – 38
90152–05011	15 – 12
90152–05M03	23 – 7
90157–05M16	24 – 4
90167–06002	14 – 34

PART NO. N° PIECES	REF. NO.
90170–06015	16 – 15
90170–09M03	25 – 4
90170–12066	11 – 11
90170–24M09	8 – 11
90171–10M01	23 – 12
90179–06M28	19 – 21
90179–10M33	15 – 26
90185–05002	23 – 8
90185–08057	15 – 23
	17 – 19
90185–09M01	25 – 3
90185–22043	18 – 10
90201–06M62	16 – 22
90201–06M94	8 – 6
90201–10M01	23 – 11
90201–10M02	15 – 13
	23 – 17
90201–10M20	25 – 2
90201–10M63	25 – 7
90201–12472	11 – 12
90201–13201	8 – 5
90201–15M89	22 – 44
90202–36M55	15 – 19
90206–10M24	18 – 39
90206–36M21	15 – 18
90243–04M01	18 – 4
90266–04M04	1 – 5
90269–02M09	15 – 11
90280–03M01	8 – 12
	28 – 12
90280–04M06	11 – 10
90340–08002	22 – 9
90340–10M10	21 – 14
90386–08032	15 – 15
90386–22MA4	18 – 8
90386–30048	19 – 8
90386–30M60	19 – 10
90386–33M96	15 – 20
90386–34M97	15 – 17
90387–06176	14 – 4
90387–06M13	18 – 11
90387–06M59	16 – 19
90387–06M70	6 – 12
90387–10M42	25 – 5
90387–13M56	5 – 9
90387–14M03	5 – 10
90387–14M49	22 – 4
90430–08020	22 – 10

PART NO. N° PIECES	REF. NO.
90430–08020	30 – 5
90430–08800	21 – 5
90430–10M11	21 – 15
	30 – 3
90445–09812	6 – 7
90445–10809	9 – 5
90445–10810	9 – 28
90445–10811	9 – 8
90446–10M86	26 – 21
90446–14M66	9 – 10
	9 – 30
90447–13M00	14 – 29
90464–10M53	9 – 32
90464–10M60	16 – 8
90465–08M83	6 – 16
90465–08M99	6 – 15
	12 – 23
90465–11M10	2 – 12
	9 – 11
	9 – 31
	11 – 9
	12 – 16
	12 – 26
	14 – 28
	26 – 31
90465–12M56	26 – 27
90467–09M05	22 – 37
90467–09M09	9 – 6
	9 – 9
	9 – 29
90467–11M08	21 – 8
90468–18001	16 – 14
90468–18008	17 – 13
	17 – 15
90480–06M19	14 – 17
90480–10627	8 – 14
90480–14M54	20 – 4
90480–21M82	14 – 3
90480–25161	12 – 9
90501–12M05	22 – 49
90501–12M40	5 – 11
90501–23800	15 – 14
90502–10M07	18 – 18
90506–18M41	18 – 27
90506–20005	18 – 27
90506–20806	18 – 31
90506–23803	18 – 31
91490–16010	15 – 7

PART NO. N° PIECES	REF. NO.
91490–30020	23 – 13
91690–30008	18 – 17
91690–30012	17 – 4
91690–30014	16 – 9
91690–50014	6 – 6
91812–12001	2 – 3
92907–04600	4 – 17
92990–06300	22 – 8
92990–06600	18 – 13
92995–05600	16 – 4
	17 – 11
92995–06100	9 – 25
	14 – 22
92995–06600	4 – 13
	6 – 18
	8 – 18
	9 – 4
	9 – 26
	10 – 23
	12 – 5
	12 – 7
	12 – 11
	12 – 15
	12 – 25
	14 – 8
	14 – 23
	14 – 37
	16 – 24
	16 – 26
	17 – 6
	22 – 18
	26 – 26
	27 – 6
92995–08600	21 – 23
	26 – 19
93101–11M23	22 – 31
	30 – 10
93101–12M70	21 – 6
	30 – 2
93101–15074	22 – 14
	30 – 6
93101–25M69	3 – 2
	28 – 8
93102–18M21	8 – 1
	28 – 2
93102–30M22	3 – 1
	28 – 7
93210–06ME6	22 – 33

NUMERICAL INDEX
INDEX NUMERIQUE

PART NO. N° PIECES	REF. NO.
93210–06ME6	30 – 12
93210–12327	16 – 2
	17 – 9
93210–12M62	21 – 10
93210–13M63	4 – 21
	28 – 6
93210–16275	25 – 9
93210–20M65	9 – 27
	28 – 18
93210–24M79	4 – 23
	28 – 17
93210–29M94	19 – 9
93210–31MJ5	6 – 11
	28 – 15
93210–44398	22 – 24
	30 – 9
	30 – 18
93210–49046	22 – 15
	30 – 7
93210–53M08	22 – 16
	30 – 8
93306–004YH	22 – 5
	22 – 13
93430–04M03	18 – 34
93450–15023	3 – 10
93604–12M07	20 – 8
	21 – 20
	22 – 26
	23 – 3
93606–19M23	21 – 11
93700–06M03	19 – 1
94702–00274	4 – 24
95380–04600	9 – 23
95380–06600	14 – 24
	17 – 7
95380–06700	16 – 16
	18 – 14
95380–08600	19 – 14
95895–06016	22 – 7
97075–08030	21 – 22
97080–08025	22 – 34
97080–08045	22 – 27
	30 – 20
97095–05010	11 – 7
97095–05016	16 – 3
	17 – 10
97095–06008	20 – 6
97095–06010	6 – 17
97095–06012	12 – 6
	12 – 14
	12 – 24
	14 – 7
	14 – 36
	16 – 25
	17 – 5
	26 – 25
	27 – 5
97095–06016	22 – 17
97095–06020	4 – 12
	10 – 22
	12 – 4
97095–06025	9 – 3
	12 – 10
97095–06030	8 – 17
	9 – 24
97095–06045	16 – 23
97095–08014	21 – 4
97095–08016	26 – 18
97575–06514	20 – 3
97575–06525	19 – 15
97575–08535	17 – 18
	20 – 9
	23 – 4
97595–05514	1 – 8
97595–06585	6 – 13
97595–06610	26 – 23
97780–40512	12 – 3
97780–60516	1 – 3
97880–05025	4 – 19
97885–05008	20 – 7
	21 – 18
97885–05012	15 – 4
97885–06030	14 – 21
97980–04110	7 – 4
97980–04112	7 – 20
	29 – 7
98507–04010	4 – 16
99001–07600	22 – 38
99080–05600	18 – 25
	18 – 29
	18 – 36
99510–10114	4 – 5