YAMAHA

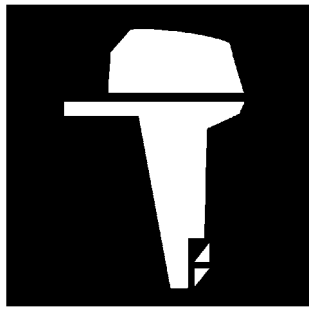

PARTS CATALOGUE
CATALOGUE DE PIECES DETACHEES

25NMHO Y12 (6L2C)

1L6L2-300FA

( )

YAMAHA
GENUINE
Parts & Accessories

25NMHO
PARTS CATALOGUE
©2012 by Yamaha Motor Co., Ltd.
1st edition, June 2012
All rights reserved.
Any reprinting or unauthorized use
without the written permission of
Yamaha Motor Co., Ltd.
is expressly prohibited.
Printed in Japan.

25NMHO
CATALOGUE DE PIECES DETACHEES
©2012 par Yamaha Motor Co., Ltd.
1re édition, juin 2012
Tous droits réservés
Toute réimpression ou utilisation
non autorisée sans la permission écrite
de la Yamaha Motor Co., Ltd.
est formellement interdite.
Imprimé au Japon

FOREWORD

This Parts Catalogue is related to the parts for the model(s) on the cover page. When you are ordering replacement parts, please refer to this Parts Catalogue and quote both part numbers and part names correctly.

1. Modifications or additions which have been made after the issue of the Parts Catalogue will be announced in the Parts News.
   It is advisable that you make the necessary corrections to the Parts Catalogue according to the Parts News.

2. Abbreviations
   The following abbreviations are used in this Parts Catalogue.

   "UR" Use specified parts number.
   "UN" Use as many as needed.
   "AP" Alternate Parts
   "LM" Locally Made (Parts need to be ordered locally)
   "F#" Frame No. (Applicable machine No.)
   "O/S" Over Size

3. The number of components for assembly
   - Parts, which are to be supplied in an assembly, are listed with a dot (.) in front of the part name as shown below.
   - The numeral appearing to the right of each component part indicates the quantity of parts for each assembly unit.

PART NO.	DESCRIPTION	Q'TY	REMARKS
2F5–83310–60	FRONT FLASHER LIGHT ASSY	2	
115–83311–60	.BULB (6V–18W)	1	

4. Applicable colours of graphics are represented in the "REMARKS" as shown below.

PART NO.	DESCRIPTION	Q'TY	REMARKS
2N4–24110–00–X5	FUEL TANK COMP.	2	MXR
3J1–24240–10	.GRAPHIC, FUEL TANK	1	FOR MXR

5. Note that the illustrations for reference in finding parts numbers are not to be used for assembling. When assembling, please use the applicable service manual.

6. The asterisk (*) before a reference number indicates modified items after the first edition.

7. Applicable Serial No.

   Engine Serial No.

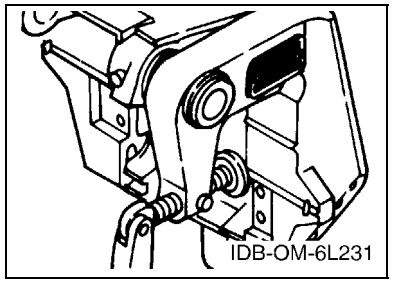

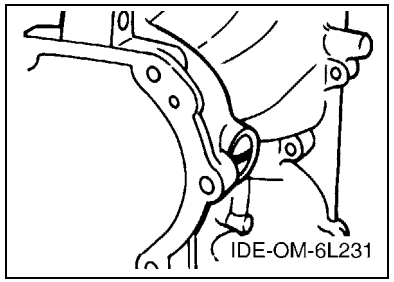

8. Applicable Engine Starting Serial No.

Model	Serial No.	Model	Serial No.
25N	6L2K-1051755		

9. Applicable Colour Code

Abbreviation	Colour Name	Colour Code
DBNM2	DARK BLUISH GRAY METALLIC 2	004D

10. Quantity Column Information

Column No.	Name Of Q'ty Column	Applicable Model
1	6L2C	25NMHO

AVANT–PROPOS

Ce catalogue de pièces détachées concerne les pièces pour le(s) modèle(s) indiqué(s) sur la page de couverture. Lorsque vous commandez des pièces de rechange, veuillez vous référer à ce catalogue de pieces détachées et indiquer clairement les numéros et les noms des pièces détachées.

1. Les modifications ou ajouts ayant été effectués après la parution du catalogue de pièces détachées seront décrits dans les Bulletins d'information concernant les pièces détachées.
   Il est recommandé que vous apportiez les corrections nécessaires au catalogue des pièces détachées en vous référant aux Bulletins d'information.

2. Abréviations
   Dans ce catalogue, les abréviations suivantes sont utilisées:

   "UR" Utiliser le numéro de pièces spécifié.
   "UN" Utiliser autant que nécessaire.
   "AP" Pièces de substitution
   "LM" Fabrication locale (les pièces doivent être commandées localement.)
   "F#" N° de cadre (applicable au N° de série)
   "O/S" Surdimensionné

3. Nombre de pièces d'un assemblage
   - Les pièces fournies comme composants d'un assemblage sont précédées d'un point (.) de la manière indiquée ci–dessous.
   - Le chiffre apparaissant à la droite de chaque composant indique la quantité de pièces pour chaque unité d'assemblage.

N° PIECES	DESCRIPTION	QTE	REMARQUES
2F5–83310–60	ENS. CLIGNOTANT AVANT	2	
115–83311–60	.AMPOULE (6V–18W)	1	

4. Les couleurs concernant les graphiques sont indiquées dans la colonne "REMARQUES", comme indiqué ci–dessous.

N° PIECES	DESCRIPTION	QTE	REMARQUES
2N4–24110–00–X5	RESERVOIR A ESSENCE.	2	MXR
3J1–24240–10	.GRAPHIQUE	1	POUR MXR

5. Veuillez noter que les illustrations sont indiquées à titre de référence pour trouver les numéros de pièces, non pour être utilisées lors de l'assemblage. Lors de l'assemblage, veuillez utiliser le manuel d'entretien adéquat.

6. L'astérisque (*) placé devant un numéro de référence indique des éléments qui ont été modifiés après la première édition.

7. N° de série applicable

   N° de Série du moteur

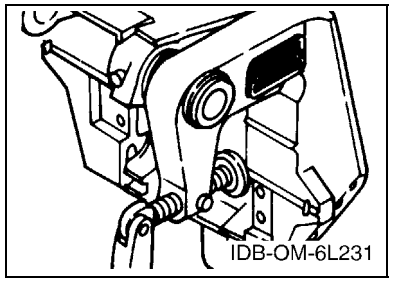

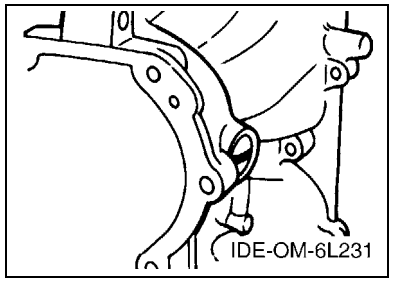

8. N° de série initial du moteur applicable

Modèle	N° de série	Modèle	N° de série
25N	6L2K-1051755		

9. Code couleur applicable

Abréviation	Nom de la couleur	Code couleur
DBNM2	DARK BLUISH GRAY METALLIC 2	004D

10. Informations relatives à la colonne Quantité

N° de la colonne	Nom de la colonne Qté	Modèle applicable
1	6L2C	25NMHO

CONTENTS

TOP COWLING 1
CYLINDER & CRANKCASE 2
CRANKSHAFT & PISTON 4
INTAKE 6
CARBURETOR 7
OIL PUMP 9
FUEL 11
STARTER 12
GENERATOR 14
ELECTRICAL 15
BOTTOM COWLING 16
STEERING 18
CONTROL 20
BRACKET 1 22
BRACKET 2 24
UPPER CASING 26
LOWER CASING & DRIVE 1 27
LOWER CASING & DRIVE 2 30
FUEL TANK 1 32
FUEL TANK 2 33
REPAIR KIT 1 34
REPAIR KIT 2 35

INDEX

NUMERICAL INDEX 36

TABLE DES MATIERES

CAPOT SUPERIEUR 1
CYLINDRE & CARTER 2
VILEBREQUIN & PISTON 4
ADMISSION 6
CARBURATEUR 7
POMPE A HUILE 9
CARBURANT 11
DEMARREUR 12
GENERATRICE 14
ELECTRIQUE 15
CAPOT INFERIEUR 16
DIRECTION 18
COMMANDE 20
SUPPORT 1 22
SUPPORT 2 24
FOURREAU 26
BOITIER D'HELICE TRANSMISSION1 27
BOITIER D'HELICE TRANSMISSION2 30
RESERVOIR A CARBURANT 1 32
RESERVOIR A CARBURANT 2 33
KITS DE REPARATION 1 34
KITS DE REPARATION 2 35

INDEX

INDEX NUMERIQUE 36

FIG. 1 TOP COWLING CAPOT SUPERIEUR

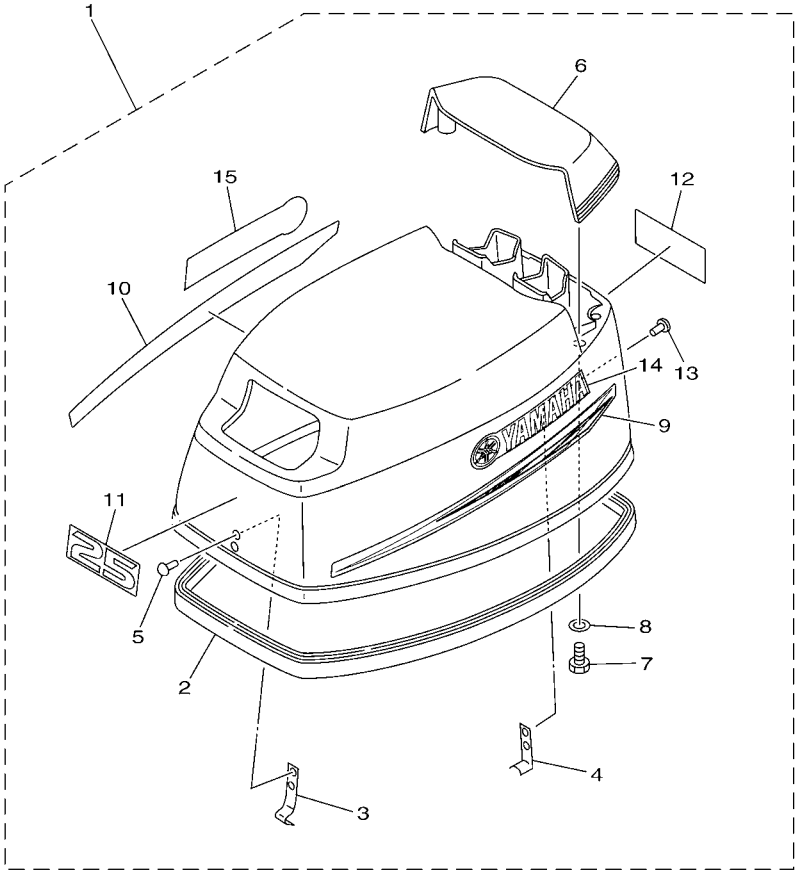

6L2C300-L010

REF. NO.	PART NO. N° PIECES	DESCRIPTION DESCRIPTION	6L2C					REMARKS REMARQUES
1	6L2–42610–00	TOP COWLING ASSY CAPOT (ENS.)	1					
2	6L2–42615–00	.SEAL .JOINT	1					
3	6G1–42651–71	.HOOK .CROCHET	1					
4	6L2–42647–00	.HOLDER, CLAMP BAND .SUPPORT, SANDOW DE SERRAGE	1					
5	90266–04M00	.RIVET .RIVET	2					
6	6L2–42613–01–4D	.MOLDING, AIR DUCT .MANCHON A AIR	1					
7	97095–06016	.BOLT .BOULON	4					
8	92995–06600	.WASHER .RONDELLE	4					
9	63V–42675–40	.GRAPHIC, SIDE 1 .EMBLEME	1					
10	63V–42676–40	.GRAPHIC, SIDE 2 .EMBLEME	1					
11	6L2–42678–40	.GRAPHIC, REAR .ADHESIF, ARRIERE	1					
12	6L2–42678–40	.GRAPHIC, REAR .ADHESIF, ARRIERE	1					
13	90266–04M04	.RIVET .RIVET	2					
14	6E0–42681–40	.MARK, COWLING .ADHESIF, CAPOT	1					
15	6E0–42681–40	.MARK, COWLING .ADHESIF, CAPOT	1					

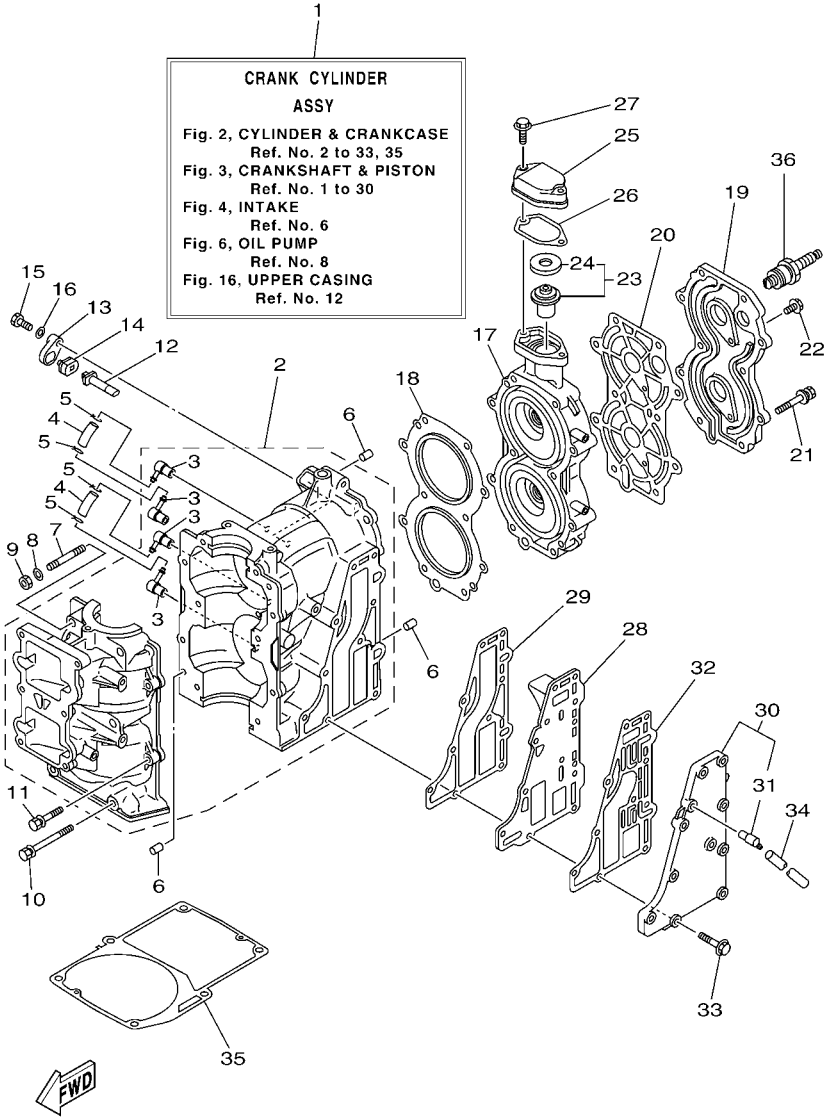

6L2B300-L020

FIG. 2 CYLINDER & CRANKCASE CYLINDRE & CARTER

REF. NO.	PART NO. N° PIECES	DESCRIPTION DESCRIPTION	6L2C					REMARKS REMARQUES
1	6L2–W0090–12–1S	CRANK CYLINDER ASSY EMBIELLAGE CYLINDRE (ENS.)	1					O/I O/I
2	6L2–15100–10	CRANKCASE ASSY CARTER DE MOTEUR COMPLET	1					O/I O/I
3	6E5–11372–01	.NIPPLE, HOSE .RACCORD, TUYAU	4					
4	90445–07M15	HOSE (L40) DURITE (L40)	2					
5	90467–06016	CLIP JONC	4					
6	93604–12M07	PIN, DOWEL CLAVETTE	4					
7	95617–08645	BOLT, STUD GOUJON	2					
8	90201–08086	WASHER, PLATE RONDELLE, PLATE	2					
9	95333–08600	NUT ECROU	2					
10	90119–08M65	BOLT, WITH WASHER BOULON, AVEC RONDELLE	4					
11	90119–06M14	BOLT, WITH WASHER BOULON, AVEC RONDELLE	4					
12	6J8–11325–00	ANODE ANODE	1					
13	6H3–11327–00–94	COVER, ANODE COUVERCLE ANODE	1					
14	6H3–11328–00	GROMMET, ANODE PASSE-FIL	1					
15	97013–06016	BOLT BOULON	1					
16	92903–06600	WASHER, PLATE RONDELLE, PLATE	1					
17	6L2–11111–01–1S	HEAD, CYLINDER 1 CULASSE	1					
18	6L2–11181–A3	GASKET, CYLINDER HEAD 1 JOINT, DE CULASSE 1	1					
19	6L2–11191–00–1S	COVER, CYLINDER HEAD 1 COUVERCLE, CULASSE 1	1					
20	6L2–11193–A1	GASKET, HEAD COVER 1 JOINT, COUVERCLE DE CULASSE 1	1					
21	90119–08M91	BOLT, WITH WASHER BOULON, AVEC RONDELLE	10					
22	90119–06023	BOLT, WITH WASHER BOULON, AVEC RONDELLE	2					
23	6E5–12411–30	THERMOSTAT THERMOSTAT	1					
24	688–12412–00	.SEAL, THERMOSTAT .JOINT, THERMOSTAT	1					
25	6H4–12413–00–1S	COVER, THERMOSTAT COUVERCLE, THERMOSTAT	1					
26	6J8–12414–A0	GASKET, COVER JOINT, COUVERCLE	1					
27	90119–06MA3	BOLT, WITH WASHER BOULON, AVEC RONDELLE	2					

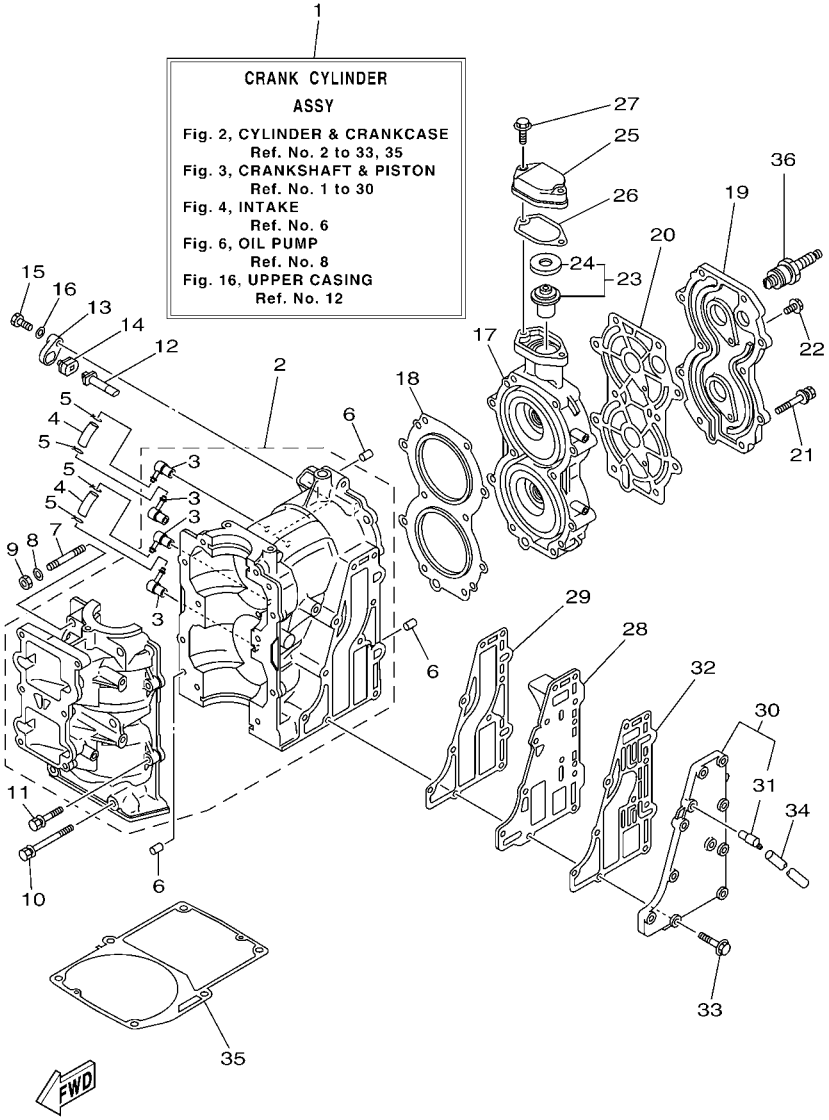

6L2B300-L020

FIG. 2 CYLINDER & CRANKCASE CYLINDRE & CARTER

REF. NO.	PART NO. N° PIECES	DESCRIPTION DESCRIPTION	6L2C					REMARKS REMARQUES
28	6L2–41111–00–1S	INNER COVER, EXHAUST PLAQUE, ECHAPPEMENT	1					
29	6L2–41112–A3	GASKET, EXHAUST INNER COVER JOINT, PLAQUE D'ECHAPPEMENT	1					
30	6L2–41113–00–1S	OUTER COVER, EXHAUST COUVERCLE, ECHAPPEMENT	1					
31	676–11372–00	.NIPPLE, HOSE .RACCORD, TUYAU	1					
32	6L2–41114–A1	GASKET, EXHAUST OUTER COVER JOINT, COUVERCLE D'ECHAPPEMENT	1					
33	90119–06MA4	BOLT, WITH WASHER BOULON, AVEC RONDELLE	10					
34	90445–10M40	HOSE (L330) DURITE (L330)	1					
35	6L2–45113–A2	GASKET, UPPER CASING JOINT, TUBE D'ARBRE	1					
36	94702–00271	PLUG, SPARK (NGK BR7HS-10) BOUGIE D'ALLUMAGE(NGK BR7HS-10	2					

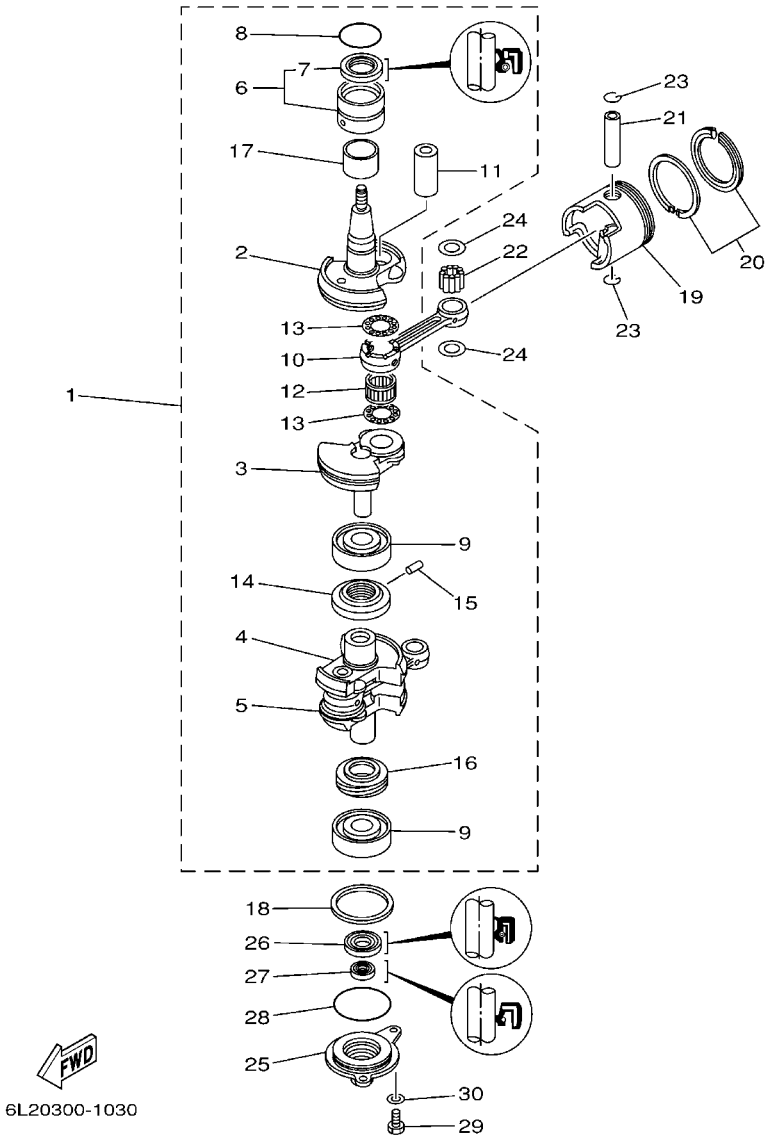

FIG. 3 CRANKSHAFT & PISTON VILEBREQUIN & PISTON

REF. NO.	PART NO. N° PIECES	DESCRIPTION DESCRIPTION	6L2C					REMARKS REMARQUES
1	6L2–11400–10	CRANKSHAFT ASSY VILEBREQUIN COMPLET	1					O/I O/I
2	6L2–11412–00	.CRANK 1 .MASSOLOTTE DE VILEBREQUIN 1	1					
3	6L2–11422–00	.CRANK 2 .MASSOLOTTE DE VILEBREQUIN 2	1					
4	6L2–11432–00	.CRANK 3 .MASSOLOTTE DE VILEBREQUIN 3	1					
5	6L2–11442–00	.CRANK 4 .MASSOLOTTE DE VILEBREQUIN 4	1					
6	93311–632U7	.BEARING .ROULEMENT	1					
7	93102–26M27	..OIL SEAL ..JOINT SPY	1					
8	93210–42159	.O-RING .JOINT TORIQUE	1					
9	93306–305U3	.BEARING .ROULEMENT	2					
10	6L2–11651–00	.ROD, CONNECTING .BIELLE NUE	2					
11	6L2–11681–00	.PIN, CRANK 1 .MANETON, VILEBREQUIN 1	2					
12	93310–424W9	.BEARING .ROULEMENT	2					
13	90209–24M15	.WASHER .RONDELLE	4					
14	6L2–11515–00	.SEAL, LABYRINTH 1 .JOINT, LABYRINTHE 1	1					
15	91690–30010	.PIN, SPRING .AGRAFFE	1					
16	6J8–11536–00	.GEAR, DRIVE .ENGRENAGE, MENANT	1					O/I O/I
17	90387–28M00	.COLLAR .COLLERETTE	1					
18	90201–50306	WASHER, PLATE RONDELLE, PLATE	1					
19	6L2–11631–00–97	PISTON (STD) PISTON (STD)	2					
	6L2–11635–00	PISTON (0.25MM O/S) PISTON (0.25MM O/S)	2					AP AP
	6L2–11636–00	PISTON (0.50MM O/S) PISTON (0.50MM O/S)	2					AP AP
20	6L2–11610–00	PISTON RING SET (STD) JEU DE SEGMENTS (STD)	2					
	6L2–11610–10	PISTON RING SET (0.25MM O/S) JEU DE SEGMENTS (0.25MM O/S)	2					AP AP
	6L2–11610–20	PISTON RING SET (0.50MM O/S) JEU DE SEGMENTS (0.50MM O/S)	2					AP AP
21	648–11633–00	PIN, PISTON AXE, PISTON	2					
22	93602–18M12	PIN, DOWEL GOUJON	62					
23	93450–20026	CIRCLIP CIRCLIP, TYPE S	4					

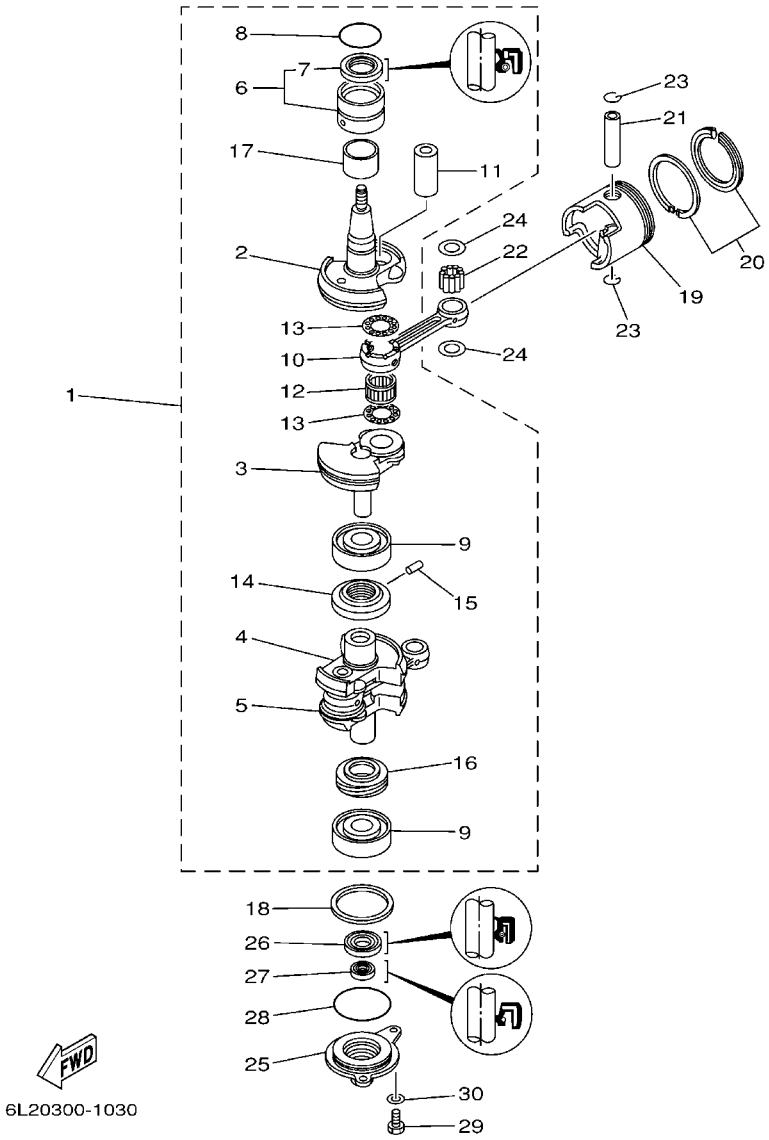

FIG. 3 CRANKSHAFT & PISTON VILEBREQUIN & PISTON

REF. NO.	PART NO. N° PIECES	DESCRIPTION DESCRIPTION	6L2C					REMARKS REMARQUES
24	90201–18522	WASHER, PLATE RONDELLE, PLATE	4					
25	6L2–15396–00–1S	HOUSING, OIL SEAL LOGEMENT DE JOINT SPY	1					
26	93102–25142	OIL SEAL JOINT SPY	1					
27	93101–13M37	OIL SEAL JOINT SPY	1					
28	93210–56M80	O-RING JOINT TORIQUE	1					
29	97095–06016	BOLT BOULON	2					
30	92995–06600	WASHER RONDELLE	2					

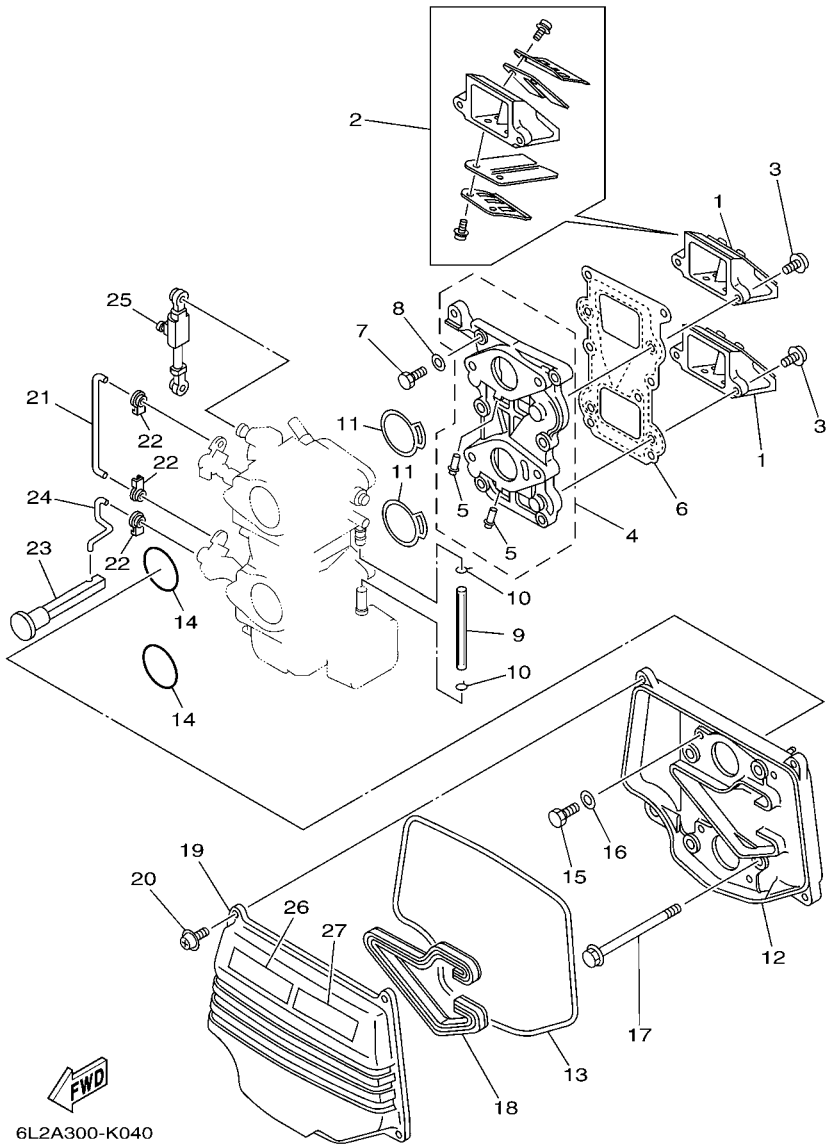

FIG. 4 INTAKE — ADMISSION

REF. NO.	PART NO. N° PIECES	DESCRIPTION DESCRIPTION	6L2C					REMARKS REMARQUES
1	6L2–13610–00	REED VALVE ASSY CLAPET COMPLET	2					
2	6L2–W0004–00	.REED SET .JEU DE CLAPETS	1					
3	97980–05216	SCREW, WITH WASHER VIS, AVEC RONDELLE	4					
4	6L2–13641–10	MANIFOLD, INTAKE 1 TUBULURE, ADMISSION 1	1					O/I O/I
5	676–14485–00	.PIPE, JOINT .DURITE	2					
6	6L2–13621–00	GASKET, VALVE SEAT JOINT, SIEGE DE CLAPET	1					
7	97013–06025	BOLT BOULON	6					
8	92903–06600	WASHER, PLATE RONDELLE, PLATE	6					
9	90445–09012	HOSE (L70) DURITE (L70)	1					
10	90467–08004	CLIP JONC	2					
11	6L2–14198–00	GASKET JOINT	2					
12	6L2–14417–00–94	COVER 1 COUVERCLE 1	1					
13	6L2–14476–00	SEAL JOINT SPY	1					
14	93210–35M86	O-RING JOINT TORIQUE	2					
15	97013–05012	BOLT BOULON	4					
16	92903–05600	WASHER, PLATE RONDELLE, PLATE	4					
17	97513–06585	BOLT, WITH WASHER VIS HEXAGONAL AVC RONDELLE	4					
18	6L2–14476–11	SEAL JOINT SPY	1					
19	6L2–14418–00	COVER 2 COUVERCLE 2	1					
20	97980–05216	SCREW, WITH WASHER VIS, AVEC RONDELLE	4					
21	6J8–41259–00	ROD, CHOKE 3 TRINGLE 3, STARTER	1					
22	661–41262–02	JOINT, CHOKE LEVER RACCORD, LEVIER DE STARTER	3					
23	6J8–41271–01	KNOB, CHOKE BOUTON DE STARTER	1					
24	6L2–41257–00	ROD, CHOKE 2 TRINGLE 2, STARTER	1					
25	6L2–41217–00	ROD, ACCEL. LEVER TIGE, LEVIER ACCELERATION	1					
26	6AH–81994–40	LABEL, SAFETY ETIQUETTE, SECURITE	1					
27	6AH–81994–50	LABEL, SAFETY ETIQUETTE, SECURITE	1					

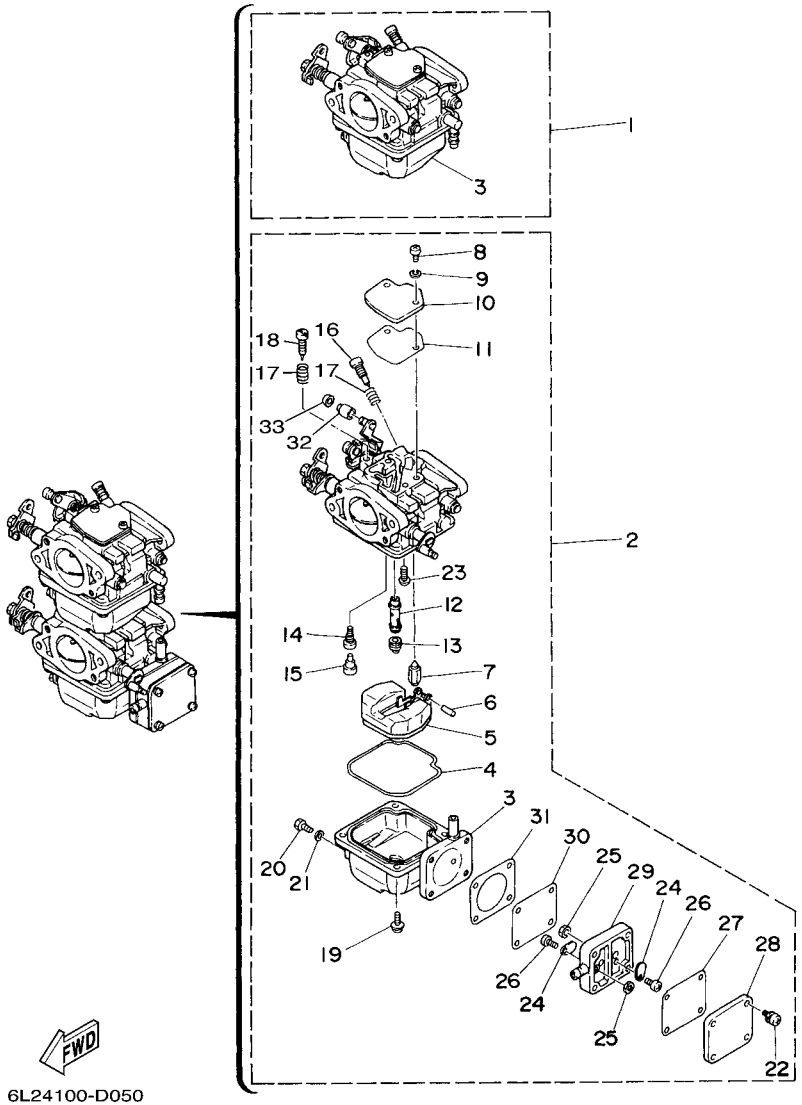

FIG. 5 CARBURETOR CARBURATEUR

REF. NO.	PART NO. N° PIECES	DESCRIPTION DESCRIPTION	6L2C					REMARKS REMARQUES
1	6L2–14301–02	CARBURETOR ASSY 1 CARBURATEUR COMPLET 1	1					#1 #1
2	6L2–14302–02	CARBURETOR ASSY 2 CARBURATEUR COMPLET 2	1					#2 #2
3	6L2–14381–00	.BODY, FLOAT CHAMBER 1 .CORPS, CUVE DE FLOTTEUR 1	1					#1 #1
	6L2–14383–00	.BODY, FLOAT CHAMBER 2 .CORPS, CUVE DE FLOTTEUR 2	1					#2 #2
4	6L2–14384–00	.GASKET, FLOAT CHAMBER .JOINT, CUVE DE FLOTTEUR	2					
5	6L2–14385–00	.FLOAT .FLOTTEUR	2					
6	6E5–14386–01	.PIN, FLOAT .AXE, FLOTTEUR	2					
7	6L2–14392–00	.VALVE, NEEDLE .POINTEAU	2					
8	97880–04010	.SCREW, PAN HEAD .VIS, TETE TRONCONIQUE	4					
9	92900–04100	.WASHER .RONDELLE	4					
10	6L2–14157–00	.COVER, MIXING .COUVERCLE DE CHAMBRE	2					
11	6L2–14399–00	.GASKET .JOINT	2					
12	6L2–14341–00	.NOZZLE, MAIN .PUITS D'AIGUILLE	2					
13	30X–14343–63	.JET, MAIN (#125) .GICLEUR, PRINCIPAL (#125)	2					
14	6L2–14342–30	.JET, PILOT (# 60) .GICLEUR, RALENTI (# 60)	2					
15	50M–14355–00	.PLUG .PLOT	2					
16	6L2–14323–00	.SCREW, AIR ADJUSTING .VIS DE DOSEUR D'AIR	2					
17	646–14212–01	.SPRING, PILOT ADJUSTING .RESSORT, VIS DE RALENTI	4					
18	664–14321–01	.SCREW, THROTTLE .VIS, ACCELERATEUR	2					
19	97980–04112	.SCREW, WITH WASHER .VIS, AVEC RONDELLE	8					
20	677–14383–01	.SCREW, DRAIN .BOUCHON, PURGE	2					
21	6L2–14398–00	.GASKET .JOINT	2					
22	677–24444–01	.SCREW .VIS	4					
23	98980–04006	.SCREW, BIND .VIS, DE PRESSION	2					
24	6A0–24421–01	.VALVE, CHECK .SOUPAPE, RETENUE	2					
25	95380–03600	.NUT .ECROU	2					
26	6E7–14325–00	.SCREW, PAN HEAD .VIS TETE CONIQUE	2					

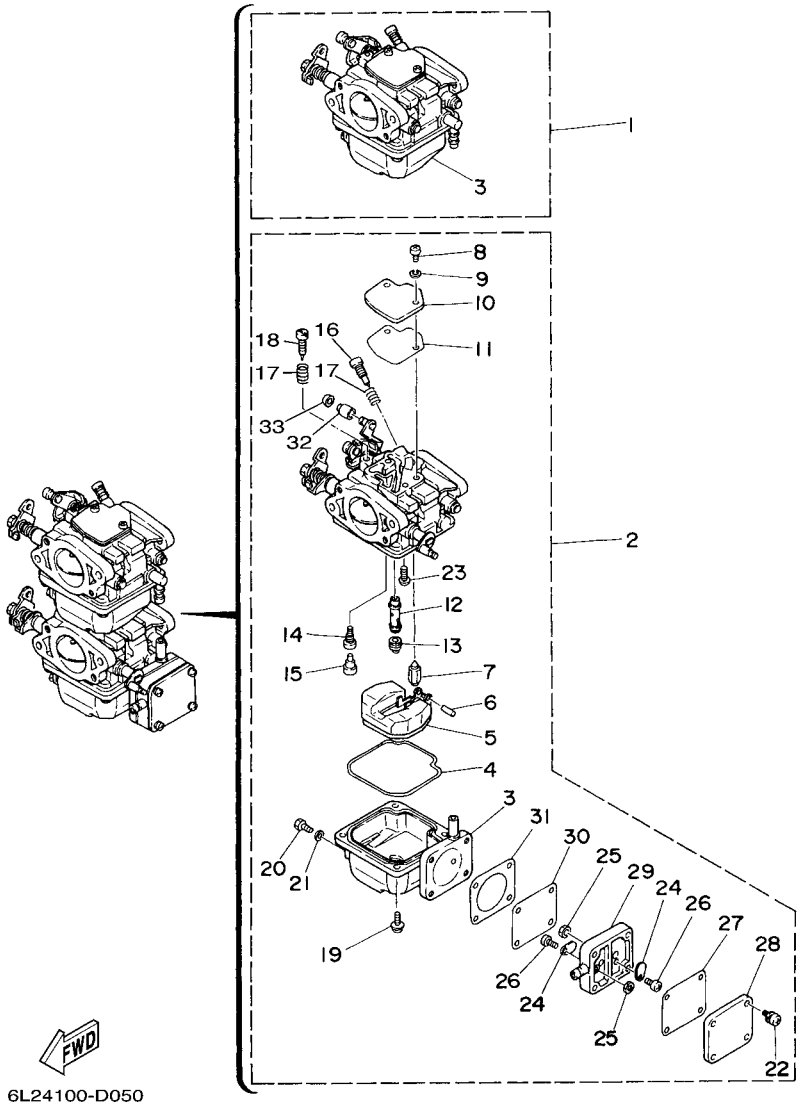

FIG. 5 CARBURETOR CARBURATEUR

REF. NO.	PART NO. N° PIECES	DESCRIPTION DESCRIPTION	6L2C					REMARKS REMARQUES
27	6L2–24435–00	.GASKET, BODY 2 .JOINT, CORPS 2	1					
28	6L2–24413–00	.BODY 2 .CORPS 2	1					
29	682–24412–01	.BODY 1 .CORPS 1	1					
30	677–24411–02	.DIAPHRAGM .DIAPHRAGME	1					
31	677–24434–02	.GASKET, BODY .JOINT, CORPS	1					
32	6L2–14578–01	.COLLAR .COLLERETTE	1					#2 #2
33	6L2–14584–00	.STOPPER .BUTEE	1					#2 #2

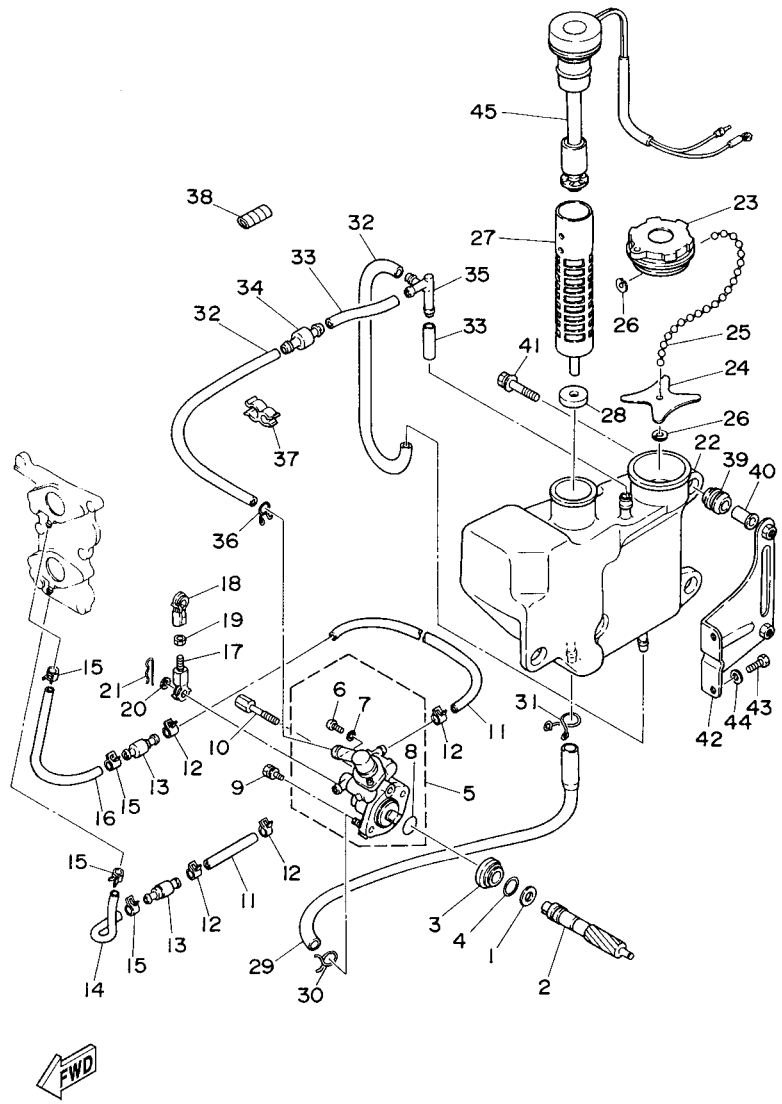

6L20300-4060

FIG. 6 OIL PUMP — POMPE A HUILE

REF. NO.	PART NO. N° PIECES	DESCRIPTION DESCRIPTION	6L2C					REMARKS REMARQUES
1	90201–08M93	WASHER, PLATE RONDELLE, PLATE	1					
2	6L2–11537–00	GEAR, DRIVEN PIGNON SECONDAIRE	1					
3	6J8–13117–00	COLLAR, DISTANCE ENTRETOISE	1					
4	93210–13M04	O-RING JOINT TORIQUE	1					
5	6L2–13200–00	OIL INJECTION PUMP ASSY POMPE A HUILE COMPLET	1					
6	6L2–13471–00	.PLUG, DRAIN .PLOT, VIDANGE	1					
7	6L2–13475–00	.GASKET .JOINT	1					
8	93210–19M82	.O-RING .JOINT TORIQUE	1					
9	97513–05518	BOLT, WITH WASHER VIS HEXAGONAL AVC RONDELLE	1					
10	90109–05M33	BOLT BOULON	1					
11	90445–07M32	HOSE (L120) DURITE (L120)	2					
12	90468–07M02	CLIP JONC	4					
13	6E9–13183–70	VALVE, CHECK CLAPET ANTI RETOUR	2					
14	90445–07M04	HOSE (L50) DURITE (L50)	1					
15	90468–07M02	CLIP JONC	4					
16	90445–07M16	HOSE (L85) DURITE (L85)	1					
17	682–41237–50	JOINT, LINK RACCORD	1					
18	6H1–41237–00	JOINT, LINK RACCORD	1					
19	95380–05700	NUT ECROU	1					
20	90202–05088	WASHER, PLATE RONDELLE, PLATE	1					
21	90468–05M03	CLIP JONC	1					
22	6L2–21707–01	OIL TANK COMP. RESERVOIR A PETROLE COMP.	1					
23	6H4–21770–00	OIL TANK CAP ASSY CABOCHON DE RESERVOIR A HUILE	1					
24	6L2–21758–00	WASHER, SPECIAL 2 RONDELLE, SPECIALE 2	1					
25	6H1–24633–00	CHAIN, BALL CHANE DE BALLE	1					
26	6H1–21757–00	WASHER, SPECIAL 1 RONDELLE, SPECIALE 1	2					
27	6J8–13411–00	STRAINER, OIL FILTRE, HUILE	1					

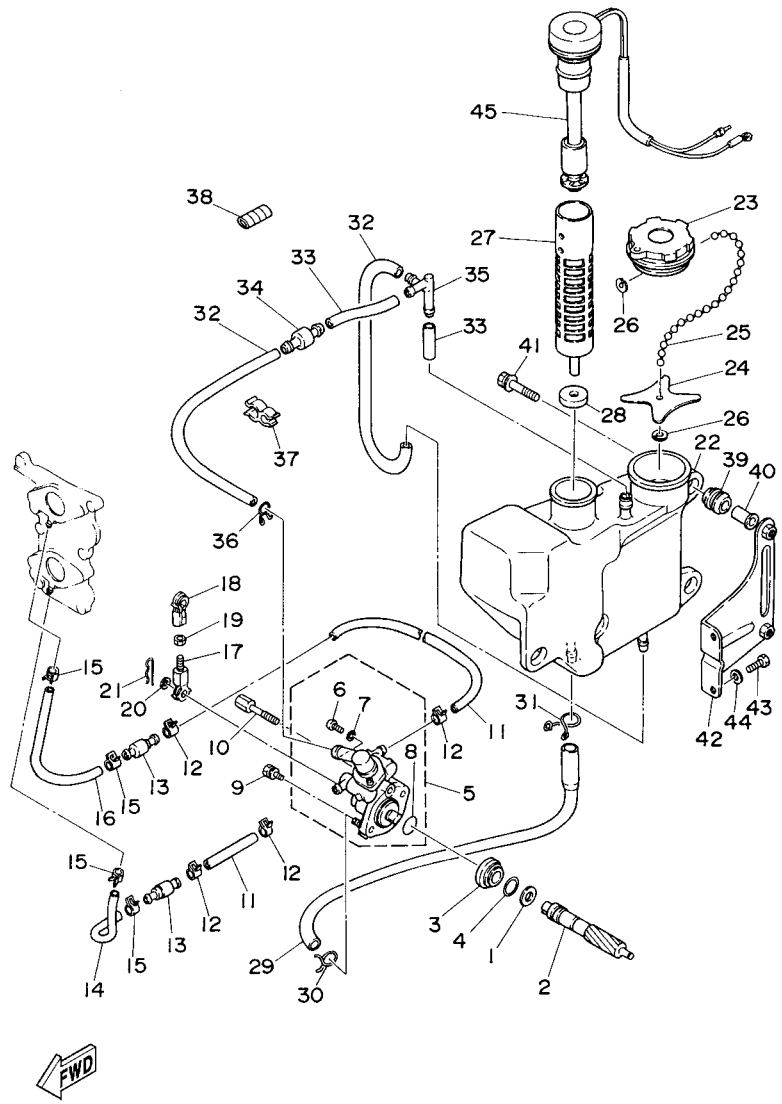

6L20300-4060

FIG. 6 OIL PUMP — POMPE A HUILE

REF. NO.	PART NO. N° PIECES	DESCRIPTION DESCRIPTION	6L2C					REMARKS REMARQUES
28	6J8–13414–00	GASKET, STRAINER COVER JOINT, COUVERCLE DE FILTRE	1					
29	6L2–13416–00	PIPE, OIL 1 DURITE A HUILE	1					
30	90467–08004	CLIP JONC	1					
31	90467–11M08	CLIP JONC	1					
32	90445–11M03	HOSE (L330) DURITE (L330)	2					
33	90445–11M07	HOSE (L30) DURITE (L30)	2					
34	63D–21744–00	BREATHER RENIFLARD	1					
35	6E5–24376–10	PIPE, JOINT 1 DURITE 1, RACCORDEMENT	1					
36	90467–10M04	CLIP JONC	1					
37	90464–11M24	CLAMP BRIDE	1					
38	90446–10M02	HOSE DURITE	1					
39	6A0–82317–00	DAMPER, IGNITION COIL AMORTISSEUR, BOBINE D'ALLUM	3					
40	90387–06119	COLLAR COLLERETTE	3					
41	90119–06M65	BOLT, WITH WASHER BOULON, AVEC RONDELLE	3					
42	6L2–21798–00	BRACKET, DAMPER SUPPORT, AMORTISSEUR	1					
43	97095–06016	BOLT BOULON	2					
44	92995–06600	WASHER RONDELLE	2					
45	6L2–85720–02	OIL LEVEL GAUGE ASSY JAUGE A HUILE CPLT	1					

FIG. 7 FUEL CARBURANT

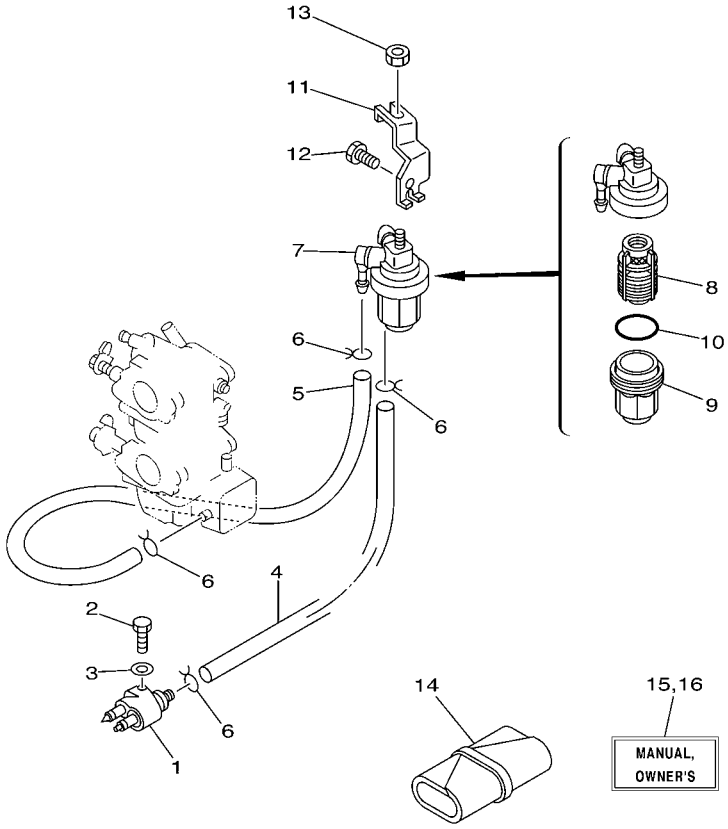

6L22300-3070

REF. NO.	PART NO. N° PIECES	DESCRIPTION DESCRIPTION	6L2C					REMARKS REMARQUES
1	6G1–24304–02	FUEL PIPE JOINT COMP. 1 DURITE RACCORDEMT. A ESSENCE	1					
2	97095–06020	BOLT BOULON	1					
3	92995–06600	WASHER RONDELLE	1					
4	6H4–24311–00	PIPE, FUEL 1 DURITE A ESSENCE	1					
5	6L2–24311–00	PIPE, FUEL 1 DURITE A ESSENCE	1					
6	90467–08004	CLIP JONC	4					
7	61N–24560–00	FILTER ASSY ENS FILTRE	1					
8	61N–24563–00	.ELEMENT, FILTER .ELEMENT, FILTRE	1					
9	61N–24521–00	.CUP, FILTER .CUVETTE, FILTRE	1					
10	93210–32738	.O-RING .JOINT TORIQUE	1					
11	6L2–24566–00	BRACKET, FILTER SUPPORT, FILTRE	1					
12	97013–06014	BOLT BOULON	1					
13	95380–08600	NUT ECROU	1					
14	656–W2810–02	TOOL KIT TROUSSE A OUTILS	1					AP AP
15	6L3–28199–7E–E0	MANUAL,OWNER'S MANUEL D'UTILISATION	1					UR (E) UR (E)
	6L3–28199–7E–F0	MANUAL,OWNER'S MANUEL D'UTILISATION	1					UR (F) UR (F)
	6L3–28199–7E–S0	MANUAL,OWNER'S MANUEL D'UTILISATION	1					UR (ES) UR (ES)
	6L3–28199–7E–G0	MANUAL,OWNER'S MANUEL D'UTILISATION	1					UR (D) UR (D)
	6L3–28199–7E–D0	MANUAL,OWNER'S MANUEL D'UTILISATION	1					UR (NL) UR (NL)
	6L3–28199–7E–H0	MANUAL,OWNER'S MANUEL D'UTILISATION	1					UR (I) UR (I)
16	6L3–28199–8F–K0	MANUAL,OWNER'S MANUEL D'UTILISATION	1					UR (DK) UR (DK)
	6L3–28199–8F–R0	MANUAL,OWNER'S MANUEL D'UTILISATION	1					UR (GR) UR (GR)
	6L3–28199–8F–P0	MANUAL,OWNER'S MANUEL D'UTILISATION	1					UR (P) UR (P)
	6L3–28199–8F–N0	MANUAL,OWNER'S MANUEL D'UTILISATION	1					UR (N) UR (N)
	6L3–28199–8F–M0	MANUAL,OWNER'S MANUEL D'UTILISATION	1					UR (S) UR (S)
	6L3–28199–8F–L0	MANUAL,OWNER'S MANUEL D'UTILISATION	1					UR (SF) UR (SF)

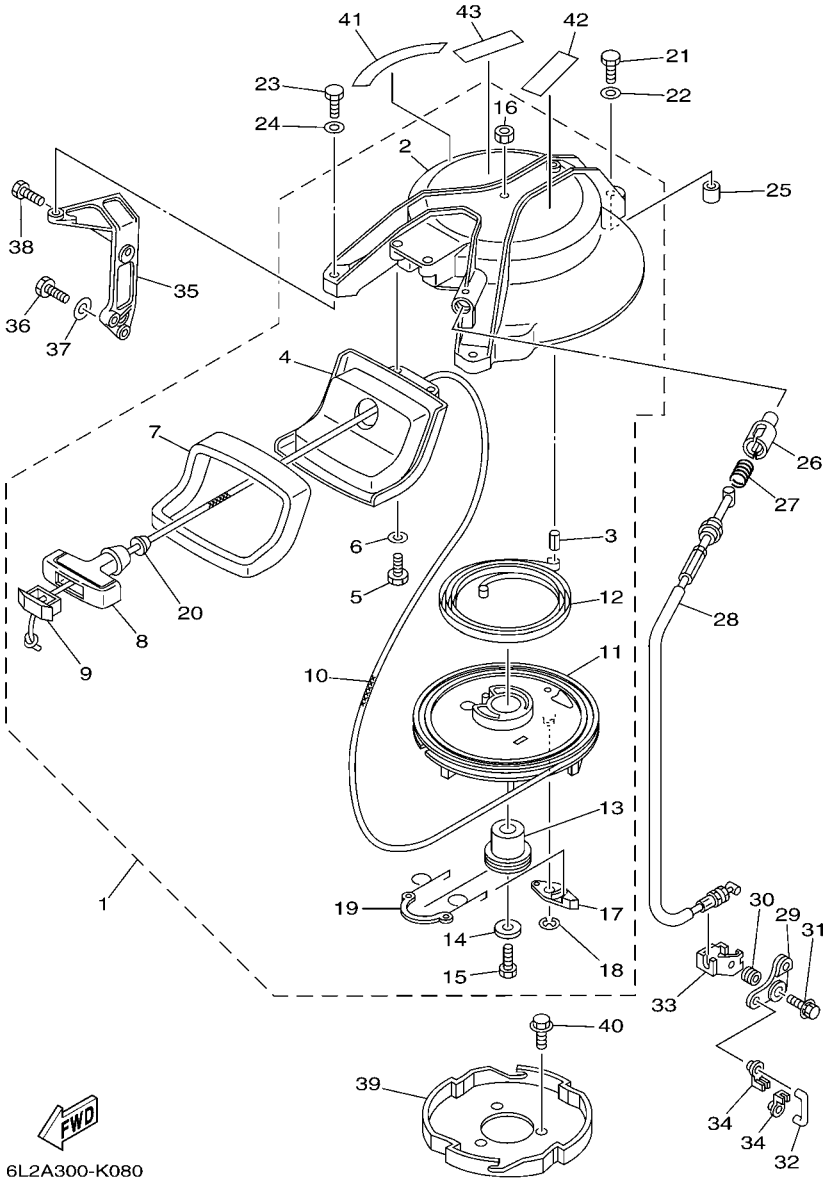

*1:CUT FROM 50M ROLLS,PART NO.90890-44373,CUTTING LENGTH 1.95M

*1:A PRELEVER SUR BOBINE 50M ,REFERENCE 90890-44373,
LONGUEUR DE COUPE 1.95M

FIG. 8 STARTER DEMARREUR

REF. NO.	PART NO. N° PIECES	DESCRIPTION DESCRIPTION	6L2C					REMARKS REMARQUES
1	6L2–15710–02	STARTER ASSY DEMARREUR COMPLET	1					
2	6L2–15711–00–94	.CASE, STARTER .CARTER DE DEMARREUR	1					
3	91690–40014	.PIN, SPRING .AGRAFFE	1					
4	6L2–15758–01–94	.GUIDE, ROPE .GUIDE DE CABLE	1					
5	97095–06016	.BOLT .BOULON	2					
6	92995–06600	.WASHER .RONDELLE	2					
7	6L2–15762–00	.SEAL, RUBBER 2 .JOINT CAOUTCHOUC 2	1					
8	689–15755–01	.HANDLE, STARTER .POIGNEE, DE DEMARREUR	1					
9	6F5–15779–02	.COVER .COUVERCLE	1					
10	*	.WIRE (L:1,950MM) .FIL (L:1,950MM)	1					*1 *1
11	6J8–15714–00	.DRUM, SHEAVE .TAMBOUR, POULIE	1					
12	90510–08M04	.SPRING, SPIRAL .RESSORT, HELICOIDAL	1					
13	677–15717–01	.SHAFT, STARTER .AXE DE DEMARREUR	1					
14	90201–06060	.WASHER, PLATE .RONDELLE, PLATE	1					
15	97013–06025	.BOLT .BOULON	1					
16	95303–06700	.NUT .ECROU	1					
17	676–15741–03	.PAWL, DRIVE .CLIQUET, ENTRAINEMENT	1					
18	93430–06M02	.CIRCLIP .CLIPS	1					
19	6J8–15705–00	.SPRING, DRIVE PAWL .RESSORT DE CLIQUET	1					
20	6A0–15789–00	.DAMPER .AMORTISSEUR	1					
21	97095–06035	BOLT BOULON	1					
22	92995–06600	WASHER RONDELLE	1					
23	97095–06025	BOLT BOULON	2					
24	92995–06600	WASHER RONDELLE	2					
25	99530–10014	PIN, DOWEL GOUJON, D'ASSEMBLAGE	1					
26	656–15748–00	PLUNGER, STARTER STOP PLONGEUR, BOUTE DE DEMAR	1					
27	90501–10227	SPRING, COMPRESSION RESSORT, COMPRESSION	1					

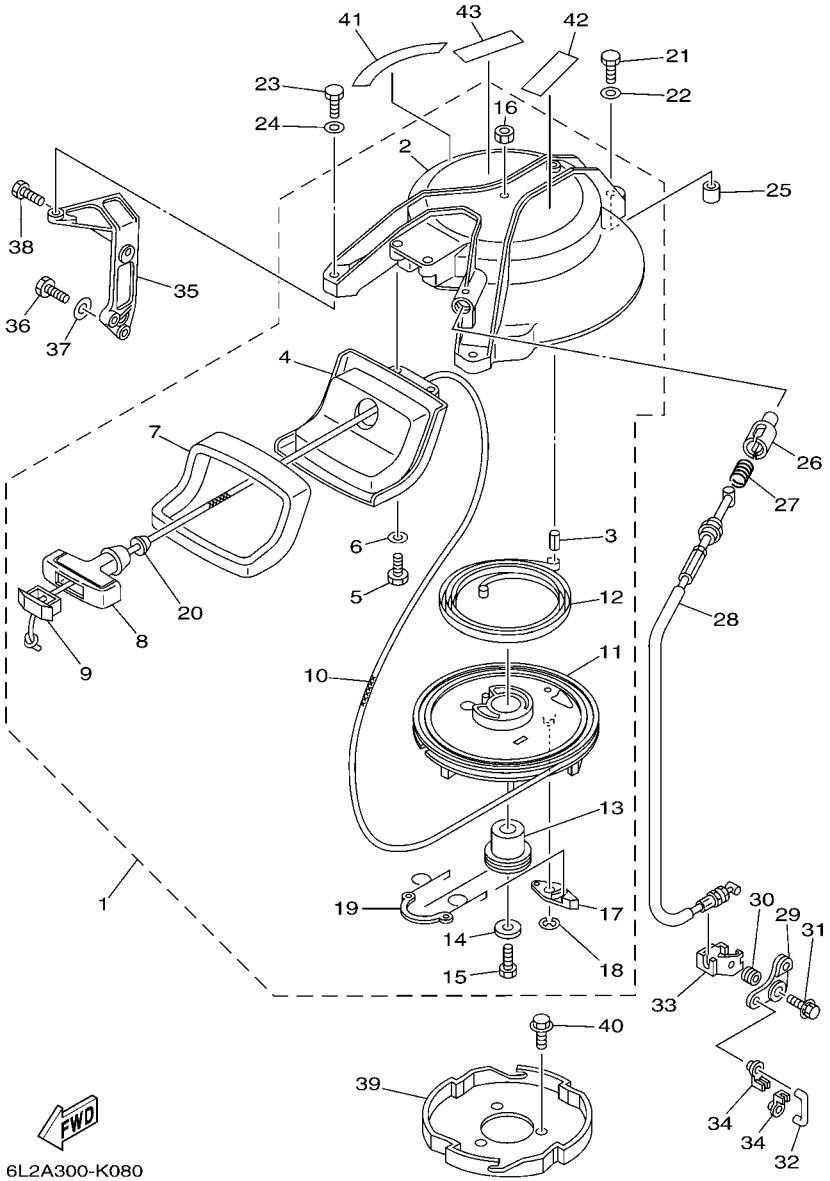

*1:CUT FROM 50M ROLLS,PART NO.90890-44373,CUTTING LENGTH 1.95M

*1:A PRELEVER SUR BOBINE 50M ,REFERENCE 90890-44373,
LONGUEUR DE COUPE 1.95M

FIG. 8 STARTER DEMARREUR

REF. NO.	PART NO. N° PIECES	DESCRIPTION DESCRIPTION	6L2C					REMARKS REMARQUES
28	6L2–15770–00	CABLE COMP., STARTER STOP CABLE, BUTEE DE DEMAR	1					
29	6L2–15746–00	ARM BRAS	1					
30	90387–06M51	COLLAR COLLERETTE	1					
31	90119–06M53	BOLT, WITH WASHER BOULON, AVEC RONDELLE	1					
32	6L2–15747–00	LINK BIELLETTE	1					
33	6L2–15774–00	STAY 4 SUPPORT 4	1					
34	661–41262–02	JOINT, CHOKE LEVER RACCORD, LEVIER DE STARTER	2					
35	6L2–15772–00–94	STAY 2 SUPPORT 2	1					
36	97013–06020	BOLT BOULON	1					
37	92903–06600	WASHER, PLATE RONDELLE, PLATE	1					
38	97095–06020	BOLT BOULON	1					
39	6L2–15723–01	PULLEY, STARTER POULIE DE DEMARREUR	1					
40	90105–08M10	BOLT, FLANGE BOULON	3					
41	6L2–13437–21	MARK, CAUTION MAKER	1					
42	6AH–81995–40	LABEL, WARNING ETIQUETTE, AVERTISSEMENT	1					
43	6AH–81995–50	LABEL, WARNING ETIQUETTE, AVERTISSEMENT	1					

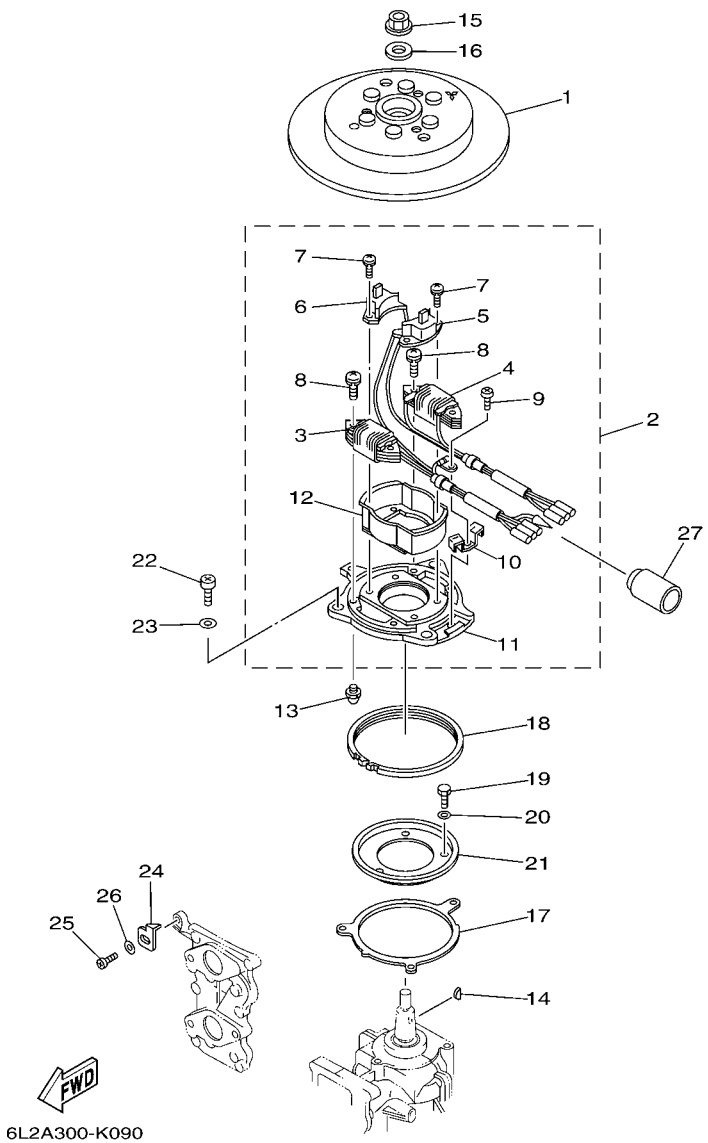

FIG. 9 GENERATOR GENERATRICE

REF. NO.	PART NO. N° PIECES	DESCRIPTION DESCRIPTION	6L2C					REMARKS REMARQUES
1	6L2–85550–00	ROTOR ASSY ROTOR CPLT	1					
2	6L2–85560–10	BASE ASSY ENS. FLASQUE	1					
3	6L2–85520–12	.COIL, CHARGE .BOBINE, CHARGE	1					
4	6L2–85533–10	.COIL, LIGHTING .BOBINE, ECLAIRAGE	1					
5	6L2–85580–10	.COIL, PULSER .BOBINE, PULSEUR	1					
6	6L2–85580–20	.COIL, PULSER .BOBINE, PULSEUR	1					
7	97607–04110	.SCREW,WITH WASHER .VIS HEXAGONAL	4					
8	97607–06125	.SCREW,WITH WASHER .VIS HEXAGONAL	4					
9	97802–04006	.SCREW, PAN HEAD .VIS	1					
10	6E9–81328–70	.CLAMP .COLLIER	1					
11	6L2–85561–10	.BASE, MAGNETO .BASE, MAGNETO	1					
12	61N–85537–00	.COVER .COUVERCLE	1					
13	663–85518–00	JOINT, BALL JOINT SPHERIQUE	1					
14	90280–05013	KEY, WOODRUFF CLAVETTE, DEMI-LUNE	1					
15	90179–12M04	NUT ECROU	1					
16	90201–13M42	WASHER, PLATE RONDELLE, PLATE	1					
17	6G1–41611–00	RETAINER, MAGNETO BASE FLASQUE, PLATEAU D'AVANCE	1					
18	695–41613–00	PLATE, BASE FRICTION PLAQUE, FRICTION DE BASE	1					
19	97095–06012	BOLT BOULON	3					
20	92995–06600	WASHER RONDELLE	3					
21	6G1–41612–00	RETAINER, MAGNETO BASE FLASQUE, PLATEAU D'AVANCE	1					
22	97885–05010	SCREW, PAN HEAD VIS, A ENCOCHE	3					
23	92995–05600	WASHER RONDELLE	3					
24	6L2–81332–00	PLATE, TIMING PLATEAU, ALLUMAGE	1					
25	97885–05010	SCREW, PAN HEAD VIS, A ENCOCHE	1					
26	92995–05600	WASHER RONDELLE	1					
27	6L2–82599–01	COVER, CONNECTER COUVERCLE, CONNECTEUR	1					

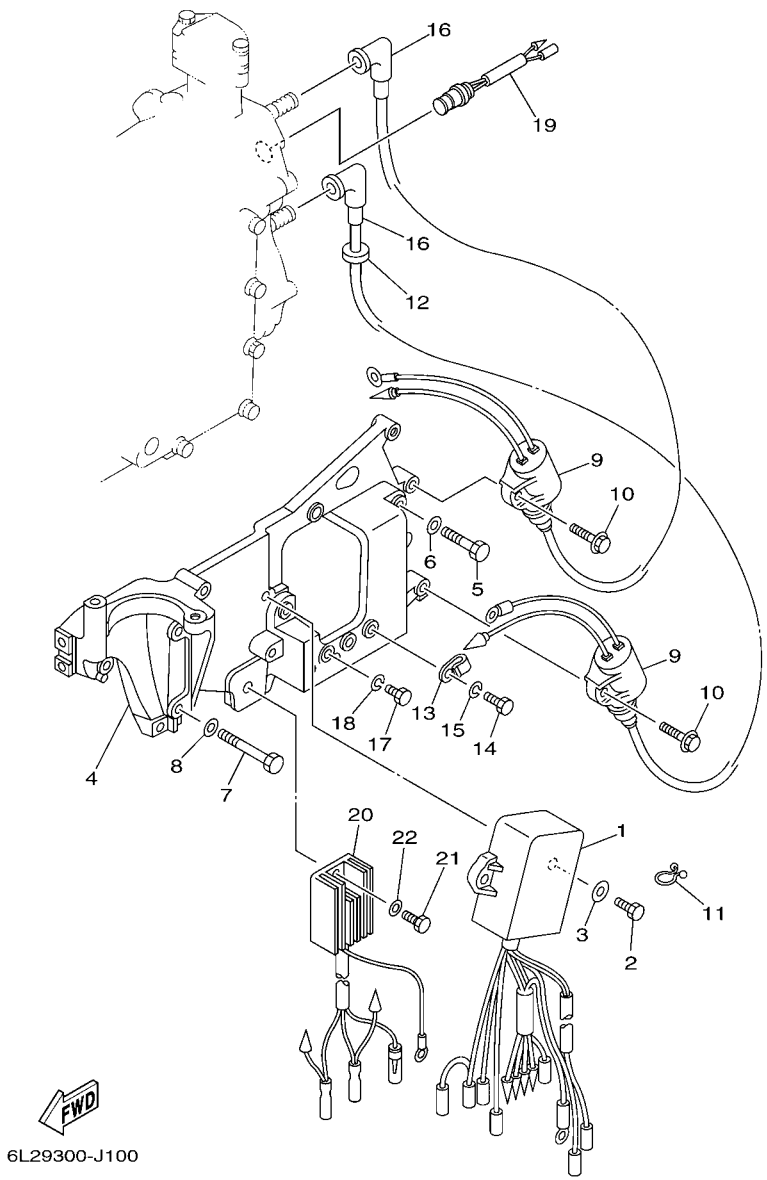

FIG. 10 ELECTRICAL ELECTRIQUE

REF. NO.	PART NO. N° PIECES	DESCRIPTION DESCRIPTION	6L2C					REMARKS REMARQUES
1	6L2–85540–23	C.D.I. UNIT ASSY BLOC C.D.I.	1					
2	97095–06020	BOLT BOULON	2					
3	92995–06600	WASHER RONDELLE	2					
4	6L2–85542–02–94	BRACKET SUPPORT	1					
5	97075–06030	BOLT BOULON	3					
6	92995–06600	WASHER RONDELLE	3					
7	90101–06M16	BOLT BOULON	2					
8	92903–06600	WASHER, PLATE RONDELLE, PLATE	2					
9	61N–85570–00	IGNITION COIL ASSY BOBINE D'ALLUMAGE (ENS.)	2					
10	97595–06420	BOLT, WITH WASHER VIS HEXAGONAL AVC RONDELLE	2					
11	90464–08M07	CLAMP BRIDE	1					O/I O/I
12	90480–25161	GROMMET PASSE-FIL	1					
13	90465–06M86	CLAMP BRIDE	1					O/I O/I
14	97095–06012	BOLT BOULON	1					
15	92995–06100	WASHER, SPRING RONDELLE, GROWER	1					
16	6G1–82370–21	PLUG CAP ASSY ANTIPARASITE	2					
17	97095–06012	BOLT BOULON	2					
18	92995–06100	WASHER, SPRING RONDELLE, GROWER	2					
19	689–82560–00	THERMO SWITCH ASSY THERMO-CONTACT COMPLET	1					O/I O/I
20	6J8–81960–00	RECTIFIER & REGULATOR ASSY REDRESSEUR REGULATEUR CPLT	1					
21	97095–06016	BOLT BOULON	1					
22	92995–06600	WASHER RONDELLE	1					

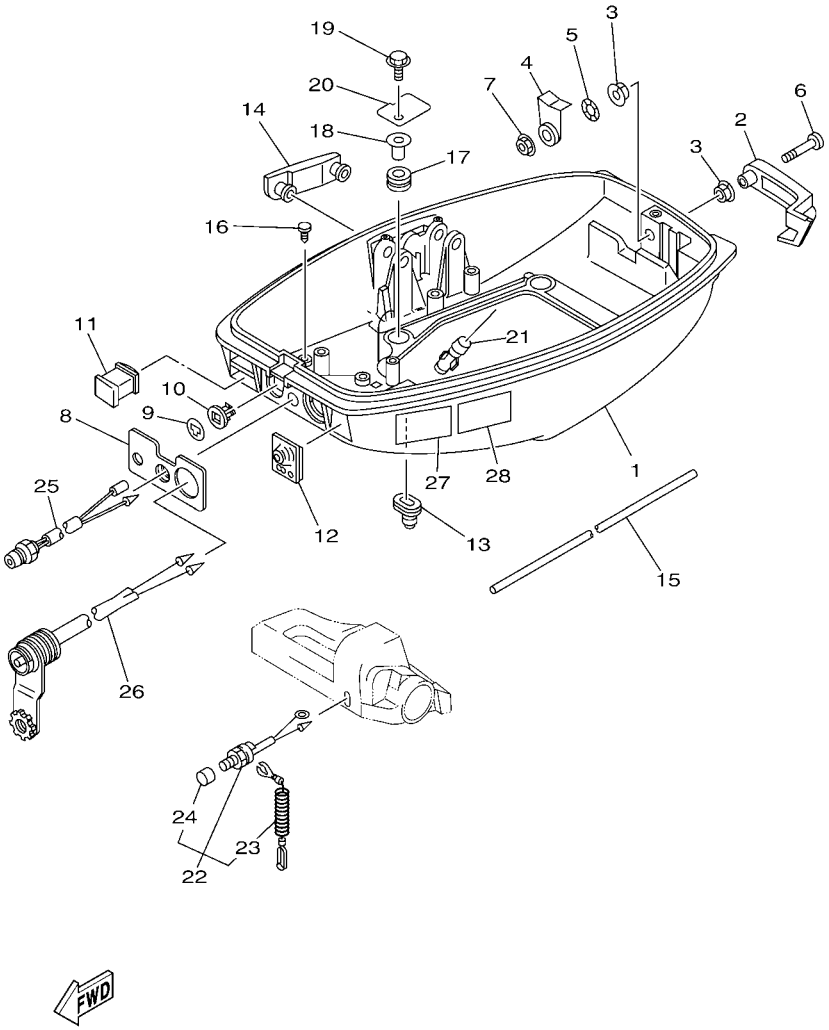

6L2B300-L110

FIG. 11 BOTTOM COWLING CAPOT INFERIEUR

REF. NO.	PART NO. N° PIECES	DESCRIPTION DESCRIPTION	6L2C					REMARKS REMARQUES
1	6L2–42711–03–4D	COWLING, BOTTOM 1 CUVETTE 1	1					
2	6L2–42815–01–4D	LEVER, CLAMP LEVIER, PRESSE	1					
3	90386–12M45	BUSH DOUILLE	2					
4	6L2–42816–00	LEVER, CLAMP LEVIER, PRESSE	1					
5	90206–12052	WASHER, WAVE RONDELLE, ONDULEE	1					
6	97880–06035	SCREW, PAN HEAD VIS, TETE TRONCONIQUE	1					
7	95780–06300	NUT, FLANGE ECROU	1					
8	6L2–42719–A0	PANEL, FRONT LOWER PANNEAU, AVANT INFERIEUR	1					
9	689–41273–00	GROMMET PASSE-FIL	1					
10	6J8–41274–00	GROMMET 2 PASSE-FIL 2	1					
11	6L2–42725–00	GROMMET PASSE-FIL	1					
12	6L2–42726–01	GROMMET PASSE-FIL	1					
13	6G1–42727–00	GROMMET PASSE-FIL	1					
14	6L2–42748–01	GROMMET PASSE-FIL	1					
15	6L2–42716–00	RUBBER, SEAL 1 JOINT EN CAOUTCHOUC 1	1					
16	90338–05M03	PLUG PLOT	2					
17	90480–15M31	GROMMET PASSE-FIL	4					
18	90387–06M52	COLLAR COLLERETTE	4					
19	95895–06020	BOLT, FLANGE BOULON	4					
20	6L2–42738–01	PLATE, FITTING ETRIER	2					
21	6BL–44391–00	NIPPLE, HOSE RACCORD D'ESSENCE	1					
22	6L2–82575–00	ENGINE STOP SWITCH ASSY COUPE CIRCUIT CPLT	1					
23	682–82556–00	.LANYARD, STOP SWITCH .CORDON DU COUPE CIRCUIT	1					
24	689–8257Y–00	.CAP .COUVERCLE	1					
25	6J8–85410–00	EMERGENCY SIGNAL LIGHT ASSY FEU DE DETRESSE	1					O/I O/I
26	682–84381–00	2P CONCENT RALLONGE 2 FILS	1					
27	6AH–42794–40	LABEL, WARNING (GENERAL) ETIQUETTE, AVERTISSEMENT	1					

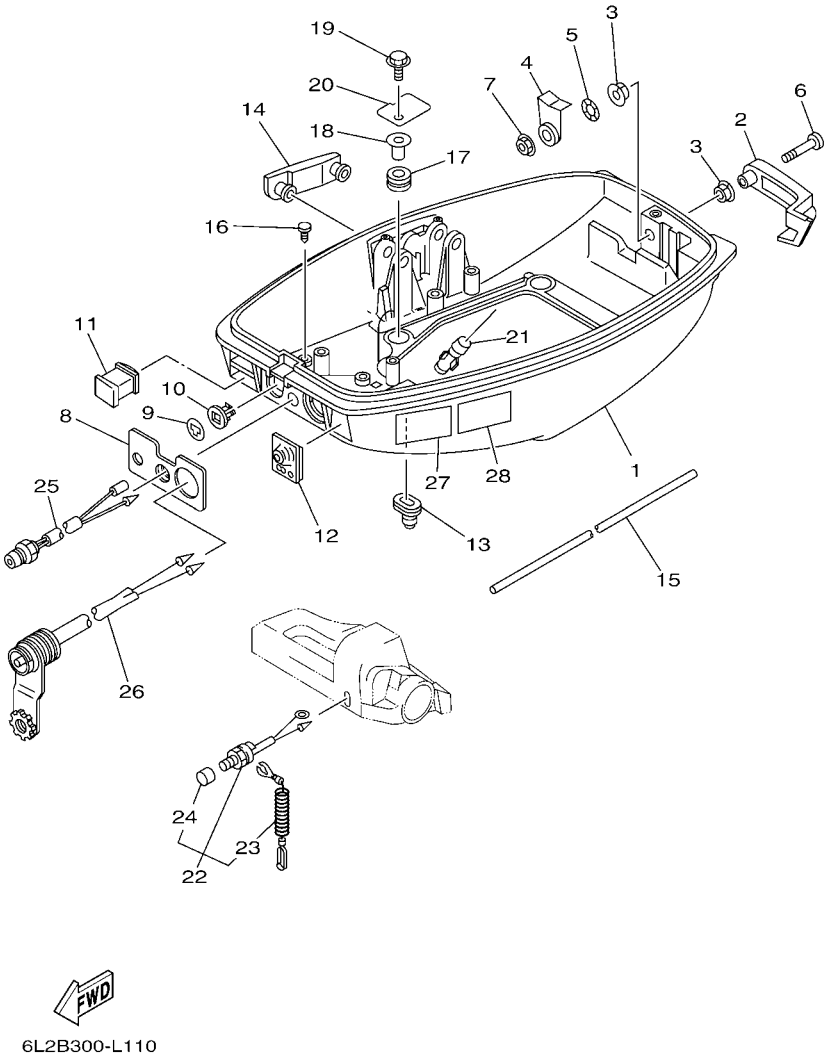

FIG. 11 BOTTOM COWLING CAPOT INFERIEUR

REF. NO.	PART NO. N° PIECES	DESCRIPTION DESCRIPTION	6L2C					REMARKS REMARQUES
28	6AH–42794–50	LABEL, WARNING (GENERAL) ETIQUETTE, AVERTISSEMENT	1					

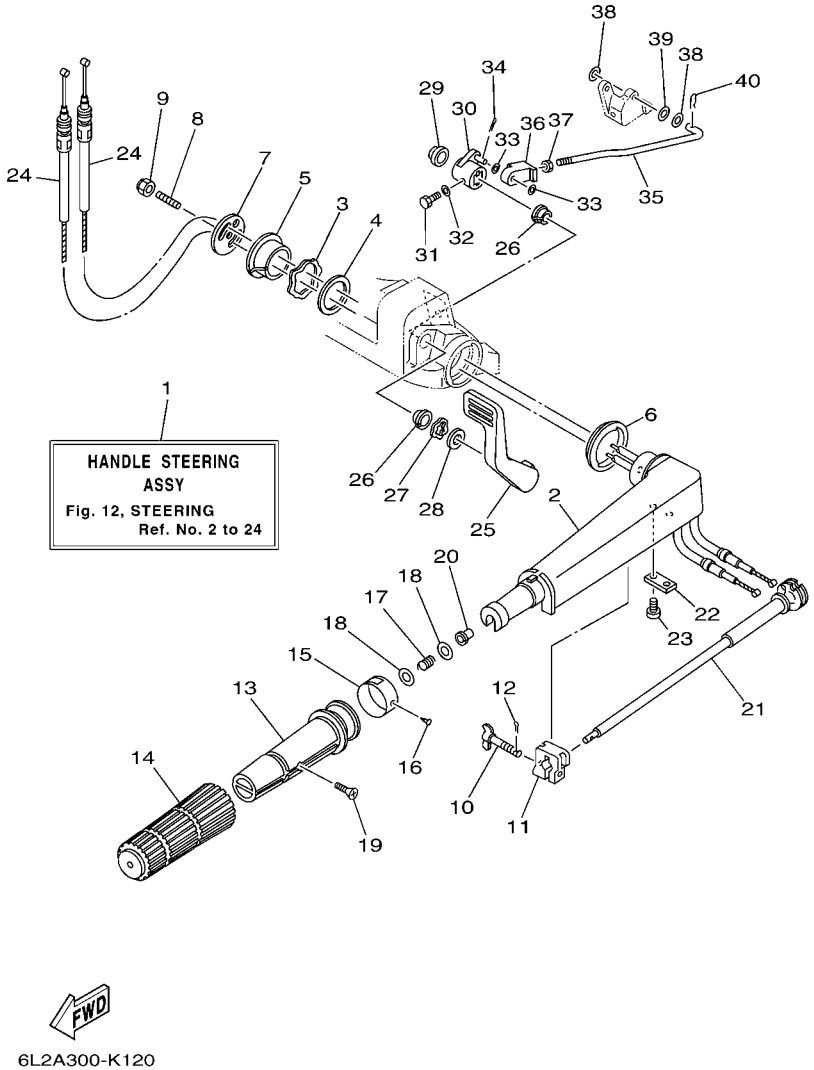

FIG. 12 STEERING DIRECTION

REF. NO.	PART NO. N° PIECES	DESCRIPTION DESCRIPTION	6L2C					REMARKS REMARQUES
1	6L2–W0084–11–4D	HANDLE STEERING ASSY BARRE FRANCHE (ENS.)	1					
2	6G1–42111–12–4D	HANDLE, STEERING POIGNEE	1					
3	90206–36M21	WASHER, WAVE RONDELLE, ONDULEE	1					
4	90202–36M55	WASHER, PLATE RONDELLE, PLATE	1					
5	90386–33M96	BUSH DOUILLE	1					
6	90386–34M97	BUSH DOUILLE	1					
7	6G1–42131–02	COVER, HANDLE STEERING COUVERCLE	1					
8	90116–08016	BOLT, STUD GOUJON	1					
9	90185–08057	NUT, SELF-LOCKING ECROU,AUTO-BLOQUANT	1					
10	6G1–42125–01	BOLT, FRICTION ADJUSTING BOULON	1					
11	6G1–42126–00	FRICTION, STEERING HANDLE GRIP CUVETTE, POIGNEE DE DIRECTION	1					
12	91490–16010	PIN. COTTER GOUPILLE	1					
13	664–42119–00	GRIP, STEERING HANDLE POIGNEE, BARRE FRANCHE	1					
14	6G1–42177–00	RUBBER, HANDLE CAOUTCHOUC, POIGNEE	1					
15	6L2–42137–00	INDICATOR, THROTTLE INDICATEUR, ACCELERATION	1					
16	90269–02M09	RIVET RIVET	1					
17	90501–23215	SPRING, COMPRESSION RESSORT, COMPRESSION	1					
18	90201–10M02	WASHER, PLATE RONDELLE, PLATE	2					
19	90152–05011	SCREW, COUNTERSUNK VIS, TETE NOYEE	1					
20	90386–08032	BUSH DOUILLE	1					
21	6G1–42138–01	LEVER, THROTTLE LEVIER, ACCELERATEUR	1					
22	6E0–42159–02	STAY SUPPORT	1					
23	97885–05012	SCREW, PAN HEAD VIS, A ENCOCHE	2					
24	6L2–26301–01	THROTTLE CABLE ASSY CABLE D'ACCELERATEUR	2					
25	6L2–44111–01–94	HANDLE, GEAR SHIFT POIGNEE, LEVIER D'EMBRAYAGE	1					
26	90386–15M73	BUSH DOUILLE	2					
27	90206–15M18	WASHER, WAVE RONDELLE, ONDULEE	1					

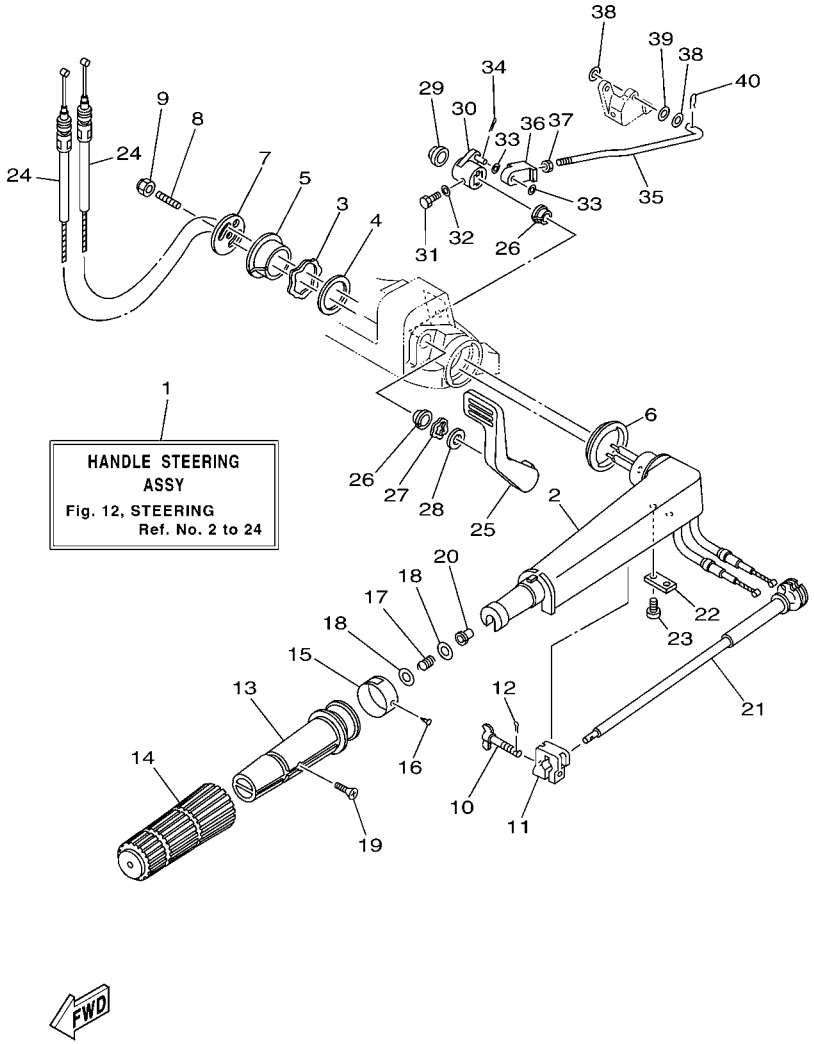

FIG. 12 STEERING — DIRECTION

REF. NO.	PART NO. N° PIECES	DESCRIPTION DESCRIPTION	6L2C					REMARKS REMARQUES
28	90202–15M37	WASHER, PLATE RONDELLE, PLATE	1					
29	90386–12M72	BUSH DOUILLE	1					
30	6L2–44125–00–94	LEVER, SHIFT ROD LEVIER, TIGE D'INVERSION	1					
31	97095–06020	BOLT BOULON	1					
32	92995–06600	WASHER RONDELLE	1					
33	90202–06009	WASHER, PLATE RONDELLE, PLATE	2					
34	91490–20010	PIN. COTTER GOUPILLE	1					
35	6L2–44124–00	LINK, SHIFT ROD BIELLETTE	1					
36	6L2–26363–00	END, CABLE EMBOUT DE CABLE	1					
37	95380–06700	NUT ECROU	1					
38	90202–05088	WASHER, PLATE RONDELLE, PLATE	2					
39	90202–05M38	WASHER, PLATE RONDELLE, PLATE	1					
40	90468–05M03	CLIP JONC	1					

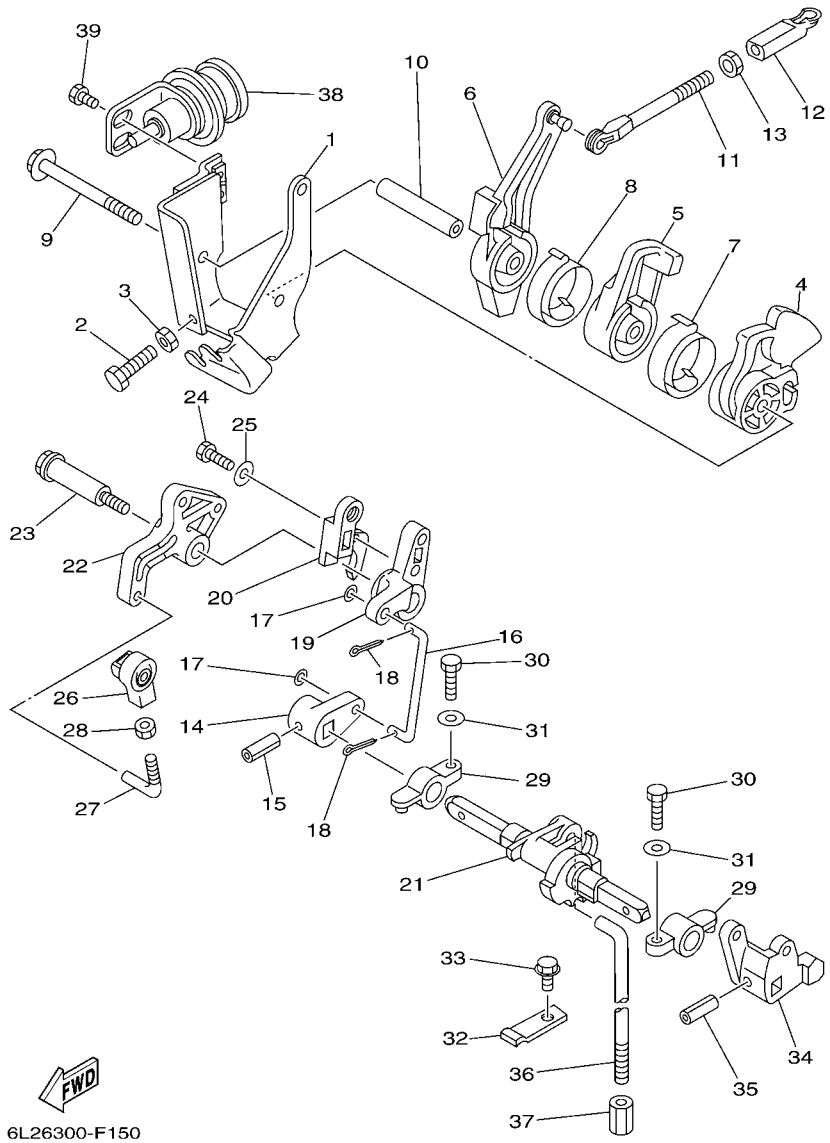

FIG. 13 CONTROL COMMANDE

REF. NO.	PART NO. N° PIECES	DESCRIPTION DESCRIPTION	6L2C					REMARKS REMARQUES
1	6L2–14497–00	STAY, THROTTLE WIRE SUPPORT DE BOISSEAU	1					
2	97095–06020	BOLT BOULON	1					
3	95380–06700	NUT ECROU	1					
4	6L2–41213–00	CAM, ACCEL. CAME, ACCELERATION	1					
5	6L2–41283–00	LEVER, FREE ACCEL. LEVIER	1					
6	6L2–41631–00	LEVER, MAGNETO CONTROL LEVIER, COMMANDE D'AVANCE	1					
7	6J8–42167–00	SPRING 1 RESSORT1	1					
8	6L2–42167–00	SPRING 1 RESSORT1	1					
9	97595–06575	BOLT, WITH WASHER VIS HEXAGONAL AVC RONDELLE	1					
10	90387–06M18	COLLAR COLLERETTE	1					
11	689–42169–01	JOINT AXE	1					
12	662–41237–01	JOINT, LINK RACCORD	1					
13	95380–05600	NUT ECROU	1					
14	6L2–44122–00	BUSHING, SHIFT ROD LEVER DOUILLE, LEVIER D'EMBRAYAGE	1					
15	90254–03M04	PIN, SPRING RIVET, TETE TRONCONIQUE	1					
16	6L2–42192–00	ROD 2 TRINGLE 2	1					
17	90202–05088	WASHER, PLATE RONDELLE, PLATE	2					
18	91490–20010	PIN. COTTER GOUPILLE	2					
19	6L2–44141–02	LINK, SHIFT ROD BIELLETTE	1					
20	6L2–44141–10–94	LINK, SHIFT ROD BIELLETTE	1					
21	6L2–44121–00	LEVER, SHIFT ROD LEVIER, TIGE D'INVERSION	1					
22	6L2–41212–00	ARM, ACCEL. BRAS	1					
23	90109–06M28	BOLT BOULON	1					
24	97013–05016	BOLT BOULON	1					
25	92903–05600	WASHER, PLATE RONDELLE, PLATE	1					
26	6L2–41237–00	JOINT, LINK RACCORD	1					
27	6L2–41238–00	JOINT, LINK RACCORD	1					

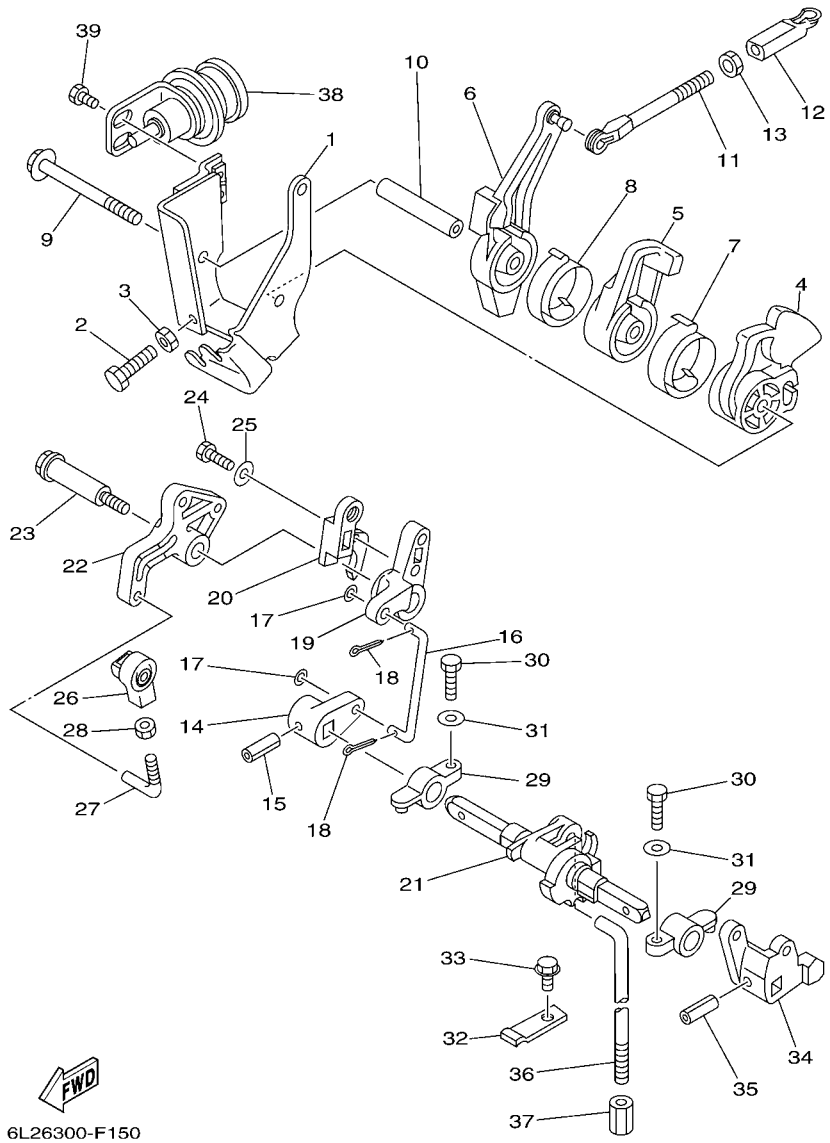

FIG. 13 CONTROL COMMANDE

REF. NO.	PART NO. N° PIECES	DESCRIPTION DESCRIPTION	6L2C					REMARKS REMARQUES
28	95380–05700	NUT ECROU	1					
29	6G1–41662–01–94	BRACKET 2 SUPPORT 2	2					
30	97013–06020	BOLT BOULON	2					
31	92903–06600	WASHER, PLATE RONDELLE, PLATE	2					
32	6J8–44116–00	SPRING RESSORT	1					
33	95895–06012	BOLT, FLANGE BOULON	1					
34	6L2–44123–00	ARM, SHIFT ROD BRAS, TIGE D'INVERSION	1					
35	90254–03M04	PIN, SPRING RIVET, TETE TRONCONIQUE	1					
36	6L2–44143–00	ROD, SHIFT TIGE D'EMBRAYAGE	1					
37	90170–06015	NUT ECROU	1					
38	6L2–14368–00	DIAPHRAGM ASSY 1 DIAPHRAGME 1	1					
39	97095–06008	BOLT BOULON	2					

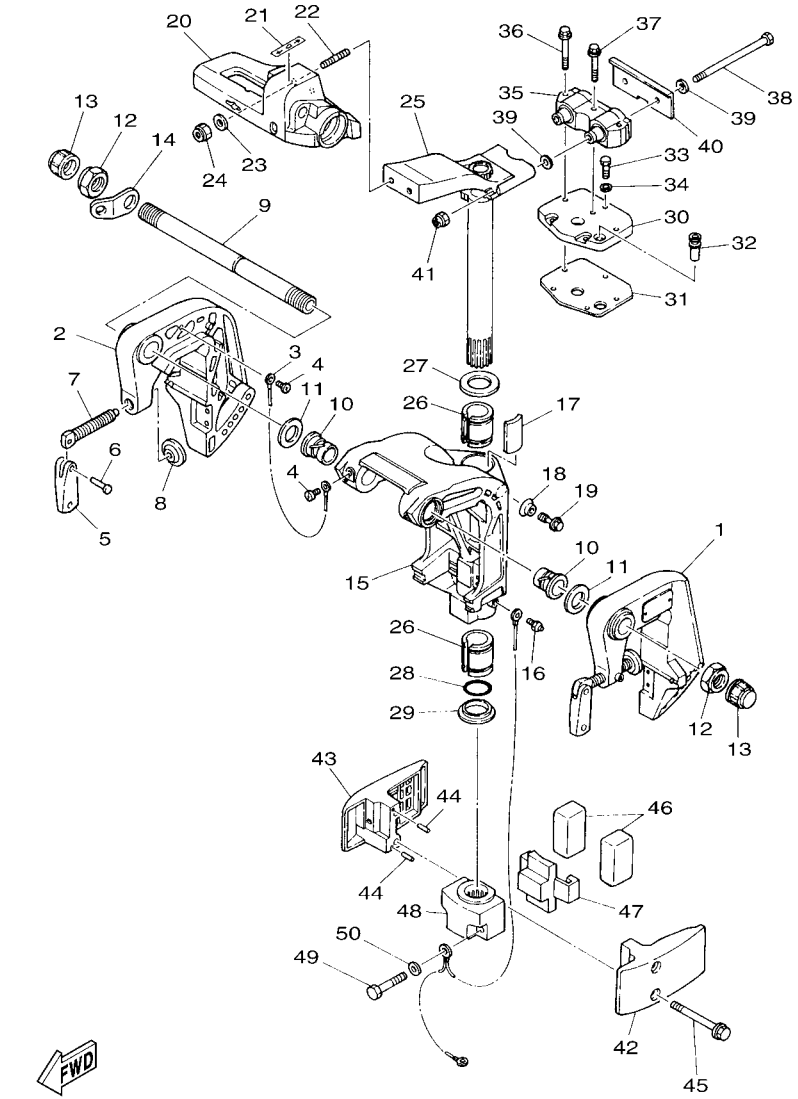

FIG. 14 BRACKET 1 SUPPORT 1

REF. NO.	PART NO. N° PIECES	DESCRIPTION DESCRIPTION	6L2C					REMARKS REMARQUES
1	6L2–43111–05–4D	BRACKET, CLAMP 1 PRESSE 1	1					
2	6L2–43112–06–4D	BRACKET, CLAMP 2 PRESSE 2	1					
3	6E5–82148–00	WIRE, LEAD 4 FIL 4	1					
4	97885–06008	SCREW, PAN HEAD VIS, A ENCOCHE	2					
5	6E0–43118–01	HANDLE, TRANSOM CLAMP POIGNEE DE VIS DE PRESSE	2					
6	90243–04M01	PIN GOUPILLE	2					
7	6L2–43116–00	SCREW, TRANSOM CLAMP VIS DE PRESSE	2					
8	648–43114–01	PAD, TRANSOM CLAMP RONDELLE D'APPUI	2					
9	6J8–43131–01	BOLT, CLAMP BRACKET BOULON, PRESSE	1					
10	90386–22M67	BUSH DOUILLE	2					
11	90201–22M03	WASHER, PLATE RONDELLE, PLATE	2					
12	90185–22043	NUT, SELF-LOCKING ECROU,AUTO-BLOQUANT	2					
13	6G5–43145–01	CAP, CLAMP BRACKET CAPUCHON, PRESSE	2					
14	6J8–43113–01	PLATE, CLAMP BRACKET PLAQUETTE, PRESSE	1					
15	6L2–43311–05–4D	BRACKET, SWIVEL 1 SUPPORT, PIVOT 1	1					
16	93700–06M03	NIPPLE, GREASE PION	1					
17	6H4–42528–00	PLATE, FRICTION PLAQUE, FRICTION	1					
18	689–43373–01	SEAL, DAMPER JOINT	1					
19	90105–06M18	BOLT, FLANGE BOULON	1					
20	6L2–42121–03–4D	BRACKET SUPPORT	1					
21	6E0–44191–11	INDICATOR, SHIFT ETIQUETTE, EMBRAYAGE	1					
22	90116–10M28	BOLT, STUD GOUJON	2					
23	92995–10600	WASHER RONDELLE	2					
24	90185–10051	NUT, SELF-LOCKING ECROU,AUTO-BLOQUANT	2					
25	6L2–42510–01–4D	STEERING BRACKET ASSY DIRECTION SUPPORT (ENS.)	1					
26	90386–30M75	BUSH DOUILLE	2					
27	90201–30M00	WASHER, PLATE RONDELLE, PLATE	1					

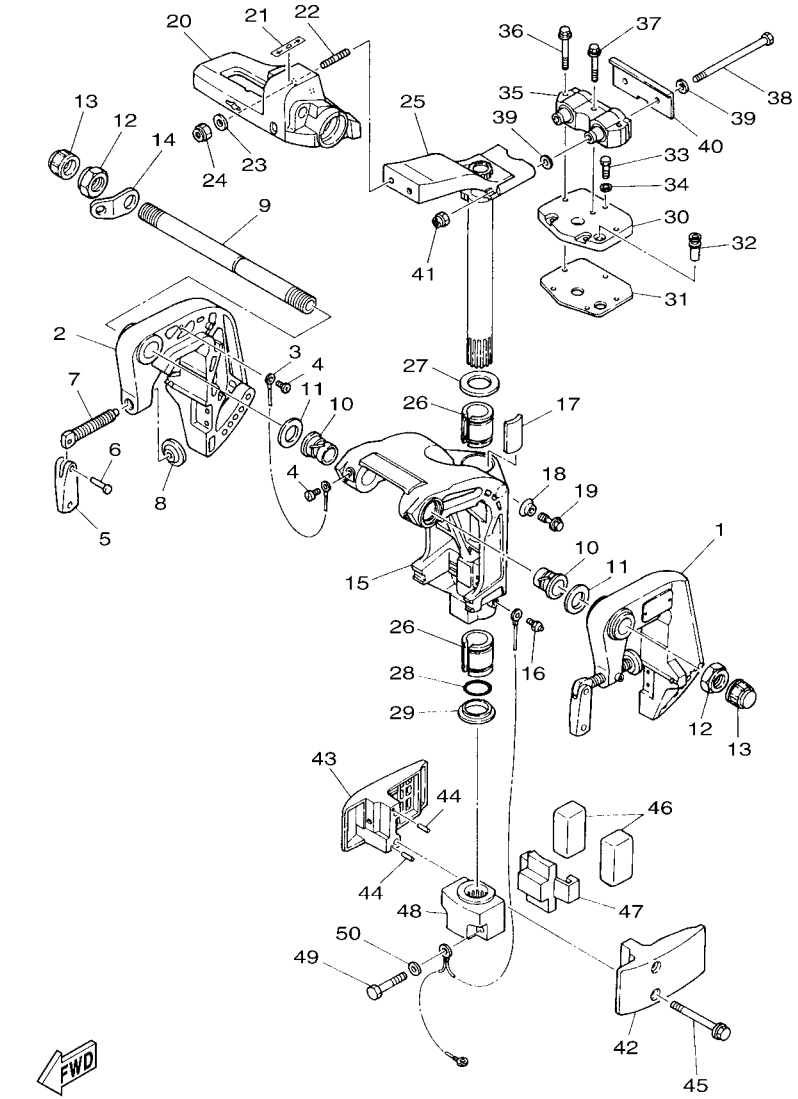

FIG. 14 BRACKET 1 SUPPORT 1

REF. NO.	PART NO. N° PIECES	DESCRIPTION DESCRIPTION	6L2C					REMARKS REMARQUES
28	93210–29375	O-RING JOINT TORIQUE	1					
29	90386–30M60	BUSH DOUILLE	1					
30	6L2–44512–00–4D	COVER, UPPER MOUNT COUVERCLE	1					
31	6L2–45114–A1	GASKET, UPPER CASING JOINT, TUBE D'ARBRE	1					
32	6L2–44365–00	DAMPER, WATER SEAL 1 JOINT, TUBE D'EAU 1	1					
33	97095–06020	BOLT BOULON	3					
34	92995–06600	WASHER RONDELLE	3					
35	6L2–44514–01	MOUNT DAMPER, UPPER SIDE SILENT-BLOC, SUPERIEUR LATERAL	1					
36	90119–06M04	BOLT, WITH WASHER BOULON, AVEC RONDELLE	2					
37	90119–06M05	BOLT, WITH WASHER BOULON, AVEC RONDELLE	1					
38	90101–08M09	BOLT BOULON	2					
39	90201–08M01	WASHER, PLATE RONDELLE, PLATE	4					
40	6L2–44526–00	PLATE PLAQUE	1					
41	90185–08057	NUT, SELF-LOCKING ECROU,AUTO-BLOQUANT	2					
42	6L2–44551–01–4D	HOUSING, LOWER MOUNT RUBBER 1 BOITIER, SILENT-BLOC INFERIEUR	1					
43	6L2–44552–01–4D	HOUSING, LOWER MOUNT RUBBER 2 BOITIER, SILENT-BLOC INFERIEUR	1					
44	93604–12M07	PIN, DOWEL CLAVETTE	2					
45	97595–08585	BOLT, WITH WASHER VIS HEXAGONAL AVC RONDELLE	2					
46	6L2–44555–00	MOUNT DAMPER, LOWER SIDE SILENT-BLOC, INFERIEUR LATERAL	2					
47	6L2–44557–00	MOUNT DAMPER, LOWER FRONT SILENT-BLOC, INFERIEUR AVANT	1					
48	6L2–44553–01–4D	COVER, LOWER MOUNT COUVERCLE, SUSPENSION INFERIEU	1					
49	97095–08045	BOLT BOULON	2					
50	92995–08600	WASHER RONDELLE	2					

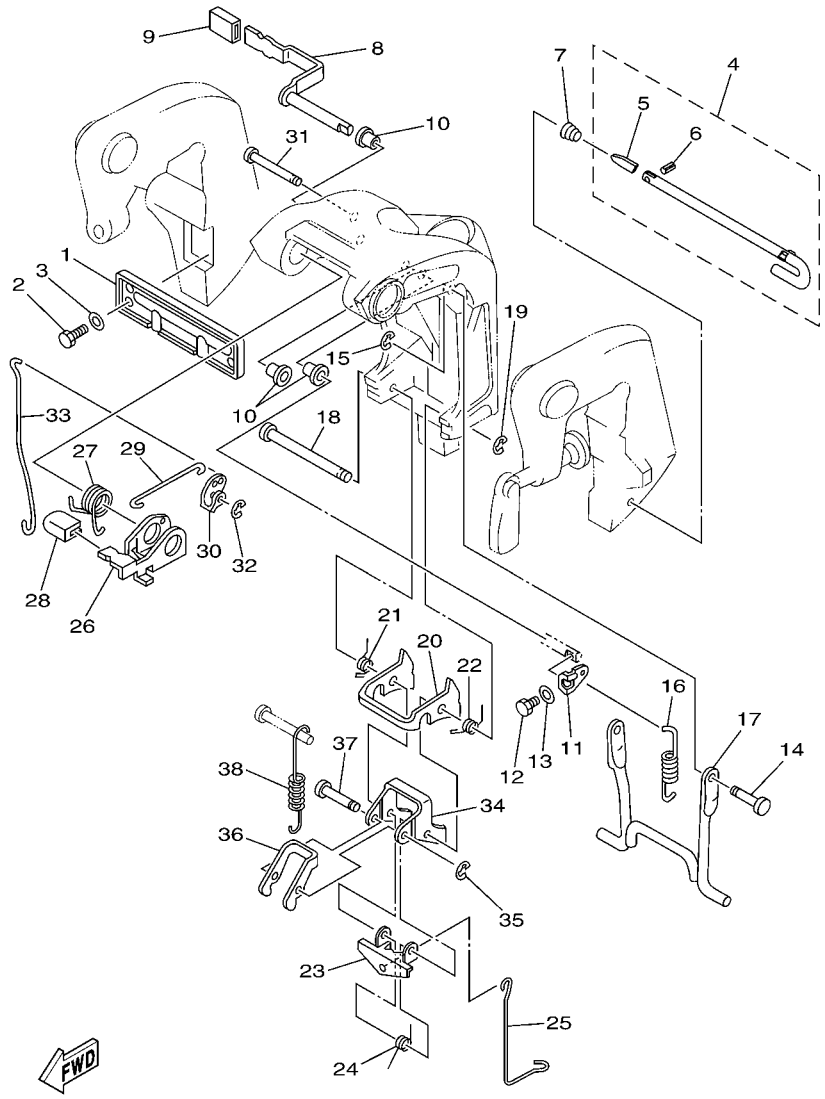

6L23300-C180

FIG. 15 BRACKET 2 SUPPORT 2

REF. NO.	PART NO. N° PIECES	DESCRIPTION DESCRIPTION	6L2C					REMARKS REMARQUES
1	6L2–43165–01	PLATE, TILT LOCK TAQUET, BROCHE INCLINAISON	1					
2	97090–06010	BOLT BOULON	4					
3	92990–06600	WASHER, PLATE RONDELLE, PLATE	4					
4	6L2–43160–01	TILT ROD ASSY BROCHE D'INCLINAISON (ENS.)	1					
5	689–43165–00	.PLATE, TILT LOCK .TAQUET, BROCHE INCLINAISON	1					
6	91690–30008	.PIN, SPRING .AGRAFFE	1					
7	90502–10M07	SPRING, CONICAL RESSORT, CONIQUE	1					
8	6L2–43630–01	TILT LEVER ASSY LEVIER D'INCLINAISON	1					
9	682–43318–01	COVER CAPUCHON	1					
10	90386–08032	BUSH DOUILLE	3					
11	6L2–43682–01	LEVER, SHALLOW WATER DRIVE 2 LEVIER, PEU PROFOND D'EAU 2	1					
12	97095–05010	BOLT BOULON	1					
13	92995–05600	WASHER RONDELLE	1					
14	6L2–43191–01	SHAFT, STOPPER AXE, BUTEE	1					
15	99080–05600	CIRCLIP CIRCLIP	1					
16	90506–20M27	SPRING, TENSION RESSORT, TENSION	1					
17	6L2–43350–02	RECEIVER ASSY RECEIVER ASSY	1					
18	6J8–43611–01	SHAFT, TILT LOCK AXE, VERROUILLAGE MARCHE AR	1					
19	99080–05600	CIRCLIP CIRCLIP	1					
20	6L2–43614–00	PLATE, TILT LOCK ETRIER, VERROUILLAGE MARCHE AR	1					
21	90508–12M28	SPRING, TORSION RESSORT, TORSION	1					
22	90508–12M29	SPRING, TORSION RESSORT, TORSION	1					
23	6L2–43615–00	PLATE, TILT LOCK ETRIER, VERROUILLAGE MARCHE AR	1					
24	6L2–43657–00	SPRING, LOCK RESSORT, BLOCAGE	1					
25	6L2–43676–00	HOOK CROCHET	1					
26	6L2–43631–00	LEVER, TILT LEVIER, INCLINAISON	1					
27	6L2–43188–00	SPRING RESSORT	1					

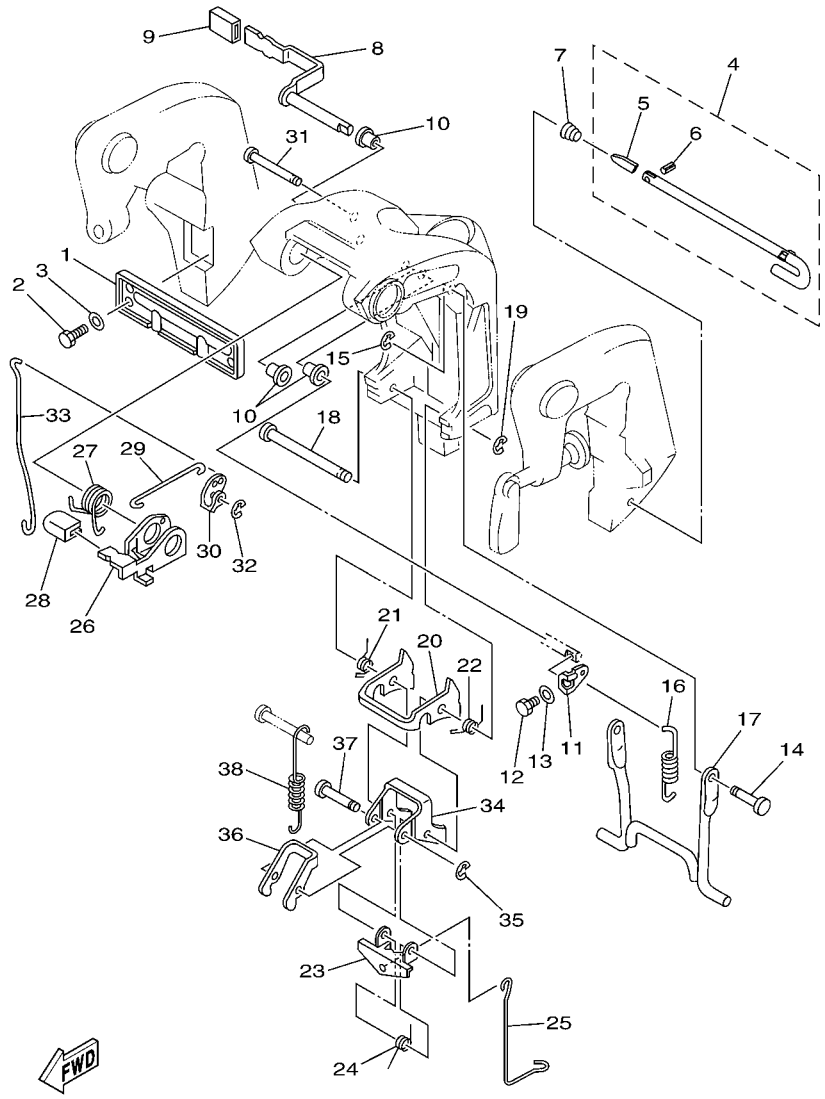

6L23300-C180

FIG. 15 BRACKET 2 SUPPORT 2

REF. NO.	PART NO. N° PIECES	DESCRIPTION DESCRIPTION	6L2C					REMARKS REMARQUES
28	6L2–43633–10	COVER, TILT LEVER COUVERCLE	1					
29	6L2–43611–00	SHAFT, TILT LOCK AXE, VERROUILLAGE MARCHE AR	1					
30	6L2–43641–00	LEVER, TILT LEVIER, INCLINAISON	1					
31	6L2–43659–00	SHAFT, REVERSE LOCK AXE, VERROUILLAGE MARCHE AR	1					
32	99080–05600	CIRCLIP CIRCLIP	1					
33	6L2–43617–00	ROD, TILT LOCK TIGE	1					
34	6L2–43613–00	ARM, TILT LOCK GUIDE	1					
35	99080–05600	CIRCLIP CIRCLIP	1					
36	6L2–43624–00	PLATE, TILT ROCK ETRIER, VERROUILLAGE MARCHE AR	1					
37	6L2–43336–00	PIN CLAVETTE	1					
38	90506–23M11	SPRING, TENSION RESSORT, TENSION	1					

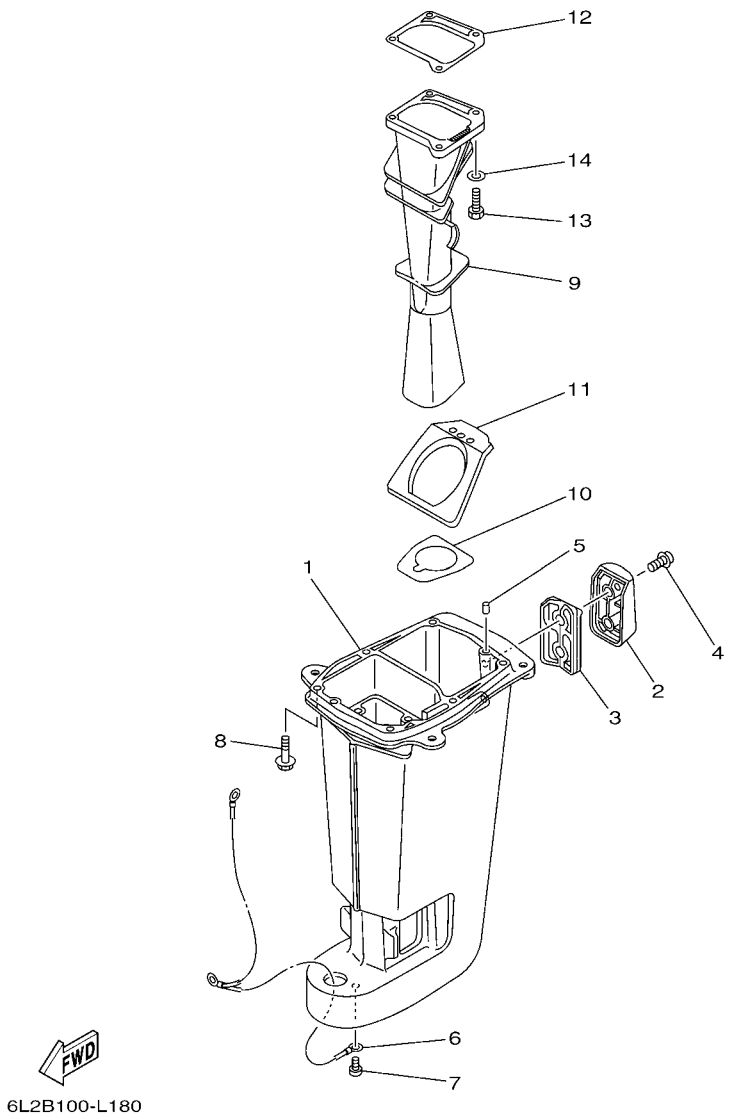

FIG. 16 UPPER CASING FOURREAU

REF. NO.	PART NO. N° PIECES	DESCRIPTION DESCRIPTION	6L2C					REMARKS REMARQUES
1	6L2–45111–03–4D	CASING, UPPER FOURREAU	1					S(16.5") S(16.5")
	6L2–45111–13–4D	CASING, UPPER FOURREAU	1					L(21.5") L(21.5")
2	6L2–45151–01–4D	COVER, UPPER CASING CAPUCHON, FOURREAU	1					
3	6L2–45115–00	GASKET, UPPER CASING JOINT, TUBE D'ARBRE	1					
4	90159–06M11	SCREW, WITH WASHER VIS, AVEC RONDELLE	2					
5	93604–12M07	PIN, DOWEL CLAVETTE	2					
6	6L2–82127–00	WIRE, LEAD 2 FIL 2	1					
7	90157–06M06	SCREW, PAN HEAD VIS, TETE TRONCONIQUE	1					
8	97575–08530	BOLT, WITH WASHER VIS HEXAGONAL AVC RONDELLE	6					
9	6L2–41131–00–CA	MANIFOLD, EXT. 1 PIPE D'ECHAPPEMENT	1					
10	6L2–41134–00	GASKET, EXHAUST MANIFOLD JOINT, PIPE D'ECHAPPEMENT	1					
11	6L2–45123–01	GASKET, MUFFLER JOINT, POT DE DETENTE	1					
12	6L2–41133–A3	GASKET, EXHAUST MANIFOLD 1 JOINT, PIPE D'ECHAPPEMENT	1					
13	97095–06020	BOLT BOULON	4					
14	92995–06600	WASHER RONDELLE	4					

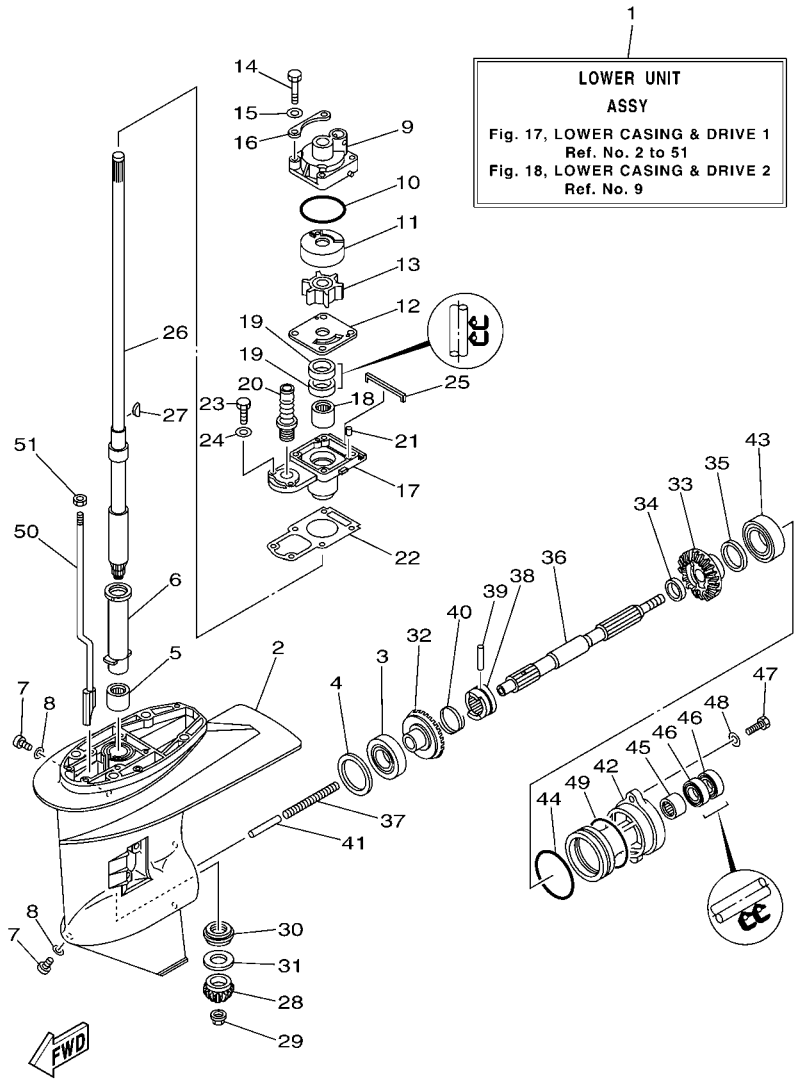

FIG. 17 LOWER CASING & DRIVE 1 BOITIER D'HELICE TRANSMISSION1

REF. NO.	PART NO. N° PIECES	DESCRIPTION DESCRIPTION	6L2C					REMARKS REMARQUES
1	6L2–45300–04–4D	LOWER UNIT ASSY UNITE INFERIEURE (ENS.)	1					S(16.5") S(16.5")
	6L2–45300–14–4D	LOWER UNIT ASSY UNITE INFERIEURE (ENS.)	1					L(21.5") L(21.5")
2	6L2–45311–02–4D	CASING, LOWER BOITIER D'HELICE	1					
3	93332–00005	BEARING ROULEMENT	1					
4	6L2–45567–00	SHIM (T:1.0MM) CALE (T;1.0MM)	1					UR UR
	6L2–45567–10	SHIM (T:1.1MM) CALE (T:1.1MM)	1					UR UR
	6L2–45567–20	SHIM (T:1.2MM) CALE (T:1.2MM)	1					UR UR
	6L2–45567–30	SHIM (T:1.3MM) CALE (T:1.3MM)	1					UR UR
	6L2–45567–40	SHIM (T:1.4MM) CALE (T:1.4MM)	1					UR UR
5	93315–220V9	BEARING ROULEMENT	1					
6	6L2–45536–00	SLEEVE, DRIVE SHAFT MANCHON, ARBRE MOTEUR	1					
7	90340–08002	PLUG, STRAIGHT SCREW PLOT, FILETE DROIT	2					
8	90430–08020	GASKET JOINT	2					
9	6L2–44311–01	HOUSING, WATER PUMP CORPS, POMPE A EAU	1					
10	93210–45161	O-RING JOINT TORIQUE	1					
11	6L2–44322–00	INSERT, CARTRIDGE CUVETTE	1					
12	6L2–44323–00	OUTER PLATE, CARTRIDGE PLAQUE EXTERIEURE	1					
13	6L2–44352–00	IMPELLER TURBINE	1					
14	97095–06040	BOLT BOULON	4					
15	92995–06600	WASHER RONDELLE	4					
16	6L2–44328–00	PLATE PLAQUETTE	2					
17	6L2–45331–00–CA	HOUSING, BEARING FLASQUE, ROULEMENT	1					
18	93315–22004	BEARING ROULEMENT	1					
19	93101–20048	OIL SEAL JOINT SPY	2					
20	6L2–44147–00	BOOT, SHIFT ROD SOUFFLET, TIGE D'INVERSION	1					
21	93604–12M07	PIN, DOWEL CLAVETTE	2					
22	6L2–45315–A0	PACKING, LOWER CASING JOINT, BOITIER D'HELICE	1					

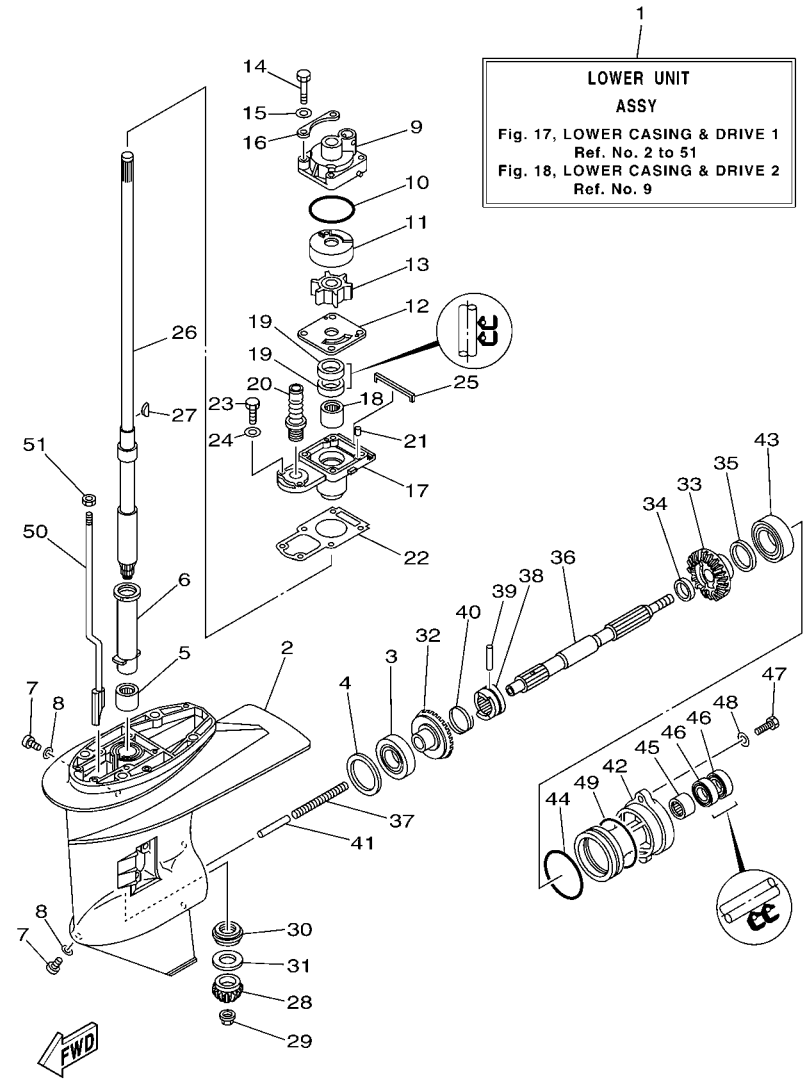

FIG. 17 LOWER CASING & DRIVE 1 BOITIER D'HELICE TRANSMISSION1

REF. NO.	PART NO. N° PIECES	DESCRIPTION DESCRIPTION	6L2C					REMARKS REMARQUES
23	97095–06020	BOLT BOULON	2					
24	92995–06600	WASHER RONDELLE	2					
25	6L2–45375–00	DAMPER, SEAL BOURRELET, CAOUTCHOUC	1					
26	6L2–45510–00	DRIVE SHAFT ASSY ARBRE MOTEUR (ENS.)	1					S(16.5") S(16.5")
	6L2–45510–10	DRIVE SHAFT ASSY ARBRE MOTEUR (ENS.)	1					L(21.5") L(21.5")
27	90280–03024	KEY, WOODRUFF CLAVETTE, DEMI-LUNE	1					
28	6L2–45551–01	PINION (13T) PIGNON D'ATTAQUE (13D)	1					
29	90179–10M14	NUT ECROU	1					
30	93341–320U0	BEARING CERVEAUX DE DIRECTION	1					
31	6L2–45587–00	SHIM (T:1.5MM) CALE (T:1.5MM)	1					UR UR
	6L2–45587–10	SHIM (T:1.6MM) CALE (T:1.6MM)	1					UR UR
32	6L2–45560–10	GEAR 1 (27T) PIGNON 1 (27T)	1					
33	6L2–45571–00	GEAR 2 (27T) PIGNON 2 (27T)	1					
34	90201–20417	WASHER, PLATE RONDELLE, PLATE	1					
35	6L2–45577–00	SHIM (T:1.0MM) CALE (T:1.0MM)	1					UR UR
	6L2–45577–10	SHIM (T:1.1MM) CALE (T:1.1MM)	1					UR UR
	6L2–45577–20	SHIM (T:1.2MM) CALE (T:1.2MM)	1					UR UR
	6L2–45577–30	SHIM (T:1.3MM) CALE (T:1.3MM)	1					UR UR
36	65W–45611–00	SHAFT, PROPELLER ARBRE, HELICE	1					
37	90501–10065	SPRING, COMPRESSION RESSORT, COMPRESSION	1					
38	6L2–45631–00	CLUTCH, DOG CRABOT	1					
39	90250–05010	PIN, STRAIGHT GOUPILLE, DROITE	1					
40	648–45633–00	RING, CROSS PIN JONC, GOUPILLE CRABOT	1					
41	648–45635–00	PLUNGER, SHIFT POUSSOIR D'EMBRAYAGE	1					
42	6L2–45361–03–4D	CAP, LOWER CASING COUVERCLE, BOITIER D'HELICE	1					
43	93306–00612	BEARING ROULEMENT	1					
44	93210–60MA3	O-RING JOINT TORIQUE	1					

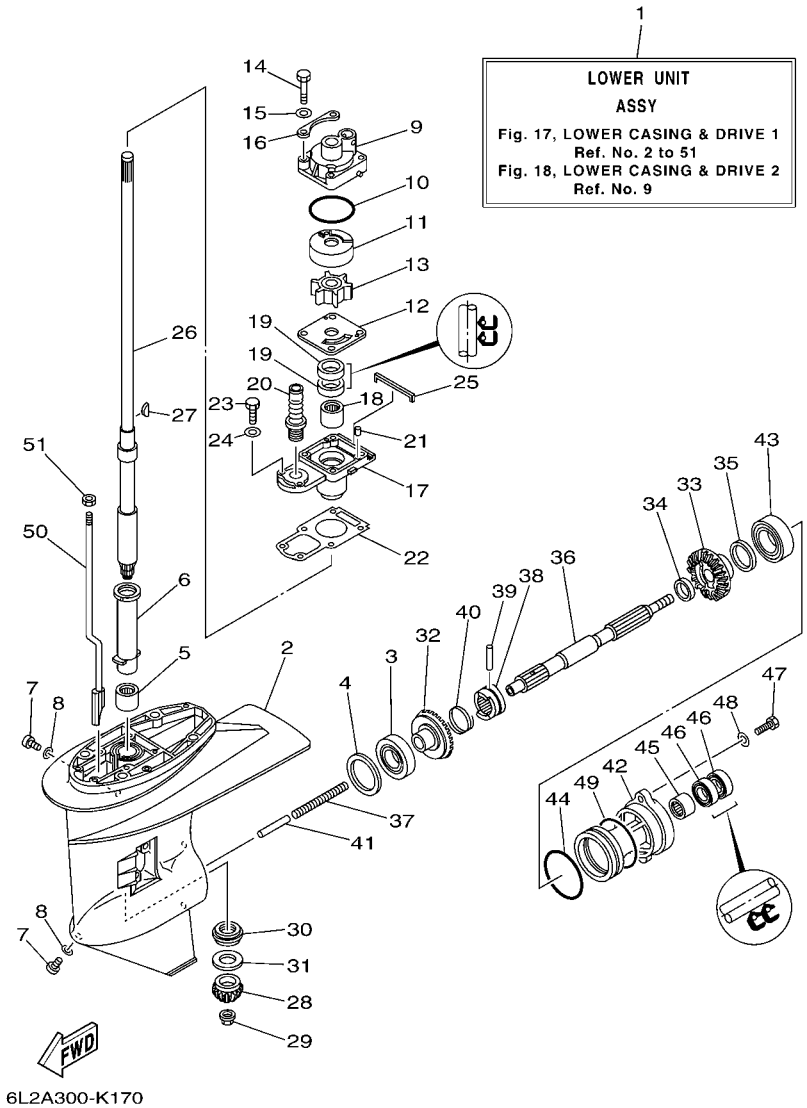

FIG. 17 LOWER CASING & DRIVE 1 BOITIER D'HELICE TRANSMISSION1

REF. NO.	PART NO. N° PIECES	DESCRIPTION DESCRIPTION	6L2C					REMARKS REMARQUES
45	93315–22004	BEARING ROULEMENT	1					
46	93101–20M07	OIL SEAL JOINT SPY	2					
47	97095–06020	BOLT BOULON	2					
48	92995–06600	WASHER RONDELLE	2					
49	93210–60M99	O-RING JOINT TORIQUE	1					
50	6L2–44150–00	SHIFT CAM ASSY CAME D'INVERSION	1					S(16.5") S(16.5")
	6L2–44150–10	SHIFT CAM ASSY CAME D'INVERSION	1					L(21.5") L(21.5")
51	95380–06600	NUT, HEXAGON ECROU	1					

FIG. 18 LOWER CASING & DRIVE 2 BOITIER D'HELICE TRANSMISSION2

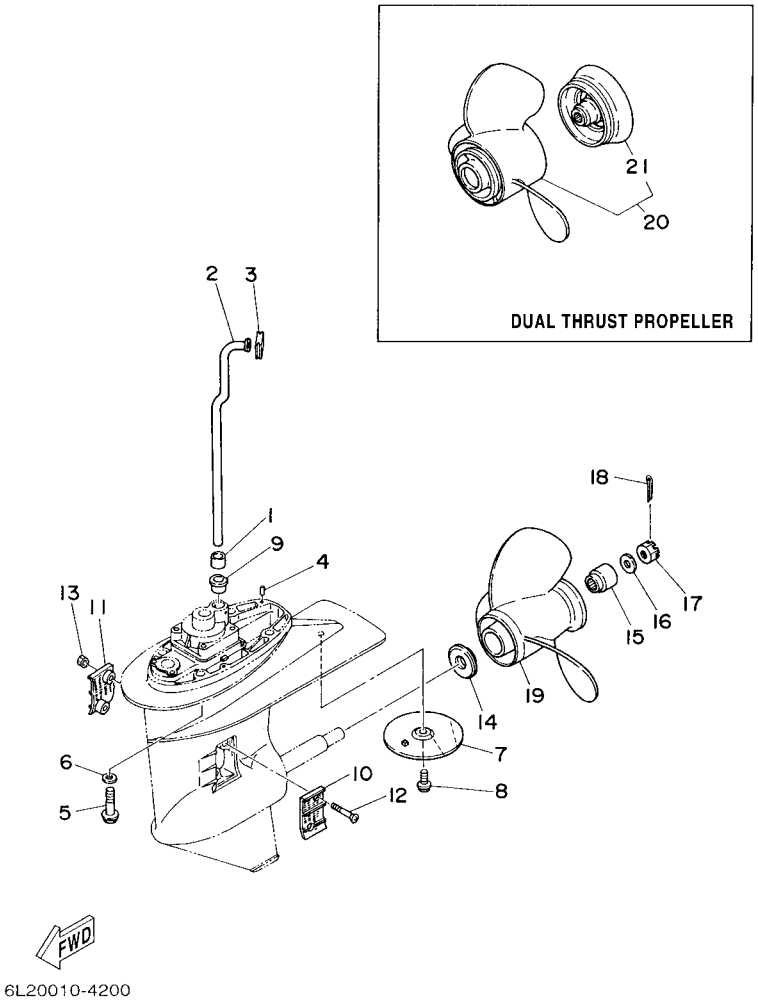

REF. NO.	PART NO. N° PIECES	DESCRIPTION DESCRIPTION	6L2C					REMARKS REMARQUES
1	6L2–44368–00	RUBBER, WATER SEAL 4 JOINT,TUBEDEAU	1					
2	6L2–44361–00	TUBE, WATER 1 TUBE D'EAU 1	1					S(16.5") S(16.5")
	6L2–44361–10	TUBE, WATER 1 TUBE D'EAU 1	1					L(21.5") L(21.5")
3	6L2–44366–00	DAMPER, WATER SEAL 2 JOINT, TUBE D'EAU 2	1					
4	93604–12M07	PIN, DOWEL CLAVETTE	2					
5	90105–10M12	BOLT, FLANGE BOULON	4					
6	92995–10600	WASHER RONDELLE	4					
7	664–45371–01	TAB-TRIM ANODE DERIVE	1					
8	90105–08M02	BOLT, FLANGE BOULON	1					
9	6L2–44367–10	DAMPER, WATER SEAL 3 JOINT TUBE D'EAU 3	1					
10	6L2–45214–00	COVER, WATER INLET 1 GRILLE, ENTREE D'EAU 1	1					
11	6L2–45215–00	COVER, WATER INLET 2 GRILLE, ENTREE D'EAU 2	1					
12	90151–05M05	SCREW, COUNTERSUNK VIS, TETE NOYEE	2					
13	90185–05002	NUT, NYLON ECROU,AUTO-BLOQUANT	2					
14	6L2–45987–01	SPACER 1 ENTRETOISE 1	1					
15	689–45997–00	SPACER 2 ENTRETOISE 2	1					
16	92990–14200	WASHER, PLAIN RONDELLE, PLATE	1					
17	90171–14013	NUT, CASTLE ECROU, CRENELE	1					
18	91490–30022	PIN. COTTER GOUPILLE	1					
19	664–45941–01	PROPELLER (3X9-7/8"X9"-F) HELICE (3X9-7/8"X9"-F)	1					UR UR
	664–45943–01	PROPELLER (3X9-7/8"X8"-F) HELICE (3X9-7/8"X8"-F)	1					UR UR
	664–45945–00	PROPELLER (3X9-7/8"X10-1/2"-F) HELICE (3X9-7/8"X10-1/2"-F)	1					UR UR
	664–45947–01	PROPELLER (3X9-7/8"X11-1/4"-F) HELICE (3X9-7/8"X11-1/4"-F)	1					UR UR
	664–45949–02	PROPELLER (3X9-7/8"X13"-F) HELICE (3X9-7/8"X13"-F)	1					UR UR
	664–45952–00	PROPELLER (3X9-7/8"X14"-F) HELICE (3X9-7/8"X14"-F)	1					UR UR
	664–45954–01	PROPELLER (3X9-7/8"X12"-F) HELICE (3X9-7/8"X12"-F)	1					UR UR
	664–45970–00	PROPELLER (3X9-1/8"X13"-F) HELICE (3X9-1/8"X13"-F)	1					UR UR

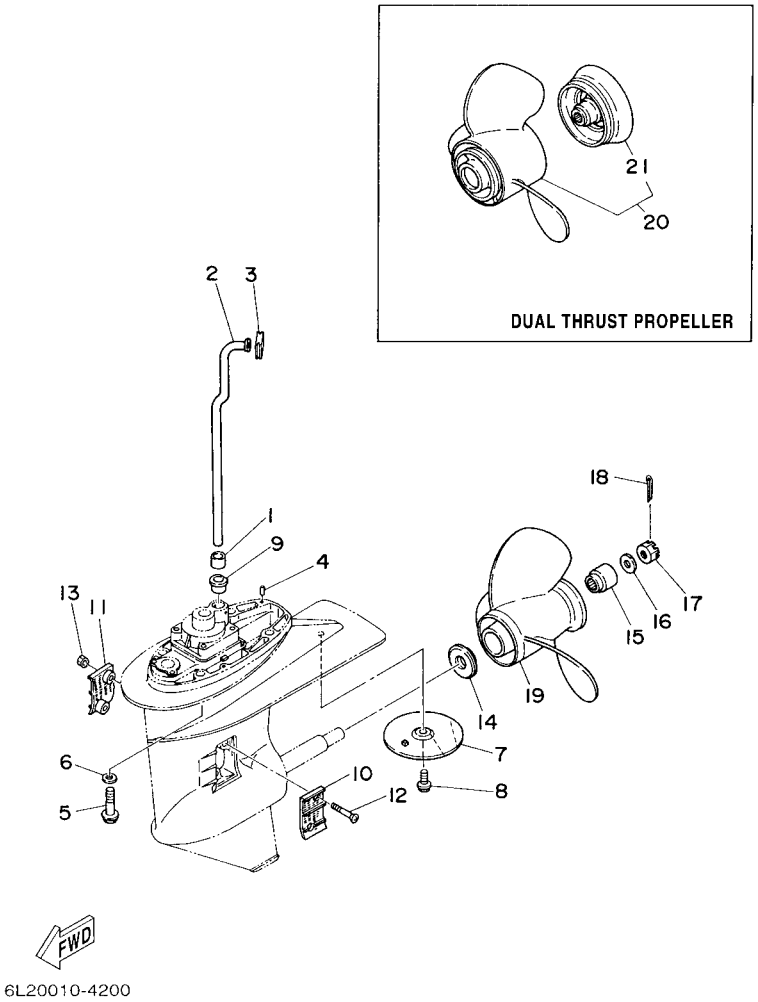

FIG. 18 LOWER CASING & DRIVE 2 BOITIER D'HELICE TRANSMISSION2

REF. NO.	PART NO. N° PIECES	DESCRIPTION DESCRIPTION	6L2C					REMARKS REMARQUES
19	664–45972–00	PROPELLER (3X9-1/8"X12"-F) HELICE (3X9-1/8"X12"-F)	1					UR UR
20	6J8–W4591–00	PROPELLER (3X10-5/8"X8-1/4"-F) HELICE (3X10-5/8"X8-1/4"-F)	1					
21	6J8–45986–10	.RING, DEFLECTOR .DEFLECTEUR DE CERCLE	1					

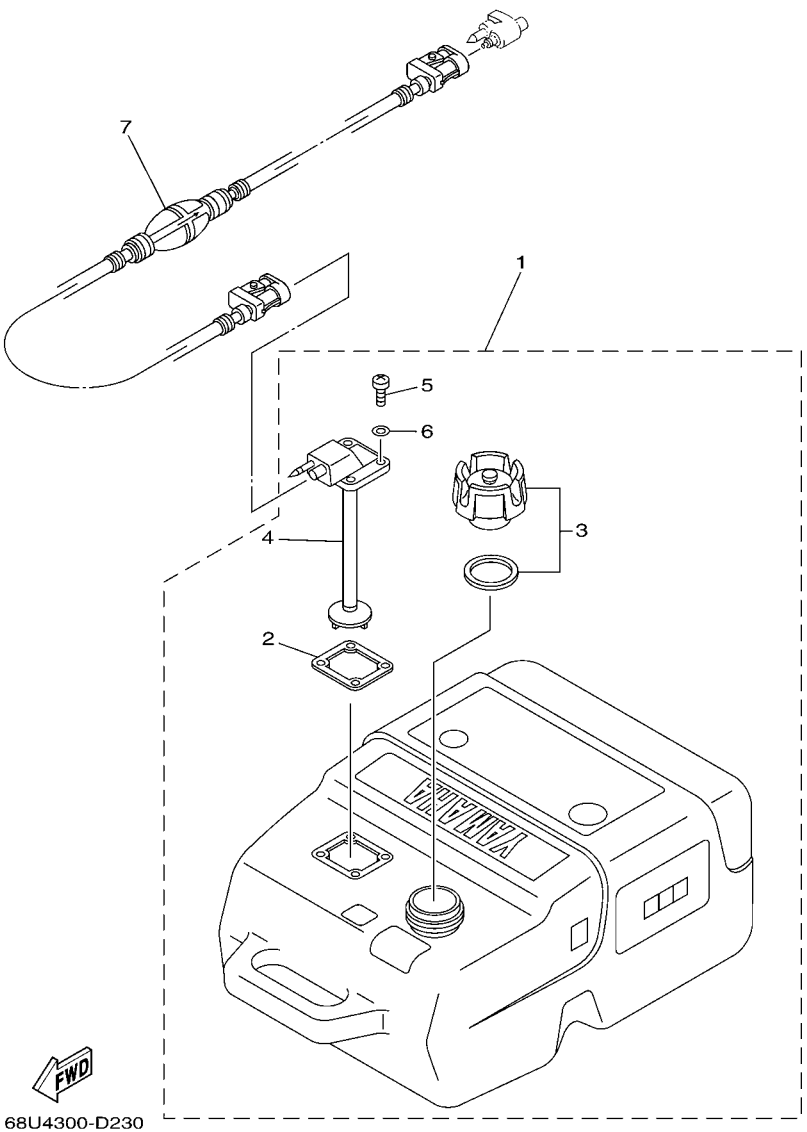

FIG. 19 FUEL TANK 1 — RESERVOIR A CARBURANT 1

REF. NO.	PART NO. N° PIECES	DESCRIPTION DESCRIPTION	6L2C					REMARKS REMARQUES
1	6YK–24201–03	FUEL TANK ASSY (25L) RESERVOIR A ESSENCE (ENS.) 25L	1					AP EXCEPT FOR RUS AP EXCEPT FOR RUS
2	6YL–24268–01	.GASKET, FUEL METER .JOINT, JAUGE A CARBURANT	1					
3	6YK–24610–01	.CAP ASSY .BOUCHON	1					
4	6YK–24260–01	.FUEL METER ASSY .INDICATEUR DE CARBURANT	1					
5	90157–05M16	.SCREW, PAN HEAD .VIS, TETE TRONCONIQUE	4					
6	6YL–24329–00	.SEAL .JOINT	4					
7	6YL–24306–54	FUEL PIPE COMP. 1 DURITE A ESSENCE 1	1					AP EXCEPT FOR RUS AP EXCEPT FOR RUS

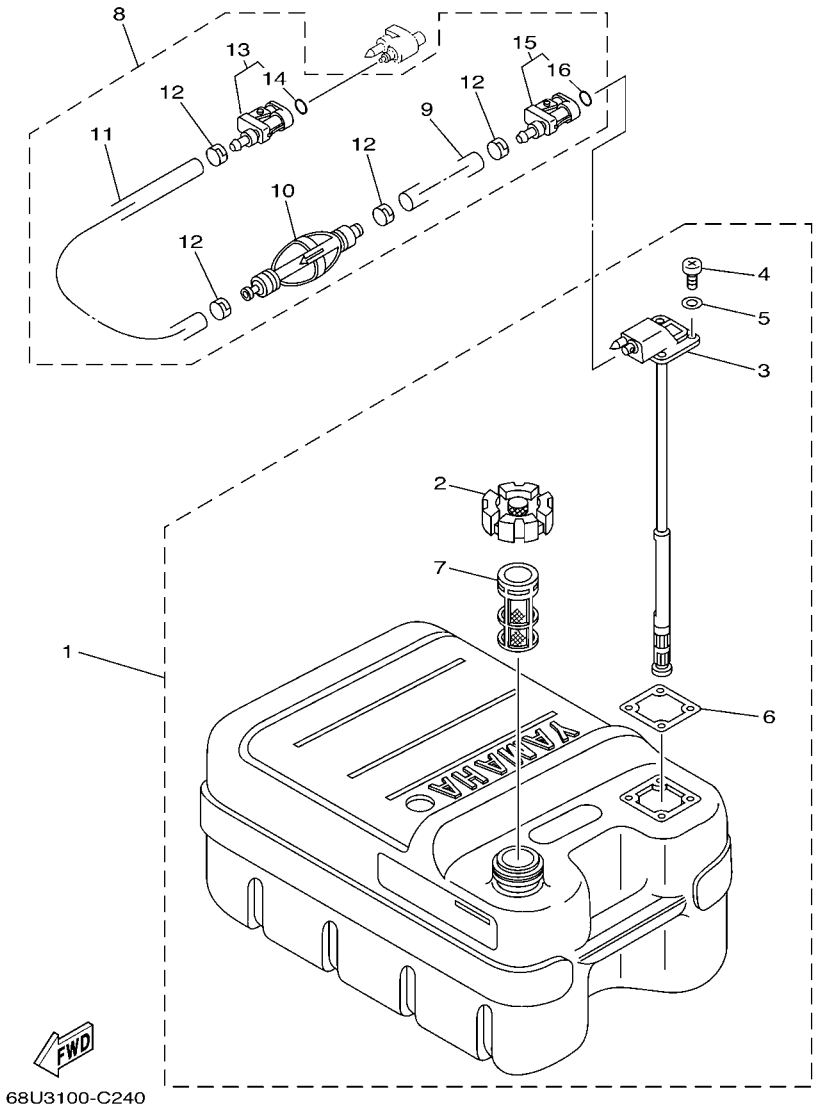

FIG. 20 FUEL TANK 2 — RESERVOIR A CARBURANT 2

REF. NO.	PART NO. N° PIECES	DESCRIPTION DESCRIPTION	6L2C					REMARKS REMARQUES
1	6YJ–24201–10	FUEL TANK ASSY (24L) RESERVOIR A ESSENCE (ENS.):24L	1					AP FOR RUS AP FOR RUS
2	6YJ–24610–01	.CAP ASSY .BOUCHON	1					
3	6Y1–24260–12	.FUEL METER ASSY .INDICATEUR DE CARBURANT	1					WITH INDICATOR WITH INDICATOR
4	90157–05M19	.SCREW, PAN HEAD .VIS, TETE TRONCONIQUE	4					
5	6Y1–24329–00	.SEAL .JOINT	4					
6	6Y1–24268–00	.GASKET, FUEL METER .JOINT, JAUGE A CARBURANT	1					
7	6YJ–24167–00	.STRAINER .FILTRE	1					
8	61J–24306–04	FUEL PIPE COMP. 1 DURITE A ESSENCE 1	1					AP FOR RUS AP FOR RUS
9	90445–11M06	.HOSE (L2050) .DURITE (L2050)	1					
10	61J–24360–00	.PRIMER PUMP ASSY .POMPE D'AMORCAGE	1					
11	90445–11M05	.HOSE (L850) .DURITE (L850)	1					
12	650–24351–51	.BAND 1 .COLLIER 1	4					
13	6G1–24305–05	.FUEL PIPE JOINT COMP. 2 .DURITE RACCORDEMT. A ESSENCE	1					
14	93210–08287	..O-RING ..JOINT TORIQUE	1					
15	6Y1–24305–06	.FUEL PIPE JOINT COMP. 2 .DURITE RACCORDEMT. A ESSENCE	1					
16	93210–08287	..O-RING ..JOINT TORIQUE	1					

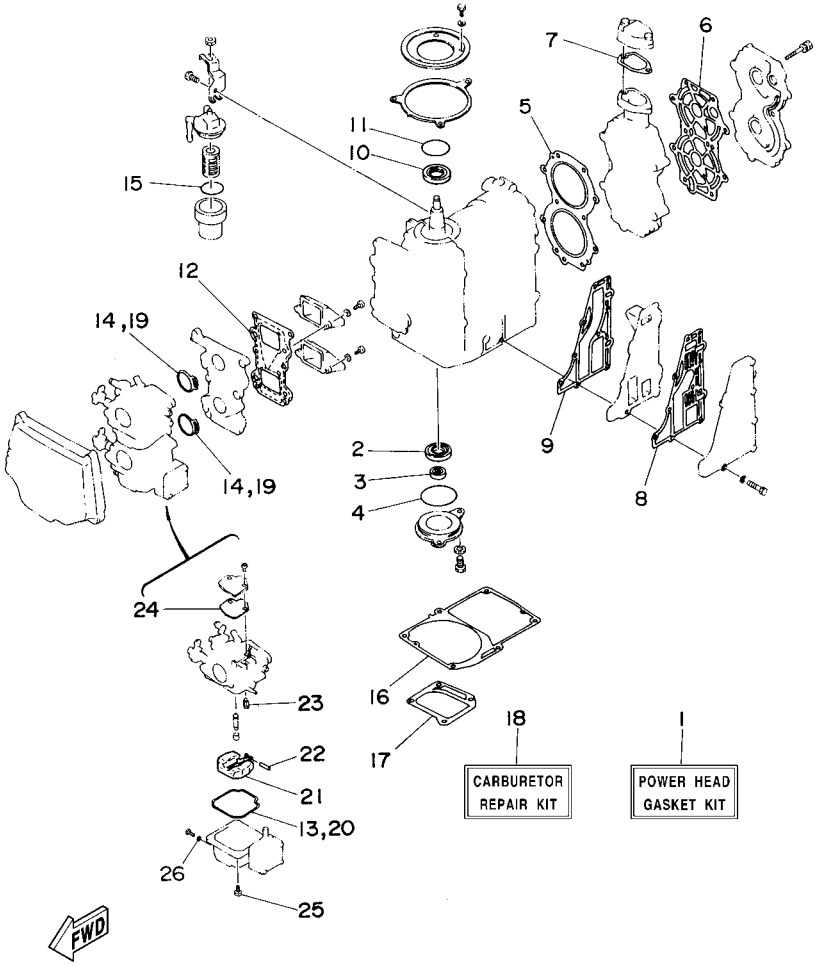

FIG. 21 REPAIR KIT 1 — KITS DE REPARATION 1

REF. NO.	PART NO. N° PIECES	DESCRIPTION DESCRIPTION	6L2C					REMARKS REMARQUES
1	6L2–W0001–03	POWER HEAD GASKET KIT POCHETTE DE JINTS TETE MOTRICE	1					
2	93102–25142	.OIL SEAL .JOINT SPY	1					
3	93101–13M37	.OIL SEAL .JOINT SPY	1					
4	93210–56M80	.O-RING .JOINT TORIQUE	1					
5	6L2–11181–A3	.GASKET, CYLINDER HEAD 1 .JOINT, DE CULASSE 1	1					
6	6L2–11193–A1	.GASKET, HEAD COVER 1 .JOINT, COUVERCLE DE CULASSE 1	1					
7	6J8–12414–A0	.GASKET, COVER .JOINT, COUVERCLE	1					
8	6L2–41114–A1	.GASKET, EXHAUST OUTER COVER .JOINT, COUVERCLE D'ECHAPPEMENT	1					
9	6L2–41112–A3	.GASKET, EXHAUST INNER COVER .JOINT, PLAQUE D'ECHAPPEMENT	1					
10	93102–26M27	.OIL SEAL .JOINT SPY	1					
11	93210–42159	.O-RING .JOINT TORIQUE	1					
12	6L2–13621–00	.GASKET, VALVE SEAT .JOINT, SIEGE DE CLAPET	1					
13	6L2–14384–00	.GASKET, FLOAT CHAMBER .JOINT, CUVE DE FLOTTEUR	2					
14	6L2–14198–00	.GASKET .JOINT	2					
15	93210–32738	.O-RING .JOINT TORIQUE	1					
16	6L2–45113–A2	.GASKET, UPPER CASING .JOINT, TUBE D'ARBRE	1					
17	6L2–41133–A3	.GASKET, EXHAUST MANIFOLD 1 .JOINT, PIPE D'ECHAPPEMENT	1					
18	6L2–W0093–00	CARBURETOR REPAIR KIT KIT DE REPARATION CARBURATEUR	1					
19	6L2–14198–00	.GASKET .JOINT	2					
20	6L2–14384–00	.GASKET, FLOAT CHAMBER .JOINT, CUVE DE FLOTTEUR	2					
21	6L2–14385–00	.FLOAT .FLOTTEUR	2					
22	6E5–14386–01	.PIN, FLOAT .AXE, FLOTTEUR	2					
23	6L2–14392–00	.VALVE, NEEDLE .POINTEAU	2					
24	6L2–14399–00	.GASKET .JOINT	2					
25	97980–04112	.SCREW, WITH WASHER .VIS, AVEC RONDELLE	2					
26	6L2–14398–00	.GASKET .JOINT	2					

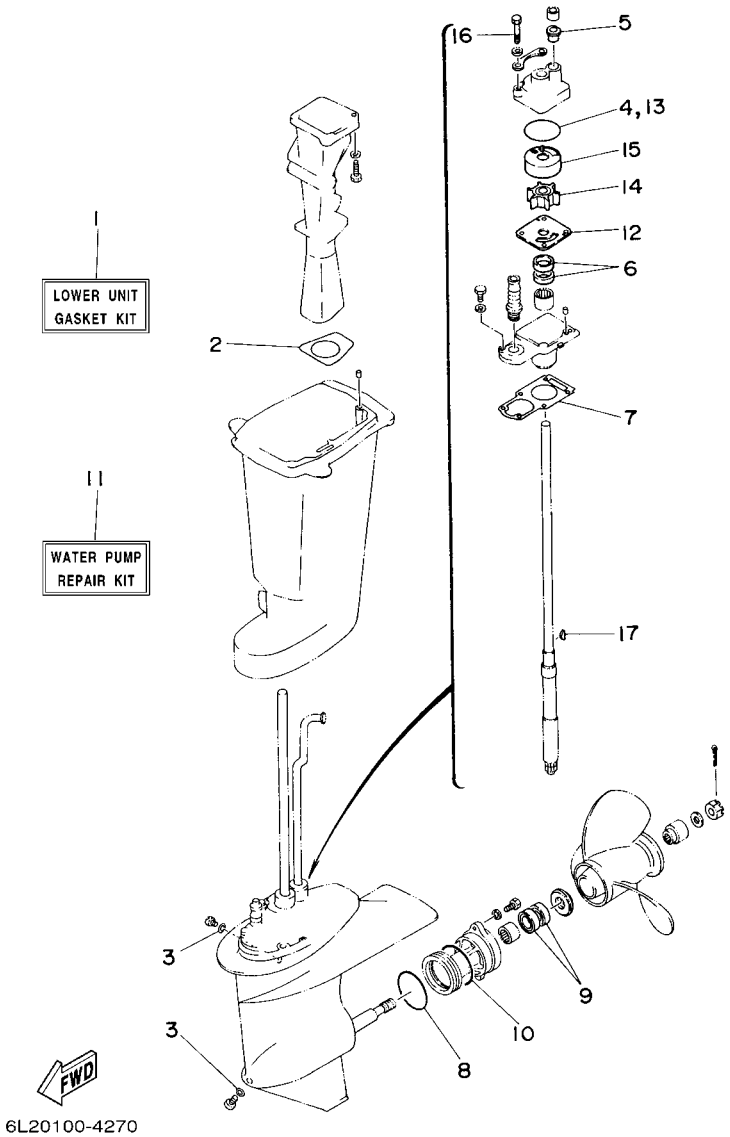

FIG. 22 REPAIR KIT 2 — KITS DE REPARATION 2

REF. NO.	PART NO. N° PIECES	DESCRIPTION DESCRIPTION	6L2C					REMARKS REMARQUES
1	6L2–W0001–C3	LOWER UNITGASKETKIT POCHETTE DE JOINTS EMBASE	1					
2	6L2–41134–00	.GASKET, EXHAUST MANIFOLD .JOINT, PIPE D'ECHAPPEMENT	1					
3	90430–08020	.GASKET .JOINT	2					
4	93210–45161	.O-RING .JOINT TORIQUE	1					
5	6L2–44367–00	.DAMPER, WATER SEAL 3 .JOINT TUBE D'EAU 3	1					
6	93101–20048	.OIL SEAL .JOINT SPY	2					
7	6L2–45315–A0	.PACKING, LOWER CASING .JOINT, BOITIER D'HELICE	1					
8	93210–60MA3	.O-RING .JOINT TORIQUE	1					
9	93101–20M07	.OIL SEAL .JOINT SPY	2					
10	93210–60M99	.O-RING .JOINT TORIQUE	1					
11	6L2–W0078–00	WATER PUMP REPAIR KIT KIT DE REPARATION DE LA POMPE	1					
12	6L2–44323–00	.OUTER PLATE, CARTRIDGE .PLAQUE EXTERIEURE	1					
13	93210–45161	.O-RING .JOINT TORIQUE	1					
14	6L2–44352–00	.IMPELLER .TURBINE	1					
15	6L2–44322–00	.INSERT, CARTRIDGE .CUVETTE	1					
16	97095–06040	.BOLT .BOULON	4					
17	90280–03024	.KEY, WOODRUFF .CLAVETTE, DEMI-LUNE	1					

NUMERICAL INDEX
INDEX NUMERIQUE

PART NO. N° PIECES	REF. NO.
6L2–11111–01–1S	2 – 17
6L2–11181–A3	2 – 18
	21 – 5
6L2–11191–00–1S	2 – 19
6L2–11193–A1	2 – 20
	21 – 6
6J8–11325–00	2 – 12
6H3–11327–00–94	2 – 13
6H3–11328–00	2 – 14
676–11372–00	2 – 31
6E5–11372–01	2 – 3
6L2–11400–10	3 – 1
6L2–11412–00	3 – 2
6L2–11422–00	3 – 3
6L2–11432–00	3 – 4
6L2–11442–00	3 – 5
6L2–11515–00	3 – 14
6J8–11536–00	3 – 16
6L2–11537–00	6 – 2
6L2–11610–00	3 – 20
6L2–11610–10	3 – 20
6L2–11610–20	3 – 20
6L2–11631–00–97	3 – 19
648–11633–00	3 – 21
6L2–11635–00	3 – 19
6L2–11636–00	3 – 19
6L2–11651–00	3 – 10
6L2–11681–00	3 – 11
6E5–12411–30	2 – 23
688–12412–00	2 – 24
6H4–12413–00–1S	2 – 25
6J8–12414–A0	2 – 26
	21 – 7
6J8–13117–00	6 – 3
6E9–13183–70	6 – 13
6L2–13200–00	6 – 5
6J8–13411–00	6 – 27
6J8–13414–00	6 – 28
6L2–13416–00	6 – 29
6L2–13437–21	8 – 41
6L2–13471–00	6 – 6
6L2–13475–00	6 – 7
6L2–13610–00	4 – 1
6L2–13621–00	4 – 6
	21 – 12
6L2–13641–10	4 – 4
6L2–14157–00	5 – 10
6L2–14198–00	4 – 11

PART NO. N° PIECES	REF. NO.
6L2–14198–00	21 – 14
	21 – 19
646–14212–01	5 – 17
6L2–14301–02	5 – 1
6L2–14302–02	5 – 2
664–14321–01	5 – 18
6L2–14323–00	5 – 16
6E7–14325–00	5 – 26
6L2–14341–00	5 – 12
6L2–14342–30	5 – 14
30X–14343–63	5 – 13
50M–14355–00	5 – 15
6L2–14368–00	13 – 38
6L2–14381–00	5 – 3
6L2–14383–00	5 – 3
677–14383–01	5 – 20
6L2–14384–00	5 – 4
	21 – 13
	21 – 20
6L2–14385–00	5 – 5
	21 – 21
6E5–14386–01	5 – 6
	21 – 22
6L2–14392–00	5 – 7
	21 – 23
6L2–14398–00	5 – 21
	21 – 26
6L2–14399–00	5 – 11
	21 – 24
6L2–14417–00–94	4 – 12
6L2–14418–00	4 – 19
6L2–14476–00	4 – 13
6L2–14476–11	4 – 18
676–14485–00	4 – 5
6L2–14497–00	13 – 1
6L2–14578–01	5 – 32
6L2–14584–00	5 – 33
6L2–15100–10	2 – 2
6L2–15396–00–1S	3 – 25
6J8–15705–00	8 – 19
6L2–15710–02	8 – 1
6L2–15711–00–94	8 – 2
6J8–15714–00	8 – 11
677–15717–01	8 – 13
6L2–15723–01	8 – 39
676–15741–03	8 – 17
6L2–15746–00	8 – 29
6L2–15747–00	8 – 32

PART NO. N° PIECES	REF. NO.
656–15748–00	8 – 26
689–15755–01	8 – 8
6L2–15758–01–94	8 – 4
6L2–15762–00	8 – 7
6L2–15770–00	8 – 28
6L2–15772–00–94	8 – 35
6L2–15774–00	8 – 33
6F5–15779–02	8 – 9
6A0–15789–00	8 – 20
6L2–21707–01	6 – 22
63D–21744–00	6 – 34
6H1–21757–00	6 – 26
6L2–21758–00	6 – 24
6H4–21770–00	6 – 23
6L2–21798–00	6 – 42
6YJ–24167–00	20 – 7
6YK–24201–03	19 – 1
6YJ–24201–10	20 – 1
6YK–24260–01	19 – 4
6Y1–24260–12	20 – 3
6Y1–24268–00	20 – 6
6YL–24268–01	19 – 2
6G1–24304–02	7 – 1
6G1–24305–05	20 – 13
6Y1–24305–06	20 – 15
61J–24306–04	20 – 8
6YL–24306–54	19 – 7
6H4–24311–00	7 – 4
6L2–24311–00	7 – 5
6Y1–24329–00	20 – 5
6YL–24329–00	19 – 6
650–24351–51	20 – 12
61J–24360–00	20 – 10
6E5–24376–10	6 – 35
677–24411–02	5 – 30
682–24412–01	5 – 29
6L2–24413–00	5 – 28
6A0–24421–01	5 – 24
677–24434–02	5 – 31
6L2–24435–00	5 – 27
677–24444–01	5 – 22
61N–24521–00	7 – 9
61N–24560–00	7 – 7
61N–24563–00	7 – 8
6L2–24566–00	7 – 11
6YJ–24610–01	20 – 2
6YK–24610–01	19 – 3
6H1–24633–00	6 – 25

PART NO. N° PIECES	REF. NO.
6L2–26301–01	12 – 24
6L2–26363–00	12 – 36
6L3–28199–7E–D0	7 – 15
6L3–28199–7E–E0	7 – 15
6L3–28199–7E–F0	7 – 15
6L3–28199–7E–G0	7 – 15
6L3–28199–7E–H0	7 – 15
6L3–28199–7E–S0	7 – 15
6L3–28199–8F–K0	7 – 16
6L3–28199–8F–L0	7 – 16
6L3–28199–8F–M0	7 – 16
6L3–28199–8F–N0	7 – 16
6L3–28199–8F–P0	7 – 16
6L3–28199–8F–R0	7 – 16
6L2–41111–00–1S	2 – 28
6L2–41112–A3	2 – 29
	21 – 9
6L2–41113–00–1S	2 – 30
6L2–41114–A1	2 – 32
	21 – 8
6L2–41131–00–CA	16 – 9
6L2–41133–A3	16 – 12
	21 – 17
6L2–41134–00	16 – 10
	22 – 2
6L2–41212–00	13 – 22
6L2–41213–00	13 – 4
6L2–41217–00	4 – 25
6H1–41237–00	6 – 18
6L2–41237–00	13 – 26
662–41237–01	13 – 12
682–41237–50	6 – 17
6L2–41238–00	13 – 27
6L2–41257–00	4 – 24
6J8–41259–00	4 – 21
661–41262–02	4 – 22
	8 – 34
6J8–41271–01	4 – 23
689–41273–00	11 – 9
6J8–41274–00	11 – 10
6L2–41283–00	13 – 5
6G1–41611–00	9 – 17
6G1–41612–00	9 – 21
695–41613–00	9 – 18
6L2–41631–00	13 – 6
6G1–41662–01–94	13 – 29
6G1–42111–12–4D	12 – 2
664–42119–00	12 – 13

PART NO. N° PIECES	REF. NO.
6L2–42121–03–4D	14 – 20
6G1–42125–01	12 – 10
6G1–42126–00	12 – 11
6G1–42131–02	12 – 7
6L2–42137–00	12 – 15
6G1–42138–01	12 – 21
6E0–42159–02	12 – 22
6J8–42167–00	13 – 7
6L2–42167–00	13 – 8
689–42169–01	13 – 11
6G1–42177–00	12 – 14
6L2–42192–00	13 – 16
6L2–42510–01–4D	14 – 25
6H4–42528–00	14 – 17
6L2–42610–00	1 – 1
6L2–42613–01–4D	1 – 6
6L2–42615–00	1 – 2
6L2–42647–00	1 – 4
6G1–42651–71	1 – 3
63V–42675–40	1 – 9
63V–42676–40	1 – 10
6L2–42678–40	1 – 11
	1 – 12
6E0–42681–40	1 – 14
	1 – 15
6L2–42711–03–4D	11 – 1
6L2–42716–00	11 – 15
6L2–42719–A0	11 – 8
6L2–42725–00	11 – 11
6L2–42726–01	11 – 12
6G1–42727–00	11 – 13
6L2–42738–01	11 – 20
6L2–42748–01	11 – 14
6AH–42794–40	11 – 27
6AH–42794–50	11 – 28
6L2–42815–01–4D	11 – 2
6L2–42816–00	11 – 4
6L2–43111–05–4D	14 – 1
6L2–43112–06–4D	14 – 2
6J8–43113–01	14 – 14
648–43114–01	14 – 8
6L2–43116–00	14 – 7
6E0–43118–01	14 – 5
6J8–43131–01	14 – 9
6G5–43145–01	14 – 13
6L2–43160–01	15 – 4
689–43165–00	15 – 5
6L2–43165–01	15 – 1

PART NO. N° PIECES	REF. NO.
6L2–43188–00	15 – 27
6L2–43191–01	15 – 14
6L2–43311–05–4D	14 – 15
682–43318–01	15 – 9
6L2–43336–00	15 – 37
6L2–43350–02	15 – 17
689–43373–01	14 – 18
6L2–43611–00	15 – 29
6J8–43611–01	15 – 18
6L2–43613–00	15 – 34
6L2–43614–00	15 – 20
6L2–43615–00	15 – 23
6L2–43617–00	15 – 33
6L2–43624–00	15 – 36
6L2–43630–01	15 – 8
6L2–43631–00	15 – 26
6L2–43633–10	15 – 28
6L2–43641–00	15 – 30
6L2–43657–00	15 – 24
6L2–43659–00	15 – 31
6L2–43676–00	15 – 25
6L2–43682–01	15 – 11
6L2–44111–01–94	12 – 25
6J8–44116–00	13 – 32
6L2–44121–00	13 – 21
6L2–44122–00	13 – 14
6L2–44123–00	13 – 34
6L2–44124–00	12 – 35
6L2–44125–00–94	12 – 30
6L2–44141–02	13 – 19
6L2–44141–10–94	13 – 20
6L2–44143–00	13 – 36
6L2–44147–00	17 – 20
6L2–44150–00	17 – 50
6L2–44150–10	17 – 50
6E0–44191–11	14 – 21
6L2–44311–01	17 – 9
6L2–44322–00	17 – 11
	22 – 15
6L2–44323–00	17 – 12
	22 – 12
6L2–44328–00	17 – 16
6L2–44352–00	17 – 13
	22 – 14
6L2–44361–00	18 – 2
6L2–44361–10	18 – 2
6L2–44365–00	14 – 32
6L2–44366–00	18 – 3

NUMERICAL INDEX
INDEX NUMERIQUE

PART NO. N° PIECES	REF. NO.
6L2–44367–00	22 – 5
6L2–44367–10	18 – 9
6L2–44368–00	18 – 1
6BL–44391–00	11 – 21
6L2–44512–00–4D	14 – 30
6L2–44514–01	14 – 35
6L2–44526–00	14 – 40
6L2–44551–01–4D	14 – 42
6L2–44552–01–4D	14 – 43
6L2–44553–01–4D	14 – 48
6L2–44555–00	14 – 46
6L2–44557–00	14 – 47
6L2–45111–03–4D	16 – 1
6L2–45111–13–4D	16 – 1
6L2–45113–A2	2 – 35
	21 – 16
6L2–45114–A1	14 – 31
6L2–45115–00	16 – 3
6L2–45123–01	16 – 11
6L2–45151–01–4D	16 – 2
6L2–45214–00	18 – 10
6L2–45215–00	18 – 11
6L2–45300–04–4D	17 – 1
6L2–45300–14–4D	17 – 1
6L2–45311–02–4D	17 – 2
6L2–45315–A0	17 – 22
	22 – 7
6L2–45331–00–CA	17 – 17
6L2–45361–03–4D	17 – 42
664–45371–01	18 – 7
6L2–45375–00	17 – 25
6L2–45510–00	17 – 26
6L2–45510–10	17 – 26
6L2–45536–00	17 – 6
6L2–45551–01	17 – 28
6L2–45560–10	17 – 32
6L2–45567–00	17 – 4
6L2–45567–10	17 – 4
6L2–45567–20	17 – 4
6L2–45567–30	17 – 4
6L2–45567–40	17 – 4
6L2–45571–00	17 – 33
6L2–45577–00	17 – 35
6L2–45577–10	17 – 35
6L2–45577–20	17 – 35
6L2–45577–30	17 – 35
6L2–45587–00	17 – 31
6L2–45587–10	17 – 31

PART NO. N° PIECES	REF. NO.
65W–45611–00	17 – 36
6L2–45631–00	17 – 38
648–45633–00	17 – 40
648–45635–00	17 – 41
664–45941–01	18 – 19
664–45943–01	18 – 19
664–45945–00	18 – 19
664–45947–01	18 – 19
664–45949–02	18 – 19
664–45952–00	18 – 19
664–45954–01	18 – 19
664–45970–00	18 – 19
664–45972–00	18 – 19
6J8–45986–10	18 – 21
6L2–45987–01	18 – 14
689–45997–00	18 – 15
6E9–81328–70	9 – 10
6L2–81332–00	9 – 24
6J8–81960–00	10 – 20
6AH–81994–40	4 – 26
6AH–81994–50	4 – 27
6AH–81995–40	8 – 42
6AH–81995–50	8 – 43
6L2–82127–00	16 – 6
6E5–82148–00	14 – 3
6A0–82317–00	6 – 39
6G1–82370–21	10 – 16
682–82556–00	11 – 23
689–82560–00	10 – 19
6L2–82575–00	11 – 22
689–8257Y–00	11 – 24
6L2–82599–01	9 – 27
682–84381–00	11 – 26
6J8–85410–00	11 – 25
663–85518–00	9 – 13
6L2–85520–12	9 – 3
6L2–85533–10	9 – 4
61N–85537–00	9 – 12
6L2–85540–23	10 – 1
6L2–85542–02–94	10 – 4
6L2–85550–00	9 – 1
6L2–85560–10	9 – 2
6L2–85561–10	9 – 11
61N–85570–00	10 – 9
6L2–85580–10	9 – 5
6L2–85580–20	9 – 6
6L2–85720–02	6 – 45
6L2–W0001–03	21 – 1

PART NO. N° PIECES	REF. NO.
6L2–W0001–C3	22 – 1
6L2–W0004–00	4 – 2
6L2–W0078–00	22 – 11
6L2–W0084–11–4D	12 – 1
6L2–W0090–12–1S	2 – 1
6L2–W0093–00	21 – 18
656–W2810–02	7 – 14
6J8–W4591–00	18 – 20
90101–06M16	10 – 7
90101–08M09	14 – 38
90105–06M18	14 – 19
90105–08M02	18 – 8
90105–08M10	8 – 40
90105–10M12	18 – 5
90109–05M33	6 – 10
90109–06M28	13 – 23
90116–08016	12 – 8
90116–10M28	14 – 22
90119–06023	2 – 22
90119–06M04	14 – 36
90119–06M05	14 – 37
90119–06M14	2 – 11
90119–06M53	8 – 31
90119–06M65	6 – 41
90119–06MA3	2 – 27
90119–06MA4	2 – 33
90119–08M65	2 – 10
90119–08M91	2 – 21
90151–05M05	18 – 12
90152–05011	12 – 19
90157–05M16	19 – 5
90157–05M19	20 – 4
90157–06M06	16 – 7
90159–06M11	16 – 4
90170–06015	13 – 37
90171–14013	18 – 17
90179–10M14	17 – 29
90179–12M04	9 – 15
90185–05002	18 – 13
90185–08057	12 – 9
	14 – 41
90185–10051	14 – 24
90185–22043	14 – 12
90201–06060	8 – 14
90201–08086	2 – 8
90201–08M01	14 – 39
90201–08M93	6 – 1
90201–10M02	12 – 18

PART NO. N° PIECES	REF. NO.
90201–13M42	9 – 16
90201–18522	3 – 24
90201–20417	17 – 34
90201–22M03	14 – 11
90201–30M00	14 – 27
90201–50306	3 – 18
90202–05088	6 – 20
	12 – 38
	13 – 17
90202–05M38	12 – 39
90202–06009	12 – 33
90202–15M37	12 – 28
90202–36M55	12 – 4
90206–12052	11 – 5
90206–15M18	12 – 27
90206–36M21	12 – 3
90209–24M15	3 – 13
90243–04M01	14 – 6
90250–05010	17 – 39
90254–03M04	13 – 15
	13 – 35
90266–04M00	1 – 5
90266–04M04	1 – 13
90269–02M09	12 – 16
90280–03024	17 – 27
	22 – 17
90280–05013	9 – 14
90338–05M03	11 – 16
90340–08002	17 – 7
90386–08032	12 – 20
	15 – 10
90386–12M45	11 – 3
90386–12M72	12 – 29
90386–15M73	12 – 26
90386–22M67	14 – 10
90386–30M60	14 – 29
90386–30M75	14 – 26
90386–33M96	12 – 5
90386–34M97	12 – 6
90387–06119	6 – 40
90387–06M18	13 – 10
90387–06M51	8 – 30
90387–06M52	11 – 18
90387–28M00	3 – 17
90430–08020	17 – 8
	22 – 3
90445–07M04	6 – 14
90445–07M15	2 – 4

PART NO. N° PIECES	REF. NO.
90445–07M16	6 – 16
90445–07M32	6 – 11
90445–09012	4 – 9
90445–10M40	2 – 34
90445–11M03	6 – 32
90445–11M05	20 – 11
90445–11M06	20 – 9
90445–11M07	6 – 33
90446–10M02	6 – 38
90464–08M07	10 – 11
90464–11M24	6 – 37
90465–06M86	10 – 13
90467–06016	2 – 5
90467–08004	4 – 10
	6 – 30
	7 – 6
90467–10M04	6 – 36
90467–11M08	6 – 31
90468–05M03	6 – 21
	12 – 40
90468–07M02	6 – 12
	6 – 15
90480–15M31	11 – 17
90480–25161	10 – 12
90501–10065	17 – 37
90501–10227	8 – 27
90501–23215	12 – 17
90502–10M07	15 – 7
90506–20M27	15 – 16
90506–23M11	15 – 38
90508–12M28	15 – 21
90508–12M29	15 – 22
90510–08M04	8 – 12
91490–16010	12 – 12
91490–20010	12 – 34
	13 – 18
91490–30022	18 – 18
91690–30008	15 – 6
91690–30010	3 – 15
91690–40014	8 – 3
92900–04100	5 – 9
92903–05600	4 – 16
	13 – 25
92903–06600	2 – 16
	4 – 8
	8 – 37
	10 – 8
	13 – 31

PART NO. N° PIECES	REF. NO.
92990–06600	15 – 3
92990–14200	18 – 16
92995–05600	9 – 23
	9 – 26
	15 – 13
92995–06100	10 – 15
	10 – 18
92995–06600	1 – 8
	3 – 30
	6 – 44
	7 – 3
	8 – 6
	8 – 22
	8 – 24
	9 – 20
	10 – 3
	10 – 6
	10 – 22
	12 – 32
	14 – 34
	16 – 14
	17 – 15
	17 – 24
	17 – 48
92995–08600	14 – 50
92995–10600	14 – 23
	18 – 6
93101–13M37	3 – 27
	21 – 3
93101–20048	17 – 19
	22 – 6
93101–20M07	17 – 46
	22 – 9
93102–25142	3 – 26
	21 – 2
93102–26M27	3 – 7
	21 – 10
93210–08287	20 – 14
	20 – 16
93210–13M04	6 – 4
93210–19M82	6 – 8
93210–29375	14 – 28
93210–32738	7 – 10
	21 – 15
93210–35M86	4 – 14
93210–42159	3 – 8
	21 – 11
93210–45161	17 – 10

NUMERICAL INDEX
INDEX NUMERIQUE

PART NO. N° PIECES	REF. NO.
93210–45161	22 – 4
	22 – 13
93210–56M80	3 – 28
	21 – 4
93210–60M99	17 – 49
	22 – 10
93210–60MA3	17 – 44
	22 – 8
93306–00612	17 – 43
93306–305U3	3 – 9
93310–424W9	3 – 12
93311–632U7	3 – 6
93315–22004	17 – 18
	17 – 45
93315–220V9	17 – 5
93332–00005	17 – 3
93341–320U0	17 – 30
93430–06M02	8 – 18
93450–20026	3 – 23
93602–18M12	3 – 22
93604–12M07	2 – 6
	14 – 44
	16 – 5
	17 – 21
	18 – 4
93700–06M03	14 – 16
94702–00271	2 – 36
95303–06700	8 – 16
95333–08600	2 – 9
95380–03600	5 – 25
95380–05600	13 – 13
95380–05700	6 – 19
	13 – 28
95380–06600	17 – 51
95380–06700	12 – 37
	13 – 3
95380–08600	7 – 13
95617–08645	2 – 7
95780–06300	11 – 7
95895–06012	13 – 33
95895–06020	11 – 19
97013–05012	4 – 15
97013–05016	13 – 24
97013–06014	7 – 12
97013–06016	2 – 15
97013–06020	8 – 36
	13 – 30
97013–06025	4 – 7
97013–06025	8 – 15
97075–06030	10 – 5
97090–06010	15 – 2
97095–05010	15 – 12
97095–06008	13 – 39
97095–06012	9 – 19
	10 – 14
	10 – 17
97095–06016	1 – 7
	3 – 29
	6 – 43
	8 – 5
	10 – 21
97095–06020	7 – 2
	8 – 38
	10 – 2
	12 – 31
	13 – 2
	14 – 33
	16 – 13
	17 – 23
	17 – 47
97095–06025	8 – 23
97095–06035	8 – 21
97095–06040	17 – 14
	22 – 16
97095–08045	14 – 49
97513–05518	6 – 9
97513–06585	4 – 17
97575–08530	16 – 8
97595–06420	10 – 10
97595–06575	13 – 9
97595–08585	14 – 45
97607–04110	9 – 7
97607–06125	9 – 8
97802–04006	9 – 9
97880–04010	5 – 8
97880–06035	11 – 6
97885–05010	9 – 22
	9 – 25
97885–05012	12 – 23
97885–06008	14 – 4
97980–04112	5 – 19
	21 – 25
97980–05216	4 – 3
	4 – 20
98980–04006	5 – 23
99080–05600	15 – 15
99080–05600	15 – 19
	15 – 32
	15 – 35
99530–10014	8 – 25