YAMAHA

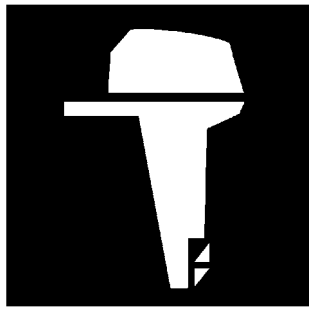

PARTS CATALOGUE
CATALOGUE DE PIECES DETACHEES

4ACMH Y12 (6E0C)
5CMH Y12 (6E3C)

1L6E3-300FA

( )

YAMAHA
GENUINE
Parts & Accessories

4ACMH/5CMH
PARTS CATALOGUE
©2012 by Yamaha Motor Co., Ltd.
1st edition, May 2012
All rights reserved.
Any reprinting or unauthorized use
without the written permission of
Yamaha Motor Co., Ltd.
is expressly prohibited.
Printed in Japan.

4ACMH/5CMH
CATALOGUE DE PIECES DETACHEES
©2012 par Yamaha Motor Co., Ltd.
1re édition, mai 2012
Tous droits réservés
Toute réimpression ou utilisation
non autorisée sans la permission écrite
de la Yamaha Motor Co., Ltd.
est formellement interdite.
Imprimé au Japon

FOREWORD

This Parts Catalogue is related to the parts for the model(s) on the cover page. When you are ordering replacement parts, please refer to this Parts Catalogue and quote both part numbers and part names correctly.

1. Modifications or additions which have been made after the issue of the Parts Catalogue will be announced in the Parts News.
   It is advisable that you make the necessary corrections to the Parts Catalogue according to the Parts News.

2. Abbreviations
   The following abbreviations are used in this Parts Catalogue.

   "UR" Use specified parts number.
   "UN" Use as many as needed.
   "AP" Alternate Parts
   "LM" Locally Made (Parts need to be ordered locally)
   "F#" Frame No. (Applicable machine No.)
   "O/S" Over Size

3. The number of components for assembly
   - Parts, which are to be supplied in an assembly, are listed with a dot (.) in front of the part name as shown below.
   - The numeral appearing to the right of each component part indicates the quantity of parts for each assembly unit.

PART NO.	DESCRIPTION	Q'TY	REMARKS
2F5–83310–60	FRONT FLASHER LIGHT ASSY	2	
115–83311–60	.BULB (6V–18W)	1	

4. Applicable colours of graphics are represented in the "REMARKS" as shown below.

PART NO.	DESCRIPTION	Q'TY	REMARKS
2N4–24110–00–X5	FUEL TANK COMP.	2	MXR
3J1–24240–10	.GRAPHIC, FUEL TANK	1	FOR MXR

5. Note that the illustrations for reference in finding parts numbers are not to be used for assembling. When assembling, please use the applicable service manual.

6. The asterisk (*) before a reference number indicates modified items after the first edition.

7. Applicable Serial No.

   Engine Serial No.

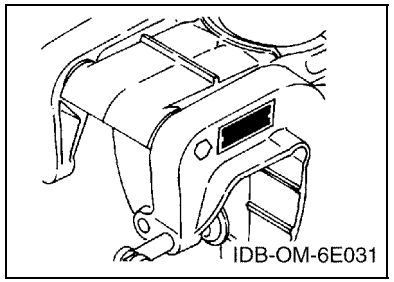

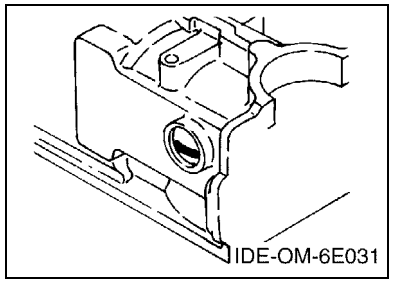

8. Applicable Engine Starting Serial No.

Model	Serial No.	Model	Serial No.
4AC	6E0K-1020881	5C	6E3K-1070441

9. Applicable Colour Code

Abbreviation	Colour Name	Colour Code
DBNM2	DARK BLUISH GRAY METALLIC 2	004D

10. Quantity Column Information

Column No.	Name Of Q'ty Column	Applicable Model
1	6E0C	4ACMH
2	6E3C	5CMH

AVANT–PROPOS

Ce catalogue de pièces détachées concerne les pièces pour le(s) modèle(s) indiqué(s) sur la page de couverture. Lorsque vous commandez des pièces de rechange, veuillez vous référer à ce catalogue de pieces détachées et indiquer clairement les numéros et les noms des pièces détachées.

1. Les modifications ou ajouts ayant été effectués après la parution du catalogue de pièces détachées seront décrits dans les Bulletins d'information concernant les pièces détachées.
   Il est recommandé que vous apportiez les corrections nécessaires au catalogue des pièces détachées en vous référant aux Bulletins d'information.

2. Abréviations
   Dans ce catalogue, les abréviations suivantes sont utilisées:

   "UR" Utiliser le numéro de pièces spécifié.
   "UN" Utiliser autant que nécessaire.
   "AP" Pièces de substitution
   "LM" Fabrication locale (les pièces doivent être commandées localement.)
   "F#" N° de cadre (applicable au N° de série)
   "O/S" Surdimensionné

3. Nombre de pièces d'un assemblage
   - Les pièces fournies comme composants d'un assemblage sont précédées d'un point (.) de la manière indiquée ci–dessous.
   - Le chiffre apparaissant à la droite de chaque composant indique la quantité de pièces pour chaque unité d'assemblage.

N° PIECES	DESCRIPTION	QTE	REMARQUES
2F5–83310–60	ENS. CLIGNOTANT AVANT	2	
115–83311–60	.AMPOULE (6V–18W)	1	

4. Les couleurs concernant les graphiques sont indiquées dans la colonne "REMARQUES", comme indiqué ci–dessous.

N° PIECES	DESCRIPTION	QTE	REMARQUES
2N4–24110–00–X5	RESERVOIR A ESSENCE.	2	MXR
3J1–24240–10	.GRAPHIQUE	1	POUR MXR

5. Veuillez noter que les illustrations sont indiquées à titre de référence pour trouver les numéros de pièces, non pour être utilisées lors de l'assemblage. Lors de l'assemblage, veuillez utiliser le manuel d'entretien adéquat.

6. L'astérisque (*) placé devant un numéro de référence indique des éléments qui ont été modifiés après la première édition.

7. N° de série applicable

   N° de Série du moteur

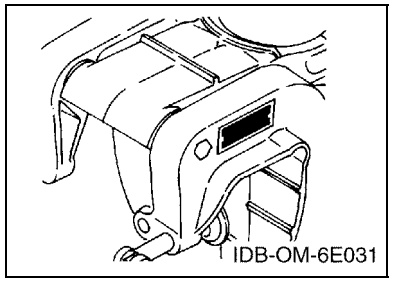

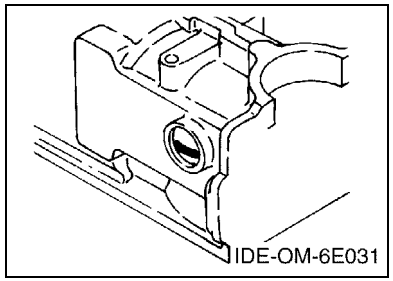

8. N° de série initial du moteur applicable

Modèle	N° de série	Modèle	N° de série
4AC	6E0K-1020881	5C	6E3K-1070441

9. Code couleur applicable

Abréviation	Nom de la couleur	Code couleur
DBNM2	DARK BLUISH GRAY METALLIC 2	004D

10. Informations relatives à la colonne Quantité

N° de la colonne	Nom de la colonne Qté	Modèle applicable
1	6E0C	4ACMH
2	6E3C	5CMH

CONTENTS

TOP COWLING 1
CYLINDER & CRANKCASE 3
INTAKE 6
STARTER 8
GENERATOR 10
ELECTRICAL 11
BOTTOM COWLING 12
CONTROL 15
UPPER CASING & BRACKET 17
LOWER CASING & DRIVE 20
FUEL TANK 23
REPAIR KIT 24

INDEX

NUMERICAL INDEX 26

TABLE DES MATIERES

CAPOT SUPERIEUR 1
CYLINDRE & CARTER 3
ADMISSION 6
DEMARREUR 8
GENERATRICE 10
ELECTRIQUE 11
CAPOT INFERIEUR 12
COMMANDE 15
FOURREAU & SUPPORT 17
BOITIER D HELICE TRANSMISSION 20
RESERVOIR A CARBURANT 23
KITS DE REPARATION 24

INDEX

INDEX NUMERIQUE 26

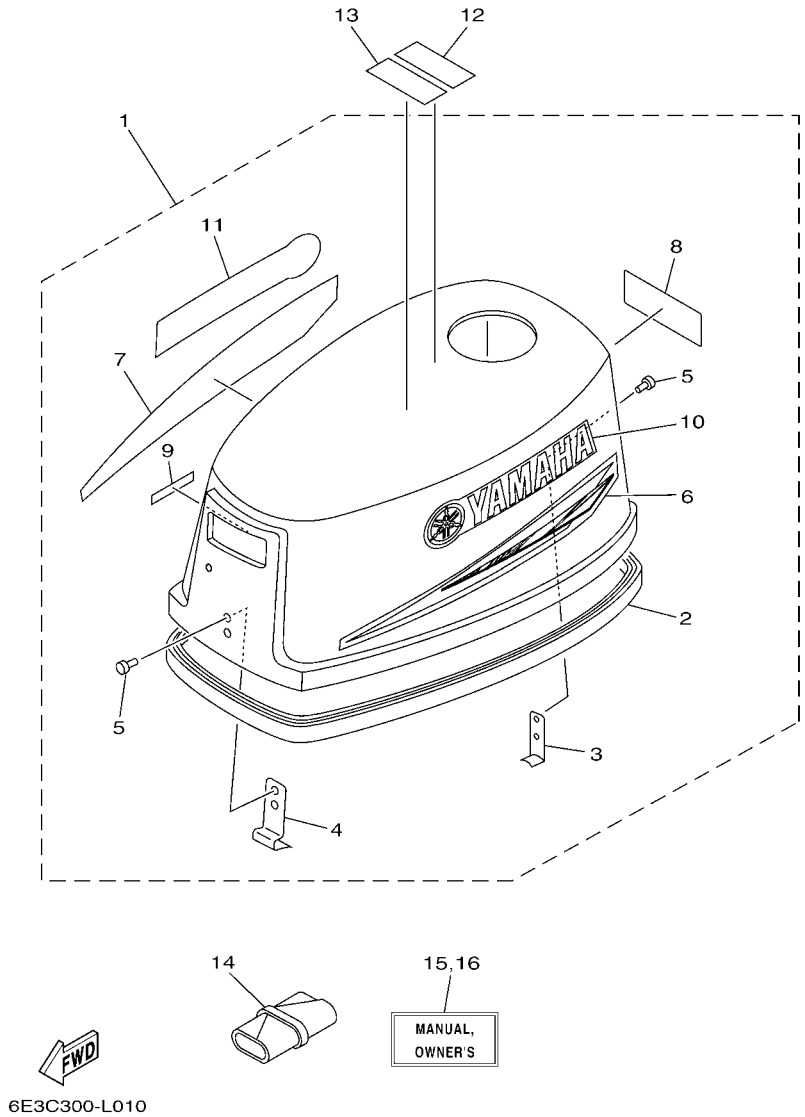

FIG. 1 TOP COWLING CAPOT SUPERIEUR

REF. NO.	PART NO. N° PIECES	DESCRIPTION DESCRIPTION	6E0C	6E3C				REMARKS REMARQUES
1	6E0–42610–90	TOP COWLING ASSY CAPOT (ENS.)	1					
	6E3–42610–60	TOP COWLING ASSY CAPOT (ENS.)		1				
2	6E0–42615–00	.SEAL .JOINT	1	1				
3	6E0–42647–01	.HOLDER, CLAMP BAND .SUPPORT, SANDOW DE SERRAGE	1	1				
4	6E0–42651–02	.HOOK .CROCHET	1	1				
5	90266–04M00	.RIVET .RIVET	4	4				
6	6E0–42675–40	.GRAPHIC, SIDE 1 .EMBLEME	1	1				
7	6E0–42676–40	.GRAPHIC, SIDE 2 .EMBLEME	1	1				
8	6E0–42678–40	.GRAPHIC, REAR .ADHESIF, ARRIERE	1					
	6E3–42678–40	.GRAPHIC, REAR .ADHESIF, ARRIERE		1				
9	6E0–44191–11	.INDICATOR, SHIFT .ETIQUETTE, EMBRAYAGE	1	1				
10	6E0–42681–40	.MARK, COWLING .ADHESIF, CAPOT	1	1				
11	6E0–42681–40	.MARK, COWLING .ADHESIF, CAPOT	1	1				
12	6S7–42698–40	LABEL, WARNING (FUEL) ETIQUETTE, AVERTISSEMENT	1	1				
13	6S7–42698–50	LABEL, WARNING (FUEL) ETIQUETTE, AVERTISSEMENT		1				
14	656–W2810–02	TOOL KIT TROUSSE A OUTILS	1	1				AP AP
15	6A1–28199–7U–E0	MANUAL,OWNER'S MANUEL D'UTILISATION		1				UR (E) UR (E)
	6A1–28199–7U–F0	MANUAL,OWNER'S MANUEL D'UTILISATION		1				UR (F) UR (F)
	6A1–28199–7U–S0	MANUAL,OWNER'S MANUEL D'UTILISATION		1				UR (ES) UR (ES)
	6A1–28199–7U–G0	MANUAL,OWNER'S MANUEL D'UTILISATION		1				UR (D) UR (D)
	6A1–28199–7U–D0	MANUAL,OWNER'S MANUEL D'UTILISATION		1				UR (NL) UR (NL)
	6A1–28199–7U–H0	MANUAL,OWNER'S MANUEL D'UTILISATION		1				UR (I) UR (I)
16	6A1–28199–8V–K0	MANUAL,OWNER'S MANUEL D'UTILISATION		1				UR (DK) UR (DK)
	6A1–28199–8V–R0	MANUAL,OWNER'S MANUEL D'UTILISATION		1				UR (GR) UR (GR)
	6A1–28199–8V–P0	MANUAL,OWNER'S MANUEL D'UTILISATION		1				UR (P) UR (P)
	6A1–28199–8V–N0	MANUAL,OWNER'S MANUEL D'UTILISATION		1				UR (N) UR (N)
	6A1–28199–8V–M0	MANUAL,OWNER'S MANUEL D'UTILISATION		1				UR (S) UR (S)

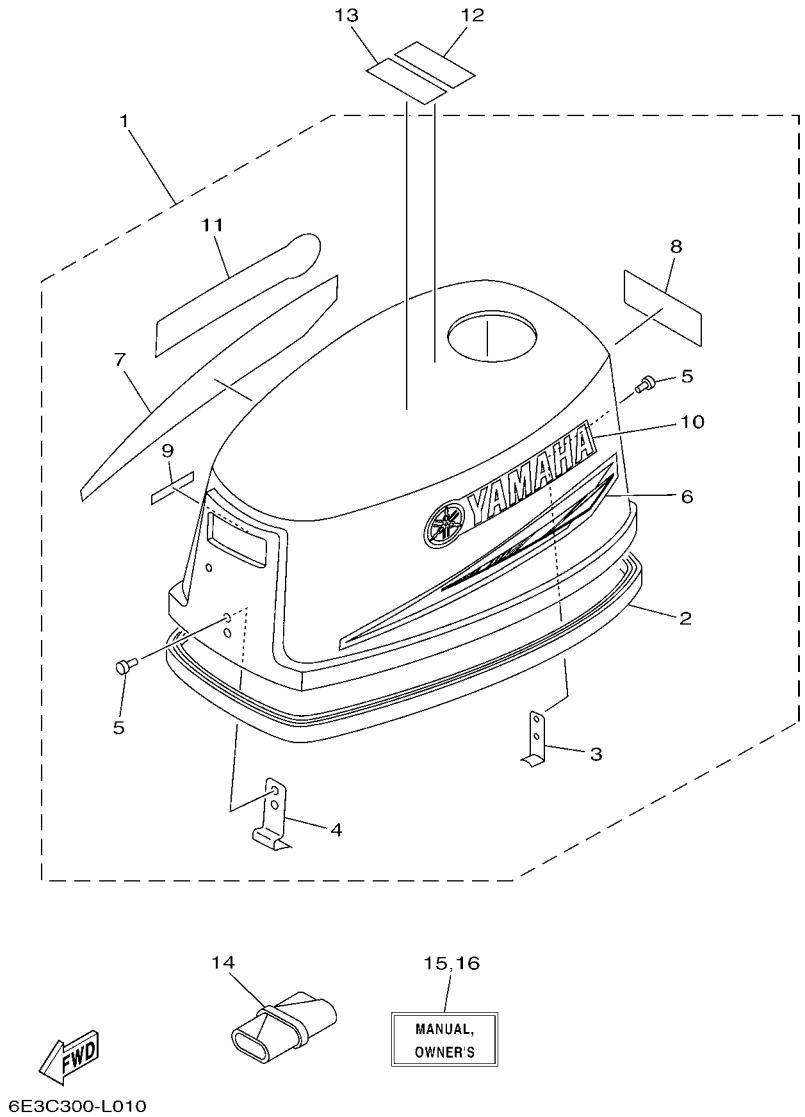

FIG. 1 TOP COWLING CAPOT SUPERIEUR

REF. NO.	PART NO. N° PIECES	DESCRIPTION DESCRIPTION	6E0C	6E3C				REMARKS REMARQUES
16	6A1–28199–8V–L0	MANUAL,OWNER'S MANUEL D'UTILISATION		1				UR (SF) UR (SF)

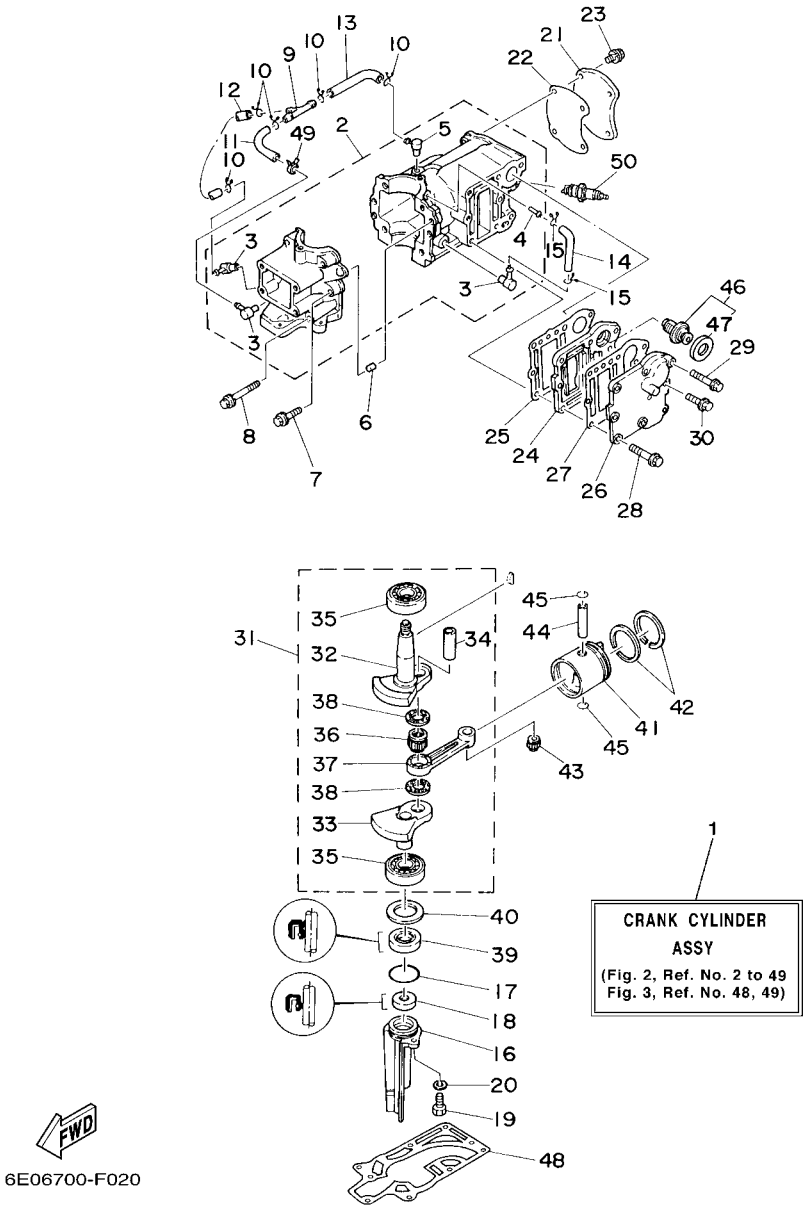

FIG. 2 CYLINDER & CRANKCASE CYLINDRE & CARTER

REF. NO.	PART NO. N° PIECES	DESCRIPTION DESCRIPTION	6E0C	6E3C				REMARKS REMARQUES
1	6E0–W0090–04–1S	CRANK CYLINDER ASSY EMBIELLAGE CYLINDRE (ENS.)	1					
	6E3–W0090–04–1S	CRANK CYLINDER ASSY EMBIELLAGE CYLINDRE (ENS.)		1				
2	6E0–15100–01	CRANKCASE ASSY CARTER DE MOTEUR COMPLET	1					
	6E3–15100–02	CRANKCASE ASSY CARTER DE MOTEUR COMPLET		1				
3	650–11370–01	.CHECK VALVE ASSY .CLAPET (ENS.)	3	3				
4	624–14485–00	.PIPE, JOINT .DURITE	1	1				
5	6E5–11372–01	.NIPPLE, HOSE .RACCORD, TUYAU	1	1				
6	93606–12019	PIN, DOWEL GOUPILLE	2	2				
7	90105–06M16	BOLT, FLANGE BOULON	4	4				
8	90105–06M17	BOLT, FLANGE BOULON	2	2				
9	6E0–24378–00	PIPE, JOINT 3 DURITE RACCORDEMENT 3	1	1				
10	90467–06016	CLIP JONC	5	5				
11	90445–07M00	HOSE (L100) DURITE (L100)	1	1				
12	90445–07M28	HOSE (L70) DURITE (L70)	1	1				
13	90445–07M32	HOSE (L120) DURITE (L120)	1	1				
14	90445–07M28	HOSE (L70) DURITE (L70)	1	1				
15	90467–06016	CLIP JONC	2	2				
16	6E0–15396–03–CA	HOUSING, OIL SEAL LOGEMENT DE JOINT SPY	1	1				
17	93210–31MJ5	O-RING JOINT TORIQUE	1	1				
18	93101–10M25	OIL SEAL JOINT SPY	1	1				
19	97095–06016	BOLT BOULON	1	1				
20	92995–06600	WASHER RONDELLE	1	1				
21	6E0–11191–01–1S	COVER, CYLINDER HEAD 1 COUVERCLE, CULASSE 1	1					
	6E3–11191–01–1S	COVER, CYLINDER HEAD 1 COUVERCLE, CULASSE 1		1				
22	6E0–11193–A1	GASKET, HEAD COVER 1 JOINT, COUVERCLE DE CULASSE 1	1					
	6E3–11193–A1	GASKET, HEAD COVER 1 JOINT, COUVERCLE DE CULASSE 1		1				
23	90105–06039	BOLT, FLANGE BOULON	4	4				

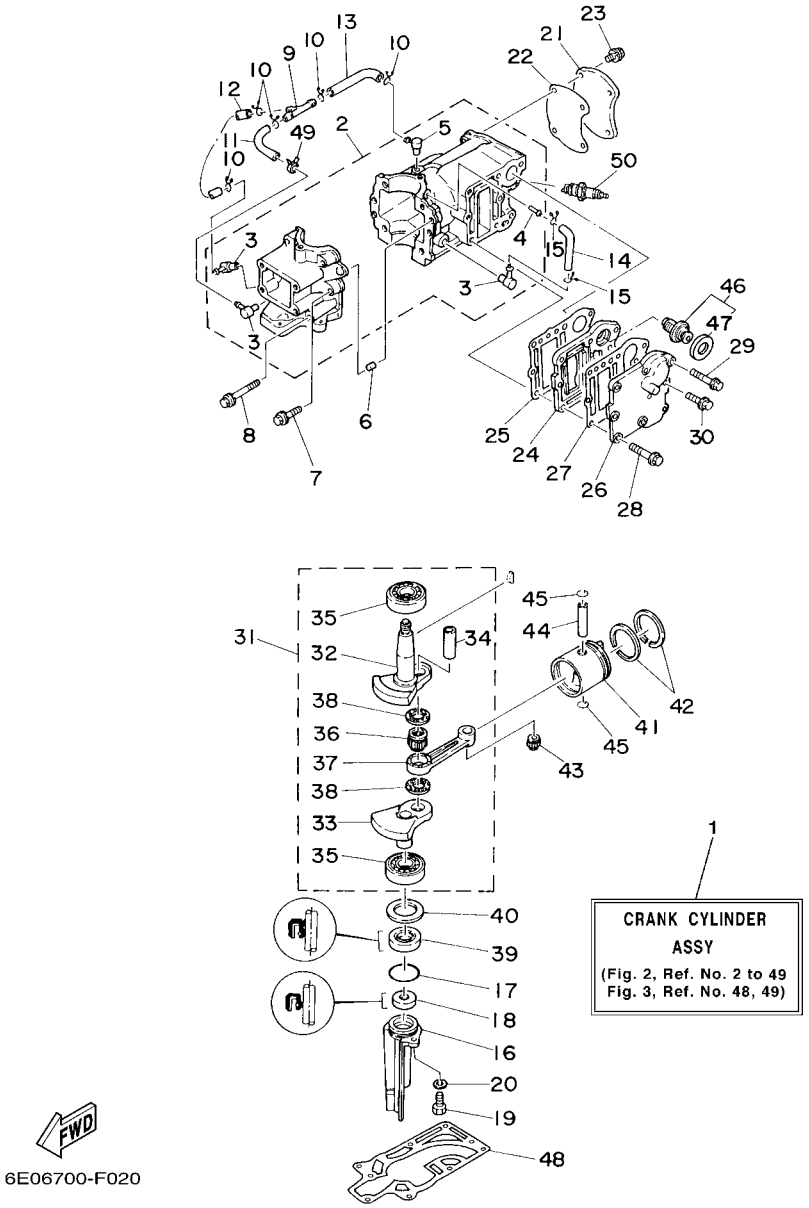

FIG. 2 CYLINDER & CRANKCASE CYLINDRE & CARTER

REF. NO.	PART NO. N° PIECES	DESCRIPTION DESCRIPTION	6E0C	6E3C				REMARKS REMARQUES
24	6E0–41111–01–1S	INNER COVER, EXHAUST PLAQUE, ECHAPPEMENT	1					
	6E3–41111–01–1S	INNER COVER, EXHAUST PLAQUE, ECHAPPEMENT		1				
25	6E0–41112–A1	GASKET, EXHAUST INNER COVER JOINT, PLAQUE D'ECHAPPEMENT	1					
	6E3–41112–A1	GASKET, EXHAUST INNER COVER JOINT, PLAQUE D'ECHAPPEMENT		1				
26	6E0–41113–01–1S	OUTER COVER, EXHAUST COUVERCLE, ECHAPPEMENT	1					
	6E3–41113–01–1S	OUTER COVER, EXHAUST COUVERCLE, ECHAPPEMENT		1				
27	6E0–41114–A1	GASKET, EXHAUST OUTER COVER JOINT, COUVERCLE D'ECHAPPEMENT	1					
	6E3–41114–A1	GASKET, EXHAUST OUTER COVER JOINT, COUVERCLE D'ECHAPPEMENT		1				
28	90105–06037	BOLT, FLANGE BOULON	7					
	90105–06037	BOLT, FLANGE BOULON		8				
29	90105–06035	BOLT, FLANGE BOULON	1					
30	90105–06039	BOLT, FLANGE BOULON	1	1				
31	6E0–11400–00	CRANKSHAFT ASSY VILEBREQUIN COMPLET	1					
	6E3–11400–00	CRANKSHAFT ASSY VILEBREQUIN COMPLET		1				
32	6E0–11412–00	.CRANK 1 .MASSOLOTTE DE VILEBREQUIN 1	1					
	6E3–11412–00	.CRANK 1 .MASSOLOTTE DE VILEBREQUIN 1		1				
33	6E0–11422–00	.CRANK 2 .MASSOLOTTE DE VILEBREQUIN 2	1					
	6E3–11422–00	.CRANK 2 .MASSOLOTTE DE VILEBREQUIN 2		1				
34	6G1–11681–00	.PIN, CRANK 1 .MANETON, VILEBREQUIN 1	1	1				
35	93306–204U0	.BEARING .ROULEMENT	2	2				
36	93310–418V1	.BEARING .ROULEMENT	1	1				
37	6E0–11651–01	.ROD, CONNECTING .BIELLE NUE	1	1				
38	90209–18112	.WASHER .RONDELLE	2	2				
39	93101–20M29	OIL SEAL JOINT SPY	1	1				
40	90201–32M48	WASHER, PLATE RONDELLE, PLATE	1	1				
41	6E0–11631–00–98	PISTON (STD) PISTON (STD)	1					
	6E3–11631–00–98	PISTON (STD) PISTON (STD)		1				

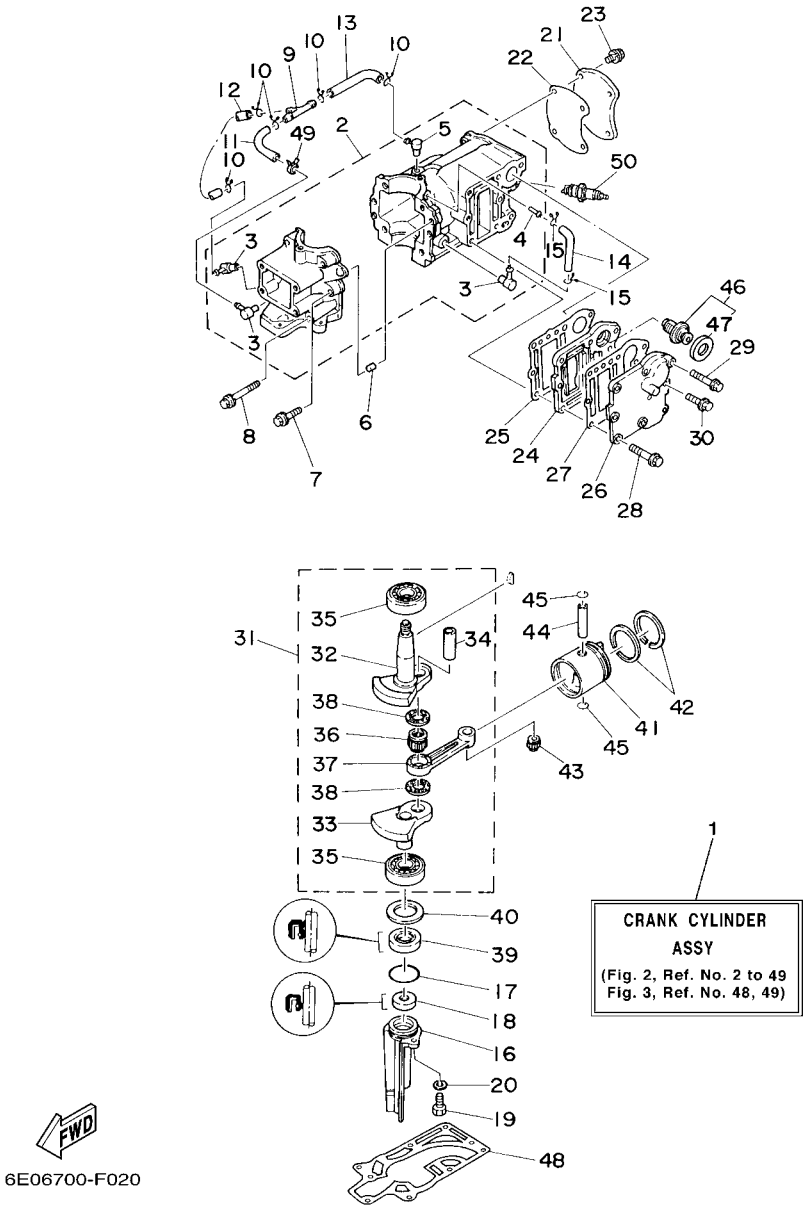

FIG. 2 CYLINDER & CRANKCASE CYLINDRE & CARTER

REF. NO.	PART NO. N° PIECES	DESCRIPTION DESCRIPTION	6E0C	6E3C				REMARKS REMARQUES
42	6G1–11610–00	PISTON RING SET (STD) JEU DE SEGMENTS (STD)	1					
	6J1–11610–00	PISTON RING SET (STD) JEU DE SEGMENTS (STD)		1				
43	93310–112V0	BEARING ROULEMENT	1	1				
44	6G1–11633–00	PIN, PISTON AXE, PISTON	1	1				
45	93450–13022	CIRCLIP CIRCLIP, TYPE S	2	2				
46	6E5–12411–02	THERMOSTAT THERMOSTAT		1				
47	6E5–12412–00	.SEAL, THERMOSTAT .JOINT, THERMOSTAT		1				
48	6E0–45113–A1	GASKET, UPPER CASING JOINT, TUBE D'ARBRE	1	1				
49	90468–07M02	CLIP JONC	1	1				
50	94702–00040	PLUG, SPARK (NGK B7HS) BOUGIE D'ALLUMAGE (NGK B7HS)	1					
	94702–00272	PLUG, SPARK (NGK BR7HS) BOUGIE D'ALLUMAGE (NGK BR7HS)		1				

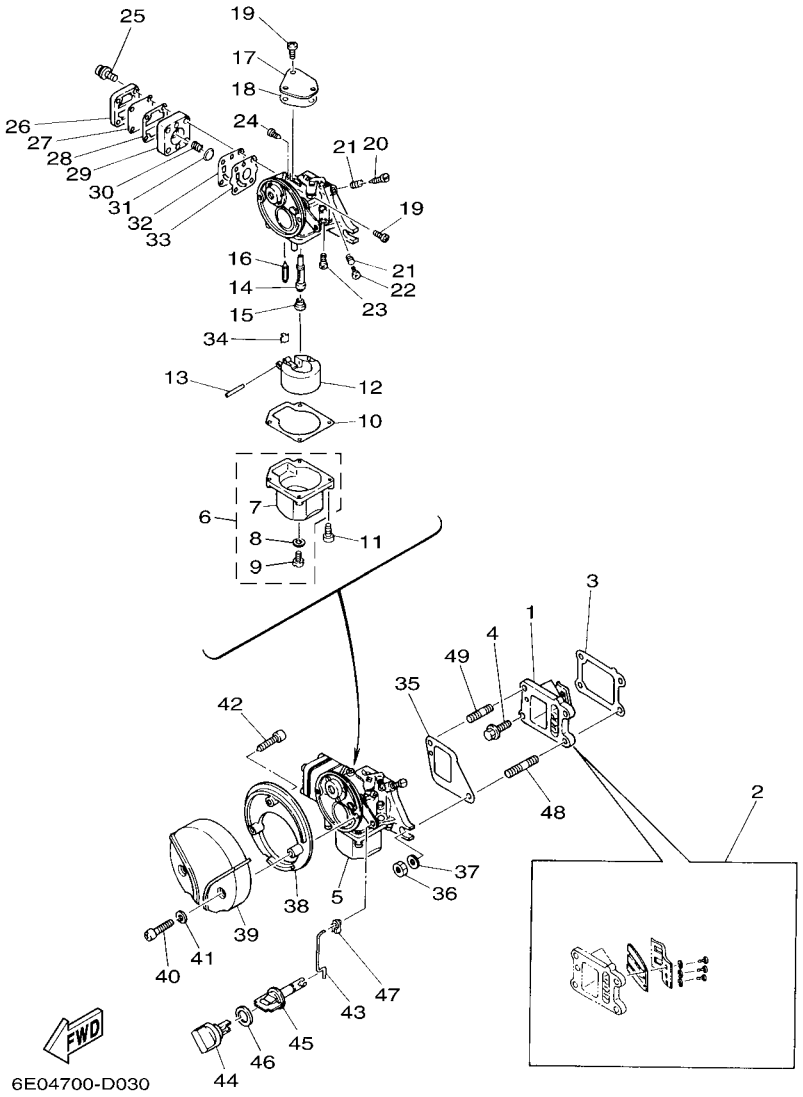

FIG. 3 INTAKE — ADMISSION

REF. NO.	PART NO. N° PIECES	DESCRIPTION DESCRIPTION	6E0C	6E3C				REMARKS REMARQUES
1	6J1–13610–00	REED VALVE ASSY CLAPET COMPLET	1					
	6E0–13610–00	REED VALVE ASSY CLAPET COMPLET		1				
2	6J1–W0004–00	.REED SET .JEU DE CLAPETS	1					
	6E0–W0004–00	.REED SET .JEU DE CLAPETS		1				
3	6E0–13621–A2	GASKET, VALVE SEAT JOINT, SIEGE DE CLAPET	1	1				
4	95895–06016	BOLT, FLANGE BOULON	2	2				
5	6E0–14301–05	CARBURETOR ASSY 1 CARBURATEUR COMPLET 1	1					
	6E3–14301–05	CARBURETOR ASSY 1 CARBURATEUR COMPLET 1		1				
6	6E0–14180–00	.FLOAT CHAMBER ASSY .CUVE DE FLOTTEUR	1	1				
7	6E0–14381–02	..BODY, FLOAT CHAMBER ..CORPS, CUVE DE FLOTTEUR	1	1				
8	646–14198–01	..GASKET ..JOINT	1	1				
9	97890–05006	..SCREW, PAN HEAD ..VIS, CRUCIFORME	1	1				
10	6E0–14384–00	.GASKET, FLOAT CHAMBER .JOINT, CUVE DE FLOTTEUR	1	1				
11	97980–04116	.SCREW, WITH WASHER .VIS, AVEC RONDELLE	4	4				
12	6E7–14385–01	.FLOAT .FLOTTEUR	1	1				
13	647–14386–00	.PIN, FLOAT .AXE, FLOTTEUR	1	1				
14	6E0–14341–01	.NOZZLE, MAIN .PUITS D'AIGUILLE	1					
	6E3–14341–02	.NOZZLE, MAIN .PUITS D'AIGUILLE		1				
15	648–14343–40	.JET, MAIN (# 80) .GICLEUR, PRINCIPAL (# 80)	1	1				
16	6F5–14392–00	.VALVE, NEEDLE .POINTEAU	1	1				
17	6E0–14157–00	.COVER, PLATE .COUVERCLE	1	1				
18	6E0–14227–00	.GASKET .JOINT	1	1				
19	97890–04007	.SCREW, PAN HEAD .VIS, CRUCIFORME	4	4				
20	647–14323–00	.SCREW, AIR ADJUSTING .VIS DE DOSEUR D'AIR	1	1				
21	646–14212–01	.SPRING, PILOT ADJUSTING .RESSORT, VIS DE RALENTI	2	2				
22	664–14321–01	.SCREW, THROTTLE .VIS, ACCELERATEUR	1	1				
23	648–14342–23	.JET, PILOT (# 46) .GICLEUR, RALENTI (# 46)	1					

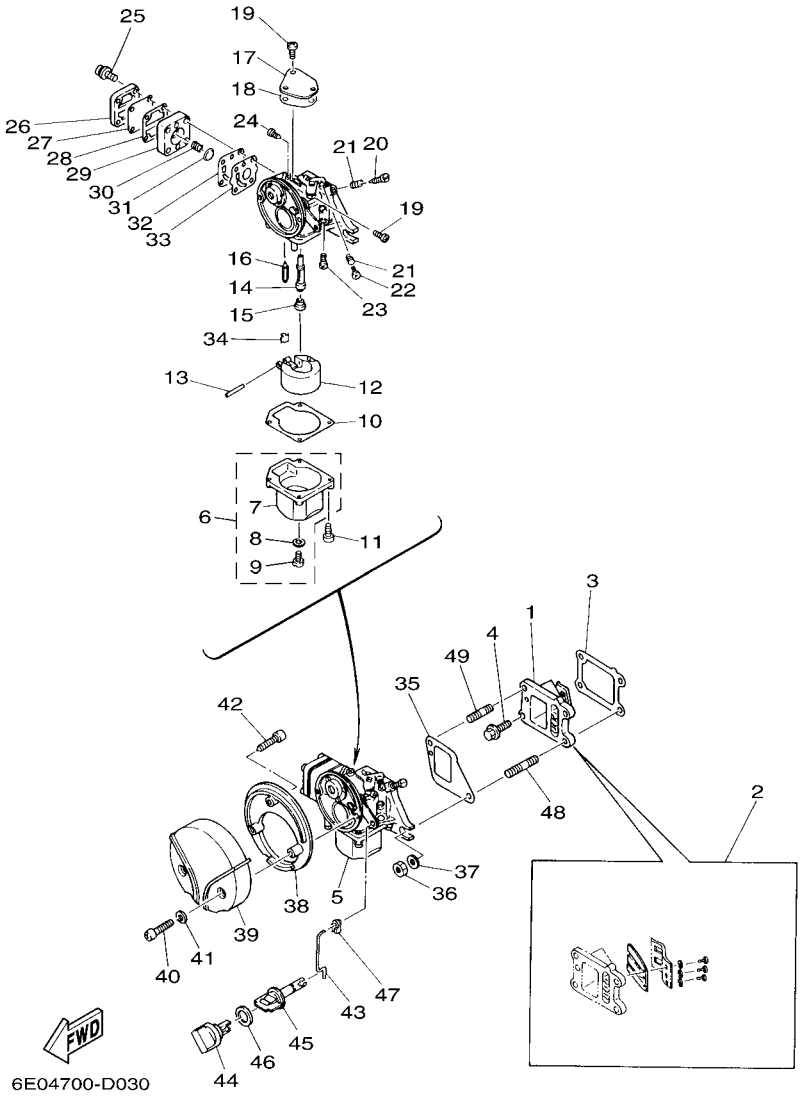

FIG. 3 INTAKE — ADMISSION

REF. NO.	PART NO. N° PIECES	DESCRIPTION DESCRIPTION	6E0C	6E3C				REMARKS REMARQUES
23	648–14342–26	.JET, PILOT (# 52) .GICLEUR, RALENTI (# 52)		1				
24	647–14326–00	.SCREW, GUIDE .GUIDE DE VIS	1	1				
25	97980–04120	.SCREW, WITH WASHER .VIS, AVEC RONDELLE	4	4				
26	6E0–24413–00	.COVER .CAPUCHON	1	1				
27	6E0–24471–00	.DIAPHRAGM .DIAPHRAGME	1	1				
28	6E0–24435–00	.GASKET, BODY 2 .JOINT, CORPS 2	1	1				
29	6E0–24412–00	.BODY 1 .CORPS 1	1	1				
30	6E0–24423–00	.SPRING, DIAPHRAGM .RESSORT, DIAPHRAGME	1	1				
31	6E0–14346–00	.PLATE .PLAQUE	1	1				
32	6E0–24411–00	.DIAPHRAGM .DIAPHRAGME	1	1				
33	6E0–24434–00	.GASKET, BODY .JOINT, CORPS	1	1				
34	6E0–14159–00	.CLIP .JONC	1	1				
35	6E0–14198–A0	GASKET JOINT	1	1				
36	95380–06700	NUT ECROU	2	2				
37	92995–06600	WASHER RONDELLE	2	2				
38	6E0–14417–00	COVER 1 COUVERCLE 1	1	1				
39	6E0–14418–00	COVER 2 COUVERCLE 2	1	1				
40	97880–05025	SCREW, PAN HEAD VIS, TETE TRONCONIQUE	2	2				
41	92990–05600	WASHER, PLATE RONDELLE, PLATE	2	2				
42	97780–40720	SCREW, TAPPING VIS, TETE BOMBEE	1	1				
43	6E0–41256–00	ROD, CHOKE 1 TRINGLE 1, STARTER	1	1				
44	6E0–41271–01	KNOB, CHOKE BOUTON DE STARTER	1	1				
45	6E0–41272–00	KNOB, CHOKE CONTRE ECROU	1	1				
46	90202–12M16	WASHER, PLATE RONDELLE, PLATE	1	1				
47	661–41262–02	JOINT, CHOKE LEVER RACCORD, LEVIER DE STARTER	1	1				
48	95627–06325	BOLT, STUD GOUJON	1	1				
49	90116–06M08	BOLT, STUD GOUJON	1	1				

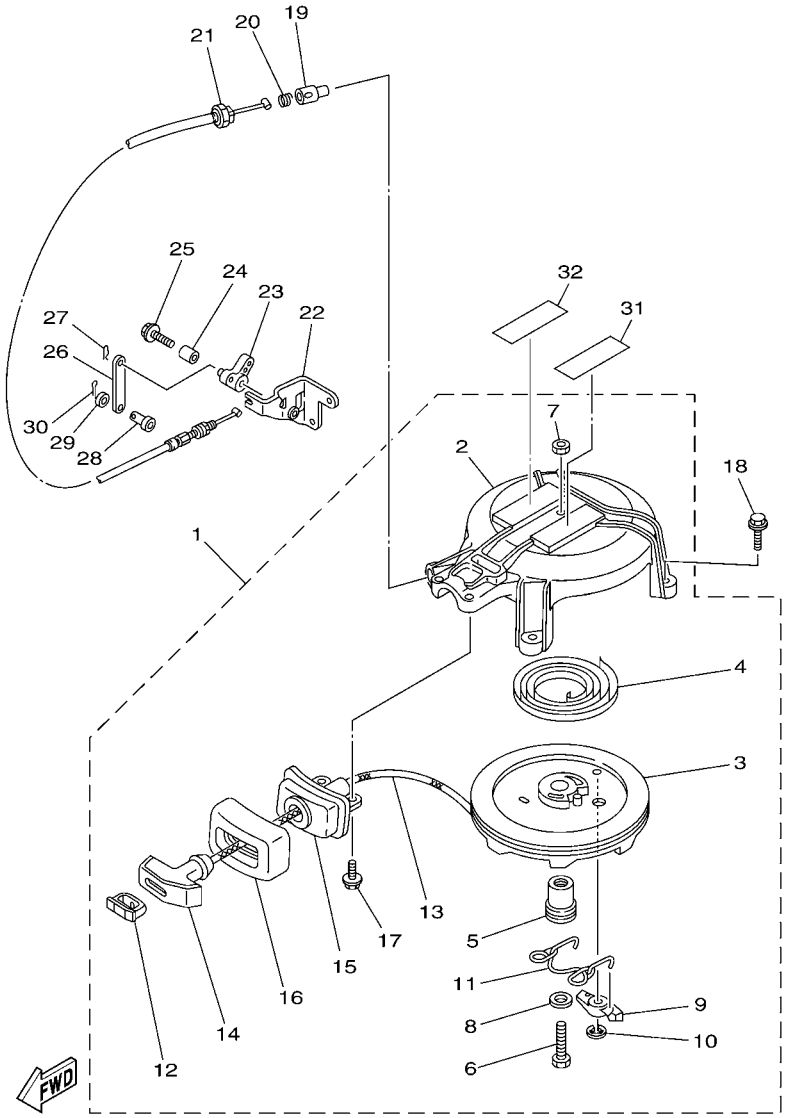

6E38300-H040

*1:CUT FROM 50M ROLLS,PART NO.90890-44372,CUTTING LENGTH 1.85M

*1:A PRELEVER SUR BOBINE 50M ,REFERENCE 90890-44372,
LONGUEUR DE COUPE 1.85M

FIG. 4 STARTER DEMARREUR

REF. NO.	PART NO. N° PIECES	DESCRIPTION DESCRIPTION	6E0C	6E3C				REMARKS REMARQUES
1	6E0–15710–73–94	STARTER ASSY DEMARREUR COMPLET	1					
	6E4–15710–74–94	STARTER ASSY DEMARREUR COMPLET		1				
2	6E4–15711–72–94	.CASE, STARTER .CARTER DE DEMARREUR	1	1				
3	6E0–15714–01	.DRUM, SHEAVE .TAMBOUR, POULIE	1	1				
4	90510–08M03	.SPRING, SPIRAL .RESSORT, HELICOIDAL	1	1				
5	6E0–15717–00	.SHAFT, STARTER .AXE DE DEMARREUR	1	1				
6	97313–06035	.BOLT .BOULON	1	1				
7	95303–06600	.NUT .ECROU	1	1				
8	90201–06M30	.WASHER, PLATE .RONDELLE, PLATE	1	1				
9	677–15741–01	.PAWL, DRIVE .CLIQUET, ENTRAINEMENT	1	1				
10	93430–06M02	.CIRCLIP .CLIPS	1	1				
11	6E0–15705–00	.SPRING, DRIVE PAWL .RESSORT DE CLIQUET	1	1				
12	6G1–15779–00	.COVER .COUVERCLE	1	1				
13	*	.WIRE (L1850) .FIL (L1850)	1	1				*1 *1
14	6G1–15755–00	.HANDLE, STARTER .POIGNEE, DE DEMARREUR	1	1				
15	6E0–15758–01	.GUIDE, ROPE .GUIDE DE CABLE	1					
	6E3–15758–01	.GUIDE, ROPE .GUIDE DE CABLE		1				
16	6E0–15761–00	.SEAL, RUBBER 1 .JOINT CAOUTCHOUC 1	1	1				
17	90105–06M14	.BOLT FLANGE .BOULON	2	2				
18	95895–06020	BOLT, FLANGE BOULON	3	3				
19	656–15748–00	PLUNGER, STARTER STOP PLONGEUR, BOUTE DE DEMAR	1	1				
20	90501–10227	SPRING, COMPRESSION RESSORT, COMPRESSION	1	1				
21	6E4–15770–70	CABLE COMP., STARTER STOP CABLE, BUTEE DE DEMAR	1	1				
22	6E0–15772–71	STAY 2 SUPPORT 2	1					
	6E4–15772–71	STAY 2 SUPPORT 2		1				
23	6E4–15746–70	ARM BRAS	1	1				
24	90387–06504	COLLAR COLLERETTE	1	1				

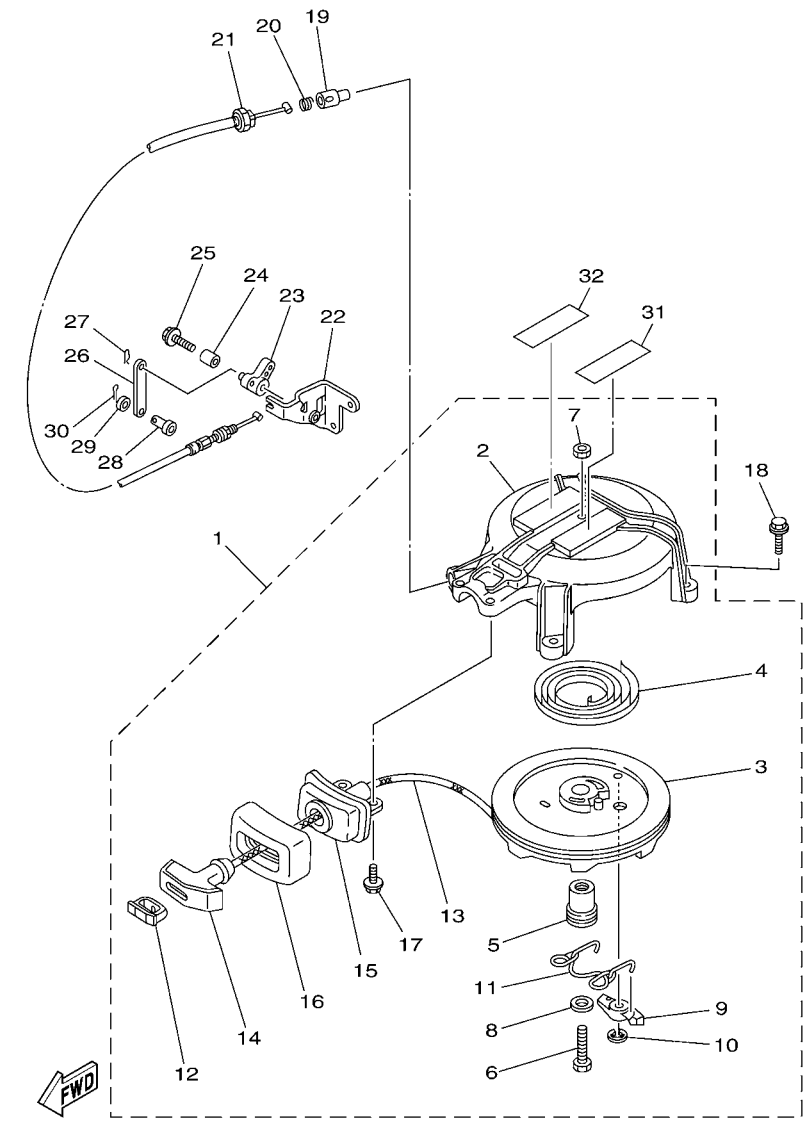

6E38300-H040

*1:CUT FROM 50M ROLLS,PART NO.90890-44372,CUTTING LENGTH 1.85M

*1:A PRELEVER SUR BOBINE 50M ,REFERENCE 90890-44372,
LONGUEUR DE COUPE 1.85M

FIG. 4 STARTER DEMARREUR

REF. NO.	PART NO. N° PIECES	DESCRIPTION DESCRIPTION	6E0C	6E3C				REMARKS REMARQUES
25	90119–06M18	BOLT, WITH WASHER BOULON, AVEC RONDELLE	1	1				
26	6E4–15747–70	LINK BIELLETTE	1	1				
27	90468–10005	CLIP JONC	1	1				
28	91790–05010	PIN, CLEVIS AXE D"ARTICULATION	1	1				
29	90202–05088	WASHER, PLATE RONDELLE, PLATE	1	1				
30	91490–16010	PIN. COTTER GOUPILLE	1	1				
31	6AH–81995–40	LABEL, WARNING ETIQUETTE, AVERTISSEMENT	1	1				
32	6AH–81995–50	LABEL, WARNING ETIQUETTE, AVERTISSEMENT		1				

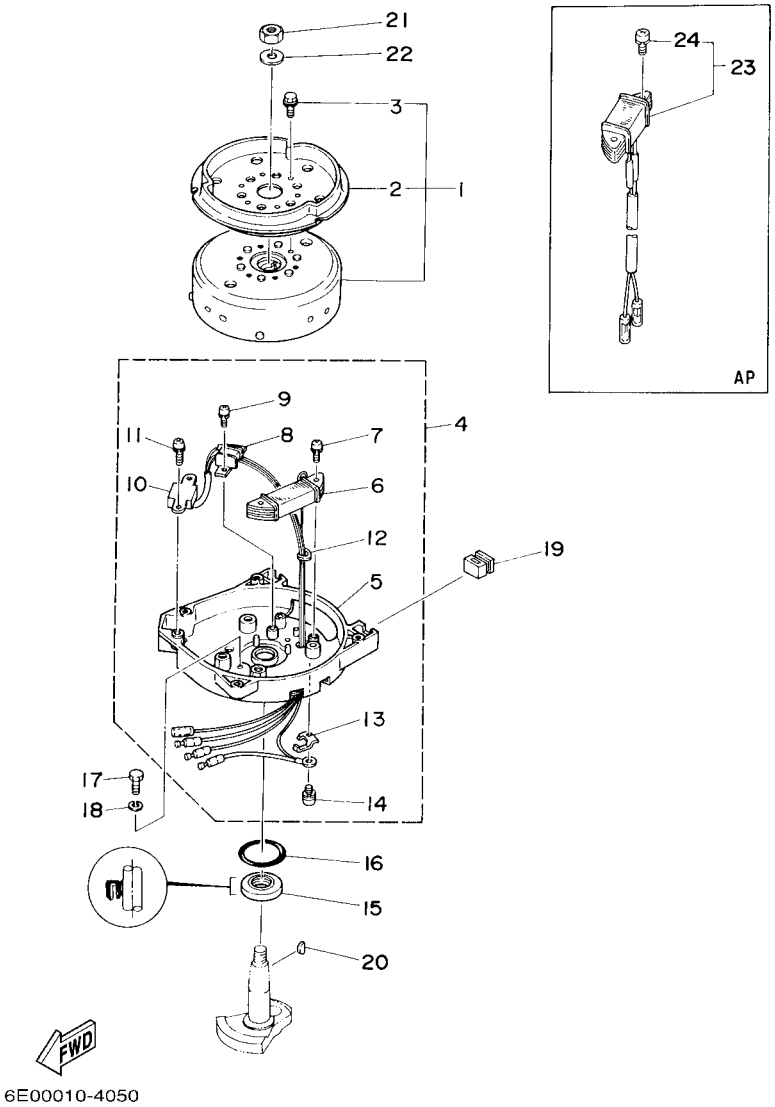

FIG. 5 GENERATOR GENERATRICE

REF. NO.	PART NO. N° PIECES	DESCRIPTION DESCRIPTION	6E0C	6E3C				REMARKS REMARQUES
1	6E0–85550–72	ROTOR ASSY ROTOR CPLT	1	1				
2	6E0–15723–00–94	.PULLEY, STARTER .POULIE DE DEMARREUR	1	1				
3	90105–06M14	.BOLT FLANGE .BOULON	3	3				
4	6E0–85560–71	BASE ASSY ENS. FLASQUE	1	1				
5	6E0–15359–01–94	.HOUSING, OIL SEAL .LOGEMENT, BAGUE D'ETANCHEITE	1	1				
6	6E0–85520–70	.COIL, CHARGE .BOBINE, CHARGE	1	1				
7	90159–05038	.SCREW, WITH WASHER .VIS, AVEC RONDELLE	2	2				
8	6E0–85595–70	.COIL, PULSER .BOBINE, PULSEUR	1	1				
9	90159–04036	.SCREW, WITH WASHER .VIS, AVEC RONDELLE	2	2				
10	6E0–85592–70	.PULSER COIL ASSY .PULSATION BOBINE (ENS.)	1	1				
11	90159–05037	.SCREW, WITH WASHER .VIS, AVEC RONDELLE	2	2				
12	6E0–81336–70	.GROMMET .OEILLET CAOUTCHOUC	1	1				
13	6E0–81328–70	.CLAMP .COLLIER	1	1				
14	90159–04035	.SCREW, WITH WASHER .VIS, AVEC RONDELLE	1	1				
15	93102–20M25	OIL SEAL JOINT SPY	1	1				
16	93210–42159	O-RING JOINT TORIQUE	1	1				
17	97095–06016	BOLT BOULON	2	2				
18	92995–06100	WASHER, SPRING RONDELLE, GROWER	2	2				
19	6E0–24183–00	DAMPER, LOCATING 3 SILENT-BLOC	2	2				
20	90280–04M06	KEY, WOODRUFF CLAVETTE, DEMI-LUNE	1	1				
21	90170–10113	NUT ECROU	1	1				
22	90201–10126	WASHER, PLATE RONDELLE, PLATE	1	1				
23	6E0–81303–40	LIGHTING COIL ASSY BOBINE D'ECLAIRAGE	1	1				AP 40W AP 40W
	6E0–81303–80	LIGHTING COIL ASSY BOBINE D'ECLAIRAGE	1	1				AP 60W AP 60W
24	90159–05040	.SCREW, WITH WASHER .VIS, AVEC RONDELLE	2	2				

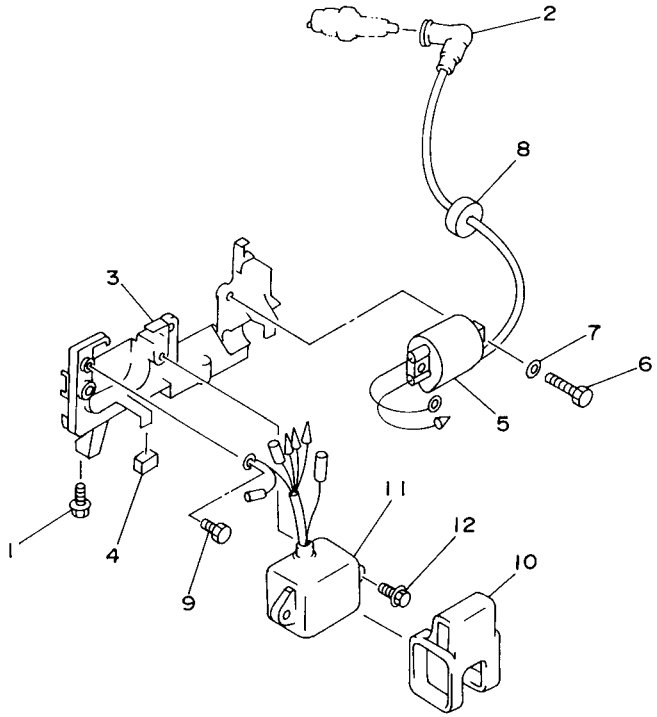

6E00010-6060

FIG. 6 ELECTRICAL ELECTRIQUE

REF. NO.	PART NO. N° PIECES	DESCRIPTION DESCRIPTION	6E0C	6E3C				REMARKS REMARQUES
1	95895–06016	BOLT, FLANGE BOULON	2	2				
2	663–82370–01	PLUG CAP ASSY ANTIPARASITE	1					
	6E3–82370–21	PLUG CAP ASSY ANTIPARASITE		1				
3	6E0–82316–01–94	BRACKET, IGNITION COIL SUPPORT, BOBINE D'ALLUMAGE	1	1				
4	6E0–82317–00	DAMPER, IGNITION COIL AMORTISSEUR, BOBINE D'ALLUM	2	2				
5	6E0–85570–00	IGNITION COIL ASSY BOBINE D'ALLUMAGE (ENS.)	1	1				
6	97095–06016	BOLT BOULON	2	2				
7	92995–06600	WASHER RONDELLE	2	2				
8	90480–25161	GROMMET PASSE-FIL	1	1				
9	97080–06010	BOLT BOULON	1	1				
10	6E0–85548–00	HOLDER SUPPORT	1	1				
11	6E0–85540–71	C.D.I. UNIT ASSY BLOC C.D.I.	1	1				
12	95895–06020	BOLT, FLANGE BOULON	2	2				

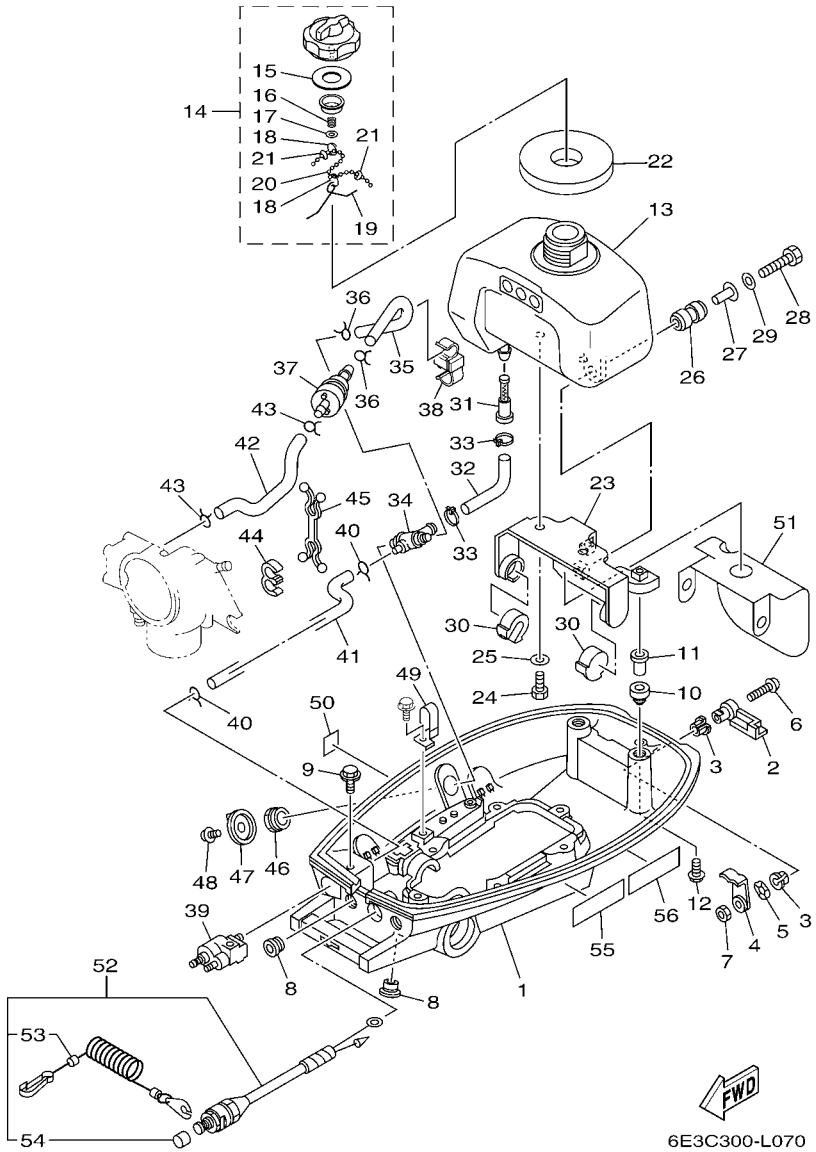

FIG. 7 BOTTOM COWLING CAPOT INFERIEUR

REF. NO.	PART NO. N° PIECES	DESCRIPTION DESCRIPTION	6E0C	6E3C				REMARKS REMARQUES
1	6E0–42711–10–4D	COWLING, BOTTOM 1 CUVETTE 1	1	1				
2	6E0–42815–00–4D	LEVER, CLAMP LEVIER, PRESSE	1	1				
3	90386–12069	BUSH DOUILLE	2	2				
4	6E0–42816–00	LEVER, CLAMP LEVIER, PRESSE	1	1				
5	90206–12052	WASHER, WAVE RONDELLE, ONDULEE	1	1				
6	97885–06030	SCREW, PAN HEAD VIS, A ENCOCHE	1	1				
7	95380–06700	NUT ECROU	1	1				
8	90480–14M14	GROMMET PASSE-FIL	2	2				
9	95895–06020	BOLT, FLANGE BOULON	1	1				
10	6E0–24182–00	DAMPER, LOCATING 2 SILENT-BLOC	2					
	6E3–24182–00	DAMPER, LOCATING 2 SILENT-BLOC		2				
11	6E0–42542–00	PIPE TUYAU	2	2				
12	95895–06025	BOLT, FLANGE BOULON	2	2				
13	6E3–24111–00	TANK, FUEL RESERVOIR, A ESSENCE	1	1				
14	68D–24610–10	CAP ASSY BOUCHON	1	1				
15	68D–24612–00	.PACKING, CAP .JOINT, BOUCHON	1	1				
16	90501–100A5	.SPRING, COMPRESSION .RESSORT, COMPRESSION	1	1				
17	92990–04200	.WASHER, PLAIN .RONDELLE, PLATE	1	1				
18	90468–100A0	.CLIP .JONC	2	2				
19	624–24634–00	.HOOK, CHAIN BALL .ATTACHE	1	1				
20	69M–24633–00	.CHAIN, BALL .CHANE DE BALLE	1	1				
21	67D–21757–00	.WASHER, SPECIAL 1 .RONDELLE, SPECIALE 1	2	2				
22	6E0–24641–20	GASKET, CAP 1 JOINT 1, BOUCHON	1					
	6E3–24641–10	GASKET, CAP 1 JOINT 1, BOUCHON		1				
23	6E3–24115–00	STAY, FUEL TANK 1 SUPPORT 1, RESERV A ESSENCE	1	1				
24	97095–06014	BOLT BOULON	2	2				
25	92995–06600	WASHER RONDELLE	2	2				

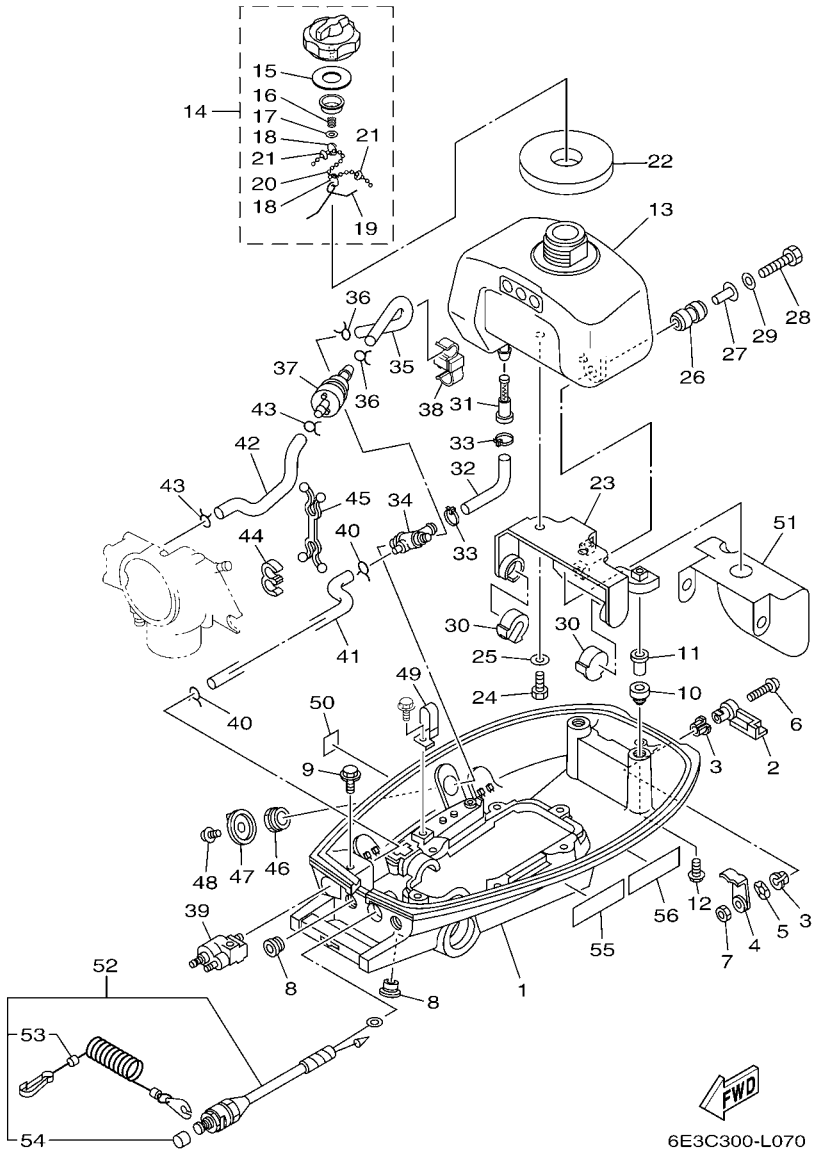

FIG. 7 BOTTOM COWLING CAPOT INFERIEUR

REF. NO.	PART NO. N° PIECES	DESCRIPTION DESCRIPTION	6E0C	6E3C				REMARKS REMARQUES
26	6A0–82317–00	DAMPER, IGNITION COIL AMORTISSEUR, BOBINE D'ALLUM	1	1				
27	90387–06119	COLLAR COLLERETTE	1	1				
28	97095–06025	BOLT BOULON	1	1				
29	92995–06600	WASHER RONDELLE	1	1				
30	6E0–24181–00	DAMPER, LOCATING 1 SILENT-BLOC 1	2	2				
31	6L5–24251–00	STRAINER 1 FILTRE 1	1	1				
32	6E3–24311–00	PIPE, FUEL 1 DURITE A ESSENCE	1	1				
33	90465–13M11	CLAMP BRIDE	2	2				
34	6E0–24500–10	FUEL COCK ASSY 1 ROBINET A ESSENCE	1	1				
35	6E3–24314–00	PIPE 4 DURITE 4	1	1				
36	90467–08004	CLIP JONC	2	2				
37	68T–24251–01	STRAINER 1 FILTRE 1	1	1				
38	90464–12010	CLAMP BRIDE	1	1				
39	6G1–24304–02	FUEL PIPE JOINT COMP. 1 DURITE RACCORDEMT. A ESSENCE	1	1				
40	90467–08004	CLIP JONC	2	2				
41	6E3–24313–00	PIPE 3 DURITE 3	1	1				
42	6E3–24315–00	PIPE 5 DURITE 5	1	1				
43	90467–08004	CLIP JONC	2	2				
44	90464–09M21	CLAMP BRIDE	1	1				
45	90464–10M53	CLAMP BRIDE	1	1				
46	90170–16M35	NUT ECROU	1	1				
47	6J1–24524–00	LEVER, COCK LEVIER, ROBINET	1	1				
48	97980–04210	SCREW, WITH WASHER VIS, AVEC RONDELLE	1	1				
49	90465–08M62	CLAMP BRIDE	1	1				
50	6E0–24591–10	EMBLEM, FUEL COCK ADHESIF	1	1				
51	6E3–24217–00	COVER COUVERCLE	1	1				
52	6E0–82575–00	ENGINE STOP SWITCH ASSY COUPE CIRCUIT CPLT	1	1				

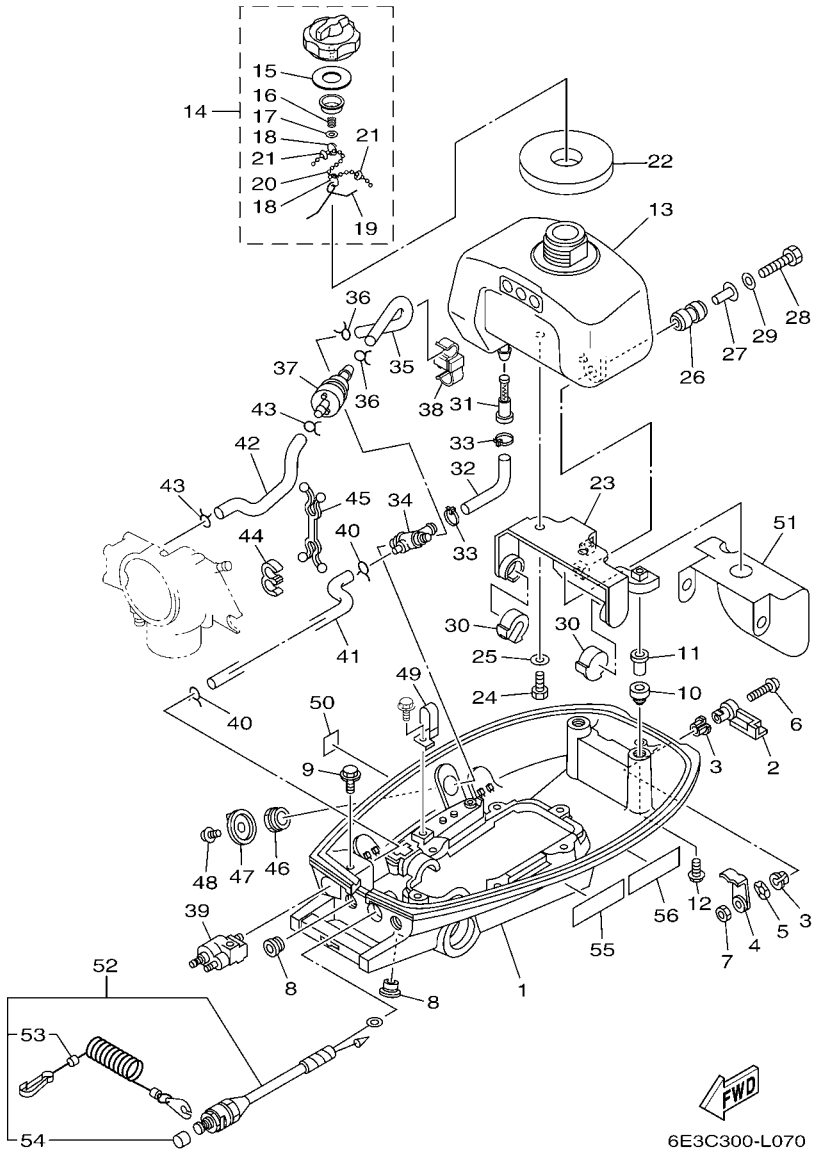

FIG. 7 BOTTOM COWLING CAPOT INFERIEUR

REF. NO.	PART NO. N° PIECES	DESCRIPTION DESCRIPTION	6E0C	6E3C				REMARKS REMARQUES
53	682–82556–00	.LANYARD, STOP SWITCH .CORDON DU COUPE CIRCUIT	1	1				
54	689–8257Y–00	.CAP .COUVERCLE	1	1				
55	6AH–81994–40	LABEL, SAFETY ETIQUETTE, SECURITE	1	1				
56	6AH–81994–50	LABEL, SAFETY ETIQUETTE, SECURITE		1				

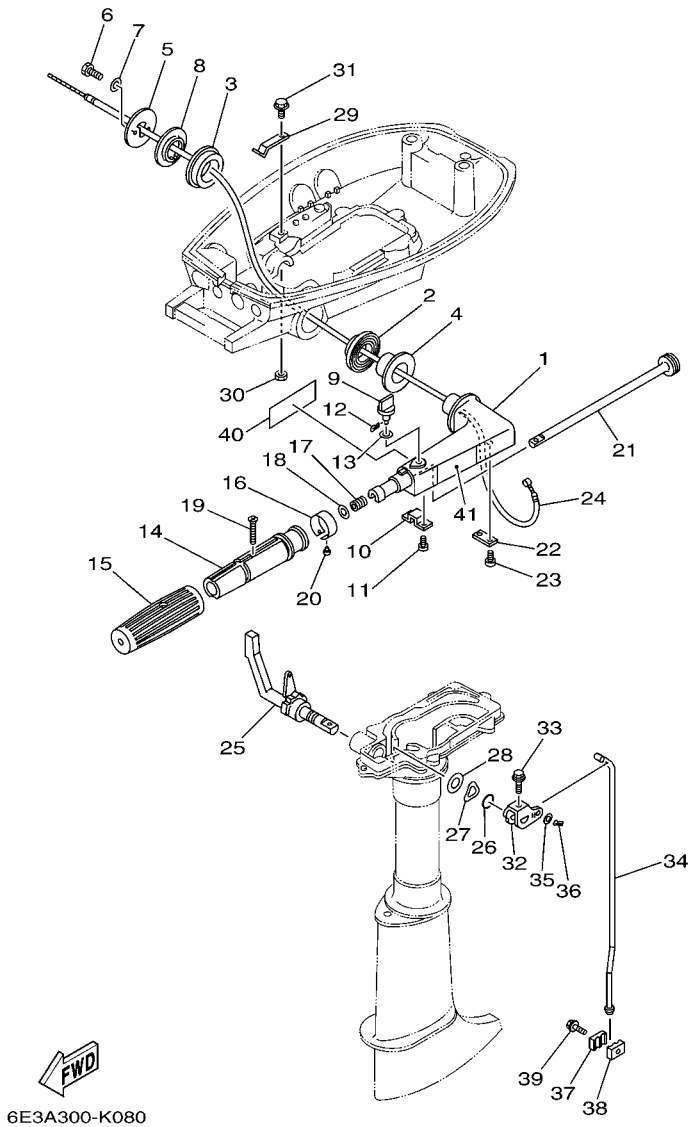

6E3A300-K080

FIG. 8 CONTROL — COMMANDE

REF. NO.	PART NO. N° PIECES	DESCRIPTION DESCRIPTION	6E0C	6E3C				REMARKS REMARQUES
1	6E0–42111–02–4D	HANDLE, STEERING POIGNEE	1	1				
2	6E0–42129–02	BUSHING, RUBBER DOUILLE, CAOUTCHOUC	1	1				
3	6E4–42129–00	BUSHING, RUBBER DOUILLE, CAOUTCHOUC	1	1				
4	90386–26M30	BUSH DOUILLE	1	1				
5	6E0–42131–02–94	COVER, HANDLE STEERING COUVERCLE	1	1				
6	97013–05020	BOLT BOULON	2	2				
7	92903–05600	WASHER, PLATE RONDELLE, PLATE	2	2				
8	90386–26M33	BUSH DOUILLE	1	1				
9	6E0–42125–00	BOLT, FRICTION ADJUSTING BOULON	1	1				
10	6E0–42134–02	COVER, THROTTLE LEVER CAPOT, CREMAILLERE	1	1				
11	97885–05012	SCREW, PAN HEAD VIS, A ENCOCHE	2	2				
12	91490–12010	PIN. COTTER GOUPILLE	1	1				
13	90202–07M22	WASHER, PLATE RONDELLE, PLATE	1	1				
14	6E0–42119–00	GRIP, STEERING HANDLE POIGNEE, BARRE FRANCHE	1	1				
15	6E0–42177–00	RUBBER, HANDLE CAOUTCHOUC, POIGNEE	1	1				
16	6E0–42137–10	INDICATOR, THROTTLE INDICATEUR, ACCELERATION	1	1				
17	90501–23215	SPRING, COMPRESSION RESSORT, COMPRESSION	1	1				
18	90201–10119	WASHER, PLATE RONDELLE, PLATE	1	1				
19	90152–05011	SCREW, COUNTERSUNK VIS, TETE NOYEE	1	1				
20	90269–02M09	RIVET RIVET	1	1				
21	6E0–42138–01	LEVER, THROTTLE LEVIER, ACCELERATEUR	1	1				
22	6E0–42159–02	STAY SUPPORT	1	1				
23	97885–05012	SCREW, PAN HEAD VIS, A ENCOCHE	2	2				
24	6E0–26301–01	THROTTLE CABLE ASSY CABLE D'ACCELERATEUR	1	1				
25	6E4–44111–72–4D	HANDLE, GEAR SHIFT POIGNEE, LEVIER D'EMBRAYAGE	1	1				
26	93210–12327	O-RING JOINT TORIQUE	1	1				
27	90206–16M06	WASHER, WAVE RONDELLE, ONDULEE	1	1				

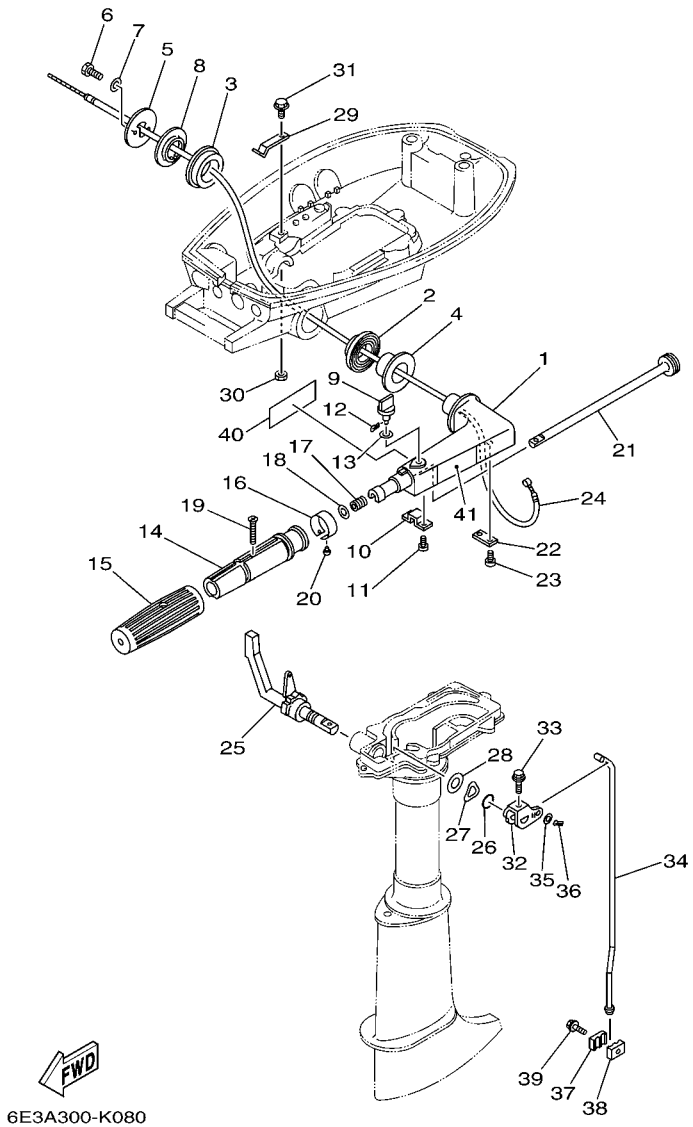

FIG. 8 CONTROL — COMMANDE

REF. NO.	PART NO. N° PIECES	DESCRIPTION DESCRIPTION	6E0C	6E3C				REMARKS REMARQUES
28	90202–16061	WASHER, PLATE RONDELLE, PLATE	1	1				
29	6E0–44116–00	SPRING RESSORT	1	1				
30	95380–06700	NUT ECROU	1	1				
31	95895–06012	BOLT, FLANGE BOULON	1	1				
32	6E0–44121–00	LEVER, SHIFT ROD LEVIER, TIGE D'INVERSION	1	1				
33	95895–06025	BOLT, FLANGE BOULON	1	1				
34	6E0–44143–00	ROD, SHIFT TIGE D'EMBRAYAGE	1	1				S(17.5") S(17.5")
	6E0–44143–10	ROD, SHIFT TIGE D'EMBRAYAGE		1				L(22.5") L(22.5")
35	92990–05600	WASHER, PLATE RONDELLE, PLATE	1	1				
36	91490–16010	PIN. COTTER GOUPILLE	1	1				
37	6E0–44145–00	CONNECTOR, SHIFT ROD CONNECTEUR, TIGE D'INVERSION	1	1				
38	6E0–44146–00	CONNECTOR, SHIFT ROD CONNECTEUR, TIGE D'INVERSION	1	1				
39	95895–06020	BOLT, FLANGE BOULON	1	1				
40	6AH–42794–40	LABEL, WARNING (GENERAL) ETIQUETTE, AVERTISSEMENT	1	1				
41	6AH–42794–50	LABEL, WARNING (GENERAL) ETIQUETTE, AVERTISSEMENT		1				

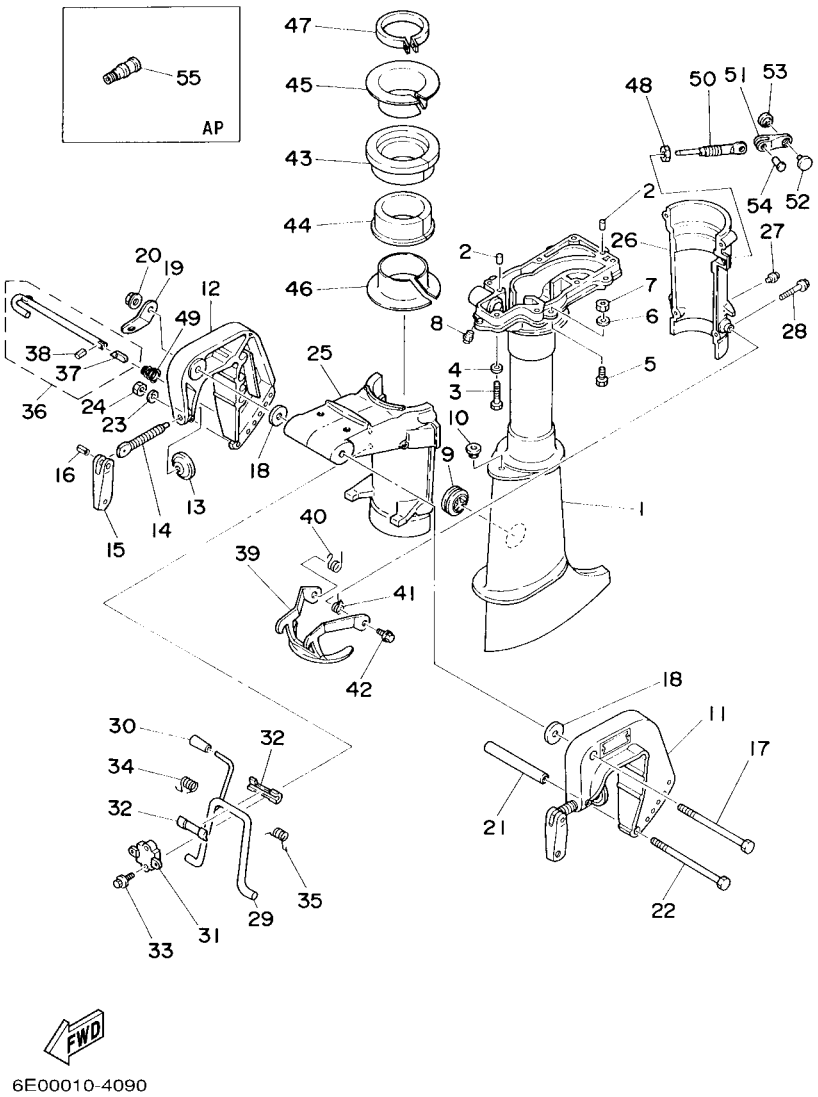

6E00010-4090

FIG. 9 UPPER CASING & BRACKET FOURREAU & SUPPORT

REF. NO.	PART NO. N° PIECES	DESCRIPTION DESCRIPTION	6E0C	6E3C				REMARKS REMARQUES
1	6E0–45111–02–4D	CASING, UPPER FOURREAU	1	1				S(17.5") S(17.5")
	6E0–45111–12–4D	CASING, UPPER FOURREAU		1				L(22.5") L(22.5")
2	93606–12019	PIN, DOWEL GOUPILLE	2	2				
3	97095–06030	BOLT BOULON	7	7				
4	92995–06600	WASHER RONDELLE	7	7				
5	97095–06016	BOLT BOULON	4	4				
6	92995–06600	WASHER RONDELLE	4	4				
7	95380–06700	NUT ECROU	4	4				
8	93700–06M03	NIPPLE, GREASE PION	1	1				
9	647–45151–01	COVER, UPPER CASING CAPUCHON, FOURREAU	1	1				
10	90480–10M13	GROMMET PASSE-FIL	1	1				
11	6E0–43111–02–4D	BRACKET, CLAMP 1 PRESSE 1	1	1				
12	6E0–43112–01–4D	BRACKET, CLAMP 2 PRESSE 2	1	1				
13	620–43114–00	PAD, TRANSOM CLAMP RONDELLE D'APPUI	2	2				
14	6E0–43116–01	SCREW, TRANSOM CLAMP VIS DE PRESSE	2	2				
15	6E0–43118–01	HANDLE, TRANSOM CLAMP POIGNEE DE VIS DE PRESSE	2	2				
16	90243–04M01	PIN GOUPILLE	2	2				
17	90101–08M07	BOLT BOULON	1	1				
18	90201–08M03	WASHER, PLATE RONDELLE, PLATE	2	2				
19	6A1–43113–01	PLATE, CLAMP BRACKET PLAQUETTE, PRESSE	1	1				
20	90185–08057	NUT, SELF-LOCKING ECROU,AUTO-BLOQUANT	1	1				
21	90387–06M11	COLLAR COLLERETTE	1	1				
22	90101–06335	BOLT BOULON	1	1				
23	92990–06600	WASHER, PLATE RONDELLE, PLATE	1	1				
24	95380–06600	NUT, HEXAGON ECROU	1	1				
25	6E0–43311–04–4D	BRACKET, SWIVEL 1 SUPPORT, PIVOT 1	1	1				
26	6E0–43312–02–4D	BRACKET, SWIVEL 2 SUPPORT, PIVOT 2	1	1				

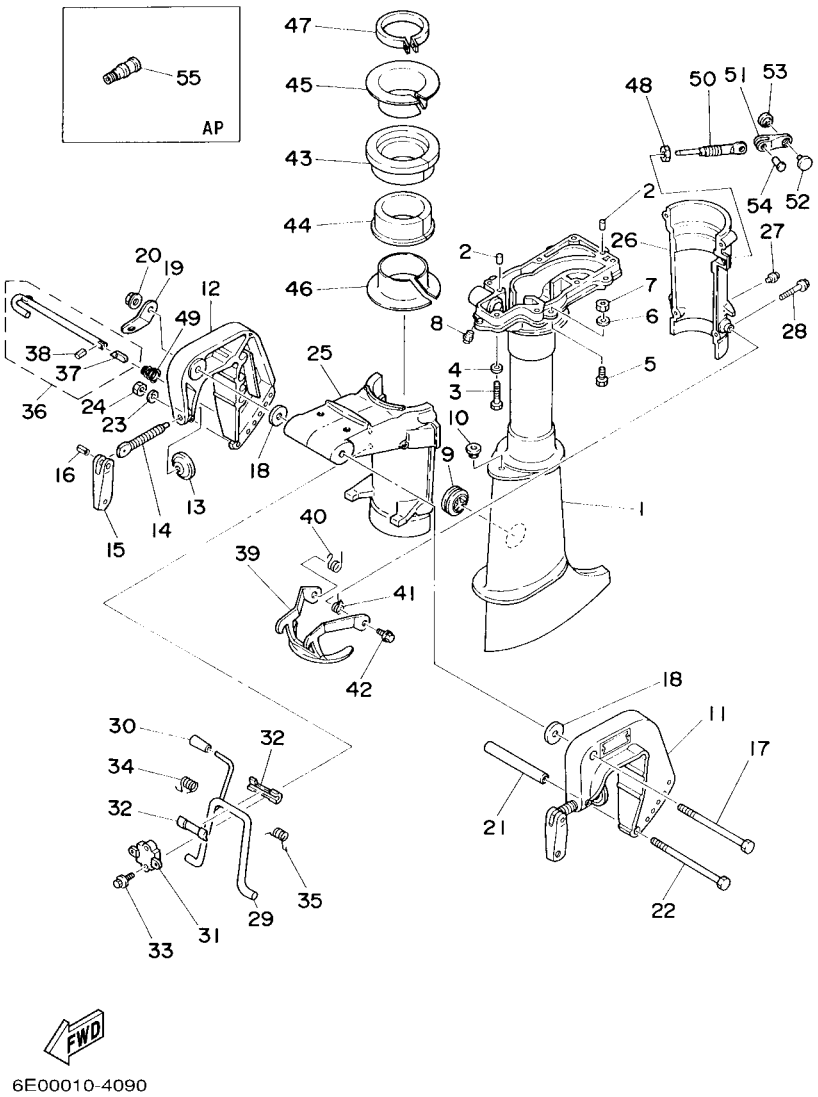

6E00010-4090

FIG. 9 UPPER CASING & BRACKET FOURREAU & SUPPORT

REF. NO.	PART NO. N° PIECES	DESCRIPTION DESCRIPTION	6E0C	6E3C				REMARKS REMARQUES
27	93700–06M03	NIPPLE, GREASE PION	1	1				
28	95895–06035	BOLT, FLANGE BOULON	4	4				
29	6E0–43181–00	LEVER, TILT STOP 1 LEVIER VERROUILLAGE RELEVAGE 1	1	1				
30	6E0–43632–00	KNOB, TILT POIGNEE, LEVIER DE RELEVAGE	1	1				
31	6E0–43313–00–94	BRACKET, SWIVEL 3 SUPPORT, PIVOT 3	1	1				
32	620–43189–00	BUSHING COUSSINET	2	2				
33	95895–06020	BOLT, FLANGE BOULON	2	2				
34	90508–16020	SPRING, TORSION RESSORT, TORSION	1	1				
35	90508–16021	SPRING, TORSION RESSORT, TORSION	1	1				
36	6E0–43160–01	TILT ROD ASSY BROCHE D'INCLINAISON (ENS.)	1	1				
37	689–43165–00	.PLATE, TILT LOCK .TAQUET, BROCHE INCLINAISON	1	1				
38	91690–30008	.PIN, SPRING .AGRAFFE	1	1				
39	6E0–43614–00–CA	PLATE, TILT LOCK ETRIER, VERROUILLAGE MARCHE AR	1	1				
40	90508–14M10	SPRING, TORSION RESSORT, TORSION	1	1				
41	90508–14M11	SPRING, TORSION RESSORT, TORSION	1	1				
42	95895–06010	BOLT, FLANGE BOULON	2	2				
43	6E0–42537–02	BUSHING, PIVOT SHAFT COUSSINET	1	1				
44	6E0–42538–02	BUSHING, PIVOT SHAFT COUSSINET	1	1				
45	6E0–42539–00	BUSHING, PIVOT SHAFT COUSSINET	1	1				
46	6E0–42549–00	BUSHING, PIVOT SHAFT COUSSINET	1	1				
47	6E0–42528–03	PLATE, FRICTION PLAQUE, FRICTION	1	1				
48	95380–08600	NUT ECROU	1	1				
49	90502–08M05	SPRING, CONICAL RESSORT, CONIQUE	1	1				
50	6L5–42529–01	SCREW, FRICTION PIECE VIS, PIECE DE FRICTION	1	1				
51	6L5–42561–00	KNOB, STEERING LOCK BOUTON	1	1				
52	6L5–44196–00	INDICATOR 3 INDICATEUR 3	1	1				
53	6L5–44197–00	INDICATOR 4 INDICATEUR 4	1	1				

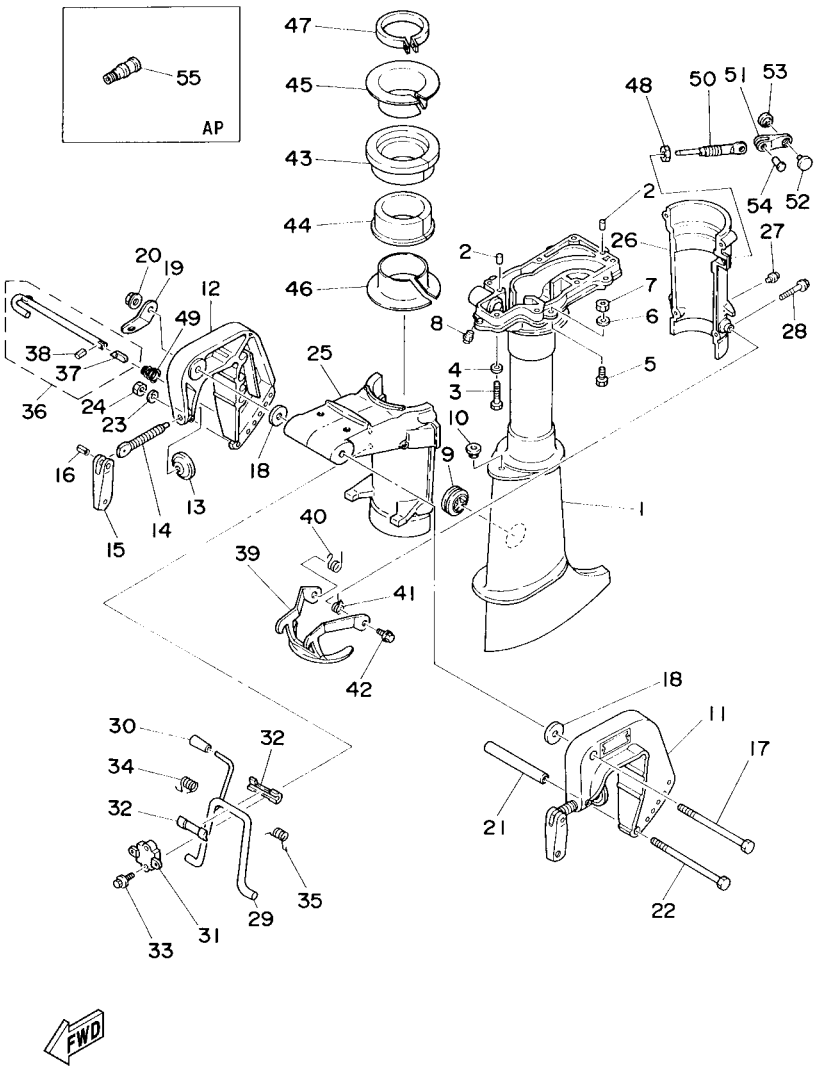

6E00010-4090

FIG. 9 UPPER CASING & BRACKET FOURREAU & SUPPORT

REF. NO.	PART NO. N° PIECES	DESCRIPTION DESCRIPTION	6E0C	6E3C				REMARKS REMARQUES
54	90266–04M05	RIVET RIVET	1	1				
55	626–28193–01–94	PLUG, WATER CHECK BOUCHON, CONTROLE D'EAU	1	1				AP D:15MM AP D:15MM

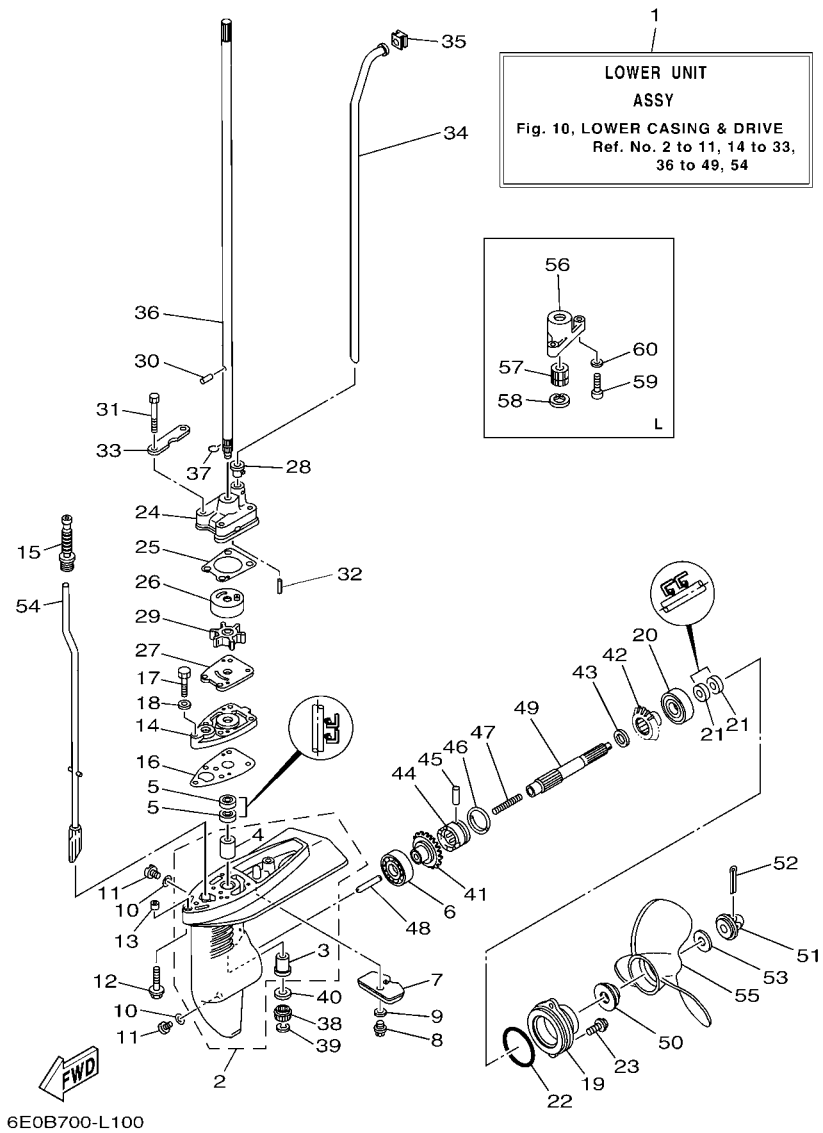

FIG. 10 LOWER CASING & DRIVE — BOITIER D HELICE TRANSMISSION

REF. NO.	PART NO. N° PIECES	DESCRIPTION DESCRIPTION	6E0C	6E3C				REMARKS REMARQUES
1	6E0–45300–03–4D	LOWER UNIT ASSY UNITE INFERIEURE (ENS.)	1	1				S(17.5") S(17.5")
	6E0–45300–13–4D	LOWER UNIT ASSY UNITE INFERIEURE (ENS.)		1				L(22.5") L(22.5")
2	6E0–45311–02–4D	CASING, LOWER BOITIER D'HELICE	1	1				
3	6E0–45317–09	.BUSHING, DRIVE SHAFT .DOUILLE, ARBRE MOTEUR	1	1				
4	6E0–45316–09	.BUSHING, DRIVE SHAFT .DOUILLE, ARBRE MOTEUR	1	1				
5	93101–10M14	OIL SEAL JOINT SPY	2	2				
6	93306–004U0	BEARING ROULEMENT	1	1				
7	6L5–45251–03	ANODE ANODE	1	1				
8	95895–06012	BOLT, FLANGE BOULON	1	1				
9	92990–06300	WASHER, INTERNAL TOOTH RONDELLE, DENTURE INTERNE	1	1				
10	90430–08020	GASKET JOINT	3	3				
11	90340–08002	PLUG, STRAIGHT SCREW PLOT, FILETE DROIT	3	3				
12	90119–06M40	BOLT, WITH WASHER BOULON, AVEC RONDELLE	2	2				
13	90387–06M14	COLLAR COLLERETTE	2	2				
14	6E0–45321–01–CA	PLATE PLAQUETTE	1	1				
15	6G1–44147–00	BOOT, SHIFT ROD SOUFFLET, TIGE D'INVERSION	1	1				
16	6E0–45315–A0	PACKING, LOWER CASING JOINT, BOITIER D'HELICE	1	1				
17	97095–06025	BOLT BOULON	1	1				
18	92995–06600	WASHER RONDELLE	1	1				
19	6E0–45361–01–4D	CAP, LOWER CASING COUVERCLE, BOITIER D'HELICE	1	1				
20	93306–004U0	BEARING ROULEMENT	1	1				
21	93101–13M12	OIL SEAL JOINT SPY	2	2				
22	93210–48214	O-RING JOINT TORIQUE	1	1				
23	95895–06016	BOLT, FLANGE BOULON	2	2				
24	6E0–44311–00	HOUSING, WATER PUMP CORPS, POMPE A EAU	1	1				
25	6E0–44315–A0	GASKET, WATER PUMP JOINT, POMPE A EAU	1	1				
26	6E0–44322–02	INSERT, CARTRIDGE CUVETTE	1	1				

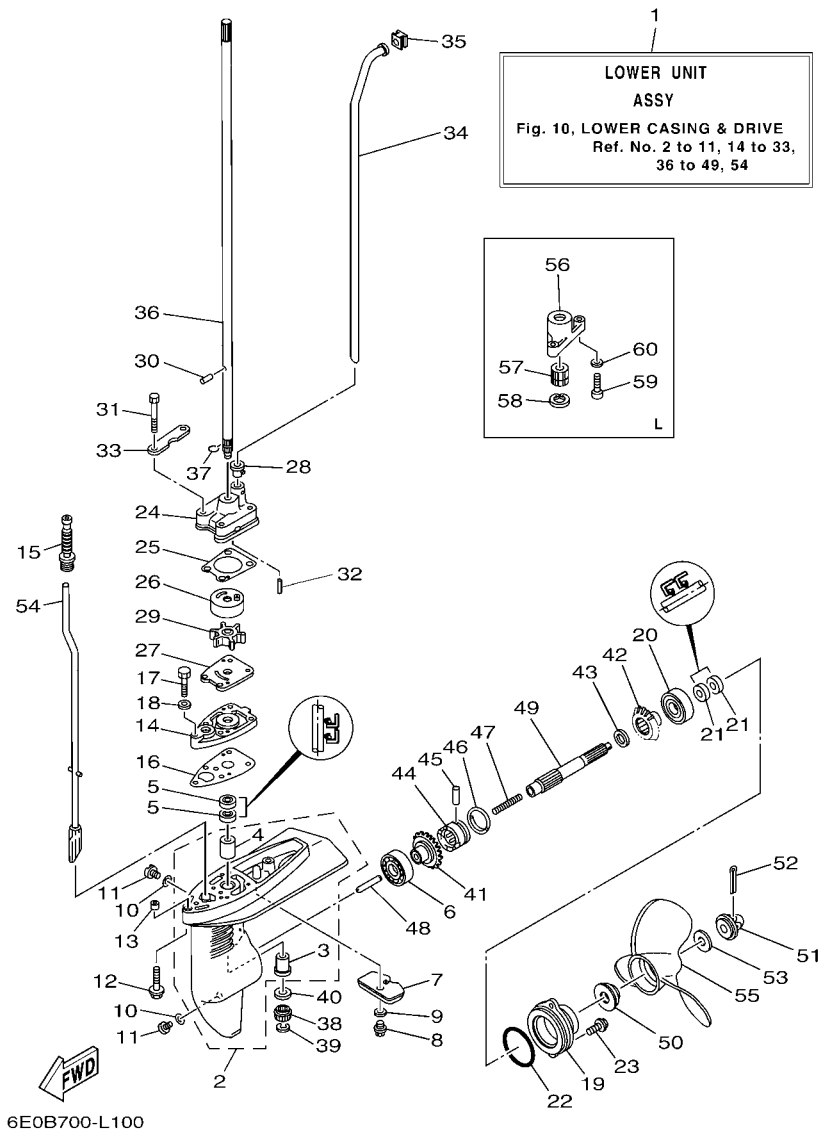

FIG. 10 LOWER CASING & DRIVE — BOITIER D HELICE TRANSMISSION

REF. NO.	PART NO. N° PIECES	DESCRIPTION DESCRIPTION	6E0C	6E3C				REMARKS REMARQUES
27	6E0–44323–00	OUTER PLATE, CARTRIDGE PLAQUE EXTERIEURE	1	1				
28	6E0–44366–00	DAMPER, WATER SEAL 2 JOINT, TUBE D'EAU 2	1	1				
29	6E0–44352–00	IMPELLER TURBINE	1	1				
30	93604–09066	PIN, DOWEL CLAVETTE	1	1				
31	97095–06045	BOLT BOULON	4	4				
32	93604–18080	PIN, DOWEL CLAVETTE	2	2				
33	6E0–44328–00	PLATE PLAQUETTE	2	2				
34	6E0–44361–00	TUBE, WATER 1 TUBE D'EAU 1	1	1				S(17.5") S(17.5")
	6E0–44361–10	TUBE, WATER 1 TUBE D'EAU 1		1				L(22.5") L(22.5")
35	646–44365–00	DAMPER, WATER SEAL 1 JOINT, TUBE D'EAU 1	1	1				
36	6E0–45511–01	SHAFT, DRIVE ARBRE, MOTEUR	1	1				S(17.5") S(17.5")
	6E0–45511–11	SHAFT, DRIVE ARBRE, MOTEUR		1				L(22.5") L(22.5")
37	90467–08M01	CLIP JONC	1	1				
38	6E0–45551–00	PINION (13T) PIGNON D'ATTAQUE (13D)	1	1				
39	99001–06600	CIRCLIP CIRCLIP	1	1				
40	90201–11M49	WASHER, PLATE RONDELLE, PLATE	1	1				
41	6E0–45560–00	GEAR 1 (27T) PIGNON 1 (27T)	1	1				
42	6E0–45570–00	GEAR 2 (27T) PIGNON 2 (27T)	1	1				
43	90201–13M50	WASHER, PLATE RONDELLE, PLATE	1	1				
44	6E0–45631–00	CLUTCH, DOG CRABOT	1	1				
45	90250–05046	PIN, STRAIGHT GOUPILLE, DROITE	1	1				
46	654–45633–00	RING, CROSS PIN JONC, GOUPILLE CRABOT	1	1				
47	90501–10064	SPRING, COMPRESSION RESSORT, COMPRESSION	1	1				
48	654–45635–00	PLUNGER, SHIFT POUSSOIR D'EMBRAYAGE	1	1				
49	6E0–45611–01	SHAFT, PROPELLER ARBRE, HELICE	1	1				
50	6L5–45987–01	SPACER 1 ENTRETOISE 1	1	1				
51	6L5–45616–00	NUT, PROPELLER CONE, HELICE	1	1				

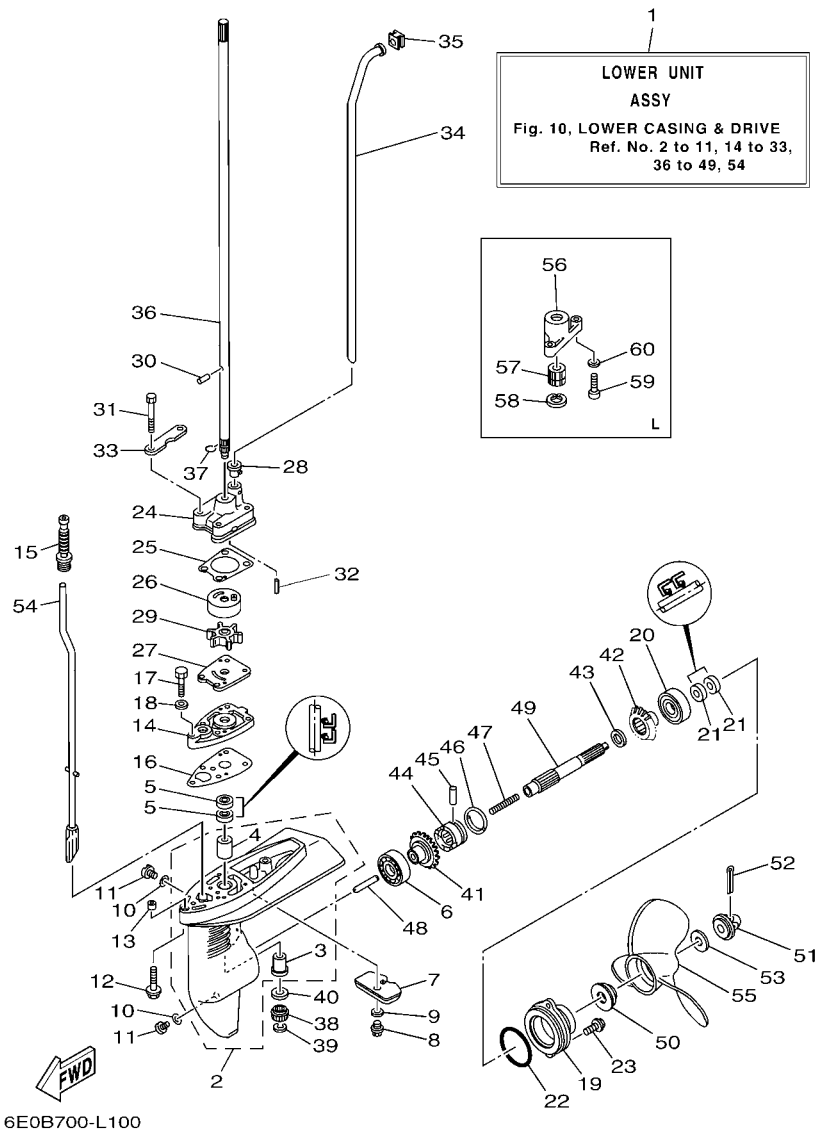

FIG. 10 LOWER CASING & DRIVE — BOITIER D HELICE TRANSMISSION

REF. NO.	PART NO. N° PIECES	DESCRIPTION DESCRIPTION	6E0C	6E3C				REMARKS REMARQUES
52	91490–25030	PIN. COTTER GOUPILLE	1	1				
53	90201–08M54	WASHER, PLATE RONDELLE, PLATE	1	1				
54	6E0–44150–00	SHIFT CAM ASSY CAME D'INVERSION	1	1				S(17.5") S(17.5")
	6E0–44150–10	SHIFT CAM ASSY CAME D'INVERSION		1				L(22.5") L(22.5")
55	6E0–45941–01	PROPELLER (3X7-1/2"X8"-BA) HELICE (3X7-1/2"X8"-BA)	1	1				UR UR
	6E0–45943–01	PROPELLER (3X7-1/2"X7"-BA) HELICE (3X7-1/2"X7"-BA)	1	1				UR UR
	6E0–45949–00	PROPELLER (3X7-1/4"X6-1/2"-BA) HELICE (3X7-1/4"X6-1/2"-BA)	1	1				UR UR
56	6E0–45331–00–CA	HOUSING, BEARING FLASQUE, ROULEMENT		1				L(22.5") L(22.5")
57	6E0–45318–01	BUSHING, DRIVE SHAFT DOUILLE, ARBRE MOTEUR		1				L(22.5") L(22.5")
58	93420–22M03	CIRCLIP CIRCLIP, TYPE S		1				L(22.5") L(22.5")
59	97880–05025	SCREW, PAN HEAD VIS, TETE TRONCONIQUE		2				L(22.5") L(22.5")
60	92990–05600	WASHER, PLATE RONDELLE, PLATE		2				L(22.5") L(22.5")

FIG. 11 FUEL TANK RESERVOIR A CARBURANT

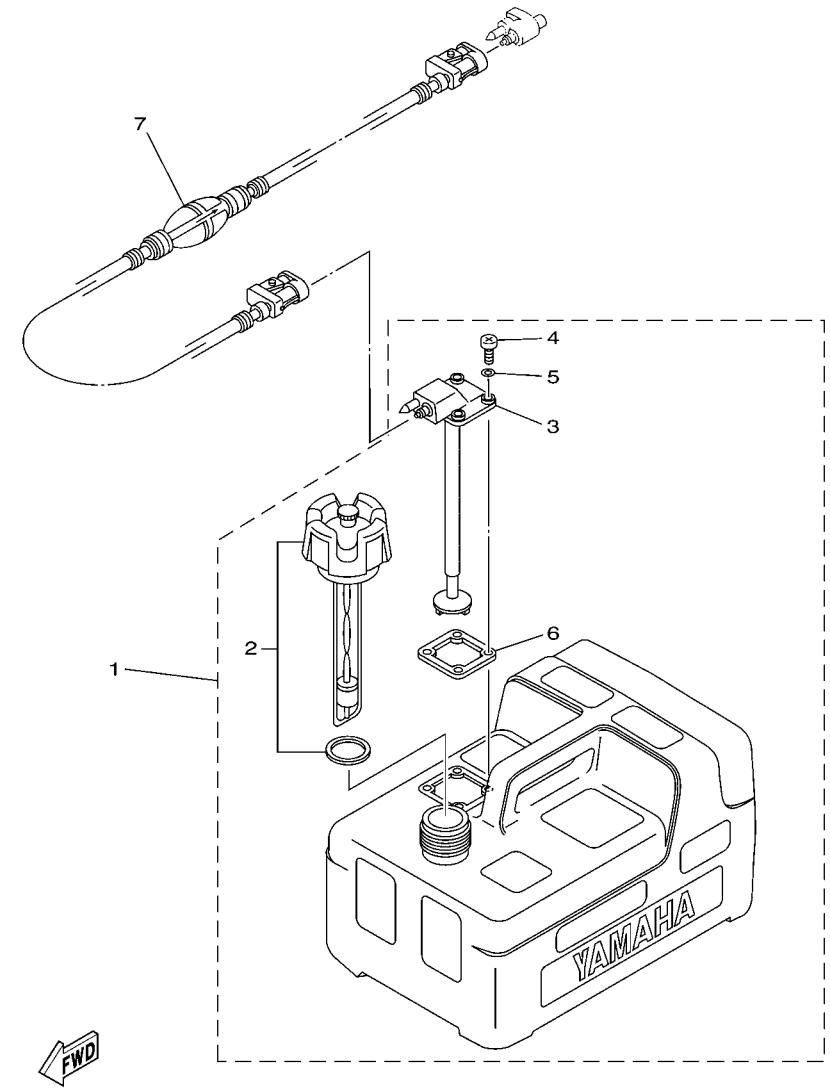

66M4100-D270

REF. NO.	PART NO. N° PIECES	DESCRIPTION DESCRIPTION	6E0C	6E3C				REMARKS REMARQUES
1	6YL–24201–05	FUEL TANK ASSY (12L) RESERVOIR A ESSENCE (ENS.) 12L		1				AP AP
2	6YL–24610–01	.CAP ASSY .BOUCHON		1				
3	6YL–24260–01	.FUEL METER ASSY .INDICATEUR DE CARBURANT		1				
4	90157–05M16	.SCREW, PAN HEAD .VIS, TETE TRONCONIQUE		4				
5	6YL–24329–00	.SEAL .JOINT		4				
6	6YL–24268–01	.GASKET, FUEL METER .JOINT, JAUGE A CARBURANT		1				
7	6YL–24306–54	FUEL PIPE COMP. 1 DURITE A ESSENCE 1		1				AP AP

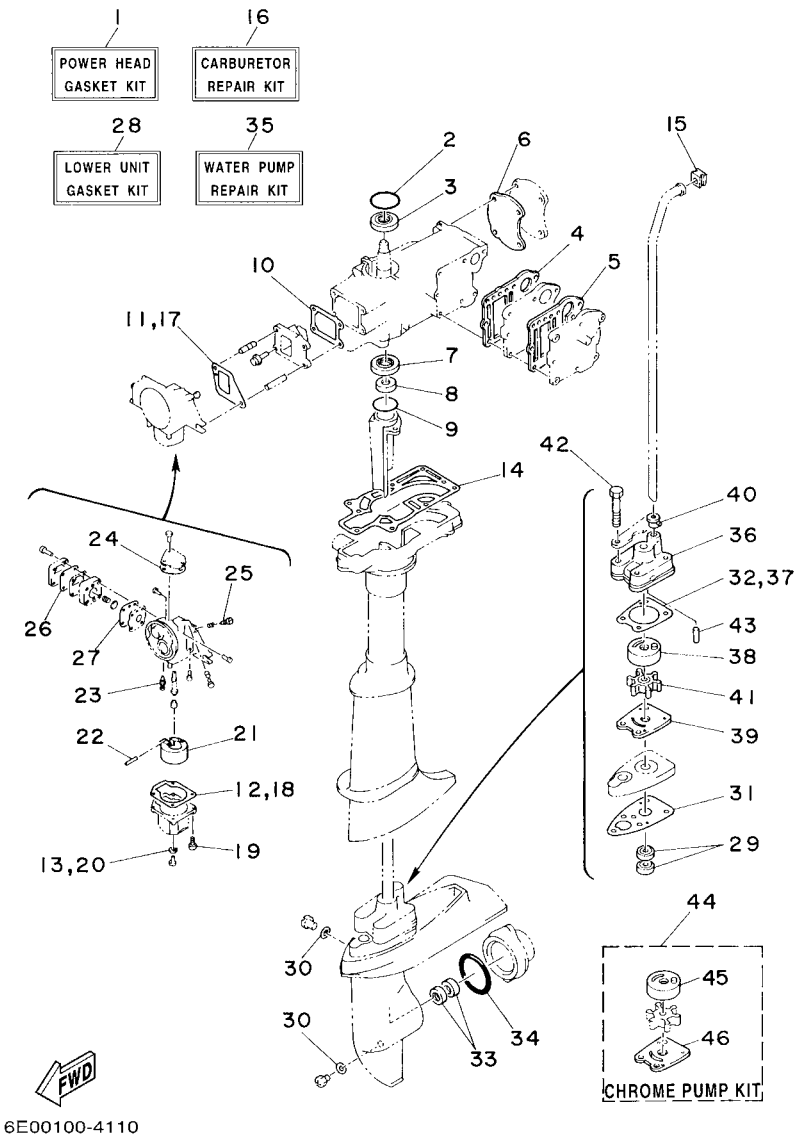

FIG. 12 REPAIR KIT — KITS DE REPARATION

REF. NO.	PART NO. N° PIECES	DESCRIPTION DESCRIPTION	6E0C	6E3C				REMARKS REMARQUES
1	6E0–W0001–A4	POWER HEAD GASKET KIT POCHETTE DE JINTS TETE MOTRICE	1					
	6E3–W0001–A4	POWER HEAD GASKET KIT POCHETTE DE JINTS TETE MOTRICE		1				
2	93210–42159	.O-RING .JOINT TORIQUE	1	1				
3	93102–20M25	.OIL SEAL .JOINT SPY	1	1				
4	6E0–41112–A1	.GASKET, EXHAUST INNER COVER .JOINT, PLAQUE D'ECHAPPEMENT	1					
	6E3–41112–A1	.GASKET, EXHAUST INNER COVER .JOINT, PLAQUE D'ECHAPPEMENT		1				
5	6E0–41114–A1	.GASKET, EXHAUST OUTER COVER .JOINT, COUVERCLE D'ECHAPPEMENT	1					
	6E3–41114–A1	.GASKET, EXHAUST OUTER COVER .JOINT, COUVERCLE D'ECHAPPEMENT		1				
6	6E0–11193–A1	.GASKET, HEAD COVER 1 .JOINT, COUVERCLE DE CULASSE 1	1					
	6E3–11193–A1	.GASKET, HEAD COVER 1 .JOINT, COUVERCLE DE CULASSE 1		1				
7	93101–20M29	.OIL SEAL .JOINT SPY	1	1				
8	93101–10M25	.OIL SEAL .JOINT SPY	1	1				
9	93210–31MJ5	.O-RING .JOINT TORIQUE	1	1				
10	6E0–13621–A2	.GASKET, VALVE SEAT .JOINT, SIEGE DE CLAPET	1	1				
11	6E0–14198–A0	.GASKET .JOINT	1	1				
12	6E0–14384–00	.GASKET, FLOAT CHAMBER .JOINT, CUVE DE FLOTTEUR	1	1				
13	646–14198–01	.GASKET .JOINT	1	1				
14	6E0–45113–A1	.GASKET, UPPER CASING .JOINT, TUBE D'ARBRE	1	1				
15	646–44365–00	.DAMPER, WATER SEAL 1 .JOINT, TUBE D'EAU 1	1	1				
16	6E0–W0093–04	CARBURETOR REPAIR KIT KIT DE REPARATION CARBURATEUR	1	1				
17	6E0–14198–A0	.GASKET .JOINT	1	1				
18	6E0–14384–00	.GASKET, FLOAT CHAMBER .JOINT, CUVE DE FLOTTEUR	1	1				
19	97980–04116	.SCREW, WITH WASHER .VIS, AVEC RONDELLE	4	4				
20	646–14198–01	.GASKET .JOINT	1	1				
21	6E7–14385–01	.FLOAT .FLOTTEUR	1	1				
22	647–14386–00	.PIN, FLOAT .AXE, FLOTTEUR	1	1				
23	6F5–14392–00	.VALVE, NEEDLE .POINTEAU	1	1				

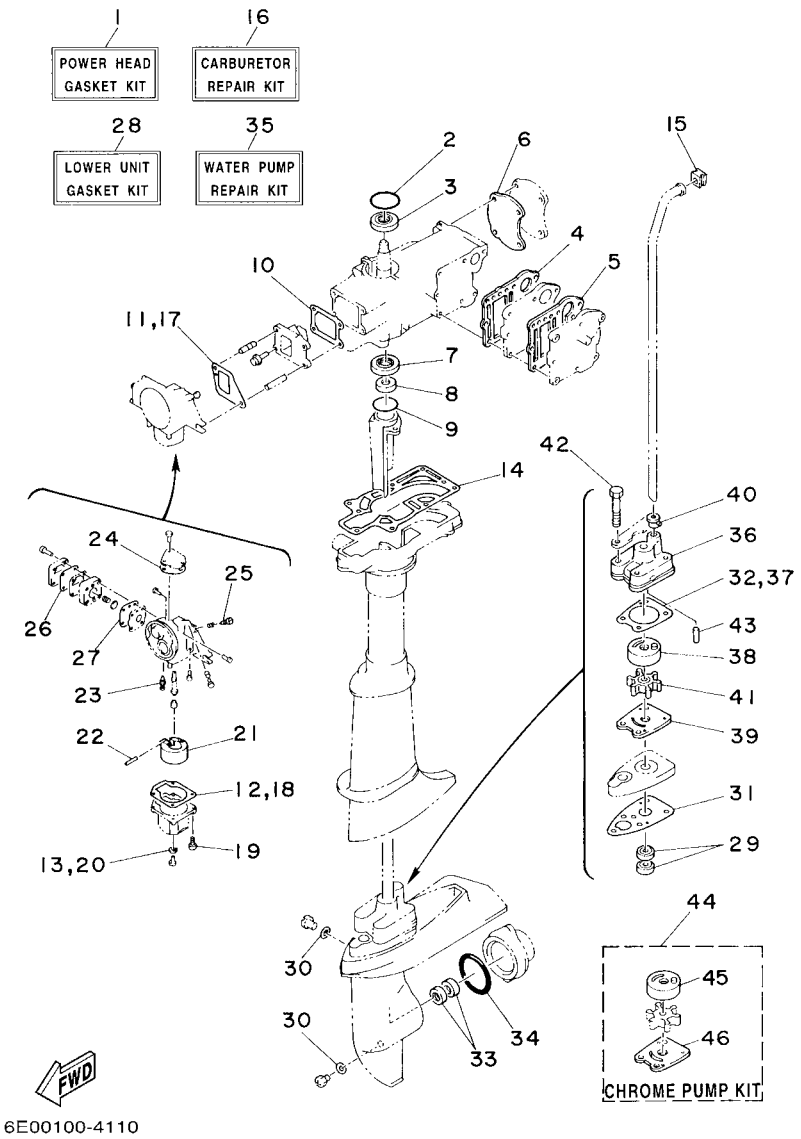

FIG. 12 REPAIR KIT — KITS DE REPARATION

REF. NO.	PART NO. N° PIECES	DESCRIPTION DESCRIPTION	6E0C	6E3C				REMARKS REMARQUES
24	6E0–14227–00	.GASKET .JOINT	1	1				
25	647–14323–00	.SCREW, AIR ADJUSTING .VIS DE DOSEUR D'AIR	1	1				
26	6E0–24471–00	.DIAPHRAGM .DIAPHRAGME	1	1				
27	6E0–24411–00	.DIAPHRAGM .DIAPHRAGME	1	1				
28	6E0–W0001–C1	LOWER UNIT GASKET KIT POCHETTE DE JOINTS EMBASE	1	1				
29	93101–10M14	.OIL SEAL .JOINT SPY	2	2				
30	90430–08020	.GASKET .JOINT	3	3				
31	6E0–45315–A0	.PACKING, LOWER CASING .JOINT, BOITIER D'HELICE	1	1				
32	6E0–44315–A0	.GASKET, WATER PUMP .JOINT, POMPE A EAU	1	1				
33	93101–13M12	.OIL SEAL .JOINT SPY	2	2				
34	93210–48214	.O-RING .JOINT TORIQUE	1	1				
35	6E0–W0078–A3	WATER PUMP REPAIR KIT KIT DE REPARATION DE LA POMPE	1	1				
36	6E0–44311–00	.HOUSING, WATER PUMP .CORPS, POMPE A EAU	1	1				
37	6E0–44315–A0	.GASKET, WATER PUMP .JOINT, POMPE A EAU	1	1				
38	6E0–44322–02	.INSERT, CARTRIDGE .CUVETTE	1	1				
39	6E0–44323–00	.OUTER PLATE, CARTRIDGE .PLAQUE EXTERIEURE	1	1				
40	6E0–44366–00	.DAMPER, WATER SEAL 2 .JOINT, TUBE D'EAU 2	1	1				
41	6E0–44352–00	.IMPELLER .TURBINE	1	1				
42	97095–06045	.BOLT .BOULON	4	4				
43	93604–18080	.PIN, DOWEL .CLAVETTE	2	2				
44	6E0–W0078–0A	CHROME PUMP KIT KIT DE POMPE A EAU CHROMEE	1	1				
45	6E0–44322–40	.INSERT, CARTRIDGE .CUVETTE	1	1				
46	6E0–44323–40	.OUTER PLATE, CARTRIDGE .PLAQUE EXTERIEURE	1	1				

NUMERICAL INDEX
INDEX NUMERIQUE

PART NO. N° PIECES	REF. NO.
6E0–11191–01–1S	2 – 21
6E3–11191–01–1S	2 – 21
6E0–11193–A1	2 – 22
	12 – 6
6E3–11193–A1	2 – 22
	12 – 6
650–11370–01	2 – 3
6E5–11372–01	2 – 5
6E0–11400–00	2 – 31
6E3–11400–00	2 – 31
6E0–11412–00	2 – 32
6E3–11412–00	2 – 32
6E0–11422–00	2 – 33
6E3–11422–00	2 – 33
6G1–11610–00	2 – 42
6J1–11610–00	2 – 42
6E0–11631–00–98	2 – 41
6E3–11631–00–98	2 – 41
6G1–11633–00	2 – 44
6E0–11651–01	2 – 37
6G1–11681–00	2 – 34
6E5–12411–02	2 – 46
6E5–12412–00	2 – 47
6E0–13610–00	3 – 1
6J1–13610–00	3 – 1
6E0–13621–A2	3 – 3
	12 – 10
6E0–14157–00	3 – 17
6E0–14159–00	3 – 34
6E0–14180–00	3 – 6
646–14198–01	3 – 8
	12 – 13
	12 – 20
6E0–14198–A0	3 – 35
	12 – 11
	12 – 17
646–14212–01	3 – 21
6E0–14227–00	3 – 18
	12 – 24
6E0–14301–05	3 – 5
6E3–14301–05	3 – 5
664–14321–01	3 – 22
647–14323–00	3 – 20
	12 – 25
647–14326–00	3 – 24
6E0–14341–01	3 – 14
6E3–14341–02	3 – 14
648–14342–23	3 – 23

PART NO. N° PIECES	REF. NO.
648–14342–26	3 – 23
648–14343–40	3 – 15
6E0–14346–00	3 – 31
6E0–14381–02	3 – 7
6E0–14384–00	3 – 10
	12 – 12
	12 – 18
6E7–14385–01	3 – 12
	12 – 21
647–14386–00	3 – 13
	12 – 22
6F5–14392–00	3 – 16
	12 – 23
6E0–14417–00	3 – 38
6E0–14418–00	3 – 39
624–14485–00	2 – 4
6E0–15100–01	2 – 2
6E3–15100–02	2 – 2
6E0–15359–01–94	5 – 5
6E0–15396–03–CA	2 – 16
6E0–15705–00	4 – 11
6E0–15710–73–94	4 – 1
6E4–15710–74–94	4 – 1
6E4–15711–72–94	4 – 2
6E0–15714–01	4 – 3
6E0–15717–00	4 – 5
6E0–15723–00–94	5 – 2
677–15741–01	4 – 9
6E4–15746–70	4 – 23
6E4–15747–70	4 – 26
656–15748–00	4 – 19
6G1–15755–00	4 – 14
6E0–15758–01	4 – 15
6E3–15758–01	4 – 15
6E0–15761–00	4 – 16
6E4–15770–70	4 – 21
6E0–15772–71	4 – 22
6E4–15772–71	4 – 22
6G1–15779–00	4 – 12
67D–21757–00	7 – 21
6E3–24111–00	7 – 13
6E3–24115–00	7 – 23
6E0–24181–00	7 – 30
6E0–24182–00	7 – 10
6E3–24182–00	7 – 10
6E0–24183–00	5 – 19
6YL–24201–05	11 – 1
6E3–24217–00	7 – 51

PART NO. N° PIECES	REF. NO.
6L5–24251–00	7 – 31
68T–24251–01	7 – 37
6YL–24260–01	11 – 3
6YL–24268–01	11 – 6
6G1–24304–02	7 – 39
6YL–24306–54	11 – 7
6E3–24311–00	7 – 32
6E3–24313–00	7 – 41
6E3–24314–00	7 – 35
6E3–24315–00	7 – 42
6YL–24329–00	11 – 5
6E0–24378–00	2 – 9
6E0–24411–00	3 – 32
	12 – 27
6E0–24412–00	3 – 29
6E0–24413–00	3 – 26
6E0–24423–00	3 – 30
6E0–24434–00	3 – 33
6E0–24435–00	3 – 28
6E0–24471–00	3 – 27
	12 – 26
6E0–24500–10	7 – 34
6J1–24524–00	7 – 47
6E0–24591–10	7 – 50
6YL–24610–01	11 – 2
68D–24610–10	7 – 14
68D–24612–00	7 – 15
69M–24633–00	7 – 20
624–24634–00	7 – 19
6E3–24641–10	7 – 22
6E0–24641–20	7 – 22
6E0–26301–01	8 – 24
626–28193–01–94	9 – 55
6A1–28199–7U–D0	1 – 15
6A1–28199–7U–E0	1 – 15
6A1–28199–7U–F0	1 – 15
6A1–28199–7U–G0	1 – 15
6A1–28199–7U–H0	1 – 15
6A1–28199–7U–S0	1 – 15
6A1–28199–8V–K0	1 – 16
6A1–28199–8V–L0	1 – 16
6A1–28199–8V–M0	1 – 16
6A1–28199–8V–N0	1 – 16
6A1–28199–8V–P0	1 – 16
6A1–28199–8V–R0	1 – 16
6E0–41111–01–1S	2 – 24
6E3–41111–01–1S	2 – 24
6E0–41112–A1	2 – 25

PART NO. N° PIECES	REF. NO.
6E0–41112–A1	12 – 4
6E3–41112–A1	2 – 25
	12 – 4
6E0–41113–01–1S	2 – 26
6E3–41113–01–1S	2 – 26
6E0–41114–A1	2 – 27
	12 – 5
6E3–41114–A1	2 – 27
	12 – 5
6E0–41256–00	3 – 43
661–41262–02	3 – 47
6E0–41271–01	3 – 44
6E0–41272–00	3 – 45
6E0–42111–02–4D	8 – 1
6E0–42119–00	8 – 14
6E0–42125–00	8 – 9
6E4–42129–00	8 – 3
6E0–42129–02	8 – 2
6E0–42131–02–94	8 – 5
6E0–42134–02	8 – 10
6E0–42137–10	8 – 16
6E0–42138–01	8 – 21
6E0–42159–02	8 – 22
6E0–42177–00	8 – 15
6E0–42528–03	9 – 47
6L5–42529–01	9 – 50
6E0–42537–02	9 – 43
6E0–42538–02	9 – 44
6E0–42539–00	9 – 45
6E0–42542–00	7 – 11
6E0–42549–00	9 – 46
6L5–42561–00	9 – 51
6E3–42610–60	1 – 1
6E0–42610–90	1 – 1
6E0–42615–00	1 – 2
6E0–42647–01	1 – 3
6E0–42651–02	1 – 4
6E0–42675–40	1 – 6
6E0–42676–40	1 – 7
6E0–42678–40	1 – 8
6E3–42678–40	1 – 8
6E0–42681–40	1 – 10
	1 – 11
6S7–42698–40	1 – 12
6S7–42698–50	1 – 13
6E0–42711–10–4D	7 – 1
6AH–42794–40	8 – 40
6AH–42794–50	8 – 41

PART NO. N° PIECES	REF. NO.
6E0–42815–00–4D	7 – 2
6E0–42816–00	7 – 4
6E0–43111–02–4D	9 – 11
6E0–43112–01–4D	9 – 12
6A1–43113–01	9 – 19
620–43114–00	9 – 13
6E0–43116–01	9 – 14
6E0–43118–01	9 – 15
6E0–43160–01	9 – 36
689–43165–00	9 – 37
6E0–43181–00	9 – 29
620–43189–00	9 – 32
6E0–43311–04–4D	9 – 25
6E0–43312–02–4D	9 – 26
6E0–43313–00–94	9 – 31
6E0–43614–00–CA	9 – 39
6E0–43632–00	9 – 30
6E4–44111–72–4D	8 – 25
6E0–44116–00	8 – 29
6E0–44121–00	8 – 32
6E0–44143–00	8 – 34
6E0–44143–10	8 – 34
6E0–44145–00	8 – 37
6E0–44146–00	8 – 38
6G1–44147–00	10 – 15
6E0–44150–00	10 – 54
6E0–44150–10	10 – 54
6E0–44191–11	1 – 9
6L5–44196–00	9 – 52
6L5–44197–00	9 – 53
6E0–44311–00	10 – 24
	12 – 36
6E0–44315–A0	10 – 25
	12 – 32
	12 – 37
6E0–44322–02	10 – 26
	12 – 38
6E0–44322–40	12 – 45
6E0–44323–00	10 – 27
	12 – 39
6E0–44323–40	12 – 46
6E0–44328–00	10 – 33
6E0–44352–00	10 – 29
	12 – 41
6E0–44361–00	10 – 34
6E0–44361–10	10 – 34
646–44365–00	10 – 35
	12 – 15

PART NO. N° PIECES	REF. NO.
6E0–44366–00	10 – 28
	12 – 40
6E0–45111–02–4D	9 – 1
6E0–45111–12–4D	9 – 1
6E0–45113–A1	2 – 48
	12 – 14
647–45151–01	9 – 9
6L5–45251–03	10 – 7
6E0–45300–03–4D	10 – 1
6E0–45300–13–4D	10 – 1
6E0–45311–02–4D	10 – 2
6E0–45315–A0	10 – 16
	12 – 31
6E0–45316–09	10 – 4
6E0–45317–09	10 – 3
6E0–45318–01	10 – 57
6E0–45321–01–CA	10 – 14
6E0–45331–00–CA	10 – 56
6E0–45361–01–4D	10 – 19
6E0–45511–01	10 – 36
6E0–45511–11	10 – 36
6E0–45551–00	10 – 38
6E0–45560–00	10 – 41
6E0–45570–00	10 – 42
6E0–45611–01	10 – 49
6L5–45616–00	10 – 51
6E0–45631–00	10 – 44
654–45633–00	10 – 46
654–45635–00	10 – 48
6E0–45941–01	10 – 55
6E0–45943–01	10 – 55
6E0–45949–00	10 – 55
6L5–45987–01	10 – 50
6E0–81303–40	5 – 23
6E0–81303–80	5 – 23
6E0–81328–70	5 – 13
6E0–81336–70	5 – 12
6AH–81994–40	7 – 55
6AH–81994–50	7 – 56
6AH–81995–40	4 – 31
6AH–81995–50	4 – 32
6E0–82316–01–94	6 – 3
6A0–82317–00	7 – 26
6E0–82317–00	6 – 4
663–82370–01	6 – 2
6E3–82370–21	6 – 2
682–82556–00	7 – 53
6E0–82575–00	7 – 52

NUMERICAL INDEX
INDEX NUMERIQUE

PART NO. N° PIECES	REF. NO.
689–8257Y–00	7 – 54
6E0–85520–70	5 – 6
6E0–85540–71	6 – 11
6E0–85548–00	6 – 10
6E0–85550–72	5 – 1
6E0–85560–71	5 – 4
6E0–85570–00	6 – 5
6E0–85592–70	5 – 10
6E0–85595–70	5 – 8
6E0–W0001–A4	12 – 1
6E3–W0001–A4	12 – 1
6E0–W0001–C1	12 – 28
6E0–W0004–00	3 – 2
6J1–W0004–00	3 – 2
6E0–W0078–0A	12 – 44
6E0–W0078–A3	12 – 35
6E0–W0090–04–1S	2 – 1
6E3–W0090–04–1S	2 – 1
6E0–W0093–04	12 – 16
656–W2810–02	1 – 14
90101–06335	9 – 22
90101–08M07	9 – 17
90105–06035	2 – 29
90105–06037	2 – 28
	2 – 28
90105–06039	2 – 23
	2 – 30
90105–06M14	4 – 17
	5 – 3
90105–06M16	2 – 7
90105–06M17	2 – 8
90116–06M08	3 – 49
90119–06M18	4 – 25
90119–06M40	10 – 12
90152–05011	8 – 19
90157–05M16	11 – 4
90159–04035	5 – 14
90159–04036	5 – 9
90159–05037	5 – 11
90159–05038	5 – 7
90159–05040	5 – 24
90170–10113	5 – 21
90170–16M35	7 – 46
90185–08057	9 – 20
90201–06M30	4 – 8
90201–08M03	9 – 18
90201–08M54	10 – 53
90201–10119	8 – 18

PART NO. N° PIECES	REF. NO.
90201–10126	5 – 22
90201–11M49	10 – 40
90201–13M50	10 – 43
90201–32M48	2 – 40
90202–05088	4 – 29
90202–07M22	8 – 13
90202–12M16	3 – 46
90202–16061	8 – 28
90206–12052	7 – 5
90206–16M06	8 – 27
90209–18112	2 – 38
90243–04M01	9 – 16
90250–05046	10 – 45
90266–04M00	1 – 5
90266–04M05	9 – 54
90269–02M09	8 – 20
90280–04M06	5 – 20
90340–08002	10 – 11
90386–12069	7 – 3
90386–26M30	8 – 4
90386–26M33	8 – 8
90387–06119	7 – 27
90387–06504	4 – 24
90387–06M11	9 – 21
90387–06M14	10 – 13
90430–08020	10 – 10
	12 – 30
90445–07M00	2 – 11
90445–07M28	2 – 12
	2 – 14
90445–07M32	2 – 13
90464–09M21	7 – 44
90464–10M53	7 – 45
90464–12010	7 – 38
90465–08M62	7 – 49
90465–13M11	7 – 33
90467–06016	2 – 10
	2 – 15
90467–08004	7 – 36
	7 – 40
	7 – 43
90467–08M01	10 – 37
90468–07M02	2 – 49
90468–10005	4 – 27
90468–100A0	7 – 18
90480–10M13	9 – 10
90480–14M14	7 – 8
90480–25161	6 – 8

PART NO. N° PIECES	REF. NO.
90501–10064	10 – 47
90501–100A5	7 – 16
90501–10227	4 – 20
90501–23215	8 – 17
90502–08M05	9 – 49
90508–14M10	9 – 40
90508–14M11	9 – 41
90508–16020	9 – 34
90508–16021	9 – 35
90510–08M03	4 – 4
91490–12010	8 – 12
91490–16010	4 – 30
	8 – 36
91490–25030	10 – 52
91690–30008	9 – 38
91790–05010	4 – 28
92903–05600	8 – 7
92990–04200	7 – 17
92990–05600	3 – 41
	8 – 35
	10 – 60
92990–06300	10 – 9
92990–06600	9 – 23
92995–06100	5 – 18
92995–06600	2 – 20
	3 – 37
	6 – 7
	7 – 25
	7 – 29
	9 – 4
	9 – 6
	10 – 18
93101–10M14	10 – 5
	12 – 29
93101–10M25	2 – 18
	12 – 8
93101–13M12	10 – 21
	12 – 33
93101–20M29	2 – 39
	12 – 7
93102–20M25	5 – 15
	12 – 3
93210–12327	8 – 26
93210–31MJ5	2 – 17
	12 – 9
93210–42159	5 – 16
	12 – 2
93210–48214	10 – 22

PART NO. N° PIECES	REF. NO.
93210–48214	12 – 34
93306–004U0	10 – 6
	10 – 20
93306–204U0	2 – 35
93310–112V0	2 – 43
93310–418V1	2 – 36
93420–22M03	10 – 58
93430–06M02	4 – 10
93450–13022	2 – 45
93604–09066	10 – 30
93604–18080	10 – 32
	12 – 43
93606–12019	2 – 6
	9 – 2
93700–06M03	9 – 8
	9 – 27
94702–00040	2 – 50
94702–00272	2 – 50
95303–06600	4 – 7
95380–06600	9 – 24
95380–06700	3 – 36
	7 – 7
	8 – 30
	9 – 7
95380–08600	9 – 48
95627–06325	3 – 48
95895–06010	9 – 42
95895–06012	8 – 31
	10 – 8
95895–06016	3 – 4
	6 – 1
	10 – 23
95895–06020	4 – 18
	6 – 12
	7 – 9
	8 – 39
	9 – 33
95895–06025	7 – 12
	8 – 33
95895–06035	9 – 28
97013–05020	8 – 6
97080–06010	6 – 9
97095–06014	7 – 24
97095–06016	2 – 19
	5 – 17
	6 – 6
	9 – 5
97095–06025	7 – 28

PART NO. N° PIECES	REF. NO.
97095–06025	10 – 17
97095–06030	9 – 3
97095–06045	10 – 31
	12 – 42
97313–06035	4 – 6
97780–40720	3 – 42
97880–05025	3 – 40
	10 – 59
97885–05012	8 – 11
	8 – 23
97885–06030	7 – 6
97890–04007	3 – 19
97890–05006	3 – 9
97980–04116	3 – 11
	12 – 19
97980–04120	3 – 25
97980–04210	7 – 48
99001–06600	10 – 39

PART NO. N° PIECES	REF. NO.