YAMAHA

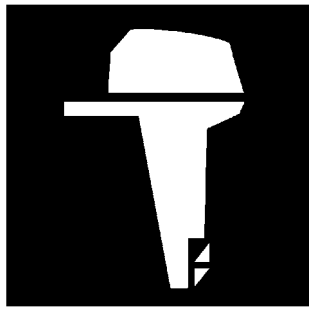

PARTS CATALOGUE
CATALOGUE DE PIECES DETACHEES

70BETO'12 (6H3B)

1L6H3-300F1

( )

YAMAHA
GENUINE
Parts & Accessories

70BETO
PARTS CATALOGUE
©2011 by Yamaha Motor Co., Ltd.
1st edition, April 2011
All rights reserved.
Any reprinting or unauthorized use
without the written permission of
Yamaha Motor Co., Ltd.
is expressly prohibited.
Printed in Japan.

70BETO
CATALOGUE DE PIECES DETACHEES
©2011 par Yamaha Motor Co., Ltd.
1re édition, avril 2011
Tous droits réservés
Toute réimpression ou utilisation
non autorisée sans la permission écrite
de la Yamaha Motor Co., Ltd.
est formellement interdite.
Imprimé au Japon

FOREWORD

This Parts Catalogue is related to the parts for the model(s) on the cover page. When you are ordering replacement parts, please refer to this Parts Catalogue and quote both part numbers and part names correctly.

1. Modifications or additions which have been made after the issue of the Parts Catalogue will be announced in the Parts News.
   It is advisable that you make the necessary corrections to the Parts Catalogue according to the Parts News.

2. Abbreviations
   The following abbreviations are used in this Parts Catalogue.

   "UR" Use specified parts number.
   "UN" Use as many as needed.
   "AP" Alternate Parts
   "LM" Locally Made (Parts need to be ordered locally)
   "F#" Frame No. (Applicable machine No.)
   "O/S" Over Size

3. The number of components for assembly
   - Parts, which are to be supplied in an assembly, are listed with a dot (.) in front of the part name as shown below.
   - The numeral appearing to the right of each component part indicates the quantity of parts for each assembly unit.

PART NO.	DESCRIPTION	Q'TY	REMARKS
2F5–83310–60	FRONT FLASHER LIGHT ASSY	2	
115–83311–60	.BULB (6V–18W)	1	

4. Applicable colours of graphics are represented in the "REMARKS" as shown below.

PART NO.	DESCRIPTION	Q'TY	REMARKS
2N4–24110–00–X5	FUEL TANK COMP.	2	MXR
3J1–24240–10	.GRAPHIC, FUEL TANK	1	FOR MXR

5. Note that the illustrations for reference in finding parts numbers are not to be used for assembling. When assembling, please use the applicable service manual.

6. The asterisk (*) before a reference number indicates modified items after the first edition.

7. Applicable Serial No.

   Engine Serial No.

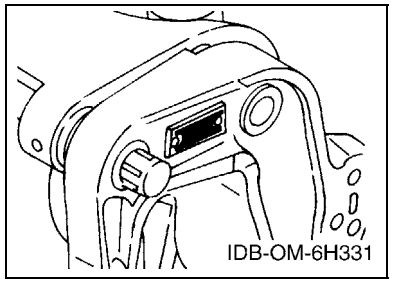

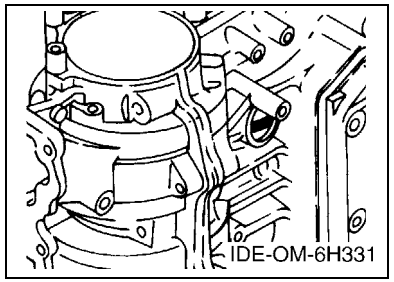

8. Applicable Engine Starting Serial No.

Model	Serial No.	Model	Serial No.
70B	6H3K-1015090		

9. Applicable Colour Code

Abbreviation	Colour Name	Colour Code
DBNM2	DARK BLUISH GRAY METALLIC 2	004D

10. Quantity Column Information

Column No.	Name Of Q'ty Column	Applicable Model
1	6H3B	70BETO

AVANT–PROPOS

Ce catalogue de pièces détachées concerne les pièces pour le(s) modèle(s) indiqué(s) sur la page de couverture. Lorsque vous commandez des pièces de rechange, veuillez vous référer à ce catalogue de pieces détachées et indiquer clairement les numéros et les noms des pièces détachées.

1. Les modifications ou ajouts ayant été effectués après la parution du catalogue de pièces détachées seront décrits dans les Bulletins d'information concernant les pièces détachées.
   Il est recommandé que vous apportiez les corrections nécessaires au catalogue des pièces détachées en vous référant aux Bulletins d'information.

2. Abréviations
   Dans ce catalogue, les abréviations suivantes sont utilisées:

   "UR" Utiliser le numéro de pièces spécifié.
   "UN" Utiliser autant que nécessaire.
   "AP" Pièces de substitution
   "LM" Fabrication locale (les pièces doivent être commandées localement.)
   "F#" N° de cadre (applicable au N° de série)
   "O/S" Surdimensionné

3. Nombre de pièces d'un assemblage
   - Les pièces fournies comme composants d'un assemblage sont précédées d'un point (.) de la manière indiquée ci–dessous.
   - Le chiffre apparaissant à la droite de chaque composant indique la quantité de pièces pour chaque unité d'assemblage.

N° PIECES	DESCRIPTION	QTE	REMARQUES
2F5–83310–60	ENS. CLIGNOTANT AVANT	2	
115–83311–60	.AMPOULE (6V–18W)	1	

4. Les couleurs concernant les graphiques sont indiquées dans la colonne "REMARQUES", comme indiqué ci–dessous.

N° PIECES	DESCRIPTION	QTE	REMARQUES
2N4–24110–00–X5	RESERVOIR A ESSENCE.	2	MXR
3J1–24240–10	.GRAPHIQUE	1	POUR MXR

5. Veuillez noter que les illustrations sont indiquées à titre de référence pour trouver les numéros de pièces, non pour être utilisées lors de l'assemblage. Lors de l'assemblage, veuillez utiliser le manuel d'entretien adéquat.

6. L'astérisque (*) placé devant un numéro de référence indique des éléments qui ont été modifiés après la première édition.

7. N° de série applicable

   N° de Série du moteur

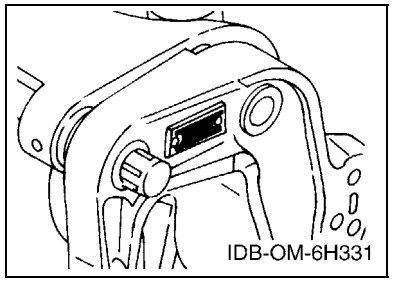

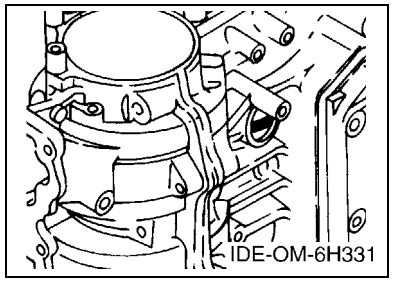

8. N° de série initial du moteur applicable

Modèle	N° de série	Modèle	N° de série
70B	6H3K-1015090		

9. Code couleur applicable

Abréviation	Nom de la couleur	Code couleur
DBNM2	DARK BLUISH GRAY METALLIC 2	004D

10. Informations relatives à la colonne Quantité

N° de la colonne	Nom de la colonne Qté	Modèle applicable
1	6H3B	70BETO

CONTENTS

TOP COWLING 1
CYLINDER & CRANKCASE 3
CRANKSHAFT & PISTON 5
INTAKE 6
CARBURETOR 7
OIL PUMP 9
FUEL 12
GENERATOR 14
ELECTRICAL 15
STARTING MOTOR 17
BOTTOM COWLING 18
CONTROL 20
BRACKET 1 22
BRACKET 2 24
POWER TRIM & TILT ASSY 26
UPPER CASING 29
LOWER CASING & DRIVE 1 30
LOWER CASING & DRIVE 2 34
FUEL TANK 36
STEERING GUIDE 37
REMOTE CONTROL BOX 38
REMOTE CONTROL ASSY 39
METER 42
OPTIONAL PARTS 43
REPAIR KIT 1 44
REPAIR KIT 2 46

INDEX

NUMERICAL INDEX 48

TABLE DES MATIERES

CAPOT SUPERIEUR 1
CYLINDRE & CARTER 3
VILEBREQUIN & PISTON 5
ADMISSION 6
CARBURATEUR 7
POMPE A HUILE 9
CARBURANT 12
GENERATRICE 14
ELECTRIQUE 15
DEMARREUR ELECTRIQUE 17
CAPOT INFERIEUR 18
COMMANDE 20
SUPPORT 1 22
SUPPORT 2 24
PUISSANCE PARER ET INCLINER 26
FOURREAU 29
BOITIER D'HELICE TRANSMISSION1 30
BOITIER D'HELICE TRANSMISSION2 34
RESERVOIR A CARBURANT 36
FIXATION DE DIRECTION 37
BOITIER DE COMMANDE A DISTANCE 38
BOITIER DE COMMANDE A DISTANCE 39
COMPTEUR 42
PIECES OPTIONNELLES 43
KITS DE REPARATION 1 44
KITS DE REPARATION 2 46

INDEX

INDEX NUMERIQUE 48

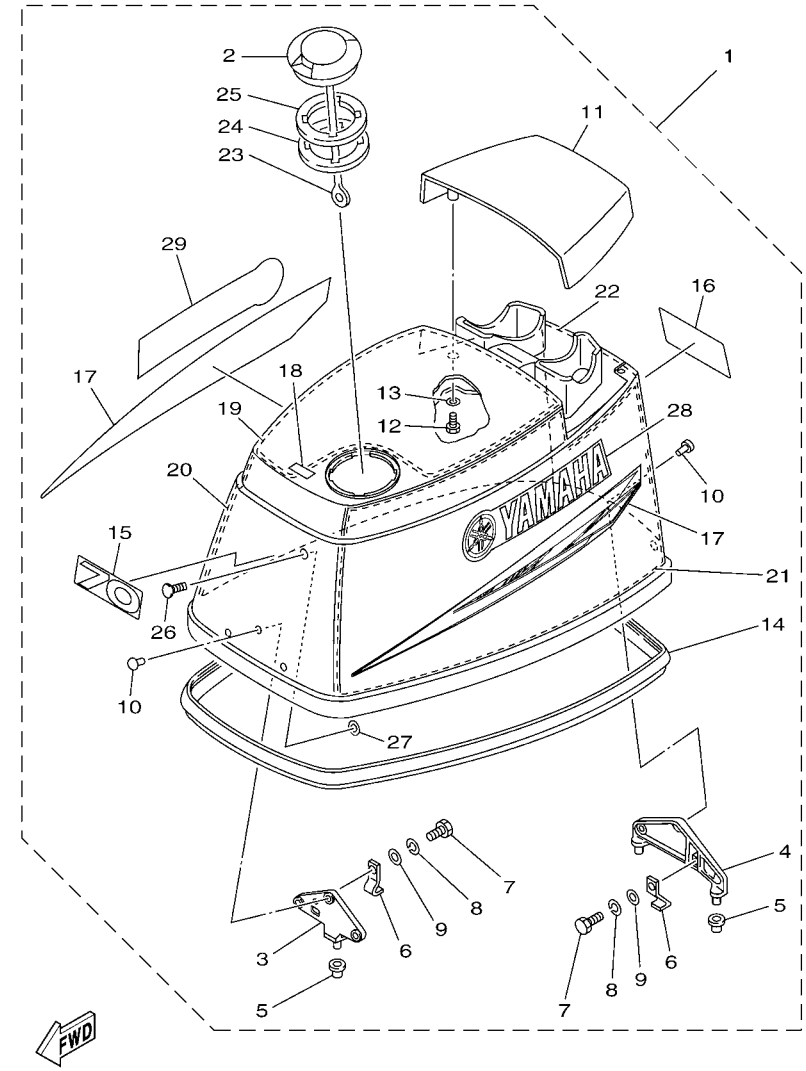

6H3B300-L010

FIG. 1 TOP COWLING — CAPOT SUPERIEUR

REF. NO.	PART NO. N° PIECES	DESCRIPTION DESCRIPTION	6H3B					REMARKS REMARQUES
1	6H3–42610–00	TOP COWLING ASSY CAPOT (ENS.)	1					
2	63D–2177H–00	.DISK CAP 2 .BOUCHON DE DISQUE 2	1					
3	6H3–42647–00	.HOLDER, CLAMP BAND .SUPPORT, SANDOW DE SERRAGE	1					
4	6H3–42649–00	.HOLDER, CLAMP BAND .SUPPORT, SANDOW DE SERRAGE	1					
5	663–42662–00	.DAMPER .AMORTISSEUR	3					
6	6H3–42652–00	.HOOK .CROCHET	2					
7	97095–06016	.BOLT .BOULON	2					
8	92995–06100	.WASHER, SPRING .RONDELLE, GROWER	2					
9	92995–06600	.WASHER .RONDELLE	2					
10	90266–06009	.RIVET .RIVET	6					
11	6H3–42613–01–4D	.MOLDING, AIR DUCT .MANCHON A AIR	1					
12	97095–06016	.BOLT .BOULON	4					
13	92995–06600	.WASHER .RONDELLE	4					
14	6H3–42615–00	.SEAL .JOINT	1					
15	6H3–42678–10	.GRAPHIC, REAR .ADHESIF, ARRIERE	1					
16	6H3–42678–10	.GRAPHIC, REAR .ADHESIF, ARRIERE	1					
17	688–W0070–40	.GRAPHIC SET .JEU DIEMBLEMES	1					
18	6H3–13436–00	.MARK .ADHESIF	1					
19	6H3–42617–10	.DAMPER, FORM .BOURRELET, CAOUTCHOUC	1					
20	6H3–42619–00	.DAMPER, FORM .BOURRELET, CAOUTCHOUC	1					
21	6H3–42627–00	.DAMPER, FORM .BOURRELET, CAOUTCHOUC	1					
22	6H3–42637–00	.DAMPER, FORM .BOURRELET, CAOUTCHOUC	1					
23	6H1–42694–00	.BAND .COLLIER	1					
24	6H3–21732–00	.SEAL 1 .JOINT 1	1					
25	6H3–21735–00	.SEAL 2 .JOINT 2	1					
26	90338–05M03	.PLUG .PLOT	1					
27	90183–05M06	.NUT, SPRING .ECROU, RESSORT	1					

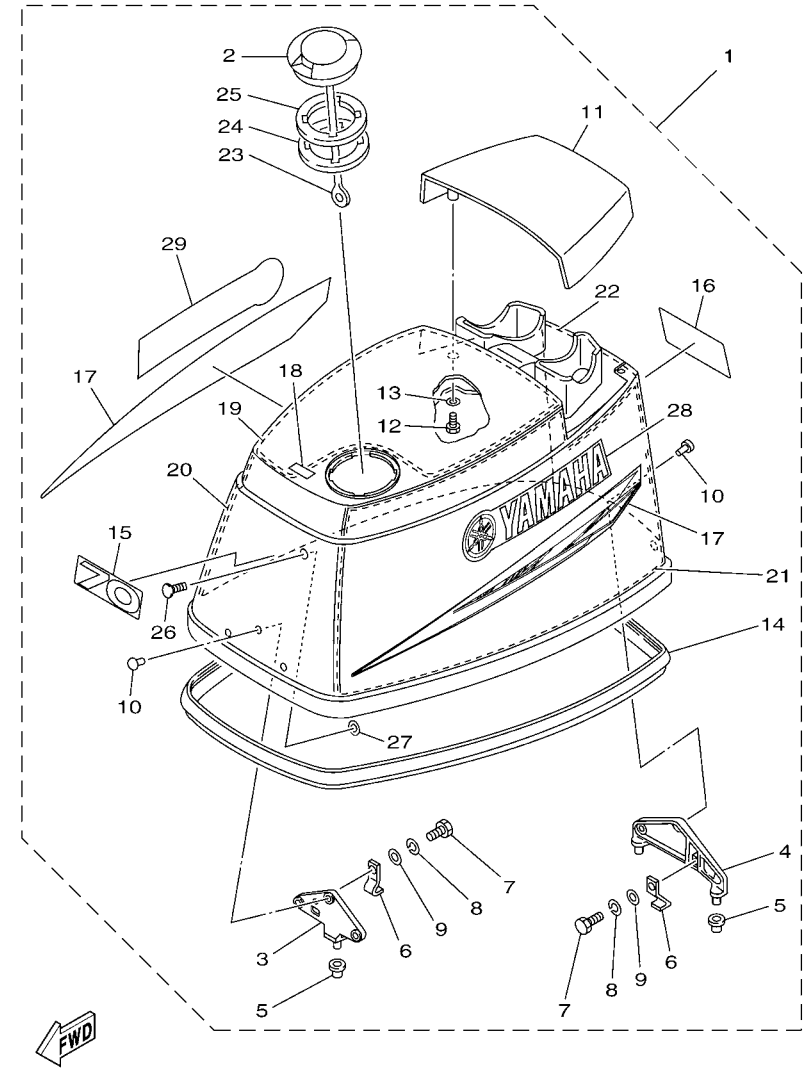

6H3B300-L010

FIG. 1 TOP COWLING — CAPOT SUPERIEUR

REF. NO.	PART NO. N° PIECES	DESCRIPTION DESCRIPTION	6H3B					REMARKS REMARQUES
28	688–42681–40	.MARK, COWLING .ADHESIF, CAPOT	1					
29	688–42681–40	.MARK, COWLING .ADHESIF, CAPOT	1					

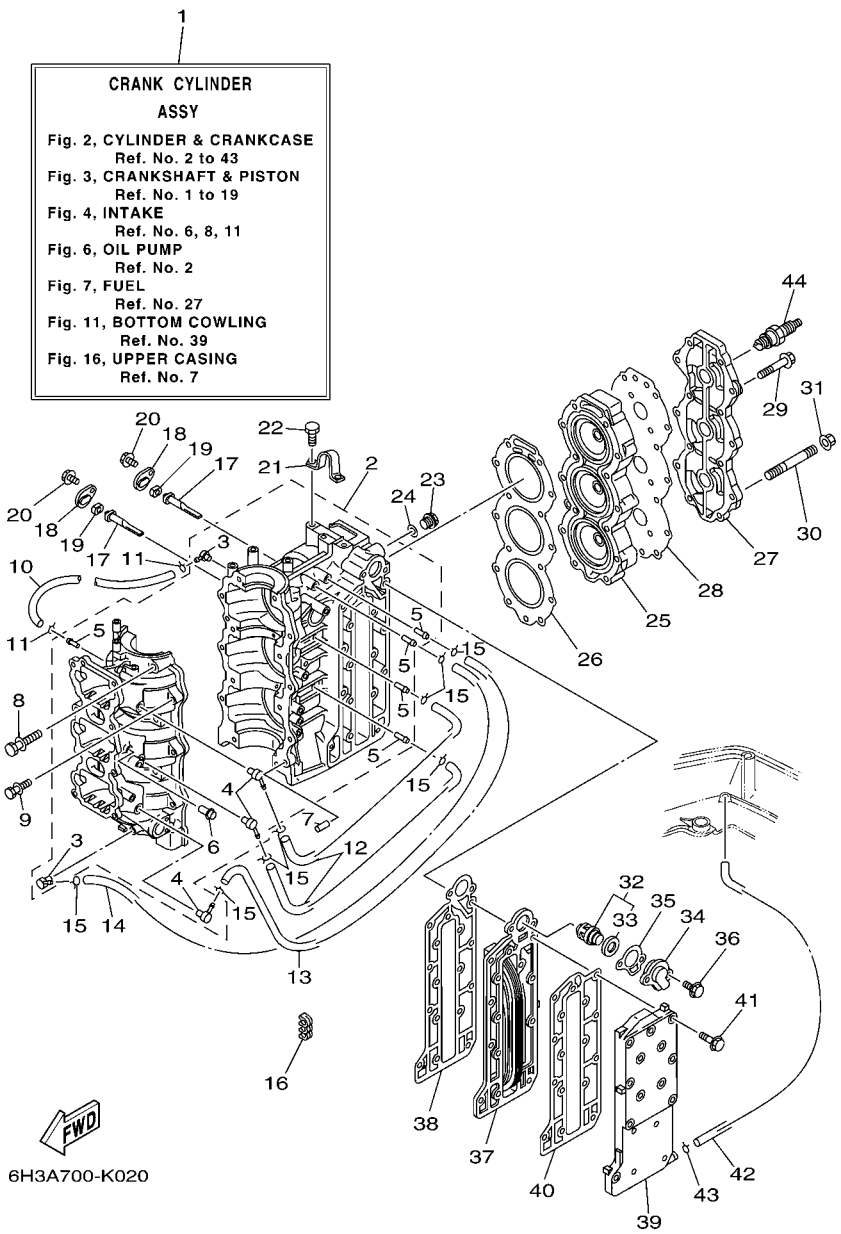

FIG. 2 CYLINDER & CRANKCASE CYLINDRE & CARTER

REF. NO.	PART NO. N° PIECES	DESCRIPTION DESCRIPTION	6H3B					REMARKS REMARQUES
1	6H3–W0090–44–1S	CRANK CYLINDER ASSY EMBIELLAGE CYLINDRE (ENS.)	1					O/I-A/CHOKE O/I-A/CHOKE
2	6H3–15100–14	CRANKCASE ASSY CARTER DE MOTEUR COMPLET	1					O/I-A/CHOKE O/I-A/CHOKE
3	688–11370–01	.CHECK VALVE ASSY .CLAPET (ENS.)	2					
4	650–11370–01	.CHECK VALVE ASSY .CLAPET (ENS.)	3					
5	624–14485–00	.PIPE, JOINT .DURITE	5					
6	650–24378–00	.PIPE, JOINT 4 .DURITE RACCORDEMENT 3	1					
7	93608–12063	PIN, DOWEL AXE	2					
8	90119–10005	BOLT, WITH WASHER BOULON, AVEC RONDELLE	8					
9	90119–08M64	BOLT, WITH WASHER BOULON, AVEC RONDELLE	6					
10	90445–07M44	HOSE (L250) DURITE (L250)	1					
11	90467–06016	CLIP JONC	2					
12	90445–07M02	HOSE (L167) DURITE (L167)	2					
13	90445–07M45	HOSE (L340) DURITE (L340)	1					
14	90445–07M82	HOSE (L440) DURITE (L440)	1					
15	90467–06016	CLIP JONC	8					
16	90464–07M05	CLAMP BRIDE	1					
17	6H3–11325–01	ANODE ANODE	2					
18	6H3–11327–00–94	COVER, ANODE COUVERCLE ANODE	2					
19	6H3–11328–00	GROMMET, ANODE PASSE-FIL	2					
20	90119–06023	BOLT, WITH WASHER BOULON, AVEC RONDELLE	2					
21	688–11119–01	HANGER, ENGINE ANNEAU, LEVAGE	1					
22	90101–08002	BOLT BOULON	2					
23	90340–14M00	PLUG, STRAIGHT SCREW PLOT, FILETE DROIT	1					
24	90430–14115	GASKET JOINT	1					
25	6H3–11111–01–1S	HEAD, CYLINDER 1 CULASSE	1					
26	6H3–11181–A2	GASKET, CYLINDER HEAD 1 JOINT, DE CULASSE 1	1					
27	6H3–11191–00–1S	COVER, CYLINDER HEAD 1 COUVERCLE, CULASSE 1	1					

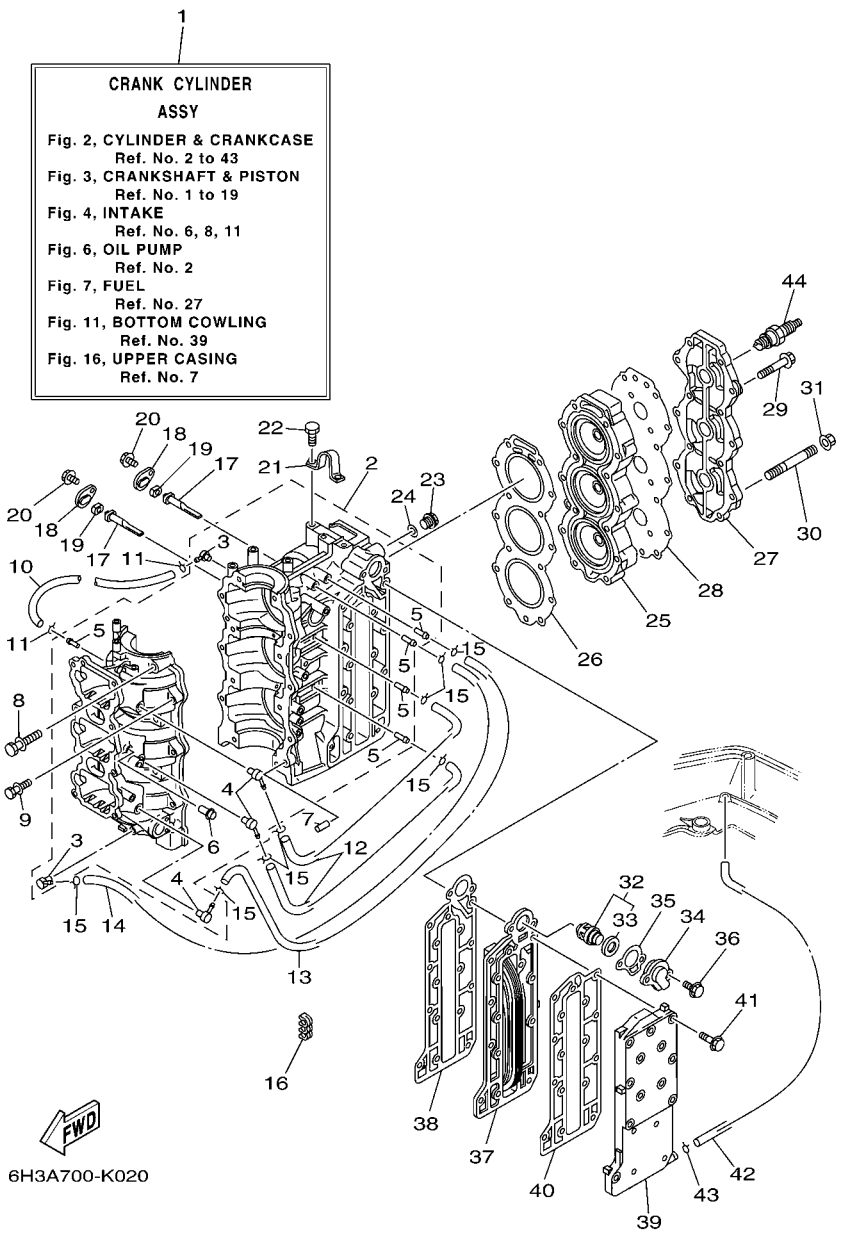

FIG. 2 CYLINDER & CRANKCASE CYLINDRE & CARTER

REF. NO.	PART NO. N° PIECES	DESCRIPTION DESCRIPTION	6H3B					REMARKS REMARQUES
28	6H3–11193–A1	GASKET, HEAD COVER 1 JOINT, COUVERCLE DE CULASSE 1	1					
29	90119–08MA5	BOLT, WITH WASHER BOULON, AVEC RONDELLE	13					
30	90116–08M69	BOLT, STUD GOUJON	1					
31	90179–08M34	NUT ECROU	1					
32	6H3–12411–11	THERMOSTAT THERMOSTAT	1					
33	688–12412–00	.SEAL, THERMOSTAT .JOINT, THERMOSTAT	1					
34	6H3–12413–00–1S	COVER, THERMOSTAT COUVERCLE, THERMOSTAT	1					
35	6H3–12414–A1	GASKET, COVER JOINT, COUVERCLE	1					
36	90119–06MA3	BOLT, WITH WASHER BOULON, AVEC RONDELLE	2					
37	6H3–41111–01–1S	INNER COVER, EXHAUST PLAQUE, ECHAPPEMENT	1					
38	6H3–41112–A0	GASKET, EXHAUST INNER COVER JOINT, PLAQUE D'ECHAPPEMENT	1					
39	6H3–41113–02–1S	OUTER COVER, EXHAUST COUVERCLE, ECHAPPEMENT	1					
40	6H3–41114–A0	GASKET, EXHAUST OUTER COVER JOINT, COUVERCLE D'ECHAPPEMENT	1					
41	90119–06MA5	BOLT, WITH WASHER BOULON, AVEC RONDELLE	16					
42	663–24312–01	PIPE 2 DURITE 2	1					
43	90467–08004	CLIP JONC	1					
44	94702–00247	PLUG, SPARK (NGK BR8HS-10) BOUGIE D'ALLUMAGE(NGK BR8HS-10	3					

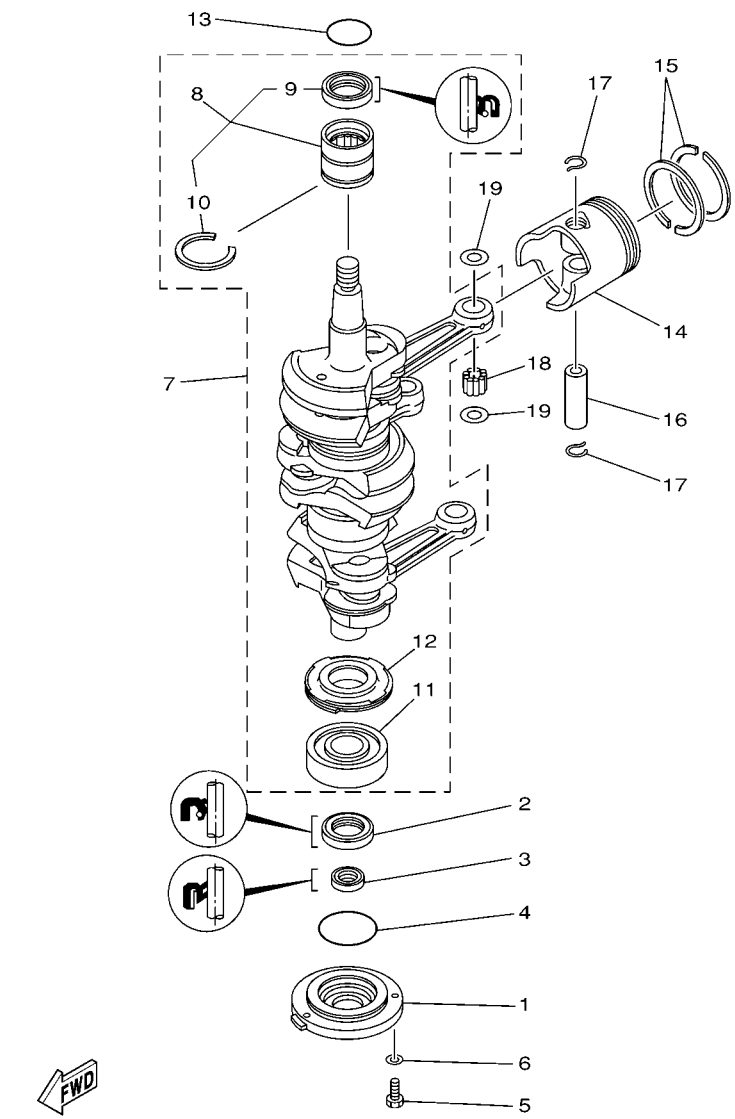

6H30010-9030

FIG. 3 CRANKSHAFT & PISTON VILEBREQUIN & PISTON

REF. NO.	PART NO. N° PIECES	DESCRIPTION DESCRIPTION	6H3B					REMARKS REMARQUES
1	6H3–15359–00–94	HOUSING, OIL SEAL LOGEMENT, BAGUE D'ETANCHEITE	1					
2	93102–30M23	OIL SEAL JOINT SPY	1					
3	93106–18M01	OIL SEAL JOINT SPY	1					
4	93210–65M50	O-RING JOINT TORIQUE	1					
5	97095–06020	BOLT BOULON	3					
6	92995–06600	WASHER RONDELLE	3					
7	6H3–11400–10	CRANKSHAFT ASSY VILEBREQUIN COMPLET	1					
8	93311–636U6	.BEARING .ROULEMENT	1					
9	93102–36M24	..OIL SEAL ..JOINT SPY	1					
10	93440–49M04	..CIRCLIP ..CIRCLIP	1					
11	93306–306V1	.BEARING .ROULEMENT	1					
12	6H3–11536–00	.GEAR, DRIVE .ENGRENAGE, MENANT	1					
13	93210–46M16	O-RING JOINT TORIQUE	1					
14	6H3–11631–01–96	PISTON (STD) PISTON (STD)	3					
	6H3–11635–01	PISTON (0.25MM O/S) PISTON (0.25MM O/S)	3					AP AP
	6H3–11636–01	PISTON (0.50MM O/S) PISTON (0.50MM O/S)	3					AP AP
15	6K5–11601–02	PISTON RING SET (STD) JEU DE SEGMENTS (STD)	3					
	6K5–11601–12	PISTON RING SET (0.25MM O/S) JEU DE SEGMENTS (0.25MM O/S)	3					AP AP
	6K5–11601–22	PISTON RING SET (0.50MM O/S) JEU DE SEGMENTS (0.50MM O/S)	3					AP AP
16	6H3–11633–00	PIN, PISTON AXE, PISTON	3					
17	688–11634–10	CLIP, PISTON PIN AGRAFE, AXE DE PISTON	6					
18	93603–18M09	PIN, DOWEL CLAVETTE	84					
19	90201–20417	WASHER, PLATE RONDELLE, PLATE	6					

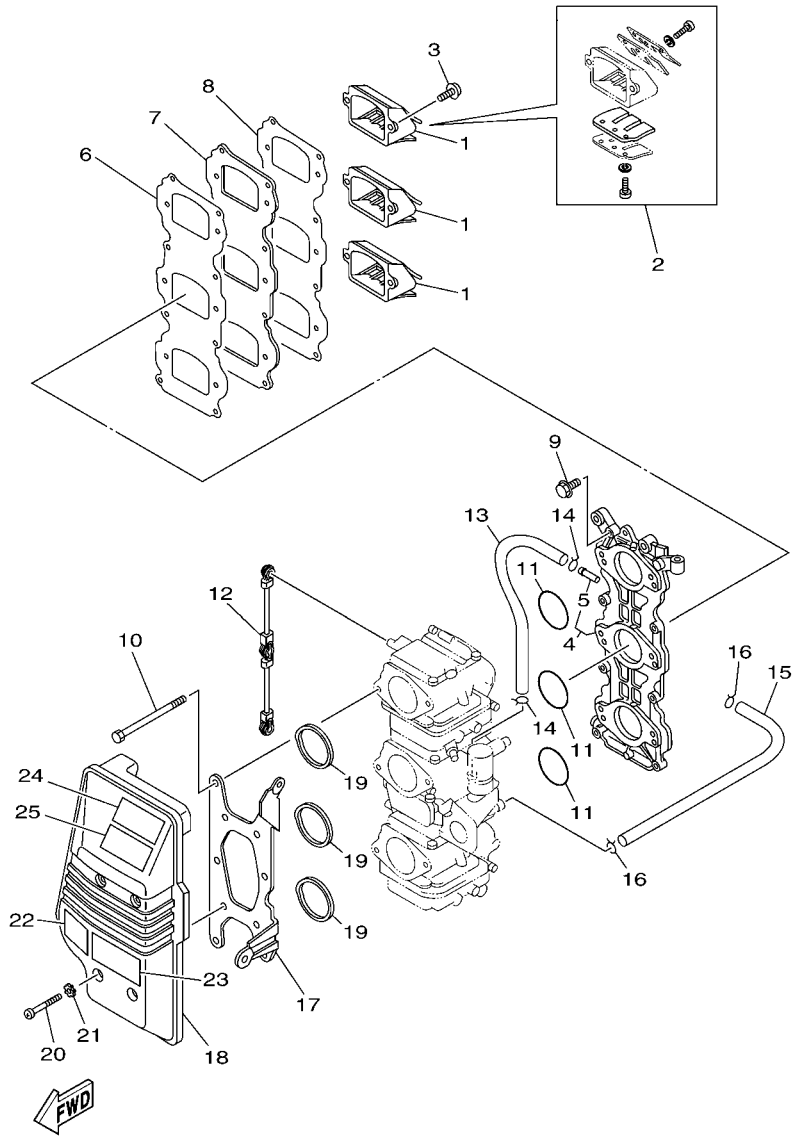

6H3A300-K040

FIG. 4 INTAKE — ADMISSION

REF. NO.	PART NO. N° PIECES	DESCRIPTION DESCRIPTION	6H3B					REMARKS REMARQUES
1	6H3–13610–00	REED VALVE ASSY CLAPET COMPLET	3					
2	688–W0004–00	.REED SET .JEU DE CLAPETS	1					
3	97980–05216	SCREW, WITH WASHER VIS, AVEC RONDELLE	6					
4	6H3–13641–13	MANIFOLD 1 TUBULURE 1	1					
5	6H1–14485–00	.PIPE, JOINT .DURITE	4					
6	6H3–13621–A1	GASKET, VALVE SEAT JOINT, SIEGE DE CLAPET	1					
7	6H3–13624–00	PLATE,REED VALVE PLAQUE DE CLAPET	1					
8	6H3–13622–A1	GASKET, VALVE SEAT JOINT, SIEGE DE CLAPET	1					
9	90119–06MA3	BOLT, WITH WASHER BOULON, AVEC RONDELLE	8					
10	97095–06095	BOLT BOULON	6					
11	93210–39ME4	O-RING JOINT TORIQUE	3					
12	6H3–41217–00	ROD, ACCEL. LEVER TIGE, LEVIER ACCELERATION	1					
13	90445–07255	HOSE (L160) DURITE (L160)	1					
14	90467–06016	CLIP JONC	2					
15	6H3–14349–00	PIPE DURITE	1					
16	90467–08004	CLIP JONC	2					
17	6H3–14413–11	STAY SUPPORT	1					
18	6H3–14440–02	SILENCER ASSY, INTAKE SIENCIEUX D'ADMISSION	1					
19	6H3–14457–01	SEAL JOINT	3					
20	97885–06045	SCREW, PAN HEAD VIS, A ENCOCHE	4					
21	90209–06M05	WASHER RONDELLE	4					
22	6H1–85711–60	MARK, CAUTION MAKER	1					
23	6K5–14488–00	LABEL, CAUTION ETIQUETTE, RECOMMANDATION	1					
24	6AH–81994–40	LABEL, SAFETY ETIQUETTE, SECURITE	1					
25	6AH–81994–50	LABEL, SAFETY ETIQUETTE, SECURITE	1					

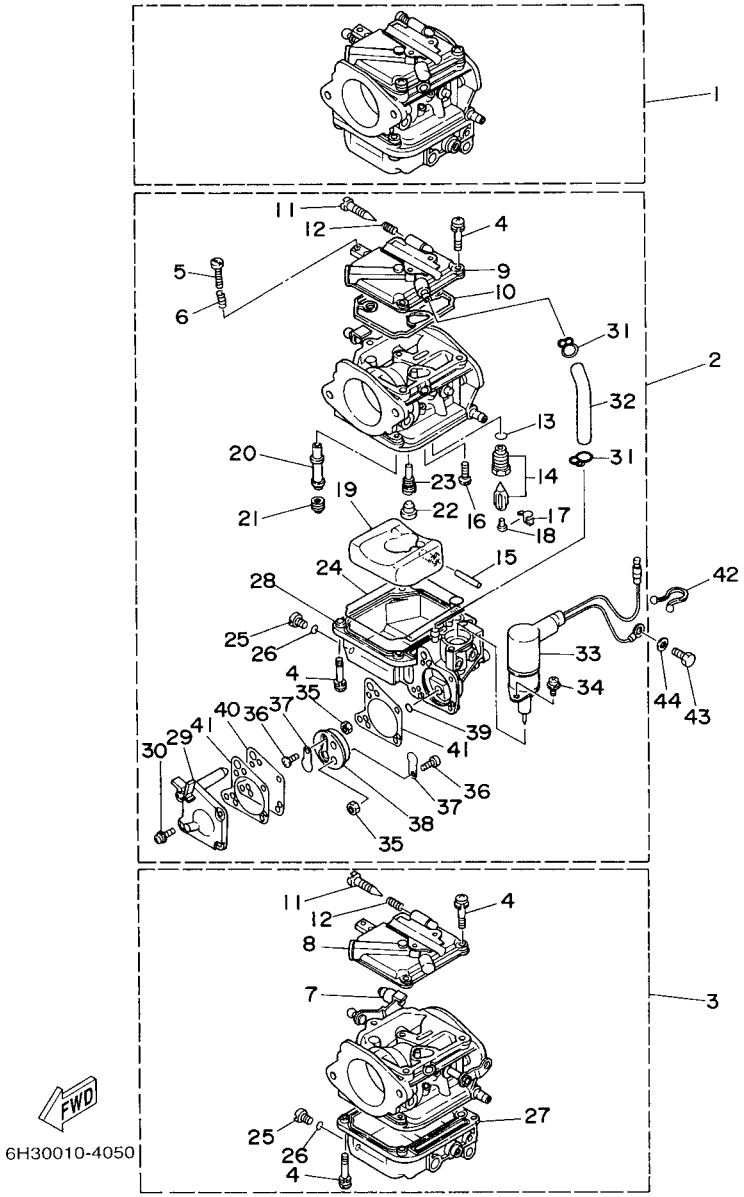

FIG. 5 CARBURETOR CARBURATEUR

REF. NO.	PART NO. N° PIECES	DESCRIPTION DESCRIPTION	6H3B					REMARKS REMARQUES
1	6H3–14301–0A	CARBURETOR ASSY 1 CARBURATEUR COMPLET 1	1					
2	6H3–14302–0A	CARBURETOR ASSY 2 CARBURATEUR COMPLET 2	1					
3	6H3–14303–0A	CARBURETOR ASSY 3 CARBURATEUR COMPLET 3	1					
4	97980–04114	.SCREW, WITH WASHER .VIS, AVEC RONDELLE	21					
5	63V–14523–00	.SCREW, STOP .VIS, BUTEE	1					#2 #2
6	90501–10326	.SPRING, COMPRESSION .RESSORT, COMPRESSION	1					#2 #2
7	6H2–14578–00	.COLLAR .COLLERETTE	1					#3 #3
8	6H4–14146–00	.PLATE .PLAQUE	2					#1,3 #1,3
9	6H3–14146–10	.PLATE .PLAQUE	1					#2 #2
10	6H4–14147–00	.O-RING .JOINT TORIQUE	3					
11	692–14923–00	.SCREW, PILOT .VIS, RALENTI	3					
12	697–14555–00	.SPRING .RESSORT	4					
13	93210–04228	.O-RING .JOINT TORIQUE	3					
14	6H3–14590–01	.NEEDLE VALVE ASSY .POINTEAU	3					
15	6H4–14548–00	.PIN, FLOAT ARM .AXE, BRAS DE FLOTTEUR	3					
16	98580–04008	.SCREW, PAN HEAD .VIS	3					
17	663–14159–00	.CLIP .JONC	3					
18	676–14186–00	.PIN, FLOAT .AXE, FLOTTEUR	3					
19	6H4–14985–01	.FLOAT .FLOTTEUR	3					
20	6H3–14947–71	.JET, NEEDLE .GICLEUR DE STARTER	3					
21	6H3–14943–37	.JET, MAIN (#150) .GICLEUR, PRINCIPAL (#150)	3					
22	676–14966–00	.CAP .CAPUCHON	3					
23	6H3–14948–17	.JET (#75) .GICLEUR (#75)	3					
24	6H4–14984–00	.GASKET, FLOAT CHAMBER .JOINT, CUVE DE FLOTTEUR	3					
25	6H3–14992–00	.SCREW, DRAIN .BOUCHON, PURGE	3					
26	93210–04230	.O-RING .JOINT TORIQUE	3					
27	6H4–14980–00	.BODY, FLOAT CHAMBER .CORPS, CUVE DE FLOTTEUR	2					#1,3 #1,3

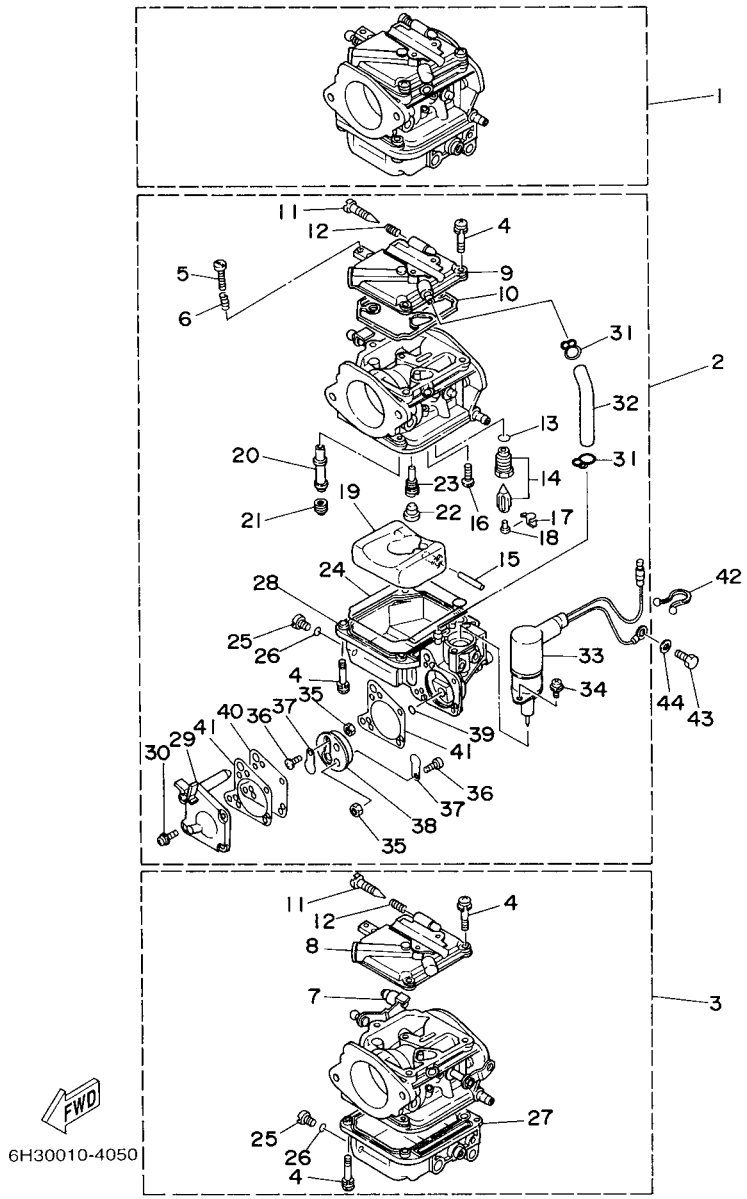

FIG. 5 CARBURETOR CARBURATEUR

REF. NO.	PART NO. N° PIECES	DESCRIPTION DESCRIPTION	6H3B					REMARKS REMARQUES
28	6H3–14980–10	.BODY, FLOAT CHAMBER .CORPS, CUVE DE FLOTTEUR	1					#2 #2
29	6H3–24452–10	.COVER .COUVERCLE	1					#2 #2
30	6H4–14567–00	.SCREW .VIS	4					#2 #2
31	6H3–14137–00	.CLIP .JONC	2					#2 #2
32	6H3–14349–00	.PIPE .DURITE	1					#2 #2
33	6H3–14380–00	.STARTER ASSY .DEMARREUR COMPLET	1					#2 #2
34	97803–04010	.SCREW, PAN HEAD .VIS, CRUCIFORME	2					#2 #2
35	95380–03600	.NUT .ECROU	2					#2 #2
36	98980–03006	.SCREW, BIND .VIS, DE PRESSION	2					#2 #2
37	6L5–24421–00	.VALVE, CHECK .SOUPAPE, RETENUE	2					#2 #2
38	6H4–24413–00	.BODY 2 .CORPS 2	1					#2 #2
39	6H4–24486–00	.O-RING .JOINT TORIQUE	1					#2 #2
40	6H3–24411–10	.DIAPHRAGM .DIAPHRAGME	1					#2 #2
41	6H3–24434–10	.GASKET, BODY .JOINT, CORPS	2					#2 #2
42	90465–18147	CLAMP BRIDE	1					
43	97013–06012	BOLT BOULON	1					
44	92903–06600	WASHER, PLATE RONDELLE, PLATE	1					

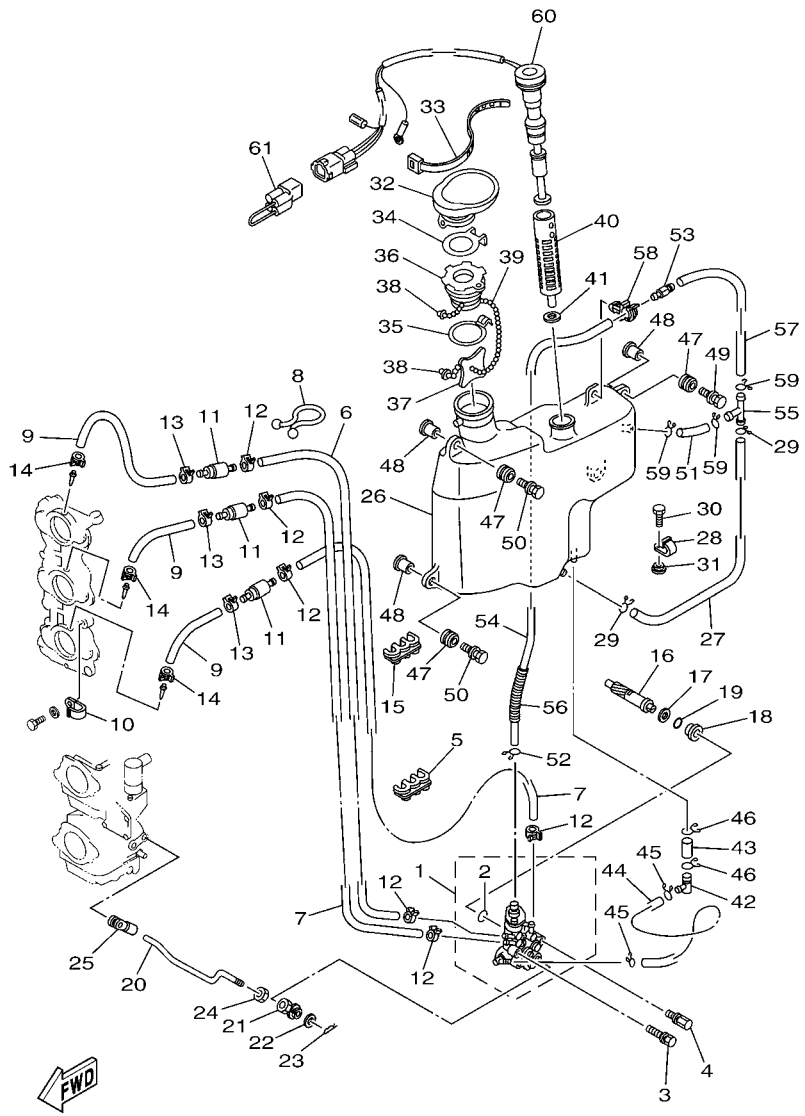

6H35100-E080

FIG. 6 OIL PUMP — POMPE A HUILE

REF. NO.	PART NO. N° PIECES	DESCRIPTION DESCRIPTION	6H3B					REMARKS REMARQUES
1	6H3–13200–02	OIL INJECTION PUMP ASSY POMPE A HUILE COMPLET	1					
2	93210–19MA7	.O-RING .JOINT TORIQUE	1					
3	90109–06M39	BOLT BOULON	1					
4	90109–06M40	BOLT BOULON	1					
5	90464–07M05	CLAMP BRIDE	1					
6	90445–07M44	HOSE (L250) DURITE (L250)	1					
7	90445–07M23	HOSE (L408) DURITE (L408)	2					
8	90464–15M11	CLAMP BRIDE	1					
9	90445–07M87	HOSE (L110) DURITE (L110)	3					
10	90465–06M86	CLAMP BRIDE	1					
11	6E9–13183–70	VALVE, CHECK CLAPET ANTI RETOUR	3					
12	90468–07M02	CLIP JONC	6					
13	90468–07M02	CLIP JONC	3					
14	90468–07M02	CLIP JONC	3					
15	90464–07M05	CLAMP BRIDE	1					
16	6H3–11537–01	GEAR, DRIVEN PIGNON SECONDAIRE	1					
17	90201–08M93	WASHER, PLATE RONDELLE, PLATE	1					
18	6H1–13117–01	COLLAR, DISTANCE ENTRETOISE	1					
19	93210–13M04	O-RING JOINT TORIQUE	1					
20	6H3–41241–01	ROD, LINK BIELLETTE	1					
21	6H1–41237–00	JOINT, LINK RACCORD	1					
22	90202–05088	WASHER, PLATE RONDELLE, PLATE	1					
23	90468–05M03	CLIP JONC	1					
24	95380–05600	NUT ECROU	1					
25	6E9–41237–00	JOINT, LINK RACCORD	1					
26	6H3–21707–06	OIL TANK COMP. RESERVOIR A PETROLE COMP.	1					
27	90445–11M03	HOSE (L330) DURITE (L330)	1					

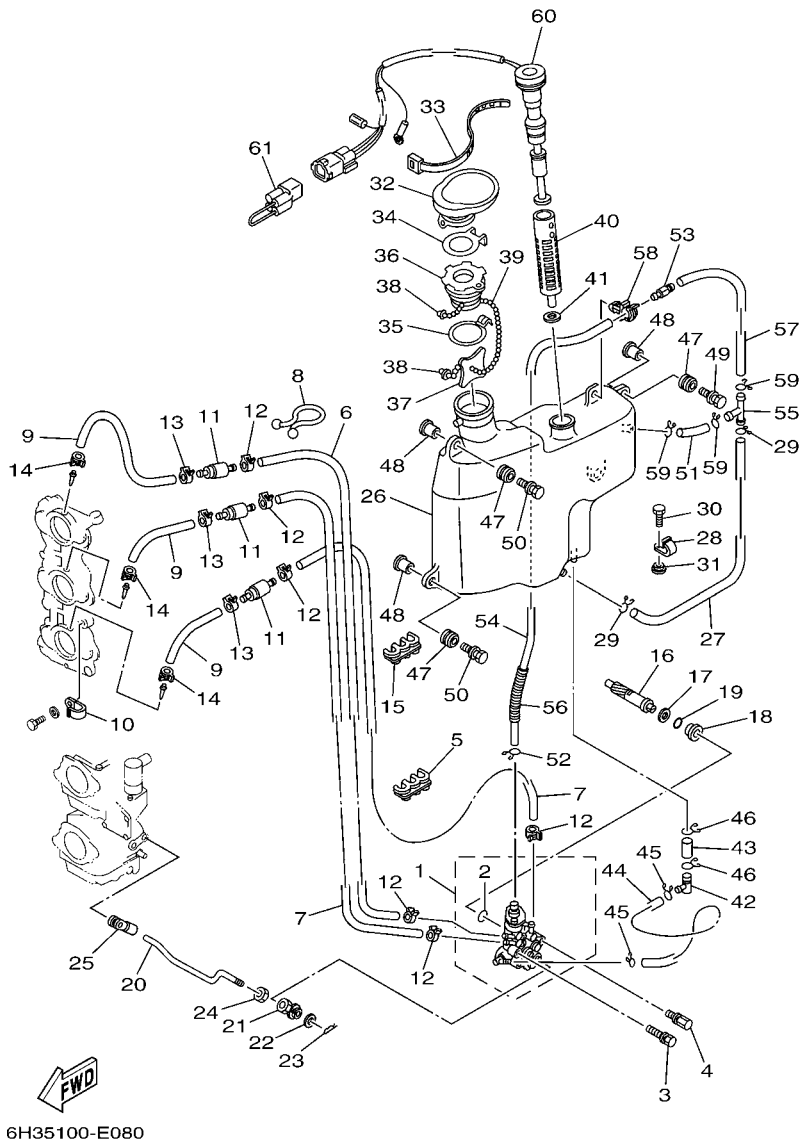

FIG. 6 OIL PUMP — POMPE A HUILE

REF. NO.	PART NO. N° PIECES	DESCRIPTION DESCRIPTION	6H3B					REMARKS REMARQUES
28	90465–11M27	CLAMP BRIDE	1					
29	90467–11M08	CLIP JONC	2					
30	97095–06016	BOLT BOULON	1					
31	90387–06M31	COLLAR COLLERETTE	1					
32	6H3–21752–00	TUBE, FILLER 1 DURITE	1					
33	90465–13M30	CLAMP BRIDE	1					
34	63D–2176M–00	HOOK CROCHET	1					
35	63D–2175R–00	HOOK, BAND CROCHET, BANDE	1					
36	6H4–21770–00	OIL TANK CAP ASSY CABOCHON DE RESERVOIR A HUILE	1					
37	6J8–21758–00	WASHER, SPECIAL 2 RONDELLE, SPECIALE 2	1					
38	6H1–21757–00	WASHER, SPECIAL 1 RONDELLE, SPECIALE 1	2					
39	6H1–24633–00	CHAIN, BALL CHANE DE BALLE	1					
40	6J8–13411–00	STRAINER, OIL FILTRE, HUILE	1					
41	6J8–13414–00	GASKET, STRAINER COVER JOINT, COUVERCLE DE FILTRE	1					
42	6H1–13435–00	NIPPLE RACCORD	1					
43	90445–08M01	HOSE (L30) DURITE (L30)	1					
44	6H1–21766–01	PIPE, OIL DURITE A HUILE	1					
45	90467–08004	CLIP JONC	2					
46	90467–12M11	CLIP JONC	2					
47	6A0–82317–00	DAMPER, IGNITION COIL AMORTISSEUR, BOBINE D'ALLUM	4					
48	90387–06119	COLLAR COLLERETTE	4					
49	90119–06M65	BOLT, WITH WASHER BOULON, AVEC RONDELLE	2					
50	90119–06M88	BOLT, WITH WASHER BOULON, AVEC RONDELLE	2					
51	90445–11M21	HOSE (L40) DURITE (L40)	1					
52	90467–10M04	CLIP JONC	1					
53	63D–21744–00	BREATHER RENIFLARD	1					
54	90445–11M15	HOSE (L360) DURITE (L360)	1					

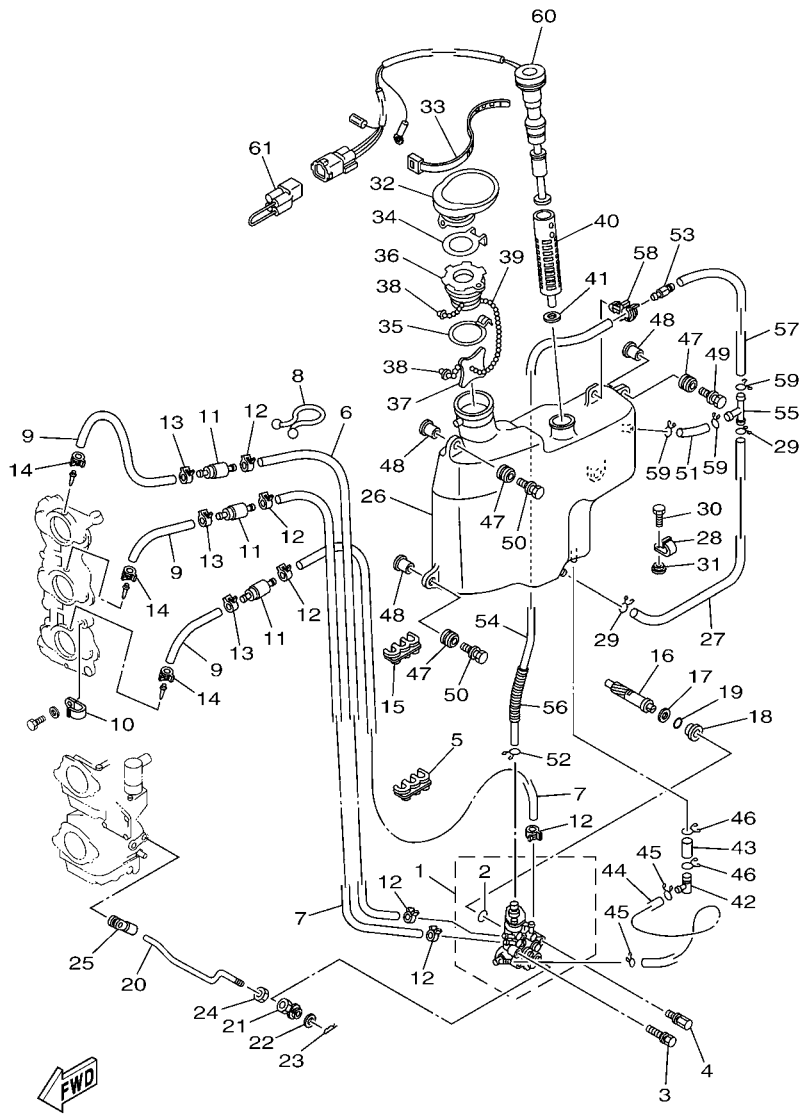

6H35100-E080

FIG. 6 OIL PUMP — POMPE A HUILE

REF. NO.	PART NO. N° PIECES	DESCRIPTION DESCRIPTION	6H3B					REMARKS REMARQUES
55	6E5–24378–00	PIPE, JOINT 3 DURITE, RACCORDEMENT 3	1					
56	90446–10M01	HOSE (L60) DURITE (L60)	1					
57	90445–11M02	HOSE (L100) DURITE (L100)	1					
58	90464–11M23	CLAMP BRIDE	1					
59	90467–11M08	CLIP JONC	3					
60	6H3–85720–17	OIL LEVEL GAUGE ASSY JAUGE A HUILE CPLT	1					
61	6R5–82582–B0	COVER, WIRE HARNESS COUVERCLE, FAISCEAU DE FILS	1					AP AP

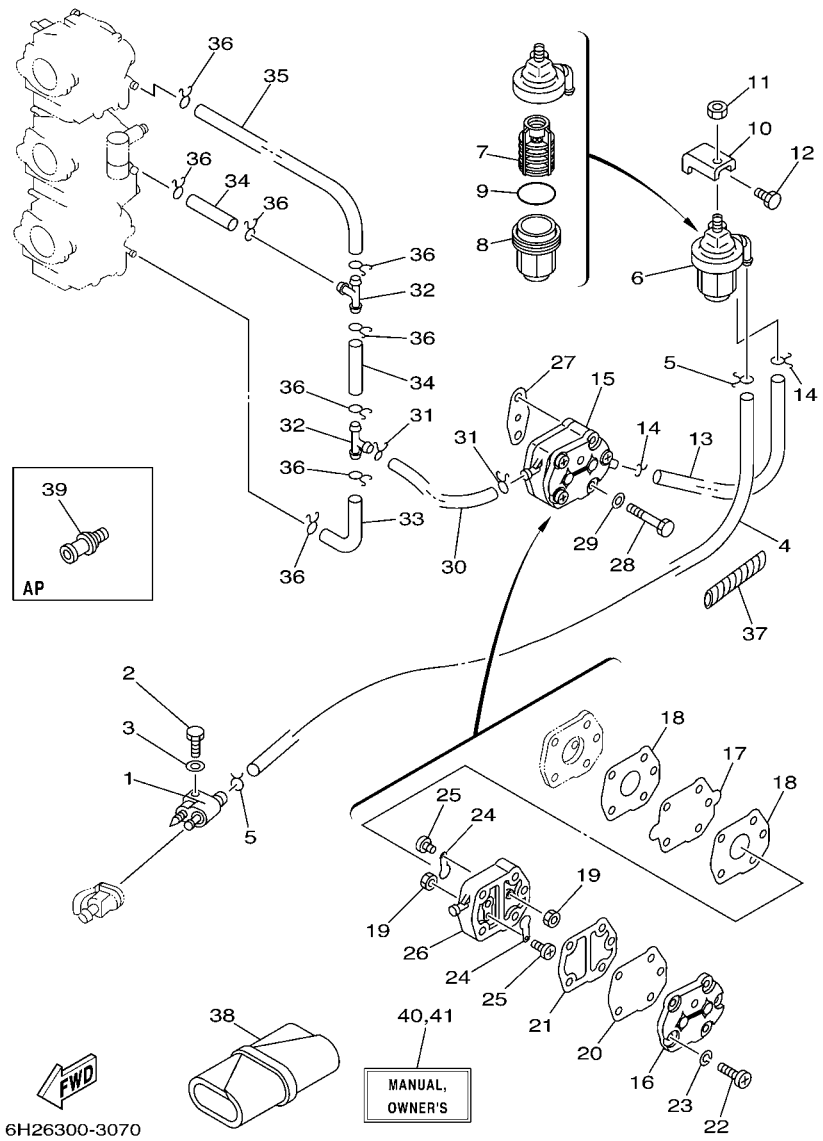

FIG. 7 FUEL CARBURANT

REF. NO.	PART NO. N° PIECES	DESCRIPTION DESCRIPTION	6H3B					REMARKS REMARQUES
1	6G1–24304–02	FUEL PIPE JOINT COMP. 1 DURITE RACCORDEMT. A ESSENCE	1					
2	97095–06025	BOLT BOULON	1					
3	92995–06600	WASHER RONDELLE	1					
4	90445–09M75	HOSE (L370) DURITE (L370)	1					
5	90467–08004	CLIP JONC	2					
6	61N–24560–00	FILTER ASSY ENS FILTRE	1					
7	61N–24563–00	.ELEMENT, FILTER .ELEMENT, FILTRE	1					
8	61N–24521–00	.CUP, FILTER .CUVETTE, FILTRE	1					
9	93210–32738	.O-RING .JOINT TORIQUE	1					
10	648–24566–02	BRACKET, FILTER SUPPORT, FILTRE	1					
11	95380–08600	NUT ECROU	1					
12	97013–06014	BOLT BOULON	1					
13	90445–09072	HOSE (L120) DURITE (L120)	1					
14	90467–08004	CLIP JONC	2					
15	692–24410–00	FUEL PUMP ASSY POMPE A ESSENCE	1					
16	6A0–24413–00	.BODY 2 .CORPS 2	1					
17	692–24411–00	.DIAPHRAGM .DIAPHRAGME	1					
18	648–24434–01	.GASKET, BODY .JOINT, CORPS	2					
19	95380–03600	.NUT .ECROU	2					
20	663–24411–00	.DIAPHRAGM .DIAPHRAGME	1					
21	648–24435–02	.GASKET, BODY 2 .JOINT, CORPS 2	1					
22	98503–05028	.SCREW, PAN HEAD .VIS	3					
23	92990–05100	.WASHER, SPRING .RONDELLE, GROWER	3					
24	6A0–24421–01	.VALVE, CHECK .SOUPAPE, RETENUE	2					
25	6A0–14325–00	.SCREW, PAN HEAD .VIS TETE CONIQUE	2					
26	6A0–24412–02	.BODY 1 .CORPS 1	1					
27	650–24431–A0	GASKET, FUEL PUMP 1 JOINT 1 DE POMPE A ESSENCE	1					

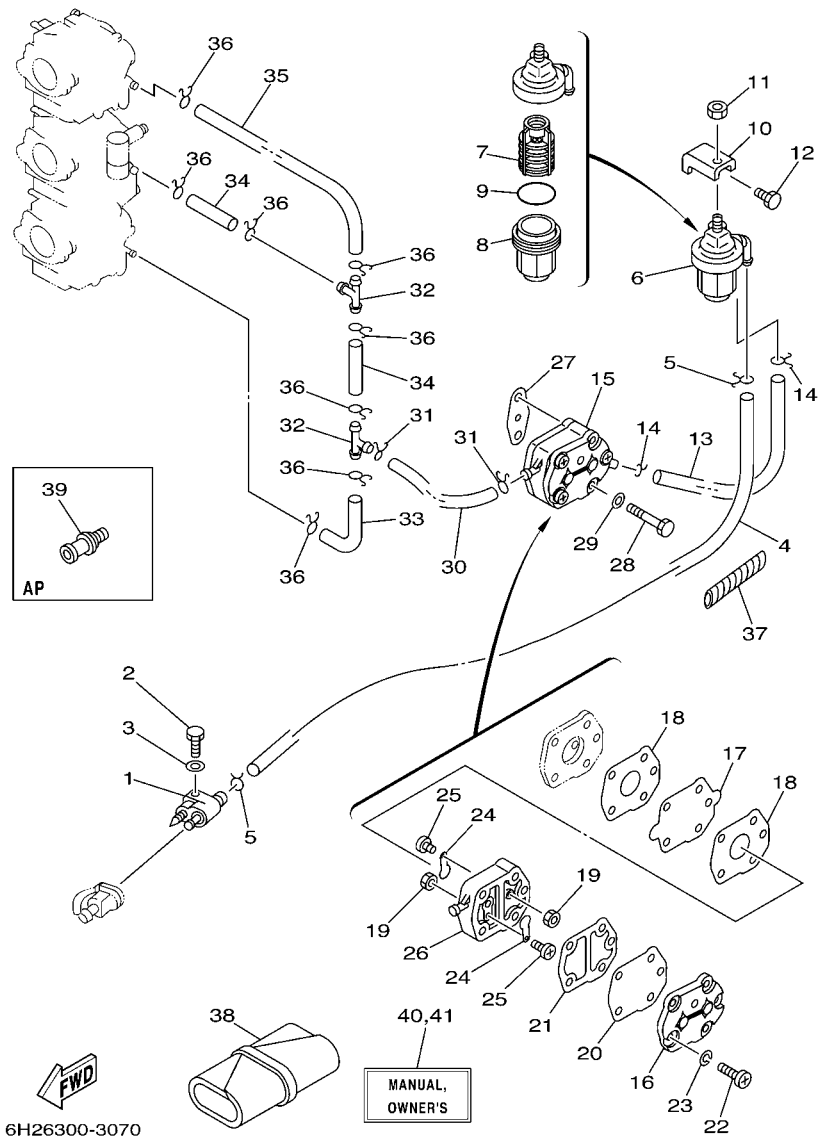

FIG. 7 FUEL CARBURANT

REF. NO.	PART NO. N° PIECES	DESCRIPTION DESCRIPTION	6H3B					REMARKS REMARQUES
28	97095–06040	BOLT BOULON	2					
29	92995–06600	WASHER RONDELLE	2					
30	90445–09072	HOSE (L120) DURITE (L120)	1					
31	90467–08004	CLIP JONC	2					
32	688–24378–00	PIPE, JOINT 3 DURITE RACCORDEMENT 3	2					
33	6H3–24313–00	PIPE 3 DURITE 3	1					
34	90445–09220	HOSE (L30) DURITE (L30)	2					
35	6H3–24314–00	PIPE 4 DURITE 4	1					
36	90467–08004	CLIP JONC	8					
37	90446–10M01	HOSE (L60) DURITE (L60)	1					
38	656–W2810–02	TOOL KIT TROUSSE A OUTILS	1					AP AP
39	6E0–28193–00–94	PLUG, WATER CHECK BOUCHON, CONTROLE D'EAU	1					AP D:12.5MM AP D:12.5MM
40	6H2–28199–7Y–E0	MANUAL,OWNER'S MANUEL D'UTILISATION	1					UR (E) UR (E)
	6H2–28199–7Y–F0	MANUAL,OWNER'S MANUEL D'UTILISATION	1					UR (F) UR (F)
	6H2–28199–7Y–S0	MANUAL,OWNER'S MANUEL D'UTILISATION	1					UR (ES) UR (ES)
	6H2–28199–7Y–G0	MANUAL,OWNER'S MANUEL D'UTILISATION	1					UR (D) UR (D)
	6H2–28199–7Y–D0	MANUAL,OWNER'S MANUEL D'UTILISATION	1					UR (NL) UR (NL)
	6H2–28199–7Y–H0	MANUAL,OWNER'S MANUEL D'UTILISATION	1					UR (I) UR (I)
41	6H2–28199–8Y–K0	MANUAL,OWNER'S MANUEL D'UTILISATION	1					UR (DK) UR (DK)
	6H2–28199–8Y–R0	MANUAL,OWNER'S MANUEL D'UTILISATION	1					UR (GR) UR (GR)
	6H2–28199–8Y–P0	MANUAL,OWNER'S MANUEL D'UTILISATION	1					UR (P) UR (P)
	6H2–28199–8Y–N0	MANUAL,OWNER'S MANUEL D'UTILISATION	1					UR (N) UR (N)
	6H2–28199–8Y–M0	MANUAL,OWNER'S MANUEL D'UTILISATION	1					UR (S) UR (S)
	6H2–28199–8Y–L0	MANUAL,OWNER'S MANUEL D'UTILISATION	1					UR (SF) UR (SF)

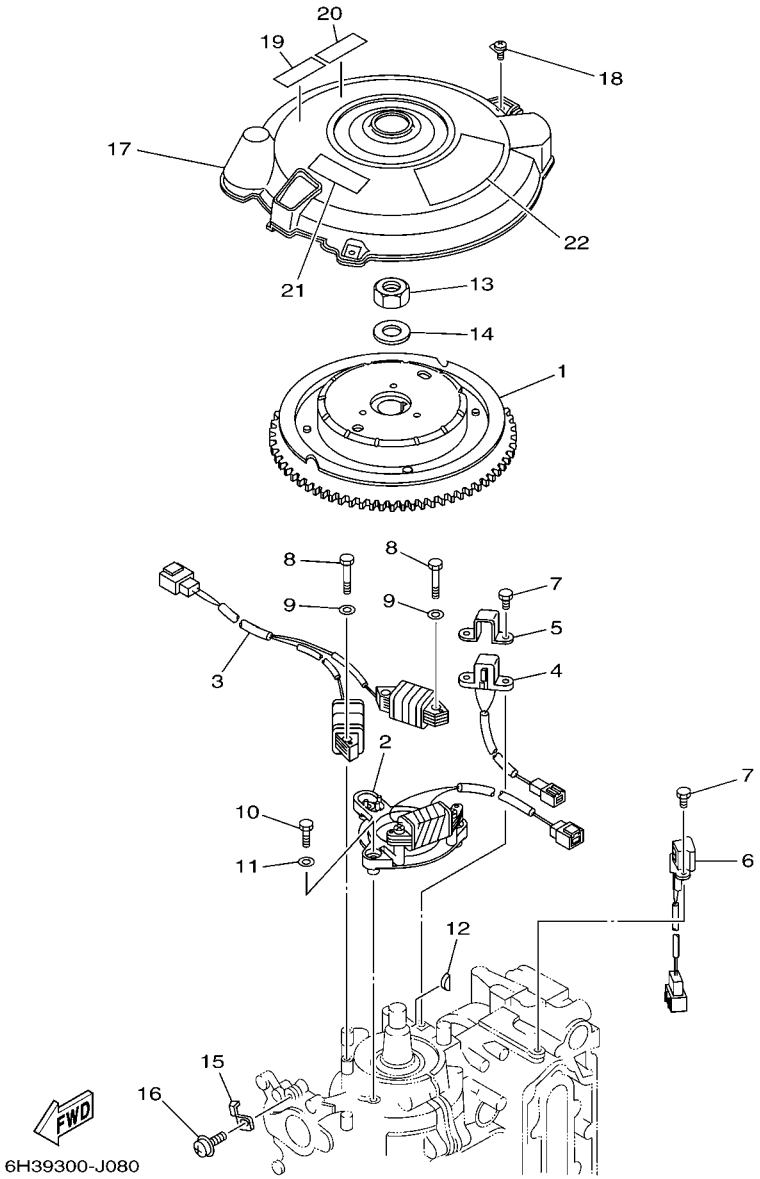

FIG. 8 GENERATOR GENERATRICE

REF. NO.	PART NO. N° PIECES	DESCRIPTION DESCRIPTION	6H3B					REMARKS REMARQUES
1	6H2–85550–00	ROTOR ASSY ROTOR CPLT	1					
2	6H2–85520–02	COIL, CHARGE BOBINE, CHARGE	1					
3	6H2–85533–01	COIL, LIGHTING BOBINE, ECLAIRAGE	1					
4	6H2–85580–01	COIL, PULSER BOBINE, PULSEUR	1					
5	6H2–85582–00	ATTACHMENT, PULSER SUPPORT, PULSEUR	1					
6	6H2–85895–01	CRANK POSITION SENDER SONDE, REGLAGE DE VILEBREQUIN	1					
7	97095–05012	BOLT BOULON	4					
8	97095–06035	BOLT BOULON	4					
9	92995–06600	WASHER RONDELLE	4					
10	97095–06025	BOLT BOULON	3					
11	92995–06600	WASHER RONDELLE	3					
12	90280–05015	KEY, WOODRUFF CLAVETTE, DEMI-LUNE	1					
13	90170–20137	NUT ECROU	1					
14	90201–21M18	WASHER, PLATE RONDELLE, PLATE	1					
15	6E5–81332–00	PLATE, TIMING PLATEAU, ALLUMAGE	1					
16	97985–06210	SCREW, WITH WASHER VIS, AVEC RONDELLE	1					
17	6H3–81337–01	COVER, FLYWHEEL COUVERCLE, VOLANT	1					
18	90159–06M23	SCREW, WITH WASHER VIS, AVEC RONDELLE	3					
19	6AH–81995–40	LABEL, WARNING ETIQUETTE, AVERTISSEMENT	1					
20	6AH–81995–50	LABEL, WARNING ETIQUETTE, AVERTISSEMENT	1					
21	6AG–81996–00	MARK MARQUE	1					
22	6H3–13437–21	MARK, CAUTION MAKER	1					

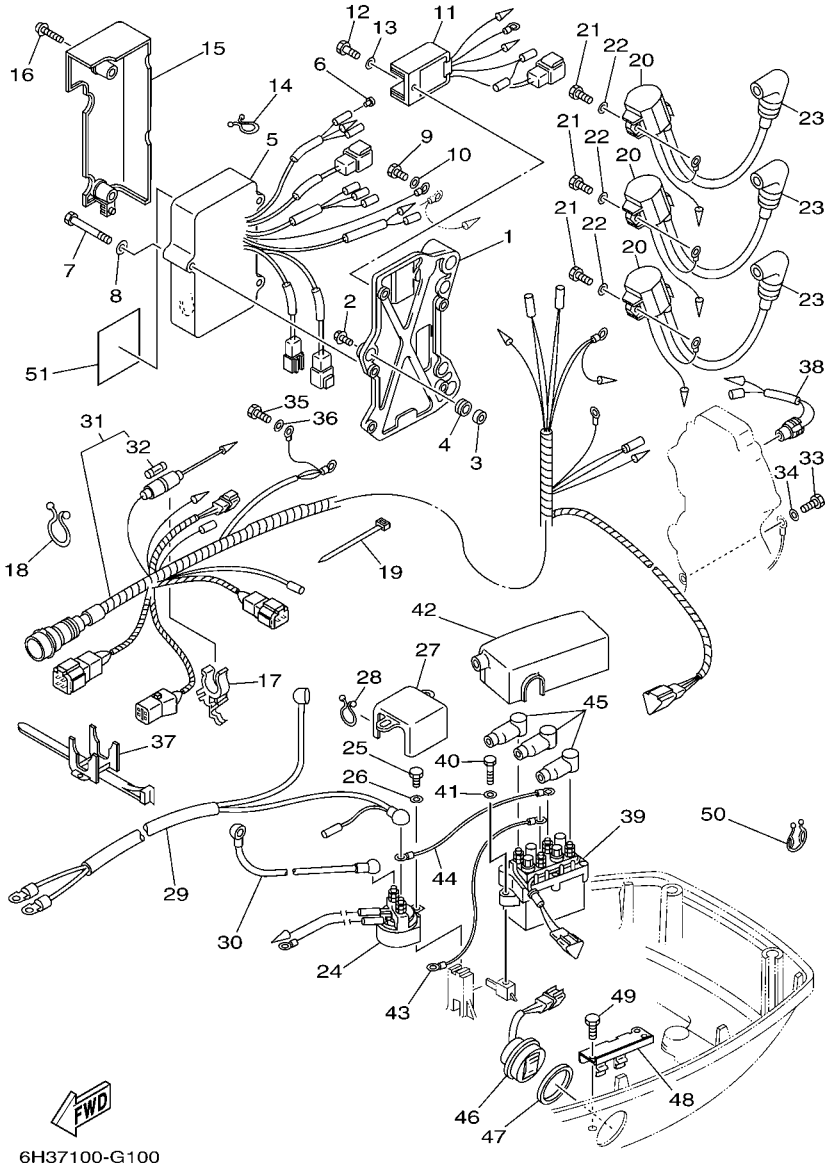

FIG. 9 ELECTRICAL ELECTRIQUE

REF. NO.	PART NO. N° PIECES	DESCRIPTION DESCRIPTION	6H3B					REMARKS REMARQUES
1	6H3–85542–11–94	BRACKET SUPPORT	1					
2	90105–06M14	BOLT FLANGE BOULON	3					
3	90387–06M43	COLLAR COLLERETTE	3					
4	90480–13M54	GROMMET PASSE-FIL	3					
5	6H2–85540–13	C.D.I. UNIT ASSY BLOC C.D.I.	1					
6	703–82119–00	COVER, LEAD WIRE GARNITURE, FIL	1					
7	97095–06045	BOLT BOULON	3					
8	92995–06600	WASHER RONDELLE	3					
9	97013–06012	BOLT BOULON	1					
10	92903–06600	WASHER, PLATE RONDELLE, PLATE	1					
11	6H2–81960–10	RECTIFIER & REGULATOR ASSY REDRESSEUR REGULATEUR CPLT	1					
12	97095–06016	BOLT BOULON	1					
13	92995–06600	WASHER RONDELLE	1					
14	90464–05M16	CLAMP BRIDE	1					
15	6H3–81916–10	COVER, TERMINAL COUVERCLE, BORNE	1					
16	90159–06M01	SCREW, WITH WASHER VIS, AVEC RONDELLE	2					
17	6G5–82152–00	HOLDER, FUSE SUPPORT, FUSIBLE	1					
18	90464–23M22	CLAMP BRIDE	1					
19	90465–13M11	CLAMP BRIDE	1					
20	697–85570–00	IGNITION COIL ASSY BOBINE D'ALLUMAGE (ENS.)	3					
21	97013–06020	BOLT BOULON	3					
22	92903–06600	WASHER, PLATE RONDELLE, PLATE	3					
23	6G1–82370–21	PLUG CAP ASSY ANTIPARASITE	3					
24	688–81950–10	RELAY ASSY RELAIS COMPLET	1					
25	97013–06016	BOLT BOULON	1					
26	92903–06600	WASHER, PLATE RONDELLE, PLATE	1					
27	6H3–82164–00	CASE 2 COUSSINET	1					

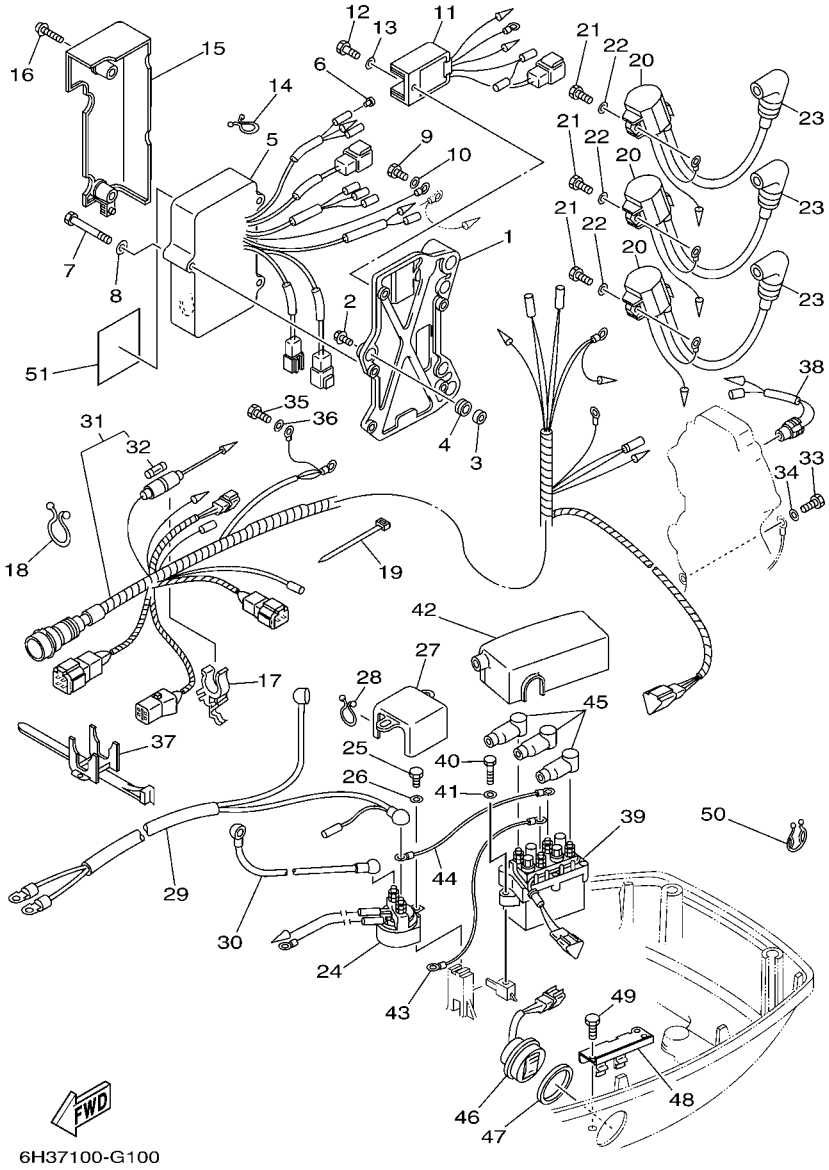

FIG. 9 ELECTRICAL ELECTRIQUE

REF. NO.	PART NO. N° PIECES	DESCRIPTION DESCRIPTION	6H3B					REMARKS REMARQUES
28	90464–15M11	CLAMP BRIDE	1					
29	6H3–82105–01	WIRE HARNESS FAISCEAU DE FILS	1					
30	6H3–82117–00	WIRE, LEAD FIL	1					
31	6H2–82590–80	WIRE HARNESS ASSY (10P) FAISCEAU DE FILS COMPLET (10P)	1					
32	663–82151–00	.FUSE (12V-20A) .FUSIBLE (12V-20A)	1					
33	97013–06012	BOLT BOULON	1					
34	92903–06600	WASHER, PLATE RONDELLE, PLATE	1					
35	97013–06012	BOLT BOULON	2					
36	92903–06600	WASHER, PLATE RONDELLE, PLATE	2					
37	688–82594–00	CLAMP BRIDE	1					
38	688–82560–10	THERMO SWITCH ASSY THERMO-CONTACT COMPLET	1					
39	61A–81950–00	RELAY ASSY RELAIS COMPLET	1					
40	97095–06025	BOLT BOULON	2					
41	92995–06600	WASHER RONDELLE	2					
42	6H3–82154–11	CASE CAISSE	1					
43	6H2–81949–11	WIRE, LEAD FIL	1					
44	6H2–81949–01	WIRE, LEAD FIL	1					
45	682–82119–01	COVER, LEAD WIRE GARNITURE, FIL	3					
46	6H1–82563–10	TRIM & TILT SWITCH ASSY INCLINER ET PARER COMMUTATEUR	1					
47	6E5–82587–00	GASKET JOINT	1					
48	6E5–83614–01	BRACKET SUPPORT	1					
49	97095–06016	BOLT BOULON	1					
50	90464–18M14	CLAMP BRIDE	1					
51	6R5–85711–60	MARK, CAUTION MAKER	1					

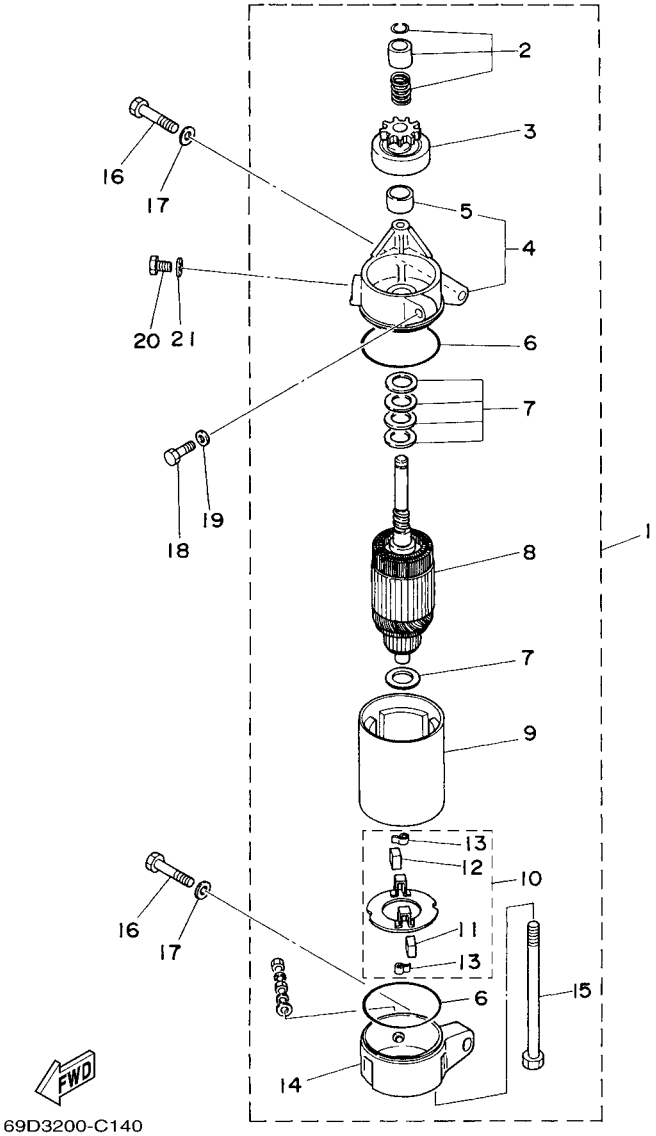

FIG. 10 STARTING MOTOR DEMARREUR ELECTRIQUE

REF. NO.	PART NO. N° PIECES	DESCRIPTION DESCRIPTION	6H3B					REMARKS REMARQUES
1	6H3–81800–11	STARTING MOTOR ASSY DEMARREUR ELECTRIQUE COMPLET	1					
2	689–81857–11	.PINION STOPPER SET .BUTEE PIGNON	1					
3	6H3–81807–10	.GEAR ASSY, STARTING MOTOR .PIGNON, DEMARREUR ELECTRIQUE	1					
4	6H3–81830–10	.FRONT BRACKET ASSY .SUPPORT AVANT	1					
5	689–81831–00	..METAL, FRONT ..METAL, AVANT	1					
6	689–81847–11	.O-RING .JOINT TORIQUE	2					
7	689–81809–11	.WASHER KIT .JEU DE RONDELLES	1					
8	689–81850–12	.ARMATURE ASSY .INDUIT	1					
9	6H3–81810–10	.STATOR ASSY .STATOR COMPLET	1					
10	689–81840–11	.BRUSH HOLDER ASSY .SUPPORT DE CHARBON	1					
11	689–81812–11	..BRUSH 2 ..CHARBON 2	1					
12	689–81811–11	..BRUSH 1 ..CHARBON 1	1					
13	689–81813–10	..SPRING, BRUSH ..RESSORT, DE CHARBON	2					
14	6H3–81820–11	.REAR BRACKET ASSY .SUPPORT ARRIERE COMPLET	1					
15	689–81826–10	.BOLT .BOULON	2					
16	97013–08035	BOLT BOULON	2					
17	92903–08600	WASHER, PLATE RONDELLE, PLATE	2					
18	97013–06025	BOLT BOULON	1					
19	92903–06600	WASHER, PLATE RONDELLE, PLATE	1					
20	97013–08016	BOLT BOULON	1					
21	92903–08600	WASHER, PLATE RONDELLE, PLATE	1					

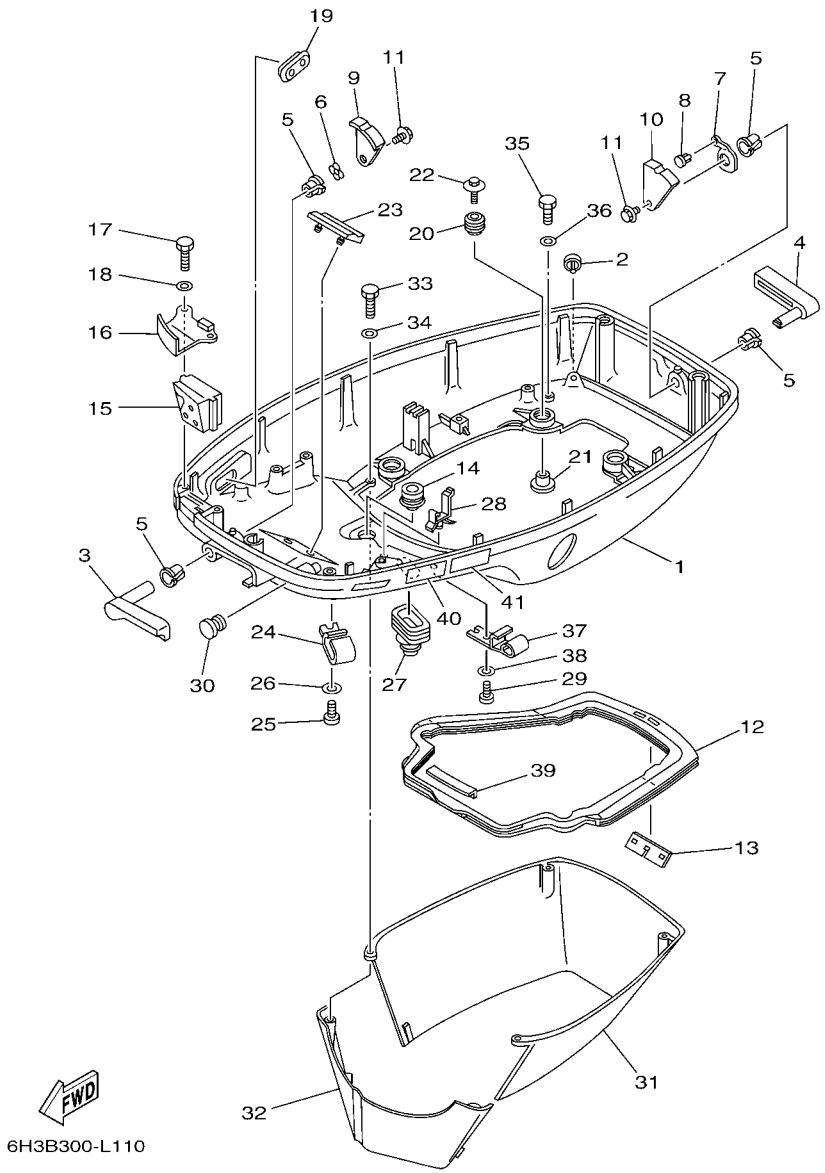

FIG. 11 BOTTOM COWLING CAPOT INFERIEUR

REF. NO.	PART NO. N° PIECES	DESCRIPTION DESCRIPTION	6H3B					REMARKS REMARQUES
1	6H3–42711–25–4D	COWLING, BOTTOM 1 CUVETTE 1	1					
2	69D–44391–00	NIPPLE, HOSE RACCORD D'ESSENCE	1					L(20.5") L(20.5")
3	6H3–42815–01–4D	LEVER, CLAMP LEVIER, PRESSE	1					
4	6H3–42817–01–4D	LEVER, CLAMP LEVIER, PRESSE	1					
5	90386–13M38	BUSH DOUILLE	4					
6	90206–13M10	WASHER, WAVE RONDELLE, ONDULEE	1					
7	6H3–42813–00	SPRING, CLAMP LEVER RESSORT	1					
8	90269–04M03	RIVET RIVET	1					
9	6H3–42816–00	LEVER, CLAMP LEVIER, PRESSE	1					
10	6H3–42818–00	LEVER, CLAMP LEVIER, PRESSE	1					
11	90119–06M09	BOLT, WITH WASHER BOULON, AVEC RONDELLE	2					
12	6H3–42716–02	RUBBER, SEAL 1 JOINT EN CAOUTCHOUC 1	1					
13	6K5–42717–00	RUBBER, SEAL 2 JOINT EN CAOUTCHOUC 2	1					
14	6E5–42724–00	GROMMET PASSE-FIL	1					
15	6H3–42725–30	GROMMET PASSE-FIL	1					
16	6H3–42738–01–CA	PLATE, FITTING ETRIER	1					
17	97095–06016	BOLT BOULON	2					
18	92995–06600	WASHER RONDELLE	2					
19	6H3–42727–00	GROMMET PASSE-FIL	1					
20	6BG–42748–00	GROMMET PASSE-FIL	4					
21	90387–06M69	COLLAR COLLERETTE	4					
22	90119–06M61	BOLT, WITH WASHER BOULON, AVEC RONDELLE	4					
23	6H3–42768–00	DAMPER AMORTISSEUR	1					
24	6E5–24367–01	CLAMP, FUEL PIPE 2 COLLIER DE DURITE A ESSENCE	1					
25	90157–06M01	SCREW, PAN HEAD VIS, TETE TRONCONIQUE	1					
26	92990–06600	WASHER, PLATE RONDELLE, PLATE	1					
27	688–42726–10	GROMMET PASSE-FIL	1					

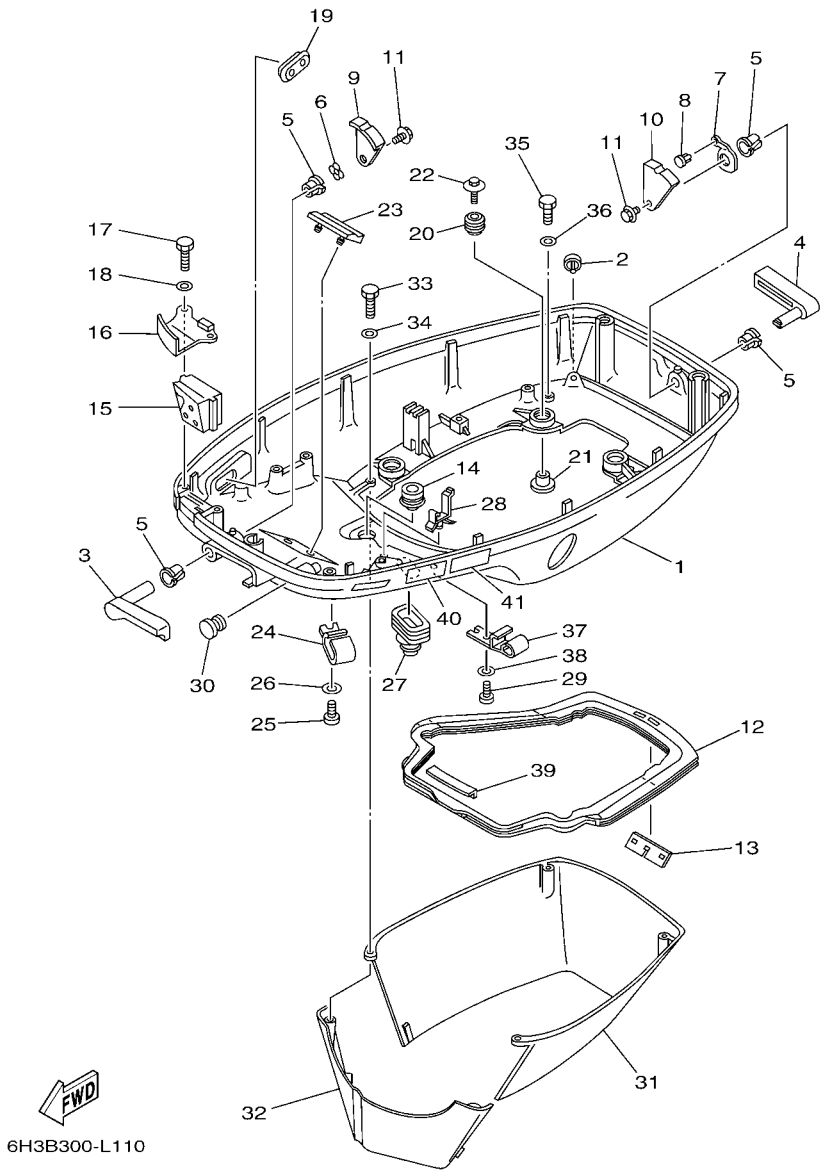

FIG. 11 BOTTOM COWLING CAPOT INFERIEUR

REF. NO.	PART NO. N° PIECES	DESCRIPTION DESCRIPTION	6H3B					REMARKS REMARQUES
28	90464–09M13	CLAMP BRIDE	1					
29	90157–06M01	SCREW, PAN HEAD VIS, TETE TRONCONIQUE	1					
30	6G1–42748–00	GROMMET PASSE-FIL	1					
31	6H3–42741–01–4D	APRON CAPOT LATERAL	1					
32	6H3–42771–01–4D	APRON CAPOT LATERAL	1					
33	97095–06025	BOLT BOULON	2					
34	92995–06600	WASHER RONDELLE	2					
35	97095–06020	BOLT BOULON	2					
36	92995–06600	WASHER RONDELLE	2					
37	6E5–24367–01	CLAMP, FUEL PIPE 2 COLLIER DE DURITE A ESSENCE	1					
38	92990–06600	WASHER, PLATE RONDELLE, PLATE	1					
39	6H3–42718–00	RUBBER, SEAL 3 JOINT	1					
40	6AH–42794–40	LABEL, WARNING (GENERAL) ETIQUETTE, AVERTISSEMENT	1					
41	6AH–42794–50	LABEL, WARNING (GENERAL) ETIQUETTE, AVERTISSEMENT	1					

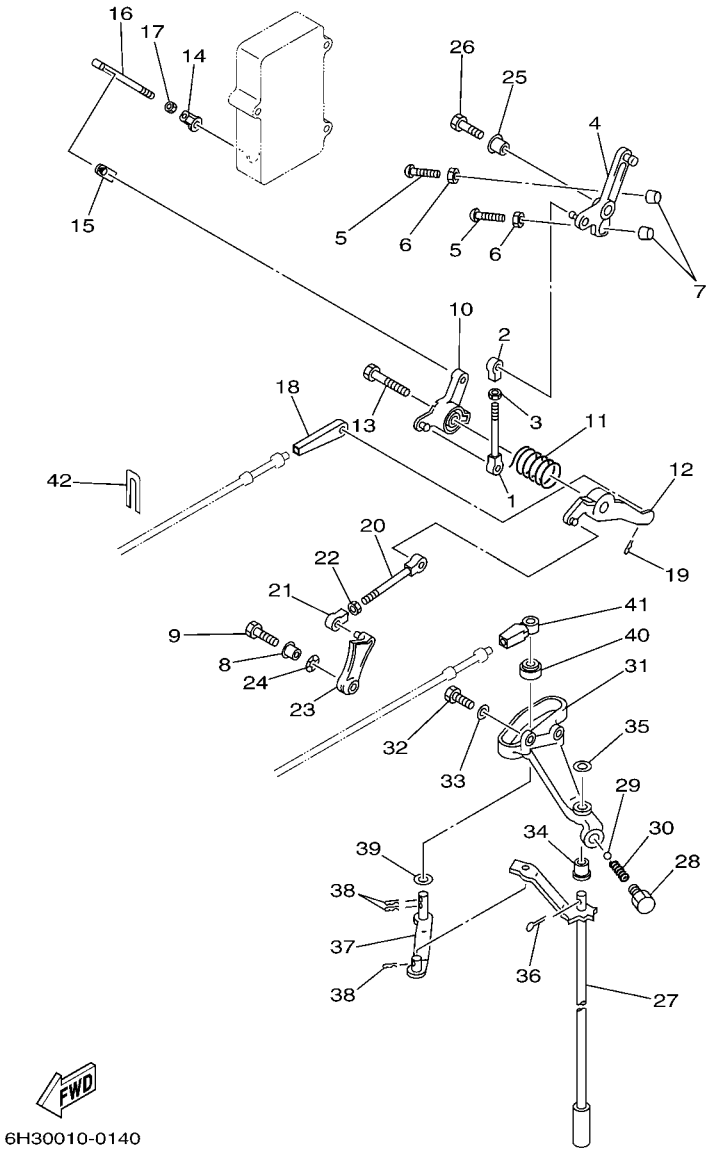

FIG. 12 CONTROL COMMANDE

REF. NO.	PART NO. N° PIECES	DESCRIPTION DESCRIPTION	6H3B					REMARKS REMARQUES
1	689–42169–01	JOINT AXE	1					
2	682–41237–00	JOINT, LINK RACCORD	1					
3	95380–05600	NUT ECROU	1					
4	6H3–41631–00	LEVER, MAGNETO CONTROL LEVIER, COMMANDE D'AVANCE	1					
5	90157–06M13	SCREW, PAN HEAD VIS, TETE TRONCONIQUE	2					
6	95380–06600	NUT, HEXAGON ECROU	2					
7	688–44194–00	CAP CAPUCHON	2					
8	90387–06M60	COLLAR COLLERETTE	1					
9	97095–06025	BOLT BOULON	1					
10	6H3–41632–20	LEVER, MAGNETO CONTROL LEVIER, COMMANDE D'AVANCE	1					
11	90508–26M35	SPRING, TORSION RESSORT, TORSION	1					
12	6H3–41633–10	LEVER, MAGNETO CONTROL LEVIER, COMMANDE D'AVANCE	1					
13	90109–06M43	BOLT BOULON	1					
14	6H1–41237–00	JOINT, LINK RACCORD	1					
15	6F5–41237–00	JOINT, LINK RACCORD	1					
16	6H3–41636–10–94	ROD, MAGNETO CONTROL BIELLETTE, COMMANDE D'AVANCE	1					
17	95380–05600	NUT ECROU	1					
18	6H3–48344–00	CABLE END, REMOTE CONTROL CHAPE CABLE	1					
19	90468–18008	CLIP JONC	1					
20	689–42169–01	JOINT AXE	1					
21	6H4–41237–00	JOINT, LINK RACCORD	1					
22	95380–05600	NUT ECROU	1					
23	6H3–41213–10	CAM, ACCEL. CAME, ACCELERATION	1					
24	90206–10M04	WASHER, WAVE RONDELLE, ONDULEE	1					
25	90387–06M60	COLLAR COLLERETTE	1					
26	97095–06025	BOLT BOULON	1					
27	6H3–44120–12	HANDLE GEAR SHIFT ASSY LEVIER D'EMBRAYAGE	1					L(20.5") L(20.5")

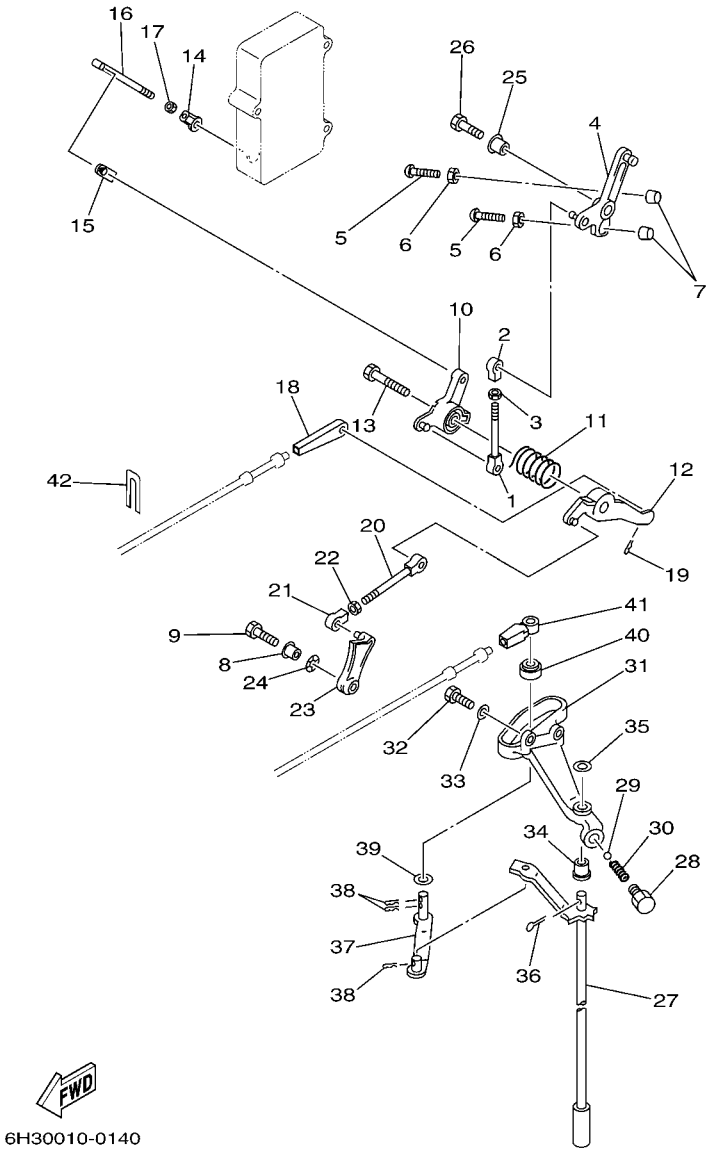

FIG. 12 CONTROL COMMANDE

REF. NO.	PART NO. N° PIECES	DESCRIPTION DESCRIPTION	6H3B					REMARKS REMARQUES
28	648–42715–00	BUSHING COUSSINET	1					
29	93501–04M02	BALL BILLE	1					
30	90501–12082	SPRING, COMPRESSION RESSORT, COMPRESSION	1					
31	6H3–44117–00–94	BRACKET SUPPORT	1					
32	97013–06020	BOLT BOULON	2					
33	92903–06600	WASHER, PLATE RONDELLE, PLATE	2					
34	90386–07M58	BUSH DOUILLE	1					
35	92990–08200	WASHER, PLAIN RONDELLE, PLATE	1					
36	91490–20012	PIN. COTTER GOUPILLE	1					
37	6H3–44121–01	LEVER, SHIFT ROD LEVIER, TIGE D'INVERSION	1					
38	90468–18008	CLIP JONC	3					
39	90202–07M07	WASHER, PLATE RONDELLE, PLATE	1					
40	688–44122–00	BUSHING, SHIFT ROD LEVER DOUILLE, LEVIER D'EMBRAYAGE	1					
41	663–48344–00	CABLE END, REMOTE CONTROL CHAPE CABLE	1					
42	6H3–48538–00	CLAMP, CABLE 1 COLLIER	1					

FIG. 13 BRACKET 1 SUPPORT 1

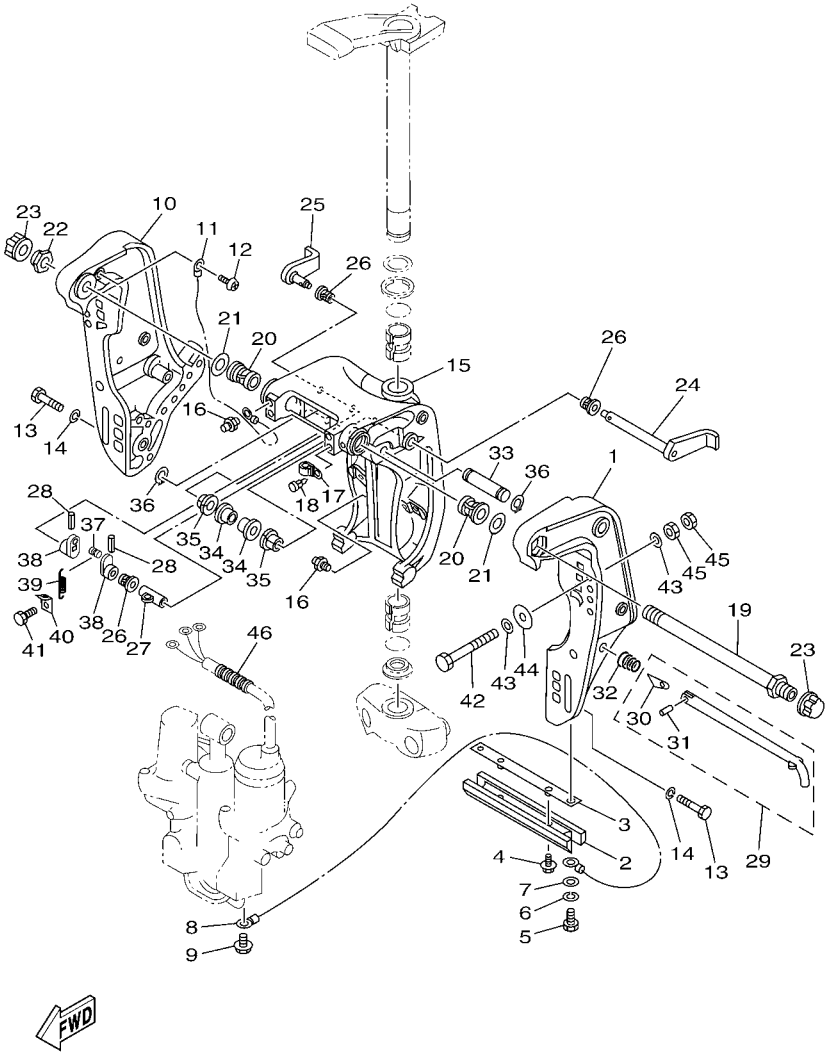

6H3B700-L130

REF. NO.	PART NO. N° PIECES	DESCRIPTION DESCRIPTION	6H3B					REMARKS REMARQUES
1	6H1–43111–01–4D	BRACKET, CLAMP 1 PRESSE 1	1					
2	6H1–45251–03	ANODE ANODE	1					
3	6H1–44526–00	PLATE PLAQUE	1					
4	90119–06M29	BOLT, WITH WASHER BOULON, AVEC RONDELLE	2					
5	97095–06016	BOLT BOULON	2					
6	92995–06100	WASHER, SPRING RONDELLE, GROWER	2					
7	92995–06600	WASHER RONDELLE	2					
8	6H1–82148–00	WIRE, LEAD 4 FIL 4	1					
9	97595–06510	BOLT, WITH WASHER VIS HEXAGONAL AVC RONDELLE	1					
10	6H1–43112–00–4D	BRACKET, CLAMP 2 PRESSE 2	1					
11	6E5–82148–00	WIRE, LEAD 4 FIL 4	1					
12	97880–06012	SCREW, PAN HEAD VIS, TETE TRONCONIQUE	1					
13	97095–10045	BOLT BOULON	6					
14	92995–10100	WASHER RONDELLE	6					
15	6H1–43311–02–4D	BRACKET, SWIVEL 1 SUPPORT, PIVOT 1	1					
16	93700–06M03	NIPPLE, GREASE PION	3					
17	90464–11M18	CLAMP BRIDE	1					
18	90338–05M03	PLUG PLOT	1					
19	688–43131–03	BOLT, CLAMP BRACKET BOULON, PRESSE	1					
20	90386–22M15	BUSH DOUILLE	2					
21	90201–22M67	WASHER, PLATE RONDELLE, PLATE	2					
22	90185–22043	NUT, SELF-LOCKING ECROU,AUTO-BLOQUANT	1					
23	6G5–43145–01	CAP, CLAMP BRACKET CAPUCHON, PRESSE	2					
24	6H1–43181–01	LEVER, TILT STOP 1 LEVIER VERROUILLAGE RELEVAGE 1	1					
25	6H1–43185–01	LEVER, TILT STOP 2 LEVIER VERROUILLAGE RELEVAGE 2	1					
26	90386–10M16	BUSH DOUILLE	3					
27	90387–10M02	COLLAR COLLERETTE	1					

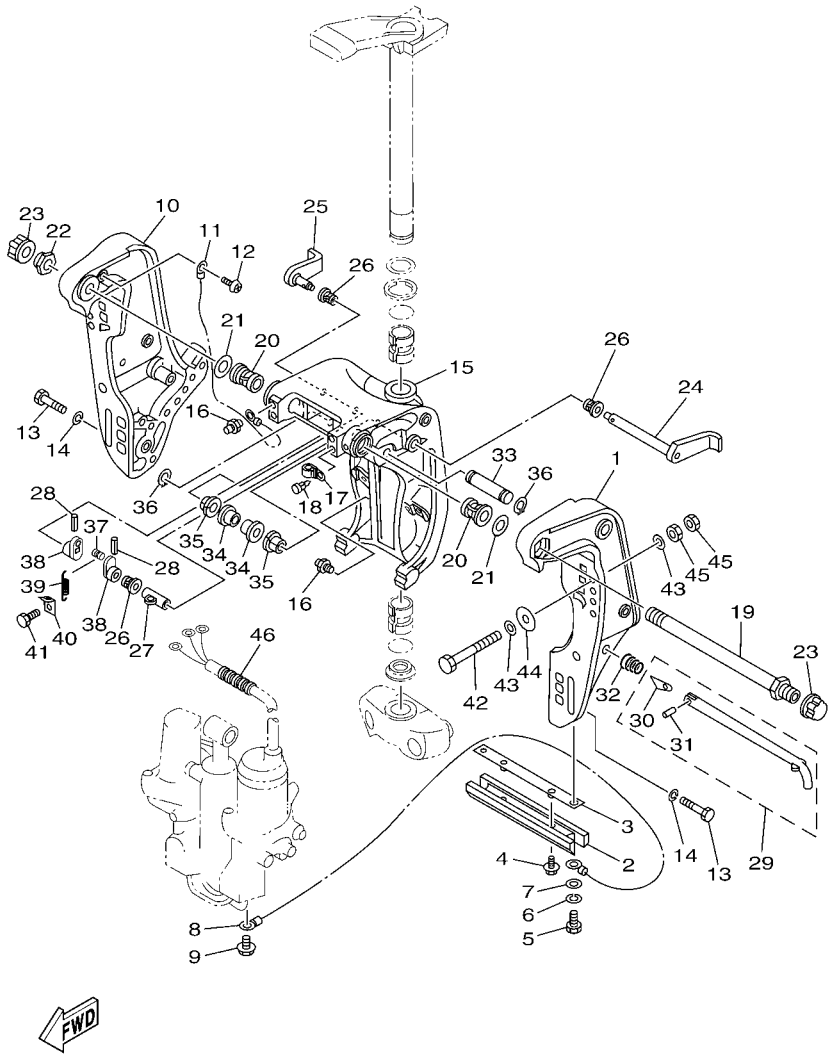

FIG. 13 BRACKET 1 SUPPORT 1

REF. NO.	PART NO. N° PIECES	DESCRIPTION DESCRIPTION	6H3B					REMARKS REMARQUES
28	91690–30020	PIN, SPRING AGRAFFE	2					
29	688–43160–01	TILT ROD ASSY BROCHE D'INCLINAISON (ENS.)	1					
30	688–43165–00	.PLATE, TILT LOCK .TAQUET, BROCHE INCLINAISON	1					
31	91690–30012	.PIN, SPRING .AGRAFFE	1					
32	90502–16M02	SPRING, CONICAL RESSORT, CONIQUE	1					
33	6E5–43126–10	PIN, UPPER SHOCK MOUNT AXE, SUPERIEUR AMORTISSEUR	1					
34	90386–18M63	BUSH DOUILLE	2					
35	90386–18M35	BUSH DOUILLE	2					
36	93410–18M05	CIRCLIP CLIPS	2					
37	90249–06M19	PIN GOUPILLE	1					
38	6G5–43148–00	COLLAR, DISTANCE ENTRETOISE	2					
39	90506–14M24	SPRING, TENSION RESSORT, TENSION	1					
40	6G5–43144–00	HOOK, SPRING CROCHET	1					
41	97095–06010	BOLT BOULON	1					
42	90101–12M65	BOLT BOULON	4					
43	90201–12062	WASHER, PLATE RONDELLE, PLATE	8					
44	90201–12426	WASHER, PLATE RONDELLE, PLATE	4					
45	95380–12600	NUT ECROU	8					
46	90440–14M00	PIPE DURITE	1					

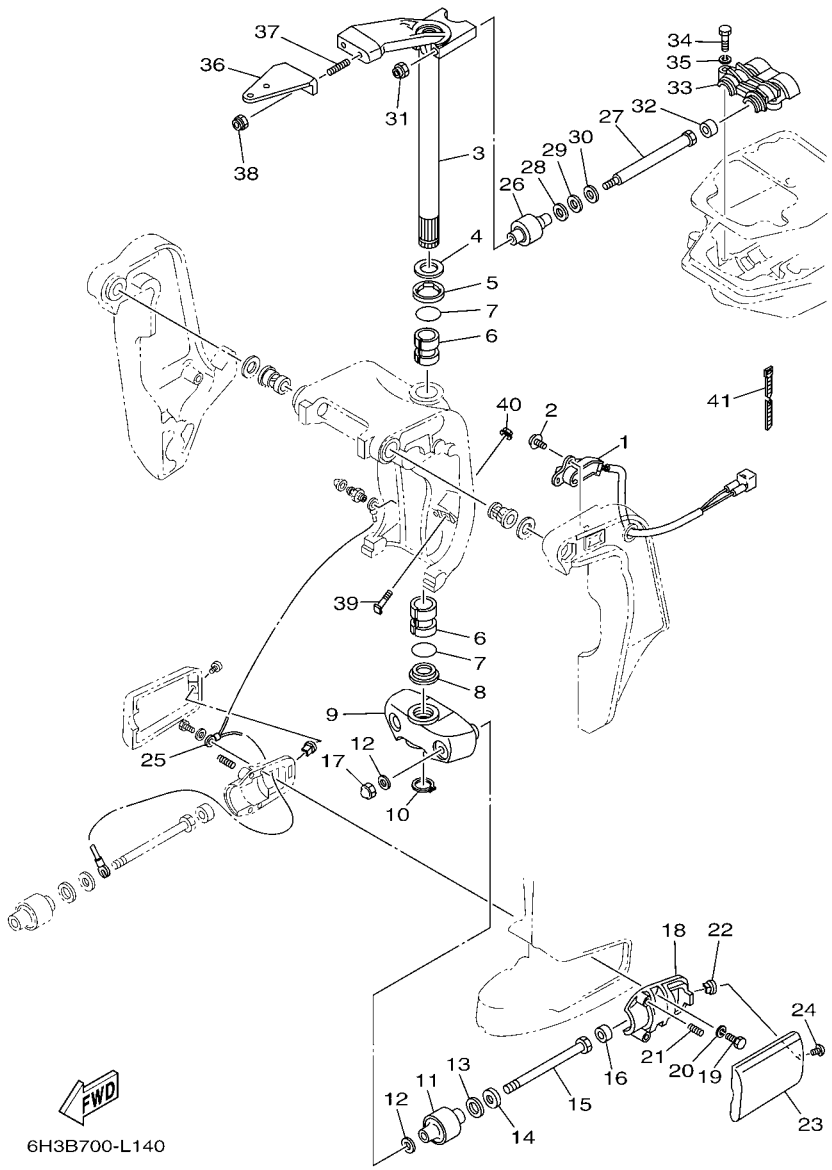

FIG. 14 BRACKET 2 SUPPORT 2

REF. NO.	PART NO. N° PIECES	DESCRIPTION DESCRIPTION	6H3B					REMARKS REMARQUES
1	6H1–83672–21	TRIM SENDER INCLINER RACCORD	1					
2	97985–06216	SCREW, WITH WASHER VIS, AVEC RONDELLE	2					
3	6H3–42510–13–4D	STEERING BRACKET ASSY DIRECTION SUPPORT (ENS.)	1					
4	90201–30M00	WASHER, PLATE RONDELLE, PLATE	1					
5	90386–30M78	BUSH DOUILLE	1					
6	90386–30M77	BUSH DOUILLE	2					
7	93210–29M94	O-RING JOINT TORIQUE	2					
8	90386–30M60	BUSH DOUILLE	1					
9	6H3–44551–01–4D	HOUSING, LOWER MOUNT RUBBER 1 BOITIER, SILENT-BLOC INFERIEUR	1					
10	93410–28M06	CIRCLIP CLIPS	1					
11	687–44555–00	MOUNT DAMPER, LOWER SIDE SILENT-BLOC, INFERIEUR LATERAL	2					
12	90201–12M16	WASHER, PLATE RONDELLE, PLATE	4					
13	90202–25M04	WASHER, PLATE RONDELLE, PLATE	2					
14	90201–13M19	WASHER, PLATE RONDELLE, PLATE	2					
15	90109–12M21	BOLT BOULON	2					
16	663–44575–00	DAMPER, LOWER MOUNT RUBBER SILENT-BLOC, INFERIEUR	2					
17	95380–12800	NUT, CROWN ECROU, BORGNE	2					
18	6H3–44552–03	HOUSING, LOWER MOUNT RUBBER 2 BOITIER, SILENT-BLOC INFERIEUR	2					
19	97075–08025	BOLT BOULON	4					
20	92995–08100	WASHER RONDELLE	4					
21	90501–14M08	SPRING, COMPRESSION RESSORT, COMPRESSION	4					
22	90179–06066	NUT ECROU	2					
23	6H3–44553–01–4D	COVER, LOWER MOUNT COUVERCLE, SUSPENSION INFERIEU	2					
24	97885–06016	SCREW, PAN HEAD VIS, A ENCOCHE	2					
25	688–82127–02	WIRE, LEAD 2 FIL 2	1					
26	688–44514–00	MOUNT DAMPER, UPPER SIDE SILENT-BLOC, SUPERIEUR LATERAL	2					
27	90101–10M49	BOLT BOULON	2					

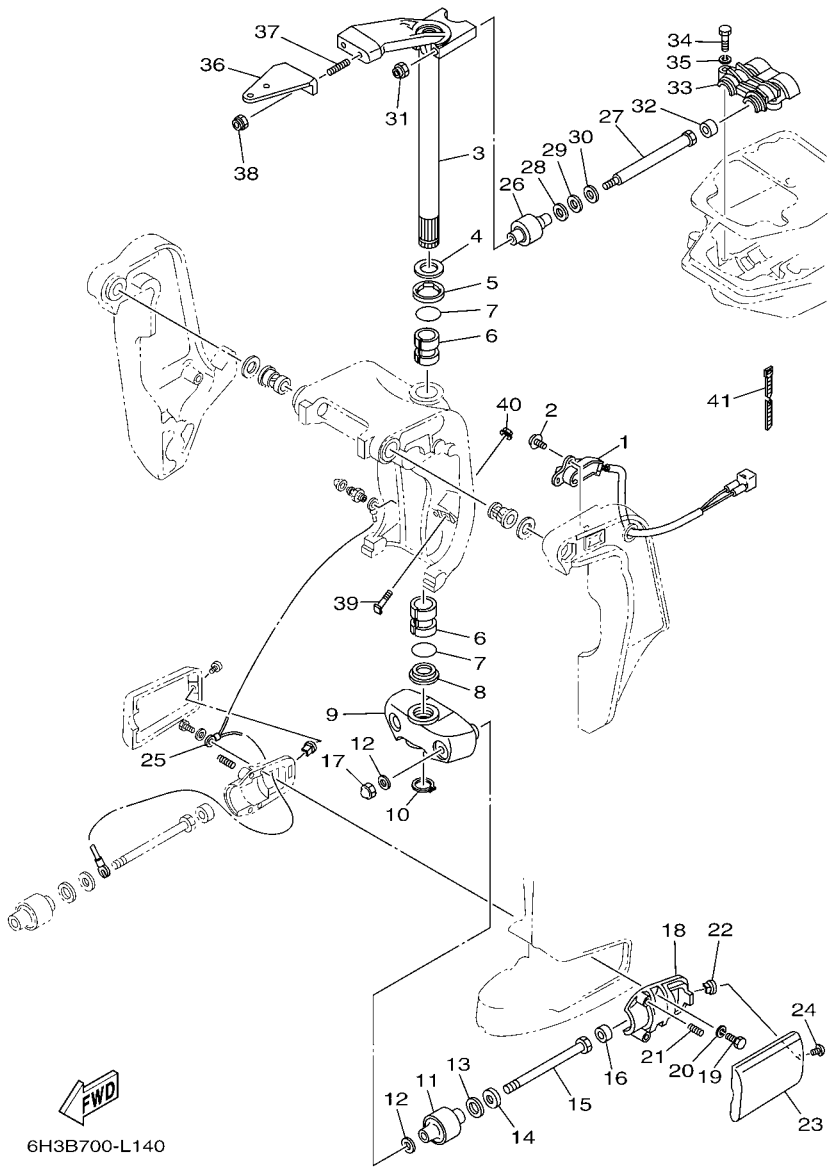

FIG. 14 BRACKET 2 SUPPORT 2

REF. NO.	PART NO. N° PIECES	DESCRIPTION DESCRIPTION	6H3B					REMARKS REMARQUES
28	90201–20M21	WASHER, PLATE RONDELLE, PLATE	2					
29	90202–20M06	WASHER, PLATE RONDELLE, PLATE	2					
30	90201–11M22	WASHER, PLATE RONDELLE, PLATE	2					
31	90185–10051	NUT, SELF-LOCKING ECROU,AUTO-BLOQUANT	2					
32	663–44575–00	DAMPER, LOWER MOUNT RUBBER SILENT-BLOC, INFERIEUR	2					
33	688–44511–00	COVER, UPPER MOUNT COUVERCLE, SUSPENSION SUPERIEU	1					
34	97075–08035	BOLT BOULON	3					
35	92995–08100	WASHER RONDELLE	3					
36	6H3–48511–51–4D	HOOK, STEERING ATTACHE, DIRECTION	1					STEERING GUIDE STEERING GUIDE
37	90116–10175	BOLT, STUD GOUJON	2					
38	90185–10051	NUT, SELF-LOCKING ECROU,AUTO-BLOQUANT	2					
39	6H1–43376–00	BOLT, THRUST RECEIVER BOULON	2					
40	90185–08057	NUT, SELF-LOCKING ECROU,AUTO-BLOQUANT	2					
41	90465–11M10	CLAMP BRIDE	3					

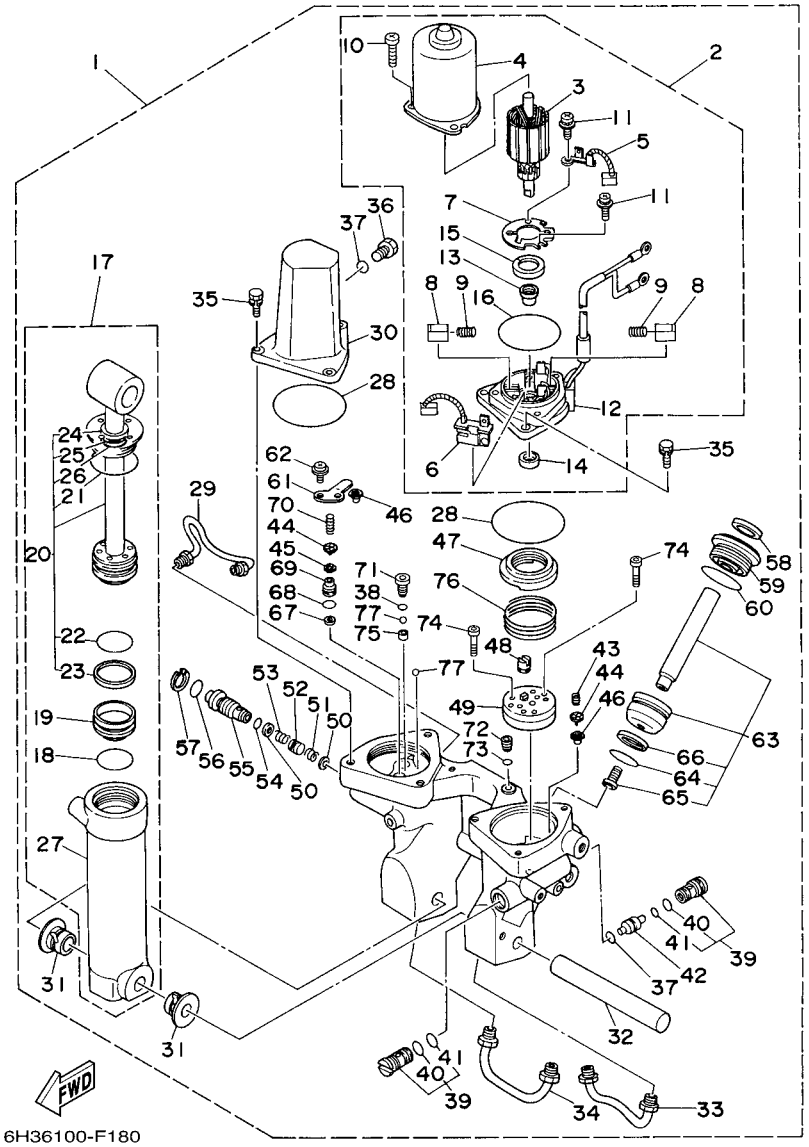

FIG. 15 POWER TRIM & TILT ASSY PUISSANCE PARER ET INCLINER

REF. NO.	PART NO. N° PIECES	DESCRIPTION DESCRIPTION	6H3B					REMARKS REMARQUES
1	6H1–43800–17–4D	POWER TRIM & TILT ASSY PUISSANCE PARER ET INCLINER (E	1					
2	6H1–43880–02	.MOTOR ASSY .MOTEUR (ENS.)	1					
3	6H1–43805–10	..ARMATURE ASSY ..INDUIT (ENS.)	1					
4	6H1–43804–10	..STATOR ASSY ..STATOR (ENS.)	1					
5	6H1–43891–10	..BRUSH 1 ..BALAI 1	1					
6	6H1–43892–10	..BREAKER COMP. (BRUSH 2) ..RUPTEUR COMP. (BALAI 2)	1					
7	6H1–4380F–10	..PLATE, BRUSH HOLDER ..PLAQUE	1					
8	6H1–4380J–10	..HOLDER, BRUSH ..PORTE-BALAI	2					
9	6H1–4386K–10	..SPRING, BRUSH ..RESSORT, BALAI	2					
10	97885–05016	..SCREW, PAN HEAD ..VIS, A ENCOCHE	3					
11	97607–04310	..SCREW,WITH WASHER ..VIS HEXAGONAL	2					
12	6H1–43881–10	..FRAME, END ..BATI	1					
13	6H1–4380H–10	..METAL ..METAL	1					
14	93102–08M43	..OIL SEAL ..JOINT SPY	1					
15	6H1–4380G–10	..PLATE ..PLAQUE	1					
16	6H1–43865–10	..O-RING ..JOINT TORIQUE	1					
17	6H1–43840–11	.POWER TILT ASSY .PUISSANCE INCLINER (ENS.)	1					
18	6H1–43861–10	..O-RING ..JOINT TORIQUE	1					
19	6H1–43814–11	..PISTON, FREE ..PISTON	1					
20	6H1–43810–11	..TILT PISTON SUB ASSY ..INCLINER PISTON AUXILIAIRE(ENS	1					
21	6H1–43861–00	...O-RING ...JOINT TORIQUE	1					
22	6H1–43861–10	...O-RING ...JOINT TORIQUE	1					
23	6H1–43871–10	...RING, BACK UP ...SEGMENT	1					
24	6H1–43812–00	...SEAL, DUST ...JOINT	1					
25	6H1–43872–10	...RING, BACK UP ...RESSORT	1					
26	6D8–43863–00	...O-RING ...JOINT TORIQUE	1					
27	6H1–43813–10	..CYLINDER, TILT ..CYLINDRE	1					

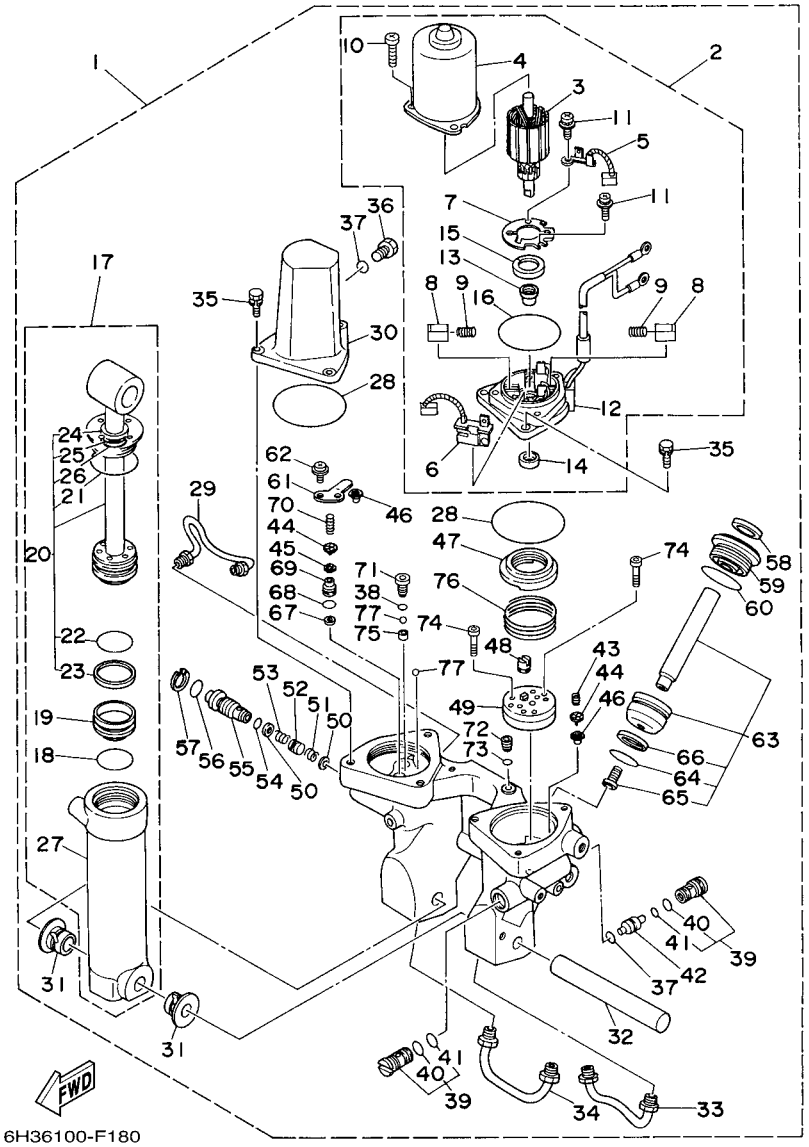

FIG. 15 POWER TRIM & TILT ASSY PUISSANCE PARER ET INCLINER

REF. NO.	PART NO. N° PIECES	DESCRIPTION DESCRIPTION	6H3B					REMARKS REMARQUES
28	93210–68N50	.O-RING .JOINT TORIQUE	2					
29	6H1–43835–10	.PIPE .TUYAU	1					
30	6H1–43828–10	.BODY, RESERVOIR .CORPS	1					
31	90386–18M14	.BUSH .DOUILLE	2					
32	6E5–43818–00	.PIN, LOWER SHOCK MOUNT .AXE, INFERIEUR AMORTISSEUR	1					
33	6H1–43833–10	.PIPE .TUYAU	1					
34	6H1–43834–00	.PIPE .TUYAU	1					
35	97595–06420	.BOLT, WITH WASHER .VIS HEXAGONAL AVC RONDELLE	6					
36	6H1–43829–00	.PLUG, RESERVOIR .BOUCHON	1					
37	93210–09165	.O-RING .JOINT TORIQUE	2					
38	93210–064A5	.O-RING .JOINT TORIQUE	1					
39	67F–43802–00	.VALVE SUB ASSY .CLAPET AUXILIAIRE (ENS.)	2					
40	6H1–43866–01	..O-RING ..JOINT TORIQUE	1					
41	6H1–43867–00	..O-RING ..JOINT TORIQUE	1					
42	6H1–43841–11	.PISTON, SHUTTLE .PISTON	1					
43	6H1–43856–10	.SPRING, DOWN RELIEF .RESSORT	1					
44	6H1–43844–10	.PIN, VALVE SUPPORT .GOUPILLE	2					
45	6H1–4384G–11	.SEAL, RELIEF VALVE .JOINT	1					
46	6H1–4384F–10	.SEAL, MAIN VALVE .JOINT	2					
47	6H1–43817–01	.FILTER 2 .FILTRE 2	1					
48	6H1–43831–10	.CONNECTOR, SHAFT .RACCORD	1					
49	6H1–43830–11	.GEAR PUMP ASSY .POMPE A PIGNON (ENS.)	1					
50	6H1–43847–00	.SEAT, MANUAL VALVE .SIEGE	2					
51	6H1–43899–00	.SPRING, MANUAL RELEASE .RESSORT	1					
52	6H1–4382A–10	.ADAPTOR 1 .ADAPTEUR 1	1					
53	6H1–43854–00	.SPRING, MANUAL RELEASE .RESSORT	1					
54	93210–10M74	.O-RING .JOINT TORIQUE	1					

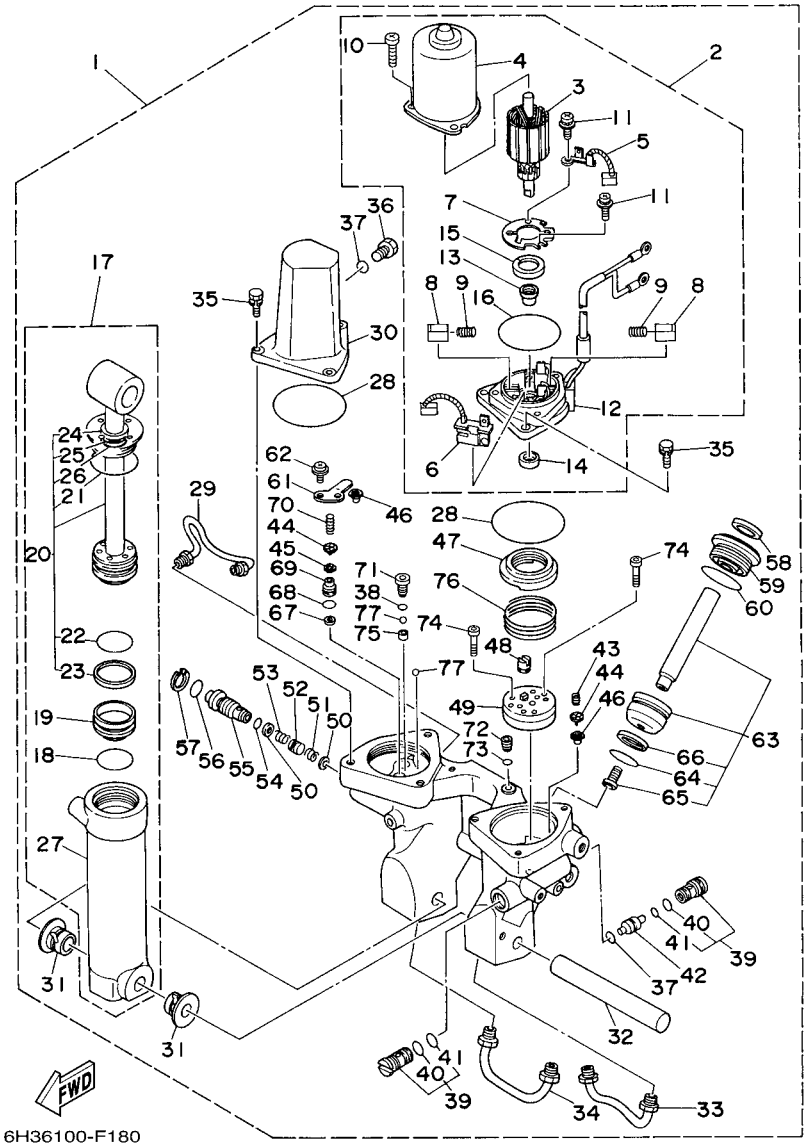

FIG. 15 POWER TRIM & TILT ASSY PUISSANCE PARER ET INCLINER

REF. NO.	PART NO. N° PIECES	DESCRIPTION DESCRIPTION	6H3B					REMARKS REMARQUES
55	6H1–43845–00	.SCREW, MANUAL RELEASE .VIS	1					
56	6D8–43863–00	.O-RING .JOINT TORIQUE	1					
57	6H1–43875–00	.RING, SNAP .RESSORT	1					
58	6H1–43822–10	.SEAL, TRIM DUST .JOINT	2					
59	6H1–43821–11	.SCREW, TRIM CYLINDER END .VIS	2					
60	6H1–43861–10	.O-RING .JOINT TORIQUE	2					
61	6H1–4384E–20	.SPRING, TRIM .RESSORT	1					
62	97602–05210	.SCREW, PAN HEAD WITH WASHER .VIS	2					
63	6H1–43820–11	.TRIM PISTON SUB ASSY .PARER PISTON AUXILIAIRE (ENS.)	2					
64	6H1–43864–00	..O-RING ..JOINT TORIQUE	1					
65	91318–08016	..BOLT, SOCKET HEAD ..BOULON	1					
66	6H1–43874–00	..RING, BACK UP ..RESSORT	1					
67	6H1–43816–00	.FILTER 1 .FILTRE 1	1					
68	6H1–43896–00	.O-RING .JOINT TORIQUE	1					
69	6H1–43895–12	.SEAT, RELIEF VALVE .SIEGE	1					
70	6H1–43855–11	.SPRING, UP RELIEF .RESSORT	1					
71	6H1–43843–11	.SCREW, VALVE LOCK .VIS	1					
72	6H1–4388E–11	.PLUG, TAPER SCREW .BOUCHON	1					
73	6H1–43868–00	.O-RING .JOINT TORIQUE	1					
74	91318–04025	.BOLT .BOULON	4					
75	6H1–4387J–00	.WASHER, SPECIAL 2 .RONDELLE	1					
76	6H1–4385H–00	.SPRING, SEAL .RESSORT	1					
77	93505–32038	.BALL .BILLE	2					

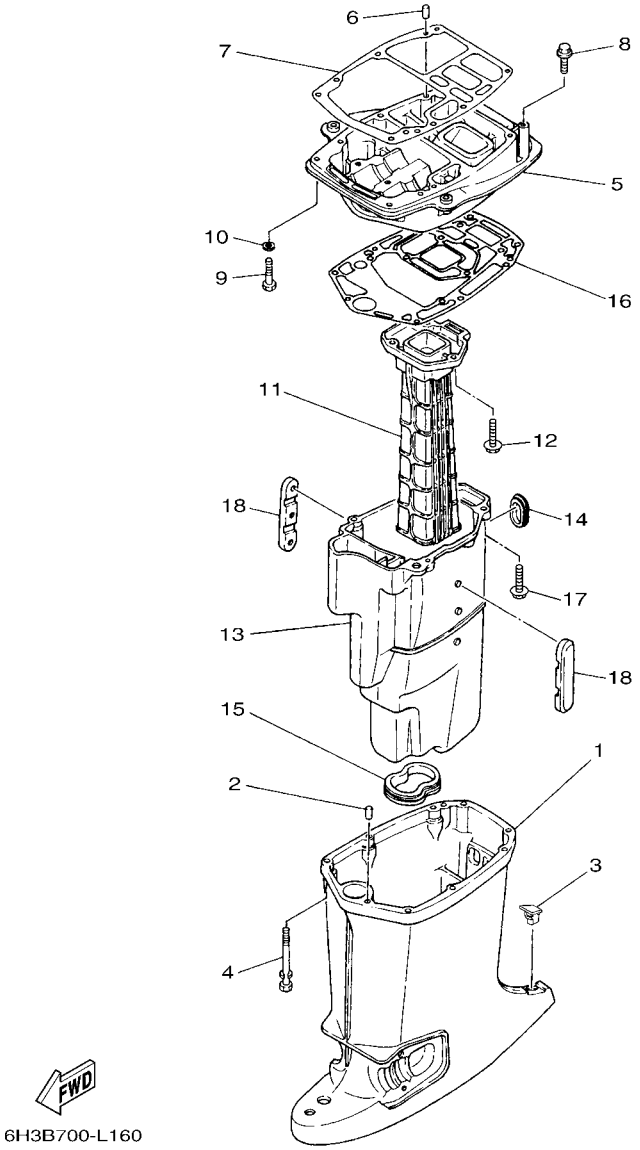

FIG. 16 UPPER CASING FOURREAU

REF. NO.	PART NO. N° PIECES	DESCRIPTION DESCRIPTION	6H3B					REMARKS REMARQUES
1	6H3–45111–12–4D	CASING, UPPER FOURREAU	1					L(20.5") L(20.5")
2	93606–12019	PIN, DOWEL GOUPILLE	2					
3	6C5–45155–00	CAP CAPUCHON	1					
4	90119–08M81	BOLT, WITH WASHER BOULON, AVEC RONDELLE	6					
5	6H3–41137–01–CA	GUIDE, EXHAUST COLLECTEUR D'ECHAPPEMENT	1					
6	93606–12019	PIN, DOWEL GOUPILLE	2					
7	6H3–45113–A0	GASKET, UPPER CASING JOINT, TUBE D'ARBRE	1					
8	97575–08430	BOLT, WITH WASHER VIS HEXAGONAL AVC RONDELLE	2					
9	97075–08035	BOLT BOULON	2					
10	92995–08100	WASHER RONDELLE	2					
11	6H3–41131–00–CA	MANIFOLD, EXT. 1 PIPE D'ECHAPPEMENT	1					
12	97575–08430	BOLT, WITH WASHER VIS HEXAGONAL AVC RONDELLE	3					
13	6H3–14711–11–CA	MUFFLER 1 POT D'ECHAPPEMENT 1	1					L(20.5") L(20.5")
14	6H3–45127–00	SEAL JOINT	1					
15	6H3–45123–00	GASKET, MUFFLER JOINT, POT DE DETENTE	1					
16	6H3–45114–A1	GASKET, UPPER CASING JOINT, TUBE D'ARBRE	1					
17	97575–08430	BOLT, WITH WASHER VIS HEXAGONAL AVC RONDELLE	4					
18	6H3–14737–10	DAMPER, MUFFLER AMORTISSEUR DE POT D'ECHAPPT	2					L(20.5") L(20.5")

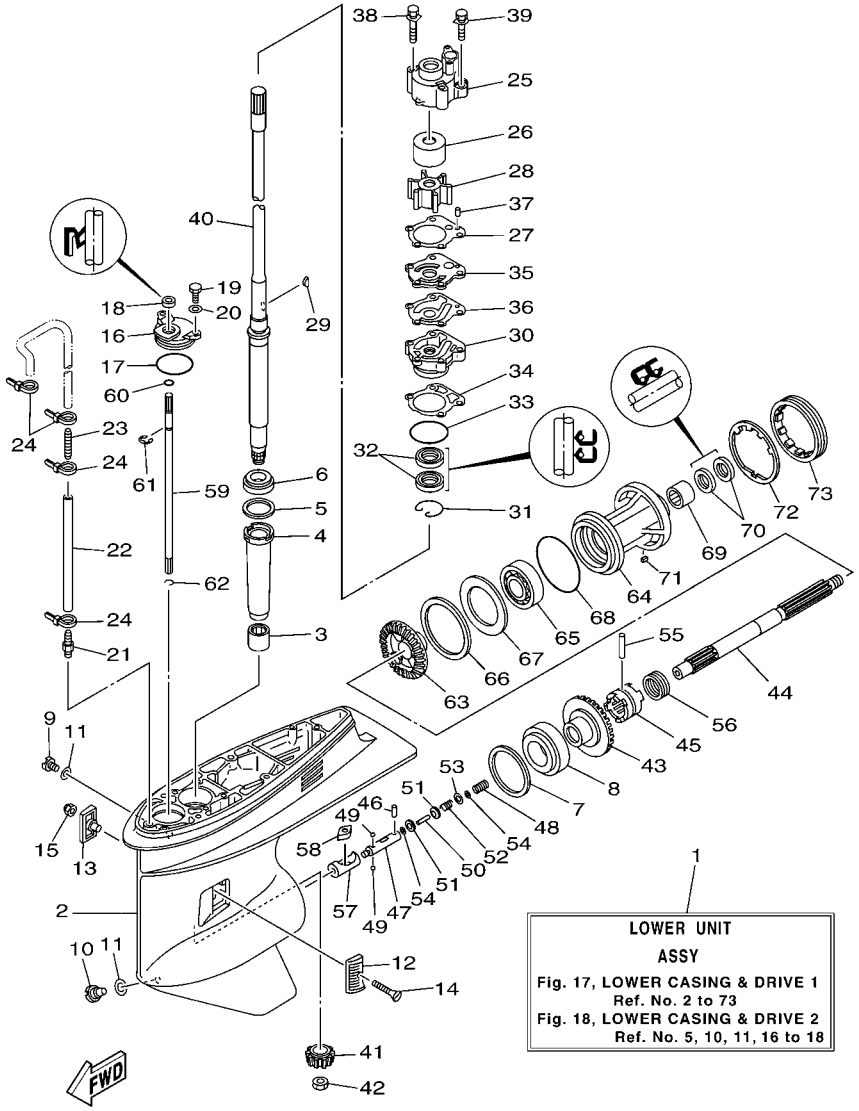

FIG. 17 LOWER CASING & DRIVE 1 BOITIER D'HELICE TRANSMISSION1

REF. NO.	PART NO. N° PIECES	DESCRIPTION DESCRIPTION	6H3B					REMARKS REMARQUES
1	6H3–45300–17–4D	LOWER UNIT ASSY UNITE INFERIEURE (ENS.)	1					L(20.5") L(20.5")
2	6H1–45301–03–4D	CASING, LOWER BEQUILLE	1					
3	93315–325V1	BEARING ROULEMENT	1					
4	688–45536–01	SLEEVE, DRIVE SHAFT MANCHON, ARBRE MOTEUR	1					
5	688–45587–01	SHIM (T:0.10MM) CALE (T:0.10MM)	1					UR UR
	688–45587–10	SHIM (T:0.12MM) CALE (T:0.12MM)	1					UR UR
	688–45587–20	SHIM (T:0.15MM) CALE (T:0.15MM)	1					UR UR
	688–45587–30	SHIM (T:0.18MM) CALE (T:0.18MM)	1					UR UR
	688–45587–40	SHIM (T:0.30MM) CALE (T:0.30MM)	1					UR UR
	688–45587–50	SHIM (T:0.40MM) CALE (T:0.40MM)	1					UR UR
	688–45587–60	SHIM (T:0.50MM) CALE (T:0.50MM)	1					UR UR
6	93332–000U3	BEARING ROULEMENT	1					
7	688–45567–01	SHIM (T:0.10MM) CALE (T:0.10MM)	1					UR UR
	688–45567–10	SHIM (T:0.12MM) CALE (T:0.12MM)	1					UR UR
	688–45567–20	SHIM (T:0.15MM) CALE (T:0.15MM)	1					UR UR
	688–45567–30	SHIM (T:0.18MM) CALE (T:0.18MM)	1					UR UR
	688–45567–40	SHIM (T:0.30MM) CALE (T:0.30MM)	1					UR UR
	688–45567–50	SHIM (T:0.40MM) CALE (T:0.40MM)	1					UR UR
	688–45567–60	SHIM (T:0.50MM) CALE (T:0.50MM)	1					UR UR
8	93332–000W7	BEARING ROULEMENT	1					
9	90340–08002	PLUG, STRAIGHT SCREW PLOT, FILETE DROIT	1					
10	688–45341–10	PLUG, DRAIN BOUCHON DE VIDANGE	1					
11	90430–08020	GASKET JOINT	2					
12	6H1–45214–00	COVER, WATER INLET 1 GRILLE, ENTREE D'EAU 1	1					
13	6H1–45215–00	COVER, WATER INLET 2 GRILLE, ENTREE D'EAU 2	1					
14	90151–05M00	SCREW, COUNTERSUNK VIS, TETE NOYEE	1					
15	90185–05002	NUT, NYLON ECROU,AUTO-BLOQUANT	1					

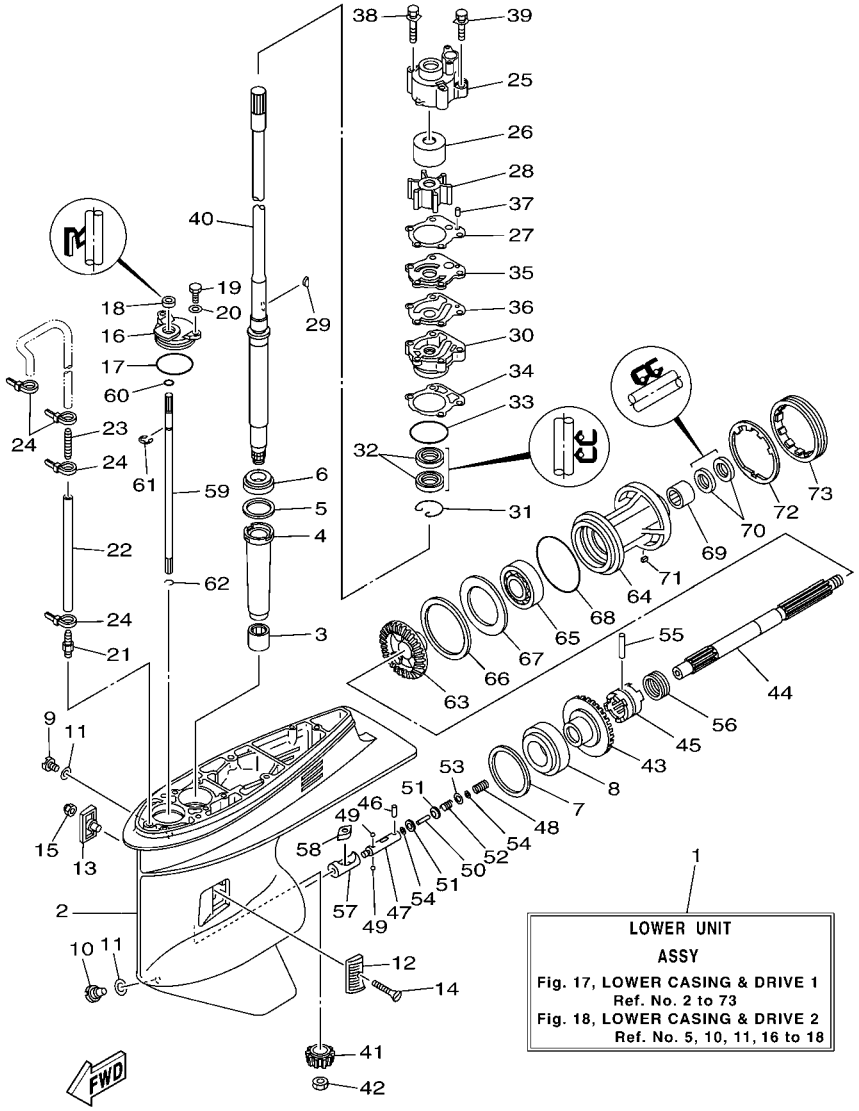

FIG. 17 LOWER CASING & DRIVE 1 BOITIER D'HELICE TRANSMISSION1

REF. NO.	PART NO. N° PIECES	DESCRIPTION DESCRIPTION	6H3B					REMARKS REMARQUES
16	688–45321–00	PLATE PLAQUETTE	1					
17	93210–49046	O-RING JOINT TORIQUE	1					
18	93106–09014	OIL SEAL JOINT SPY	1					
19	97095–06016	BOLT BOULON	2					
20	92995–06600	WASHER RONDELLE	2					
21	6E5–45378–00	NIPPLE, HOSE RACCORD, TUYAU	1					
22	90445–07ME9	HOSE (L120) DURITE (L120)	1					L(20.5") L(20.5")
23	6E5–83558–10	END, NIPPLE RACCORD DE NIPPLE	1					
24	90465–11M10	CLAMP BRIDE	4					
25	688–44311–01	HOUSING, WATER PUMP CORPS, POMPE A EAU	1					L(20.5") L(20.5")
26	688–44322–00	INSERT, CARTRIDGE CUVETTE	1					L(20.5") L(20.5")
27	688–44315–A0	GASKET, WATER PUMP JOINT, POMPE A EAU	1					L(20.5") L(20.5")
28	688–44352–03	IMPELLER TURBINE	1					L(20.5") L(20.5")
29	90280–04M04	KEY, WOODRUFF CLAVETTE, DEMI-LUNE	1					L(20.5") L(20.5")
30	6D8–44341–01–CA	HOUSING, WATER PUMP CORPS, POMPE A EAU	1					L(20.5") L(20.5")
31	93450–44166	CIRCLIP CIRCLIP, TYPE S	1					L(20.5") L(20.5")
32	93101–25M03	OIL SEAL JOINT SPY	2					L(20.5") L(20.5")
33	93210–46044	O-RING JOINT TORIQUE	1					
34	688–44316–A0	GASKET, WATER PUMP JOINT, POMPE A EAU	1					
35	688–44323–00	OUTER PLATE, CARTRIDGE PLAQUE EXTERIEURE	1					L(20.5") L(20.5")
36	688–44324–A0	GASKET, CARTRIDGE JOINT	1					L(20.5") L(20.5")
37	93604–10M03	PIN, DOWEL CLAVETTE	2					
38	90119–08M16	BOLT, WITH WASHER BOULON, AVEC RONDELLE	2					L(20.5") L(20.5")
39	90119–08M13	BOLT, WITH WASHER BOULON, AVEC RONDELLE	2					L(20.5") L(20.5")
40	6H3–45501–11	DRIVE SHAFT COMP. ARBRE MOTEUR COMP.	1					L(20.5") L(20.5")
41	6K5–45551–00	PINION (12T) PIGNON D'ATTAQUE (12D)	1					
42	90170–16M01	NUT ECROU	1					

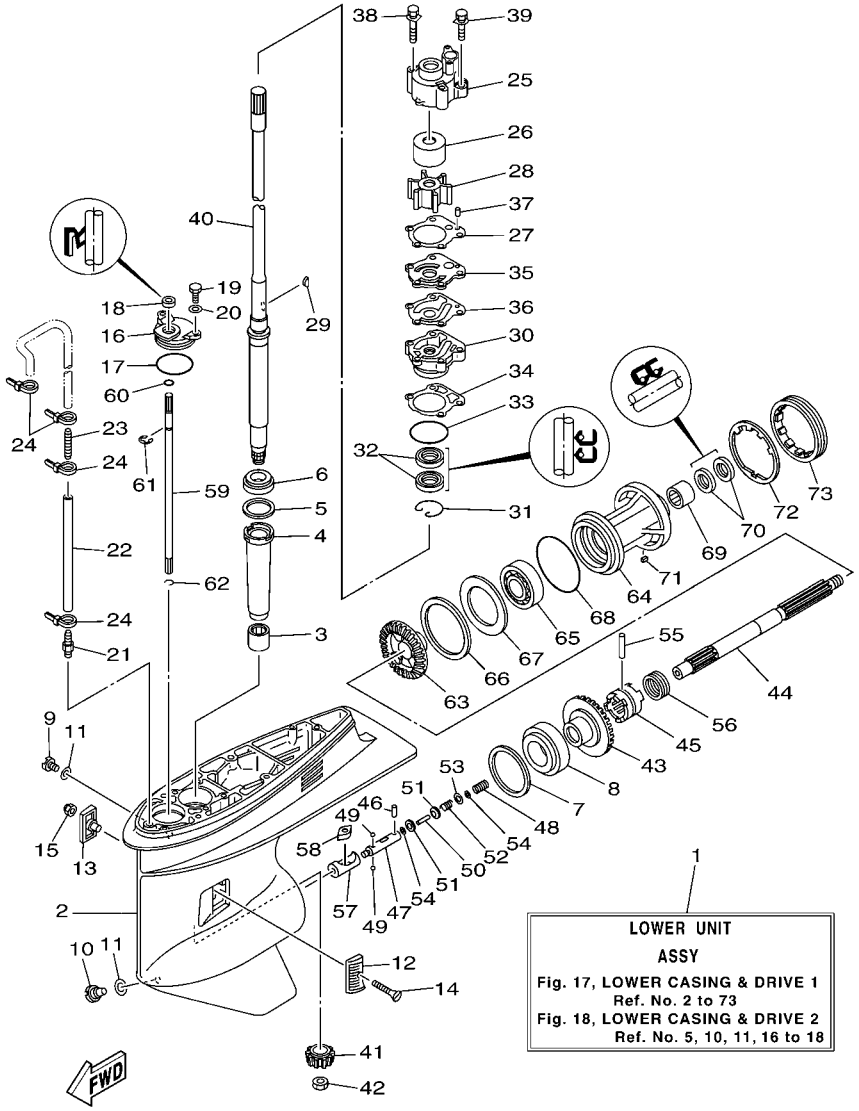

FIG. 17 LOWER CASING & DRIVE 1 BOITIER D'HELICE TRANSMISSION1

REF. NO.	PART NO. N° PIECES	DESCRIPTION DESCRIPTION	6H3B					REMARKS REMARQUES
43	6K5–45560–00	GEAR 1 (28T) PIGNON 1 (28T)	1					
44	6H1–45611–01	SHAFT, PROPELLER ARBRE, HELICE	1					
45	6H1–45631–01	CLUTCH, DOG CRABOT	1					
46	93603–12M11	PIN, DOWEL CLAVETTE	1					
47	6H1–45634–02	SLIDE, SHIFT CONTRE-POUSSOIR	1					
48	90501–16M65	SPRING, COMPRESSION RESSORT, COMPRESSION	1					
49	93503–16003	BALL BILLES	2					
50	6H1–45668–00	SHAFT, FREE 1 AXE 1	1					
51	6H1–45635–00	PLUNGER, SHIFT POUSSOIR D'EMBRAYAGE	2					
52	90501–12M48	SPRING, COMPRESSION RESSORT, COMPRESSION	1					
53	90201–03313	WASHER, PLATE RONDELLE, PLATE	1					
54	90183–02M03	NUT, SPRING ECROU, RESSORT	2					
55	90250–07M02	PIN, STRAIGHT GOUPILLE, DROITE	1					
56	688–45633–00	RING, CROSS PIN JONC, GOUPILLE CRABOT	1					
57	6H1–45641–01	SHIFTER EMBRAYAGE	1					
58	6H1–44151–00	CAM, SHIFT CAME, INVERSION	1					
59	6H1–44144–00	ROD, SHIFT TIGE D'EMBRAYAGE	1					
60	93210–07003	O-RING JOINT TORIQUE	1					
61	99001–08600	CIRCLIP CIRCLIP	1					
62	93450–07M00	CIRCLIP CIRCLIP, TYPE S	1					
63	6H3–45571–00	GEAR (28T) PIGNON (28D)	1					
64	688–45331–00–CA	HOUSING, BEARING FLASQUE, ROULEMENT	1					
65	93306–207U0	BEARING ROULEMENT	1					
66	688–45577–01	SHIM (T:0.10MM) CALE (T:0.10MM)	1					UR UR
	688–45577–10	SHIM (T:0.12MM) CALE (T:0.12MM)	1					UR UR
	688–45577–20	SHIM (T:0.15MM) CALE (T:0.15MM)	1					UR UR
	688–45577–30	SHIM (T:0.18MM) CALE (T:0.18MM)	1					UR UR

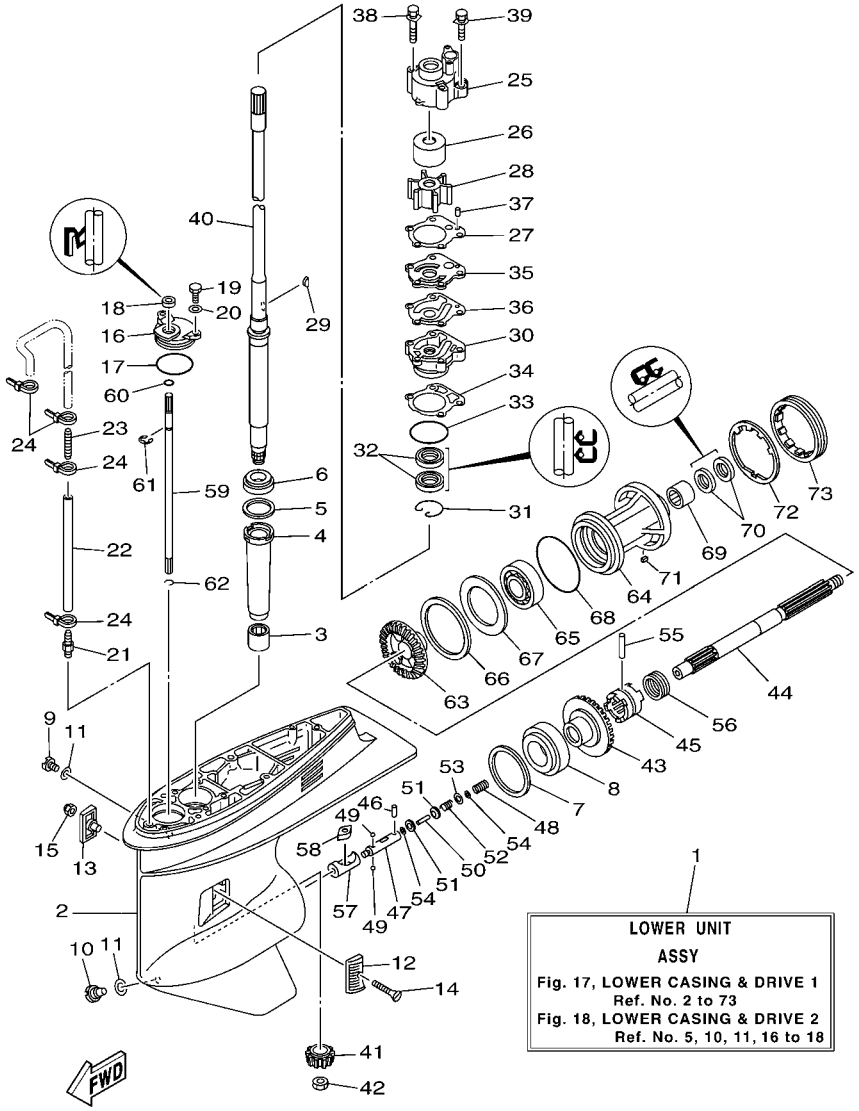

FIG. 17 LOWER CASING & DRIVE 1 BOITIER D'HELICE TRANSMISSION1

REF. NO.	PART NO. N° PIECES	DESCRIPTION DESCRIPTION	6H3B					REMARKS REMARQUES
66	688–45577–40	SHIM (T:0.30MM) CALE (T:0.30MM)	1					UR UR
	688–45577–50	SHIM (T:0.40MM) CALE (T:0.40MM)	1					UR UR
	688–45577–60	SHIM (T:0.50MM) CALE (T:0.50MM)	1					UR UR
67	688–45576–00	WASHER, THRUST 2 RONDELLE DE CALAGE 2	1					
68	93210–85M97	O-RING JOINT TORIQUE	1					
69	93317–325U0	BEARING ROULEMENT	1					
70	93101–25M03	OIL SEAL JOINT SPY	2					
71	90282–04010	KEY, STRAIGHT CLAVETTE, DROITE	1					
72	688–45383–02	WASHER, CLAW FREIN D'ECROU	1					
73	688–45384–02	NUT ECROU	1					

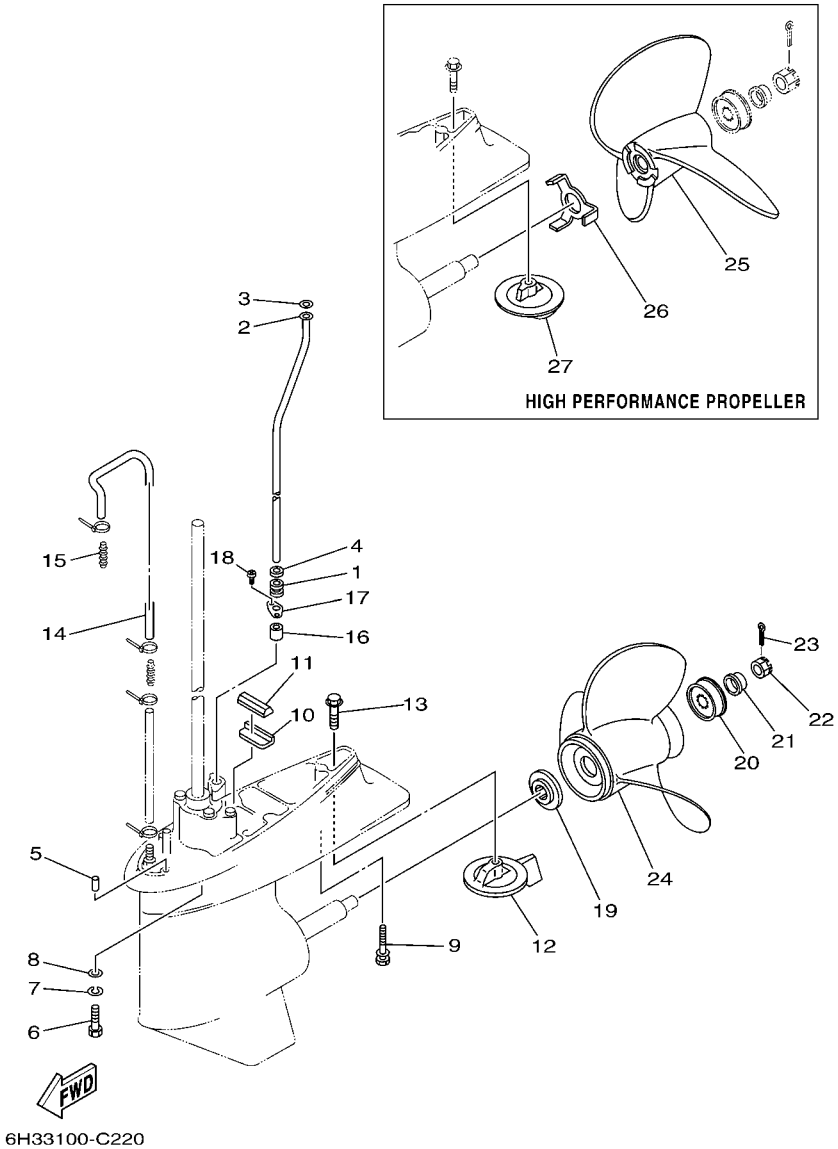

FIG. 18 LOWER CASING & DRIVE 2 BOITIER D'HELICE TRANSMISSION2

REF. NO.	PART NO. N° PIECES	DESCRIPTION DESCRIPTION	6H3B					REMARKS REMARQUES
1	663–44367–00	DAMPER, WATER SEAL 3 JOINT TUBE D'EAU 3	1					
2	6H3–44361–11	TUBE, WATER 1 TUBE D'EAU 1	1					L(20.5") L(20.5")
3	90202–12060	WASHER, PLATE RONDELLE, PLATE	1					
4	90430–12072	GASKET JOINT	1					
5	93606–12019	PIN, DOWEL GOUPILLE	2					
6	97075–10040	BOLT BOULON	4					
7	92990–10100	WASHER, SPRING RONDELLE, GROWER	4					
8	92990–10600	WASHER, PLATE RONDELLE, PLATE	4					
9	97575–08460	BOLT, WITH WASHER VIS HEXAGONAL AVC RONDELLE	1					
10	663–45376–00	GUIDE, SEAL DAMPER BUTEE, JOINT CAOUTCHOUC	1					
11	688–45375–00	DAMPER, SEAL BOURRELET, CAOUTCHOUC	1					
12	688–45371–02	TAB-TRIM ANODE DERIVE	1					
13	90105–10M67	BOLT, FLANGE BOULON	1					
14	90445–07MF1	HOSE (L570) DURITE (L570)	1					
15	6E5–83558–00	END, NIPPLE RACCORD DE NIPPLE	1					
16	663–44366–00	DAMPER, WATER SEAL 2 JOINT, TUBE D'EAU 2	1					
17	90480–19M06	GROMMET PASSE-FIL	1					L(20.5") L(20.5")
18	90160–04006	SCREW, ROUND TAPPING VIS, TETE RONDE FRAISEE	2					L(20.5") L(20.5")
19	688–45987–01	SPACER 1 ENTRETOISE 1	1					
20	67F–45997–00	SPACER 2 ENTRETOISE 2	1					
21	90389–25M00	BUSH DOUILLE	1					
22	90171–16011	NUT, CASTLE ECROU, CRENELE	1					
23	91490–40025	PIN. COTTER GOUPILLE	1					
24	6E5–45941–00	PROPELLER (3X13"X19"-K) HELICE (3X13"X19"-K)	1					UR UR
	6E5–45943–00	PROPELLER (3X12-5/8"X21"-K) HELICE (3X12-5/8"X21"-K)	1					UR UR
	6E5–45945–01	PROPELLER (3X13-1/4"X17"-K) HELICE (3X13-1/4"X17"-K)	1					UR UR
	6E5–45947–00	PROPELLER (3X13-1/2"X15"-K) HELICE (3X13-1/2"X15"-K)	1					UR UR

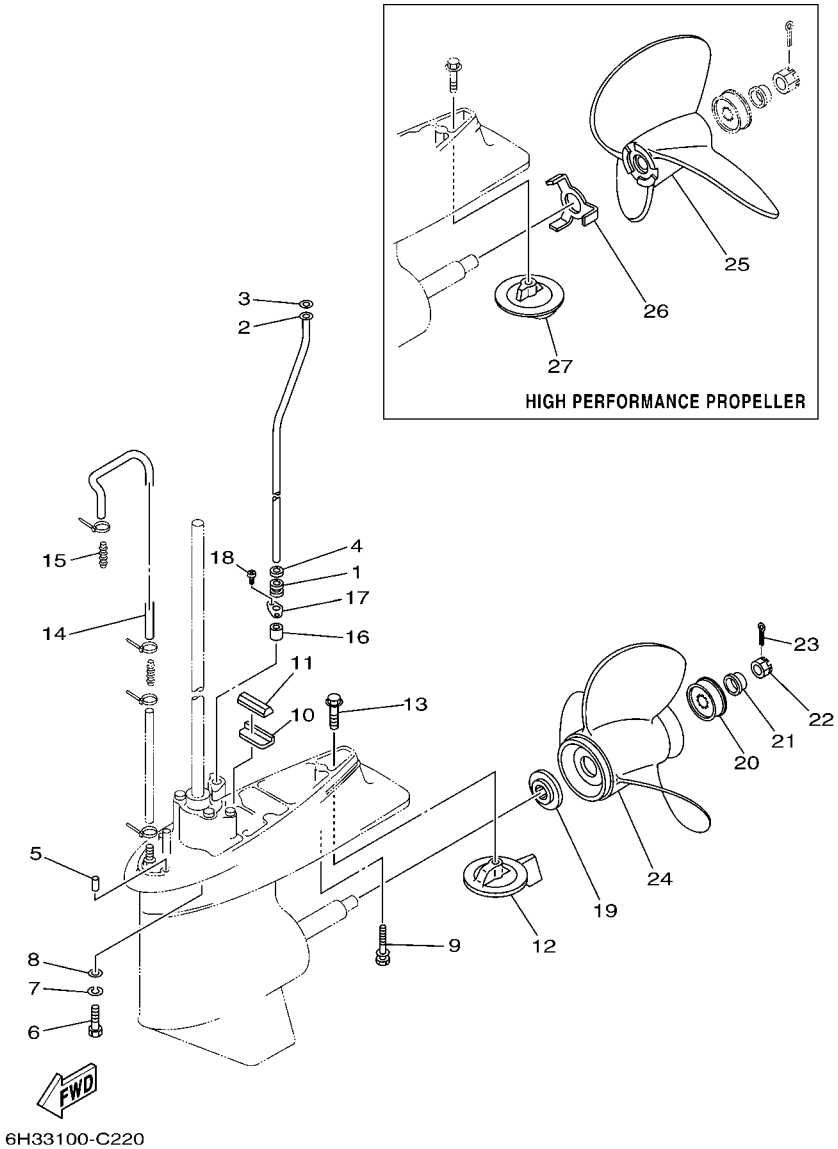

FIG. 18 LOWER CASING & DRIVE 2 BOITIER D'HELICE TRANSMISSION2

REF. NO.	PART NO. N° PIECES	DESCRIPTION DESCRIPTION	6H3B					REMARKS REMARQUES
24	6E5–45949–00	PROPELLER (3X13-5/8"X13"-K) HELICE (3X13-5/8"X13"-K)	1					UR UR
	6E5–45952–00	PROPELLER (3X13"X23"-K) HELICE (3X13"X23"-K)	1					UR UR
	6E5–45954–00	PROPELLER (3X14"X11"-K) HELICE (3X14"X11"-K)	1					UR UR
	6E5–45956–00	PROPELLER (3X13"X25"-K) HELICE (3X13"X25"-K)	1					UR UR
	688–45930–02	PROPELLER (3X13"X17"-K2) HELICE (3X13"X17"-K2)	1					UR UR
	688–45970–03	PROPELLER (3X13"X19"-K) HELICE (3X13"X19"-K)	1					UR UR
	688–45972–02	PROPELLER (3X13"X21"-K) HELICE (3X13"X21"-K)	1					UR UR
	688–45974–02	PROPELLER (3X13"X23"-K) HELICE (3X13"X23"-K)	1					UR UR
	688–45976–01	PROPELLER (3X13"X25"-K) HELICE (3X13"X25"-K)	1					UR UR
	688–45932–60	PROPELLER (3X13-1/2"X14"-K) HELICE (3X13-1/2"X14"-K)	1					UR UR
	688–45978–60	PROPELLER (3X13-1/2"X16"-K) HELICE (3X13-1/2"X16"-K)	1					UR UR
25	6E5–45970–10	PROPELLER (3X14"X20"-P) HELICE (3X14"X20"-P)	1					UR UR
	6E5–45972–10	PROPELLER (3X14"X24"-P) HELICE (3X14"X24"-P)	1					UR UR
	6E5–45974–10	PROPELLER (3X14"X28"-P) HELICE (3X14"X28"-P)	1					UR UR
	6E5–45976–10	PROPELLER (3X14"X22"-P) HELICE (3X14"X22"-P)	1					UR UR
	6E5–45978–10	PROPELLER (3X14"X26"-P) HELICE (3X14"X26"-P)	1					UR UR
26	6E5–45994–10	PLATE, TOOTH PLAQUETTE	1					
27	6E5–45371–10	TAB-TRIM ANODE DERIVE	1					

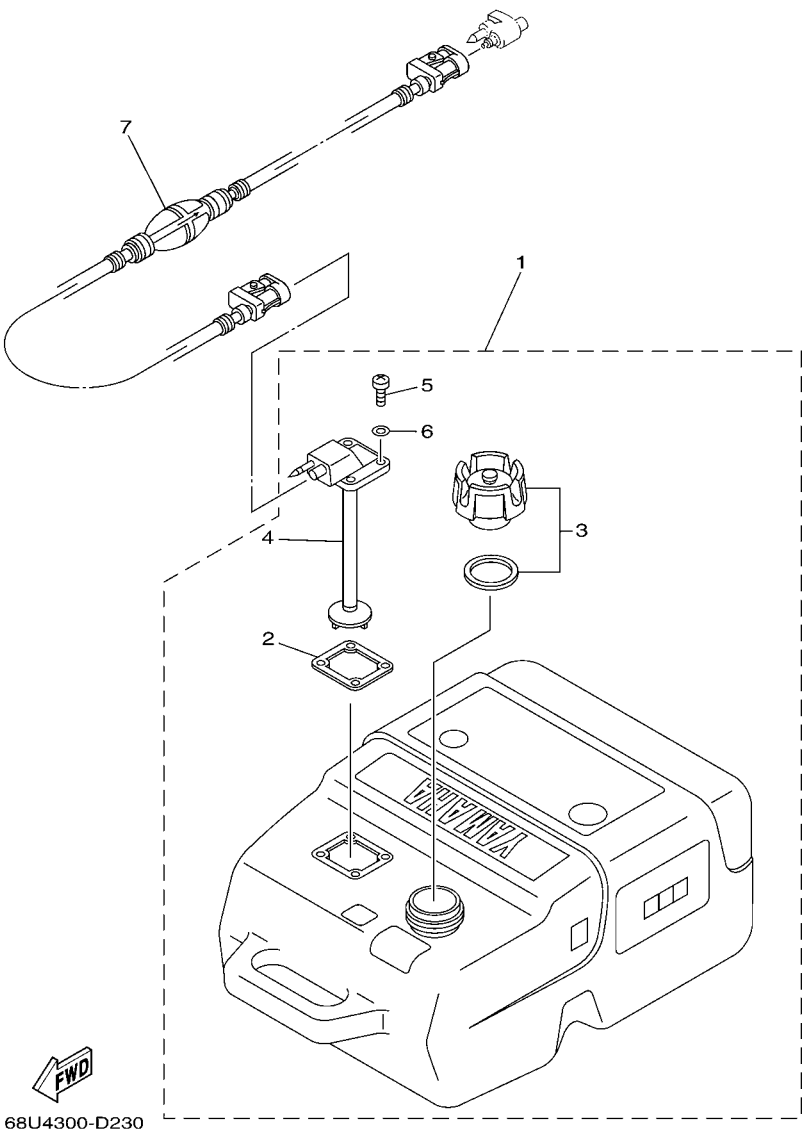

FIG. 19 FUEL TANK — RESERVOIR A CARBURANT

REF. NO.	PART NO. N° PIECES	DESCRIPTION DESCRIPTION	6H3B					REMARKS REMARQUES
1	6YK–24201–03	FUEL TANK ASSY (25L) RESERVOIR A ESSENCE (ENS.) 25L	1					AP AP
2	6YL–24268–01	.GASKET, FUEL METER .JOINT, JAUGE A CARBURANT	1					
3	6YK–24610–01	.CAP ASSY .BOUCHON	1					
4	6YK–24260–01	.FUEL METER ASSY .INDICATEUR DE CARBURANT	1					
5	90157–05M16	.SCREW, PAN HEAD .VIS, TETE TRONCONIQUE	4					
6	6YL–24329–00	.SEAL .JOINT	4					
7	6YL–24306–54	FUEL PIPE COMP. 1 DURITE A ESSENCE 1	1					AP AP

FIG. 20 STEERING GUIDE FIXATION DE DIRECTION

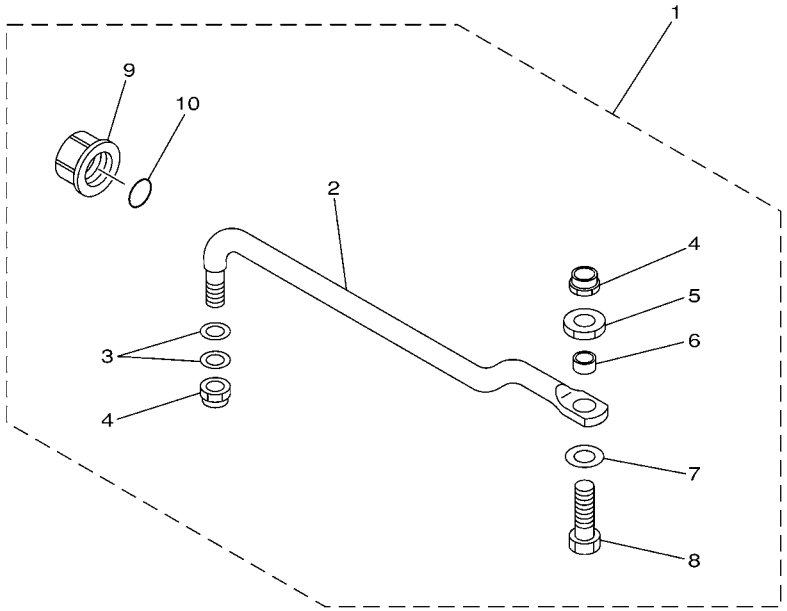

6880700-9190

REF. NO.	PART NO. N° PIECES	DESCRIPTION DESCRIPTION	6H3B					REMARKS REMARQUES
1	688–61350–10	STEERING GUIDE ATTACHMENT KIT FIXATIONS DE DIRECTION	1					AP AP
2	688–61351–10	.ROD, STEERING LINK .RENVOI DE DIRECTION	1					
3	90201–10M20	.WASHER, PLATE .RONDELLE, PLATE	2					
4	90185–09M01	.NUT, SELF-LOCKING .ECROU,AUTO-BLOQUANT	2					
5	90170–09M03	.NUT .ECROU	1					
6	90387–10M42	.COLLAR .COLLERETTE	1					
7	90201–10M63	.WASHER, PLATE .RONDELLE, PLATE	1					
8	6E5–61355–00	.BOLT .BOULON	1					
9	6E5–43145–01	.CAP, CLAMP BRACKET .CAPUCHON, PRESSE	1					
10	93210–16275	.O-RING .JOINT TORIQUE	1					

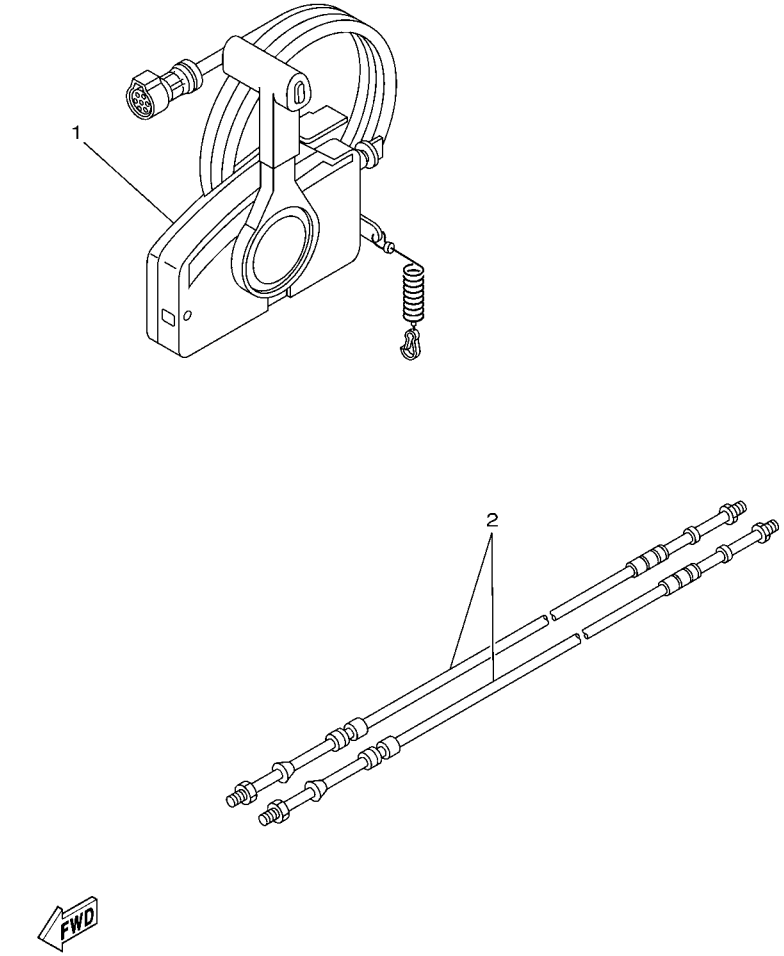

FIG. 21 REMOTE CONTROL BOX BOITIER DE COMMANDE A DISTANCE

REF. NO.	PART NO. N° PIECES	DESCRIPTION DESCRIPTION	6H3B					REMARKS REMARQUES
1	703–48207–1A	REMOTE CONTROL ASSY (10P) BOITIER DE COMMANDE A DISTANCE	1					AP WITH PT/T SW. AP WITH PT/T SW.
2	701–48320–00	CABLE, REMOTE CONTROL L=12F CABLE, COMMANDE A DISTANCE:12F	2					UR UR
	701–48320–20	CABLE, REMOTE CONTROL L=13F CABLE, COMMANDE A DISTANCE:13F	2					UR UR
	701–48320–30	CABLE, REMOTE CONTROL L=14F CABLE, COMMANDE A DISTANCE:14F	2					UR UR
	701–48320–50	CABLE, REMOTE CONTROL L=15F CABLE, COMMANDE A DISTANCE:15F	2					UR UR
	701–48320–60	CABLE, REMOTE CONTROL L=16F CABLE, COMMANDE A DISTANCE:16F	2					UR UR
	701–48320–80	CABLE, REMOTE CONTROL L=17F CABLE, COMMANDE A DISTANCE:17F	2					UR UR

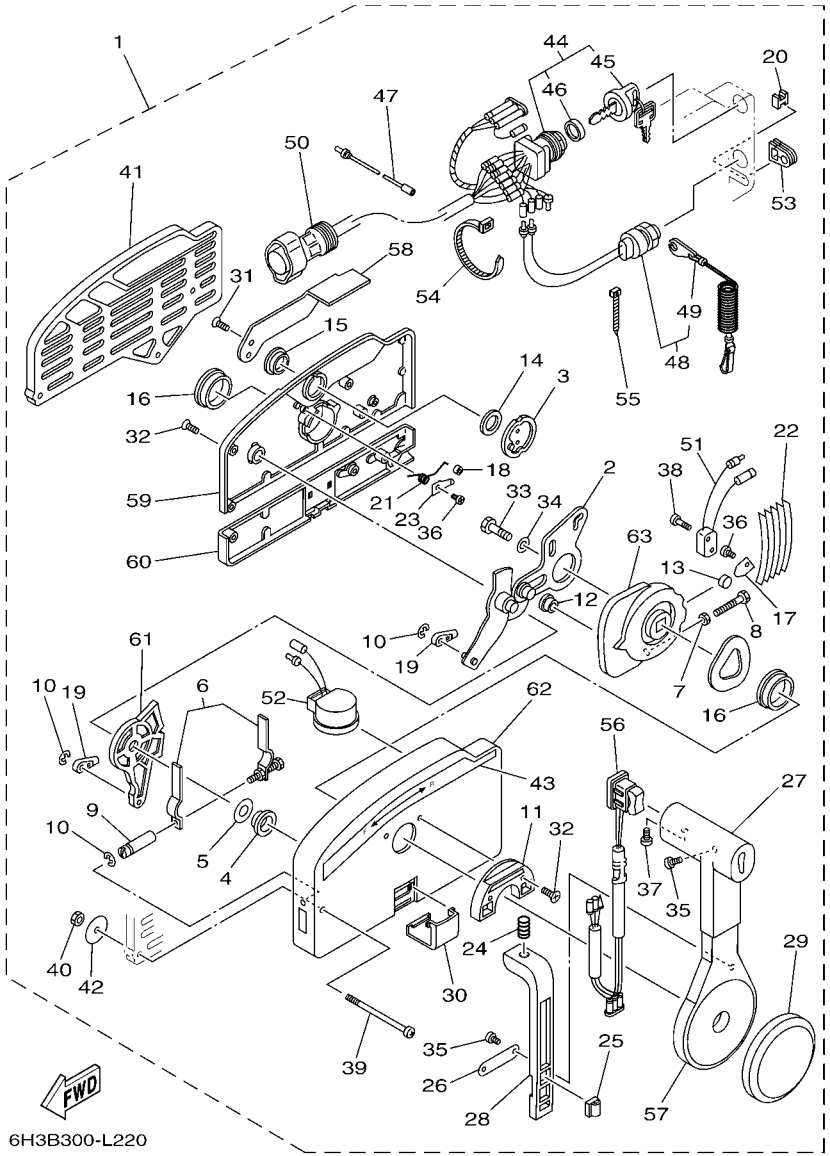

FIG. 22 REMOTE CONTROL ASSY BOITIER DE COMMANDE A DISTANCE

REF. NO.	PART NO. N° PIECES	DESCRIPTION DESCRIPTION	6H3B					REMARKS REMARQUES
1	703–48207–1A	REMOTE CONTROL ASSY (10P) BOITIER DE COMMANDE A DISTANCE	1					AP WITH PT/T SW. AP WITH PT/T SW.
2	703–48261–01	.ARM, THROTTLE .BRAS, ACCELERATION	1					
3	703–48153–00	.SHAFT, FREE ACCEL. .AXE	1					
4	703–48235–00	.BUSHING .COUSSINET	1					
5	703–48268–00	.SPACER .ENTRETOISE	1					
6	703–48264–00	.FRICTION, THROTTLE .FRICTION, ACCELERATION	1					
7	95380–05600	.NUT .ECROU	1					
8	97380–05025	.BOLT .BOULON, HEXAGONAL	1					
9	703–48265–00	.SHAFT, FRICTION .AXE, COPILOTE	1					
10	93430–06024	.CIRCLIP .CLIPS	3					
11	703–48245–00	.PLATE, LOCK .PLAQUE, VERROU	1					
12	703–48252–00	.ROLLER, CAM .POULIE	1					
13	701–48248–00	.ROLLER, FREE ACCEL. .POULIE	1					
14	703–48198–00	.WASHER, WAVE .RONDELLE, ELASTIQUE ONDULEE	1					
15	703–48243–00	.BUSHING .COUSSINET	1					
16	703–48236–00	.BUSHING 1 .POULIE	2					
17	703–48189–00	.RETAINER .FLASQUE	1					
18	703–48234–00	.ROLLER, DETENT .POULIE	1					
19	703–48345–01	.CABLE END, REMOTE CONTROL 2 .CHAPE CABLE	2					
20	703–48358–00	.ANCHOR, CABLE .COLLIER	1					
21	703–48244–00	.SPRING, FREE ACCEL. .RESSORT	1					
22	703–48238–00	.SPRING, DETENT .RESSORT	5					
23	703–48246–00	.SPACER .ENTRETOISE	1					
24	703–48227–00	.SPRING, NEUTRAL LOCK .RESSORT	1					
25	703–82594–00	.CLAMP .BRIDE	1					WITH PT/T SW. WITH PT/T SW.
26	703–48226–00	.PLATE, STOPPER .PLAQUETTE	1					
27	703–48222–00	.GRIP, CONTROL LEVER .POIGNEE, COMMANDE LEVIER	1					SINGLE SINGLE

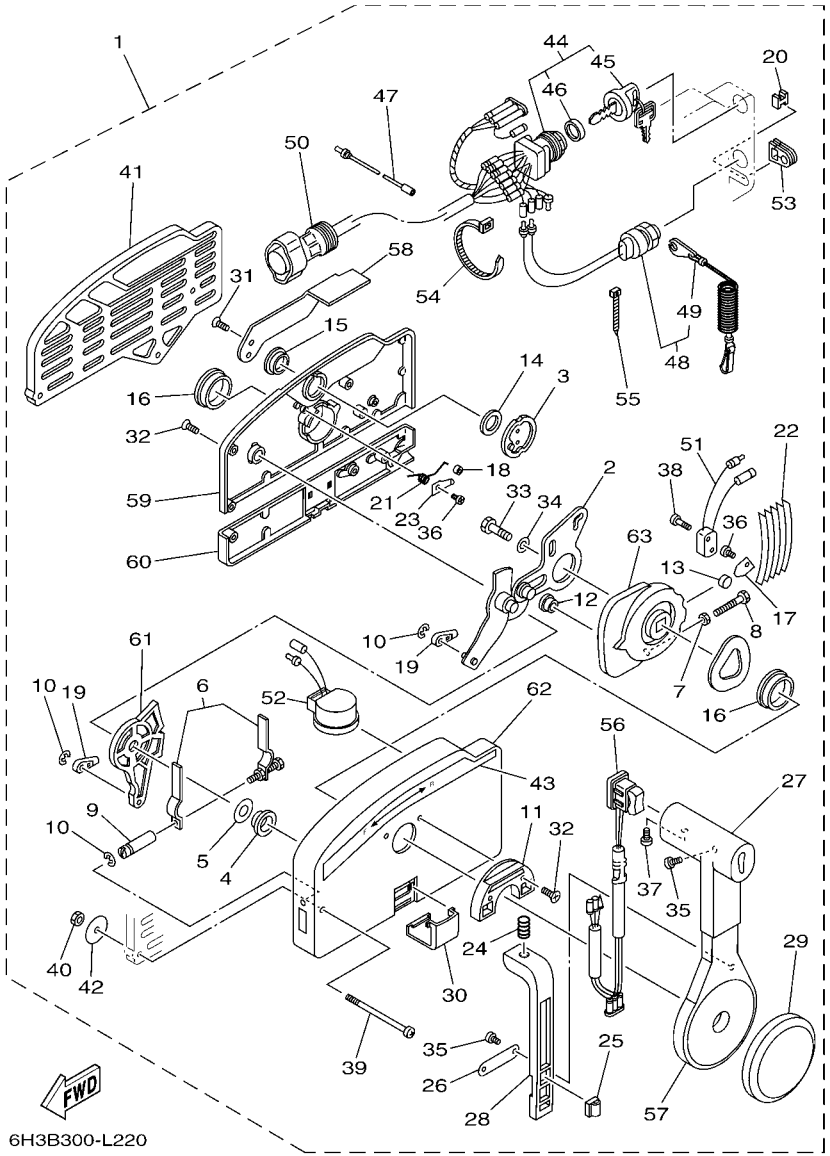

FIG. 22 REMOTE CONTROL ASSY BOITIER DE COMMANDE A DISTANCE

REF. NO.	PART NO. N° PIECES	DESCRIPTION DESCRIPTION	6H3B					REMARKS REMARQUES
28	703–48223–00	.LOCK, NEUTRAL .VERROU, NEUTRAL	1					
29	703–48225–00	.COVER .COUVERCLE	1					
30	703–48219–00	.COVER, LEAD .COUVERCLE	1					
31	703–48281–00	.SCREW .VIS	2					
32	703–48282–00	.SCREW .VIS	7					
33	97380–08030	.BOLT .BOULON, HEXAGONAL	1					
34	92990–08600	.WASHER, PLATE .RONDELLE, PLATE	1					
35	98580–04010	.SCREW, PAN HEAD .VIS	3					
36	98580–04006	.SCREW, PAN HEAD .VIS	2					
37	98580–05010	.SCREW, PAN HEAD .VIS	1					
38	98580–03015	.SCREW, PAN HEAD .VIS	2					
39	703–48291–10	.SCREW (M6) .VIS (M6)	3					
40	95380–06600	.NUT, HEXAGON .ECROU	3					
41	703–48293–10	.SPACER, REMOTE CONTROL .ENTRETOISE	1					SINGLE SINGLE
42	701–48287–00	.WASHER .RONDELLE	3					
43	703–48215–00	.GRAPHIC .ADHESIF	1					
44	703–82510–43	.MAIN SWITCH ASSY .CONTACTEUR A CLEF COMPLET	1					
45	703–82577–00	..CAP, KEY ..CABOCHON	1					
46	6K1–82532–00	..CAP ..COUVERCLE	1					
47	703–82531–00	.WIRE, LEAD (L70) .FIL (L70)	1					
48	688–82575–01	.ENGINE STOP SWITCH ASSY .COUPE CIRCUIT CPLT	1					
49	682–82556–00	..LANYARD, STOP SWITCH ..PLAQUETTE	1					
50	688–8258A–20	.EXTENSION, WIRE HARNESS (4.9M) .EXTENSION, FAISCEAU DE FILS (4	1					(10P) (10P)
51	703–82540–00	.NEUTRAL SWITCH ASSY .CONTACTEUR DE POINT-MORT	1					
52	703–83383–11	.BUZZER .RONFLEUR	1					
53	703–48284–10	.GROMMET .PASSE-FIL	1					
54	703–82591–00	.BAND .COLLIER	3					

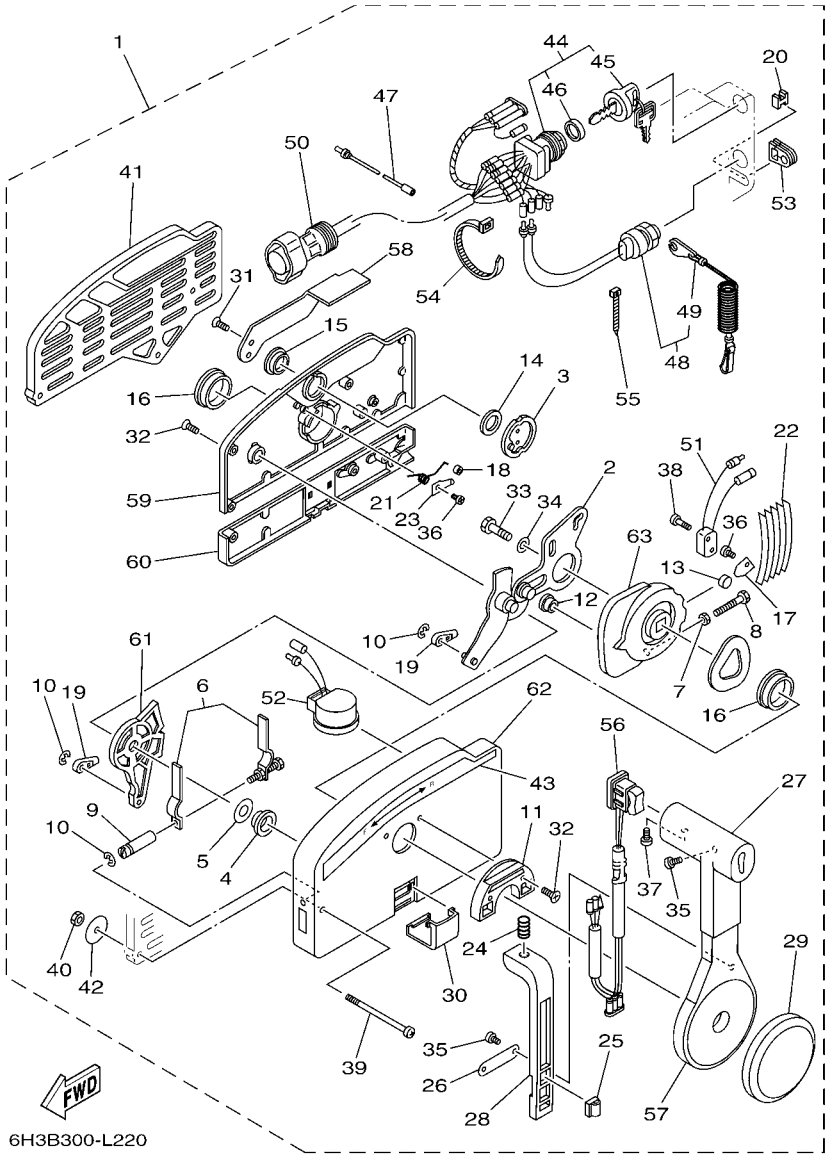

FIG. 22 REMOTE CONTROL ASSY BOITIER DE COMMANDE A DISTANCE

REF. NO.	PART NO. N° PIECES	DESCRIPTION DESCRIPTION	6H3B					REMARKS REMARQUES
55	703–82592–00	.BAND .COLLIER	1					
56	703–82563–12	.TRIM & TILT SWITCH ASSY .INCLINER ET PARER COMMUTATEUR	1					WITH PT/T SW. WITH PT/T SW.
57	703–48221–00	.LEVER, CONTROL .LEVIER, COMMANDE	1					
58	703–48152–00	.KNOB, FREE ACCEL. .BOUTON	1					
59	703–48212–00	.BACK PLATE 1 .PLAQUETTE 1	1					
60	703–48213–00	.BACK PLATE 2 .PLAQUETTE 2	1					
61	703–48271–00	.ARM, SHIFT .BRAS	1					
62	703–48211–02	.HOUSING,1 .CORPS	1					
63	703–48232–00	.GEAR .PIGNON	1					

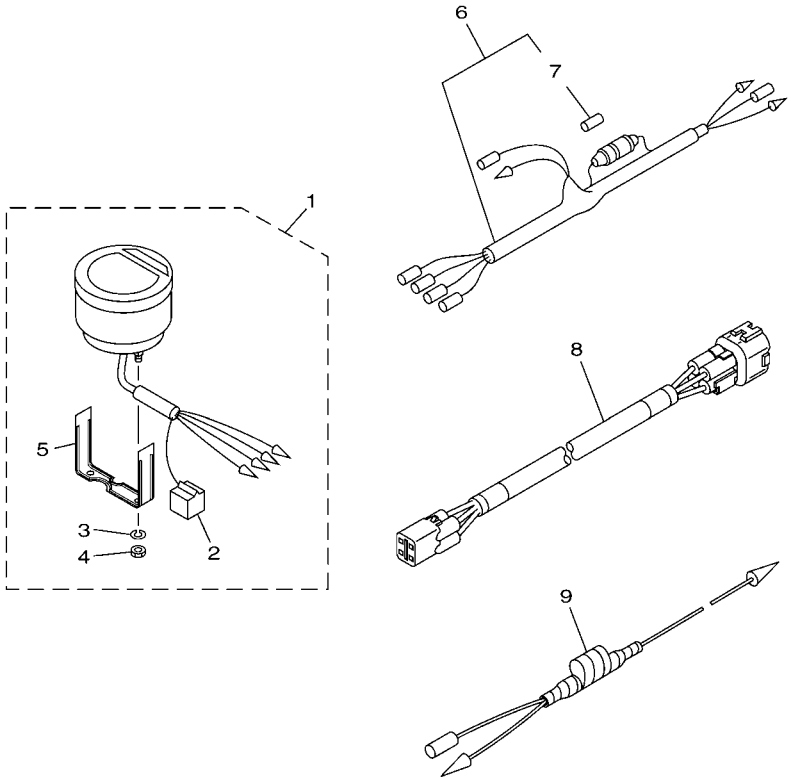

63B7300-G320

FIG. 23 METER COMPTEUR

REF. NO.	PART NO. N° PIECES	DESCRIPTION DESCRIPTION	6H3B					REMARKS REMARQUES
1	6Y5–8350T–90	DIGITAL TACHOMETER ASSY COMPTE-TOURS NUMERIQUE CPLT	1					AP AP
2	9E450–04533	.CONNECTOR .CONNECTEUR	1					F-4-W F-4-W
3	92990–04100	.WASHER, SPRING .RONDELLE, GROWER	2					
4	95380–04600	.NUT .ECROU	2					
5	6Y5–8355X–T1	.BRACKET, METER 1 .CROCHET, COMPTEUR	1					
6	6Y5–83553–00	WIRE, LEAD (L=2.5M) FIL (L=2.5M)	1					AP AP
7	1E6–82151–00	.FUSE (10A) .FUSIBLE (10A)	1					
8	6Y5–83653–20	WIRE, LEAD (L=7.0M) FIL (L=7.0M)	1					AP 4P,7M AP 4P,7M
9	6H4–81315–11	LEAD WIRE ASSY FIL	1					AP AP

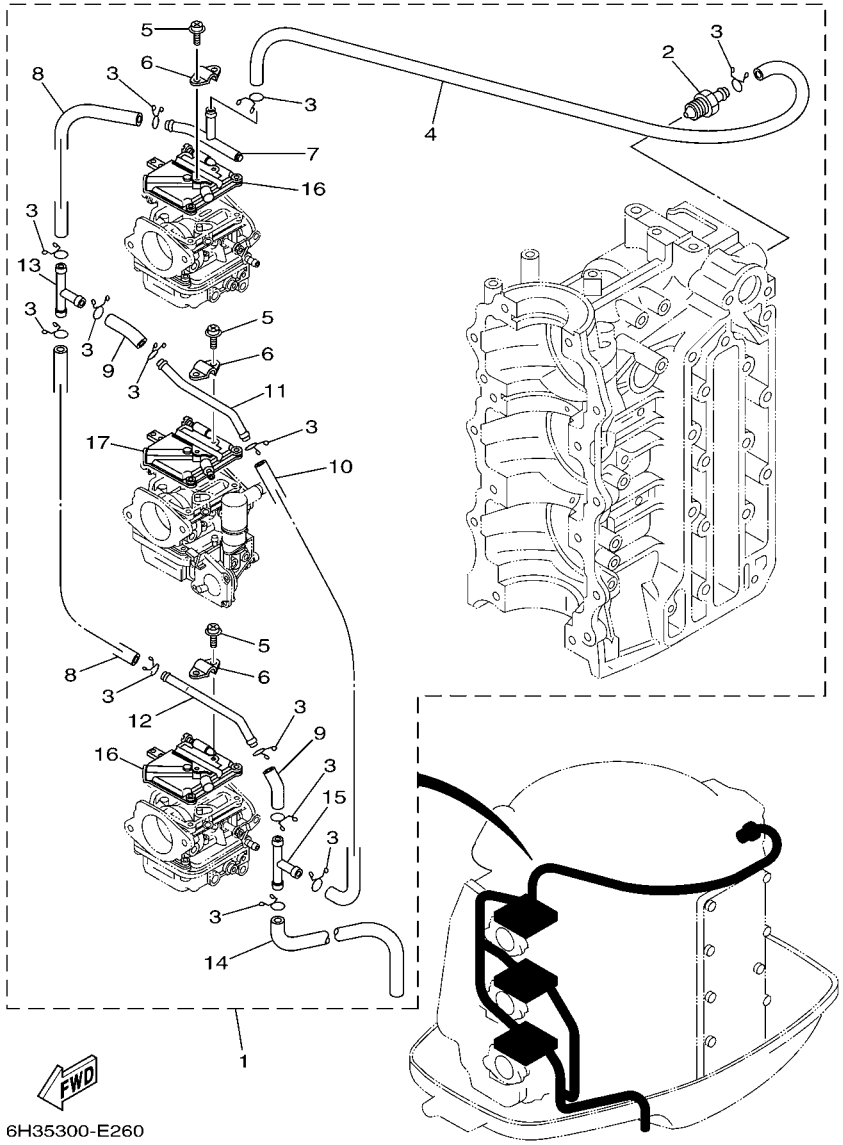

FIG. 24 OPTIONAL PARTS PIECES OPTIONNELLES

REF. NO.	PART NO. N° PIECES	DESCRIPTION DESCRIPTION	6H3B					REMARKS REMARQUES
1	6H3–12440–52	HEAT EXCHANGER ASSY ECHANGEUR DE CHALEUR	1					AP AP
2	6H4–12469–01	.JOINT 1 .RACCORD 1	1					
3	90467–10M04	.CLIP .JONC	13					
4	6H3–14348–50	.PIPE 1 .DURITE	1					
5	97880–04006	.SCREW, PAN HEAD .VIS, TETE TRONCONIQUE	6					
6	6H1–12443–50	.STAY .SUPPORT	3					
7	6H3–12466–A0	.EXCHANGER, HEAT .ECHANGEUR DE CHALEUR	1					
8	90445–11M31	.HOSE (L110) .DURITE (L110)	2					
9	90445–11M29	.HOSE (L40) .DURITE (L40)	2					
10	6H3–12481–50	.PIPE 1 .DURITE 1	1					
11	6H1–12466–B0	.EXCHANGER, HEAT .ECHANGEUR DE CHALEUR	1					
12	6H3–12466–B0	.EXCHANGER, HEAT .ECHANGEUR DE CHALEUR	1					
13	6E5–24378–00	.PIPE, JOINT 3 .DURITE, RACCORDEMENT 3	1					
14	6E5–12481–00	.PIPE 1 .DURITE 1	1					
15	6H3–24378–50	.PIPE, JOINT 3 .DURITE RACCORDEMENT 3	1					
16	6H4–14146–50	.PLATE .PLAQUE	2					
17	6H3–14146–50	.PLATE .PLAQUE	1					

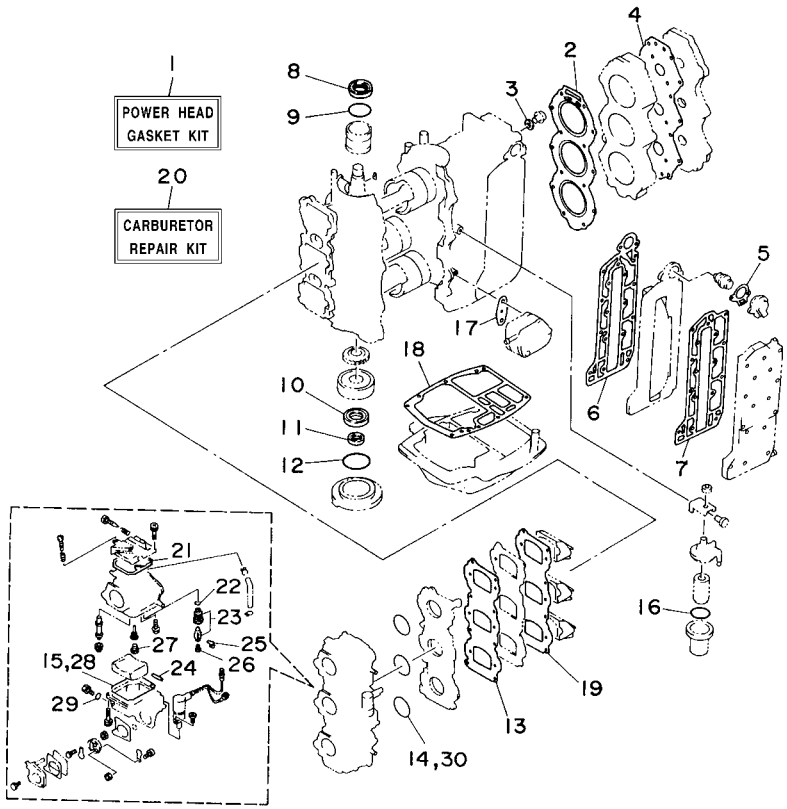

FIG. 25 REPAIR KIT 1 — KITS DE REPARATION 1

REF. NO.	PART NO. N° PIECES	DESCRIPTION DESCRIPTION	6H3B					REMARKS REMARQUES
1	6H3–W0001–02	POWER HEAD GASKET KIT KIT DE JOINTS TETE MOTRICE	1					AUTO CHOKE AUTO CHOKE
2	6H3–11181–A2	.GASKET, CYLINDER HEAD 1 .JOINT, DE CULASSE 1	1					
3	90430–14115	.GASKET .JOINT	1					
4	6H3–11193–A1	.GASKET, HEAD COVER 1 .JOINT, COUVERCLE DE CULASSE 1	1					
5	6H3–12414–A1	.GASKET, COVER .JOINT, COUVERCLE	1					
6	6H3–41112–A0	.GASKET, EXHAUST INNER COVER .JOINT, PLAQUE D'ECHAPPEMENT	1					
7	6H3–41114–A0	.GASKET, EXHAUST OUTER COVER .JOINT, COUVERCLE D'ECHAPPEMENT	1					
8	93102–36M24	.OIL SEAL .JOINT SPY	1					
9	93210–46M16	.O-RING .JOINT TORIQUE	1					
10	93102–30M23	.OIL SEAL .JOINT SPY	1					
11	93106–18M01	.OIL SEAL .JOINT SPY	1					
12	93210–65M50	.O-RING .JOINT TORIQUE	1					
13	6H3–13621–A1	.GASKET, VALVE SEAT .JOINT, SIEGE DE CLAPET	1					
14	93210–39ME4	.O-RING .JOINT TORIQUE	3					
15	6H4–14984–00	.GASKET, FLOAT CHAMBER .JOINT, CUVE DE FLOTTEUR	3					
16	93210–32738	.O-RING .JOINT TORIQUE	1					
17	650–24431–A0	.GASKET, FUEL PUMP 1 .JOINT 1 DE POMPE A ESSENCE	1					
18	6H3–45113–A0	.GASKET, UPPER CASING .JOINT, TUBE D'ARBRE	1					
19	6H3–13622–A1	.GASKET, VALVE SEAT .JOINT, SIEGE DE CLAPET	1					
20	6H2–W0093–10	CARBURETOR REPAIR KIT KIT DE REPARATION CARBURATEUR	1					AUTO CHOKE AUTO CHOKE
21	6H4–14147–00	.O-RING .JOINT TORIQUE	1					
22	93210–04228	.O-RING .JOINT TORIQUE	1					
23	6H3–14590–01	.NEEDLE VALVE ASSY .POINTEAU	1					
24	6H4–14548–00	.PIN, FLOAT ARM .AXE, BRAS DE FLOTTEUR	1					
25	663–14159–00	.CLIP .JONC	1					
26	676–14186–00	.PIN, FLOAT .AXE, FLOTTEUR	1					
27	676–14966–00	.CAP .CAPUCHON	1					

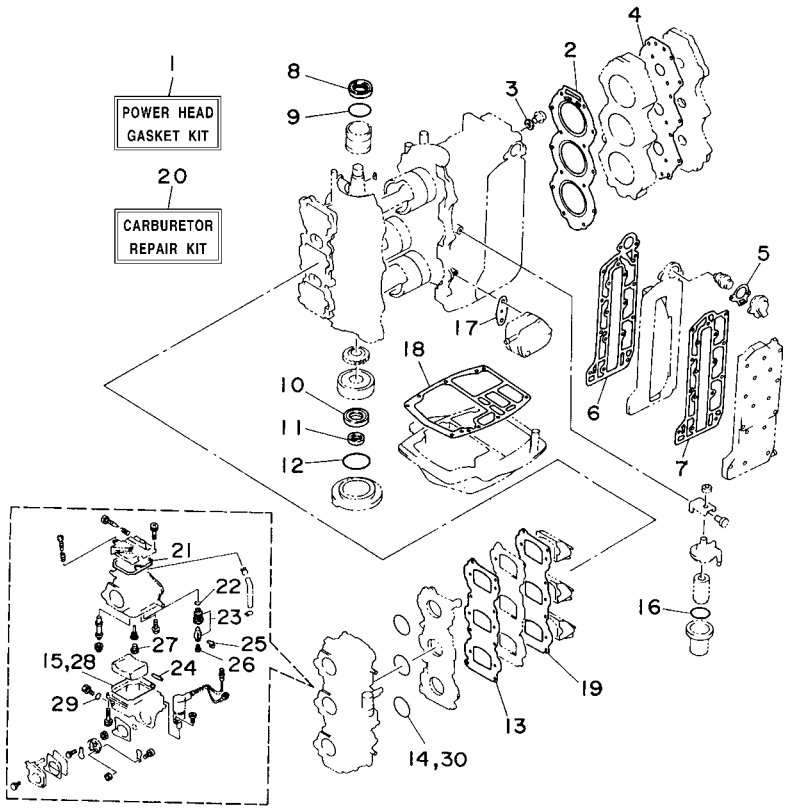

FIG. 25 REPAIR KIT 1 — KITS DE REPARATION 1

REF. NO.	PART NO. N° PIECES	DESCRIPTION DESCRIPTION	6H3B					REMARKS REMARQUES
28	6H4–14984–00	.GASKET, FLOAT CHAMBER .JOINT, CUVE DE FLOTTEUR	1					
29	93210–04230	.O-RING .JOINT TORIQUE	1					
30	93210–39ME4	.O-RING .JOINT TORIQUE	1					

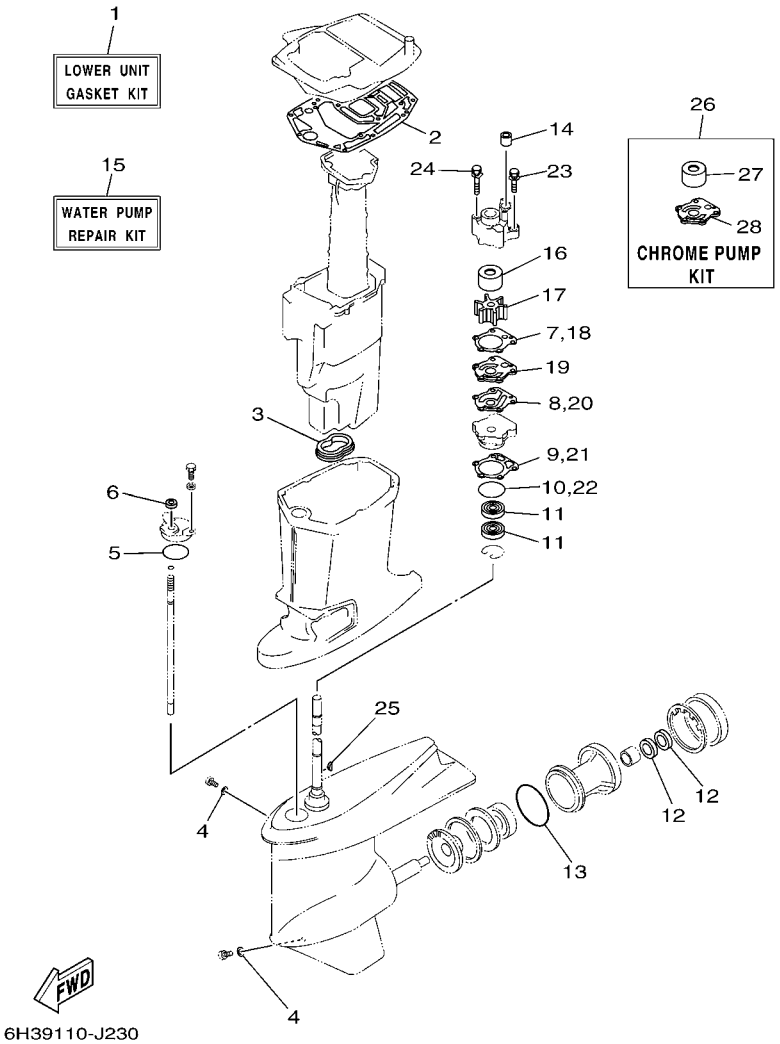

FIG. 26 REPAIR KIT 2 — KITS DE REPARATION 2

REF. NO.	PART NO. N° PIECES	DESCRIPTION DESCRIPTION	6H3B					REMARKS REMARQUES
1	6H2–W0001–20	LOWER UNIT GASKET KIT POCHETTE DE JOINTS EMBASE	1					L(20.5") L(20.5")
2	6H3–45114–A1	.GASKET, UPPER CASING .JOINT, TUBE D'ARBRE	1					
3	6H3–45123–00	.GASKET, MUFFLER .JOINT, POT DE DETENTE	1					
4	90430–08020	.GASKET .JOINT	2					
5	93210–49046	.O-RING .JOINT TORIQUE	1					
6	93106–09014	.OIL SEAL .JOINT SPY	1					
7	688–44315–A0	.GASKET, WATER PUMP .JOINT, POMPE A EAU	1					
8	688–44324–A0	.GASKET, CARTRIDGE .JOINT	1					
9	688–44316–A0	.GASKET, WATER PUMP .JOINT, POMPE A EAU	1					
10	93210–46044	.O-RING .JOINT TORIQUE	1					
11	93101–25M03	.OIL SEAL .JOINT SPY	2					
12	93101–25M03	.OIL SEAL .JOINT SPY	2					
13	93210–85M97	.O-RING .JOINT TORIQUE	1					
14	663–44366–00	.DAMPER, WATER SEAL 2 .JOINT, TUBE D'EAU 2	1					
15	692–W0078–02	WATER PUMP REPAIR KIT KIT DE REPARATION DE LA POMPE	1					L(20.5") L(20.5")
16	688–44322–00	.INSERT, CARTRIDGE .CUVETTE	1					
17	688–44352–03	.IMPELLER .TURBINE	1					
18	688–44315–A0	.GASKET, WATER PUMP .JOINT, POMPE A EAU	1					
19	688–44323–00	.OUTER PLATE, CARTRIDGE .PLAQUE EXTERIEURE	1					
20	688–44324–A0	.GASKET, CARTRIDGE .JOINT	1					
21	688–44316–A0	.GASKET, WATER PUMP .JOINT, POMPE A EAU	1					
22	93210–46044	.O-RING .JOINT TORIQUE	1					
23	90119–08M13	.BOLT, WITH WASHER .BOULON, AVEC RONDELLE	2					
24	90119–08M16	.BOLT, WITH WASHER .BOULON, AVEC RONDELLE	2					
25	90280–04M04	.KEY, WOODRUFF .CLAVETTE, DEMI-LUNE	1					
26	6H3–W0078–1B	CHROME PUMP KIT KIT DE POMPE A EAU CHROMEE	1					L(20.5") L(20.5")
27	69D–44322–00	.INSERT, CARTRIDGE .CUVETTE	1					

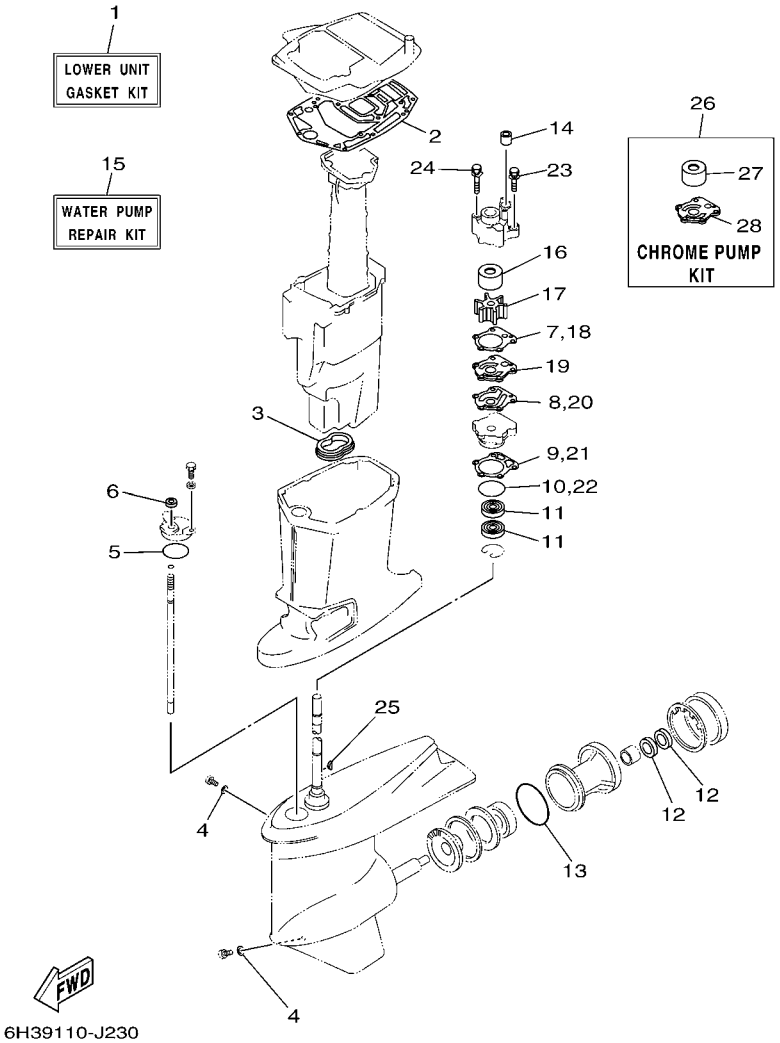

FIG. 26 REPAIR KIT 2 — KITS DE REPARATION 2

REF. NO.	PART NO. N° PIECES	DESCRIPTION DESCRIPTION	6H3B					REMARKS REMARQUES
28	688–44323–40	.OUTER PLATE, CARTRIDGE .PLAQUE EXTERIEURE	1					

NUMERICAL INDEX
INDEX NUMERIQUE

PART NO. N° PIECES	REF. NO.
6H3–11111–01–1S	2 – 25
688–11119–01	2 – 21
6H3–11181–A2	2 – 26
	25 – 2
6H3–11191–00–1S	2 – 27
6H3–11193–A1	2 – 28
	25 – 4
6H3–11325–01	2 – 17
6H3–11327–00–94	2 – 18
6H3–11328–00	2 – 19
650–11370–01	2 – 4
688–11370–01	2 – 3
6H3–11400–10	3 – 7
6H3–11536–00	3 – 12
6H3–11537–01	6 – 16
6K5–11601–02	3 – 15
6K5–11601–12	3 – 15
6K5–11601–22	3 – 15
6H3–11631–01–96	3 – 14
6H3–11633–00	3 – 16
688–11634–10	3 – 17
6H3–11635–01	3 – 14
6H3–11636–01	3 – 14
6H3–12411–11	2 – 32
688–12412–00	2 – 33
6H3–12413–00–1S	2 – 34
6H3–12414–A1	2 – 35
	25 – 5
6H3–12440–52	24 – 1
6H1–12443–50	24 – 6
6H3–12466–A0	24 – 7
6H1–12466–B0	24 – 11
6H3–12466–B0	24 – 12
6H4–12469–01	24 – 2
6E5–12481–00	24 – 14
6H3–12481–50	24 – 10
6H1–13117–01	6 – 18
6E9–13183–70	6 – 11
6H3–13200–02	6 – 1
6J8–13411–00	6 – 40
6J8–13414–00	6 – 41
6H1–13435–00	6 – 42
6H3–13436–00	1 – 18
6H3–13437–21	8 – 22
6H3–13610–00	4 – 1
6H3–13621–A1	4 – 6
	25 – 13
6H3–13622–A1	4 – 8

PART NO. N° PIECES	REF. NO.
6H3–13622–A1	25 – 19
6H3–13624–00	4 – 7
6H3–13641–13	4 – 4
6H3–14137–00	5 – 31
6H4–14146–00	5 – 8
6H3–14146–10	5 – 9
6H3–14146–50	24 – 17
6H4–14146–50	24 – 16
6H4–14147–00	5 – 10
	25 – 21
663–14159–00	5 – 17
	25 – 25
676–14186–00	5 – 18
	25 – 26
6H3–14301–0A	5 – 1
6H3–14302–0A	5 – 2
6H3–14303–0A	5 – 3
6A0–14325–00	7 – 25
6H3–14348–50	24 – 4
6H3–14349–00	4 – 15
	5 – 32
6H3–14380–00	5 – 33
6H3–14413–11	4 – 17
6H3–14440–02	4 – 18
6H3–14457–01	4 – 19
624–14485–00	2 – 5
6H1–14485–00	4 – 5
6K5–14488–00	4 – 23
63V–14523–00	5 – 5
6H4–14548–00	5 – 15
	25 – 24
697–14555–00	5 – 12
6H4–14567–00	5 – 30
6H2–14578–00	5 – 7
6H3–14590–01	5 – 14
	25 – 23
6H3–14711–11–CA	16 – 13
6H3–14737–10	16 – 18
692–14923–00	5 – 11
6H3–14943–37	5 – 21
6H3–14947–71	5 – 20
6H3–14948–17	5 – 23
676–14966–00	5 – 22
	25 – 27
6H4–14980–00	5 – 27
6H3–14980–10	5 – 28
6H4–14984–00	5 – 24
	25 – 15

PART NO. N° PIECES	REF. NO.
6H4–14984–00	25 – 28
6H4–14985–01	5 – 19
6H3–14992–00	5 – 25
6H3–15100–14	2 – 2
6H3–15359–00–94	3 – 1
6H3–21707–06	6 – 26
6H3–21732–00	1 – 24
6H3–21735–00	1 – 25
63D–21744–00	6 – 53
6H3–21752–00	6 – 32
6H1–21757–00	6 – 38
6J8–21758–00	6 – 37
63D–2175R–00	6 – 35
6H1–21766–01	6 – 44
63D–2176M–00	6 – 34
6H4–21770–00	6 – 36
63D–2177H–00	1 – 2
6YK–24201–03	19 – 1
6YK–24260–01	19 – 4
6YL–24268–01	19 – 2
6G1–24304–02	7 – 1
6YL–24306–54	19 – 7
663–24312–01	2 – 42
6H3–24313–00	7 – 33
6H3–24314–00	7 – 35
6YL–24329–00	19 – 6
6E5–24367–01	11 – 24
	11 – 37
650–24378–00	2 – 6
688–24378–00	7 – 32
6E5–24378–00	6 – 55
	24 – 13
6H3–24378–50	24 – 15
692–24410–00	7 – 15
663–24411–00	7 – 20
692–24411–00	7 – 17
6H3–24411–10	5 – 40
6A0–24412–02	7 – 26
6A0–24413–00	7 – 16
6H4–24413–00	5 – 38
6L5–24421–00	5 – 37
6A0–24421–01	7 – 24
650–24431–A0	7 – 27
	25 – 17
648–24434–01	7 – 18
6H3–24434–10	5 – 41
648–24435–02	7 – 21
6H3–24452–10	5 – 29

PART NO. N° PIECES	REF. NO.
6H4–24486–00	5 – 39
61N–24521–00	7 – 8
61N–24560–00	7 – 6
61N–24563–00	7 – 7
648–24566–02	7 – 10
6YK–24610–01	19 – 3
6H1–24633–00	6 – 39
6E0–28193–00–94	7 – 39
6H2–28199–7Y–D0	7 – 40
6H2–28199–7Y–E0	7 – 40
6H2–28199–7Y–F0	7 – 40
6H2–28199–7Y–G0	7 – 40
6H2–28199–7Y–H0	7 – 40
6H2–28199–7Y–S0	7 – 40
6H2–28199–8Y–K0	7 – 41
6H2–28199–8Y–L0	7 – 41
6H2–28199–8Y–M0	7 – 41
6H2–28199–8Y–N0	7 – 41
6H2–28199–8Y–P0	7 – 41
6H2–28199–8Y–R0	7 – 41
6H3–41111–01–1S	2 – 37
6H3–41112–A0	2 – 38
	25 – 6
6H3–41113–02–1S	2 – 39
6H3–41114–A0	2 – 40
	25 – 7
6H3–41131–00–CA	16 – 11
6H3–41137–01–CA	16 – 5
6H3–41213–10	12 – 23
6H3–41217–00	4 – 12
682–41237–00	12 – 2
6E9–41237–00	6 – 25
6F5–41237–00	12 – 15
6H1–41237–00	6 – 21
	12 – 14
6H4–41237–00	12 – 21
6H3–41241–01	6 – 20
6H3–41631–00	12 – 4
6H3–41632–20	12 – 10
6H3–41633–10	12 – 12
6H3–41636–10–94	12 – 16
689–42169–01	12 – 1
	12 – 20
6H3–42510–13–4D	14 – 3
6H3–42610–00	1 – 1
6H3–42613–01–4D	1 – 11
6H3–42615–00	1 – 14
6H3–42617–10	1 – 19

PART NO. N° PIECES	REF. NO.
6H3–42619–00	1 – 20
6H3–42627–00	1 – 21
6H3–42637–00	1 – 22
6H3–42647–00	1 – 3
6H3–42649–00	1 – 4
6H3–42652–00	1 – 6
663–42662–00	1 – 5
6H3–42678–10	1 – 15
	1 – 16
688–42681–40	1 – 28
	1 – 29
6H1–42694–00	1 – 23
6H3–42711–25–4D	11 – 1
648–42715–00	12 – 28
6H3–42716–02	11 – 12
6K5–42717–00	11 – 13
6H3–42718–00	11 – 39
6E5–42724–00	11 – 14
6H3–42725–30	11 – 15
688–42726–10	11 – 27
6H3–42727–00	11 – 19
6H3–42738–01–CA	11 – 16
6H3–42741–01–4D	11 – 31
6BG–42748–00	11 – 20
6G1–42748–00	11 – 30
6H3–42768–00	11 – 23
6H3–42771–01–4D	11 – 32
6AH–42794–40	11 – 40
6AH–42794–50	11 – 41
6H3–42813–00	11 – 7
6H3–42815–01–4D	11 – 3
6H3–42816–00	11 – 9
6H3–42817–01–4D	11 – 4
6H3–42818–00	11 – 10
6H1–43111–01–4D	13 – 1
6H1–43112–00–4D	13 – 10
6E5–43126–10	13 – 33
688–43131–03	13 – 19
6G5–43144–00	13 – 40
6E5–43145–01	20 – 9
6G5–43145–01	13 – 23
6G5–43148–00	13 – 38
688–43160–01	13 – 29
688–43165–00	13 – 30
6H1–43181–01	13 – 24
6H1–43185–01	13 – 25
6H1–43311–02–4D	13 – 15
6H1–43376–00	14 – 39

PART NO. N° PIECES	REF. NO.
6H1–43800–17–4D	15 – 1
67F–43802–00	15 – 39
6H1–43804–10	15 – 4
6H1–43805–10	15 – 3
6H1–4380F–10	15 – 7
6H1–4380G–10	15 – 15
6H1–4380H–10	15 – 13
6H1–4380J–10	15 – 8
6H1–43810–11	15 – 20
6H1–43812–00	15 – 24
6H1–43813–10	15 – 27
6H1–43814–11	15 – 19
6H1–43816–00	15 – 67
6H1–43817–01	15 – 47
6E5–43818–00	15 – 32
6H1–43820–11	15 – 63
6H1–43821–11	15 – 59
6H1–43822–10	15 – 58
6H1–43828–10	15 – 30
6H1–43829–00	15 – 36
6H1–4382A–10	15 – 52
6H1–43830–11	15 – 49
6H1–43831–10	15 – 48
6H1–43833–10	15 – 33
6H1–43834–00	15 – 34
6H1–43835–10	15 – 29
6H1–43840–11	15 – 17
6H1–43841–11	15 – 42
6H1–43843–11	15 – 71
6H1–43844–10	15 – 44
6H1–43845–00	15 – 55
6H1–43847–00	15 – 50
6H1–4384E–20	15 – 61
6H1–4384F–10	15 – 46
6H1–4384G–11	15 – 45
6H1–43854–00	15 – 53
6H1–43855–11	15 – 70
6H1–43856–10	15 – 43
6H1–4385H–00	15 – 76
6H1–43861–00	15 – 21
6H1–43861–10	15 – 18
	15 – 22
	15 – 60
6D8–43863–00	15 – 26
	15 – 56
6H1–43864–00	15 – 64
6H1–43865–10	15 – 16
6H1–43866–01	15 – 40

NUMERICAL INDEX
INDEX NUMERIQUE

PART NO. N° PIECES	REF. NO.
6H1–43867–00	15 – 41
6H1–43868–00	15 – 73
6H1–4386K–10	15 – 9
6H1–43871–10	15 – 23
6H1–43872–10	15 – 25
6H1–43874–00	15 – 66
6H1–43875–00	15 – 57
6H1–4387J–00	15 – 75
6H1–43880–02	15 – 2
6H1–43881–10	15 – 12
6H1–4388E–11	15 – 72
6H1–43891–10	15 – 5
6H1–43892–10	15 – 6
6H1–43895–12	15 – 69
6H1–43896–00	15 – 68
6H1–43899–00	15 – 51
6H3–44117–00–94	12 – 31
6H3–44120–12	12 – 27
6H3–44121–01	12 – 37
688–44122–00	12 – 40
6H1–44144–00	17 – 59
6H1–44151–00	17 – 58
688–44194–00	12 – 7
688–44311–01	17 – 25
688–44315–A0	17 – 27
	26 – 7
	26 – 18
688–44316–A0	17 – 34
	26 – 9
	26 – 21
688–44322–00	17 – 26
	26 – 16
69D–44322–00	26 – 27
688–44323–00	17 – 35
	26 – 19
688–44323–40	26 – 28
688–44324–A0	17 – 36
	26 – 8
	26 – 20
6D8–44341–01–CA	17 – 30
688–44352–03	17 – 28
	26 – 17
6H3–44361–11	18 – 2
663–44366–00	18 – 16
	26 – 14
663–44367–00	18 – 1
69D–44391–00	11 – 2
688–44511–00	14 – 33

PART NO. N° PIECES	REF. NO.
688–44514–00	14 – 26
6H1–44526–00	13 – 3
6H3–44551–01–4D	14 – 9
6H3–44552–03	14 – 18
6H3–44553–01–4D	14 – 23
687–44555–00	14 – 11
663–44575–00	14 – 16
	14 – 32
6H3–45111–12–4D	16 – 1
6H3–45113–A0	16 – 7
	25 – 18
6H3–45114–A1	16 – 16
	26 – 2
6H3–45123–00	16 – 15
	26 – 3
6H3–45127–00	16 – 14
6C5–45155–00	16 – 3
6H1–45214–00	17 – 12
6H1–45215–00	17 – 13
6H1–45251–03	13 – 2
6H3–45300–17–4D	17 – 1
6H1–45301–03–4D	17 – 2
688–45321–00	17 – 16
688–45331–00–CA	17 – 64
688–45341–10	17 – 10
688–45371–02	18 – 12
6E5–45371–10	18 – 27
688–45375–00	18 – 11
663–45376–00	18 – 10
6E5–45378–00	17 – 21
688–45383–02	17 – 72
688–45384–02	17 – 73
6H3–45501–11	17 – 40
688–45536–01	17 – 4
6K5–45551–00	17 – 41
6K5–45560–00	17 – 43
688–45567–01	17 – 7
688–45567–10	17 – 7
688–45567–20	17 – 7
688–45567–30	17 – 7
688–45567–40	17 – 7
688–45567–50	17 – 7
688–45567–60	17 – 7
6H3–45571–00	17 – 63
688–45576–00	17 – 67
688–45577–01	17 – 66
688–45577–10	17 – 66
688–45577–20	17 – 66

PART NO. N° PIECES	REF. NO.
688–45577–30	17 – 66
688–45577–40	17 – 66
688–45577–50	17 – 66
688–45577–60	17 – 66
688–45587–01	17 – 5
688–45587–10	17 – 5
688–45587–20	17 – 5
688–45587–30	17 – 5
688–45587–40	17 – 5
688–45587–50	17 – 5
688–45587–60	17 – 5
6H1–45611–01	17 – 44
6H1–45631–01	17 – 45
688–45633–00	17 – 56
6H1–45634–02	17 – 47
6H1–45635–00	17 – 51
6H1–45641–01	17 – 57
6H1–45668–00	17 – 50
688–45930–02	18 – 24
688–45932–60	18 – 24
6E5–45941–00	18 – 24
6E5–45943–00	18 – 24
6E5–45945–01	18 – 24
6E5–45947–00	18 – 24
6E5–45949–00	18 – 24
6E5–45952–00	18 – 24
6E5–45954–00	18 – 24
6E5–45956–00	18 – 24
688–45970–03	18 – 24
6E5–45970–10	18 – 25
688–45972–02	18 – 24
6E5–45972–10	18 – 25
688–45974–02	18 – 24
6E5–45974–10	18 – 25
688–45976–01	18 – 24
6E5–45976–10	18 – 25
6E5–45978–10	18 – 25
688–45978–60	18 – 24
688–45987–01	18 – 19
6E5–45994–10	18 – 26
67F–45997–00	18 – 20
703–48152–00	22 – 58
703–48153–00	22 – 3
703–48189–00	22 – 17
703–48198–00	22 – 14
703–48207–1A	21 – 1
	22 – 1
703–48211–02	22 – 62

PART NO. N° PIECES	REF. NO.
703–48212–00	22 – 59
703–48213–00	22 – 60
703–48215–00	22 – 43
703–48219–00	22 – 30
703–48221–00	22 – 57
703–48222–00	22 – 27
703–48223–00	22 – 28
703–48225–00	22 – 29
703–48226–00	22 – 26
703–48227–00	22 – 24
703–48232–00	22 – 63
703–48234–00	22 – 18
703–48235–00	22 – 4
703–48236–00	22 – 16
703–48238–00	22 – 22
703–48243–00	22 – 15
703–48244–00	22 – 21
703–48245–00	22 – 11
703–48246–00	22 – 23
701–48248–00	22 – 13
703–48252–00	22 – 12
703–48261–01	22 – 2
703–48264–00	22 – 6
703–48265–00	22 – 9
703–48268–00	22 – 5
703–48271–00	22 – 61
703–48281–00	22 – 31
703–48282–00	22 – 32
703–48284–10	22 – 53
701–48287–00	22 – 42
703–48291–10	22 – 39
703–48293–10	22 – 41
701–48320–00	21 – 2
701–48320–20	21 – 2
701–48320–30	21 – 2
701–48320–50	21 – 2
701–48320–60	21 – 2
701–48320–80	21 – 2
663–48344–00	12 – 41
6H3–48344–00	12 – 18
703–48345–01	22 – 19
703–48358–00	22 – 20
6H3–48511–51–4D	14 – 36
6H3–48538–00	12 – 42
688–61350–10	20 – 1
688–61351–10	20 – 2
6E5–61355–00	20 – 8
6H4–81315–11	23 – 9

PART NO. N° PIECES	REF. NO.
6E5–81332–00	8 – 15
6H3–81337–01	8 – 17
6H3–81800–11	10 – 1
6H3–81807–10	10 – 3
689–81809–11	10 – 7
6H3–81810–10	10 – 9
689–81811–11	10 – 12
689–81812–11	10 – 11
689–81813–10	10 – 13
6H3–81820–11	10 – 14
689–81826–10	10 – 15
6H3–81830–10	10 – 4
689–81831–00	10 – 5
689–81840–11	10 – 10
689–81847–11	10 – 6
689–81850–12	10 – 8
689–81857–11	10 – 2
6H3–81916–10	9 – 15
6H2–81949–01	9 – 44
6H2–81949–11	9 – 43
61A–81950–00	9 – 39
688–81950–10	9 – 24
6H2–81960–10	9 – 11
6AH–81994–40	4 – 24
6AH–81994–50	4 – 25
6AH–81995–40	8 – 19
6AH–81995–50	8 – 20
6AG–81996–00	8 – 21
6H3–82105–01	9 – 29
6H3–82117–00	9 – 30
703–82119–00	9 – 6
682–82119–01	9 – 45
688–82127–02	14 – 25
6E5–82148–00	13 – 11
6H1–82148–00	13 – 8
1E6–82151–00	23 – 7
663–82151–00	9 – 32
6G5–82152–00	9 – 17
6H3–82154–11	9 – 42
6H3–82164–00	9 – 27
6A0–82317–00	6 – 47
6G1–82370–21	9 – 23
703–82510–43	22 – 44
703–82531–00	22 – 47
6K1–82532–00	22 – 46
703–82540–00	22 – 51
682–82556–00	22 – 49
688–82560–10	9 – 38

PART NO. N° PIECES	REF. NO.
6H1–82563–10	9 – 46
703–82563–12	22 – 56
688–82575–01	22 – 48
703–82577–00	22 – 45
6R5–82582–B0	6 – 61
6E5–82587–00	9 – 47
688–8258A–20	22 – 50
6H2–82590–80	9 – 31
703–82591–00	22 – 54
703–82592–00	22 – 55
688–82594–00	9 – 37
703–82594–00	22 – 25
703–83383–11	22 – 52
6Y5–8350T–90	23 – 1
6Y5–83553–00	23 – 6
6E5–83558–00	18 – 15
6E5–83558–10	17 – 23
6Y5–8355X–T1	23 – 5
6E5–83614–01	9 – 48
6Y5–83653–20	23 – 8
6H1–83672–21	14 – 1
6H2–85520–02	8 – 2
6H2–85533–01	8 – 3
6H2–85540–13	9 – 5
6H3–85542–11–94	9 – 1
6H2–85550–00	8 – 1
697–85570–00	9 – 20
6H2–85580–01	8 – 4
6H2–85582–00	8 – 5
6H1–85711–60	4 – 22
6R5–85711–60	9 – 51
6H3–85720–17	6 – 60
6H2–85895–01	8 – 6
6H3–W0001–02	25 – 1
6H2–W0001–20	26 – 1
688–W0004–00	4 – 2
688–W0070–40	1 – 17
692–W0078–02	26 – 15
6H3–W0078–1B	26 – 26
6H3–W0090–44–1S	2 – 1
6H2–W0093–10	25 – 20
656–W2810–02	7 – 38
90101–08002	2 – 22
90101–10M49	14 – 27
90101–12M65	13 – 42
90105–06M14	9 – 2
90105–10M67	18 – 13
90109–06M39	6 – 3

NUMERICAL INDEX
INDEX NUMERIQUE

PART NO. N° PIECES	REF. NO.
90109–06M40	6 – 4
90109–06M43	12 – 13
90109–12M21	14 – 15
90116–08M69	2 – 30
90116–10175	14 – 37
90119–06023	2 – 20
90119–06M09	11 – 11
90119–06M29	13 – 4
90119–06M61	11 – 22
90119–06M65	6 – 49
90119–06M88	6 – 50
90119–06MA3	2 – 36
	4 – 9
90119–06MA5	2 – 41
90119–08M13	17 – 39
	26 – 23
90119–08M16	17 – 38
	26 – 24
90119–08M64	2 – 9
90119–08M81	16 – 4
90119–08MA5	2 – 29
90119–10005	2 – 8
90151–05M00	17 – 14
90157–05M16	19 – 5
90157–06M01	11 – 25
	11 – 29
90157–06M13	12 – 5
90159–06M01	9 – 16
90159–06M23	8 – 18
90160–04006	18 – 18
90170–09M03	20 – 5
90170–16M01	17 – 42
90170–20137	8 – 13
90171–16011	18 – 22
90179–06066	14 – 22
90179–08M34	2 – 31
90183–02M03	17 – 54
90183–05M06	1 – 27
90185–05002	17 – 15
90185–08057	14 – 40
90185–09M01	20 – 4
90185–10051	14 – 31
	14 – 38
90185–22043	13 – 22
90201–03313	17 – 53
90201–08M93	6 – 17
90201–10M20	20 – 3
90201–10M63	20 – 7

PART NO. N° PIECES	REF. NO.
90201–11M22	14 – 30
90201–12062	13 – 43
90201–12426	13 – 44
90201–12M16	14 – 12
90201–13M19	14 – 14
90201–20417	3 – 19
90201–20M21	14 – 28
90201–21M18	8 – 14
90201–22M67	13 – 21
90201–30M00	14 – 4
90202–05088	6 – 22
90202–07M07	12 – 39
90202–12060	18 – 3
90202–20M06	14 – 29
90202–25M04	14 – 13
90206–10M04	12 – 24
90206–13M10	11 – 6
90209–06M05	4 – 21
90249–06M19	13 – 37
90250–07M02	17 – 55
90266–06009	1 – 10
90269–04M03	11 – 8
90280–04M04	17 – 29
	26 – 25
90280–05015	8 – 12
90282–04010	17 – 71
90338–05M03	1 – 26
	13 – 18
90340–08002	17 – 9
90340–14M00	2 – 23
90386–07M58	12 – 34
90386–10M16	13 – 26
90386–13M38	11 – 5
90386–18M14	15 – 31
90386–18M35	13 – 35
90386–18M63	13 – 34
90386–22M15	13 – 20
90386–30M60	14 – 8
90386–30M77	14 – 6
90386–30M78	14 – 5
90387–06119	6 – 48
90387–06M31	6 – 31
90387–06M43	9 – 3
90387–06M60	12 – 8
	12 – 25
90387–06M69	11 – 21
90387–10M02	13 – 27
90387–10M42	20 – 6

PART NO. N° PIECES	REF. NO.
90389–25M00	18 – 21
90430–08020	17 – 11
	26 – 4
90430–12072	18 – 4
90430–14115	2 – 24
	25 – 3
90440–14M00	13 – 46
90445–07255	4 – 13
90445–07M02	2 – 12
90445–07M23	6 – 7
90445–07M44	2 – 10
	6 – 6
90445–07M45	2 – 13
90445–07M82	2 – 14
90445–07M87	6 – 9
90445–07ME9	17 – 22
90445–07MF1	18 – 14
90445–08M01	6 – 43
90445–09072	7 – 13
	7 – 30
90445–09220	7 – 34
90445–09M75	7 – 4
90445–11M02	6 – 57
90445–11M03	6 – 27
90445–11M15	6 – 54
90445–11M21	6 – 51
90445–11M29	24 – 9
90445–11M31	24 – 8
90446–10M01	6 – 56
	7 – 37
90464–05M16	9 – 14
90464–07M05	2 – 16
	6 – 5
	6 – 15
90464–09M13	11 – 28
90464–11M18	13 – 17
90464–11M23	6 – 58
90464–15M11	6 – 8
	9 – 28
90464–18M14	9 – 50
90464–23M22	9 – 18
90465–06M86	6 – 10
90465–11M10	14 – 41
	17 – 24
90465–11M27	6 – 28
90465–13M11	9 – 19
90465–13M30	6 – 33
90465–18147	5 – 42

PART NO. N° PIECES	REF. NO.
90467–06016	2 – 11
	2 – 15
	4 – 14
90467–08004	2 – 43
	4 – 16
	6 – 45
	7 – 5
	7 – 14
	7 – 31
	7 – 36
90467–10M04	6 – 52
	24 – 3
90467–11M08	6 – 29
	6 – 59
90467–12M11	6 – 46
90468–05M03	6 – 23
90468–07M02	6 – 12
	6 – 13
	6 – 14
90468–18008	12 – 19
	12 – 38
90480–13M54	9 – 4
90480–19M06	18 – 17
90501–10326	5 – 6
90501–12082	12 – 30
90501–12M48	17 – 52
90501–14M08	14 – 21
90501–16M65	17 – 48
90502–16M02	13 – 32
90506–14M24	13 – 39
90508–26M35	12 – 11
91318–04025	15 – 74
91318–08016	15 – 65
91490–20012	12 – 36
91490–40025	18 – 23
91690–30012	13 – 31
91690–30020	13 – 28
92903–06600	5 – 44
	9 – 10
	9 – 22
	9 – 26
	9 – 34
	9 – 36
	10 – 19
	12 – 33
92903–08600	10 – 17
	10 – 21
92990–04100	23 – 3

PART NO. N° PIECES	REF. NO.
92990–05100	7 – 23
92990–06600	11 – 26
	11 – 38
92990–08200	12 – 35
92990–08600	22 – 34
92990–10100	18 – 7
92990–10600	18 – 8
92995–06100	1 – 8
	13 – 6
92995–06600	1 – 9
	1 – 13
	3 – 6
	7 – 3
	7 – 29
	8 – 9
	8 – 11
	9 – 8
	9 – 13
	9 – 41
	11 – 18
	11 – 34
	11 – 36
	13 – 7
	17 – 20
92995–08100	14 – 20
	14 – 35
	16 – 10
92995–10100	13 – 14
93101–25M03	17 – 32
	17 – 70
	26 – 11
	26 – 12
93102–08M43	15 – 14
93102–30M23	3 – 2
	25 – 10
93102–36M24	3 – 9
	25 – 8
93106–09014	17 – 18
	26 – 6
93106–18M01	3 – 3
	25 – 11
93210–04228	5 – 13
	25 – 22
93210–04230	5 – 26
	25 – 29
93210–064A5	15 – 38
93210–07003	17 – 60
93210–09165	15 – 37

PART NO. N° PIECES	REF. NO.
93210–10M74	15 – 54
93210–13M04	6 – 19
93210–16275	20 – 10
93210–19MA7	6 – 2
93210–29M94	14 – 7
93210–32738	7 – 9
	25 – 16
93210–39ME4	4 – 11
	25 – 14
	25 – 30
93210–46044	17 – 33
	26 – 10
	26 – 22
93210–46M16	3 – 13
	25 – 9
93210–49046	17 – 17
	26 – 5
93210–65M50	3 – 4
	25 – 12
93210–68N50	15 – 28
93210–85M97	17 – 68
	26 – 13
93306–207U0	17 – 65
93306–306V1	3 – 11
93311–636U6	3 – 8
93315–325V1	17 – 3
93317–325U0	17 – 69
93332–000U3	17 – 6
93332–000W7	17 – 8
93410–18M05	13 – 36
93410–28M06	14 – 10
93430–06024	22 – 10
93440–49M04	3 – 10
93450–07M00	17 – 62
93450–44166	17 – 31
93501–04M02	12 – 29
93503–16003	17 – 49
93505–32038	15 – 77
93603–12M11	17 – 46
93603–18M09	3 – 18
93604–10M03	17 – 37
93606–12019	16 – 2
	16 – 6
	18 – 5
93608–12063	2 – 7
93700–06M03	13 – 16
94702–00247	2 – 44
95380–03600	5 – 35

NUMERICAL INDEX
INDEX NUMERIQUE

PART NO. N° PIECES	REF. NO.
95380–03600	7 – 19
95380–04600	23 – 4
95380–05600	6 – 24
	12 – 3
	12 – 17
	12 – 22
	22 – 7
95380–06600	12 – 6
	22 – 40
95380–08600	7 – 11
95380–12600	13 – 45
95380–12800	14 – 17
97013–06012	5 – 43
	9 – 9
	9 – 33
	9 – 35
97013–06014	7 – 12
97013–06016	9 – 25
97013–06020	9 – 21
	12 – 32
97013–06025	10 – 18
97013–08016	10 – 20
97013–08035	10 – 16
97075–08025	14 – 19
97075–08035	14 – 34
	16 – 9
97075–10040	18 – 6
97095–05012	8 – 7
97095–06010	13 – 41
97095–06016	1 – 7
	1 – 12
	6 – 30
	9 – 12
	9 – 49
	11 – 17
	13 – 5
	17 – 19
97095–06020	3 – 5
	11 – 35
97095–06025	7 – 2
	8 – 10
	9 – 40
	11 – 33
	12 – 9
	12 – 26
97095–06035	8 – 8
97095–06040	7 – 28
97095–06045	9 – 7

PART NO. N° PIECES	REF. NO.
97095–06095	4 – 10
97095–10045	13 – 13
97380–05025	22 – 8
97380–08030	22 – 33
97575–08430	16 – 8
	16 – 12
	16 – 17
97575–08460	18 – 9
97595–06420	15 – 35
97595–06510	13 – 9
97602–05210	15 – 62
97607–04310	15 – 11
97803–04010	5 – 34
97880–04006	24 – 5
97880–06012	13 – 12
97885–05016	15 – 10
97885–06016	14 – 24
97885–06045	4 – 20
97980–04114	5 – 4
97980–05216	4 – 3
97985–06210	8 – 16
97985–06216	14 – 2
98503–05028	7 – 22
98580–03015	22 – 38
98580–04006	22 – 36
98580–04008	5 – 16
98580–04010	22 – 35
98580–05010	22 – 37
98980–03006	5 – 36
99001–08600	17 – 61
9E450–04533	23 – 2

PART NO. N° PIECES	REF. NO.

PART NO. N° PIECES	REF. NO.

PART NO. N° PIECES	REF. NO.

PART NO. N° PIECES	REF. NO.