YAMAHA

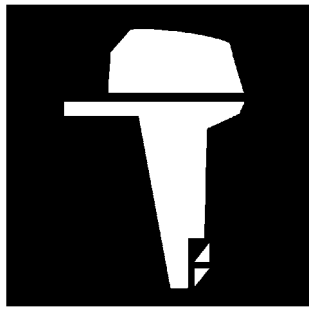

PARTS CATALOGUE
CATALOGUE DE PIECES DETACHEES

F100BET'12 (60CC)

1L60C-300F1

( )

YAMAHA GENUINE Parts & Accessories

2016/4/18

NEWS NO.	DATE	COMMENT
PE0-OM-130011	Mar.,17,2013	MOD:FIG.19 POWER TRIM & TILT ASSY 1 LIST/ILLUSTRATION REVISION
PE0-OM-160007	Apr.,11,2016	MOD:F100B FUEL (1) LIST/ILLUSTRATION REVISION

F100BET
PARTS CATALOGUE
©2011 by Yamaha Motor Co., Ltd.
1st edition, August 2011
All rights reserved.
Any reprinting or unauthorized use
without the written permission of
Yamaha Motor Co., Ltd.
is expressly prohibited.
Printed in Japan.

F100BET
CATALOGUE DE PIECES DETACHEES
©2011 par Yamaha Motor Co., Ltd.
1re édition, août 2011
Tous droits réservés
Toute réimpression ou utilisation
non autorisée sans la permission écrite
de la Yamaha Motor Co., Ltd.
est formellement interdite.
Imprimé au Japon

FOREWORD

This Parts Catalogue is related to the parts for the model(s) on the cover page. When you are ordering replacement parts, please refer to this Parts Catalogue and quote both part numbers and part names correctly.

1. Modifications or additions which have been made after the issue of the Parts Catalogue will be announced in the Parts News.
   It is advisable that you make the necessary corrections to the Parts Catalogue according to the Parts News.

2. Abbreviations
   The following abbreviations are used in this Parts Catalogue.

   "UR" Use specified parts number.
   "UN" Use as many as needed.
   "AP" Alternate Parts
   "LM" Locally Made (Parts need to be ordered locally)
   "F#" Frame No. (Applicable machine No.)
   "O/S" Over Size

3. The number of components for assembly
   - Parts, which are to be supplied in an assembly, are listed with a dot (.) in front of the part name as shown below.
   - The numeral appearing to the right of each component part indicates the quantity of parts for each assembly unit.

PART NO.	DESCRIPTION	Q'TY	REMARKS
2F5–83310–60	FRONT FLASHER LIGHT ASSY	2	
115–83311–60	.BULB (6V–18W)	1	

4. Applicable colours of graphics are represented in the "REMARKS" as shown below.

PART NO.	DESCRIPTION	Q'TY	REMARKS
2N4–24110–00–X5	FUEL TANK COMP.	2	MXR
3J1–24240–10	.GRAPHIC, FUEL TANK	1	FOR MXR

5. Note that the illustrations for reference in finding parts numbers are not to be used for assembling. When assembling, please use the applicable service manual.

6. The asterisk (*) before a reference number indicates modified items after the first edition.

7. Applicable Serial No.

   Engine Serial No.

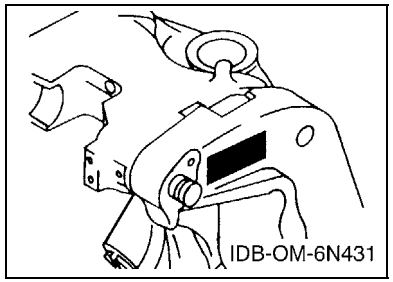

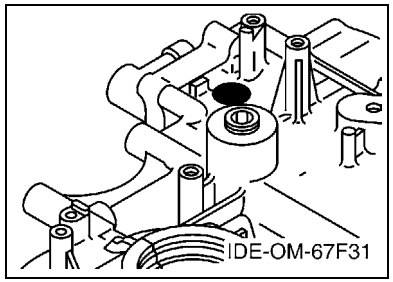

8. Applicable Engine Starting Serial No.

Model	Serial No.	Model	Serial No.
F100B	60C-1006414		

9. Applicable Colour Code

Abbreviation	Colour Name	Colour Code
DBN1	DARK BLUISH GRAY 1	008D

10. Quantity Column Information

Column No.	Name Of Q'ty Column	Applicable Model
1	60CC	F100BET

AVANT–PROPOS

Ce catalogue de pièces détachées concerne les pièces pour le(s) modèle(s) indiqué(s) sur la page de couverture. Lorsque vous commandez des pièces de rechange, veuillez vous référer à ce catalogue de pieces détachées et indiquer clairement les numéros et les noms des pièces détachées.

1. Les modifications ou ajouts ayant été effectués après la parution du catalogue de pièces détachées seront décrits dans les Bulletins d'information concernant les pièces détachées.
   Il est recommandé que vous apportiez les corrections nécessaires au catalogue des pièces détachées en vous référant aux Bulletins d'information.

2. Abréviations
   Dans ce catalogue, les abréviations suivantes sont utilisées:

   "UR" Utiliser le numéro de pièces spécifié.
   "UN" Utiliser autant que nécessaire.
   "AP" Pièces de substitution
   "LM" Fabrication locale (les pièces doivent être commandées localement.)
   "F#" N° de cadre (applicable au N° de série)
   "O/S" Surdimensionné

3. Nombre de pièces d'un assemblage
   - Les pièces fournies comme composants d'un assemblage sont précédées d'un point (.) de la manière indiquée ci–dessous.
   - Le chiffre apparaissant à la droite de chaque composant indique la quantité de pièces pour chaque unité d'assemblage.

N° PIECES	DESCRIPTION	QTE	REMARQUES
2F5–83310–60	ENS. CLIGNOTANT AVANT	2	
115–83311–60	.AMPOULE (6V–18W)	1	

4. Les couleurs concernant les graphiques sont indiquées dans la colonne "REMARQUES", comme indiqué ci–dessous.

N° PIECES	DESCRIPTION	QTE	REMARQUES
2N4–24110–00–X5	RESERVOIR A ESSENCE.	2	MXR
3J1–24240–10	.GRAPHIQUE	1	POUR MXR

5. Veuillez noter que les illustrations sont indiquées à titre de référence pour trouver les numéros de pièces, non pour être utilisées lors de l'assemblage. Lors de l'assemblage, veuillez utiliser le manuel d'entretien adéquat.

6. L'astérisque (*) placé devant un numéro de référence indique des éléments qui ont été modifiés après la première édition.

7. N° de série applicable

   N° de Série du moteur

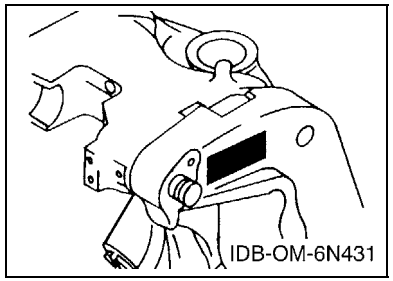

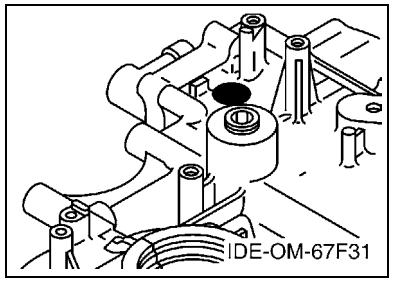

8. N° de série initial du moteur applicable

Modèle	N° de série	Modèle	N° de série
F100B	60C-1006414		

9. Code couleur applicable

Abréviation	Nom de la couleur	Code couleur
DBN1	DARK BLUISH GRAY 1	008D

10. Informations relatives à la colonne Quantité

N° de la colonne	Nom de la colonne Qté	Modèle applicable
1	60CC	F100BET

CONTENTS

TOP COWLING 1
CYLINDER & CRANKCASE 1 2
CRANKSHAFT & PISTON 4
CYLINDER & CRANKCASE 2 5
VALVE 7
INTAKE 9
CARBURETOR 1 10
CARBURETOR 2 12
FUEL 13
GENERATOR 15
ELECTRICAL 1 17
ELECTRICAL 2 19
ELECTRICAL 3 21
STARTING MOTOR 23
BOTTOM COWLING 25
CONTROL 28
BRACKET 1 30
BRACKET 2 32
POWER TRIM & TILT ASSY 1 34
POWER TRIM & TILT ASSY 2 36
UPPER CASING 38
OIL PAN 40
LOWER CASING & DRIVE 1 42
LOWER CASING & DRIVE 2 46
FUEL TANK 48
METER 49
OPTIONAL PARTS 50
REPAIR KIT 1 51
REPAIR KIT 2 52
REPAIR KIT 3 53

INDEX

NUMERICAL INDEX 55

TABLE DES MATIERES

CAPOT SUPERIEUR 1
CYLINDRE & CARTER 1 2
VILEBREQUIN & PISTON 4
CYLINDRE & CARTER 2 5
SOUPAPE 7
ADMISSION 9
CARBURATEUR 1 10
CARBURATEUR 2 12
CARBURANT 13
GENERATRICE 15
PARTIE ELECTRIQUE 1 17
PARTIE ELECTRIQUE 2 19
PARTIE ELECTRIQUE 3 21
DEMARREUR ELECTRIQUE 23
CAPOT INFERIEUR 25
COMMANDE 28
SUPPORT 1 30
SUPPORT 2 32
PUISSANCE PARER ET INCLINER 1 34
PUISSANCE PARER ET INCLINER 2 36
FOURREAU 38
VENTILATEUR D'HUILE 40
BOITIER D'HELICE TRANSMISSION1 42
BOITIER D'HELICE TRANSMISSION2 46
RESERVOIR A CARBURANT 48
COMPTEUR 49
PIECES OPTIONNELLES 50
KITS DE REPARATION 1 51
KITS DE REPARATION 2 52
KITS DE PEPARATION 3 53

INDEX

INDEX NUMERIQUE 55

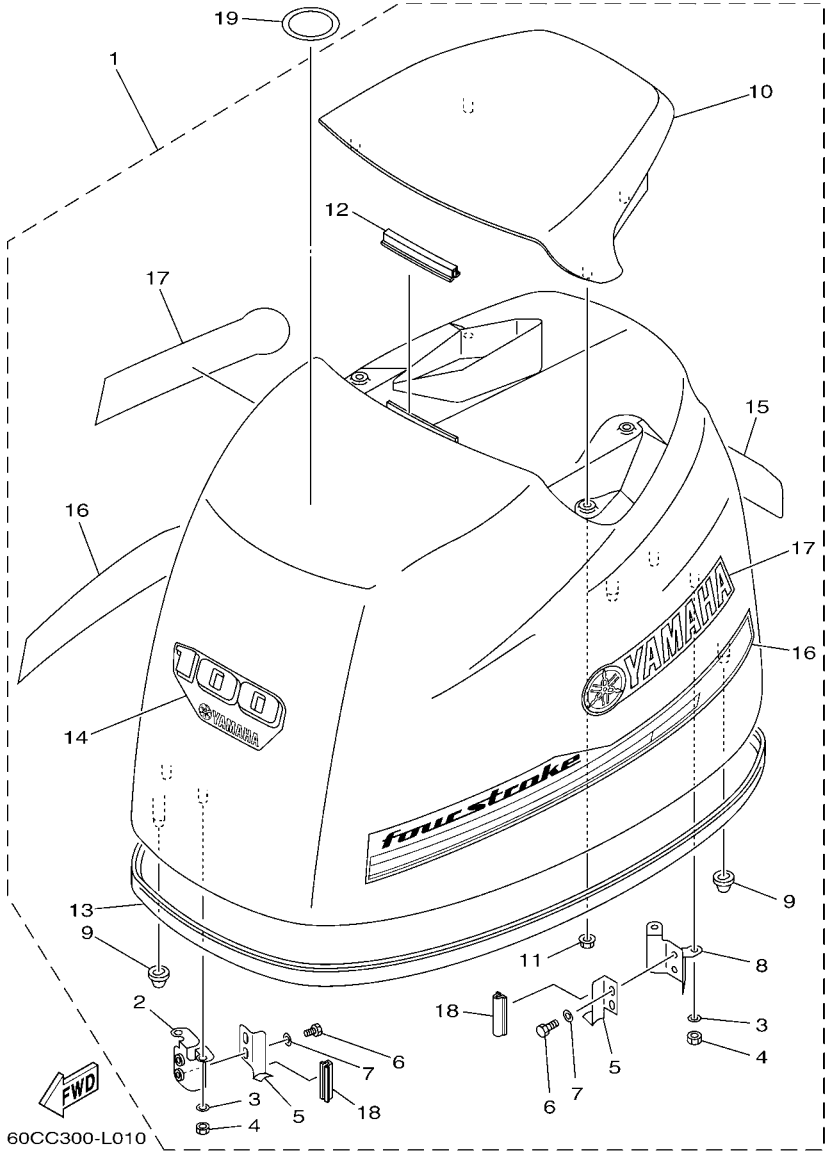

FIG. 1 TOP COWLING — CAPOT SUPERIEUR

REF. NO.	PART NO. N° PIECES	DESCRIPTION DESCRIPTION	60CC					REMARKS REMARQUES
1	60C–42610–20	TOP COWLING ASSY CAPOT (ENS.)	1					
2	67F–42647–00	.HOLDER, CLAMP BAND .SUPPORT, SANDOW DE SERRAGE	1					
3	92990–06100	.WASHER, SPRING .RONDELLE, GROWER	4					
4	95380–06600	.NUT, HEXAGON .ECROU	4					
5	68V–42652–00	.HOOK .CROCHET	2					
6	97095–06012	.BOLT .BOULON	4					
7	92995–06600	.WASHER .RONDELLE	4					
8	67F–42649–00	.HOLDER, CLAMP BAND .SUPPORT, SANDOW DE SERRAGE	1					
9	67F–42662–00	.DAMPER .AMORTISSEUR	3					
10	67F–42613–00–8D	.MOLDING, AIR DUCT .MANCHON A AIR	1					
11	90179–06M24	.NUT .ECROU	4					
12	61N–42628–00	.SEAL .JOINT	1					
13	67F–42615–00	.SEAL .JOINT	1					
14	60C–42677–10	.GRAPHIC, FRONT .ADHESIF, AVANT	1					
15	60C–42678–10	.GRAPHIC, REAR .ADHESIF, ARRIERE	1					
16	6D6–W0070–00	.GRAPHIC SET .JEU DIEMBLEMES	1					
17	6D6–42681–00	.MARK, COWLING .ADHESIF, CAPOT	2					
18	67F–42628–00	.SEAL .JOINT	2					
19	67F–13434–20	LABEL, CAUTION ETIQUETTE, ATTENTION	1					

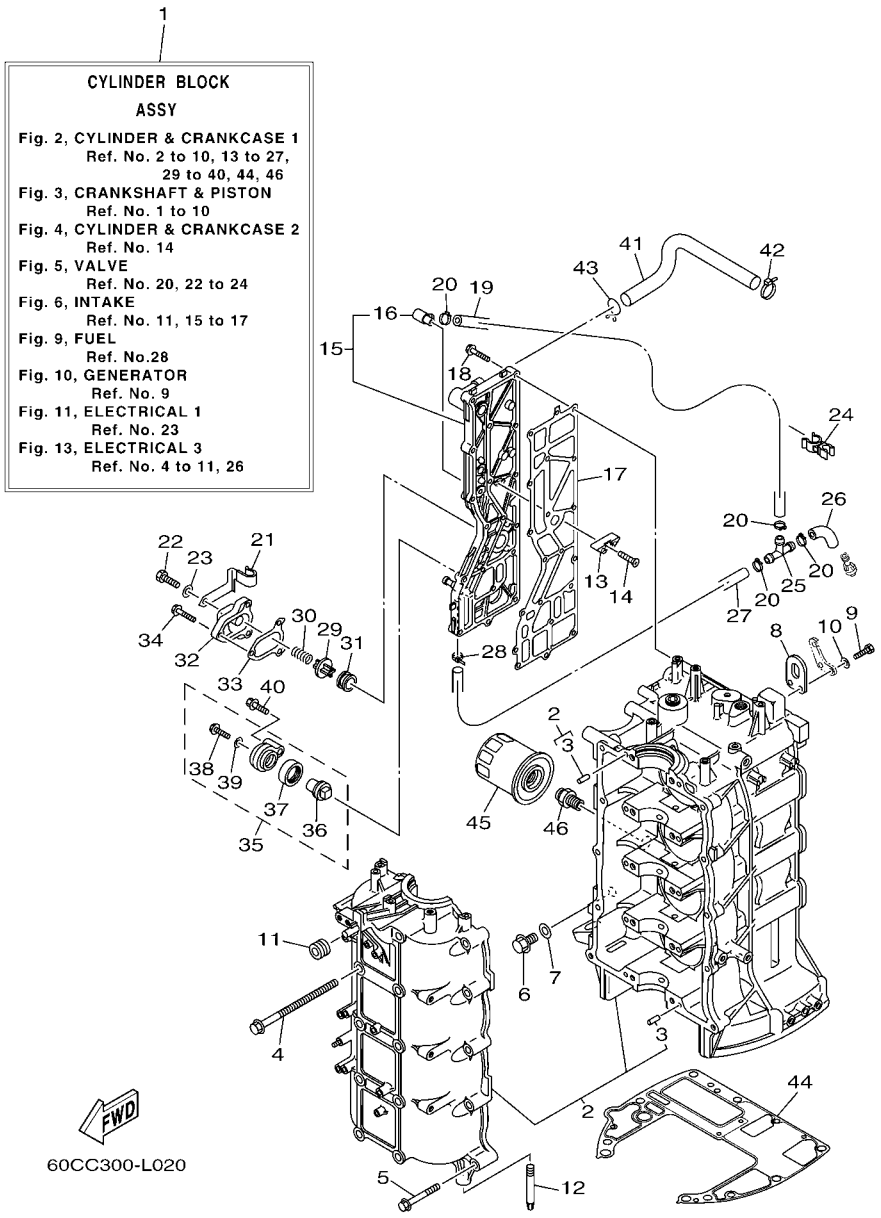

FIG. 2 CYLINDER & CRANKCASE 1 CYLINDRE & CARTER 1

REF. NO.	PART NO. N° PIECES	DESCRIPTION DESCRIPTION	60CC					REMARKS REMARQUES
1	60C–W009B–07–9S	CYLINDER BLOCK ASSY CYLINDRE GROUPE (ENS.)	1					
2	67F–15100–03	CRANKCASE ASSY CARTER DE MOTEUR COMPLET	1					
3	93606–12019	.PIN, DOWEL .GOUPILLE	10					
4	90119–10M88	BOLT, WITH WASHER BOULON, AVEC RONDELLE	10					
5	90119–08M66	BOLT, WITH WASHER BOULON, AVEC RONDELLE	10					
6	90340–14M06	PLUG, STRAIGHT SCREW PLOT, FILETE DROIT	1					
7	90430–14115	GASKET JOINT	1					
8	62Y–11119–00	HANGER, ENGINE ANNEAU, LEVAGE	2					
9	97095–06020	BOLT BOULON	4					
10	92995–06600	WASHER RONDELLE	4					
11	90480–12314	GROMMET PASSE-FIL	1					
12	67F–15142–00	GUIDE 1 GUIDE 1	2					
13	6E5–11325–00	ANODE ANODE	3					
14	98780–04016	SCREW, FLAT HEAD VIS A TETE FRAISEE	3					
15	67F–41113–50–9S	OUTER COVER, EXHAUST COUVERCLE, ECHAPPEMENT	1					
16	676–11372–00	.NIPPLE, HOSE .RACCORD, TUYAU	1					
17	67F–41114–A2	GASKET, EXHAUST OUTER COVER JOINT, COUVERCLE D'ECHAPPEMENT	1					
18	90119–06MA4	BOLT, WITH WASHER BOULON, AVEC RONDELLE	18					
19	90445–10024	HOSE (L360) DURITE (L360)	1					
20	90465–11M10	CLAMP BRIDE	4					
21	90462–10060	CLAMP BRIDE	1					
22	97095–06012	BOLT BOULON	1					
23	92995–06600	WASHER RONDELLE	1					
24	90464–10010	CLAMP BRIDE	1					
25	688–24378–00	PIPE, JOINT 3 DURITE RACCORDEMENT 3	1					
26	61A–24316–00	PIPE 6 DURITE 6	1					
27	90445–10016	HOSE (L280) DURITE (L280)	1					

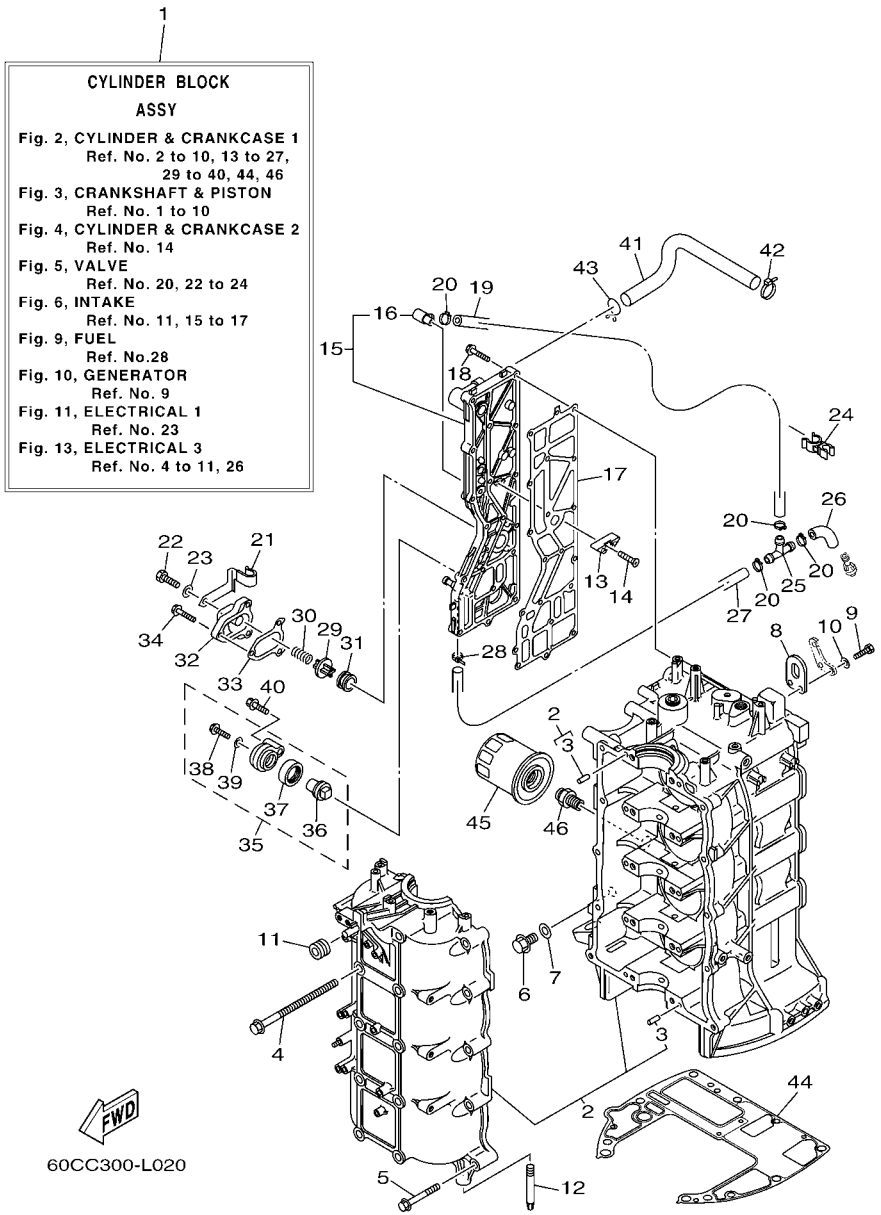

FIG. 2 CYLINDER & CRANKCASE 1 CYLINDRE & CARTER 1

REF. NO.	PART NO. N° PIECES	DESCRIPTION DESCRIPTION	60CC					REMARKS REMARQUES
28	90465–11M10	CLAMP BRIDE	2					
29	6G5–12416–00	VALVE, PRESSURE CONTROL SOUPAPE DE CONTROLEUR PRESS	1					
30	90501–16M11	SPRING, COMPRESSION RESSORT, COMPRESSION	1					
31	90480–20M05	GROMMET PASSE-FIL	1					
32	67F–1246A–01–9S	COVER 1 COUVERCLE 1	1					
33	67F–12435–A0	GASKET JOINT	1					
34	90119–06MA2	BOLT, WITH WASHER BOULON, AVEC RONDELLE	3					
35	69J–11301–00	ANODE COVER ASSY COUVERCLE ANODE (ENS.)	1					
36	67F–11325–01	.ANODE .ANODE	1					
37	67F–11328–00	.GROMMET, ANODE .PASSE-FIL	1					
38	90105–06M07	.BOLT, FLANGE .BOULON	1					
39	90430–06M03	.GASKET .JOINT	1					
40	97575–08540	BOLT, WITH WASHER VIS HEXAGONAL AVC RONDELLE	1					
41	67F–1243A–00	HOSE 1 DURITE 1	1					
42	90465–11M59	CLAMP BRIDE	1					
43	90467–20M15	CLIP JONC	1					
44	68V–11351–00	GASKET, CYLINDER JOINT, D'EMBASE	1					
45	5GH–13440–00	ELEMENT ASSY, OIL CLEANER ELEMENT, FILTRE A HUILE	1					
46	90401–20007	BOLT, UNION BOULON, RACCORD	1					

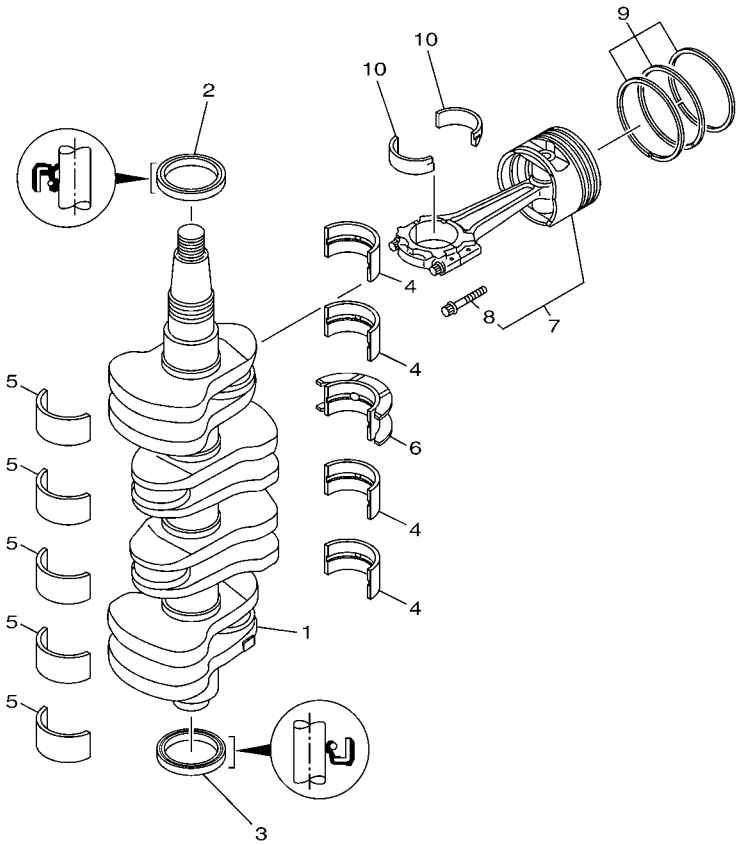

60CB300-K030

FIG. 3 CRANKSHAFT & PISTON — VILEBREQUIN & PISTON

REF. NO.	PART NO. N° PIECES	DESCRIPTION DESCRIPTION	60CC					REMARKS REMARQUES
1	6D8–11411–00	CRANKSHAFT VILEBREQUIN COMPLET	1					
2	93102–48008	OIL SEAL JOINT SPY	1					
3	93101–48001	OIL SEAL JOINT SPY	1					
4	6D8–11416–00	PLANE BEARING, CRANKSHAFT 1 COUSSINET DE VILEBREQUIN 1	4					UR GREEN UR GREEN
	6D8–11416–10	PLANE BEARING, CRANKSHAFT 1 COUSSINET DE VILEBREQUIN 1	4					UR BLUE UR BLUE
	6D8–11416–20	PLANE BEARING, CRANKSHAFT 1 COUSSINET DE VILEBREQUIN 1	4					UR RED UR RED
5	6D8–11417–00	PLANE BEARING, CRANKSHAFT 2 COUSSINET DE VILEBREQUIN 2	5					UR YELLOW UR YELLOW
	6D8–11417–10	PLANE BEARING, CRANKSHAFT 2 COUSSINET DE VILEBREQUIN 2	5					UR GREEN UR GREEN
	6D8–11417–20	PLANE BEARING, CRANKSHAFT 2 COUSSINET DE VILEBREQUIN 2	5					UR BLUE UR BLUE
	6D8–11417–30	PLANE BEARING, CRANKSHAFT 2 COUSSINET DE VILEBREQUIN 2	5					UR RED UR RED
6	6D8–11418–00	PLANE BEARING, CRANKSHAFT 3 COUSSINET DE VILEBREQUIN 3	1					UR GREEN UR GREEN
	6D8–11418–10	PLANE BEARING, CRANKSHAFT 3 COUSSINET DE VILEBREQUIN 3	1					UR BLUE UR BLUE
	6D8–11418–20	PLANE BEARING, CRANKSHAFT 3 COUSSINET DE VILEBREQUIN 3	1					UR RED UR RED
7	60C–W1164–20	PISTON/CON-ROD ASSY(STD) PISTON/BIELLE COMPLETTE(STD)	4					
	60C–W1164–30	PISTON/CON-ROD ASSY(0.25MM OS) PISTON/BIELLE COMPLETTE:0.25MM	4					AP AP
8	K1C–A3275–00	.BOLT, CONNECTING ROD .BOULON, BIELLE	2					
9	60C–11603–00	PISTON RING SET (STD) JEU DE SEGMENTS (STD)	4					
	60C–11604–00	PISTON RING SET (0.25MM O/S) JEU DE SEGMENTS (0.25MM O/S)	4					AP AP
10	6D8–11656–00	PLANE BEARING, CONNECTING ROD ROULEMENT DE BIELLE	8					UR YELLOW UR YELLOW
	6D8–11656–10	PLANE BEARING, CONNECTING ROD ROULEMENT DE BIELLE	8					UR GREEN UR GREEN
	6D8–11656–20	PLANE BEARING, CONNECTING ROD ROULEMENT DE BIELLE	8					UR BLUE UR BLUE
	6D8–11656–30	PLANE BEARING, CONNECTING ROD ROULEMENT DE BIELLE	8					UR RED UR RED

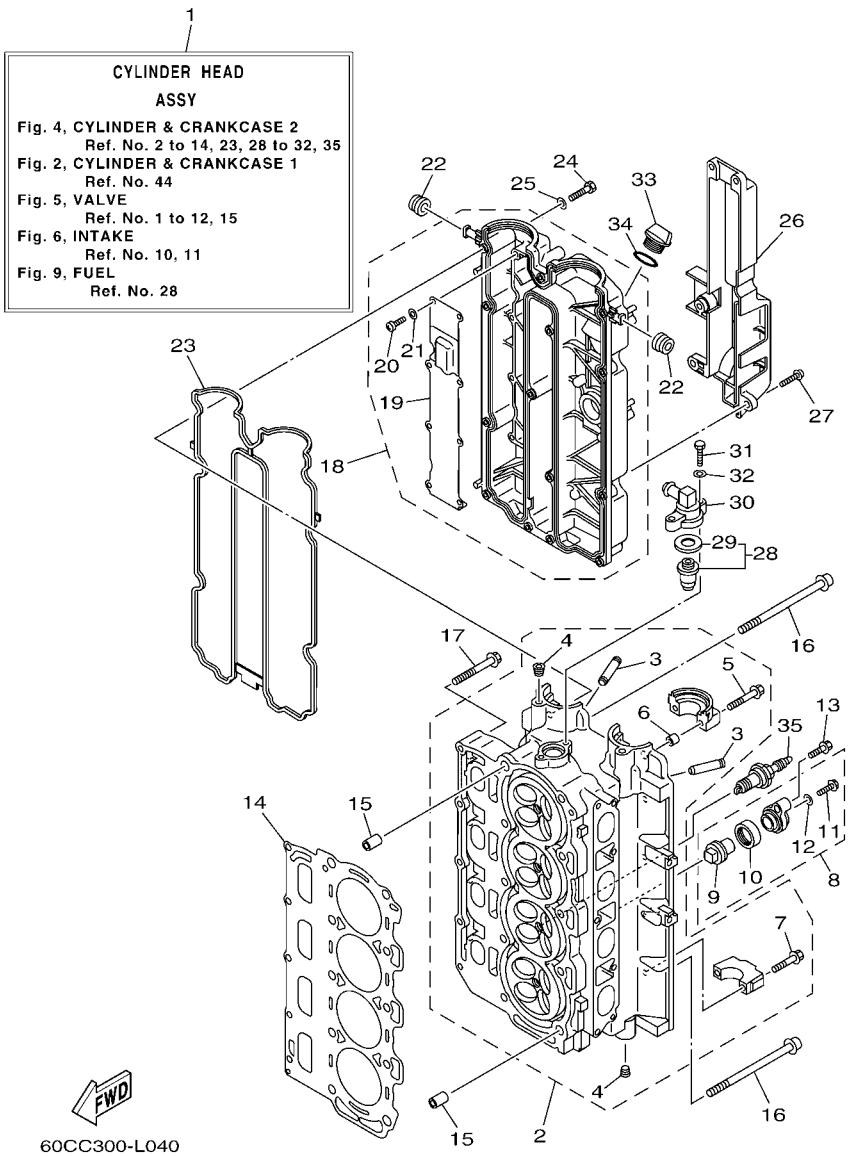

FIG. 4 CYLINDER & CRANKCASE 2 CYLINDRE & CARTER 2

REF. NO.	PART NO. N° PIECES	DESCRIPTION DESCRIPTION	60CC					REMARKS REMARQUES
1	67F–W009A–24–9S	CYLINDER HEAD ASSY CULASSE (ENS.)	1					
2	6D8–11110–13–9S	CYLINDER HEAD ASSY JEU DE CULASSE	1					
3	67F–11133–10	.GUIDE, VALVE 1 .GUIDE, SOUPAPE 1	16					
4	90344–51019	.PLUG, TAPER SCREW .PLOT, FILETE CONIQUE	4					
5	90119–07235	.BOLT/WASHER-CAM CAPS .BOULON, AVEC RONDELLE	4					
6	91809–08006	.PIN, DOWEL .GOUJON, D'ASSEMBLAGE	4					
7	90119–07234	.BOLT, WITH WASHER .BOULON, AVEC RONDELLE	16					
8	69J–11301–00	ANODE COVER ASSY COUVERCLE ANODE (ENS.)	2					
9	67F–11325–01	.ANODE .ANODE	1					
10	67F–11328–00	.GROMMET, ANODE .PASSE-FIL	1					
11	90105–06M07	.BOLT, FLANGE .BOULON	1					
12	90430–06M03	.GASKET .JOINT	1					
13	97575–08540	BOLT, WITH WASHER VIS HEXAGONAL AVC RONDELLE	2					
14	67F–11181–03	GASKET, CYLINDER HEAD 1 JOINT, DE CULASSE 1	1					
15	99530–14016	PIN, DOWEL GOUJON, D'ASSEMBLAGE	2					
16	90155–10005	SCREW, FLAT FILLISTER VIS, TETE OVALE PLATE	10					
17	90119–08M91	BOLT, WITH WASHER BOULON, AVEC RONDELLE	5					
18	6D8–11191–01–9S	COVER, CYLINDER HEAD 1 COUVERCLE, CULASSE 1	1					
19	67F–11168–00	.COVER, BREATHER .COUVERCLE, RENIFLARD	1					
20	98507–04008	.SCREW, PAN HEAD .VIS, TETE TRONCONIQUE	8					
21	92907–04600	.WASHER .RONDELLE	8					
22	90480–12072	GROMMET PASSE-FIL	2					
23	6D8–11356–01	SEAL, CYLINDER 2 JOINT, SPY CYLINDRE	1					
24	97095–06030	BOLT BOULON	14					
25	92995–06600	WASHER RONDELLE	14					
26	67F–11192–01	COVER, CYLINDER HEAD 2 COUVERCLE, CULASSE 2	1					
27	90159–06M29	SCREW, WITH WASHER VIS, AVEC RONDELLE	5					

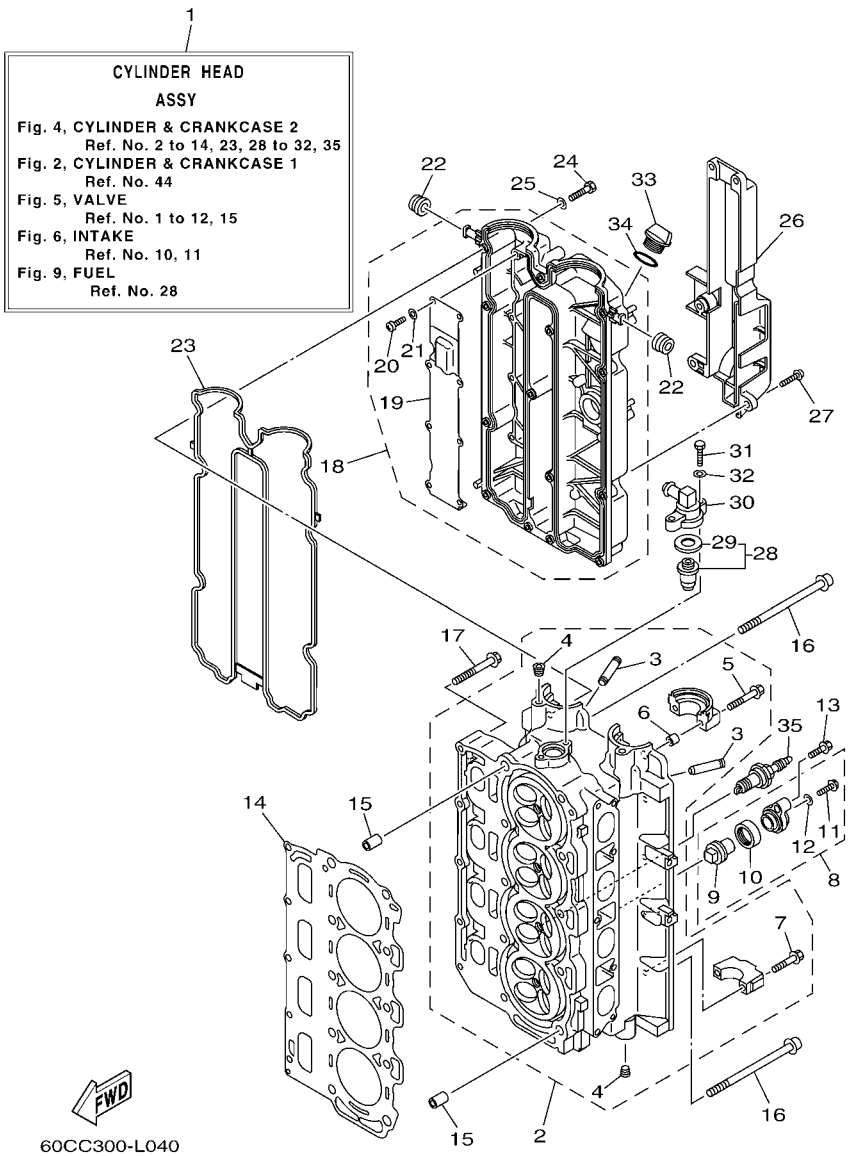

FIG. 4 CYLINDER & CRANKCASE 2 CYLINDRE & CARTER 2

REF. NO.	PART NO. N° PIECES	DESCRIPTION DESCRIPTION	60CC					REMARKS REMARQUES
28	67F–12411–01	THERMOSTAT THERMOSTAT	1					
29	67F–12412–00	.SEAL, THERMOSTAT .JOINT, THERMOSTAT	1					
30	68V–12413–00–9S	COVER, THERMOSTAT COUVERCLE, THERMOSTAT	1					
31	97095–06025	BOLT BOULON	2					
32	92995–06600	WASHER RONDELLE	2					
33	6G8–15363–00	PLUG, OIL PLOT, HUILE	1					
34	93210–24M79	O-RING JOINT TORIQUE	1					
35	94702–00391	PLUG, SPARK (NGK LFR5A-11) BOUGIE D'ALLUMAGE(NGK LFR5A-11	4					

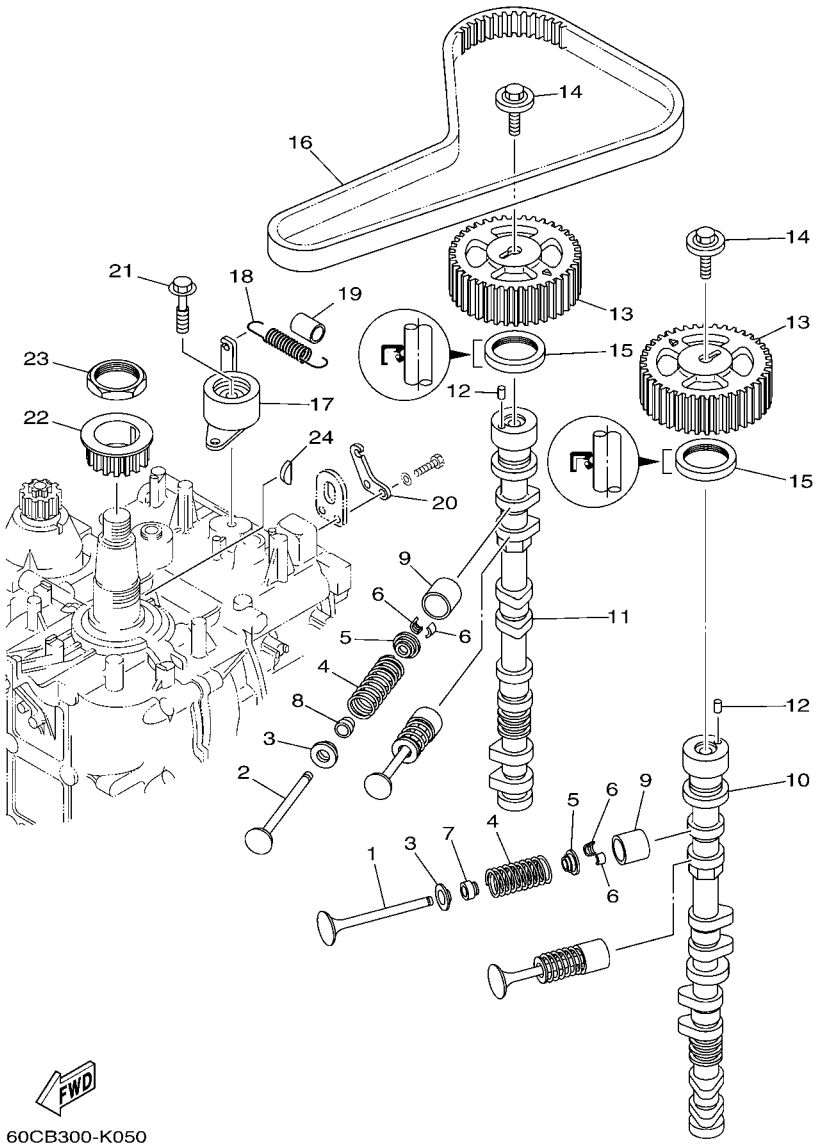

60CB300-K050

FIG. 5 VALVE SOUPAPE

REF. NO.	PART NO. N° PIECES	DESCRIPTION DESCRIPTION	60CC					REMARKS REMARQUES
1	6D8–12111–00	VALVE, INTAKE SOUPAPE, ADMISSION	8					
2	6D8–12121–00	VALVE, EXHAUST SOUPAPE, ECHAPPEMENT	8					
3	6D8–12116–00	SEAT, VALVE SPRING SIEGE, RESSORT DE SOUPAPE	16					
4	6D8–12113–00	SPRING, VALVE INNER RESSORT DE SOUPAPE, INTERNE	16					
5	26H–12117–00	RETAINER, VALVE SPRING BUTEE DE RESSORT DE SOUPAPE	16					
6	4G0–12118–00	COTTER, VALVE FRAISE, SOUPAPE	32					
7	K0A–A3721–00	SEAL, VALVE STEM JOINT, QUEUE DE SOUPAPE	8					
8	K0A–A3722–00	SEAL, VALVE STEM 2 JOINT, QUEUE DE SOUPAPE 2	8					
9	6D8–12153–00	LIFTER, VALVE (12) LEVE-SOUPAPE (12)	16					UR UR
	6D8–12153–10	LIFTER, VALVE (14) LEVE-SOUPAPE (14)	16					UR UR
	6D8–12153–20	LIFTER, VALVE (16) LEVE-SOUPAPE (16)	16					UR UR
	6D8–12153–30	LIFTER, VALVE (18) LEVE-SOUPAPE (18)	16					UR UR
	6D8–12153–40	LIFTER, VALVE (20) LEVE-SOUPAPE (20)	16					UR UR
	6D8–12153–50	LIFTER, VALVE (22) LEVE-SOUPAPE (22)	16					UR UR
	6D8–12153–60	LIFTER, VALVE (24) LEVE-SOUPAPE (24)	16					UR UR
	6D8–12153–70	LIFTER, VALVE (26) LEVE-SOUPAPE (26)	16					UR UR
	6D8–12153–80	LIFTER, VALVE (28) LEVE-SOUPAPE (28)	16					UR UR
	6D8–12153–90	LIFTER, VALVE (30) LEVE-SOUPAPE (30)	16					UR UR
	6D8–12153–A0	LIFTER, VALVE (32) LEVE-SOUPAPE (32)	16					UR UR
	6D8–12153–B0	LIFTER, VALVE (34) LEVE-SOUPAPE (34)	16					UR UR
	6D8–12153–C0	LIFTER, VALVE (36) LEVE-SOUPAPE (36)	16					UR UR
	6D8–12153–D0	LIFTER, VALVE (38) LEVE-SOUPAPE (38)	16					UR UR
	6D8–12153–E0	LIFTER, VALVE (40) LEVE-SOUPAPE (40)	16					UR UR
	6D8–12153–F0	LIFTER, VALVE (42) LEVE-SOUPAPE (42)	16					UR UR
	6D8–12153–G0	LIFTER, VALVE (44) LEVE-SOUPAPE (44)	16					UR UR
	6D8–12153–H0	LIFTER, VALVE (46) LEVE-SOUPAPE (46)	16					UR UR
	6D8–12153–J0	LIFTER, VALVE (48) LEVE-SOUPAPE (48)	16					UR UR

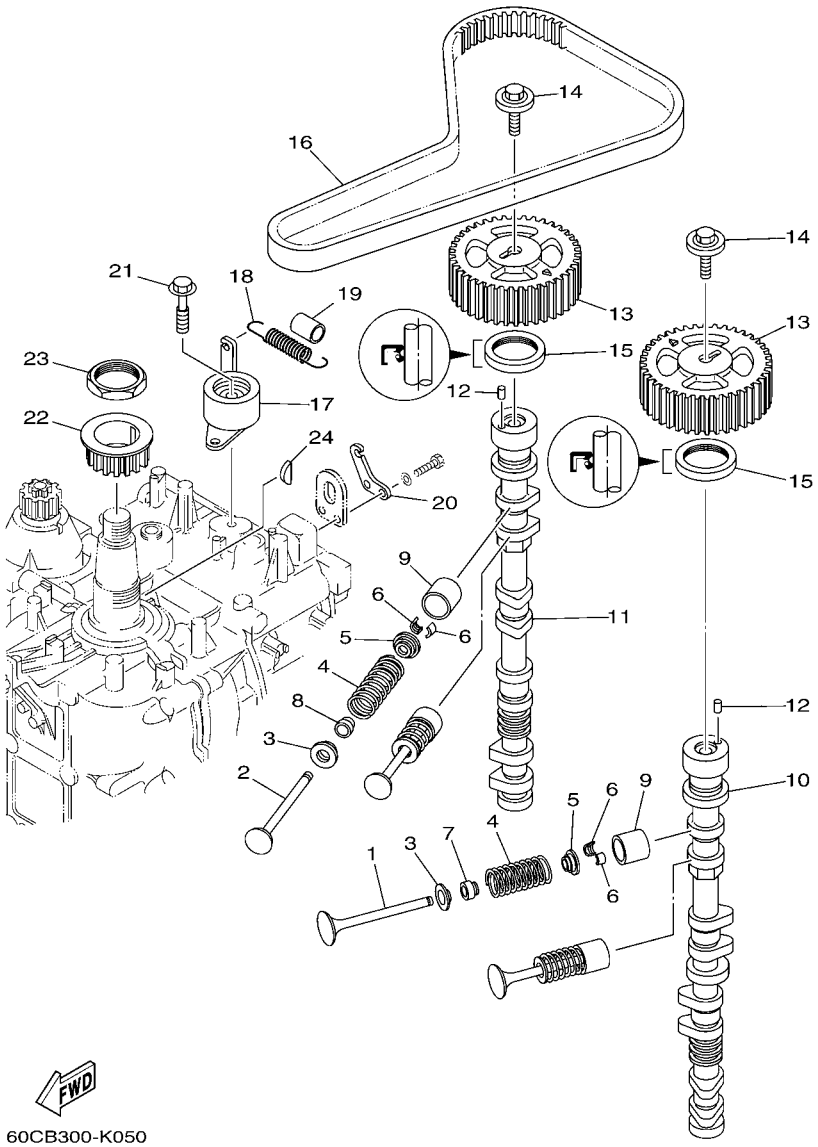

60CB300-K050

FIG. 5 VALVE SOUPAPE

REF. NO.	PART NO. N° PIECES	DESCRIPTION DESCRIPTION	60CC					REMARKS REMARQUES
9	6D8–12153–K0	LIFTER, VALVE (50) LEVE-SOUPAPE (50)	16					UR UR
	6D8–12153–L0	LIFTER, VALVE (52) LEVE-SOUPAPE (52)	16					UR UR
	6D8–12153–M0	LIFTER, VALVE (54) LEVE-SOUPAPE (54)	16					UR UR
	6D8–12153–N0	LIFTER, VALVE (56) LEVE-SOUPAPE (56)	16					UR UR
	6D8–12153–P0	LIFTER, VALVE (58) LEVE-SOUPAPE (58)	16					UR UR
	6D8–12153–R0	LIFTER, VALVE (60) LEVE-SOUPAPE (60)	16					UR UR
	6D8–12153–S0	LIFTER, VALVE (62) LEVE-SOUPAPE (62)	16					UR UR
	6D8–12153–T0	LIFTER, VALVE (64) LEVE-SOUPAPE (64)	16					UR UR
	6D8–12153–U0	LIFTER, VALVE (66) LEVE-SOUPAPE (66)	16					UR UR
	6D8–12153–V0	LIFTER, VALVE (68) LEVE-SOUPAPE (68)	16					UR UR
10	6D9–12171–00	CAMSHAFT 1 ARBRE A CAMES 1	1					
11	6D8–12181–00	CAMSHAFT 2 ARBRE A CAMES 2	1					
12	93605–10108	PIN, DOWEL AXE	2					
13	67F–11537–00	GEAR, DRIVEN PIGNON SECONDAIRE	2					
14	90119–10050	BOLT, WITH WASHER BOULON, AVEC RONDELLE	2					
15	93102–38008	OIL SEAL JOINT SPY	2					
16	67F–46241–00	BELT COURROIE TRAPEZOIDALE	1					
17	67F–11590–00	TENSIONER ASSY TENDEUR (ENS.)	1					
18	90506–16M39	SPRING, TENSION RESSORT, TENSION	1					
19	90445–15M03	HOSE (L23) DURITE (L23)	1					
20	67F–11595–00	PLATE,VALVE PLAQUE DE SOUPAPE	1					
21	90119–10M72	BOLT, WITH WASHER BOULON, AVEC RONDELLE	1					
22	6D8–11536–00	GEAR, DRIVE ENGRENAGE, MENANT	1					
23	90170–40008	NUT ECROU	1					
24	90280–04008	KEY, WOODRUFF CLAVETTE, DEMI-LUNE	1					

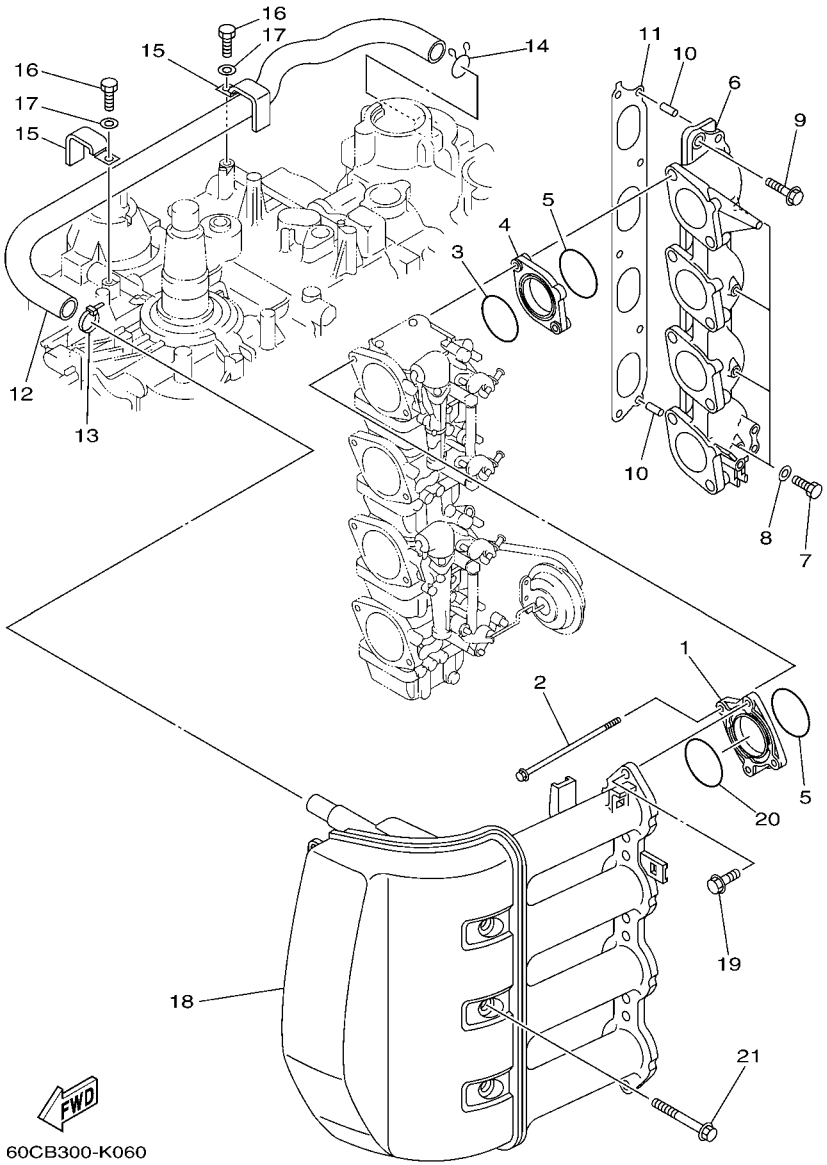

FIG. 6 INTAKE — ADMISSION

REF. NO.	PART NO. N° PIECES	DESCRIPTION DESCRIPTION	60CC					REMARKS REMARQUES
1	67F–14243–00	PLATE PLAQUE	4					
2	67F–14216–00	BOLT BOULON	8					
3	67F–14239–00	SEAL JOINT	4					
4	67F–14271–00	INSULATOR ISOLATEUR	4					
5	93210–40M10	O-RING JOINT TORIQUE	8					
6	67F–13641–00–94	MANIFOLD 1 TUBULURE 1	1					
7	97095–06010	BOLT BOULON	4					
8	90430–06014	GASKET JOINT	4					
9	97575–08535	BOLT, WITH WASHER VIS HEXAGONAL AVC RONDELLE	5					
10	91690–50014	PIN, SPRING AGRAFFE	2					
11	67F–13645–00	GASKET, MANIFOLD 1 JOINT, TUBULURE 1	1					
12	67F–15373–00	PIPE, BREATHER DURITE DE RENIFLARD	1					
13	90465–11M59	CLAMP BRIDE	1					
14	90467–20M15	CLIP JONC	1					
15	90465–12M03	CLAMP BRIDE	2					
16	97095–06012	BOLT BOULON	2					
17	92995–06600	WASHER RONDELLE	2					
18	67F–14440–00	SILENCER ASSY, INTAKE SIENCIEUX D'ADMISSION	1					
19	90119–06M82	BOLT, WITH WASHER BOULON, AVEC RONDELLE	8					
20	93210–41MJ2	O-RING JOINT TORIQUE	4					
21	90119–08M59	BOLT, WITH WASHER BOULON, AVEC RONDELLE	3					

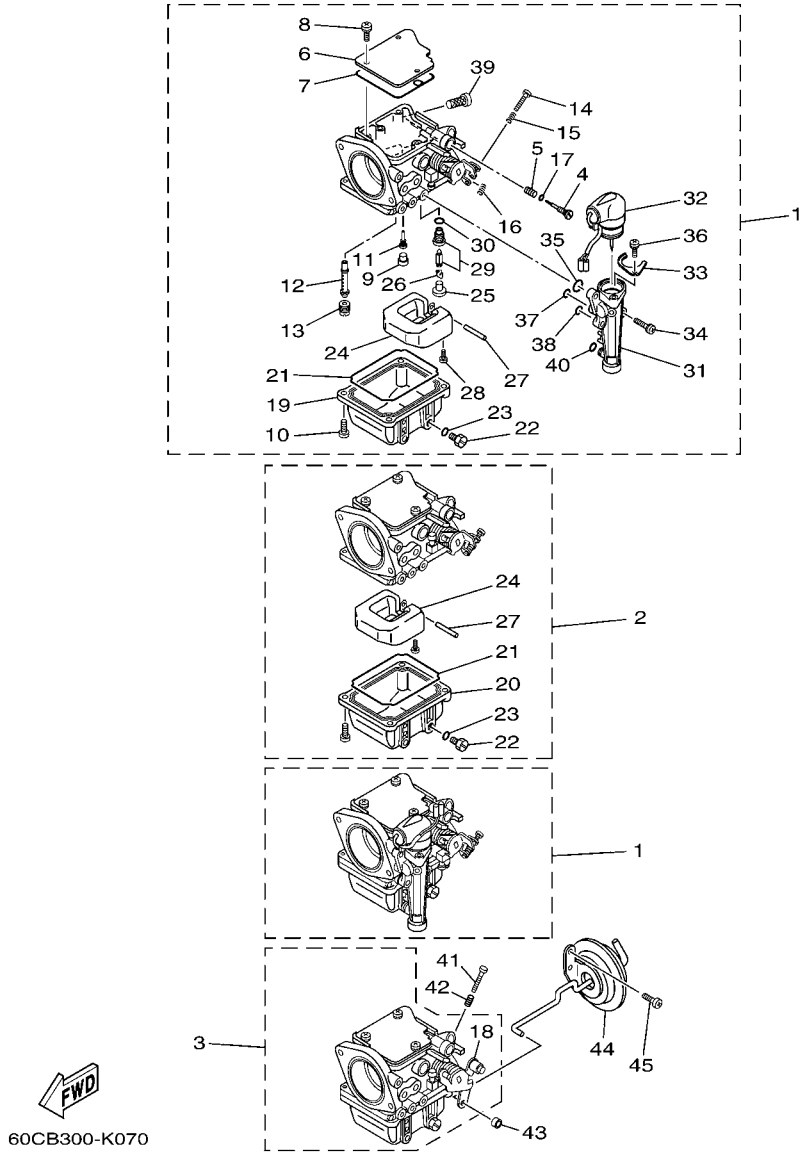

FIG. 7 CARBURETOR 1 CARBURATEUR 1

REF. NO.	PART NO. N° PIECES	DESCRIPTION DESCRIPTION	60CC					REMARKS REMARQUES
1	60C–14901–00	CARBURETOR ASSY 1 CARBURATEUR 1 COMPLET	2					#1,3 #1,3
2	60C–14902–00	CARBURETOR ASSY 2 CARBURATEUR 2 COMPLET	1					#2 #2
3	60C–14904–00	CARBURETOR ASSY 4 CARBURATEUR 4 COMPLET	1					#4 #4
4	67F–14923–00	.SCREW, PILOT .VIS, RALENTI	4					
5	697–14555–00	.SPRING .RESSORT	4					
6	67F–14146–00	.PLATE .PLAQUE	4					
7	67F–14147–00	.O-RING .JOINT TORIQUE	4					
8	97803–04010	.SCREW, PAN HEAD .VIS, CRUCIFORME	12					
9	676–14966–00	.CAP .CAPUCHON	4					
10	97980–04114	.SCREW, WITH WASHER .VIS, AVEC RONDELLE	16					
11	67F–14948–04	.JET (#42) .GICLEUR (#42)	4					
12	67F–14947–00	.JET, NEEDLE .GICLEUR DE STARTER	4					
13	67F–14943–83	.JET, MAIN (#128) .GICLEUR, PRINCIPAL (#128)	4					
14	67F–14567–00	.SCREW .VIS	3					#1,2,3 #1,2,3
15	67F–14555–00	.SPRING .RESSORT	3					#1,2,3 #1,2,3
16	67F–14556–00	.SPRING .RESSORT	3					#1,2,3 #1,2,3
17	67F–14397–00	.O-RING .JOINT TORIQUE	4					
18	6H2–14578–00	.COLLAR .COLLERETTE	1					#4 #4
19	67F–14980–00	.BODY, FLOAT CHAMBER .CORPS, CUVE DE FLOTTEUR	2					#1,3 #1,3
20	67F–14980–10	.BODY, FLOAT CHAMBER .CORPS, CUVE DE FLOTTEUR	2					#2,4 #2,4
21	67F–14984–00	.GASKET, FLOAT CHAMBER .JOINT, CUVE DE FLOTTEUR	4					
22	6H3–14992–00	.SCREW, DRAIN .BOUCHON, PURGE	4					
23	93210–04230	.O-RING .JOINT TORIQUE	4					
24	6H4–14985–01	.FLOAT .FLOTTEUR	4					
25	676–14186–00	.PIN, FLOAT .AXE, FLOTTEUR	4					
26	67F–14159–00	.CLIP .JONC	4					
27	6H4–14548–00	.PIN, FLOAT ARM .AXE, BRAS DE FLOTTEUR	4					

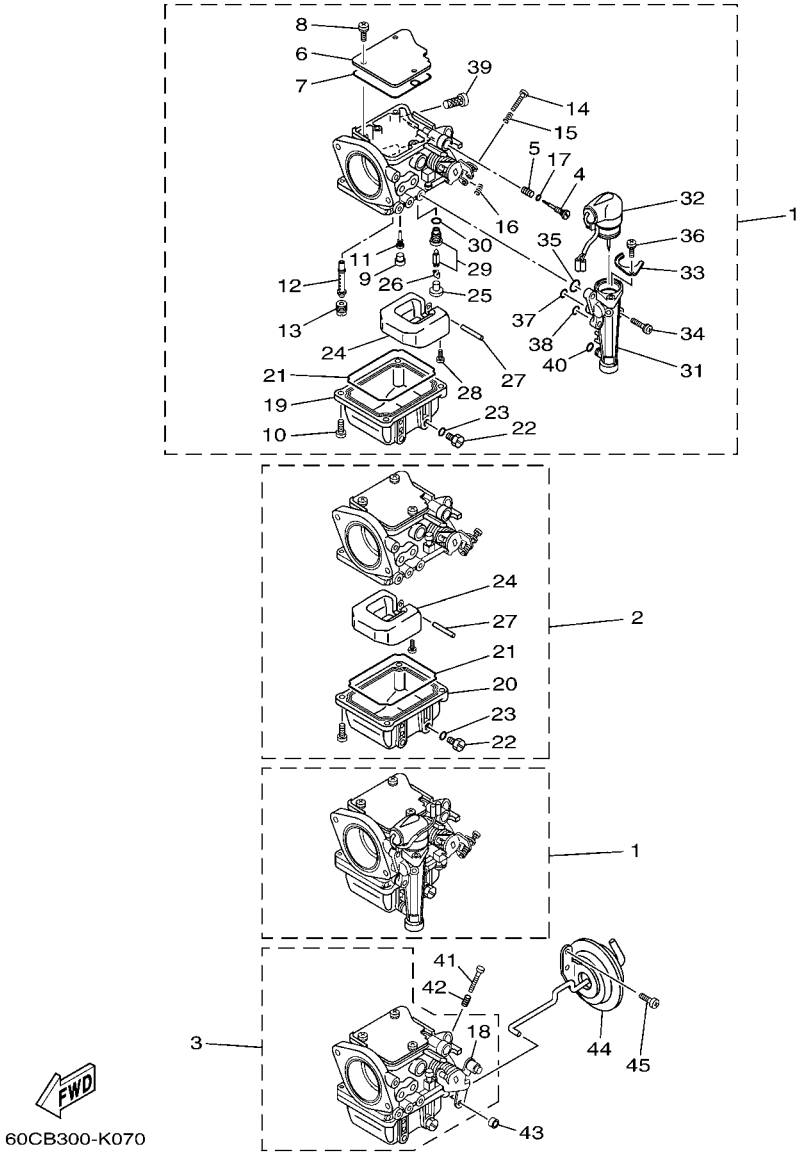

FIG. 7 CARBURETOR 1 — CARBURATEUR 1

REF. NO.	PART NO. N° PIECES	DESCRIPTION DESCRIPTION	60CC					REMARKS REMARQUES
28	98580–04008	.SCREW, PAN HEAD .VIS	4					
29	60C–14590–02	.NEEDLE VALVE ASSY .POINTEAU	4					
30	93210–04228	.O-RING .JOINT TORIQUE	4					
31	67F–14378–00	.BODY, STARTER .CORPS, STARTER	2					#1,3 #1,3
32	67F–14380–01	.PRIME STARTER ASSY .STARTER AUTOMATIQUE	2					#1,3 #1,3
33	67F–14178–00	.PLATE, STARTER LEVER .PLAQUE, LEVIER DE STARTER	2					#1,3 #1,3
34	67F–14592–00	.SCREW .VIS	6					#1,3 #1,3
35	67F–14398–00	.O-RING .JOINT TORIQUE	2					#1,3 #1,3
36	67F–14565–00	.SCREW .VIS	2					#1,3 #1,3
37	67F–14398–10	.O-RING .JOINT TORIQUE	2					#1,3 #1,3
38	67F–14398–20	.O-RING .JOINT TORIQUE	2					#1,3 #1,3
39	67F–14371–01	.ELEMENT, FILTER .ELEMENT, FILTRE	4					
40	67F–14398–30	.O-RING .JOINT TORIQUE	2					#1,3 #1,3
41	63V–14523–00	SCREW, STOP VIS, BUTEE	1					#4 #4
42	90501–10326	SPRING, COMPRESSION RESSORT, COMPRESSION	1					#4 #4
43	67F–14998–00	BUSH BAGUE	1					#4 #4
44	67F–14369–00	DIAPHRAGM ASSY 2 DIAPHRAGME 2	1					#4 #4
45	67F–14325–00	SCREW, PAN HEAD VIS TETE CONIQUE	2					#4 #4

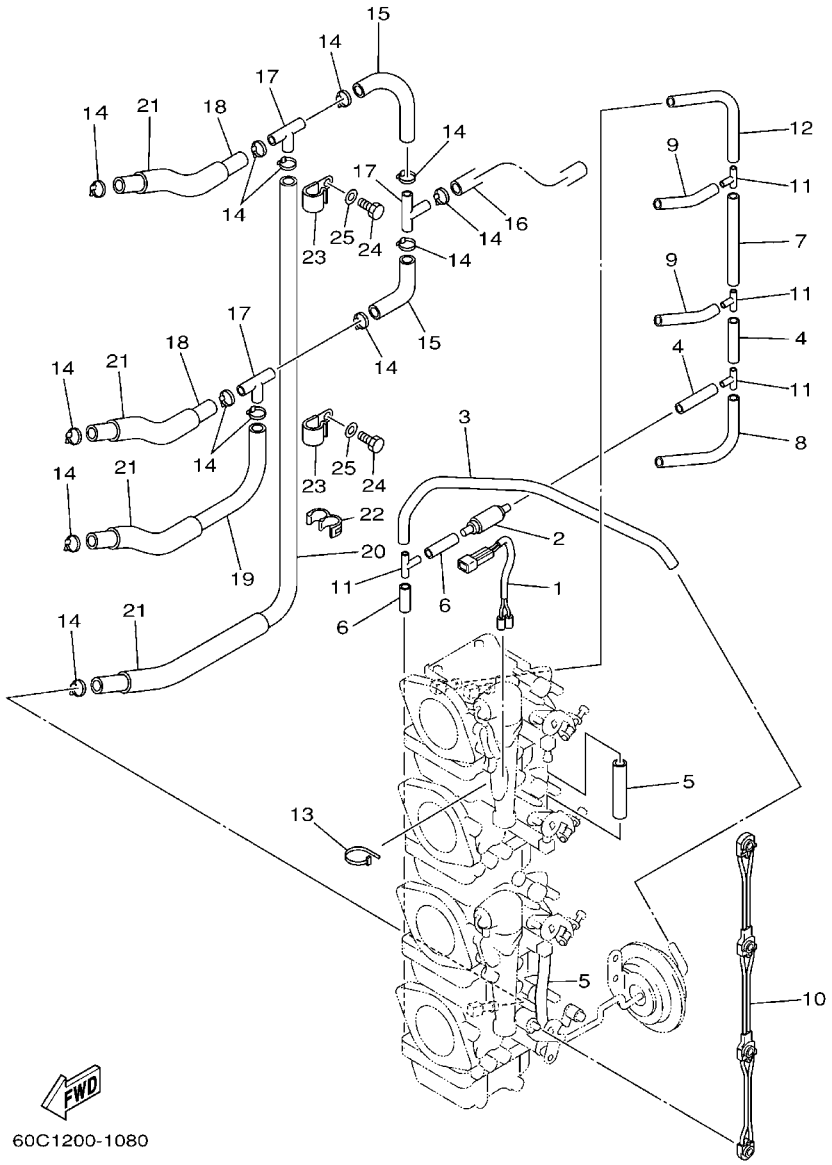

FIG. 8 CARBURETOR 2 CARBURATEUR 2

REF. NO.	PART NO. N° PIECES	DESCRIPTION DESCRIPTION	60CC					REMARKS REMARQUES
1	67F–1412A–00	WIRE HARNESS ASSY FAISCEAU DE FILS COMPLET	1					
2	67F–13183–00	VALVE, CHECK S'OUPAPE DE RATANUE	1					
3	67F–14349–00	PIPE DURITE	1					
4	67F–14349–10	PIPE DURITE	2					
5	67F–14349–20	PIPE DURITE	2					
6	67F–14349–30	PIPE DURITE	2					
7	67F–14349–40	PIPE DURITE	1					
8	67F–14349–50	PIPE DURITE	1					
9	67F–14349–60	PIPE DURITE	2					
10	67F–14585–00	ROD, CHOKE TRINGLE, STARTER	1					
11	67F–14189–00	CONNECTOR CONNECTEUR	4					
12	67F–14349–70	PIPE DURITE	1					
13	90465–11M59	CLAMP BRIDE	1					
14	68F–24356–00	CLIP, PIPE 1 JONC, TUBE 1	13					
15	60C–14294–00	HOSE DURITE	2					
16	60C–14298–00	PIPE DURITE	1					
17	688–24378–00	PIPE, JOINT 3 DURITE RACCORDEMENT 3	3					
18	90445–10M16	HOSE (L120) DURITE (L120)	2					
19	90445–10MG6	HOSE (L180) DURITE (L180)	1					
20	90445–10MG7	HOSE (L350) DURITE (L350)	1					
21	90445–16M07	HOSE (L80) DURITE (L80)	4					
22	90464–10M57	CLAMP BRIDE	1					
23	90465–08M83	CLAMP BRIDE	2					
24	97095–06012	BOLT BOULON	2					
25	92995–06600	WASHER RONDELLE	2					

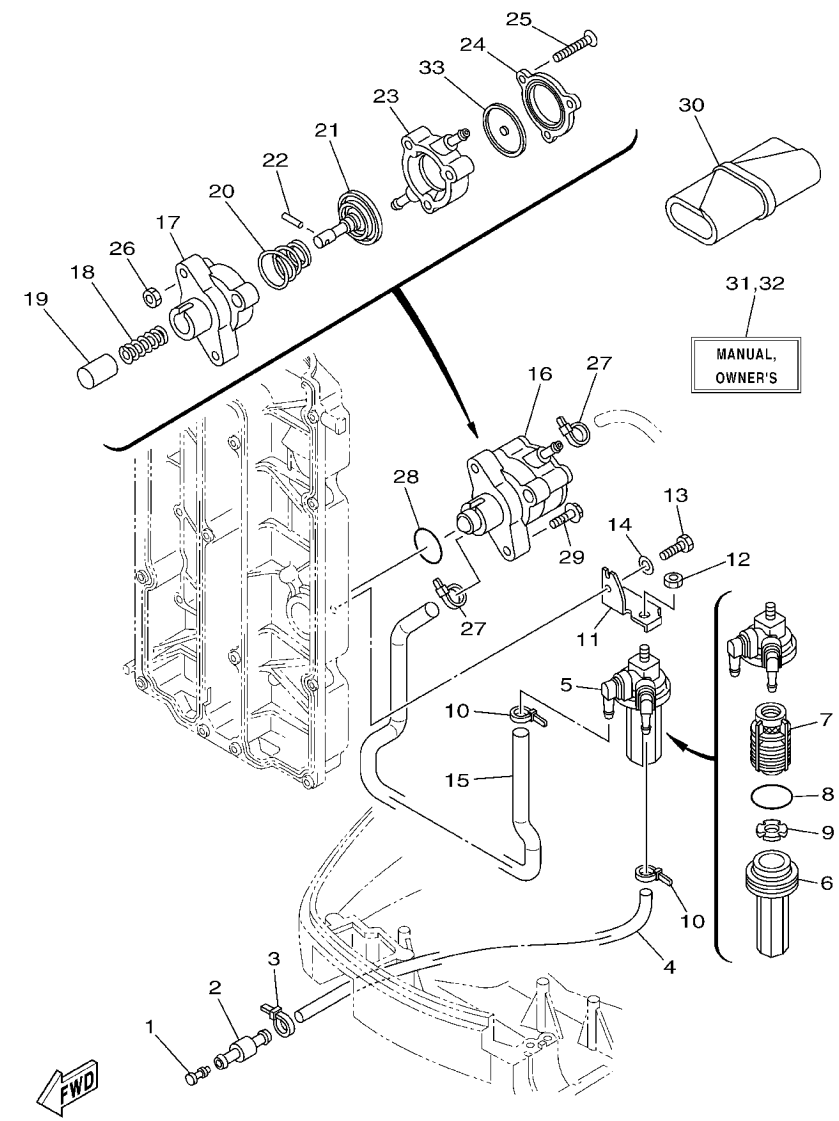

60CC300L0901

FIG. 9 FUEL CARBURANT

REF. NO.	PART NO. N° PIECES	DESCRIPTION DESCRIPTION	60CC					REMARKS REMARQUES
1	689–85547–00	DAMPER AMORTISSEUR	1					
2	6R3–24377–00	PIPE, JOINT 2 DURITE RACCORDEMENT 2	1					
3	90465–11M10	CLAMP BRIDE	1					
4	90445–13M27	HOSE (L950) DURITE (L950)	1					
5	60C–24560–01	FILTER ASSY ENS FILTRE	1					
6	68V–24521–01	.CUP, FILTER .CUVETTE, FILTRE	1					
7	61N–24563–10	.ELEMENT, FILTER .ELEMENT, FILTRE	1					
8	93210–32738	.O-RING .JOINT TORIQUE	1					
9	68V–24469–01	.FLOAT, WATER LEVEL .FLOTTEUR	1					
10	90465–11M10	CLAMP BRIDE	2					
11	60C–24566–00	BRACKET, FILTER SUPPORT, FILTRE	1					
12	95380–08600	NUT ECROU	1					
13	97095–06016	BOLT BOULON	1					
14	92995–06600	WASHER RONDELLE	1					
15	6D8–24311–00	PIPE, FUEL 1 DURITE A ESSENCE	1					
16	6D8–24410–10	FUEL PUMP ASSY POMPE A ESSENCE	1					
17	68V–24412–00	.BODY 1 .CORPS 1	1					
18	68V–24454–00	.SPRING .RESSORT	1					
19	63P–13131–00	.PLUNGER .PLONGEUR	1					
20	68V–24423–00	.SPRING, DIAPHRAGM .RESSORT, DIAPHRAGME	1					
21	68V–24411–00	.DIAPHRAGM .DIAPHRAGME	1					
22	68V–24374–00	.PIN .GOUPILLE	1					
23	68V–24413–10	.BODY 2 .CORPS 2	1					
24	6D8–24414–00	.BODY 3 .CORPS 3	1					
25	68V–24444–00	.SCREW .VIS	3					
26	68V–24149–00	.NUT .ECROU	3					
27	90465–11M10	CLAMP BRIDE	2					

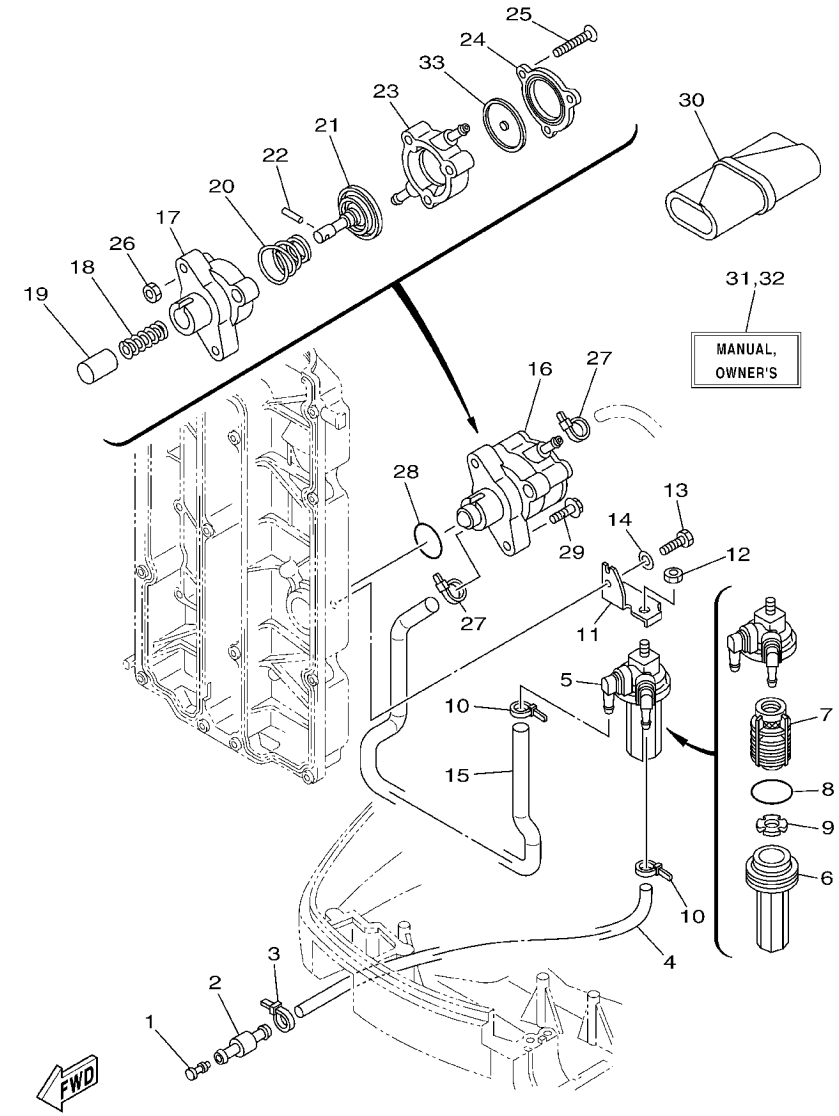

FIG. 9 FUEL CARBURANT

REF. NO.	PART NO. N° PIECES	DESCRIPTION DESCRIPTION	60CC					REMARKS REMARQUES
28	93210–30682	O-RING JOINT TORIQUE	1					
29	90119–06M83	BOLT, WITH WASHER BOULON, AVEC RONDELLE	2					
30	67F–28100–01	TOOL KIT TROUSSE A OUTILS	1					AP AP
31	67F–28199–7F–E0	MANUAL,OWNER'S MANUEL D'UTILISATION	1					UR (E) UR (E)
	67F–28199–7F–F0	MANUAL,OWNER'S MANUEL D'UTILISATION	1					UR (F) UR (F)
	67F–28199–7F–S0	MANUAL,OWNER'S MANUEL D'UTILISATION	1					UR (ES) UR (ES)
	67F–28199–7F–G0	MANUAL,OWNER'S MANUEL D'UTILISATION	1					UR (D) UR (D)
	67F–28199–7F–D0	MANUAL,OWNER'S MANUEL D'UTILISATION	1					UR (NL) UR (NL)
	67F–28199–7F–H0	MANUAL,OWNER'S MANUEL D'UTILISATION	1					UR (I) UR (I)
32	67F–28199–8H–K0	MANUAL,OWNER'S MANUEL D'UTILISATION	1					UR (DK) UR (DK)
	67F–28199–8H–R0	MANUAL,OWNER'S MANUEL D'UTILISATION	1					UR (GR) UR (GR)
	67F–28199–8H–P0	MANUAL,OWNER'S MANUEL D'UTILISATION	1					UR (P) UR (P)
	67F–28199–8H–N0	MANUAL,OWNER'S MANUEL D'UTILISATION	1					UR (N) UR (N)
	67F–28199–8H–M0	MANUAL,OWNER'S MANUEL D'UTILISATION	1					UR (S) UR (S)
	67F–28199–8H–L0	MANUAL,OWNER'S MANUEL D'UTILISATION	1					UR (SF) UR (SF)
33	68V–24471–10	.DIAPHRAGM .DIAPHRAGME	1					

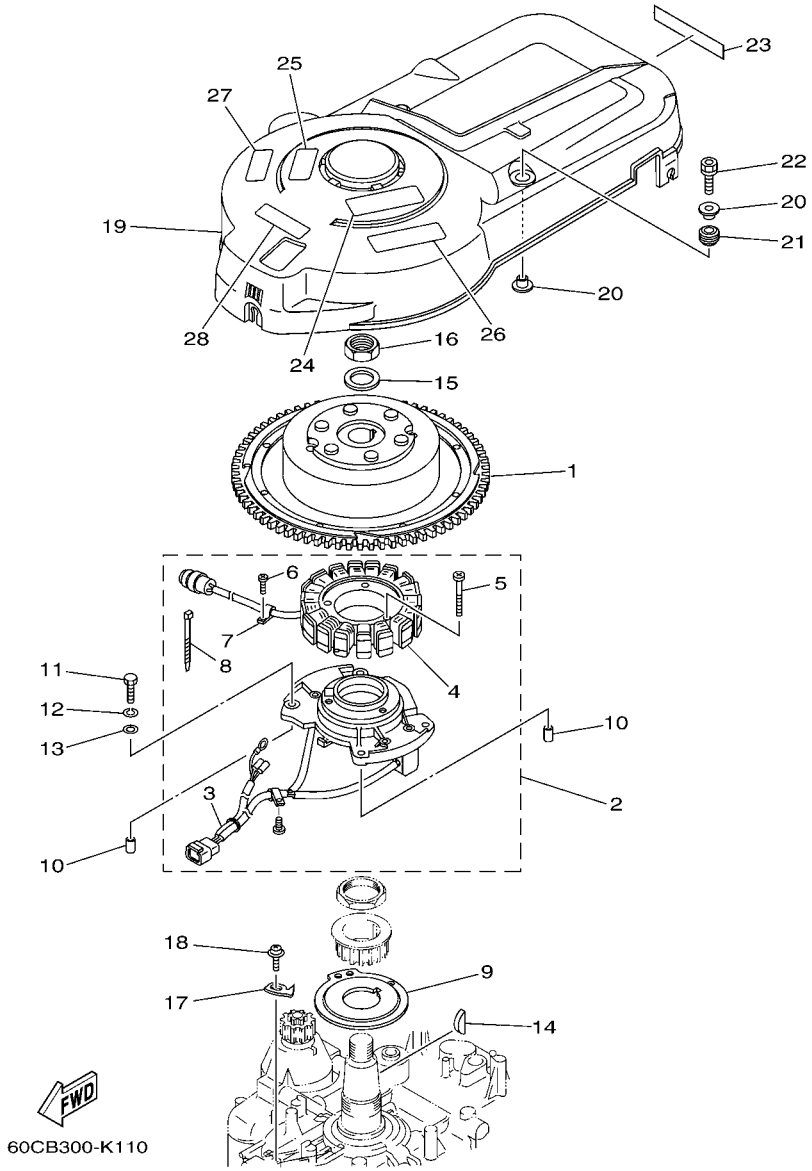

FIG. 10 GENERATOR GENERATRICE

REF. NO.	PART NO. N° PIECES	DESCRIPTION DESCRIPTION	60CC					REMARKS REMARQUES
1	67F–85550–00	ROTOR ASSY ROTOR CPLT	1					
2	67F–85560–01	BASE ASSY ENS. FLASQUE	1					
3	67F–85580–00	.COIL, PULSER .BOBINE, PULSEUR	1					
4	67F–85510–01	.STATOR ASSY .STATOR CPLT	1					
5	63D–81345–20	.SCREW, WITH WASHER (M6X30) .VIS, AVEC RONDELLE (M6X30)	3					
6	97607–04110	.SCREW,WITH WASHER .VIS HEXAGONAL	1					
7	445–81328–20	.CLAMP .COLLIER	1					
8	66T–81328–00	.CLAMP .COLLIER	1					
9	67F–81673–00	ROTOR ROTOR	1					
10	99530–08012	PIN, DOWEL GOUJON, D'ASSEMBLAGE	2					
11	97095–06030	BOLT BOULON	4					
12	92995–06100	WASHER, SPRING RONDELLE, GROWER	4					
13	92995–06600	WASHER RONDELLE	4					
14	90280–05015	KEY, WOODRUFF CLAVETTE, DEMI-LUNE	1					
15	90201–24014	WASHER, PLATE RONDELLE, PLATE	1					
16	90179–24002	NUT ECROU	1					
17	6D8–81332–00	PLATE, TIMING PLATEAU, ALLUMAGE	1					
18	97985–06210	SCREW, WITH WASHER VIS, AVEC RONDELLE	1					
19	67F–81337–01	COVER, FLYWHEEL COUVERCLE, VOLANT	1					
20	90387–06M71	COLLAR COLLERETTE	4					
21	90480–15M31	GROMMET PASSE-FIL	2					
22	90119–06M92	BOLT, WITH WASHER BOULON, AVEC RONDELLE	2					
23	68V–13437–62	MARK, CAUTION MAKER	1					
24	6AH–81995–40	LABEL, WARNING ETIQUETTE, AVERTISSEMENT	1					
25	6AH–81995–50	LABEL, WARNING ETIQUETTE, AVERTISSEMENT	1					
26	6AH–81994–40	LABEL, SAFETY ETIQUETTE, SECURITE	1					
27	6AH–81994–50	LABEL, SAFETY ETIQUETTE, SECURITE	1					

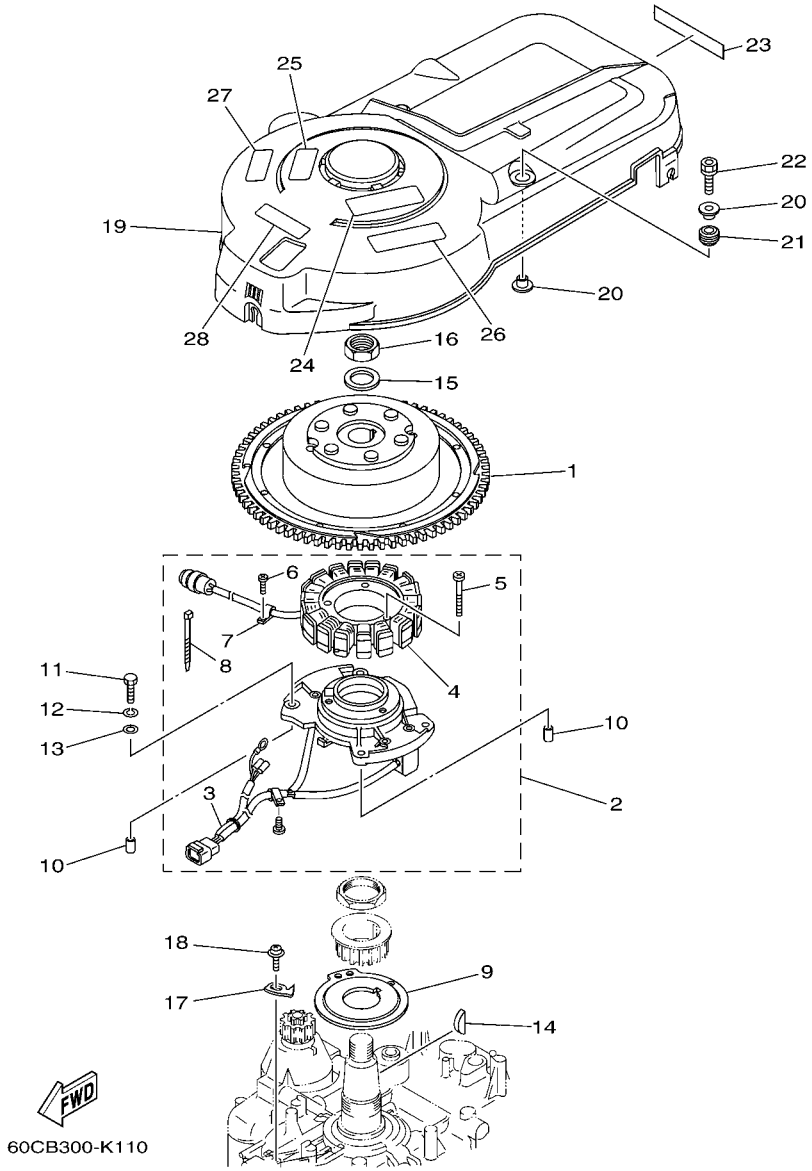

FIG. 10 GENERATOR GENERATRICE

REF. NO.	PART NO. N° PIECES	DESCRIPTION DESCRIPTION	60CC					REMARKS REMARQUES
28	6AG–81996–00	MARK MARQUE	1					

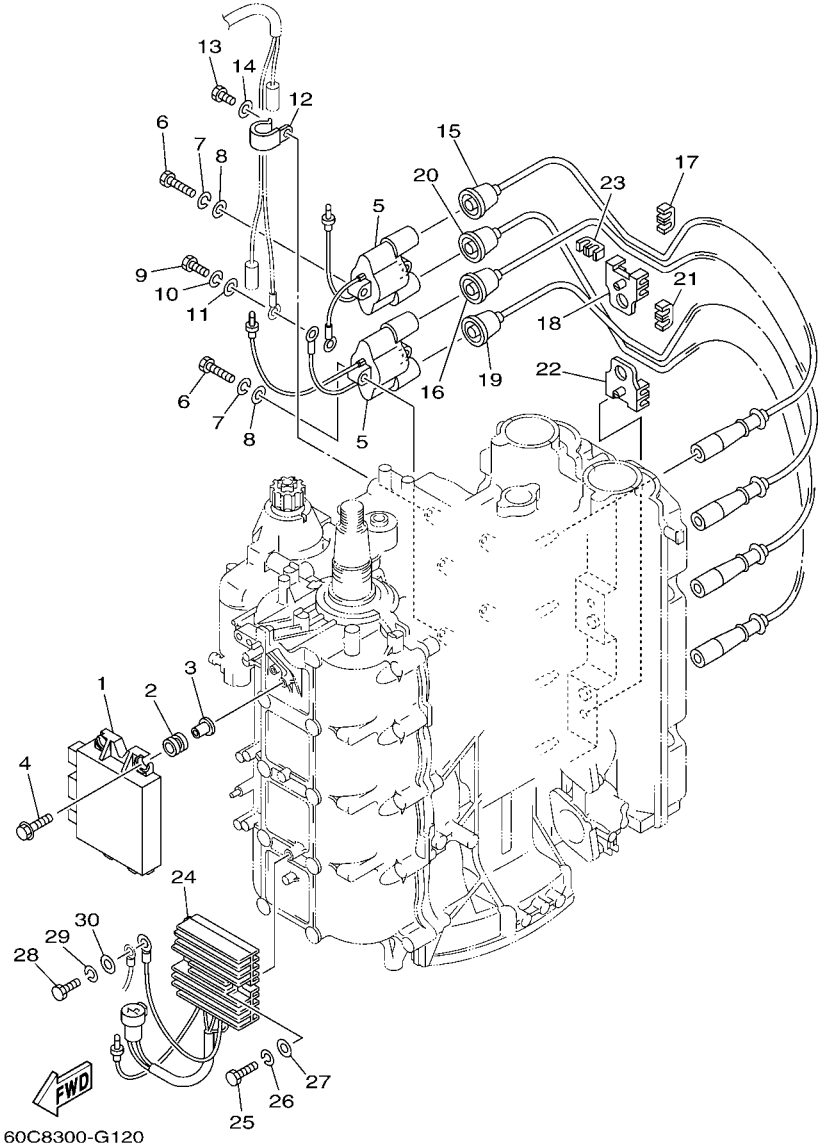

FIG. 11 ELECTRICAL 1 PARTIE ELECTRIQUE 1

REF. NO.	PART NO. N° PIECES	DESCRIPTION DESCRIPTION	60CC					REMARKS REMARQUES
1	67F–85540–03	C.D.I. UNIT ASSY BLOC C.D.I.	1					
2	68V–82317–00	DAMPER, IGNITION COIL AMORTISSEUR, BOBINE D'ALLUM	4					
3	90387–06119	COLLAR COLLERETTE	4					
4	90119–06M59	BOLT, WITH WASHER BOULON, AVEC RONDELLE	4					
5	67F–85570–00	IGNITION COIL ASSY BOBINE D'ALLUMAGE (ENS.)	2					
6	97095–06030	BOLT BOULON	4					
7	92995–06100	WASHER, SPRING RONDELLE, GROWER	4					
8	92995–06600	WASHER RONDELLE	4					
9	97095–06020	BOLT BOULON	1					
10	92995–06100	WASHER, SPRING RONDELLE, GROWER	1					
11	92995–06600	WASHER RONDELLE	1					
12	90465–06M86	CLAMP BRIDE	1					
13	97095–06012	BOLT BOULON	1					
14	92995–06600	WASHER RONDELLE	1					
15	67F–82341–00	CORD, HIGH TENSION 1 CORDON, HAUTE-TENSION 1	1					#1 #1
16	67F–82342–00	CORD, HIGH TENSION 2 CORDON, HAUTE-TENSION 2	1					#2 #2
17	67F–82361–00	CLAMP, CORD COLLIER, CORDON	1					
18	67F–82362–00	CLAMP, CORD 2 COLLIER, CABLE 2	1					
19	67F–82343–00	CORD, HIGH TENSION 3 CORDON, HAUTE-TENSION 3	1					#3 #3
20	67F–82344–00	CORD, HIGH TENSION 4 CORDON, HAUTE TENSION 4	1					#4 #4
21	67F–82361–00	CLAMP, CORD COLLIER, CORDON	1					
22	67F–82362–00	CLAMP, CORD 2 COLLIER, CABLE 2	1					
23	67F–82361–00	CLAMP, CORD COLLIER, CORDON	1					
24	67F–81960–12	RECTIFIER & REGULATOR ASSY REDRESSEUR REGULATEUR CPLT	1					
25	97095–06025	BOLT BOULON	2					
26	92995–06100	WASHER, SPRING RONDELLE, GROWER	2					
27	92995–06600	WASHER RONDELLE	2					

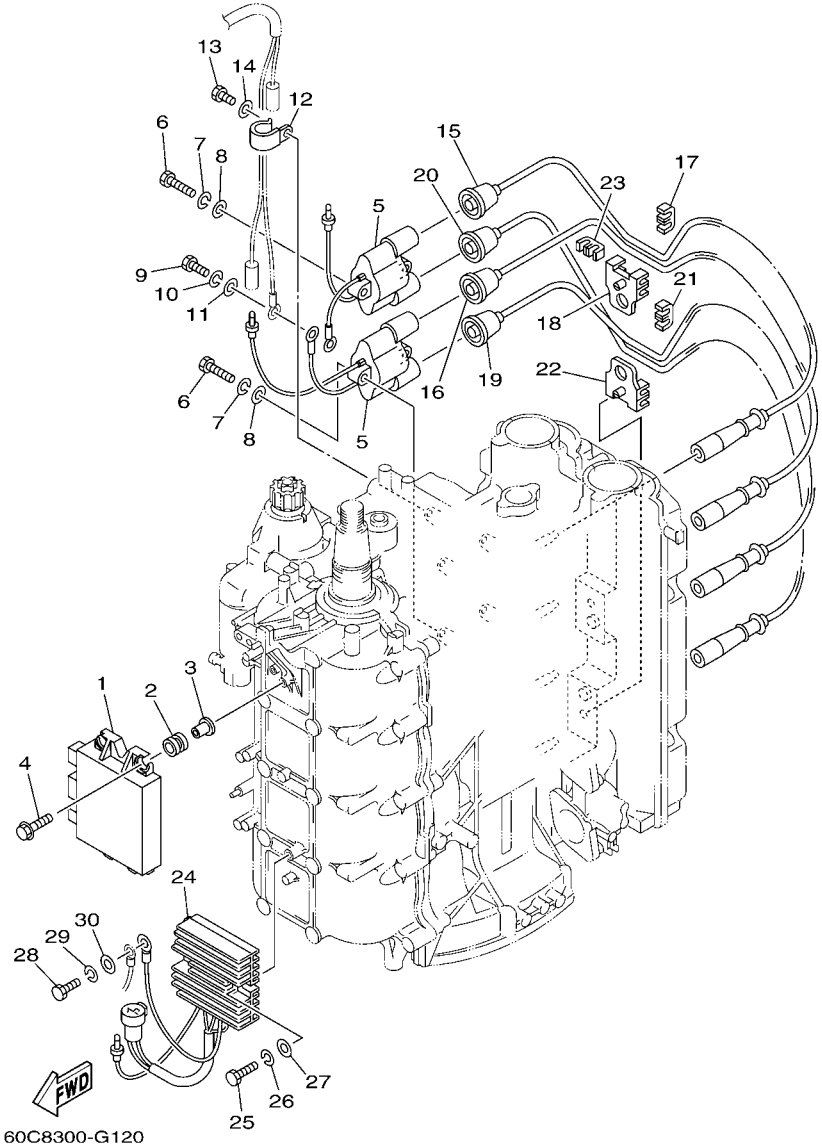

FIG. 11 ELECTRICAL 1 — PARTIE ELECTRIQUE 1

REF. NO.	PART NO. N° PIECES	DESCRIPTION DESCRIPTION	60CC					REMARKS REMARQUES
28	97095–06016	BOLT BOULON	1					
29	92995–06100	WASHER, SPRING RONDELLE, GROWER	1					
30	92995–06600	WASHER RONDELLE	1					

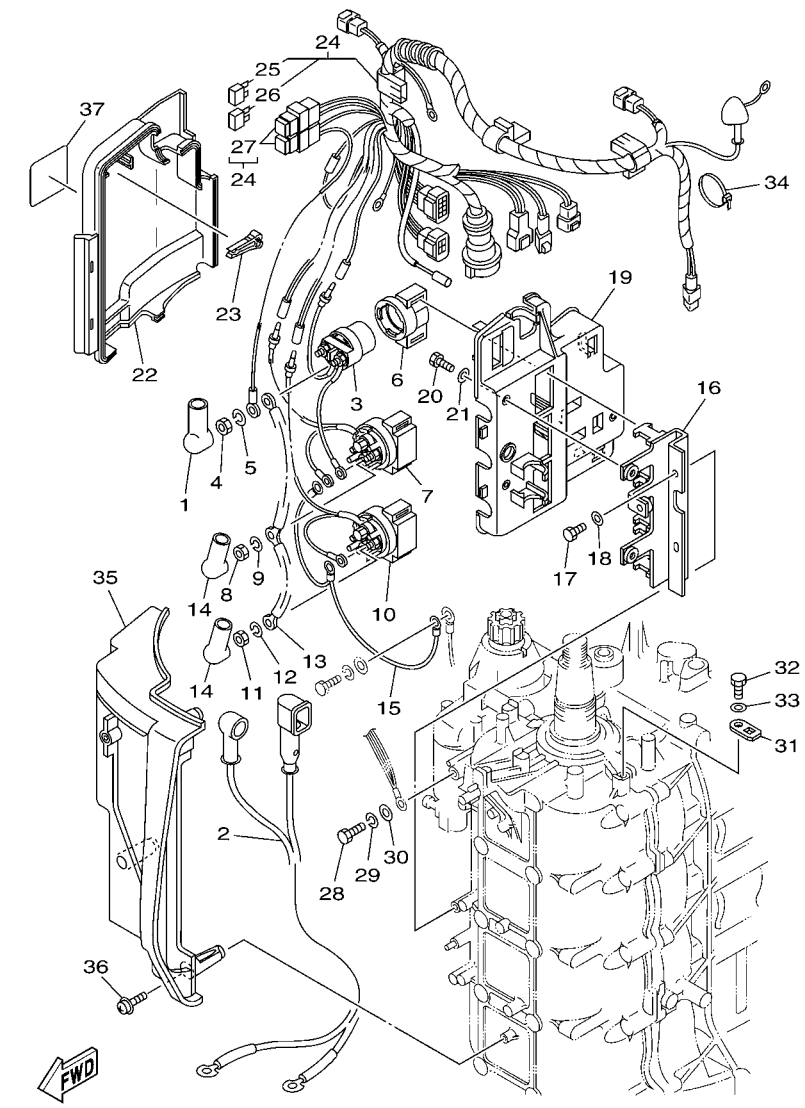

60CB300-K130

FIG. 12 ELECTRICAL 2 — PARTIE ELECTRIQUE 2

REF. NO.	PART NO. N° PIECES	DESCRIPTION DESCRIPTION	60CC					REMARKS REMARQUES
1	682–82119–01	COVER, LEAD WIRE GARNITURE, FIL	2					
2	67F–82105–00	WIRE HARNESS FAISCEAU DE FILS	1					
3	6G1–8194A–10	RELAY RELAIS	1					
4	90170–06M30	NUT ECROU	2					
5	90204–06M00	WASHER, SPRING RONDELLE, GROWER	2					
6	6G1–81952–00	HOLDER, RELAY SUPPORT, RELAIS	1					
7	6E5–8195B–01	RELAY ASSY RELAIS COMPLET	1					
8	90170–06M30	NUT ECROU	3					
9	90204–06M00	WASHER, SPRING RONDELLE, GROWER	3					
10	6E5–8195C–01	RELAY ASSY RELAIS COMPLET	1					
11	90170–06M30	NUT ECROU	3					
12	90204–06M00	WASHER, SPRING RONDELLE, GROWER	3					
13	66T–87149–00	CONNECTOR RACCORD	1					
14	6G5–82119–00	COVER, LEAD WIRE GARNITURE, FIL	2					
15	67F–82116–00	WIRE, MINUS LEAD FIL, NEGATIF	1					
16	67F–81953–00	STAY, RELAY SUPPORT, RELAIS	1					
17	97095–06016	BOLT BOULON	2					
18	92995–06600	WASHER RONDELLE	2					
19	67F–81948–01	BRACKET SUPPORT	1					
20	97095–06016	BOLT BOULON	3					
21	92995–06600	WASHER RONDELLE	3					
22	67F–81942–00	COVER COUVERCLE	1					
23	67F–2812A–00	PULLER, FUSE TENDEUR, FUSIBLE	1					
24	60C–82590–10	WIRE HARNESS ASSY FAISCEAU DE FILS COMPLET	1					
25	67F–82151–00	.FUSE (20A) .FUSIBLE (20A)	2					
26	67F–82151–10	.FUSE (30A) .FUSIBLE (30A)	2					
27	67F–8215B–00	.CAP (BLACK) .BOUCHON (NOIR)	2					

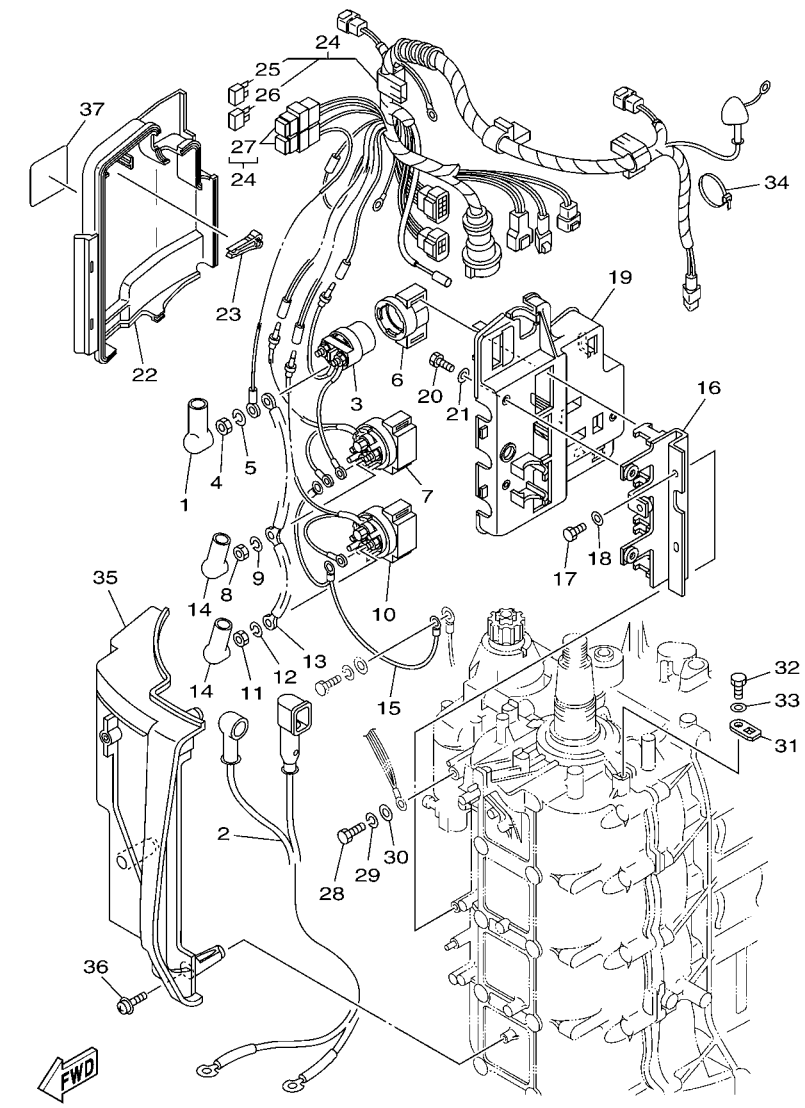

60CB300-K130

FIG. 12 ELECTRICAL 2 — PARTIE ELECTRIQUE 2

REF. NO.	PART NO. N° PIECES	DESCRIPTION DESCRIPTION	60CC					REMARKS REMARQUES
28	97095–06016	BOLT BOULON	1					
29	92995–06100	WASHER, SPRING RONDELLE, GROWER	1					
30	92995–06600	WASHER RONDELLE	1					
31	67F–82588–00	PLATE PLAQUE	3					
32	97095–06012	BOLT BOULON	3					
33	92995–06600	WASHER RONDELLE	3					
34	90465–13M11	CLAMP BRIDE	1					
35	67F–81916–02	COVER, TERMINAL COUVERCLE, BORNE	1					
36	90159–06M29	SCREW, WITH WASHER VIS, AVEC RONDELLE	3					
37	67F–83626–00	MARK 6 MARK 6	1					

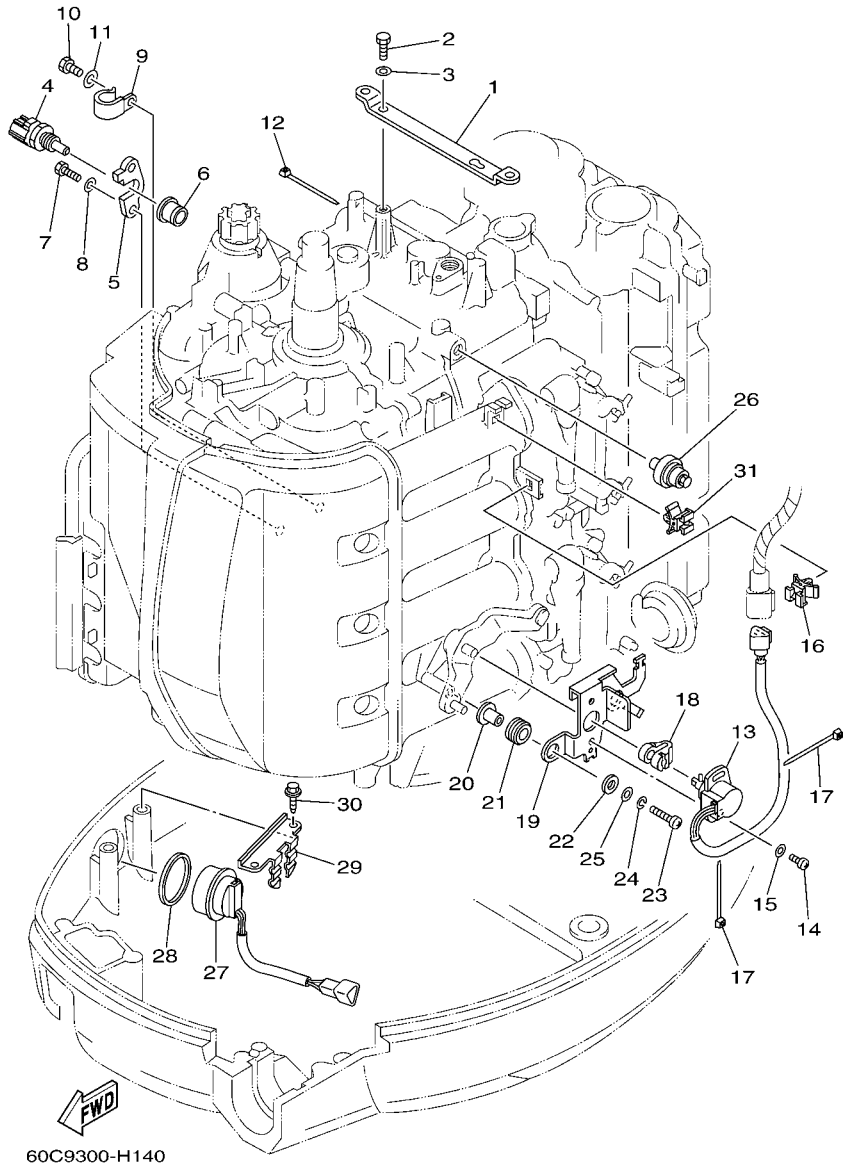

FIG. 13 ELECTRICAL 3 — PARTIE ELECTRIQUE 3

REF. NO.	PART NO. N° PIECES	DESCRIPTION DESCRIPTION	60CC					REMARKS REMARQUES
1	67F–8132G–01	PLATE PLAQUE	1					
2	97095–06016	BOLT BOULON	2					
3	92995–06600	WASHER RONDELLE	2					
4	67F–85790–00	THERMOSENSOR ASSY SENSITOMETRE	1					
5	67F–85757–00	RETAINER ARRETOIR	1					
6	68V–85753–00	GASKET, SENDER UNIT JOINT, DE PERCEPTION	1					
7	97095–06016	BOLT BOULON	2					
8	92995–06600	WASHER RONDELLE	2					
9	90465–06M86	CLAMP BRIDE	1					
10	97095–06012	BOLT BOULON	1					
11	92995–06600	WASHER RONDELLE	1					
12	90465–11M10	CLAMP BRIDE	1					
13	61A–85885–00	THROTTLE SENSOR ASSY SENSITOMETRE (ENS.)	1					
14	97885–05010	SCREW, PAN HEAD VIS, A ENCOCHE	2					
15	92995–05600	WASHER RONDELLE	2					
16	90464–09M47	CLAMP BRIDE	1					
17	90465–11M10	CLAMP BRIDE	2					
18	6K7–14573–00	LEVER LEVIER	1					
19	67F–83635–00	BRACKET SUPPORT	1					
20	90387–05M00	COLLAR COLLERETTE	2					
21	90480–10M23	GROMMET PASSE-FIL	2					
22	90201–05M03	WASHER, PLATE RONDELLE, PLATE	2					
23	97885–05025	SCREW, PAN HEAD VIS, A ENCOCHE	2					
24	92995–05100	WASHER RONDELLE	2					
25	92995–05600	WASHER RONDELLE	2					
26	68V–82504–00	OIL PRESSURE SWITCH ASSY CONTACTEUR DE PRESSION D'HUILE	1					
27	63D–82563–10	TRIM & TILT SWITCH ASSY INCLINER ET PARER COMMUTATEUR	1					

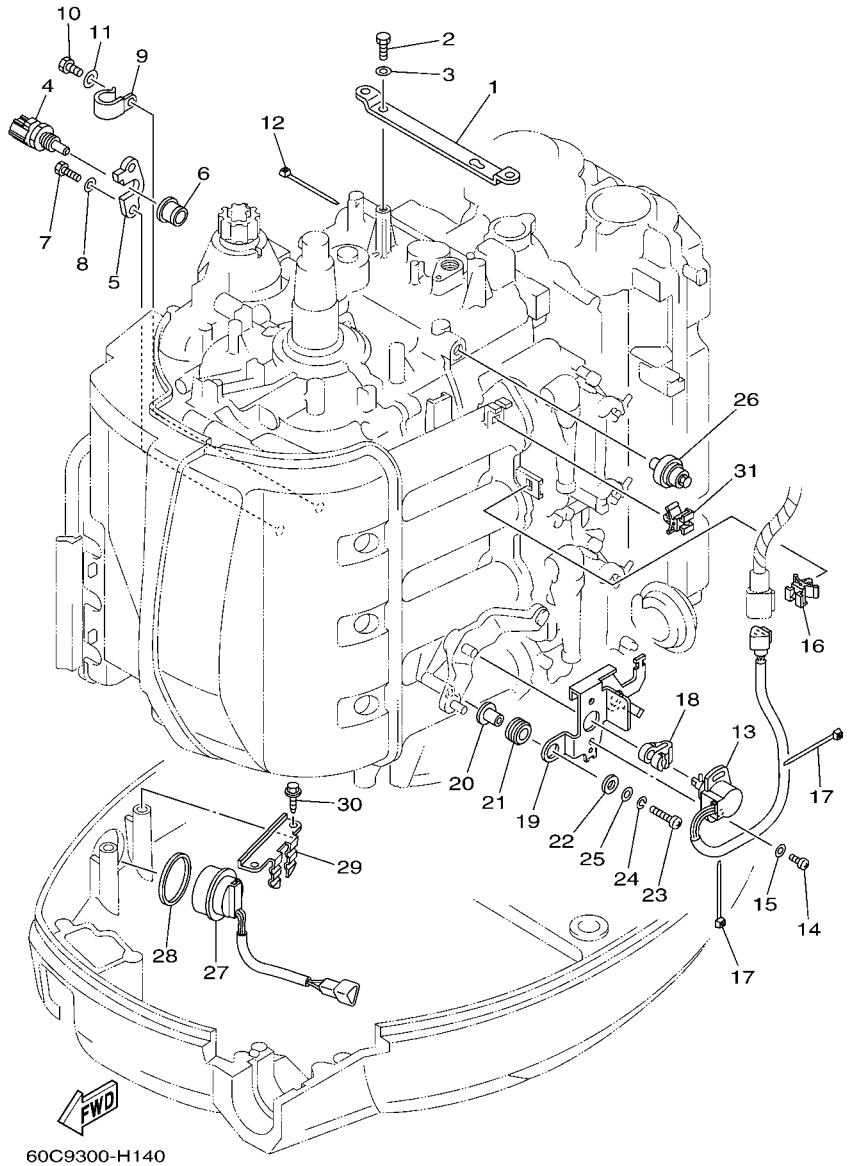

FIG. 13 ELECTRICAL 3 — PARTIE ELECTRIQUE 3

REF. NO.	PART NO. N° PIECES	DESCRIPTION DESCRIPTION	60CC					REMARKS REMARQUES
28	6E5–82587–00	GASKET JOINT	1					
29	67F–83614–00	BRACKET SUPPORT	1					
30	90109–06M86	BOLT BOULON	2					
31	90464–09M47	CLAMP BRIDE	1					

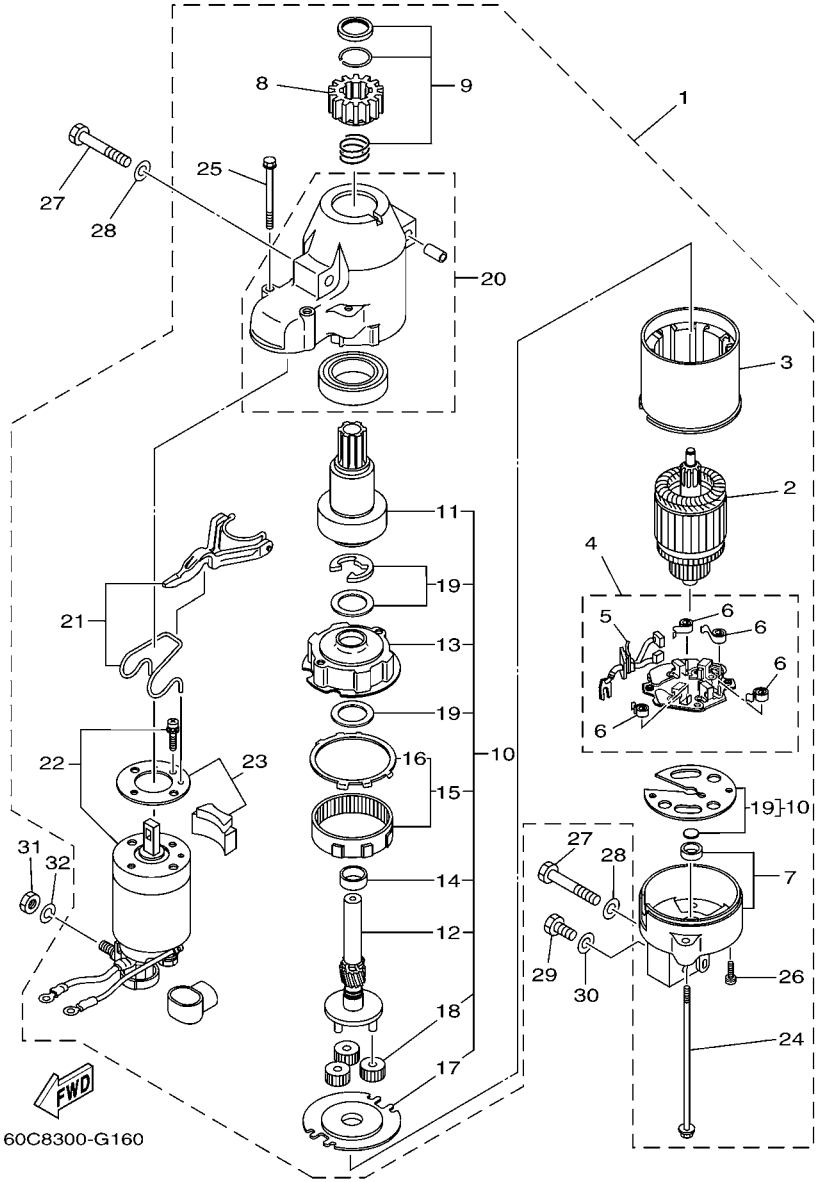

FIG. 14 STARTING MOTOR DEMARREUR ELECTRIQUE

REF. NO.	PART NO. N° PIECES	DESCRIPTION DESCRIPTION	60CC					REMARKS REMARQUES
1	67F–81800–02	STARTING MOTOR ASSY DEMARREUR ELECTRIQUE COMPLET	1					
2	67F–81850–00	.ARMATURE ASSY .INDUIT	1					
3	67F–81810–00	.STATOR ASSY .STATOR COMPLET	1					
4	68F–81840–00	.BRUSH HOLDER ASSY .SUPPORT DE CHARBON	1					
5	67F–81801–00	..BRUSH SET ..CHARBON	1					
6	67F–81813–00	..SPRING, BRUSH ..RESSORT, DE CHARBON	4					
7	67F–81820–00	.REAR BRACKET ASSY .SUPPORT ARRIERE COMPLET	1					
8	67F–81808–00	.PINION ASSY .PIGNON	1					
9	67F–81857–00	.PINION STOPPER SET .BUTEE PIGNON	1					
10	67F–81807–00	.GEAR ASSY, STARTING MOTOR .PIGNON, DEMARREUR ELECTRIQUE	1					
11	67F–81832–00	..CLUTCH, OVER RUN ..EMBRAYAGE, ROUE LIBRE	1					
12	67F–81836–00	..SHAFT, PINION ..AXE, PIGNON	1					
13	67F–81821–00	..BRACKET, CENTER 1 ..SUPPORT, CENTRE 1	1					
14	67F–81841–00	..BEARING ..ROULEMENT	1					
15	67F–81891–00	..GEAR, RING ..ROUE DENTEE	1					
16	67F–8183R–00	...GASKET ...JOINT	1					
17	67F–81830–00	..BRACKET, CENTER 2 ..SUPPORT, CENTRE 2	1					
18	60V–8183T–00	..GEAR, IDLER ..PIGNON, INTERMEDIAIRE	3					
19	67F–81809–00	..WASHER KIT ..JEU DE RONDELLES	1					
20	67F–81842–00	.COVER .COUVERCLE	1					
21	67F–81839–00	.LEVER ASSY .LEVIER COMPLET	1					
22	67F–81941–01	.STARTER RELAY ASSY .LANCEUR RELAIS (ENS.)	1					
23	67F–81869–00	.COVER, DUST .COUVERCLE, POUSSIERE	1					
24	6K7–81826–11	.BOLT .BOULON	2					
25	67F–81828–00	.SCREW 2 .VIS 2	2					
26	67F–81846–00	.SCREW .VIS	2					
27	97013–08045	BOLT BOULON	3					

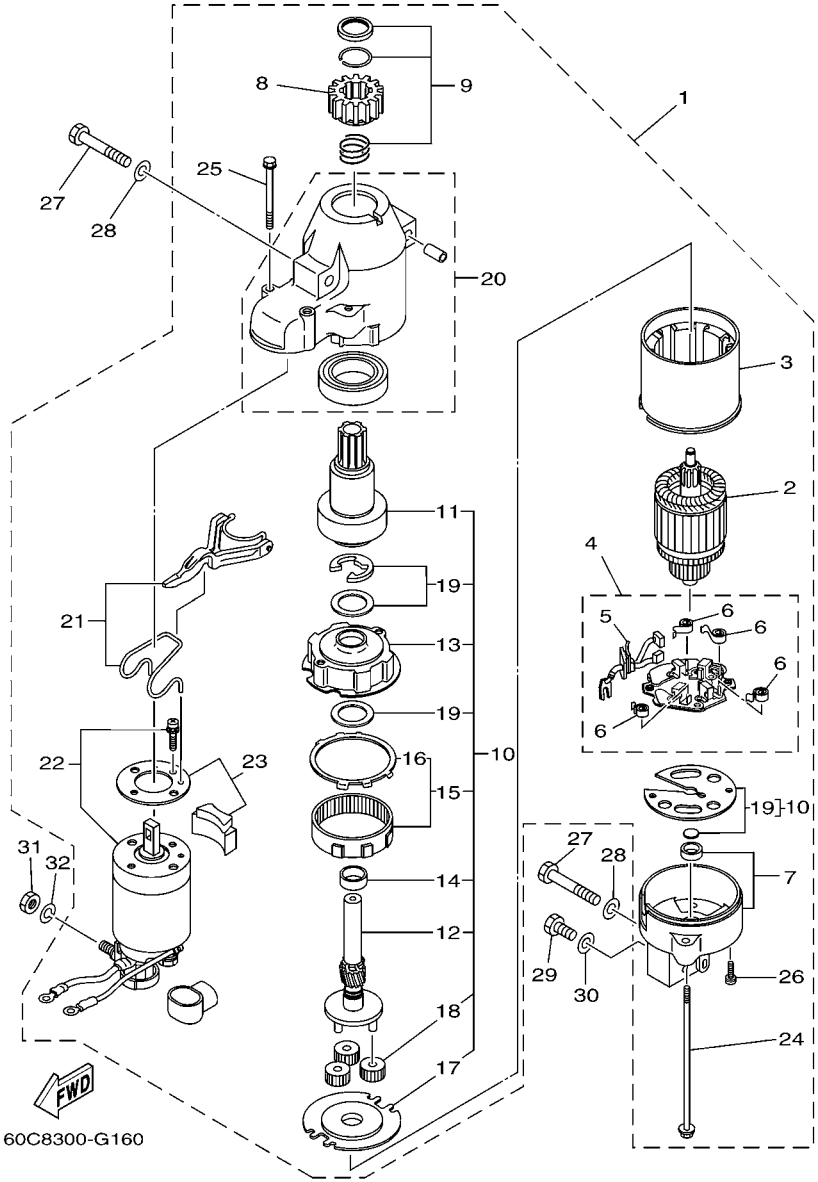

FIG. 14 STARTING MOTOR DEMARREUR ELECTRIQUE

REF. NO.	PART NO. N° PIECES	DESCRIPTION DESCRIPTION	60CC					REMARKS REMARQUES
28	92903–08600	WASHER, PLATE RONDELLE, PLATE	3					
29	97013–08016	BOLT BOULON	1					
30	92903–08600	WASHER, PLATE RONDELLE, PLATE	1					
31	95333–08600	NUT ECROU	1					
32	92903–08100	WASHER, SPRING RONDELLE, GROWER	1					

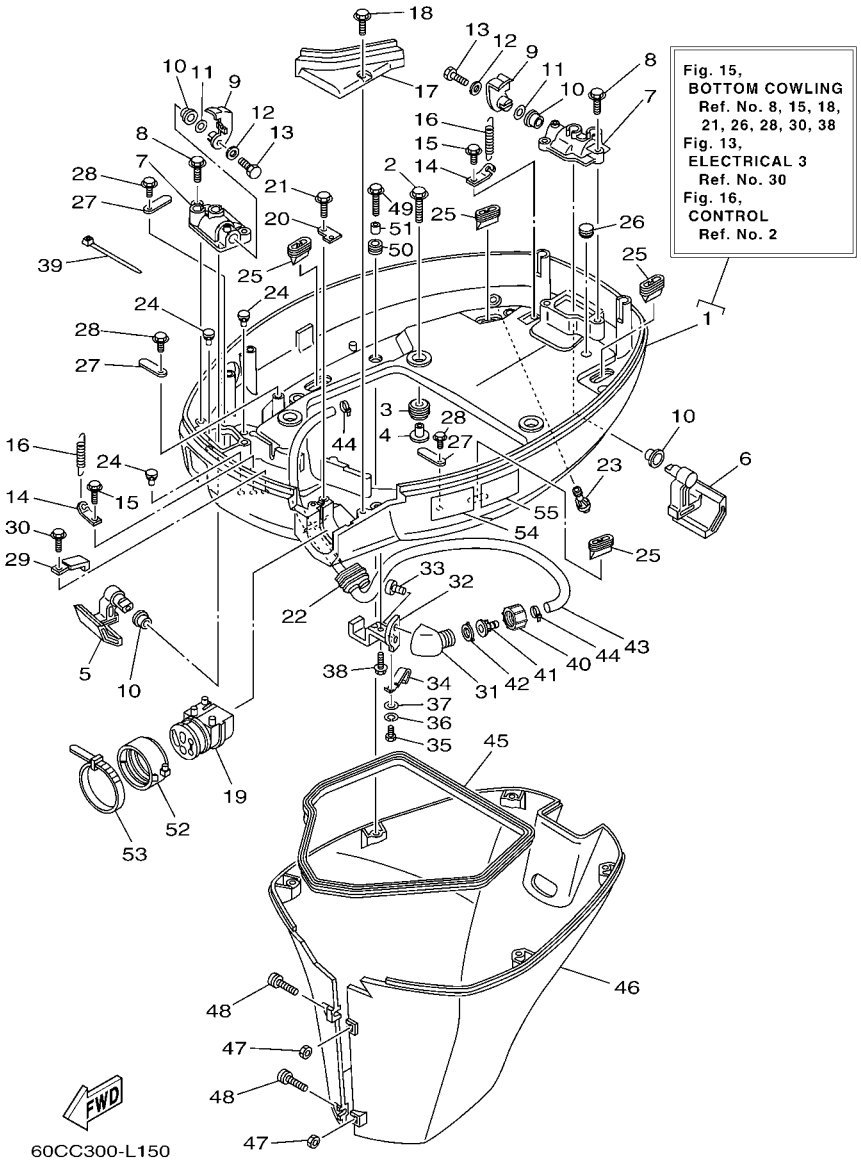

FIG. 15 BOTTOM COWLING CAPOT INFERIEUR

REF. NO.	PART NO. N° PIECES	DESCRIPTION DESCRIPTION	60CC					REMARKS REMARQUES
1	67F–42710–03–8D	BOTTOM COWLING ASSY ENS. EMBASE	1					
2	90119–08M22	BOLT, WITH WASHER BOULON, AVEC RONDELLE	4					
3	90480–22M15	GROMMET PASSE-FIL	4					
4	90387–08M37	COLLAR COLLERETTE	4					
5	67F–42815–00–8D	LEVER, CLAMP LEVIER, PRESSE	1					
6	67F–42816–00–8D	LEVER, CLAMP LEVIER, PRESSE	1					
7	67F–42828–00–8D	PLATE, CLAMP PLAQUE, PRESSE	2					
8	90109–06M82	BOLT BOULON	4					
9	68V–42818–01	LEVER, CLAMP LEVIER, PRESSE	2					
10	90386–15M73	BUSH DOUILLE	4					
11	90206–15M18	WASHER, WAVE RONDELLE, ONDULEE	2					
12	90201–06068	WASHER, PLATE RONDELLE, PLATE	2					
13	97095–06016	BOLT BOULON	2					
14	64D–43144–00	HOOK, SPRING CROCHET	2					
15	90109–06M86	BOLT BOULON	2					
16	90506–16M34	SPRING, TENSION RESSORT, TENSION	2					
17	67F–42738–00–8D	PLATE, FITTING ETRIER	1					
18	90109–06M96	BOLT BOULON	2					
19	68V–42725–00	GROMMET PASSE-FIL	1					
20	67F–42756–01	STAY, CLAMP SUPPORT, COLLIER	1					
21	90109–06M86	BOLT BOULON	1					
22	6H1–42726–21	GROMMET PASSE-FIL	1					FLUSHING KIT FLUSHING KIT
23	6BL–44391–00	NIPPLE, HOSE RACCORD D'ESSENCE	1					
24	6H4–42748–00	GROMMET PASSE-FIL	3					
25	67F–42717–00	RUBBER, SEAL 2 JOINT EN CAOUTCHOUC 2	4					
26	90338–11007	PLUG PLOT	1					
27	6E5–82588–00	PLATE PLAQUE	3					

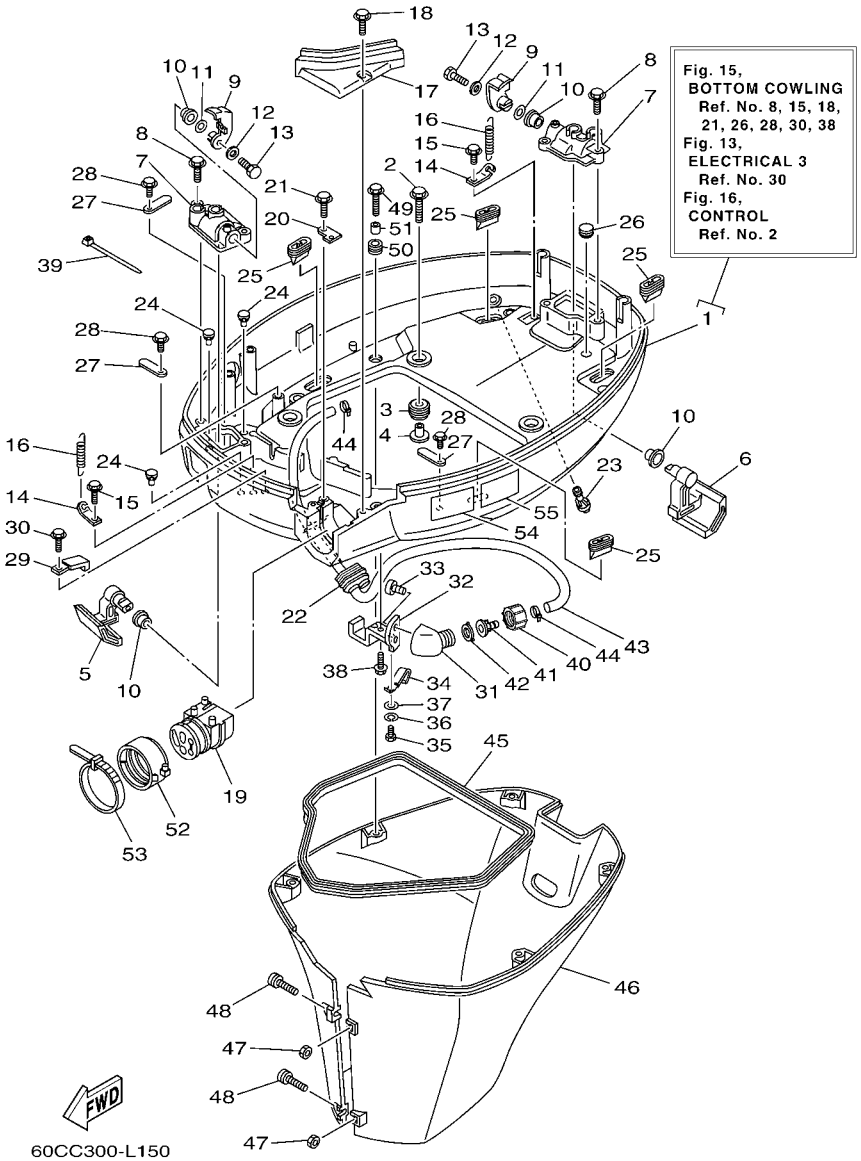

FIG. 15 BOTTOM COWLING CAPOT INFERIEUR

REF. NO.	PART NO. N° PIECES	DESCRIPTION DESCRIPTION	60CC					REMARKS REMARQUES
28	90109–06M81	BOLT BOULON	3					
29	90465–08M23	CLAMP BRIDE	1					
30	90109–06M86	BOLT BOULON	1					
31	68T–12572–00	ADAPTER ADAPTATEUR	1					FLUSHING KIT FLUSHING KIT
32	67F–12535–01	PLATE PLAQUE	1					FLUSHING KIT FLUSHING KIT
33	90167–06002	SCREW, TAPPING VIS, TETE FRAISEE	2					FLUSHING KIT FLUSHING KIT
34	90462–06018	CLAMP BRIDE	1					FLUSHING KIT FLUSHING KIT
35	97095–06008	BOLT BOULON	1					FLUSHING KIT FLUSHING KIT
36	92995–06100	WASHER, SPRING RONDELLE, GROWER	1					FLUSHING KIT FLUSHING KIT
37	92995–06200	WASHER RONDELLE	1					FLUSHING KIT FLUSHING KIT
38	90109–06M86	BOLT BOULON	1					FLUSHING KIT FLUSHING KIT
39	90465–13M18	CLAMP BRIDE	1					
40	6R3–12581–00	JOINT, HOSE 1 JOINT DE TUYAU	1					FLUSHING KIT FLUSHING KIT
41	6R3–12582–00	JOINT, HOSE 2 RACCORD DE TUYAU 1	1					FLUSHING KIT FLUSHING KIT
42	6R3–12583–00	GASKET, HOSE JOINT JOINT	1					FLUSHING KIT FLUSHING KIT
43	67F–24312–00	PIPE 2 DURITE 2	1					FLUSHING KIT FLUSHING KIT
44	90465–11M10	CLAMP BRIDE	2					FLUSHING KIT FLUSHING KIT
45	61A–42716–00	RUBBER, SEAL 1 JOINT EN CAOUTCHOUC 1	1					
46	67F–42741–01–8D	APRON CAPOT LATERAL	1					
47	95380–06600	NUT, HEXAGON ECROU	2					
48	90159–06M28	SCREW, WITH WASHER VIS, AVEC RONDELLE	2					
49	90109–06M80	BOLT BOULON	5					
50	90480–13M24	GROMMET PASSE-FIL	5					
51	90387–06M43	COLLAR COLLERETTE	5					
52	68F–42753–00	FASTNER ATTACHE	1					AP AP
53	90464–20258	CLAMP BRIDE	1					AP AP
54	6AH–42794–40	LABEL, WARNING (GENERAL) ETIQUETTE, AVERTISSEMENT	1					

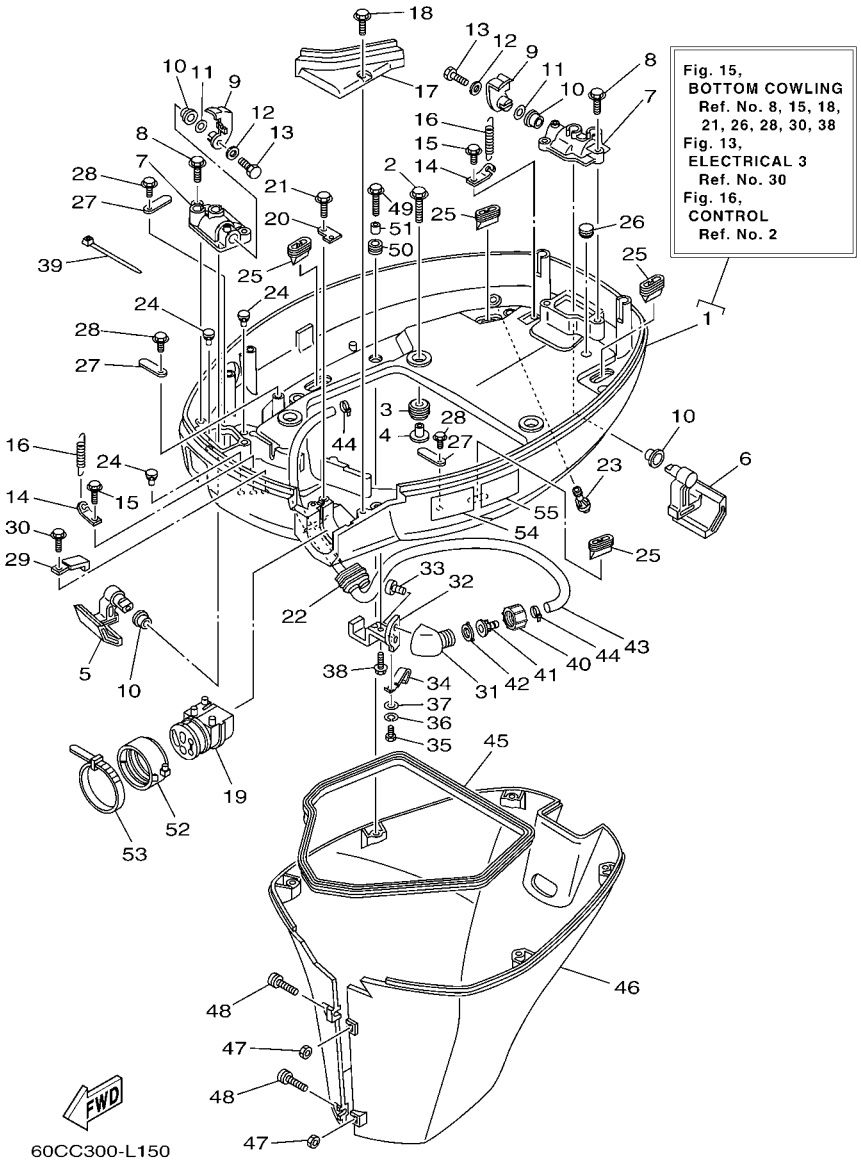

FIG. 15 BOTTOM COWLING CAPOT INFERIEUR

REF. NO.	PART NO. N° PIECES	DESCRIPTION DESCRIPTION	60CC					REMARKS REMARQUES
55	6AH–42794–50	LABEL, WARNING (GENERAL) ETIQUETTE, AVERTISSEMENT	1					

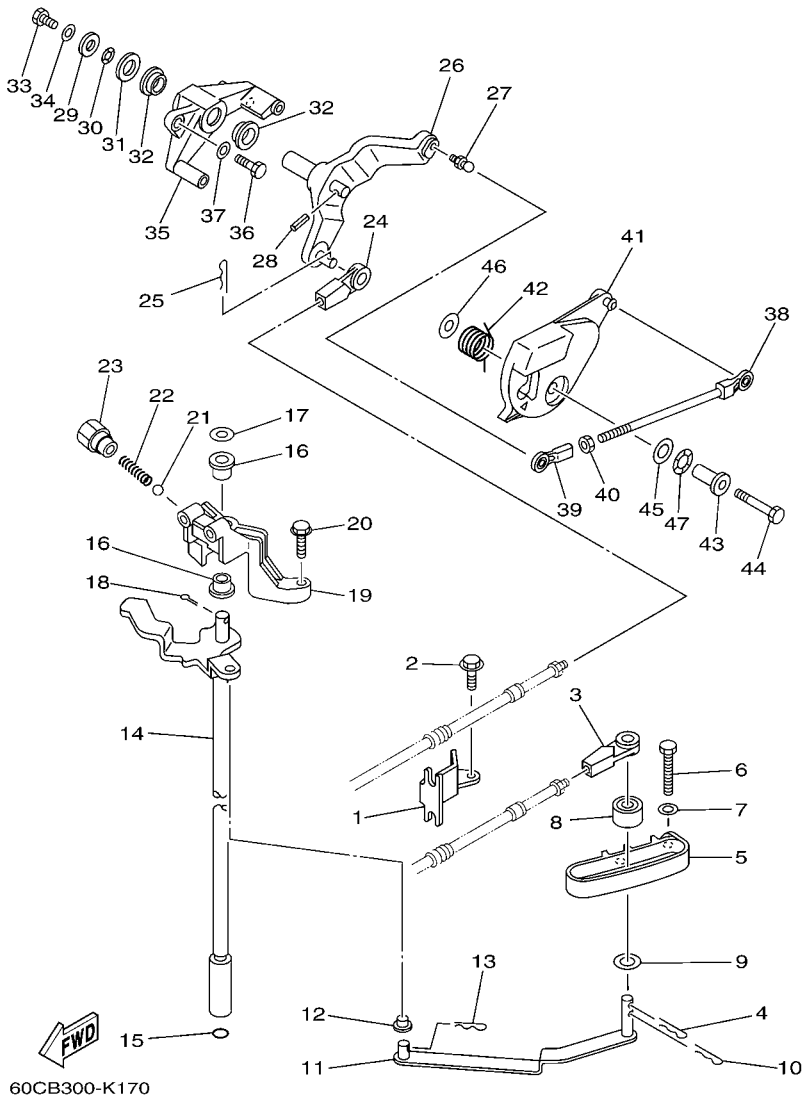

FIG. 16 CONTROL COMMANDE

REF. NO.	PART NO. N° PIECES	DESCRIPTION DESCRIPTION	60CC					REMARKS REMARQUES
1	67F–48538–00	CLAMP, CABLE 1 COLLIER	1					
2	90109–06M86	BOLT BOULON	1					
3	663–48344–00	CABLE END, REMOTE CONTROL CHAPE CABLE	1					
4	90468–18008	CLIP JONC	1					
5	67F–44117–00–94	BRACKET SUPPORT	1					
6	97095–06040	BOLT BOULON	2					
7	92995–06600	WASHER RONDELLE	2					
8	688–44122–00	BUSHING, SHIFT ROD LEVER DOUILLE, LEVIER D'EMBRAYAGE	1					
9	90202–07M07	WASHER, PLATE RONDELLE, PLATE	1					
10	90468–18008	CLIP JONC	1					
11	67F–44121–00	LEVER, SHIFT ROD LEVIER, TIGE D'INVERSION	1					
12	90386–06M12	BUSH DOUILLE	1					
13	90468–18008	CLIP JONC	1					
14	60C–44120–30	HANDLE GEAR SHIFT ASSY LEVIER D'EMBRAYAGE	1					X(25.3") X(25.3")
15	93210–09165	O-RING JOINT TORIQUE	1					
16	90386–90M90	BUSH DOUILLE	2					
17	90201–09M02	WASHER, PLATE RONDELLE, PLATE	1					
18	91490–20015	PIN. COTTER GOUPILLE	1					
19	68V–44118–00–94	BRACKET SUPPORT	1					
20	97575–06525	BOLT, WITH WASHER VIS HEXAGONAL AVC RONDELLE	2					
21	93501–04M02	BALL BILLE	1					
22	90501–12082	SPRING, COMPRESSION RESSORT, COMPRESSION	1					
23	648–42715–00	BUSHING COUSSINET	1					
24	663–48344–00	CABLE END, REMOTE CONTROL CHAPE CABLE	1					
25	90468–18008	CLIP JONC	1					
26	67F–42154–00–94	LEVER, THROTTLE CONTROL LEVIER DE COMMANDE D'AVANCE	1					
27	663–85518–00	JOINT, BALL JOINT SPHERIQUE	1					

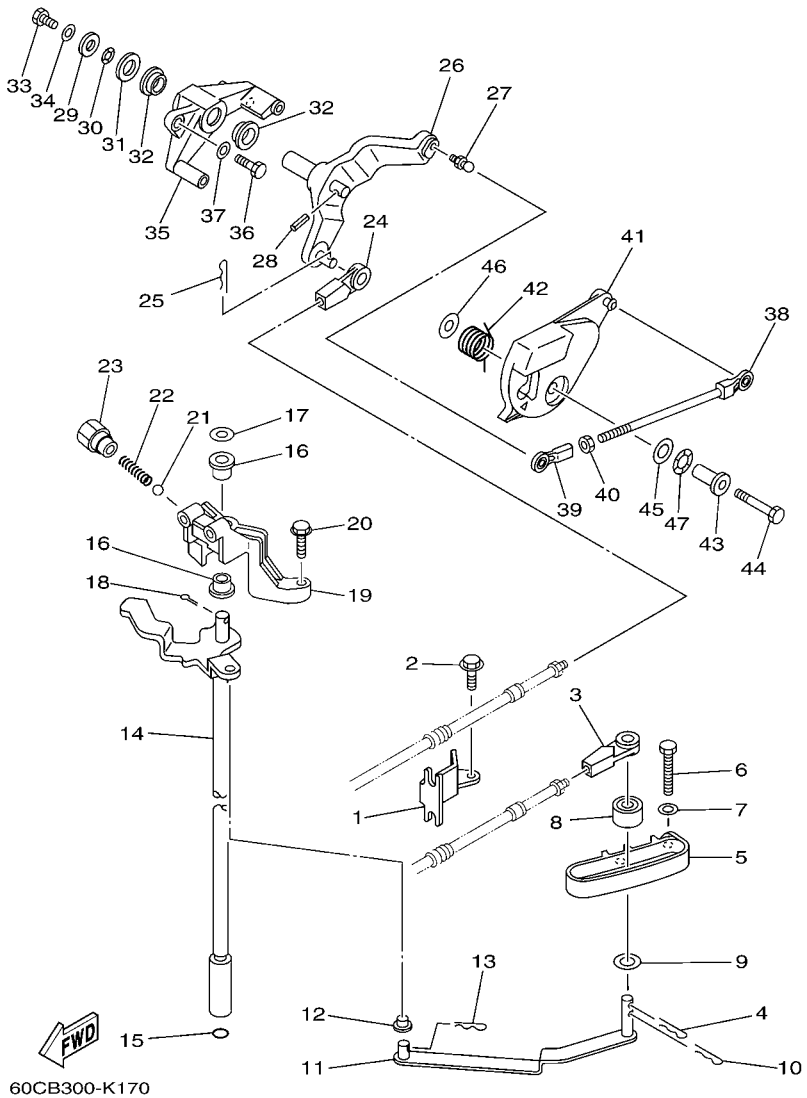

FIG. 16 CONTROL COMMANDE

REF. NO.	PART NO. N° PIECES	DESCRIPTION DESCRIPTION	60CC					REMARKS REMARQUES
28	91690–30018	PIN, SPRING AGRAFFE	1					
29	90201–06068	WASHER, PLATE RONDELLE, PLATE	1					
30	90206–12M00	WASHER, WAVE RONDELLE, ONDULEE	1					
31	92990–12600	WASHER, PLATE RONDELLE, PLATE	1					
32	90386–12069	BUSH DOUILLE	2					
33	97095–06012	BOLT BOULON	1					
34	92995–06600	WASHER RONDELLE	1					
35	67F–41661–00–94	BRACKET 1 SUPPORT 1	1					
36	97095–06025	BOLT BOULON	2					
37	92995–06600	WASHER RONDELLE	2					
38	67F–41237–00	JOINT, LINK RACCORD	1					
39	682–41237–00	JOINT, LINK RACCORD	1					
40	95380–05600	NUT ECROU	1					
41	67F–41213–01	CAM, ACCEL. CAME, ACCELERATION	1					
42	67F–44135–00	SPRING RESSORT	1					
43	90387–06M82	COLLAR COLLERETTE	1					
44	97095–06035	BOLT BOULON	1					
45	90201–10M02	WASHER, PLATE RONDELLE, PLATE	1					
46	90201–06M31	WASHER, PLATE RONDELLE, PLATE	1					
47	90206–10M04	WASHER, WAVE RONDELLE, ONDULEE	1					

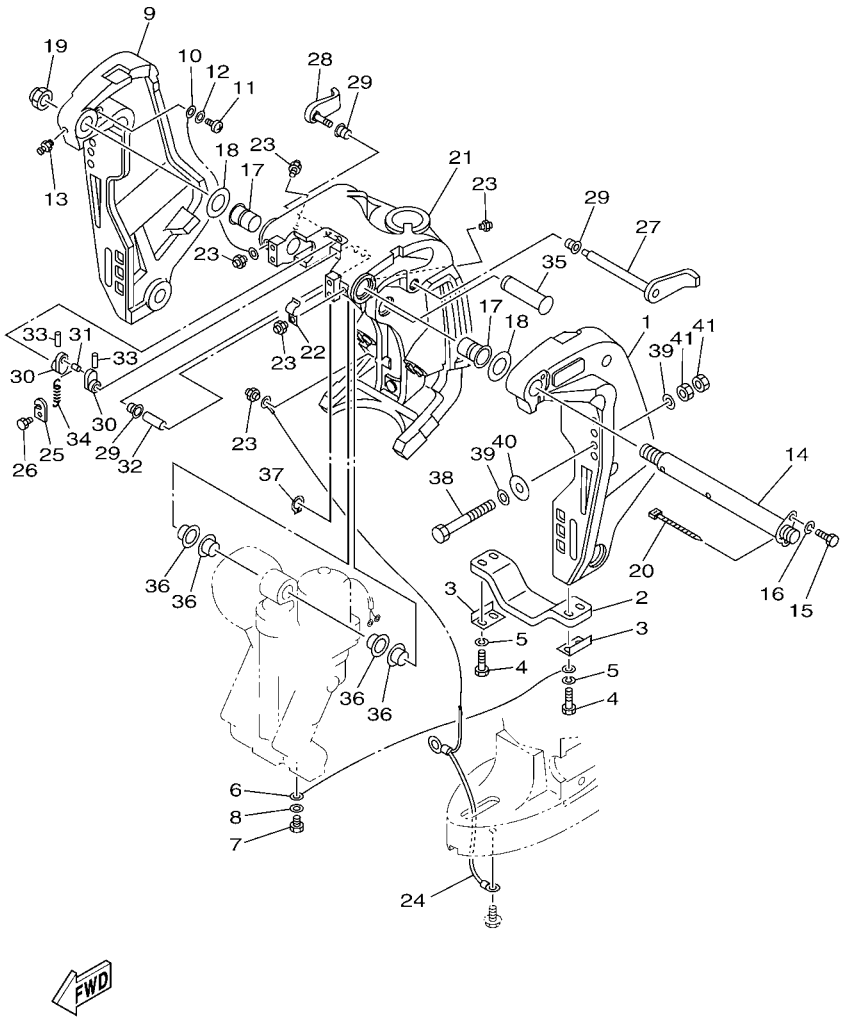

FIG. 17 BRACKET 1 SUPPORT 1

REF. NO.	PART NO. N° PIECES	DESCRIPTION DESCRIPTION	60CC					REMARKS REMARQUES
1	68V–43111–01–8D	BRACKET, CLAMP 1 PRESSE 1	1					
2	6G5–45251–02	ANODE ANODE	1					
3	6G5–44526–00	PLATE PLAQUE	2					
4	97095–06030	BOLT BOULON	4					
5	92995–06100	WASHER, SPRING RONDELLE, GROWER	4					
6	6E5–82148–00	WIRE, LEAD 4 FIL 4	1					
7	97095–06010	BOLT BOULON	1					
8	92995–06600	WASHER RONDELLE	1					
9	68V–43112–01–8D	BRACKET, CLAMP 2 PRESSE 2	1					
10	6E5–82148–00	WIRE, LEAD 4 FIL 4	1					
11	97885–06012	SCREW, PAN HEAD VIS, A ENCOCHE	1					
12	92995–06600	WASHER RONDELLE	1					
13	93700–06M03	NIPPLE, GREASE PION	1					
14	64E–43131–01	BOLT, CLAMP BRACKET BOULON, PRESSE	1					
15	97095–08020	BOLT BOULON	1					
16	92995–08100	WASHER RONDELLE	1					
17	90386–25M31	BUSH DOUILLE	2					
18	90201–26M59	WASHER, PLATE RONDELLE, PLATE	2					
19	90185–22M11	NUT, SELF-LOCKING ECROU,AUTO-BLOQUANT	1					
20	90465–11M10	CLAMP BRIDE	1					
21	64E–43311–20–8D	BRACKET, SWIVEL 1 SUPPORT, PIVOT 1	1					X(25.3") X(25.3")
22	90465–08M63	CLAMP BRIDE	1					
23	93700–06M03	NIPPLE, GREASE PION	5					
24	68V–82149–30	WIRE, LEAD 3 FIL 3	1					X(25.3") X(25.3")
25	66T–43144–00	HOOK, SPRING CROCHET	1					
26	97095–06010	BOLT BOULON	1					
27	6G5–43181–02	LEVER, TILT STOP 1 LEVIER VERROUILLAGE RELEVAGE 1	1					

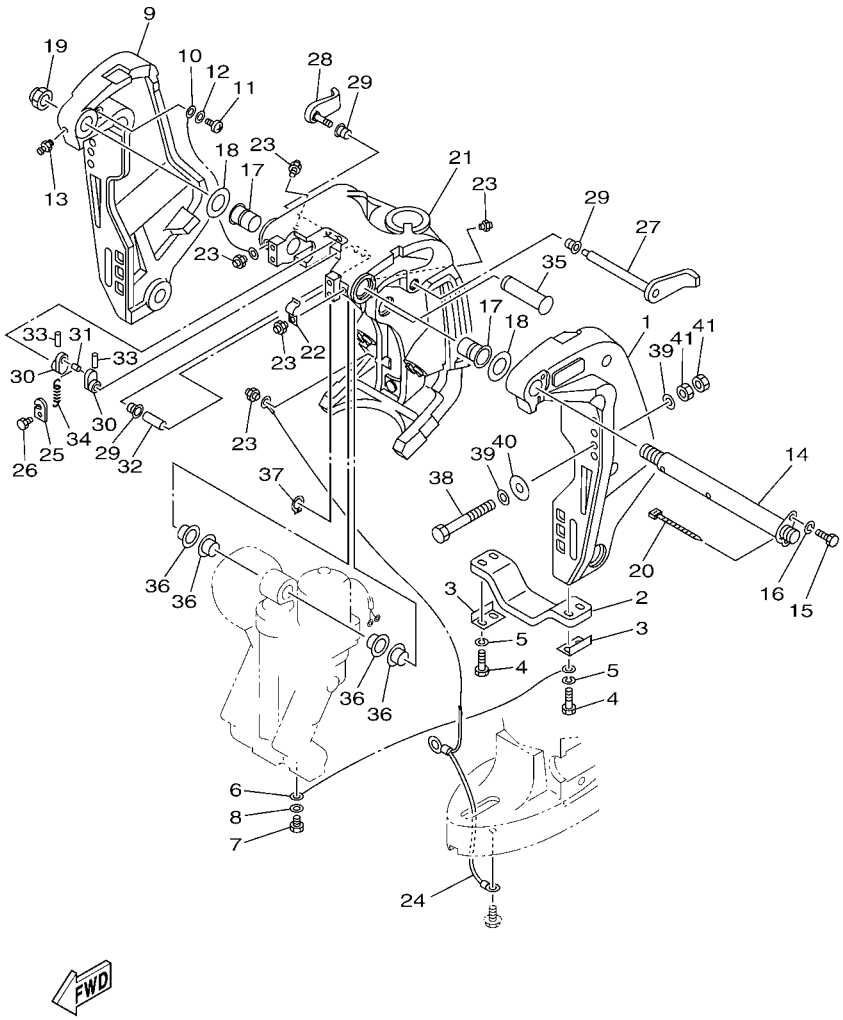

FIG. 17 BRACKET 1 SUPPORT 1

REF. NO.	PART NO. N° PIECES	DESCRIPTION DESCRIPTION	60CC					REMARKS REMARQUES
28	6G5–43185–02	LEVER, TILT STOP 2 LEVIER VERROUILLAGE RELEVAGE 2	1					
29	90386–10M16	BUSH DOUILLE	3					
30	6G5–43148–00	COLLAR, DISTANCE ENTRETOISE	2					
31	90249–06M19	PIN GOUPILLE	1					
32	90387–10M05	COLLAR COLLERETTE	1					
33	91690–30020	PIN, SPRING AGRAFFE	2					
34	90506–14M24	SPRING, TENSION RESSORT, TENSION	1					
35	64E–43126–00	PIN, UPPER SHOCK MOUNT AXE, SUPERIEUR AMORTISSEUR	1					
36	90386–22M98	BUSH DOUILLE	4					
37	93410–22M11	CIRCLIP CLIPS	1					
38	90101–12M05	BOLT (L:130MM) BOULON (L:130MM)	4					
39	90201–13M01	WASHER, PLATE RONDELLE, PLATE	8					
40	90201–12426	WASHER, PLATE RONDELLE, PLATE	4					
41	95380–12600	NUT ECROU	8					

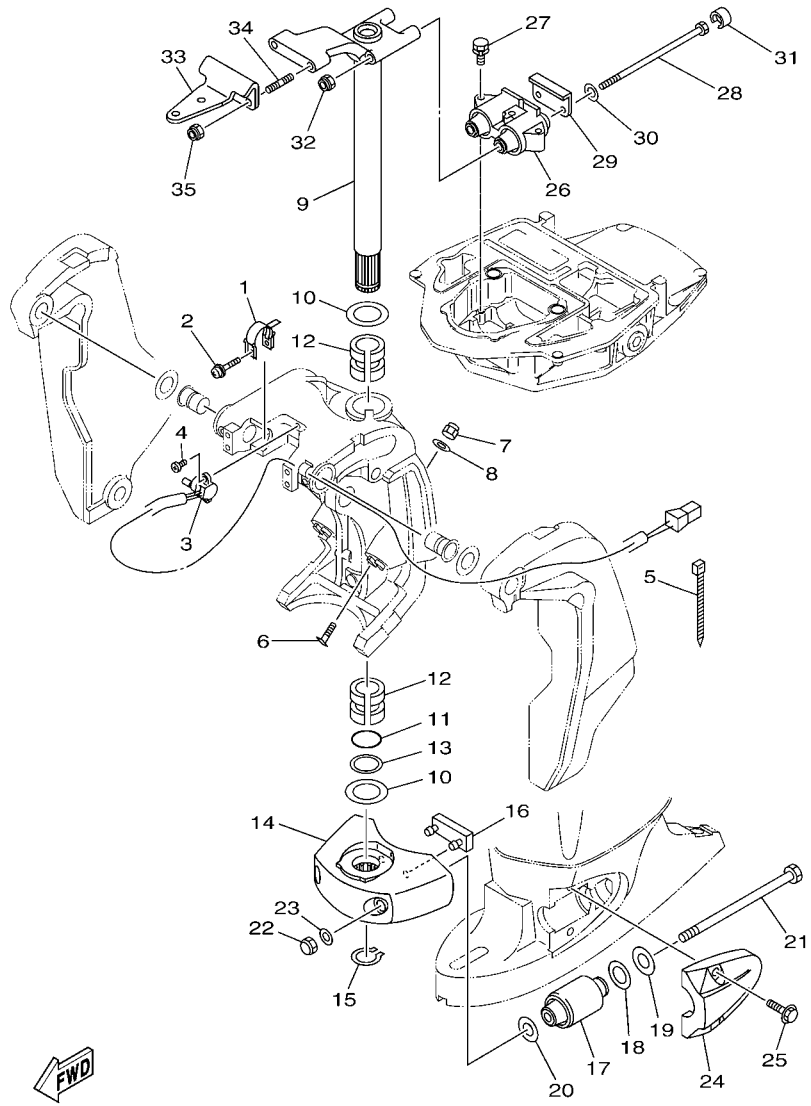

68V9110-J200

FIG. 18 BRACKET 2 SUPPORT 2

REF. NO.	PART NO. N° PIECES	DESCRIPTION DESCRIPTION	60CC					REMARKS REMARQUES
1	64E–43139–10	CAM, TRIM SENDER VILEBREQUIN TRUM	1					
2	90159–05059	SCREW, WITH WASHER VIS, AVEC RONDELLE	1					
3	67H–83672–01	TRIM SENDER INCLINER RACCORD	1					
4	97885–06016	SCREW, PAN HEAD VIS, A ENCOCHE	2					
5	90465–11M10	CLAMP BRIDE	3					
6	63P–43376–00	BOLT, THRUST RECEIVER BOULON	2					
7	95780–10300	NUT, FLANGE ECROU	2					
8	92995–10600	WASHER RONDELLE	2					
9	68V–42510–31–8D	STEERING BRACKET ASSY DIRECTION SUPPORT (ENS.)	1					X(25.3") X(25.3")
10	90201–38M60	WASHER, PLATE RONDELLE, PLATE	2					
11	93210–37MH7	O-RING JOINT TORIQUE	1					
12	90386–38M32	BUSH DOUILLE	2					
13	90202–40M47	WASHER, PLATE RONDELLE, PLATE	1					
14	68V–44551–00–8D	HOUSING, LOWER MOUNT RUBBER 1 BOITIER, SILENT-BLOC INFERIEUR	1					
15	93410–37M04	CIRCLIP CLIPS	1					
16	61A–44575–00	DAMPER, LOWER MOUNT RUBBER SILENT-BLOC, INFERIEUR	1					
17	61A–44555–01–94	MOUNT DAMPER, LOWER SIDE SILENT-BLOC, INFERIEUR LATERAL	2					
18	90202–32M19	WASHER, PLATE RONDELLE, PLATE	2					
19	90201–16M55	WASHER, PLATE RONDELLE, PLATE	2					
20	90201–15M58	WASHER, PLATE RONDELLE, PLATE	2					
21	90109–14007	BOLT BOULON	2					
22	95380–14600	NUT ECROU	2					
23	92995–14600	WASHER RONDELLE	2					
24	68V–44553–00–8D	COVER, LOWER MOUNT COUVERCLE, SUSPENSION INFERIEU	2					
25	90119–10049	BOLT, WITH WASHER BOULON, AVEC RONDELLE	4					
26	67F–44514–01	MOUNT DAMPER, UPPER SIDE SILENT-BLOC, SUPERIEUR LATERAL	1					
27	90119–08091	BOLT, WITH WASHER BOULON, AVEC RONDELLE	3					

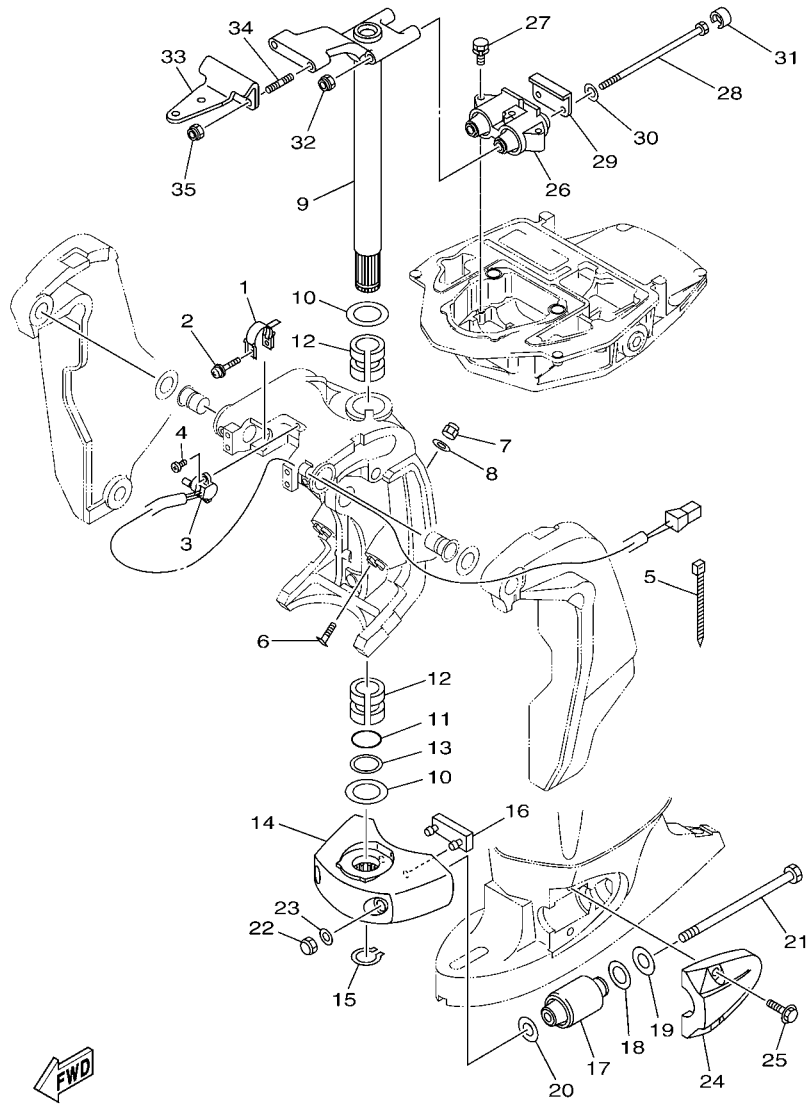

FIG. 18 BRACKET 2 SUPPORT 2

REF. NO.	PART NO. N° PIECES	DESCRIPTION DESCRIPTION	60CC					REMARKS REMARQUES
28	90109–12007	BOLT BOULON	2					
29	67F–44526–00	PLATE PLAQUE	1					
30	90201–12M09	WASHER, PLATE RONDELLE, PLATE	2					
31	67F–44533–00	DAMPER, UPPER MOUNT RUBBER COUVERCLE, SUSPENSION INFERIEU	2					
32	90185–12M12	NUT, SELF-LOCKING ECROU,AUTO-BLOQUANT	2					
33	68V–48511–00	HOOK, STEERING ATTACHE, DIRECTION	1					
34	90116–10175	BOLT, STUD GOUJON	2					
35	90185–10051	NUT, SELF-LOCKING ECROU,AUTO-BLOQUANT	2					

FIG. 19 POWER TRIM & TILT ASSY 1 PUISSANCE PARER ET INCLINER 1

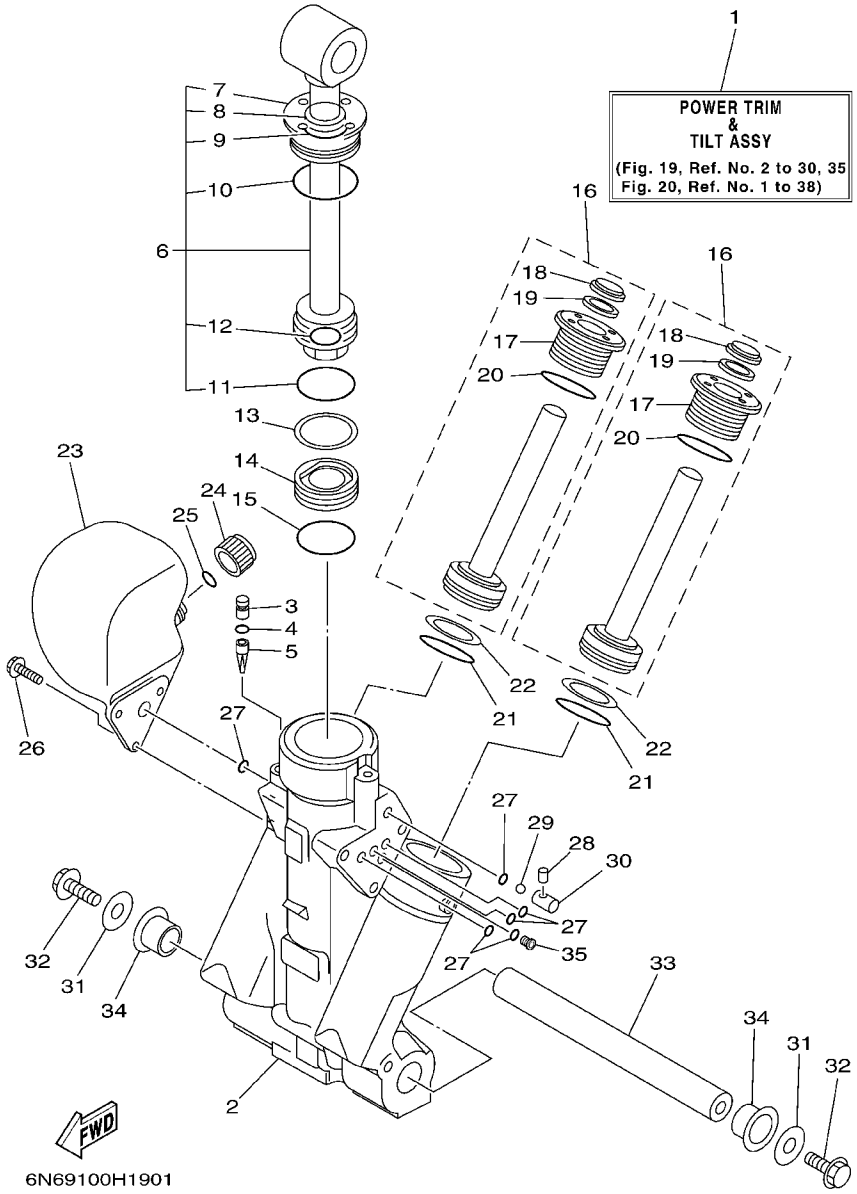

REF. NO.	PART NO. N° PIECES	DESCRIPTION DESCRIPTION	60CC					REMARKS REMARQUES
1	68V–43800–05	POWER TRIM & TILT ASSY PUISSANCE PARER ET INCLINER (E	1					
2	64E–43825–03	HOUSING, TRIM & TILT CARTER	1					
3	6AW–4388J–00	PLUG 2 BOUCHON 2	1					
4	93210–10M74	O-RING JOINT TORIQUE	1					
5	64E–43817–00	FILTER 2 FILTRE 2	1					
6	64E–43810–02	TILT PISTON SUB ASSY INCLINER PISTON AUXILIAIRE(ENS	1					
7	64E–43811–02	.SCREW, CYLINDER END .VIS, CYLINDRE RACCORD	1					
8	64E–43898–00	.SEAL, DUST 2 .JOINT ANTI-PUSSIERE	1					
9	64E–43867–00	.O-RING .JOINT TORIQUE	1					
10	64E–43866–00	.O-RING .JOINT TORIQUE	1					
11	6E5–43862–00	.O-RING .JOINT TORIQUE	1					
12	64E–43883–00	.O-RING .JOINT TORIQUE	1					
13	6E5–43872–00	RING, BACK UP RESSORT	1					
14	6E5–43814–02	PISTON, FREE PISTON	1					
15	6E5–43862–00	O-RING JOINT TORIQUE	1					
16	64E–43820–02	TRIM PISTON SUB ASSY PARER PISTON AUXILIAIRE (ENS.)	2					
17	64E–43821–02	.SCREW, TRIM CYLINDER END .VIS	1					
18	64E–43822–00	.SEAL, TRIM DUST .JOINT	1					
19	64E–4384J–00	.SEAL, TRIM DOWN .JOINT	1					
20	6G5–43864–00	.O-RING .JOINT TORIQUE	1					
21	6E5–43864–00	O-RING JOINT TORIQUE	2					
22	6E5–43874–01	RING, BACK UP RESSORT	2					
23	64E–43828–01	BODY, RESERVOIR CORPS	1					
24	64E–43829–01	PLUG, RESERVOIR BOUCHON	1					
25	64E–43897–00	O-RING JOINT TORIQUE	1					
26	64E–4388E–01	BOLT ,SCREW (L:14MM) VIS (L:14MM)	3					
27	64E–43869–00	O-RING JOINT TORIQUE	6					

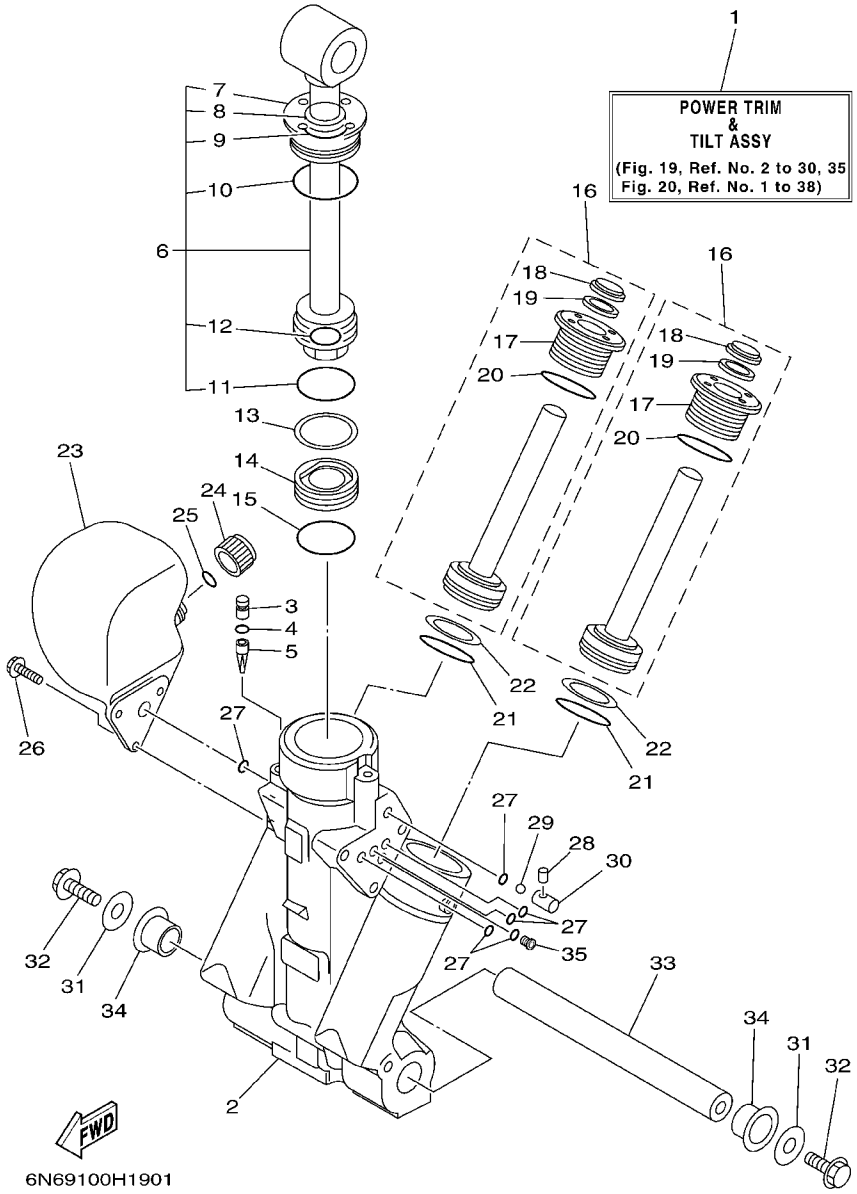

FIG. 19 POWER TRIM & TILT ASSY 1 PUISSANCE PARER ET INCLINER 1

REF. NO.	PART NO. N° PIECES	DESCRIPTION DESCRIPTION	60CC					REMARKS REMARQUES
28	64E–4381G–00	PIN COUPILL	1					
29	6E5–43858–00	BALL BILLE	1					
30	64E–4382G–00	VALVE, SEAT JEU DE POINTEAUX	1					
31	90201–10060	WASHER, PLATE RONDELLE, PLATE	2					
32	97575–10530	BOLT, WITH WASHER VIS HEXAGONAL AVC RONDELLE	2					
33	6BC–43818–00	PIN, LOWER SHOCK MOUNT AXE, INFERIEUR AMORTISSEUR	1					
34	90386–22M98	BUSH DOUILLE	2					
35	64E–4384N–00	PLUG, ORIFICE TAPON DE ORIFICIO	1					

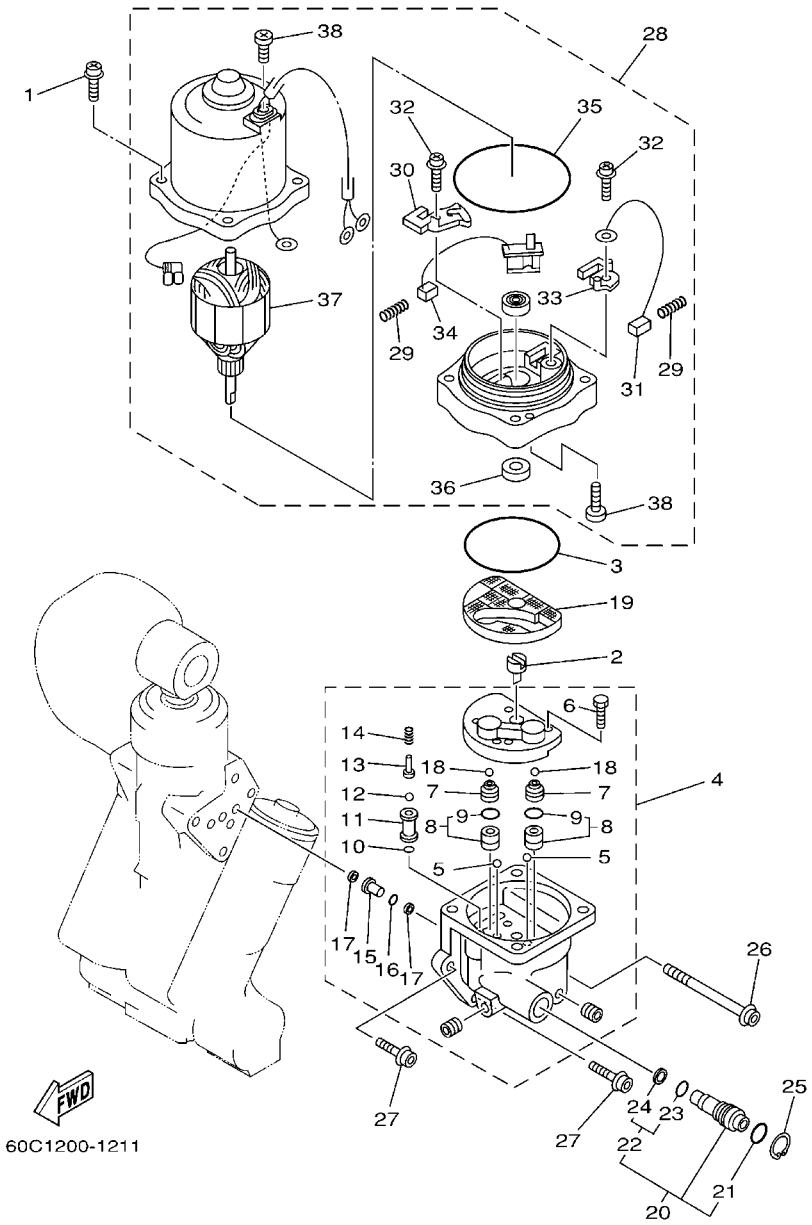

FIG. 20 POWER TRIM & TILT ASSY 2 PUISSANCE PARER ET INCLINER 2

REF. NO.	PART NO. N° PIECES	DESCRIPTION DESCRIPTION	60CC					REMARKS REMARQUES
1	64E–4388E–11	BOLT ,SCREW (L:34.7MM) VIS (L:34.7MM)	4					
2	64E–43831–00	CONNECTOR, SHAFT RACCORD	1					
3	64E–43868–00	O-RING JOINT TORIQUE	1					
4	68V–43830–01	GEAR PUMP ASSY POMPE A PIGNON (ENS.)	1					
5	72X–43858–00	.BALL .BILLE	2					
6	64E–43843–00	.SCREW, VALVE LOCK .VIS	4					
7	6AW–43841–00	.PISTON, SHUTTLE .PISTON	2					
8	64E–43802–00	.VALVE SUB ASSY .CLAPET AUXILIAIRE (ENS.)	2					
9	6E5–43896–00	..O-RING ..JOINT TORIQUE	1					
10	6G5–43863–00	.O-RING .JOINT TORIQUE	1					
11	66Y–43851–00	.SEAT, RELIEF VALVE .SIEGE	1					
12	64E–43858–00	.BALL .BILLE	1					
13	64E–43859–00	.PIN, VALVE SUPPORT .GOUPILLE	1					
14	68V–43855–00	.SPRING, UP RELIEF .RESSORT	1					
15	64E–43850–00	.VALVE SUB ASSY .CLAPET AUXILIAIRE (ENS.)	1					
16	64E–43865–00	.O-RING .JOINT TORIQUE	1					
17	64E–43816–00	.FILTER 1 .FILTRE 1	2					
18	6AW–43858–00	.BALL .BILLE	2					
19	64E–43817–11	FILTER 2 FILTRE 2	1					
20	64E–43860–01	MANUAL VALVE SUB-ASSY SOUPAPE, MANUEL (ENS.)	1					
21	72X–85075–L0	.O-RING .JOINT TORIQUE	1					
22	64E–43827–00	.RING SET .BILLE	1					
23	64E–4387A–00	..O-RING ..JOINT TORIQUE	1					
24	64E–43873–00	..RING, BACK UP ..RESSORT	1					
25	6AW–43875–00	RING, SNAP RESSORT	1					
26	64E–43879–11	SCREW, WITH WASHER VIS, AVEC RONDELLE	1					
27	64E–43879–01	SCREW, WITH WASHER VIS, AVEC RONDELLE	2					

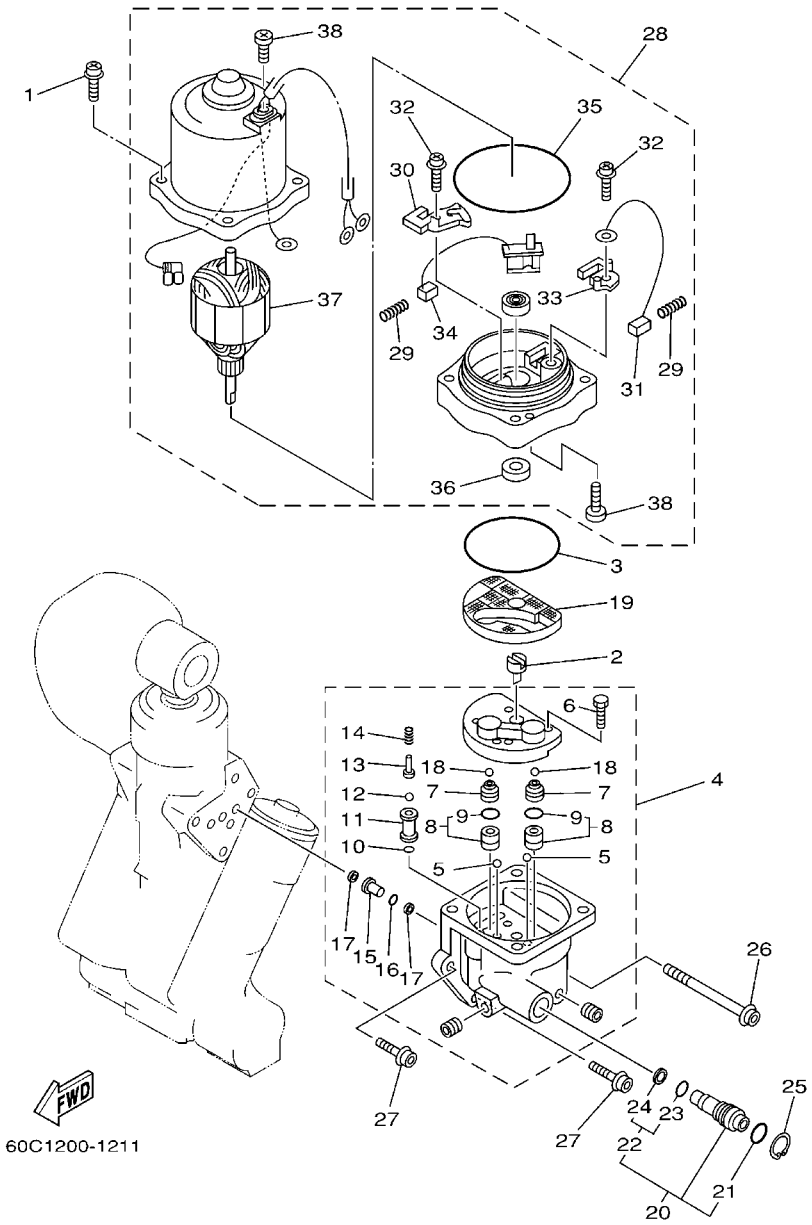

FIG. 20 POWER TRIM & TILT ASSY 2 PUISSANCE PARER ET INCLINER 2

REF. NO.	PART NO. N° PIECES	DESCRIPTION DESCRIPTION	60CC					REMARKS REMARQUES
28	68V–43880–04	MOTOR ASSY MOTEUR (ENS.)	1					
29	6H1–4386K–10	.SPRING, BRUSH .RESSORT, BALAI	2					
30	64E–4380J–00	.HOLDER, BRUSH .PORTE-BALAI	1					
31	64E–43891–00	.BRUSH 1 .BALAI 1	1					
32	97607–04310	.SCREW,WITH WASHER .VIS HEXAGONAL	2					
33	64E–4380F–00	.HOLDER, BRUSH 2 .PORTE-BALAI 2	1					
34	64E–43892–00	.BRUSH 2 .BALAI 2	1					
35	6G5–43865–01	.O-RING .JOINT TORIQUE	1					
36	93102–08M43	.OIL SEAL .JOINT SPY	1					
37	64E–43805–01	.ARMATURE ASSY .INDUIT (ENS.)	1					
38	64E–43843–10	.SCREW, VALVE LOCK .VIS	3					

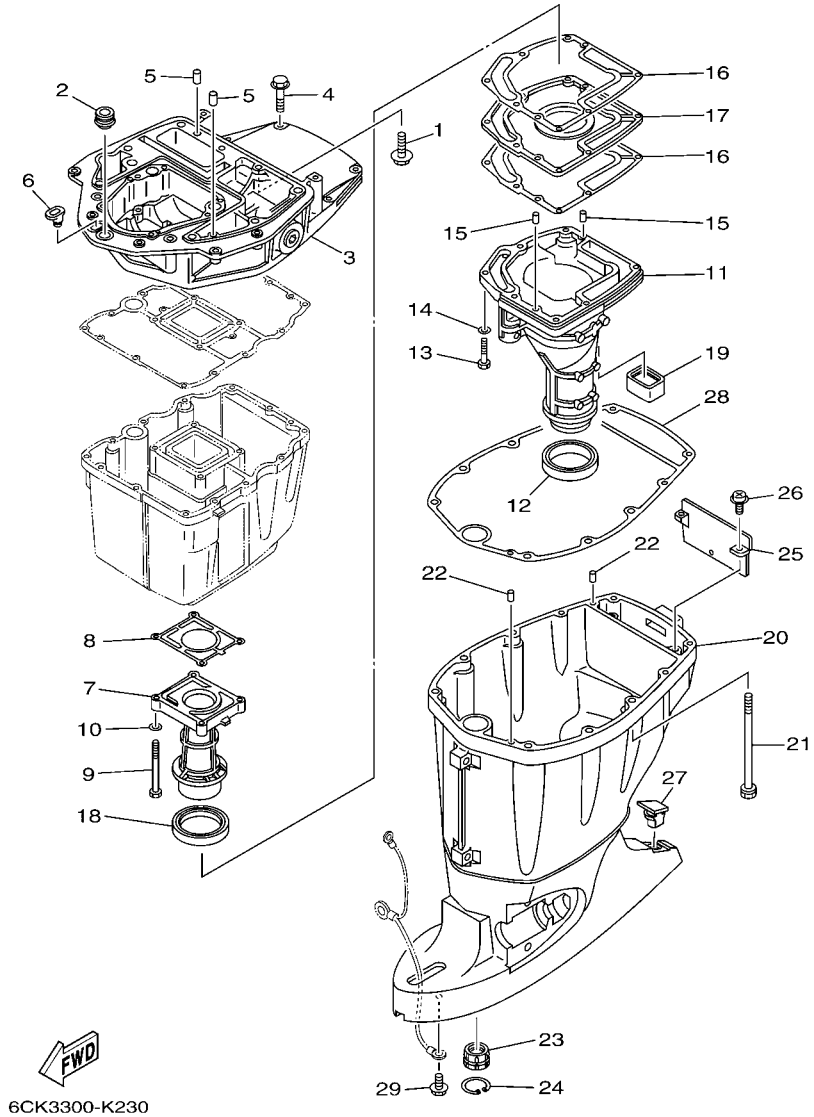

FIG. 21 UPPER CASING FOURREAU

REF. NO.	PART NO. N° PIECES	DESCRIPTION DESCRIPTION	60CC					REMARKS REMARQUES
1	90119–08M58	BOLT, WITH WASHER BOULON, AVEC RONDELLE	2					
2	67F–42724–00	GROMMET PASSE-FIL	1					
3	67F–41137–02–CA	GUIDE, EXHAUST COLLECTEUR D'ECHAPPEMENT	1					
4	97575–08540	BOLT, WITH WASHER VIS HEXAGONAL AVC RONDELLE	4					
5	93608–16M16	PIN, DOWEL AXE	2					
6	6G1–42727–00	GROMMET PASSE-FIL	1					
7	60C–41131–01–9S	MANIFOLD, EXT. 1 PIPE D'ECHAPPEMENT	1					
8	67F–41133–A1	GASKET, EXHAUST MANIFOLD 1 JOINT, PIPE D'ECHAPPEMENT	1					
9	97075–06070	BOLT BOULON	4					
10	92995–06600	WASHER RONDELLE	4					
11	60C–14711–30–9S	MUFFLER 1 POT D'ECHAPPEMENT 1	1					X(25.3") X(25.3")
12	68V–45123–00	GASKET, MUFFLER JOINT, POT DE DETENTE	1					
13	97075–06030	BOLT BOULON	7					
14	92995–06600	WASHER RONDELLE	7					
15	93606–19M23	PIN, DOWEL GOUPILLE	2					
16	67F–41134–A0	GASKET, EXHAUST MANIFOLD JOINT, PIPE D'ECHAPPEMENT	2					
17	67F–45181–00–CA	PLATE PLAQUETTE	1					
18	67F–41138–00	SEAL, EXT. 1 JOINT DE GROUPE 1	1					
19	67F–45127–00	SEAL JOINT	1					
20	68V–45111–31–8D	CASING, UPPER FOURREAU	1					X(25.3") X(25.3")
21	90119–10M08	BOLT, WITH WASHER BOULON, AVEC RONDELLE	6					
22	93608–16M16	PIN, DOWEL AXE	2					
23	6E5–45318–00	BUSHING, DRIVE SHAFT DOUILLE, ARBRE MOTEUR	1					
24	93420–36M01	CIRCLIP CIRCLIP, TYPE S	1					
25	67F–45151–00	COVER, UPPER CASING CAPUCHON, FOURREAU	1					
26	97980–06216	SCREW, WITH WASHER VIS, AVEC RONDELLE	2					
27	6C5–45155–00	CAP CAPUCHON	1					

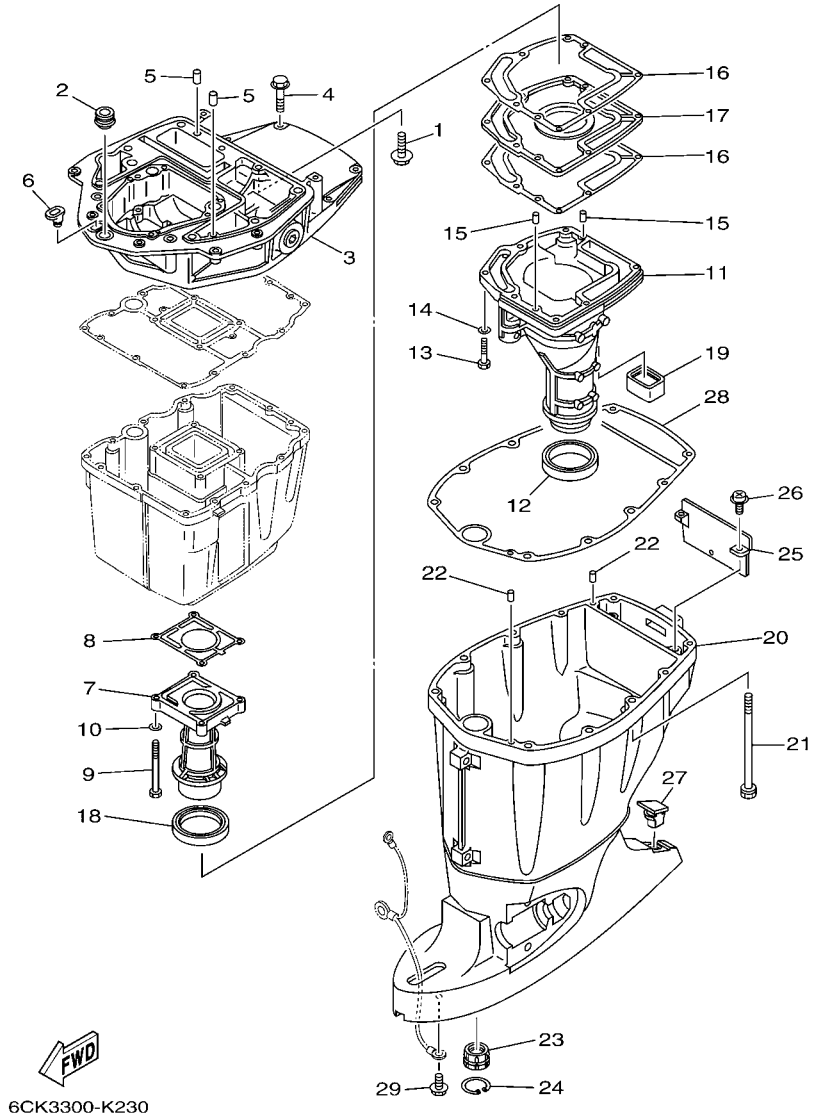

FIG. 21 UPPER CASING FOURREAU

REF. NO.	PART NO. N° PIECES	DESCRIPTION DESCRIPTION	60CC					REMARKS REMARQUES
28	67F–45113–00	GASKET, UPPER CASING JOINT, TUBE D'ARBRE	1					
29	95895–06010	BOLT, FLANGE BOULON	1					

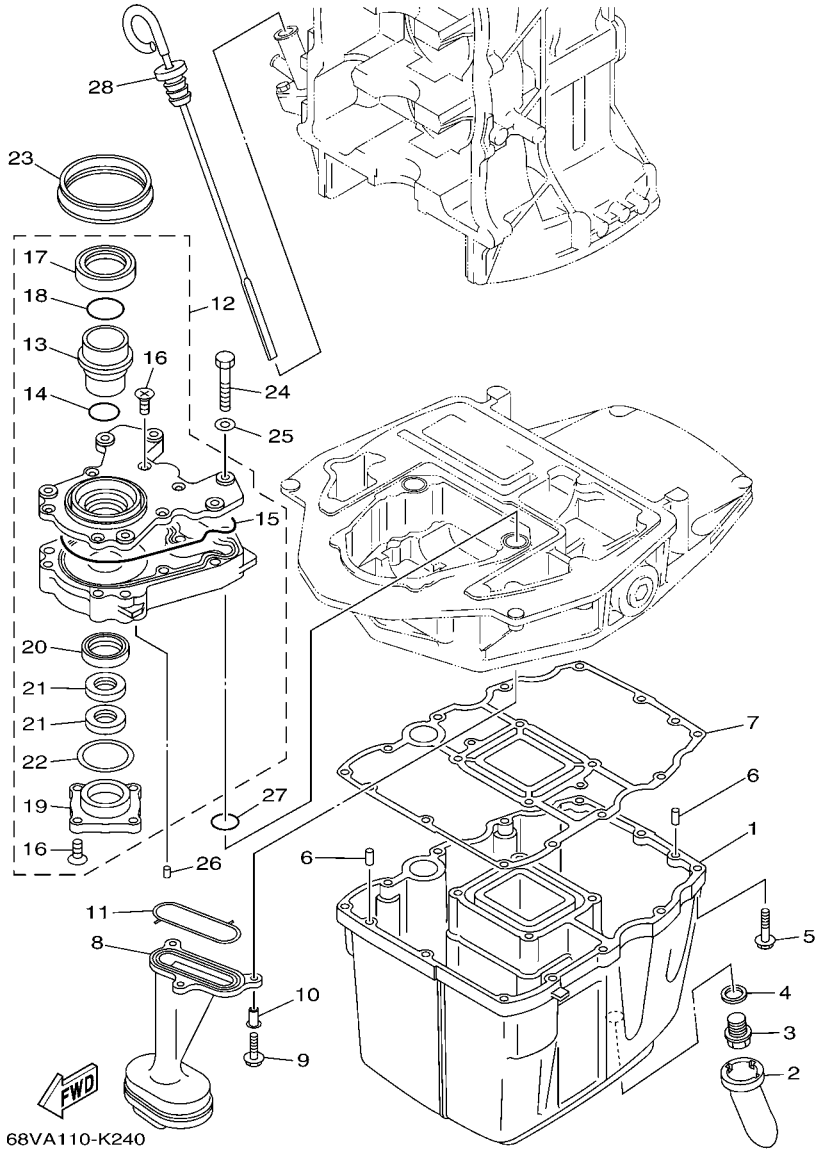

FIG. 22 OIL PAN — VENTILATEUR D'HUILE

REF. NO.	PART NO. N° PIECES	DESCRIPTION DESCRIPTION	60CC					REMARKS REMARQUES
1	68V–15311–00–CA	OIL PAN VENTILATEUR D'HUILE	1					
2	63P–15316–00	DAMPER 1 AMORTISSEUR 1	1					
3	90340–14M06	PLUG, STRAIGHT SCREW PLOT, FILETE DROIT	1					
4	90430–14M09	GASKET JOINT	1					
5	97575–06525	BOLT, WITH WASHER VIS HEXAGONAL AVC RONDELLE	12					
6	93606–12019	PIN, DOWEL GOUPILLE	2					
7	68V–15312–00	GASKET, OIL PAN JOINT DE VENTILATEUR D'HUILE	1					
8	67F–13411–00	STRAINER, OIL FILTRE, HUILE	1					
9	95812–06025	BOLT, FLANGE BOULON	3					
10	90387–06263	COLLAR COLLERETTE	3					
11	67F–13415–00	SEAL, OIL STRAINER JOINT, FILTRE A HUILE	1					
12	67F–13300–10	OIL PUMP ASSY POMPE A HUILE COMPLETE	1					
13	67F–13314–02	.SHAFT, PUMP .AXE DE POMPE	1					
14	67F–13473–01	.O-RING .JOINT TORIQUE	1					
15	67F–13329–00	.GASKET, PUMP COVER .JOINT, COUVERCLE DE POMPE	1					
16	67F–13495–00	.SCREW .VIS	10					
17	67F–13119–01	.OIL SEAL .JOINT SPY	1					
18	67F–13769–00	.O-RING .JOINT TORIQUE	1					
19	67F–13914–00	.HOUSING, PUMP .CORPS, POMPE	1					
20	67F–13631–03	.OIL SEAL .JOINT SPY	1					
21	67F–13149–00	.OIL SEAL .JOINT SPY	2					
22	67F–13339–00	.GASKET, PUMP COVER .BAINT, COUVERCLE DE POME	1					
23	67F–13338–00	SEAL JOINT	1					
24	97095–06045	BOLT BOULON	6					
25	92995–06600	WASHER RONDELLE	6					
26	93604–12M07	PIN, DOWEL CLAVETTE	2					
27	93210–19MJ1	O-RING JOINT TORIQUE	2					

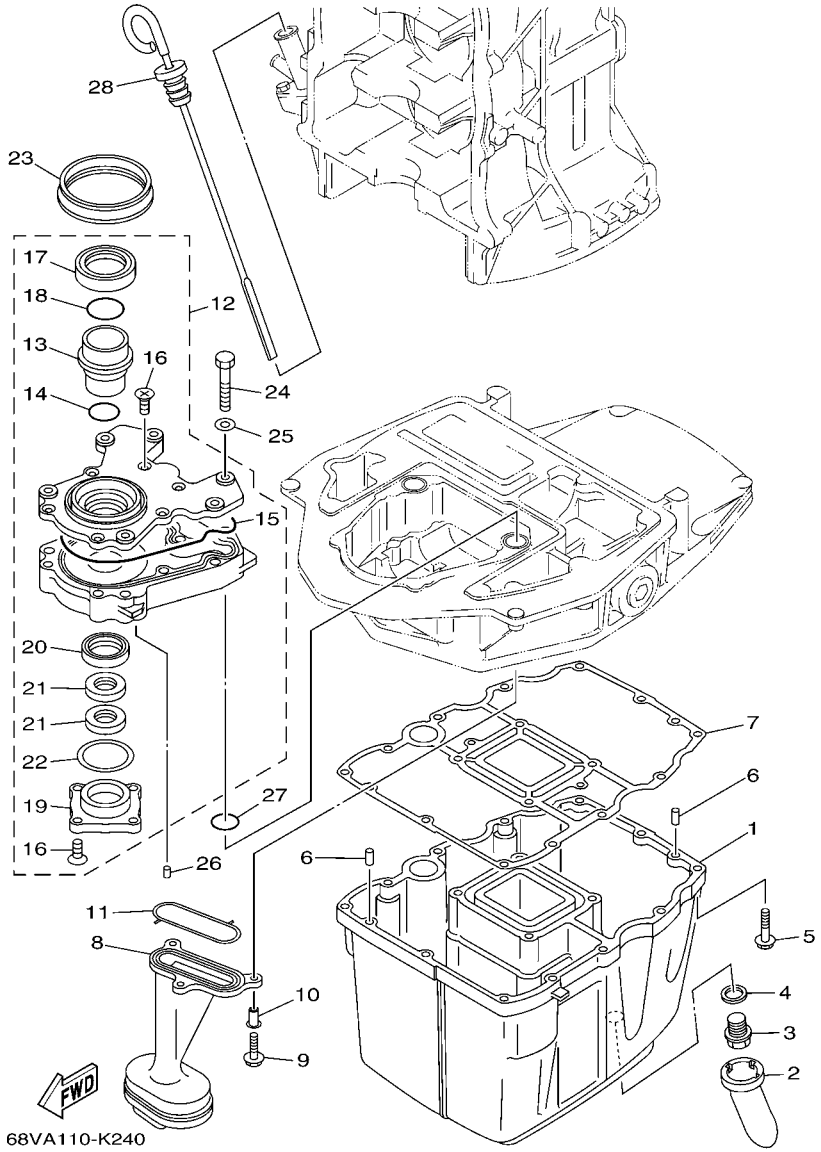

FIG. 22 OIL PAN — VENTILATEUR D'HUILE

REF. NO.	PART NO. N° PIECES	DESCRIPTION DESCRIPTION	60CC					REMARKS REMARQUES
28	6D8–15362–00	PLUG, OIL LEVEL PLOT, NIVEAU D'HUILE	1					

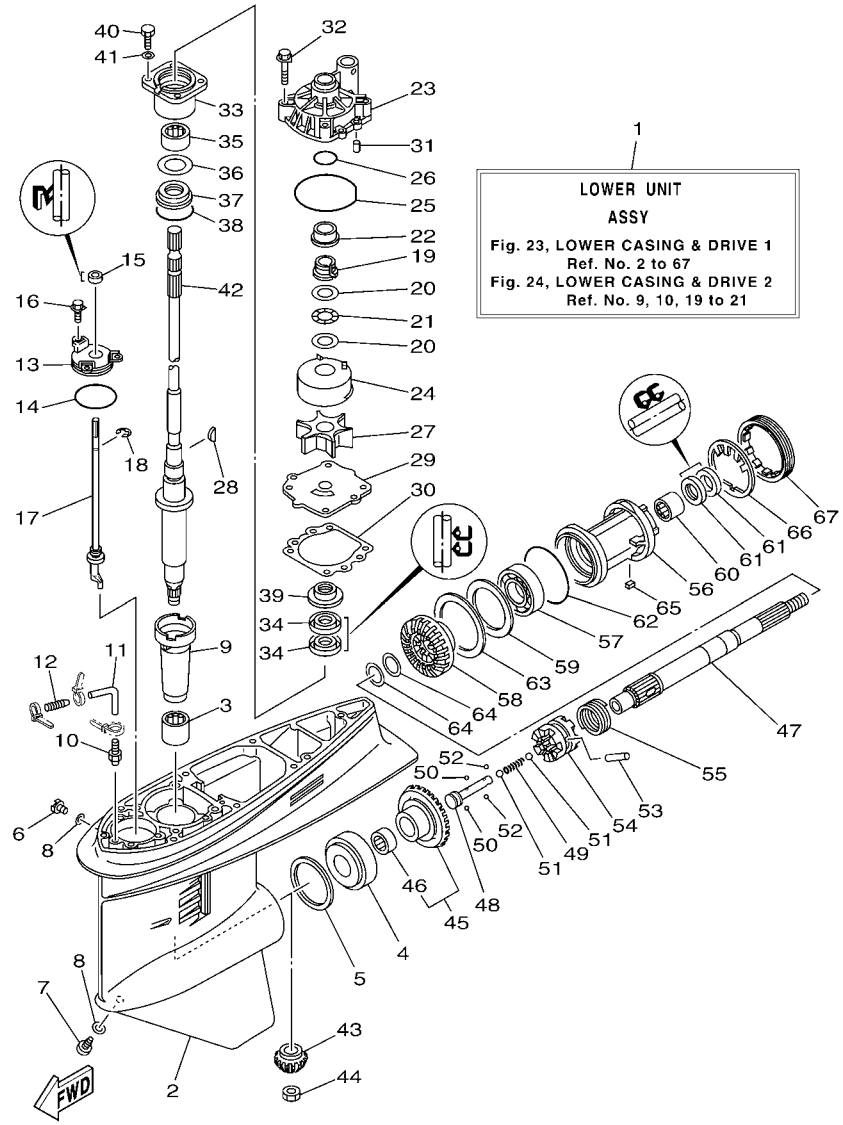

FIG. 23 LOWER CASING & DRIVE 1 BOITIER D'HELICE TRANSMISSION1

REF. NO.	PART NO. N° PIECES	DESCRIPTION DESCRIPTION	60CC					REMARKS REMARQUES
1	60C–45300–32–8D	LOWER UNIT ASSY UNITE INFERIEURE (ENS.)	1					X(25.3") X(25.3")
2	6E5–45301–07–8D	CASING, LOWER BEQUILLE	1					
3	93315–628U9	BEARING ROULEMENT	1					
4	93332–000U7	BEARING ROULEMENT	1					
5	6E5–45567–01	SHIM (T:0.10MM) CALE (T:0.10MM)	1					UR UR
	6E5–45567–10	SHIM (T:0.12MM) CALE (T:0.12MM)	1					UR UR
	6E5–45567–20	SHIM (T:0.15MM) CALE (T:0.15MM)	1					UR UR
	6E5–45567–30	SHIM (T:0.18MM) CALE (T:0.18MM)	1					UR UR
	6E5–45567–40	SHIM (T:0.30MM) CALE (T:0.30MM)	1					UR UR
	6E5–45567–50	SHIM (T:0.40MM) CALE (T:0.40MM)	1					UR UR
	6E5–45567–60	SHIM (T:0.50MM) CALE (T:0.50MM)	1					UR UR
6	90340–08002	PLUG, STRAIGHT SCREW PLOT, FILETE DROIT	1					
7	688–45341–10	PLUG, DRAIN BOUCHON DE VIDANGE	1					
8	90430–08020	GASKET JOINT	2					
9	6E5–45536–00	SLEEVE, DRIVE SHAFT MANCHON, ARBRE MOTEUR	1					
10	6E5–45378–00	NIPPLE, HOSE RACCORD, TUYAU	1					
11	90445–07ME9	HOSE (L120) DURITE (L120)	1					X(25.3") X(25.3")
12	6E5–83558–10	END, NIPPLE RACCORD DE NIPPLE	1					
13	6E5–45321–00	PLATE PLAQUETTE	1					
14	93210–58144	O-RING JOINT TORIQUE	1					
15	93106–09014	OIL SEAL JOINT SPY	1					
16	90119–06M10	BOLT, WITH WASHER BOULON, AVEC RONDELLE	3					
17	6L6–44150–02	SHIFT CAM ASSY CAME D'INVERSION	1					
18	99001–08600	CIRCLIP CIRCLIP	1					
19	61A–45538–00	SPACER 1 ENTRETOISE	1					
20	90201–22M01	WASHER, PLATE RONDELLE, PLATE	2					
21	90206–22M19	WASHER, WAVE RONDELLE, ONDULEE	1					

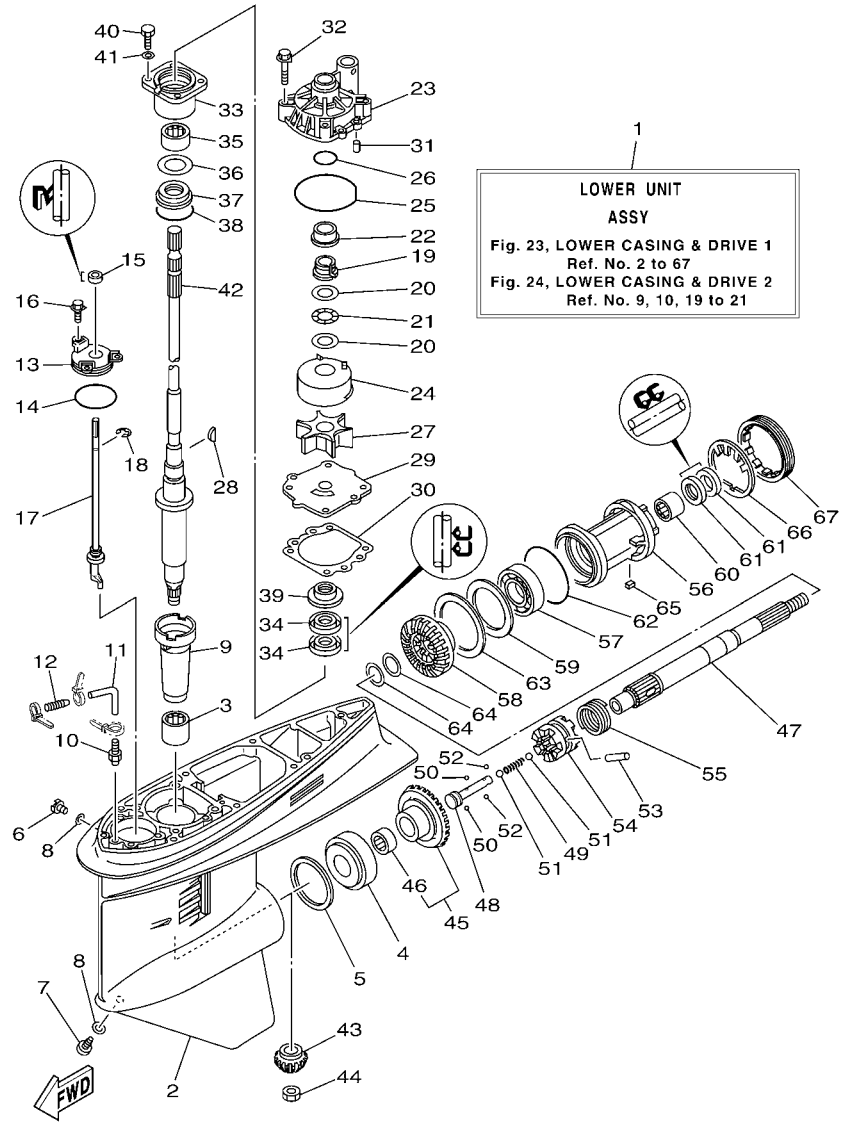

FIG. 23 LOWER CASING & DRIVE 1 BOITIER D'HELICE TRANSMISSION1

REF. NO.	PART NO. N° PIECES	DESCRIPTION DESCRIPTION	60CC					REMARKS REMARQUES
22	61A–45527–00	COLLAR, DRIVE SHAFT ENTRETOISE	1					
23	61A–44311–01	HOUSING, WATER PUMP CORPS, POMPE A EAU	1					
24	6R3–44322–42	INSERT, CARTRIDGE CUVETTE	1					FOR CHROMATE FOR CHROMATE
25	93210–86M38	O-RING JOINT TORIQUE	1					
26	93210–37160	O-RING JOINT TORIQUE	1					
27	6E5–44352–01	IMPELLER TURBINE	1					
28	90280–04M05	KEY, WOODRUFF CLAVETTE, DEMI-LUNE	1					
29	60C–44323–40	OUTER PLATE, CARTRIDGE PLAQUE EXTERIEURE	1					FOR CHROMATE FOR CHROMATE
30	6E5–44315–A0	GASKET, WATER PUMP JOINT, POMPE A EAU	1					
31	93606–12019	PIN, DOWEL GOUPILLE	2					
32	90119–08M14	BOLT, WITH WASHER BOULON, AVEC RONDELLE	4					
33	6E5–45331–00–9S	HOUSING, BEARING FLASQUE, ROULEMENT	1					
34	93101–28M16	OIL SEAL JOINT SPY	2					
35	93317–330U2	BEARING ROULEMENT	1					
36	6E5–45587–01	SHIM (T:0.10MM) CALE (T:0.10MM)	1					UR UR
	6E5–45587–10	SHIM (T:0.12MM) CALE (T:0.12MM)	1					UR UR
	6E5–45587–20	SHIM (T:0.15MM) CALE (T:0.15MM)	1					UR UR
	6E5–45587–30	SHIM (T:0.18MM) CALE (T:0.18MM)	1					UR UR
	6E5–45587–40	SHIM (T:0.30MM) CALE (T:0.30MM)	1					UR UR
	6E5–45587–50	SHIM (T:0.40MM) CALE (T:0.40MM)	1					UR UR
	6E5–45587–60	SHIM (T:0.50MM) CALE (T:0.50MM)	1					UR UR
37	93341–930V2	BEARING CERVEAUX DE DIRECTION	1					
38	93210–55M14	O-RING JOINT TORIQUE	1					
39	6E5–45344–00	COVER, OIL SEAL FLASQE, JOINT D'HUILE	1					
40	97095–08025	BOLT BOULON	4					
41	92995–08600	WASHER RONDELLE	4					
42	68V–45501–30	DRIVE SHAFT COMP. ARBRE MOTEUR COMP.	1					X(25.3") X(25.3")

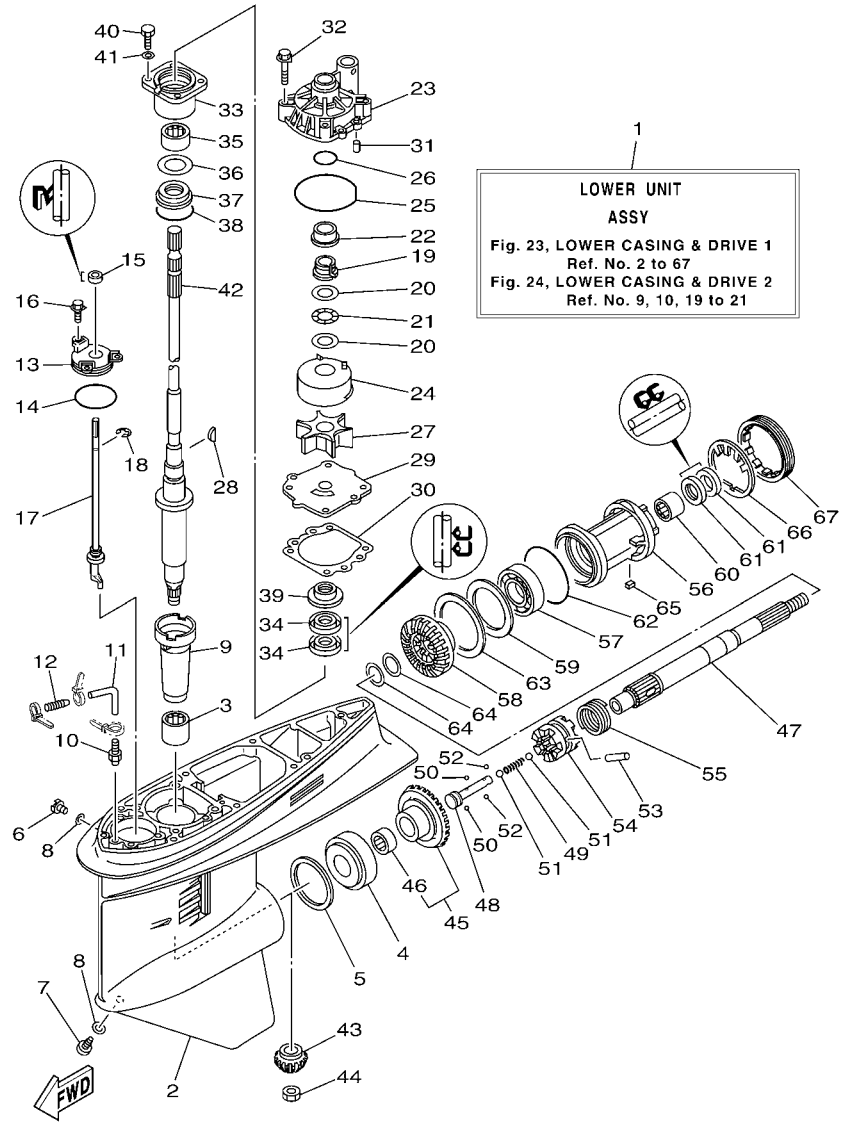

FIG. 23 LOWER CASING & DRIVE 1 BOITIER D'HELICE TRANSMISSION1

REF. NO.	PART NO. N° PIECES	DESCRIPTION DESCRIPTION	60CC					REMARKS REMARQUES
43	68V–45551–00	PINION (13T) PIGNON D'ATTAQUE (13D)	1					
44	90170–16M01	NUT ECROU	1					
45	68V–45560–00	GEAR 1 (28T) PIGNON 1 (28T)	1					
46	93315–425U7	.BEARING .ROULEMENT	1					
47	6E5–45611–01	SHAFT, PROPELLER ARBRE, HELICE	1					
48	6E5–45634–02	SLIDE, SHIFT CONTRE-POUSSOIR	1					
49	90501–16M37	SPRING, COMPRESSION RESSORT, COMPRESSION	1					
50	93507–32009	BALL BILLE	2					
51	93511–32017	BALL BILLES	2					
52	93503–16003	BALL BILLES	2					
53	90250–08M07	PIN, STRAIGHT GOUPILLE, DROITE	1					
54	68V–45631–01	CLUTCH, DOG CRABOT	1					
55	6E5–45633–01	RING, CROSS PIN JONC, GOUPILLE CRABOT	1					
56	6E5–45332–00–CA	HOUSING, BEARING FLASQUE, ROULEMENT	1					
57	93306–208U0	BEARING ROULEMENT	1					
58	68V–45571–00	GEAR 2 (28T) PIGNON 2 (28T)	1					
59	6E5–45576–00	WASHER, THRUST 2 RONDELLE DE CALAGE 2	1					
60	93315–430U8	BEARING ROULEMENT	1					
61	93101–30M17	OIL SEAL JOINT SPY	2					
62	93210–86M39	O-RING JOINT TORIQUE	1					
63	6L6–45577–00	SHIM (T:0.10MM) CALE (T:0.10MM)	1					UR UR
	6L6–45577–10	SHIM (T:0.12MM) CALE (T:0.12MM)	1					UR UR
	6L6–45577–20	SHIM (T:0.15MM) CALE (T:0.15MM)	1					UR UR
	6L6–45577–30	SHIM (T:0.18MM) CALE (T:0.18MM)	1					UR UR
	6L6–45577–40	SHIM (T:0.30MM) CALE (T:0.30MM)	1					UR UR
	6L6–45577–50	SHIM (T:0.40MM) CALE (T:0.40MM)	1					UR UR
	6L6–45577–60	SHIM (T:0.50MM) CALE (T:0.50MM)	1					UR UR

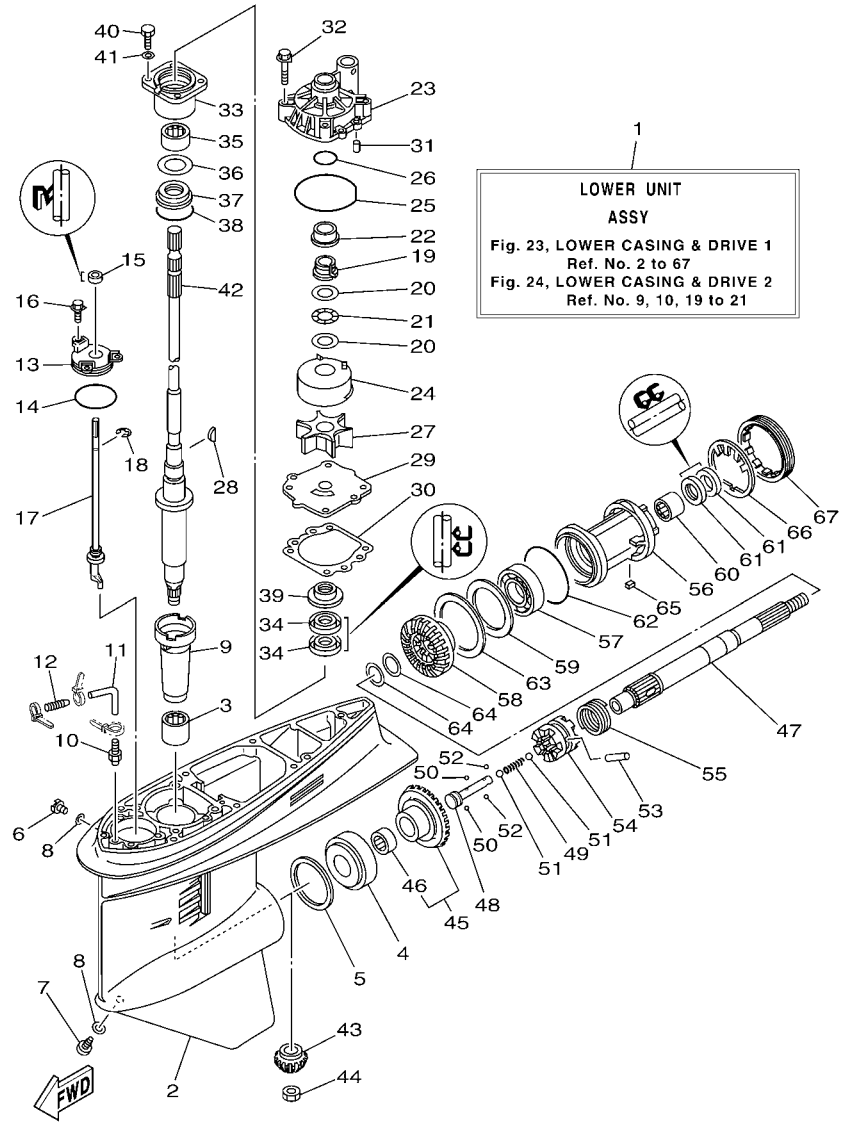

FIG. 23 LOWER CASING & DRIVE 1 BOITIER D'HELICE TRANSMISSION1

REF. NO.	PART NO. N° PIECES	DESCRIPTION DESCRIPTION	60CC					REMARKS REMARQUES
64	90201–30M92	WASHER, PLATE RONDELLE, PLATE	2					
65	90282–04010	KEY, STRAIGHT CLAVETTE, DROITE	1					
66	688–45383–02	WASHER, CLAW FREIN D'ECROU	1					
67	688–45384–02	NUT ECROU	1					

FIG. 24 LOWER CASING & DRIVE 2 BOITIER D'HELICE TRANSMISSION2

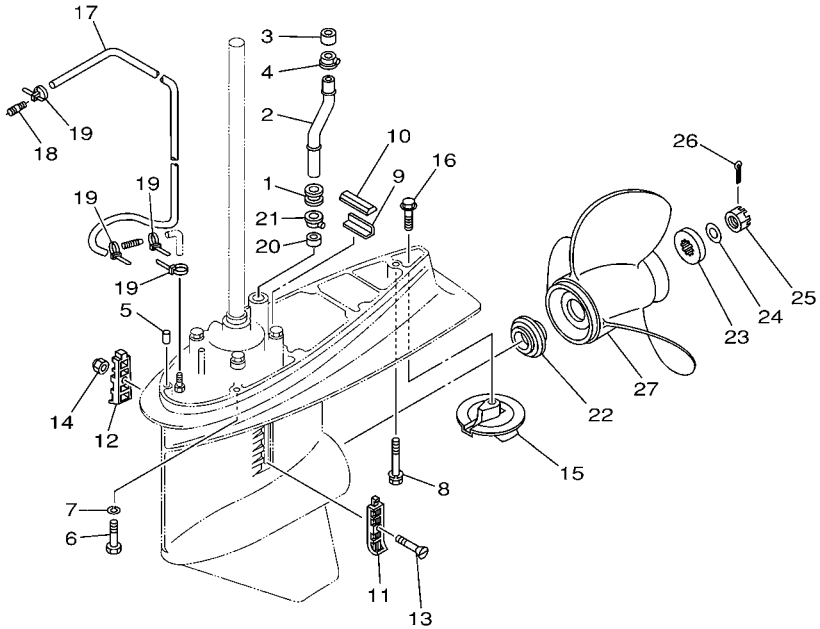

68V0010-0280

REF. NO.	PART NO. N° PIECES	DESCRIPTION DESCRIPTION	60CC					REMARKS REMARQUES
1	6E5–44366–00	DAMPER, WATER SEAL 2 JOINT, TUBE D'EAU 2	1					
2	6BC–44361–30	TUBE, WATER 1 TUBE D'EAU 1	1					X(25.3") X(25.3")
3	6E5–44365–00	DAMPER, WATER SEAL 1 JOINT, TUBE D'EAU 1	1					
4	6E5–44312–00	COVER, WATER PUMP HOUSING COUVERCLE	1					
5	93608–12M05	PIN, DOWEL AXE	2					
6	97075–10045	BOLT BOULON	6					
7	92995–10100	WASHER RONDELLE	6					
8	90119–10M89	BOLT, WITH WASHER BOULON, AVEC RONDELLE	1					
9	663–45376–00	GUIDE, SEAL DAMPER BUTEE, JOINT CAOUTCHOUC	1					
10	688–45375–00	DAMPER, SEAL BOURRELET, CAOUTCHOUC	1					
11	688–45214–02	COVER, WATER INLET 1 GRILLE, ENTREE D'EAU 1	1					
12	688–45215–02	COVER, WATER INLET 2 GRILLE, ENTREE D'EAU 2	1					
13	90152–05M07	SCREW, COUNTERSUNK VIS, TETE NOYEE	1					
14	90185–05002	NUT, NYLON ECROU,AUTO-BLOQUANT	1					
15	6E5–45371–01	TAB-TRIM ANODE DERIVE	1					
16	90105–10M00	BOLT, FLANGE BOULON	1					
17	90445–076K2	HOSE (L1550) DURITE (L1550)	1					
18	6E5–83558–00	END, NIPPLE RACCORD DE NIPPLE	1					
19	90465–11M10	CLAMP BRIDE	4					
20	6E5–44365–00	DAMPER, WATER SEAL 1 JOINT, TUBE D'EAU 1	1					
21	6E5–44312–00	COVER, WATER PUMP HOUSING COUVERCLE	1					
22	63P–45987–00	SPACER 1 ENTRETOISE 1	1					
23	688–45997–01	SPACER 2 ENTRETOISE 2	1					
24	92990–18200	WASHER RONDELLE, PLATE	1					
25	90171–18M04	NUT, CASTLE ECROU, CRENELE	1					
26	91490–40030	PIN. COTTER GOUPILLE	1					
27	6E5–45941–00	PROPELLER (3X13"X19"-K) HELICE (3X13"X19"-K)	1					UR UR

FIG. 24 LOWER CASING & DRIVE 2 BOITIER D'HELICE TRANSMISSION2

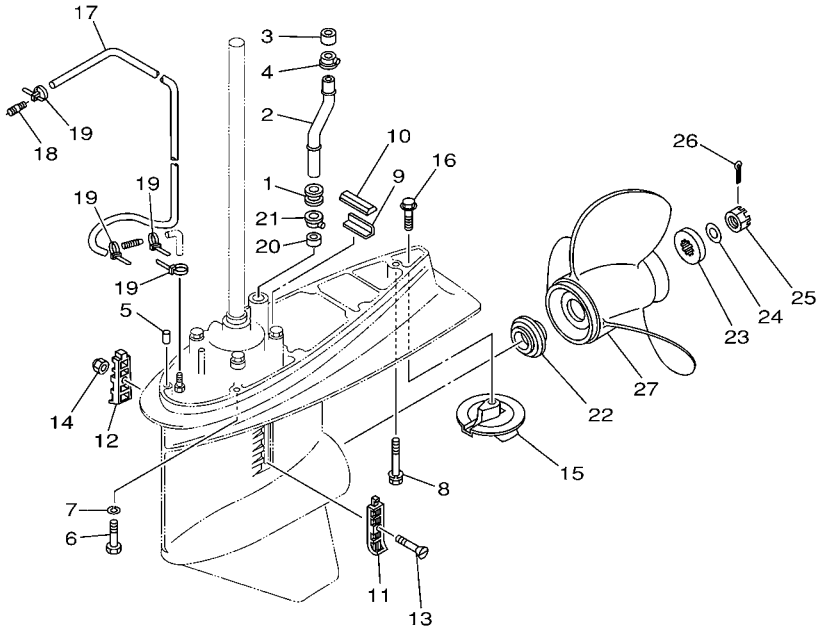

68V0010-0280

REF. NO.	PART NO. N° PIECES	DESCRIPTION DESCRIPTION	60CC					REMARKS REMARQUES
27	6E5–45943–00	PROPELLER (3X12-5/8"X21"-K) HELICE (3X12-5/8"X21"-K)	1					UR UR
	6E5–45945–01	PROPELLER (3X13-1/4"X17"-K) HELICE (3X13-1/4"X17"-K)	1					UR UR
	6E5–45947–00	PROPELLER (3X13-1/2"X15"-K) HELICE (3X13-1/2"X15"-K)	1					UR UR
	6E5–45949–00	PROPELLER (3X13-5/8"X13"-K) HELICE (3X13-5/8"X13"-K)	1					UR UR
	6E5–45952–00	PROPELLER (3X13"X23"-K) HELICE (3X13"X23"-K)	1					UR UR
	6E5–45954–00	PROPELLER (3X14"X11"-K) HELICE (3X14"X11"-K)	1					UR UR
	6E5–45956–00	PROPELLER (3X13"X25"-K) HELICE (3X13"X25"-K)	1					UR UR
	688–45930–02	PROPELLER (3X13"X17"-K2) HELICE (3X13"X17"-K2)	1					UR UR
	688–45932–60	PROPELLER (3X13-1/2"X14"-K) HELICE (3X13-1/2"X14"-K)	1					UR UR
	688–45970–03	PROPELLER (3X13"X19"-K) HELICE (3X13"X19"-K)	1					UR UR
	688–45972–02	PROPELLER (3X13"X21"-K) HELICE (3X13"X21"-K)	1					UR UR
	688–45974–02	PROPELLER (3X13"X23"-K) HELICE (3X13"X23"-K)	1					UR UR
	688–45976–01	PROPELLER (3X13"X25"-K) HELICE (3X13"X25"-K)	1					UR UR
	688–45978–60	PROPELLER (3X13-1/2"X16"-K) HELICE (3X13-1/2"X16"-K)	1					UR UR

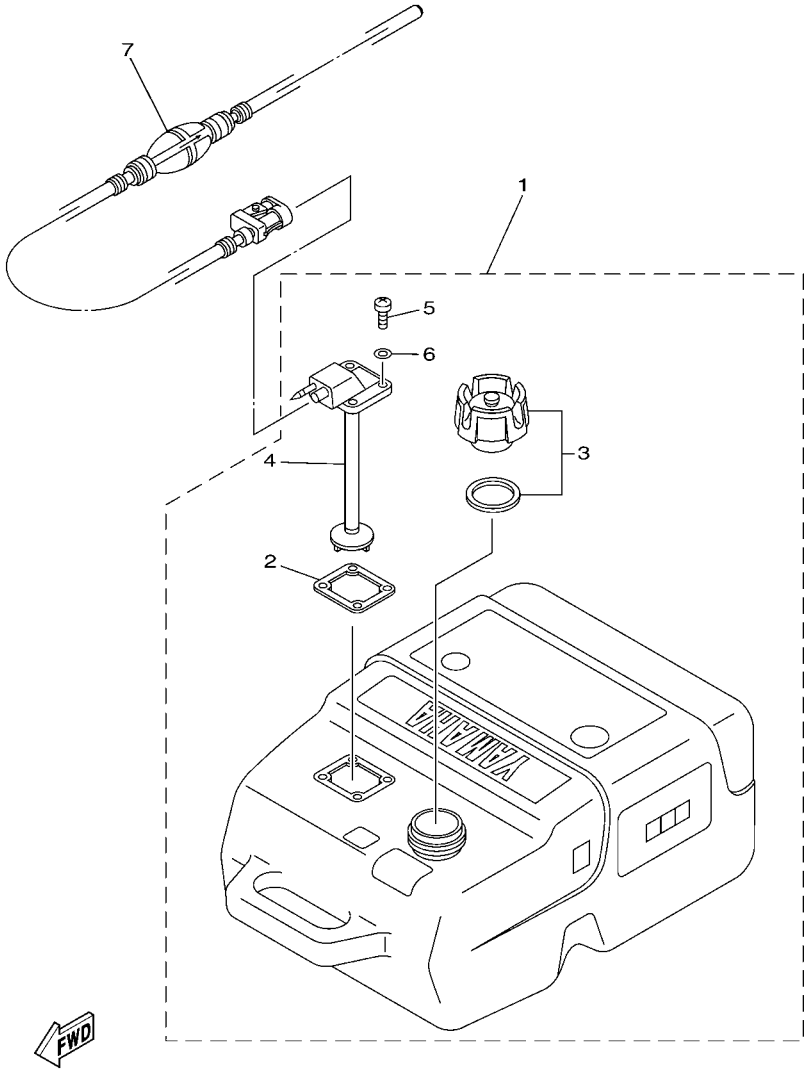

6D71300-D320

FIG. 25 FUEL TANK — RESERVOIR A CARBURANT

REF. NO.	PART NO. N° PIECES	DESCRIPTION DESCRIPTION	60CC					REMARKS REMARQUES
1	6YK–24201–03	FUEL TANK ASSY (25L) RESERVOIR A ESSENCE (ENS.) 25L	1					AP AP
2	6YL–24268–01	.GASKET, FUEL METER .JOINT, JAUGE A CARBURANT	1					
3	6YK–24610–01	.CAP ASSY .BOUCHON	1					
4	6YK–24260–01	.FUEL METER ASSY .INDICATEUR DE CARBURANT	1					
5	90157–05M16	.SCREW, PAN HEAD .VIS, TETE TRONCONIQUE	4					
6	6YL–24329–00	.SEAL .JOINT	4					
7	6YK–24306–44	FUEL PIPE COMP. 1 DURITE A ESSENCE 1	1					AP AP

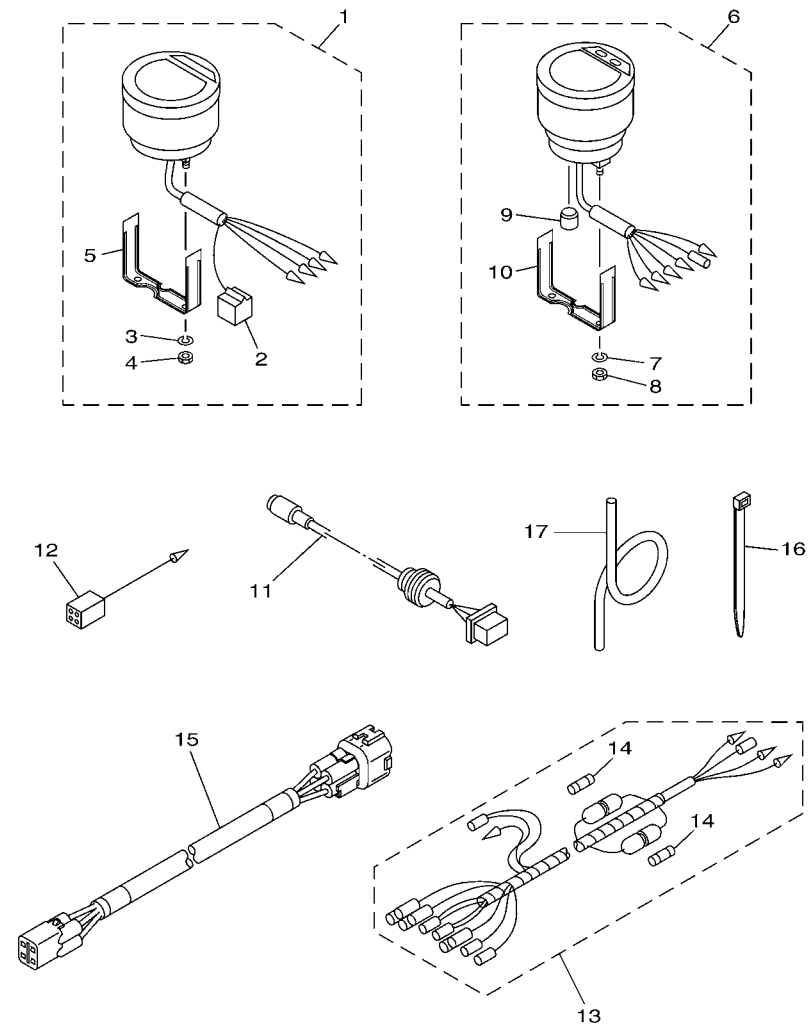

FIG. 26 METER COMPTEUR

REF. NO.	PART NO. N° PIECES	DESCRIPTION DESCRIPTION	60CC					REMARKS REMARQUES
1	6Y5–8350T–90	DIGITAL TACHOMETER ASSY COMPTE-TOURS NUMERIQUE CPLT	1					AP AP
2	9E450–04533	.CONNECTOR .CONNECTEUR	1					F-4-W F-4-W
3	92990–04100	.WASHER, SPRING .RONDELLE, GROWER	2					
4	95380–04600	.NUT .ECROU	2					
5	6Y5–8355X–T1	.BRACKET, METER 1 .CROCHET, COMPTEUR	1					
6	6Y5–83570–S5	SPEEDOMETER ASSY COMPTEUR DE VITESSE CPLT	1					AP AP
7	92990–04100	.WASHER, SPRING .RONDELLE, GROWER	2					
8	95380–04600	.NUT .ECROU	2					
9	6Y5–83533–T2	.GROMMET .RONDELLE CAOUTCHOUC	1					
10	6Y5–8355X–T1	.BRACKET, METER 1 .CROCHET, COMPTEUR	1					
11	6Y5–87122–S0	CORD ASSY 1 CORDON COMPLET 1	1					AP AP
12	6Y5–82117–00	WIRE, LEAD (BLACK) (L300) FIL (NOIR) (L300)	1					AP AP
13	6Y5–83553–M0	WIRE, LEAD (L=2.5M) FIL (L=2.5M)	1					AP AP
14	1E6–82151–00	.FUSE (10A) .FUSIBLE (10A)	2					
15	6Y5–83653–30	WIRE, LEAD (L=8.0M) FIL (L=8.0M)	1					AP 4P,8M AP 4P,8M
16	90465–11M10	CLAMP BRIDE	2					AP AP
17	6Y5–83557–10	TUBE (8M) TUBE (8M)	1					AP AP

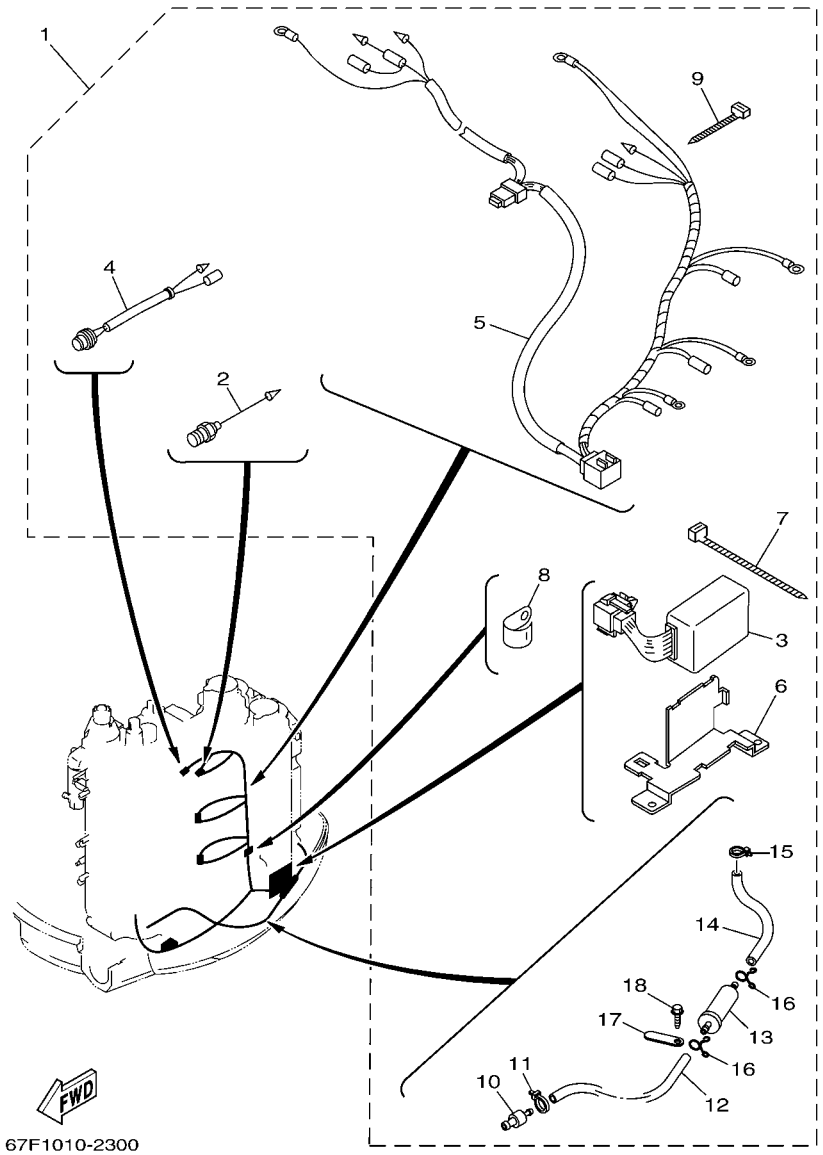

FIG. 27 OPTIONAL PARTS PIECES OPTIONNELLES

REF. NO.	PART NO. N° PIECES	DESCRIPTION DESCRIPTION	60CC					REMARKS REMARQUES
1	67F–83790–11	HEATER ASSY RECHAUFFEUR	1					AP AP
2	67F–83792–00	.HEATER .CHALEUR	4					
3	67F–81930–00	.CONTROL UNIT ASSY .BLOC DE CONTROLE	1					
4	67F–82560–00	.THERMO SWITCH ASSY .THERMO-CONTACT COMPLET	1					
5	67F–81971–00	.WIRE, LEAD .FIL	1					
6	67F–14291–00	.BRACKET 1 .SUPPORT 1	1					
7	90465–13M60	.CLAMP .BRIDE	3					
8	90465–08028	.CLAMP .BRIDE	2					
9	90465–13M36	.CLAMP .BRIDE	4					
10	67F–24377–00	.PIPE, JOINT 2 .DURITE RACCORDEMENT 2	1					
11	90465–11M10	.CLAMP .BRIDE	1					
12	90445–11M49	.HOSE (L700) .DURITE (L700)	1					
13	67F–24251–02	.STRAINER 1 .FILTRE 1	1					
14	67F–2451B–00	.HOSE, FUEL INLET .DURITE	1					
15	90465–11M10	.CLAMP .BRIDE	1					
16	90467–10M04	.CLIP .JONC	2					
17	6E5–82588–00	.PLATE .PLAQUE	2					
18	90109–06M81	.BOLT .BOULON	2					

FIG. 28 REPAIR KIT 1 — KITS DE REPARATION 1

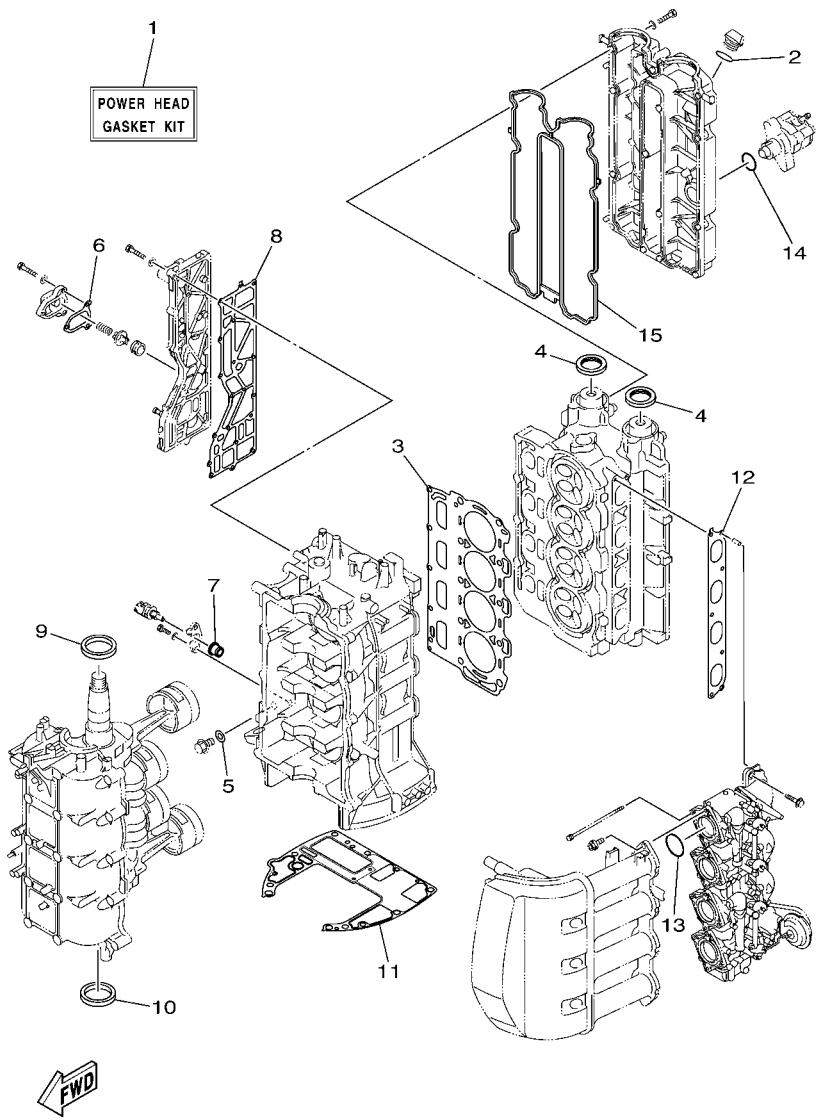

REF. NO.	PART NO. N° PIECES	DESCRIPTION DESCRIPTION	60CC					REMARKS REMARQUES
1	60C–W0001–04	POWER HEAD GASKET KIT POCHETTE DE JINTS TETE MOTRICE	1					
2	93210–24M79	.O-RING .JOINT TORIQUE	1					
3	67F–11181–03	.GASKET, CYLINDER HEAD 1 .JOINT, DE CULASSE 1	1					
4	93102–38008	.OIL SEAL .JOINT SPY	2					
5	90430–14115	.GASKET .JOINT	1					
6	67F–12435–A0	.GASKET .JOINT	1					
7	68V–85753–00	.GASKET, SENDER UNIT .JOINT, DE PERCEPTION	1					
8	67F–41114–A2	.GASKET, EXHAUST OUTER COVER .JOINT, COUVERCLE D'ECHAPPEMENT	1					
9	93102–48008	.OIL SEAL .JOINT SPY	1					
10	93101–48001	.OIL SEAL .JOINT SPY	1					
11	68V–11351–00	.GASKET, CYLINDER .JOINT, D'EMBASE	1					
12	67F–13645–00	.GASKET, MANIFOLD 1 .JOINT, TUBULURE 1	1					
13	93210–41MJ2	.O-RING .JOINT TORIQUE	4					
14	93210–30682	.O-RING .JOINT TORIQUE	1					
15	6D8–11356–01	.SEAL, CYLINDER 2 .JOINT, SPY CYLINDRE	1					

FIG. 29 REPAIR KIT 2 — KITS DE REPARATION 2

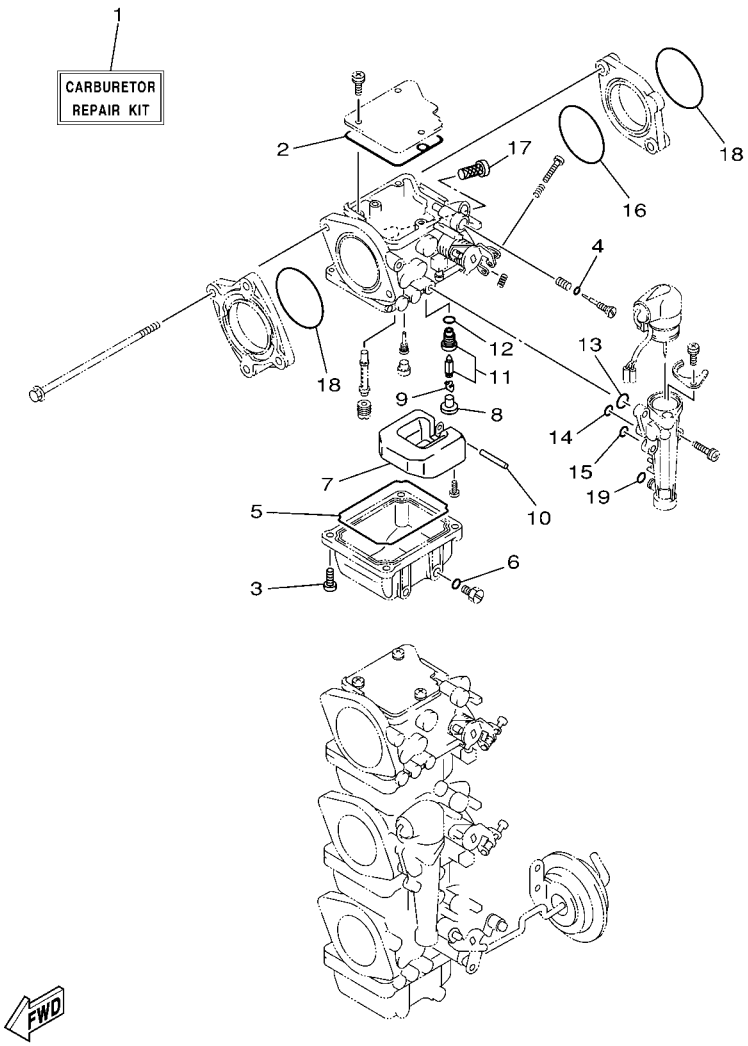

67F0100-9380

REF. NO.	PART NO. N° PIECES	DESCRIPTION DESCRIPTION	60CC					REMARKS REMARQUES
1	67F–W0093–02	CARBURETOR REPAIR KIT KIT DE REPARATION CARBURATEUR	1					
2	67F–14147–00	.O-RING .JOINT TORIQUE	1					
3	97980–04114	.SCREW, WITH WASHER .VIS, AVEC RONDELLE	4					
4	67F–14397–00	.O-RING .JOINT TORIQUE	1					
5	67F–14984–00	.GASKET, FLOAT CHAMBER .JOINT, CUVE DE FLOTTEUR	1					
6	93210–04230	.O-RING .JOINT TORIQUE	1					
7	6H4–14985–01	.FLOAT .FLOTTEUR	1					
8	676–14186–00	.PIN, FLOAT .AXE, FLOTTEUR	1					
9	67F–14159–00	.CLIP .JONC	1					
10	6H4–14548–00	.PIN, FLOAT ARM .AXE, BRAS DE FLOTTEUR	1					
11	60C–14590–02	.NEEDLE VALVE ASSY .POINTEAU	1					
12	93210–04228	.O-RING .JOINT TORIQUE	1					
13	67F–14398–00	.O-RING .JOINT TORIQUE	1					
14	67F–14398–10	.O-RING .JOINT TORIQUE	1					
15	67F–14398–20	.O-RING .JOINT TORIQUE	1					
16	67F–14239–00	.SEAL .JOINT	1					
17	67F–14371–01	.ELEMENT, FILTER .ELEMENT, FILTRE	1					
18	93210–40M10	.O-RING .JOINT TORIQUE	2					
19	67F–14398–30	.O-RING .JOINT TORIQUE	1					

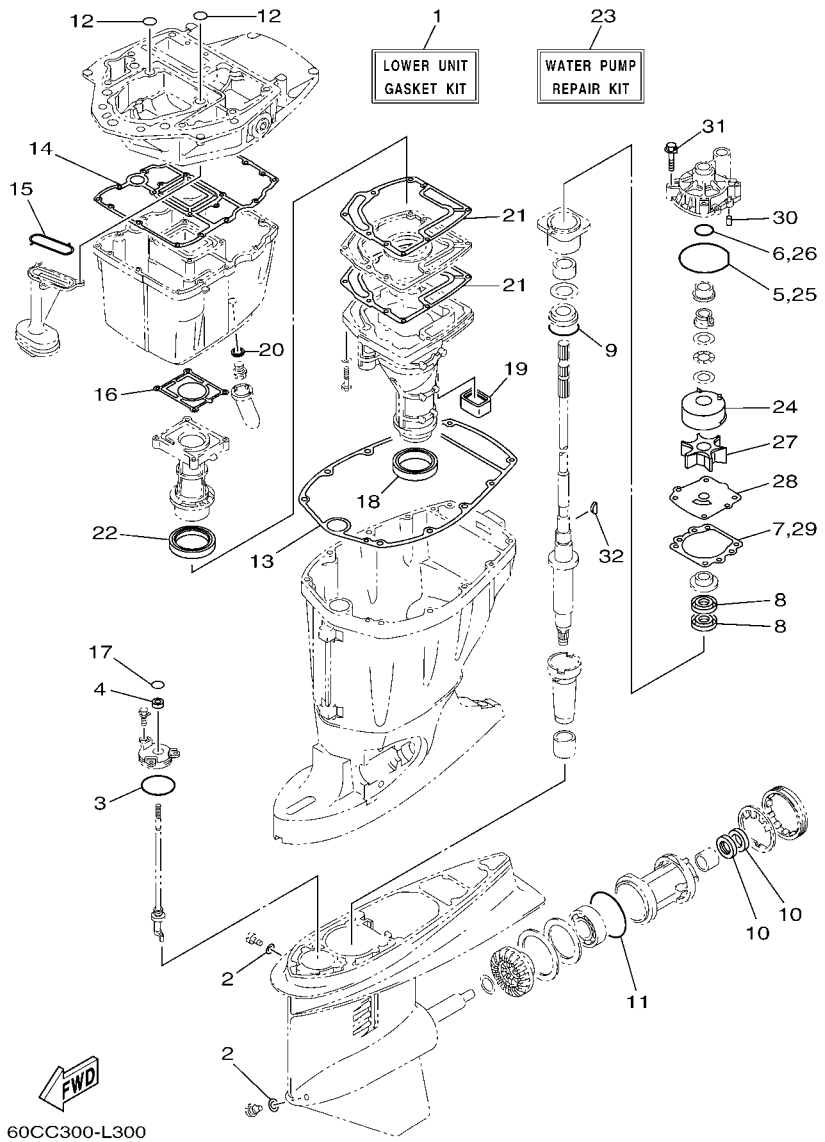

FIG. 30 REPAIR KIT 3 — KITS DE PEPARATION 3

REF. NO.	PART NO. N° PIECES	DESCRIPTION DESCRIPTION	60CC					REMARKS REMARQUES
1	68V–W0001–21	LOWER UNIT GASKET KIT POCHETTE DE JOINTS EMBASE	1					
2	90430–08020	.GASKET .JOINT	2					
3	93210–58144	.O-RING .JOINT TORIQUE	1					
4	93106–09014	.OIL SEAL .JOINT SPY	1					
5	93210–86M38	.O-RING .JOINT TORIQUE	1					
6	93210–37160	.O-RING .JOINT TORIQUE	1					
7	6E5–44315–A0	.GASKET, WATER PUMP .JOINT, POMPE A EAU	1					
8	93101–28M16	.OIL SEAL .JOINT SPY	2					
9	93210–55M14	.O-RING .JOINT TORIQUE	1					
10	93101–30M17	.OIL SEAL .JOINT SPY	2					
11	93210–86M39	.O-RING .JOINT TORIQUE	1					
12	93210–19MJ1	.O-RING .JOINT TORIQUE	2					
13	67F–45113–00	.GASKET, UPPER CASING .JOINT, TUBE D'ARBRE	1					
14	68V–15312–00	.GASKET, OIL PAN .JOINT DE VENTILATEUR D'HUILE	1					
15	67F–13415–00	.SEAL, OIL STRAINER .JOINT, FILTRE A HUILE	1					
16	67F–41133–A1	.GASKET, EXHAUST MANIFOLD 1 .JOINT, PIPE D'ECHAPPEMENT	1					
17	93210–09165	.O-RING .JOINT TORIQUE	1					
18	68V–45123–00	.GASKET, MUFFLER .JOINT, POT DE DETENTE	1					
19	67F–45127–00	.SEAL .JOINT	1					
20	90430–14M09	.GASKET .JOINT	1					
21	67F–41134–A0	.GASKET, EXHAUST MANIFOLD .JOINT, PIPE D'ECHAPPEMENT	2					
22	67F–41138–00	.SEAL, EXT. 1 .JOINT DE GROUPE 1	1					
23	60C–W0078–00	WATER PUMP REPAIR KIT KIT DE REPARATION DE LA POMPE	1					
24	6R3–44322–42	.INSERT, CARTRIDGE .CUVETTE	1					
25	93210–86M38	.O-RING .JOINT TORIQUE	1					
26	93210–37160	.O-RING .JOINT TORIQUE	1					
27	6E5–44352–01	.IMPELLER .TURBINE	1					

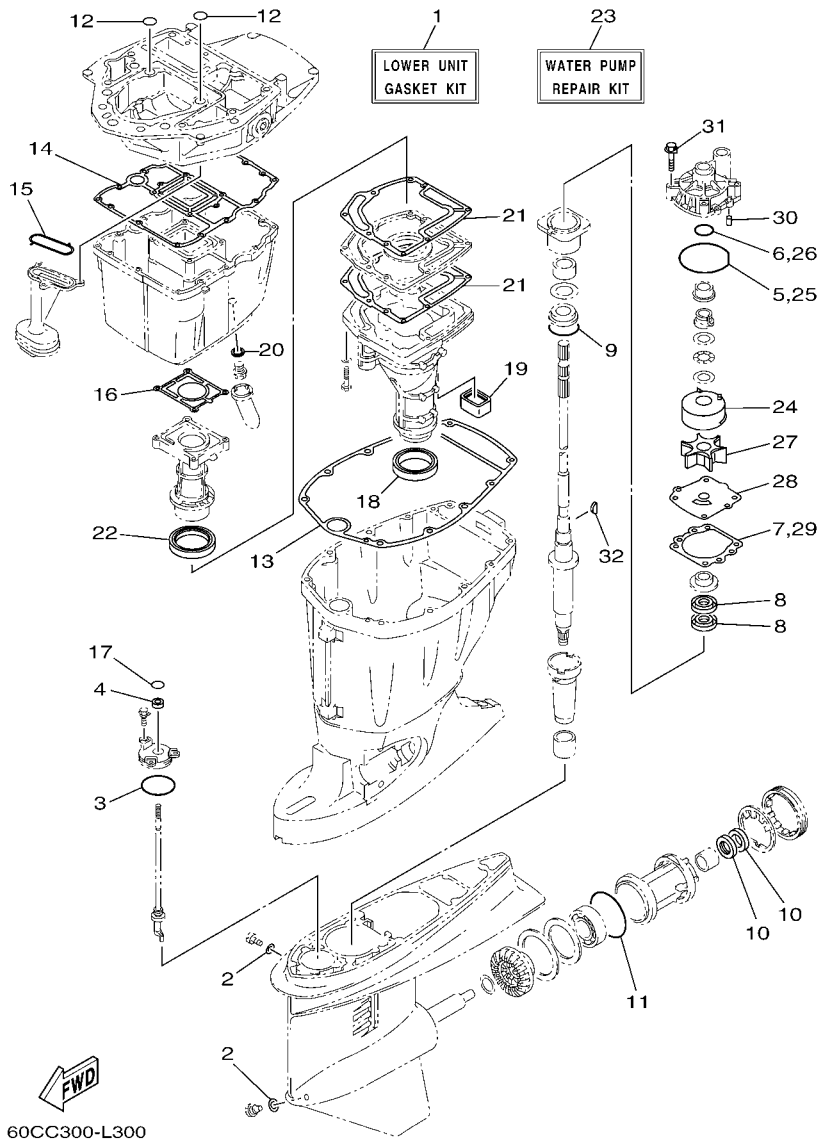

FIG. 30 REPAIR KIT 3 — KITS DE PEPARATION 3

REF. NO.	PART NO. N° PIECES	DESCRIPTION DESCRIPTION	60CC					REMARKS REMARQUES
28	60C–44323–40	.OUTER PLATE, CARTRIDGE .PLAQUE EXTERIEURE	1					
29	6E5–44315–A0	.GASKET, WATER PUMP .JOINT, POMPE A EAU	1					
30	93606–12019	.PIN, DOWEL .GOUPILLE	2					
31	90119–08M14	.BOLT, WITH WASHER .BOULON, AVEC RONDELLE	4					
32	90280–04M05	.KEY, WOODRUFF .CLAVETTE, DEMI-LUNE	1					

NUMERICAL INDEX
INDEX NUMERIQUE

PART NO. N° PIECES	REF. NO.
6D8–11110–13–9S	4 – 2
62Y–11119–00	2 – 8
67F–11133–10	4 – 3
67F–11168–00	4 – 19
67F–11181–03	4 – 14
	28 – 3
6D8–11191–01–9S	4 – 18
67F–11192–01	4 – 26
69J–11301–00	2 – 35
	4 – 8
6E5–11325–00	2 – 13
67F–11325–01	2 – 36
	4 – 9
67F–11328–00	2 – 37
	4 – 10
68V–11351–00	2 – 44
	28 – 11
6D8–11356–01	4 – 23
	28 – 15
676–11372–00	2 – 16
6D8–11411–00	3 – 1
6D8–11416–00	3 – 4
6D8–11416–10	3 – 4
6D8–11416–20	3 – 4
6D8–11417–00	3 – 5
6D8–11417–10	3 – 5
6D8–11417–20	3 – 5
6D8–11417–30	3 – 5
6D8–11418–00	3 – 6
6D8–11418–10	3 – 6
6D8–11418–20	3 – 6
6D8–11536–00	5 – 22
67F–11537–00	5 – 13
67F–11590–00	5 – 17
67F–11595–00	5 – 20
60C–11603–00	3 – 9
60C–11604–00	3 – 9
6D8–11656–00	3 – 10
6D8–11656–10	3 – 10
6D8–11656–20	3 – 10
6D8–11656–30	3 – 10
6D8–12111–00	5 – 1
6D8–12113–00	5 – 4
6D8–12116–00	5 – 3
26H–12117–00	5 – 5
4G0–12118–00	5 – 6
6D8–12121–00	5 – 2
6D8–12153–00	5 – 9

PART NO. N° PIECES	REF. NO.
6D8–12153–10	5 – 9
6D8–12153–20	5 – 9
6D8–12153–30	5 – 9
6D8–12153–40	5 – 9
6D8–12153–50	5 – 9
6D8–12153–60	5 – 9
6D8–12153–70	5 – 9
6D8–12153–80	5 – 9
6D8–12153–90	5 – 9
6D8–12153–A0	5 – 9
6D8–12153–B0	5 – 9
6D8–12153–C0	5 – 9
6D8–12153–D0	5 – 9
6D8–12153–E0	5 – 9
6D8–12153–F0	5 – 9
6D8–12153–G0	5 – 9
6D8–12153–H0	5 – 9
6D8–12153–J0	5 – 9
6D8–12153–K0	5 – 9
6D8–12153–L0	5 – 9
6D8–12153–M0	5 – 9
6D8–12153–N0	5 – 9
6D8–12153–P0	5 – 9
6D8–12153–R0	5 – 9
6D8–12153–S0	5 – 9
6D8–12153–T0	5 – 9
6D8–12153–U0	5 – 9
6D8–12153–V0	5 – 9
6D9–12171–00	5 – 10
6D8–12181–00	5 – 11
67F–12411–01	4 – 28
67F–12412–00	4 – 29
68V–12413–00–9S	4 – 30
6G5–12416–00	2 – 29
67F–12435–A0	2 – 33
	28 – 6
67F–1243A–00	2 – 41
67F–1246A–01–9S	2 – 32
67F–12535–01	15 – 32
68T–12572–00	15 – 31
6R3–12581–00	15 – 40
6R3–12582–00	15 – 41
6R3–12583–00	15 – 42
67F–13119–01	22 – 17
63P–13131–00	9 – 19
67F–13149–00	22 – 21
67F–13183–00	8 – 2
67F–13300–10	22 – 12

PART NO. N° PIECES	REF. NO.
67F–13314–02	22 – 13
67F–13329–00	22 – 15
67F–13338–00	22 – 23
67F–13339–00	22 – 22
67F–13411–00	22 – 8
67F–13415–00	22 – 11
	30 – 15
67F–13434–20	1 – 19
68V–13437–62	10 – 23
5GH–13440–00	2 – 45
67F–13473–01	22 – 14
67F–13495–00	22 – 16
67F–13631–03	22 – 20
67F–13641–00–94	6 – 6
67F–13645–00	6 – 11
	28 – 12
67F–13769–00	22 – 18
67F–13914–00	22 – 19
67F–1412A–00	8 – 1
67F–14146–00	7 – 6
67F–14147–00	7 – 7
	29 – 2
67F–14159–00	7 – 26
	29 – 9
67F–14178–00	7 – 33
676–14186–00	7 – 25
	29 – 8
67F–14189–00	8 – 11
67F–14216–00	6 – 2
67F–14239–00	6 – 3
	29 – 16
67F–14243–00	6 – 1
67F–14271–00	6 – 4
67F–14291–00	27 – 6
60C–14294–00	8 – 15
60C–14298–00	8 – 16
67F–14325–00	7 – 45
67F–14349–00	8 – 3
67F–14349–10	8 – 4
67F–14349–20	8 – 5
67F–14349–30	8 – 6
67F–14349–40	8 – 7
67F–14349–50	8 – 8
67F–14349–60	8 – 9
67F–14349–70	8 – 12
67F–14369–00	7 – 44
67F–14371–01	7 – 39
	29 – 17

PART NO. N° PIECES	REF. NO.
67F–14378–00	7 – 31
67F–14380–01	7 – 32
67F–14397–00	7 – 17
	29 – 4
67F–14398–00	7 – 35
	29 – 13
67F–14398–10	7 – 37
	29 – 14
67F–14398–20	7 – 38
	29 – 15
67F–14398–30	7 – 40
	29 – 19
67F–14440–00	6 – 18
63V–14523–00	7 – 41
6H4–14548–00	7 – 27
	29 – 10
67F–14555–00	7 – 15
697–14555–00	7 – 5
67F–14556–00	7 – 16
67F–14565–00	7 – 36
67F–14567–00	7 – 14
6K7–14573–00	13 – 18
6H2–14578–00	7 – 18
67F–14585–00	8 – 10
60C–14590–02	7 – 29
	29 – 11
67F–14592–00	7 – 34
60C–14711–30–9S	21 – 11
60C–14901–00	7 – 1
60C–14902–00	7 – 2
60C–14904–00	7 – 3
67F–14923–00	7 – 4
67F–14943–83	7 – 13
67F–14947–00	7 – 12
67F–14948–04	7 – 11
676–14966–00	7 – 9
67F–14980–00	7 – 19
67F–14980–10	7 – 20
67F–14984–00	7 – 21
	29 – 5
6H4–14985–01	7 – 24
	29 – 7
6H3–14992–00	7 – 22
67F–14998–00	7 – 43
67F–15100–03	2 – 2
67F–15142–00	2 – 12
68V–15311–00–CA	22 – 1
68V–15312–00	22 – 7

PART NO. N° PIECES	REF. NO.
68V–15312–00	30 – 14
63P–15316–00	22 – 2
6D8–15362–00	22 – 28
6G8–15363–00	4 – 33
67F–15373–00	6 – 12
68V–24149–00	9 – 26
6YK–24201–03	25 – 1
67F–24251–02	27 – 13
6YK–24260–01	25 – 4
6YL–24268–01	25 – 2
6YK–24306–44	25 – 7
6D8–24311–00	9 – 15
67F–24312–00	15 – 43
61A–24316–00	2 – 26
6YL–24329–00	25 – 6
68F–24356–00	8 – 14
68V–24374–00	9 – 22
67F–24377–00	27 – 10
6R3–24377–00	9 – 2
688–24378–00	2 – 25
	8 – 17
6D8–24410–10	9 – 16
68V–24411–00	9 – 21
68V–24412–00	9 – 17
68V–24413–10	9 – 23
6D8–24414–00	9 – 24
68V–24423–00	9 – 20
68V–24444–00	9 – 25
68V–24454–00	9 – 18
68V–24469–01	9 – 9
67F–2451B–00	27 – 14
68V–24521–01	9 – 6
60C–24560–01	9 – 5
61N–24563–10	9 – 7
60C–24566–00	9 – 11
6YK–24610–01	25 – 3
67F–28100–01	9 – 30
67F–2812A–00	12 – 23
67F–28199–7F–D0	9 – 31
67F–28199–7F–E0	9 – 31
67F–28199–7F–F0	9 – 31
67F–28199–7F–G0	9 – 31
67F–28199–7F–H0	9 – 31
67F–28199–7F–S0	9 – 31
67F–28199–8H–K0	9 – 32
67F–28199–8H–L0	9 – 32
67F–28199–8H–M0	9 – 32
67F–28199–8H–N0	9 – 32

PART NO. N° PIECES	REF. NO.
67F–28199–8H–P0	9 – 32
67F–28199–8H–R0	9 – 32
67F–41113–50–9S	2 – 15
67F–41114–A2	2 – 17
	28 – 8
60C–41131–01–9S	21 – 7
67F–41133–A1	21 – 8
	30 – 16
67F–41134–A0	21 – 16
	30 – 21
67F–41137–02–CA	21 – 3
67F–41138–00	21 – 18
	30 – 22
67F–41213–01	16 – 41
67F–41237–00	16 – 38
682–41237–00	16 – 39
67F–41661–00–94	16 – 35
67F–42154–00–94	16 – 26
68V–42510–31–8D	18 – 9
60C–42610–20	1 – 1
67F–42613–00–8D	1 – 10
67F–42615–00	1 – 13
61N–42628–00	1 – 12
67F–42628–00	1 – 18
67F–42647–00	1 – 2
67F–42649–00	1 – 8
68V–42652–00	1 – 5
67F–42662–00	1 – 9
60C–42677–10	1 – 14
60C–42678–10	1 – 15
6D6–42681–00	1 – 17
67F–42710–03–8D	15 – 1
648–42715–00	16 – 23
61A–42716–00	15 – 45
67F–42717–00	15 – 25
67F–42724–00	21 – 2
68V–42725–00	15 – 19
6H1–42726–21	15 – 22
6G1–42727–00	21 – 6
67F–42738–00–8D	15 – 17
67F–42741–01–8D	15 – 46
6H4–42748–00	15 – 24
68F–42753–00	15 – 52
67F–42756–01	15 – 20
6AH–42794–40	15 – 54
6AH–42794–50	15 – 55
67F–42815–00–8D	15 – 5
67F–42816–00–8D	15 – 6

NUMERICAL INDEX
INDEX NUMERIQUE

PART NO. N° PIECES	REF. NO.
68V–42818–01	15 – 9
67F–42828–00–8D	15 – 7
68V–43111–01–8D	17 – 1
68V–43112–01–8D	17 – 9
64E–43126–00	17 – 35
64E–43131–01	17 – 14
64E–43139–10	18 – 1
64D–43144–00	15 – 14
66T–43144–00	17 – 25
6G5–43148–00	17 – 30
6G5–43181–02	17 – 27
6G5–43185–02	17 – 28
64E–43311–20–8D	17 – 21
63P–43376–00	18 – 6
68V–43800–05	19 – 1
64E–43802–00	20 – 8
64E–43805–01	20 – 37
64E–4380F–00	20 – 33
64E–4380J–00	20 – 30
64E–43810–02	19 – 6
64E–43811–02	19 – 7
6E5–43814–02	19 – 14
64E–43816–00	20 – 17
64E–43817–00	19 – 5
64E–43817–11	20 – 19
6BC–43818–00	19 – 33
64E–4381G–00	19 – 28
64E–43820–02	19 – 16
64E–43821–02	19 – 17
64E–43822–00	19 – 18
64E–43825–03	19 – 2
64E–43827–00	20 – 22
64E–43828–01	19 – 23
64E–43829–01	19 – 24
64E–4382G–00	19 – 30
68V–43830–01	20 – 4
64E–43831–00	20 – 2
6AW–43841–00	20 – 7
64E–43843–00	20 – 6
64E–43843–10	20 – 38
64E–4384J–00	19 – 19
64E–43850–00	20 – 15
66Y–43851–00	20 – 11
68V–43855–00	20 – 14
64E–43858–00	20 – 12
6AW–43858–00	20 – 18
6E5–43858–00	19 – 29
72X–43858–00	20 – 5

PART NO. N° PIECES	REF. NO.
64E–43859–00	20 – 13
64E–43860–01	20 – 20
6E5–43862–00	19 – 11
	19 – 15
6G5–43863–00	20 – 10
6E5–43864–00	19 – 21
6G5–43864–00	19 – 20
64E–43865–00	20 – 16
6G5–43865–01	20 – 35
64E–43866–00	19 – 10
64E–43867–00	19 – 9
64E–43868–00	20 – 3
64E–43869–00	19 – 27
6H1–4386K–10	20 – 29
6E5–43872–00	19 – 13
64E–43873–00	20 – 24
6E5–43874–01	19 – 22
6AW–43875–00	20 – 25
64E–43879–01	20 – 27
64E–43879–11	20 – 26
64E–4387A–00	20 – 23
68V–43880–04	20 – 28
64E–43883–00	19 – 12
64E–4388E–01	19 – 26
64E–4388E–11	20 – 1
6AW–4388J–00	19 – 3
64E–43891–00	20 – 31
64E–43892–00	20 – 34
6E5–43896–00	20 – 9
64E–43897–00	19 – 25
64E–43898–00	19 – 8
67F–44117–00–94	16 – 5
68V–44118–00–94	16 – 19
60C–44120–30	16 – 14
67F–44121–00	16 – 11
688–44122–00	16 – 8
67F–44135–00	16 – 42
6L6–44150–02	23 – 17
61A–44311–01	23 – 23
6E5–44312–00	24 – 4
	24 – 21
6E5–44315–A0	23 – 30
	30 – 7
	30 – 29
6R3–44322–42	23 – 24
	30 – 24
60C–44323–40	23 – 29
	30 – 28

PART NO. N° PIECES	REF. NO.
6E5–44352–01	23 – 27
	30 – 27
6BC–44361–30	24 – 2
6E5–44365–00	24 – 3
	24 – 20
6E5–44366–00	24 – 1
6BL–44391–00	15 – 23
67F–44514–01	18 – 26
67F–44526–00	18 – 29
6G5–44526–00	17 – 3
67F–44533–00	18 – 31
68V–44551–00–8D	18 – 14
68V–44553–00–8D	18 – 24
61A–44555–01–94	18 – 17
61A–44575–00	18 – 16
68V–45111–31–8D	21 – 20
67F–45113–00	21 – 28
	30 – 13
68V–45123–00	21 – 12
	30 – 18
67F–45127–00	21 – 19
	30 – 19
67F–45151–00	21 – 25
6C5–45155–00	21 – 27
67F–45181–00–CA	21 – 17
688–45214–02	24 – 11
688–45215–02	24 – 12
6G5–45251–02	17 – 2
60C–45300–32–8D	23 – 1
6E5–45301–07–8D	23 – 2
6E5–45318–00	21 – 23
6E5–45321–00	23 – 13
6E5–45331–00–9S	23 – 33
6E5–45332–00–CA	23 – 56
688–45341–10	23 – 7
6E5–45344–00	23 – 39
6E5–45371–01	24 – 15
688–45375–00	24 – 10
663–45376–00	24 – 9
6E5–45378–00	23 – 10
688–45383–02	23 – 66
688–45384–02	23 – 67
68V–45501–30	23 – 42
61A–45527–00	23 – 22
6E5–45536–00	23 – 9
61A–45538–00	23 – 19
68V–45551–00	23 – 43
68V–45560–00	23 – 45

PART NO. N° PIECES	REF. NO.
6E5–45567–01	23 – 5
6E5–45567–10	23 – 5
6E5–45567–20	23 – 5
6E5–45567–30	23 – 5
6E5–45567–40	23 – 5
6E5–45567–50	23 – 5
6E5–45567–60	23 – 5
68V–45571–00	23 – 58
6E5–45576–00	23 – 59
6L6–45577–00	23 – 63
6L6–45577–10	23 – 63
6L6–45577–20	23 – 63
6L6–45577–30	23 – 63
6L6–45577–40	23 – 63
6L6–45577–50	23 – 63
6L6–45577–60	23 – 63
6E5–45587–01	23 – 36
6E5–45587–10	23 – 36
6E5–45587–20	23 – 36
6E5–45587–30	23 – 36
6E5–45587–40	23 – 36
6E5–45587–50	23 – 36
6E5–45587–60	23 – 36
6E5–45611–01	23 – 47
68V–45631–01	23 – 54
6E5–45633–01	23 – 55
6E5–45634–02	23 – 48
688–45930–02	24 – 27
688–45932–60	24 – 27
6E5–45941–00	24 – 27
6E5–45943–00	24 – 27
6E5–45945–01	24 – 27
6E5–45947–00	24 – 27
6E5–45949–00	24 – 27
6E5–45952–00	24 – 27
6E5–45954–00	24 – 27
6E5–45956–00	24 – 27
688–45970–03	24 – 27
688–45972–02	24 – 27
688–45974–02	24 – 27
688–45976–01	24 – 27
688–45978–60	24 – 27
63P–45987–00	24 – 22
688–45997–01	24 – 23
67F–46241–00	5 – 16
663–48344–00	16 – 3
	16 – 24
68V–48511–00	18 – 33

PART NO. N° PIECES	REF. NO.
67F–48538–00	16 – 1
66T–81328–00	10 – 8
445–81328–20	10 – 7
67F–8132G–01	13 – 1
6D8–81332–00	10 – 17
67F–81337–01	10 – 19
63D–81345–20	10 – 5
67F–81673–00	10 – 9
67F–81800–02	14 – 1
67F–81801–00	14 – 5
67F–81807–00	14 – 10
67F–81808–00	14 – 8
67F–81809–00	14 – 19
67F–81810–00	14 – 3
67F–81813–00	14 – 6
67F–81820–00	14 – 7
67F–81821–00	14 – 13
6K7–81826–11	14 – 24
67F–81828–00	14 – 25
67F–81830–00	14 – 17
67F–81832–00	14 – 11
67F–81836–00	14 – 12
67F–81839–00	14 – 21
67F–8183R–00	14 – 16
60V–8183T–00	14 – 18
68F–81840–00	14 – 4
67F–81841–00	14 – 14
67F–81842–00	14 – 20
67F–81846–00	14 – 26
67F–81850–00	14 – 2
67F–81857–00	14 – 9
67F–81869–00	14 – 23
67F–81891–00	14 – 15
67F–81916–02	12 – 35
67F–81930–00	27 – 3
67F–81941–01	14 – 22
67F–81942–00	12 – 22
67F–81948–01	12 – 19
6G1–8194A–10	12 – 3
6G1–81952–00	12 – 6
67F–81953–00	12 – 16
6E5–8195B–01	12 – 7
6E5–8195C–01	12 – 10
67F–81960–12	11 – 24
67F–81971–00	27 – 5
6AH–81994–40	10 – 26
6AH–81994–50	10 – 27
6AH–81995–40	10 – 24

PART NO. N° PIECES	REF. NO.
6AH–81995–50	10 – 25
6AG–81996–00	10 – 28
67F–82105–00	12 – 2
67F–82116–00	12 – 15
6Y5–82117–00	26 – 12
6G5–82119–00	12 – 14
682–82119–01	12 – 1
6E5–82148–00	17 – 6
	17 – 10
68V–82149–30	17 – 24
1E6–82151–00	26 – 14
67F–82151–00	12 – 25
67F–82151–10	12 – 26
67F–8215B–00	12 – 27
68V–82317–00	11 – 2
67F–82341–00	11 – 15
67F–82342–00	11 – 16
67F–82343–00	11 – 19
67F–82344–00	11 – 20
67F–82361–00	11 – 17
	11 – 21
	11 – 23
67F–82362–00	11 – 18
	11 – 22
68V–82504–00	13 – 26
67F–82560–00	27 – 4
63D–82563–10	13 – 27
6E5–82587–00	13 – 28
67F–82588–00	12 – 31
6E5–82588–00	15 – 27
	27 – 17
60C–82590–10	12 – 24
6Y5–8350T–90	26 – 1
6Y5–83533–T2	26 – 9
6Y5–83553–M0	26 – 13
6Y5–83557–10	26 – 17
6E5–83558–00	24 – 18
6E5–83558–10	23 – 12
6Y5–8355X–T1	26 – 5
	26 – 10
6Y5–83570–S5	26 – 6
67F–83614–00	13 – 29
67F–83626–00	12 – 37
67F–83635–00	13 – 19
6Y5–83653–30	26 – 15
67H–83672–01	18 – 3
67F–83790–11	27 – 1
67F–83792–00	27 – 2

NUMERICAL INDEX
INDEX NUMERIQUE

PART NO. N° PIECES	REF. NO.
72X–85075–L0	20 – 21
67F–85510–01	10 – 4
663–85518–00	16 – 27
67F–85540–03	11 – 1
689–85547–00	9 – 1
67F–85550–00	10 – 1
67F–85560–01	10 – 2
67F–85570–00	11 – 5
67F–85580–00	10 – 3
68V–85753–00	13 – 6
	28 – 7
67F–85757–00	13 – 5
67F–85790–00	13 – 4
61A–85885–00	13 – 13
6Y5–87122–S0	26 – 11
66T–87149–00	12 – 13
K1C–A3275–00	3 – 8
K0A–A3721–00	5 – 7
K0A–A3722–00	5 – 8
60C–W0001–04	28 – 1
68V–W0001–21	30 – 1
6D6–W0070–00	1 – 16
60C–W0078–00	30 – 23
67F–W0093–02	29 – 1
67F–W009A–24–9S	4 – 1
60C–W009B–07–9S	2 – 1
60C–W1164–20	3 – 7
60C–W1164–30	3 – 7
90101–12M05	17 – 38
90105–06M07	2 – 38
	4 – 11
90105–10M00	24 – 16
90109–06M80	15 – 49
90109–06M81	15 – 28
	27 – 18
90109–06M82	15 – 8
90109–06M86	13 – 30
	15 – 15
	15 – 21
	15 – 30
	15 – 38
	16 – 2
90109–06M96	15 – 18
90109–12007	18 – 28
90109–14007	18 – 21
90116–10175	18 – 34
90119–06M10	23 – 16
90119–06M59	11 – 4

PART NO. N° PIECES	REF. NO.
90119–06M82	6 – 19
90119–06M83	9 – 29
90119–06M92	10 – 22
90119–06MA2	2 – 34
90119–06MA4	2 – 18
90119–07234	4 – 7
90119–07235	4 – 5
90119–08091	18 – 27
90119–08M14	23 – 32
	30 – 31
90119–08M22	15 – 2
90119–08M58	21 – 1
90119–08M59	6 – 21
90119–08M66	2 – 5
90119–08M91	4 – 17
90119–10049	18 – 25
90119–10050	5 – 14
90119–10M08	21 – 21
90119–10M72	5 – 21
90119–10M88	2 – 4
90119–10M89	24 – 8
90152–05M07	24 – 13
90155–10005	4 – 16
90157–05M16	25 – 5
90159–05059	18 – 2
90159–06M28	15 – 48
90159–06M29	4 – 27
	12 – 36
90167–06002	15 – 33
90170–06M30	12 – 4
	12 – 8
	12 – 11
90170–16M01	23 – 44
90170–40008	5 – 23
90171–18M04	24 – 25
90179–06M24	1 – 11
90179–24002	10 – 16
90185–05002	24 – 14
90185–10051	18 – 35
90185–12M12	18 – 32
90185–22M11	17 – 19
90201–05M03	13 – 22
90201–06068	15 – 12
	16 – 29
90201–06M31	16 – 46
90201–09M02	16 – 17
90201–10060	19 – 31
90201–10M02	16 – 45

PART NO. N° PIECES	REF. NO.
90201–12426	17 – 40
90201–12M09	18 – 30
90201–13M01	17 – 39
90201–15M58	18 – 20
90201–16M55	18 – 19
90201–22M01	23 – 20
90201–24014	10 – 15
90201–26M59	17 – 18
90201–30M92	23 – 64
90201–38M60	18 – 10
90202–07M07	16 – 9
90202–32M19	18 – 18
90202–40M47	18 – 13
90204–06M00	12 – 5
	12 – 9
	12 – 12
90206–10M04	16 – 47
90206–12M00	16 – 30
90206–15M18	15 – 11
90206–22M19	23 – 21
90249–06M19	17 – 31
90250–08M07	23 – 53
90280–04008	5 – 24
90280–04M05	23 – 28
	30 – 32
90280–05015	10 – 14
90282–04010	23 – 65
90338–11007	15 – 26
90340–08002	23 – 6
90340–14M06	2 – 6
	22 – 3
90344–51019	4 – 4
90386–06M12	16 – 12
90386–10M16	17 – 29
90386–12069	16 – 32
90386–15M73	15 – 10
90386–22M98	17 – 36
	19 – 34
90386–25M31	17 – 17
90386–38M32	18 – 12
90386–90M90	16 – 16
90387–05M00	13 – 20
90387–06119	11 – 3
90387–06263	22 – 10
90387–06M43	15 – 51
90387–06M71	10 – 20
90387–06M82	16 – 43
90387–08M37	15 – 4

PART NO. N° PIECES	REF. NO.
90387–10M05	17 – 32
90401–20007	2 – 46
90430–06014	6 – 8
90430–06M03	2 – 39
	4 – 12
90430–08020	23 – 8
	30 – 2
90430–14115	2 – 7
	28 – 5
90430–14M09	22 – 4
	30 – 20
90445–076K2	24 – 17
90445–07ME9	23 – 11
90445–10016	2 – 27
90445–10024	2 – 19
90445–10M16	8 – 18
90445–10MG6	8 – 19
90445–10MG7	8 – 20
90445–11M49	27 – 12
90445–13M27	9 – 4
90445–15M03	5 – 19
90445–16M07	8 – 21
90462–06018	15 – 34
90462–10060	2 – 21
90464–09M47	13 – 16
	13 – 31
90464–10010	2 – 24
90464–10M57	8 – 22
90464–20258	15 – 53
90465–06M86	11 – 12
	13 – 9
90465–08028	27 – 8
90465–08M23	15 – 29
90465–08M63	17 – 22
90465–08M83	8 – 23
90465–11M10	2 – 20
	2 – 28
	9 – 3
	9 – 10
	9 – 27
	13 – 12
	13 – 17
	15 – 44
	17 – 20
	18 – 5
	24 – 19
	26 – 16
	27 – 11

PART NO. N° PIECES	REF. NO.
90465–11M10	27 – 15
90465–11M59	2 – 42
	6 – 13
	8 – 13
90465–12M03	6 – 15
90465–13M11	12 – 34
90465–13M18	15 – 39
90465–13M36	27 – 9
90465–13M60	27 – 7
90467–10M04	27 – 16
90467–20M15	2 – 43
	6 – 14
90468–18008	16 – 4
	16 – 10
	16 – 13
	16 – 25
90480–10M23	13 – 21
90480–12072	4 – 22
90480–12314	2 – 11
90480–13M24	15 – 50
90480–15M31	10 – 21
90480–20M05	2 – 31
90480–22M15	15 – 3
90501–10326	7 – 42
90501–12082	16 – 22
90501–16M11	2 – 30
90501–16M37	23 – 49
90506–14M24	17 – 34
90506–16M34	15 – 16
90506–16M39	5 – 18
91490–20015	16 – 18
91490–40030	24 – 26
91690–30018	16 – 28
91690–30020	17 – 33
91690–50014	6 – 10
91809–08006	4 – 6
92903–08100	14 – 32
92903–08600	14 – 28
	14 – 30
92907–04600	4 – 21
92990–04100	26 – 3
	26 – 7
92990–06100	1 – 3
92990–12600	16 – 31
92990–18200	24 – 24
92995–05100	13 – 24
92995–05600	13 – 15
	13 – 25

PART NO. N° PIECES	REF. NO.
92995–06100	10 – 12
	11 – 7
	11 – 10
	11 – 26
	11 – 29
	12 – 29
	15 – 36
	17 – 5
92995–06200	15 – 37
92995–06600	1 – 7
	2 – 10
	2 – 23
	4 – 25
	4 – 32
	6 – 17
	8 – 25
	9 – 14
	10 – 13
	11 – 8
	11 – 11
	11 – 14
	11 – 27
	11 – 30
	12 – 18
	12 – 21
	12 – 30
	12 – 33
	13 – 3
	13 – 8
	13 – 11
	16 – 7
	16 – 34
	16 – 37
	17 – 8
	17 – 12
	21 – 10
	21 – 14
	22 – 25
92995–08100	17 – 16
92995–08600	23 – 41
92995–10100	24 – 7
92995–10600	18 – 8
92995–14600	18 – 23
93101–28M16	23 – 34
	30 – 8
93101–30M17	23 – 61
	30 – 10
93101–48001	3 – 3

NUMERICAL INDEX
INDEX NUMERIQUE

PART NO. N° PIECES	REF. NO.
93101–48001	28 – 10
93102–08M43	20 – 36
93102–38008	5 – 15
	28 – 4
93102–48008	3 – 2
	28 – 9
93106–09014	23 – 15
	30 – 4
93210–04228	7 – 30
	29 – 12
93210–04230	7 – 23
	29 – 6
93210–09165	16 – 15
	30 – 17
93210–10M74	19 – 4
93210–19MJ1	22 – 27
	30 – 12
93210–24M79	4 – 34
	28 – 2
93210–30682	9 – 28
	28 – 14
93210–32738	9 – 8
93210–37160	23 – 26
	30 – 6
	30 – 26
93210–37MH7	18 – 11
93210–40M10	6 – 5
	29 – 18
93210–41MJ2	6 – 20
	28 – 13
93210–55M14	23 – 38
	30 – 9
93210–58144	23 – 14
	30 – 3
93210–86M38	23 – 25
	30 – 5
	30 – 25
93210–86M39	23 – 62
	30 – 11
93306–208U0	23 – 57
93315–425U7	23 – 46
93315–430U8	23 – 60
93315–628U9	23 – 3
93317–330U2	23 – 35
93332–000U7	23 – 4
93341–930V2	23 – 37
93410–22M11	17 – 37
93410–37M04	18 – 15

PART NO. N° PIECES	REF. NO.
93420–36M01	21 – 24
93501–04M02	16 – 21
93503–16003	23 – 52
93507–32009	23 – 50
93511–32017	23 – 51
93604–12M07	22 – 26
93605–10108	5 – 12
93606–12019	2 – 3
	22 – 6
	23 – 31
	30 – 30
93606–19M23	21 – 15
93608–12M05	24 – 5
93608–16M16	21 – 5
	21 – 22
93700–06M03	17 – 13
	17 – 23
94702–00391	4 – 35
95333–08600	14 – 31
95380–04600	26 – 4
	26 – 8
95380–05600	16 – 40
95380–06600	1 – 4
	15 – 47
95380–08600	9 – 12
95380–12600	17 – 41
95380–14600	18 – 22
95780–10300	18 – 7
95812–06025	22 – 9
95895–06010	21 – 29
97013–08016	14 – 29
97013–08045	14 – 27
97075–06030	21 – 13
97075–06070	21 – 9
97075–10045	24 – 6
97095–06008	15 – 35
97095–06010	6 – 7
	17 – 7
	17 – 26
97095–06012	1 – 6
	2 – 22
	6 – 16
	8 – 24
	11 – 13
	12 – 32
	13 – 10
	16 – 33
97095–06016	9 – 13

PART NO. N° PIECES	REF. NO.
97095–06016	11 – 28
	12 – 17
	12 – 20
	12 – 28
	13 – 2
	13 – 7
	15 – 13
97095–06020	2 – 9
	11 – 9
97095–06025	4 – 31
	11 – 25
	16 – 36
97095–06030	4 – 24
	10 – 11
	11 – 6
	17 – 4
97095–06035	16 – 44
97095–06040	16 – 6
97095–06045	22 – 24
97095–08020	17 – 15
97095–08025	23 – 40
97575–06525	16 – 20
	22 – 5
97575–08535	6 – 9
97575–08540	2 – 40
	4 – 13
	21 – 4
97575–10530	19 – 32
97607–04110	10 – 6
97607–04310	20 – 32
97803–04010	7 – 8
97885–05010	13 – 14
97885–05025	13 – 23
97885–06012	17 – 11
97885–06016	18 – 4
97980–04114	7 – 10
	29 – 3
97980–06216	21 – 26
97985–06210	10 – 18
98507–04008	4 – 20
98580–04008	7 – 28
98780–04016	2 – 14
99001–08600	23 – 18
99530–08012	10 – 10
99530–14016	4 – 15
9E450–04533	26 – 2

PART NO. N° PIECES	REF. NO.

PART NO. N° PIECES	REF. NO.

PART NO. N° PIECES	REF. NO.