YAMAHA

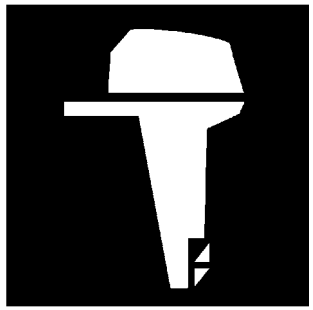

# PARTS CATALOGUE
# CATALOGUE DE PIECES DETACHEES

# F15C'12 (6AG6)
# F20B'12 (6AH6)

1L6AG-300F1

( )

YAMAHA GENUINE Parts & Accessories

2020/2/3

| NEWS NO. | DATE | COMMENT |
|---|---|---|
| PE0-OM-120058 | Nov.,19,2012 | MOD:FIG.9,18 LIST/ILLUSTRATION REVISION |
| PE0-OM-200002 | Jan.,28,2020 | MOD:F13.5B/F15C/F20B(6AF/6AG/6AH) CRANKSHAFT & PISTON LIST REVISION |

F15C/F20B
PARTS CATALOGUE
©2011 by Yamaha Motor Co., Ltd.
1st edition, April 2011
All rights reserved.
Any reprinting or unauthorized use
without the written permission of
Yamaha Motor Co., Ltd.
is expressly prohibited.
Printed in Japan.

F15C/F20B
CATALOGUE DE PIECES DETACHEES
©2011 par Yamaha Motor Co., Ltd.
1re édition, avril 2011
Tous droits réservés
Toute réimpression ou utilisation
non autorisée sans la permission écrite
de la Yamaha Motor Co., Ltd.
est formellement interdite.
Imprimé au Japon

# FOREWORD

This Parts Catalogue is related to the parts for the model(s) on the cover page. When you are ordering replacement parts, please refer to this Parts Catalogue and quote both part numbers and part names correctly.

1. Modifications or additions which have been made after the issue of the Parts Catalogue will be announced in the Parts News.
   It is advisable that you make the necessary corrections to the Parts Catalogue according to the Parts News.

2. Abbreviations
   The following abbreviations are used in this Parts Catalogue.

   "UR" Use specified parts number.
   "UN" Use as many as needed.
   "AP" Alternate Parts
   "LM" Locally Made (Parts need to be ordered locally)
   "F#" Frame No. (Applicable machine No.)
   "O/S" Over Size

3. The number of components for assembly
   - Parts, which are to be supplied in an assembly, are listed with a dot (.) in front of the part name as shown below.
   - The numeral appearing to the right of each component part indicates the quantity of parts for each assembly unit.

| PART NO. | DESCRIPTION | Q'TY | REMARKS |
|---|---|---|---|
| 2F5–83310–60 | FRONT FLASHER LIGHT ASSY | 2 | |
| 115–83311–60 | .BULB (6V–18W) | 1 | |

4. Applicable colours of graphics are represented in the "REMARKS" as shown below.

| PART NO. | DESCRIPTION | Q'TY | REMARKS |
|---|---|---|---|
| 2N4–24110–00–X5 | FUEL TANK COMP. | 2 | MXR |
| 3J1–24240–10 | .GRAPHIC, FUEL TANK | 1 | FOR MXR |

5. Note that the illustrations for reference in finding parts numbers are not to be used for assembling. When assembling, please use the applicable service manual.

6. The asterisk (*) before a reference number indicates modified items after the first edition.

7. Applicable Serial No.

   Engine Serial No.

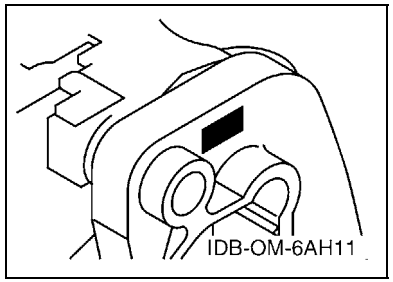


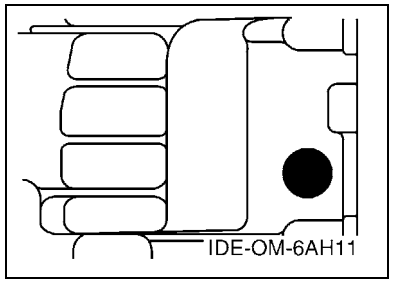


8. Applicable Engine Starting Serial No.

| Model | Serial No. | Model | Serial No. |
|---|---|---|---|
| F15C | 6AGK-1024647 | F20B | 6AHK-1033061 |
| | | | |
| | | | |
| | | | |
| | | | |

9. Applicable Colour Code

| Abbreviation | Colour Name | Colour Code |
|---|---|---|
| DBNM2 | DARK BLUISH GRAY METALLIC 2 | 004D |

10. Quantity Column Information

| Column No. | Name Of Q'ty Column | Applicable Model |
|---|---|---|
| 1 | MH | F15CMH,F20BMH |
| 2 | EH | F15CEH,F20BEH |
| 3 | E | F15CE,F20BE |
| 4 | EP | F15CEP,F20BEP |
| | | |

# AVANT–PROPOS

Ce catalogue de pièces détachées concerne les pièces pour le(s) modèle(s) indiqué(s) sur la page de couverture. Lorsque vous commandez des pièces de rechange, veuillez vous référer à ce catalogue de pieces détachées et indiquer clairement les numéros et les noms des pièces détachées.

1. Les modifications ou ajouts ayant été effectués après la parution du catalogue de pièces détachées seront décrits dans les Bulletins d'information concernant les pièces détachées.
   Il est recommandé que vous apportiez les corrections nécessaires au catalogue des pièces détachées en vous référant aux Bulletins d'information.

2. Abréviations
   Dans ce catalogue, les abréviations suivantes sont utilisées:

   "UR" Utiliser le numéro de pièces spécifié.
   "UN" Utiliser autant que nécessaire.
   "AP" Pièces de substitution
   "LM" Fabrication locale (les pièces doivent être commandées localement.)
   "F#" N° de cadre (applicable au N° de série)
   "O/S" Surdimensionné

3. Nombre de pièces d'un assemblage
   - Les pièces fournies comme composants d'un assemblage sont précédées d'un point (.) de la manière indiquée ci–dessous.
   - Le chiffre apparaissant à la droite de chaque composant indique la quantité de pièces pour chaque unité d'assemblage.

| N° PIECES | DESCRIPTION | QTE | REMARQUES |
|---|---|---|---|
| 2F5–83310–60 | ENS. CLIGNOTANT AVANT | 2 | |
| 115–83311–60 | .AMPOULE (6V–18W) | 1 | |

4. Les couleurs concernant les graphiques sont indiquées dans la colonne "REMARQUES", comme indiqué ci–dessous.

| N° PIECES | DESCRIPTION | QTE | REMARQUES |
|---|---|---|---|
| 2N4–24110–00–X5 | RESERVOIR A ESSENCE. | 2 | MXR |
| 3J1–24240–10 | .GRAPHIQUE | 1 | POUR MXR |

5. Veuillez noter que les illustrations sont indiquées à titre de référence pour trouver les numéros de pièces, non pour être utilisées lors de l'assemblage. Lors de l'assemblage, veuillez utiliser le manuel d'entretien adéquat.

6. L'astérisque (*) placé devant un numéro de référence indique des éléments qui ont été modifiés après la première édition.

7. N° de série applicable

   N° de Série du moteur

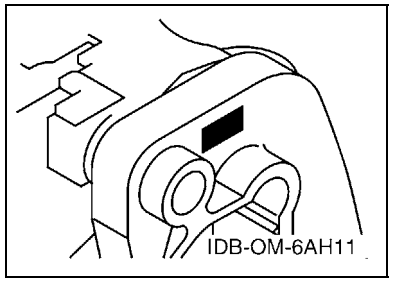


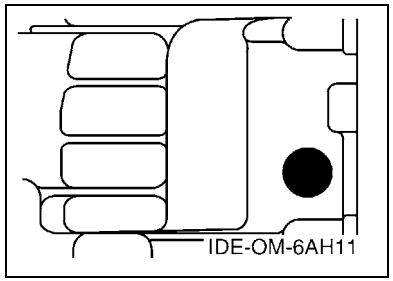


8. N° de série initial du moteur applicable

| Modèle | N° de série | Modèle | N° de série |
|---|---|---|---|
| F15C | 6AGK-1024647 | F20B | 6AHK-1033061 |
| | | | |
| | | | |
| | | | |
| | | | |

9. Code couleur applicable

| Abréviation | Nom de la couleur | Code couleur |
|---|---|---|
| DBNM2 | DARK BLUISH GRAY METALLIC 2 | 004D |

10. Informations relatives à la colonne Quantité

| N° de la colonne | Nom de la colonne Qté | Modèle applicable |
|---|---|---|
| 1 | MH | F15CMH,F20BMH |
| 2 | EH | F15CEH,F20BEH |
| 3 | E | F15CE,F20BE |
| 4 | EP | F15CEP,F20BEP |
| | | |

# CONTENTS

TOP COWLING ..... 1
CYLINDER & CRANKCASE 1 ..... 2
CRANKSHAFT & PISTON ..... 4
CYLINDER & CRANKCASE 2 ..... 5
VALVE ..... 6
INTAKE ..... 7
CARBURETOR ..... 8
OIL PUMP ..... 10
FUEL ..... 11
STARTER ..... 13
GENERATOR ..... 15
ELECTRICAL 1 ..... 16
ELECTRICAL 2 ..... 18
ELECTRICAL 3 ..... 20
ELECTRICAL 4 ..... 21
ELECTRICAL 5 ..... 23
STARTING MOTOR ..... 24
BOTTOM COWLING ..... 25
STEERING ..... 28
STEERING FRICTION ..... 30
CONTROL 1 ..... 31
CONTROL 2 ..... 33
REMO CON ATTACHMENT ..... 35
BRACKET 1 ..... 36
BRACKET 2 ..... 38
BRACKET 3 ..... 40
POWER TILT ASSY ..... 42
UPPER CASING ..... 45
OIL PAN ..... 46
LOWER CASING & DRIVE 1 ..... 47
LOWER CASING & DRIVE 2 ..... 50
FUEL TANK 1 ..... 52
FUEL TANK 2 ..... 53
STEERING GUIDE ..... 54
REMOTE CONTROL BOX ..... 55
REMOTE CONTROL ASSY ..... 56
REPAIR KIT 1 ..... 59
REPAIR KIT 2 ..... 60
REPAIR KIT 3 ..... 61

## INDEX

NUMERICAL INDEX ..... 63

# TABLE DES MATIERES

CAPOT SUPERIEUR ..... 1
CYLINDRE & CARTER 1 ..... 2
VILEBREQUIN & PISTON ..... 4
CYLINDRE & CARTER 2 ..... 5
SOUPAPE ..... 6
ADMISSION ..... 7
CARBURATEUR ..... 8
POMPE A HUILE ..... 10
CARBURANT ..... 11
DEMARREUR ..... 13
GENERATRICE ..... 15
PARTIE ELECTRIQUE 1 ..... 16
PARTIE ELECTRIQUE 2 ..... 18
PARTIE ELECTRIQUE 3 ..... 20
PARTIE ELECTRIQUE 4 ..... 21
PARTIE ELECTRIQUE 5 ..... 23
DEMARREUR ELECTRIQUE ..... 24
CAPOT INFERIEUR ..... 25
DIRECTION ..... 28
CUVETTE POIGNEE DE DIRECTION ..... 30
COMMANDE 1 ..... 31
COMMANDE 2 ..... 33
COMMANDE A DISTANCE ..... 35
SUPPORT 1 ..... 36
SUPPORT 2 ..... 38
SUPPORT 3 ..... 40
PUISSANCE PARER ET INCLINER ..... 42
FOURREAU ..... 45
VENTILATEUR D'HUILE ..... 46
BOITIER D'HELICE TRANSMISSION1 ..... 47
BOITIER D'HELICE TRANSMISSION2 ..... 50
RESERVOIR A CARBURANT 1 ..... 52
RESERVOIR A CARBURANT 2 ..... 53
FIXATION DE DIRECTION ..... 54
BOITIER DE COMMANDE A DISTANCE ..... 55
BOITIER DE COMMANDE A DISTANCE ..... 56
KITS DE REPARATION 1 ..... 59
KITS DE REPARATION 2 ..... 60
KITS DE PEPARATION 3 ..... 61

## INDEX

INDEX NUMERIQUE ..... 63

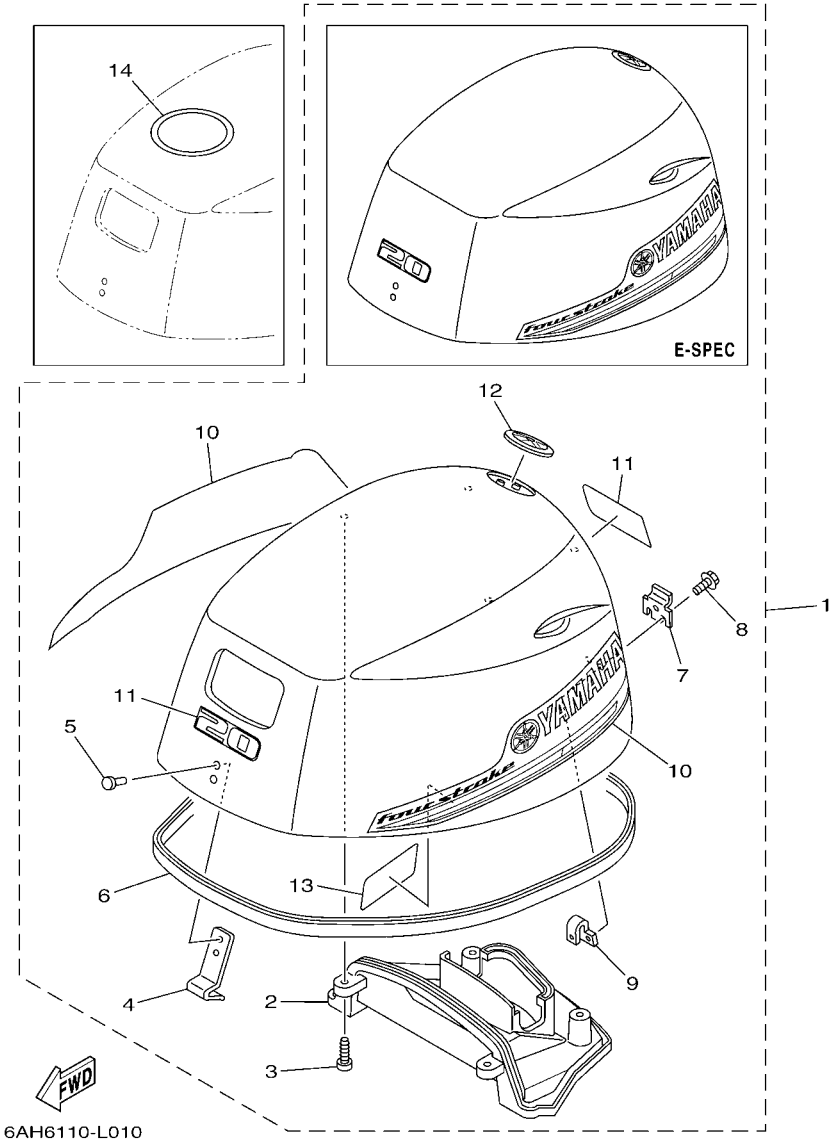


## FIG. 1 TOP COWLING — CAPOT SUPERIEUR

| REF. NO. | PART NO. N° PIECES | DESCRIPTION DESCRIPTION | MH | EH | E | EP | | REMARKS REMARQUES |
|---|---|---|---|---|---|---|---|---|
| 1 | 6AH–42610–70 | TOP COWLING ASSY<br>CAPOT (ENS.) | 1 | | | | | F20B<br>F20B |
| | 6AG–42610–60 | TOP COWLING ASSY<br>CAPOT (ENS.) | 1 | | | | | F15C<br>F15C |
| | 6AH–42610–80 | TOP COWLING ASSY<br>CAPOT (ENS.) | | 1 | 1 | 1 | | F20B<br>F20B |
| | 6AG–42610–70 | TOP COWLING ASSY<br>CAPOT (ENS.) | | 1 | 1 | 1 | | F15C<br>F15C |
| 2 | 6AH–42613–00 | .MOLDING, AIR DUCT<br>.MANCHON A AIR | 1 | 1 | 1 | 1 | | |
| 3 | 97780–50616 | .SCREW, TAPPING<br>.VIS, TETE BOMBEE | 4 | 4 | 4 | 4 | | |
| 4 | 6AH–42651–00 | .HOOK<br>.CROCHET | 1 | 1 | 1 | 1 | | |
| 5 | 90266–06M02 | .RIVET<br>.RIVET | 2 | 2 | 2 | 2 | | |
| 6 | 6AH–42615–00 | .SEAL<br>.JOINT | 1 | 1 | 1 | 1 | | |
| 7 | 60R–42652–00 | .HOOK<br>.CROCHET | 1 | 1 | 1 | 1 | | |
| 8 | 97595–05514 | .BOLT, WITH WASHER<br>.VIS HEXAGONAL AVC RONDELLE | 2 | 2 | 2 | 2 | | |
| 9 | 6AH–42649–00 | .HOLDER, CLAMP BAND<br>.SUPPORT, SANDOW DE SERRAGE | 1 | 1 | 1 | 1 | | |
| 10 | 6AG–W0070–00 | .GRAPHIC SET<br>.JEU DIEMBLEMES | 1 | 1 | 1 | 1 | | |
| 11 | 6AH–42677–00 | .GRAPHIC, FRONT<br>.ADHESIF, AVANT | 2 | 2 | 2 | 2 | | F20B<br>F20B |
| | 6AG–42677–20 | .GRAPHIC, FRONT<br>.ADHESIF, AVANT | 2 | 2 | 2 | 2 | | F15C<br>F15C |
| 12 | 6AH–42697–01 | .TUNING FORK MARK<br>.MARQUE, YAMAHA | 1 | 1 | 1 | 1 | | |
| 13 | 6AH–42735–00 | .PROTECTOR<br>.PROTECTEUR | 1 | 1 | 1 | 1 | | |
| 14 | 67F–13434–20 | LABEL, CAUTION<br>ETIQUETTE, ATTENTION | 1 | 1 | 1 | 1 | | |

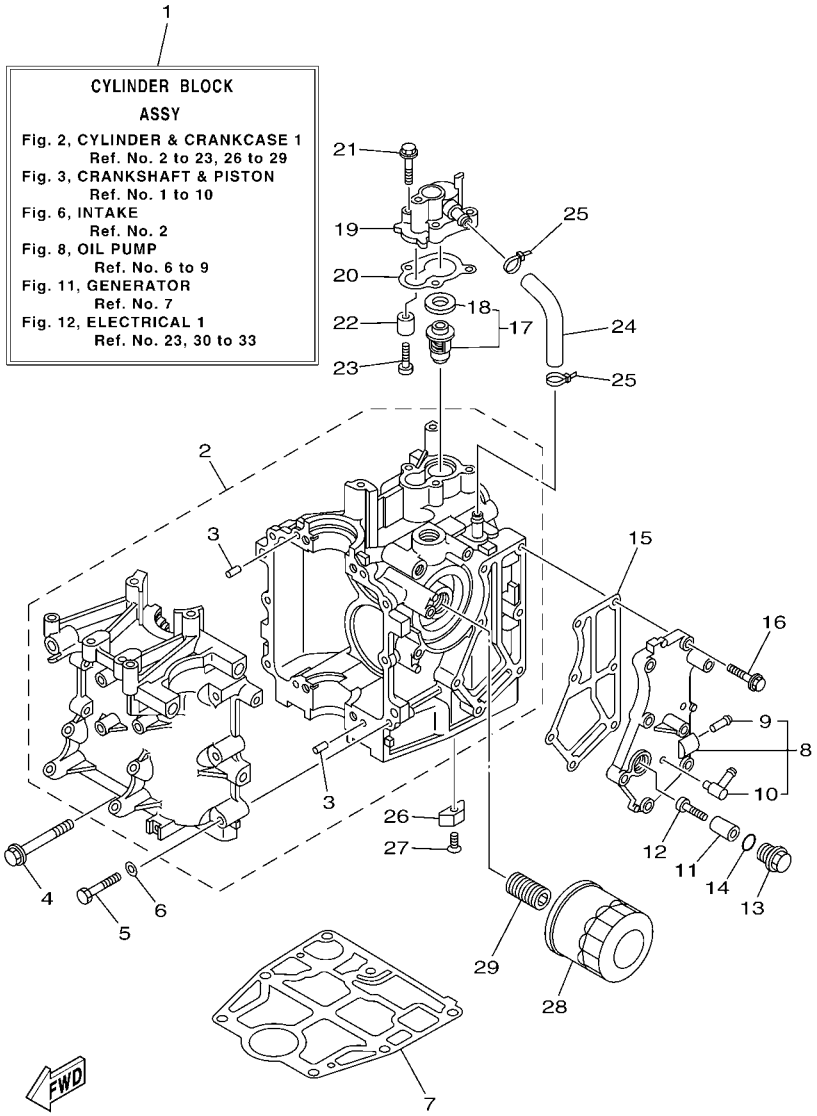


6AG6110-L020

## FIG. 2 CYLINDER & CRANKCASE 1 CYLINDRE & CARTER 1

| REF. NO. | PART NO. N° PIECES | DESCRIPTION DESCRIPTION | MH | EH | E | EP | | REMARKS REMARQUES |
|---|---|---|---|---|---|---|---|---|
| 1 | 6AH–W009B–00–1S | CYLINDER BLOCK ASSY<br>CYLINDRE GROUPE (ENS.) | 1 | 1 | 1 | 1 | | |
| 2 | 6AH–15100–00 | CRANKCASE ASSY<br>CARTER DE MOTEUR COMPLET | 1 | 1 | 1 | 1 | | |
| 3 | 93606–12019 | .PIN, DOWEL<br>.GOUPILLE | 4 | 4 | 4 | 4 | | |
| 4 | 90119–08093 | BOLT, WITH WASHER<br>BOULON, AVEC RONDELLE | 4 | 4 | 4 | 4 | | |
| 5 | 97013–06040 | BOLT<br>BOULON | 6 | 6 | 6 | 6 | | |
| 6 | 92903–06600 | WASHER, PLATE<br>RONDELLE, PLATE | 6 | 6 | 6 | 6 | | |
| 7 | 6AH–11351–00 | GASKET, CYLINDER<br>JOINT, D'EMBASE | 1 | 1 | 1 | 1 | | |
| 8 | 6AH–41113–00–1S | OUTER COVER, EXHAUST<br>COUVERCLE, ECHAPPEMENT | 1 | 1 | 1 | 1 | | |
| 9 | 650–24378–00 | .PIPE, JOINT 4<br>.DURITE RACCORDEMENT 3 | 1 | 1 | 1 | 1 | | |
| 10 | 676–11372–00 | .NIPPLE, HOSE<br>.RACCORD, TUYAU | 1 | 1 | 1 | 1 | | |
| 11 | 6G8–11325–00 | ANODE<br>ANODE | 1 | 1 | 1 | 1 | | |
| 12 | 97880–05025 | SCREW, PAN HEAD<br>VIS, TETE TRONCONIQUE | 1 | 1 | 1 | 1 | | |
| 13 | 6G8–11197–01 | PLUG, BLIND<br>PLOT, BORGNE | 1 | 1 | 1 | 1 | | |
| 14 | 93210–13M63 | O-RING<br>JOINT TORIQUE | 1 | 1 | 1 | 1 | | |
| 15 | 6AH–41114–00 | GASKET, EXHAUST OUTER COVER<br>JOINT, COUVERCLE D'ECHAPPEMENT | 1 | 1 | 1 | 1 | | |
| 16 | 90119–06MA3 | BOLT, WITH WASHER<br>BOULON, AVEC RONDELLE | 7 | 7 | 7 | 7 | | |
| 17 | 6AH–12411–00 | THERMOSTAT<br>THERMOSTAT | 1 | 1 | 1 | 1 | | |
| 18 | 688–12412–00 | .SEAL, THERMOSTAT<br>.JOINT, THERMOSTAT | 1 | 1 | 1 | 1 | | |
| 19 | 6AH–12413–00–1S | COVER, THERMOSTAT<br>COUVERCLE, THERMOSTAT | 1 | 1 | 1 | 1 | | |
| 20 | 6AH–12414–00 | GASKET, COVER<br>JOINT, COUVERCLE | 1 | 1 | 1 | 1 | | |
| 21 | 90119–06MA3 | BOLT, WITH WASHER<br>BOULON, AVEC RONDELLE | 3 | 3 | 3 | 3 | | |
| 22 | 6G8–11325–00 | ANODE<br>ANODE | 1 | 1 | 1 | 1 | | |
| 23 | 97880–05025 | SCREW, PAN HEAD<br>VIS, TETE TRONCONIQUE | 1 | 1 | 1 | 1 | | |
| 24 | 6AH–12481–00 | PIPE 1<br>DURITE 1 | 1 | 1 | 1 | 1 | | |
| 25 | 90465–11M10 | CLAMP<br>BRIDE | 2 | 2 | 2 | 2 | | |
| 26 | 6E5–11325–00 | ANODE<br>ANODE | 1 | 1 | 1 | 1 | | |
| 27 | 98780–04016 | SCREW, FLAT HEAD<br>VIS A TETE FRAISEE | 1 | 1 | 1 | 1 | | |

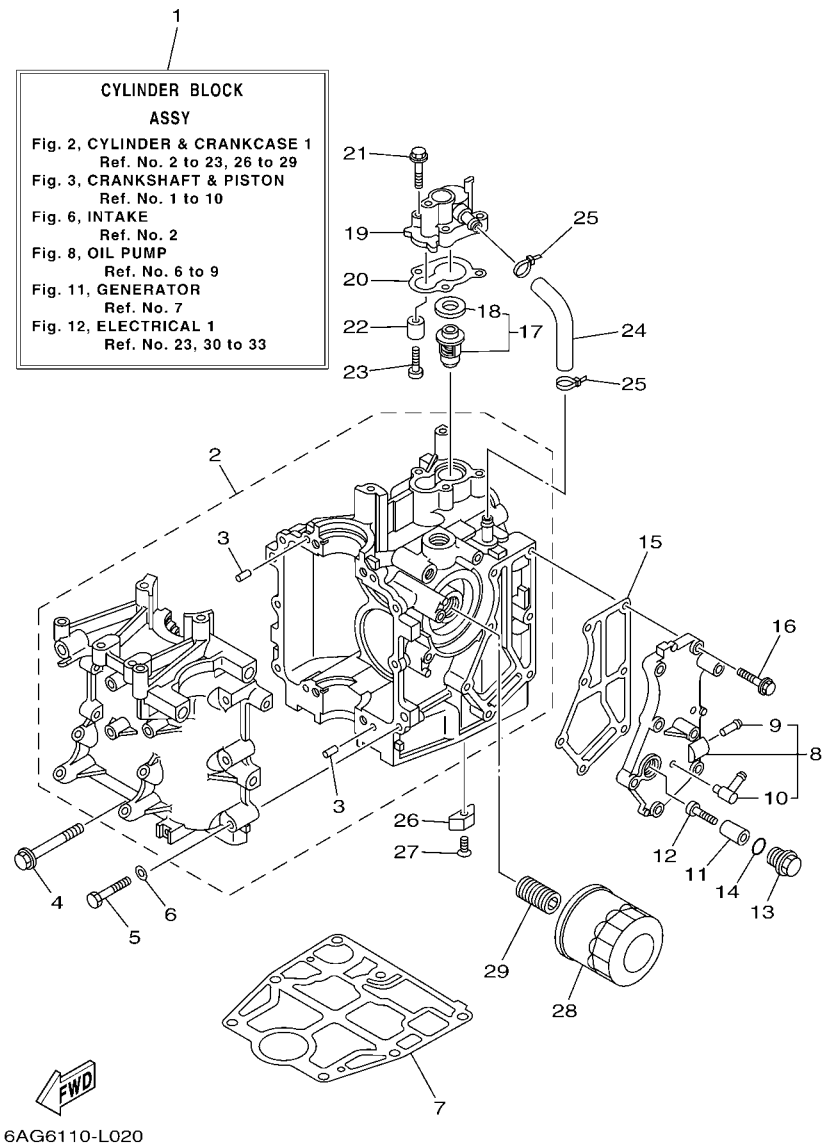


## FIG. 2 CYLINDER & CRANKCASE 1 CYLINDRE & CARTER 1

| REF. NO. | PART NO. N° PIECES | DESCRIPTION DESCRIPTION | MH | EH | E | EP | | REMARKS REMARQUES |
|---|---|---|---|---|---|---|---|---|
| 28 | 5GH–13440–20 | ELEMENT ASSY, OIL CLEANER<br>ELEMENT, FILTRE A HUILE | 1 | 1 | 1 | 1 | | |
| 29 | 6C5–12858–00 | BOLT, UNION<br>BOULON, RACCORD | 1 | 1 | 1 | 1 | | |

## FIG. 3 CRANKSHAFT & PISTON VILEBREQUIN & PISTON

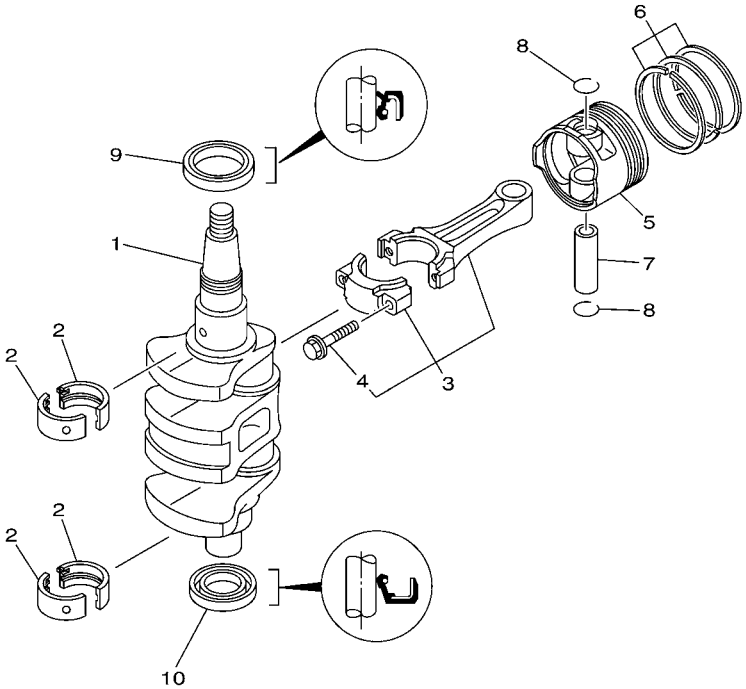

6AH1100-F030

| REF. NO. | PART NO. N° PIECES | DESCRIPTION DESCRIPTION | MH | EH | E | EP | | REMARKS REMARQUES |
|---|---|---|---|---|---|---|---|---|
| 1 | 6AH–11411–00 | CRANKSHAFT<br>VILEBREQUIN COMPLET | 1 | 1 | 1 | 1 | | |
| 2 | 6AH–11416–00 | PLANE BEARING, CRANKSHAFT 1<br>COUSSINET DE VILEBREQUIN 1 | 4 | 4 | 4 | 4 | | UR BROWN<br>UR BROWN |
| | 6AH–11416–10 | PLANE BEARING, CRANKSHAFT 1<br>COUSSINET DE VILEBREQUIN 1 | 4 | 4 | 4 | 4 | | UR BLACK<br>UR BLACK |
| | 6AH–11416–20 | PLANE BEARING, CRANKSHAFT 1<br>COUSSINET DE VILEBREQUIN 1 | 4 | 4 | 4 | 4 | | UR BLUE<br>UR BLUE |
| 3 | 6AH–11650–00 | CONNECTING ROD ASSY<br>BIELLE COMPLETTE | 2 | 2 | 2 | 2 | | |
| 4 | 6AH–11654–00 | .BOLT, CONNECTING ROD<br>.BOULON, BIELLE | 2 | 2 | 2 | 2 | | |
| 5 | 6AH–11631–00 | PISTON (STD)<br>PISTON (STD) | 2 | 2 | 2 | 2 | | |
| | 6AH–11635–00 | PISTON (0.25MM O/S)<br>PISTON (0.25MM O/S) | 2 | 2 | 2 | 2 | | AP<br>AP |
| | 6AH–11636–00 | PISTON (0.50MM O/S)<br>PISTON (0.50MM O/S) | 2 | 2 | 2 | 2 | | AP<br>AP |
| 6 | 6AH–11603–00 | PISTON RING SET (STD)<br>JEU DE SEGMENTS (STD) | 2 | 2 | 2 | 2 | | |
| | 6AH–11604–00 | PISTON RING SET (0.25MM O/S)<br>JEU DE SEGMENTS (0.25MM O/S) | 2 | 2 | 2 | 2 | | AP<br>AP |
| | 6AH–11605–00 | PISTON RING SET (0.50MM O/S)<br>JEU DE SEGMENTS (0.50MM O/S) | 2 | 2 | 2 | 2 | | AP<br>AP |
| 7 | 137–11633–10 | PIN, PISTON<br>AXE, PISTON | 2 | 2 | 2 | 2 | | |
| 8 | 93450–17129 | CIRCLIP<br>CIRCLIP, TYPE S | 4 | 4 | 4 | 4 | | |
| 9 | 93102–37004 | OIL SEAL<br>JOINT SPY | 1 | 1 | 1 | 1 | | |
| 10 | 93102–25014 | OIL SEAL<br>JOINT SPY | 1 | 1 | 1 | 1 | | |

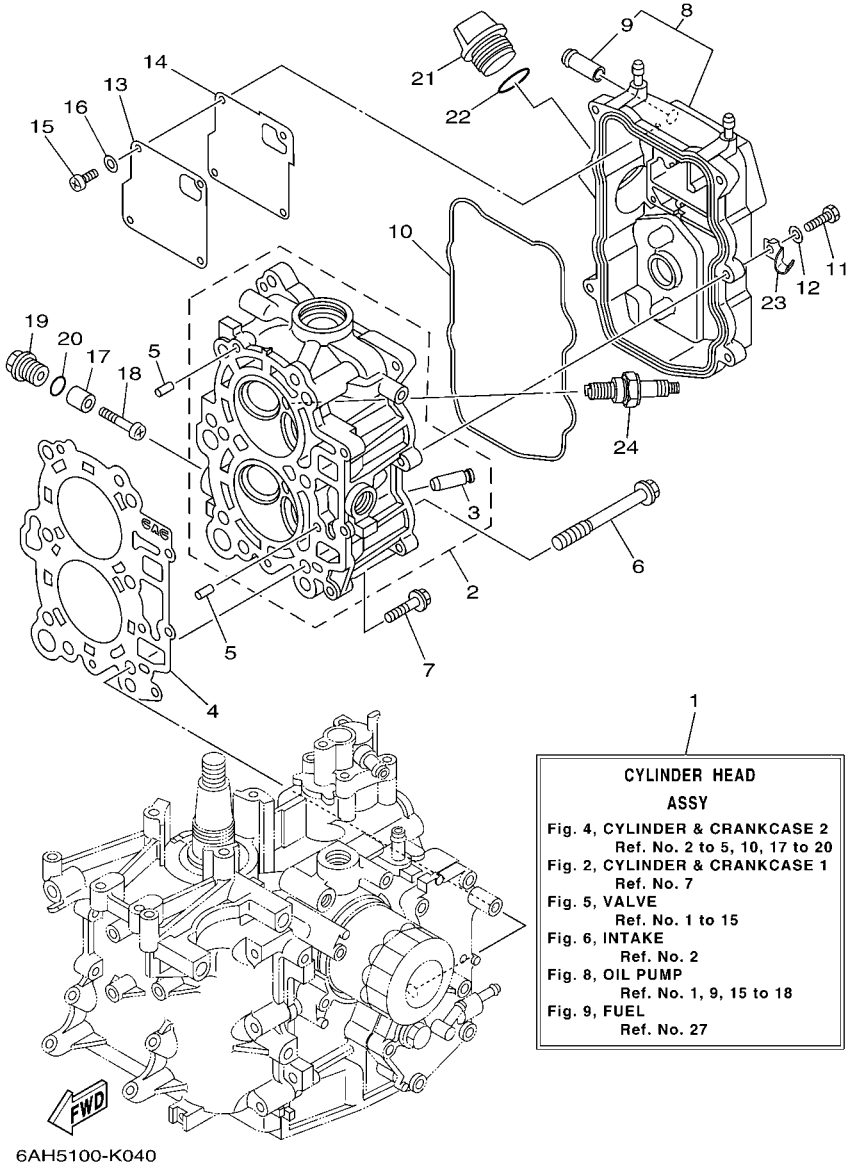


6AH5100-K040

## FIG. 4 CYLINDER & CRANKCASE 2 CYLINDRE & CARTER 2

| REF. NO. | PART NO. N° PIECES | DESCRIPTION DESCRIPTION | MH | EH | E | EP | | REMARKS REMARQUES |
|---|---|---|---|---|---|---|---|---|
| 1 | 6AH–W009A–00–1S | CYLINDER HEAD ASSY<br>CULASSE (ENS.) | 1 | 1 | 1 | 1 | | F20B<br>F20B |
| | 6AG–W009A–00–1S | CYLINDER HEAD ASSY<br>CULASSE (ENS.) | 1 | 1 | 1 | 1 | | F15C<br>F15C |
| 2 | 6AH–11111–00–1S | HEAD, CYLINDER 1<br>CULASSE | 1 | 1 | 1 | 1 | | |
| 3 | 6AH–11133–10 | .GUIDE, VALVE 1<br>.GUIDE, SOUPAPE 1 | 4 | 4 | 4 | 4 | | |
| 4 | 6AG–11181–00 | GASKET, CYLINDER HEAD 1<br>JOINT, DE CULASSE 1 | 1 | 1 | 1 | 1 | | |
| 5 | 93606–12019 | PIN, DOWEL<br>GOUPILLE | 2 | 2 | 2 | 2 | | |
| 6 | 90105–09006 | BOLT, FLANGE<br>BOULON | 6 | 6 | 6 | 6 | | |
| 7 | 90119–06MA3 | BOLT, WITH WASHER<br>BOULON, AVEC RONDELLE | 3 | 3 | 3 | 3 | | |
| 8 | 6AH–11191–00–1S | COVER, CYLINDER HEAD 1<br>COUVERCLE, CULASSE 1 | 1 | 1 | 1 | 1 | | |
| 9 | 6AH–11372–00 | .NIPPLE, HOSE<br>.RACCORD, TUYAU | 1 | 1 | 1 | 1 | | |
| 10 | 6AH–11356–00 | SEAL, CYLINDER 2<br>JOINT, SPY CYLINDRE | 1 | 1 | 1 | 1 | | |
| 11 | 97095–06020 | BOLT<br>BOULON | 5 | 5 | 5 | 5 | | |
| 12 | 92995–06600 | WASHER<br>RONDELLE | 5 | 5 | 5 | 5 | | |
| 13 | 6AH–11168–00 | COVER, BREATHER<br>COUVERCLE, RENIFLARD | 1 | 1 | 1 | 1 | | |
| 14 | 6AH–11169–00 | GASKET, BREATHER COVER<br>JOINT, COUVERCLE DE RENIFLARD | 1 | 1 | 1 | 1 | | |
| 15 | 98507–04010 | SCREW, PAN HEAD<br>VIS, TETE TRONCONIQUE | 4 | 4 | 4 | 4 | | |
| 16 | 92907–04600 | WASHER<br>RONDELLE | 4 | 4 | 4 | 4 | | |
| 17 | 6G8–11325–00 | ANODE<br>ANODE | 2 | 2 | 2 | 2 | | |
| 18 | 97880–05025 | SCREW, PAN HEAD<br>VIS, TETE TRONCONIQUE | 2 | 2 | 2 | 2 | | |
| 19 | 6G8–11197–01 | PLUG, BLIND<br>PLOT, BORGNE | 2 | 2 | 2 | 2 | | |
| 20 | 93210–13M63 | O-RING<br>JOINT TORIQUE | 2 | 2 | 2 | 2 | | |
| 21 | 6G8–15363–00 | PLUG, OIL<br>PLOT, HUILE | 1 | 1 | 1 | 1 | | |
| 22 | 93210–24M79 | O-RING<br>JOINT TORIQUE | 1 | 1 | 1 | 1 | | |
| 23 | 90465–08059 | CLAMP<br>BRIDE | 1 | 1 | 1 | 1 | | |
| 24 | 94702–00418 | PLUG, SPARK (NGK DPR6EB)<br>BOUGIE D,ALLUMAGE (NGK DPR6EB) | 2 | 2 | 2 | 2 | | |

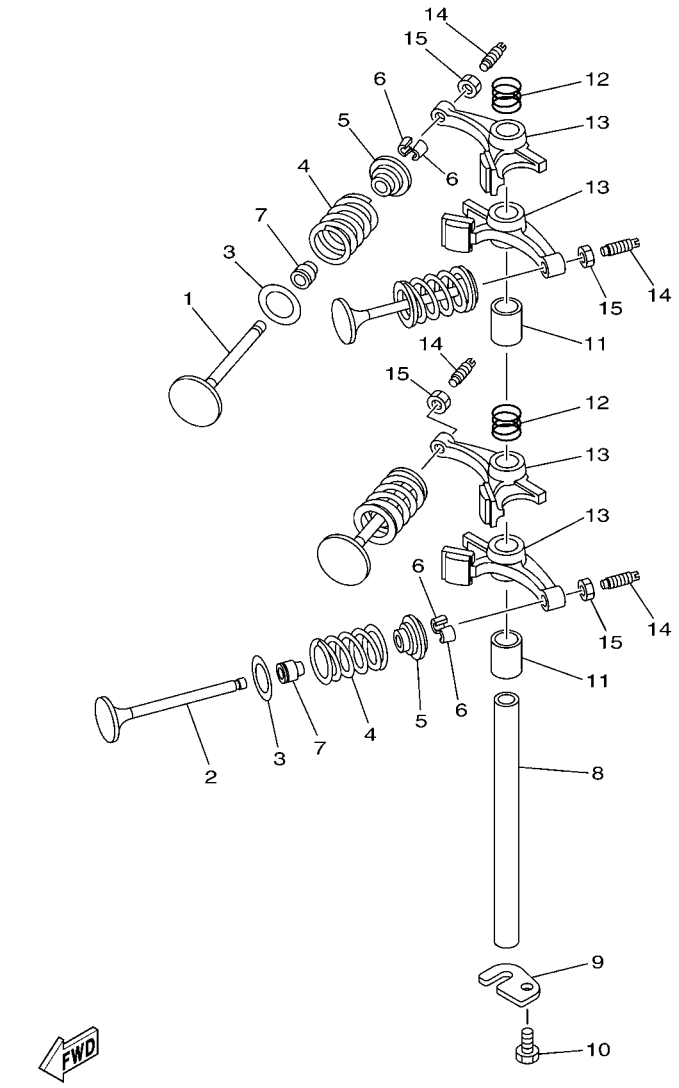


6AH1100-F050

## FIG. 5 VALVE — SOUPAPE

| REF. NO. | PART NO. N° PIECES | DESCRIPTION DESCRIPTION | MH | EH | E | EP | | REMARKS REMARQUES |
|---|---|---|---|---|---|---|---|---|
| 1 | 6AH–12111–00 | VALVE, INTAKE<br>SOUPAPE, ADMISSION | 2 | 2 | 2 | 2 | | |
| 2 | 6AH–12121–00 | VALVE, EXHAUST<br>SOUPAPE, ECHAPPEMENT | 2 | 2 | 2 | 2 | | |
| 3 | 62Y–12116–00 | SEAT, VALVE SPRING<br>SIEGE, RESSORT DE SOUPAPE | 4 | 4 | 4 | 4 | | |
| 4 | 3YF–12113–00 | SPRING, VALVE INNER<br>RESSORT DE SOUPAPE, INTERNE | 4 | 4 | 4 | 4 | | |
| 5 | 30X–12117–00 | RETAINER, VALVE SPRING<br>BUTEE DE RESSORT DE SOUPAPE | 4 | 4 | 4 | 4 | | |
| 6 | 30X–12118–00 | COTTER, VALVE<br>FRAISE, SOUPAPE | 8 | 8 | 8 | 8 | | |
| 7 | 51Y–12119–00 | SEAL, VALVE STEM<br>JOINT, QUEUE DE SOUPAPE | 4 | 4 | 4 | 4 | | |
| 8 | 66M–12146–00 | SHAFT, ROCKER<br>AXE, CULBUTEUR | 1 | 1 | 1 | 1 | | |
| 9 | 6AH–12279–00 | PLATE<br>PLAQUE | 1 | 1 | 1 | 1 | | |
| 10 | 97013–06012 | BOLT<br>BOULON | 1 | 1 | 1 | 1 | | |
| 11 | 90387–13006 | COLLAR<br>COLLERETTE | 2 | 2 | 2 | 2 | | |
| 12 | 90501–120A5 | SPRING, COMPRESSION<br>RESSORT, COMPRESSION | 2 | 2 | 2 | 2 | | |
| 13 | 6AH–12151–00 | ARM, VALVE ROCKER<br>CULBUTEUR | 4 | 4 | 4 | 4 | | |
| 14 | 64J–12159–00 | SCREW, VALVE ADJUSTING<br>VIS, REGLAGE DE SOUPAPE | 4 | 4 | 4 | 4 | | |
| 15 | 62Y–12158–00 | NUT, LOCK<br>CONTRE-ECROU | 4 | 4 | 4 | 4 | | |

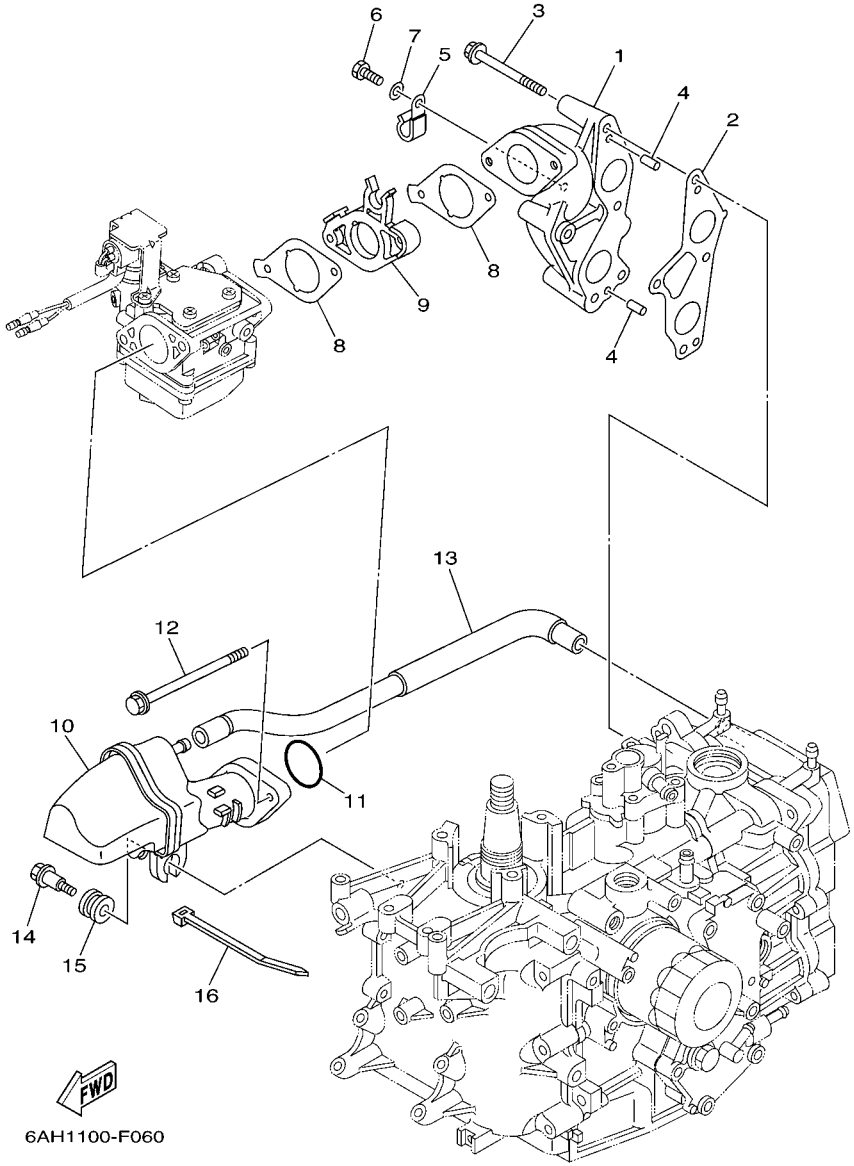


## FIG. 6 INTAKE — ADMISSION

| REF. NO. | PART NO. N° PIECES | DESCRIPTION DESCRIPTION | MH | EH | E | EP | | REMARKS REMARQUES |
|---|---|---|---|---|---|---|---|---|
| 1 | 6AH–13641–00–94 | MANIFOLD 1<br>TUBULURE 1 | 1 | 1 | 1 | 1 | | |
| 2 | 6AH–13645–00 | GASKET, MANIFOLD 1<br>JOINT, TUBULURE 1 | 1 | 1 | 1 | 1 | | |
| 3 | 97595–06555 | BOLT, WITH WASHER<br>VIS HEXAGONAL AVC RONDELLE | 4 | 4 | 4 | 4 | | |
| 4 | 91690–50014 | PIN, SPRING<br>AGRAFFE | 2 | 2 | 2 | 2 | | |
| 5 | 90465–08M83 | CLAMP<br>BRIDE | 2 | 2 | 2 | 2 | | |
| 6 | 97095–06012 | BOLT<br>BOULON | 2 | 2 | 2 | 2 | | |
| 7 | 92995–06600 | WASHER<br>RONDELLE | 2 | 2 | 2 | 2 | | |
| 8 | 6AH–13646–00 | GASKET, MANIFOLD 2<br>JOINT, TUBULURE 2 | 2 | 2 | 2 | 2 | | |
| 9 | 6AH–14271–00 | INSULATOR<br>ISOLATEUR | 1 | 1 | 1 | 1 | | |
| 10 | 6AH–14440–00 | SILENCER ASSY, INTAKE<br>SIENCIEUX D'ADMISSION | 1 | 1 | 1 | 1 | | |
| 11 | 93210–35M86 | O-RING<br>JOINT TORIQUE | 1 | 1 | 1 | 1 | | |
| 12 | 95895–06100 | BOLT, FLANGE<br>BOULON | 2 | 2 | 2 | 2 | | |
| 13 | 6AH–15373–00 | PIPE, BREATHER<br>DURITE DE RENIFLARD | 1 | 1 | 1 | 1 | | |
| 14 | 90109–06MA1 | BOLT<br>BOULON | 1 | 1 | 1 | 1 | | |
| 15 | 90480–16616 | GROMMET<br>PASSE-FIL | 1 | 1 | 1 | 1 | | |
| 16 | 90465–13M18 | CLAMP<br>BRIDE | 1 | 1 | 1 | 1 | | |

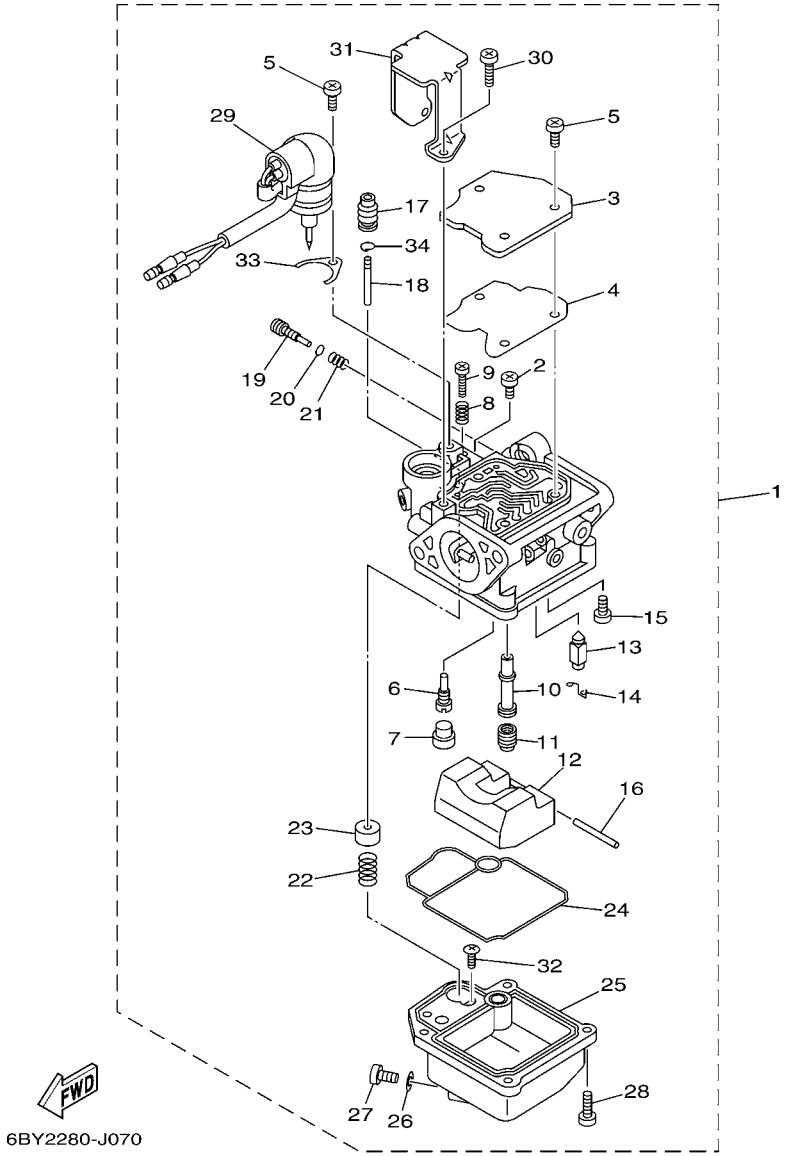


## FIG. 7 CARBURETOR CARBURATEUR

| REF. NO. | PART NO. N° PIECES | DESCRIPTION DESCRIPTION | MH | EH | E | EP | | REMARKS REMARQUES |
|---|---|---|---|---|---|---|---|---|
| 1 | 6AH–14301–11 | CARBURETOR ASSY 1<br>CARBURATEUR COMPLET 1 | 1 | | | | | F20B<br>F20B |
| | 6AG–14301–11 | CARBURETOR ASSY 1<br>CARBURATEUR COMPLET 1 | 1 | | | | | F15C<br>F15C |
| | 6AH–14301–51 | CARBURETOR ASSY 1<br>CARBURATEUR COMPLET 1 | | 1 | 1 | 1 | | F20B<br>F20B |
| | 6AG–14301–51 | CARBURETOR ASSY 1<br>CARBURATEUR COMPLET 1 | | 1 | 1 | 1 | | F15C<br>F15C |
| 2 | 98580–04006 | .SCREW, PAN HEAD<br>.VIS | 1 | 1 | 1 | 1 | | |
| 3 | 65W–14572–00 | .PLATE<br>.PLAQUE | 1 | 1 | 1 | 1 | | |
| 4 | 65W–14126–10 | .GASKET<br>.JOINT | 1 | 1 | 1 | 1 | | |
| 5 | 97980–04110 | .SCREW, WITH WASHER<br>.VIS, AVEC RONDELLE | 4 | 4 | 4 | 4 | | |
| 6 | 6AG–14948–05 | .JET (#45)<br>.GICLEUR (#45) | 1 | | | | | FOR 6AH-14301-11<br>FOR 6AH-14301-11 |
| | 6AG–14948–02 | .JET (#38)<br>.GICLEUR (#38) | 1 | | | | | FOR 6AG-14301-11<br>FOR 6AG-14301-11 |
| | 676–14948–05 | .JET (#45)<br>.GICLEUR (#45) | | 1 | 1 | 1 | | FOR 6AH-14301-51<br>FOR 6AH-14301-51 |
| | 6AH–14948–02 | .JET (#38)<br>.GICLEUR (#38) | | 1 | 1 | 1 | | FOR 6AG-14301-51<br>FOR 6AG-14301-51 |
| 7 | 679–14966–00 | .RUBBER CAP<br>.CAOUTCHOUC CASQUILLO | 1 | 1 | 1 | 1 | | |
| 8 | 90501–10326 | .SPRING, COMPRESSION<br>.RESSORT, COMPRESSION | 1 | 1 | 1 | 1 | | |
| 9 | 63V–14523–00 | .SCREW, STOP<br>.VIS, BUTEE | 1 | 1 | 1 | 1 | | |
| 10 | 6AH–14947–00 | .JET, NEEDLE<br>.GICLEUR DE STARTER | 1 | 1 | 1 | 1 | | F20B<br>F20B |
| | 6AH–14947–20 | .JET, NEEDLE<br>.GICLEUR DE STARTER | 1 | 1 | 1 | 1 | | F15C<br>F15C |
| 11 | 65W–14943–29 | .JET, MAIN (#112)<br>.GICLEUR, PRINCIPAL (#112) | 1 | 1 | 1 | 1 | | F20B<br>F20B |
| | 676–14943–19 | .JET, MAIN (#80)<br>.GICLEUR, PRINCIPAL (#80) | 1 | 1 | 1 | 1 | | F15C<br>F15C |
| 12 | 6AH–14985–00 | .FLOAT<br>.FLOTTEUR | 1 | 1 | 1 | 1 | | |
| 13 | 6AH–14546–00 | .VALVE, NEEDLE<br>.POINTEAU | 1 | 1 | 1 | 1 | | |
| 14 | 663–14159–00 | .CLIP<br>.JONC | 1 | 1 | 1 | 1 | | |
| 15 | 98580–04008 | .SCREW, PAN HEAD<br>.VIS | 1 | 1 | 1 | 1 | | |
| 16 | 6H4–14548–00 | .PIN, FLOAT ARM<br>.AXE, BRAS DE FLOTTEUR | 1 | 1 | 1 | 1 | | |
| 17 | 65W–14373–02 | .COVER, PLUNGER CAP<br>.COUVERCLE DE PLONGEUR | 1 | 1 | 1 | 1 | | |
| 18 | 6AH–14379–10 | .ROD, STARTER<br>.TRINGLE, STARTER | 1 | 1 | 1 | 1 | | F20B<br>F20B |
| | 6AH–14379–00 | .ROD, STARTER<br>.TRINGLE, STARTER | 1 | 1 | 1 | 1 | | F15C<br>F15C |

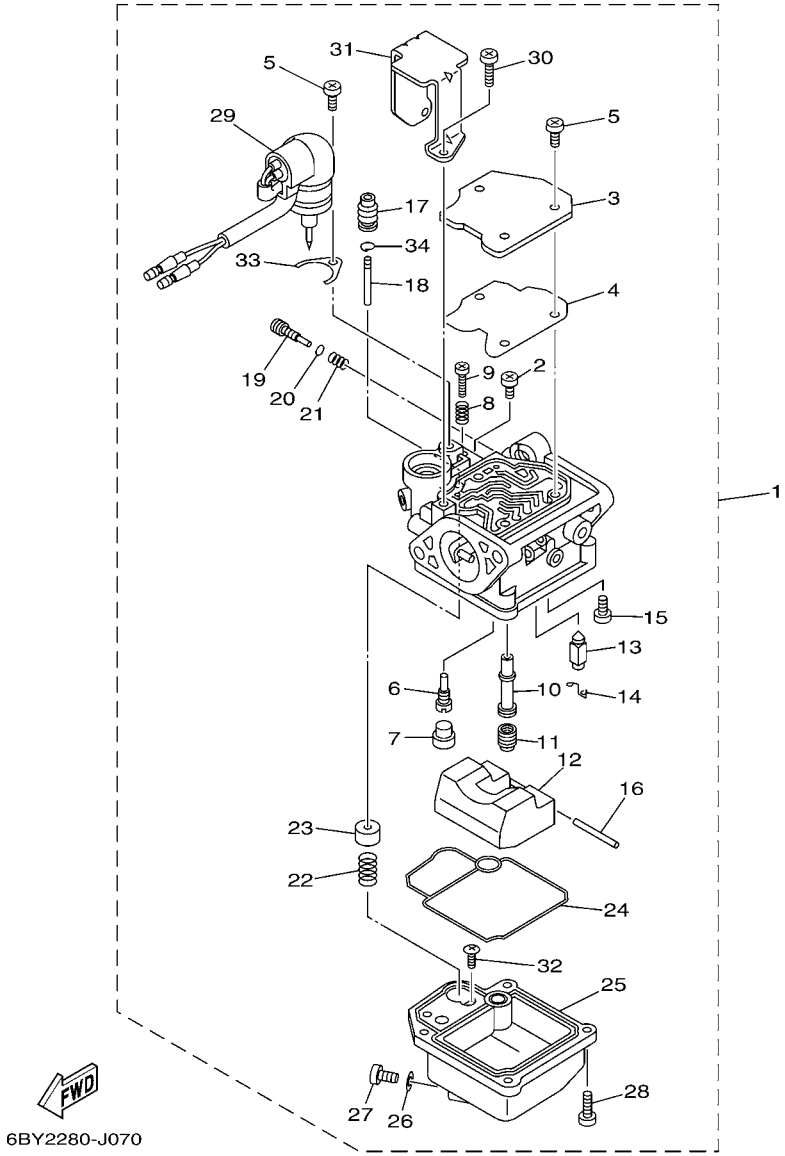


## FIG. 7 CARBURETOR CARBURATEUR

| REF. NO. | PART NO. N° PIECES | DESCRIPTION DESCRIPTION | MH | EH | E | EP | | REMARKS REMARQUES |
|---|---|---|---|---|---|---|---|---|
| 19 | 6AH–14923–20 | .SCREW, PILOT<br>.VIS, RALENTI | 1 | 1 | 1 | 1 | | |
| 20 | 67C–14397–00 | .O-RING<br>.JOINT TORIQUE | 1 | 1 | 1 | 1 | | |
| 21 | 67C–14555–00 | .SPRING<br>.RESSORT | 1 | 1 | 1 | 1 | | |
| 22 | 6AH–14335–00 | .SPRING, PLUNGER<br>.RESSORT, PLONGEUR | 1 | 1 | 1 | 1 | | F20B<br>F20B |
| | 65W–14335–00 | .SPRING, PLUNGER<br>.RESSORT, PLONGEUR | 1 | 1 | 1 | 1 | | F15C<br>F15C |
| 23 | 6AH–14371–00 | .PLUNGER, STARTER<br>.PLONGEUR, STARTER | 1 | 1 | 1 | 1 | | |
| 24 | 6AH–14384–00 | .GASKET, FLOAT CHAMBER<br>.JOINT, CUVE DE FLOTTEUR | 1 | 1 | 1 | 1 | | |
| 25 | 6AH–14980–00 | .BODY, FLOAT CHAMBER<br>.CORPS, CUVE DE FLOTTEUR | 1 | 1 | 1 | 1 | | |
| 26 | 65W–14398–00 | .GASKET<br>.JOINT | 1 | 1 | 1 | 1 | | |
| 27 | 65W–14992–00 | .SCREW, DRAIN<br>.BOUCHON, PURGE | 1 | 1 | 1 | 1 | | |
| 28 | 97980–04114 | .SCREW, WITH WASHER<br>.VIS, AVEC RONDELLE | 4 | 4 | 4 | 4 | | |
| 29 | 6AH–14380–00 | .PRIME STARTER ASSY<br>.STARTER AUTOMATIQUE | 1 | | | | | M-SPEC<br>M-SPEC |
| | 6AH–14380–10 | .PRIME STARTER ASSY<br>.STARTER AUTOMATIQUE | | 1 | 1 | 1 | | E-SPEC<br>E-SPEC |
| 30 | 97980–04108 | .SCREW, WITH WASHER<br>.VIS, AVEC RONDELLE | 2 | 2 | 2 | 2 | | |
| 31 | 6AH–14346–00 | .PLATE<br>.PLAQUE | 1 | 1 | 1 | 1 | | |
| 32 | 67C–14567–00 | .SCREW<br>.VIS | 1 | 1 | 1 | 1 | | |
| 33 | 65W–14346–00 | .PLATE<br>.PLAQUE | 1 | 1 | 1 | 1 | | |
| 34 | 65W–1439G–00 | .CLIP 1<br>.JONC 1 | 1 | 1 | 1 | 1 | | |

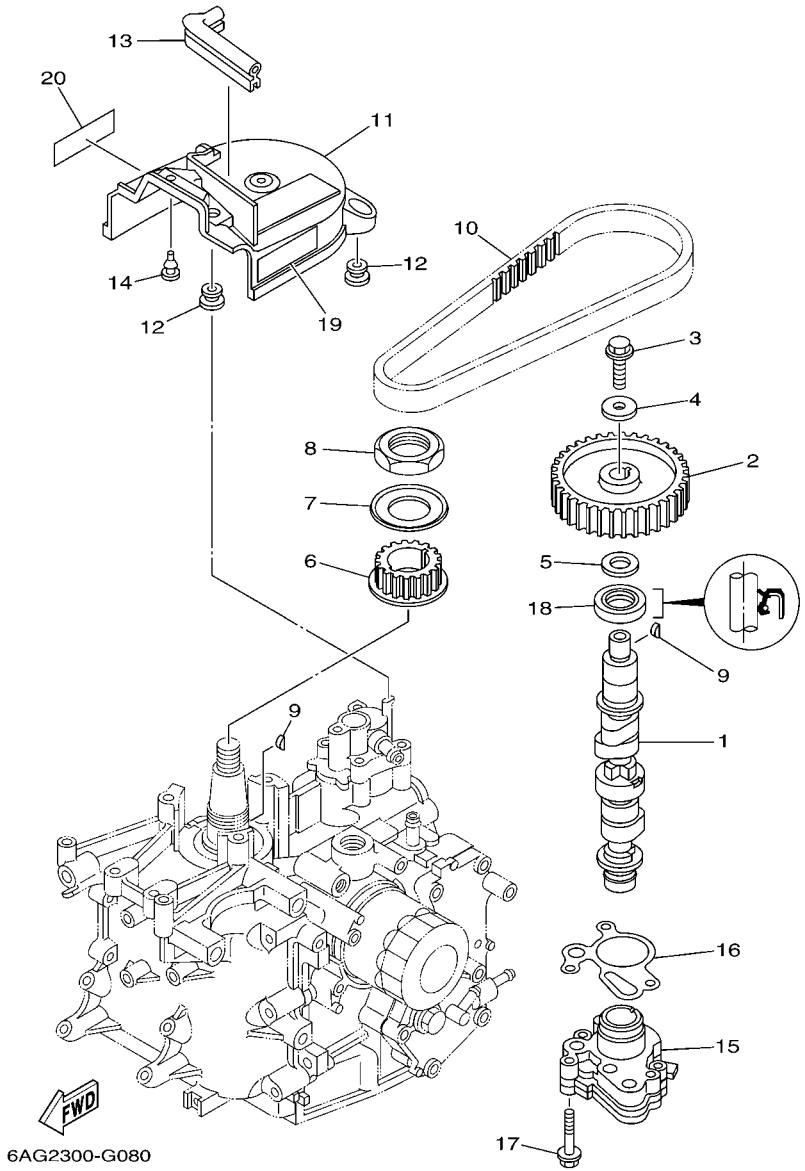


## FIG. 8 OIL PUMP — POMPE A HUILE

| REF. NO. | PART NO. N° PIECES | DESCRIPTION DESCRIPTION | MH | EH | E | EP | | REMARKS REMARQUES |
|---|---|---|---|---|---|---|---|---|
| 1 | 6AH–12170–00 | CAMSHAFT ASSY 1<br>ENS ARBRE A CAMES 1 | 1 | 1 | 1 | 1 | | F20B<br>F20B |
| | 6AG–12170–00 | CAMSHAFT ASSY 1<br>ENS ARBRE A CAMES 1 | 1 | 1 | 1 | 1 | | F15C<br>F15C |
| 2 | 6AH–11537–00 | GEAR, DRIVEN<br>PIGNON SECONDAIRE | 1 | 1 | 1 | 1 | | |
| 3 | 90105–081A7 | BOLT, FLANGE<br>BOULON | 1 | 1 | 1 | 1 | | |
| 4 | 90201–08784 | WASHER, PLATE<br>RONDELLE, PLATE | 1 | 1 | 1 | 1 | | |
| 5 | 90201–15423 | WASHER, PLATE<br>RONDELLE, PLATE | 1 | 1 | 1 | 1 | | |
| 6 | 6AH–11536–00 | GEAR, DRIVE<br>ENGRENAGE, MENANT | 1 | 1 | 1 | 1 | | |
| 7 | 6AH–11557–00 | WASHER 1<br>RONDELLE 1 | 1 | 1 | 1 | 1 | | |
| 8 | 90170–30003 | NUT<br>ECROU | 1 | 1 | 1 | 1 | | |
| 9 | 90280–03M01 | KEY, WOODRUFF<br>CLAVETTE, DEMI-LUNE | 2 | 2 | 2 | 2 | | |
| 10 | 6AH–46241–00 | BELT<br>COURROIE TRAPEZOIDALE | 1 | 1 | 1 | 1 | | |
| 11 | 6AH–46297–00 | COVER, DUST<br>COUVERCLE, POUSSIERE | 1 | 1 | 1 | 1 | | |
| 12 | 90480–10627 | GROMMET<br>PASSE-FIL | 3 | 3 | 3 | 3 | | |
| 13 | 6AH–42617–00 | DAMPER, FORM<br>BOURRELET, CAOUTCHOUC | 1 | 1 | 1 | 1 | | |
| 14 | 90480–06M19 | GROMMET<br>PASSE-FIL | 1 | 1 | 1 | 1 | | |
| 15 | 6AH–13300–00 | OIL PUMP ASSY<br>POMPE A HUILE COMPLETE | 1 | 1 | 1 | 1 | | |
| 16 | 6AH–13329–00 | GASKET, PUMP COVER<br>JOINT, COUVERCLE DE POMPE | 1 | 1 | 1 | 1 | | |
| 17 | 90105–06035 | BOLT, FLANGE<br>BOULON | 3 | 3 | 3 | 3 | | |
| 18 | 93102–22009 | OIL SEAL<br>JOINT SPY | 1 | 1 | 1 | 1 | | |
| 19 | 6AH–81994–40 | LABEL, SAFETY<br>ETIQUETTE, SECURITE | 1 | 1 | 1 | 1 | | |
| 20 | 6AH–81994–50 | LABEL, SAFETY<br>ETIQUETTE, SECURITE | 1 | 1 | 1 | 1 | | |

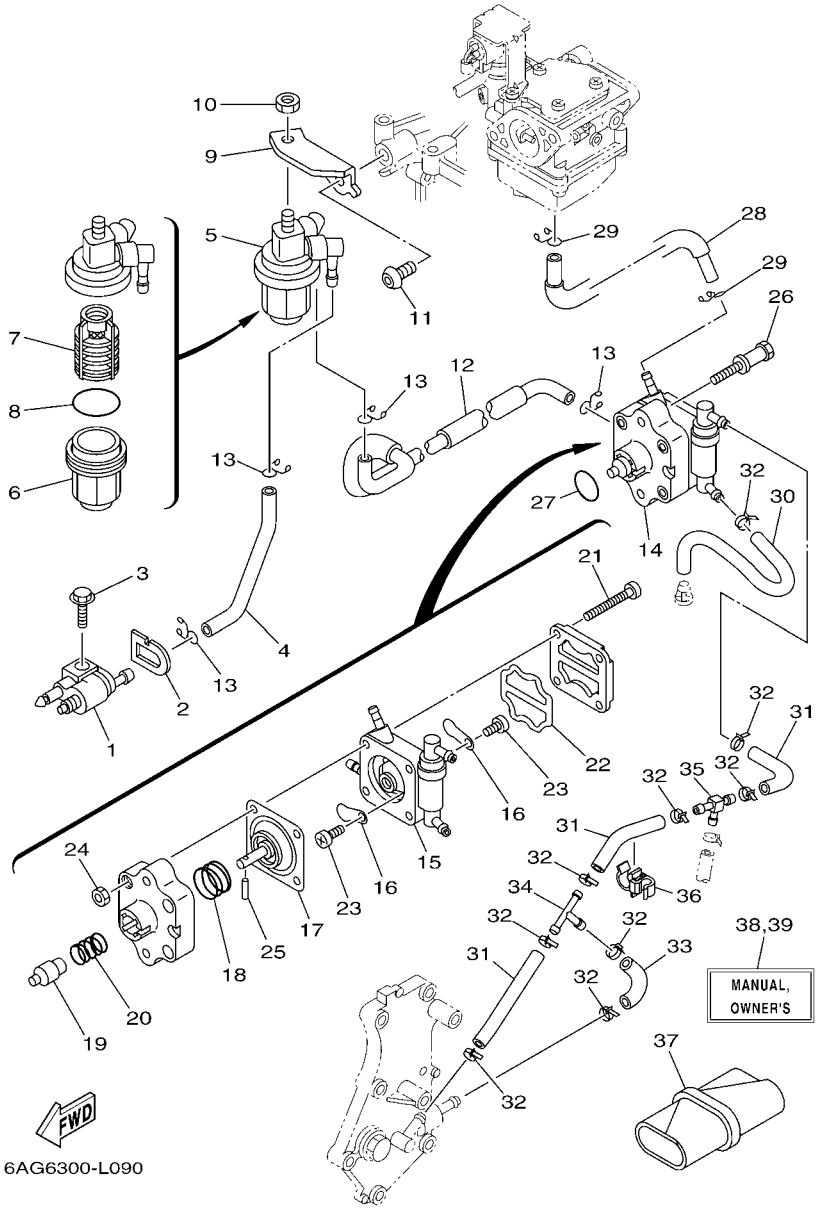


## FIG. 9 FUEL CARBURANT

| REF. NO. | PART NO. N° PIECES | DESCRIPTION DESCRIPTION | MH | EH | E | EP | | REMARKS REMARQUES |
|---|---|---|---|---|---|---|---|---|
| 1 | 6G1–24304–02 | FUEL PIPE JOINT COMP. 1<br>DURITE RACCORDEMT. A ESSENCE | 1 | 1 | 1 | 1 | | |
| 2 | 61N–24329–00 | SEAL<br>JOINT | 1 | 1 | 1 | 1 | | |
| 3 | 95895–06020 | BOLT, FLANGE<br>BOULON | 1 | 1 | 1 | 1 | | |
| 4 | 6AH–24311–00 | PIPE, FUEL 1<br>DURITE A ESSENCE | 1 | 1 | 1 | 1 | | |
| 5 | 61N–24560–10 | FILTER ASSY<br>ENS FILTRE | 1 | 1 | 1 | 1 | | |
| 6 | 61N–24521–00 | .CUP, FILTER<br>.CUVETTE, FILTRE | 1 | 1 | 1 | 1 | | |
| 7 | 61N–24563–10 | .ELEMENT, FILTER<br>.ELEMENT, FILTRE | 1 | 1 | 1 | 1 | | |
| 8 | 93210–32738 | .O-RING<br>.JOINT TORIQUE | 1 | 1 | 1 | 1 | | |
| 9 | 6AH–24566–00 | BRACKET, FILTER<br>SUPPORT, FILTRE | 1 | 1 | 1 | 1 | | |
| 10 | 95380–08600 | NUT<br>ECROU | 1 | 1 | 1 | 1 | | |
| 11 | 90111–08055 | BOLT,HEX. SOCKET BUTTON<br>BOULON | 1 | 1 | 1 | 1 | | |
| 12 | 6AH–24312–00 | PIPE 2<br>DURITE 2 | 1 | 1 | 1 | 1 | | |
| 13 | 90467–09M17 | CLIP<br>JONC | 4 | 4 | 4 | 4 | | |
| 14 | 6AH–24410–00 | FUEL PUMP ASSY<br>POMPE A ESSENCE | 1 | 1 | 1 | 1 | | |
| 15 | 6AH–24413–00 | .BODY 2<br>.CORPS 2 | 1 | 1 | 1 | 1 | | |
| 16 | 6A0–24421–01 | .VALVE, CHECK<br>.SOUPAPE, RETENUE | 2 | 2 | 2 | 2 | | |
| 17 | 66M–24411–11 | .DIAPHRAGM<br>.DIAPHRAGME | 1 | 1 | 1 | 1 | | |
| 18 | 66M–24423–00 | .SPRING, DIAPHRAGM<br>.RESSORT, DIAPHRAGME | 1 | 1 | 1 | 1 | | |
| 19 | 66M–13131–10 | .PLUNGER<br>.PLONGEUR | 1 | 1 | 1 | 1 | | |
| 20 | 66M–24454–00 | .SPRING<br>.RESSORT | 1 | 1 | 1 | 1 | | |
| 21 | 66M–24444–00 | .SCREW<br>.VIS | 4 | 4 | 4 | 4 | | |
| 22 | 66M–24471–01 | .DIAPHRAGM<br>.DIAPHRAGME | 1 | 1 | 1 | 1 | | |
| 23 | 6E7–14325–00 | .SCREW, PAN HEAD<br>.VIS TETE CONIQUE | 2 | 2 | 2 | 2 | | |
| 24 | 95380–04600 | .NUT<br>.ECROU | 4 | 4 | 4 | 4 | | |
| 25 | 66M–24374–00 | .PIN<br>.GOUPILLE | 1 | 1 | 1 | 1 | | |
| 26 | 90109–06215 | BOLT<br>BOULON | 2 | 2 | 2 | 2 | | |
| 27 | 93210–20M65 | O-RING<br>JOINT TORIQUE | 1 | 1 | 1 | 1 | | |

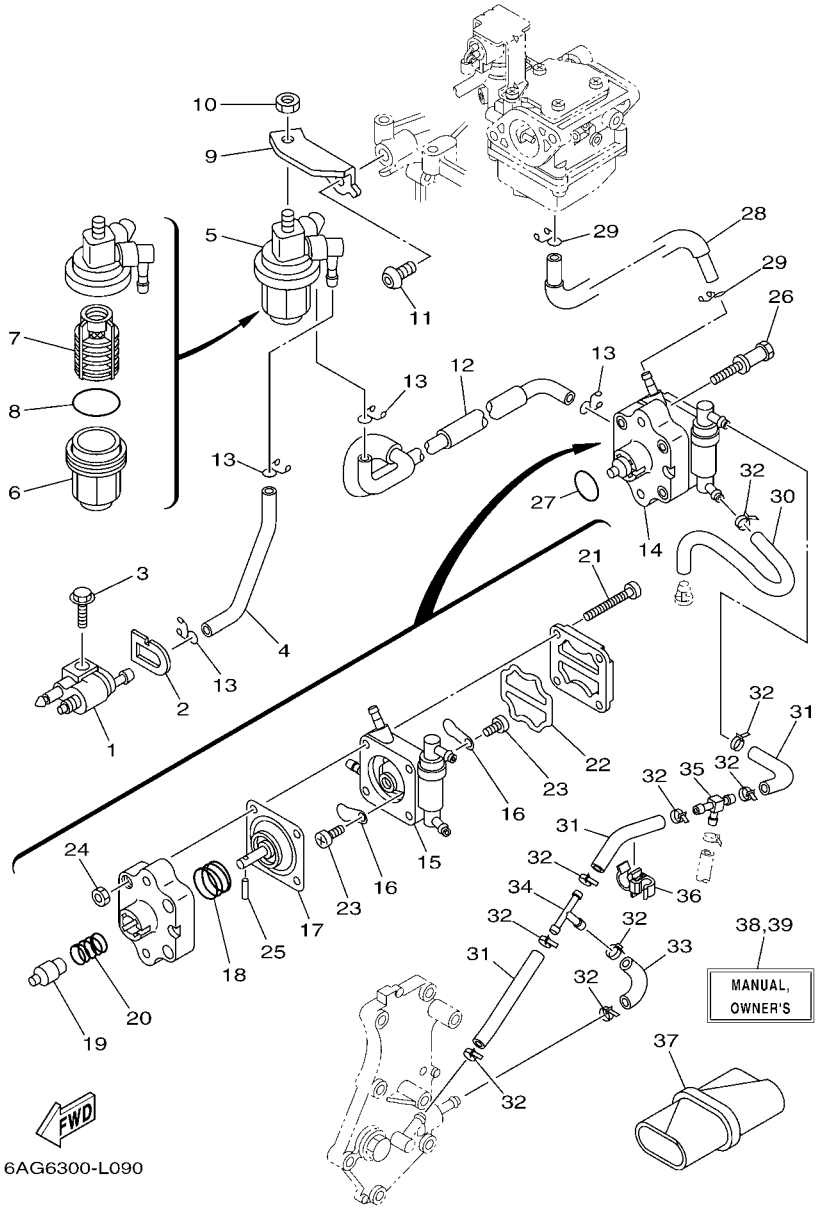


## FIG. 9 FUEL CARBURANT

| REF. NO. | PART NO. N° PIECES | DESCRIPTION DESCRIPTION | MH | EH | E | EP | | REMARKS REMARQUES |
|---|---|---|---|---|---|---|---|---|
| 28 | 6AH–24313–00 | PIPE 3<br>DURITE 3 | 1 | 1 | 1 | 1 | | |
| 29 | 90467–09M17 | CLIP<br>JONC | 2 | 2 | 2 | 2 | | |
| 30 | 6AH–24315–00 | PIPE 5<br>DURITE 5 | 1 | 1 | 1 | 1 | | Go to P/N : PE0-OM-120058 |
| 31 | 90445–09026 | HOSE<br>DURITE | 3 | 3 | 3 | 3 | | Go to P/N : PE0-OM-120058 |
| 32 | 90465–11M10 | CLAMP<br>BRIDE | 9 | 9 | 9 | 9 | | |
| 33 | 6AH–24317–00 | PIPE 7<br>DURITE 7 | 1 | 1 | 1 | 1 | | Go to P/N : PE0-OM-120058 |
| 34 | 688–24378–00 | PIPE, JOINT 3<br>DURITE RACCORDEMENT 3 | 1 | 1 | 1 | 1 | | |
| 35 | 6C5–24378–00 | PIPE, JOINT 3<br>DURITE RACCORDEMENT 3 | 1 | 1 | 1 | 1 | | |
| 36 | 90464–09018 | CLAMP<br>BRIDE | 1 | 1 | 1 | 1 | | Go to P/N : PE0-OM-120058 |
| 37 | 62Y–28100–00 | TOOL KIT<br>TROUSSE A OUTILS | 1 | 1 | 1 | 1 | | AP<br>AP |
| 38 | 6AG–28199–76–E0 | MANUAL,OWNER'S<br>MANUEL D'UTILISATION | 1 | 1 | 1 | 1 | | UR (E)<br>UR (E) |
| | 6AG–28199–76–F0 | MANUAL,OWNER'S<br>MANUEL D'UTILISATION | 1 | 1 | 1 | 1 | | UR (F)<br>UR (F) |
| | 6AG–28199–76–S0 | MANUAL,OWNER'S<br>MANUEL D'UTILISATION | 1 | 1 | 1 | 1 | | UR (ES)<br>UR (ES) |
| | 6AG–28199–76–G0 | MANUAL,OWNER'S<br>MANUEL D'UTILISATION | 1 | 1 | 1 | 1 | | UR (D)<br>UR (D) |
| | 6AG–28199–76–D0 | MANUAL,OWNER'S<br>MANUEL D'UTILISATION | 1 | 1 | 1 | 1 | | UR (NL)<br>UR (NL) |
| | 6AG–28199–76–H0 | MANUAL,OWNER'S<br>MANUEL D'UTILISATION | 1 | 1 | 1 | 1 | | UR (I)<br>UR (I) |
| 39 | 6AG–28199–86–K0 | MANUAL,OWNER'S<br>MANUEL D'UTILISATION | 1 | 1 | 1 | 1 | | UR (DK)<br>UR (DK) |
| | 6AG–28199–86–R0 | MANUAL,OWNER'S<br>MANUEL D'UTILISATION | 1 | 1 | 1 | 1 | | UR (GR)<br>UR (GR) |
| | 6AG–28199–86–P0 | MANUAL,OWNER'S<br>MANUEL D'UTILISATION | 1 | 1 | 1 | 1 | | UR (P)<br>UR (P) |
| | 6AG–28199–86–N0 | MANUAL,OWNER'S<br>MANUEL D'UTILISATION | 1 | 1 | 1 | 1 | | UR (N)<br>UR (N) |
| | 6AG–28199–86–M0 | MANUAL,OWNER'S<br>MANUEL D'UTILISATION | 1 | 1 | 1 | 1 | | UR (S)<br>UR (S) |
| | 6AG–28199–86–L0 | MANUAL,OWNER'S<br>MANUEL D'UTILISATION | 1 | 1 | 1 | 1 | | UR (SF)<br>UR (SF) |

# PARTS NEWS

YAMAHA
YAMAHA MOTOR CO., LTD.
2500 SHINGAI IWATA SHIZUOKA JAPAN

News No. PE0-OM-120058(1/2)

Date:2012/11/19

Signature:S.Ishibashi

Cause: ☑ Revision Notice ☐ Correction ☐ Sales Unit Change ☐ Others

| | |
|---|---|
| Model | F9.9H (6CA4) / F15C (6AG6) / F20B (6AH6) |
| Subject | PARTS CATALOGUE CORRECTIONS |
| CATALOGUE NO. | 1L6CA-300F1 / 1L6AG-300F1 |

Time of YPEC Revision Text, Illustration --> Dec./20/2012 PDF Replace --> Dec./20/2012

(YPEC = Yamaha Parts Electrical Catalogue = Website parts catalogue)

## Applicable Engine Serial No.

| MODEL NAME | MODEL CODE | Applicable Engine Serial No. |
|---|---|---|
| F9.9C | 6CA4 | 6CAK:1003162- |
| F15C | 6AG6 | 6AGK:1025401- |
| F20B | 6AH6 | 6AHK:1034060- |

*1: Interchangeability

| | | |
|---|---|---|
| A | Old Parts → Old Parts<br>New Parts → New Parts | |
| B | Old Parts → Old Parts<br>New Parts → New Parts | |
| C | Old Parts → Old Parts<br>New Parts → New Parts | |
| D | Old Parts → Old Parts<br>New Parts → New Parts | |
| ○ | These parts are interchangeable with a set | |

## 1.LIST CORRECTION

### FIG.9 FUEL

| Ref. No. | PART NO. | DESCRIPTION | Q'TY | *Interchangeability | | REMARKS |
|---|---|---|---|---|---|---|
| ~~30~~ | ~~6AH-24315-00~~ | ~~PIPE 5~~ | ~~1~~ | D | ○ | ***Deleted Parts** |
| 31 | 90445-09026 | HOSE | 3 --> **1** | | ○ | ***Q'TY change** |
| ~~33~~ | ~~6AH-24317-00~~ | ~~PIPE 7~~ | ~~1~~ | | ○ | ***Deleted Parts** |
| 36 | 90464-09018 | CLAMP | 1 --> **2** | | ○ | ***Q'TY change** |
| **40** | **6AH-24321-00** | **PIPE 10** | **1** | | ○ | ***Added Parts** |
| **41** | **6AH-24322-00** | **PIPE 11** | **1** | | ○ | |
| **42** | **90445-09082** | **HOSE (L150)** | **1** | | ○ | |
| **43** | **90445-09061** | **HOSE (L65)** | **1** | | ○ | |

### FIG.15 or 18 BOTTOM COWLING

| | | | | | | |
|---|---|---|---|---|---|---|
| **49(50)** | **90445-15003** | **HOSE (L230)** | **1** | | ○ | ***Added Parts** |

| Parts Manager Check | Service Manager Check | Parts Manager File |
|---|---|---|

YAMAHA MOTOR CO.,LTD
2500 Shingai Iwata Shizuoka 438-8501.Japan
Technical Publication Dept.

YAMAHA GENUINE Parts & Accessories

# PARTS NEWS

News No. PE0-OM-120058(2/2)

Date:2012/11/58

Signature:S.Ishibashi

Cause: ☑ Revision Notice ☐ Correction ☐ Sales Unit Change ☐ Others

| | |
|---|---|
| Model | F9.9H (6CA4) / F15C (6AG6) / F20B (6AH6) |
| Subject | PARTS CATALOGUE CORRECTIONS |
| CATALOGUE NO. | 1L6CA-300F1 / 1L6AG-300F1 |

Time of YPEC Revision Text, Illustration --> Dec./20/2012 PDF Replace --> Dec./20/2012

(YPEC = Yamaha Parts Electrical Catalogue = Website parts catalogue)

## 2. ILLUSTRATION CORRECTION

### FIG.9 FUEL

(OLD)

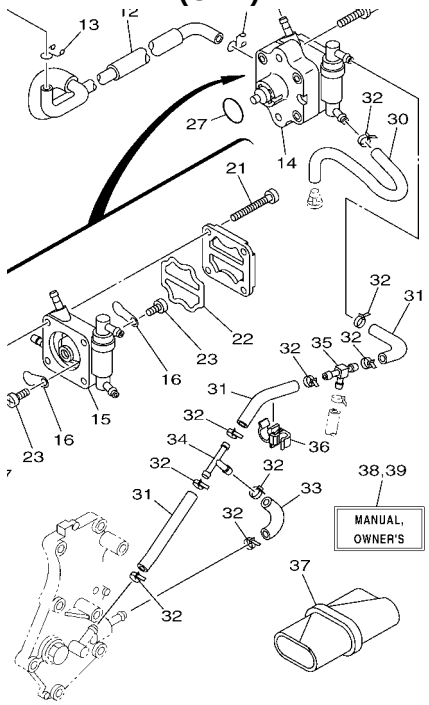


(NEW)

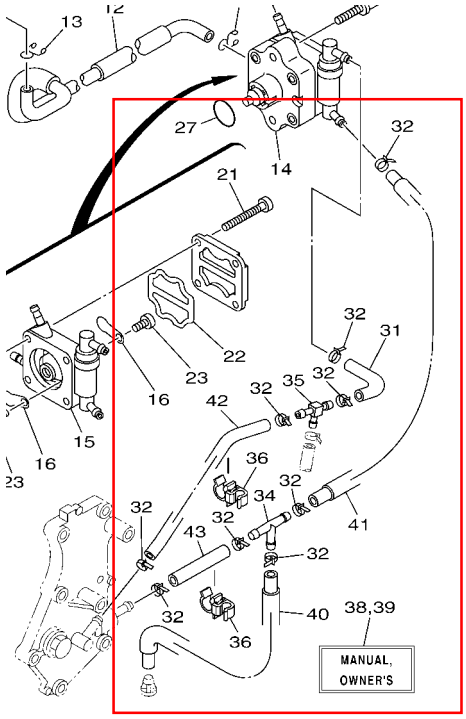


### FIG.15 or 18 BOTTOM COWLING

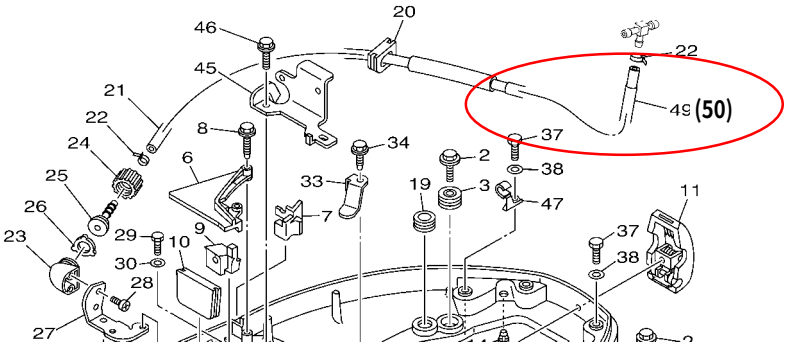


Thank you very much for your cooperation.

| Parts Manager Check | Service Manager Check | Parts Manager File |
|---|---|---|

YAMAHA MOTOR CO.,LTD
2500 Shingai Iwata Shizuoka 438-8501.Japan
Technical Publication Dept.

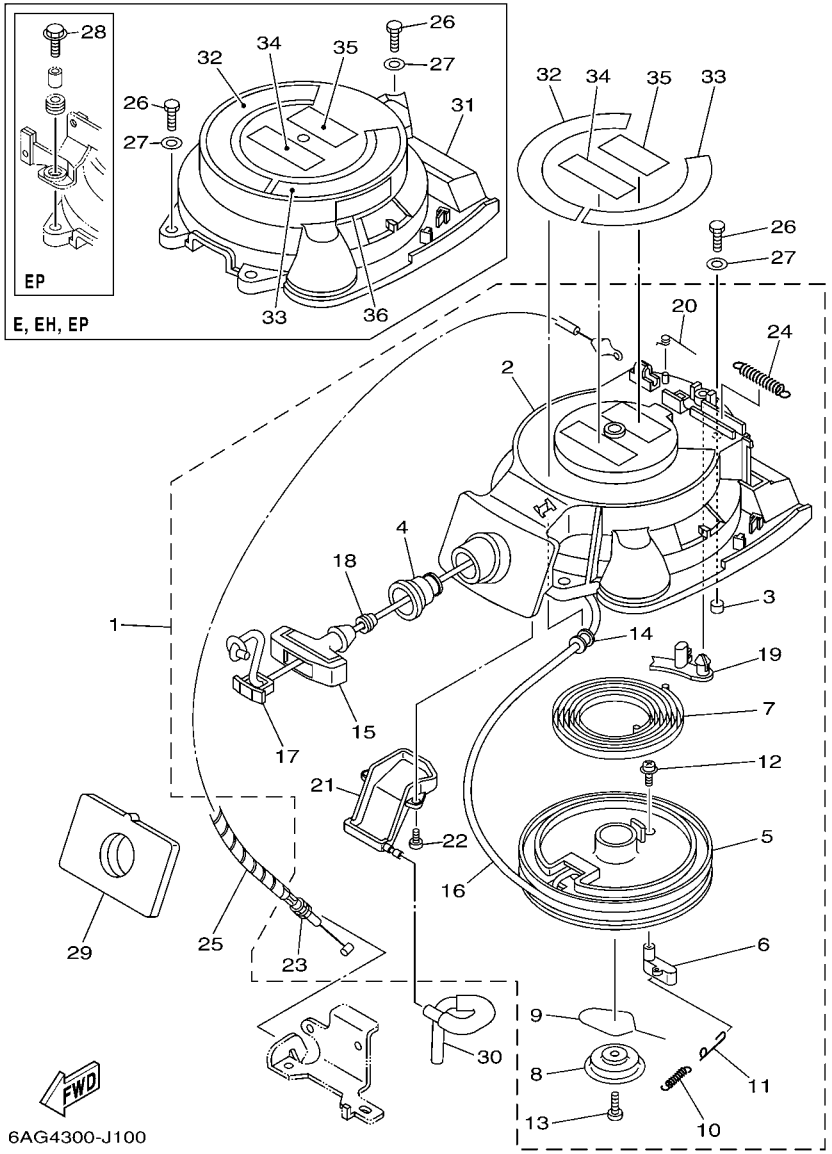


*1:CUT FROM 50M ROLLS,PART NO.90890-44373,CUTTING LENGTH 1.8M

*1:A PRELEVER SUR BOBINE 50M ,REFERENCE 90890-44373,
LONGUEUR DE COUPE 1.8M

## FIG. 10 STARTER DEMARREUR

| REF. NO. | PART NO. N° PIECES | DESCRIPTION DESCRIPTION | MH | EH | E | EP | | REMARKS REMARQUES |
|---|---|---|---|---|---|---|---|---|
| 1 | 6AH–15710–01 | STARTER ASSY<br>DEMARREUR COMPLET | 1 | | | | | |
| 2 | 6AH–15711–00 | .CASE, STARTER<br>.CARTER DE DEMARREUR | 1 | | | | | |
| 3 | 67D–15764–00 | .COLLAR 1<br>.COLLERETTE 1 | 3 | | | | | |
| 4 | 6AH–15795–00 | .GUIDE, ROPE<br>.GUIDE DE CABLE | 1 | | | | | |
| 5 | 63V–15714–00 | .DRUM, SHEAVE<br>.TAMBOUR, POULIE | 1 | | | | | |
| 6 | 6AH–15741–10 | .PAWL, DRIVE<br>.CLIQUET, ENTRAINEMENT | 1 | | | | | |
| 7 | 63V–15713–00 | .SPRING, STARTER<br>.RESSORT DE DEMARREUR | 1 | | | | | |
| 8 | 68T–15716–00 | .PLATE, DRIVE<br>.PLAQUE, ENTRAINEMENT | 1 | | | | | |
| 9 | 63V–15705–01 | .SPRING, DRIVE PAWL<br>.RESSORT DE CLIQUET | 1 | | | | | |
| 10 | 63V–15767–01 | .SPRING<br>.RESSORT | 1 | | | | | |
| 11 | 68T–15784–00 | .SPRING, RETURN<br>.RESSORT, RAPPEL | 1 | | | | | |
| 12 | 63V–15793–00 | .SCREW<br>.VIS | 1 | | | | | |
| 13 | 68T–15793–00 | .SCREW<br>.VIS | 1 | | | | | |
| 14 | 68T–15764–00 | .COLLAR 1<br>.COLLERETTE 1 | 1 | | | | | |
| 15 | 689–15755–01 | .HANDLE, STARTER<br>.POIGNEE, DE DEMARREUR | 1 | | | | | |
| 16 | * | .WIRE, STARTER (L:1800MM)<br>.CABLE DE DEMARREUR (L:1800MM) | 1 | | | | | *1<br>*1 |
| 17 | 6F5–15779–02 | .COVER<br>.COUVERCLE | 1 | | | | | |
| 18 | 6A0–15789–00 | .DAMPER<br>.AMORTISSEUR | 1 | | | | | |
| 19 | 66T–15794–00 | .STOPPER<br>.BUTEE | 1 | | | | | |
| 20 | 66T–15734–00 | .SPRING, RETURN<br>.RESSORT, RAPPEL | 1 | | | | | |
| 21 | 6AH–15782–00 | .COVER, SHEAVE<br>.COUVERCLE, POULIE | 1 | | | | | |
| 22 | 6AH–15793–00 | .SCREW<br>.VIS | 2 | | | | | |
| 23 | 6AH–15770–00 | .CABLE COMP., STARTER STOP<br>.CABLE, BUTEE DE DEMAR | 1 | | | | | |
| 24 | 66T–15731–00 | .SPRING, RETURN<br>.RESSORT, RAPPEL | 1 | | | | | |
| 25 | 90446–06M90 | HOSE (L120)<br>DURITE (L120) | 1 | | | | | |
| 26 | 97095–06020 | BOLT<br>BOULON | 3 | 3 | 3 | | | |
| | 97095–06020 | BOLT<br>BOULON | | | | 1 | | |

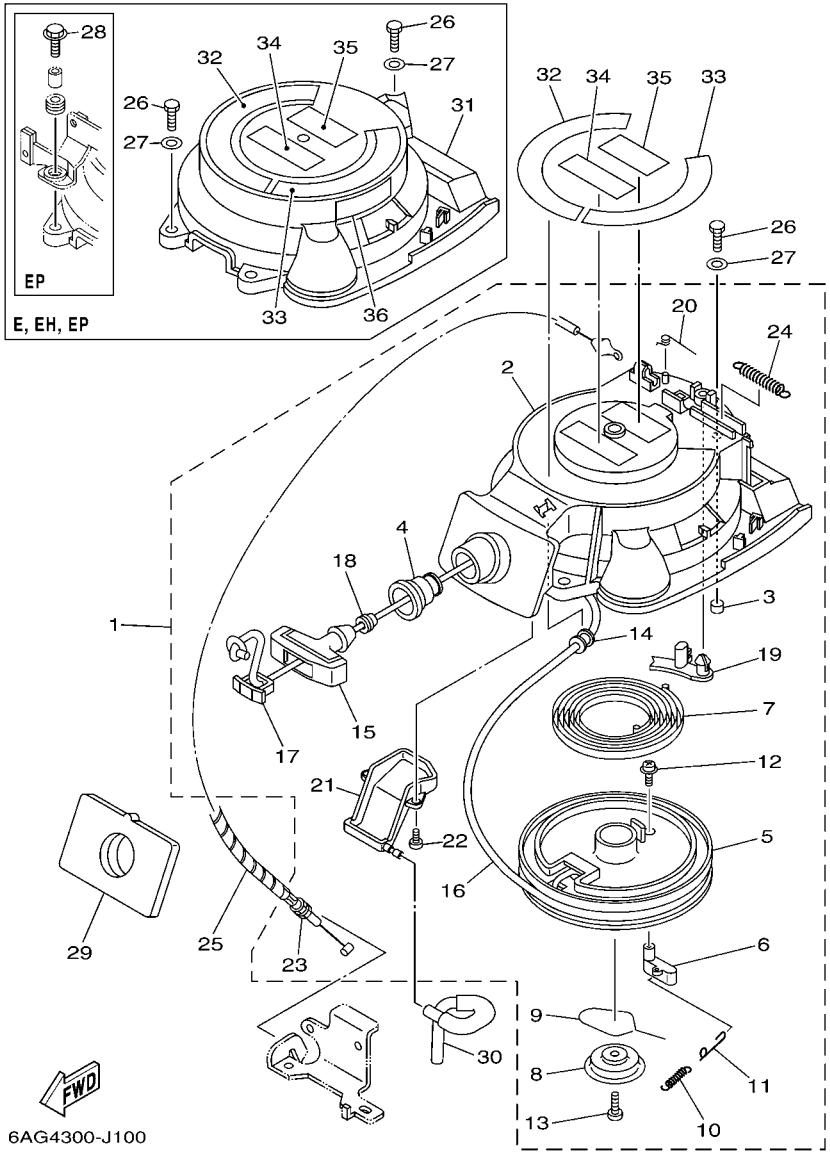


*1:CUT FROM 50M ROLLS,PART NO.90890-44373,CUTTING LENGTH 1.8M

*1:A PRELEVER SUR BOBINE 50M ,REFERENCE 90890-44373,
LONGUEUR DE COUPE 1.8M

## FIG. 10 STARTER DEMARREUR

| REF. NO. | PART NO. N° PIECES | DESCRIPTION DESCRIPTION | MH | EH | E | EP | | REMARKS REMARQUES |
|---|---|---|---|---|---|---|---|---|
| 27 | 92995–06600 | WASHER<br>RONDELLE | 3 | 3 | 3 | | | |
| | 92995–06600 | WASHER<br>RONDELLE | | | | 1 | | |
| 28 | 90119–06169 | BOLT, WITH WASHER<br>BOULON, AVEC RONDELLE | | | | 2 | | |
| 29 | 6AH–15762–00 | SEAL, RUBBER 2<br>JOINT CAOUTCHOUC 2 | 1 | | | | | |
| 30 | 6AH–24316–00 | PIPE 6<br>DURITE 6 | 1 | | | | | |
| 31 | 6AH–81337–00 | COVER, FLYWHEEL<br>COUVERCLE, VOLANT | | 1 | 1 | 1 | | |
| 32 | 6AH–14427–60 | LABEL, INSTRUCTION<br>ETIQUETTE, INSTRUCTION | 1 | 1 | 1 | 1 | | |
| 33 | 6AH–13437–60 | MARK, CAUTION<br>MAKER | 1 | 1 | 1 | 1 | | |
| 34 | 6AH–81995–40 | LABEL, WARNING<br>ETIQUETTE, AVERTISSEMENT | 1 | 1 | 1 | 1 | | |
| 35 | 6AH–81995–50 | LABEL, WARNING<br>ETIQUETTE, AVERTISSEMENT | 1 | 1 | 1 | 1 | | |
| 36 | 6AG–81996–00 | MARK<br>MARQUE | | | 1 | 1 | | |

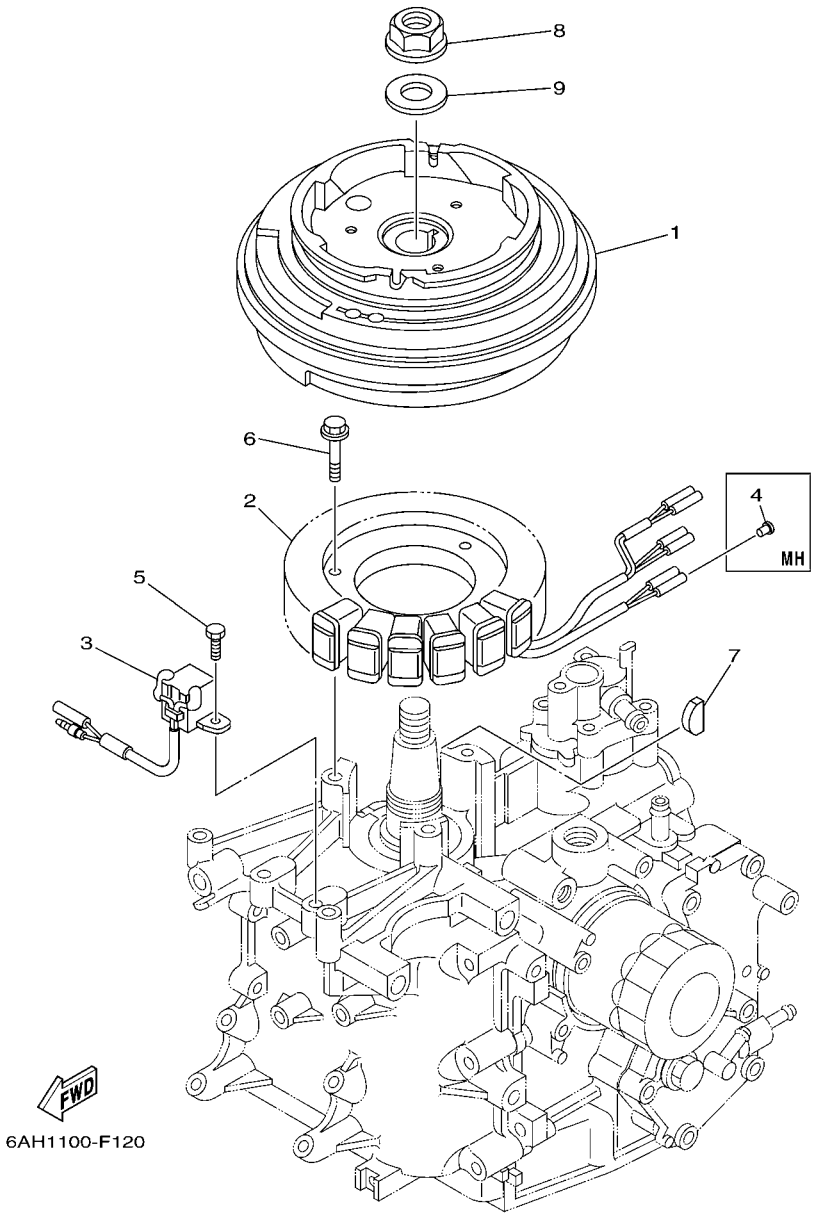


## FIG. 11 GENERATOR GENERATRICE

| REF. NO. | PART NO. N° PIECES | DESCRIPTION DESCRIPTION | MH | EH | E | EP | | REMARKS REMARQUES |
|---|---|---|---|---|---|---|---|---|
| 1 | 6AH–85550–00 | ROTOR ASSY<br>ROTOR CPLT | 1 | | | | | |
| | 6AH–85550–10 | ROTOR ASSY<br>ROTOR CPLT | | 1 | 1 | 1 | | |
| 2 | 6AH–85510–00 | STATOR ASSY<br>STATOR CPLT | 1 | 1 | 1 | 1 | | |
| 3 | 6AH–85580–00 | COIL, PULSER<br>BOBINE, PULSEUR | 1 | 1 | 1 | 1 | | |
| 4 | 703–82119–00 | COVER, LEAD WIRE<br>GARNITURE, FIL | 2 | | | | | |
| 5 | 97095–05012 | BOLT<br>BOULON | 2 | 2 | 2 | 2 | | |
| 6 | 95895–06030 | BOLT, FLANGE<br>BOULON | 3 | 3 | 3 | 3 | | |
| 7 | 90280–05013 | KEY, WOODRUFF<br>CLAVETTE, DEMI-LUNE | 1 | 1 | 1 | 1 | | |
| 8 | 90179–16M05 | NUT<br>ECROU | 1 | 1 | 1 | 1 | | |
| 9 | 90201–16M44 | WASHER, PLATE<br>RONDELLE, PLATE | 1 | 1 | 1 | 1 | | |

## FIG. 12 ELECTRICAL 1 PARTIE ELECTRIQUE 1

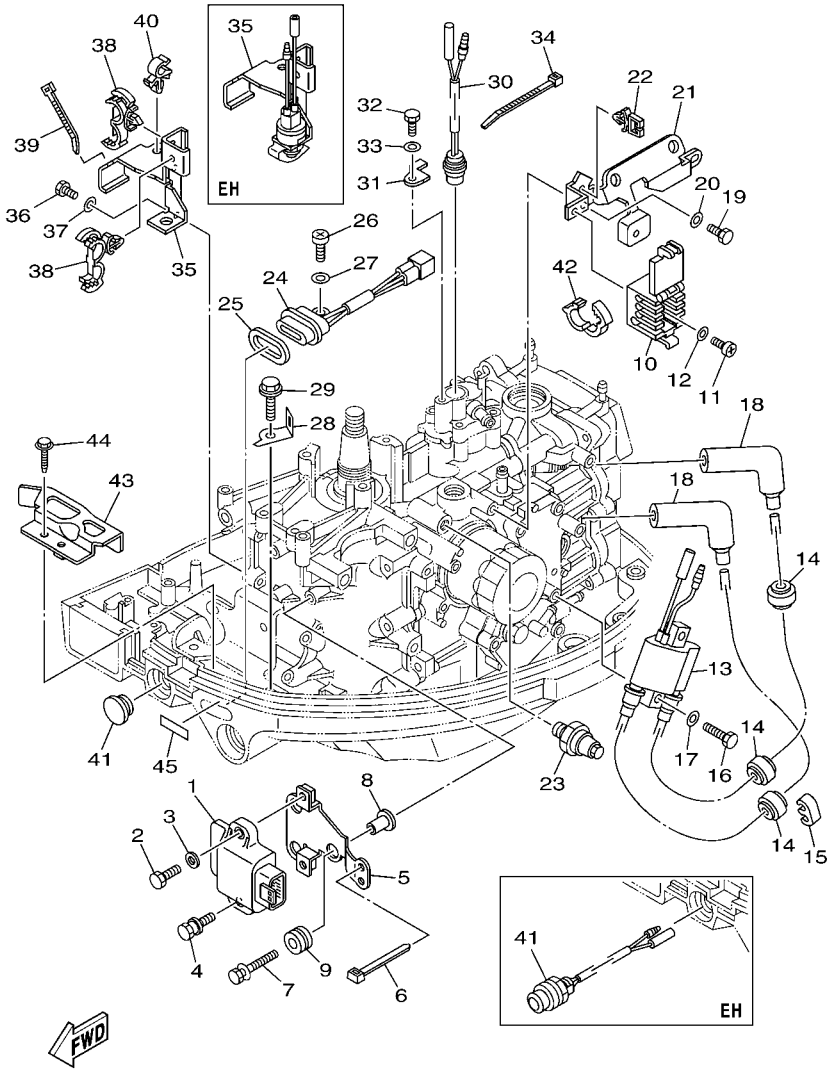


| REF. NO. | PART NO. N° PIECES | DESCRIPTION DESCRIPTION | MH | EH | E | EP | | REMARKS REMARQUES |
|---|---|---|---|---|---|---|---|---|
| 1 | 6AH–85540–10 | C.D.I. UNIT ASSY<br>BLOC C.D.I. | 1 | 1 | 1 | 1 | | F20B<br>F20B |
| | 6AH–85540–00 | C.D.I. UNIT ASSY<br>BLOC C.D.I. | 1 | 1 | 1 | 1 | | F15C<br>F15C |
| 2 | 97095–06020 | BOLT<br>BOULON | 1 | 1 | 1 | 1 | | |
| 3 | 92995–06600 | WASHER<br>RONDELLE | 1 | 1 | 1 | 1 | | |
| 4 | 90109–06221 | BOLT<br>BOULON | 1 | 1 | 1 | 1 | | |
| 5 | 6AH–81948–00 | BRACKET<br>SUPPORT | 1 | 1 | 1 | 1 | | |
| 6 | 90465–13M18 | CLAMP<br>BRIDE | 1 | 1 | 1 | 1 | | |
| 7 | 90119–06M35 | BOLT, WITH WASHER<br>BOULON, AVEC RONDELLE | 3 | 3 | 3 | 3 | | |
| 8 | 90387–06M60 | COLLAR<br>COLLERETTE | 3 | 3 | 3 | 3 | | |
| 9 | 90480–10M23 | GROMMET<br>PASSE-FIL | 3 | 3 | 3 | 3 | | |
| 10 | 6AH–82522–00 | CLAMP, COUPLER<br>BRIDE, DE CONNECTEUR | 1 | 1 | 1 | 1 | | |
| 11 | 97880–06010 | SCREW, PAN HEAD<br>VIS, TETE TRONCONIQUE | 1 | 1 | 1 | 1 | | |
| 12 | 90201–06M05 | WASHER, PLATE<br>RONDELLE, PLATE | 1 | 1 | 1 | 1 | | |
| 13 | 6F5–85570–13 | IGNITION COIL ASSY<br>BOBINE D'ALLUMAGE (ENS.) | 1 | 1 | 1 | 1 | | |
| 14 | 90480–25003 | GROMMET<br>PASSE-FIL | 3 | 3 | 3 | 3 | | |
| 15 | 67F–82361–00 | CLAMP, CORD<br>COLLIER, CORDON | 1 | 1 | 1 | 1 | | |
| 16 | 97095–06025 | BOLT<br>BOULON | 2 | 2 | 2 | 2 | | |
| 17 | 92995–06600 | WASHER<br>RONDELLE | 2 | 2 | 2 | 2 | | |
| 18 | 6AH–82370–00 | PLUG CAP ASSY<br>ANTIPARASITE | 2 | 2 | 2 | 2 | | |
| 19 | 97095–06014 | BOLT<br>BOULON | 2 | 2 | 2 | 2 | | |
| 20 | 92995–06600 | WASHER<br>RONDELLE | 2 | 2 | 2 | 2 | | |
| 21 | 6AH–85542–00 | BRACKET<br>SUPPORT | 1 | 1 | 1 | 1 | | |
| 22 | 90464–07M56 | CLAMP<br>BRIDE | 2 | 2 | 2 | 2 | | |
| 23 | 64J–82504–00 | OIL PRESSURE SWITCH ASSY<br>CONTACTEUR DE PRESSION D'HUILE | 1 | 1 | 1 | 1 | | |
| 24 | 62Y–84301–00 | PILOT LIGHT ASSY 1<br>LAMPE-TEMOIN 1 | 1 | 1 | 1 | 1 | | |
| 25 | 6H4–83589–00 | GASKET<br>GARNITURE | 1 | 1 | 1 | 1 | | |
| 26 | 97885–06012 | SCREW, PAN HEAD<br>VIS, A ENCOCHE | 1 | 1 | 1 | 1 | | |

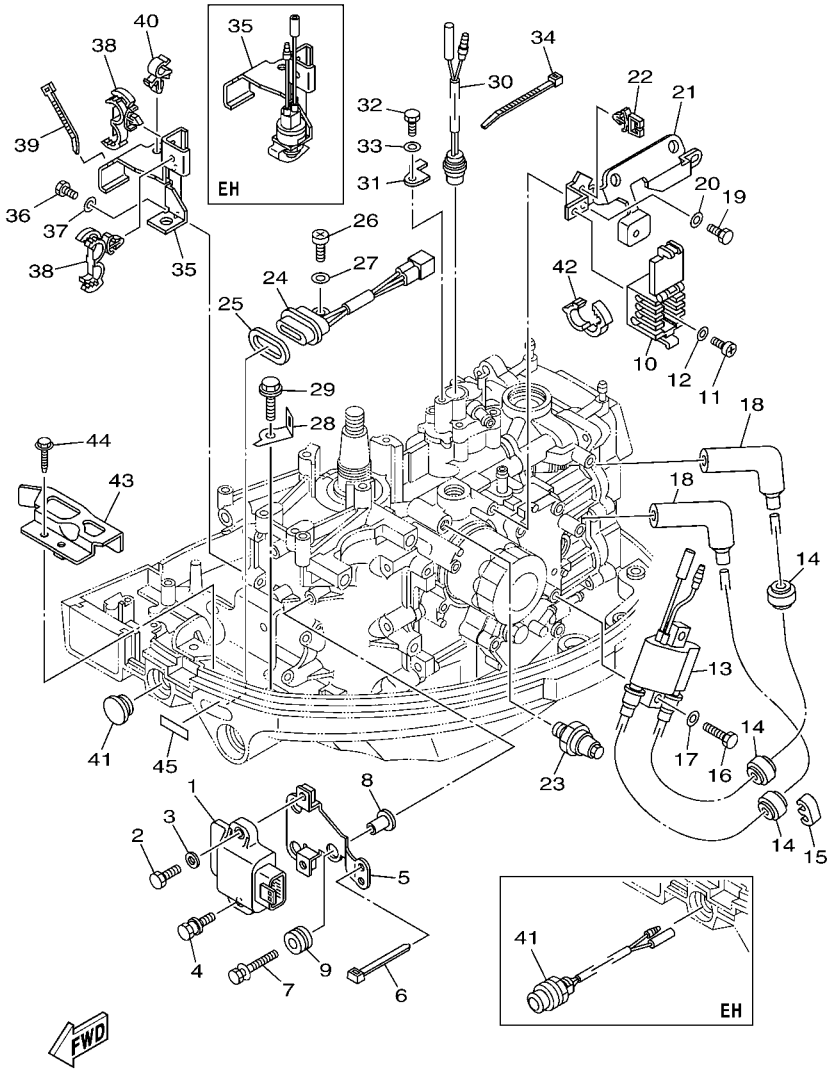


## FIG. 12 ELECTRICAL 1 PARTIE ELECTRIQUE 1

| REF. NO. | PART NO. N° PIECES | DESCRIPTION DESCRIPTION | MH | EH | E | EP | | REMARKS REMARQUES |
|---|---|---|---|---|---|---|---|---|
| 27 | 92995–06600 | WASHER<br>RONDELLE | 1 | 1 | 1 | 1 | | |
| 28 | 6AH–82388–00 | PLATE<br>PLAQUETTE | 1 | 1 | 1 | | | |
| 29 | 90109–06M86 | BOLT<br>BOULON | 1 | 1 | 1 | | | |
| 30 | 6AH–82560–00 | THERMO SWITCH ASSY<br>THERMO-CONTACT COMPLET | 1 | 1 | 1 | 1 | | |
| 31 | 6AH–82588–00 | PLATE<br>PLAQUE | 1 | 1 | 1 | 1 | | |
| 32 | 97095–06014 | BOLT<br>BOULON | 1 | 1 | 1 | 1 | | |
| 33 | 92995–06600 | WASHER<br>RONDELLE | 1 | 1 | 1 | 1 | | |
| 34 | 90465–11M10 | CLAMP<br>BRIDE | 1 | 1 | 1 | 1 | | |
| 35 | 6AH–82554–00 | STAY, NEUTRAL SWITCH<br>SUPPORT, CONT DE POINT-MORT | 1 | | 1 | 1 | | |
| | 6AH–82540–01 | NEUTRAL SWITCH ASSY<br>CONTACTEUR DE POINT-MORT | | 1 | | | | |
| 36 | 97095–06016 | BOLT<br>BOULON | 2 | 2 | 2 | 2 | | |
| 37 | 92995–06600 | WASHER<br>RONDELLE | 2 | 2 | 2 | 2 | | |
| 38 | 90464–18246 | CLAMP<br>BRIDE | 2 | 2 | 2 | 2 | | |
| 39 | 90465–13M18 | CLAMP<br>BRIDE | 1 | 1 | | 1 | | |
| 40 | 90464–10M32 | CLAMP<br>BRIDE | 1 | 1 | 1 | 1 | | |
| 41 | 6G1–42725–00 | GROMMET<br>PASSE-FIL | 1 | | 1 | 1 | | |
| | 68T–81870–00 | STARTING SWITCH ASSY<br>CONTACT A CLEF | | 1 | | | | |
| 42 | 90464–16003 | CLAMP<br>BRIDE | 1 | 1 | | | | |
| | 90464–16001 | CLAMP<br>BRIDE | | | 1 | 1 | | |
| 43 | 6AH–82389–00 | PLATE 2<br>PLAQUETTE 2 | 1 | 1 | 1 | 1 | | |
| 44 | 90109–06M86 | BOLT<br>BOULON | 1 | 1 | 1 | 1 | | |
| 45 | 67C–85415–00 | MARK, SIGNAL LAMP<br>ETIQUETTE | 1 | 1 | 1 | 1 | | |

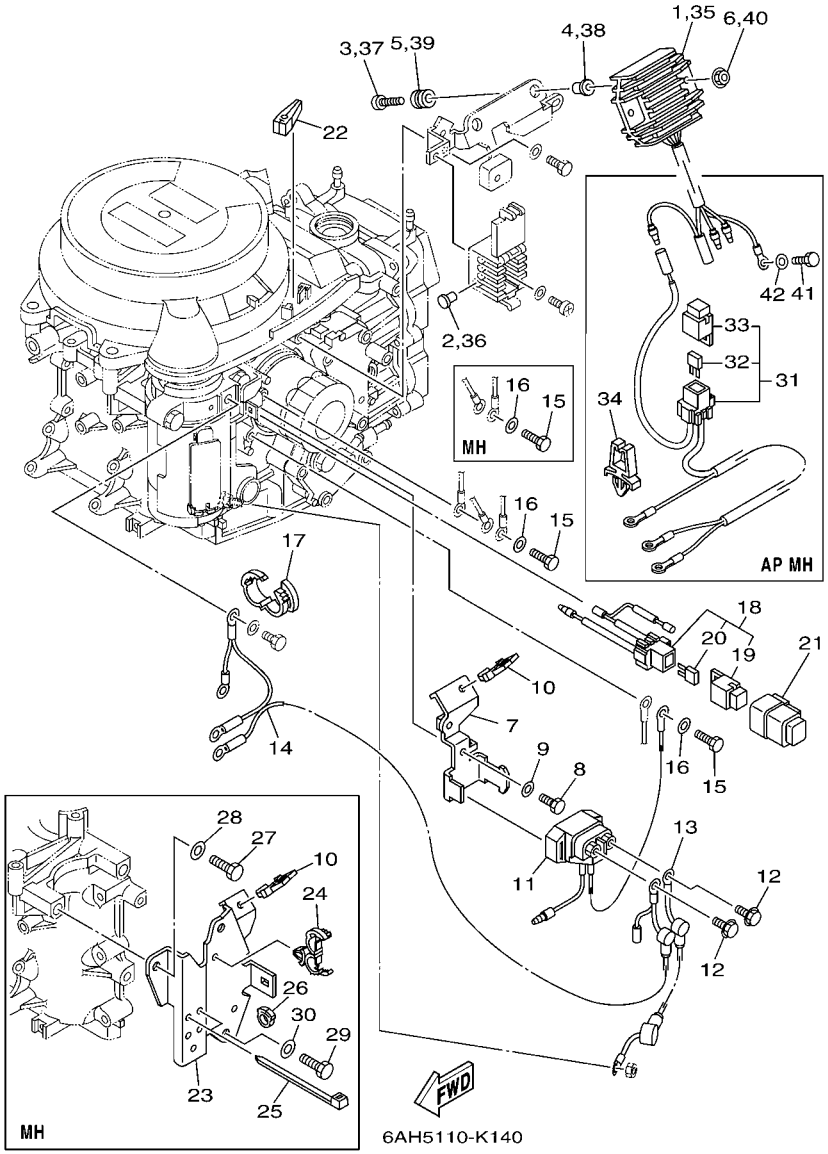


## FIG. 13 ELECTRICAL 2 — PARTIE ELECTRIQUE 2

| REF. NO. | PART NO. N° PIECES | DESCRIPTION DESCRIPTION | MH | EH | E | EP | | REMARKS REMARQUES |
|---|---|---|---|---|---|---|---|---|
| 1 | 6AH–81960–00 | RECTIFIER & REGULATOR ASSY<br>REDRESSEUR REGULATEUR CPLT | | 1 | 1 | 1 | | |
| 2 | 703–82119–00 | COVER, LEAD WIRE<br>GARNITURE, FIL | | 1 | 1 | 1 | | |
| 3 | 98980–06030 | SCREW, BIND<br>VIS, DE PRESSION | | 2 | 2 | 2 | | |
| 4 | 90387–06M70 | COLLAR<br>COLLERETTE | | 2 | 2 | 2 | | |
| 5 | 90480–13M24 | GROMMET<br>PASSE-FIL | | 2 | 2 | 2 | | |
| 6 | 95780–06500 | NUT, FLANGE<br>ECROU | | 2 | 2 | 2 | | |
| 7 | 6AH–81945–00 | PLATE, SWITCH FITTING<br>PLAQUE, FIXATION DU RELAIS | | 1 | 1 | 1 | | |
| 8 | 97095–06014 | BOLT<br>BOULON | | 1 | 1 | 1 | | |
| 9 | 92995–06600 | WASHER<br>RONDELLE | | 1 | 1 | 1 | | |
| 10 | 90464–08004 | CLAMP<br>BRIDE | 1 | 1 | 1 | 1 | | |
| 11 | 68T–81940–00 | STARTER RELAY ASSY<br>LANCEUR RELAIS (ENS.) | | 1 | 1 | 1 | | |
| 12 | 97595–06610 | BOLT, WITH WASHER<br>VIS HEXAGONAL AVC RONDELLE | | 2 | 2 | 2 | | |
| 13 | 6AH–82117–00 | WIRE, LEAD<br>FIL | | 1 | 1 | 1 | | |
| 14 | 6AH–82105–00 | WIRE HARNESS<br>FAISCEAU DE FILS | | 1 | 1 | 1 | | |
| 15 | 97095–06014 | BOLT<br>BOULON | 1 | | | | | |
| | 97095–06014 | BOLT<br>BOULON | | 2 | 2 | 2 | | |
| 16 | 92995–06600 | WASHER<br>RONDELLE | 1 | | | | | |
| | 92995–06600 | WASHER<br>RONDELLE | | 2 | 2 | 2 | | |
| 17 | 90464–16001 | CLAMP<br>BRIDE | | 1 | 1 | 1 | | |
| 18 | 6AH–82150–00 | FUSE HOLDER ASSY<br>SUPPORT DE FUSIBLE | | 1 | 1 | 1 | | |
| 19 | 67F–8215B–10 | .CAP (YELLOW)<br>.BOUCHON (YELLOW) | | 1 | 1 | 1 | | |
| 20 | 67F–82151–00 | .FUSE (20A)<br>.FUSIBLE (20A) | | 2 | 2 | 2 | | |
| 21 | 6AH–82157–00 | DAMPER<br>AMORTISSEUR | | 1 | 1 | 1 | | |
| 22 | 67F–2812A–00 | PULLER, FUSE<br>TENDEUR, FUSIBLE | | 1 | 1 | 1 | | |
| 23 | 6AH–82398–00 | PLATE 3<br>PLAQUETTE 3 | 1 | | | | | |
| 24 | 90464–18246 | CLAMP<br>BRIDE | 1 | | | | | |
| 25 | 90465–13M18 | CLAMP<br>BRIDE | 3 | | | | | |

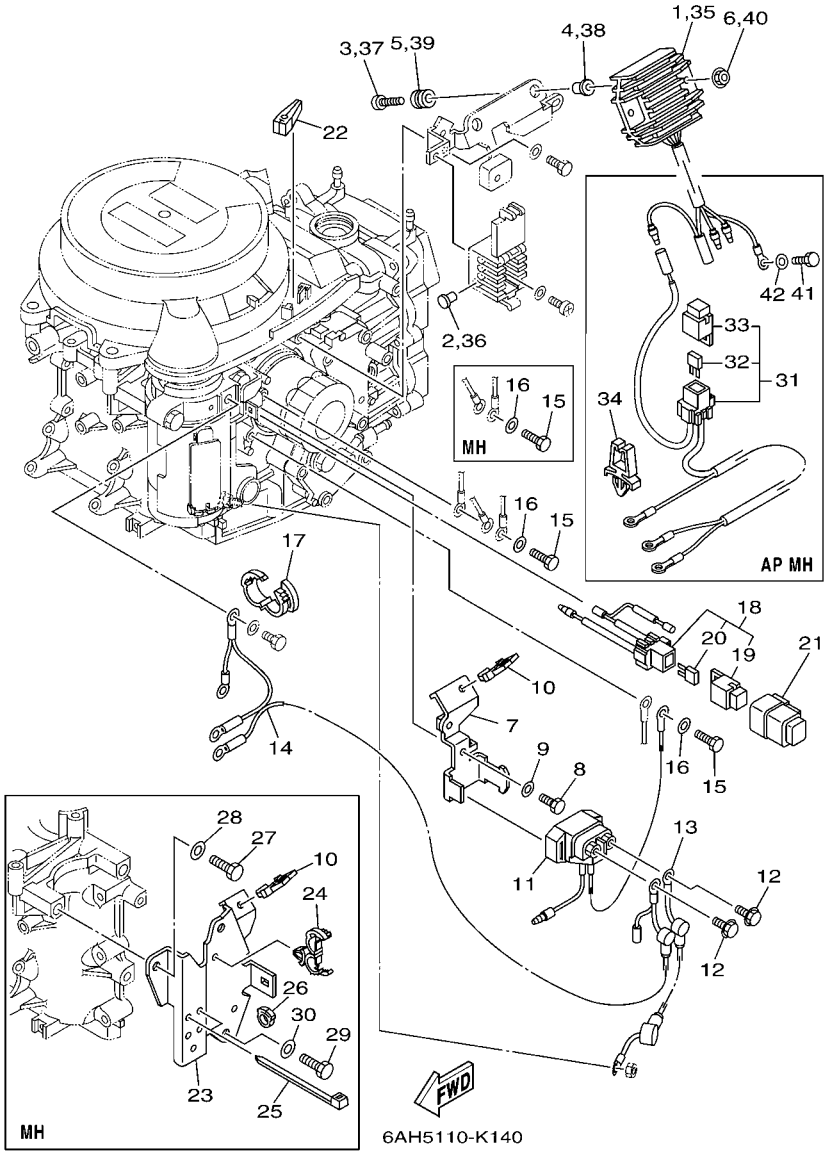


## FIG. 13 ELECTRICAL 2 — PARTIE ELECTRIQUE 2

| REF. NO. | PART NO. N° PIECES | DESCRIPTION DESCRIPTION | MH | EH | E | EP | | REMARKS REMARQUES |
|---|---|---|---|---|---|---|---|---|
| 26 | 90464–09010 | CLAMP<br>BRIDE | 1 | | | | | |
| 27 | 97095–08025 | BOLT<br>BOULON | 2 | | | | | |
| 28 | 92995–08600 | WASHER<br>RONDELLE | 2 | | | | | |
| 29 | 97095–08016 | BOLT<br>BOULON | 1 | | | | | |
| 30 | 92995–08600 | WASHER<br>RONDELLE | 1 | | | | | |
| 31 | 6AH–81949–00 | WIRE, LEAD<br>FIL | 1 | | | | | AP<br>AP |
| 32 | 67F–82151–00 | .FUSE (20A)<br>.FUSIBLE (20A) | 2 | | | | | |
| 33 | 67F–8215B–00 | .CAP (BLACK)<br>.BOUCHON (NOIR) | 1 | | | | | |
| 34 | 90464–06001 | CLAMP<br>BRIDE | 1 | | | | | AP<br>AP |
| 35 | 6AH–81960–00 | RECTIFIER & REGULATOR ASSY<br>REDRESSEUR REGULATEUR CPLT | 1 | | | | | AP<br>AP |
| 36 | 703–82119–00 | COVER, LEAD WIRE<br>GARNITURE, FIL | 1 | | | | | AP<br>AP |
| 37 | 98980–06030 | SCREW, BIND<br>VIS, DE PRESSION | 2 | | | | | AP<br>AP |
| 38 | 90387–06M70 | COLLAR<br>COLLERETTE | 2 | | | | | AP<br>AP |
| 39 | 90480–13M24 | GROMMET<br>PASSE-FIL | 2 | | | | | AP<br>AP |
| 40 | 95780–06500 | NUT, FLANGE<br>ECROU | 2 | | | | | AP<br>AP |
| 41 | 97095–06014 | BOLT<br>BOULON | 1 | | | | | AP<br>AP |
| 42 | 92995–06600 | WASHER<br>RONDELLE | 1 | | | | | AP<br>AP |

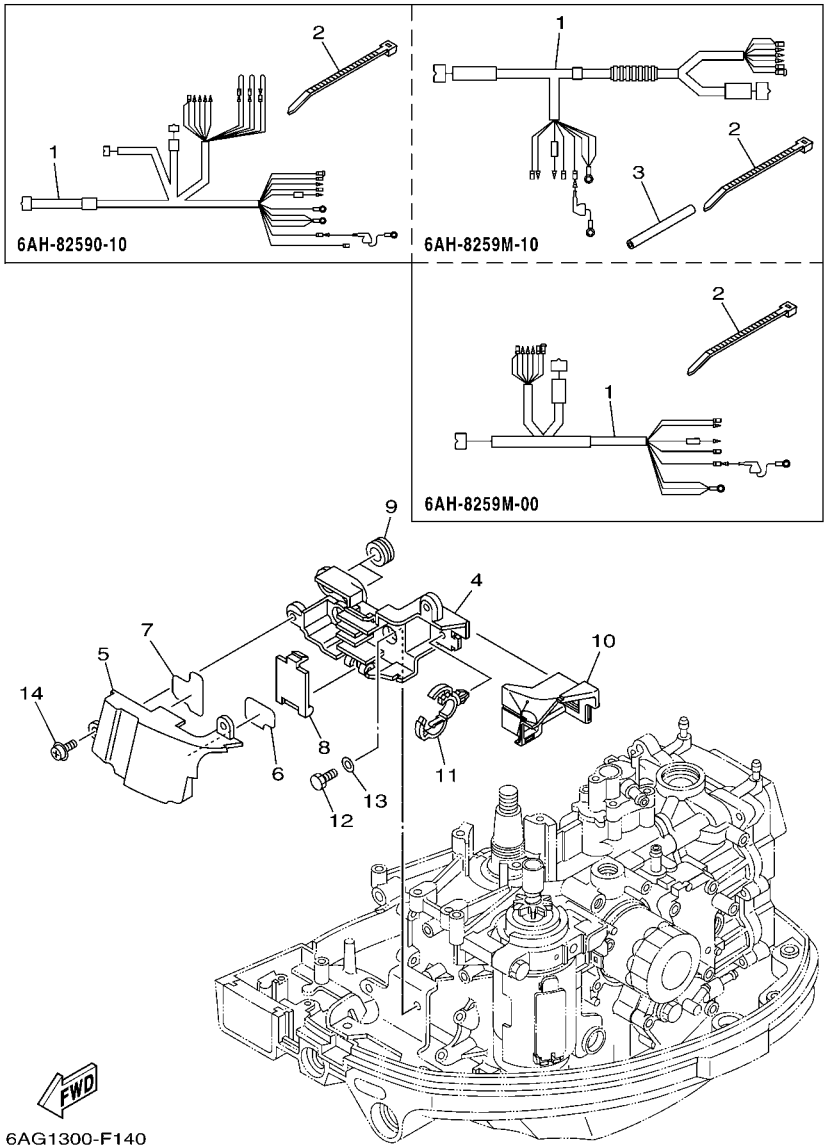


## FIG. 14 ELECTRICAL 3 — PARTIE ELECTRIQUE 3

| REF. NO. | PART NO. N° PIECES | DESCRIPTION DESCRIPTION | MH | EH | E | EP | | REMARKS REMARQUES |
|---|---|---|---|---|---|---|---|---|
| 1 | 6AH–8259M–10 | WIRE HARNESS ASSY 2<br>FAISCEAU DE FILS | 1 | | | | | |
| | 6AH–8259M–00 | WIRE HARNESS ASSY 2<br>FAISCEAU DE FILS | | 1 | | | | |
| | 6AH–82590–10 | WIRE HARNESS ASSY<br>FAISCEAU DE FILS COMPLET | | | 1 | | | |
| 2 | 90465–13M18 | CLAMP<br>BRIDE | 1 | 1 | 1 | | | |
| 3 | 90445–08029 | HOSE<br>DURITE | 1 | | | | | |
| 4 | 6AH–8552A–00 | HOUSING<br>CARTER | 1 | 1 | 1 | | | |
| 5 | 6AH–8552E–00 | COVER, CASE<br>COUVERCLE | 1 | 1 | 1 | | | |
| 6 | 6AH–42735–30 | PROTECTOR<br>PROTECTEUR | 1 | 1 | 1 | | | |
| 7 | 6AH–42735–40 | PROTECTOR<br>PROTECTEUR | 1 | 1 | 1 | | | |
| 8 | 6AH–85537–00 | COVER<br>COUVERCLE | 1 | 1 | 1 | | | |
| 9 | 90480–19368 | GROMMET<br>PASSE-FIL | 2 | 2 | 2 | | | |
| 10 | 6AH–85547–00 | DAMPER<br>AMORTISSEUR | 1 | 1 | 1 | | | |
| 11 | 90464–20181 | CLAMP<br>BRIDE | 1 | 1 | 1 | | | |
| 12 | 97095–06014 | BOLT<br>BOULON | 2 | 2 | 2 | | | |
| 13 | 92995–06600 | WASHER<br>RONDELLE | 2 | 2 | 2 | | | |
| 14 | 97985–06214 | SCREW, WITH WASHER<br>VIS, AVEC RONDELLE | 2 | 2 | 2 | | | |

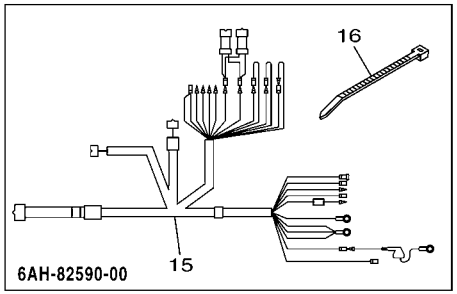


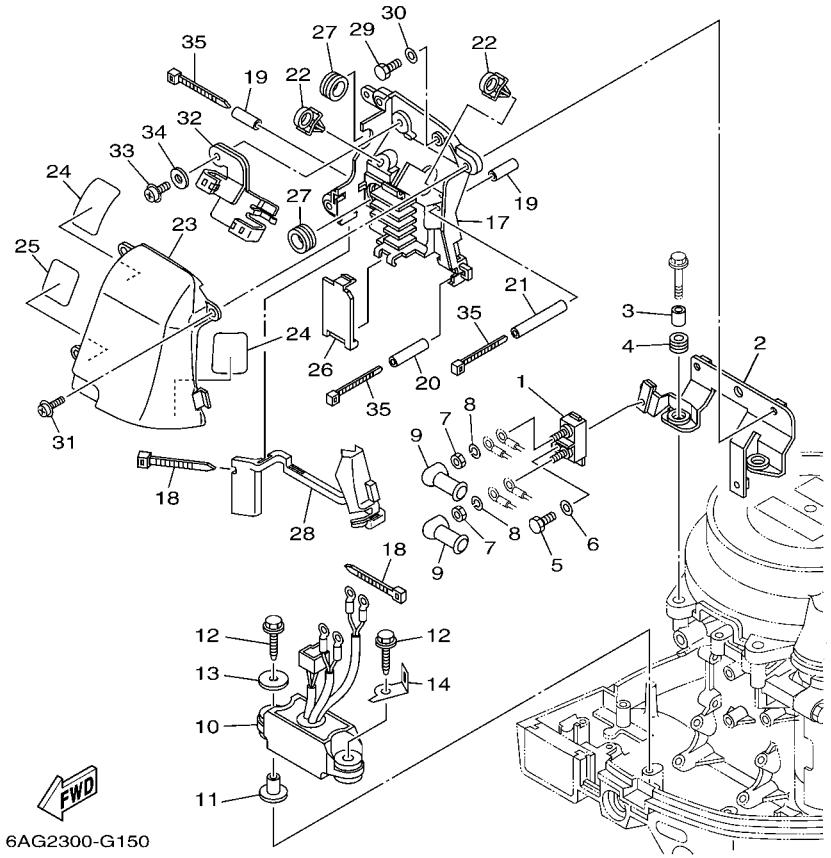


## FIG. 15 ELECTRICAL 4 — PARTIE ELECTRIQUE 4

| REF. NO. | PART NO. N° PIECES | DESCRIPTION DESCRIPTION | MH | EH | E | EP | | REMARKS REMARQUES |
|---|---|---|---|---|---|---|---|---|
| 1 | 6H5–81925–00 | TERMINAL<br>BORNE | | | | 1 | | |
| 2 | 6AH–81929–01 | BRACKET, TERMINAL<br>SUPPORT | | | | 1 | | |
| 3 | 90387–06182 | COLLAR<br>COLLERETTE | | | | 2 | | |
| 4 | 6AH–82317–00 | DAMPER, IGNITION COIL<br>AMORTISSEUR, BOBINE D'ALLUM | | | | 2 | | |
| 5 | 97095–06014 | BOLT<br>BOULON | | | | 1 | | |
| 6 | 92995–06600 | WASHER<br>RONDELLE | | | | 1 | | |
| 7 | 90170–06M30 | NUT<br>ECROU | | | | 2 | | |
| 8 | 90204–06M00 | WASHER, SPRING<br>RONDELLE, GROWER | | | | 2 | | |
| 9 | 6G5–82119–00 | COVER, LEAD WIRE<br>GARNITURE, FIL | | | | 2 | | |
| 10 | 6AH–81950–00 | RELAY ASSY<br>RELAIS COMPLET | | | | 1 | | |
| 11 | 90387–06M03 | COLLAR<br>COLLERETTE | | | | 2 | | |
| 12 | 90109–06MA2 | BOLT<br>BOULON | | | | 2 | | |
| 13 | 90201–06416 | WASHER, PLATE<br>RONDELLE, PLATE | | | | 1 | | |
| 14 | 6AH–82388–00 | PLATE<br>PLAQUETTE | | | | 1 | | |
| 15 | 6AH–82590–00 | WIRE HARNESS ASSY<br>FAISCEAU DE FILS COMPLET | | | | 1 | | |
| 16 | 90465–13M18 | CLAMP<br>BRIDE | | | | 1 | | |
| 17 | 6AH–8552A–10 | HOUSING<br>CARTER | | | | 1 | | |
| 18 | 90465–13M18 | CLAMP<br>BRIDE | | | | 2 | | |
| 19 | 90445–07025 | HOSE<br>DURITE | | | | 2 | | |
| 20 | 90445–07026 | HOSE<br>DURITE | | | | 1 | | |
| 21 | 90445–07027 | HOSE<br>DURITE | | | | 1 | | |
| 22 | 90464–12001 | CLAMP<br>BRIDE | | | | 2 | | |
| 23 | 6AH–8552E–10 | COVER, CASE<br>COUVERCLE | | | | 1 | | |
| 24 | 6AH–42735–10 | PROTECTOR<br>PROTECTEUR | | | | 2 | | |
| 25 | 6AH–42735–20 | PROTECTOR<br>PROTECTEUR | | | | 1 | | |
| 26 | 6AH–85537–10 | COVER<br>COUVERCLE | | | | 1 | | |
| 27 | 90480–19368 | GROMMET<br>PASSE-FIL | | | | 2 | | |

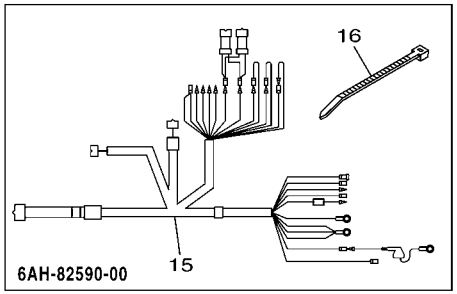


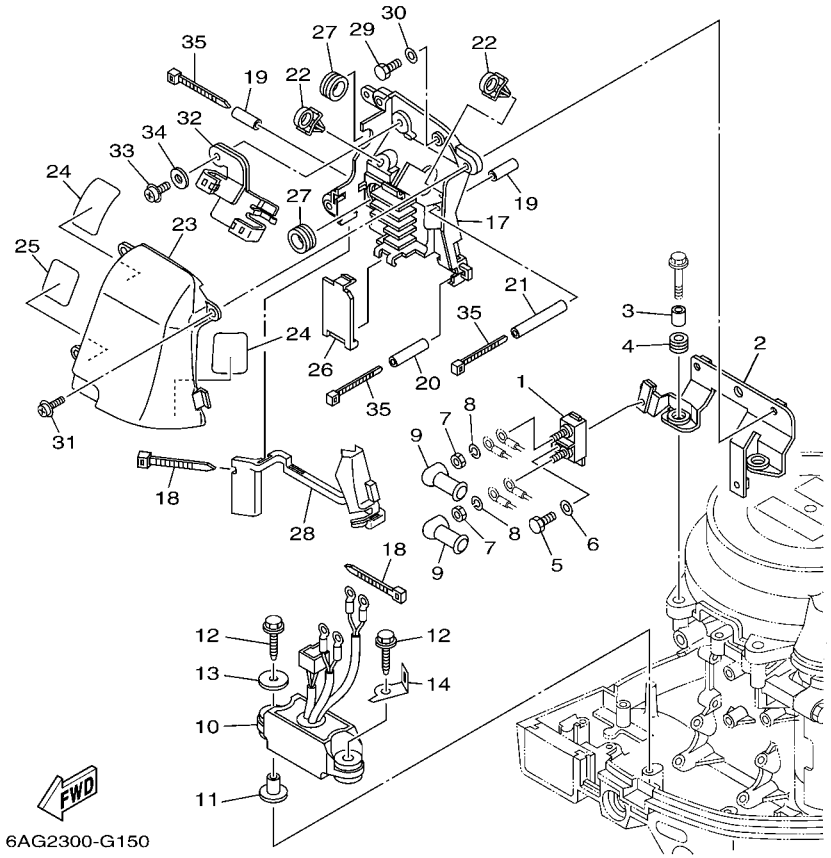


## FIG. 15 ELECTRICAL 4 — PARTIE ELECTRIQUE 4

| REF. NO. | PART NO. N° PIECES | DESCRIPTION DESCRIPTION | MH | EH | E | EP | | REMARKS REMARQUES |
|---|---|---|---|---|---|---|---|---|
| 28 | 6AH–85547–10 | DAMPER<br>AMORTISSEUR | | | | 1 | | |
| 29 | 97095–06014 | BOLT<br>BOULON | | | | 3 | | |
| 30 | 92995–06600 | WASHER<br>RONDELLE | | | | 3 | | |
| 31 | 97985–06214 | SCREW, WITH WASHER<br>VIS, AVEC RONDELLE | | | | 3 | | |
| 32 | 6AH–85525–10 | PLATE<br>PLAQUE | | | | 1 | | |
| 33 | 97985–06214 | SCREW, WITH WASHER<br>VIS, AVEC RONDELLE | | | | 1 | | |
| 34 | 90201–06068 | WASHER, PLATE<br>RONDELLE, PLATE | | | | 1 | | |
| 35 | 90464–76001 | CLAMP<br>BRIDE | | | | 3 | | |

## FIG. 16 ELECTRICAL 5 PARTIE ELECTRIQUE 5

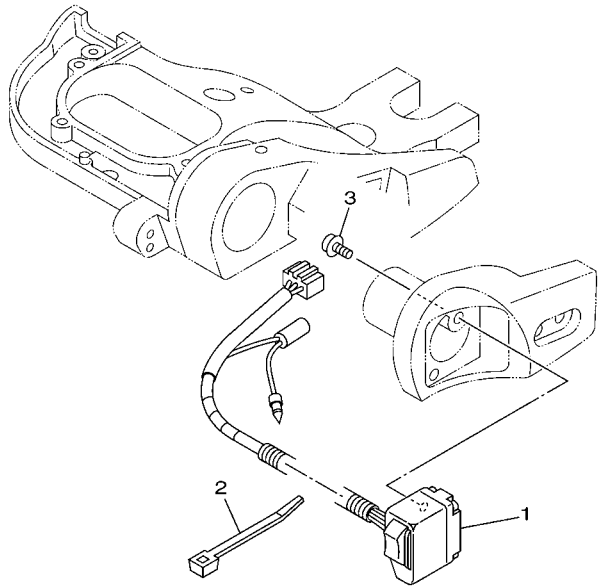

6AG4300-J160

| REF. NO. | PART NO. N° PIECES | DESCRIPTION DESCRIPTION | MH | EH | E | EP | | REMARKS REMARQUES |
|---|---|---|---|---|---|---|---|---|
| 1 | 6AH–82563–00 | TRIM & TILT SWITCH ASSY<br>INCLINER ET PARER COMMUTATEUR | | | | 1 | | |
| 2 | 90465–11M10 | CLAMP<br>BRIDE | | | | 2 | | |
| 3 | 97985–06220 | SCREW, WITH WASHER<br>VIS, AVEC RONDELLE | | | | 2 | | |

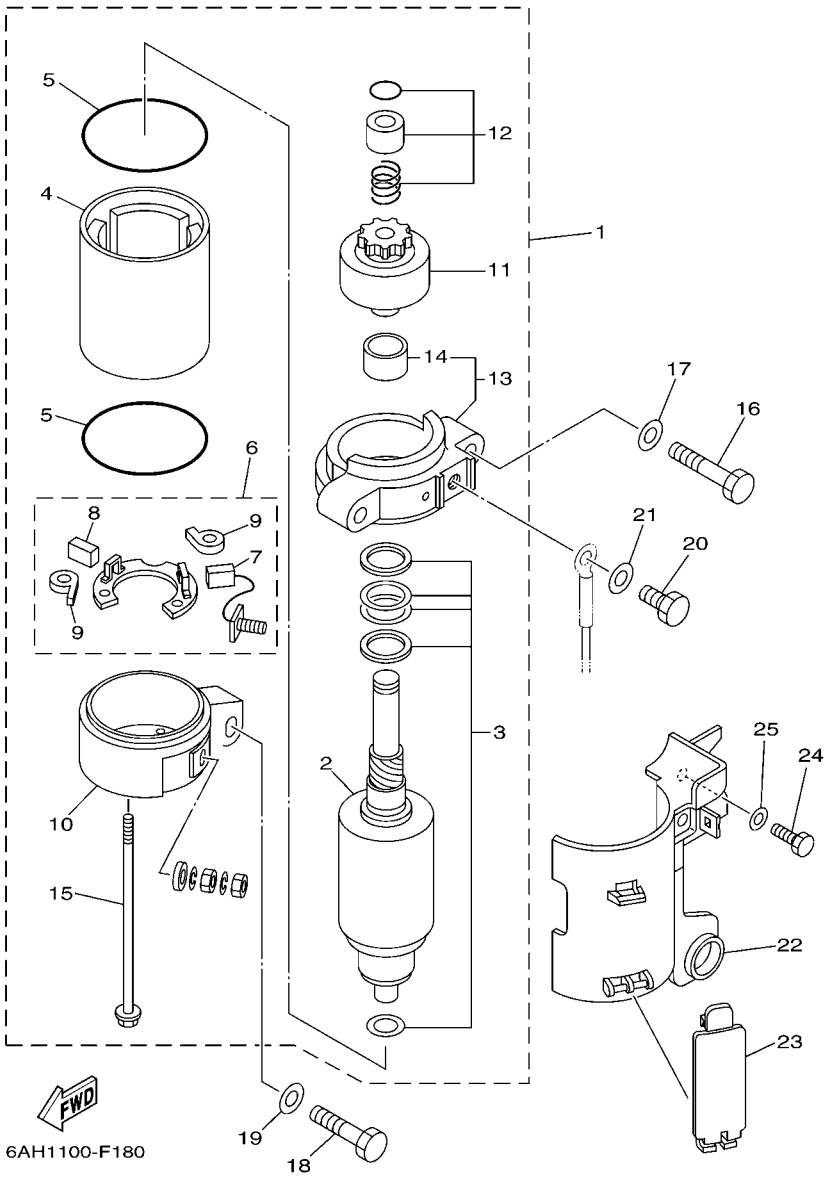


## FIG. 17 STARTING MOTOR DEMARREUR ELECTRIQUE

| REF. NO. | PART NO. N° PIECES | DESCRIPTION DESCRIPTION | MH | EH | E | EP | | REMARKS REMARQUES |
|---|---|---|---|---|---|---|---|---|
| 1 | 6AH–81800–00 | STARTING MOTOR ASSY<br>DEMARREUR ELECTRIQUE COMPLET | | 1 | 1 | 1 | | |
| 2 | 689–81850–11 | .ARMATURE ASSY<br>.INDUIT | | 1 | 1 | 1 | | |
| 3 | 689–81809–11 | .WASHER KIT<br>.JEU DE RONDELLES | | 1 | 1 | 1 | | |
| 4 | 689–81810–11 | .STATOR ASSY<br>.STATOR COMPLET | | 1 | 1 | 1 | | |
| 5 | 689–81847–11 | .O-RING<br>.JOINT TORIQUE | | 2 | 2 | 2 | | |
| 6 | 689–81840–11 | .BRUSH HOLDER ASSY<br>.SUPPORT DE CHARBON | | 1 | 1 | 1 | | |
| 7 | 689–81811–11 | ..BRUSH 1<br>..CHARBON 1 | | 1 | 1 | 1 | | |
| 8 | 689–81812–11 | ..BRUSH 2<br>..CHARBON 2 | | 1 | 1 | 1 | | |
| 9 | 689–81813–10 | ..SPRING, BRUSH<br>..RESSORT, DE CHARBON | | 2 | 2 | 2 | | |
| 10 | 6AH–81820–00 | .REAR BRACKET ASSY<br>.SUPPORT ARRIERE COMPLET | | 1 | 1 | 1 | | |
| 11 | 689–81807–12 | .GEAR ASSY, STARTING MOTOR<br>.PIGNON, DEMARREUR ELECTRIQUE | | 1 | 1 | 1 | | |
| 12 | 68T–81857–00 | .RETAINER<br>.ARRETOIR | | 1 | 1 | 1 | | |
| 13 | 6AH–81830–00 | .FRONT BRACKET ASSY<br>.SUPPORT AVANT | | 1 | 1 | 1 | | |
| 14 | 689–81831–00 | ..METAL, FRONT<br>..METAL, AVANT | | 1 | 1 | 1 | | |
| 15 | 689–81826–10 | .BOLT<br>.BOULON | | 2 | 2 | 2 | | |
| 16 | 97013–08045 | BOLT<br>BOULON | | 2 | 2 | 2 | | |
| 17 | 92903–08600 | WASHER, PLATE<br>RONDELLE, PLATE | | 2 | 2 | 2 | | |
| 18 | 97013–08035 | BOLT<br>BOULON | | 1 | 1 | 1 | | |
| 19 | 92903–08600 | WASHER, PLATE<br>RONDELLE, PLATE | | 1 | 1 | 1 | | |
| 20 | 97095–08016 | BOLT<br>BOULON | | 1 | 1 | 1 | | |
| 21 | 92995–08600 | WASHER<br>RONDELLE | | 1 | 1 | 1 | | |
| 22 | 6AH–81942–00 | COVER<br>COUVERCLE | | 1 | 1 | 1 | | |
| 23 | 6AH–82581–00 | STAY, CORD CLAMP<br>SUPPORT, COLLIER DE CORDON | | 1 | 1 | 1 | | |
| 24 | 97095–06014 | BOLT<br>BOULON | | 1 | 1 | 1 | | |
| 25 | 92995–06600 | WASHER<br>RONDELLE | | 1 | 1 | 1 | | |

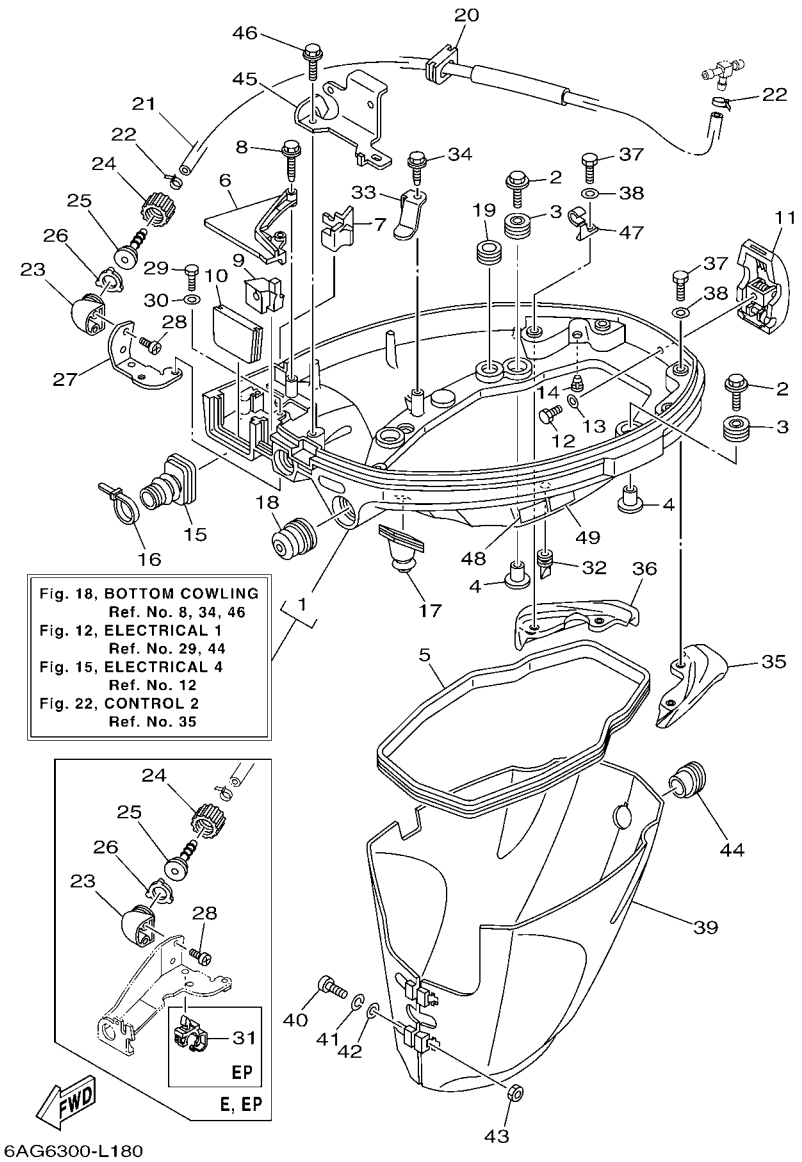


## FIG. 18 BOTTOM COWLING CAPOT INFERIEUR

| REF. NO. | PART NO. N° PIECES | DESCRIPTION DESCRIPTION | MH | EH | E | EP | | REMARKS REMARQUES |
|---|---|---|---|---|---|---|---|---|
| 1 | 6AH–42710–00–4D | BOTTOM COWLING ASSY<br>ENS. EMBASE | 1 | 1 | 1 | | | |
| | 6AH–42710–10–4D | BOTTOM COWLING ASSY<br>ENS. EMBASE | | | | 1 | | |
| 2 | 68F–85119–00 | BOLT<br>BOULON | 4 | 4 | 4 | 4 | | |
| 3 | 90480–21M82 | GROMMET<br>PASSE-FIL | 4 | 4 | 4 | 4 | | |
| 4 | 90387–06176 | COLLAR<br>COLLERETTE | 4 | 4 | 4 | 4 | | |
| 5 | 6AH–42716–00 | RUBBER, SEAL 1<br>JOINT EN CAOUTCHOUC 1 | 1 | 1 | 1 | 1 | | |
| 6 | 6AH–42738–00–4D | PLATE, FITTING<br>ETRIER | 1 | 1 | 1 | 1 | | |
| 7 | 6AH–42718–00 | RUBBER, SEAL 3<br>JOINT | 1 | 1 | 1 | 1 | | |
| 8 | 90109–06M82 | BOLT<br>BOULON | 2 | 2 | 2 | 2 | | |
| 9 | 6AH–42725–00 | GROMMET<br>PASSE-FIL | 1 | | | | | |
| | 6AH–42725–10 | GROMMET<br>PASSE-FIL | | 1 | | | | |
| | 6AH–42725–20 | GROMMET<br>PASSE-FIL | | | 1 | 1 | | |
| 10 | 6AH–42724–00 | GROMMET<br>PASSE-FIL | 1 | 1 | | | | |
| | 6AH–42724–10 | GROMMET<br>PASSE-FIL | | | 1 | 1 | | |
| 11 | 6AH–42801–00 | COWLING CLAMP COMP.<br>BRIDE DE CAPOT COMP. | 1 | 1 | 1 | 1 | | |
| 12 | 97095–06012 | BOLT<br>BOULON | 1 | 1 | 1 | 1 | | |
| 13 | 92995–06600 | WASHER<br>RONDELLE | 1 | 1 | 1 | 1 | | |
| 14 | 6BL–44391–00 | NIPPLE, HOSE<br>RACCORD D'ESSENCE | 1 | 1 | 1 | 1 | | |
| 15 | 6AH–26326–00 | GROMMET<br>RONDELLE CAOUTCHOUC | 1 | 1 | | 1 | | |
| | 6AH–26326–10 | GROMMET<br>RONDELLE CAOUTCHOUC | | | 1 | | | |
| 16 | 90465–11M10 | CLAMP<br>BRIDE | 1 | 1 | | 1 | | |
| 17 | 6AH–42727–00 | GROMMET<br>PASSE-FIL | 1 | 1 | 1 | 1 | | |
| 18 | 65W–42726–00 | GROMMET<br>PASSE-FIL | 1 | 1 | | | | |
| | 65W–42726–10 | GROMMET<br>PASSE-FIL | | | 1 | 1 | | |
| 19 | 90480–16007 | GROMMET<br>PASSE-FIL | 1 | 1 | 1 | 1 | | |
| 20 | 6AH–42726–00 | GROMMET<br>PASSE-FIL | 1 | 1 | 1 | 1 | | |
| 21 | 6AH–24314–01 | PIPE 4<br>DURITE 4 | 1 | 1 | 1 | 1 | | |

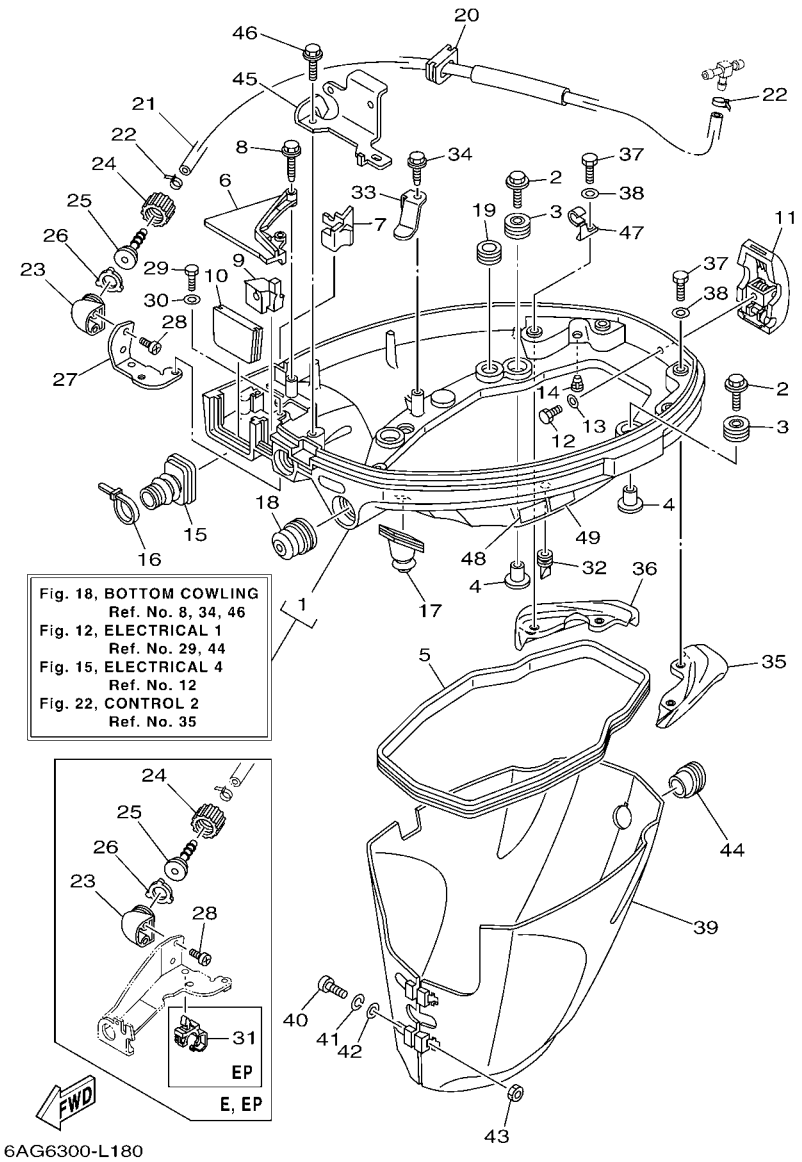


## FIG. 18 BOTTOM COWLING CAPOT INFERIEUR

| REF. NO. | PART NO. N° PIECES | DESCRIPTION DESCRIPTION | MH | EH | E | EP | | REMARKS REMARQUES |
|---|---|---|---|---|---|---|---|---|
| 22 | 90465–11M10 | CLAMP<br>BRIDE | 2 | 2 | 2 | 2 | | |
| 23 | 68T–12572–00 | ADAPTER<br>ADAPTATEUR | 1 | 1 | 1 | 1 | | |
| 24 | 6R3–12581–00 | JOINT, HOSE 1<br>JOINT DE TUYAU | 1 | 1 | 1 | 1 | | |
| 25 | 6R3–12582–00 | JOINT, HOSE 2<br>RACCORD DE TUYAU 1 | 1 | 1 | 1 | 1 | | |
| 26 | 6R3–12583–00 | GASKET, HOSE JOINT<br>JOINT | 1 | 1 | 1 | 1 | | |
| 27 | 6AH–12535–00 | PLATE<br>PLAQUE | 1 | 1 | | | | |
| 28 | 90167–06002 | SCREW, TAPPING<br>VIS, TETE FRAISEE | 2 | 2 | 2 | 2 | | |
| 29 | 97095–06010 | BOLT<br>BOULON | 2 | 2 | | | | |
| 30 | 92995–06600 | WASHER<br>RONDELLE | 2 | 2 | | | | |
| 31 | 90464–12M58 | CLAMP<br>BRIDE | | | | 1 | | |
| 32 | 65W–42717–00 | RUBBER, SEAL 2<br>JOINT EN CAOUTCHOUC 2 | 2 | 2 | 2 | 2 | | |
| 33 | 6AH–42743–00 | BRACKET<br>SUPPORT | 1 | 1 | 1 | 1 | | |
| 34 | 90109–06M86 | BOLT<br>BOULON | 1 | 1 | 1 | 1 | | |
| 35 | 6AH–42761–00 | STOPPER<br>PLAQUETTE | 1 | 1 | 1 | 1 | | |
| 36 | 6AH–42762–00 | STOPPER<br>PLAQUETTE | 1 | 1 | 1 | 1 | | |
| 37 | 97075–06012 | BOLT<br>BOULON | 4 | 4 | 4 | 4 | | |
| 38 | 92995–06600 | WASHER<br>RONDELLE | 4 | 4 | 4 | 4 | | |
| 39 | 6AH–42741–00 | APRON<br>CAPOT LATERAL | 1 | 1 | 1 | 1 | | |
| 40 | 97885–06030 | SCREW, PAN HEAD<br>VIS, A ENCOCHE | 2 | 2 | 2 | 2 | | |
| 41 | 92995–06100 | WASHER, SPRING<br>RONDELLE, GROWER | 2 | 2 | 2 | 2 | | |
| 42 | 92995–06600 | WASHER<br>RONDELLE | 2 | 2 | 2 | 2 | | |
| 43 | 95380–06600 | NUT, HEXAGON<br>ECROU | 2 | 2 | 2 | 2 | | |
| 44 | 6AH–42717–00 | RUBBER, SEAL 2<br>JOINT EN CAOUTCHOUC 2 | 1 | 1 | 1 | 1 | | |
| 45 | 6AH–15774–00 | STAY 4<br>SUPPORT 4 | 1 | 1 | 1 | 1 | | |
| 46 | 90109–06M86 | BOLT<br>BOULON | 1 | 1 | 1 | 1 | | |
| 47 | 90465–08M82 | CLAMP<br>BRIDE | 1 | 1 | 1 | 1 | | |
| 48 | 6AH–42794–40 | LABEL, WARNING (GENERAL)<br>ETIQUETTE, AVERTISSEMENT | 1 | 1 | 1 | 1 | | Go to P/N : PE0-OM-120058 |

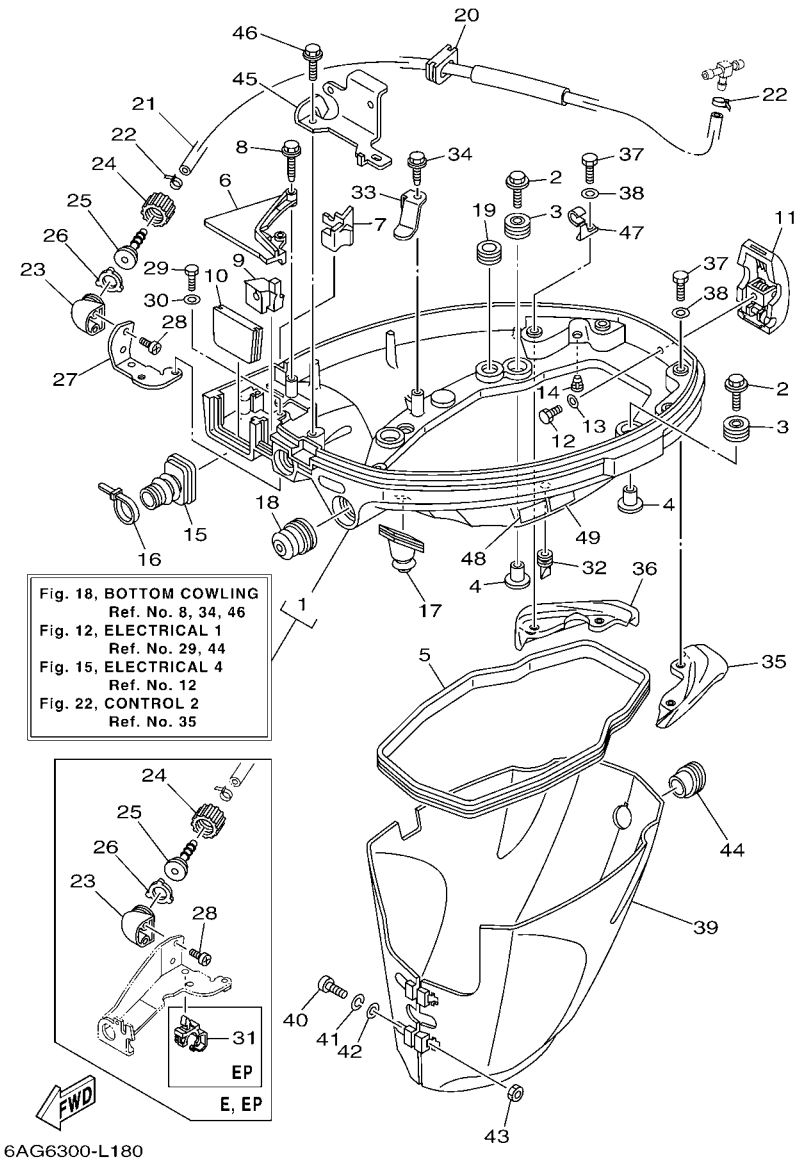


## FIG. 18 BOTTOM COWLING CAPOT INFERIEUR

| REF. NO. | PART NO. N° PIECES | DESCRIPTION DESCRIPTION | MH | EH | E | EP | | REMARKS REMARQUES |
|---|---|---|---|---|---|---|---|---|
| 49 | 6AH–42794–50 | LABEL, WARNING (GENERAL)<br>ETIQUETTE, AVERTISSEMENT | 1 | 1 | 1 | 1 | | |

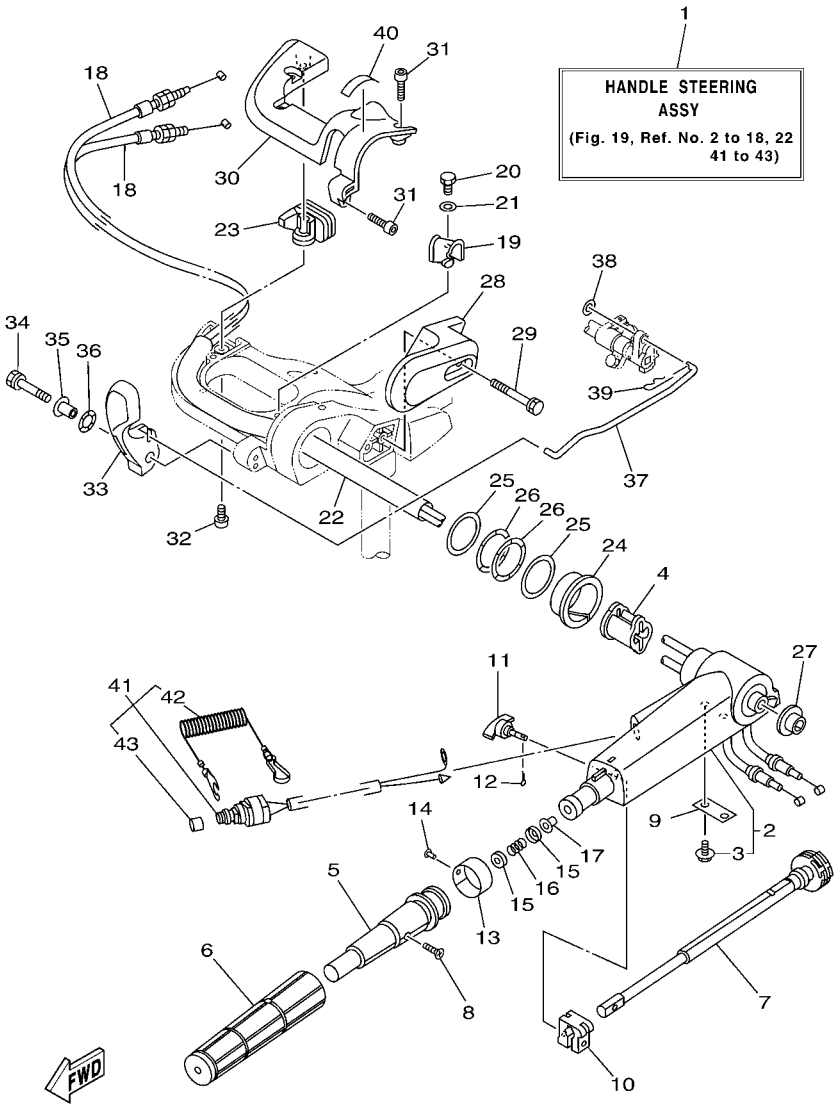


## FIG. 19 STEERING DIRECTION

| REF. NO. | PART NO. N° PIECES | DESCRIPTION DESCRIPTION | MH | EH | E | EP | | REMARKS REMARQUES |
|---|---|---|---|---|---|---|---|---|
| 1 | 6AH–W0084–02–4D | HANDLE STEERING ASSY<br>BARRE FRANCHE (ENS.) | 1 | 1 | | | | |
| 2 | 6AH–42101–01–4D | HANDLE, STEERING<br>POIGNEE | 1 | 1 | | | | |
| 3 | 90109–06M86 | .BOLT<br>.BOULON | 2 | 2 | | | | |
| 4 | 6AH–26288–00 | GROMMET, CABLE<br>OEILLET DE CABLE | 1 | 1 | | | | |
| 5 | 66M–42119–01 | GRIP, STEERING HANDLE<br>POIGNEE, BARRE FRANCHE | 1 | 1 | | | | |
| 6 | 67D–42177–00 | RUBBER, HANDLE<br>CAOUTCHOUC, POIGNEE | 1 | 1 | | | | |
| 7 | 65W–42138–00 | LEVER, THROTTLE<br>LEVIER, ACCELERATEUR | 1 | 1 | | | | |
| 8 | 90152–05011 | SCREW, COUNTERSUNK<br>VIS, TETE NOYEE | 1 | 1 | | | | |
| 9 | 65W–42159–00 | STAY<br>SUPPORT | 1 | 1 | | | | |
| 10 | 6G1–42126–00 | FRICTION, STEERING HANDLE GRIP<br>CUVETTE, POIGNEE DE DIRECTION | 1 | 1 | | | | |
| 11 | 65W–42125–00 | BOLT, FRICTION ADJUSTING<br>BOULON | 1 | 1 | | | | |
| 12 | 91490–16010 | PIN. COTTER<br>GOUPILLE | 1 | 1 | | | | |
| 13 | 6J0–42137–00 | INDICATOR, THROTTLE<br>INDICATEUR, ACCELERATION | 1 | 1 | | | | |
| 14 | 90269–02M09 | RIVET<br>RIVET | 1 | 1 | | | | |
| 15 | 6X4–44188–00 | WASHER<br>RONDELLE | 2 | 2 | | | | |
| 16 | 90501–23215 | SPRING, COMPRESSION<br>RESSORT, COMPRESSION | 1 | 1 | | | | |
| 17 | 90386–08004 | BUSH<br>DOUILLE | 1 | 1 | | | | |
| 18 | 6AH–26311–00 | CABLE, THROTTLE 1<br>CABLE 1, ACCELERATEUR | 2 | 2 | | | | |
| 19 | 6AH–44554–00 | PLATE<br>PLAQUETTE | 1 | 1 | | | | |
| 20 | 97095–06014 | BOLT<br>BOULON | 1 | 1 | | | | |
| 21 | 92995–06600 | WASHER<br>RONDELLE | 1 | 1 | | | | |
| 22 | 6AH–2634E–00 | PROTECTOR 1<br>PROTECTEUR 1 | 1 | 1 | | | | |
| 23 | 6AH–42551–00 | GROMMET<br>PASSE-FIL | 1 | 1 | | | | |
| 24 | 90386–45001 | BUSH<br>DOUILLE | 1 | 1 | | | | |
| 25 | 90201–39008 | WASHER, PLATE<br>RONDELLE, PLATE | 2 | 2 | | | | |
| 26 | 90206–39001 | WASHER, WAVE<br>RONDELLE, ONDULEE | 2 | 2 | | | | |
| 27 | 90381–20001 | BUSH, SOLID<br>DOUILLE, SOLIDE | 1 | 1 | | | | |

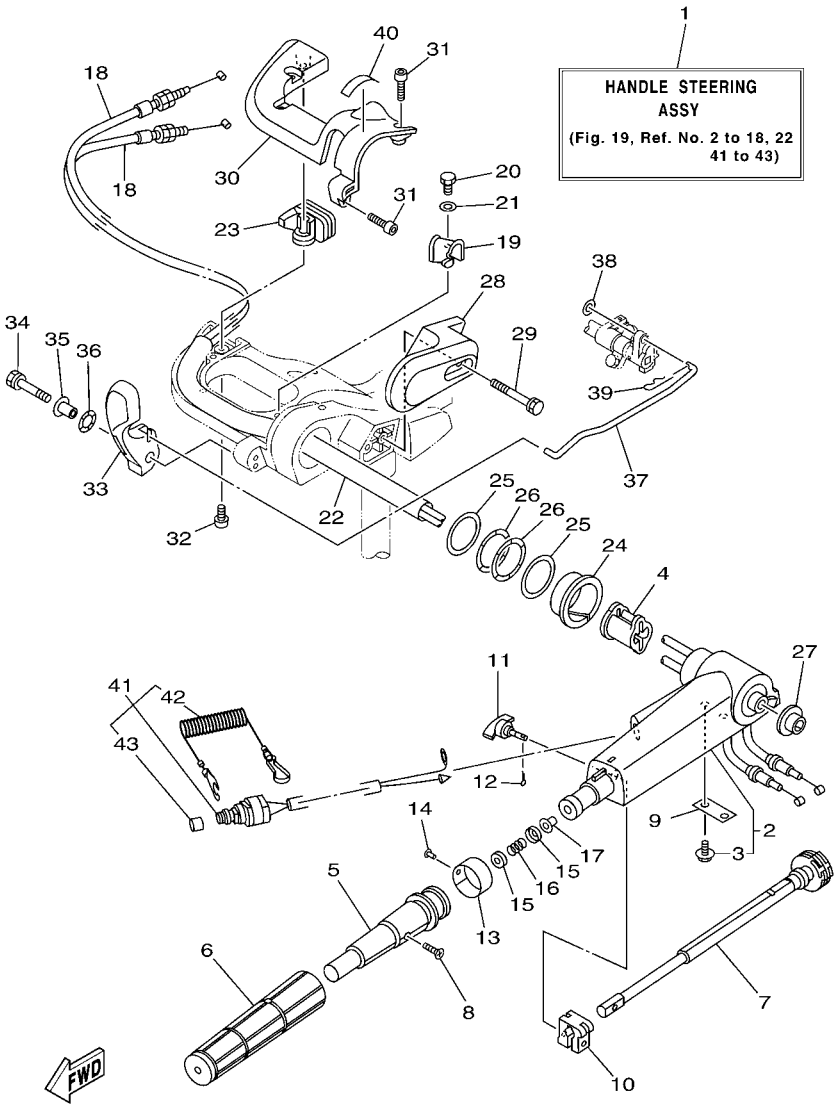


## FIG. 19 STEERING DIRECTION

| REF. NO. | PART NO. N° PIECES | DESCRIPTION DESCRIPTION | MH | EH | E | EP | | REMARKS REMARQUES |
|---|---|---|---|---|---|---|---|---|
| 28 | 6AH–42131–00–4D | COVER, HANDLE STEERING<br>COUVERCLE | 1 | 1 | | | | |
| 29 | 97595–06555 | BOLT, WITH WASHER<br>VIS HEXAGONAL AVC RONDELLE | 2 | 2 | | | | |
| 30 | 6AH–42532–00 | COVER<br>COUVERCLE | 1 | 1 | | | | |
| 31 | 90111–06072 | BOLT,HEX. SOCKET BUTTON<br>BOULON | 4 | 4 | | | | |
| 32 | 97780–60520 | SCREW, TAPPING<br>VIS, TETE BOMBEE | 1 | 1 | | | | |
| 33 | 6AH–44111–00 | HANDLE, GEAR SHIFT<br>POIGNEE, LEVIER D'EMBRAYAGE | 1 | 1 | | | | |
| 34 | 90119–06M05 | BOLT, WITH WASHER<br>BOULON, AVEC RONDELLE | 1 | 1 | | | | |
| 35 | 90387–06M86 | COLLAR<br>COLLERETTE | 1 | 1 | | | | |
| 36 | 90206–15M18 | WASHER, WAVE<br>RONDELLE, ONDULEE | 1 | 1 | | | | |
| 37 | 6AH–44124–00 | LINK, SHIFT ROD<br>BIELLETTE | 1 | 1 | | | | |
| 38 | 92990–06200 | WASHER, PLAIN<br>RONDELLE, PLATE | 1 | 1 | | | | |
| 39 | 90468–18008 | CLIP<br>JONC | 1 | 1 | | | | |
| 40 | 6G8–44191–00 | INDICATOR, SHIFT<br>ETIQUETTE, EMBRAYAGE | 1 | 1 | | | | |
| 41 | 6AH–82575–00 | ENGINE STOP SWITCH ASSY<br>COUPE CIRCUIT CPLT | 1 | 1 | | | | |
| 42 | 682–82556–00 | .LANYARD, STOP SWITCH<br>.CORDON DU COUPE CIRCUIT | 1 | 1 | | | | |
| 43 | 689–8257Y–00 | .CAP<br>.COUVERCLE | 1 | 1 | | | | |

## FIG. 20 STEERING FRICTION CUVETTE POIGNEE DE DIRECTION

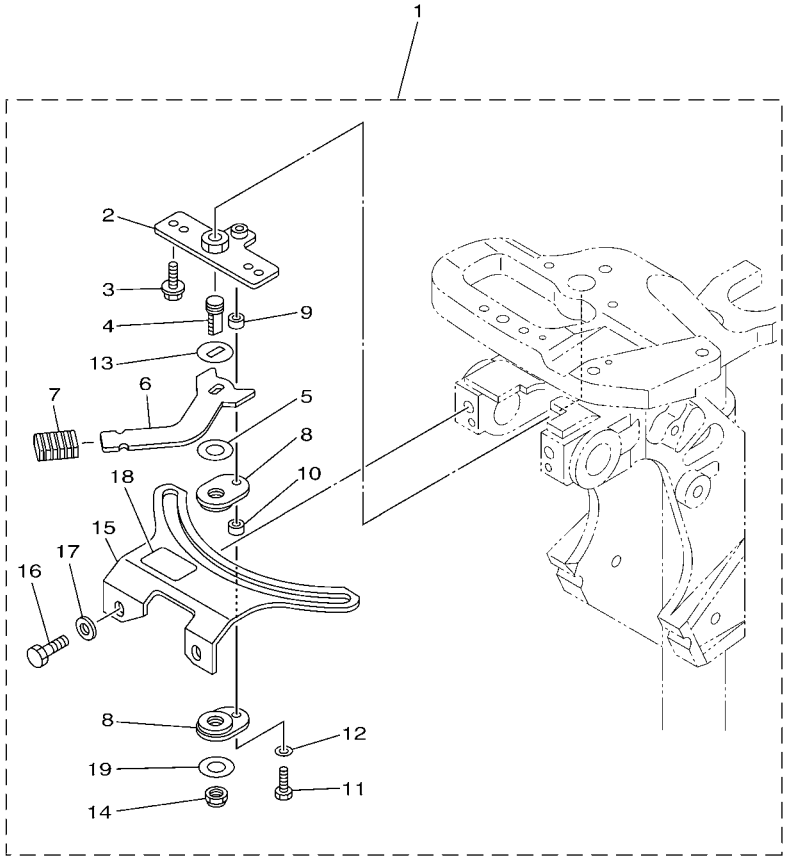

6AU5110-L180

| REF. NO. | PART NO. N° PIECES | DESCRIPTION DESCRIPTION | MH | EH | E | EP | | REMARKS REMARQUES |
|---|---|---|---|---|---|---|---|---|
| 1 | 6AH–42508–01 | STEERING FRICTION ASSY<br>DIRECTION FRICTION (ENS.) | 1 | 1 | | | | |
| 2 | 68T–42525–01 | .PLATE, FRICTION<br>.PLAQUE, FRICTION | 1 | 1 | | | | |
| 3 | 90119–05018 | .BOLT, WITH WASHER<br>.BOULON, AVEC RONDELLE | 2 | 2 | | | | |
| 4 | 67C–42562–00 | .SHAFT, STEERING LOCK<br>.ARBRE,ANTIVOL DE DIRECTION | 1 | 1 | | | | |
| 5 | 90202–10M56 | .WASHER, PLATE<br>.RONDELLE, PLATE | 1 | 1 | | | | |
| 6 | 68T–42561–00 | .KNOB, STEERING LOCK<br>.BOUTON | 1 | 1 | | | | |
| 7 | 689–43633–00 | .COVER, TILT LEVER<br>.COUVERCLE | 1 | 1 | | | | |
| 8 | 65W–42528–00 | .PLATE, FRICTION<br>.PLAQUE, FRICTION | 2 | 2 | | | | |
| 9 | 90387–05M05 | .COLLAR<br>.COLLERETTE | 1 | 1 | | | | |
| 10 | 90387–05M11 | .COLLAR<br>.COLLERETTE | 1 | 1 | | | | |
| 11 | 97095–05020 | .BOLT<br>.BOULON | 1 | 1 | | | | |
| 12 | 92995–05600 | .WASHER<br>.RONDELLE | 1 | 1 | | | | |
| 13 | 90209–10M26 | .WASHER<br>.RONDELLE | 1 | 1 | | | | |
| 14 | 90185–10M14 | .NUT, SELF-LOCKING<br>.ECROU,AUTO-BLOQUANT | 1 | 1 | | | | |
| 15 | 6AH–42527–00 | .PLATE, FRICTION<br>.PLAQUE, FRICTION | 1 | 1 | | | | |
| 16 | 90101–08022 | .BOLT<br>.BOULON | 2 | 2 | | | | |
| 17 | 90201–08065 | .WASHER, PLATE<br>.RONDELLE, PLATE | 2 | 2 | | | | |
| 18 | 68T–43155–00 | .MARK 1<br>.ETIQUETTE 1 | 1 | 1 | | | | |
| 19 | 90201–106M5 | .WASHER, PLATE<br>.RONDELLE, PLATE | 1 | 1 | | | | |

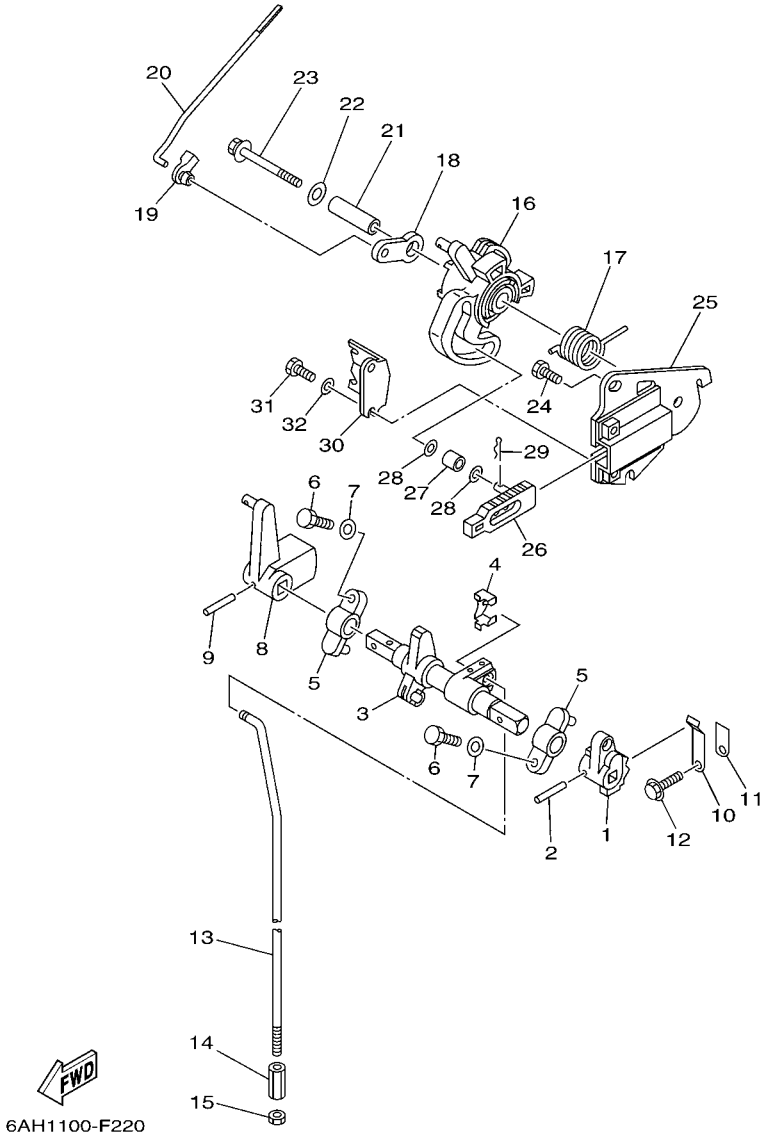


## FIG. 21 CONTROL 1 COMMANDE 1

| REF. NO. | PART NO. N° PIECES | DESCRIPTION DESCRIPTION | MH | EH | E | EP | | REMARKS REMARQUES |
|---|---|---|---|---|---|---|---|---|
| 1 | 6AH–44123–00 | ARM, SHIFT ROD<br>BRAS, TIGE D'INVERSION | 1 | 1 | | | | |
| 2 | 90254–03M05 | PIN, SPRING<br>RIVET, TETE TRONCONIQUE | 1 | 1 | | | | |
| 3 | 6AH–44121–00 | LEVER, SHIFT ROD<br>LEVIER, TIGE D'INVERSION | 1 | 1 | | | | |
| 4 | 6AH–26364–00 | END, CABLE 2<br>EMBOUT, DE CABLE | 1 | 1 | | | | |
| 5 | 6G1–41662–01–94 | BRACKET 2<br>SUPPORT 2 | 2 | 2 | | | | |
| 6 | 97095–06020 | BOLT<br>BOULON | 2 | 2 | | | | |
| 7 | 92995–06600 | WASHER<br>RONDELLE | 2 | 2 | | | | |
| 8 | 6AH–44125–00 | LEVER, SHIFT ROD<br>LEVIER, TIGE D'INVERSION | 1 | 1 | | | | |
| 9 | 90254–03M05 | PIN, SPRING<br>RIVET, TETE TRONCONIQUE | 1 | 1 | | | | |
| 10 | 65W–44116–00 | SPRING<br>RESSORT | 1 | 1 | | | | |
| 11 | 66R–44114–00 | STOPPER<br>PLAQUETTE | 1 | 1 | | | | |
| 12 | 95895–06014 | BOLT, FLANGE<br>BOULON | 1 | 1 | | | | |
| 13 | 6AH–44143–00 | ROD, SHIFT<br>TIGE D'EMBRAYAGE | 1 | 1 | | | | S(17.1")<br>S(17.1") |
| | 6AH–44143–10 | ROD, SHIFT<br>TIGE D'EMBRAYAGE | 1 | 1 | | | | L(22.1")<br>L(22.1") |
| 14 | 90170–06015 | NUT<br>ECROU | 1 | 1 | | | | |
| 15 | 95380–06700 | NUT<br>ECROU | 1 | 1 | | | | |
| 16 | 6AH–41638–00 | PULLEY<br>POULIE | 1 | 1 | | | | |
| 17 | 90508–20M44 | SPRING, TORSION<br>RESSORT, TORSION | 1 | 1 | | | | |
| 18 | 65W–41283–00 | LEVER, FREE ACCEL.<br>LEVIER | 1 | 1 | | | | |
| 19 | 6J8–41262–00 | JOINT, CHOKE LEVER<br>RACCORD, LEVIER DE STARTER | 1 | 1 | | | | |
| 20 | 6AH–41211–00 | LINK, ACCEL.<br>BIELLETTE, ACCELERATION | 1 | 1 | | | | |
| 21 | 90387–06139 | COLLAR<br>COLLERETTE | 1 | 1 | | | | |
| 22 | 90201–06M31 | WASHER, PLATE<br>RONDELLE, PLATE | 1 | 1 | | | | |
| 23 | 97595–06555 | BOLT, WITH WASHER<br>VIS HEXAGONAL AVC RONDELLE | 1 | 1 | | | | |
| 24 | 97095–06014 | BOLT<br>BOULON | 2 | 2 | | | | |
| 25 | 6AH–14571–00 | BRACKET, THROTTLE<br>SUPPORT, ACCELERATEUR | 1 | 1 | | | | |
| 26 | 6AH–44167–00 | PLUNGER, SHIFT CAM<br>POUSSOIR D'EMBRAYAGE | 1 | 1 | | | | |

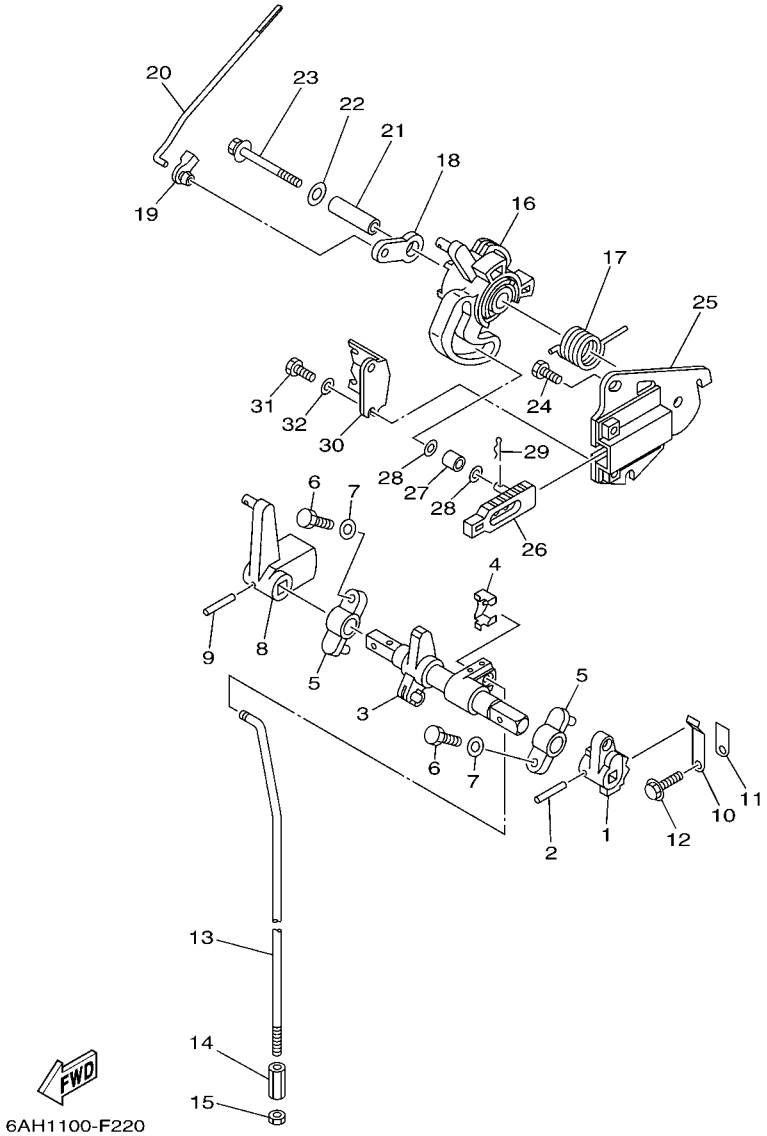


## FIG. 21 CONTROL 1 COMMANDE 1

| REF. NO. | PART NO. N° PIECES | DESCRIPTION DESCRIPTION | MH | EH | E | EP | | REMARKS REMARQUES |
|---|---|---|---|---|---|---|---|---|
| 27 | 62Y–42171–00 | BUSHING<br>COUSSINET | 1 | 1 | | | | |
| 28 | 90201–05M04 | WASHER, PLATE<br>RONDELLE, PLATE | 2 | 2 | | | | |
| 29 | 90468–10005 | CLIP<br>JONC | 1 | 1 | | | | |
| 30 | 6AH–14497–00 | STAY, THROTTLE WIRE<br>SUPPORT DE BOISSEAU | 1 | 1 | | | | |
| 31 | 97095–06014 | BOLT<br>BOULON | 2 | 2 | | | | |
| 32 | 92995–06600 | WASHER<br>RONDELLE | 2 | 2 | | | | |

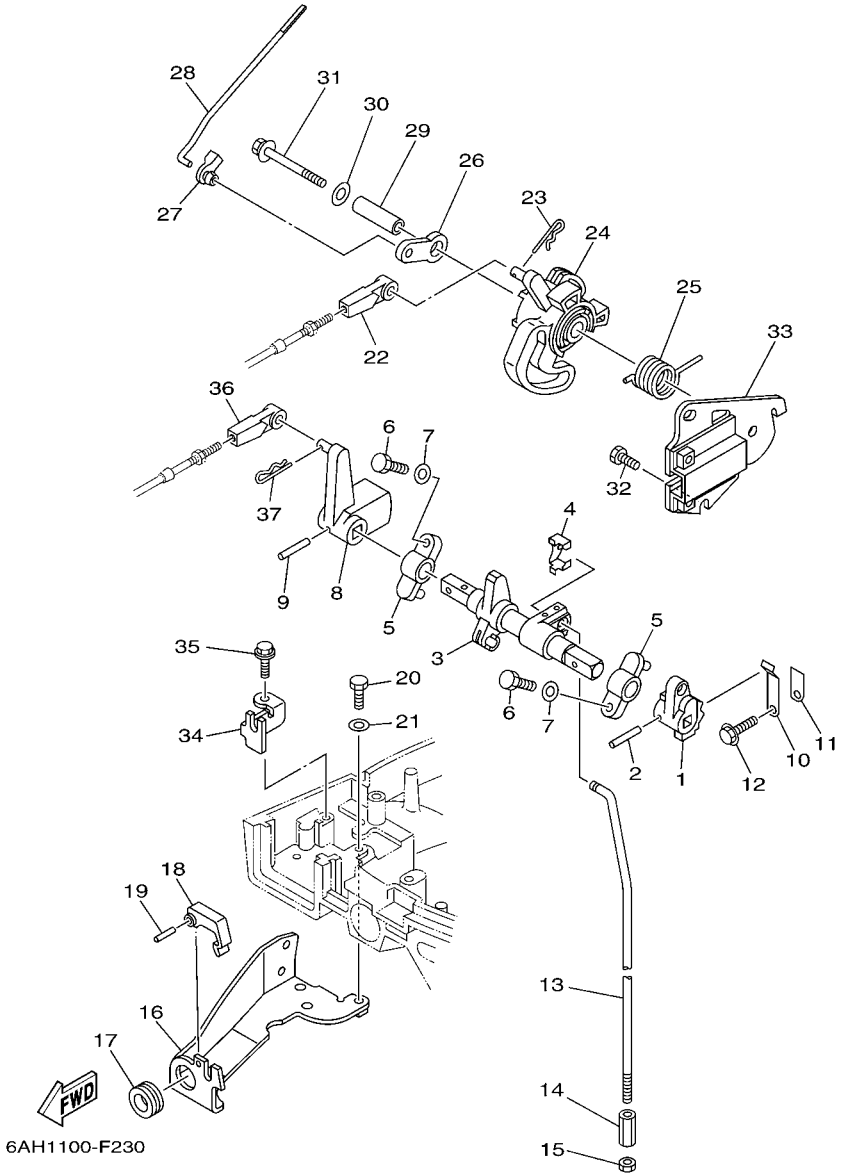


## FIG. 22 CONTROL 2 COMMANDE 2

| REF. NO. | PART NO. N° PIECES | DESCRIPTION DESCRIPTION | MH | EH | E | EP | | REMARKS REMARQUES |
|---|---|---|---|---|---|---|---|---|
| 1 | 6AH–44123–00 | ARM, SHIFT ROD<br>BRAS, TIGE D'INVERSION | | | 1 | 1 | | |
| 2 | 90254–03M05 | PIN, SPRING<br>RIVET, TETE TRONCONIQUE | | | 1 | 1 | | |
| 3 | 6AH–44121–00 | LEVER, SHIFT ROD<br>LEVIER, TIGE D'INVERSION | | | 1 | 1 | | |
| 4 | 6AH–26364–00 | END, CABLE 2<br>EMBOUT, DE CABLE | | | 1 | 1 | | |
| 5 | 6G1–41662–01–94 | BRACKET 2<br>SUPPORT 2 | | | 2 | 2 | | |
| 6 | 97095–06020 | BOLT<br>BOULON | | | 2 | 2 | | |
| 7 | 92995–06600 | WASHER<br>RONDELLE | | | 2 | 2 | | |
| 8 | 6AH–44125–00 | LEVER, SHIFT ROD<br>LEVIER, TIGE D'INVERSION | | | 1 | 1 | | |
| 9 | 90254–03M05 | PIN, SPRING<br>RIVET, TETE TRONCONIQUE | | | 1 | 1 | | |
| 10 | 65W–44116–00 | SPRING<br>RESSORT | | | 1 | 1 | | |
| 11 | 66R–44114–00 | STOPPER<br>PLAQUETTE | | | 1 | 1 | | |
| 12 | 95895–06014 | BOLT, FLANGE<br>BOULON | | | 1 | 1 | | |
| 13 | 6AH–44143–00 | ROD, SHIFT<br>TIGE D'EMBRAYAGE | | | 1 | 1 | | S(17.1")<br>S(17.1") |
| | 6AH–44143–10 | ROD, SHIFT<br>TIGE D'EMBRAYAGE | | | 1 | 1 | | L(22.1")<br>L(22.1") |
| 14 | 90170–06015 | NUT<br>ECROU | | | 1 | 1 | | |
| 15 | 95380–06700 | NUT<br>ECROU | | | 1 | 1 | | |
| 16 | 6AH–48532–00 | BRACKET, REMOTE CONTROL 2<br>ETRIER 2, COMMANDE A DISTANCE | | | 1 | 1 | | |
| 17 | 90480–19031 | GROMMET<br>PASSE-FIL | | | 1 | 1 | | |
| 18 | 682–48538–50 | CLAMP, CABLE 1<br>COLLIER | | | 1 | 1 | | |
| 19 | 91690–30012 | PIN, SPRING<br>AGRAFFE | | | 1 | 1 | | |
| 20 | 97095–06014 | BOLT<br>BOULON | | | 2 | 2 | | |
| 21 | 92995–06600 | WASHER<br>RONDELLE | | | 2 | 2 | | |
| 22 | 663–48344–00 | CABLE END, REMOTE CONTROL<br>CHAPE CABLE | | | 1 | 1 | | |
| 23 | 90468–18008 | CLIP<br>JONC | | | 1 | 1 | | |
| 24 | 6AH–41638–00 | PULLEY<br>POULIE | | | 1 | 1 | | |
| 25 | 90508–20M44 | SPRING, TORSION<br>RESSORT, TORSION | | | 1 | 1 | | |
| 26 | 65W–41283–00 | LEVER, FREE ACCEL.<br>LEVIER | | | 1 | 1 | | |

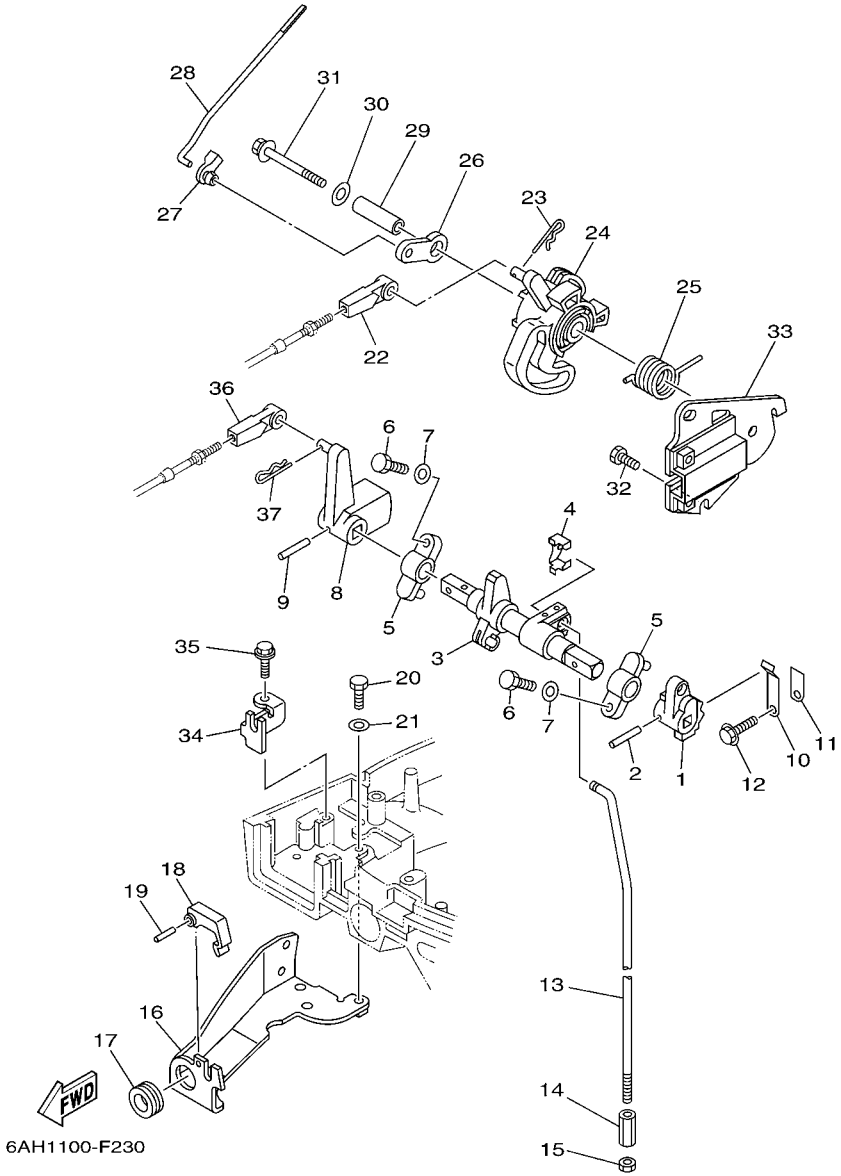


## FIG. 22 CONTROL 2 — COMMANDE 2

| REF. NO. | PART NO. N° PIECES | DESCRIPTION DESCRIPTION | MH | EH | E | EP | | REMARKS REMARQUES |
|---|---|---|---|---|---|---|---|---|
| 27 | 6J8–41262–00 | JOINT, CHOKE LEVER<br>RACCORD, LEVIER DE STARTER | | | 1 | 1 | | |
| 28 | 6AH–41211–00 | LINK, ACCEL.<br>BIELLETTE, ACCELERATION | | | 1 | 1 | | |
| 29 | 90387–06139 | COLLAR<br>COLLERETTE | | | 1 | 1 | | |
| 30 | 90201–06M31 | WASHER, PLATE<br>RONDELLE, PLATE | | | 1 | 1 | | |
| 31 | 97595–06555 | BOLT, WITH WASHER<br>VIS HEXAGONAL AVC RONDELLE | | | 1 | 1 | | |
| 32 | 97095–06014 | BOLT<br>BOULON | | | 2 | 2 | | |
| 33 | 6AH–14571–00 | BRACKET, THROTTLE<br>SUPPORT, ACCELERATEUR | | | 1 | 1 | | |
| 34 | 6AH–48531–00 | BRACKET, REMOTE CONTROL 1<br>ETRIER 1, COMMANDE A DISTANCE | | | 1 | 1 | | |
| 35 | 90109–06M86 | BOLT<br>BOULON | | | 1 | 1 | | |
| 36 | 663–48344–00 | CABLE END, REMOTE CONTROL<br>CHAPE CABLE | | | 1 | 1 | | |
| 37 | 90468–18008 | CLIP<br>JONC | | | 1 | 1 | | |

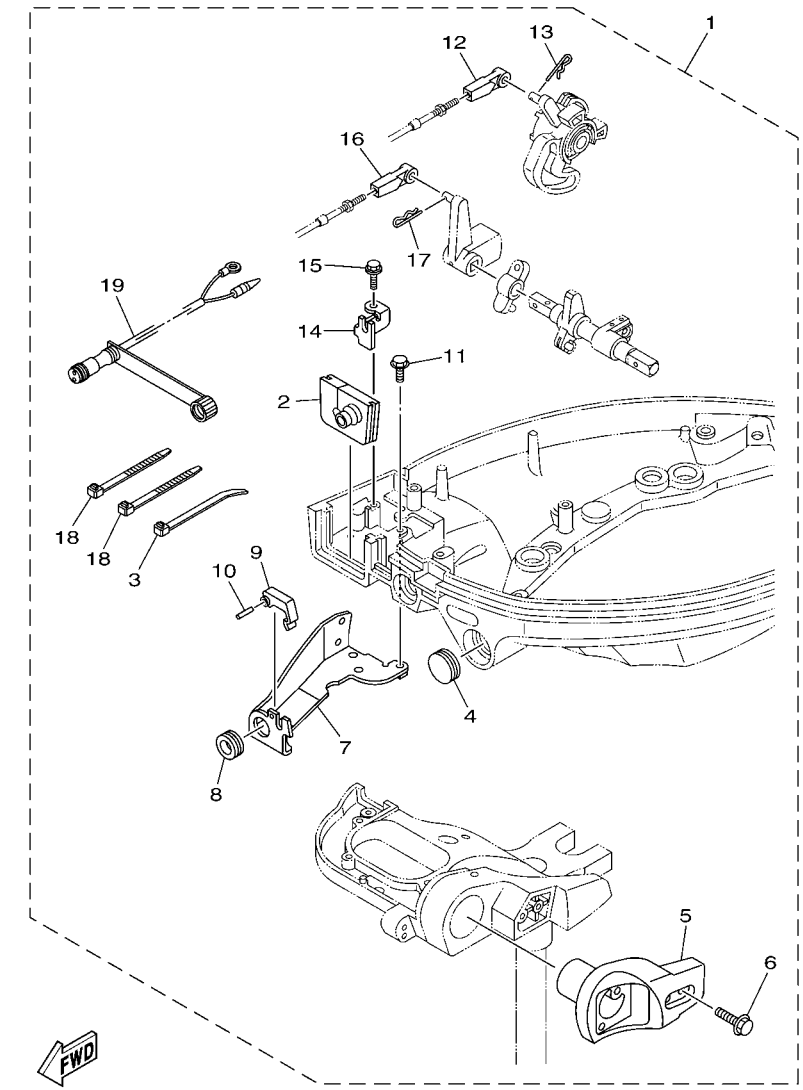


6AH3110-H360

## FIG. 23 REMO CON ATTACHMENT COMMANDE A DISTANCE

| REF. NO. | PART NO. N° PIECES | DESCRIPTION DESCRIPTION | MH | EH | E | EP | | REMARKS REMARQUES |
|---|---|---|---|---|---|---|---|---|
| 1 | 6AH–48501–00 | REMOTE CONT. ATTACHMENT ASSY.<br>COMMANDE A DISTANCE (KIT) | 1 | 1 | | | | AP<br>AP |
| 2 | 6AH–42724–10 | .GROMMET<br>.PASSE-FIL | 1 | 1 | | | | |
| 3 | 90465–11M10 | .CLAMP<br>.BRIDE | 1 | 1 | | | | |
| 4 | 65W–42726–10 | .GROMMET<br>.PASSE-FIL | 1 | 1 | | | | |
| 5 | 6AH–83773–00 | .BRACKET, SWITCH<br>.JOINT TORIQUE, COMMUTATEUR | 1 | 1 | | | | |
| 6 | 97595–06530 | .BOLT, WITH WASHER<br>.VIS HEXAGONAL AVC RONDELLE | 2 | 2 | | | | |
| 7 | 6AH–48532–00 | .BRACKET, REMOTE CONTROL 2<br>.ETRIER 2, COMMANDE A DISTANCE | 1 | 1 | | | | |
| 8 | 90480–19031 | .GROMMET<br>.PASSE-FIL | 1 | 1 | | | | |
| 9 | 682–48538–50 | .CLAMP, CABLE 1<br>.COLLIER | 1 | 1 | | | | |
| 10 | 91690–30012 | .PIN, SPRING<br>.AGRAFFE | 1 | 1 | | | | |
| 11 | 97595–06514 | .BOLT, WITH WASHER<br>.VIS HEXAGONAL AVC RONDELLE | 2 | 2 | | | | |
| 12 | 663–48344–00 | .CABLE END, REMOTE CONTROL<br>.CHAPE CABLE | 1 | 1 | | | | |
| 13 | 90468–18008 | .CLIP<br>.JONC | 1 | 1 | | | | |
| 14 | 6AH–48531–00 | .BRACKET, REMOTE CONTROL 1<br>.ETRIER 1, COMMANDE A DISTANCE | 1 | 1 | | | | |
| 15 | 90109–06M86 | .BOLT<br>.BOULON | 1 | 1 | | | | |
| 16 | 663–48344–00 | .CABLE END, REMOTE CONTROL<br>.CHAPE CABLE | 1 | 1 | | | | |
| 17 | 90468–18008 | .CLIP<br>.JONC | 1 | 1 | | | | |
| 18 | 90465–13M18 | .CLAMP<br>.BRIDE | 2 | 2 | | | | |
| 19 | 6D5–84340–00 | .SOCKET CORD ASSY 1<br>.DOUILLE | 1 | 1 | | | | |

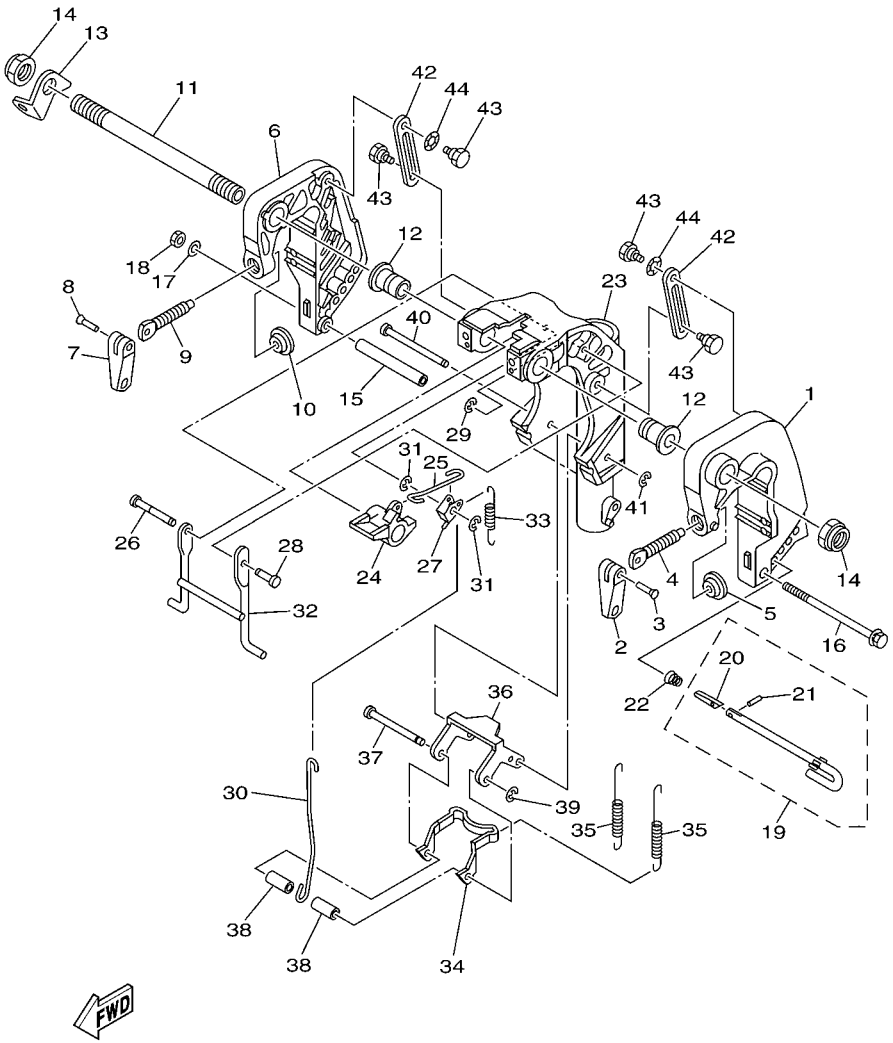


## FIG. 24 BRACKET 1 SUPPORT 1

| REF. NO. | PART NO. N° PIECES | DESCRIPTION DESCRIPTION | MH | EH | E | EP | | REMARKS REMARQUES |
|---|---|---|---|---|---|---|---|---|
| 1 | 6AH–43111–00–4D | BRACKET, CLAMP 1<br>PRESSE 1 | 1 | 1 | 1 | | | |
| 2 | 6E0–43118–01 | HANDLE, TRANSOM CLAMP<br>POIGNEE DE VIS DE PRESSE | 1 | 1 | 1 | | | |
| 3 | 90243–04M01 | PIN<br>GOUPILLE | 1 | 1 | 1 | | | |
| 4 | 6E7–43116–00 | SCREW, TRANSOM CLAMP<br>VIS DE PRESSE | 1 | 1 | 1 | | | |
| 5 | 648–43114–01 | PAD, TRANSOM CLAMP<br>RONDELLE D'APPUI | 1 | 1 | 1 | | | |
| 6 | 6AH–43112–00–4D | BRACKET, CLAMP 2<br>PRESSE 2 | 1 | 1 | 1 | | | |
| 7 | 6E0–43118–01 | HANDLE, TRANSOM CLAMP<br>POIGNEE DE VIS DE PRESSE | 1 | 1 | 1 | | | |
| 8 | 90243–04M01 | PIN<br>GOUPILLE | 1 | 1 | 1 | | | |
| 9 | 6E7–43116–00 | SCREW, TRANSOM CLAMP<br>VIS DE PRESSE | 1 | 1 | 1 | | | |
| 10 | 648–43114–01 | PAD, TRANSOM CLAMP<br>RONDELLE D'APPUI | 1 | 1 | 1 | | | |
| 11 | 69A–43131–00 | BOLT, CLAMP BRACKET<br>BOULON, PRESSE | 1 | 1 | 1 | | | FOR REMOTE CONTROL<br>FOR REMOTE CONTROL |
| 12 | 90386–22MA4 | BUSH<br>DOUILLE | 2 | 2 | 2 | | | |
| 13 | 66R–43113–00 | PLATE, CLAMP BRACKET<br>PLAQUETTE, PRESSE | 1 | 1 | 1 | | | |
| 14 | 90185–22043 | NUT, SELF-LOCKING<br>ECROU,AUTO-BLOQUANT | 2 | 2 | 2 | | | |
| 15 | 90387–06M13 | COLLAR<br>COLLERETTE | 1 | 1 | 1 | | | |
| 16 | 90101–06M18 | BOLT<br>BOULON | 1 | 1 | 1 | | | |
| 17 | 92990–06600 | WASHER, PLATE<br>RONDELLE, PLATE | 1 | 1 | 1 | | | |
| 18 | 95380–06700 | NUT<br>ECROU | 1 | 1 | 1 | | | |
| 19 | 6L2–43160–01 | TILT ROD ASSY<br>BROCHE D'INCLINAISON (ENS.) | 1 | 1 | 1 | | | |
| 20 | 689–43165–00 | .PLATE, TILT LOCK<br>.TAQUET, BROCHE INCLINAISON | 1 | 1 | 1 | | | |
| 21 | 91690–30008 | .PIN, SPRING<br>.AGRAFFE | 1 | 1 | 1 | | | |
| 22 | 90502–10M07 | SPRING, CONICAL<br>RESSORT, CONIQUE | 1 | 1 | 1 | | | |
| 23 | 6AH–43311–00–4D | BRACKET, SWIVEL 1<br>SUPPORT, PIVOT 1 | 1 | 1 | 1 | | | S(17.1")<br>S(17.1") |
| | 6AH–43311–10–4D | BRACKET, SWIVEL 1<br>SUPPORT, PIVOT 1 | 1 | 1 | 1 | | | L(22.1")<br>L(22.1") |
| 24 | 6AH–43631–00 | LEVER, TILT<br>LEVIER, INCLINAISON | 1 | 1 | 1 | | | |
| 25 | 6AH–43616–00 | ROD, TILT LOCK<br>TIGE | 1 | 1 | 1 | | | |
| 26 | 6AH–43646–00 | SHAFT, LEVER<br>AXE, LEIVER | 1 | 1 | 1 | | | |

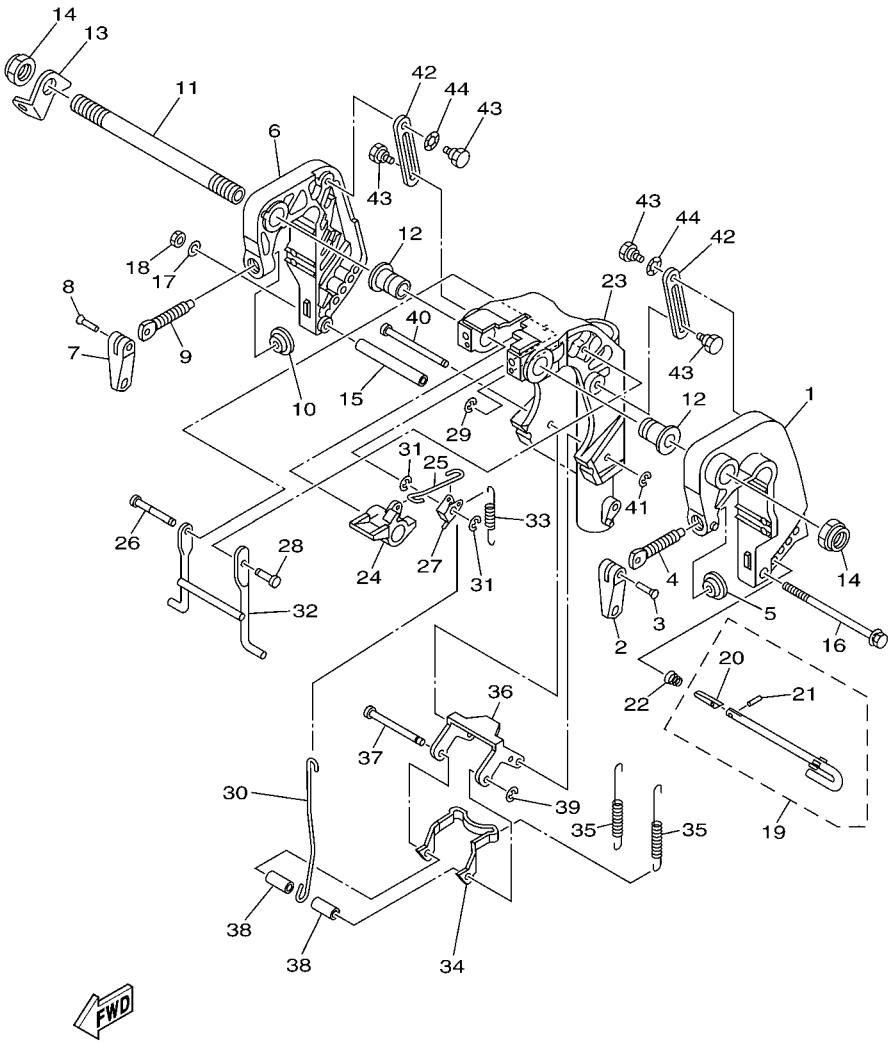


## FIG. 24 BRACKET 1 SUPPORT 1

| REF. NO. | PART NO. N° PIECES | DESCRIPTION DESCRIPTION | MH | EH | E | EP | | REMARKS REMARQUES |
|---|---|---|---|---|---|---|---|---|
| 27 | 6AH–43641–00 | LEVER, TILT<br>LEVIER, INCLINAISON | 1 | 1 | 1 | | | |
| 28 | 6AH–43191–00 | SHAFT, STOPPER<br>AXE, BUTEE | 1 | 1 | 1 | | | |
| 29 | 99080–05600 | CIRCLIP<br>CIRCLIP | 1 | 1 | 1 | | | |
| 30 | 6AH–43617–00 | ROD, TILT LOCK<br>TIGE | 1 | 1 | 1 | | | |
| 31 | 99080–05600 | CIRCLIP<br>CIRCLIP | 2 | 2 | 2 | | | |
| 32 | 6AH–43350–00 | RECEIVER ASSY<br>RECEIVER ASSY | 1 | 1 | 1 | | | |
| 33 | 90506–18014 | SPRING, TENSION<br>RESSORT, TENSION | 1 | 1 | 1 | | | |
| 34 | 6AH–43614–00 | PLATE, TILT LOCK<br>ETRIER, VERROUILLAGE MARCHE AR | 1 | 1 | 1 | | | |
| 35 | 90506–20020 | SPRING, TENSION<br>RESSORT, TENSION | 2 | 2 | 2 | | | |
| 36 | 6AH–43615–00 | PLATE, TILT LOCK<br>ETRIER, VERROUILLAGE MARCHE AR | 1 | 1 | 1 | | | |
| 37 | 68T–43611–00 | SHAFT, TILT LOCK<br>AXE, VERROUILLAGE MARCHE AR | 1 | 1 | 1 | | | |
| 38 | 90387–06138 | COLLAR<br>COLLERETTE | 2 | 2 | 2 | | | |
| 39 | 93430–04M03 | CIRCLIP<br>CLIPS | 1 | 1 | 1 | | | |
| 40 | 68T–43659–00 | SHAFT, REVERSE LOCK<br>AXE, VERROUILLAGE MARCHE AR | 1 | 1 | 1 | | | |
| 41 | 99080–05600 | CIRCLIP<br>CIRCLIP | 1 | 1 | 1 | | | |
| 42 | 6AH–43627–00 | STOPPER<br>PLAQUETTE | 2 | 2 | 2 | | | |
| 43 | 90109–06M84 | BOLT<br>BOULON | 4 | 4 | 4 | | | |
| 44 | 90206–10M24 | WASHER, WAVE<br>RONDELLE, ONDULEE | 2 | 2 | 2 | | | |

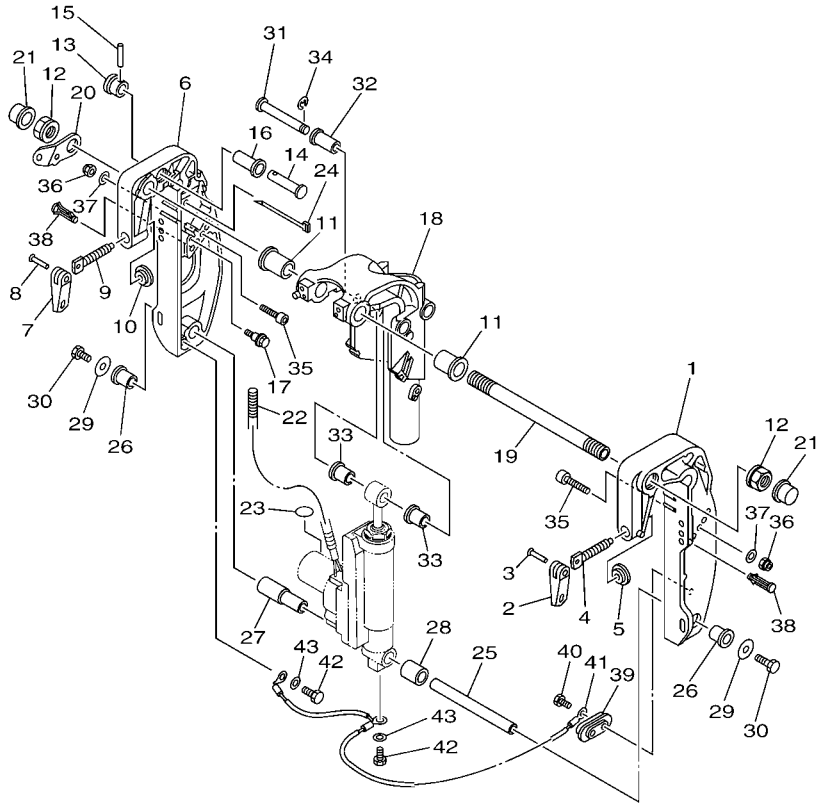


6AH1300-F240

## FIG. 25 BRACKET 2 SUPPORT 2

| REF. NO. | PART NO. N° PIECES | DESCRIPTION DESCRIPTION | MH | EH | E | EP | | REMARKS REMARQUES |
|---|---|---|---|---|---|---|---|---|
| 1 | 69A–43111–01–4D | BRACKET, CLAMP 1<br>PRESSE 1 | | | | 1 | | |
| 2 | 6E0–43118–01 | HANDLE, TRANSOM CLAMP<br>POIGNEE DE VIS DE PRESSE | | | | 1 | | |
| 3 | 90243–04M01 | PIN<br>GOUPILLE | | | | 1 | | |
| 4 | 6E7–43116–00 | SCREW, TRANSOM CLAMP<br>VIS DE PRESSE | | | | 1 | | |
| 5 | 648–43114–01 | PAD, TRANSOM CLAMP<br>RONDELLE D'APPUI | | | | 1 | | |
| 6 | 69A–43112–01–4D | BRACKET, CLAMP 2<br>PRESSE 2 | | | | 1 | | |
| 7 | 6E0–43118–01 | HANDLE, TRANSOM CLAMP<br>POIGNEE DE VIS DE PRESSE | | | | 1 | | |
| 8 | 90243–04M01 | PIN<br>GOUPILLE | | | | 1 | | |
| 9 | 6E7–43116–00 | SCREW, TRANSOM CLAMP<br>VIS DE PRESSE | | | | 1 | | |
| 10 | 648–43114–01 | PAD, TRANSOM CLAMP<br>RONDELLE D'APPUI | | | | 1 | | |
| 11 | 90386–22MA4 | BUSH<br>DOUILLE | | | | 2 | | |
| 12 | 90185–22043 | NUT, SELF-LOCKING<br>ECROU,AUTO-BLOQUANT | | | | 2 | | |
| 13 | 65W–43192–00 | KNOB, STOPPER<br>BOUTON, BUTEE DE RELEVAGE | | | | 1 | | |
| 14 | 65W–43191–00 | SHAFT, STOPPER<br>AXE, BUTEE | | | | 1 | | |
| 15 | 91690–30018 | PIN, SPRING<br>AGRAFFE | | | | 1 | | |
| 16 | 90386–14MA1 | BUSH<br>DOUILLE | | | | 1 | | |
| 17 | 90109–06MA1 | BOLT<br>BOULON | | | | 1 | | |
| 18 | 6AH–43311–20–4D | BRACKET, SWIVEL 1<br>SUPPORT, PIVOT 1 | | | | 1 | | S(17.1")<br>S(17.1") |
| | 69A–43311–11–4D | BRACKET, SWIVEL 1<br>SUPPORT, PIVOT 1 | | | | 1 | | L(22.1")<br>L(22.1") |
| 19 | 69A–43131–00 | BOLT, CLAMP BRACKET<br>BOULON, PRESSE | | | | 1 | | FOR REMOTE CONTROL<br>FOR REMOTE CONTROL |
| 20 | 69A–43113–00 | PLATE, CLAMP BRACKET<br>PLAQUETTE, PRESSE | | | | 1 | | |
| 21 | 6G5–43145–01 | CAP, CLAMP BRACKET<br>CAPUCHON, PRESSE | | | | 2 | | |
| 22 | 90446–14MH7 | HOSE (L560)<br>DURITE (L560) | | | | 1 | | |
| 23 | 69A–43155–00 | MARK 1<br>ETIQUETTE 1 | | | | 1 | | |
| 24 | 90465–13M97 | CLAMP<br>BRIDE | | | | 1 | | |
| 25 | 69G–43818–00 | PIN, LOWER SHOCK MOUNT<br>AXE, INFERIEUR AMORTISSEUR | | | | 1 | | |
| 26 | 90386–16MA7 | BUSH<br>DOUILLE | | | | 2 | | |

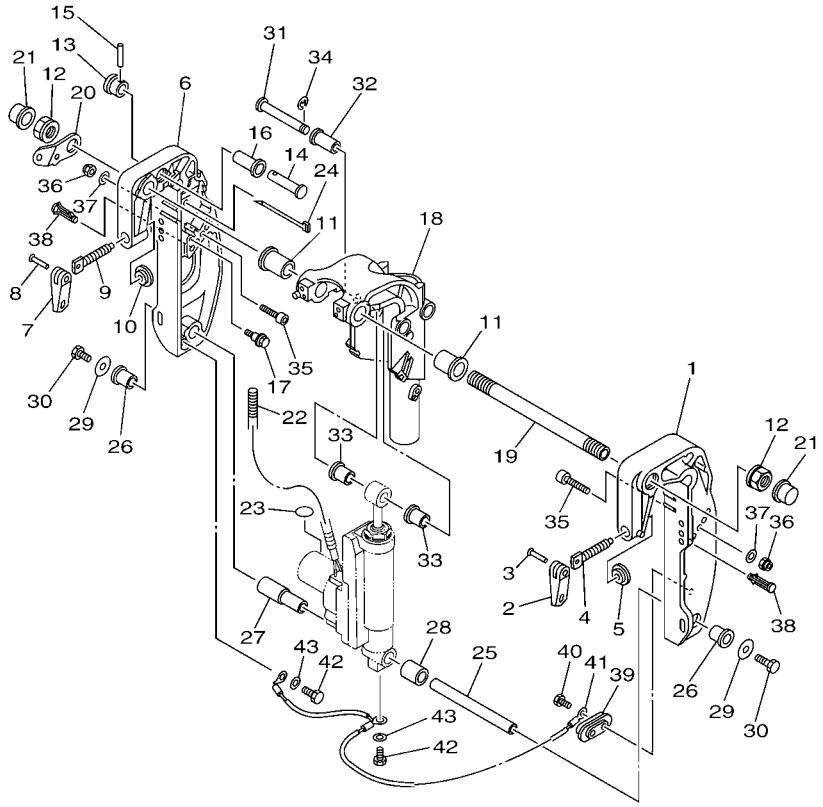


6AH1300-F240

## FIG. 25 BRACKET 2 SUPPORT 2

| REF. NO. | PART NO. N° PIECES | DESCRIPTION DESCRIPTION | MH | EH | E | EP | | REMARKS REMARQUES |
|---|---|---|---|---|---|---|---|---|
| 27 | 90386–16MA8 | BUSH<br>DOUILLE | | | | 1 | | |
| 28 | 90387–16M02 | COLLAR<br>COLLERETTE | | | | 1 | | |
| 29 | 90201–08M00 | WASHER, PLATE<br>RONDELLE, PLATE | | | | 2 | | |
| 30 | 97080–08016 | BOLT<br>BOULON | | | | 2 | | |
| 31 | 90249–12M36 | PIN<br>GOUPILLE | | | | 1 | | |
| 32 | 90381–12M10 | BUSH, SOLID<br>DOUILLE, SOLIDE | | | | 1 | | |
| 33 | 90381–12M11 | BUSH, SOLID<br>DOUILLE, SOLIDE | | | | 2 | | |
| 34 | 99080–10600 | CIRCLIP<br>CIRCLIP | | | | 1 | | |
| 35 | 90110–08081 | BOLT, HEXAGON SOCKET HEAD<br>BOULON, TETE HEXAGONALE CREUSE | | | | 2 | | |
| 36 | 90185–08057 | NUT, SELF-LOCKING<br>ECROU,AUTO-BLOQUANT | | | | 2 | | |
| 37 | 92990–08600 | WASHER, PLATE<br>RONDELLE, PLATE | | | | 2 | | |
| 38 | 90338–08M19 | PLUG<br>PLOT | | | | 4 | | S(17.1")<br>S(17.1") |
| | 90338–08M19 | PLUG<br>PLOT | | | | 2 | | L(22.1")<br>L(22.1") |
| 39 | 65W–45251–00 | ANODE<br>ANODE | | | | 1 | | |
| 40 | 90101–06020 | BOLT<br>BOULON | | | | 2 | | |
| 41 | 63V–82127–00 | WIRE, LEAD 2<br>FIL 2 | | | | 1 | | |
| 42 | 97095–06010 | BOLT<br>BOULON | | | | 2 | | |
| 43 | 92995–06600 | WASHER<br>RONDELLE | | | | 2 | | |

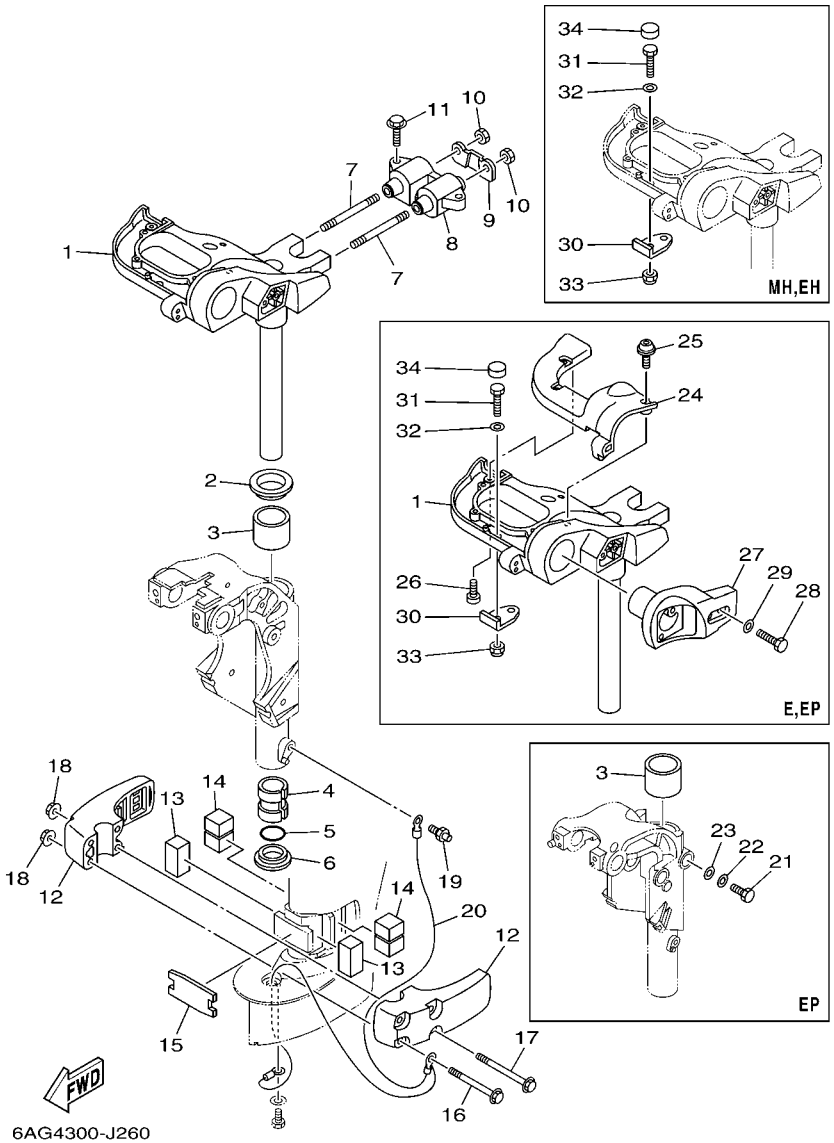


## FIG. 26 BRACKET 3 SUPPORT 3

| REF. NO. | PART NO. N° PIECES | DESCRIPTION DESCRIPTION | MH | EH | E | EP | | REMARKS REMARQUES |
|---|---|---|---|---|---|---|---|---|
| 1 | 6AH–42510–00–4D | STEERING BRACKET ASSY<br>DIRECTION SUPPORT (ENS.) | 1 | 1 | 1 | 1 | | S(17.1")<br>S(17.1") |
| | 6AH–42510–10–4D | STEERING BRACKET ASSY<br>DIRECTION SUPPORT (ENS.) | 1 | 1 | 1 | 1 | | L(22.1")<br>L(22.1") |
| 2 | 90209–40008 | WASHER<br>RONDELLE | 1 | 1 | 1 | 1 | | |
| 3 | 90386–40001 | BUSH<br>DOUILLE | 1 | 1 | 1 | 1 | | |
| 4 | 90386–30048 | BUSH<br>DOUILLE | 1 | 1 | 1 | 1 | | |
| 5 | 93210–29M94 | O-RING<br>JOINT TORIQUE | 1 | 1 | 1 | 1 | | |
| 6 | 90386–30M60 | BUSH<br>DOUILLE | 1 | 1 | 1 | 1 | | |
| 7 | 90116–10033 | BOLT, STUD<br>GOUJON | 2 | 2 | 2 | 2 | | |
| 8 | 6AH–44514–00 | MOUNT DAMPER, UPPER SIDE<br>SILENT-BLOC, SUPERIEUR LATERAL | 1 | 1 | 1 | 1 | | |
| 9 | 6AH–44526–00 | PLATE<br>PLAQUE | 1 | 1 | 1 | 1 | | |
| 10 | 95380–10600 | NUT<br>ECROU | 2 | 2 | 2 | 2 | | |
| 11 | 90119–08094 | BOLT, WITH WASHER<br>BOULON, AVEC RONDELLE | 2 | 2 | 2 | 2 | | |
| 12 | 6AH–44551–00–4D | HOUSING, LOWER MOUNT RUBBER 1<br>BOITIER, SILENT-BLOC INFERIEUR | 2 | 2 | 2 | 2 | | |
| 13 | 6AH–44557–00 | MOUNT DAMPER, LOWER FRONT<br>SILENT-BLOC, INFERIEUR AVANT | 2 | 2 | 2 | 2 | | |
| 14 | 6AH–44555–00 | MOUNT DAMPER, LOWER SIDE<br>SILENT-BLOC, INFERIEUR LATERAL | 2 | 2 | 2 | 2 | | |
| 15 | 6AH–44574–00 | STOPPER, LOWER MOUNT RUBBER<br>BUTEE | 1 | 1 | 1 | 1 | | |
| 16 | 90119–08M45 | BOLT, WITH WASHER<br>BOULON, AVEC RONDELLE | 2 | 2 | 2 | 2 | | |
| 17 | 90119–08M46 | BOLT, WITH WASHER<br>BOULON, AVEC RONDELLE | 2 | 2 | 2 | 2 | | |
| 18 | 90179–08M34 | NUT<br>ECROU | 4 | 4 | 4 | 4 | | |
| 19 | 93700–06M03 | NIPPLE, GREASE<br>PION | 1 | 1 | 1 | 1 | | |
| 20 | 6AH–82127–00 | WIRE, LEAD 2<br>FIL 2 | 1 | 1 | 1 | 1 | | EP-S(17.1")<br>EP-S(17.1") |
| | 6AH–82127–11 | WIRE, LEAD 2<br>FIL 2 | | | | 1 | | EP-L(22.1")<br>EP-L(22.1") |
| 21 | 97095–06014 | BOLT<br>BOULON | | | | 1 | | |
| 22 | 92995–06600 | WASHER<br>RONDELLE | | | | 1 | | |
| 23 | 92995–06600 | WASHER<br>RONDELLE | | | | 1 | | |
| 24 | 6AH–42532–10 | COVER<br>COUVERCLE | | | 1 | 1 | | |
| 25 | 90111–06072 | BOLT,HEX. SOCKET BUTTON<br>BOULON | | | 4 | 4 | | |

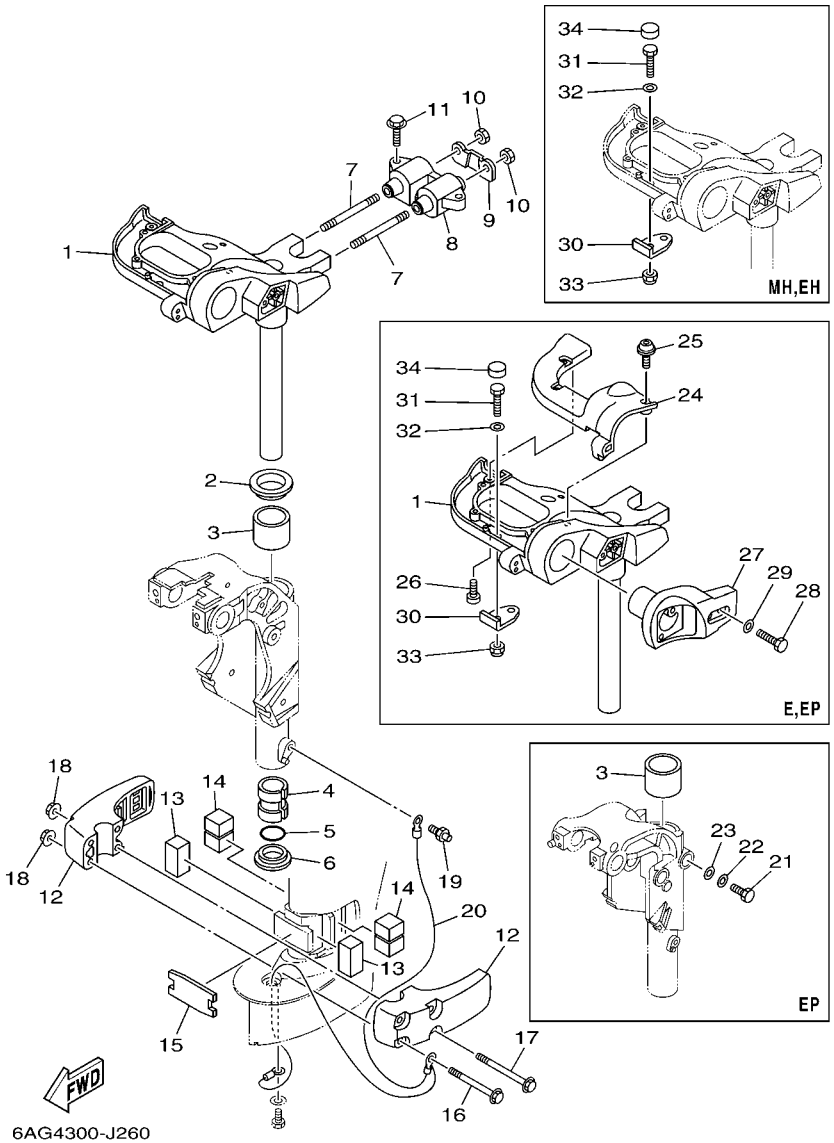


## FIG. 26 BRACKET 3 SUPPORT 3

| REF. NO. | PART NO. N° PIECES | DESCRIPTION DESCRIPTION | MH | EH | E | EP | | REMARKS REMARQUES |
|---|---|---|---|---|---|---|---|---|
| 26 | 97780–60520 | SCREW, TAPPING<br>VIS, TETE BOMBEE | | | 1 | 1 | | |
| 27 | 6AH–83773–00 | BRACKET, SWITCH<br>JOINT TORIQUE, COMMUTATEUR | | | 1 | 1 | | |
| 28 | 97095–06030 | BOLT<br>BOULON | | | 2 | 2 | | |
| 29 | 92995–06600 | WASHER<br>RONDELLE | | | 2 | 2 | | |
| 30 | 6AH–48511–00 | HOOK, STEERING<br>ATTACHE, DIRECTION | 1 | 1 | 1 | 1 | | |
| 31 | 97095–08025 | BOLT<br>BOULON | 1 | 1 | 1 | 1 | | |
| 32 | 92995–08600 | WASHER<br>RONDELLE | 1 | 1 | 1 | 1 | | |
| 33 | 90185–08057 | NUT, SELF-LOCKING<br>ECROU,AUTO-BLOQUANT | 1 | 1 | 1 | 1 | | |
| 34 | 6AH–44194–00 | CAP<br>CAPUCHON | 1 | 1 | 1 | 1 | | |

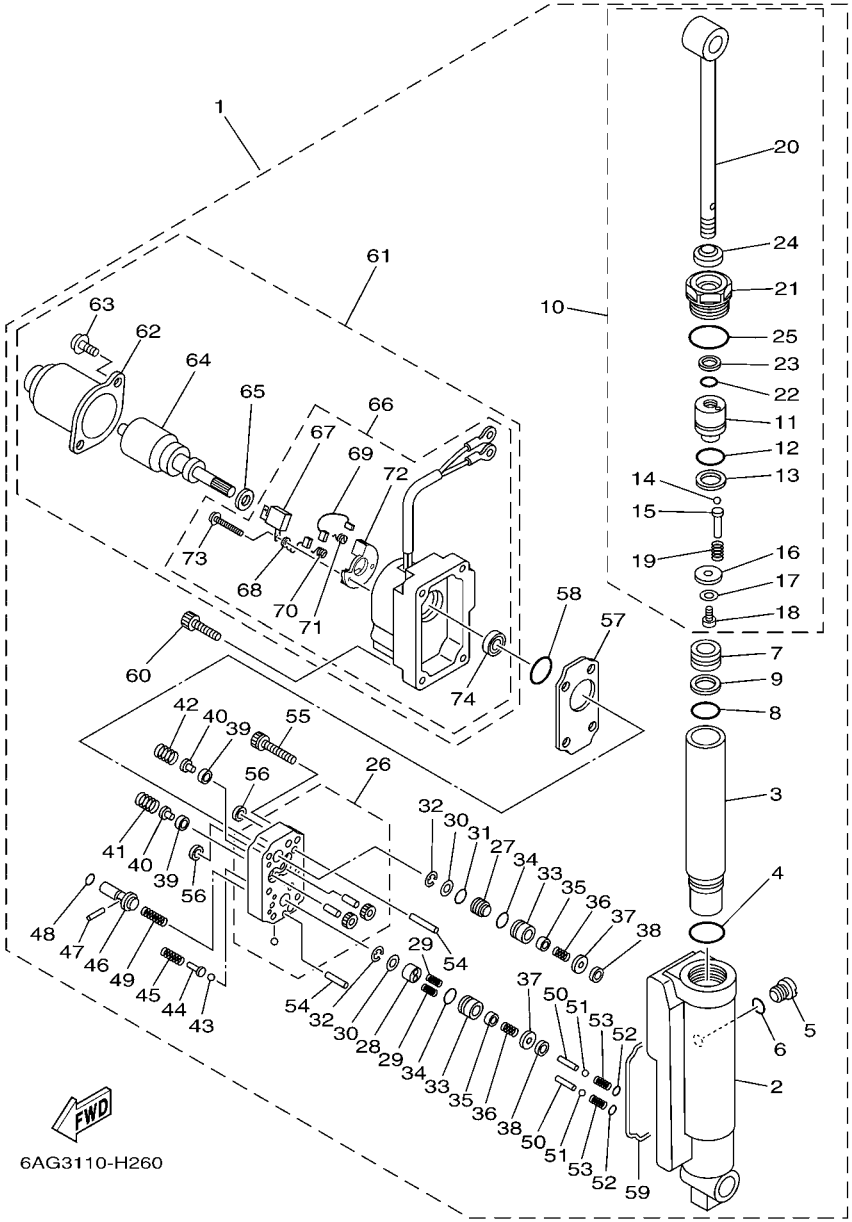


## FIG. 27 POWER TILT ASSY — PUISSANCE PARER ET INCLINER

| REF. NO. | PART NO. N° PIECES | DESCRIPTION DESCRIPTION | MH | EH | E | EP | | REMARKS REMARQUES |
|---|---|---|---|---|---|---|---|---|
| 1 | 6AH–43840–01–4D | POWER TILT ASSY<br>PUISSANCE INCLINER (ENS.) | | | | 1 | | |
| 2 | 6AH–4380K–00 | .CYLINDER, TILT SUB ASSY<br>.CYLINDRE | | | | 1 | | |
| 3 | 6AH–22471–00 | .CYLINDER, SHOCK ABSORBER<br>.CYLINDRE, AMORTISSEUR | | | | 1 | | |
| 4 | 93210–320A7 | .O-RING<br>.JOINT TORIQUE | | | | 1 | | |
| 5 | 6H1–4388E–11 | .PLUG, TAPER SCREW<br>.BOUCHON | | | | 1 | | |
| 6 | 93210–07003 | .O-RING<br>.JOINT TORIQUE | | | | 1 | | |
| 7 | 6AH–43814–00 | .PISTON, FREE<br>.PISTON | | | | 1 | | |
| 8 | 93210–24709 | .O-RING<br>.JOINT TORIQUE | | | | 1 | | |
| 9 | 6C5–43871–00 | .RING, BACK UP<br>.SEGMENT | | | | 1 | | |
| 10 | 6AH–43810–00 | .TILT PISTON SUB ASSY<br>.INCLINER PISTON AUXILIAIRE(ENS | | | | 1 | | |
| 11 | 6AH–4380D–00 | ..PISTON COMP.<br>..PISTON COMP. | | | | 1 | | |
| 12 | 93210–24709 | ..O-RING<br>..JOINT TORIQUE | | | | 1 | | |
| 13 | 6C5–43871–00 | ..RING, BACK UP<br>..SEGMENT | | | | 1 | | |
| 14 | 93501–08001 | ..BALL<br>..BILLE | | | | 5 | | |
| 15 | 6AH–4386A–00 | ..PIN, ABSORBER VALVE<br>..GOUPILLE, SOUPAPE | | | | 5 | | |
| 16 | 6AH–4385E–00 | ..PLATE, PISTON<br>..PLAQUE DE PISTON | | | | 1 | | |
| 17 | 92902–06200 | ..WASHER<br>..RONDELLE | | | | 1 | | |
| 18 | 6AH–43878–00 | ..BOLT, SOCKET<br>..BOULON | | | | 1 | | |
| 19 | 6AH–43857–00 | ..SPRING, ABSORBER VALVE<br>..RESSORT | | | | 5 | | |
| 20 | 6AH–43801–00 | ..ROD<br>..TIGE | | | | 1 | | |
| 21 | 6AH–43811–00 | ..SCREW, CYLINDER END<br>..VIS, CYLINDRE RACCORD | | | | 1 | | |
| 22 | 6H1–43866–00 | ..O-RING<br>..JOINT TORIQUE | | | | 1 | | |
| 23 | 69A–43871–00 | ..RING, BACK UP<br>..SEGMENT | | | | 1 | | |
| 24 | 69A–43812–00 | ..SEAL, DUST<br>..JOINT | | | | 1 | | |
| 25 | 62X–43862–00 | ..O-RING<br>..JOINT TORIQUE | | | | 1 | | |
| 26 | 6AH–43830–00 | .GEAR PUMP ASSY<br>.POMPE A PIGNON (ENS.) | | | | 1 | | |
| 27 | 69A–43841–00 | .PISTON, SHUTTLE<br>.PISTON | | | | 1 | | |

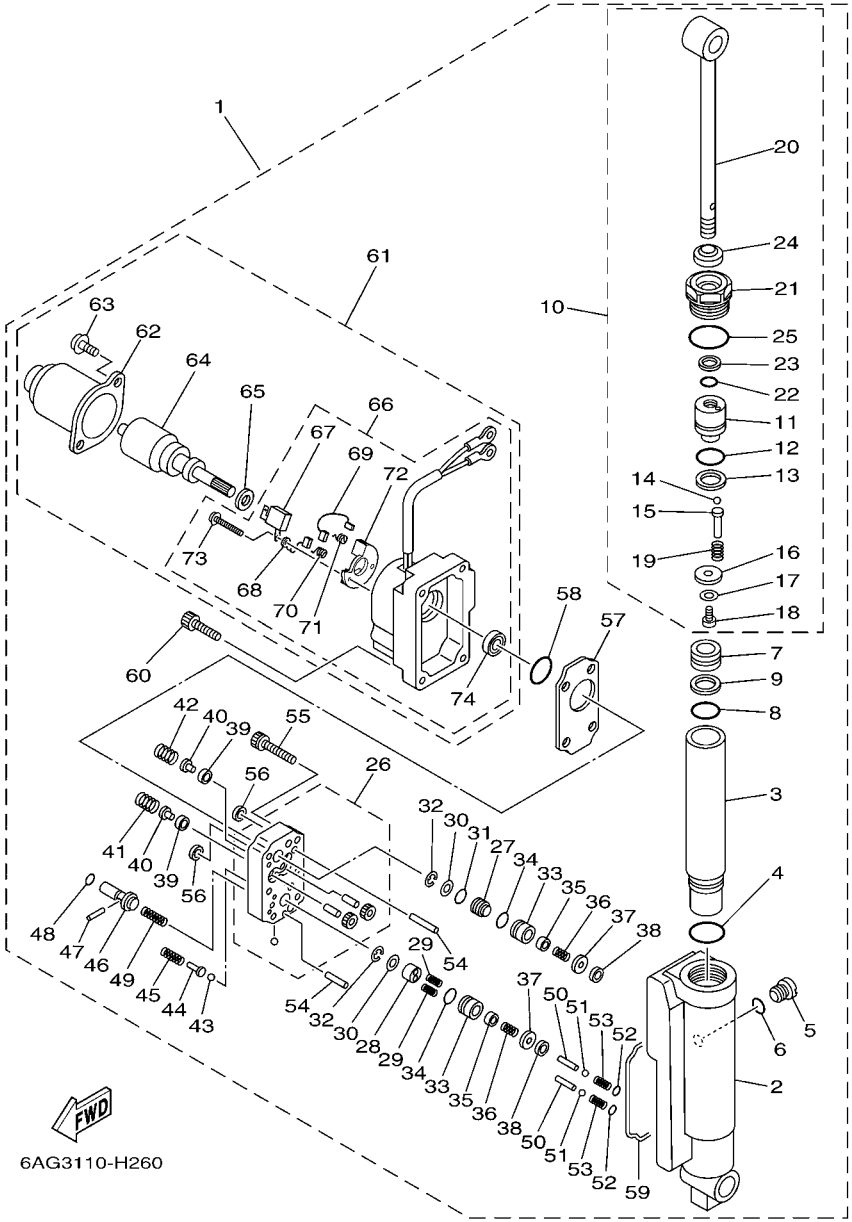


## FIG. 27 POWER TILT ASSY — PUISSANCE PARER ET INCLINER

| REF. NO. | PART NO. N° PIECES | DESCRIPTION DESCRIPTION | MH | EH | E | EP | | REMARKS REMARQUES |
|---|---|---|---|---|---|---|---|---|
| 28 | 69A–4384M–00 | .PISTON, SHUTTLE 2<br>.PISTON 2 | | | | 1 | | |
| 29 | 62Y–43894–00 | .SPRING, SHUTTLE RETURN<br>.RESSORT | | | | 2 | | |
| 30 | 69A–4384F–00 | .SEAL, MAIN VALVE<br>.JOINT | | | | 2 | | |
| 31 | 6H1–43883–00 | .O-RING<br>.JOINT TORIQUE | | | | 1 | | |
| 32 | 99002–03600 | .CLIP<br>.CIRCLIP | | | | 2 | | |
| 33 | 69G–4382G–00 | .VALVE SEAT<br>.JEU DE POINTEAUX | | | | 2 | | |
| 34 | 93210–12N52 | .O-RING<br>.JOINT TORIQUE | | | | 2 | | |
| 35 | 6T4–43808–00 | .SEAT VALVE COMP. 1<br>.SIEGE VALVE COMP. 1 | | | | 2 | | |
| 36 | 69G–43853–00 | .SPRING, MAIN VALVE<br>.RESSORT | | | | 2 | | |
| 37 | 69G–4388F–00 | .SPACER<br>.ENTRETOISE | | | | 2 | | |
| 38 | 69J–4381C–00 | .FILTER 3<br>.FILTRE 3 | | | | 2 | | |
| 39 | 6H1–4384G–11 | .SEAL, RELIEF VALVE<br>.JOINT | | | | 2 | | |
| 40 | 6H1–43844–10 | .PIN, VALVE SUPPORT<br>.GOUPILLE | | | | 2 | | |
| 41 | 6F2–43855–00 | .SPRING, UP RELIEF<br>.RESSORT | | | | 1 | | |
| 42 | 6H1–43856–10 | .SPRING, DOWN RELIEF<br>.RESSORT | | | | 1 | | |
| 43 | 93501–08001 | .BALL<br>.BILLE | | | | 2 | | |
| 44 | 69A–4386A–00 | .PIN, ABSORBER VALVE<br>.GOUPILLE, SOUPAPE | | | | 2 | | |
| 45 | 69A–43824–00 | .SPRING, DOWN RELIEF 2<br>.RESSORT 2 | | | | 2 | | |
| 46 | 69A–43848–00 | .ROD, MANUAL RELEASE<br>.TIGE | | | | 1 | | |
| 47 | 93602–15250 | .PIN, DOWEL<br>.GOUJON | | | | 1 | | |
| 48 | 93210–06001 | .O-RING<br>.JOINT TORIQUE | | | | 1 | | |
| 49 | 6AH–43854–00 | .SPRING, MANUAL RELEASE<br>.RESSORT | | | | 1 | | |
| 50 | 69A–4381G–00 | .PIN 1<br>.GOUPILLE 1 | | | | 2 | | |
| 51 | 93501–08001 | .BALL<br>.BILLE | | | | 2 | | |
| 52 | 6H1–43883–00 | .O-RING<br>.JOINT TORIQUE | | | | 2 | | |
| 53 | 69A–4384H–00 | .SPRING<br>.RESSORT | | | | 2 | | |
| 54 | 93606–14081 | .PIN, DOWEL<br>.GOUPILLE | | | | 2 | | |

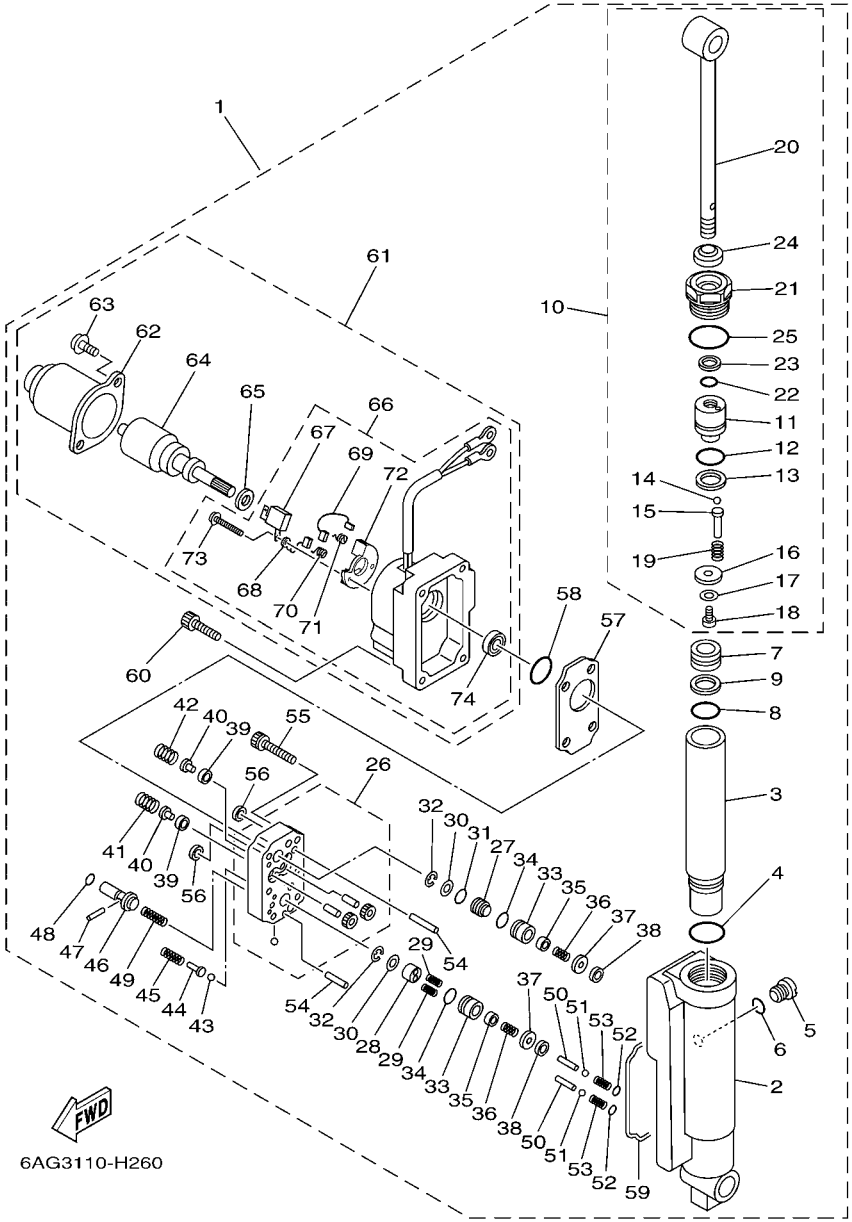


## FIG. 27 POWER TILT ASSY — PUISSANCE PARER ET INCLINER

| REF. NO. | PART NO. N° PIECES | DESCRIPTION DESCRIPTION | MH | EH | E | EP | | REMARKS REMARQUES |
|---|---|---|---|---|---|---|---|---|
| 55 | 91318–05025 | .BOLT<br>.BOULON | | | | 6 | | |
| 56 | 69J–4381C–00 | .FILTER 3<br>.FILTRE 3 | | | | 2 | | |
| 57 | 6AH–4381J–00 | .PLATE<br>.PLAQUE | | | | 1 | | |
| 58 | N35–43862–10 | .O-RING<br>.JOINT TORIQUE | | | | 1 | | |
| 59 | 69A–23129–00 | .GASKET, DRAIN PLUG<br>.JOINT, PLOT DE VIDANGE | | | | 1 | | |
| 60 | 69A–43878–00 | .BOLT, SOCKET<br>.BOULON | | | | 4 | | |
| 61 | 69A–43880–01 | .MOTOR ASSY<br>.MOTEUR (ENS.) | | | | 1 | | |
| 62 | 65W–43804–01 | ..STATOR ASSY<br>..STATOR (ENS.) | | | | 1 | | |
| 63 | 65W–43887–01 | ..BOLT<br>..BOULON | | | | 2 | | |
| 64 | 65W–43805–01 | ..ARMATURE ASSY<br>..INDUIT (ENS.) | | | | 1 | | |
| 65 | 65W–4387G–00 | ..WASHER<br>..RONDELLE | | | | 1 | | |
| 66 | 69A–43881–01 | ..FRAME, END<br>..BATI | | | | 1 | | |
| 67 | 65W–82181–00 | ...CIRCUIT BREAKER COMP.<br>...RUPTEUR COMPLET | | | | 1 | | |
| 68 | 65W–43892–01 | ...BRUSH 2<br>...BALAI 2 | | | | 1 | | |
| 69 | 65W–43891–01 | ...BRUSH 1<br>...BALAI 1 | | | | 1 | | |
| 70 | 65W–4386K–01 | ...SPRING, BRUSH<br>...RESSORT, BALAI | | | | 1 | | |
| 71 | 65W–4386L–00 | ...SPRING, BRUSH 2<br>...RESSORT, BALAI 2 | | | | 1 | | |
| 72 | 65W–4380F–01 | ...PLATE, BRUSH HOLDER<br>...PLAQUE | | | | 1 | | |
| 73 | 65W–43879–01 | ...SCREW, WITH WASHER<br>...VIS, AVEC RONDELLE | | | | 2 | | |
| 74 | 65W–43882–01 | ...OIL SEAL<br>...JOINT SPI | | | | 1 | | |

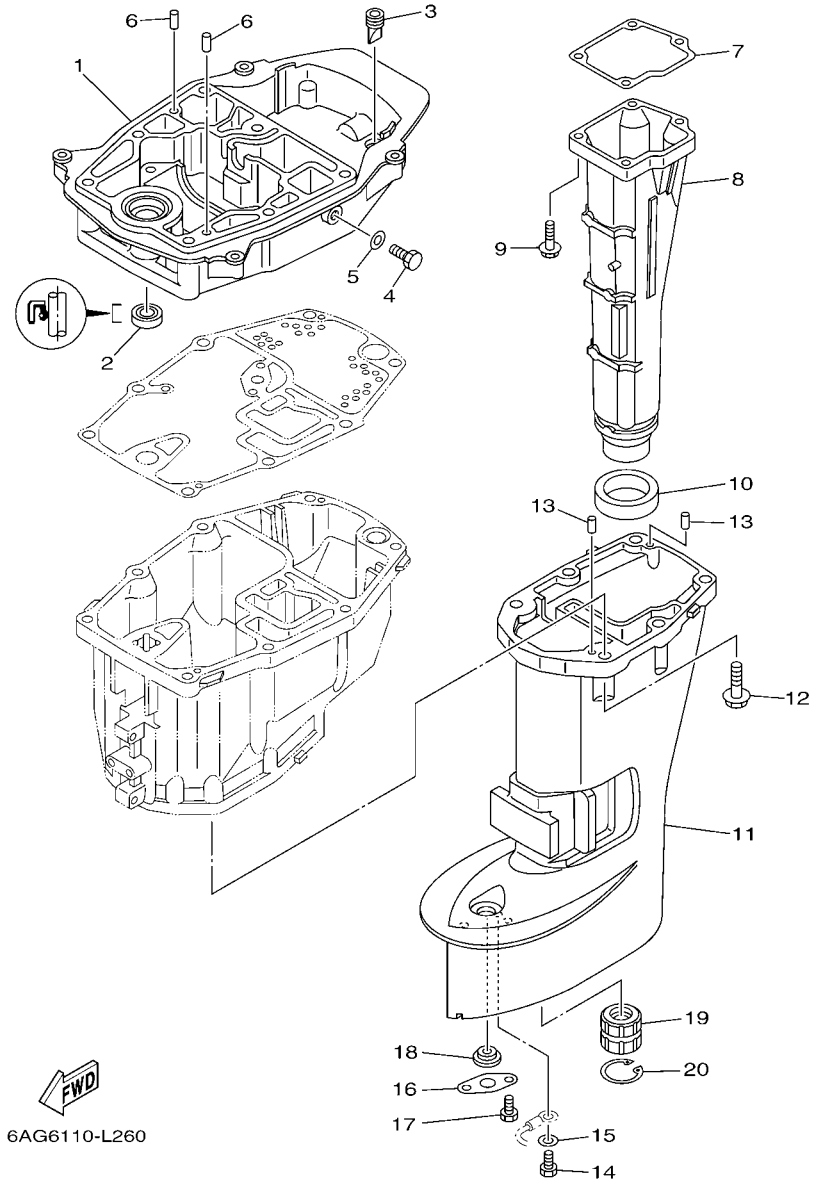


## FIG. 28 UPPER CASING FOURREAU

| REF. NO. | PART NO. N° PIECES | DESCRIPTION DESCRIPTION | MH | EH | E | EP | | REMARKS REMARQUES |
|---|---|---|---|---|---|---|---|---|
| 1 | 6AH–41137–00–CA | GUIDE, EXHAUST<br>COLLECTEUR D'ECHAPPEMENT | 1 | 1 | 1 | 1 | | |
| 2 | 93101–12M63 | OIL SEAL<br>JOINT SPY | 1 | 1 | 1 | 1 | | |
| 3 | 65W–42717–00 | RUBBER, SEAL 2<br>JOINT EN CAOUTCHOUC 2 | 1 | 1 | 1 | 1 | | |
| 4 | 97095–08014 | BOLT<br>BOULON | 1 | 1 | 1 | 1 | | |
| 5 | 90430–08143 | GASKET<br>JOINT | 1 | 1 | 1 | 1 | | |
| 6 | 93606–19M23 | PIN, DOWEL<br>GOUPILLE | 2 | 2 | 2 | 2 | | |
| 7 | 6AH–41134–00 | GASKET, EXHAUST MANIFOLD<br>JOINT, PIPE D'ECHAPPEMENT | 1 | 1 | 1 | 1 | | |
| 8 | 6AH–14711–00–CA | MUFFLER 1<br>POT D'ECHAPPEMENT 1 | 1 | 1 | 1 | 1 | | S(17.1")<br>S(17.1") |
| | 6AH–14711–10–CA | MUFFLER 1<br>POT D'ECHAPPEMENT 1 | 1 | 1 | 1 | 1 | | L(22.1")<br>L(22.1") |
| 9 | 97575–06525 | BOLT, WITH WASHER<br>VIS HEXAGONAL AVC RONDELLE | 4 | 4 | 4 | 4 | | |
| 10 | 6AH–41138–00 | SEAL, EXT. 1<br>JOINT DE GROUPE 1 | 1 | 1 | 1 | 1 | | |
| 11 | 6AH–45111–00–4D | CASING, UPPER<br>FOURREAU | 1 | 1 | 1 | 1 | | S(17.1")<br>S(17.1") |
| | 6AH–45111–10–4D | CASING, UPPER<br>FOURREAU | 1 | 1 | 1 | 1 | | L(22.1")<br>L(22.1") |
| 12 | 97575–08530 | BOLT, WITH WASHER<br>VIS HEXAGONAL AVC RONDELLE | 6 | 6 | 6 | 6 | | |
| 13 | 93604–12M07 | PIN, DOWEL<br>CLAVETTE | 2 | 2 | 2 | 2 | | |
| 14 | 97095–05010 | BOLT<br>BOULON | 1 | 1 | 1 | 1 | | |
| 15 | 92995–05600 | WASHER<br>RONDELLE | 1 | 1 | 1 | 1 | | |
| 16 | 68T–45321–00 | PLATE<br>PLAQUETTE | 1 | 1 | 1 | 1 | | |
| 17 | 97095–06008 | BOLT<br>BOULON | 1 | 1 | 1 | 1 | | |
| 18 | 90480–14M54 | GROMMET<br>PASSE-FIL | 1 | 1 | 1 | 1 | | |
| 19 | 682–45318–00 | BUSHING, DRIVE SHAFT<br>DOUILLE, ARBRE MOTEUR | 1 | 1 | 1 | 1 | | L(22.1")<br>L(22.1") |
| 20 | 93420–30042 | CIRCLIP<br>CIRCLIP, TYPE S | 1 | 1 | 1 | 1 | | L(22.1")<br>L(22.1") |

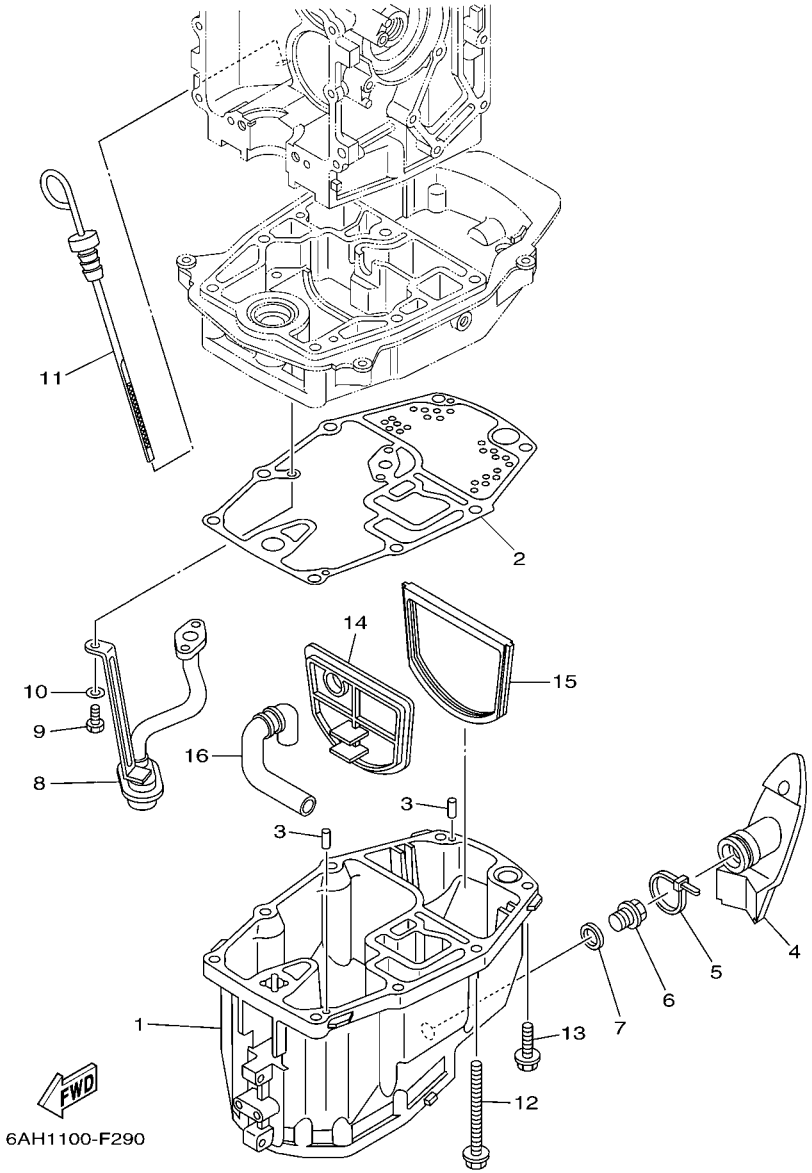


## FIG. 29 OIL PAN — VENTILATEUR D'HUILE

| REF. NO. | PART NO. N° PIECES | DESCRIPTION DESCRIPTION | MH | EH | E | EP | | REMARKS REMARQUES |
|---|---|---|---|---|---|---|---|---|
| 1 | 6AH–15311–00–CA | OIL PAN<br>VENTILATEUR D'HUILE | 1 | 1 | 1 | 1 | | |
| 2 | 6AH–15312–00 | GASKET, OIL PAN<br>JOINT DE VENTILATEUR D'HUILE | 1 | 1 | 1 | 1 | | |
| 3 | 93604–12M07 | PIN, DOWEL<br>CLAVETTE | 2 | 2 | 2 | 2 | | |
| 4 | 6AH–15316–00 | DAMPER 1<br>AMORTISSEUR 1 | 1 | 1 | 1 | 1 | | |
| 5 | 90465–11M59 | CLAMP<br>BRIDE | 1 | 1 | 1 | 1 | | |
| 6 | 90340–14M06 | PLUG, STRAIGHT SCREW<br>PLOT, FILETE DROIT | 1 | 1 | 1 | 1 | | |
| 7 | 90430–14M09 | GASKET<br>JOINT | 1 | 1 | 1 | 1 | | |
| 8 | 6AH–13411–00 | STRAINER, OIL<br>FILTRE, HUILE | 1 | 1 | 1 | 1 | | |
| 9 | 97013–06016 | BOLT<br>BOULON | 3 | 3 | 3 | 3 | | |
| 10 | 92903–06600 | WASHER, PLATE<br>RONDELLE, PLATE | 3 | 3 | 3 | 3 | | |
| 11 | 6AH–15362–00 | PLUG, OIL LEVEL<br>PLOT, NIVEAU D'HUILE | 1 | 1 | 1 | 1 | | |
| 12 | 90119–08103 | BOLT, WITH WASHER<br>BOULON, AVEC RONDELLE | 6 | 6 | 6 | 6 | | |
| 13 | 97575–08530 | BOLT, WITH WASHER<br>VIS HEXAGONAL AVC RONDELLE | 2 | 2 | 2 | 2 | | |
| 14 | 6AH–45126–00 | PLATE, SEAL DAMPER<br>PLAQUETTE | 1 | 1 | 1 | 1 | | |
| 15 | 6AH–45115–00 | GASKET, UPPER CASING<br>JOINT, TUBE D'ARBRE | 1 | 1 | 1 | 1 | | |
| 16 | 6AH–45135–00 | PIPE<br>TUYAU | 1 | 1 | 1 | 1 | | |

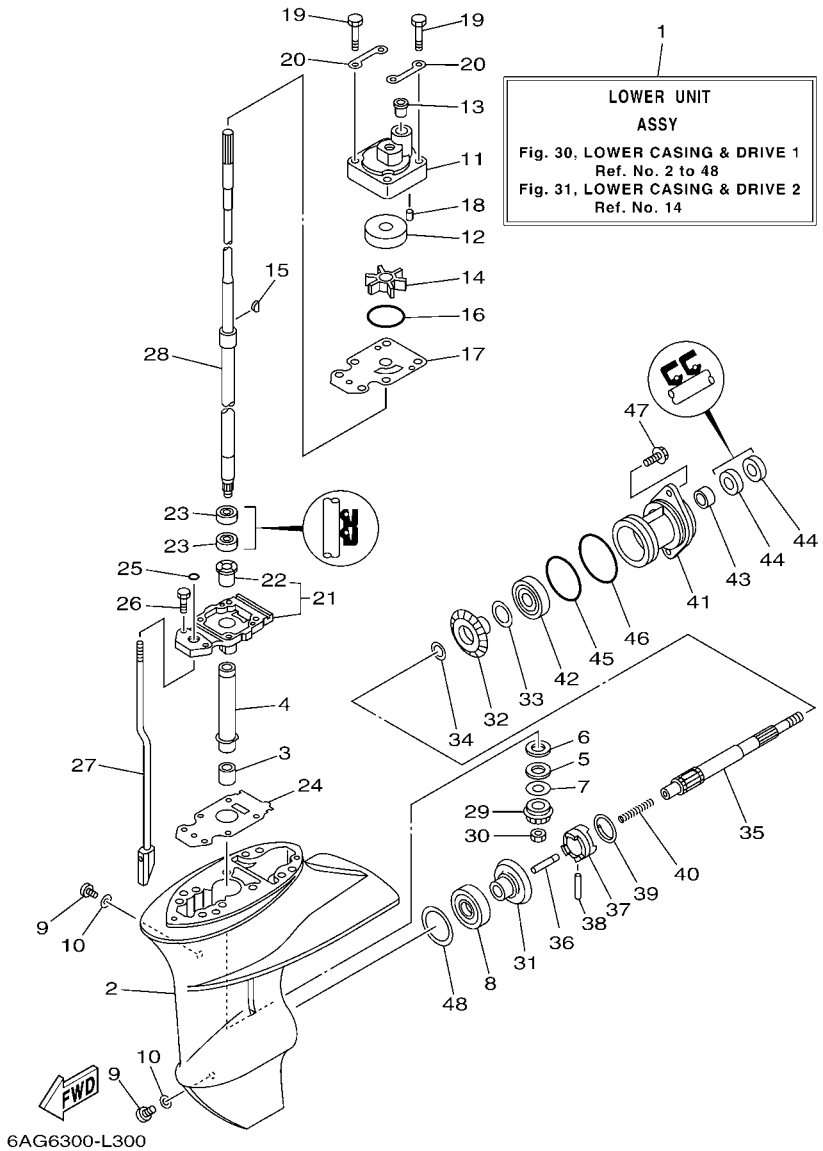


## FIG. 30 LOWER CASING & DRIVE 1 BOITIER D'HELICE TRANSMISSION1

| REF. NO. | PART NO. N° PIECES | DESCRIPTION DESCRIPTION | MH | EH | E | EP | | REMARKS REMARQUES |
|---|---|---|---|---|---|---|---|---|
| 1 | 6AH–45300–00–4D | LOWER UNIT ASSY<br>UNITE INFERIEURE (ENS.) | 1 | 1 | 1 | 1 | | S(17.1")<br>S(17.1") |
| | 6AH–45300–10–4D | LOWER UNIT ASSY<br>UNITE INFERIEURE (ENS.) | 1 | 1 | 1 | 1 | | L(22.1")<br>L(22.1") |
| 2 | 6AH–45311–00–4D | CASING, LOWER<br>BOITIER D'HELICE | 1 | 1 | 1 | 1 | | |
| 3 | 93315–314V8 | BEARING<br>ROULEMENT | 1 | 1 | 1 | 1 | | |
| 4 | 63V–45536–00 | SLEEVE, DRIVE SHAFT<br>MANCHON, ARBRE MOTEUR | 1 | 1 | 1 | 1 | | |
| 5 | 90209–14011 | WASHER<br>RONDELLE | 1 | 1 | 1 | 1 | | |
| 6 | 90201–15017 | WASHER, PLATE<br>RONDELLE, PLATE | 1 | 1 | 1 | 1 | | |
| 7 | 6E8–45587–10 | SHIM (T:1.13MM)<br>CALE (T:1.13MM) | 1 | 1 | 1 | 1 | | UR<br>UR |
| | 6E8–45587–30 | SHIM (T:1.20MM)<br>CALE (T:1.20MM) | 1 | 1 | 1 | 1 | | UR<br>UR |
| 8 | 93332–00005 | BEARING<br>ROULEMENT | 1 | 1 | 1 | 1 | | |
| 9 | 90340–08002 | PLUG, STRAIGHT SCREW<br>PLOT, FILETE DROIT | 2 | 2 | 2 | 2 | | |
| 10 | 90430–08020 | GASKET<br>JOINT | 2 | 2 | 2 | 2 | | |
| 11 | 6AH–44311–00 | HOUSING, WATER PUMP<br>CORPS, POMPE A EAU | 1 | 1 | 1 | 1 | | |
| 12 | 63V–44322–00 | INSERT, CARTRIDGE<br>CUVETTE | 1 | 1 | 1 | 1 | | |
| 13 | 6L2–44367–00 | DAMPER, WATER SEAL 3<br>JOINT TUBE D'EAU 3 | 1 | 1 | 1 | 1 | | |
| 14 | 63V–44352–01 | IMPELLER<br>TURBINE | 1 | 1 | 1 | 1 | | |
| 15 | 664–44338–00 | KEY, WOODRUFF<br>CLAVETTE, VOLANT | 1 | 1 | 1 | 1 | | |
| 16 | 93210–49046 | O-RING<br>JOINT TORIQUE | 1 | 1 | 1 | 1 | | |
| 17 | 68T–44323–00 | OUTER PLATE, CARTRIDGE<br>PLAQUE EXTERIEURE | 1 | 1 | 1 | 1 | | |
| 18 | 93604–12M07 | PIN, DOWEL<br>CLAVETTE | 2 | 2 | 2 | 2 | | |
| 19 | 97095–08045 | BOLT<br>BOULON | 4 | 4 | 4 | 4 | | |
| 20 | 63V–44328–01 | PLATE<br>PLAQUETTE | 2 | 2 | 2 | 2 | | |
| 21 | 69G–45331–01–CA | HOUSING, BEARING<br>FLASQUE, ROULEMENT | 1 | 1 | 1 | 1 | | |
| 22 | 626–45316–09 | .BUSHING, DRIVE SHAFT<br>.DOUILLE, ARBRE MOTEUR | 1 | 1 | 1 | 1 | | |
| 23 | 93101–20001 | OIL SEAL<br>JOINT SPY | 2 | 2 | 2 | 2 | | |
| 24 | 69G–45315–A0 | PACKING, LOWER CASING<br>JOINT, BOITIER D'HELICE | 1 | 1 | 1 | 1 | | |
| 25 | 93210–06ME6 | O-RING<br>JOINT TORIQUE | 1 | 1 | 1 | 1 | | |

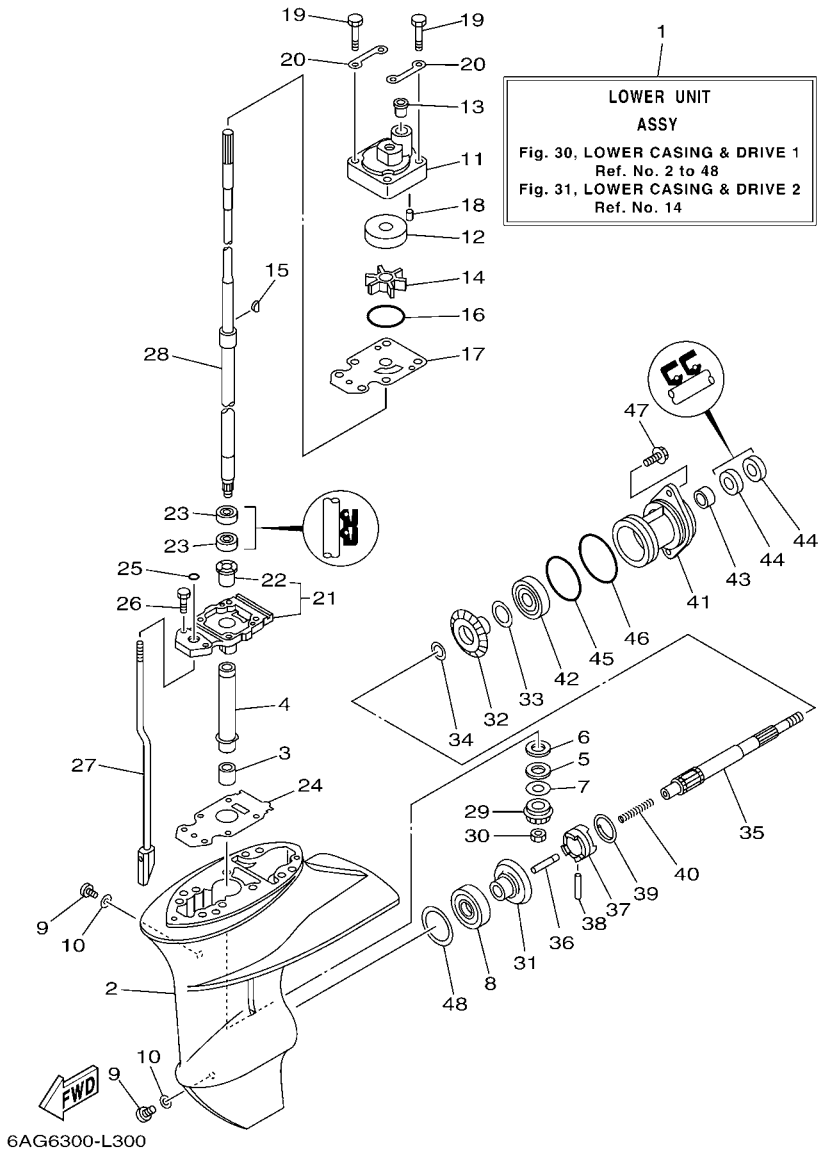


## FIG. 30 LOWER CASING & DRIVE 1 BOITIER D'HELICE TRANSMISSION1

| REF. NO. | PART NO. N° PIECES | DESCRIPTION DESCRIPTION | MH | EH | E | EP | | REMARKS REMARQUES |
|---|---|---|---|---|---|---|---|---|
| 26 | 97080–08025 | BOLT<br>BOULON | 2 | 2 | 2 | 2 | | |
| 27 | 6AH–44150–00 | SHIFT CAM ASSY<br>CAME D'INVERSION | 1 | 1 | 1 | 1 | | S(17.1")<br>S(17.1") |
| | 6AH–44150–10 | SHIFT CAM ASSY<br>CAME D'INVERSION | 1 | 1 | 1 | 1 | | L(22.1")<br>L(22.1") |
| 28 | 6AH–45510–00 | DRIVE SHAFT ASSY<br>ARBRE MOTEUR (ENS.) | 1 | 1 | 1 | 1 | | S(17.1")<br>S(17.1") |
| | 6AH–45510–10 | DRIVE SHAFT ASSY<br>ARBRE MOTEUR (ENS.) | 1 | 1 | 1 | 1 | | L(22.1")<br>L(22.1") |
| 29 | 63V–45551–00 | PINION (13T)<br>PIGNON D'ATTAQUE (13D) | 1 | 1 | 1 | 1 | | |
| 30 | 90179–08M06 | NUT<br>ECROU | 1 | 1 | 1 | 1 | | |
| 31 | 6E7–45560–01 | GEAR 1 (27T)<br>PIGNON 1 (27T) | 1 | 1 | 1 | 1 | | |
| 32 | 6E7–45571–00 | GEAR 2 (27T)<br>PIGNON 2 (27T) | 1 | 1 | 1 | 1 | | |
| 33 | 626–45577–00 | SHIM (T:0.10MM)<br>CALE (T:0.10MM) | 1 | 1 | 1 | 1 | | UR<br>UR |
| | 626–45577–10 | SHIM (T:0.20MM)<br>CALE (T:0.20MM) | 1 | 1 | 1 | 1 | | UR<br>UR |
| | 626–45577–20 | SHIM (T:0.30MM)<br>CALE (T:0.30MM) | 1 | 1 | 1 | 1 | | UR<br>UR |
| | 626–45577–30 | SHIM (T:0.40MM)<br>CALE (T:0.40MM) | 1 | 1 | 1 | 1 | | UR<br>UR |
| | 626–45577–40 | SHIM (T:0.50MM)<br>CALE (T:0.50MM) | 1 | 1 | 1 | 1 | | UR<br>UR |
| 34 | 90201–17682 | WASHER, PLATE<br>RONDELLE, PLATE | 1 | 1 | 1 | 1 | | |
| 35 | 683–45611–00 | SHAFT, PROPELLER<br>ARBRE, HELICE | 1 | 1 | 1 | 1 | | |
| 36 | 650–45635–00 | PLUNGER, SHIFT<br>POUSSOIR D'EMBRAYAGE | 1 | 1 | 1 | 1 | | |
| 37 | 682–45631–00 | CLUTCH, DOG<br>CRABOT | 1 | 1 | 1 | 1 | | |
| 38 | 90250–05010 | PIN, STRAIGHT<br>GOUPILLE, DROITE | 1 | 1 | 1 | 1 | | |
| 39 | 648–45633–00 | RING, CROSS PIN<br>JONC, GOUPILLE CRABOT | 1 | 1 | 1 | 1 | | |
| 40 | 90501–150A0 | SPRING, COMPRESSION<br>RESSORT, COMPRESSION | 1 | 1 | 1 | 1 | | |
| 41 | 683–45361–02–4D | CAP, LOWER CASING<br>COUVERCLE, BOITIER D'HELICE | 1 | 1 | 1 | 1 | | |
| 42 | 93306–00501 | BEARING<br>ROULEMENT | 1 | 1 | 1 | 1 | | |
| 43 | 93315–317U2 | BEARING<br>ROULEMENT | 1 | 1 | 1 | 1 | | |
| 44 | 93101–17054 | OIL SEAL<br>JOINT SPY | 2 | 2 | 2 | 2 | | |
| 45 | 93210–57M09 | O-RING<br>JOINT TORIQUE | 1 | 1 | 1 | 1 | | |
| 46 | 93210–56M80 | O-RING<br>JOINT TORIQUE | 1 | 1 | 1 | 1 | | |

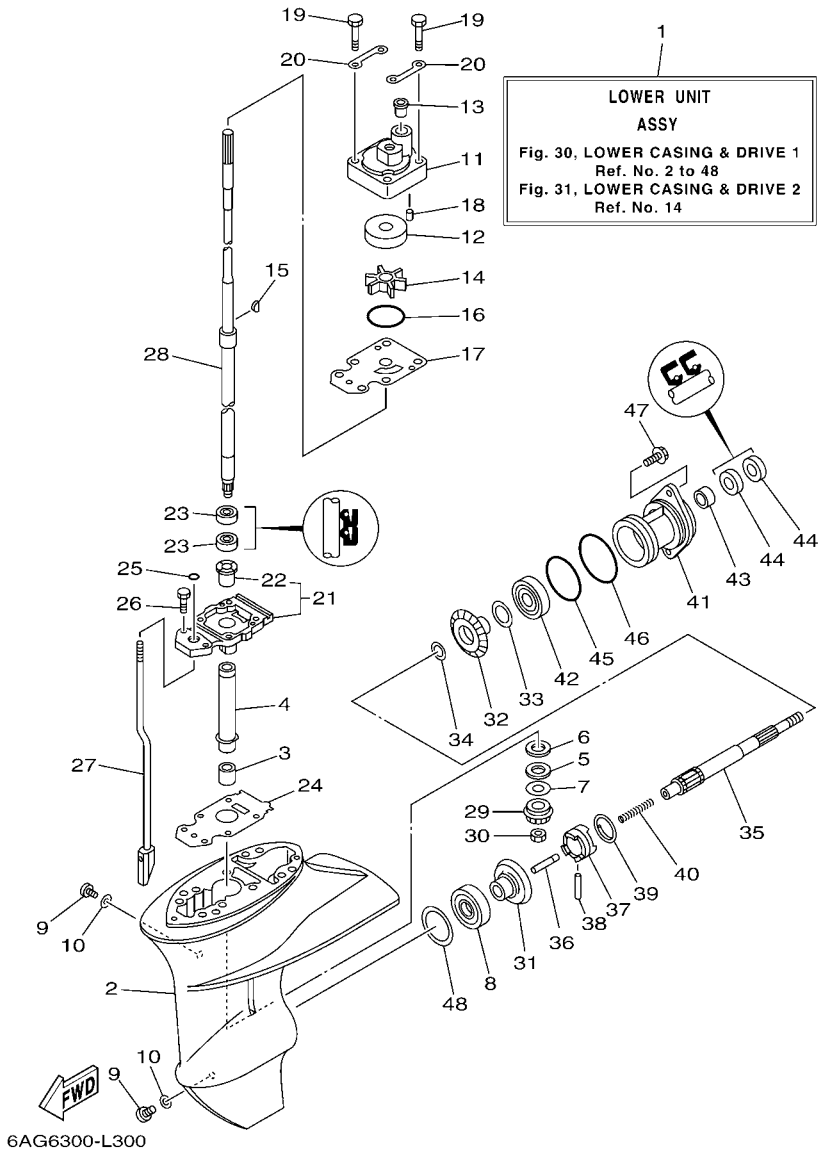


## FIG. 30 LOWER CASING & DRIVE 1 BOITIER D'HELICE TRANSMISSION1

| REF. NO. | PART NO. N° PIECES | DESCRIPTION DESCRIPTION | MH | EH | E | EP | | REMARKS REMARQUES |
|---|---|---|---|---|---|---|---|---|
| 47 | 97575–06520 | BOLT, WITH WASHER<br>VIS HEXAGONAL AVC RONDELLE | 2 | 2 | 2 | 2 | | |
| 48 | 664–45567–01 | SHIM (T:0.10MM)<br>CALE (T:0.10MM) | 1 | 1 | 1 | 1 | | UR<br>UR |
| | 664–45567–10 | SHIM (T:0.12MM)<br>CALE (T:0.12MM) | 1 | 1 | 1 | 1 | | UR<br>UR |
| | 664–45567–20 | SHIM (T:0.15MM)<br>CALE (T:0.15MM) | 1 | 1 | 1 | 1 | | UR<br>UR |
| | 664–45567–30 | SHIM (T:0.18MM)<br>CALE (T:0.18MM) | 1 | 1 | 1 | 1 | | UR<br>UR |
| | 664–45567–40 | SHIM (T:0.30MM)<br>CALE (T:0.30MM) | 1 | 1 | 1 | 1 | | UR<br>UR |
| | 664–45567–50 | SHIM (T:0.40MM)<br>CALE (T:0.40MM) | 1 | 1 | 1 | 1 | | UR<br>UR |
| | 664–45567–60 | SHIM (T:0.50MM)<br>CALE (T:0.50MM) | 1 | 1 | 1 | 1 | | UR<br>UR |

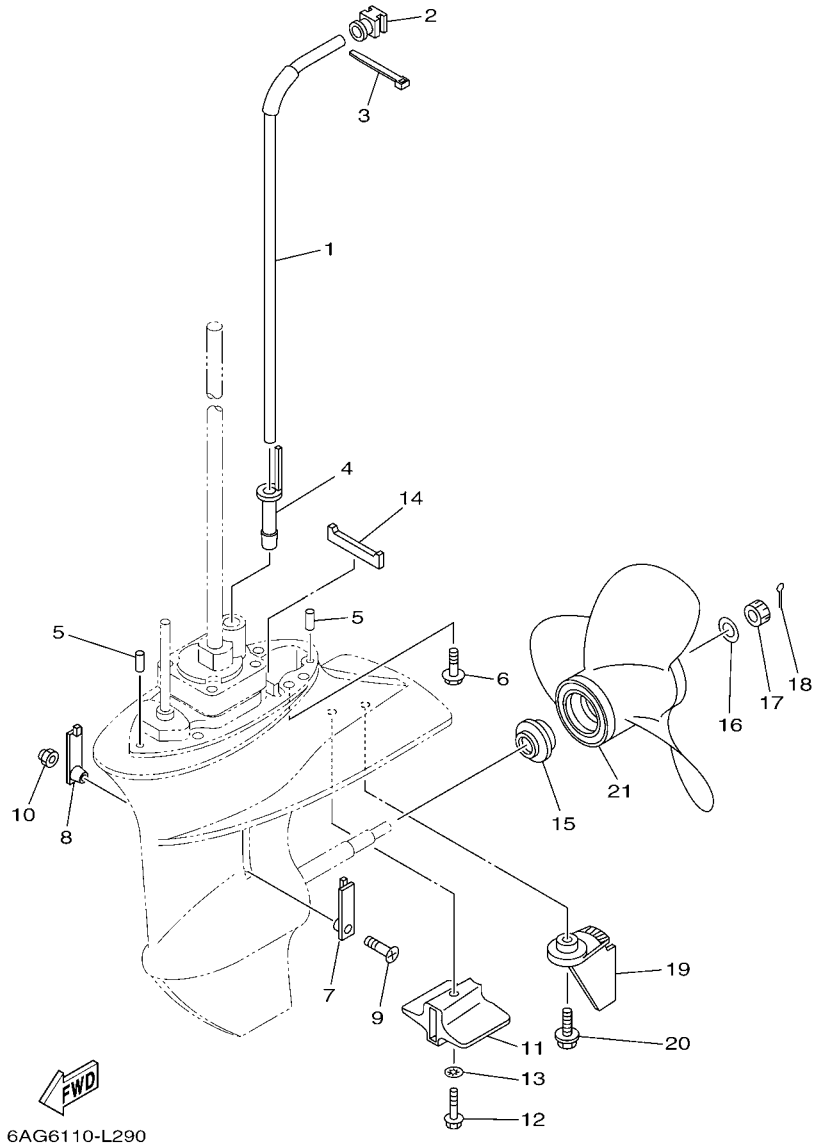


## FIG. 31 LOWER CASING & DRIVE 2 BOITIER D'HELICE TRANSMISSION2

| REF. NO. | PART NO. N° PIECES | DESCRIPTION DESCRIPTION | MH | EH | E | EP | | REMARKS REMARQUES |
|---|---|---|---|---|---|---|---|---|
| 1 | 6AH–44361–01 | TUBE, WATER 1<br>TUBE D'EAU 1 | 1 | 1 | 1 | 1 | | S(17.1")<br>S(17.1") |
| | 6AH–44361–11 | TUBE, WATER 1<br>TUBE D'EAU 1 | 1 | 1 | 1 | 1 | | L(22.1")<br>L(22.1") |
| 2 | 6AH–44365–00 | DAMPER, WATER SEAL 1<br>JOINT, TUBE D'EAU 1 | 1 | 1 | 1 | 1 | | |
| 3 | 90465–11M10 | CLAMP<br>BRIDE | 1 | 1 | 1 | 1 | | |
| 4 | 6AH–44368–00 | RUBBER, WATER SEAL 4<br>CAOUTCHOUC EAU JUNTA 4 | 1 | 1 | 1 | 1 | | |
| 5 | 93604–12M07 | PIN, DOWEL<br>CLAVETTE | 2 | 2 | 2 | 2 | | |
| 6 | 97575–08530 | BOLT, WITH WASHER<br>VIS HEXAGONAL AVC RONDELLE | 4 | 4 | 4 | 4 | | |
| 7 | 6G1–45214–00 | COVER, WATER INLET 1<br>GRILLE, ENTREE D'EAU 1 | 1 | 1 | 1 | 1 | | |
| 8 | 63V–45215–00 | COVER, WATER INLET 2<br>GRILLE, ENTREE D'EAU 2 | 1 | 1 | 1 | 1 | | |
| 9 | 90152–05011 | SCREW, COUNTERSUNK<br>VIS, TETE NOYEE | 1 | 1 | 1 | 1 | | |
| 10 | 90185–05002 | NUT, NYLON<br>ECROU,AUTO-BLOQUANT | 1 | 1 | 1 | 1 | | |
| 11 | 6AH–45251–00 | ANODE<br>ANODE | 1 | 1 | 1 | 1 | | |
| 12 | 95895–06035 | BOLT, FLANGE<br>BOULON | 1 | 1 | 1 | 1 | | |
| 13 | 92990–06300 | WASHER, INTERNAL TOOTH<br>RONDELLE, DENTURE INTERNE | 1 | 1 | 1 | 1 | | |
| 14 | 63V–45375–00 | DAMPER, SEAL<br>BOURRELET, CAOUTCHOUC | 1 | 1 | 1 | 1 | | |
| 15 | 6E7–45987–01 | SPACER 1<br>ENTRETOISE 1 | 1 | 1 | 1 | 1 | | |
| 16 | 90201–10M01 | WASHER, PLATE<br>RONDELLE, PLATE | 1 | 1 | 1 | 1 | | |
| 17 | 90171–10M01 | NUT, CASTLE<br>ECROU, CRENELE | 1 | 1 | 1 | 1 | | |
| 18 | 91490–30020 | PIN. COTTER<br>GOUPILLE | 1 | 1 | 1 | 1 | | |
| 19 | 6AH–45371–00–4D | TAB-TRIM<br>ANODE DERIVE | 1 | 1 | 1 | 1 | | |
| 20 | 90119–06M88 | BOLT, WITH WASHER<br>BOULON, AVEC RONDELLE | 1 | 1 | 1 | 1 | | |
| 21 | 63V–45941–10 | PROPELLER (3X9-1/4"X12"-J1)<br>HELICE (3X9-1/4"X12"-J1) | 1 | 1 | 1 | 1 | | UR<br>UR |
| | 63V–45943–10 | PROPELLER (3X9-1/4"X11"-J1)<br>HELICE (3X9-1/4"X11"-J1) | 1 | 1 | 1 | 1 | | UR<br>UR |
| | 63V–45945–10 | PROPELLER (3X9-1/4"X9"-J1)<br>HELICE (3X9-1/4"X9"-J1) | 1 | 1 | 1 | 1 | | UR<br>UR |
| | 63V–45952–10 | PROPELLER (3X9-1/4"X10"-J1)<br>HELICE (3X9-1/4"X10"-J1) | 1 | 1 | 1 | 1 | | UR<br>UR |
| | 683–45941–00 | PROPELLER (3X9-1/4"X12"-J)<br>HELICE (3X9-1/4"X12"-J) | 1 | 1 | 1 | 1 | | UR<br>UR |
| | 683–45943–00 | PROPELLER (3X9-1/4"X10-1/2"-J)<br>HELICE (3X9-1/4"X10-1/2"-J) | 1 | 1 | 1 | 1 | | UR<br>UR |

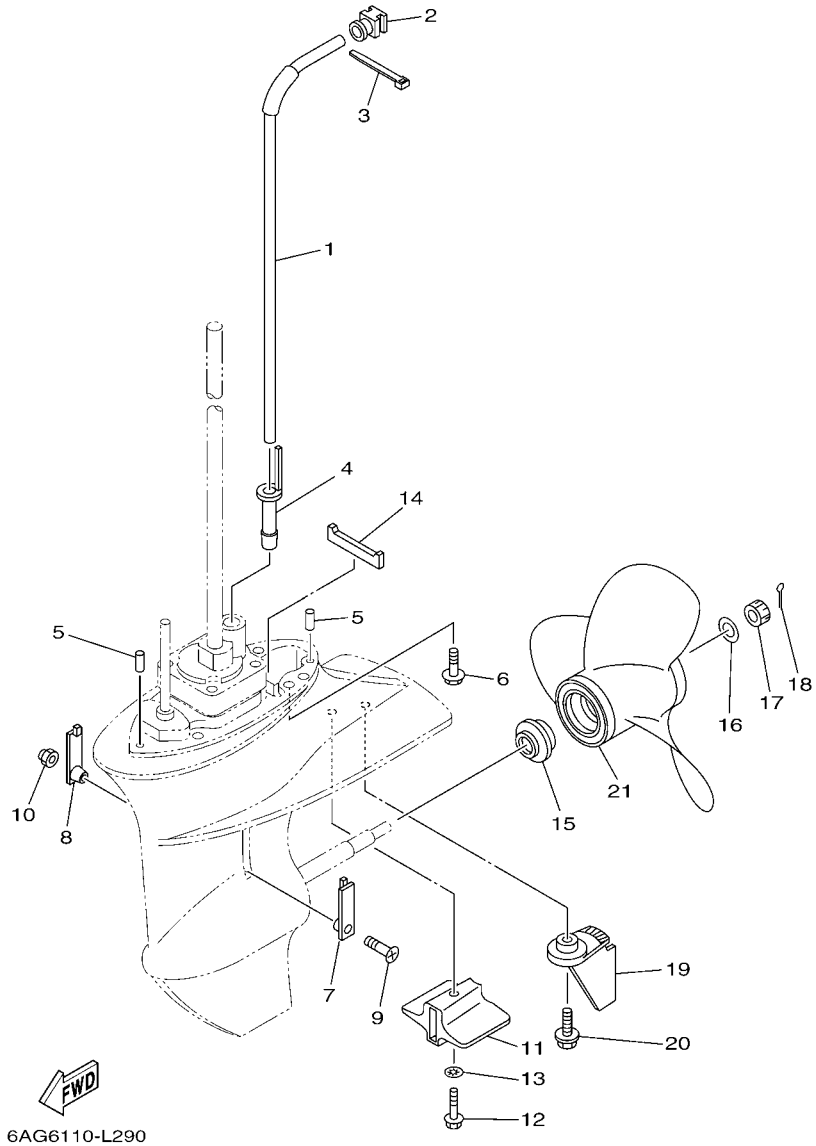


## FIG. 31 LOWER CASING & DRIVE 2 BOITIER D'HELICE TRANSMISSION2

| REF. NO. | PART NO. N° PIECES | DESCRIPTION DESCRIPTION | MH | EH | E | EP | | REMARKS REMARQUES |
|---|---|---|---|---|---|---|---|---|
| 21 | 683–45952–00 | PROPELLER (3X9-1/4"X9-3/4"-J)<br>HELICE (3X9-1/4"X9-3/4"-J) | 1 | 1 | 1 | 1 | | UR<br>UR |

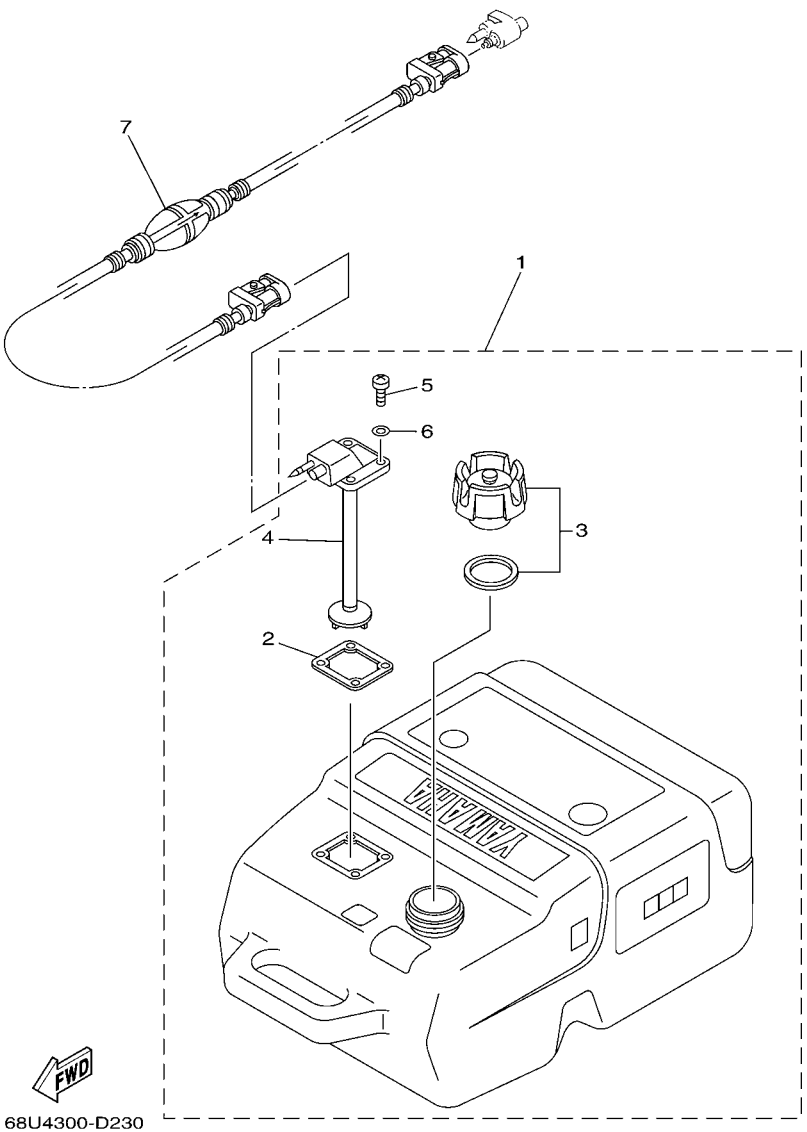


## FIG. 32 FUEL TANK 1 — RESERVOIR A CARBURANT 1

| REF. NO. | PART NO. N° PIECES | DESCRIPTION DESCRIPTION | MH | EH | E | EP | | REMARKS REMARQUES |
|---|---|---|---|---|---|---|---|---|
| 1 | 6YK–24201–03 | FUEL TANK ASSY (25L)<br>RESERVOIR A ESSENCE (ENS.) 25L | 1 | 1 | 1 | 1 | | AP EXCEPT FOR RUS<br>AP EXCEPT FOR RUS |
| 2 | 6YL–24268–01 | .GASKET, FUEL METER<br>.JOINT, JAUGE A CARBURANT | 1 | 1 | 1 | 1 | | |
| 3 | 6YK–24610–01 | .CAP ASSY<br>.BOUCHON | 1 | 1 | 1 | 1 | | |
| 4 | 6YK–24260–01 | .FUEL METER ASSY<br>.INDICATEUR DE CARBURANT | 1 | 1 | 1 | 1 | | |
| 5 | 90157–05M16 | .SCREW, PAN HEAD<br>.VIS, TETE TRONCONIQUE | 4 | 4 | 4 | 4 | | |
| 6 | 6YL–24329–00 | .SEAL<br>.JOINT | 4 | 4 | 4 | 4 | | |
| 7 | 6YL–24306–54 | FUEL PIPE COMP. 1<br>DURITE A ESSENCE 1 | 1 | 1 | 1 | 1 | | AP EXCEPT FOR RUS<br>AP EXCEPT FOR RUS |

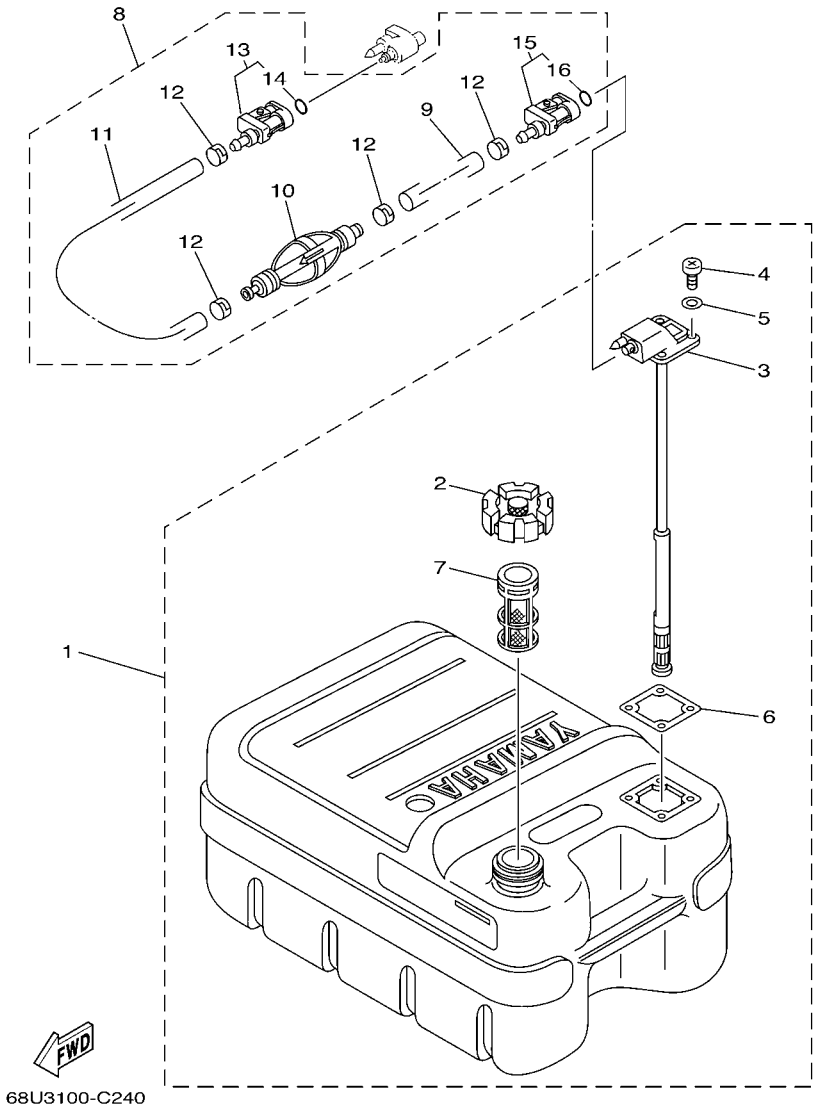


## FIG. 33 FUEL TANK 2 — RESERVOIR A CARBURANT 2

| REF. NO. | PART NO. N° PIECES | DESCRIPTION DESCRIPTION | MH | EH | E | EP | | REMARKS REMARQUES |
|---|---|---|---|---|---|---|---|---|
| 1 | 6YJ–24201–10 | FUEL TANK ASSY (24L)<br>RESERVOIR A ESSENCE (ENS.):24L | 1 | 1 | 1 | | | AP FOR RUS<br>AP FOR RUS |
| 2 | 6YJ–24610–01 | .CAP ASSY<br>.BOUCHON | 1 | 1 | 1 | | | |
| 3 | 6Y1–24260–12 | .FUEL METER ASSY<br>.INDICATEUR DE CARBURANT | 1 | 1 | 1 | | | WITH INDICATOR<br>WITH INDICATOR |
| 4 | 90157–05M19 | .SCREW, PAN HEAD<br>.VIS, TETE TRONCONIQUE | 4 | 4 | 4 | | | |
| 5 | 6Y1–24329–00 | .SEAL<br>.JOINT | 4 | 4 | 4 | | | |
| 6 | 6Y1–24268–00 | .GASKET, FUEL METER<br>.JOINT, JAUGE A CARBURANT | 1 | 1 | 1 | | | |
| 7 | 6YJ–24167–00 | .STRAINER<br>.FILTRE | 1 | 1 | 1 | | | |
| 8 | 61J–24306–04 | FUEL PIPE COMP. 1<br>DURITE A ESSENCE 1 | 1 | 1 | 1 | | | AP FOR RUS<br>AP FOR RUS |
| 9 | 90445–11M06 | .HOSE (L2050)<br>.DURITE (L2050) | 1 | 1 | 1 | | | |
| 10 | 61J–24360–00 | .PRIMER PUMP ASSY<br>.POMPE D'AMORCAGE | 1 | 1 | 1 | | | |
| 11 | 90445–11M05 | .HOSE (L850)<br>.DURITE (L850) | 1 | 1 | 1 | | | |
| 12 | 650–24351–51 | .BAND 1<br>.COLLIER 1 | 4 | 4 | 4 | | | |
| 13 | 6G1–24305–05 | .FUEL PIPE JOINT COMP. 2<br>.DURITE RACCORDEMT. A ESSENCE | 1 | 1 | 1 | | | |
| 14 | 93210–08287 | ..O-RING<br>..JOINT TORIQUE | 1 | 1 | 1 | | | |
| 15 | 6Y1–24305–06 | .FUEL PIPE JOINT COMP. 2<br>.DURITE RACCORDEMT. A ESSENCE | 1 | 1 | 1 | | | |
| 16 | 93210–08287 | ..O-RING<br>..JOINT TORIQUE | 1 | 1 | 1 | | | |

## FIG. 34 STEERING GUIDE FIXATION DE DIRECTION

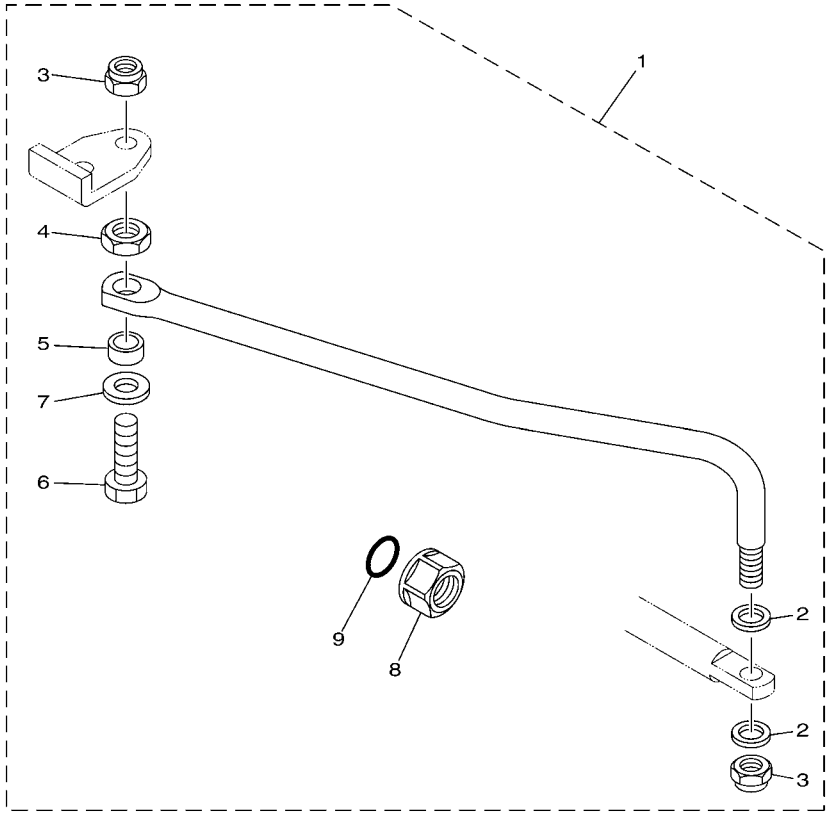

6AH1100-F341

| REF. NO. | PART NO. N° PIECES | DESCRIPTION DESCRIPTION | MH | EH | E | EP | | REMARKS REMARQUES |
|---|---|---|---|---|---|---|---|---|
| 1 | 6AH–61350–00 | STEERING GUIDE ATTACHMENT KIT<br>FIXATIONS DE DIRECTION | 1 | 1 | 1 | 1 | | AP<br>AP |
| 2 | 90201–10M20 | .WASHER, PLATE<br>.RONDELLE, PLATE | 2 | 2 | 2 | 2 | | |
| 3 | 90185–09M01 | .NUT, SELF-LOCKING<br>.ECROU,AUTO-BLOQUANT | 2 | 2 | 2 | 2 | | |
| 4 | 90170–09M03 | .NUT<br>.ECROU | 1 | 1 | 1 | 1 | | |
| 5 | 90387–10M42 | .COLLAR<br>.COLLERETTE | 1 | 1 | 1 | 1 | | |
| 6 | 6E5–61355–00 | .BOLT<br>.BOULON | 1 | 1 | 1 | 1 | | |
| 7 | 90201–10M63 | .WASHER, PLATE<br>.RONDELLE, PLATE | 1 | 1 | 1 | 1 | | |
| 8 | 6E5–43145–01 | .CAP, CLAMP BRACKET<br>.CAPUCHON, PRESSE | 1 | 1 | 1 | 1 | | |
| 9 | 93210–16275 | .O-RING<br>.JOINT TORIQUE | 1 | 1 | 1 | 1 | | |

## FIG. 35 REMOTE CONTROL BOX BOITIER DE COMMANDE A DISTANCE

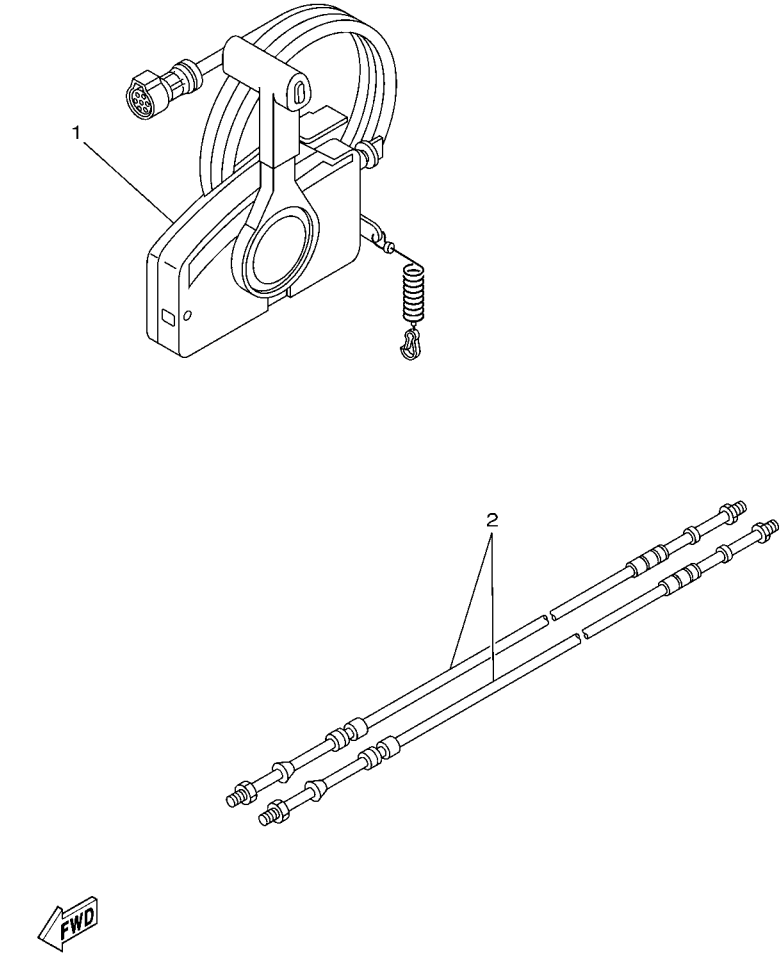


67M0100-8280

| REF. NO. | PART NO. N° PIECES | DESCRIPTION DESCRIPTION | MH | EH | E | EP | | REMARKS REMARQUES |
|---|---|---|---|---|---|---|---|---|
| 1 | 703–48205–A6 | REMOTE CONTROL ASSY (10P)<br>BOITIER DE COMMANDE A DISTANCE | | | | 1 | | AP WITH PT/T SW.<br>AP WITH PT/T SW. |
| | 703–48201–A4 | REMOTE CONTROL ASSY (10P)<br>BOITIER DE COMMANDE A DISTANCE | | | 1 | | | AP WITHOUT PT/T SW.<br>AP WITHOUT PT/T SW. |
| 2 | 701–48310–90 | CABLE, REMOTE CONTROL L=11F<br>CABLE, COMMANDE A DISTANCE:11F | | | 2 | 2 | | UR<br>UR |
| | 701–48320–00 | CABLE, REMOTE CONTROL L=12F<br>CABLE, COMMANDE A DISTANCE:12F | | | 2 | 2 | | UR<br>UR |
| | 701–48320–20 | CABLE, REMOTE CONTROL L=13F<br>CABLE, COMMANDE A DISTANCE:13F | | | 2 | 2 | | UR<br>UR |
| | 701–48320–50 | CABLE, REMOTE CONTROL L=15F<br>CABLE, COMMANDE A DISTANCE:15F | | | 2 | 2 | | UR<br>UR |

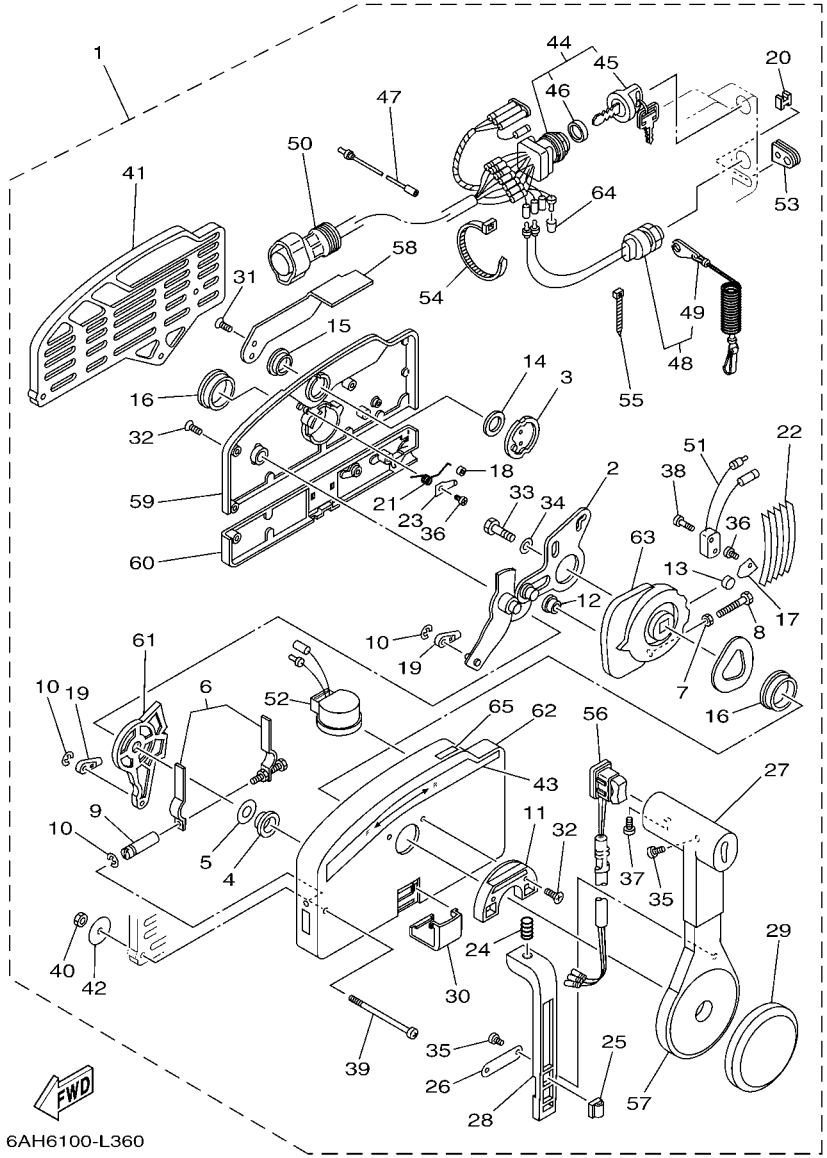


## FIG. 36 REMOTE CONTROL ASSY BOITIER DE COMMANDE A DISTANCE

| REF. NO. | PART NO. N° PIECES | DESCRIPTION DESCRIPTION | MH | EH | E | EP | | REMARKS REMARQUES |
|---|---|---|---|---|---|---|---|---|
| 1 | 703–48205–A6 | REMOTE CONTROL ASSY (10P)<br>BOITIER DE COMMANDE A DISTANCE | | | | 1 | | AP WITH PT/T SW.<br>AP WITH PT/T SW. |
| | 703–48201–A4 | REMOTE CONTROL ASSY (10P)<br>BOITIER DE COMMANDE A DISTANCE | | | 1 | | | AP WITHOUT PT/T SW.<br>AP WITHOUT PT/T SW. |
| 2 | 703–48261–01 | .ARM, THROTTLE<br>.BRAS, ACCELERATION | | | 1 | 1 | | |
| 3 | 703–48153–00 | .SHAFT, FREE ACCEL.<br>.AXE | | | 1 | 1 | | |
| 4 | 703–48235–00 | .BUSHING<br>.COUSSINET | | | 1 | 1 | | |
| 5 | 703–48268–00 | .SPACER<br>.ENTRETOISE | | | 1 | 1 | | |
| 6 | 703–48264–00 | .FRICTION, THROTTLE<br>.FRICTION, ACCELERATION | | | 1 | 1 | | |
| 7 | 95380–05600 | .NUT<br>.ECROU | | | 1 | 1 | | |
| 8 | 97380–05025 | .BOLT<br>.BOULON, HEXAGONAL | | | 1 | 1 | | |
| 9 | 703–48265–00 | .SHAFT, FRICTION<br>.AXE, COPILOTE | | | 1 | 1 | | |
| 10 | 93430–06024 | .CIRCLIP<br>.CLIPS | | | 3 | 3 | | |
| 11 | 703–48245–00 | .PLATE, LOCK<br>.PLAQUE, VERROU | | | 1 | 1 | | |
| 12 | 703–48252–00 | .ROLLER, CAM<br>.POULIE | | | 1 | 1 | | |
| 13 | 701–48248–00 | .ROLLER, FREE ACCEL.<br>.POULIE | | | 1 | 1 | | |
| 14 | 703–48198–00 | .WASHER, WAVE<br>.RONDELLE, ELASTIQUE ONDULEE | | | 1 | 1 | | |
| 15 | 703–48243–00 | .BUSHING<br>.COUSSINET | | | 1 | 1 | | |
| 16 | 703–48236–00 | .BUSHING 1<br>.POULIE | | | 2 | 2 | | |
| 17 | 703–48189–00 | .RETAINER<br>.FLASQUE | | | 1 | 1 | | |
| 18 | 703–48234–00 | .ROLLER, DETENT<br>.POULIE | | | 1 | 1 | | |
| 19 | 703–48345–01 | .CABLE END, REMOTE CONTROL 2<br>.CHAPE CABLE | | | 2 | 2 | | |
| 20 | 703–48358–00 | .ANCHOR, CABLE<br>.COLLIER | | | 1 | 1 | | |
| 21 | 703–48244–00 | .SPRING, FREE ACCEL.<br>.RESSORT | | | 1 | 1 | | |
| 22 | 703–48238–00 | .SPRING, DETENT<br>.RESSORT | | | 5 | 5 | | |
| 23 | 703–48246–00 | .SPACER<br>.ENTRETOISE | | | 1 | 1 | | |
| 24 | 703–48227–00 | .SPRING, NEUTRAL LOCK<br>.RESSORT | | | 1 | 1 | | |
| 25 | 703–82594–00 | .CLAMP<br>.BRIDE | | | | 1 | | WITH PT/T SW.<br>WITH PT/T SW. |
| 26 | 703–48226–00 | .PLATE, STOPPER<br>.PLAQUETTE | | | 1 | 1 | | |

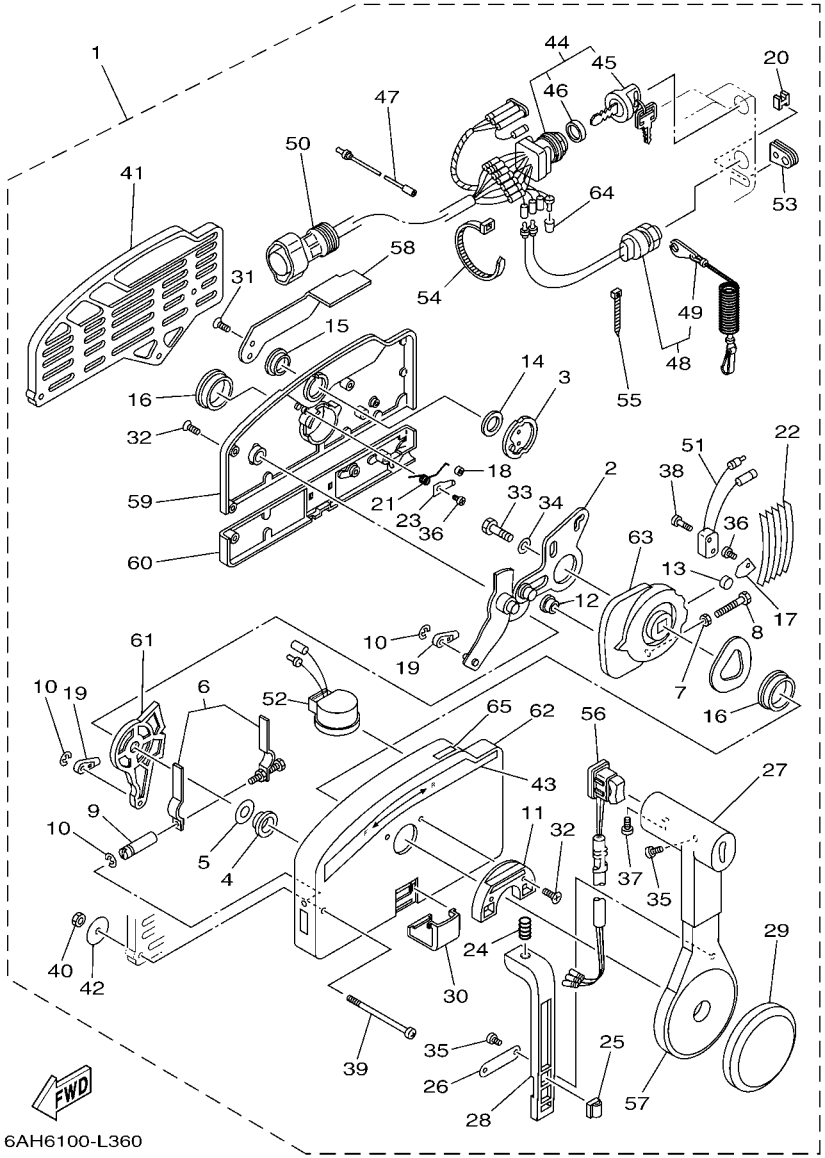


## FIG. 36 REMOTE CONTROL ASSY BOITIER DE COMMANDE A DISTANCE

| REF. NO. | PART NO. N° PIECES | DESCRIPTION DESCRIPTION | MH | EH | E | EP | | REMARKS REMARQUES |
|---|---|---|---|---|---|---|---|---|
| 27 | 703–48222–00 | .GRIP, CONTROL LEVER<br>.POIGNEE, COMMANDE LEVIER | | | 1 | 1 | | SINGLE<br>SINGLE |
| 28 | 703–48223–00 | .LOCK, NEUTRAL<br>.VERROU, NEUTRAL | | | 1 | 1 | | |
| 29 | 703–48225–00 | .COVER<br>.COUVERCLE | | | 1 | 1 | | |
| 30 | 703–48219–00 | .COVER, LEAD<br>.COUVERCLE | | | 1 | 1 | | |
| 31 | 703–48281–00 | .SCREW<br>.VIS | | | 2 | 2 | | |
| 32 | 703–48282–00 | .SCREW<br>.VIS | | | 7 | 7 | | |
| 33 | 97380–08030 | .BOLT<br>.BOULON, HEXAGONAL | | | 1 | 1 | | |
| 34 | 92990–08600 | .WASHER, PLATE<br>.RONDELLE, PLATE | | | 1 | 1 | | |
| 35 | 98580–04010 | .SCREW, PAN HEAD<br>.VIS | | | 3 | 3 | | |
| 36 | 98580–04006 | .SCREW, PAN HEAD<br>.VIS | | | 2 | 2 | | |
| 37 | 98580–05010 | .SCREW, PAN HEAD<br>.VIS | | | 1 | 1 | | |
| 38 | 98580–03015 | .SCREW, PAN HEAD<br>.VIS | | | 2 | 2 | | |
| 39 | 703–48291–10 | .SCREW (M6)<br>.VIS (M6) | | | 3 | 3 | | |
| 40 | 95380–06600 | .NUT, HEXAGON<br>.ECROU | | | 3 | 3 | | |
| 41 | 703–48293–10 | .SPACER, REMOTE CONTROL<br>.ENTRETOISE | | | 1 | 1 | | SINGLE<br>SINGLE |
| 42 | 701–48287–00 | .WASHER<br>.RONDELLE | | | 3 | 3 | | |
| 43 | 703–48215–00 | .GRAPHIC<br>.ADHESIF | | | 1 | 1 | | |
| 44 | 703–82510–12 | .MAIN SWITCH ASSY<br>.CONTACTEUR A CLEF COMPLET | | | 1 | 1 | | PRIME START<br>PRIME START |
| 45 | 676–82577–00 | ..CAP, KEY<br>..CABOCHON | | | 1 | 1 | | |
| 46 | 703–82532–00 | ..CAP<br>..COUVERCLE | | | 1 | 1 | | |
| 47 | 703–82531–00 | .WIRE, LEAD (L70)<br>.FIL (L70) | | | 1 | 1 | | |
| 48 | 688–82575–01 | .ENGINE STOP SWITCH ASSY<br>.COUPE CIRCUIT CPLT | | | 1 | 1 | | |
| 49 | 682–82556–00 | ..LANYARD, STOP SWITCH<br>..CORDON DU COUPE CIRCUIT | | | 1 | 1 | | |
| 50 | 688–8258A–20 | .EXTENSION, WIRE HARNESS (4.9M)<br>.EXTENSION, FAISCEAU DE FILS (4 | | | 1 | 1 | | (10P)<br>(10P) |
| 51 | 703–82540–00 | .NEUTRAL SWITCH ASSY<br>.CONTACTEUR DE POINT-MORT | | | 1 | 1 | | |
| 52 | 703–83383–B0 | .BUZZER<br>.RONFLEUR | | | 1 | 1 | | |
| 53 | 703–48284–00 | .GROMMET<br>.PASSE-FIL | | | 1 | 1 | | |

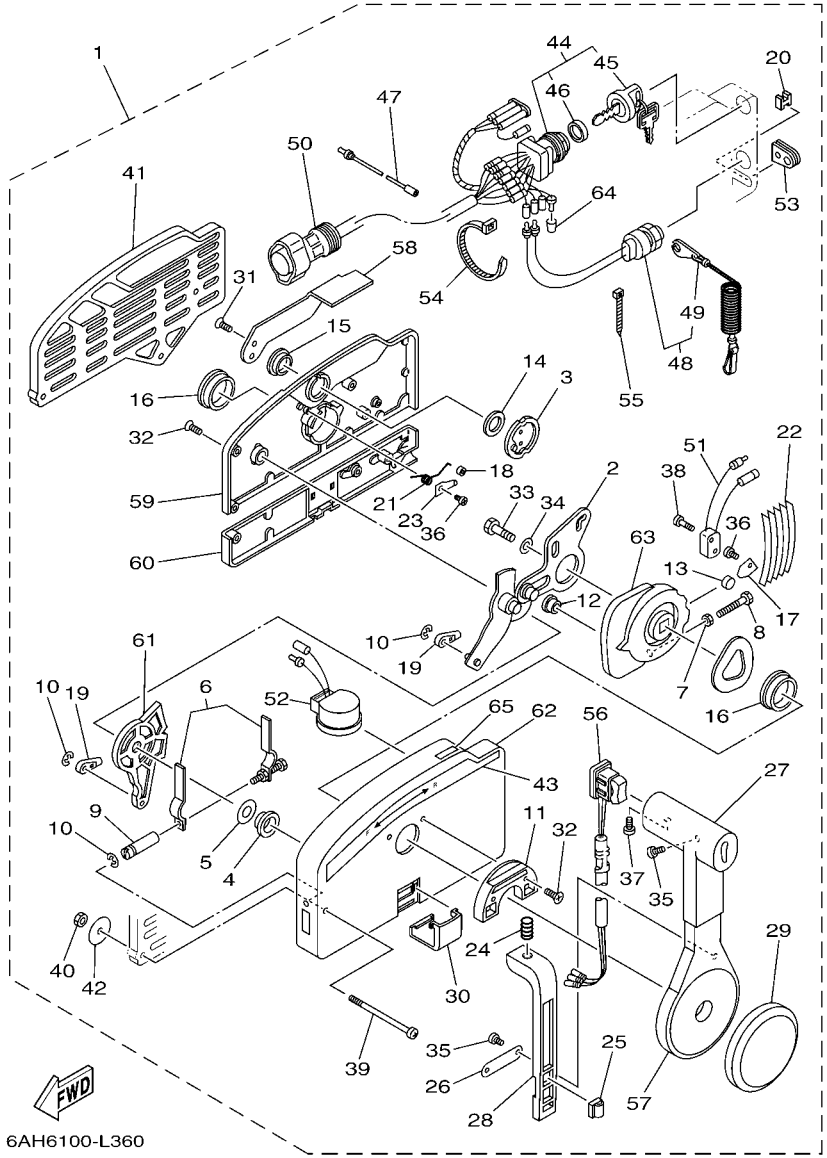


## FIG. 36 REMOTE CONTROL ASSY BOITIER DE COMMANDE A DISTANCE

| REF. NO. | PART NO. N° PIECES | DESCRIPTION DESCRIPTION | MH | EH | E | EP | | REMARKS REMARQUES |
|---|---|---|---|---|---|---|---|---|
| 54 | 703–82591–00 | .BAND<br>.COLLIER | | | 1 | 1 | | |
| 55 | 703–82592–00 | .BAND<br>.COLLIER | | | 1 | 1 | | |
| 56 | 703–82563–02 | .TRIM & TILT SWITCH ASSY<br>.INCLINER ET PARER COMMUTATEUR | | | | 1 | | WITH PT/T SW.<br>WITH PT/T SW. |
| | 703–48224–00 | .COVER, CONTROL LEVER<br>.COUVERCLE | | | 1 | | | WITHOUT PT/T SW.<br>WITHOUT PT/T SW. |
| 57 | 703–48221–00 | .LEVER, CONTROL<br>.LEVIER, COMMANDE | | | 1 | 1 | | |
| 58 | 703–48152–00 | .KNOB, FREE ACCEL.<br>.BOUTON | | | 1 | 1 | | |
| 59 | 703–48212–00 | .BACK PLATE 1<br>.PLAQUETTE 1 | | | 1 | 1 | | |
| 60 | 703–48213–00 | .BACK PLATE 2<br>.PLAQUETTE 2 | | | 1 | 1 | | |
| 61 | 703–48271–00 | .ARM, SHIFT<br>.BRAS | | | 1 | 1 | | |
| 62 | 703–48211–02 | .HOUSING,1<br>.CORPS | | | 1 | 1 | | |
| 63 | 703–48232–00 | .GEAR<br>.PIGNON | | | 1 | 1 | | |
| 64 | 703–82542–00 | .CAP<br>.COUVERCLE | | | | 1 | | FOR 703-48205-A6<br>FOR 703-48205-A6 |
| | 703–82542–00 | .CAP<br>.COUVERCLE | | | 3 | | | FOR 703-48201-A4<br>FOR 703-48201-A4 |
| 65 | 703–48218–00 | .GRAPHIC<br>.ADHESIF | | | 1 | 1 | | |

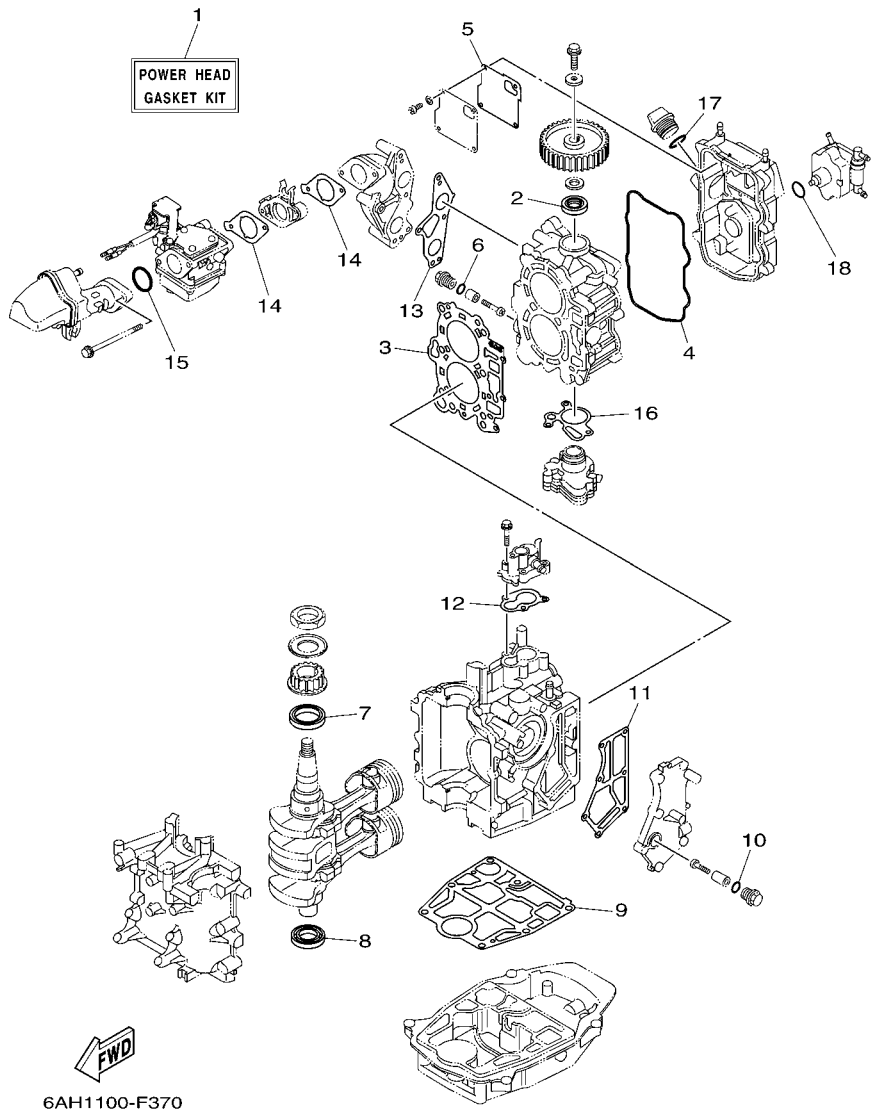


## FIG. 37 REPAIR KIT 1 — KITS DE REPARATION 1

| REF. NO. | PART NO. N° PIECES | DESCRIPTION DESCRIPTION | MH | EH | E | EP | | REMARKS REMARQUES |
|---|---|---|---|---|---|---|---|---|
| 1 | 6AG–W0001–00 | POWER HEAD GASKET KIT<br>POCHETTE DE JINTS TETE MOTRICE | 1 | 1 | 1 | 1 | | |
| 2 | 93102–22009 | .OIL SEAL<br>.JOINT SPY | 1 | 1 | 1 | 1 | | |
| 3 | 6AG–11181–00 | .GASKET, CYLINDER HEAD 1<br>.JOINT, DE CULASSE 1 | 1 | 1 | 1 | 1 | | |
| 4 | 6AH–11356–00 | .SEAL, CYLINDER 2<br>.JOINT, SPY CYLINDRE | 1 | 1 | 1 | 1 | | |
| 5 | 6AH–11169–00 | .GASKET, BREATHER COVER<br>.JOINT, COUVERCLE DE RENIFLARD | 1 | 1 | 1 | 1 | | |
| 6 | 93210–13M63 | .O-RING<br>.JOINT TORIQUE | 2 | 2 | 2 | 2 | | |
| 7 | 93102–37004 | .OIL SEAL<br>.JOINT SPY | 1 | 1 | 1 | 1 | | |
| 8 | 93102–25014 | .OIL SEAL<br>.JOINT SPY | 1 | 1 | 1 | 1 | | |
| 9 | 6AH–11351–00 | .GASKET, CYLINDER<br>.JOINT, D'EMBASE | 1 | 1 | 1 | 1 | | |
| 10 | 93210–13M63 | .O-RING<br>.JOINT TORIQUE | 1 | 1 | 1 | 1 | | |
| 11 | 6AH–41114–00 | .GASKET, EXHAUST OUTER COVER<br>.JOINT, COUVERCLE D'ECHAPPEMENT | 1 | 1 | 1 | 1 | | |
| 12 | 6AH–12414–00 | .GASKET, COVER<br>.JOINT, COUVERCLE | 1 | 1 | 1 | 1 | | |
| 13 | 6AH–13645–00 | .GASKET, MANIFOLD 1<br>.JOINT, TUBULURE 1 | 1 | 1 | 1 | 1 | | |
| 14 | 6AH–13646–00 | .GASKET, MANIFOLD 2<br>.JOINT, TUBULURE 2 | 2 | 2 | 2 | 2 | | |
| 15 | 93210–35M86 | .O-RING<br>.JOINT TORIQUE | 1 | 1 | 1 | 1 | | |
| 16 | 6AH–13329–00 | .GASKET, PUMP COVER<br>.JOINT, COUVERCLE DE POMPE | 1 | 1 | 1 | 1 | | |
| 17 | 93210–24M79 | .O-RING<br>.JOINT TORIQUE | 1 | 1 | 1 | 1 | | |
| 18 | 93210–20M65 | .O-RING<br>.JOINT TORIQUE | 1 | 1 | 1 | 1 | | |

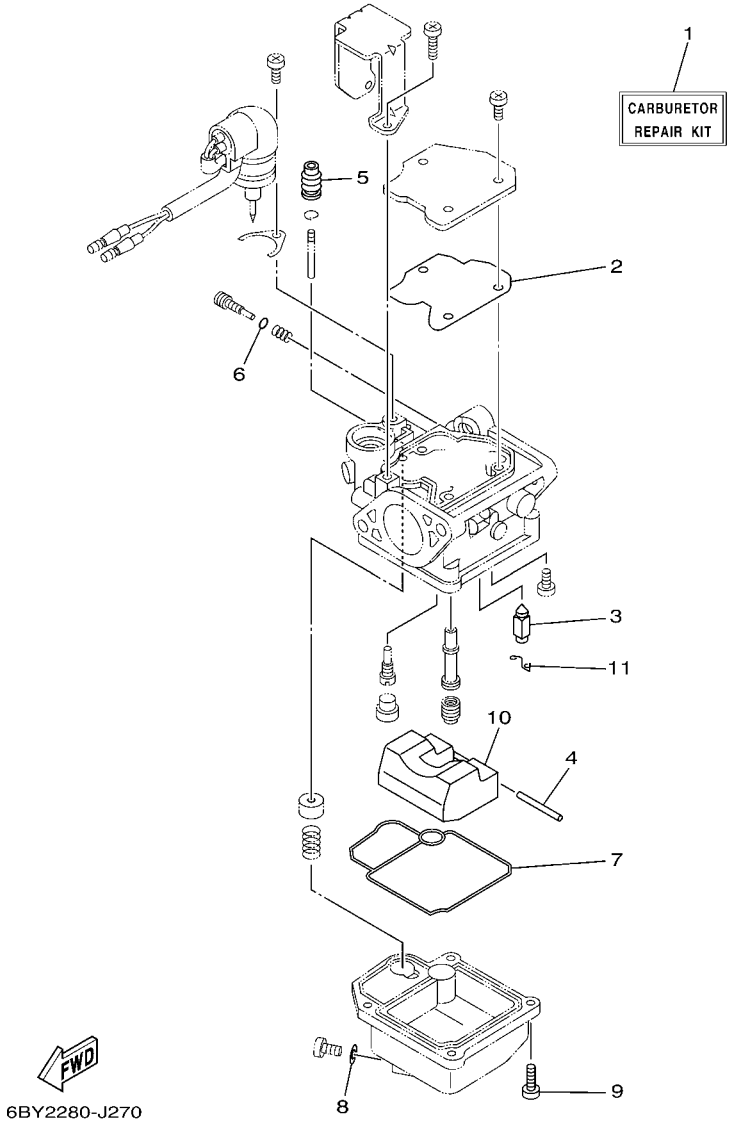


## FIG. 38 REPAIR KIT 2 — KITS DE REPARATION 2

| REF. NO. | PART NO. N° PIECES | DESCRIPTION DESCRIPTION | MH | EH | E | EP | | REMARKS REMARQUES |
|---|---|---|---|---|---|---|---|---|
| 1 | 6AH–W0093–01 | CARBURETOR REPAIR KIT<br>KIT DE REPARATION CARBURATEUR | 1 | 1 | 1 | 1 | | |
| 2 | 65W–14126–10 | .GASKET<br>.JOINT | 1 | 1 | 1 | 1 | | |
| 3 | 6AH–14546–00 | .VALVE, NEEDLE<br>.POINTEAU | 1 | 1 | 1 | 1 | | |
| 4 | 6H4–14548–00 | .PIN, FLOAT ARM<br>.AXE, BRAS DE FLOTTEUR | 1 | 1 | 1 | 1 | | |
| 5 | 65W–14373–02 | .COVER, PLUNGER CAP<br>.COUVERCLE DE PLONGEUR | 1 | 1 | 1 | 1 | | |
| 6 | 67C–14397–00 | .O-RING<br>.JOINT TORIQUE | 1 | 1 | 1 | 1 | | |
| 7 | 6AH–14384–00 | .GASKET, FLOAT CHAMBER<br>.JOINT, CUVE DE FLOTTEUR | 1 | 1 | 1 | 1 | | |
| 8 | 65W–14398–00 | .GASKET<br>.JOINT | 1 | 1 | 1 | 1 | | |
| 9 | 97980–04114 | .SCREW, WITH WASHER<br>.VIS, AVEC RONDELLE | 4 | 4 | 4 | 4 | | |
| 10 | 6AH–14985–00 | .FLOAT<br>.FLOTTEUR | 1 | 1 | 1 | 1 | | |
| 11 | 663–14159–00 | .CLIP<br>.JONC | 1 | 1 | 1 | 1 | | |

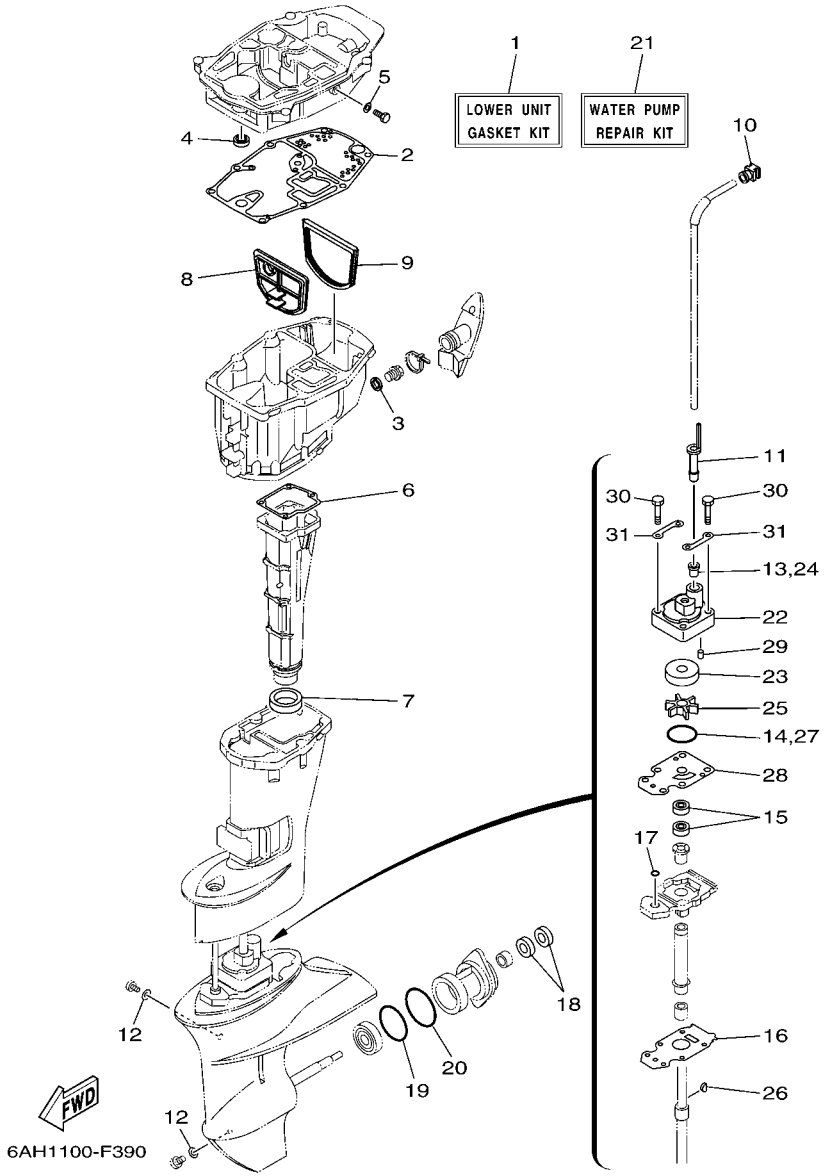


## FIG. 39 REPAIR KIT 3 — KITS DE PEPARATION 3

| REF. NO. | PART NO. N° PIECES | DESCRIPTION DESCRIPTION | MH | EH | E | EP | | REMARKS REMARQUES |
|---|---|---|---|---|---|---|---|---|
| 1 | 6AH–W0001–20 | LOWER UNIT GASKET KIT<br>POCHETTE DE JOINTS EMBASE | 1 | 1 | 1 | 1 | | |
| 2 | 6AH–15312–00 | .GASKET, OIL PAN<br>.JOINT DE VENTILATEUR D'HUILE | 1 | 1 | 1 | 1 | | |
| 3 | 90430–14M09 | .GASKET<br>.JOINT | 1 | 1 | 1 | 1 | | |
| 4 | 93101–12M63 | .OIL SEAL<br>.JOINT SPY | 1 | 1 | 1 | 1 | | |
| 5 | 90430–08143 | .GASKET<br>.JOINT | 1 | 1 | 1 | 1 | | |
| 6 | 6AH–41134–00 | .GASKET, EXHAUST MANIFOLD<br>.JOINT, PIPE D'ECHAPPEMENT | 1 | 1 | 1 | 1 | | |
| 7 | 6AH–41138–00 | .SEAL, EXT. 1<br>.JOINT DE GROUPE 1 | 1 | 1 | 1 | 1 | | |
| 8 | 6AH–45126–00 | .PLATE, SEAL DAMPER<br>.PLAQUETTE | 1 | 1 | 1 | 1 | | |
| 9 | 6AH–45115–00 | .GASKET, UPPER CASING<br>.JOINT, TUBE D'ARBRE | 1 | 1 | 1 | 1 | | |
| 10 | 6AH–44365–00 | .DAMPER, WATER SEAL 1<br>.JOINT, TUBE D'EAU 1 | 1 | 1 | 1 | 1 | | |
| 11 | 6AH–44368–00 | .RUBBER, WATER SEAL 4<br>.CAOUTCHOUC EAU JUNTA 4 | 1 | 1 | 1 | 1 | | |
| 12 | 90430–08020 | .GASKET<br>.JOINT | 2 | 2 | 2 | 2 | | |
| 13 | 6L2–44367–00 | .DAMPER, WATER SEAL 3<br>.JOINT TUBE D'EAU 3 | 1 | 1 | 1 | 1 | | |
| 14 | 93210–49046 | .O-RING<br>.JOINT TORIQUE | 1 | 1 | 1 | 1 | | |
| 15 | 93101–20001 | .OIL SEAL<br>.JOINT SPY | 2 | 2 | 2 | 2 | | |
| 16 | 69G–45315–A0 | .PACKING, LOWER CASING<br>.JOINT, BOITIER D'HELICE | 1 | 1 | 1 | 1 | | |
| 17 | 93210–06ME6 | .O-RING<br>.JOINT TORIQUE | 1 | 1 | 1 | 1 | | |
| 18 | 93101–17054 | .OIL SEAL<br>.JOINT SPY | 2 | 2 | 2 | 2 | | |
| 19 | 93210–57M09 | .O-RING<br>.JOINT TORIQUE | 1 | 1 | 1 | 1 | | |
| 20 | 93210–56M80 | .O-RING<br>.JOINT TORIQUE | 1 | 1 | 1 | 1 | | |
| 21 | 6AH–W0078–00 | WATER PUMP REPAIR KIT<br>KIT DE REPARATION DE LA POMPE | 1 | 1 | 1 | 1 | | |
| 22 | 6AH–44311–00 | .HOUSING, WATER PUMP<br>.CORPS, POMPE A EAU | 1 | 1 | 1 | 1 | | |
| 23 | 63V–44322–00 | .INSERT, CARTRIDGE<br>.CUVETTE | 1 | 1 | 1 | 1 | | |
| 24 | 6L2–44367–00 | .DAMPER, WATER SEAL 3<br>.JOINT TUBE D'EAU 3 | 1 | 1 | 1 | 1 | | |
| 25 | 63V–44352–01 | .IMPELLER<br>.TURBINE | 1 | 1 | 1 | 1 | | |
| 26 | 664–44338–00 | .KEY, WOODRUFF<br>.CLAVETTE, VOLANT | 1 | 1 | 1 | 1 | | |
| 27 | 93210–49046 | .O-RING<br>.JOINT TORIQUE | 1 | 1 | 1 | 1 | | |

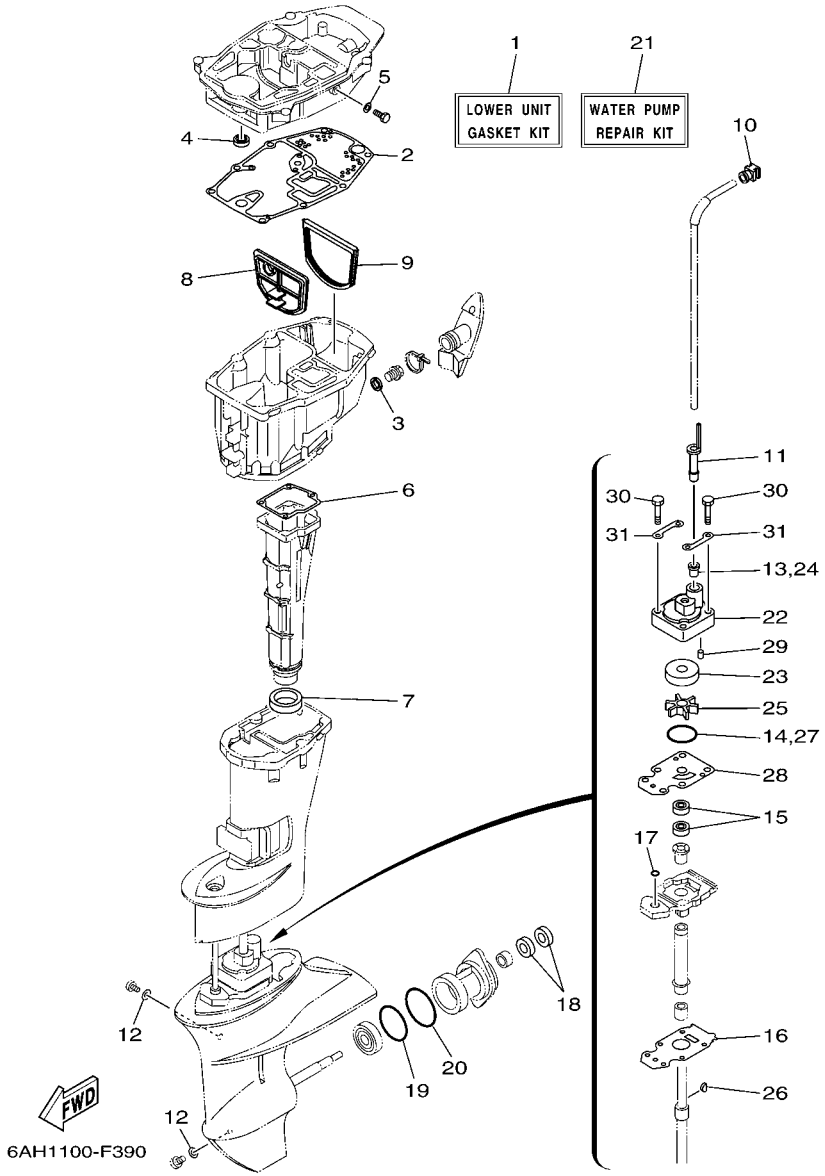


## FIG. 39 REPAIR KIT 3 — KITS DE PEPARATION 3

| REF. NO. | PART NO. N° PIECES | DESCRIPTION DESCRIPTION | MH | EH | E | EP | | REMARKS REMARQUES |
|---|---|---|---|---|---|---|---|---|
| 28 | 68T–44323–00 | .OUTER PLATE, CARTRIDGE<br>.PLAQUE EXTERIEURE | 1 | 1 | 1 | 1 | | |
| 29 | 93604–12M07 | .PIN, DOWEL<br>.CLAVETTE | 2 | 2 | 2 | 2 | | |
| 30 | 97095–08045 | .BOLT<br>.BOULON | 4 | 4 | 4 | 4 | | |
| 31 | 63V–44328–01 | .PLATE<br>.PLAQUETTE | 2 | 2 | 2 | 2 | | |

NUMERICAL INDEX
INDEX NUMERIQUE


| PART NO. N° PIECES | REF. NO. |
|---|---|
| 6AH–11111–00–1S | 4 – 2 |
| 6AH–11133–10 | 4 – 3 |
| 6AH–11168–00 | 4 – 13 |
| 6AH–11169–00 | 4 – 14 |
| | 37 – 5 |
| 6AG–11181–00 | 4 – 4 |
| | 37 – 3 |
| 6AH–11191–00–1S | 4 – 8 |
| 6G8–11197–01 | 2 – 13 |
| | 4 – 19 |
| 6E5–11325–00 | 2 – 26 |
| 6G8–11325–00 | 2 – 11 |
| | 2 – 22 |
| | 4 – 17 |
| 6AH–11351–00 | 2 – 7 |
| | 37 – 9 |
| 6AH–11356–00 | 4 – 10 |
| | 37 – 4 |
| 676–11372–00 | 2 – 10 |
| 6AH–11372–00 | 4 – 9 |
| 6AH–11411–00 | 3 – 1 |
| 6AH–11416–00 | 3 – 2 |
| 6AH–11416–10 | 3 – 2 |
| 6AH–11416–20 | 3 – 2 |
| 6AH–11536–00 | 8 – 6 |
| 6AH–11537–00 | 8 – 2 |
| 6AH–11557–00 | 8 – 7 |
| 6AH–11603–00 | 3 – 6 |
| 6AH–11604–00 | 3 – 6 |
| 6AH–11605–00 | 3 – 6 |
| 6AH–11631–00 | 3 – 5 |
| 137–11633–10 | 3 – 7 |
| 6AH–11635–00 | 3 – 5 |
| 6AH–11636–00 | 3 – 5 |
| 6AH–11650–00 | 3 – 3 |
| 6AH–11654–00 | 3 – 4 |
| 6AH–12111–00 | 5 – 1 |
| 3YF–12113–00 | 5 – 4 |
| 62Y–12116–00 | 5 – 3 |
| 30X–12117–00 | 5 – 5 |
| 30X–12118–00 | 5 – 6 |
| 51Y–12119–00 | 5 – 7 |
| 6AH–12121–00 | 5 – 2 |
| 66M–12146–00 | 5 – 8 |
| 6AH–12151–00 | 5 – 13 |
| 62Y–12158–00 | 5 – 15 |
| 64J–12159–00 | 5 – 14 |
| 6AG–12170–00 | 8 – 1 |

| PART NO. N° PIECES | REF. NO. |
|---|---|
| 6AH–12170–00 | 8 – 1 |
| 6AH–12279–00 | 5 – 9 |
| 6AH–12411–00 | 2 – 17 |
| 688–12412–00 | 2 – 18 |
| 6AH–12413–00–1S | 2 – 19 |
| 6AH–12414–00 | 2 – 20 |
| | 37 – 12 |
| 6AH–12481–00 | 2 – 24 |
| 6AH–12535–00 | 18 – 27 |
| 68T–12572–00 | 18 – 23 |
| 6R3–12581–00 | 18 – 24 |
| 6R3–12582–00 | 18 – 25 |
| 6R3–12583–00 | 18 – 26 |
| 6C5–12858–00 | 2 – 29 |
| 66M–13131–10 | 9 – 19 |
| 6AH–13300–00 | 8 – 15 |
| 6AH–13329–00 | 8 – 16 |
| | 37 – 16 |
| 6AH–13411–00 | 29 – 8 |
| 67F–13434–20 | 1 – 14 |
| 6AH–13437–60 | 10 – 33 |
| 5GH–13440–20 | 2 – 28 |
| 6AH–13641–00–94 | 6 – 1 |
| 6AH–13645–00 | 6 – 2 |
| | 37 – 13 |
| 6AH–13646–00 | 6 – 8 |
| | 37 – 14 |
| 65W–14126–10 | 7 – 4 |
| | 38 – 2 |
| 663–14159–00 | 7 – 14 |
| | 38 – 11 |
| 6AH–14271–00 | 6 – 9 |
| 6AG–14301–11 | 7 – 1 |
| 6AH–14301–11 | 7 – 1 |
| 6AG–14301–51 | 7 – 1 |
| 6AH–14301–51 | 7 – 1 |
| 6E7–14325–00 | 9 – 23 |
| 65W–14335–00 | 7 – 22 |
| 6AH–14335–00 | 7 – 22 |
| 65W–14346–00 | 7 – 33 |
| 6AH–14346–00 | 7 – 31 |
| 6AH–14371–00 | 7 – 23 |
| 65W–14373–02 | 7 – 17 |
| | 38 – 5 |
| 6AH–14379–00 | 7 – 18 |
| 6AH–14379–10 | 7 – 18 |
| 6AH–14380–00 | 7 – 29 |
| 6AH–14380–10 | 7 – 29 |

| PART NO. N° PIECES | REF. NO. |
|---|---|
| 6AH–14384–00 | 7 – 24 |
| | 38 – 7 |
| 67C–14397–00 | 7 – 20 |
| | 38 – 6 |
| 65W–14398–00 | 7 – 26 |
| | 38 – 8 |
| 65W–1439G–00 | 7 – 34 |
| 6AH–14427–60 | 10 – 32 |
| 6AH–14440–00 | 6 – 10 |
| 6AH–14497–00 | 21 – 30 |
| 63V–14523–00 | 7 – 9 |
| 6AH–14546–00 | 7 – 13 |
| | 38 – 3 |
| 6H4–14548–00 | 7 – 16 |
| | 38 – 4 |
| 67C–14555–00 | 7 – 21 |
| 67C–14567–00 | 7 – 32 |
| 6AH–14571–00 | 21 – 25 |
| | 22 – 33 |
| 65W–14572–00 | 7 – 3 |
| 6AH–14711–00–CA | 28 – 8 |
| 6AH–14711–10–CA | 28 – 8 |
| 6AH–14923–20 | 7 – 19 |
| 676–14943–19 | 7 – 11 |
| 65W–14943–29 | 7 – 11 |
| 6AH–14947–00 | 7 – 10 |
| 6AH–14947–20 | 7 – 10 |
| 6AG–14948–02 | 7 – 6 |
| 6AH–14948–02 | 7 – 6 |
| 676–14948–05 | 7 – 6 |
| 6AG–14948–05 | 7 – 6 |
| 679–14966–00 | 7 – 7 |
| 6AH–14980–00 | 7 – 25 |
| 6AH–14985–00 | 7 – 12 |
| | 38 – 10 |
| 65W–14992–00 | 7 – 27 |
| 6AH–15100–00 | 2 – 2 |
| 6AH–15311–00–CA | 29 – 1 |
| 6AH–15312–00 | 29 – 2 |
| | 39 – 2 |
| 6AH–15316–00 | 29 – 4 |
| 6AH–15362–00 | 29 – 11 |
| 6G8–15363–00 | 4 – 21 |
| 6AH–15373–00 | 6 – 13 |
| 63V–15705–01 | 10 – 9 |
| 6AH–15710–01 | 10 – 1 |
| 6AH–15711–00 | 10 – 2 |
| 63V–15713–00 | 10 – 7 |

| PART NO. N° PIECES | REF. NO. |
|---|---|
| 63V–15714–00 | 10 – 5 |
| 68T–15716–00 | 10 – 8 |
| 66T–15731–00 | 10 – 24 |
| 66T–15734–00 | 10 – 20 |
| 6AH–15741–10 | 10 – 6 |
| 689–15755–01 | 10 – 15 |
| 6AH–15762–00 | 10 – 29 |
| 67D–15764–00 | 10 – 3 |
| 68T–15764–00 | 10 – 14 |
| 63V–15767–01 | 10 – 10 |
| 6AH–15770–00 | 10 – 23 |
| 6AH–15774–00 | 18 – 45 |
| 6F5–15779–02 | 10 – 17 |
| 6AH–15782–00 | 10 – 21 |
| 68T–15784–00 | 10 – 11 |
| 6A0–15789–00 | 10 – 18 |
| 63V–15793–00 | 10 – 12 |
| 68T–15793–00 | 10 – 13 |
| 6AH–15793–00 | 10 – 22 |
| 66T–15794–00 | 10 – 19 |
| 6AH–15795–00 | 10 – 4 |
| 6AH–22471–00 | 27 – 3 |
| 69A–23129–00 | 27 – 59 |
| 6YJ–24167–00 | 33 – 7 |
| 6YK–24201–03 | 32 – 1 |
| 6YJ–24201–10 | 33 – 1 |
| 6YK–24260–01 | 32 – 4 |
| 6Y1–24260–12 | 33 – 3 |
| 6Y1–24268–00 | 33 – 6 |
| 6YL–24268–01 | 32 – 2 |
| 6G1–24304–02 | 9 – 1 |
| 6G1–24305–05 | 33 – 13 |
| 6Y1–24305–06 | 33 – 15 |
| 61J–24306–04 | 33 – 8 |
| 6YL–24306–54 | 32 – 7 |
| 6AH–24311–00 | 9 – 4 |
| 6AH–24312–00 | 9 – 12 |
| 6AH–24313–00 | 9 – 28 |
| 6AH–24314–01 | 18 – 21 |
| 6AH–24315–00 | 9 – 30 |
| 6AH–24316–00 | 10 – 30 |
| 6AH–24317–00 | 9 – 33 |
| 61N–24329–00 | 9 – 2 |
| 6Y1–24329–00 | 33 – 5 |
| 6YL–24329–00 | 32 – 6 |
| 650–24351–51 | 33 – 12 |
| 61J–24360–00 | 33 – 10 |
| 66M–24374–00 | 9 – 25 |

| PART NO. N° PIECES | REF. NO. |
|---|---|
| 650–24378–00 | 2 – 9 |
| 688–24378–00 | 9 – 34 |
| 6C5–24378–00 | 9 – 35 |
| 6AH–24410–00 | 9 – 14 |
| 66M–24411–11 | 9 – 17 |
| 6AH–24413–00 | 9 – 15 |
| 6A0–24421–01 | 9 – 16 |
| 66M–24423–00 | 9 – 18 |
| 66M–24444–00 | 9 – 21 |
| 66M–24454–00 | 9 – 20 |
| 66M–24471–01 | 9 – 22 |
| 61N–24521–00 | 9 – 6 |
| 61N–24560–10 | 9 – 5 |
| 61N–24563–10 | 9 – 7 |
| 6AH–24566–00 | 9 – 9 |
| 6YJ–24610–01 | 33 – 2 |
| 6YK–24610–01 | 32 – 3 |
| 6AH–26288–00 | 19 – 4 |
| 6AH–26311–00 | 19 – 18 |
| 6AH–26326–00 | 18 – 15 |
| 6AH–26326–10 | 18 – 15 |
| 6AH–2634E–00 | 19 – 22 |
| 6AH–26364–00 | 21 – 4 |
| | 22 – 4 |
| 62Y–28100–00 | 9 – 37 |
| 67F–2812A–00 | 13 – 22 |
| 6AG–28199–76–D0 | 9 – 38 |
| 6AG–28199–76–E0 | 9 – 38 |
| 6AG–28199–76–F0 | 9 – 38 |
| 6AG–28199–76–G0 | 9 – 38 |
| 6AG–28199–76–H0 | 9 – 38 |
| 6AG–28199–76–S0 | 9 – 38 |
| 6AG–28199–86–K0 | 9 – 39 |
| 6AG–28199–86–L0 | 9 – 39 |
| 6AG–28199–86–M0 | 9 – 39 |
| 6AG–28199–86–N0 | 9 – 39 |
| 6AG–28199–86–P0 | 9 – 39 |
| 6AG–28199–86–R0 | 9 – 39 |
| 6AH–41113–00–1S | 2 – 8 |
| 6AH–41114–00 | 2 – 15 |
| | 37 – 11 |
| 6AH–41134–00 | 28 – 7 |
| | 39 – 6 |
| 6AH–41137–00–CA | 28 – 1 |
| 6AH–41138–00 | 28 – 10 |
| | 39 – 7 |
| 6AH–41211–00 | 21 – 20 |
| | 22 – 28 |

| PART NO. N° PIECES | REF. NO. |
|---|---|
| 6J8–41262–00 | 21 – 19 |
| | 22 – 27 |
| 65W–41283–00 | 21 – 18 |
| | 22 – 26 |
| 6AH–41638–00 | 21 – 16 |
| | 22 – 24 |
| 6G1–41662–01–94 | 21 – 5 |
| | 22 – 5 |
| 6AH–42101–01–4D | 19 – 2 |
| 66M–42119–01 | 19 – 5 |
| 65W–42125–00 | 19 – 11 |
| 6G1–42126–00 | 19 – 10 |
| 6AH–42131–00–4D | 19 – 28 |
| 6J0–42137–00 | 19 – 13 |
| 65W–42138–00 | 19 – 7 |
| 65W–42159–00 | 19 – 9 |
| 62Y–42171–00 | 21 – 27 |
| 67D–42177–00 | 19 – 6 |
| 6AH–42508–01 | 20 – 1 |
| 6AH–42510–00–4D | 26 – 1 |
| 6AH–42510–10–4D | 26 – 1 |
| 68T–42525–01 | 20 – 2 |
| 6AH–42527–00 | 20 – 15 |
| 65W–42528–00 | 20 – 8 |
| 6AH–42532–00 | 19 – 30 |
| 6AH–42532–10 | 26 – 24 |
| 6AH–42551–00 | 19 – 23 |
| 68T–42561–00 | 20 – 6 |
| 67C–42562–00 | 20 – 4 |
| 6AG–42610–60 | 1 – 1 |
| 6AG–42610–70 | 1 – 1 |
| 6AH–42610–70 | 1 – 1 |
| 6AH–42610–80 | 1 – 1 |
| 6AH–42613–00 | 1 – 2 |
| 6AH–42615–00 | 1 – 6 |
| 6AH–42617–00 | 8 – 13 |
| 6AH–42649–00 | 1 – 9 |
| 6AH–42651–00 | 1 – 4 |
| 60R–42652–00 | 1 – 7 |
| 6AH–42677–00 | 1 – 11 |
| 6AG–42677–20 | 1 – 11 |
| 6AH–42697–01 | 1 – 12 |
| 6AH–42710–00–4D | 18 – 1 |
| 6AH–42710–10–4D | 18 – 1 |
| 6AH–42716–00 | 18 – 5 |
| 65W–42717–00 | 18 – 32 |
| | 28 – 3 |
| 6AH–42717–00 | 18 – 44 |

| PART NO. N° PIECES | REF. NO. |
|---|---|
| 6AH–42718–00 | 18 – 7 |
| 6AH–42724–00 | 18 – 10 |
| 6AH–42724–10 | 18 – 10 |
| | 23 – 2 |
| 6AH–42725–00 | 18 – 9 |
| 6G1–42725–00 | 12 – 41 |
| 6AH–42725–10 | 18 – 9 |
| 6AH–42725–20 | 18 – 9 |
| 65W–42726–00 | 18 – 18 |
| 6AH–42726–00 | 18 – 20 |
| 65W–42726–10 | 18 – 18 |
| | 23 – 4 |
| 6AH–42727–00 | 18 – 17 |
| 6AH–42735–00 | 1 – 13 |
| 6AH–42735–10 | 15 – 24 |
| 6AH–42735–20 | 15 – 25 |
| 6AH–42735–30 | 14 – 6 |
| 6AH–42735–40 | 14 – 7 |
| 6AH–42738–00–4D | 18 – 6 |
| 6AH–42741–00 | 18 – 39 |
| 6AH–42743–00 | 18 – 33 |
| 6AH–42761–00 | 18 – 35 |
| 6AH–42762–00 | 18 – 36 |
| 6AH–42794–40 | 18 – 48 |
| 6AH–42794–50 | 18 – 49 |
| 6AH–42801–00 | 18 – 11 |
| 6AH–43111–00–4D | 24 – 1 |
| 69A–43111–01–4D | 25 – 1 |
| 6AH–43112–00–4D | 24 – 6 |
| 69A–43112–01–4D | 25 – 6 |
| 66R–43113–00 | 24 – 13 |
| 69A–43113–00 | 25 – 20 |
| 648–43114–01 | 24 – 5 |
| | 24 – 10 |
| | 25 – 5 |
| | 25 – 10 |
| 6E7–43116–00 | 24 – 4 |
| | 24 – 9 |
| | 25 – 4 |
| | 25 – 9 |
| 6E0–43118–01 | 24 – 2 |
| | 24 – 7 |
| | 25 – 2 |
| | 25 – 7 |
| 69A–43131–00 | 24 – 11 |
| | 25 – 19 |
| 6E5–43145–01 | 34 – 8 |
| 6G5–43145–01 | 25 – 21 |

| PART NO. N° PIECES | REF. NO. |
|---|---|
| 68T–43155–00 | 20 – 18 |
| 69A–43155–00 | 25 – 23 |
| 6L2–43160–01 | 24 – 19 |
| 689–43165–00 | 24 – 20 |
| 65W–43191–00 | 25 – 14 |
| 6AH–43191–00 | 24 – 28 |
| 65W–43192–00 | 25 – 13 |
| 6AH–43311–00–4D | 24 – 23 |
| 6AH–43311–10–4D | 24 – 23 |
| 69A–43311–11–4D | 25 – 18 |
| 6AH–43311–20–4D | 25 – 18 |
| 6AH–43350–00 | 24 – 32 |
| 68T–43611–00 | 24 – 37 |
| 6AH–43614–00 | 24 – 34 |
| 6AH–43615–00 | 24 – 36 |
| 6AH–43616–00 | 24 – 25 |
| 6AH–43617–00 | 24 – 30 |
| 6AH–43627–00 | 24 – 42 |
| 6AH–43631–00 | 24 – 24 |
| 689–43633–00 | 20 – 7 |
| 6AH–43641–00 | 24 – 27 |
| 6AH–43646–00 | 24 – 26 |
| 68T–43659–00 | 24 – 40 |
| 6AH–43801–00 | 27 – 20 |
| 65W–43804–01 | 27 – 62 |
| 65W–43805–01 | 27 – 64 |
| 6T4–43808–00 | 27 – 35 |
| 6AH–4380D–00 | 27 – 11 |
| 65W–4380F–01 | 27 – 72 |
| 6AH–4380K–00 | 27 – 2 |
| 6AH–43810–00 | 27 – 10 |
| 6AH–43811–00 | 27 – 21 |
| 69A–43812–00 | 27 – 24 |
| 6AH–43814–00 | 27 – 7 |
| 69G–43818–00 | 25 – 25 |
| 69J–4381C–00 | 27 – 38 |
| | 27 – 56 |
| 69A–4381G–00 | 27 – 50 |
| 6AH–4381J–00 | 27 – 57 |
| 69A–43824–00 | 27 – 45 |
| 69G–4382G–00 | 27 – 33 |
| 6AH–43830–00 | 27 – 26 |
| 6AH–43840–01–4D | 27 – 1 |
| 69A–43841–00 | 27 – 27 |
| 6H1–43844–10 | 27 – 40 |
| 69A–43848–00 | 27 – 46 |
| 69A–4384F–00 | 27 – 30 |
| 6H1–4384G–11 | 27 – 39 |

| PART NO. N° PIECES | REF. NO. |
|---|---|
| 69A–4384H–00 | 27 – 53 |
| 69A–4384M–00 | 27 – 28 |
| 69G–43853–00 | 27 – 36 |
| 6AH–43854–00 | 27 – 49 |
| 6F2–43855–00 | 27 – 41 |
| 6H1–43856–10 | 27 – 42 |
| 6AH–43857–00 | 27 – 19 |
| 6AH–4385E–00 | 27 – 16 |
| 62X–43862–00 | 27 – 25 |
| N35–43862–10 | 27 – 58 |
| 6H1–43866–00 | 27 – 22 |
| 69A–4386A–00 | 27 – 44 |
| 6AH–4386A–00 | 27 – 15 |
| 65W–4386K–01 | 27 – 70 |
| 65W–4386L–00 | 27 – 71 |
| 69A–43871–00 | 27 – 23 |
| 6C5–43871–00 | 27 – 9 |
| | 27 – 13 |
| 69A–43878–00 | 27 – 60 |
| 6AH–43878–00 | 27 – 18 |
| 65W–43879–01 | 27 – 73 |
| 65W–4387G–00 | 27 – 65 |
| 69A–43880–01 | 27 – 61 |
| 69A–43881–01 | 27 – 66 |
| 65W–43882–01 | 27 – 74 |
| 6H1–43883–00 | 27 – 31 |
| | 27 – 52 |
| 65W–43887–01 | 27 – 63 |
| 6H1–4388E–11 | 27 – 5 |
| 69G–4388F–00 | 27 – 37 |
| 65W–43891–01 | 27 – 69 |
| 65W–43892–01 | 27 – 68 |
| 62Y–43894–00 | 27 – 29 |
| 6AH–44111–00 | 19 – 33 |
| 66R–44114–00 | 21 – 11 |
| | 22 – 11 |
| 65W–44116–00 | 21 – 10 |
| | 22 – 10 |
| 6AH–44121–00 | 21 – 3 |
| | 22 – 3 |
| 6AH–44123–00 | 21 – 1 |
| | 22 – 1 |
| 6AH–44124–00 | 19 – 37 |
| 6AH–44125–00 | 21 – 8 |
| | 22 – 8 |
| 6AH–44143–00 | 21 – 13 |
| | 22 – 13 |
| 6AH–44143–10 | 21 – 13 |

| PART NO. N° PIECES | REF. NO. |
|---|---|
| 6AH–44143–10 | 22 – 13 |
| 6AH–44150–00 | 30 – 27 |
| 6AH–44150–10 | 30 – 27 |
| 6AH–44167–00 | 21 – 26 |
| 6X4–44188–00 | 19 – 15 |
| 6G8–44191–00 | 19 – 40 |
| 6AH–44194–00 | 26 – 34 |
| 6AH–44311–00 | 30 – 11 |
| | 39 – 22 |
| 63V–44322–00 | 30 – 12 |
| | 39 – 23 |
| 68T–44323–00 | 30 – 17 |
| | 39 – 28 |
| 63V–44328–01 | 30 – 20 |
| | 39 – 31 |
| 664–44338–00 | 30 – 15 |
| | 39 – 26 |
| 63V–44352–01 | 30 – 14 |
| | 39 – 25 |
| 6AH–44361–01 | 31 – 1 |
| 6AH–44361–11 | 31 – 1 |
| 6AH–44365–00 | 31 – 2 |
| | 39 – 10 |
| 6L2–44367–00 | 30 – 13 |
| | 39 – 13 |
| | 39 – 24 |
| 6AH–44368–00 | 31 – 4 |
| | 39 – 11 |
| 6BL–44391–00 | 18 – 14 |
| 6AH–44514–00 | 26 – 8 |
| 6AH–44526–00 | 26 – 9 |
| 6AH–44551–00–4D | 26 – 12 |
| 6AH–44554–00 | 19 – 19 |
| 6AH–44555–00 | 26 – 14 |
| 6AH–44557–00 | 26 – 13 |
| 6AH–44574–00 | 26 – 15 |
| 6AH–45111–00–4D | 28 – 11 |
| 6AH–45111–10–4D | 28 – 11 |
| 6AH–45115–00 | 29 – 15 |
| | 39 – 9 |
| 6AH–45126–00 | 29 – 14 |
| | 39 – 8 |
| 6AH–45135–00 | 29 – 16 |
| 6G1–45214–00 | 31 – 7 |
| 63V–45215–00 | 31 – 8 |
| 65W–45251–00 | 25 – 39 |
| 6AH–45251–00 | 31 – 11 |
| 6AH–45300–00–4D | 30 – 1 |

| PART NO. N° PIECES | REF. NO. |
|---|---|
| 6AH–45300–10–4D | 30 – 1 |
| 6AH–45311–00–4D | 30 – 2 |
| 69G–45315–A0 | 30 – 24 |
| | 39 – 16 |
| 626–45316–09 | 30 – 22 |
| 682–45318–00 | 28 – 19 |
| 68T–45321–00 | 28 – 16 |
| 69G–45331–01–CA | 30 – 21 |
| 683–45361–02–4D | 30 – 41 |
| 6AH–45371–00–4D | 31 – 19 |
| 63V–45375–00 | 31 – 14 |
| 6AH–45510–00 | 30 – 28 |
| 6AH–45510–10 | 30 – 28 |
| 63V–45536–00 | 30 – 4 |
| 63V–45551–00 | 30 – 29 |
| 6E7–45560–01 | 30 – 31 |
| 664–45567–01 | 30 – 48 |
| 664–45567–10 | 30 – 48 |
| 664–45567–20 | 30 – 48 |
| 664–45567–30 | 30 – 48 |
| 664–45567–40 | 30 – 48 |
| 664–45567–50 | 30 – 48 |
| 664–45567–60 | 30 – 48 |
| 6E7–45571–00 | 30 – 32 |
| 626–45577–00 | 30 – 33 |
| 626–45577–10 | 30 – 33 |
| 626–45577–20 | 30 – 33 |
| 626–45577–30 | 30 – 33 |
| 626–45577–40 | 30 – 33 |
| 6E8–45587–10 | 30 – 7 |
| 6E8–45587–30 | 30 – 7 |
| 683–45611–00 | 30 – 35 |
| 682–45631–00 | 30 – 37 |
| 648–45633–00 | 30 – 39 |
| 650–45635–00 | 30 – 36 |
| 683–45941–00 | 31 – 21 |
| 63V–45941–10 | 31 – 21 |
| 683–45943–00 | 31 – 21 |
| 63V–45943–10 | 31 – 21 |
| 63V–45945–10 | 31 – 21 |
| 683–45952–00 | 31 – 21 |
| 63V–45952–10 | 31 – 21 |
| 6E7–45987–01 | 31 – 15 |
| 6AH–46241–00 | 8 – 10 |
| 6AH–46297–00 | 8 – 11 |
| 703–48152–00 | 36 – 58 |
| 703–48153–00 | 36 – 3 |
| 703–48189–00 | 36 – 17 |

| PART NO. N° PIECES | REF. NO. |
|---|---|
| 703–48198–00 | 36 – 14 |
| 703–48201–A4 | 35 – 1 |
| | 36 – 1 |
| 703–48205–A6 | 35 – 1 |
| | 36 – 1 |
| 703–48211–02 | 36 – 62 |
| 703–48212–00 | 36 – 59 |
| 703–48213–00 | 36 – 60 |
| 703–48215–00 | 36 – 43 |
| 703–48218–00 | 36 – 65 |
| 703–48219–00 | 36 – 30 |
| 703–48221–00 | 36 – 57 |
| 703–48222–00 | 36 – 27 |
| 703–48223–00 | 36 – 28 |
| 703–48224–00 | 36 – 56 |
| 703–48225–00 | 36 – 29 |
| 703–48226–00 | 36 – 26 |
| 703–48227–00 | 36 – 24 |
| 703–48232–00 | 36 – 63 |
| 703–48234–00 | 36 – 18 |
| 703–48235–00 | 36 – 4 |
| 703–48236–00 | 36 – 16 |
| 703–48238–00 | 36 – 22 |
| 703–48243–00 | 36 – 15 |
| 703–48244–00 | 36 – 21 |
| 703–48245–00 | 36 – 11 |
| 703–48246–00 | 36 – 23 |
| 701–48248–00 | 36 – 13 |
| 703–48252–00 | 36 – 12 |
| 703–48261–01 | 36 – 2 |
| 703–48264–00 | 36 – 6 |
| 703–48265–00 | 36 – 9 |
| 703–48268–00 | 36 – 5 |
| 703–48271–00 | 36 – 61 |
| 703–48281–00 | 36 – 31 |
| 703–48282–00 | 36 – 32 |
| 703–48284–00 | 36 – 53 |
| 701–48287–00 | 36 – 42 |
| 703–48291–10 | 36 – 39 |
| 703–48293–10 | 36 – 41 |
| 701–48310–90 | 35 – 2 |
| 701–48320–00 | 35 – 2 |
| 701–48320–20 | 35 – 2 |
| 701–48320–50 | 35 – 2 |
| 663–48344–00 | 22 – 22 |
| | 22 – 36 |
| | 23 – 12 |
| | 23 – 16 |

NUMERICAL INDEX
INDEX NUMERIQUE


| PART NO. N° PIECES | REF. NO. |
|---|---|
| 703–48345–01 | 36 – 19 |
| 703–48358–00 | 36 – 20 |
| 6AH–48501–00 | 23 – 1 |
| 6AH–48511–00 | 26 – 30 |
| 6AH–48531–00 | 22 – 34 |
| | 23 – 14 |
| 6AH–48532–00 | 22 – 16 |
| | 23 – 7 |
| 682–48538–50 | 22 – 18 |
| | 23 – 9 |
| 6AH–61350–00 | 34 – 1 |
| 6E5–61355–00 | 34 – 6 |
| 6AH–81337–00 | 10 – 31 |
| 6AH–81800–00 | 17 – 1 |
| 689–81807–12 | 17 – 11 |
| 689–81809–11 | 17 – 3 |
| 689–81810–11 | 17 – 4 |
| 689–81811–11 | 17 – 7 |
| 689–81812–11 | 17 – 8 |
| 689–81813–10 | 17 – 9 |
| 6AH–81820–00 | 17 – 10 |
| 689–81826–10 | 17 – 15 |
| 6AH–81830–00 | 17 – 13 |
| 689–81831–00 | 17 – 14 |
| 689–81840–11 | 17 – 6 |
| 689–81847–11 | 17 – 5 |
| 689–81850–11 | 17 – 2 |
| 68T–81857–00 | 17 – 12 |
| 68T–81870–00 | 12 – 41 |
| 6H5–81925–00 | 15 – 1 |
| 6AH–81929–01 | 15 – 2 |
| 68T–81940–00 | 13 – 11 |
| 6AH–81942–00 | 17 – 22 |
| 6AH–81945–00 | 13 – 7 |
| 6AH–81948–00 | 12 – 5 |
| 6AH–81949–00 | 13 – 31 |
| 6AH–81950–00 | 15 – 10 |
| 6AH–81960–00 | 13 – 1 |
| | 13 – 35 |
| 6AH–81994–40 | 8 – 19 |
| 6AH–81994–50 | 8 – 20 |
| 6AH–81995–40 | 10 – 34 |
| 6AH–81995–50 | 10 – 35 |
| 6AG–81996–00 | 10 – 36 |
| 6AH–82105–00 | 13 – 14 |
| 6AH–82117–00 | 13 – 13 |
| 6G5–82119–00 | 15 – 9 |
| 703–82119–00 | 11 – 4 |

| PART NO. N° PIECES | REF. NO. |
|---|---|
| 703–82119–00 | 13 – 2 |
| | 13 – 36 |
| 63V–82127–00 | 25 – 41 |
| 6AH–82127–00 | 26 – 20 |
| 6AH–82127–11 | 26 – 20 |
| 6AH–82150–00 | 13 – 18 |
| 67F–82151–00 | 13 – 20 |
| | 13 – 32 |
| 6AH–82157–00 | 13 – 21 |
| 67F–8215B–00 | 13 – 33 |
| 67F–8215B–10 | 13 – 19 |
| 65W–82181–00 | 27 – 67 |
| 6AH–82317–00 | 15 – 4 |
| 67F–82361–00 | 12 – 15 |
| 6AH–82370–00 | 12 – 18 |
| 6AH–82388–00 | 12 – 28 |
| | 15 – 14 |
| 6AH–82389–00 | 12 – 43 |
| 6AH–82398–00 | 13 – 23 |
| 64J–82504–00 | 12 – 23 |
| 703–82510–12 | 36 – 44 |
| 6AH–82522–00 | 12 – 10 |
| 703–82531–00 | 36 – 47 |
| 703–82532–00 | 36 – 46 |
| 703–82540–00 | 36 – 51 |
| 6AH–82540–01 | 12 – 35 |
| 703–82542–00 | 36 – 64 |
| | 36 – 64 |
| 6AH–82554–00 | 12 – 35 |
| 682–82556–00 | 19 – 42 |
| | 36 – 49 |
| 6AH–82560–00 | 12 – 30 |
| 6AH–82563–00 | 16 – 1 |
| 703–82563–02 | 36 – 56 |
| 6AH–82575–00 | 19 – 41 |
| 688–82575–01 | 36 – 48 |
| 676–82577–00 | 36 – 45 |
| 689–8257Y–00 | 19 – 43 |
| 6AH–82581–00 | 17 – 23 |
| 6AH–82588–00 | 12 – 31 |
| 688–8258A–20 | 36 – 50 |
| 6AH–82590–00 | 15 – 15 |
| 6AH–82590–10 | 14 – 1 |
| 703–82591–00 | 36 – 54 |
| 703–82592–00 | 36 – 55 |
| 703–82594–00 | 36 – 25 |
| 6AH–8259M–00 | 14 – 1 |
| 6AH–8259M–10 | 14 – 1 |

| PART NO. N° PIECES | REF. NO. |
|---|---|
| 703–83383–B0 | 36 – 52 |
| 6H4–83589–00 | 12 – 25 |
| 6AH–83773–00 | 23 – 5 |
| | 26 – 27 |
| 62Y–84301–00 | 12 – 24 |
| 6D5–84340–00 | 23 – 19 |
| 68F–85119–00 | 18 – 2 |
| 67C–85415–00 | 12 – 45 |
| 6AH–85510–00 | 11 – 2 |
| 6AH–85525–10 | 15 – 32 |
| 6AH–8552A–00 | 14 – 4 |
| 6AH–8552A–10 | 15 – 17 |
| 6AH–8552E–00 | 14 – 5 |
| 6AH–8552E–10 | 15 – 23 |
| 6AH–85537–00 | 14 – 8 |
| 6AH–85537–10 | 15 – 26 |
| 6AH–85540–00 | 12 – 1 |
| 6AH–85540–10 | 12 – 1 |
| 6AH–85542–00 | 12 – 21 |
| 6AH–85547–00 | 14 – 10 |
| 6AH–85547–10 | 15 – 28 |
| 6AH–85550–00 | 11 – 1 |
| 6AH–85550–10 | 11 – 1 |
| 6F5–85570–13 | 12 – 13 |
| 6AH–85580–00 | 11 – 3 |
| 6AG–W0001–00 | 37 – 1 |
| 6AH–W0001–20 | 39 – 1 |
| 6AG–W0070–00 | 1 – 10 |
| 6AH–W0078–00 | 39 – 21 |
| 6AH–W0084–02–4D | 19 – 1 |
| 6AH–W0093–01 | 38 – 1 |
| 6AG–W009A–00–1S | 4 – 1 |
| 6AH–W009A–00–1S | 4 – 1 |
| 6AH–W009B–00–1S | 2 – 1 |
| 90101–06020 | 25 – 40 |
| 90101–06M18 | 24 – 16 |
| 90101–08022 | 20 – 16 |
| 90105–06035 | 8 – 17 |
| 90105–081A7 | 8 – 3 |
| 90105–09006 | 4 – 6 |
| 90109–06215 | 9 – 26 |
| 90109–06221 | 12 – 4 |
| 90109–06M82 | 18 – 8 |
| 90109–06M84 | 24 – 43 |
| 90109–06M86 | 12 – 29 |
| | 12 – 44 |
| | 18 – 34 |
| | 18 – 46 |

| PART NO. N° PIECES | REF. NO. |
|---|---|
| 90109–06M86 | 19 – 3 |
| | 22 – 35 |
| | 23 – 15 |
| 90109–06MA1 | 6 – 14 |
| | 25 – 17 |
| 90109–06MA2 | 15 – 12 |
| 90110–08081 | 25 – 35 |
| 90111–06072 | 19 – 31 |
| | 26 – 25 |
| 90111–08055 | 9 – 11 |
| 90116–10033 | 26 – 7 |
| 90119–05018 | 20 – 3 |
| 90119–06169 | 10 – 28 |
| 90119–06M05 | 19 – 34 |
| 90119–06M35 | 12 – 7 |
| 90119–06M88 | 31 – 20 |
| 90119–06MA3 | 2 – 16 |
| | 2 – 21 |
| | 4 – 7 |
| 90119–08093 | 2 – 4 |
| 90119–08094 | 26 – 11 |
| 90119–08103 | 29 – 12 |
| 90119–08M45 | 26 – 16 |
| 90119–08M46 | 26 – 17 |
| 90152–05011 | 19 – 8 |
| | 31 – 9 |
| 90157–05M16 | 32 – 5 |
| 90157–05M19 | 33 – 4 |
| 90167–06002 | 18 – 28 |
| 90170–06015 | 21 – 14 |
| | 22 – 14 |
| 90170–06M30 | 15 – 7 |
| 90170–09M03 | 34 – 4 |
| 90170–30003 | 8 – 8 |
| 90171–10M01 | 31 – 17 |
| 90179–08M06 | 30 – 30 |
| 90179–08M34 | 26 – 18 |
| 90179–16M05 | 11 – 8 |
| 90185–05002 | 31 – 10 |
| 90185–08057 | 25 – 36 |
| | 26 – 33 |
| 90185–09M01 | 34 – 3 |
| 90185–10M14 | 20 – 14 |
| 90185–22043 | 24 – 14 |
| | 25 – 12 |
| 90201–05M04 | 21 – 28 |
| 90201–06068 | 15 – 34 |
| 90201–06416 | 15 – 13 |

| PART NO. N° PIECES | REF. NO. |
|---|---|
| 90201–06M05 | 12 – 12 |
| 90201–06M31 | 21 – 22 |
| | 22 – 30 |
| 90201–08065 | 20 – 17 |
| 90201–08784 | 8 – 4 |
| 90201–08M00 | 25 – 29 |
| 90201–106M5 | 20 – 19 |
| 90201–10M01 | 31 – 16 |
| 90201–10M20 | 34 – 2 |
| 90201–10M63 | 34 – 7 |
| 90201–15017 | 30 – 6 |
| 90201–15423 | 8 – 5 |
| 90201–16M44 | 11 – 9 |
| 90201–17682 | 30 – 34 |
| 90201–39008 | 19 – 25 |
| 90202–10M56 | 20 – 5 |
| 90204–06M00 | 15 – 8 |
| 90206–10M24 | 24 – 44 |
| 90206–15M18 | 19 – 36 |
| 90206–39001 | 19 – 26 |
| 90209–10M26 | 20 – 13 |
| 90209–14011 | 30 – 5 |
| 90209–40008 | 26 – 2 |
| 90243–04M01 | 24 – 3 |
| | 24 – 8 |
| | 25 – 3 |
| | 25 – 8 |
| 90249–12M36 | 25 – 31 |
| 90250–05010 | 30 – 38 |
| 90254–03M05 | 21 – 2 |
| | 21 – 9 |
| | 22 – 2 |
| | 22 – 9 |
| 90266–06M02 | 1 – 5 |
| 90269–02M09 | 19 – 14 |
| 90280–03M01 | 8 – 9 |
| 90280–05013 | 11 – 7 |
| 90338–08M19 | 25 – 38 |
| | 25 – 38 |
| 90340–08002 | 30 – 9 |
| 90340–14M06 | 29 – 6 |
| 90381–12M10 | 25 – 32 |
| 90381–12M11 | 25 – 33 |
| 90381–20001 | 19 – 27 |
| 90386–08004 | 19 – 17 |
| 90386–14MA1 | 25 – 16 |
| 90386–16MA7 | 25 – 26 |
| 90386–16MA8 | 25 – 27 |

| PART NO. N° PIECES | REF. NO. |
|---|---|
| 90386–22MA4 | 24 – 12 |
| | 25 – 11 |
| 90386–30048 | 26 – 4 |
| 90386–30M60 | 26 – 6 |
| 90386–40001 | 26 – 3 |
| 90386–45001 | 19 – 24 |
| 90387–05M05 | 20 – 9 |
| 90387–05M11 | 20 – 10 |
| 90387–06138 | 24 – 38 |
| 90387–06139 | 21 – 21 |
| | 22 – 29 |
| 90387–06176 | 18 – 4 |
| 90387–06182 | 15 – 3 |
| 90387–06M03 | 15 – 11 |
| 90387–06M13 | 24 – 15 |
| 90387–06M60 | 12 – 8 |
| 90387–06M70 | 13 – 4 |
| | 13 – 38 |
| 90387–06M86 | 19 – 35 |
| 90387–10M42 | 34 – 5 |
| 90387–13006 | 5 – 11 |
| 90387–16M02 | 25 – 28 |
| 90430–08020 | 30 – 10 |
| | 39 – 12 |
| 90430–08143 | 28 – 5 |
| | 39 – 5 |
| 90430–14M09 | 29 – 7 |
| | 39 – 3 |
| 90445–07025 | 15 – 19 |
| 90445–07026 | 15 – 20 |
| 90445–07027 | 15 – 21 |
| 90445–08029 | 14 – 3 |
| 90445–09026 | 9 – 31 |
| 90445–11M05 | 33 – 11 |
| 90445–11M06 | 33 – 9 |
| 90446–06M90 | 10 – 25 |
| 90446–14MH7 | 25 – 22 |
| 90464–06001 | 13 – 34 |
| 90464–07M56 | 12 – 22 |
| 90464–08004 | 13 – 10 |
| 90464–09010 | 13 – 26 |
| 90464–09018 | 9 – 36 |
| 90464–10M32 | 12 – 40 |
| 90464–12001 | 15 – 22 |
| 90464–12M58 | 18 – 31 |
| 90464–16001 | 12 – 42 |
| | 13 – 17 |
| 90464–16003 | 12 – 42 |

NUMERICAL INDEX
INDEX NUMERIQUE


| PART NO. N° PIECES | REF. NO. |
|---|---|
| 90464–18246 | 12 – 38 |
| | 13 – 24 |
| 90464–20181 | 14 – 11 |
| 90464–76001 | 15 – 35 |
| 90465–08059 | 4 – 23 |
| 90465–08M82 | 18 – 47 |
| 90465–08M83 | 6 – 5 |
| 90465–11M10 | 2 – 25 |
| | 9 – 32 |
| | 12 – 34 |
| | 16 – 2 |
| | 18 – 16 |
| | 18 – 22 |
| | 23 – 3 |
| | 31 – 3 |
| 90465–11M59 | 29 – 5 |
| 90465–13M18 | 6 – 16 |
| | 12 – 6 |
| | 12 – 39 |
| | 13 – 25 |
| | 14 – 2 |
| | 15 – 16 |
| | 15 – 18 |
| | 23 – 18 |
| 90465–13M97 | 25 – 24 |
| 90467–09M17 | 9 – 13 |
| | 9 – 29 |
| 90468–10005 | 21 – 29 |
| 90468–18008 | 19 – 39 |
| | 22 – 23 |
| | 22 – 37 |
| | 23 – 13 |
| | 23 – 17 |
| 90480–06M19 | 8 – 14 |
| 90480–10627 | 8 – 12 |
| 90480–10M23 | 12 – 9 |
| 90480–13M24 | 13 – 5 |
| | 13 – 39 |
| 90480–14M54 | 28 – 18 |
| 90480–16007 | 18 – 19 |
| 90480–16616 | 6 – 15 |
| 90480–19031 | 22 – 17 |
| | 23 – 8 |
| 90480–19368 | 14 – 9 |
| | 15 – 27 |
| 90480–21M82 | 18 – 3 |
| 90480–25003 | 12 – 14 |
| 90501–10326 | 7 – 8 |

| PART NO. N° PIECES | REF. NO. |
|---|---|
| 90501–120A5 | 5 – 12 |
| 90501–150A0 | 30 – 40 |
| 90501–23215 | 19 – 16 |
| 90502–10M07 | 24 – 22 |
| 90506–18014 | 24 – 33 |
| 90506–20020 | 24 – 35 |
| 90508–20M44 | 21 – 17 |
| | 22 – 25 |
| 91318–05025 | 27 – 55 |
| 91490–16010 | 19 – 12 |
| 91490–30020 | 31 – 18 |
| 91690–30008 | 24 – 21 |
| 91690–30012 | 22 – 19 |
| | 23 – 10 |
| 91690–30018 | 25 – 15 |
| 91690–50014 | 6 – 4 |
| 92902–06200 | 27 – 17 |
| 92903–06600 | 2 – 6 |
| | 29 – 10 |
| 92903–08600 | 17 – 17 |
| | 17 – 19 |
| 92907–04600 | 4 – 16 |
| 92990–06200 | 19 – 38 |
| 92990–06300 | 31 – 13 |
| 92990–06600 | 24 – 17 |
| 92990–08600 | 25 – 37 |
| | 36 – 34 |
| 92995–05600 | 20 – 12 |
| | 28 – 15 |
| 92995–06100 | 18 – 41 |
| 92995–06600 | 4 – 12 |
| | 6 – 7 |
| | 10 – 27 |
| | 10 – 27 |
| | 12 – 3 |
| | 12 – 17 |
| | 12 – 20 |
| | 12 – 27 |
| | 12 – 33 |
| | 12 – 37 |
| | 13 – 9 |
| | 13 – 16 |
| | 13 – 16 |
| | 13 – 42 |
| | 14 – 13 |
| | 15 – 6 |
| | 15 – 30 |
| | 17 – 25 |

| PART NO. N° PIECES | REF. NO. |
|---|---|
| 92995–06600 | 18 – 13 |
| | 18 – 30 |
| | 18 – 38 |
| | 18 – 42 |
| | 19 – 21 |
| | 21 – 7 |
| | 21 – 32 |
| | 22 – 7 |
| | 22 – 21 |
| | 25 – 43 |
| | 26 – 22 |
| | 26 – 23 |
| | 26 – 29 |
| 92995–08600 | 13 – 28 |
| | 13 – 30 |
| | 17 – 21 |
| | 26 – 32 |
| 93101–12M63 | 28 – 2 |
| | 39 – 4 |
| 93101–17054 | 30 – 44 |
| | 39 – 18 |
| 93101–20001 | 30 – 23 |
| | 39 – 15 |
| 93102–22009 | 8 – 18 |
| | 37 – 2 |
| 93102–25014 | 3 – 10 |
| | 37 – 8 |
| 93102–37004 | 3 – 9 |
| | 37 – 7 |
| 93210–06001 | 27 – 48 |
| 93210–06ME6 | 30 – 25 |
| | 39 – 17 |
| 93210–07003 | 27 – 6 |
| 93210–08287 | 33 – 14 |
| | 33 – 16 |
| 93210–12N52 | 27 – 34 |
| 93210–13M63 | 2 – 14 |
| | 4 – 20 |
| | 37 – 6 |
| | 37 – 10 |
| 93210–16275 | 34 – 9 |
| 93210–20M65 | 9 – 27 |
| | 37 – 18 |
| 93210–24709 | 27 – 8 |
| | 27 – 12 |
| 93210–24M79 | 4 – 22 |
| | 37 – 17 |
| 93210–29M94 | 26 – 5 |

| PART NO. N° PIECES | REF. NO. |
|---|---|
| 93210–320A7 | 27 – 4 |
| 93210–32738 | 9 – 8 |
| 93210–35M86 | 6 – 11 |
| | 37 – 15 |
| 93210–49046 | 30 – 16 |
| | 39 – 14 |
| | 39 – 27 |
| 93210–56M80 | 30 – 46 |
| | 39 – 20 |
| 93210–57M09 | 30 – 45 |
| | 39 – 19 |
| 93306–00501 | 30 – 42 |
| 93315–314V8 | 30 – 3 |
| 93315–317U2 | 30 – 43 |
| 93332–00005 | 30 – 8 |
| 93420–30042 | 28 – 20 |
| 93430–04M03 | 24 – 39 |
| 93430–06024 | 36 – 10 |
| 93450–17129 | 3 – 8 |
| 93501–08001 | 27 – 14 |
| | 27 – 43 |
| | 27 – 51 |
| 93602–15250 | 27 – 47 |
| 93604–12M07 | 28 – 13 |
| | 29 – 3 |
| | 30 – 18 |
| | 31 – 5 |
| | 39 – 29 |
| 93606–12019 | 2 – 3 |
| | 4 – 5 |
| 93606–14081 | 27 – 54 |
| 93606–19M23 | 28 – 6 |
| 93700–06M03 | 26 – 19 |
| 94702–00418 | 4 – 24 |
| 95380–04600 | 9 – 24 |
| 95380–05600 | 36 – 7 |
| 95380–06600 | 18 – 43 |
| | 36 – 40 |
| 95380–06700 | 21 – 15 |
| | 22 – 15 |
| | 24 – 18 |
| 95380–08600 | 9 – 10 |
| 95380–10600 | 26 – 10 |
| 95780–06500 | 13 – 6 |
| | 13 – 40 |
| 95895–06014 | 21 – 12 |
| | 22 – 12 |
| 95895–06020 | 9 – 3 |

| PART NO. N° PIECES | REF. NO. |
|---|---|
| 95895–06030 | 11 – 6 |
| 95895–06035 | 31 – 12 |
| 95895–06100 | 6 – 12 |
| 97013–06012 | 5 – 10 |
| 97013–06016 | 29 – 9 |
| 97013–06040 | 2 – 5 |
| 97013–08035 | 17 – 18 |
| 97013–08045 | 17 – 16 |
| 97075–06012 | 18 – 37 |
| 97080–08016 | 25 – 30 |
| 97080–08025 | 30 – 26 |
| 97095–05010 | 28 – 14 |
| 97095–05012 | 11 – 5 |
| 97095–05020 | 20 – 11 |
| 97095–06008 | 28 – 17 |
| 97095–06010 | 18 – 29 |
| | 25 – 42 |
| 97095–06012 | 6 – 6 |
| | 18 – 12 |
| 97095–06014 | 12 – 19 |
| | 12 – 32 |
| | 13 – 8 |
| | 13 – 15 |
| | 13 – 15 |
| | 13 – 41 |
| | 14 – 12 |
| | 15 – 5 |
| | 15 – 29 |
| | 17 – 24 |
| | 19 – 20 |
| | 21 – 24 |
| | 21 – 31 |
| | 22 – 20 |
| | 22 – 32 |
| | 26 – 21 |
| 97095–06016 | 12 – 36 |
| 97095–06020 | 4 – 11 |
| | 10 – 26 |
| | 10 – 26 |
| | 12 – 2 |
| | 21 – 6 |
| | 22 – 6 |
| 97095–06025 | 12 – 16 |
| 97095–06030 | 26 – 28 |
| 97095–08014 | 28 – 4 |
| 97095–08016 | 13 – 29 |
| | 17 – 20 |
| 97095–08025 | 13 – 27 |

| PART NO. N° PIECES | REF. NO. |
|---|---|
| 97095–08025 | 26 – 31 |
| 97095–08045 | 30 – 19 |
| | 39 – 30 |
| 97380–05025 | 36 – 8 |
| 97380–08030 | 36 – 33 |
| 97575–06520 | 30 – 47 |
| 97575–06525 | 28 – 9 |
| 97575–08530 | 28 – 12 |
| | 29 – 13 |
| | 31 – 6 |
| 97595–05514 | 1 – 8 |
| 97595–06514 | 23 – 11 |
| 97595–06530 | 23 – 6 |
| 97595–06555 | 6 – 3 |
| | 19 – 29 |
| | 21 – 23 |
| | 22 – 31 |
| 97595–06610 | 13 – 12 |
| 97780–50616 | 1 – 3 |
| 97780–60520 | 19 – 32 |
| | 26 – 26 |
| 97880–05025 | 2 – 12 |
| | 2 – 23 |
| | 4 – 18 |
| 97880–06010 | 12 – 11 |
| 97885–06012 | 12 – 26 |
| 97885–06030 | 18 – 40 |
| 97980–04108 | 7 – 30 |
| 97980–04110 | 7 – 5 |
| 97980–04114 | 7 – 28 |
| | 38 – 9 |
| 97985–06214 | 14 – 14 |
| | 15 – 31 |
| | 15 – 33 |
| 97985–06220 | 16 – 3 |
| 98507–04010 | 4 – 15 |
| 98580–03015 | 36 – 38 |
| 98580–04006 | 7 – 2 |
| | 36 – 36 |
| 98580–04008 | 7 – 15 |
| 98580–04010 | 36 – 35 |
| 98580–05010 | 36 – 37 |
| 98780–04016 | 2 – 27 |
| 98980–06030 | 13 – 3 |
| | 13 – 37 |
| 99002–03600 | 27 – 32 |
| 99080–05600 | 24 – 29 |
| | 24 – 31 |

| PART NO. N° PIECES | REF. NO. | PART NO. N° PIECES | REF. NO. | PART NO. N° PIECES | REF. NO. | PART NO. N° PIECES | REF. NO. | PART NO. N° PIECES | REF. NO. | PART NO. N° PIECES | REF. NO. |
|---|---|---|---|---|---|---|---|---|---|---|---|
| 99080–05600 | 24 – 41 | | | | | | | | | | |
| 99080–10600 | 25 – 34 | | | | | | | | | | |