YAMAHA

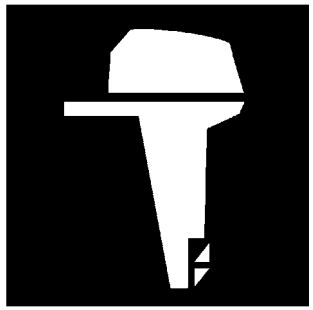

PARTS CATALOGUE
CATALOGUE DE PIECES DETACHEES

F15C Y12 (6AG7)
F20B Y12 (6AH7)

1L6AG-300FA

( )

YAMAHA GENUINE Parts & Accessories

2020/2/3

NEWS NO.	DATE	COMMENT
PE0-OM-200002	Jan.,28,2020	MOD:F13.5B/F15C/F20B(6AF/6AG/6AH) CRANKSHAFT & PISTON LIST REVISION

F15C/F20B
PARTS CATALOGUE
©2012 by Yamaha Motor Co., Ltd.
1st edition, April 2012
All rights reserved.
Any reprinting or unauthorized use
without the written permission of
Yamaha Motor Co., Ltd.
is expressly prohibited.
Printed in Japan.

F15C/F20B
CATALOGUE DE PIECES DETACHEES
©2012 par Yamaha Motor Co., Ltd.
1re édition, avril 2012
Tous droits réservés
Toute réimpression ou utilisation
non autorisée sans la permission écrite
de la Yamaha Motor Co., Ltd.
est formellement interdite.
Imprimé au Japon

FOREWORD

This Parts Catalogue is related to the parts for the model(s) on the cover page. When you are ordering replacement parts, please refer to this Parts Catalogue and quote both part numbers and part names correctly.

1. Modifications or additions which have been made after the issue of the Parts Catalogue will be announced in the Parts News.
   It is advisable that you make the necessary corrections to the Parts Catalogue according to the Parts News.

2. Abbreviations
   The following abbreviations are used in this Parts Catalogue.

   "UR" Use specified parts number.
   "UN" Use as many as needed.
   "AP" Alternate Parts
   "LM" Locally Made (Parts need to be ordered locally)
   "F#" Frame No. (Applicable machine No.)
   "O/S" Over Size

3. The number of components for assembly
   - Parts, which are to be supplied in an assembly, are listed with a dot (.) in front of the part name as shown below.
   - The numeral appearing to the right of each component part indicates the quantity of parts for each assembly unit.

PART NO.	DESCRIPTION	Q'TY	REMARKS
2F5–83310–60	FRONT FLASHER LIGHT ASSY	2	
115–83311–60	.BULB (6V–18W)	1	

4. Applicable colours of graphics are represented in the "REMARKS" as shown below.

PART NO.	DESCRIPTION	Q'TY	REMARKS
2N4–24110–00–X5	FUEL TANK COMP.	2	MXR
3J1–24240–10	.GRAPHIC, FUEL TANK	1	FOR MXR

5. Note that the illustrations for reference in finding parts numbers are not to be used for assembling. When assembling, please use the applicable service manual.

6. The asterisk (*) before a reference number indicates modified items after the first edition.

7. Applicable Serial No.

   Engine Serial No.

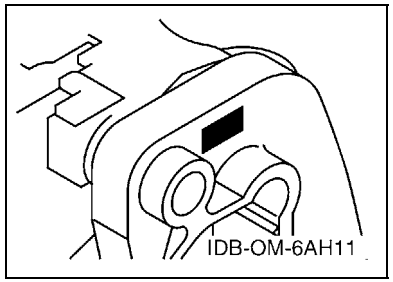

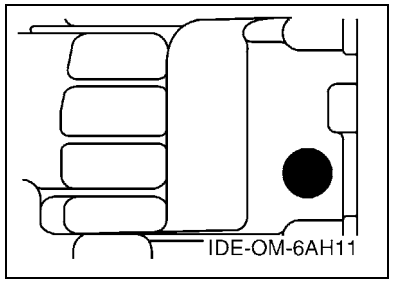

8. Applicable Engine Starting Serial No.

Model	Serial No.	Model	Serial No.
F15C	6AGK-1028335	F20B	6AHK-1037081

9. Applicable Colour Code

Abbreviation	Colour Name	Colour Code
DBNM2	DARK BLUISH GRAY METALLIC 2	004D

10. Quantity Column Information

Column No.	Name Of Q'ty Column	Applicable Model
1	MH	F15CMH,F20BMH
2	EH	F15CEH,F20BEH
3	E	F15CE,F20BE
4	EP	F15CEP,F20BEP

AVANT–PROPOS

Ce catalogue de pièces détachées concerne les pièces pour le(s) modèle(s) indiqué(s) sur la page de couverture. Lorsque vous commandez des pièces de rechange, veuillez vous référer à ce catalogue de pieces détachées et indiquer clairement les numéros et les noms des pièces détachées.

1. Les modifications ou ajouts ayant été effectués après la parution du catalogue de pièces détachées seront décrits dans les Bulletins d'information concernant les pièces détachées.
   Il est recommandé que vous apportiez les corrections nécessaires au catalogue des pièces détachées en vous référant aux Bulletins d'information.

2. Abréviations
   Dans ce catalogue, les abréviations suivantes sont utilisées:

   "UR" Utiliser le numéro de pièces spécifié.
   "UN" Utiliser autant que nécessaire.
   "AP" Pièces de substitution
   "LM" Fabrication locale (les pièces doivent être commandées localement.)
   "F#" N° de cadre (applicable au N° de série)
   "O/S" Surdimensionné

3. Nombre de pièces d'un assemblage
   - Les pièces fournies comme composants d'un assemblage sont précédées d'un point (.) de la manière indiquée ci–dessous.
   - Le chiffre apparaissant à la droite de chaque composant indique la quantité de pièces pour chaque unité d'assemblage.

N° PIECES	DESCRIPTION	QTE	REMARQUES
2F5–83310–60	ENS. CLIGNOTANT AVANT	2	
115–83311–60	.AMPOULE (6V–18W)	1	

4. Les couleurs concernant les graphiques sont indiquées dans la colonne "REMARQUES", comme indiqué ci–dessous.

N° PIECES	DESCRIPTION	QTE	REMARQUES
2N4–24110–00–X5	RESERVOIR A ESSENCE.	2	MXR
3J1–24240–10	.GRAPHIQUE	1	POUR MXR

5. Veuillez noter que les illustrations sont indiquées à titre de référence pour trouver les numéros de pièces, non pour être utilisées lors de l'assemblage. Lors de l'assemblage, veuillez utiliser le manuel d'entretien adéquat.

6. L'astérisque (*) placé devant un numéro de référence indique des éléments qui ont été modifiés après la première édition.

7. N° de série applicable

   N° de Série du moteur

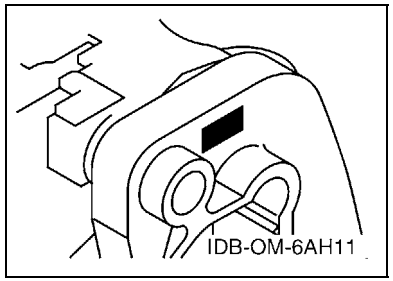

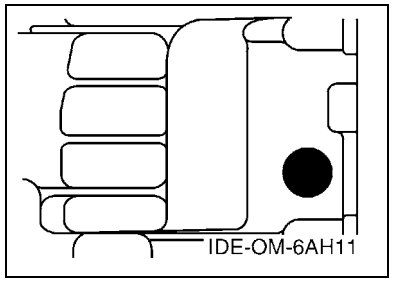

8. N° de série initial du moteur applicable

Modèle	N° de série	Modèle	N° de série
F15C	6AGK-1028335	F20B	6AHK-1037081

9. Code couleur applicable

Abréviation	Nom de la couleur	Code couleur
DBNM2	DARK BLUISH GRAY METALLIC 2	004D

10. Informations relatives à la colonne Quantité

N° de la colonne	Nom de la colonne Qté	Modèle applicable
1	MH	F15CMH,F20BMH
2	EH	F15CEH,F20BEH
3	E	F15CE,F20BE
4	EP	F15CEP,F20BEP

CONTENTS

TOP COWLING 1
CYLINDER & CRANKCASE 1 2
CRANKSHAFT & PISTON 4
CYLINDER & CRANKCASE 2 5
VALVE 6
INTAKE 7
CARBURETOR 8
OIL PUMP 10
FUEL 11
STARTER 13
GENERATOR 15
ELECTRICAL 1 16
ELECTRICAL 2 18
ELECTRICAL 3 20
ELECTRICAL 4 21
ELECTRICAL 5 23
STARTING MOTOR 24
BOTTOM COWLING 25
STEERING 28
STEERING FRICTION 30
CONTROL 1 31
CONTROL 2 33
REMO CON ATTACHMENT 35
BRACKET 1 36
BRACKET 2 38
BRACKET 3 40
POWER TILT ASSY 42
UPPER CASING 45
OIL PAN 46
LOWER CASING & DRIVE 1 47
LOWER CASING & DRIVE 2 50
FUEL TANK 1 52
FUEL TANK 2 53
STEERING GUIDE 54
REMOTE CONTROL BOX 55
REMOTE CONTROL ASSY 56
REPAIR KIT 1 59
REPAIR KIT 2 60
REPAIR KIT 3 61

INDEX

NUMERICAL INDEX 63

TABLE DES MATIERES

CAPOT SUPERIEUR 1
CYLINDRE & CARTER 1 2
VILEBREQUIN & PISTON 4
CYLINDRE & CARTER 2 5
SOUPAPE 6
ADMISSION 7
CARBURATEUR 8
POMPE A HUILE 10
CARBURANT 11
DEMARREUR 13
GENERATRICE 15
PARTIE ELECTRIQUE 1 16
PARTIE ELECTRIQUE 2 18
PARTIE ELECTRIQUE 3 20
PARTIE ELECTRIQUE 4 21
PARTIE ELECTRIQUE 5 23
DEMARREUR ELECTRIQUE 24
CAPOT INFERIEUR 25
DIRECTION 28
CUVETTE POIGNEE DE DIRECTION 30
COMMANDE 1 31
COMMANDE 2 33
COMMANDE A DISTANCE 35
SUPPORT 1 36
SUPPORT 2 38
SUPPORT 3 40
PUISSANCE PARER ET INCLINER 42
FOURREAU 45
VENTILATEUR D'HUILE 46
BOITIER D'HELICE TRANSMISSION1 47
BOITIER D'HELICE TRANSMISSION2 50
RESERVOIR A CARBURANT 1 52
RESERVOIR A CARBURANT 2 53
FIXATION DE DIRECTION 54
BOITIER DE COMMANDE A DISTANCE 55
BOITIER DE COMMANDE A DISTANCE 56
KITS DE REPARATION 1 59
KITS DE REPARATION 2 60
KITS DE PEPARATION 3 61

INDEX

INDEX NUMERIQUE 63

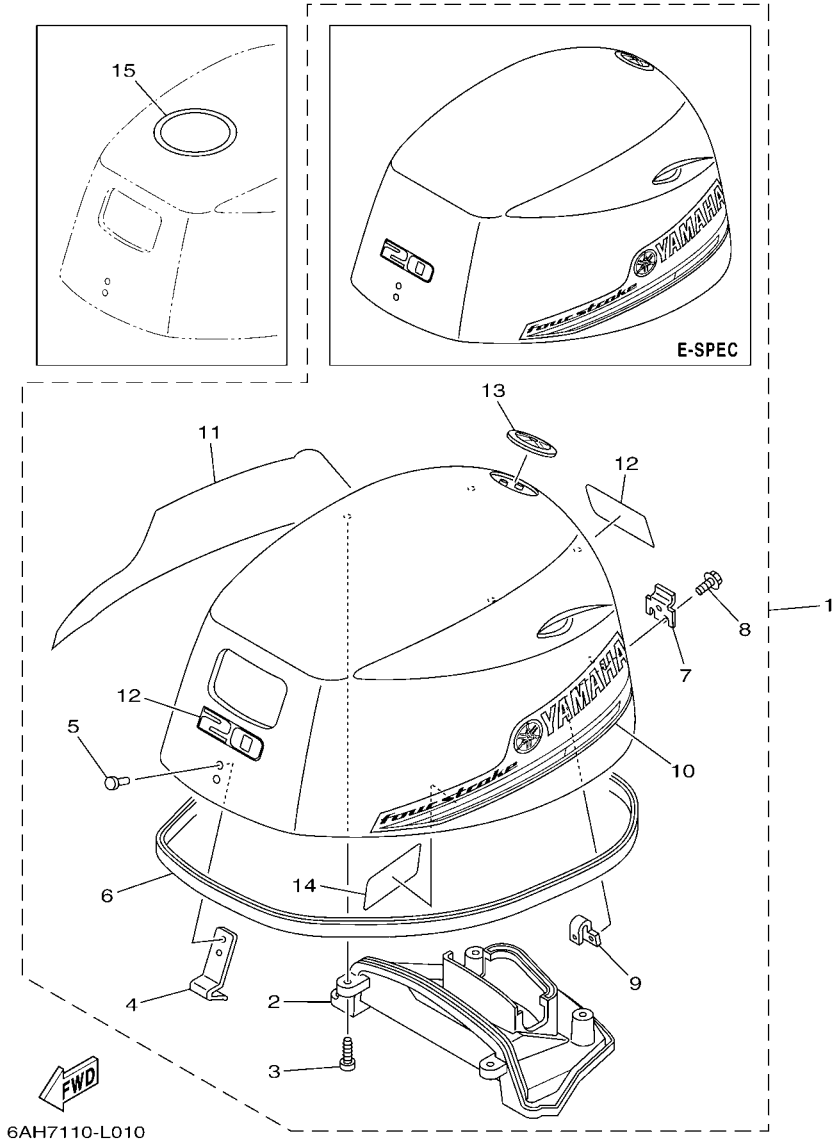

FIG. 1 TOP COWLING — CAPOT SUPERIEUR

REF. NO.	PART NO. N° PIECES	DESCRIPTION DESCRIPTION	MH	EH	E	EP		REMARKS REMARQUES
1	6AH–42610–71	TOP COWLING ASSY CAPOT (ENS.)	1					F20B F20B
	6AG–42610–61	TOP COWLING ASSY CAPOT (ENS.)	1					F15C F15C
	6AH–42610–81	TOP COWLING ASSY CAPOT (ENS.)		1	1	1		F20B F20B
	6AG–42610–71	TOP COWLING ASSY CAPOT (ENS.)		1	1	1		F15C F15C
2	6AH–42613–00	.MOLDING, AIR DUCT .MANCHON A AIR	1	1	1	1		
3	97780–50616	.SCREW, TAPPING .VIS, TETE BOMBEE	4	4	4	4		
4	6AH–42651–00	.HOOK .CROCHET	1	1	1	1		
5	90266–06M02	.RIVET .RIVET	2	2	2	2		
6	6AH–42615–00	.SEAL .JOINT	1	1	1	1		
7	60R–42652–00	.HOOK .CROCHET	1	1	1	1		
8	97595–05514	.BOLT, WITH WASHER .VIS HEXAGONAL AVC RONDELLE	2	2	2	2		
9	6AH–42649–00	.HOLDER, CLAMP BAND .SUPPORT, SANDOW DE SERRAGE	1	1	1	1		
10	6AG–42675–00	.GRAPHIC, SIDE 1 .EMBLEME	1	1	1	1		
11	6AG–42676–00	.GRAPHIC, SIDE 2 .EMBLEME	1	1	1	1		
12	6AH–42677–00	.GRAPHIC, FRONT .ADHESIF, AVANT	2	2	2	2		F20B F20B
	6AG–42677–20	.GRAPHIC, FRONT .ADHESIF, AVANT	2	2	2	2		F15C F15C
13	6AH–42697–10	.TUNING FORK MARK .MARQUE, YAMAHA	1	1	1	1		
14	6AH–42735–00	.PROTECTOR .PROTECTEUR	1	1	1	1		
15	67F–13434–20	LABEL, CAUTION ETIQUETTE, ATTENTION	1	1	1	1		

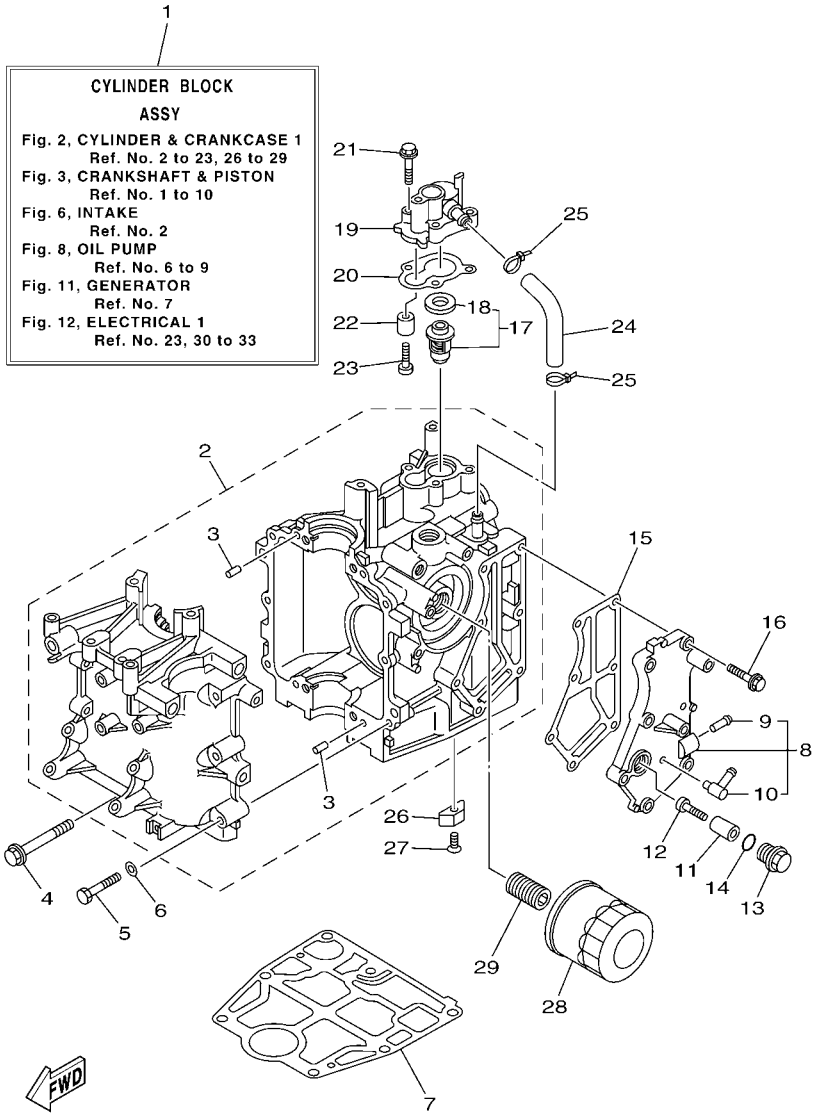

6AG6110-L020

FIG. 2 CYLINDER & CRANKCASE 1 CYLINDRE & CARTER 1

REF. NO.	PART NO. N° PIECES	DESCRIPTION DESCRIPTION	MH	EH	E	EP		REMARKS REMARQUES
1	6AH–W009B–00–1S	CYLINDER BLOCK ASSY CYLINDRE GROUPE (ENS.)	1	1	1	1		
2	6AH–15100–00	CRANKCASE ASSY CARTER DE MOTEUR COMPLET	1	1	1	1		
3	93606–12019	.PIN, DOWEL .GOUPILLE	4	4	4	4		
4	90119–08093	BOLT, WITH WASHER BOULON, AVEC RONDELLE	4	4	4	4		
5	97013–06040	BOLT BOULON	6	6	6	6		
6	92903–06600	WASHER, PLATE RONDELLE, PLATE	6	6	6	6		
7	6AH–11351–00	GASKET, CYLINDER JOINT, D'EMBASE	1	1	1	1		
8	6AH–41113–00–1S	OUTER COVER, EXHAUST COUVERCLE, ECHAPPEMENT	1	1	1	1		
9	650–24378–00	.PIPE, JOINT 4 .DURITE RACCORDEMENT 3	1	1	1	1		
10	676–11372–00	.NIPPLE, HOSE .RACCORD, TUYAU	1	1	1	1		
11	6G8–11325–00	ANODE ANODE	1	1	1	1		
12	97880–05025	SCREW, PAN HEAD VIS, TETE TRONCONIQUE	1	1	1	1		
13	6G8–11197–01	PLUG, BLIND PLOT, BORGNE	1	1	1	1		
14	93210–13M63	O-RING JOINT TORIQUE	1	1	1	1		
15	6AH–41114–00	GASKET, EXHAUST OUTER COVER JOINT, COUVERCLE D'ECHAPPEMENT	1	1	1	1		
16	90119–06MA3	BOLT, WITH WASHER BOULON, AVEC RONDELLE	7	7	7	7		
17	6AH–12411–00	THERMOSTAT THERMOSTAT	1	1	1	1		
18	688–12412–00	.SEAL, THERMOSTAT .JOINT, THERMOSTAT	1	1	1	1		
19	6AH–12413–00–1S	COVER, THERMOSTAT COUVERCLE, THERMOSTAT	1	1	1	1		
20	6AH–12414–00	GASKET, COVER JOINT, COUVERCLE	1	1	1	1		
21	90119–06MA3	BOLT, WITH WASHER BOULON, AVEC RONDELLE	3	3	3	3		
22	6G8–11325–00	ANODE ANODE	1	1	1	1		
23	97880–05025	SCREW, PAN HEAD VIS, TETE TRONCONIQUE	1	1	1	1		
24	6AH–12481–00	PIPE 1 DURITE 1	1	1	1	1		
25	90465–11M10	CLAMP BRIDE	2	2	2	2		
26	6E5–11325–00	ANODE ANODE	1	1	1	1		
27	98780–04016	SCREW, FLAT HEAD VIS A TETE FRAISEE	1	1	1	1		

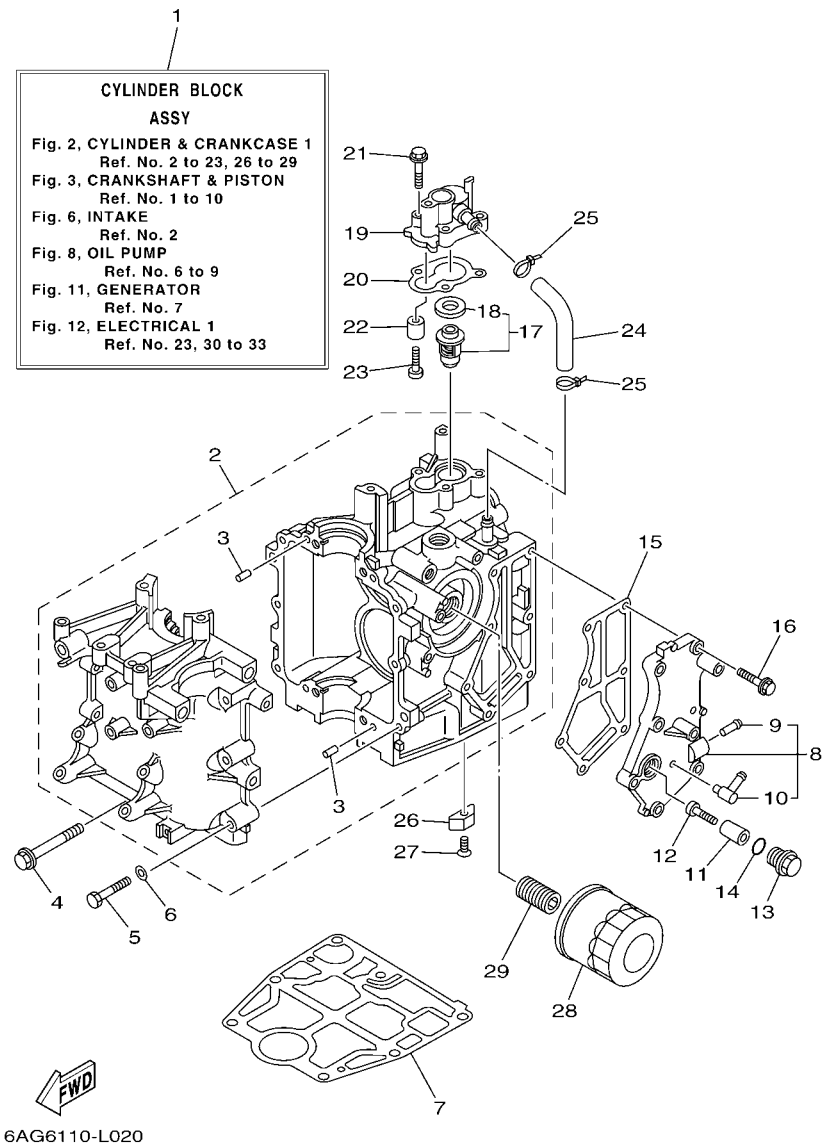

FIG. 2 CYLINDER & CRANKCASE 1 CYLINDRE & CARTER 1

REF. NO.	PART NO. N° PIECES	DESCRIPTION DESCRIPTION	MH	EH	E	EP		REMARKS REMARQUES
28	5GH–13440–20	ELEMENT ASSY, OIL CLEANER ELEMENT, FILTRE A HUILE	1	1	1	1		
29	6C5–12858–00	BOLT, UNION BOULON, RACCORD	1	1	1	1		

FIG. 3 CRANKSHAFT & PISTON VILEBREQUIN & PISTON

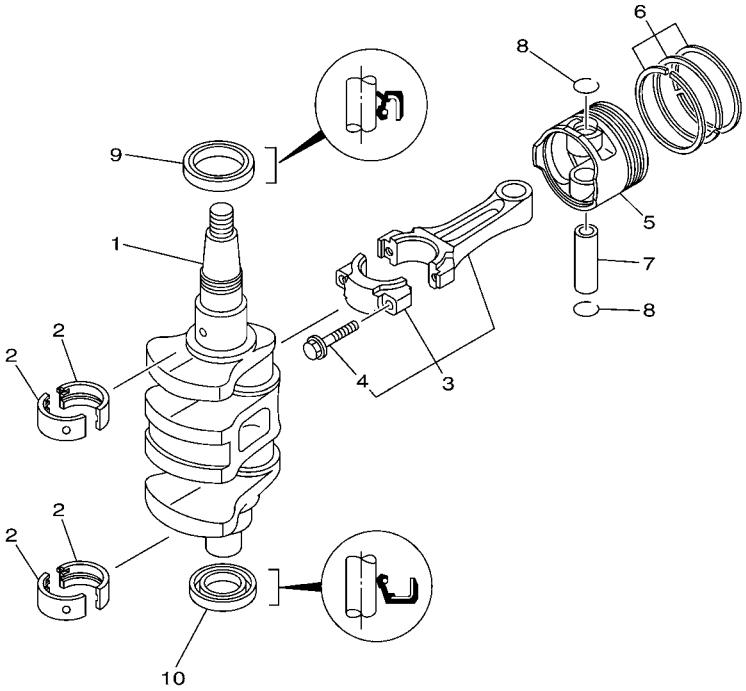

6AH1100-F030

REF. NO.	PART NO. N° PIECES	DESCRIPTION DESCRIPTION	MH	EH	E	EP		REMARKS REMARQUES
1	6AH–11411–00	CRANKSHAFT VILEBREQUIN COMPLET	1	1	1	1		
2	6AH–11416–00	PLANE BEARING, CRANKSHAFT 1 COUSSINET DE VILEBREQUIN 1	4	4	4	4		UR BROWN UR BROWN
	6AH–11416–10	PLANE BEARING, CRANKSHAFT 1 COUSSINET DE VILEBREQUIN 1	4	4	4	4		UR BLACK UR BLACK
	6AH–11416–20	PLANE BEARING, CRANKSHAFT 1 COUSSINET DE VILEBREQUIN 1	4	4	4	4		UR BLUE UR BLUE
3	6AH–11650–00	CONNECTING ROD ASSY BIELLE COMPLETTE	2	2	2	2		
4	6AH–11654–00	.BOLT, CONNECTING ROD .BOULON, BIELLE	2	2	2	2		
5	6AH–11631–00	PISTON (STD) PISTON (STD)	2	2	2	2		
	6AH–11635–00	PISTON (0.25MM O/S) PISTON (0.25MM O/S)	2	2	2	2		AP AP
	6AH–11636–00	PISTON (0.50MM O/S) PISTON (0.50MM O/S)	2	2	2	2		AP AP
6	6AH–11603–00	PISTON RING SET (STD) JEU DE SEGMENTS (STD)	2	2	2	2		
	6AH–11604–00	PISTON RING SET (0.25MM O/S) JEU DE SEGMENTS (0.25MM O/S)	2	2	2	2		AP AP
	6AH–11605–00	PISTON RING SET (0.50MM O/S) JEU DE SEGMENTS (0.50MM O/S)	2	2	2	2		AP AP
7	137–11633–10	PIN, PISTON AXE, PISTON	2	2	2	2		
8	93450–17129	CIRCLIP CIRCLIP, TYPE S	4	4	4	4		
9	93102–37004	OIL SEAL JOINT SPY	1	1	1	1		
10	93102–25014	OIL SEAL JOINT SPY	1	1	1	1		

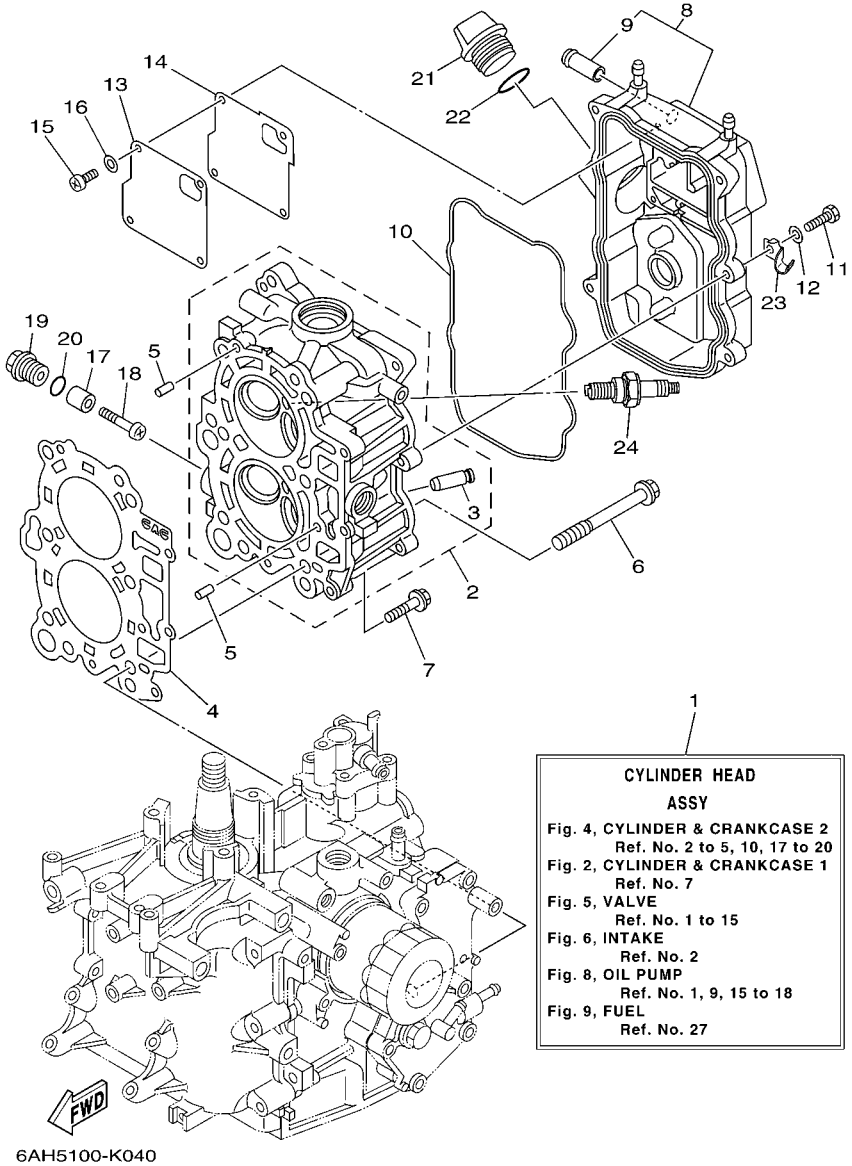

6AH5100-K040

FIG. 4 CYLINDER & CRANKCASE 2 CYLINDRE & CARTER 2

REF. NO.	PART NO. N° PIECES	DESCRIPTION DESCRIPTION	MH	EH	E	EP		REMARKS REMARQUES
1	6AH–W009A–00–1S	CYLINDER HEAD ASSY CULASSE (ENS.)	1	1	1	1		F20B F20B
	6AG–W009A–00–1S	CYLINDER HEAD ASSY CULASSE (ENS.)	1	1	1	1		F15C F15C
2	6AH–11111–00–1S	HEAD, CYLINDER 1 CULASSE	1	1	1	1		
3	6AH–11133–10	.GUIDE, VALVE 1 .GUIDE, SOUPAPE 1	4	4	4	4		
4	6AG–11181–00	GASKET, CYLINDER HEAD 1 JOINT, DE CULASSE 1	1	1	1	1		
5	93606–12019	PIN, DOWEL GOUPILLE	2	2	2	2		
6	90105–09006	BOLT, FLANGE BOULON	6	6	6	6		
7	90119–06MA3	BOLT, WITH WASHER BOULON, AVEC RONDELLE	3	3	3	3		
8	6AH–11191–00–1S	COVER, CYLINDER HEAD 1 COUVERCLE, CULASSE 1	1	1	1	1		
9	6AH–11372–00	.NIPPLE, HOSE .RACCORD, TUYAU	1	1	1	1		
10	6AH–11356–00	SEAL, CYLINDER 2 JOINT, SPY CYLINDRE	1	1	1	1		
11	97095–06020	BOLT BOULON	5	5	5	5		
12	92995–06600	WASHER RONDELLE	5	5	5	5		
13	6AH–11168–00	COVER, BREATHER COUVERCLE, RENIFLARD	1	1	1	1		
14	6AH–11169–00	GASKET, BREATHER COVER JOINT, COUVERCLE DE RENIFLARD	1	1	1	1		
15	98507–04010	SCREW, PAN HEAD VIS, TETE TRONCONIQUE	4	4	4	4		
16	92907–04600	WASHER RONDELLE	4	4	4	4		
17	6G8–11325–00	ANODE ANODE	2	2	2	2		
18	97880–05025	SCREW, PAN HEAD VIS, TETE TRONCONIQUE	2	2	2	2		
19	6G8–11197–01	PLUG, BLIND PLOT, BORGNE	2	2	2	2		
20	93210–13M63	O-RING JOINT TORIQUE	2	2	2	2		
21	6G8–15363–00	PLUG, OIL PLOT, HUILE	1	1	1	1		
22	93210–24M79	O-RING JOINT TORIQUE	1	1	1	1		
23	90465–08059	CLAMP BRIDE	1	1	1	1		
24	94702–00418	PLUG, SPARK (NGK DPR6EB) BOUGIE D,ALLUMAGE (NGK DPR6EB)	2	2	2	2		

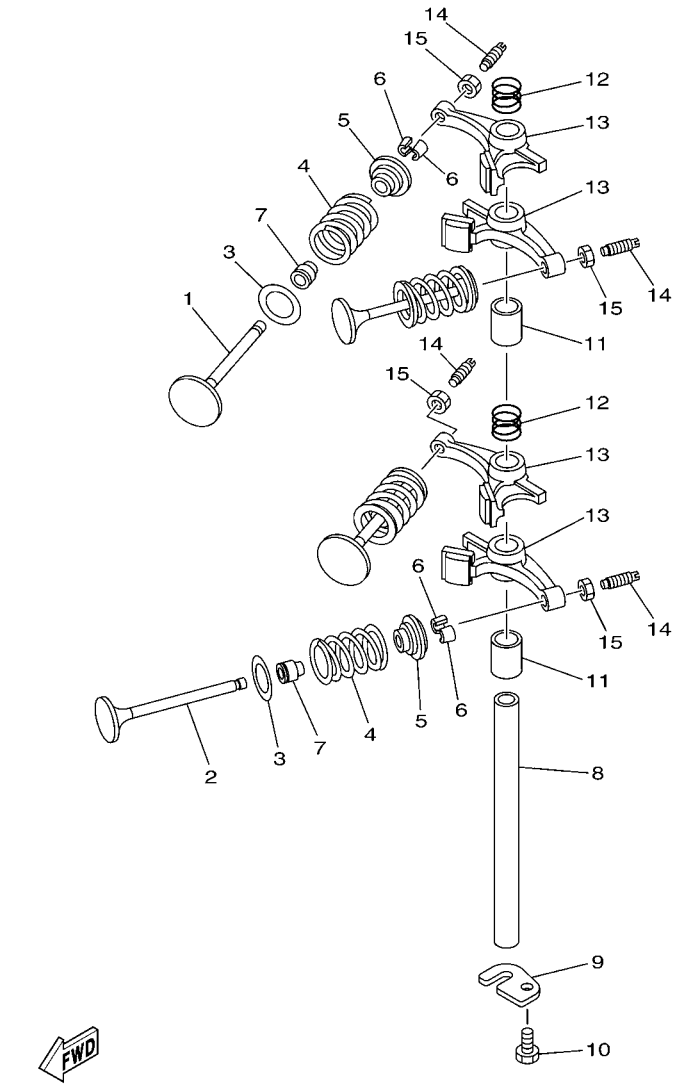

6AH1100-F050

FIG. 5 VALVE — SOUPAPE

REF. NO.	PART NO. N° PIECES	DESCRIPTION DESCRIPTION	MH	EH	E	EP		REMARKS REMARQUES
1	6AH–12111–00	VALVE, INTAKE SOUPAPE, ADMISSION	2	2	2	2		
2	6AH–12121–00	VALVE, EXHAUST SOUPAPE, ECHAPPEMENT	2	2	2	2		
3	62Y–12116–00	SEAT, VALVE SPRING SIEGE, RESSORT DE SOUPAPE	4	4	4	4		
4	3YF–12113–00	SPRING, VALVE INNER RESSORT DE SOUPAPE, INTERNE	4	4	4	4		
5	30X–12117–00	RETAINER, VALVE SPRING BUTEE DE RESSORT DE SOUPAPE	4	4	4	4		
6	30X–12118–00	COTTER, VALVE FRAISE, SOUPAPE	8	8	8	8		
7	51Y–12119–00	SEAL, VALVE STEM JOINT, QUEUE DE SOUPAPE	4	4	4	4		
8	66M–12146–00	SHAFT, ROCKER AXE, CULBUTEUR	1	1	1	1		
9	6AH–12279–00	PLATE PLAQUE	1	1	1	1		
10	97013–06012	BOLT BOULON	1	1	1	1		
11	90387–13006	COLLAR COLLERETTE	2	2	2	2		
12	90501–120A5	SPRING, COMPRESSION RESSORT, COMPRESSION	2	2	2	2		
13	6AH–12151–00	ARM, VALVE ROCKER CULBUTEUR	4	4	4	4		
14	64J–12159–00	SCREW, VALVE ADJUSTING VIS, REGLAGE DE SOUPAPE	4	4	4	4		
15	62Y–12158–00	NUT, LOCK CONTRE-ECROU	4	4	4	4		

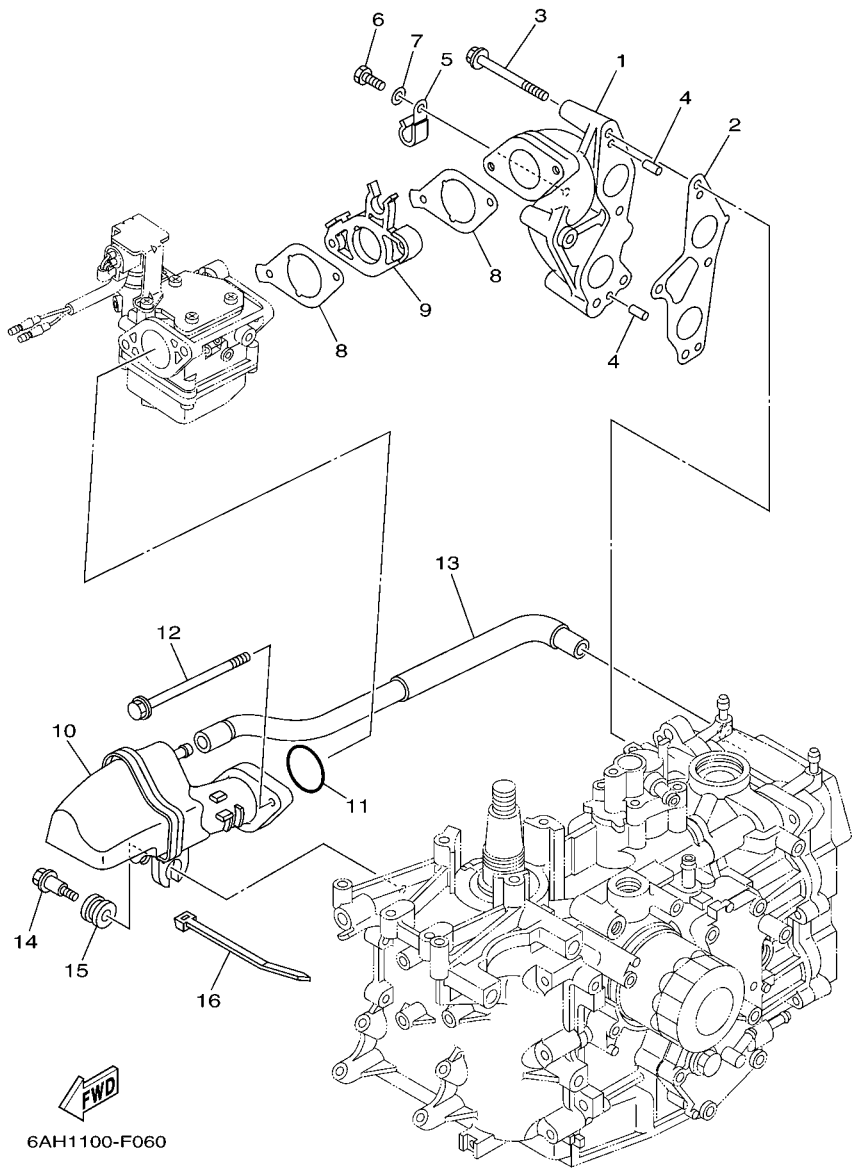

FIG. 6 INTAKE — ADMISSION

REF. NO.	PART NO. N° PIECES	DESCRIPTION DESCRIPTION	MH	EH	E	EP		REMARKS REMARQUES
1	6AH–13641–00–94	MANIFOLD, INTAKE 1 TUBULURE, ADMISSION 1	1	1	1	1		
2	6AH–13645–00	GASKET, MANIFOLD 1 JOINT, TUBULURE 1	1	1	1	1		
3	97595–06555	BOLT, WITH WASHER VIS HEXAGONAL AVC RONDELLE	4	4	4	4		
4	91690–50014	PIN, SPRING AGRAFFE	2	2	2	2		
5	90465–08M83	CLAMP BRIDE	2	2	2	2		
6	97095–06012	BOLT BOULON	2	2	2	2		
7	92995–06600	WASHER RONDELLE	2	2	2	2		
8	6AH–13646–00	GASKET, MANIFOLD 2 JOINT, TUBULURE 2	2	2	2	2		
9	6AH–14271–00	INSULATOR ISOLATEUR	1	1	1	1		
10	6AH–14440–00	SILENCER ASSY, INTAKE SIENCIEUX D'ADMISSION	1	1	1	1		
11	93210–35M86	O-RING JOINT TORIQUE	1	1	1	1		
12	95895–06100	BOLT, FLANGE BOULON	2	2	2	2		
13	6AH–15373–00	PIPE, BREATHER DURITE DE RENIFLARD	1	1	1	1		
14	90109–06MA1	BOLT BOULON	1	1	1	1		
15	90480–16616	GROMMET PASSE-FIL	1	1	1	1		
16	90465–13M18	CLAMP BRIDE	1	1	1	1		

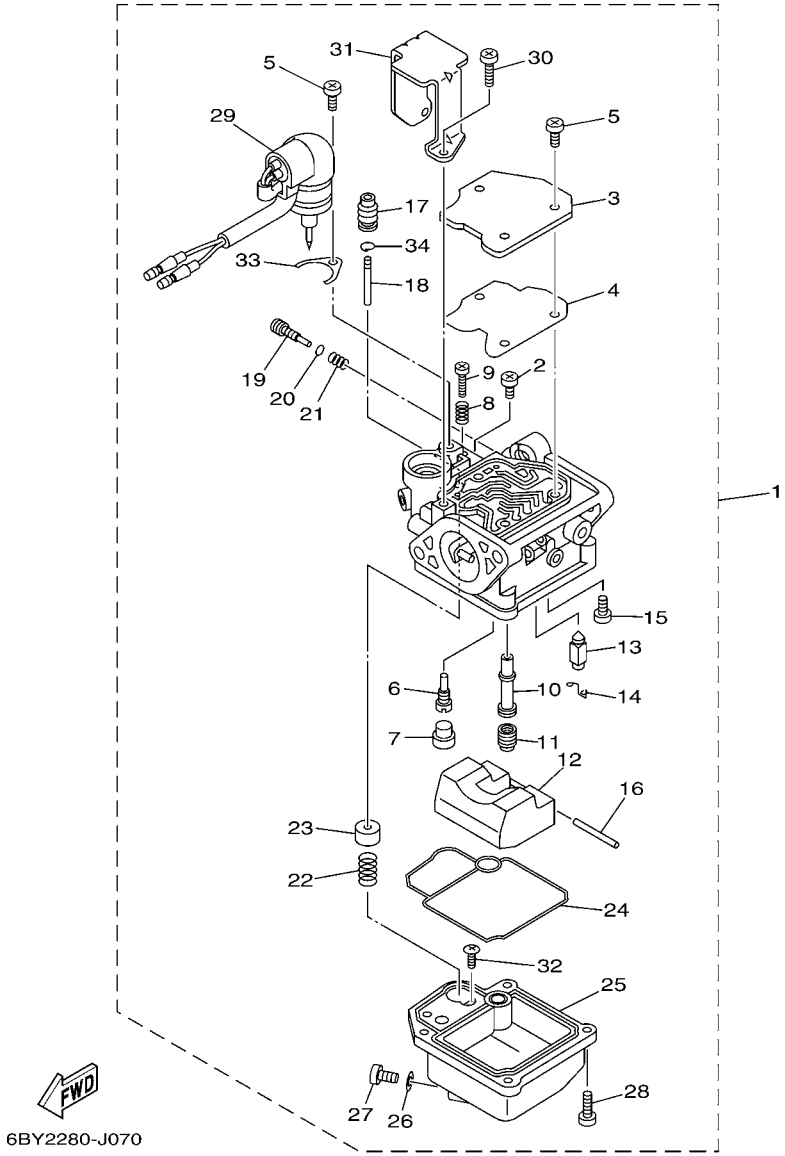

FIG. 7 CARBURETOR CARBURATEUR

REF. NO.	PART NO. N° PIECES	DESCRIPTION DESCRIPTION	MH	EH	E	EP		REMARKS REMARQUES
1	6AH–14301–11	CARBURETOR ASSY 1 CARBURATEUR COMPLET 1	1					F20B F20B
	6AG–14301–11	CARBURETOR ASSY 1 CARBURATEUR COMPLET 1	1					F15C F15C
	6AH–14301–51	CARBURETOR ASSY 1 CARBURATEUR COMPLET 1		1	1	1		F20B F20B
	6AG–14301–51	CARBURETOR ASSY 1 CARBURATEUR COMPLET 1		1	1	1		F15C F15C
2	98580–04006	.SCREW, PAN HEAD .VIS	1	1	1	1		
3	65W–14572–00	.PLATE .PLAQUE	1	1	1	1		
4	65W–14126–10	.GASKET .JOINT	1	1	1	1		
5	97980–04110	.SCREW, WITH WASHER .VIS, AVEC RONDELLE	4	4	4	4		
6	6AG–14948–05	.JET (#45) .GICLEUR (#45)	1					FOR 6AH-14301-11 FOR 6AH-14301-11
	6AG–14948–02	.JET (#38) .GICLEUR (#38)	1					FOR 6AG-14301-11 FOR 6AG-14301-11
	676–14948–05	.JET (#45) .GICLEUR (#45)		1	1	1		FOR 6AH-14301-51 FOR 6AH-14301-51
	6AH–14948–02	.JET (#38) .GICLEUR (#38)		1	1	1		FOR 6AG-14301-51 FOR 6AG-14301-51
7	679–14966–00	.RUBBER CAP .CAOUTCHOUC CASQUILLO	1	1	1	1		
8	90501–10326	.SPRING, COMPRESSION .RESSORT, COMPRESSION	1	1	1	1		
9	63V–14523–00	.SCREW, STOP .VIS, BUTEE	1	1	1	1		
10	6AH–14947–00	.JET, NEEDLE .GICLEUR DE STARTER	1	1	1	1		F20B F20B
	6AH–14947–20	.JET, NEEDLE .GICLEUR DE STARTER	1	1	1	1		F15C F15C
11	65W–14943–29	.JET, MAIN (#112) .GICLEUR, PRINCIPAL (#112)	1	1	1	1		F20B F20B
	676–14943–19	.JET, MAIN (#80) .GICLEUR, PRINCIPAL (#80)	1	1	1	1		F15C F15C
12	6AH–14985–00	.FLOAT .FLOTTEUR	1	1	1	1		
13	6AH–14546–00	.VALVE, NEEDLE .POINTEAU	1	1	1	1		
14	663–14159–00	.CLIP .JONC	1	1	1	1		
15	98580–04008	.SCREW, PAN HEAD .VIS	1	1	1	1		
16	6H4–14548–00	.PIN, FLOAT ARM .AXE, BRAS DE FLOTTEUR	1	1	1	1		
17	65W–14373–02	.COVER, PLUNGER CAP .COUVERCLE DE PLONGEUR	1	1	1	1		
18	6AH–14379–10	.ROD, STARTER .TRINGLE, STARTER	1	1	1	1		F20B F20B
	6AH–14379–00	.ROD, STARTER .TRINGLE, STARTER	1	1	1	1		F15C F15C

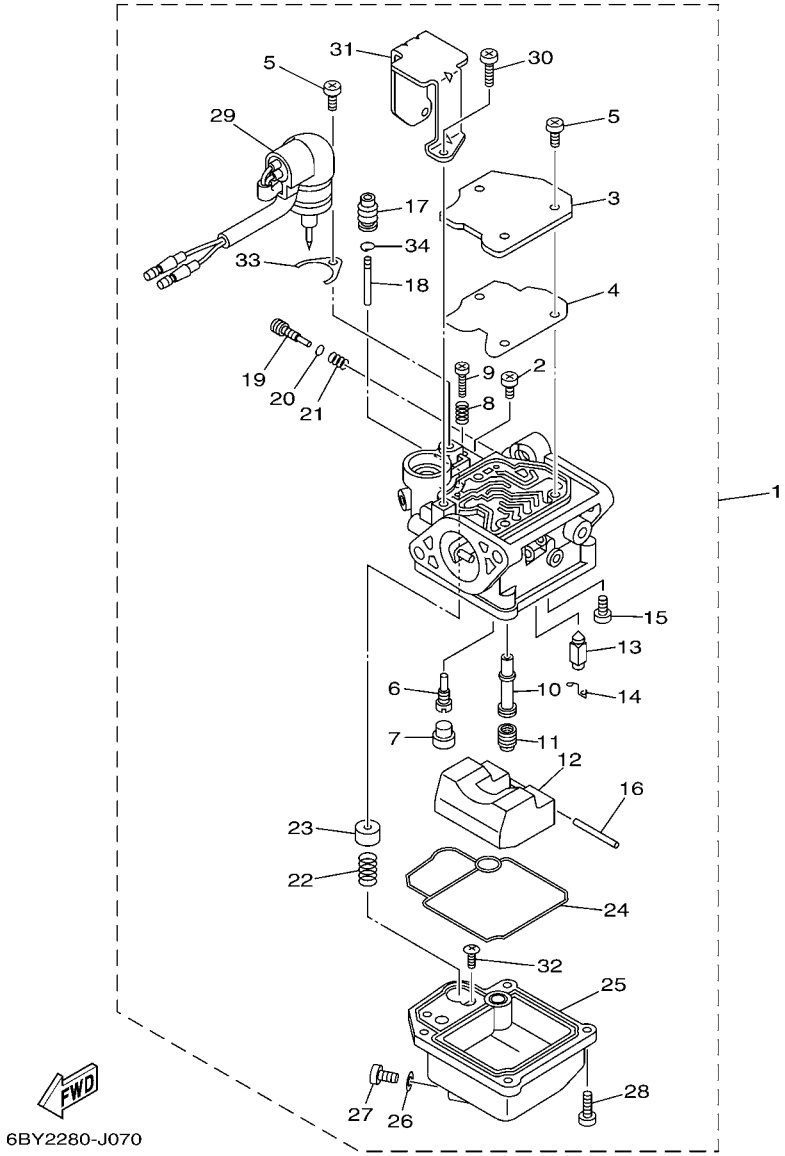

FIG. 7 CARBURETOR CARBURATEUR

REF. NO.	PART NO. N° PIECES	DESCRIPTION DESCRIPTION	MH	EH	E	EP		REMARKS REMARQUES
19	6AH–14923–20	.SCREW, PILOT .VIS, RALENTI	1	1	1	1		
20	67C–14397–00	.O-RING .JOINT TORIQUE	1	1	1	1		
21	67C–14555–00	.SPRING .RESSORT	1	1	1	1		
22	6AH–14335–00	.SPRING, PLUNGER .RESSORT, PLONGEUR	1	1	1	1		F20B F20B
	65W–14335–00	.SPRING, PLUNGER .RESSORT, PLONGEUR	1	1	1	1		F15C F15C
23	6AH–14371–00	.PLUNGER, STARTER .PLONGEUR, STARTER	1	1	1	1		
24	6AH–14384–00	.GASKET, FLOAT CHAMBER .JOINT, CUVE DE FLOTTEUR	1	1	1	1		
25	6AH–14980–00	.BODY, FLOAT CHAMBER .CORPS, CUVE DE FLOTTEUR	1	1	1	1		
26	65W–14398–00	.GASKET .JOINT	1	1	1	1		
27	65W–14992–00	.SCREW, DRAIN .BOUCHON, PURGE	1	1	1	1		
28	97980–04114	.SCREW, WITH WASHER .VIS, AVEC RONDELLE	4	4	4	4		
29	6AH–14380–00	.PRIME STARTER ASSY .STARTER AUTOMATIQUE	1					M-SPEC M-SPEC
	6AH–14380–10	.PRIME STARTER ASSY .STARTER AUTOMATIQUE		1	1	1		E-SPEC E-SPEC
30	97980–04108	.SCREW, WITH WASHER .VIS, AVEC RONDELLE	2	2	2	2		
31	6AH–14346–00	.PLATE .PLAQUE	1	1	1	1		
32	67C–14567–00	.SCREW .VIS	1	1	1	1		
33	65W–14346–00	.PLATE .PLAQUE	1	1	1	1		
34	65W–1439G–00	.CLIP 1 .JONC 1	1	1	1	1		

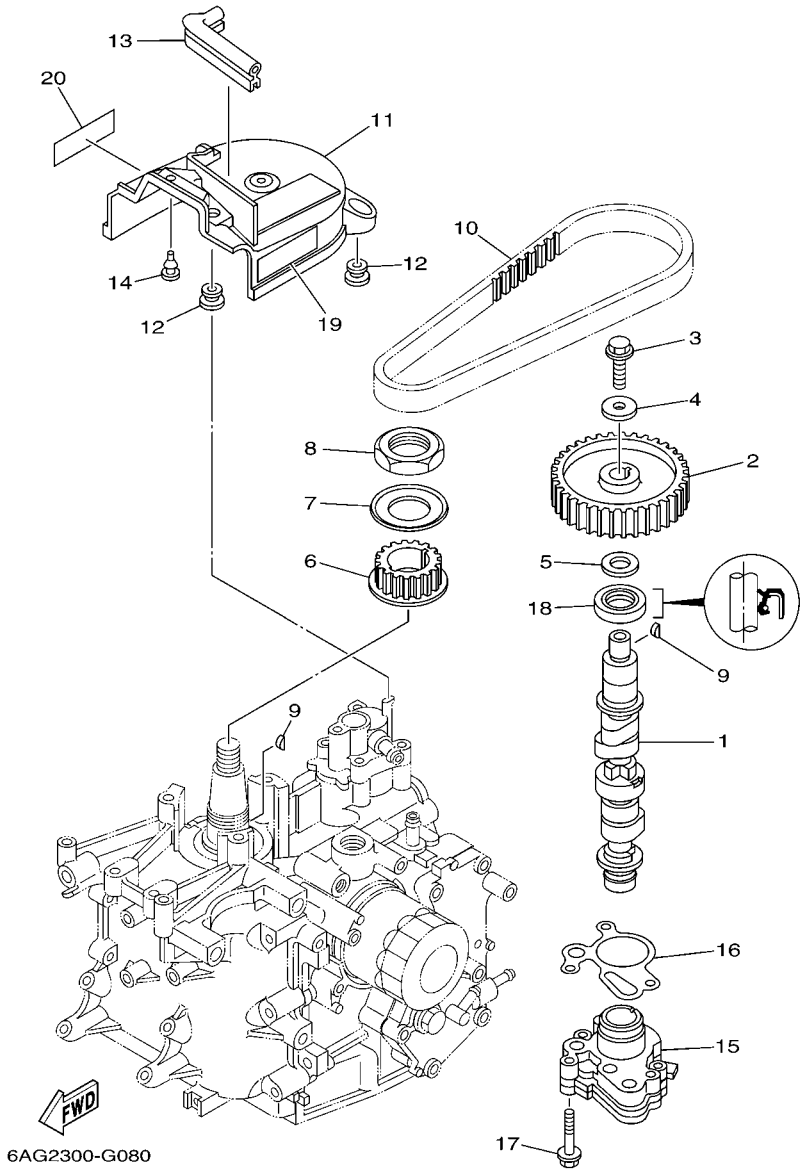

FIG. 8 OIL PUMP — POMPE A HUILE

REF. NO.	PART NO. N° PIECES	DESCRIPTION DESCRIPTION	MH	EH	E	EP		REMARKS REMARQUES
1	6AH–12170–00	CAMSHAFT ASSY 1 ENS ARBRE A CAMES 1	1	1	1	1		F20B F20B
	6AG–12170–00	CAMSHAFT ASSY 1 ENS ARBRE A CAMES 1	1	1	1	1		F15C F15C
2	6AH–11537–00	GEAR, DRIVEN PIGNON SECONDAIRE	1	1	1	1		
3	90105–081A7	BOLT, FLANGE BOULON	1	1	1	1		
4	90201–08784	WASHER, PLATE RONDELLE, PLATE	1	1	1	1		
5	90201–15423	WASHER, PLATE RONDELLE, PLATE	1	1	1	1		
6	6AH–11536–00	GEAR, DRIVE ENGRENAGE, MENANT	1	1	1	1		
7	6AH–11557–00	WASHER 1 RONDELLE 1	1	1	1	1		
8	90170–30003	NUT ECROU	1	1	1	1		
9	90280–03M01	KEY, WOODRUFF CLAVETTE, DEMI-LUNE	2	2	2	2		
10	6AH–46241–00	BELT COURROIE TRAPEZOIDALE	1	1	1	1		
11	6AH–46297–00	COVER, DUST COUVERCLE, POUSSIERE	1	1	1	1		
12	90480–10627	GROMMET PASSE-FIL	3	3	3	3		
13	6AH–42617–00	DAMPER, FORM BOURRELET, CAOUTCHOUC	1	1	1	1		
14	90480–06M19	GROMMET PASSE-FIL	1	1	1	1		
15	6AH–13300–00	OIL PUMP ASSY POMPE A HUILE COMPLETE	1	1	1	1		
16	6AH–13329–00	GASKET, PUMP COVER JOINT, COUVERCLE DE POMPE	1	1	1	1		
17	90105–06035	BOLT, FLANGE BOULON	3	3	3	3		
18	93102–22009	OIL SEAL JOINT SPY	1	1	1	1		
19	6AH–81994–40	LABEL, SAFETY ETIQUETTE, SECURITE	1	1	1	1		
20	6AH–81994–50	LABEL, SAFETY ETIQUETTE, SECURITE	1	1	1	1		

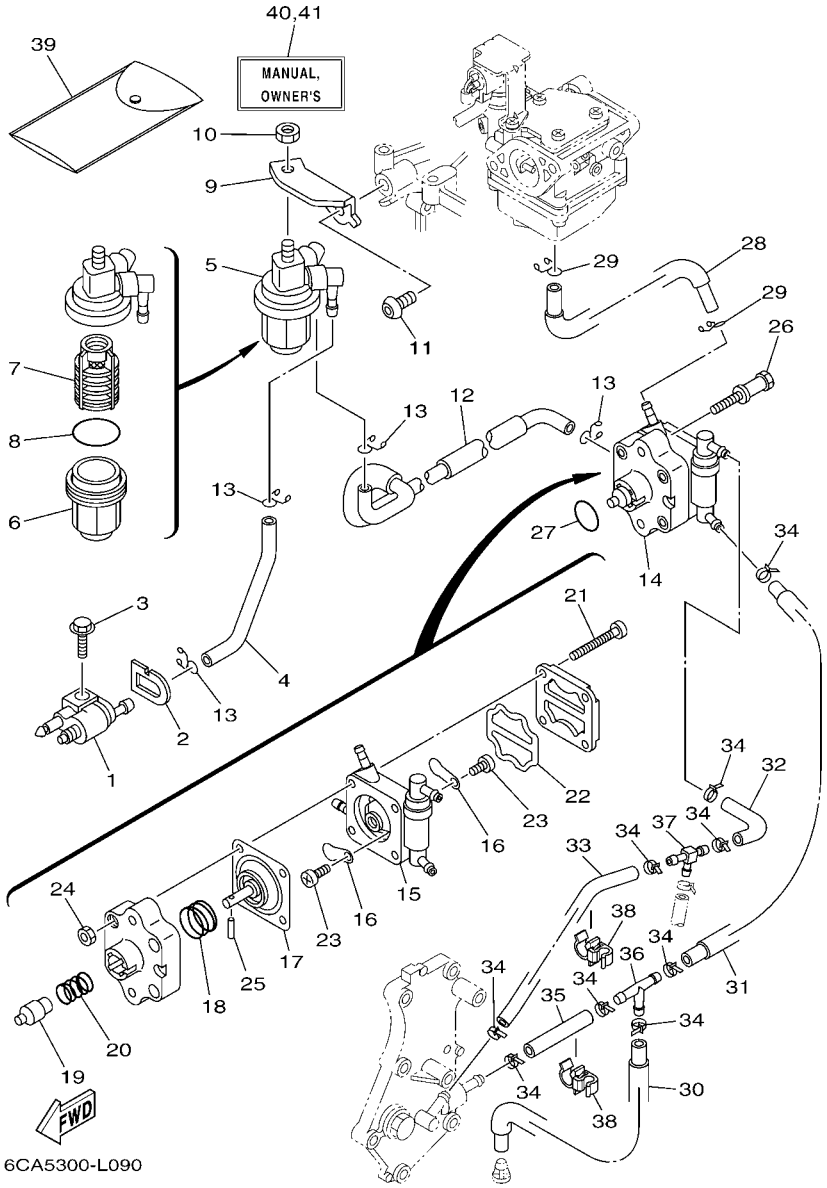

FIG. 9 FUEL CARBURANT

REF. NO.	PART NO. N° PIECES	DESCRIPTION DESCRIPTION	MH	EH	E	EP		REMARKS REMARQUES
1	6G1–24304–02	FUEL PIPE JOINT COMP. 1 DURITE RACCORDEMT. A ESSENCE	1	1	1	1		
2	61N–24329–00	SEAL JOINT	1	1	1	1		
3	95895–06020	BOLT, FLANGE BOULON	1	1	1	1		
4	6AH–24311–00	PIPE, FUEL 1 DURITE A ESSENCE	1	1	1	1		
5	61N–24560–10	FILTER ASSY ENS FILTRE	1	1	1	1		
6	61N–24521–00	.CUP, FILTER .CUVETTE, FILTRE	1	1	1	1		
7	61N–24563–10	.ELEMENT, FILTER .ELEMENT, FILTRE	1	1	1	1		
8	93210–32738	.O-RING .JOINT TORIQUE	1	1	1	1		
9	6AH–24566–00	BRACKET, FILTER SUPPORT, FILTRE	1	1	1	1		
10	95380–08600	NUT ECROU	1	1	1	1		
11	90111–08055	BOLT,HEX. SOCKET BUTTON BOULON	1	1	1	1		
12	6AH–24312–00	PIPE 2 DURITE 2	1	1	1	1		
13	90467–09M17	CLIP JONC	4	4	4	4		
14	6AH–24410–00	FUEL PUMP ASSY POMPE A ESSENCE	1	1	1	1		
15	6AH–24413–00	.BODY 2 .CORPS 2	1	1	1	1		
16	6A0–24421–01	.VALVE, CHECK .SOUPAPE, RETENUE	2	2	2	2		
17	66M–24411–11	.DIAPHRAGM .DIAPHRAGME	1	1	1	1		
18	66M–24423–00	.SPRING, DIAPHRAGM .RESSORT, DIAPHRAGME	1	1	1	1		
19	66M–13131–10	.PLUNGER .PLONGEUR	1	1	1	1		
20	66M–24454–00	.SPRING .RESSORT	1	1	1	1		
21	66M–24444–00	.SCREW .VIS	4	4	4	4		
22	66M–24471–01	.DIAPHRAGM .DIAPHRAGME	1	1	1	1		
23	6E7–14325–00	.SCREW, PAN HEAD .VIS TETE CONIQUE	2	2	2	2		
24	95380–04600	.NUT .ECROU	4	4	4	4		
25	66M–24374–00	.PIN .GOUPILLE	1	1	1	1		
26	90109–06215	BOLT BOULON	2	2	2	2		
27	93210–20M65	O-RING JOINT TORIQUE	1	1	1	1		

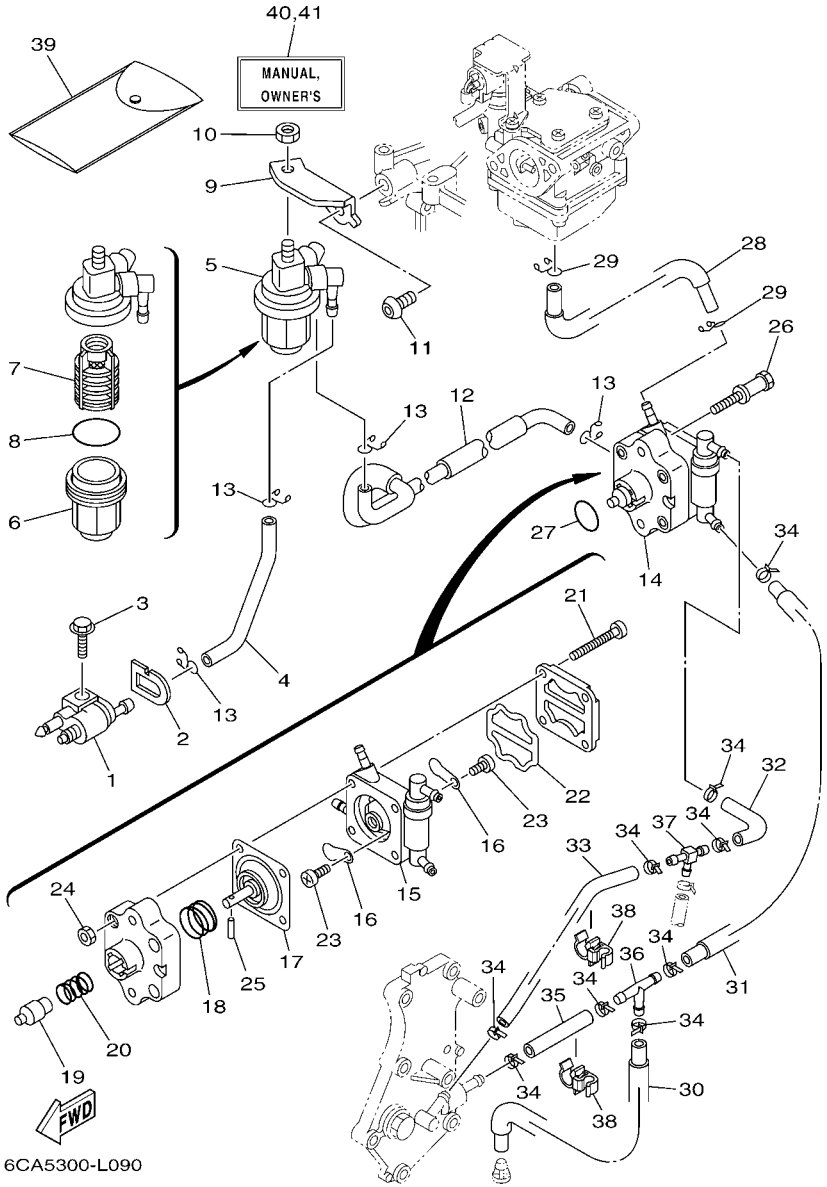

FIG. 9 FUEL CARBURANT

REF. NO.	PART NO. N° PIECES	DESCRIPTION DESCRIPTION	MH	EH	E	EP		REMARKS REMARQUES
28	6AH–24313–00	PIPE 3 DURITE 3	1	1	1	1		
29	90467–09M17	CLIP JONC	2	2	2	2		
30	6AH–24321–00	PIPE 10 DURITE 10	1	1	1	1		
31	6AH–24322–00	PIPE 11 DURITE 11	1	1	1	1		
32	90445–09026	HOSE (L68) DURITE (L68)	1	1	1	1		
33	90445–09082	HOSE (L150) DURITE (L150)	1	1	1	1		
34	90465–11M10	CLAMP BRIDE	9	9	9	9		
35	90445–09061	HOSE (L65) DURITE (L65)	1	1	1	1		
36	688–24378–00	PIPE, JOINT 3 DURITE RACCORDEMENT 3	1	1	1	1		
37	6C5–24378–00	PIPE, JOINT 3 DURITE RACCORDEMENT 3	1	1	1	1		
38	90464–09018	CLAMP BRIDE	2	2	2	2		
39	62Y–28100–00	TOOL KIT TROUSSE A OUTILS	1	1	1	1		AP AP
40	6AG–28199–76–E0	MANUAL,OWNER'S MANUEL D'UTILISATION	1	1	1	1		UR (E) UR (E)
	6AG–28199–76–F0	MANUAL,OWNER'S MANUEL D'UTILISATION	1	1	1	1		UR (F) UR (F)
	6AG–28199–76–S0	MANUAL,OWNER'S MANUEL D'UTILISATION	1	1	1	1		UR (ES) UR (ES)
	6AG–28199–76–G0	MANUAL,OWNER'S MANUEL D'UTILISATION	1	1	1	1		UR (D) UR (D)
	6AG–28199–76–D0	MANUAL,OWNER'S MANUEL D'UTILISATION	1	1	1	1		UR (NL) UR (NL)
	6AG–28199–76–H0	MANUAL,OWNER'S MANUEL D'UTILISATION	1	1	1	1		UR (I) UR (I)
41	6AG–28199–86–K0	MANUAL,OWNER'S MANUEL D'UTILISATION	1	1	1	1		UR (DK) UR (DK)
	6AG–28199–86–R0	MANUAL,OWNER'S MANUEL D'UTILISATION	1	1	1	1		UR (GR) UR (GR)
	6AG–28199–86–P0	MANUAL,OWNER'S MANUEL D'UTILISATION	1	1	1	1		UR (P) UR (P)
	6AG–28199–86–N0	MANUAL,OWNER'S MANUEL D'UTILISATION	1	1	1	1		UR (N) UR (N)
	6AG–28199–86–M0	MANUAL,OWNER'S MANUEL D'UTILISATION	1	1	1	1		UR (S) UR (S)
	6AG–28199–86–L0	MANUAL,OWNER'S MANUEL D'UTILISATION	1	1	1	1		UR (SF) UR (SF)

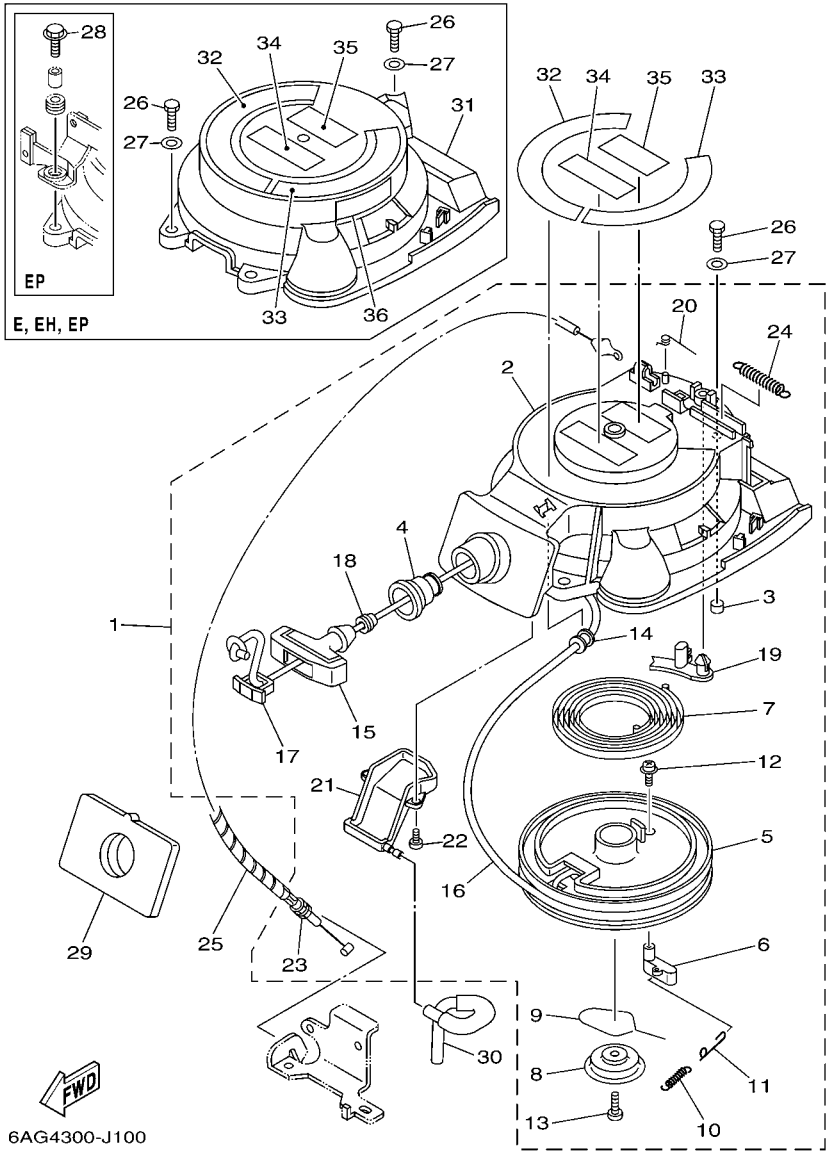

*1:CUT FROM 50M ROLLS,PART NO.90890-44373,CUTTING LENGTH 1.8M

*1:A PRELEVER SUR BOBINE 50M ,REFERENCE 90890-44373,
LONGUEUR DE COUPE 1.8M

FIG. 10 STARTER DEMARREUR

REF. NO.	PART NO. N° PIECES	DESCRIPTION DESCRIPTION	MH	EH	E	EP		REMARKS REMARQUES
1	6AH–15710–01	STARTER ASSY DEMARREUR COMPLET	1					
2	6AH–15711–00	.CASE, STARTER .CARTER DE DEMARREUR	1					
3	67D–15764–00	.COLLAR 1 .COLLERETTE 1	3					
4	6AH–15795–00	.GUIDE, ROPE .GUIDE DE CABLE	1					
5	63V–15714–00	.DRUM, SHEAVE .TAMBOUR, POULIE	1					
6	6AH–15741–10	.PAWL, DRIVE .CLIQUET, ENTRAINEMENT	1					
7	63V–15713–00	.SPRING, STARTER .RESSORT DE DEMARREUR	1					
8	68T–15716–00	.PLATE, DRIVE .PLAQUE, ENTRAINEMENT	1					
9	63V–15705–01	.SPRING, DRIVE PAWL .RESSORT DE CLIQUET	1					
10	63V–15767–01	.SPRING .RESSORT	1					
11	68T–15784–00	.SPRING, RETURN .RESSORT, RAPPEL	1					
12	63V–15793–00	.SCREW .VIS	1					
13	68T–15793–00	.SCREW .VIS	1					
14	68T–15764–00	.COLLAR 1 .COLLERETTE 1	1					
15	689–15755–01	.HANDLE, STARTER .POIGNEE, DE DEMARREUR	1					
16	*	.WIRE, STARTER (L:1800MM) .CABLE DE DEMARREUR (L:1800MM)	1					*1 *1
17	6F5–15779–02	.COVER .COUVERCLE	1					
18	6A0–15789–00	.DAMPER .AMORTISSEUR	1					
19	66T–15794–00	.STOPPER .BUTEE	1					
20	66T–15734–00	.SPRING, RETURN .RESSORT, RAPPEL	1					
21	6AH–15782–00	.COVER, SHEAVE .COUVERCLE, POULIE	1					
22	6AH–15793–00	.SCREW .VIS	2					
23	6AH–15770–00	.CABLE COMP., STARTER STOP .CABLE, BUTEE DE DEMAR	1					
24	66T–15731–00	.SPRING, RETURN .RESSORT, RAPPEL	1					
25	90446–06M90	HOSE (L120) DURITE (L120)	1					
26	97095–06020	BOLT BOULON	3	3	3			
	97095–06020	BOLT BOULON				1		

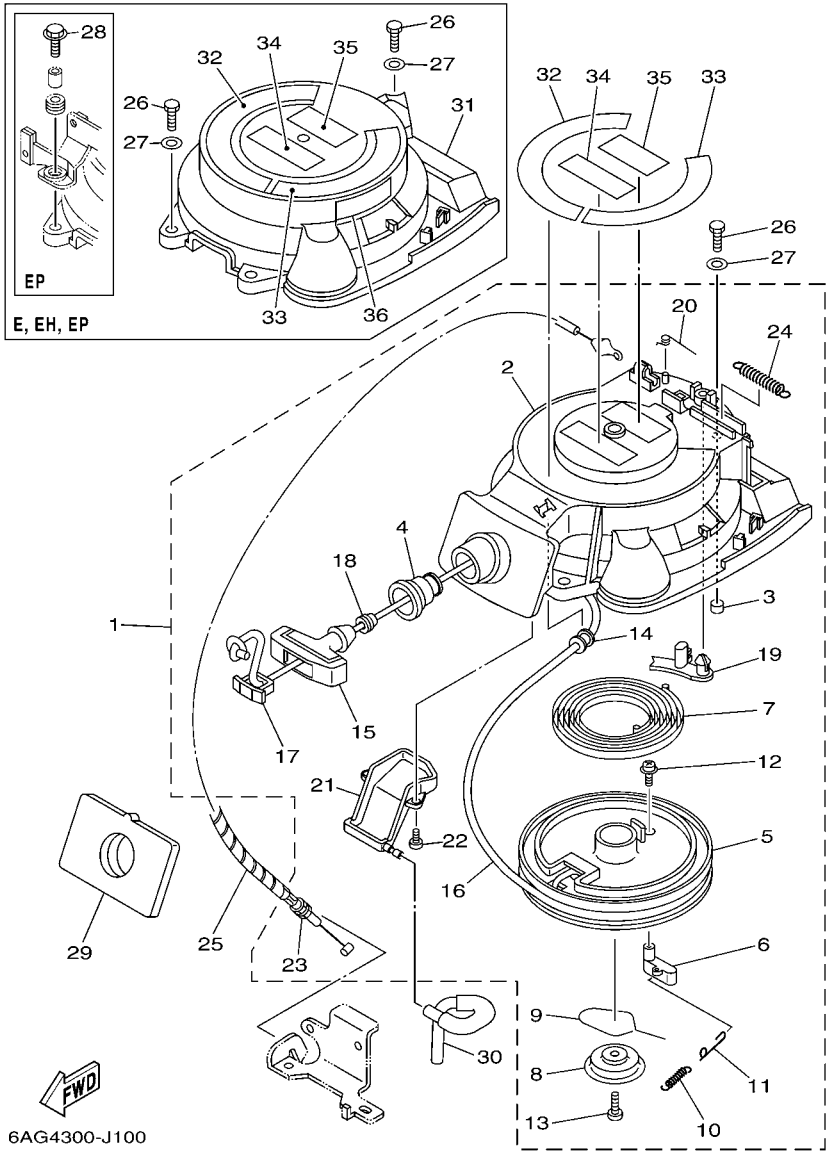

*1:CUT FROM 50M ROLLS,PART NO.90890-44373,CUTTING LENGTH 1.8M

*1:A PRELEVER SUR BOBINE 50M ,REFERENCE 90890-44373,
LONGUEUR DE COUPE 1.8M

FIG. 10 STARTER DEMARREUR

REF. NO.	PART NO. N° PIECES	DESCRIPTION DESCRIPTION	MH	EH	E	EP		REMARKS REMARQUES
27	92995–06600	WASHER RONDELLE	3	3	3			
	92995–06600	WASHER RONDELLE				1		
28	90119–06169	BOLT, WITH WASHER BOULON, AVEC RONDELLE				2		
29	6AH–15762–00	SEAL, RUBBER 2 JOINT CAOUTCHOUC 2	1					
30	6AH–24316–00	PIPE 6 DURITE 6	1					
31	6AH–81337–00	COVER, FLYWHEEL COUVERCLE, VOLANT		1	1	1		
32	6AH–14427–60	LABEL, INSTRUCTION ETIQUETTE, INSTRUCTION	1	1	1	1		
33	6AH–13437–60	MARK, CAUTION MAKER	1	1	1	1		
34	6AH–81995–40	LABEL, WARNING ETIQUETTE, AVERTISSEMENT	1	1	1	1		
35	6AH–81995–50	LABEL, WARNING ETIQUETTE, AVERTISSEMENT	1	1	1	1		
36	6AG–81996–00	MARK MARQUE			1	1		

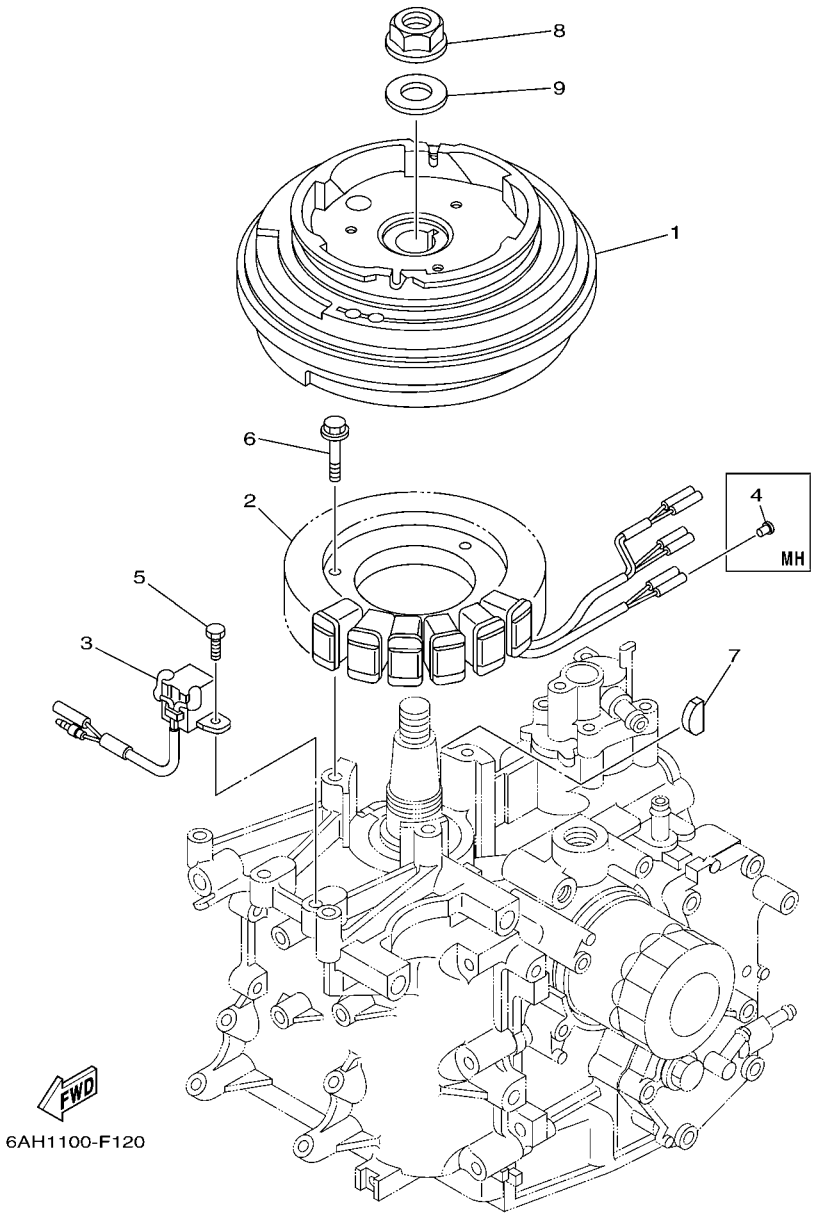

FIG. 11 GENERATOR GENERATRICE

REF. NO.	PART NO. N° PIECES	DESCRIPTION DESCRIPTION	MH	EH	E	EP		REMARKS REMARQUES
1	6AH–85550–00	ROTOR ASSY ROTOR CPLT	1					
	6AH–85550–10	ROTOR ASSY ROTOR CPLT		1	1	1		
2	6AH–85510–00	STATOR ASSY STATOR CPLT	1	1	1	1		
3	6AH–85580–00	COIL, PULSER BOBINE, PULSEUR	1	1	1	1		
4	703–82119–00	COVER, LEAD WIRE GARNITURE, FIL	2					
5	97095–05012	BOLT BOULON	2	2	2	2		
6	95895–06030	BOLT, FLANGE BOULON	3	3	3	3		
7	90280–05013	KEY, WOODRUFF CLAVETTE, DEMI-LUNE	1	1	1	1		
8	90179–16M05	NUT ECROU	1	1	1	1		
9	90201–16M44	WASHER, PLATE RONDELLE, PLATE	1	1	1	1		

FIG. 12 ELECTRICAL 1 PARTIE ELECTRIQUE 1

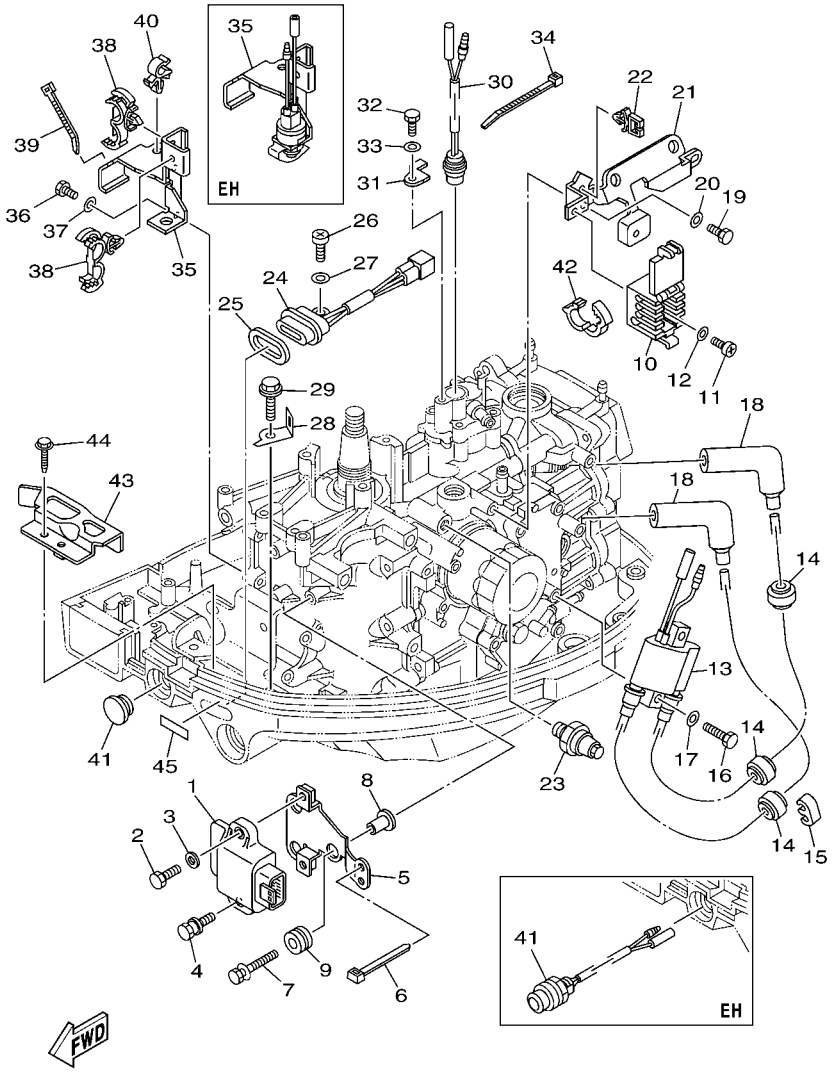

REF. NO.	PART NO. N° PIECES	DESCRIPTION DESCRIPTION	MH	EH	E	EP		REMARKS REMARQUES
1	6AH–85540–10	C.D.I. UNIT ASSY BLOC C.D.I.	1	1	1	1		F20B F20B
	6AH–85540–00	C.D.I. UNIT ASSY BLOC C.D.I.	1	1	1	1		F15C F15C
2	97095–06020	BOLT BOULON	1	1	1	1		
3	92995–06600	WASHER RONDELLE	1	1	1	1		
4	90109–06221	BOLT BOULON	1	1	1	1		
5	6AH–81948–00	BRACKET SUPPORT	1	1	1	1		
6	90465–13M18	CLAMP BRIDE	1	1	1	1		
7	90119–06M35	BOLT, WITH WASHER BOULON, AVEC RONDELLE	3	3	3	3		
8	90387–06M60	COLLAR COLLERETTE	3	3	3	3		
9	90480–10M23	GROMMET PASSE-FIL	3	3	3	3		
10	6AH–82522–00	CLAMP, COUPLER BRIDE, DE CONNECTEUR	1	1	1	1		
11	97880–06010	SCREW, PAN HEAD VIS, TETE TRONCONIQUE	1	1	1	1		
12	90201–06M05	WASHER, PLATE RONDELLE, PLATE	1	1	1	1		
13	6F5–85570–13	IGNITION COIL ASSY BOBINE D'ALLUMAGE (ENS.)	1	1	1	1		
14	90480–25003	GROMMET PASSE-FIL	3	3	3	3		
15	67F–82361–00	CLAMP, CORD COLLIER, CORDON	1	1	1	1		
16	97095–06025	BOLT BOULON	2	2	2	2		
17	92995–06600	WASHER RONDELLE	2	2	2	2		
18	6AH–82370–00	PLUG CAP ASSY ANTIPARASITE	2	2	2	2		
19	97095–06014	BOLT BOULON	2	2	2	2		
20	92995–06600	WASHER RONDELLE	2	2	2	2		
21	6AH–85542–00	BRACKET SUPPORT	1	1	1	1		
22	90464–07M56	CLAMP BRIDE	2	2	2	2		
23	64J–82504–00	OIL PRESSURE SWITCH ASSY CONTACTEUR DE PRESSION D'HUILE	1	1	1	1		
24	62Y–84301–00	PILOT LIGHT ASSY 1 LAMPE-TEMOIN 1	1	1	1	1		
25	6H4–83589–00	GASKET GARNITURE	1	1	1	1		
26	97885–06012	SCREW, PAN HEAD VIS, A ENCOCHE	1	1	1	1		

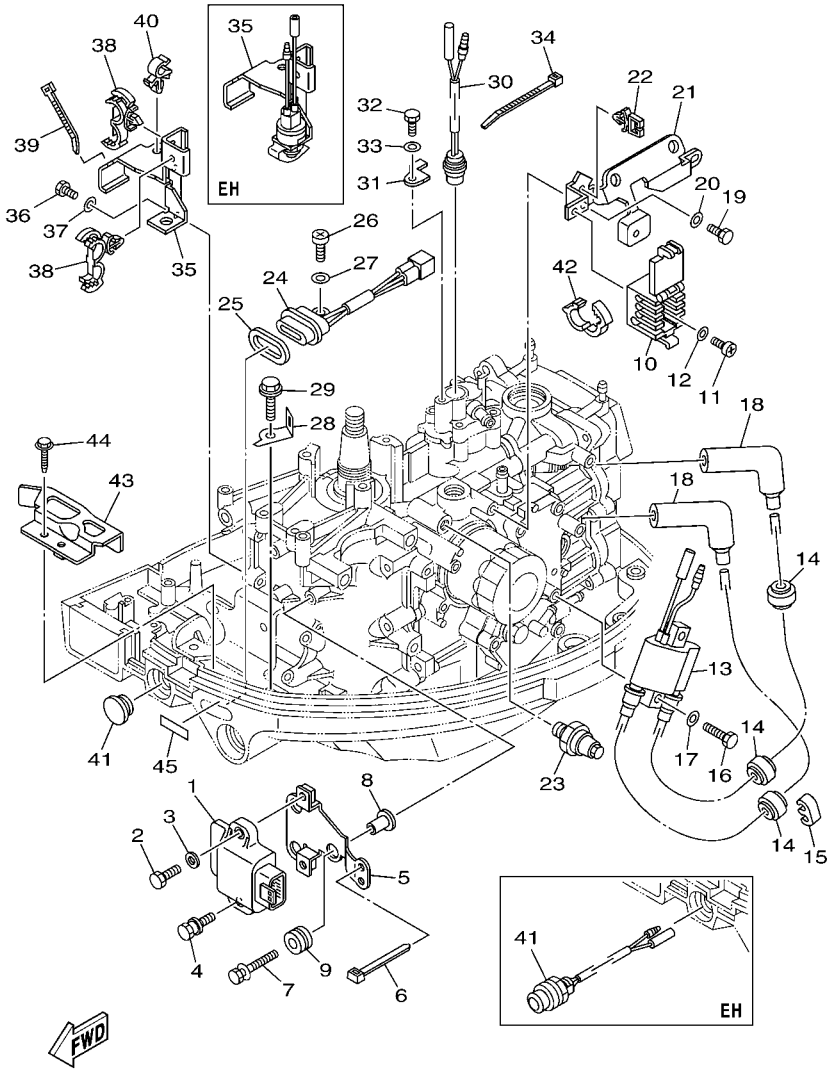

FIG. 12 ELECTRICAL 1 PARTIE ELECTRIQUE 1

REF. NO.	PART NO. N° PIECES	DESCRIPTION DESCRIPTION	MH	EH	E	EP		REMARKS REMARQUES
27	92995–06600	WASHER RONDELLE	1	1	1	1		
28	6AH–82388–00	PLATE PLAQUETTE	1	1	1			
29	90109–06M86	BOLT BOULON	1	1	1			
30	6AH–82560–00	THERMO SWITCH ASSY THERMO-CONTACT COMPLET	1	1	1	1		
31	6AH–82588–00	PLATE PLAQUE	1	1	1	1		
32	97095–06014	BOLT BOULON	1	1	1	1		
33	92995–06600	WASHER RONDELLE	1	1	1	1		
34	90465–11M10	CLAMP BRIDE	1	1	1	1		
35	6AH–82554–00	STAY, NEUTRAL SWITCH SUPPORT, CONT DE POINT-MORT	1		1	1		
	6AH–82540–01	NEUTRAL SWITCH ASSY CONTACTEUR DE POINT-MORT		1				
36	97095–06016	BOLT BOULON	2	2	2	2		
37	92995–06600	WASHER RONDELLE	2	2	2	2		
38	90464–18246	CLAMP BRIDE	2	2	2	2		
39	90465–13M18	CLAMP BRIDE	1	1		1		
40	90464–10M32	CLAMP BRIDE	1	1	1	1		
41	6G1–42725–00	GROMMET PASSE-FIL	1		1	1		
	68T–81870–00	STARTING SWITCH ASSY CONTACT A CLEF		1				
42	90464–16003	CLAMP BRIDE	1	1				
	90464–16001	CLAMP BRIDE			1	1		
43	6AH–82389–00	PLATE 2 PLAQUETTE 2	1	1	1	1		
44	90109–06M86	BOLT BOULON	1	1	1	1		
45	67C–85415–00	MARK, SIGNAL LAMP ETIQUETTE	1	1	1	1		

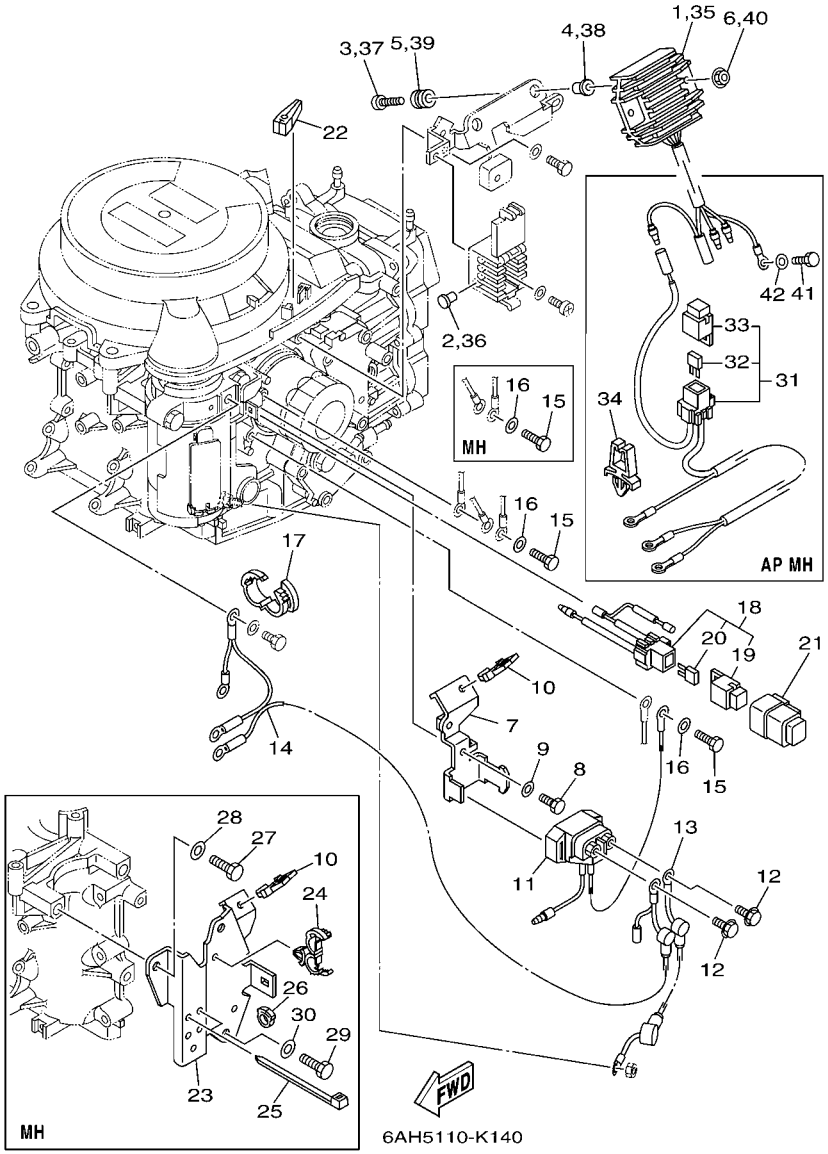

FIG. 13 ELECTRICAL 2 — PARTIE ELECTRIQUE 2

REF. NO.	PART NO. N° PIECES	DESCRIPTION DESCRIPTION	MH	EH	E	EP		REMARKS REMARQUES
1	6AH–81960–00	RECTIFIER & REGULATOR ASSY REDRESSEUR REGULATEUR CPLT		1	1	1		
2	703–82119–00	COVER, LEAD WIRE GARNITURE, FIL		1	1	1		
3	98980–06030	SCREW, BIND VIS, DE PRESSION		2	2	2		
4	90387–06M70	COLLAR COLLERETTE		2	2	2		
5	90480–13M24	GROMMET PASSE-FIL		2	2	2		
6	95780–06500	NUT, FLANGE ECROU		2	2	2		
7	6AH–81945–00	PLATE, SWITCH FITTING PLAQUE, FIXATION DU RELAIS		1	1	1		
8	97095–06014	BOLT BOULON		1	1	1		
9	92995–06600	WASHER RONDELLE		1	1	1		
10	90464–08004	CLAMP BRIDE	1	1	1	1		
11	68T–81940–00	STARTER RELAY ASSY LANCEUR RELAIS (ENS.)		1	1	1		
12	97595–06610	BOLT, WITH WASHER VIS HEXAGONAL AVC RONDELLE		2	2	2		
13	6AH–82117–00	WIRE, LEAD FIL		1	1	1		
14	6AH–82105–00	WIRE HARNESS FAISCEAU DE FILS		1	1	1		
15	97095–06014	BOLT BOULON	1					
	97095–06014	BOLT BOULON		2	2	2		
16	92995–06600	WASHER RONDELLE	1					
	92995–06600	WASHER RONDELLE		2	2	2		
17	90464–16001	CLAMP BRIDE		1	1	1		
18	6AH–82150–00	FUSE HOLDER ASSY SUPPORT DE FUSIBLE		1	1	1		
19	67F–8215B–10	.CAP (YELLOW) .BOUCHON (YELLOW)		1	1	1		
20	67F–82151–00	.FUSE (20A) .FUSIBLE (20A)		2	2	2		
21	6AH–82157–00	DAMPER AMORTISSEUR		1	1	1		
22	67F–2812A–00	PULLER, FUSE TENDEUR, FUSIBLE		1	1	1		
23	6AH–82398–00	PLATE 3 PLAQUETTE 3	1					
24	90464–18246	CLAMP BRIDE	1					
25	90465–13M18	CLAMP BRIDE	3					

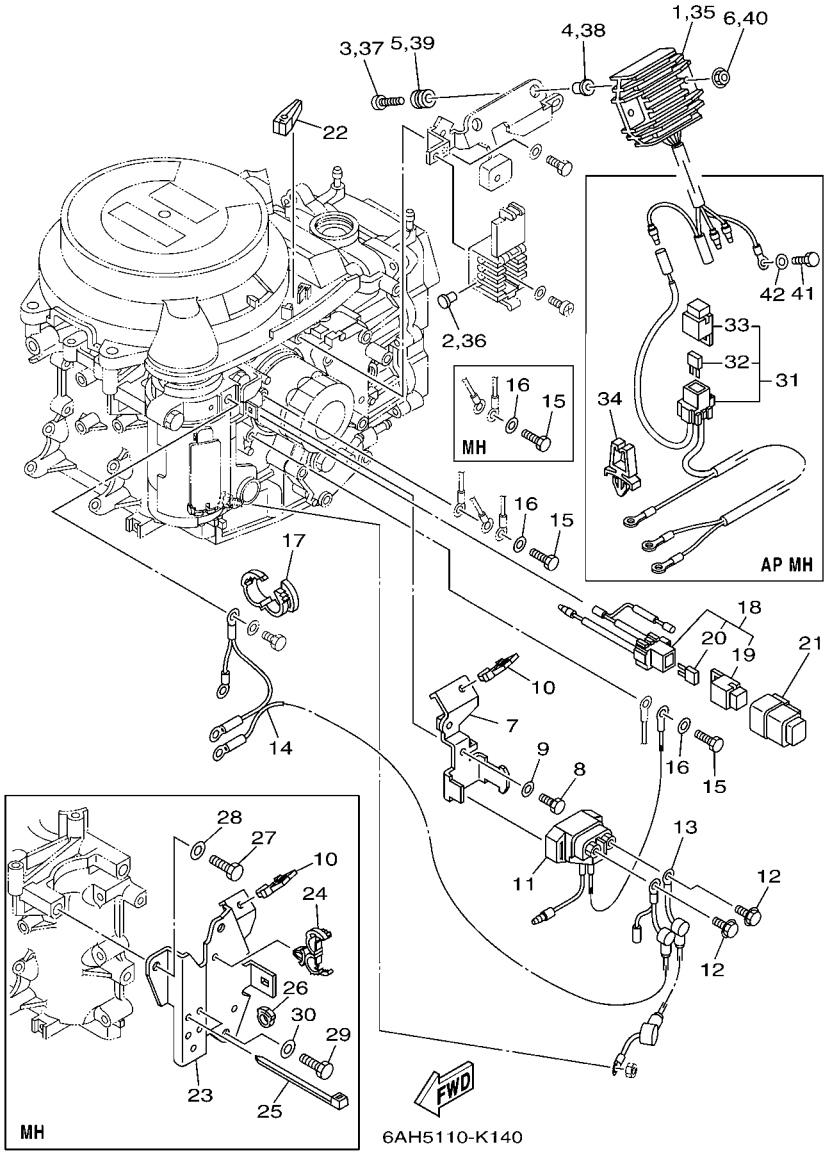

FIG. 13 ELECTRICAL 2 — PARTIE ELECTRIQUE 2

REF. NO.	PART NO. N° PIECES	DESCRIPTION DESCRIPTION	MH	EH	E	EP		REMARKS REMARQUES
26	90464–09010	CLAMP BRIDE	1					
27	97095–08025	BOLT BOULON	2					
28	92995–08600	WASHER RONDELLE	2					
29	97095–08016	BOLT BOULON	1					
30	92995–08600	WASHER RONDELLE	1					
31	6AH–81949–00	WIRE, LEAD FIL	1					AP AP
32	67F–82151–00	.FUSE (20A) .FUSIBLE (20A)	2					
33	67F–8215B–00	.CAP (BLACK) .BOUCHON (NOIR)	1					
34	90464–06001	CLAMP BRIDE	1					AP AP
35	6AH–81960–00	RECTIFIER & REGULATOR ASSY REDRESSEUR REGULATEUR CPLT	1					AP AP
36	703–82119–00	COVER, LEAD WIRE GARNITURE, FIL	1					AP AP
37	98980–06030	SCREW, BIND VIS, DE PRESSION	2					AP AP
38	90387–06M70	COLLAR COLLERETTE	2					AP AP
39	90480–13M24	GROMMET PASSE-FIL	2					AP AP
40	95780–06500	NUT, FLANGE ECROU	2					AP AP
41	97095–06014	BOLT BOULON	1					AP AP
42	92995–06600	WASHER RONDELLE	1					AP AP

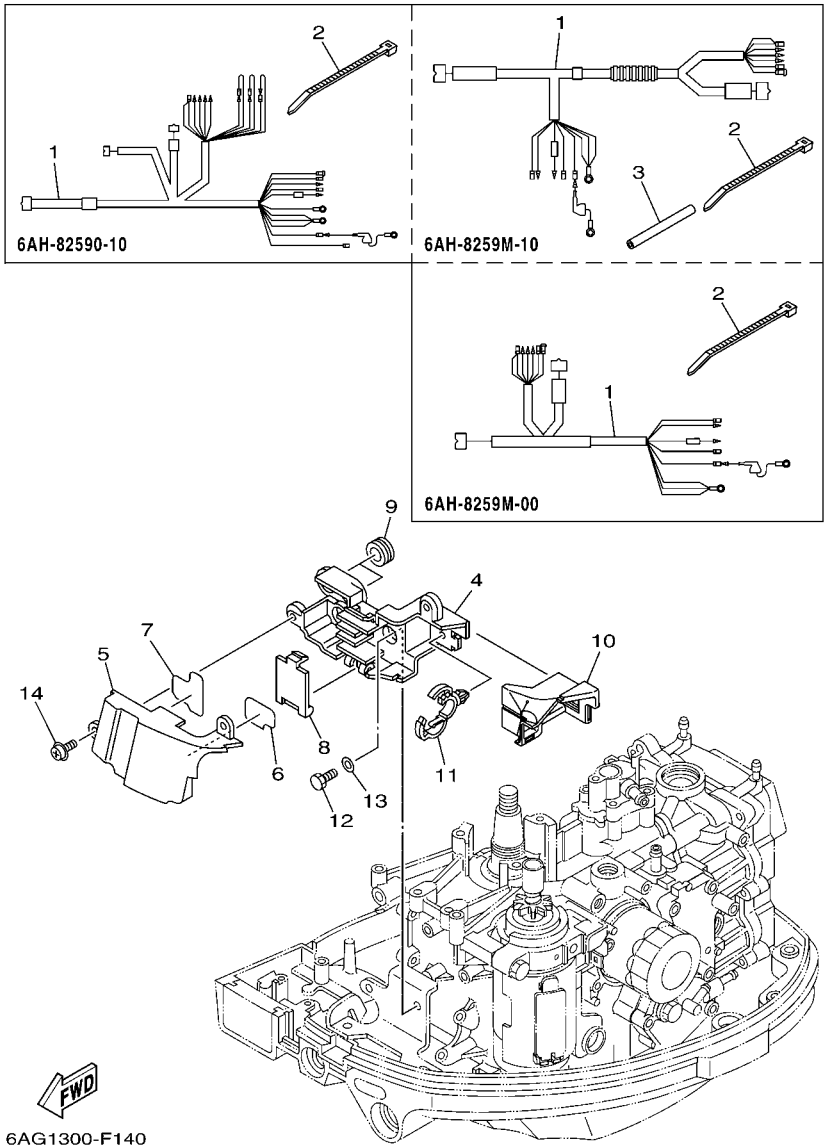

FIG. 14 ELECTRICAL 3 — PARTIE ELECTRIQUE 3

REF. NO.	PART NO. N° PIECES	DESCRIPTION DESCRIPTION	MH	EH	E	EP		REMARKS REMARQUES
1	6AH–8259M–10	WIRE HARNESS ASSY 2 FAISCEAU DE FILS	1					
	6AH–8259M–00	WIRE HARNESS ASSY 2 FAISCEAU DE FILS		1				
	6AH–82590–10	WIRE HARNESS ASSY FAISCEAU DE FILS COMPLET			1			
2	90465–13M18	CLAMP BRIDE	1	1	1			
3	90445–08029	HOSE DURITE	1					
4	6AH–8552A–00	HOUSING CARTER	1	1	1			
5	6AH–8552E–00	COVER, CASE COUVERCLE	1	1	1			
6	6AH–42735–30	PROTECTOR PROTECTEUR	1	1	1			
7	6AH–42735–40	PROTECTOR PROTECTEUR	1	1	1			
8	6AH–85537–00	COVER COUVERCLE	1	1	1			
9	90480–19368	GROMMET PASSE-FIL	2	2	2			
10	6AH–85547–00	DAMPER AMORTISSEUR	1	1	1			
11	90464–20181	CLAMP BRIDE	1	1	1			
12	97095–06014	BOLT BOULON	2	2	2			
13	92995–06600	WASHER RONDELLE	2	2	2			
14	97985–06214	SCREW, WITH WASHER VIS, AVEC RONDELLE	2	2	2			

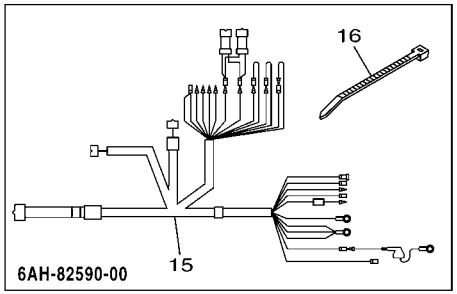

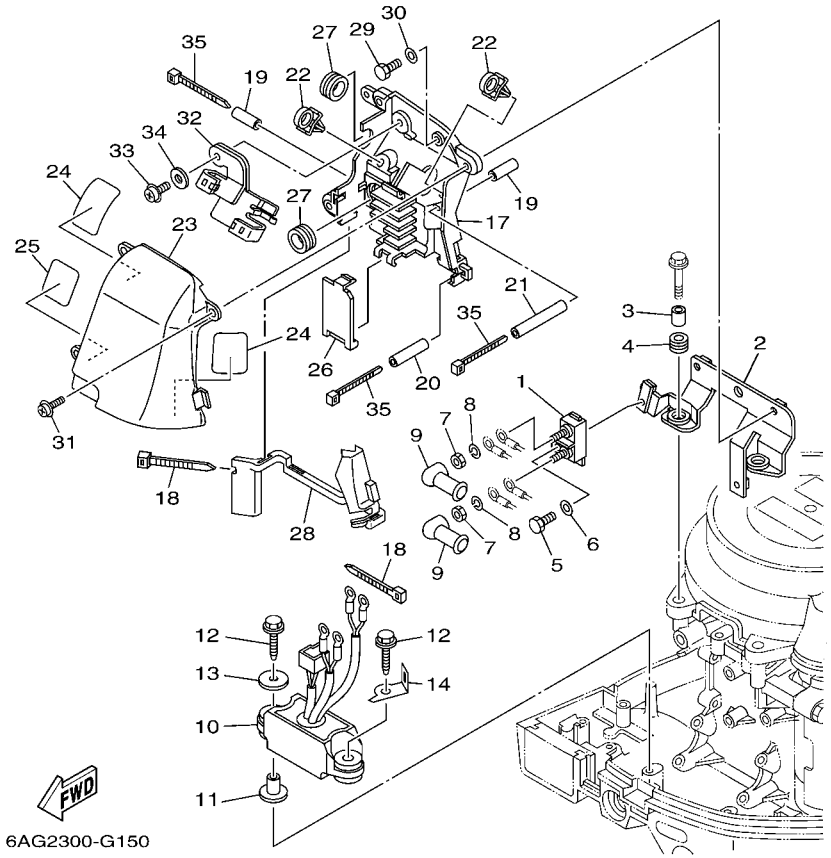

FIG. 15 ELECTRICAL 4 — PARTIE ELECTRIQUE 4

REF. NO.	PART NO. N° PIECES	DESCRIPTION DESCRIPTION	MH	EH	E	EP		REMARKS REMARQUES
1	6H5–81925–00	TERMINAL BORNE				1		
2	6AH–81929–01	BRACKET, TERMINAL SUPPORT				1		
3	90387–06182	COLLAR COLLERETTE				2		
4	6AH–82317–00	DAMPER, IGNITION COIL AMORTISSEUR, BOBINE D'ALLUM				2		
5	97095–06014	BOLT BOULON				1		
6	92995–06600	WASHER RONDELLE				1		
7	90170–06M30	NUT ECROU				2		
8	90204–06M00	WASHER, SPRING RONDELLE, GROWER				2		
9	6G5–82119–00	COVER, LEAD WIRE GARNITURE, FIL				2		
10	6AH–81950–00	RELAY ASSY RELAIS COMPLET				1		
11	90387–06M03	COLLAR COLLERETTE				2		
12	90109–06MA2	BOLT BOULON				2		
13	90201–06416	WASHER, PLATE RONDELLE, PLATE				1		
14	6AH–82388–00	PLATE PLAQUETTE				1		
15	6AH–82590–00	WIRE HARNESS ASSY FAISCEAU DE FILS COMPLET				1		
16	90465–13M18	CLAMP BRIDE				1		
17	6AH–8552A–10	HOUSING CARTER				1		
18	90465–13M18	CLAMP BRIDE				2		
19	90445–07025	HOSE DURITE				2		
20	90445–07026	HOSE DURITE				1		
21	90445–07027	HOSE DURITE				1		
22	90464–12001	CLAMP BRIDE				2		
23	6AH–8552E–10	COVER, CASE COUVERCLE				1		
24	6AH–42735–10	PROTECTOR PROTECTEUR				2		
25	6AH–42735–20	PROTECTOR PROTECTEUR				1		
26	6AH–85537–10	COVER COUVERCLE				1		
27	90480–19368	GROMMET PASSE-FIL				2		

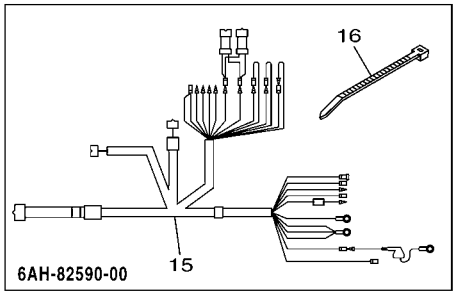

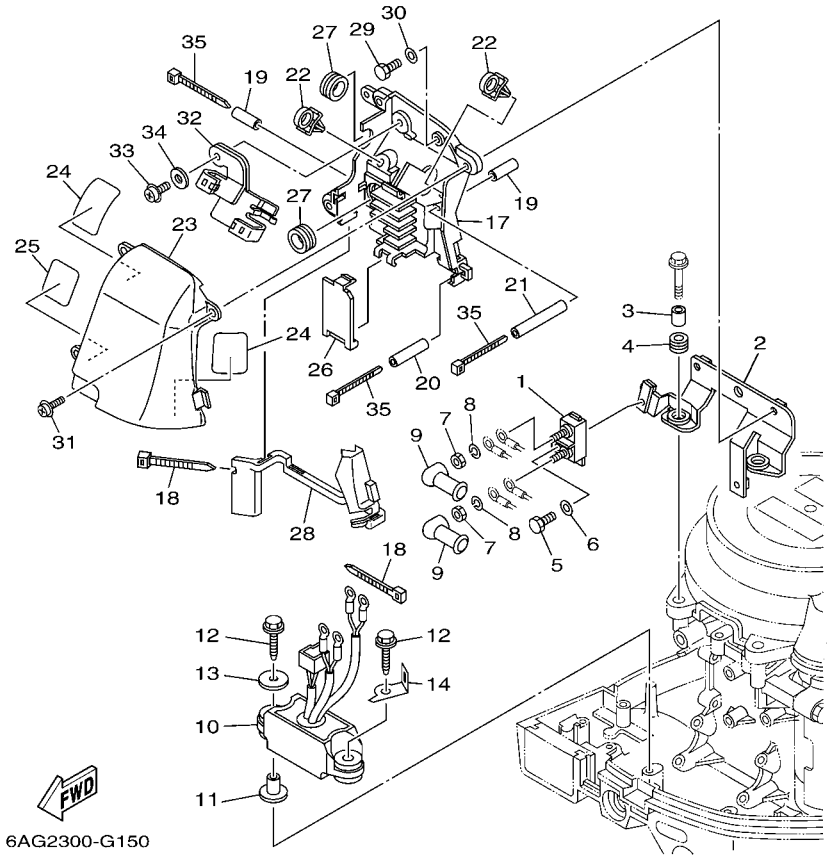

FIG. 15 ELECTRICAL 4 — PARTIE ELECTRIQUE 4

REF. NO.	PART NO. N° PIECES	DESCRIPTION DESCRIPTION	MH	EH	E	EP		REMARKS REMARQUES
28	6AH–85547–10	DAMPER AMORTISSEUR				1		
29	97095–06014	BOLT BOULON				3		
30	92995–06600	WASHER RONDELLE				3		
31	97985–06214	SCREW, WITH WASHER VIS, AVEC RONDELLE				3		
32	6AH–85525–10	PLATE PLAQUE				1		
33	97985–06214	SCREW, WITH WASHER VIS, AVEC RONDELLE				1		
34	90201–06068	WASHER, PLATE RONDELLE, PLATE				1		
35	90464–76001	CLAMP BRIDE				3		

FIG. 16 ELECTRICAL 5 PARTIE ELECTRIQUE 5

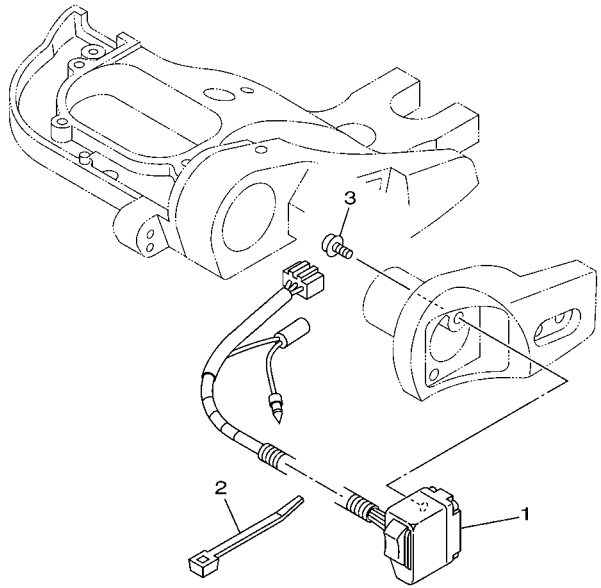

6AG4300-J160

REF. NO.	PART NO. N° PIECES	DESCRIPTION DESCRIPTION	MH	EH	E	EP		REMARKS REMARQUES
1	6AH–82563–00	TRIM & TILT SWITCH ASSY INCLINER ET PARER COMMUTATEUR				1		
2	90465–11M10	CLAMP BRIDE				2		
3	97985–06220	SCREW, WITH WASHER VIS, AVEC RONDELLE				2		

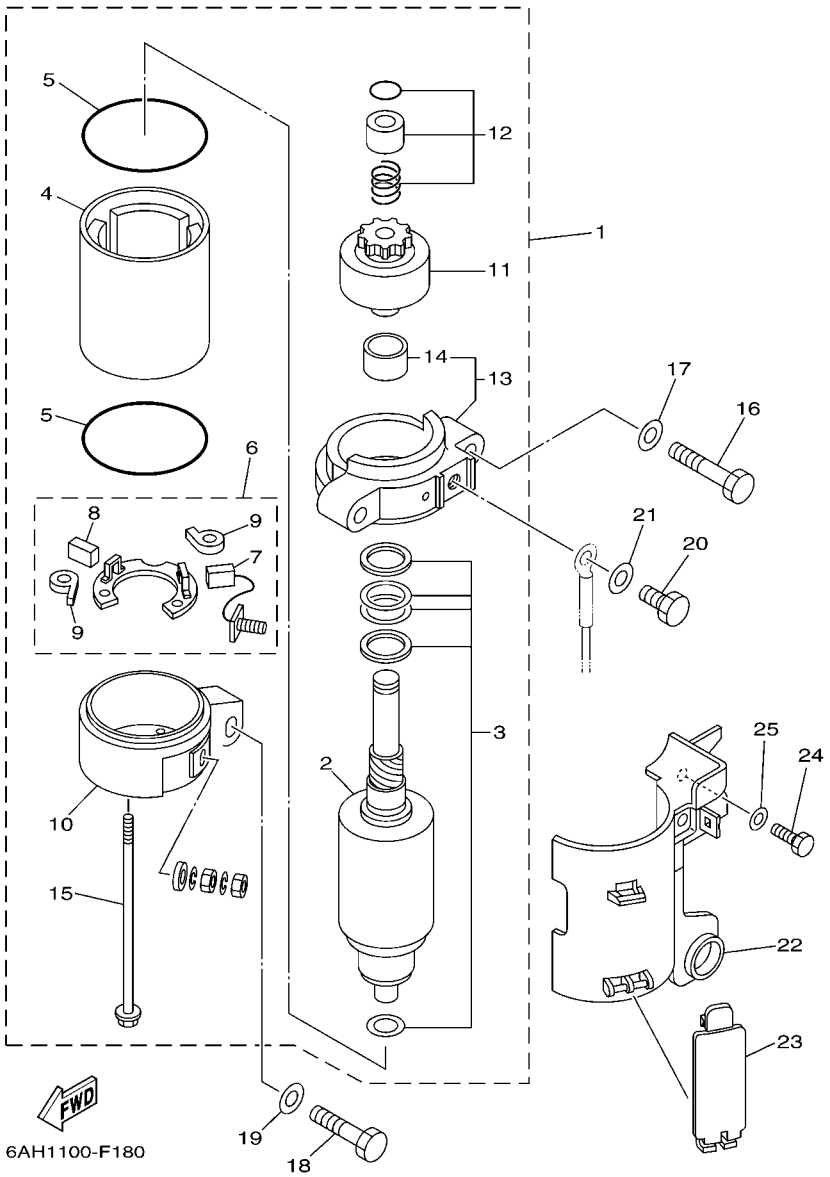

FIG. 17 STARTING MOTOR DEMARREUR ELECTRIQUE

REF. NO.	PART NO. N° PIECES	DESCRIPTION DESCRIPTION	MH	EH	E	EP		REMARKS REMARQUES
1	6AH–81800–00	STARTING MOTOR ASSY DEMARREUR ELECTRIQUE COMPLET		1	1	1		
2	689–81850–11	.ARMATURE ASSY .INDUIT		1	1	1		
3	689–81809–11	.WASHER KIT .JEU DE RONDELLES		1	1	1		
4	689–81810–11	.STATOR ASSY .STATOR COMPLET		1	1	1		
5	689–81847–11	.O-RING .JOINT TORIQUE		2	2	2		
6	689–81840–11	.BRUSH HOLDER ASSY .SUPPORT DE CHARBON		1	1	1		
7	689–81811–11	..BRUSH 1 ..CHARBON 1		1	1	1		
8	689–81812–11	..BRUSH 2 ..CHARBON 2		1	1	1		
9	689–81813–10	..SPRING, BRUSH ..RESSORT, DE CHARBON		2	2	2		
10	6AH–81820–00	.REAR BRACKET ASSY .SUPPORT ARRIERE COMPLET		1	1	1		
11	689–81807–12	.GEAR ASSY, STARTING MOTOR .PIGNON, DEMARREUR ELECTRIQUE		1	1	1		
12	68T–81857–00	.RETAINER .ARRETOIR		1	1	1		
13	6AH–81830–00	.FRONT BRACKET ASSY .SUPPORT AVANT		1	1	1		
14	689–81831–00	..METAL, FRONT ..METAL, AVANT		1	1	1		
15	689–81826–10	.BOLT .BOULON		2	2	2		
16	97013–08045	BOLT BOULON		2	2	2		
17	92903–08600	WASHER, PLATE RONDELLE, PLATE		2	2	2		
18	97013–08035	BOLT BOULON		1	1	1		
19	92903–08600	WASHER, PLATE RONDELLE, PLATE		1	1	1		
20	97095–08016	BOLT BOULON		1	1	1		
21	92995–08600	WASHER RONDELLE		1	1	1		
22	6AH–81942–00	COVER COUVERCLE		1	1	1		
23	6AH–82581–00	STAY, CORD CLAMP SUPPORT, COLLIER DE CORDON		1	1	1		
24	97095–06014	BOLT BOULON		1	1	1		
25	92995–06600	WASHER RONDELLE		1	1	1		

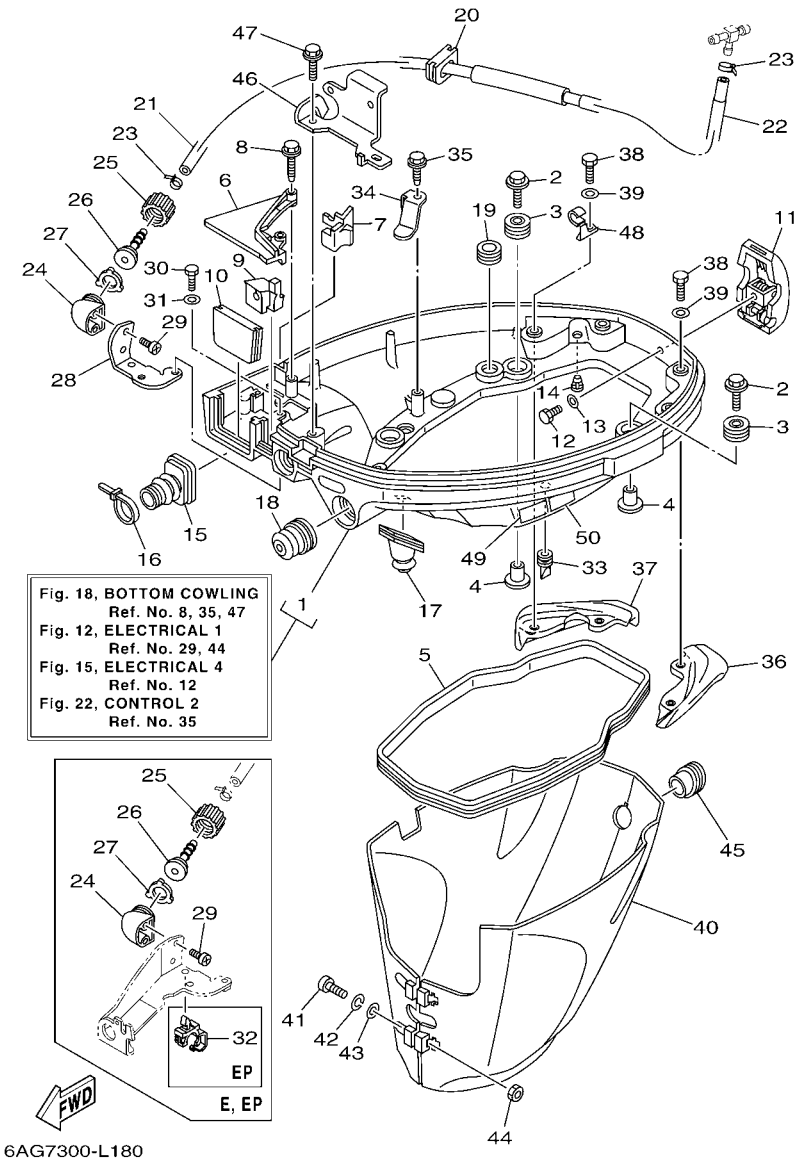

FIG. 18 BOTTOM COWLING CAPOT INFERIEUR

REF. NO.	PART NO. N° PIECES	DESCRIPTION DESCRIPTION	MH	EH	E	EP		REMARKS REMARQUES
1	6AH–42710–00–4D	BOTTOM COWLING ASSY ENS. EMBASE	1	1	1			
	6AH–42710–10–4D	BOTTOM COWLING ASSY ENS. EMBASE				1		
2	68F–85119–00	BOLT BOULON	4	4	4	4		
3	90480–21M82	GROMMET PASSE-FIL	4	4	4	4		
4	90387–06176	COLLAR COLLERETTE	4	4	4	4		
5	6AH–42716–00	RUBBER, SEAL 1 JOINT EN CAOUTCHOUC 1	1	1	1	1		
6	6AH–42738–00–4D	PLATE, FITTING ETRIER	1	1	1	1		
7	6AH–42718–00	RUBBER, SEAL 3 JOINT	1	1	1	1		
8	90109–06M82	BOLT BOULON	2	2	2	2		
9	6AH–42725–00	GROMMET PASSE-FIL	1					
	6AH–42725–10	GROMMET PASSE-FIL		1				
	6AH–42725–20	GROMMET PASSE-FIL			1	1		
10	6AH–42724–00	GROMMET PASSE-FIL	1	1				
	6AH–42724–10	GROMMET PASSE-FIL			1	1		
11	6AH–42801–00	COWLING CLAMP COMP. BRIDE DE CAPOT COMP.	1	1	1	1		
12	97095–06012	BOLT BOULON	1	1	1	1		
13	92995–06600	WASHER RONDELLE	1	1	1	1		
14	6BL–44391–00	NIPPLE, HOSE RACCORD D'ESSENCE	1	1	1	1		
15	6AH–26326–00	GROMMET RONDELLE CAOUTCHOUC	1	1		1		
	6AH–26326–10	GROMMET RONDELLE CAOUTCHOUC			1			
16	90465–11M10	CLAMP BRIDE	1	1		1		
17	6AH–42727–00	GROMMET PASSE-FIL	1	1	1	1		
18	65W–42726–00	GROMMET PASSE-FIL	1	1				
	65W–42726–10	GROMMET PASSE-FIL			1	1		
19	90480–16007	GROMMET PASSE-FIL	1	1	1	1		
20	6AH–42726–00	GROMMET PASSE-FIL	1	1	1	1		
21	6AH–24314–01	PIPE 4 DURITE 4	1	1	1	1		

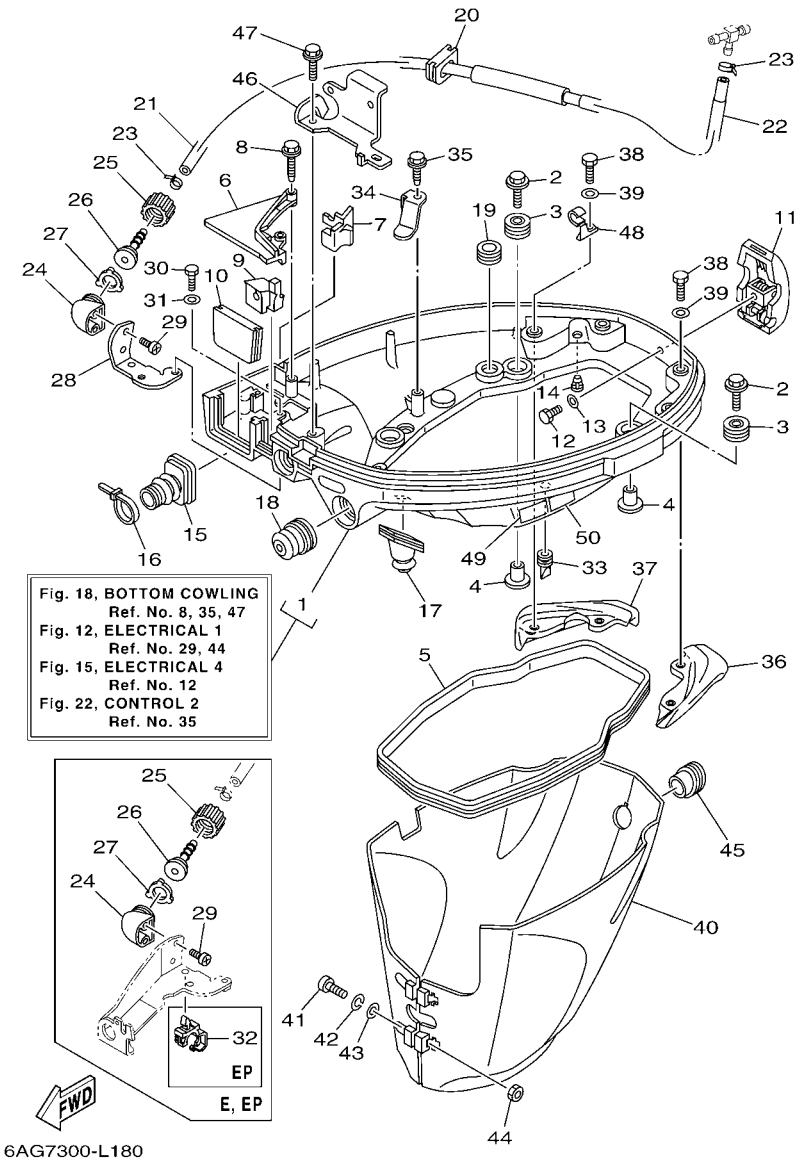

FIG. 18 BOTTOM COWLING — CAPOT INFERIEUR

REF. NO.	PART NO. N° PIECES	DESCRIPTION DESCRIPTION	MH	EH	E	EP		REMARKS REMARQUES
22	90445–15003	HOSE (L230) DURITE (L230)	1	1	1	1		
23	90465–11M10	CLAMP BRIDE	2	2	2	2		
24	68T–12572–00	ADAPTER ADAPTATEUR	1	1	1	1		
25	6R3–12581–00	JOINT, HOSE 1 JOINT DE TUYAU	1	1	1	1		
26	6R3–12582–00	JOINT, HOSE 2 RACCORD DE TUYAU 1	1	1	1	1		
27	6R3–12583–00	GASKET, HOSE JOINT JOINT	1	1	1	1		
28	6AH–12535–00	PLATE PLAQUE	1	1				
29	90167–06002	SCREW, TAPPING VIS, TETE FRAISEE	2	2	2	2		
30	97095–06010	BOLT BOULON	2	2				
31	92995–06600	WASHER RONDELLE	2	2				
32	90464–12M58	CLAMP BRIDE				1		
33	65W–42717–00	RUBBER, SEAL 2 JOINT EN CAOUTCHOUC 2	2	2	2	2		
34	6AH–42743–00	BRACKET SUPPORT	1	1	1	1		
35	90109–06M86	BOLT BOULON	1	1	1	1		
36	6AH–42761–00	STOPPER PLAQUETTE	1	1	1	1		
37	6AH–42762–00	STOPPER PLAQUETTE	1	1	1	1		
38	97075–06012	BOLT BOULON	4	4	4	4		
39	92995–06600	WASHER RONDELLE	4	4	4	4		
40	6AH–42741–00	APRON CAPOT LATERAL	1	1	1	1		
41	97885–06030	SCREW, PAN HEAD VIS, A ENCOCHE	2	2	2	2		
42	92995–06100	WASHER, SPRING RONDELLE, GROWER	2	2	2	2		
43	92995–06600	WASHER RONDELLE	2	2	2	2		
44	95380–06600	NUT, HEXAGON ECROU	2	2	2	2		
45	6AH–42717–00	RUBBER, SEAL 2 JOINT EN CAOUTCHOUC 2	1	1	1	1		
46	6AH–15774–00	STAY 4 SUPPORT 4	1	1	1			
47	90109–06M86	BOLT BOULON	1	1	1			
48	90465–08M82	CLAMP BRIDE	1	1	1	1		

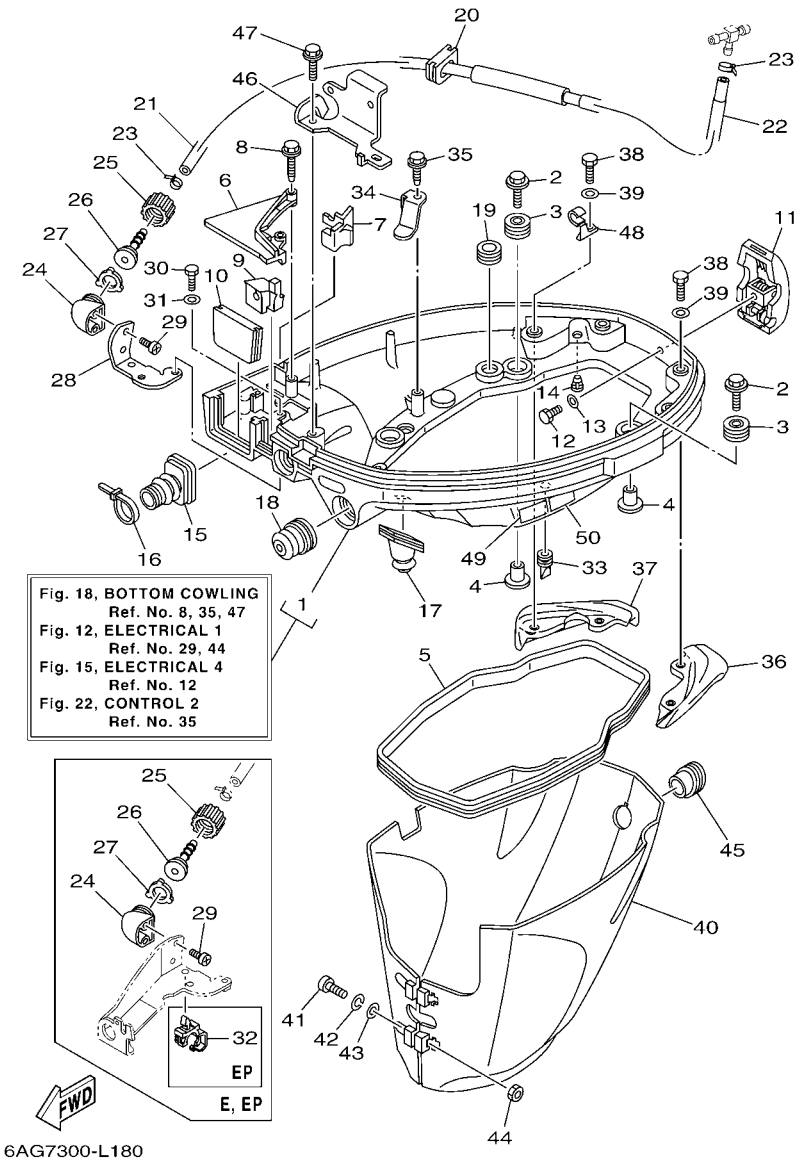

FIG. 18 BOTTOM COWLING CAPOT INFERIEUR

REF. NO.	PART NO. N° PIECES	DESCRIPTION DESCRIPTION	MH	EH	E	EP		REMARKS REMARQUES
49	6AH–42794–40	LABEL, WARNING (GENERAL) ETIQUETTE, AVERTISSEMENT	1	1	1	1		
50	6AH–42794–50	LABEL, WARNING (GENERAL) ETIQUETTE, AVERTISSEMENT	1	1	1	1		

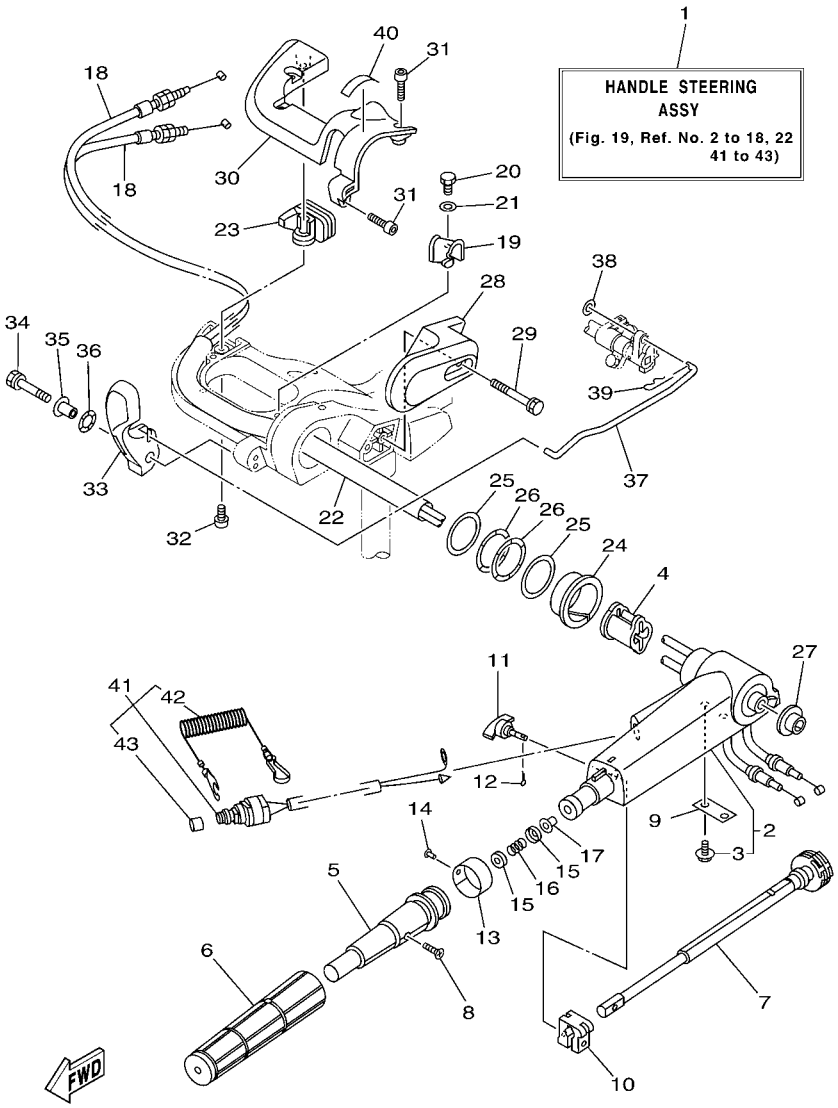

FIG. 19 STEERING DIRECTION

REF. NO.	PART NO. N° PIECES	DESCRIPTION DESCRIPTION	MH	EH	E	EP		REMARKS REMARQUES
1	6AH–W0084–02–4D	HANDLE STEERING ASSY BARRE FRANCHE (ENS.)	1	1				
2	6AH–42101–01–4D	HANDLE, STEERING POIGNEE	1	1				
3	90109–06M86	.BOLT .BOULON	2	2				
4	6AH–26288–00	GROMMET, CABLE OEILLET DE CABLE	1	1				
5	66M–42119–01	GRIP, STEERING HANDLE POIGNEE, BARRE FRANCHE	1	1				
6	67D–42177–00	RUBBER, HANDLE CAOUTCHOUC, POIGNEE	1	1				
7	65W–42138–00	LEVER, THROTTLE LEVIER, ACCELERATEUR	1	1				
8	90152–05011	SCREW, COUNTERSUNK VIS, TETE NOYEE	1	1				
9	65W–42159–00	STAY SUPPORT	1	1				
10	6G1–42126–00	FRICTION, STEERING HANDLE GRIP CUVETTE, POIGNEE DE DIRECTION	1	1				
11	65W–42125–00	BOLT, FRICTION ADJUSTING BOULON	1	1				
12	91490–16010	PIN. COTTER GOUPILLE	1	1				
13	6J0–42137–00	INDICATOR, THROTTLE INDICATEUR, ACCELERATION	1	1				
14	90269–02M09	RIVET RIVET	1	1				
15	6X4–44188–00	WASHER RONDELLE	2	2				
16	90501–23215	SPRING, COMPRESSION RESSORT, COMPRESSION	1	1				
17	90386–08004	BUSH DOUILLE	1	1				
18	6AH–26311–00	CABLE, THROTTLE 1 CABLE 1, ACCELERATEUR	2	2				
19	6AH–44554–00	PLATE PLAQUETTE	1	1				
20	97095–06014	BOLT BOULON	1	1				
21	92995–06600	WASHER RONDELLE	1	1				
22	6AH–2634E–00	PROTECTOR 1 PROTECTEUR 1	1	1				
23	6AH–42551–00	GROMMET PASSE-FIL	1	1				
24	90386–45001	BUSH DOUILLE	1	1				
25	90201–39008	WASHER, PLATE RONDELLE, PLATE	2	2				
26	90206–39001	WASHER, WAVE RONDELLE, ONDULEE	2	2				
27	90381–20001	BUSH, SOLID DOUILLE, SOLIDE	1	1				

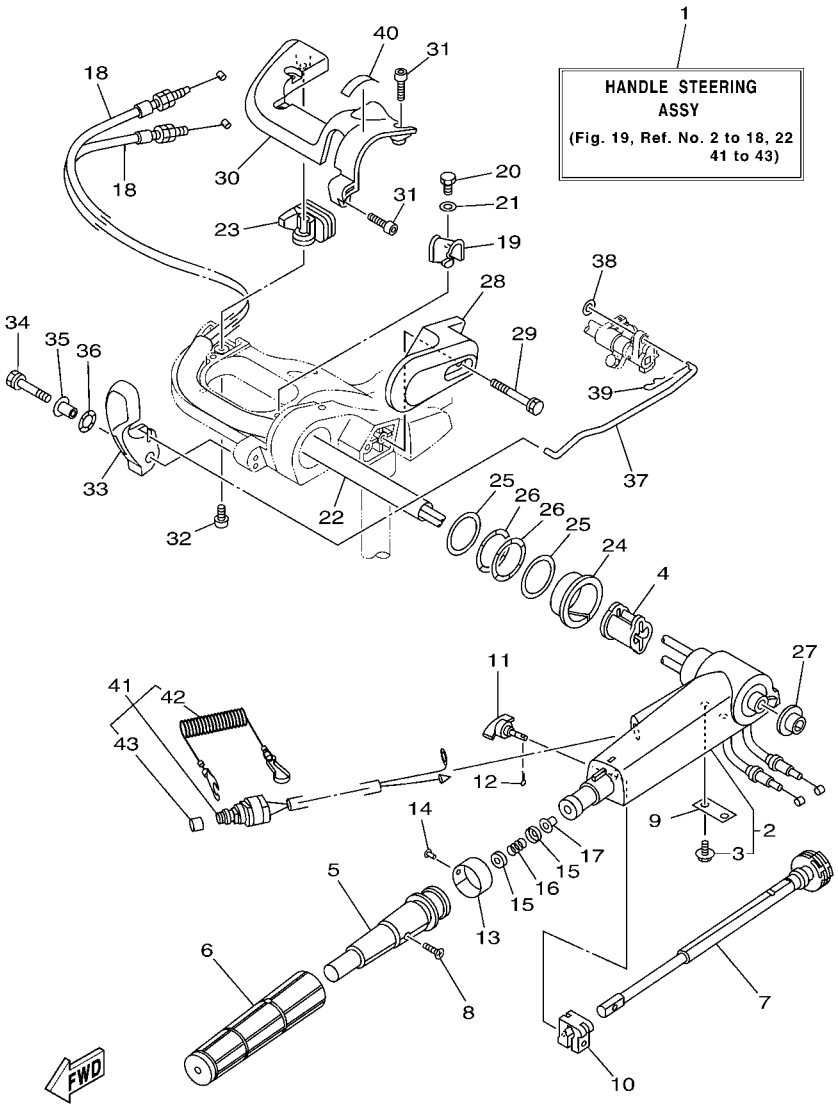

FIG. 19 STEERING DIRECTION

REF. NO.	PART NO. N° PIECES	DESCRIPTION DESCRIPTION	MH	EH	E	EP		REMARKS REMARQUES
28	6AH–42131–00–4D	COVER, HANDLE STEERING COUVERCLE	1	1				
29	97595–06555	BOLT, WITH WASHER VIS HEXAGONAL AVC RONDELLE	2	2				
30	6AH–42532–00	COVER COUVERCLE	1	1				
31	90111–06072	BOLT,HEX. SOCKET BUTTON BOULON	4	4				
32	97780–60520	SCREW, TAPPING VIS, TETE BOMBEE	1	1				
33	6AH–44111–00	HANDLE, GEAR SHIFT POIGNEE, LEVIER D'EMBRAYAGE	1	1				
34	90119–06M05	BOLT, WITH WASHER BOULON, AVEC RONDELLE	1	1				
35	90387–06M86	COLLAR COLLERETTE	1	1				
36	90206–15M18	WASHER, WAVE RONDELLE, ONDULEE	1	1				
37	6AH–44124–00	LINK, SHIFT ROD BIELLETTE	1	1				
38	92990–06200	WASHER, PLAIN RONDELLE, PLATE	1	1				
39	90468–18008	CLIP JONC	1	1				
40	6G8–44191–00	INDICATOR, SHIFT ETIQUETTE, EMBRAYAGE	1	1				
41	6AH–82575–00	ENGINE STOP SWITCH ASSY COUPE CIRCUIT CPLT	1	1				
42	682–82556–00	.LANYARD, STOP SWITCH .CORDON DU COUPE CIRCUIT	1	1				
43	689–8257Y–00	.CAP .COUVERCLE	1	1				

FIG. 20 STEERING FRICTION CUVETTE POIGNEE DE DIRECTION

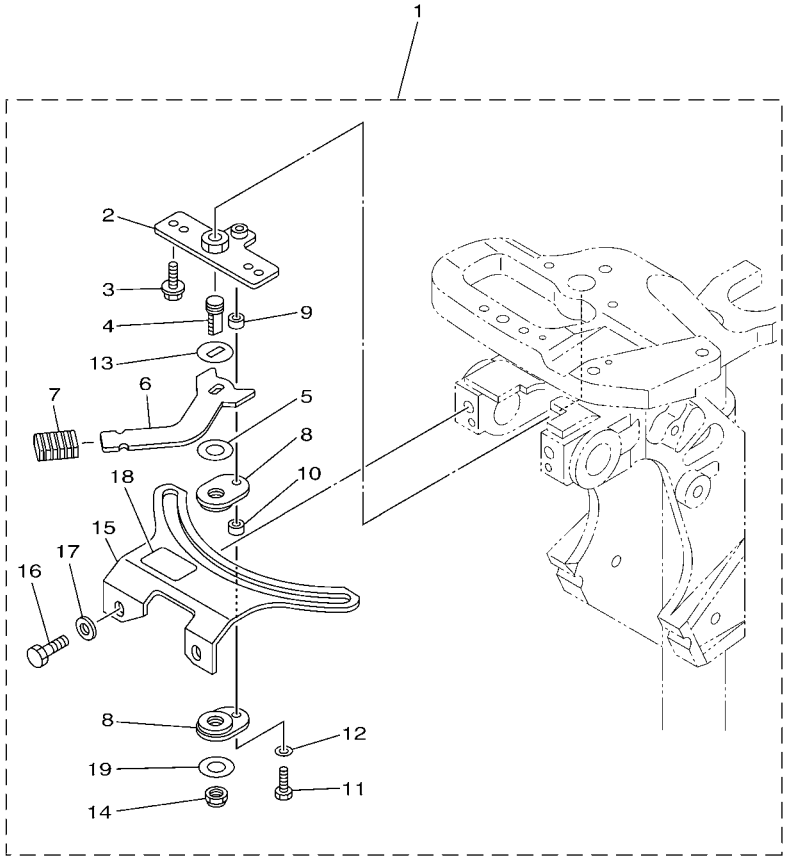

6AU5110-L180

REF. NO.	PART NO. N° PIECES	DESCRIPTION DESCRIPTION	MH	EH	E	EP		REMARKS REMARQUES
1	6AH–42508–01	STEERING FRICTION ASSY DIRECTION FRICTION (ENS.)	1	1				
2	68T–42525–01	.PLATE, FRICTION .PLAQUE, FRICTION	1	1				
3	90119–05018	.BOLT, WITH WASHER .BOULON, AVEC RONDELLE	2	2				
4	67C–42562–00	.SHAFT, STEERING LOCK .ARBRE,ANTIVOL DE DIRECTION	1	1				
5	90202–10M56	.WASHER, PLATE .RONDELLE, PLATE	1	1				
6	68T–42561–00	.KNOB, STEERING LOCK .BOUTON	1	1				
7	689–43633–00	.COVER, TILT LEVER .COUVERCLE	1	1				
8	65W–42528–00	.PLATE, FRICTION .PLAQUE, FRICTION	2	2				
9	90387–05053	.COLLAR .COLLERETTE	1	1				
10	90387–05054	.COLLAR .COLLERETTE	1	1				
11	97095–05020	.BOLT .BOULON	1	1				
12	92995–05600	.WASHER .RONDELLE	1	1				
13	90209–10M26	.WASHER .RONDELLE	1	1				
14	90185–10M14	.NUT, SELF-LOCKING .ECROU,AUTO-BLOQUANT	1	1				
15	6AH–42527–00	.PLATE, FRICTION .PLAQUE, FRICTION	1	1				
16	90101–08022	.BOLT .BOULON	2	2				
17	90201–08065	.WASHER, PLATE .RONDELLE, PLATE	2	2				
18	68T–43155–00	.MARK 1 .ETIQUETTE 1	1	1				
19	90201–106M5	.WASHER, PLATE .RONDELLE, PLATE	1	1				

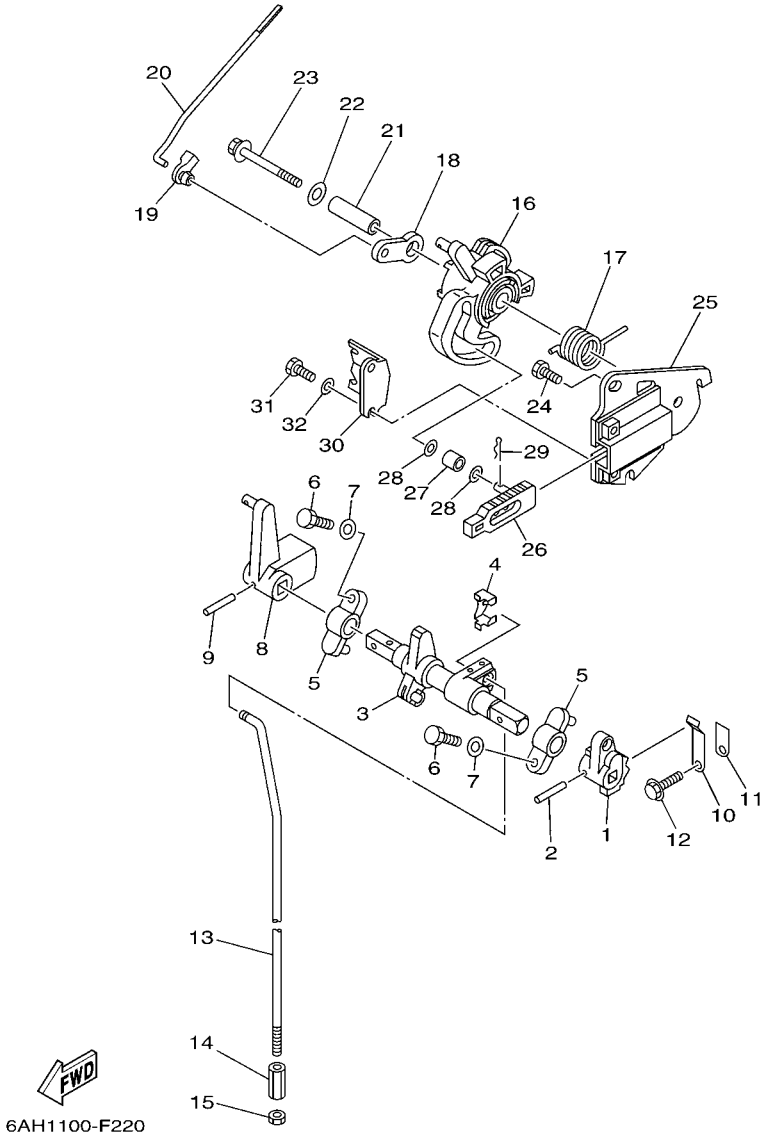

FIG. 21 CONTROL 1 COMMANDE 1

REF. NO.	PART NO. N° PIECES	DESCRIPTION DESCRIPTION	MH	EH	E	EP		REMARKS REMARQUES
1	6AH–44123–00	ARM, SHIFT ROD BRAS, TIGE D'INVERSION	1	1				
2	90254–03M05	PIN, SPRING RIVET, TETE TRONCONIQUE	1	1				
3	6AH–44121–00	LEVER, SHIFT ROD LEVIER, TIGE D'INVERSION	1	1				
4	6AH–26364–00	END, CABLE 2 EMBOUT, DE CABLE	1	1				
5	6G1–41662–01–94	BRACKET 2 SUPPORT 2	2	2				
6	97095–06020	BOLT BOULON	2	2				
7	92995–06600	WASHER RONDELLE	2	2				
8	6AH–44125–00	LEVER, SHIFT ROD LEVIER, TIGE D'INVERSION	1	1				
9	90254–03M05	PIN, SPRING RIVET, TETE TRONCONIQUE	1	1				
10	65W–44116–00	SPRING RESSORT	1	1				
11	66R–44114–00	STOPPER PLAQUETTE	1	1				
12	95895–06014	BOLT, FLANGE BOULON	1	1				
13	6AH–44143–00	ROD, SHIFT TIGE D'EMBRAYAGE	1	1				S(17.1") S(17.1")
	6AH–44143–10	ROD, SHIFT TIGE D'EMBRAYAGE	1	1				L(22.1") L(22.1")
14	90170–06015	NUT ECROU	1	1				
15	95380–06700	NUT ECROU	1	1				
16	6AH–41638–00	PULLEY POULIE	1	1				
17	90508–20M44	SPRING, TORSION RESSORT, TORSION	1	1				
18	65W–41283–00	LEVER, FREE ACCEL. LEVIER	1	1				
19	6J8–41262–00	JOINT, CHOKE LEVER RACCORD, LEVIER DE STARTER	1	1				
20	6AH–41211–00	LINK, ACCEL. BIELLETTE, ACCELERATION	1	1				
21	90387–06139	COLLAR COLLERETTE	1	1				
22	90201–06M31	WASHER, PLATE RONDELLE, PLATE	1	1				
23	97595–06555	BOLT, WITH WASHER VIS HEXAGONAL AVC RONDELLE	1	1				
24	97095–06014	BOLT BOULON	2	2				
25	6AH–14571–00	BRACKET, THROTTLE SUPPORT, ACCELERATEUR	1	1				
26	6AH–44167–00	PLUNGER, SHIFT CAM POUSSOIR D'EMBRAYAGE	1	1				

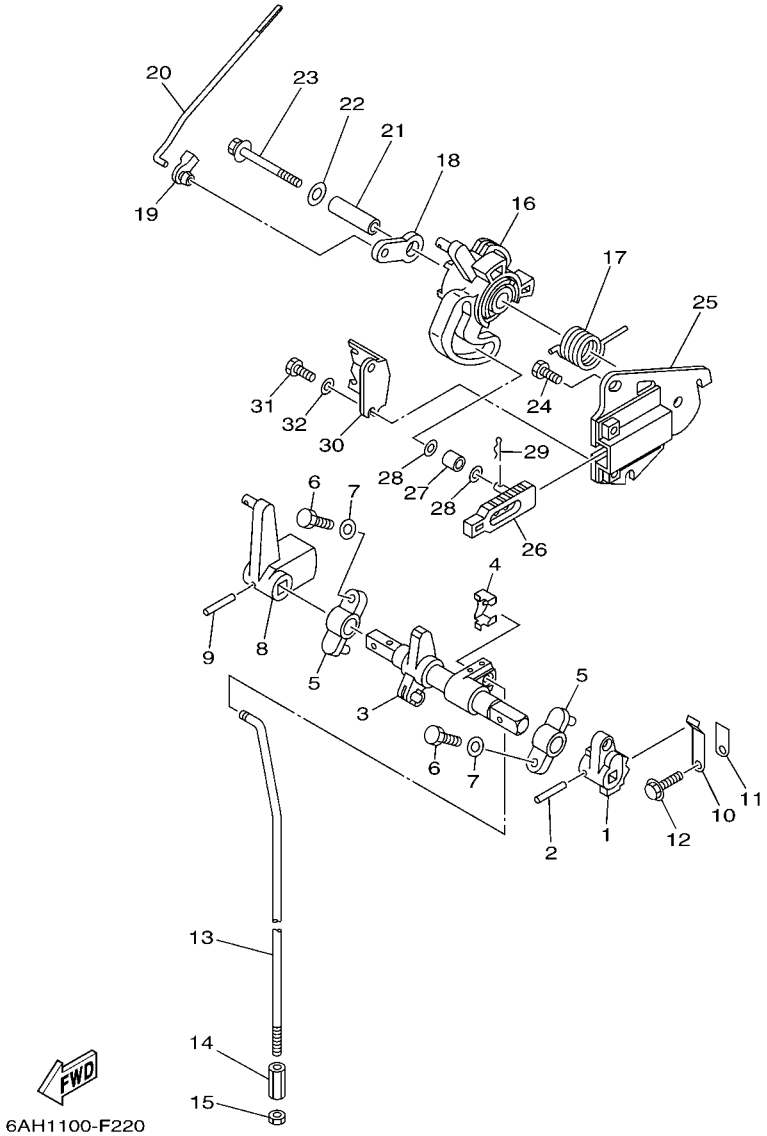

FIG. 21 CONTROL 1 COMMANDE 1

REF. NO.	PART NO. N° PIECES	DESCRIPTION DESCRIPTION	MH	EH	E	EP		REMARKS REMARQUES
27	62Y–42171–00	BUSHING COUSSINET	1	1				
28	90201–05M04	WASHER, PLATE RONDELLE, PLATE	2	2				
29	90468–10005	CLIP JONC	1	1				
30	6AH–14497–00	STAY, THROTTLE WIRE SUPPORT DE BOISSEAU	1	1				
31	97095–06014	BOLT BOULON	2	2				
32	92995–06600	WASHER RONDELLE	2	2				

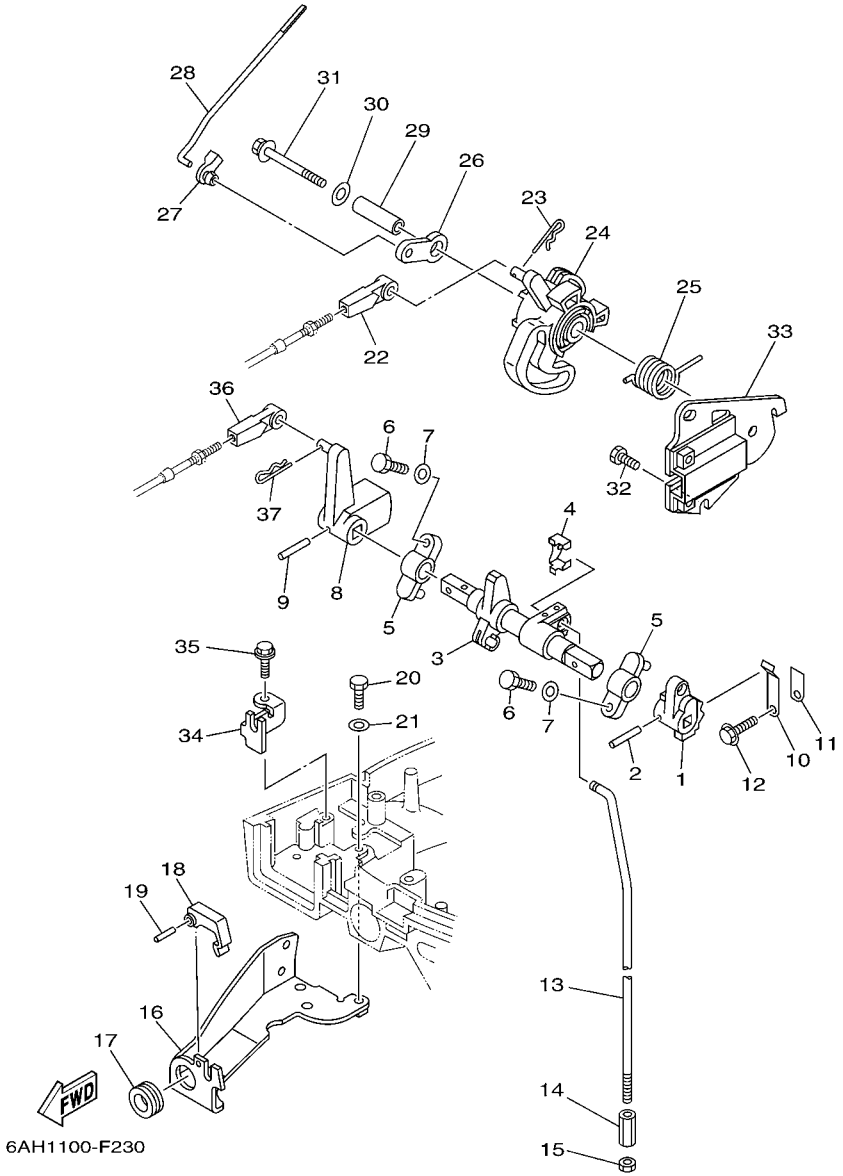

FIG. 22 CONTROL 2 COMMANDE 2

REF. NO.	PART NO. N° PIECES	DESCRIPTION DESCRIPTION	MH	EH	E	EP		REMARKS REMARQUES
1	6AH–44123–00	ARM, SHIFT ROD BRAS, TIGE D'INVERSION			1	1		
2	90254–03M05	PIN, SPRING RIVET, TETE TRONCONIQUE			1	1		
3	6AH–44121–00	LEVER, SHIFT ROD LEVIER, TIGE D'INVERSION			1	1		
4	6AH–26364–00	END, CABLE 2 EMBOUT, DE CABLE			1	1		
5	6G1–41662–01–94	BRACKET 2 SUPPORT 2			2	2		
6	97095–06020	BOLT BOULON			2	2		
7	92995–06600	WASHER RONDELLE			2	2		
8	6AH–44125–00	LEVER, SHIFT ROD LEVIER, TIGE D'INVERSION			1	1		
9	90254–03M05	PIN, SPRING RIVET, TETE TRONCONIQUE			1	1		
10	65W–44116–00	SPRING RESSORT			1	1		
11	66R–44114–00	STOPPER PLAQUETTE			1	1		
12	95895–06014	BOLT, FLANGE BOULON			1	1		
13	6AH–44143–00	ROD, SHIFT TIGE D'EMBRAYAGE			1	1		S(17.1") S(17.1")
	6AH–44143–10	ROD, SHIFT TIGE D'EMBRAYAGE			1	1		L(22.1") L(22.1")
14	90170–06015	NUT ECROU			1	1		
15	95380–06700	NUT ECROU			1	1		
16	6AH–48532–00	BRACKET, REMOTE CONTROL 2 ETRIER 2, COMMANDE A DISTANCE			1	1		
17	90480–19031	GROMMET PASSE-FIL			1	1		
18	682–48538–50	CLAMP, CABLE 1 COLLIER			1	1		
19	91690–30012	PIN, SPRING AGRAFFE			1	1		
20	97095–06014	BOLT BOULON			2	2		
21	92995–06600	WASHER RONDELLE			2	2		
22	663–48344–00	CABLE END, REMOTE CONTROL CHAPE CABLE			1	1		
23	90468–18008	CLIP JONC			1	1		
24	6AH–41638–00	PULLEY POULIE			1	1		
25	90508–20M44	SPRING, TORSION RESSORT, TORSION			1	1		
26	65W–41283–00	LEVER, FREE ACCEL. LEVIER			1	1		

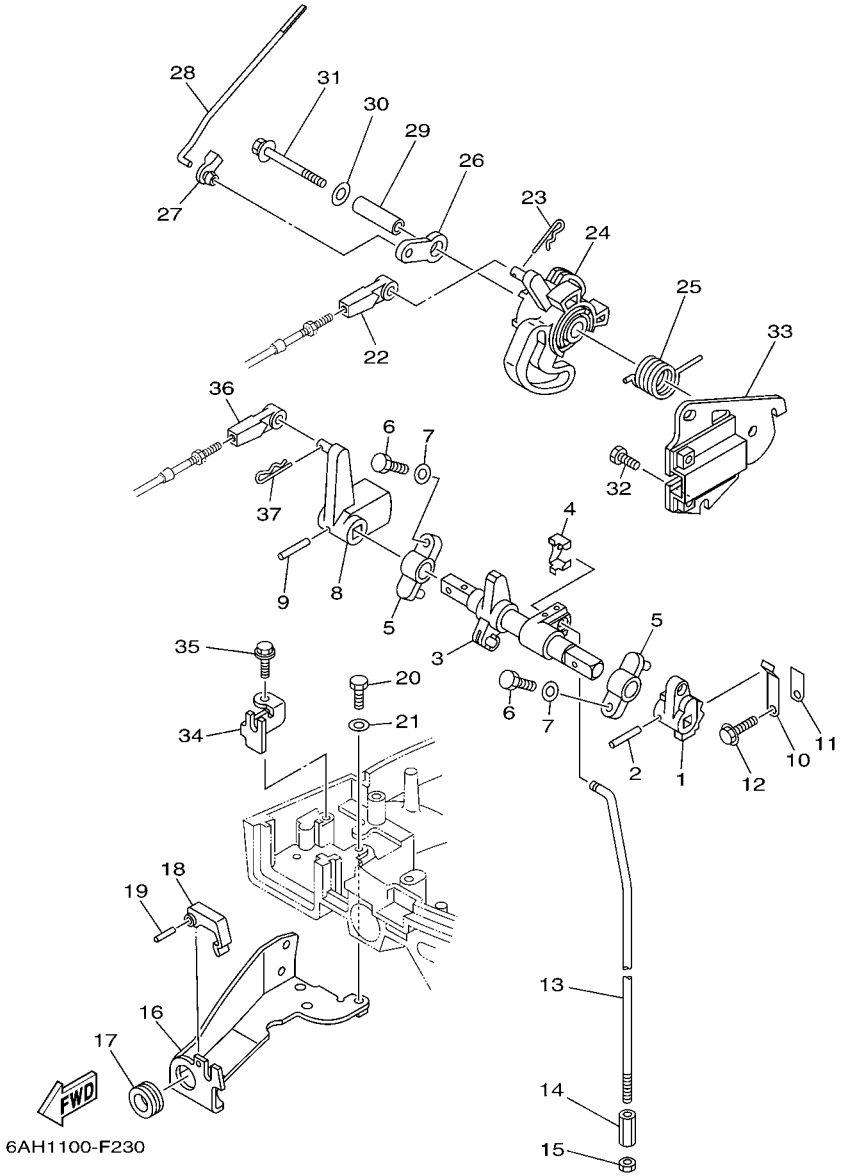

FIG. 22 CONTROL 2 — COMMANDE 2

REF. NO.	PART NO. N° PIECES	DESCRIPTION DESCRIPTION	MH	EH	E	EP		REMARKS REMARQUES
27	6J8–41262–00	JOINT, CHOKE LEVER RACCORD, LEVIER DE STARTER			1	1		
28	6AH–41211–00	LINK, ACCEL. BIELLETTE, ACCELERATION			1	1		
29	90387–06139	COLLAR COLLERETTE			1	1		
30	90201–06M31	WASHER, PLATE RONDELLE, PLATE			1	1		
31	97595–06555	BOLT, WITH WASHER VIS HEXAGONAL AVC RONDELLE			1	1		
32	97095–06014	BOLT BOULON			2	2		
33	6AH–14571–00	BRACKET, THROTTLE SUPPORT, ACCELERATEUR			1	1		
34	6AH–48531–00	BRACKET, REMOTE CONTROL 1 ETRIER 1, COMMANDE A DISTANCE			1	1		
35	90109–06M86	BOLT BOULON			1	1		
36	663–48344–00	CABLE END, REMOTE CONTROL CHAPE CABLE			1	1		
37	90468–18008	CLIP JONC			1	1		

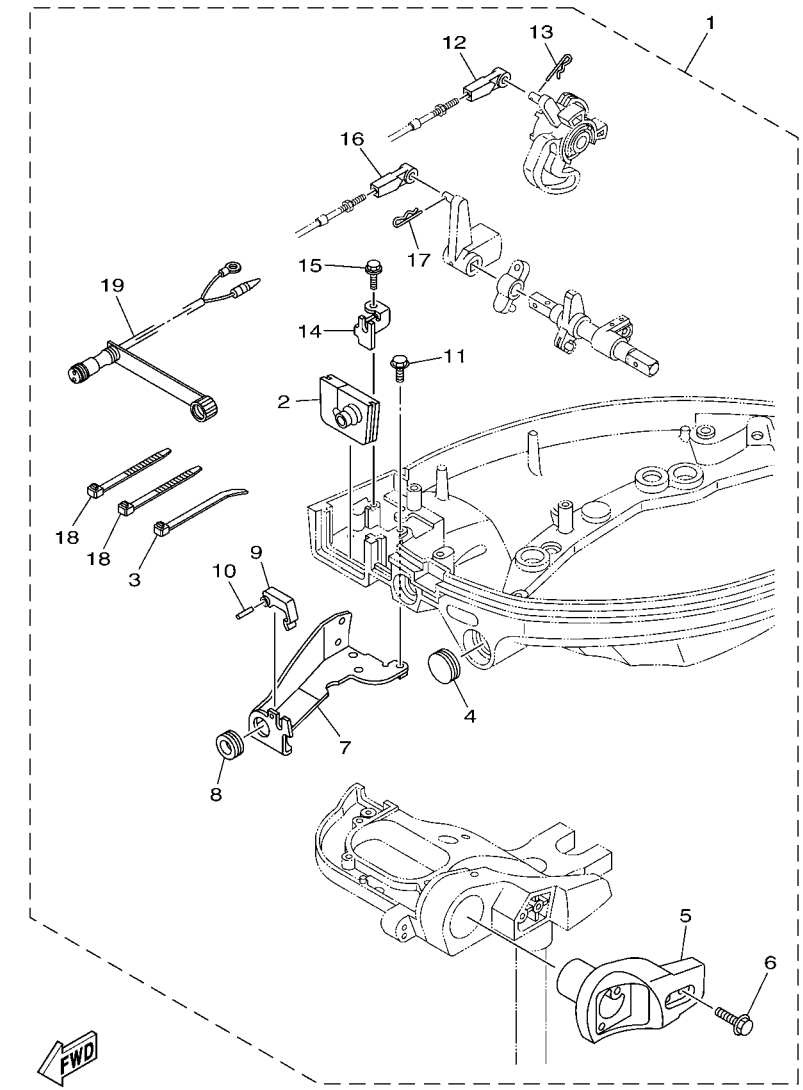

6AH3110-H360

FIG. 23 REMO CON ATTACHMENT COMMANDE A DISTANCE

REF. NO.	PART NO. N° PIECES	DESCRIPTION DESCRIPTION	MH	EH	E	EP		REMARKS REMARQUES
1	6AH–48501–00	REMOTE CONT. ATTACHMENT ASSY. COMMANDE A DISTANCE (KIT)	1	1				AP AP
2	6AH–42724–10	.GROMMET .PASSE-FIL	1	1				
3	90465–11M10	.CLAMP .BRIDE	1	1				
4	65W–42726–10	.GROMMET .PASSE-FIL	1	1				
5	6AH–83773–00	.BRACKET, SWITCH .JOINT TORIQUE, COMMUTATEUR	1	1				
6	97595–06530	.BOLT, WITH WASHER .VIS HEXAGONAL AVC RONDELLE	2	2				
7	6AH–48532–00	.BRACKET, REMOTE CONTROL 2 .ETRIER 2, COMMANDE A DISTANCE	1	1				
8	90480–19031	.GROMMET .PASSE-FIL	1	1				
9	682–48538–50	.CLAMP, CABLE 1 .COLLIER	1	1				
10	91690–30012	.PIN, SPRING .AGRAFFE	1	1				
11	97595–06514	.BOLT, WITH WASHER .VIS HEXAGONAL AVC RONDELLE	2	2				
12	663–48344–00	.CABLE END, REMOTE CONTROL .CHAPE CABLE	1	1				
13	90468–18008	.CLIP .JONC	1	1				
14	6AH–48531–00	.BRACKET, REMOTE CONTROL 1 .ETRIER 1, COMMANDE A DISTANCE	1	1				
15	90109–06M86	.BOLT .BOULON	1	1				
16	663–48344–00	.CABLE END, REMOTE CONTROL .CHAPE CABLE	1	1				
17	90468–18008	.CLIP .JONC	1	1				
18	90465–13M18	.CLAMP .BRIDE	2	2				
19	6D5–84340–00	.SOCKET CORD ASSY 1 .DOUILLE	1	1				

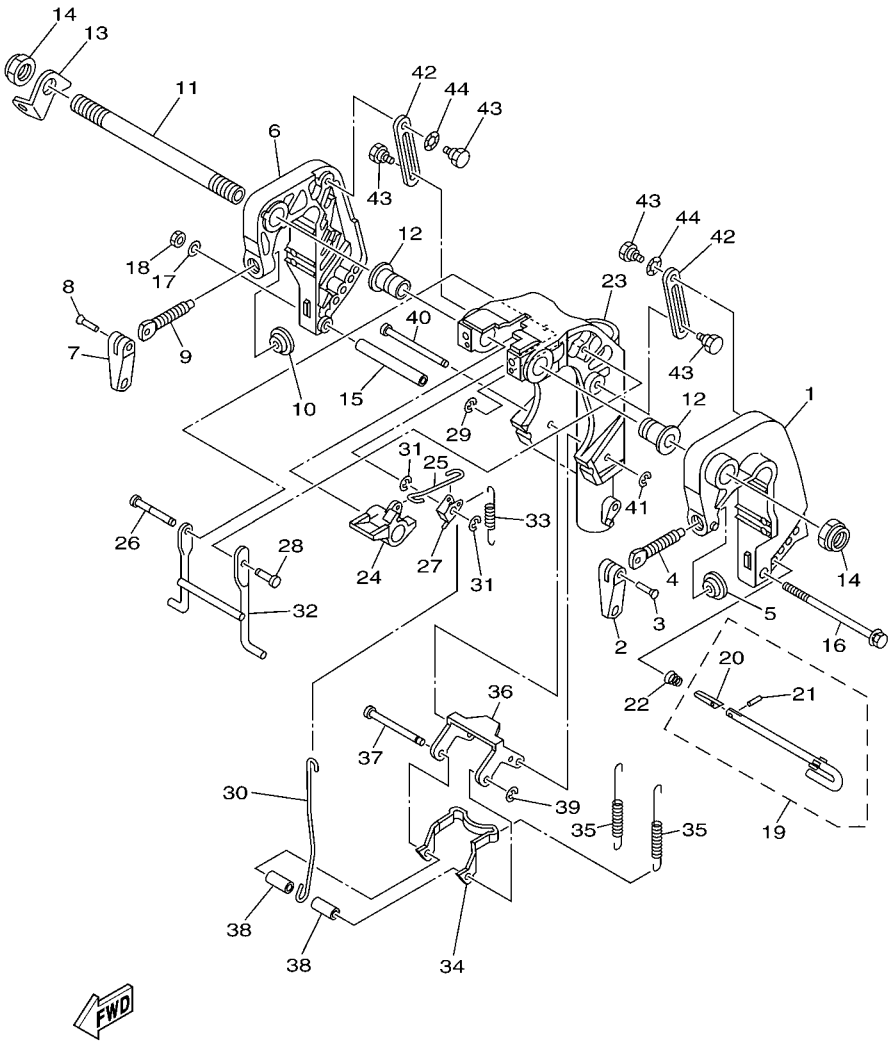

FIG. 24 BRACKET 1 SUPPORT 1

REF. NO.	PART NO. N° PIECES	DESCRIPTION DESCRIPTION	MH	EH	E	EP		REMARKS REMARQUES
1	6AH–43111–00–4D	BRACKET, CLAMP 1 PRESSE 1	1	1	1			
2	6E0–43118–01	HANDLE, TRANSOM CLAMP POIGNEE DE VIS DE PRESSE	1	1	1			
3	90243–04M01	PIN GOUPILLE	1	1	1			
4	6E7–43116–00	SCREW, TRANSOM CLAMP VIS DE PRESSE	1	1	1			
5	648–43114–01	PAD, TRANSOM CLAMP RONDELLE D'APPUI	1	1	1			
6	6AH–43112–00–4D	BRACKET, CLAMP 2 PRESSE 2	1	1	1			
7	6E0–43118–01	HANDLE, TRANSOM CLAMP POIGNEE DE VIS DE PRESSE	1	1	1			
8	90243–04M01	PIN GOUPILLE	1	1	1			
9	6E7–43116–00	SCREW, TRANSOM CLAMP VIS DE PRESSE	1	1	1			
10	648–43114–01	PAD, TRANSOM CLAMP RONDELLE D'APPUI	1	1	1			
11	69A–43131–00	BOLT, CLAMP BRACKET BOULON, PRESSE	1	1	1			FOR REMOTE CONTROL FOR REMOTE CONTROL
12	90386–22MA4	BUSH DOUILLE	2	2	2			
13	66R–43113–00	PLATE, CLAMP BRACKET PLAQUETTE, PRESSE	1	1	1			
14	90185–22043	NUT, SELF-LOCKING ECROU,AUTO-BLOQUANT	2	2	2			
15	90387–06M13	COLLAR COLLERETTE	1	1	1			
16	90101–06M18	BOLT BOULON	1	1	1			
17	92990–06600	WASHER, PLATE RONDELLE, PLATE	1	1	1			
18	95380–06700	NUT ECROU	1	1	1			
19	6L2–43160–01	TILT ROD ASSY BROCHE D'INCLINAISON (ENS.)	1	1	1			
20	689–43165–00	.PLATE, TILT LOCK .TAQUET, BROCHE INCLINAISON	1	1	1			
21	91690–30008	.PIN, SPRING .AGRAFFE	1	1	1			
22	90502–10M07	SPRING, CONICAL RESSORT, CONIQUE	1	1	1			
23	6AH–43311–00–4D	BRACKET, SWIVEL 1 SUPPORT, PIVOT 1	1	1	1			S(17.1") S(17.1")
	6AH–43311–10–4D	BRACKET, SWIVEL 1 SUPPORT, PIVOT 1	1	1	1			L(22.1") L(22.1")
24	6AH–43631–00	LEVER, TILT LEVIER, INCLINAISON	1	1	1			
25	6AH–43616–00	ROD, TILT LOCK TIGE	1	1	1			
26	6AH–43646–00	SHAFT, LEVER AXE, LEIVER	1	1	1			

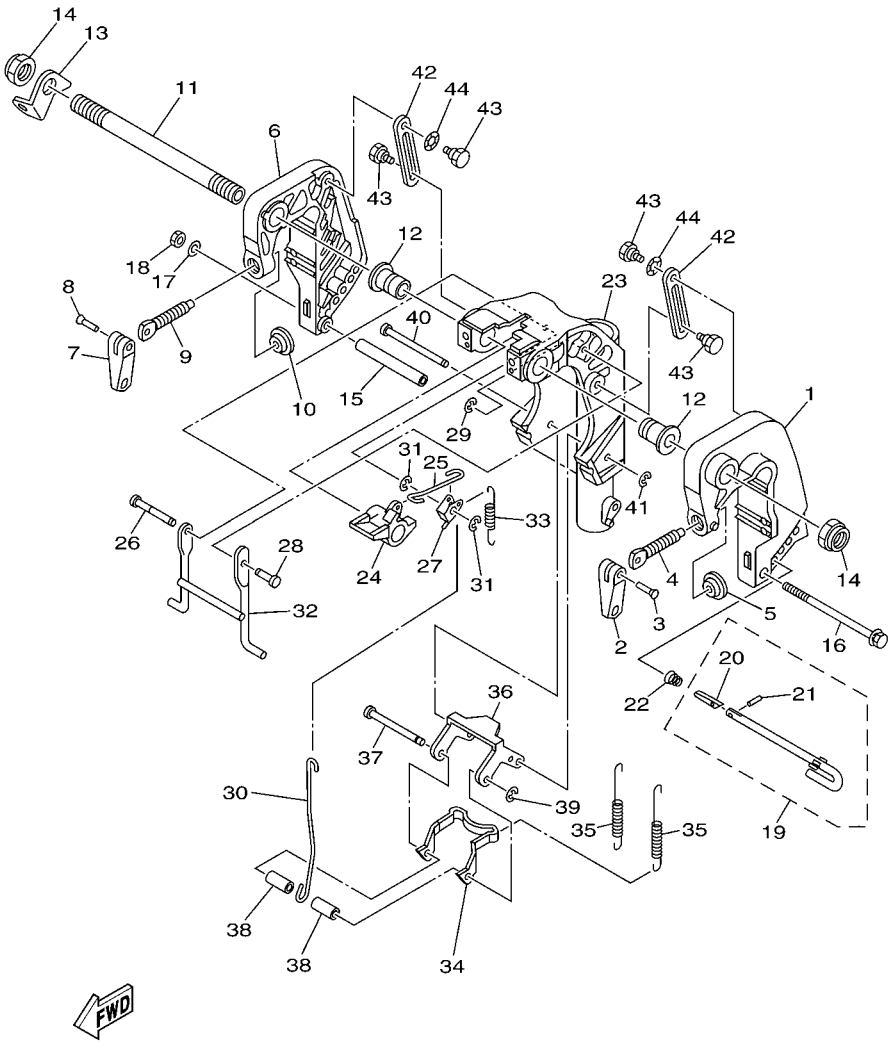

FIG. 24 BRACKET 1 SUPPORT 1

REF. NO.	PART NO. N° PIECES	DESCRIPTION DESCRIPTION	MH	EH	E	EP		REMARKS REMARQUES
27	6AH–43641–00	LEVER, TILT LEVIER, INCLINAISON	1	1	1			
28	6AH–43191–00	SHAFT, STOPPER AXE, BUTEE	1	1	1			
29	99080–05600	CIRCLIP CIRCLIP	1	1	1			
30	6AH–43617–00	ROD, TILT LOCK TIGE	1	1	1			
31	99080–05600	CIRCLIP CIRCLIP	2	2	2			
32	6AH–43350–00	RECEIVER ASSY RECEIVER ASSY	1	1	1			
33	90506–18014	SPRING, TENSION RESSORT, TENSION	1	1	1			
34	6AH–43614–00	PLATE, TILT LOCK ETRIER, VERROUILLAGE MARCHE AR	1	1	1			
35	90506–20020	SPRING, TENSION RESSORT, TENSION	2	2	2			
36	6AH–43615–00	PLATE, TILT LOCK ETRIER, VERROUILLAGE MARCHE AR	1	1	1			
37	68T–43611–00	SHAFT, TILT LOCK AXE, VERROUILLAGE MARCHE AR	1	1	1			
38	90387–06138	COLLAR COLLERETTE	2	2	2			
39	93430–04M03	CIRCLIP CLIPS	1	1	1			
40	68T–43659–00	SHAFT, REVERSE LOCK AXE, VERROUILLAGE MARCHE AR	1	1	1			
41	99080–05600	CIRCLIP CIRCLIP	1	1	1			
42	6AH–43627–00	STOPPER PLAQUETTE	2	2	2			
43	90109–06M84	BOLT BOULON	4	4	4			
44	90206–10M24	WASHER, WAVE RONDELLE, ONDULEE	2	2	2			

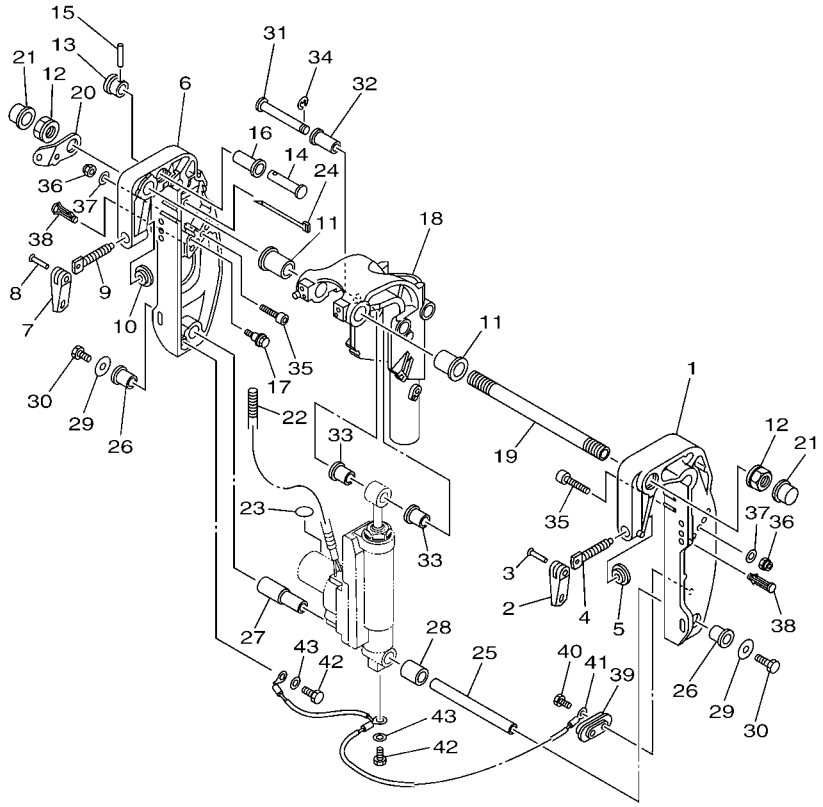

6AH1300-F240

FIG. 25 BRACKET 2 SUPPORT 2

REF. NO.	PART NO. N° PIECES	DESCRIPTION DESCRIPTION	MH	EH	E	EP		REMARKS REMARQUES
1	69A–43111–01–4D	BRACKET, CLAMP 1 PRESSE 1				1		
2	6E0–43118–01	HANDLE, TRANSOM CLAMP POIGNEE DE VIS DE PRESSE				1		
3	90243–04M01	PIN GOUPILLE				1		
4	6E7–43116–00	SCREW, TRANSOM CLAMP VIS DE PRESSE				1		
5	648–43114–01	PAD, TRANSOM CLAMP RONDELLE D'APPUI				1		
6	69A–43112–01–4D	BRACKET, CLAMP 2 PRESSE 2				1		
7	6E0–43118–01	HANDLE, TRANSOM CLAMP POIGNEE DE VIS DE PRESSE				1		
8	90243–04M01	PIN GOUPILLE				1		
9	6E7–43116–00	SCREW, TRANSOM CLAMP VIS DE PRESSE				1		
10	648–43114–01	PAD, TRANSOM CLAMP RONDELLE D'APPUI				1		
11	90386–22MA4	BUSH DOUILLE				2		
12	90185–22043	NUT, SELF-LOCKING ECROU,AUTO-BLOQUANT				2		
13	65W–43192–00	KNOB, STOPPER BOUTON, BUTEE DE RELEVAGE				1		
14	65W–43191–00	SHAFT, STOPPER AXE, BUTEE				1		
15	91690–30018	PIN, SPRING AGRAFFE				1		
16	90386–14MA1	BUSH DOUILLE				1		
17	90109–06MA1	BOLT BOULON				1		
18	6AH–43311–20–4D	BRACKET, SWIVEL 1 SUPPORT, PIVOT 1				1		S(17.1") S(17.1")
	69A–43311–11–4D	BRACKET, SWIVEL 1 SUPPORT, PIVOT 1				1		L(22.1") L(22.1")
19	69A–43131–00	BOLT, CLAMP BRACKET BOULON, PRESSE				1		FOR REMOTE CONTROL FOR REMOTE CONTROL
20	69A–43113–00	PLATE, CLAMP BRACKET PLAQUETTE, PRESSE				1		
21	6G5–43145–01	CAP, CLAMP BRACKET CAPUCHON, PRESSE				2		
22	90446–14MH7	HOSE (L560) DURITE (L560)				1		
23	69A–43155–00	MARK 1 ETIQUETTE 1				1		
24	90465–13M97	CLAMP BRIDE				1		
25	69G–43818–00	PIN, LOWER SHOCK MOUNT AXE, INFERIEUR AMORTISSEUR				1		
26	90386–16MA7	BUSH DOUILLE				2		

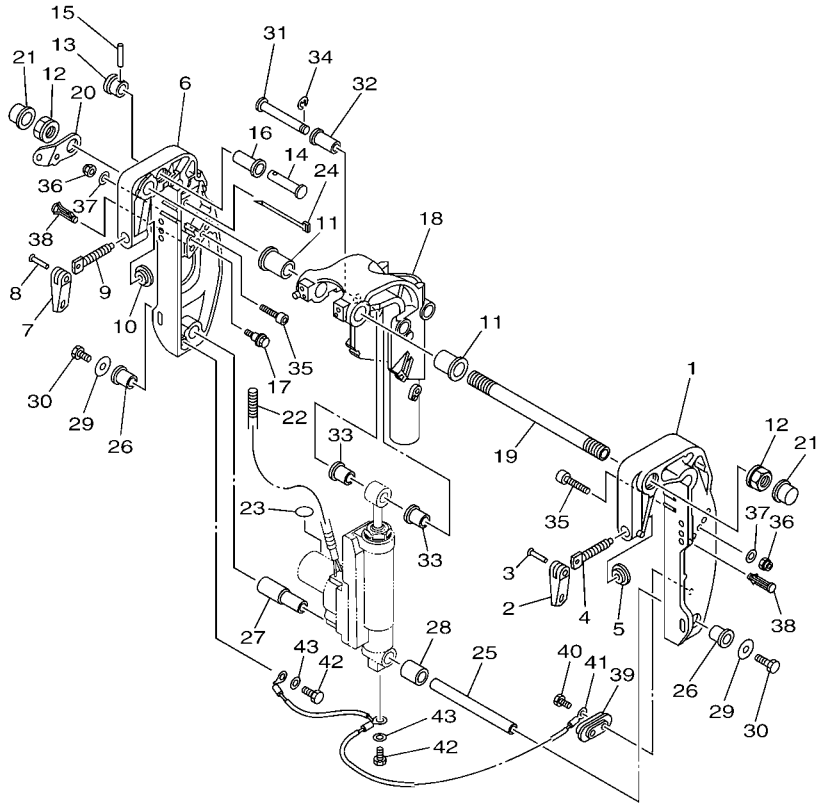

6AH1300-F240

FIG. 25 BRACKET 2 SUPPORT 2

REF. NO.	PART NO. N° PIECES	DESCRIPTION DESCRIPTION	MH	EH	E	EP		REMARKS REMARQUES
27	90386–16MA8	BUSH DOUILLE				1		
28	90387–16M02	COLLAR COLLERETTE				1		
29	90201–08M00	WASHER, PLATE RONDELLE, PLATE				2		
30	97080–08016	BOLT BOULON				2		
31	90249–12M36	PIN GOUPILLE				1		
32	90381–12M10	BUSH, SOLID DOUILLE, SOLIDE				1		
33	90381–12M11	BUSH, SOLID DOUILLE, SOLIDE				2		
34	99080–10600	CIRCLIP CIRCLIP				1		
35	90110–08081	BOLT, HEXAGON SOCKET HEAD BOULON, TETE HEXAGONALE CREUSE				2		
36	90185–08057	NUT, SELF-LOCKING ECROU,AUTO-BLOQUANT				2		
37	92990–08600	WASHER, PLATE RONDELLE, PLATE				2		
38	90338–08M19	PLUG PLOT				4		S(17.1") S(17.1")
	90338–08M19	PLUG PLOT				2		L(22.1") L(22.1")
39	65W–45251–00	ANODE ANODE				1		
40	90101–06020	BOLT BOULON				2		
41	63V–82127–00	WIRE, LEAD 2 FIL 2				1		
42	97095–06010	BOLT BOULON				2		
43	92995–06600	WASHER RONDELLE				2		

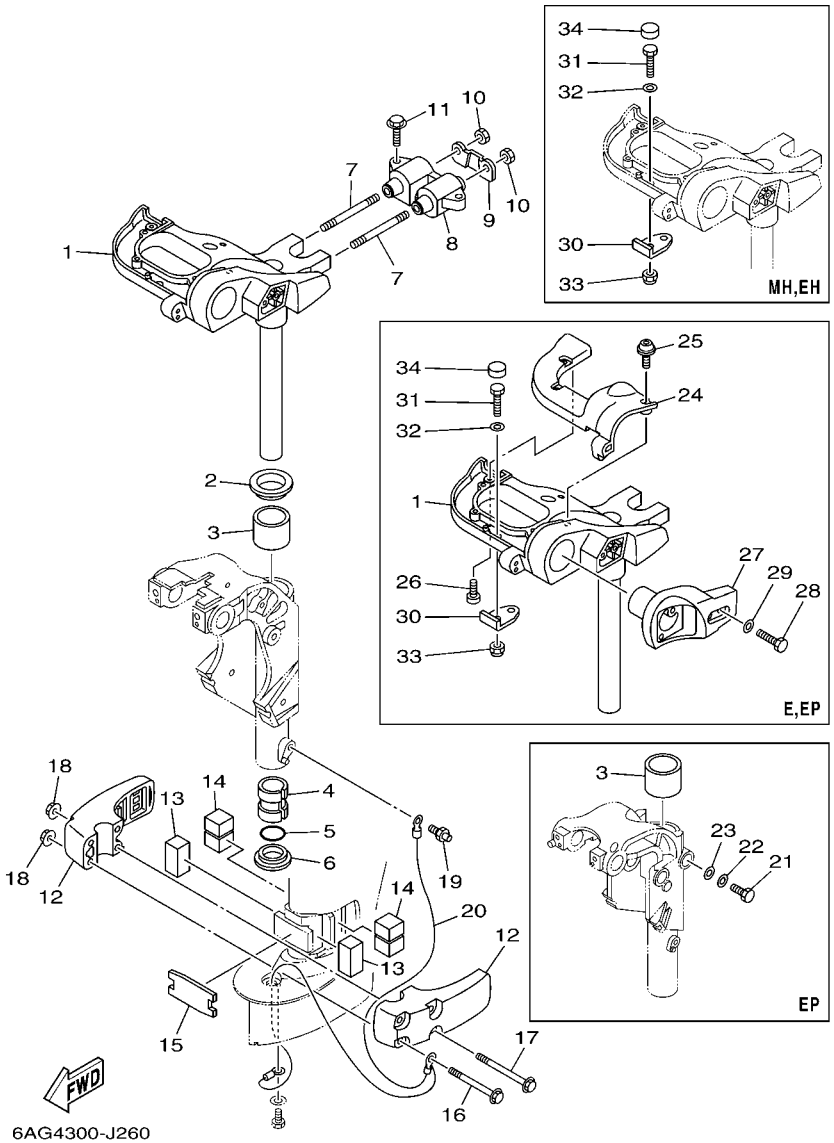

FIG. 26 BRACKET 3 SUPPORT 3

REF. NO.	PART NO. N° PIECES	DESCRIPTION DESCRIPTION	MH	EH	E	EP		REMARKS REMARQUES
1	6AH–42510–00–4D	STEERING BRACKET ASSY DIRECTION SUPPORT (ENS.)	1	1	1	1		S(17.1") S(17.1")
	6AH–42510–10–4D	STEERING BRACKET ASSY DIRECTION SUPPORT (ENS.)	1	1	1	1		L(22.1") L(22.1")
2	90209–40008	WASHER RONDELLE	1	1	1	1		
3	90386–40001	BUSH DOUILLE	1	1	1	1		
4	90386–30048	BUSH DOUILLE	1	1	1	1		
5	93210–29M94	O-RING JOINT TORIQUE	1	1	1	1		
6	90386–30M60	BUSH DOUILLE	1	1	1	1		
7	90116–10033	BOLT, STUD GOUJON	2	2	2	2		
8	6AH–44514–00	MOUNT DAMPER, UPPER SIDE SILENT-BLOC, SUPERIEUR LATERAL	1	1	1	1		
9	6AH–44526–00	PLATE PLAQUE	1	1	1	1		
10	95380–10600	NUT ECROU	2	2	2	2		
11	90119–08094	BOLT, WITH WASHER BOULON, AVEC RONDELLE	2	2	2	2		
12	6AH–44551–00–4D	HOUSING, LOWER MOUNT RUBBER 1 BOITIER, SILENT-BLOC INFERIEUR	2	2	2	2		
13	6AH–44557–00	MOUNT DAMPER, LOWER FRONT SILENT-BLOC, INFERIEUR AVANT	2	2	2	2		
14	6AH–44555–00	MOUNT DAMPER, LOWER SIDE SILENT-BLOC, INFERIEUR LATERAL	2	2	2	2		
15	6AH–44574–00	STOPPER, LOWER MOUNT RUBBER BUTEE	1	1	1	1		
16	90119–08M45	BOLT, WITH WASHER BOULON, AVEC RONDELLE	2	2	2	2		
17	90119–08M46	BOLT, WITH WASHER BOULON, AVEC RONDELLE	2	2	2	2		
18	90179–08M34	NUT ECROU	4	4	4	4		
19	93700–06M03	NIPPLE, GREASE PION	1	1	1	1		
20	6AH–82127–00	WIRE, LEAD 2 FIL 2	1	1	1	1		EP-S(17.1") EP-S(17.1")
	6AH–82127–11	WIRE, LEAD 2 FIL 2				1		EP-L(22.1") EP-L(22.1")
21	97095–06014	BOLT BOULON				1		
22	92995–06600	WASHER RONDELLE				1		
23	92995–06600	WASHER RONDELLE				1		
24	6AH–42532–10	COVER COUVERCLE			1	1		
25	90111–06072	BOLT,HEX. SOCKET BUTTON BOULON			4	4		

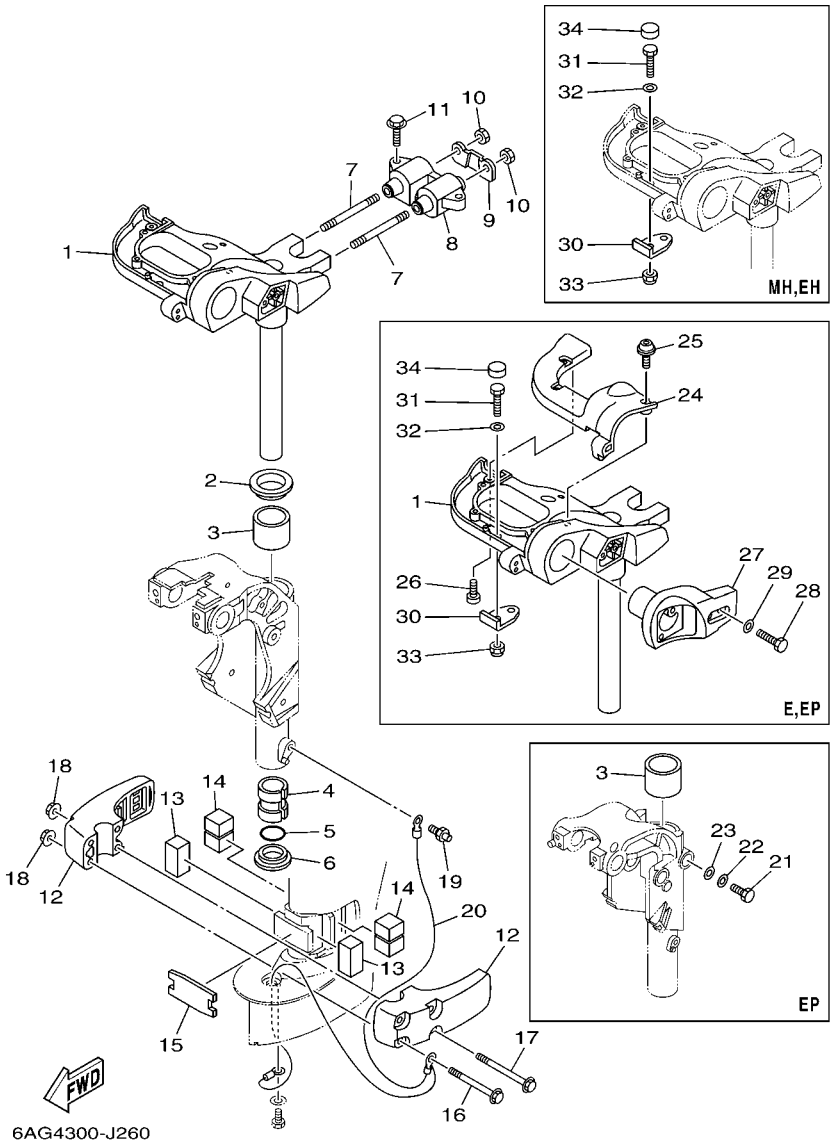

FIG. 26 BRACKET 3 SUPPORT 3

REF. NO.	PART NO. N° PIECES	DESCRIPTION DESCRIPTION	MH	EH	E	EP		REMARKS REMARQUES
26	97780–60520	SCREW, TAPPING VIS, TETE BOMBEE			1	1		
27	6AH–83773–00	BRACKET, SWITCH JOINT TORIQUE, COMMUTATEUR			1	1		
28	97095–06030	BOLT BOULON			2	2		
29	92995–06600	WASHER RONDELLE			2	2		
30	6AH–48511–01	HOOK, STEERING ATTACHE, DIRECTION	1	1	1	1		
31	97095–08025	BOLT BOULON	1	1	1	1		
32	92995–08600	WASHER RONDELLE	1	1	1	1		
33	90185–08057	NUT, SELF-LOCKING ECROU,AUTO-BLOQUANT	1	1	1	1		
34	6AH–44194–00	CAP CAPUCHON	1	1	1	1		

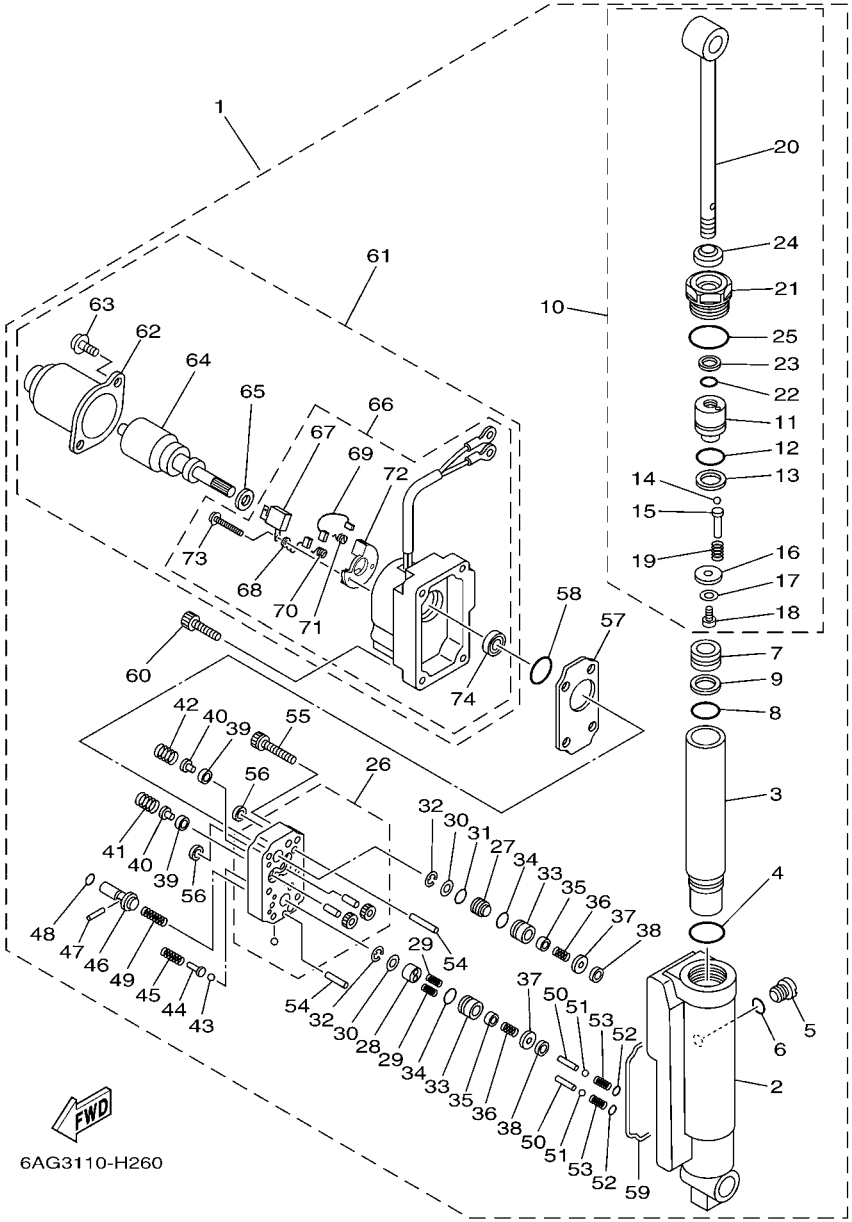

FIG. 27 POWER TILT ASSY — PUISSANCE PARER ET INCLINER

REF. NO.	PART NO. N° PIECES	DESCRIPTION DESCRIPTION	MH	EH	E	EP		REMARKS REMARQUES
1	6AH–43840–01–4D	POWER TILT ASSY PUISSANCE INCLINER (ENS.)				1		
2	6AH–4380K–00	.CYLINDER, TILT SUB ASSY .CYLINDRE				1		
3	6AH–22471–00	.CYLINDER, SHOCK ABSORBER .CYLINDRE, AMORTISSEUR				1		
4	93210–320A7	.O-RING .JOINT TORIQUE				1		
5	6H1–4388E–11	.PLUG, TAPER SCREW .BOUCHON				1		
6	93210–07003	.O-RING .JOINT TORIQUE				1		
7	6AH–43814–00	.PISTON, FREE .PISTON				1		
8	93210–24709	.O-RING .JOINT TORIQUE				1		
9	6C5–43871–00	.RING, BACK UP .SEGMENT				1		
10	6AH–43810–00	.TILT PISTON SUB ASSY .INCLINER PISTON AUXILIAIRE(ENS				1		
11	6AH–4380D–00	..PISTON COMP. ..PISTON COMP.				1		
12	93210–24709	..O-RING ..JOINT TORIQUE				1		
13	6C5–43871–00	..RING, BACK UP ..SEGMENT				1		
14	93501–08001	..BALL ..BILLE				5		
15	6AH–4386A–00	..PIN, ABSORBER VALVE ..GOUPILLE, SOUPAPE				5		
16	6AH–4385E–00	..PLATE, PISTON ..PLAQUE DE PISTON				1		
17	92902–06200	..WASHER ..RONDELLE				1		
18	6AH–43878–00	..BOLT, SOCKET ..BOULON				1		
19	6AH–43857–00	..SPRING, ABSORBER VALVE ..RESSORT				5		
20	6AH–43801–00	..ROD ..TIGE				1		
21	6AH–43811–00	..SCREW, CYLINDER END ..VIS, CYLINDRE RACCORD				1		
22	6H1–43866–00	..O-RING ..JOINT TORIQUE				1		
23	69A–43871–00	..RING, BACK UP ..SEGMENT				1		
24	69A–43812–00	..SEAL, DUST ..JOINT				1		
25	62X–43862–00	..O-RING ..JOINT TORIQUE				1		
26	6AH–43830–00	.GEAR PUMP ASSY .POMPE A PIGNON (ENS.)				1		
27	69A–43841–00	.PISTON, SHUTTLE .PISTON				1		

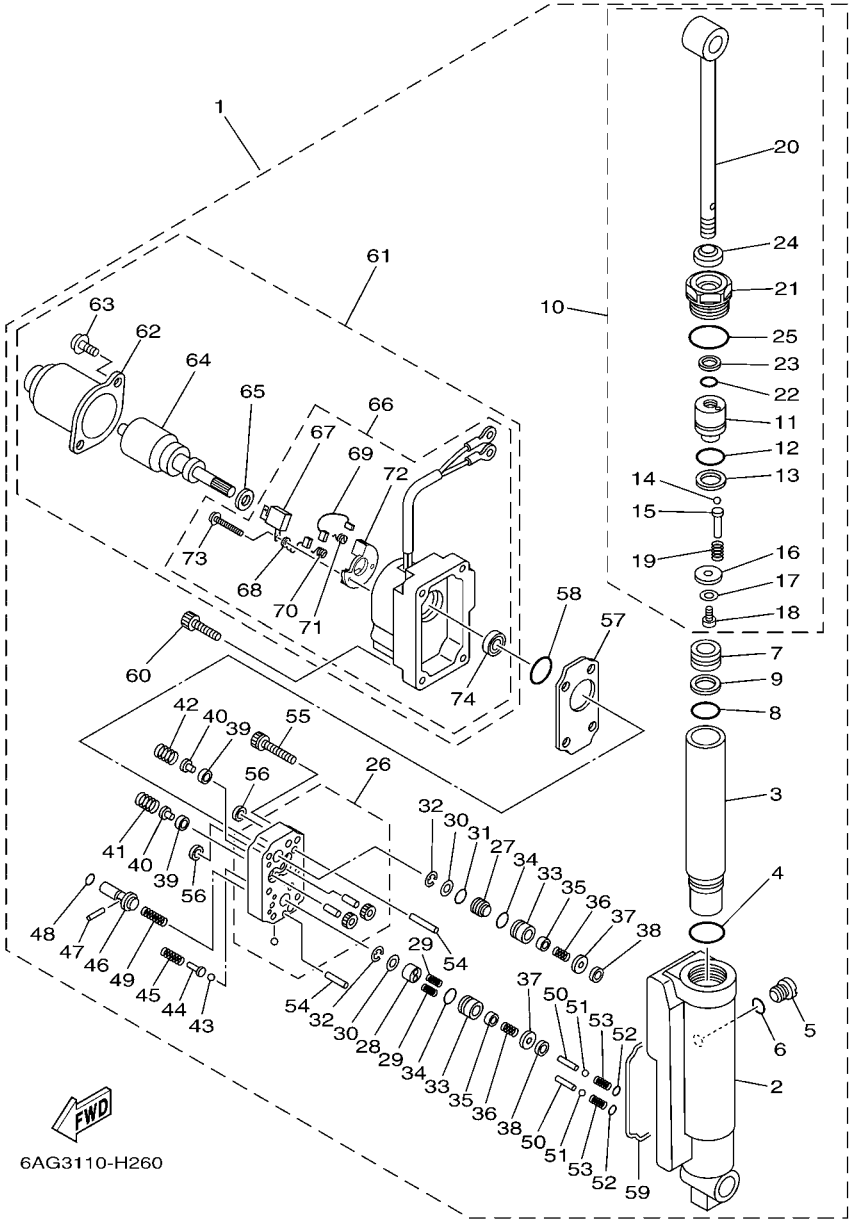

FIG. 27 POWER TILT ASSY — PUISSANCE PARER ET INCLINER

REF. NO.	PART NO. N° PIECES	DESCRIPTION DESCRIPTION	MH	EH	E	EP		REMARKS REMARQUES
28	69A–4384M–00	.PISTON, SHUTTLE 2 .PISTON 2				1		
29	62Y–43894–00	.SPRING, SHUTTLE RETURN .RESSORT				2		
30	69A–4384F–00	.SEAL, MAIN VALVE .JOINT				2		
31	6H1–43883–00	.O-RING .JOINT TORIQUE				1		
32	99002–03600	.CLIP .CIRCLIP				2		
33	69G–4382G–00	.VALVE SEAT .JEU DE POINTEAUX				2		
34	93210–12N52	.O-RING .JOINT TORIQUE				2		
35	6T4–43808–00	.SEAT VALVE COMP. 1 .SIEGE VALVE COMP. 1				2		
36	69G–43853–00	.SPRING, MAIN VALVE .RESSORT				2		
37	69G–4388F–00	.SPACER .ENTRETOISE				2		
38	69J–4381C–00	.FILTER 3 .FILTRE 3				2		
39	6H1–4384G–11	.SEAL, RELIEF VALVE .JOINT				2		
40	6H1–43844–10	.PIN, VALVE SUPPORT .GOUPILLE				2		
41	6F2–43855–00	.SPRING, UP RELIEF .RESSORT				1		
42	6H1–43856–10	.SPRING, DOWN RELIEF .RESSORT				1		
43	93501–08001	.BALL .BILLE				2		
44	69A–4386A–00	.PIN, ABSORBER VALVE .GOUPILLE, SOUPAPE				2		
45	69A–43824–00	.SPRING, DOWN RELIEF 2 .RESSORT 2				2		
46	69A–43848–00	.ROD, MANUAL RELEASE .TIGE				1		
47	93602–15250	.PIN, DOWEL .GOUJON				1		
48	93210–06001	.O-RING .JOINT TORIQUE				1		
49	6AH–43854–00	.SPRING, MANUAL RELEASE .RESSORT				1		
50	69A–4381G–00	.PIN 1 .GOUPILLE 1				2		
51	93501–08001	.BALL .BILLE				2		
52	6H1–43883–00	.O-RING .JOINT TORIQUE				2		
53	69A–4384H–00	.SPRING .RESSORT				2		
54	93606–14081	.PIN, DOWEL .GOUPILLE				2		

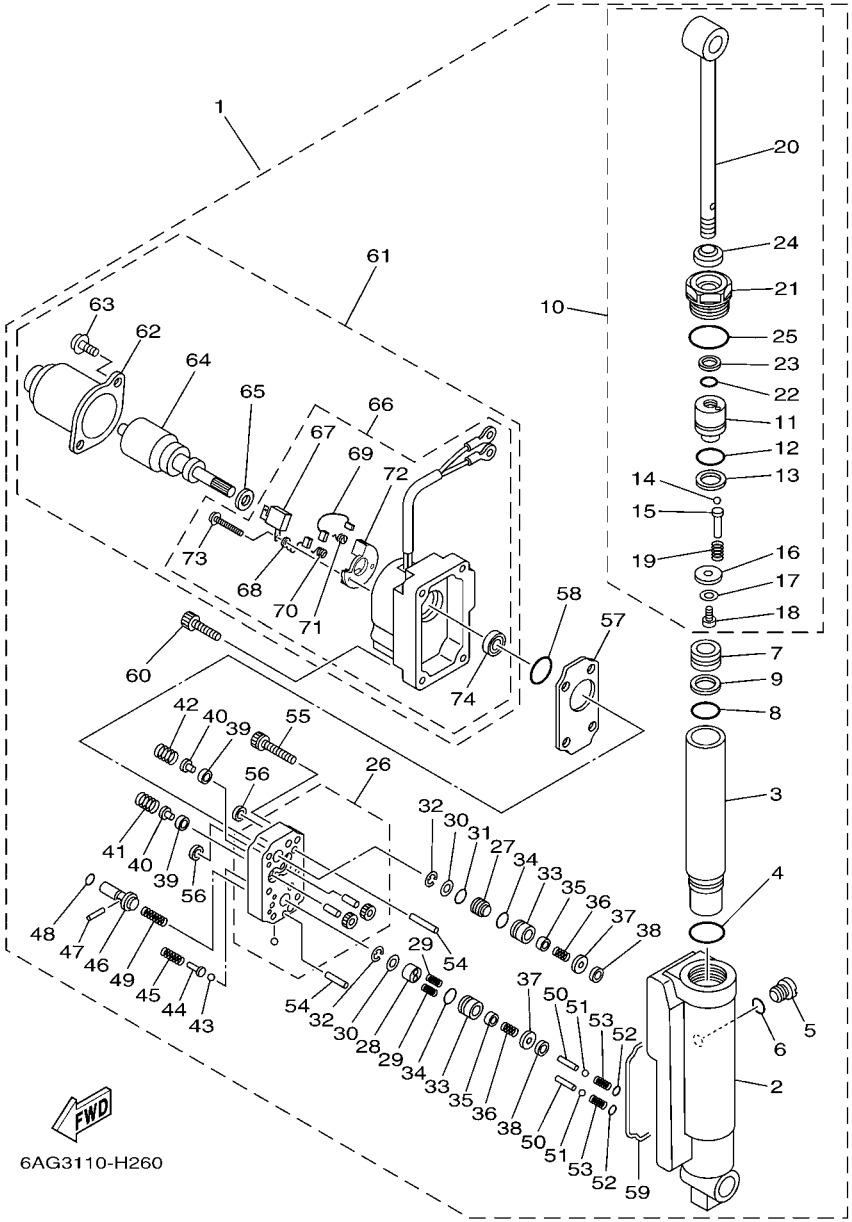

FIG. 27 POWER TILT ASSY — PUISSANCE PARER ET INCLINER

REF. NO.	PART NO. N° PIECES	DESCRIPTION DESCRIPTION	MH	EH	E	EP		REMARKS REMARQUES
55	91318–05025	.BOLT .BOULON				6		
56	69J–4381C–00	.FILTER 3 .FILTRE 3				2		
57	6AH–4381J–00	.PLATE .PLAQUE				1		
58	N35–43862–10	.O-RING .JOINT TORIQUE				1		
59	69A–23129–00	.GASKET, DRAIN PLUG .JOINT, PLOT DE VIDANGE				1		
60	69A–43878–00	.BOLT, SOCKET .BOULON				4		
61	69A–43880–01	.MOTOR ASSY .MOTEUR (ENS.)				1		
62	65W–43804–01	..STATOR ASSY ..STATOR (ENS.)				1		
63	65W–43887–01	..BOLT ..BOULON				2		
64	65W–43805–01	..ARMATURE ASSY ..INDUIT (ENS.)				1		
65	65W–4387G–00	..WASHER ..RONDELLE				1		
66	69A–43881–01	..FRAME, END ..BATI				1		
67	65W–82181–00	...CIRCUIT BREAKER COMP. ...RUPTEUR COMPLET				1		
68	65W–43892–01	...BRUSH 2 ...BALAI 2				1		
69	65W–43891–01	...BRUSH 1 ...BALAI 1				1		
70	65W–4386K–01	...SPRING, BRUSH ...RESSORT, BALAI				1		
71	65W–4386L–00	...SPRING, BRUSH 2 ...RESSORT, BALAI 2				1		
72	65W–4380F–01	...PLATE, BRUSH HOLDER ...PLAQUE				1		
73	65W–43879–01	...SCREW, WITH WASHER ...VIS, AVEC RONDELLE				2		
74	65W–43882–01	...OIL SEAL ...JOINT SPI				1		

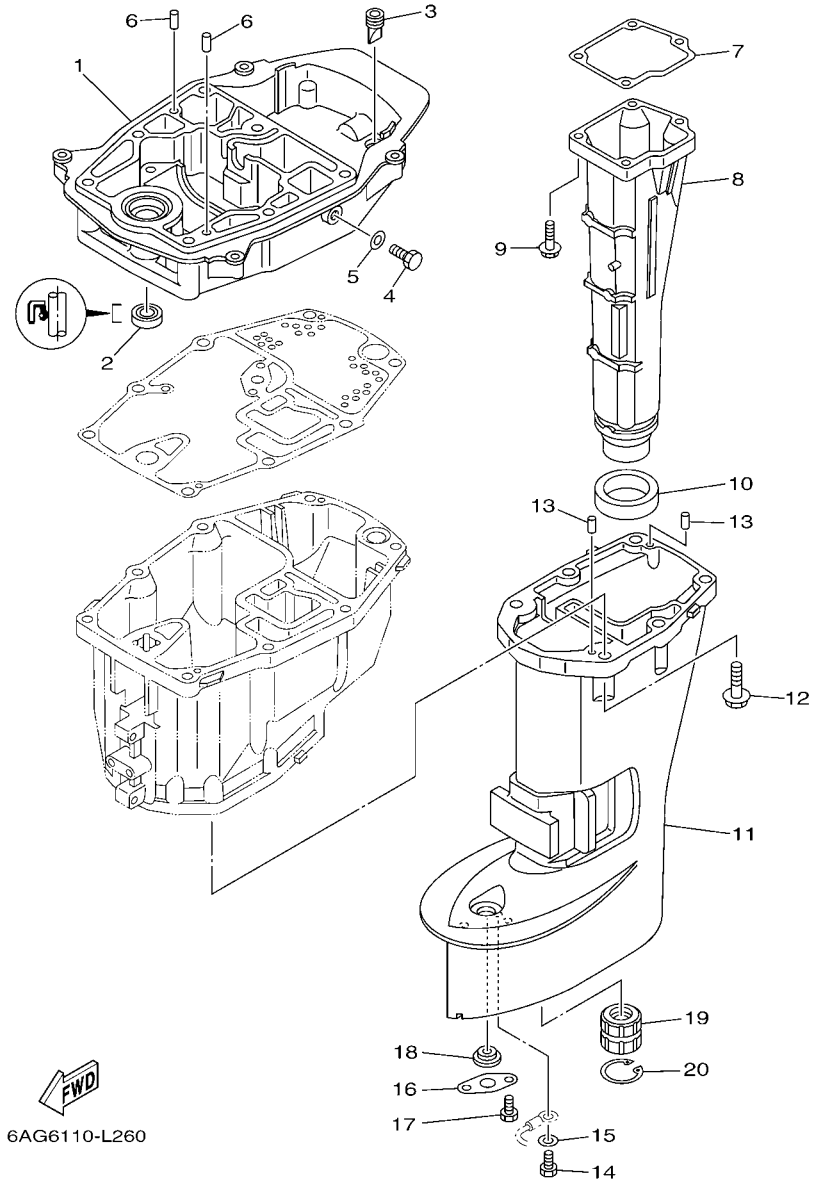

FIG. 28 UPPER CASING FOURREAU

REF. NO.	PART NO. N° PIECES	DESCRIPTION DESCRIPTION	MH	EH	E	EP		REMARKS REMARQUES
1	6AH–41137–00–CA	GUIDE, EXHAUST COLLECTEUR D'ECHAPPEMENT	1	1	1	1		
2	93101–12M63	OIL SEAL JOINT SPY	1	1	1	1		
3	65W–42717–00	RUBBER, SEAL 2 JOINT EN CAOUTCHOUC 2	1	1	1	1		
4	97095–08014	BOLT BOULON	1	1	1	1		
5	90430–08143	GASKET JOINT	1	1	1	1		
6	93606–19M23	PIN, DOWEL GOUPILLE	2	2	2	2		
7	6AH–41134–00	GASKET, EXHAUST MANIFOLD JOINT, PIPE D'ECHAPPEMENT	1	1	1	1		
8	6AH–14711–00–CA	MUFFLER 1 POT D'ECHAPPEMENT 1	1	1	1	1		S(17.1") S(17.1")
	6AH–14711–10–CA	MUFFLER 1 POT D'ECHAPPEMENT 1	1	1	1	1		L(22.1") L(22.1")
9	97575–06525	BOLT, WITH WASHER VIS HEXAGONAL AVC RONDELLE	4	4	4	4		
10	6AH–41138–00	SEAL, EXT. 1 JOINT DE GROUPE 1	1	1	1	1		
11	6AH–45111–00–4D	CASING, UPPER FOURREAU	1	1	1	1		S(17.1") S(17.1")
	6AH–45111–10–4D	CASING, UPPER FOURREAU	1	1	1	1		L(22.1") L(22.1")
12	97575–08530	BOLT, WITH WASHER VIS HEXAGONAL AVC RONDELLE	6	6	6	6		
13	93604–12M07	PIN, DOWEL CLAVETTE	2	2	2	2		
14	97095–05010	BOLT BOULON	1	1	1	1		
15	92995–05600	WASHER RONDELLE	1	1	1	1		
16	68T–45321–00	PLATE PLAQUETTE	1	1	1	1		
17	97095–06008	BOLT BOULON	1	1	1	1		
18	90480–14M54	GROMMET PASSE-FIL	1	1	1	1		
19	682–45318–00	BUSHING, DRIVE SHAFT DOUILLE, ARBRE MOTEUR	1	1	1	1		L(22.1") L(22.1")
20	93420–30042	CIRCLIP CIRCLIP, TYPE S	1	1	1	1		L(22.1") L(22.1")

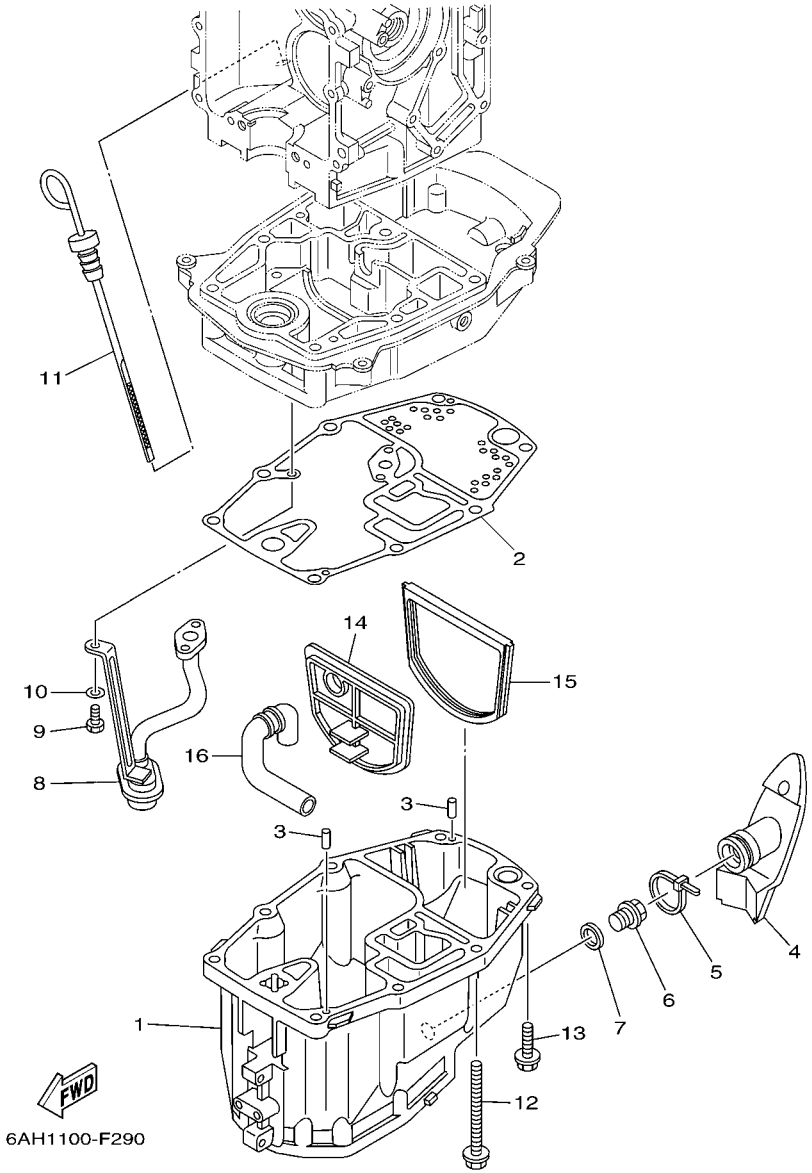

FIG. 29 OIL PAN — VENTILATEUR D'HUILE

REF. NO.	PART NO. N° PIECES	DESCRIPTION DESCRIPTION	MH	EH	E	EP		REMARKS REMARQUES
1	6AH–15311–00–CA	OIL PAN VENTILATEUR D'HUILE	1	1	1	1		
2	6AH–15312–00	GASKET, OIL PAN JOINT DE VENTILATEUR D'HUILE	1	1	1	1		
3	93604–12M07	PIN, DOWEL CLAVETTE	2	2	2	2		
4	6AH–15316–00	DAMPER 1 AMORTISSEUR 1	1	1	1	1		
5	90465–11M59	CLAMP BRIDE	1	1	1	1		
6	90340–14M06	PLUG, STRAIGHT SCREW PLOT, FILETE DROIT	1	1	1	1		
7	90430–14M09	GASKET JOINT	1	1	1	1		
8	6AH–13411–00	STRAINER, OIL FILTRE, HUILE	1	1	1	1		
9	97013–06016	BOLT BOULON	3	3	3	3		
10	92903–06600	WASHER, PLATE RONDELLE, PLATE	3	3	3	3		
11	6AH–15362–00	PLUG, OIL LEVEL PLOT, NIVEAU D'HUILE	1	1	1	1		
12	90119–08103	BOLT, WITH WASHER BOULON, AVEC RONDELLE	6	6	6	6		
13	97575–08530	BOLT, WITH WASHER VIS HEXAGONAL AVC RONDELLE	2	2	2	2		
14	6AH–45126–00	PLATE, SEAL DAMPER PLAQUETTE	1	1	1	1		
15	6AH–45115–00	GASKET, UPPER CASING JOINT, TUBE D'ARBRE	1	1	1	1		
16	6AH–45135–00	PIPE TUYAU	1	1	1	1		

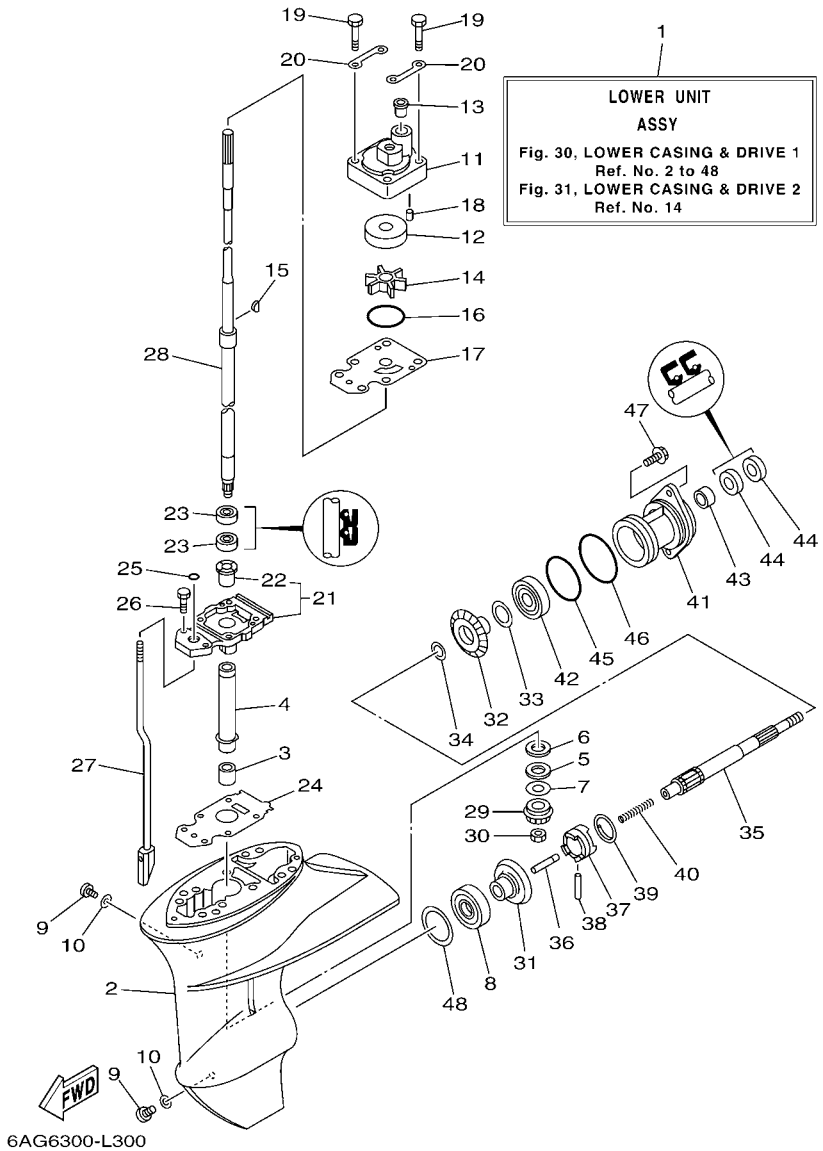

FIG. 30 LOWER CASING & DRIVE 1 BOITIER D'HELICE TRANSMISSION1

REF. NO.	PART NO. N° PIECES	DESCRIPTION DESCRIPTION	MH	EH	E	EP		REMARKS REMARQUES
1	6AH–45300–00–4D	LOWER UNIT ASSY UNITE INFERIEURE (ENS.)	1	1	1	1		S(17.1") S(17.1")
	6AH–45300–10–4D	LOWER UNIT ASSY UNITE INFERIEURE (ENS.)	1	1	1	1		L(22.1") L(22.1")
2	6AH–45311–00–4D	CASING, LOWER BOITIER D'HELICE	1	1	1	1		
3	93315–314V8	BEARING ROULEMENT	1	1	1	1		
4	63V–45536–00	SLEEVE, DRIVE SHAFT MANCHON, ARBRE MOTEUR	1	1	1	1		
5	90209–14011	WASHER RONDELLE	1	1	1	1		
6	90201–15017	WASHER, PLATE RONDELLE, PLATE	1	1	1	1		
7	6E8–45587–10	SHIM (T:1.13MM) CALE (T:1.13MM)	1	1	1	1		UR UR
	6E8–45587–30	SHIM (T:1.20MM) CALE (T:1.20MM)	1	1	1	1		UR UR
8	93332–00005	BEARING ROULEMENT	1	1	1	1		
9	90340–08002	PLUG, STRAIGHT SCREW PLOT, FILETE DROIT	2	2	2	2		
10	90430–08020	GASKET JOINT	2	2	2	2		
11	6AH–44311–00	HOUSING, WATER PUMP CORPS, POMPE A EAU	1	1	1	1		
12	63V–44322–00	INSERT, CARTRIDGE CUVETTE	1	1	1	1		
13	6L2–44367–00	DAMPER, WATER SEAL 3 JOINT TUBE D'EAU 3	1	1	1	1		
14	63V–44352–01	IMPELLER TURBINE	1	1	1	1		
15	664–44338–00	KEY, WOODRUFF CLAVETTE, VOLANT	1	1	1	1		
16	93210–49046	O-RING JOINT TORIQUE	1	1	1	1		
17	68T–44323–00	OUTER PLATE, CARTRIDGE PLAQUE EXTERIEURE	1	1	1	1		
18	93604–12M07	PIN, DOWEL CLAVETTE	2	2	2	2		
19	97095–08045	BOLT BOULON	4	4	4	4		
20	63V–44328–01	PLATE PLAQUETTE	2	2	2	2		
21	69G–45331–01–CA	HOUSING, BEARING FLASQUE, ROULEMENT	1	1	1	1		
22	626–45316–09	.BUSHING, DRIVE SHAFT .DOUILLE, ARBRE MOTEUR	1	1	1	1		
23	93101–20001	OIL SEAL JOINT SPY	2	2	2	2		
24	69G–45315–A0	PACKING, LOWER CASING JOINT, BOITIER D'HELICE	1	1	1	1		
25	93210–06ME6	O-RING JOINT TORIQUE	1	1	1	1		

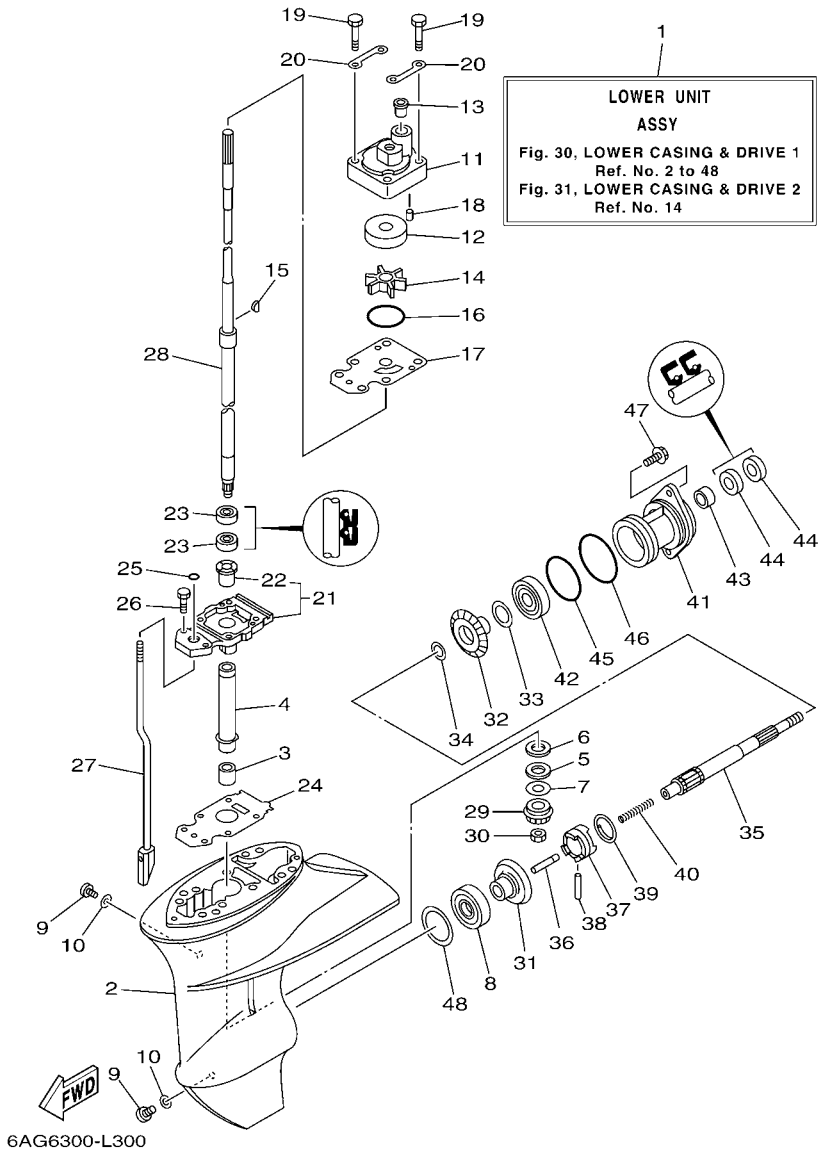

FIG. 30 LOWER CASING & DRIVE 1 BOITIER D'HELICE TRANSMISSION1

REF. NO.	PART NO. N° PIECES	DESCRIPTION DESCRIPTION	MH	EH	E	EP		REMARKS REMARQUES
26	97080–08025	BOLT BOULON	2	2	2	2		
27	6AH–44150–00	SHIFT CAM ASSY CAME D'INVERSION	1	1	1	1		S(17.1") S(17.1")
	6AH–44150–10	SHIFT CAM ASSY CAME D'INVERSION	1	1	1	1		L(22.1") L(22.1")
28	6AH–45510–00	DRIVE SHAFT ASSY ARBRE MOTEUR (ENS.)	1	1	1	1		S(17.1") S(17.1")
	6AH–45510–10	DRIVE SHAFT ASSY ARBRE MOTEUR (ENS.)	1	1	1	1		L(22.1") L(22.1")
29	63V–45551–00	PINION (13T) PIGNON D'ATTAQUE (13D)	1	1	1	1		
30	90179–08M06	NUT ECROU	1	1	1	1		
31	6E7–45560–01	GEAR 1 (27T) PIGNON 1 (27T)	1	1	1	1		
32	6E7–45571–00	GEAR 2 (27T) PIGNON 2 (27T)	1	1	1	1		
33	626–45577–00	SHIM (T:0.10MM) CALE (T:0.10MM)	1	1	1	1		UR UR
	626–45577–10	SHIM (T:0.20MM) CALE (T:0.20MM)	1	1	1	1		UR UR
	626–45577–20	SHIM (T:0.30MM) CALE (T:0.30MM)	1	1	1	1		UR UR
	626–45577–30	SHIM (T:0.40MM) CALE (T:0.40MM)	1	1	1	1		UR UR
	626–45577–40	SHIM (T:0.50MM) CALE (T:0.50MM)	1	1	1	1		UR UR
34	90201–17682	WASHER, PLATE RONDELLE, PLATE	1	1	1	1		
35	683–45611–00	SHAFT, PROPELLER ARBRE, HELICE	1	1	1	1		
36	650–45635–00	PLUNGER, SHIFT POUSSOIR D'EMBRAYAGE	1	1	1	1		
37	682–45631–00	CLUTCH, DOG CRABOT	1	1	1	1		
38	90250–05010	PIN, STRAIGHT GOUPILLE, DROITE	1	1	1	1		
39	648–45633–00	RING, CROSS PIN JONC, GOUPILLE CRABOT	1	1	1	1		
40	90501–150A0	SPRING, COMPRESSION RESSORT, COMPRESSION	1	1	1	1		
41	683–45361–02–4D	CAP, LOWER CASING COUVERCLE, BOITIER D'HELICE	1	1	1	1		
42	93306–00501	BEARING ROULEMENT	1	1	1	1		
43	93315–317U2	BEARING ROULEMENT	1	1	1	1		
44	93101–17054	OIL SEAL JOINT SPY	2	2	2	2		
45	93210–57M09	O-RING JOINT TORIQUE	1	1	1	1		
46	93210–56M80	O-RING JOINT TORIQUE	1	1	1	1		

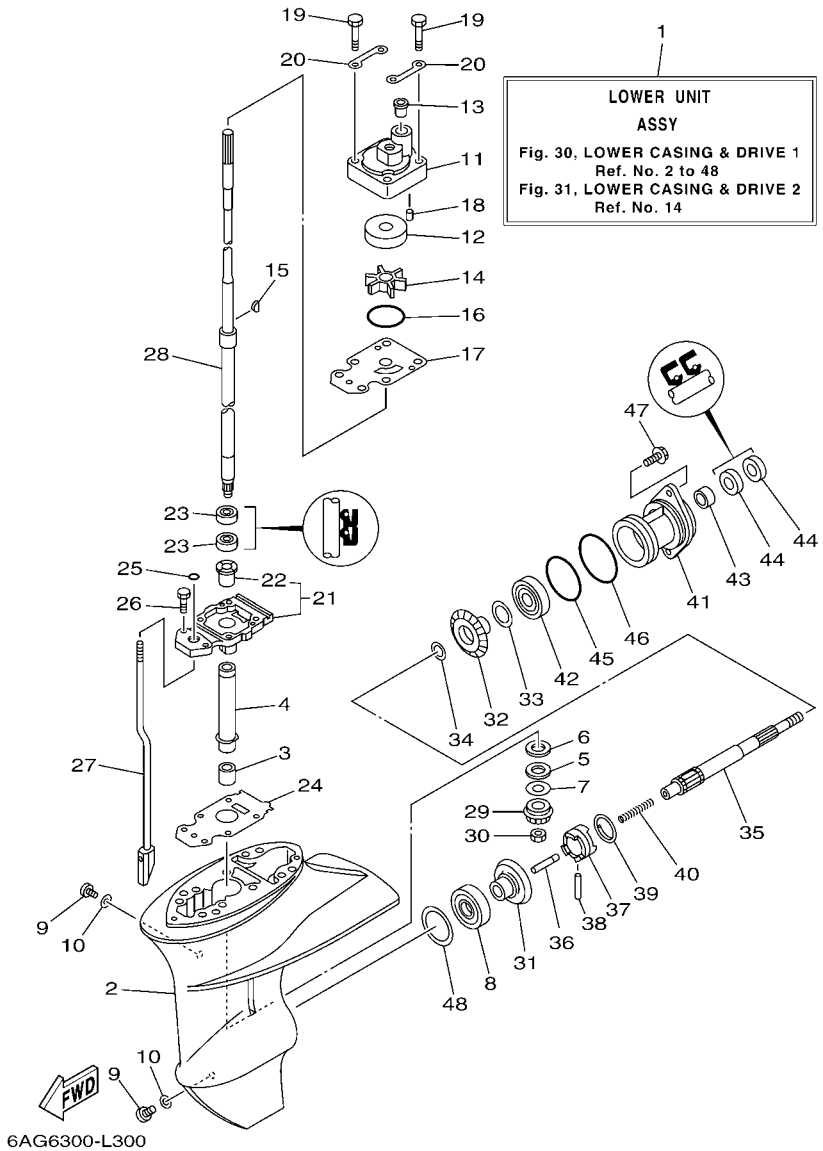

FIG. 30 LOWER CASING & DRIVE 1 BOITIER D'HELICE TRANSMISSION1

REF. NO.	PART NO. N° PIECES	DESCRIPTION DESCRIPTION	MH	EH	E	EP		REMARKS REMARQUES
47	97575–06520	BOLT, WITH WASHER VIS HEXAGONAL AVC RONDELLE	2	2	2	2		
48	664–45567–01	SHIM (T:0.10MM) CALE (T:0.10MM)	1	1	1	1		UR UR
	664–45567–10	SHIM (T:0.12MM) CALE (T:0.12MM)	1	1	1	1		UR UR
	664–45567–20	SHIM (T:0.15MM) CALE (T:0.15MM)	1	1	1	1		UR UR
	664–45567–30	SHIM (T:0.18MM) CALE (T:0.18MM)	1	1	1	1		UR UR
	664–45567–40	SHIM (T:0.30MM) CALE (T:0.30MM)	1	1	1	1		UR UR
	664–45567–50	SHIM (T:0.40MM) CALE (T:0.40MM)	1	1	1	1		UR UR
	664–45567–60	SHIM (T:0.50MM) CALE (T:0.50MM)	1	1	1	1		UR UR

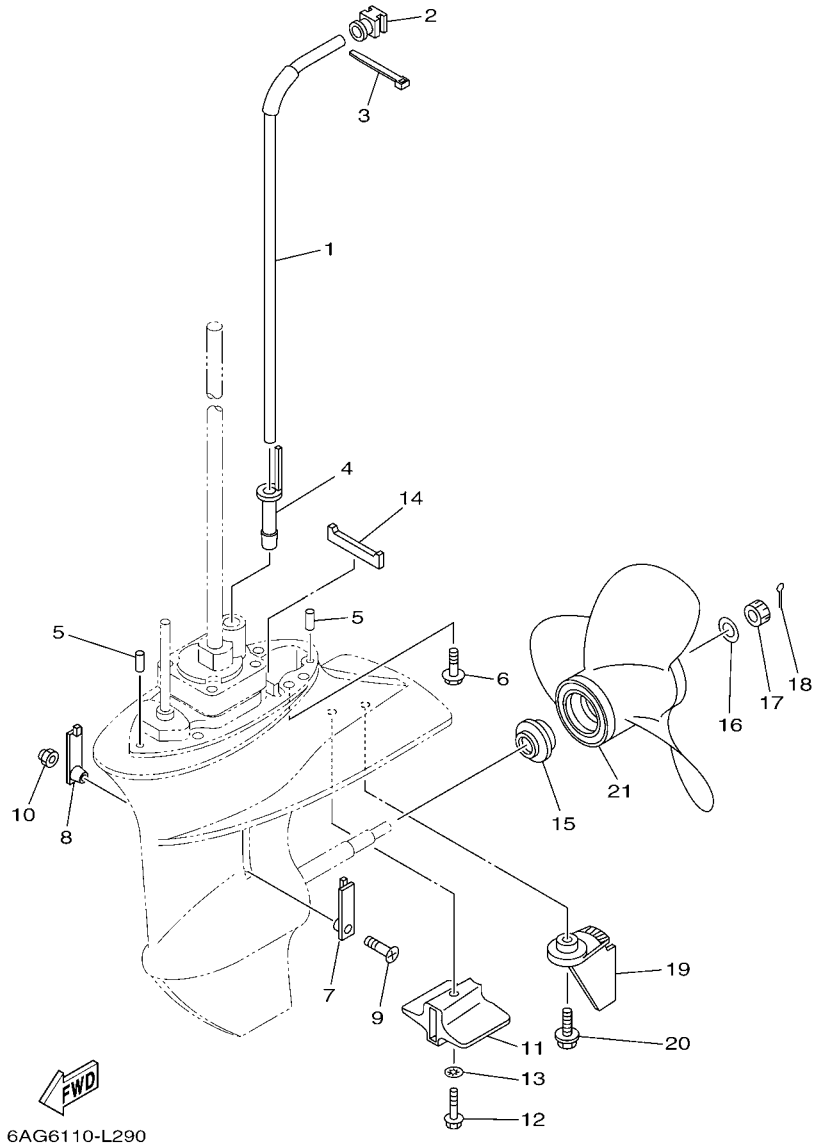

FIG. 31 LOWER CASING & DRIVE 2 BOITIER D'HELICE TRANSMISSION2

REF. NO.	PART NO. N° PIECES	DESCRIPTION DESCRIPTION	MH	EH	E	EP		REMARKS REMARQUES
1	6AH–44361–01	TUBE, WATER 1 TUBE D'EAU 1	1	1	1	1		S(17.1") S(17.1")
	6AH–44361–11	TUBE, WATER 1 TUBE D'EAU 1	1	1	1	1		L(22.1") L(22.1")
2	6AH–44365–00	DAMPER, WATER SEAL 1 JOINT, TUBE D'EAU 1	1	1	1	1		
3	90465–11M10	CLAMP BRIDE	1	1	1	1		
4	6AH–44368–00	RUBBER, WATER SEAL 4 CAOUTCHOUC EAU JUNTA 4	1	1	1	1		
5	93604–12M07	PIN, DOWEL CLAVETTE	2	2	2	2		
6	97575–08530	BOLT, WITH WASHER VIS HEXAGONAL AVC RONDELLE	4	4	4	4		
7	6G1–45214–00	COVER, WATER INLET 1 GRILLE, ENTREE D'EAU 1	1	1	1	1		
8	63V–45215–00	COVER, WATER INLET 2 GRILLE, ENTREE D'EAU 2	1	1	1	1		
9	90152–05011	SCREW, COUNTERSUNK VIS, TETE NOYEE	1	1	1	1		
10	90185–05002	NUT, NYLON ECROU,AUTO-BLOQUANT	1	1	1	1		
11	6AH–45251–00	ANODE ANODE	1	1	1	1		
12	95895–06035	BOLT, FLANGE BOULON	1	1	1	1		
13	92990–06300	WASHER, INTERNAL TOOTH RONDELLE, DENTURE INTERNE	1	1	1	1		
14	63V–45375–00	DAMPER, SEAL BOURRELET, CAOUTCHOUC	1	1	1	1		
15	6E7–45987–01	SPACER 1 ENTRETOISE 1	1	1	1	1		
16	90201–10M01	WASHER, PLATE RONDELLE, PLATE	1	1	1	1		
17	90171–10M01	NUT, CASTLE ECROU, CRENELE	1	1	1	1		
18	91490–30020	PIN. COTTER GOUPILLE	1	1	1	1		
19	6AH–45371–00–4D	TAB-TRIM ANODE DERIVE	1	1	1	1		
20	90119–06M88	BOLT, WITH WASHER BOULON, AVEC RONDELLE	1	1	1	1		
21	63V–45941–10	PROPELLER (3X9-1/4"X12"-J1) HELICE (3X9-1/4"X12"-J1)	1	1	1	1		UR UR
	63V–45943–10	PROPELLER (3X9-1/4"X11"-J1) HELICE (3X9-1/4"X11"-J1)	1	1	1	1		UR UR
	63V–45945–10	PROPELLER (3X9-1/4"X9"-J1) HELICE (3X9-1/4"X9"-J1)	1	1	1	1		UR UR
	63V–45952–10	PROPELLER (3X9-1/4"X10"-J1) HELICE (3X9-1/4"X10"-J1)	1	1	1	1		UR UR
	683–45941–00	PROPELLER (3X9-1/4"X12"-J) HELICE (3X9-1/4"X12"-J)	1	1	1	1		UR UR
	683–45943–00	PROPELLER (3X9-1/4"X10-1/2"-J) HELICE (3X9-1/4"X10-1/2"-J)	1	1	1	1		UR UR

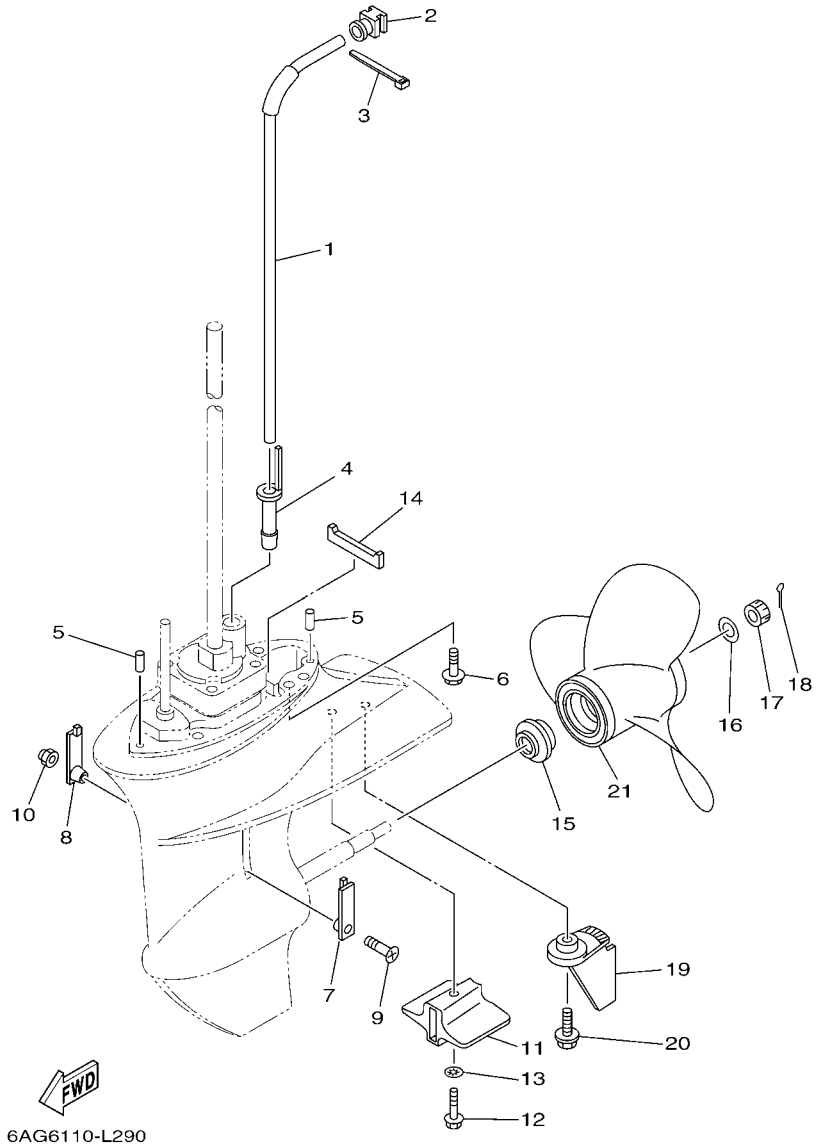

FIG. 31 LOWER CASING & DRIVE 2 BOITIER D'HELICE TRANSMISSION2

REF. NO.	PART NO. N° PIECES	DESCRIPTION DESCRIPTION	MH	EH	E	EP		REMARKS REMARQUES
21	683–45952–00	PROPELLER (3X9-1/4"X9-3/4"-J) HELICE (3X9-1/4"X9-3/4"-J)	1	1	1	1		UR UR

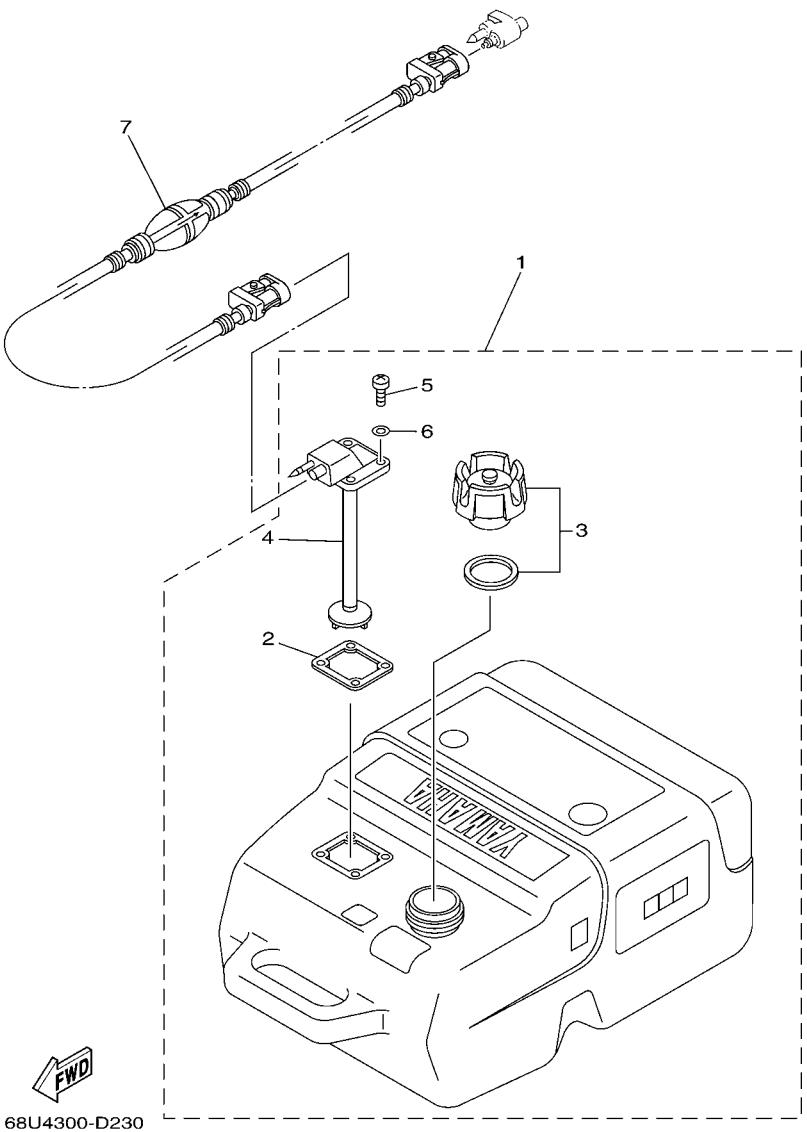

FIG. 32 FUEL TANK 1 — RESERVOIR A CARBURANT 1

REF. NO.	PART NO. N° PIECES	DESCRIPTION DESCRIPTION	MH	EH	E	EP		REMARKS REMARQUES
1	6YK–24201–03	FUEL TANK ASSY (25L) RESERVOIR A ESSENCE (ENS.) 25L	1	1	1	1		AP EXCEPT FOR RUS AP EXCEPT FOR RUS
2	6YL–24268–01	.GASKET, FUEL METER .JOINT, JAUGE A CARBURANT	1	1	1	1		
3	6YK–24610–01	.CAP ASSY .BOUCHON	1	1	1	1		
4	6YK–24260–01	.FUEL METER ASSY .INDICATEUR DE CARBURANT	1	1	1	1		
5	90157–05M16	.SCREW, PAN HEAD .VIS, TETE TRONCONIQUE	4	4	4	4		
6	6YL–24329–00	.SEAL .JOINT	4	4	4	4		
7	6YL–24306–54	FUEL PIPE COMP. 1 DURITE A ESSENCE 1	1	1	1	1		AP EXCEPT FOR RUS AP EXCEPT FOR RUS

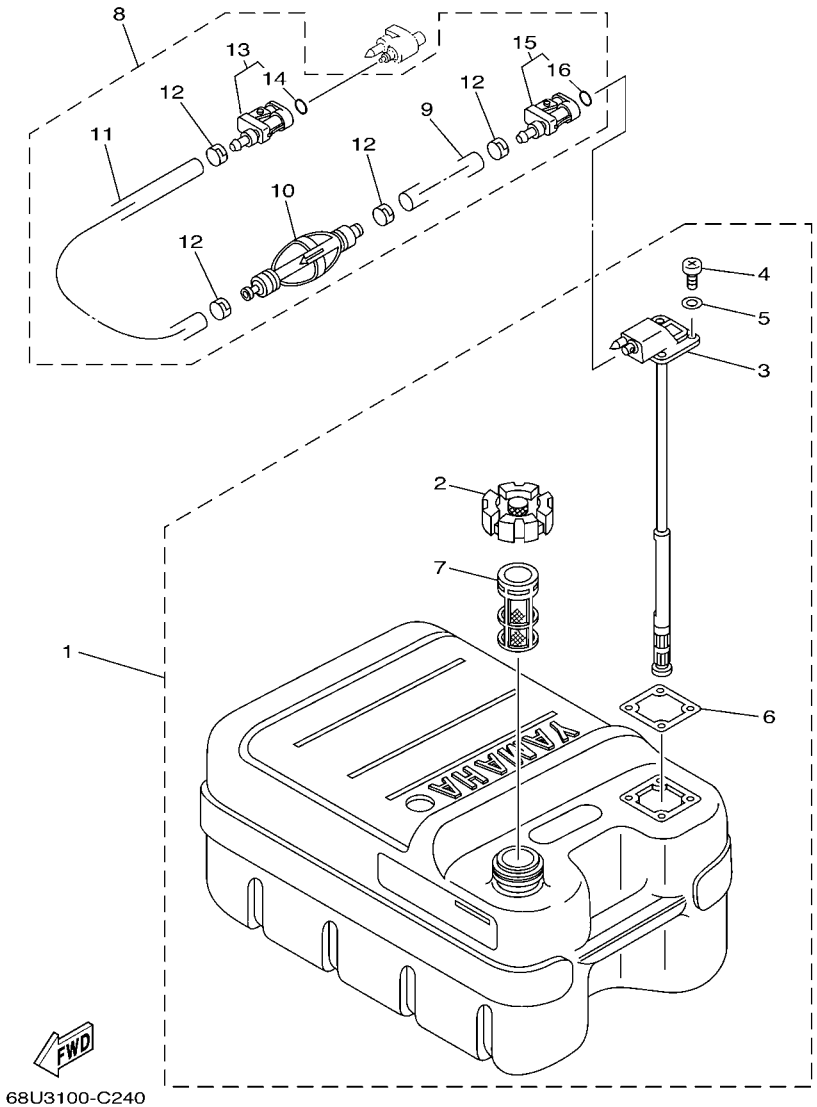

FIG. 33 FUEL TANK 2 — RESERVOIR A CARBURANT 2

REF. NO.	PART NO. N° PIECES	DESCRIPTION DESCRIPTION	MH	EH	E	EP		REMARKS REMARQUES
1	6YJ–24201–10	FUEL TANK ASSY (24L) RESERVOIR A ESSENCE (ENS.):24L	1	1	1			AP FOR RUS AP FOR RUS
2	6YJ–24610–01	.CAP ASSY .BOUCHON	1	1	1			
3	6Y1–24260–12	.FUEL METER ASSY .INDICATEUR DE CARBURANT	1	1	1			WITH INDICATOR WITH INDICATOR
4	90157–05M19	.SCREW, PAN HEAD .VIS, TETE TRONCONIQUE	4	4	4			
5	6Y1–24329–00	.SEAL .JOINT	4	4	4			
6	6Y1–24268–00	.GASKET, FUEL METER .JOINT, JAUGE A CARBURANT	1	1	1			
7	6YJ–24167–00	.STRAINER .FILTRE	1	1	1			
8	61J–24306–04	FUEL PIPE COMP. 1 DURITE A ESSENCE 1	1	1	1			AP FOR RUS AP FOR RUS
9	90445–11M06	.HOSE (L2050) .DURITE (L2050)	1	1	1			
10	61J–24360–00	.PRIMER PUMP ASSY .POMPE D'AMORCAGE	1	1	1			
11	90445–11M05	.HOSE (L850) .DURITE (L850)	1	1	1			
12	650–24351–51	.BAND 1 .COLLIER 1	4	4	4			
13	6G1–24305–05	.FUEL PIPE JOINT COMP. 2 .DURITE RACCORDEMT. A ESSENCE	1	1	1			
14	93210–08287	..O-RING ..JOINT TORIQUE	1	1	1			
15	6Y1–24305–06	.FUEL PIPE JOINT COMP. 2 .DURITE RACCORDEMT. A ESSENCE	1	1	1			
16	93210–08287	..O-RING ..JOINT TORIQUE	1	1	1			

FIG. 34 STEERING GUIDE FIXATION DE DIRECTION

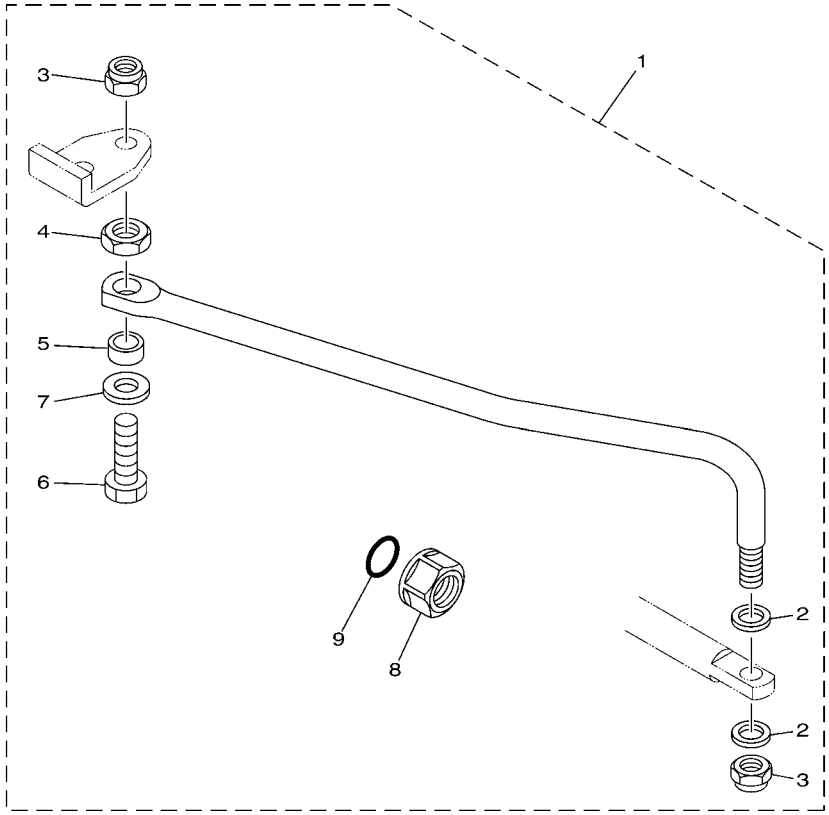

6AH1100-F341

REF. NO.	PART NO. N° PIECES	DESCRIPTION DESCRIPTION	MH	EH	E	EP		REMARKS REMARQUES
1	6AH–61350–00	STEERING GUIDE ATTACHMENT KIT FIXATIONS DE DIRECTION	1	1	1	1		AP AP
2	90201–10M20	.WASHER, PLATE .RONDELLE, PLATE	2	2	2	2		
3	90185–09M01	.NUT, SELF-LOCKING .ECROU,AUTO-BLOQUANT	2	2	2	2		
4	90170–09M03	.NUT .ECROU	1	1	1	1		
5	90387–10M42	.COLLAR .COLLERETTE	1	1	1	1		
6	6E5–61355–00	.BOLT .BOULON	1	1	1	1		
7	90201–10M63	.WASHER, PLATE .RONDELLE, PLATE	1	1	1	1		
8	6E5–43145–01	.CAP, CLAMP BRACKET .CAPUCHON, PRESSE	1	1	1	1		
9	93210–16275	.O-RING .JOINT TORIQUE	1	1	1	1		

FIG. 35 REMOTE CONTROL BOX BOITIER DE COMMANDE A DISTANCE

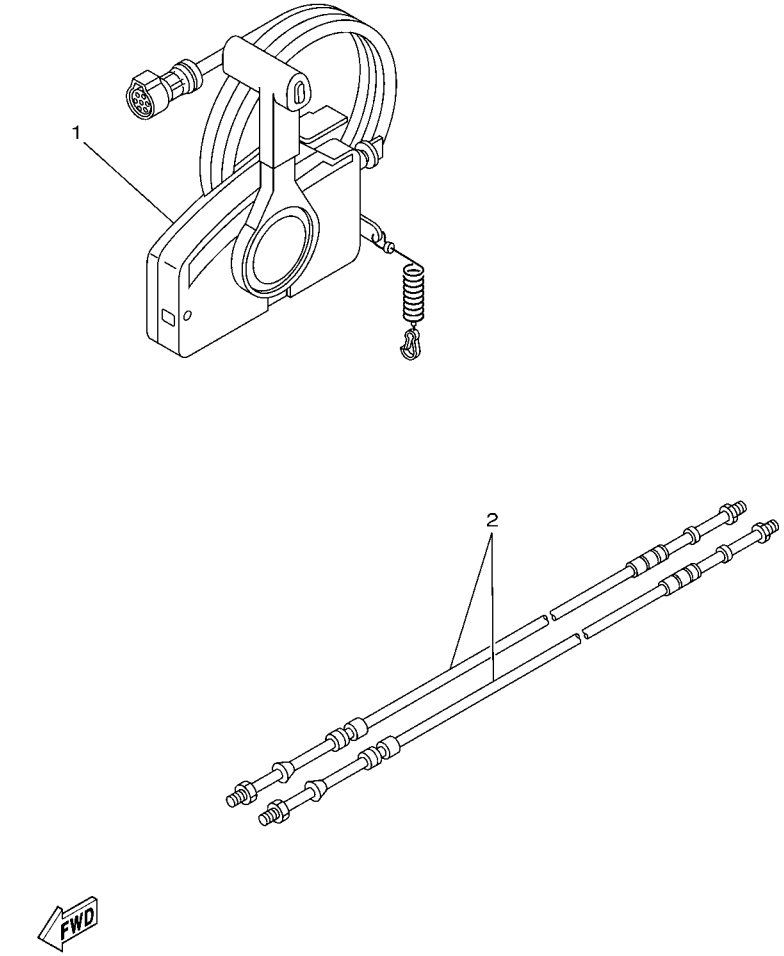

67M0100-8280

REF. NO.	PART NO. N° PIECES	DESCRIPTION DESCRIPTION	MH	EH	E	EP		REMARKS REMARQUES
1	703–48205–A6	REMOTE CONTROL ASSY (10P) BOITIER DE COMMANDE A DISTANCE				1		AP WITH PT/T SW. AP WITH PT/T SW.
	703–48201–A4	REMOTE CONTROL ASSY (10P) BOITIER DE COMMANDE A DISTANCE			1			AP WITHOUT PT/T SW. AP WITHOUT PT/T SW.
2	701–48310–90	CABLE, REMOTE CONTROL L=11F CABLE, COMMANDE A DISTANCE:11F			2	2		UR UR
	701–48320–00	CABLE, REMOTE CONTROL L=12F CABLE, COMMANDE A DISTANCE:12F			2	2		UR UR
	701–48320–20	CABLE, REMOTE CONTROL L=13F CABLE, COMMANDE A DISTANCE:13F			2	2		UR UR
	701–48320–50	CABLE, REMOTE CONTROL L=15F CABLE, COMMANDE A DISTANCE:15F			2	2		UR UR

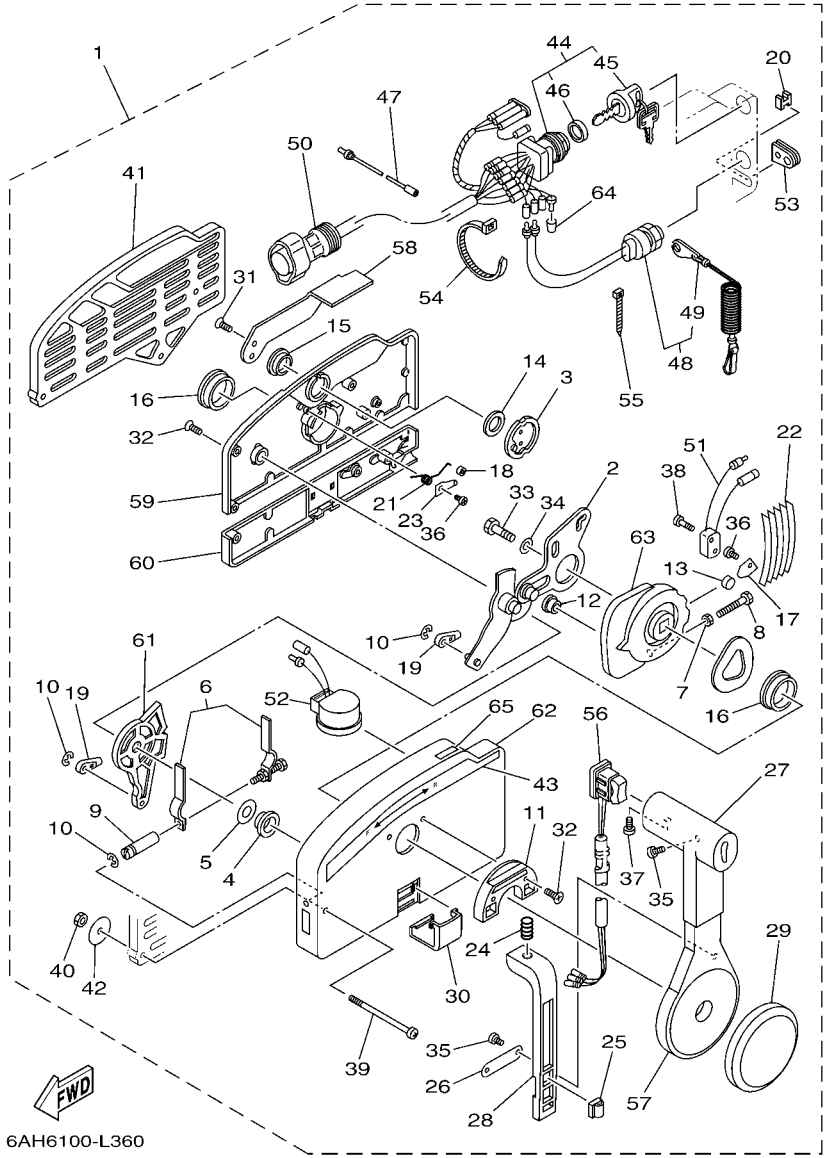

FIG. 36 REMOTE CONTROL ASSY BOITIER DE COMMANDE A DISTANCE

REF. NO.	PART NO. N° PIECES	DESCRIPTION DESCRIPTION	MH	EH	E	EP		REMARKS REMARQUES
1	703–48205–A6	REMOTE CONTROL ASSY (10P) BOITIER DE COMMANDE A DISTANCE				1		AP WITH PT/T SW. AP WITH PT/T SW.
	703–48201–A4	REMOTE CONTROL ASSY (10P) BOITIER DE COMMANDE A DISTANCE			1			AP WITHOUT PT/T SW. AP WITHOUT PT/T SW.
2	703–48261–01	.ARM, THROTTLE .BRAS, ACCELERATION			1	1		
3	703–48153–00	.SHAFT, FREE ACCEL. .AXE			1	1		
4	703–48235–00	.BUSHING .COUSSINET			1	1		
5	703–48268–00	.SPACER .ENTRETOISE			1	1		
6	703–48264–00	.FRICTION, THROTTLE .FRICTION, ACCELERATION			1	1		
7	95380–05600	.NUT .ECROU			1	1		
8	97380–05025	.BOLT .BOULON, HEXAGONAL			1	1		
9	703–48265–00	.SHAFT, FRICTION .AXE, COPILOTE			1	1		
10	93430–06024	.CIRCLIP .CLIPS			3	3		
11	703–48245–00	.PLATE, LOCK .PLAQUE, VERROU			1	1		
12	703–48252–00	.ROLLER, CAM .POULIE			1	1		
13	701–48248–00	.ROLLER, FREE ACCEL. .POULIE			1	1		
14	703–48198–00	.WASHER, WAVE .RONDELLE, ELASTIQUE ONDULEE			1	1		
15	703–48243–00	.BUSHING .COUSSINET			1	1		
16	703–48236–00	.BUSHING 1 .POULIE			2	2		
17	703–48189–00	.RETAINER .FLASQUE			1	1		
18	703–48234–00	.ROLLER, DETENT .POULIE			1	1		
19	703–48345–01	.CABLE END, REMOTE CONTROL 2 .CHAPE CABLE			2	2		
20	703–48358–00	.ANCHOR, CABLE .COLLIER			1	1		
21	703–48244–00	.SPRING, FREE ACCEL. .RESSORT			1	1		
22	703–48238–00	.SPRING, DETENT .RESSORT			5	5		
23	703–48246–00	.SPACER .ENTRETOISE			1	1		
24	703–48227–00	.SPRING, NEUTRAL LOCK .RESSORT			1	1		
25	703–82594–00	.CLAMP .BRIDE				1		WITH PT/T SW. WITH PT/T SW.
26	703–48226–00	.PLATE, STOPPER .PLAQUETTE			1	1		

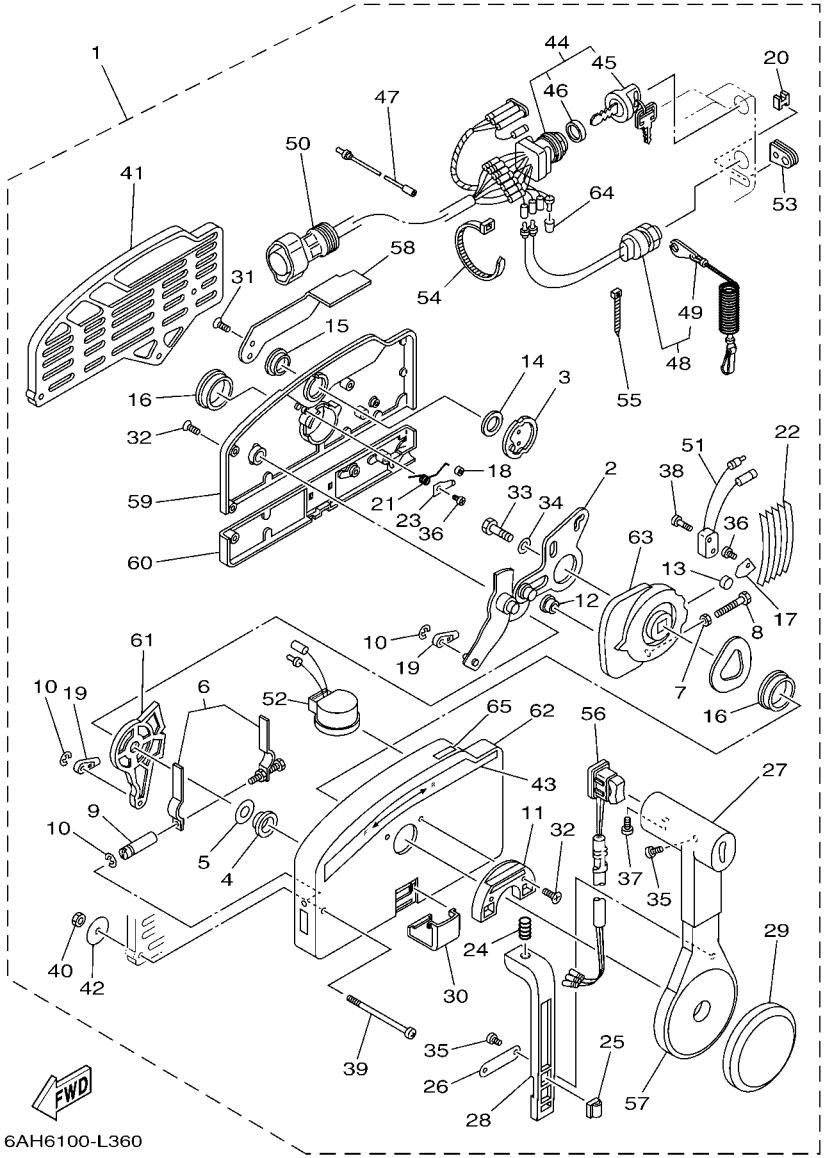

FIG. 36 REMOTE CONTROL ASSY BOITIER DE COMMANDE A DISTANCE

REF. NO.	PART NO. N° PIECES	DESCRIPTION DESCRIPTION	MH	EH	E	EP		REMARKS REMARQUES
27	703–48222–00	.GRIP, CONTROL LEVER .POIGNEE, COMMANDE LEVIER			1	1		SINGLE SINGLE
28	703–48223–00	.LOCK, NEUTRAL .VERROU, NEUTRAL			1	1		
29	703–48225–00	.COVER .COUVERCLE			1	1		
30	703–48219–00	.COVER, LEAD .COUVERCLE			1	1		
31	703–48281–00	.SCREW .VIS			2	2		
32	703–48282–00	.SCREW .VIS			7	7		
33	97380–08030	.BOLT .BOULON, HEXAGONAL			1	1		
34	92990–08600	.WASHER, PLATE .RONDELLE, PLATE			1	1		
35	98580–04010	.SCREW, PAN HEAD .VIS			3	3		
36	98580–04006	.SCREW, PAN HEAD .VIS			2	2		
37	98580–05010	.SCREW, PAN HEAD .VIS			1	1		
38	98580–03015	.SCREW, PAN HEAD .VIS			2	2		
39	703–48291–10	.SCREW (M6) .VIS (M6)			3	3		
40	95380–06600	.NUT, HEXAGON .ECROU			3	3		
41	703–48293–10	.SPACER, REMOTE CONTROL .ENTRETOISE			1	1		SINGLE SINGLE
42	701–48287–00	.WASHER .RONDELLE			3	3		
43	703–48215–00	.GRAPHIC .ADHESIF			1	1		
44	703–82510–12	.MAIN SWITCH ASSY .CONTACTEUR A CLEF COMPLET			1	1		PRIME START PRIME START
45	676–82577–00	..CAP, KEY ..CABOCHON			1	1		
46	703–82532–00	..CAP ..COUVERCLE			1	1		
47	703–82531–00	.WIRE, LEAD (L70) .FIL (L70)			1	1		
48	688–82575–01	.ENGINE STOP SWITCH ASSY .COUPE CIRCUIT CPLT			1	1		
49	682–82556–00	..LANYARD, STOP SWITCH ..CORDON DU COUPE CIRCUIT			1	1		
50	688–8258A–20	.EXTENSION, WIRE HARNESS (4.9M) .EXTENSION, FAISCEAU DE FILS (4			1	1		(10P) (10P)
51	703–82540–00	.NEUTRAL SWITCH ASSY .CONTACTEUR DE POINT-MORT			1	1		
52	703–83383–B0	.BUZZER .RONFLEUR			1	1		
53	703–48284–00	.GROMMET .PASSE-FIL			1	1		

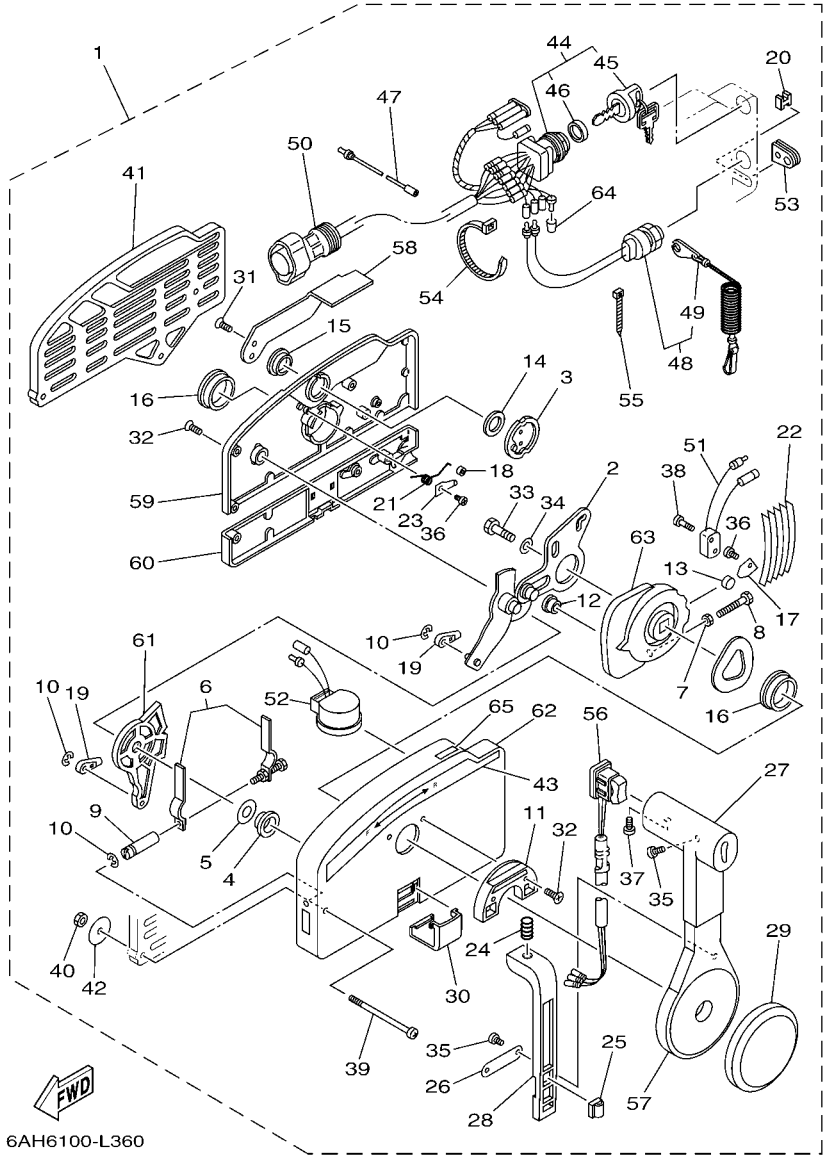

FIG. 36 REMOTE CONTROL ASSY BOITIER DE COMMANDE A DISTANCE

REF. NO.	PART NO. N° PIECES	DESCRIPTION DESCRIPTION	MH	EH	E	EP		REMARKS REMARQUES
54	703–82591–00	.BAND .COLLIER			1	1		
55	703–82592–00	.BAND .COLLIER			1	1		
56	703–82563–02	.TRIM & TILT SWITCH ASSY .INCLINER ET PARER COMMUTATEUR				1		WITH PT/T SW. WITH PT/T SW.
	703–48224–00	.COVER, CONTROL LEVER .COUVERCLE			1			WITHOUT PT/T SW. WITHOUT PT/T SW.
57	703–48221–00	.LEVER, CONTROL .LEVIER, COMMANDE			1	1		
58	703–48152–00	.KNOB, FREE ACCEL. .BOUTON			1	1		
59	703–48212–00	.BACK PLATE 1 .PLAQUETTE 1			1	1		
60	703–48213–00	.BACK PLATE 2 .PLAQUETTE 2			1	1		
61	703–48271–00	.ARM, SHIFT .BRAS			1	1		
62	703–48211–02	.HOUSING,1 .CORPS			1	1		
63	703–48232–00	.GEAR .PIGNON			1	1		
64	703–82542–00	.CAP .COUVERCLE				1		FOR 703-48205-A6 FOR 703-48205-A6
	703–82542–00	.CAP .COUVERCLE			3			FOR 703-48201-A4 FOR 703-48201-A4
65	703–48218–00	.GRAPHIC .ADHESIF			1	1		

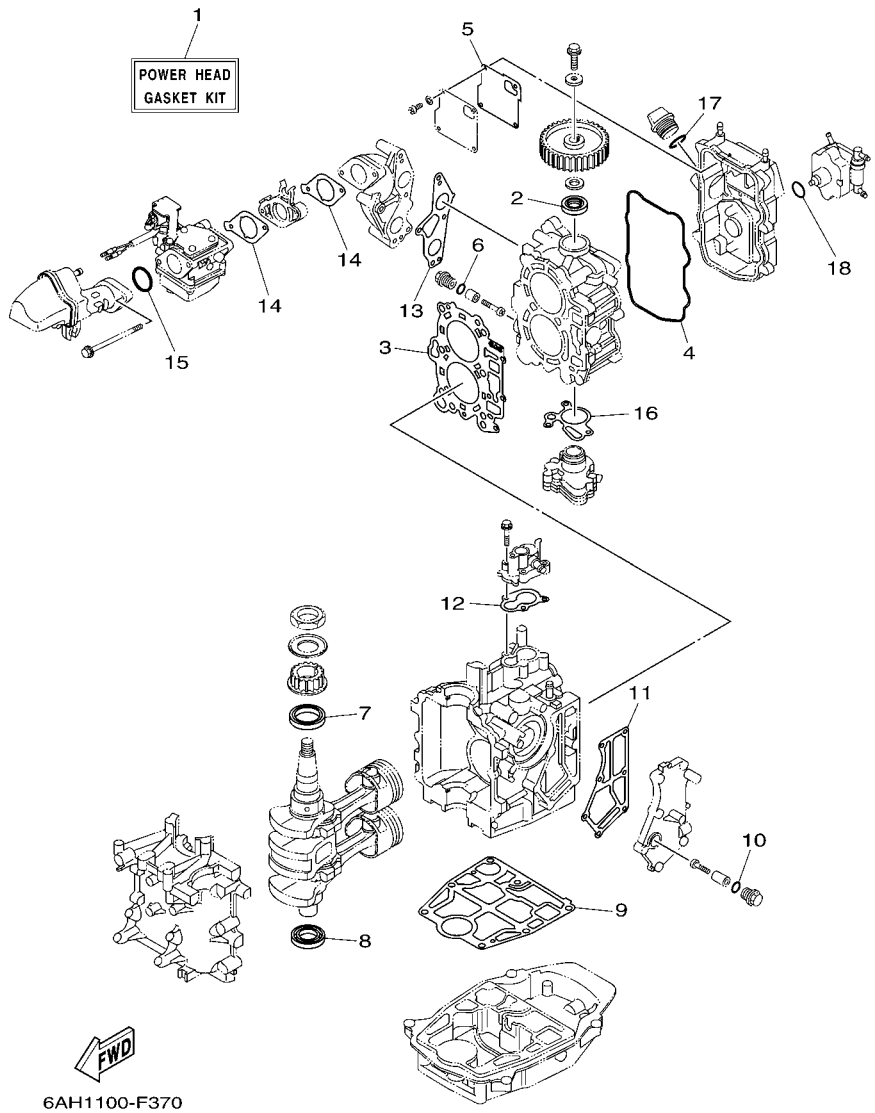

FIG. 37 REPAIR KIT 1 — KITS DE REPARATION 1

REF. NO.	PART NO. N° PIECES	DESCRIPTION DESCRIPTION	MH	EH	E	EP		REMARKS REMARQUES
1	6AG–W0001–00	POWER HEAD GASKET KIT POCHETTE DE JINTS TETE MOTRICE	1	1	1	1		
2	93102–22009	.OIL SEAL .JOINT SPY	1	1	1	1		
3	6AG–11181–00	.GASKET, CYLINDER HEAD 1 .JOINT, DE CULASSE 1	1	1	1	1		
4	6AH–11356–00	.SEAL, CYLINDER 2 .JOINT, SPY CYLINDRE	1	1	1	1		
5	6AH–11169–00	.GASKET, BREATHER COVER .JOINT, COUVERCLE DE RENIFLARD	1	1	1	1		
6	93210–13M63	.O-RING .JOINT TORIQUE	2	2	2	2		
7	93102–37004	.OIL SEAL .JOINT SPY	1	1	1	1		
8	93102–25014	.OIL SEAL .JOINT SPY	1	1	1	1		
9	6AH–11351–00	.GASKET, CYLINDER .JOINT, D'EMBASE	1	1	1	1		
10	93210–13M63	.O-RING .JOINT TORIQUE	1	1	1	1		
11	6AH–41114–00	.GASKET, EXHAUST OUTER COVER .JOINT, COUVERCLE D'ECHAPPEMENT	1	1	1	1		
12	6AH–12414–00	.GASKET, COVER .JOINT, COUVERCLE	1	1	1	1		
13	6AH–13645–00	.GASKET, MANIFOLD 1 .JOINT, TUBULURE 1	1	1	1	1		
14	6AH–13646–00	.GASKET, MANIFOLD 2 .JOINT, TUBULURE 2	2	2	2	2		
15	93210–35M86	.O-RING .JOINT TORIQUE	1	1	1	1		
16	6AH–13329–00	.GASKET, PUMP COVER .JOINT, COUVERCLE DE POMPE	1	1	1	1		
17	93210–24M79	.O-RING .JOINT TORIQUE	1	1	1	1		
18	93210–20M65	.O-RING .JOINT TORIQUE	1	1	1	1		

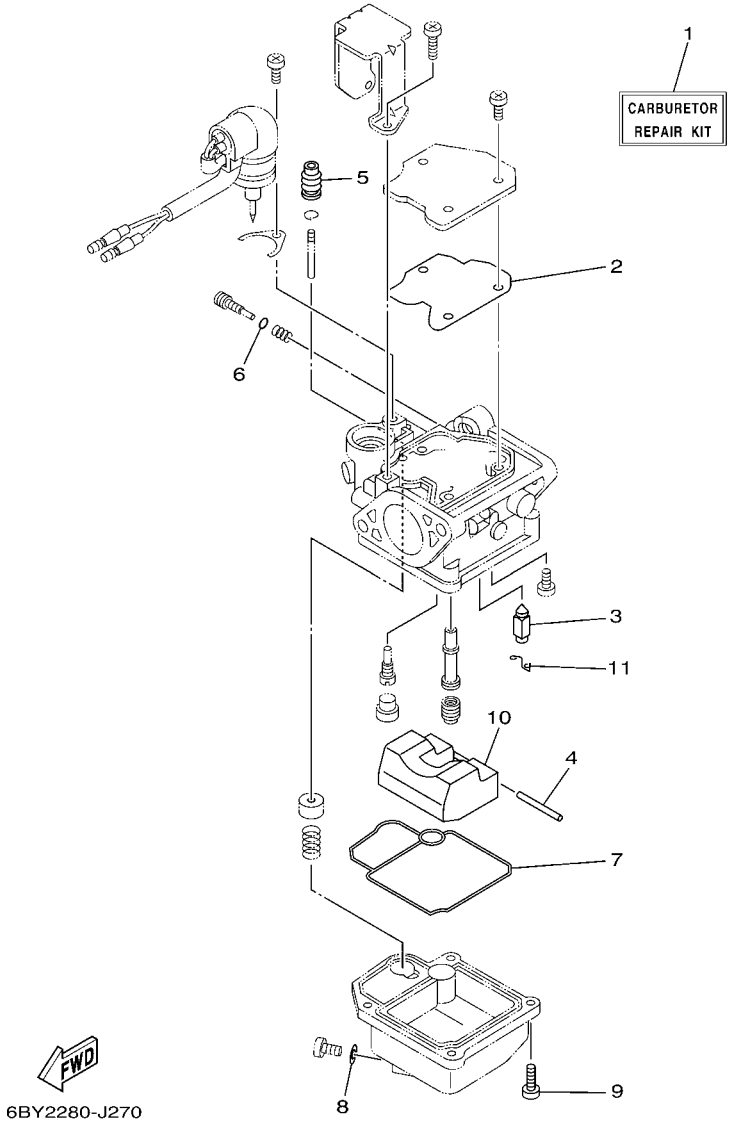

FIG. 38 REPAIR KIT 2 — KITS DE REPARATION 2

REF. NO.	PART NO. N° PIECES	DESCRIPTION DESCRIPTION	MH	EH	E	EP		REMARKS REMARQUES
1	6AH–W0093–01	CARBURETOR REPAIR KIT KIT DE REPARATION CARBURATEUR	1	1	1	1		
2	65W–14126–10	.GASKET .JOINT	1	1	1	1		
3	6AH–14546–00	.VALVE, NEEDLE .POINTEAU	1	1	1	1		
4	6H4–14548–00	.PIN, FLOAT ARM .AXE, BRAS DE FLOTTEUR	1	1	1	1		
5	65W–14373–02	.COVER, PLUNGER CAP .COUVERCLE DE PLONGEUR	1	1	1	1		
6	67C–14397–00	.O-RING .JOINT TORIQUE	1	1	1	1		
7	6AH–14384–00	.GASKET, FLOAT CHAMBER .JOINT, CUVE DE FLOTTEUR	1	1	1	1		
8	65W–14398–00	.GASKET .JOINT	1	1	1	1		
9	97980–04114	.SCREW, WITH WASHER .VIS, AVEC RONDELLE	4	4	4	4		
10	6AH–14985–00	.FLOAT .FLOTTEUR	1	1	1	1		
11	663–14159–00	.CLIP .JONC	1	1	1	1		

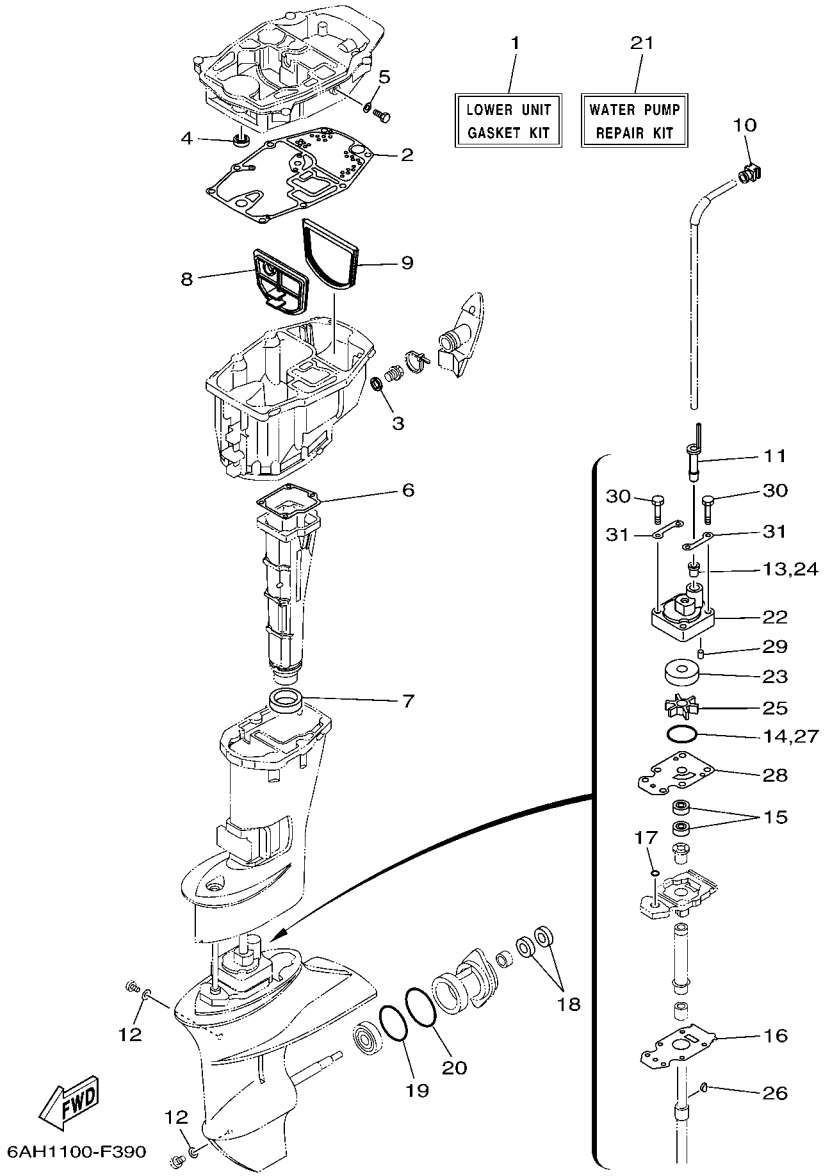

FIG. 39 REPAIR KIT 3 — KITS DE PEPARATION 3

REF. NO.	PART NO. N° PIECES	DESCRIPTION DESCRIPTION	MH	EH	E	EP		REMARKS REMARQUES
1	6AH–W0001–20	LOWER UNIT GASKET KIT POCHETTE DE JOINTS EMBASE	1	1	1	1		
2	6AH–15312–00	.GASKET, OIL PAN .JOINT DE VENTILATEUR D'HUILE	1	1	1	1		
3	90430–14M09	.GASKET .JOINT	1	1	1	1		
4	93101–12M63	.OIL SEAL .JOINT SPY	1	1	1	1		
5	90430–08143	.GASKET .JOINT	1	1	1	1		
6	6AH–41134–00	.GASKET, EXHAUST MANIFOLD .JOINT, PIPE D'ECHAPPEMENT	1	1	1	1		
7	6AH–41138–00	.SEAL, EXT. 1 .JOINT DE GROUPE 1	1	1	1	1		
8	6AH–45126–00	.PLATE, SEAL DAMPER .PLAQUETTE	1	1	1	1		
9	6AH–45115–00	.GASKET, UPPER CASING .JOINT, TUBE D'ARBRE	1	1	1	1		
10	6AH–44365–00	.DAMPER, WATER SEAL 1 .JOINT, TUBE D'EAU 1	1	1	1	1		
11	6AH–44368–00	.RUBBER, WATER SEAL 4 .CAOUTCHOUC EAU JUNTA 4	1	1	1	1		
12	90430–08020	.GASKET .JOINT	2	2	2	2		
13	6L2–44367–00	.DAMPER, WATER SEAL 3 .JOINT TUBE D'EAU 3	1	1	1	1		
14	93210–49046	.O-RING .JOINT TORIQUE	1	1	1	1		
15	93101–20001	.OIL SEAL .JOINT SPY	2	2	2	2		
16	69G–45315–A0	.PACKING, LOWER CASING .JOINT, BOITIER D'HELICE	1	1	1	1		
17	93210–06ME6	.O-RING .JOINT TORIQUE	1	1	1	1		
18	93101–17054	.OIL SEAL .JOINT SPY	2	2	2	2		
19	93210–57M09	.O-RING .JOINT TORIQUE	1	1	1	1		
20	93210–56M80	.O-RING .JOINT TORIQUE	1	1	1	1		
21	6AH–W0078–00	WATER PUMP REPAIR KIT KIT DE REPARATION DE LA POMPE	1	1	1	1		
22	6AH–44311–00	.HOUSING, WATER PUMP .CORPS, POMPE A EAU	1	1	1	1		
23	63V–44322–00	.INSERT, CARTRIDGE .CUVETTE	1	1	1	1		
24	6L2–44367–00	.DAMPER, WATER SEAL 3 .JOINT TUBE D'EAU 3	1	1	1	1		
25	63V–44352–01	.IMPELLER .TURBINE	1	1	1	1		
26	664–44338–00	.KEY, WOODRUFF .CLAVETTE, VOLANT	1	1	1	1		
27	93210–49046	.O-RING .JOINT TORIQUE	1	1	1	1		

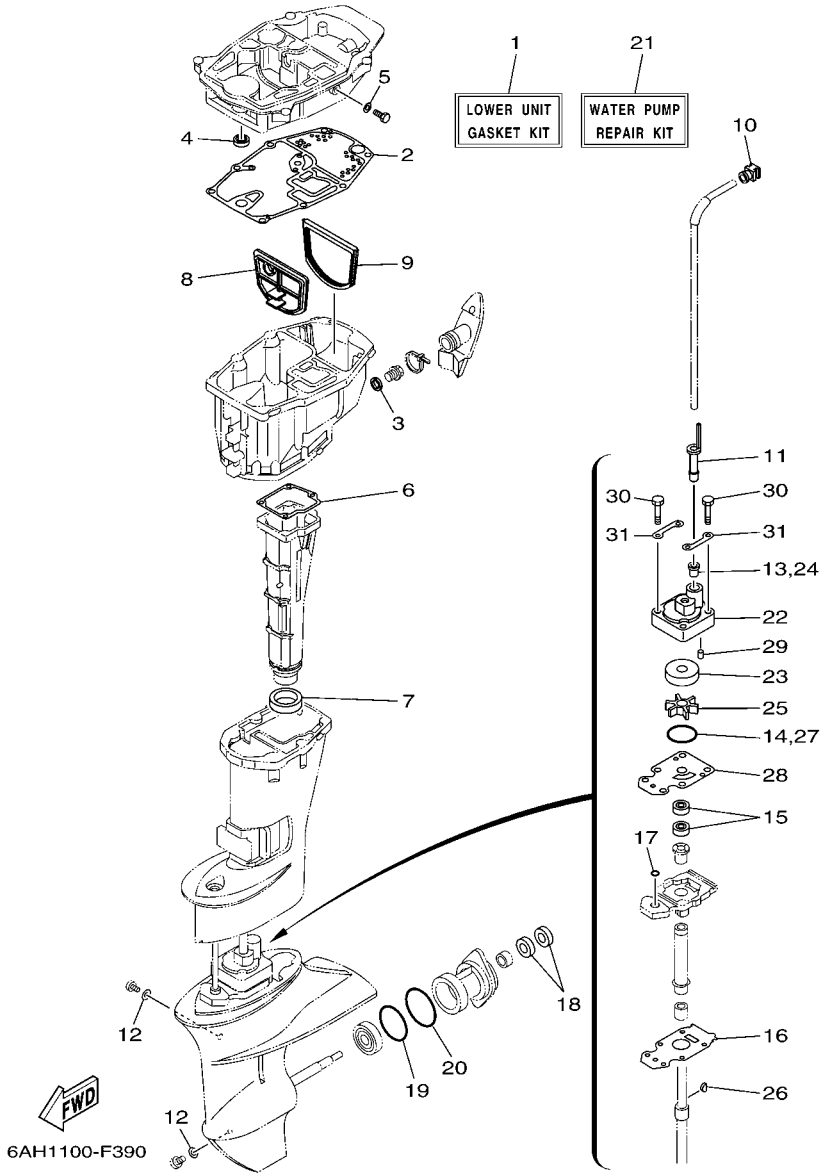

FIG. 39 REPAIR KIT 3 — KITS DE PEPARATION 3

REF. NO.	PART NO. N° PIECES	DESCRIPTION DESCRIPTION	MH	EH	E	EP		REMARKS REMARQUES
28	68T–44323–00	.OUTER PLATE, CARTRIDGE .PLAQUE EXTERIEURE	1	1	1	1		
29	93604–12M07	.PIN, DOWEL .CLAVETTE	2	2	2	2		
30	97095–08045	.BOLT .BOULON	4	4	4	4		
31	63V–44328–01	.PLATE .PLAQUETTE	2	2	2	2		

PART NO. N° PIECES	REF. NO.
6AH–11111–00–1S	4 – 2
6AH–11133–10	4 – 3
6AH–11168–00	4 – 13
6AH–11169–00	4 – 14
	37 – 5
6AG–11181–00	4 – 4
	37 – 3
6AH–11191–00–1S	4 – 8
6G8–11197–01	2 – 13
	4 – 19
6E5–11325–00	2 – 26
6G8–11325–00	2 – 11
	2 – 22
	4 – 17
6AH–11351–00	2 – 7
	37 – 9
6AH–11356–00	4 – 10
	37 – 4
676–11372–00	2 – 10
6AH–11372–00	4 – 9
6AH–11411–00	3 – 1
6AH–11416–00	3 – 2
6AH–11416–10	3 – 2
6AH–11416–20	3 – 2
6AH–11536–00	8 – 6
6AH–11537–00	8 – 2
6AH–11557–00	8 – 7
6AH–11603–00	3 – 6
6AH–11604–00	3 – 6
6AH–11605–00	3 – 6
6AH–11631–00	3 – 5
137–11633–10	3 – 7
6AH–11635–00	3 – 5
6AH–11636–00	3 – 5
6AH–11650–00	3 – 3
6AH–11654–00	3 – 4
6AH–12111–00	5 – 1
3YF–12113–00	5 – 4
62Y–12116–00	5 – 3
30X–12117–00	5 – 5
30X–12118–00	5 – 6
51Y–12119–00	5 – 7
6AH–12121–00	5 – 2
66M–12146–00	5 – 8
6AH–12151–00	5 – 13
62Y–12158–00	5 – 15
64J–12159–00	5 – 14
6AG–12170–00	8 – 1

PART NO. N° PIECES	REF. NO.
6AH–12170–00	8 – 1
6AH–12279–00	5 – 9
6AH–12411–00	2 – 17
688–12412–00	2 – 18
6AH–12413–00–1S	2 – 19
6AH–12414–00	2 – 20
	37 – 12
6AH–12481–00	2 – 24
6AH–12535–00	18 – 28
68T–12572–00	18 – 24
6R3–12581–00	18 – 25
6R3–12582–00	18 – 26
6R3–12583–00	18 – 27
6C5–12858–00	2 – 29
66M–13131–10	9 – 19
6AH–13300–00	8 – 15
6AH–13329–00	8 – 16
	37 – 16
6AH–13411–00	29 – 8
67F–13434–20	1 – 15
6AH–13437–60	10 – 33
5GH–13440–20	2 – 28
6AH–13641–00–94	6 – 1
6AH–13645–00	6 – 2
	37 – 13
6AH–13646–00	6 – 8
	37 – 14
65W–14126–10	7 – 4
	38 – 2
663–14159–00	7 – 14
	38 – 11
6AH–14271–00	6 – 9
6AG–14301–11	7 – 1
6AH–14301–11	7 – 1
6AG–14301–51	7 – 1
6AH–14301–51	7 – 1
6E7–14325–00	9 – 23
65W–14335–00	7 – 22
6AH–14335–00	7 – 22
65W–14346–00	7 – 33
6AH–14346–00	7 – 31
6AH–14371–00	7 – 23
65W–14373–02	7 – 17
	38 – 5
6AH–14379–00	7 – 18
6AH–14379–10	7 – 18
6AH–14380–00	7 – 29
6AH–14380–10	7 – 29

PART NO. N° PIECES	REF. NO.
6AH–14384–00	7 – 24
	38 – 7
67C–14397–00	7 – 20
	38 – 6
65W–14398–00	7 – 26
	38 – 8
65W–1439G–00	7 – 34
6AH–14427–60	10 – 32
6AH–14440–00	6 – 10
6AH–14497–00	21 – 30
63V–14523–00	7 – 9
6AH–14546–00	7 – 13
	38 – 3
6H4–14548–00	7 – 16
	38 – 4
67C–14555–00	7 – 21
67C–14567–00	7 – 32
6AH–14571–00	21 – 25
	22 – 33
65W–14572–00	7 – 3
6AH–14711–00–CA	28 – 8
6AH–14711–10–CA	28 – 8
6AH–14923–20	7 – 19
676–14943–19	7 – 11
65W–14943–29	7 – 11
6AH–14947–00	7 – 10
6AH–14947–20	7 – 10
6AG–14948–02	7 – 6
6AH–14948–02	7 – 6
676–14948–05	7 – 6
6AG–14948–05	7 – 6
679–14966–00	7 – 7
6AH–14980–00	7 – 25
6AH–14985–00	7 – 12
	38 – 10
65W–14992–00	7 – 27
6AH–15100–00	2 – 2
6AH–15311–00–CA	29 – 1
6AH–15312–00	29 – 2
	39 – 2
6AH–15316–00	29 – 4
6AH–15362–00	29 – 11
6G8–15363–00	4 – 21
6AH–15373–00	6 – 13
63V–15705–01	10 – 9
6AH–15710–01	10 – 1
6AH–15711–00	10 – 2
63V–15713–00	10 – 7

PART NO. N° PIECES	REF. NO.
63V–15714–00	10 – 5
68T–15716–00	10 – 8
66T–15731–00	10 – 24
66T–15734–00	10 – 20
6AH–15741–10	10 – 6
689–15755–01	10 – 15
6AH–15762–00	10 – 29
67D–15764–00	10 – 3
68T–15764–00	10 – 14
63V–15767–01	10 – 10
6AH–15770–00	10 – 23
6AH–15774–00	18 – 46
6F5–15779–02	10 – 17
6AH–15782–00	10 – 21
68T–15784–00	10 – 11
6A0–15789–00	10 – 18
63V–15793–00	10 – 12
68T–15793–00	10 – 13
6AH–15793–00	10 – 22
66T–15794–00	10 – 19
6AH–15795–00	10 – 4
6AH–22471–00	27 – 3
69A–23129–00	27 – 59
6YJ–24167–00	33 – 7
6YK–24201–03	32 – 1
6YJ–24201–10	33 – 1
6YK–24260–01	32 – 4
6Y1–24260–12	33 – 3
6Y1–24268–00	33 – 6
6YL–24268–01	32 – 2
6G1–24304–02	9 – 1
6G1–24305–05	33 – 13
6Y1–24305–06	33 – 15
61J–24306–04	33 – 8
6YL–24306–54	32 – 7
6AH–24311–00	9 – 4
6AH–24312–00	9 – 12
6AH–24313–00	9 – 28
6AH–24314–01	18 – 21
6AH–24316–00	10 – 30
6AH–24321–00	9 – 30
6AH–24322–00	9 – 31
61N–24329–00	9 – 2
6Y1–24329–00	33 – 5
6YL–24329–00	32 – 6
650–24351–51	33 – 12
61J–24360–00	33 – 10
66M–24374–00	9 – 25

PART NO. N° PIECES	REF. NO.
650–24378–00	2 – 9
688–24378–00	9 – 36
6C5–24378–00	9 – 37
6AH–24410–00	9 – 14
66M–24411–11	9 – 17
6AH–24413–00	9 – 15
6A0–24421–01	9 – 16
66M–24423–00	9 – 18
66M–24444–00	9 – 21
66M–24454–00	9 – 20
66M–24471–01	9 – 22
61N–24521–00	9 – 6
61N–24560–10	9 – 5
61N–24563–10	9 – 7
6AH–24566–00	9 – 9
6YJ–24610–01	33 – 2
6YK–24610–01	32 – 3
6AH–26288–00	19 – 4
6AH–26311–00	19 – 18
6AH–26326–00	18 – 15
6AH–26326–10	18 – 15
6AH–2634E–00	19 – 22
6AH–26364–00	21 – 4
	22 – 4
62Y–28100–00	9 – 39
67F–2812A–00	13 – 22
6AG–28199–76–D0	9 – 40
6AG–28199–76–E0	9 – 40
6AG–28199–76–F0	9 – 40
6AG–28199–76–G0	9 – 40
6AG–28199–76–H0	9 – 40
6AG–28199–76–S0	9 – 40
6AG–28199–86–K0	9 – 41
6AG–28199–86–L0	9 – 41
6AG–28199–86–M0	9 – 41
6AG–28199–86–N0	9 – 41
6AG–28199–86–P0	9 – 41
6AG–28199–86–R0	9 – 41
6AH–41113–00–1S	2 – 8
6AH–41114–00	2 – 15
	37 – 11
6AH–41134–00	28 – 7
	39 – 6
6AH–41137–00–CA	28 – 1
6AH–41138–00	28 – 10
	39 – 7
6AH–41211–00	21 – 20
	22 – 28

PART NO. N° PIECES	REF. NO.
6J8–41262–00	21 – 19
	22 – 27
65W–41283–00	21 – 18
	22 – 26
6AH–41638–00	21 – 16
	22 – 24
6G1–41662–01–94	21 – 5
	22 – 5
6AH–42101–01–4D	19 – 2
66M–42119–01	19 – 5
65W–42125–00	19 – 11
6G1–42126–00	19 – 10
6AH–42131–00–4D	19 – 28
6J0–42137–00	19 – 13
65W–42138–00	19 – 7
65W–42159–00	19 – 9
62Y–42171–00	21 – 27
67D–42177–00	19 – 6
6AH–42508–01	20 – 1
6AH–42510–00–4D	26 – 1
6AH–42510–10–4D	26 – 1
68T–42525–01	20 – 2
6AH–42527–00	20 – 15
65W–42528–00	20 – 8
6AH–42532–00	19 – 30
6AH–42532–10	26 – 24
6AH–42551–00	19 – 23
68T–42561–00	20 – 6
67C–42562–00	20 – 4
6AG–42610–61	1 – 1
6AG–42610–71	1 – 1
6AH–42610–71	1 – 1
6AH–42610–81	1 – 1
6AH–42613–00	1 – 2
6AH–42615–00	1 – 6
6AH–42617–00	8 – 13
6AH–42649–00	1 – 9
6AH–42651–00	1 – 4
60R–42652–00	1 – 7
6AG–42675–00	1 – 10
6AG–42676–00	1 – 11
6AH–42677–00	1 – 12
6AG–42677–20	1 – 12
6AH–42697–10	1 – 13
6AH–42710–00–4D	18 – 1
6AH–42710–10–4D	18 – 1
6AH–42716–00	18 – 5
65W–42717–00	18 – 33

NUMERICAL INDEX
INDEX NUMERIQUE

PART NO. N° PIECES	REF. NO.
65W–42717–00	28 – 3
6AH–42717–00	18 – 45
6AH–42718–00	18 – 7
6AH–42724–00	18 – 10
6AH–42724–10	18 – 10
	23 – 2
6AH–42725–00	18 – 9
6G1–42725–00	12 – 41
6AH–42725–10	18 – 9
6AH–42725–20	18 – 9
65W–42726–00	18 – 18
6AH–42726–00	18 – 20
65W–42726–10	18 – 18
	23 – 4
6AH–42727–00	18 – 17
6AH–42735–00	1 – 14
6AH–42735–10	15 – 24
6AH–42735–20	15 – 25
6AH–42735–30	14 – 6
6AH–42735–40	14 – 7
6AH–42738–00–4D	18 – 6
6AH–42741–00	18 – 40
6AH–42743–00	18 – 34
6AH–42761–00	18 – 36
6AH–42762–00	18 – 37
6AH–42794–40	18 – 49
6AH–42794–50	18 – 50
6AH–42801–00	18 – 11
6AH–43111–00–4D	24 – 1
69A–43111–01–4D	25 – 1
6AH–43112–00–4D	24 – 6
69A–43112–01–4D	25 – 6
66R–43113–00	24 – 13
69A–43113–00	25 – 20
648–43114–01	24 – 5
	24 – 10
	25 – 5
	25 – 10
6E7–43116–00	24 – 4
	24 – 9
	25 – 4
	25 – 9
6E0–43118–01	24 – 2
	24 – 7
	25 – 2
	25 – 7
69A–43131–00	24 – 11
	25 – 19

PART NO. N° PIECES	REF. NO.
6E5–43145–01	34 – 8
6G5–43145–01	25 – 21
68T–43155–00	20 – 18
69A–43155–00	25 – 23
6L2–43160–01	24 – 19
689–43165–00	24 – 20
65W–43191–00	25 – 14
6AH–43191–00	24 – 28
65W–43192–00	25 – 13
6AH–43311–00–4D	24 – 23
6AH–43311–10–4D	24 – 23
69A–43311–11–4D	25 – 18
6AH–43311–20–4D	25 – 18
6AH–43350–00	24 – 32
68T–43611–00	24 – 37
6AH–43614–00	24 – 34
6AH–43615–00	24 – 36
6AH–43616–00	24 – 25
6AH–43617–00	24 – 30
6AH–43627–00	24 – 42
6AH–43631–00	24 – 24
689–43633–00	20 – 7
6AH–43641–00	24 – 27
6AH–43646–00	24 – 26
68T–43659–00	24 – 40
6AH–43801–00	27 – 20
65W–43804–01	27 – 62
65W–43805–01	27 – 64
6T4–43808–00	27 – 35
6AH–4380D–00	27 – 11
65W–4380F–01	27 – 72
6AH–4380K–00	27 – 2
6AH–43810–00	27 – 10
6AH–43811–00	27 – 21
69A–43812–00	27 – 24
6AH–43814–00	27 – 7
69G–43818–00	25 – 25
69J–4381C–00	27 – 38
	27 – 56
69A–4381G–00	27 – 50
6AH–4381J–00	27 – 57
69A–43824–00	27 – 45
69G–4382G–00	27 – 33
6AH–43830–00	27 – 26
6AH–43840–01–4D	27 – 1
69A–43841–00	27 – 27
6H1–43844–10	27 – 40
69A–43848–00	27 – 46

PART NO. N° PIECES	REF. NO.
69A–4384F–00	27 – 30
6H1–4384G–11	27 – 39
69A–4384H–00	27 – 53
69A–4384M–00	27 – 28
69G–43853–00	27 – 36
6AH–43854–00	27 – 49
6F2–43855–00	27 – 41
6H1–43856–10	27 – 42
6AH–43857–00	27 – 19
6AH–4385E–00	27 – 16
62X–43862–00	27 – 25
N35–43862–10	27 – 58
6H1–43866–00	27 – 22
69A–4386A–00	27 – 44
6AH–4386A–00	27 – 15
65W–4386K–01	27 – 70
65W–4386L–00	27 – 71
69A–43871–00	27 – 23
6C5–43871–00	27 – 9
	27 – 13
69A–43878–00	27 – 60
6AH–43878–00	27 – 18
65W–43879–01	27 – 73
65W–4387G–00	27 – 65
69A–43880–01	27 – 61
69A–43881–01	27 – 66
65W–43882–01	27 – 74
6H1–43883–00	27 – 31
	27 – 52
65W–43887–01	27 – 63
6H1–4388E–11	27 – 5
69G–4388F–00	27 – 37
65W–43891–01	27 – 69
65W–43892–01	27 – 68
62Y–43894–00	27 – 29
6AH–44111–00	19 – 33
66R–44114–00	21 – 11
	22 – 11
65W–44116–00	21 – 10
	22 – 10
6AH–44121–00	21 – 3
	22 – 3
6AH–44123–00	21 – 1
	22 – 1
6AH–44124–00	19 – 37
6AH–44125–00	21 – 8
	22 – 8
6AH–44143–00	21 – 13

PART NO. N° PIECES	REF. NO.
6AH–44143–00	22 – 13
6AH–44143–10	21 – 13
	22 – 13
6AH–44150–00	30 – 27
6AH–44150–10	30 – 27
6AH–44167–00	21 – 26
6X4–44188–00	19 – 15
6G8–44191–00	19 – 40
6AH–44194–00	26 – 34
6AH–44311–00	30 – 11
	39 – 22
63V–44322–00	30 – 12
	39 – 23
68T–44323–00	30 – 17
	39 – 28
63V–44328–01	30 – 20
	39 – 31
664–44338–00	30 – 15
	39 – 26
63V–44352–01	30 – 14
	39 – 25
6AH–44361–01	31 – 1
6AH–44361–11	31 – 1
6AH–44365–00	31 – 2
	39 – 10
6L2–44367–00	30 – 13
	39 – 13
	39 – 24
6AH–44368–00	31 – 4
	39 – 11
6BL–44391–00	18 – 14
6AH–44514–00	26 – 8
6AH–44526–00	26 – 9
6AH–44551–00–4D	26 – 12
6AH–44554–00	19 – 19
6AH–44555–00	26 – 14
6AH–44557–00	26 – 13
6AH–44574–00	26 – 15
6AH–45111–00–4D	28 – 11
6AH–45111–10–4D	28 – 11
6AH–45115–00	29 – 15
	39 – 9
6AH–45126–00	29 – 14
	39 – 8
6AH–45135–00	29 – 16
6G1–45214–00	31 – 7
63V–45215–00	31 – 8
65W–45251–00	25 – 39

PART NO. N° PIECES	REF. NO.
6AH–45251–00	31 – 11
6AH–45300–00–4D	30 – 1
6AH–45300–10–4D	30 – 1
6AH–45311–00–4D	30 – 2
69G–45315–A0	30 – 24
	39 – 16
626–45316–09	30 – 22
682–45318–00	28 – 19
68T–45321–00	28 – 16
69G–45331–01–CA	30 – 21
683–45361–02–4D	30 – 41
6AH–45371–00–4D	31 – 19
63V–45375–00	31 – 14
6AH–45510–00	30 – 28
6AH–45510–10	30 – 28
63V–45536–00	30 – 4
63V–45551–00	30 – 29
6E7–45560–01	30 – 31
664–45567–01	30 – 48
664–45567–10	30 – 48
664–45567–20	30 – 48
664–45567–30	30 – 48
664–45567–40	30 – 48
664–45567–50	30 – 48
664–45567–60	30 – 48
6E7–45571–00	30 – 32
626–45577–00	30 – 33
626–45577–10	30 – 33
626–45577–20	30 – 33
626–45577–30	30 – 33
626–45577–40	30 – 33
6E8–45587–10	30 – 7
6E8–45587–30	30 – 7
683–45611–00	30 – 35
682–45631–00	30 – 37
648–45633–00	30 – 39
650–45635–00	30 – 36
683–45941–00	31 – 21
63V–45941–10	31 – 21
683–45943–00	31 – 21
63V–45943–10	31 – 21
63V–45945–10	31 – 21
683–45952–00	31 – 21
63V–45952–10	31 – 21
6E7–45987–01	31 – 15
6AH–46241–00	8 – 10
6AH–46297–00	8 – 11
703–48152–00	36 – 58

PART NO. N° PIECES	REF. NO.
703–48153–00	36 – 3
703–48189–00	36 – 17
703–48198–00	36 – 14
703–48201–A4	35 – 1
	36 – 1
703–48205–A6	35 – 1
	36 – 1
703–48211–02	36 – 62
703–48212–00	36 – 59
703–48213–00	36 – 60
703–48215–00	36 – 43
703–48218–00	36 – 65
703–48219–00	36 – 30
703–48221–00	36 – 57
703–48222–00	36 – 27
703–48223–00	36 – 28
703–48224–00	36 – 56
703–48225–00	36 – 29
703–48226–00	36 – 26
703–48227–00	36 – 24
703–48232–00	36 – 63
703–48234–00	36 – 18
703–48235–00	36 – 4
703–48236–00	36 – 16
703–48238–00	36 – 22
703–48243–00	36 – 15
703–48244–00	36 – 21
703–48245–00	36 – 11
703–48246–00	36 – 23
701–48248–00	36 – 13
703–48252–00	36 – 12
703–48261–01	36 – 2
703–48264–00	36 – 6
703–48265–00	36 – 9
703–48268–00	36 – 5
703–48271–00	36 – 61
703–48281–00	36 – 31
703–48282–00	36 – 32
703–48284–00	36 – 53
701–48287–00	36 – 42
703–48291–10	36 – 39
703–48293–10	36 – 41
701–48310–90	35 – 2
701–48320–00	35 – 2
701–48320–20	35 – 2
701–48320–50	35 – 2
663–48344–00	22 – 22
	22 – 36

NUMERICAL INDEX
INDEX NUMERIQUE

PART NO. N° PIECES	REF. NO.
663–48344–00	23 – 12
	23 – 16
703–48345–01	36 – 19
703–48358–00	36 – 20
6AH–48501–00	23 – 1
6AH–48511–01	26 – 30
6AH–48531–00	22 – 34
	23 – 14
6AH–48532–00	22 – 16
	23 – 7
682–48538–50	22 – 18
	23 – 9
6AH–61350–00	34 – 1
6E5–61355–00	34 – 6
6AH–81337–00	10 – 31
6AH–81800–00	17 – 1
689–81807–12	17 – 11
689–81809–11	17 – 3
689–81810–11	17 – 4
689–81811–11	17 – 7
689–81812–11	17 – 8
689–81813–10	17 – 9
6AH–81820–00	17 – 10
689–81826–10	17 – 15
6AH–81830–00	17 – 13
689–81831–00	17 – 14
689–81840–11	17 – 6
689–81847–11	17 – 5
689–81850–11	17 – 2
68T–81857–00	17 – 12
68T–81870–00	12 – 41
6H5–81925–00	15 – 1
6AH–81929–01	15 – 2
68T–81940–00	13 – 11
6AH–81942–00	17 – 22
6AH–81945–00	13 – 7
6AH–81948–00	12 – 5
6AH–81949–00	13 – 31
6AH–81950–00	15 – 10
6AH–81960–00	13 – 1
	13 – 35
6AH–81994–40	8 – 19
6AH–81994–50	8 – 20
6AH–81995–40	10 – 34
6AH–81995–50	10 – 35
6AG–81996–00	10 – 36
6AH–82105–00	13 – 14
6AH–82117–00	13 – 13

PART NO. N° PIECES	REF. NO.
6G5–82119–00	15 – 9
703–82119–00	11 – 4
	13 – 2
	13 – 36
63V–82127–00	25 – 41
6AH–82127–00	26 – 20
6AH–82127–11	26 – 20
6AH–82150–00	13 – 18
67F–82151–00	13 – 20
	13 – 32
6AH–82157–00	13 – 21
67F–8215B–00	13 – 33
67F–8215B–10	13 – 19
65W–82181–00	27 – 67
6AH–82317–00	15 – 4
67F–82361–00	12 – 15
6AH–82370–00	12 – 18
6AH–82388–00	12 – 28
	15 – 14
6AH–82389–00	12 – 43
6AH–82398–00	13 – 23
64J–82504–00	12 – 23
703–82510–12	36 – 44
6AH–82522–00	12 – 10
703–82531–00	36 – 47
703–82532–00	36 – 46
703–82540–00	36 – 51
6AH–82540–01	12 – 35
703–82542–00	36 – 64
	36 – 64
6AH–82554–00	12 – 35
682–82556–00	19 – 42
	36 – 49
6AH–82560–00	12 – 30
6AH–82563–00	16 – 1
703–82563–02	36 – 56
6AH–82575–00	19 – 41
688–82575–01	36 – 48
676–82577–00	36 – 45
689–8257Y–00	19 – 43
6AH–82581–00	17 – 23
6AH–82588–00	12 – 31
688–8258A–20	36 – 50
6AH–82590–00	15 – 15
6AH–82590–10	14 – 1
703–82591–00	36 – 54
703–82592–00	36 – 55
703–82594–00	36 – 25

PART NO. N° PIECES	REF. NO.
6AH–8259M–00	14 – 1
6AH–8259M–10	14 – 1
703–83383–B0	36 – 52
6H4–83589–00	12 – 25
6AH–83773–00	23 – 5
	26 – 27
62Y–84301–00	12 – 24
6D5–84340–00	23 – 19
68F–85119–00	18 – 2
67C–85415–00	12 – 45
6AH–85510–00	11 – 2
6AH–85525–10	15 – 32
6AH–8552A–00	14 – 4
6AH–8552A–10	15 – 17
6AH–8552E–00	14 – 5
6AH–8552E–10	15 – 23
6AH–85537–00	14 – 8
6AH–85537–10	15 – 26
6AH–85540–00	12 – 1
6AH–85540–10	12 – 1
6AH–85542–00	12 – 21
6AH–85547–00	14 – 10
6AH–85547–10	15 – 28
6AH–85550–00	11 – 1
6AH–85550–10	11 – 1
6F5–85570–13	12 – 13
6AH–85580–00	11 – 3
6AG–W0001–00	37 – 1
6AH–W0001–20	39 – 1
6AH–W0078–00	39 – 21
6AH–W0084–02–4D	19 – 1
6AH–W0093–01	38 – 1
6AG–W009A–00–1S	4 – 1
6AH–W009A–00–1S	4 – 1
6AH–W009B–00–1S	2 – 1
90101–06020	25 – 40
90101–06M18	24 – 16
90101–08022	20 – 16
90105–06035	8 – 17
90105–081A7	8 – 3
90105–09006	4 – 6
90109–06215	9 – 26
90109–06221	12 – 4
90109–06M82	18 – 8
90109–06M84	24 – 43
90109–06M86	12 – 29
	12 – 44
	18 – 35

PART NO. N° PIECES	REF. NO.
90109–06M86	18 – 47
	19 – 3
	22 – 35
	23 – 15
90109–06MA1	6 – 14
	25 – 17
90109–06MA2	15 – 12
90110–08081	25 – 35
90111–06072	19 – 31
	26 – 25
90111–08055	9 – 11
90116–10033	26 – 7
90119–05018	20 – 3
90119–06169	10 – 28
90119–06M05	19 – 34
90119–06M35	12 – 7
90119–06M88	31 – 20
90119–06MA3	2 – 16
	2 – 21
	4 – 7
90119–08093	2 – 4
90119–08094	26 – 11
90119–08103	29 – 12
90119–08M45	26 – 16
90119–08M46	26 – 17
90152–05011	19 – 8
	31 – 9
90157–05M16	32 – 5
90157–05M19	33 – 4
90167–06002	18 – 29
90170–06015	21 – 14
	22 – 14
90170–06M30	15 – 7
90170–09M03	34 – 4
90170–30003	8 – 8
90171–10M01	31 – 17
90179–08M06	30 – 30
90179–08M34	26 – 18
90179–16M05	11 – 8
90185–05002	31 – 10
90185–08057	25 – 36
	26 – 33
90185–09M01	34 – 3
90185–10M14	20 – 14
90185–22043	24 – 14
	25 – 12
90201–05M04	21 – 28
90201–06068	15 – 34

PART NO. N° PIECES	REF. NO.
90201–06416	15 – 13
90201–06M05	12 – 12
90201–06M31	21 – 22
	22 – 30
90201–08065	20 – 17
90201–08784	8 – 4
90201–08M00	25 – 29
90201–106M5	20 – 19
90201–10M01	31 – 16
90201–10M20	34 – 2
90201–10M63	34 – 7
90201–15017	30 – 6
90201–15423	8 – 5
90201–16M44	11 – 9
90201–17682	30 – 34
90201–39008	19 – 25
90202–10M56	20 – 5
90204–06M00	15 – 8
90206–10M24	24 – 44
90206–15M18	19 – 36
90206–39001	19 – 26
90209–10M26	20 – 13
90209–14011	30 – 5
90209–40008	26 – 2
90243–04M01	24 – 3
	24 – 8
	25 – 3
	25 – 8
90249–12M36	25 – 31
90250–05010	30 – 38
90254–03M05	21 – 2
	21 – 9
	22 – 2
	22 – 9
90266–06M02	1 – 5
90269–02M09	19 – 14
90280–03M01	8 – 9
90280–05013	11 – 7
90338–08M19	25 – 38
	25 – 38
90340–08002	30 – 9
90340–14M06	29 – 6
90381–12M10	25 – 32
90381–12M11	25 – 33
90381–20001	19 – 27
90386–08004	19 – 17
90386–14MA1	25 – 16
90386–16MA7	25 – 26

PART NO. N° PIECES	REF. NO.
90386–16MA8	25 – 27
90386–22MA4	24 – 12
	25 – 11
90386–30048	26 – 4
90386–30M60	26 – 6
90386–40001	26 – 3
90386–45001	19 – 24
90387–05053	20 – 9
90387–05054	20 – 10
90387–06138	24 – 38
90387–06139	21 – 21
	22 – 29
90387–06176	18 – 4
90387–06182	15 – 3
90387–06M03	15 – 11
90387–06M13	24 – 15
90387–06M60	12 – 8
90387–06M70	13 – 4
	13 – 38
90387–06M86	19 – 35
90387–10M42	34 – 5
90387–13006	5 – 11
90387–16M02	25 – 28
90430–08020	30 – 10
	39 – 12
90430–08143	28 – 5
	39 – 5
90430–14M09	29 – 7
	39 – 3
90445–07025	15 – 19
90445–07026	15 – 20
90445–07027	15 – 21
90445–08029	14 – 3
90445–09026	9 – 32
90445–09061	9 – 35
90445–09082	9 – 33
90445–11M05	33 – 11
90445–11M06	33 – 9
90445–15003	18 – 22
90446–06M90	10 – 25
90446–14MH7	25 – 22
90464–06001	13 – 34
90464–07M56	12 – 22
90464–08004	13 – 10
90464–09010	13 – 26
90464–09018	9 – 38
90464–10M32	12 – 40
90464–12001	15 – 22

NUMERICAL INDEX
INDEX NUMERIQUE

PART NO. N° PIECES	REF. NO.
90464–12M58	18 – 32
90464–16001	12 – 42
	13 – 17
90464–16003	12 – 42
90464–18246	12 – 38
	13 – 24
90464–20181	14 – 11
90464–76001	15 – 35
90465–08059	4 – 23
90465–08M82	18 – 48
90465–08M83	6 – 5
90465–11M10	2 – 25
	9 – 34
	12 – 34
	16 – 2
	18 – 16
	18 – 23
	23 – 3
	31 – 3
90465–11M59	29 – 5
90465–13M18	6 – 16
	12 – 6
	12 – 39
	13 – 25
	14 – 2
	15 – 16
	15 – 18
	23 – 18
90465–13M97	25 – 24
90467–09M17	9 – 13
	9 – 29
90468–10005	21 – 29
90468–18008	19 – 39
	22 – 23
	22 – 37
	23 – 13
	23 – 17
90480–06M19	8 – 14
90480–10627	8 – 12
90480–10M23	12 – 9
90480–13M24	13 – 5
	13 – 39
90480–14M54	28 – 18
90480–16007	18 – 19
90480–16616	6 – 15
90480–19031	22 – 17
	23 – 8
90480–19368	14 – 9

PART NO. N° PIECES	REF. NO.
90480–19368	15 – 27
90480–21M82	18 – 3
90480–25003	12 – 14
90501–10326	7 – 8
90501–120A5	5 – 12
90501–150A0	30 – 40
90501–23215	19 – 16
90502–10M07	24 – 22
90506–18014	24 – 33
90506–20020	24 – 35
90508–20M44	21 – 17
	22 – 25
91318–05025	27 – 55
91490–16010	19 – 12
91490–30020	31 – 18
91690–30008	24 – 21
91690–30012	22 – 19
	23 – 10
91690–30018	25 – 15
91690–50014	6 – 4
92902–06200	27 – 17
92903–06600	2 – 6
	29 – 10
92903–08600	17 – 17
	17 – 19
92907–04600	4 – 16
92990–06200	19 – 38
92990–06300	31 – 13
92990–06600	24 – 17
92990–08600	25 – 37
	36 – 34
92995–05600	20 – 12
	28 – 15
92995–06100	18 – 42
92995–06600	4 – 12
	6 – 7
	10 – 27
	10 – 27
	12 – 3
	12 – 17
	12 – 20
	12 – 27
	12 – 33
	12 – 37
	13 – 9
	13 – 16
	13 – 16
	13 – 42

PART NO. N° PIECES	REF. NO.
92995–06600	14 – 13
	15 – 6
	15 – 30
	17 – 25
	18 – 13
	18 – 31
	18 – 39
	18 – 43
	19 – 21
	21 – 7
	21 – 32
	22 – 7
	22 – 21
	25 – 43
	26 – 22
	26 – 23
	26 – 29
92995–08600	13 – 28
	13 – 30
	17 – 21
	26 – 32
93101–12M63	28 – 2
	39 – 4
93101–17054	30 – 44
	39 – 18
93101–20001	30 – 23
	39 – 15
93102–22009	8 – 18
	37 – 2
93102–25014	3 – 10
	37 – 8
93102–37004	3 – 9
	37 – 7
93210–06001	27 – 48
93210–06ME6	30 – 25
	39 – 17
93210–07003	27 – 6
93210–08287	33 – 14
	33 – 16
93210–12N52	27 – 34
93210–13M63	2 – 14
	4 – 20
	37 – 6
	37 – 10
93210–16275	34 – 9
93210–20M65	9 – 27
	37 – 18
93210–24709	27 – 8

PART NO. N° PIECES	REF. NO.
93210–24709	27 – 12
93210–24M79	4 – 22
	37 – 17
93210–29M94	26 – 5
93210–320A7	27 – 4
93210–32738	9 – 8
93210–35M86	6 – 11
	37 – 15
93210–49046	30 – 16
	39 – 14
	39 – 27
93210–56M80	30 – 46
	39 – 20
93210–57M09	30 – 45
	39 – 19
93306–00501	30 – 42
93315–314V8	30 – 3
93315–317U2	30 – 43
93332–00005	30 – 8
93420–30042	28 – 20
93430–04M03	24 – 39
93430–06024	36 – 10
93450–17129	3 – 8
93501–08001	27 – 14
	27 – 43
	27 – 51
93602–15250	27 – 47
93604–12M07	28 – 13
	29 – 3
	30 – 18
	31 – 5
	39 – 29
93606–12019	2 – 3
	4 – 5
93606–14081	27 – 54
93606–19M23	28 – 6
93700–06M03	26 – 19
94702–00418	4 – 24
95380–04600	9 – 24
95380–05600	36 – 7
95380–06600	18 – 44
	36 – 40
95380–06700	21 – 15
	22 – 15
	24 – 18
95380–08600	9 – 10
95380–10600	26 – 10
95780–06500	13 – 6

PART NO. N° PIECES	REF. NO.
95780–06500	13 – 40
95895–06014	21 – 12
	22 – 12
95895–06020	9 – 3
95895–06030	11 – 6
95895–06035	31 – 12
95895–06100	6 – 12
97013–06012	5 – 10
97013–06016	29 – 9
97013–06040	2 – 5
97013–08035	17 – 18
97013–08045	17 – 16
97075–06012	18 – 38
97080–08016	25 – 30
97080–08025	30 – 26
97095–05010	28 – 14
97095–05012	11 – 5
97095–05020	20 – 11
97095–06008	28 – 17
97095–06010	18 – 30
	25 – 42
97095–06012	6 – 6
	18 – 12
97095–06014	12 – 19
	12 – 32
	13 – 8
	13 – 15
	13 – 15
	13 – 41
	14 – 12
	15 – 5
	15 – 29
	17 – 24
	19 – 20
	21 – 24
	21 – 31
	22 – 20
	22 – 32
	26 – 21
97095–06016	12 – 36
97095–06020	4 – 11
	10 – 26
	10 – 26
	12 – 2
	21 – 6
	22 – 6
97095–06025	12 – 16
97095–06030	26 – 28

PART NO. N° PIECES	REF. NO.
97095–08014	28 – 4
97095–08016	13 – 29
	17 – 20
97095–08025	13 – 27
	26 – 31
97095–08045	30 – 19
	39 – 30
97380–05025	36 – 8
97380–08030	36 – 33
97575–06520	30 – 47
97575–06525	28 – 9
97575–08530	28 – 12
	29 – 13
	31 – 6
97595–05514	1 – 8
97595–06514	23 – 11
97595–06530	23 – 6
97595–06555	6 – 3
	19 – 29
	21 – 23
	22 – 31
97595–06610	13 – 12
97780–50616	1 – 3
97780–60520	19 – 32
	26 – 26
97880–05025	2 – 12
	2 – 23
	4 – 18
97880–06010	12 – 11
97885–06012	12 – 26
97885–06030	18 – 41
97980–04108	7 – 30
97980–04110	7 – 5
97980–04114	7 – 28
	38 – 9
97985–06214	14 – 14
	15 – 31
	15 – 33
97985–06220	16 – 3
98507–04010	4 – 15
98580–03015	36 – 38
98580–04006	7 – 2
	36 – 36
98580–04008	7 – 15
98580–04010	36 – 35
98580–05010	36 – 37
98780–04016	2 – 27
98980–06030	13 – 3

PART NO. N° PIECES	REF. NO.	PART NO. N° PIECES	REF. NO.	PART NO. N° PIECES	REF. NO.	PART NO. N° PIECES	REF. NO.	PART NO. N° PIECES	REF. NO.	PART NO. N° PIECES	REF. NO.
98980–06030	13 – 37										
99002–03600	27 – 32										
99080–05600	24 – 29										
	24 – 31										
	24 – 41										
99080–10600	25 – 34										