YAMAHA

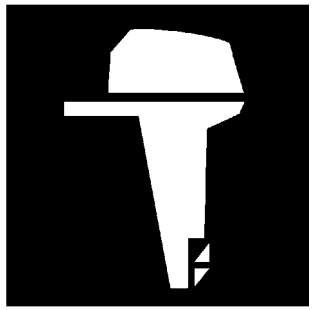

PARTS CATALOGUE
CATALOGUE DE PIECES DETACHEES

F20DET Y12 (6DN3)

1L6DN-300FA

( )

YAMAHA
GENUINE
Parts & Accessories

F20DET
PARTS CATALOGUE
©2012 by Yamaha Motor Co., Ltd.
1st edition, April 2012
All rights reserved.
Any reprinting or unauthorized use
without the written permission of
Yamaha Motor Co., Ltd.
is expressly prohibited.
Printed in Japan.

F20DET
CATALOGUE DE PIECES DETACHEES
©2012 par Yamaha Motor Co., Ltd.
1re édition, avril 2012
Tous droits réservés
Toute réimpression ou utilisation
non autorisée sans la permission écrite
de la Yamaha Motor Co., Ltd.
est formellement interdite.
Imprimé au Japon

FOREWORD

This Parts Catalogue is related to the parts for the model(s) on the cover page. When you are ordering replacement parts, please refer to this Parts Catalogue and quote both part numbers and part names correctly.

1. Modifications or additions which have been made after the issue of the Parts Catalogue will be announced in the Parts News.
   It is advisable that you make the necessary corrections to the Parts Catalogue according to the Parts News.

2. Abbreviations
   The following abbreviations are used in this Parts Catalogue.

   "UR" Use specified parts number.
   "UN" Use as many as needed.
   "AP" Alternate Parts
   "LM" Locally Made (Parts need to be ordered locally)
   "F#" Frame No. (Applicable machine No.)
   "O/S" Over Size

3. The number of components for assembly
   - Parts, which are to be supplied in an assembly, are listed with a dot (.) in front of the part name as shown below.
   - The numeral appearing to the right of each component part indicates the quantity of parts for each assembly unit.

PART NO.	DESCRIPTION	Q'TY	REMARKS
2F5–83310–60	FRONT FLASHER LIGHT ASSY	2	
115–83311–60	.BULB (6V–18W)	1	

4. Applicable colours of graphics are represented in the "REMARKS" as shown below.

PART NO.	DESCRIPTION	Q'TY	REMARKS
2N4–24110–00–X5	FUEL TANK COMP.	2	MXR
3J1–24240–10	.GRAPHIC, FUEL TANK	1	FOR MXR

5. Note that the illustrations for reference in finding parts numbers are not to be used for assembling. When assembling, please use the applicable service manual.

6. The asterisk (*) before a reference number indicates modified items after the first edition.

7. Applicable Serial No.

   Engine Serial No.

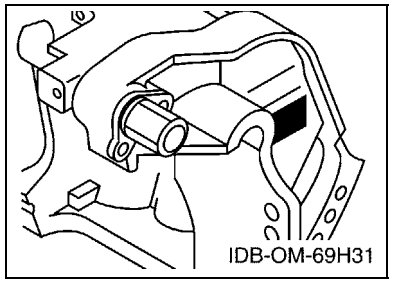

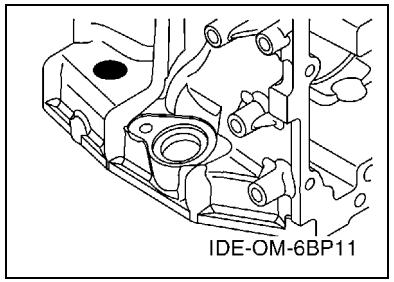

8. Applicable Engine Starting Serial No.

Model	Serial No.	Model	Serial No.
F20D	6DNK-1000173		

9. Applicable Colour Code

Abbreviation	Colour Name	Colour Code
DBNM2	DARK BLUISH GRAY METALLIC 2	004D

10. Quantity Column Information

Column No.	Name Of Q'ty Column	Applicable Model
1	6DN3	F20DET

AVANT–PROPOS

Ce catalogue de pièces détachées concerne les pièces pour le(s) modèle(s) indiqué(s) sur la page de couverture. Lorsque vous commandez des pièces de rechange, veuillez vous référer à ce catalogue de pieces détachées et indiquer clairement les numéros et les noms des pièces détachées.

1. Les modifications ou ajouts ayant été effectués après la parution du catalogue de pièces détachées seront décrits dans les Bulletins d'information concernant les pièces détachées.
   Il est recommandé que vous apportiez les corrections nécessaires au catalogue des pièces détachées en vous référant aux Bulletins d'information.

2. Abréviations
   Dans ce catalogue, les abréviations suivantes sont utilisées:

   "UR" Utiliser le numéro de pièces spécifié.
   "UN" Utiliser autant que nécessaire.
   "AP" Pièces de substitution
   "LM" Fabrication locale (les pièces doivent être commandées localement.)
   "F#" N° de cadre (applicable au N° de série)
   "O/S" Surdimensionné

3. Nombre de pièces d'un assemblage
   - Les pièces fournies comme composants d'un assemblage sont précédées d'un point (.) de la manière indiquée ci–dessous.
   - Le chiffre apparaissant à la droite de chaque composant indique la quantité de pièces pour chaque unité d'assemblage.

N° PIECES	DESCRIPTION	QTE	REMARQUES
2F5–83310–60	ENS. CLIGNOTANT AVANT	2	
115–83311–60	.AMPOULE (6V–18W)	1	

4. Les couleurs concernant les graphiques sont indiquées dans la colonne "REMARQUES", comme indiqué ci–dessous.

N° PIECES	DESCRIPTION	QTE	REMARQUES
2N4–24110–00–X5	RESERVOIR A ESSENCE.	2	MXR
3J1–24240–10	.GRAPHIQUE	1	POUR MXR

5. Veuillez noter que les illustrations sont indiquées à titre de référence pour trouver les numéros de pièces, non pour être utilisées lors de l'assemblage. Lors de l'assemblage, veuillez utiliser le manuel d'entretien adéquat.

6. L'astérisque (*) placé devant un numéro de référence indique des éléments qui ont été modifiés après la première édition.

7. N° de série applicable

   N° de Série du moteur

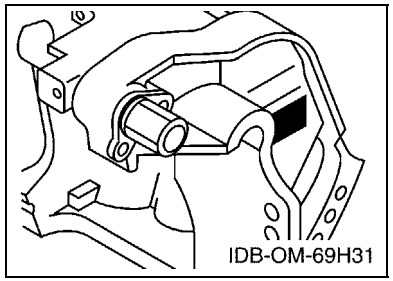

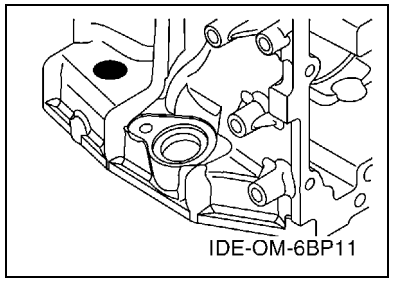

8. N° de série initial du moteur applicable

Modèle	N° de série	Modèle	N° de série
F20D	6DNK-1000173		

9. Code couleur applicable

Abréviation	Nom de la couleur	Code couleur
DBNM2	DARK BLUISH GRAY METALLIC 2	004D

10. Informations relatives à la colonne Quantité

N° de la colonne	Nom de la colonne Qté	Modèle applicable
1	6DN3	F20DET

CONTENTS

TOP COWLING 1
CYLINDER & CRANKCASE 1 2
CRANKSHAFT & PISTON 4
CYLINDER & CRANKCASE 2 5
VALVE 7
INTAKE 8
CARBURETOR 9
OIL PUMP 11
FUEL 12
GENERATOR 14
ELECTRICAL 1 15
ELECTRICAL 2 16
ELECTRICAL 3 17
ELECTRICAL 4 18
ELECTRICAL 5 19
STARTING MOTOR 20
BOTTOM COWLING 1 21
BOTTOM COWLING 2 23
CONTROL 24
BRACKET 1 26
BRACKET 2 28
POWER TRIM & TILT ASSY 29
UPPER CASING 32
OIL PAN 33
LOWER CASING & DRIVE 1 34
LOWER CASING & DRIVE 2 37
FUEL TANK 38
STEERING GUIDE 39
REMOTE CONTROL BOX 40
REMOTE CONTROL ASSY 41
REPAIR KIT 1 44
REPAIR KIT 2 45
REPAIR KIT 3 46

INDEX

NUMERICAL INDEX 48

TABLE DES MATIERES

CAPOT SUPERIEUR 1
CYLINDRE & CARTER 1 2
VILEBREQUIN & PISTON 4
CYLINDRE & CARTER 2 5
SOUPAPE 7
ADMISSION 8
CARBURATEUR 9
POMPE A HUILE 11
CARBURANT 12
GENERATRICE 14
PARTIE ELECTRIQUE 1 15
PARTIE ELECTRIQUE 2 16
PARTIE ELECTRIQUE 3 17
PARTIE ELECTRIQUE 4 18
PARTIE ELECTRIQUE 5 19
DEMARREUR ELECTRIQUE 20
CAPOT INFERIEUR 1 21
CAPOT INFERIEUR 2 23
COMMANDE 24
SUPPORT 1 26
SUPPORT 2 28
PUISSANCE PARER ET INCLINER 29
FOURREAU 32
VENTILATEUR D'HUILE 33
BOITIER D'HELICE TRANSMISSION1 34
BOITIER D'HELICE TRANSMISSION2 37
RESERVOIR A CARBURANT 38
FIXATION DE DIRECTION 39
BOITIER DE COMMANDE A DISTANCE 40
BOITIER DE COMMANDE A DISTANCE 41
KITS DE REPARATION 1 44
KITS DE REPARATION 2 45
KITS DE PEPARATION 3 46

INDEX

INDEX NUMERIQUE 48

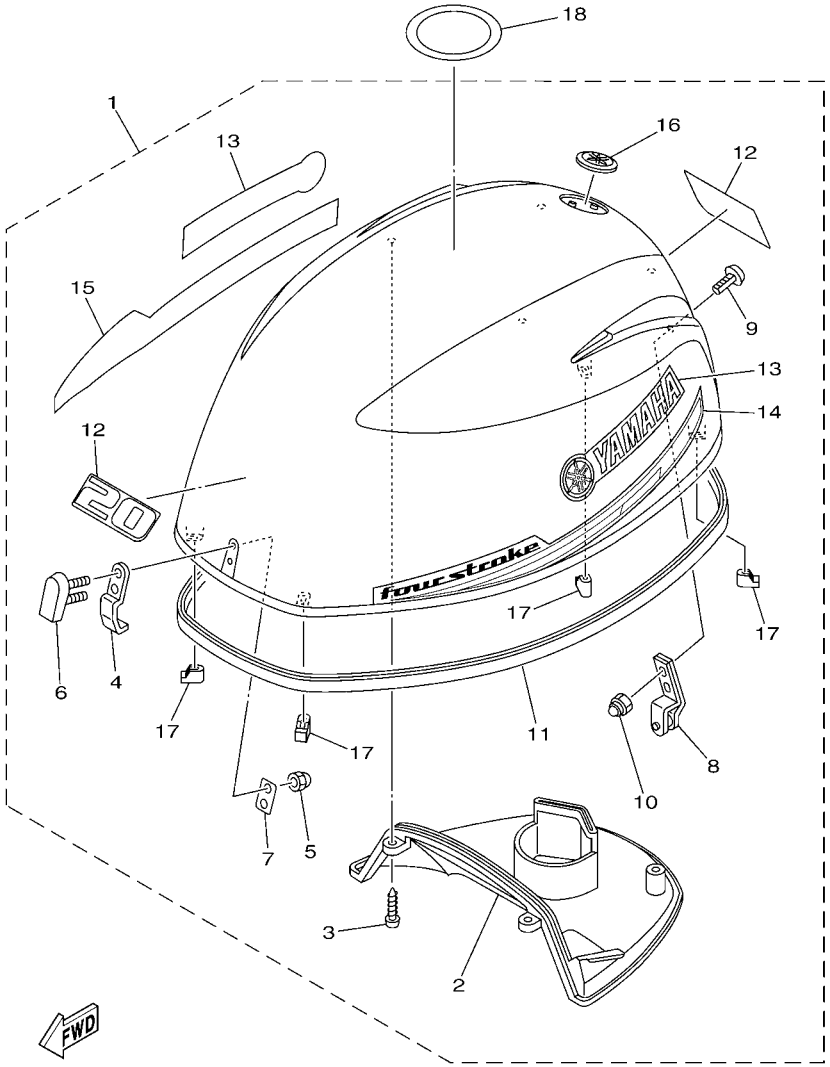

6DN3300-L010

FIG. 1 TOP COWLING — CAPOT SUPERIEUR

REF. NO.	PART NO. N° PIECES	DESCRIPTION DESCRIPTION	6DN3					REMARKS REMARQUES
1	6DN–42610–11	TOP COWLING ASSY CAPOT (ENS.)	1					
2	6BL–42613–00	.MOLDING, AIR DUCT .MANCHON A AIR	1					
3	97780–50616	.SCREW, TAPPING .VIS, TETE BOMBEE	4					
4	6BL–42651–00	.HOOK .CROCHET	1					
5	95380–05800	.NUT .ECROU	2					
6	6BG–42851–00	.COVER, CLAMP .COUVERCLE, BRIDE	1					
7	6BG–42649–00	.HOLDER, CLAMP BAND .SUPPORT, SANDOW DE SERRAGE	1					
8	6BL–42652–00	.HOOK .CROCHET	1					
9	90109–06047	.BOLT .BOULON	2					
10	90185–06M05	.NUT, SELF-LOCKING .ECROU,AUTO-BLOQUANT	2					
11	6CJ–42615–00	.SEAL .JOINT	1					
12	6DN–42677–10	.GRAPHIC, FRONT .ADHESIF, AVANT	2					
13	6BP–42681–00	.MARK, COWLING .ADHESIF, CAPOT	2					
14	6BP–42675–10	.GRAPHIC, SIDE 1 .EMBLEME	1					
15	6BP–42676–10	.GRAPHIC, SIDE 2 .EMBLEME	1					
16	6AH–42697–10	.TUNING FORK MARK .MARQUE, YAMAHA	1					
17	6BG–42662–00	.DAMPER .AMORTISSEUR	4					
18	67F–13434–20	LABEL, CAUTION ETIQUETTE, ATTENTION	1					

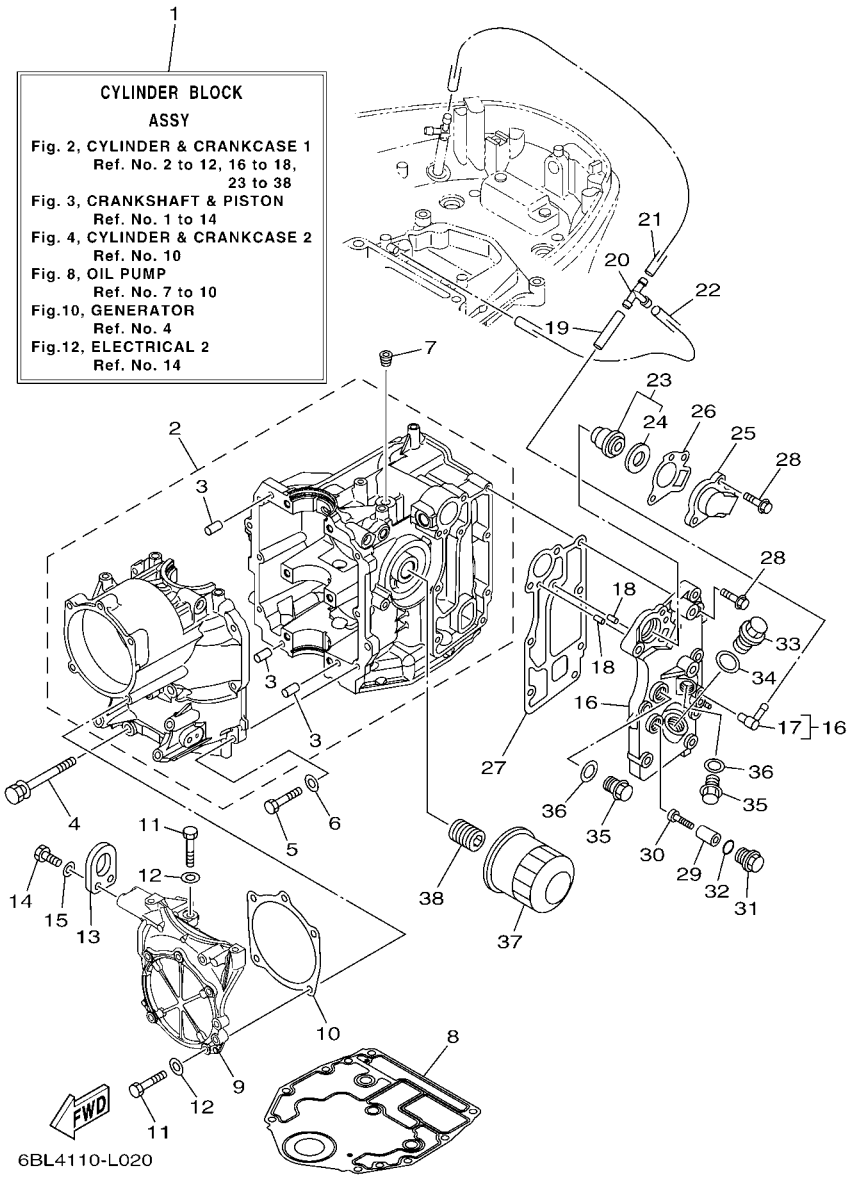

FIG. 2 CYLINDER & CRANKCASE 1 CYLINDRE & CARTER 1

REF. NO.	PART NO. N° PIECES	DESCRIPTION DESCRIPTION	6DN3					REMARKS REMARQUES
1	6BL–W009B–00–1S	CYLINDER BLOCK ASSY CYLINDRE GROUPE (ENS.)	1					
2	6BL–15100–01	CRANKCASE ASSY CARTER DE MOTEUR COMPLET	1					
3	93606–12019	.PIN, DOWEL .GOUPILLE	3					
4	90119–08M01	BOLT, WITH WASHER BOULON, AVEC RONDELLE	6					
5	97013–06025	BOLT BOULON	7					
6	92903–06600	WASHER, PLATE RONDELLE, PLATE	7					
7	90344–51003	PLUG, TAPER SCREW PLOT, FILETE CONIQUE	1					
8	6BG–11351–00	GASKET, CYLINDER JOINT, D'EMBASE	1					
9	6BL–15121–00–1S	CRANKCASE 2 CARTER DE MOTEUR	1					
10	6BL–15663–00	SEAL JOINT	1					
11	97013–06025	BOLT BOULON	6					
12	92903–06600	WASHER, PLATE RONDELLE, PLATE	6					
13	62Y–11119–00	HANGER, ENGINE ANNEAU, LEVAGE	1					
14	97095–06020	BOLT BOULON	2					
15	92995–06600	WASHER RONDELLE	2					
16	6BL–41113–00–1S	OUTER COVER, EXHAUST COUVERCLE, ECHAPPEMENT	1					
17	676–11372–00	.NIPPLE, HOSE .RACCORD, TUYAU	1					
18	93604–10M03	PIN, DOWEL CLAVETTE	2					
19	90445–09057	HOSE (L43) DURITE (L43)	1					
20	688–24378–00	PIPE, JOINT 3 DURITE RACCORDEMENT 3	1					
21	90445–09251	HOSE (L350) DURITE (L350)	1					
22	90445–09104	HOSE (L300) DURITE (L300)	1					
23	6G8–12411–03	THERMOSTAT THERMOSTAT	1					
24	688–12412–00	.SEAL, THERMOSTAT .JOINT, THERMOSTAT	1					
25	6C5–12413–00–9S	COVER, THERMOSTAT COUVERCLE, THERMOSTAT	1					
26	62Y–12414–00	GASKET, COVER JOINT, COUVERCLE	1					
27	6BL–41114–00	GASKET, EXHAUST OUTER COVER JOINT, COUVERCLE D'ECHAPPEMENT	1					

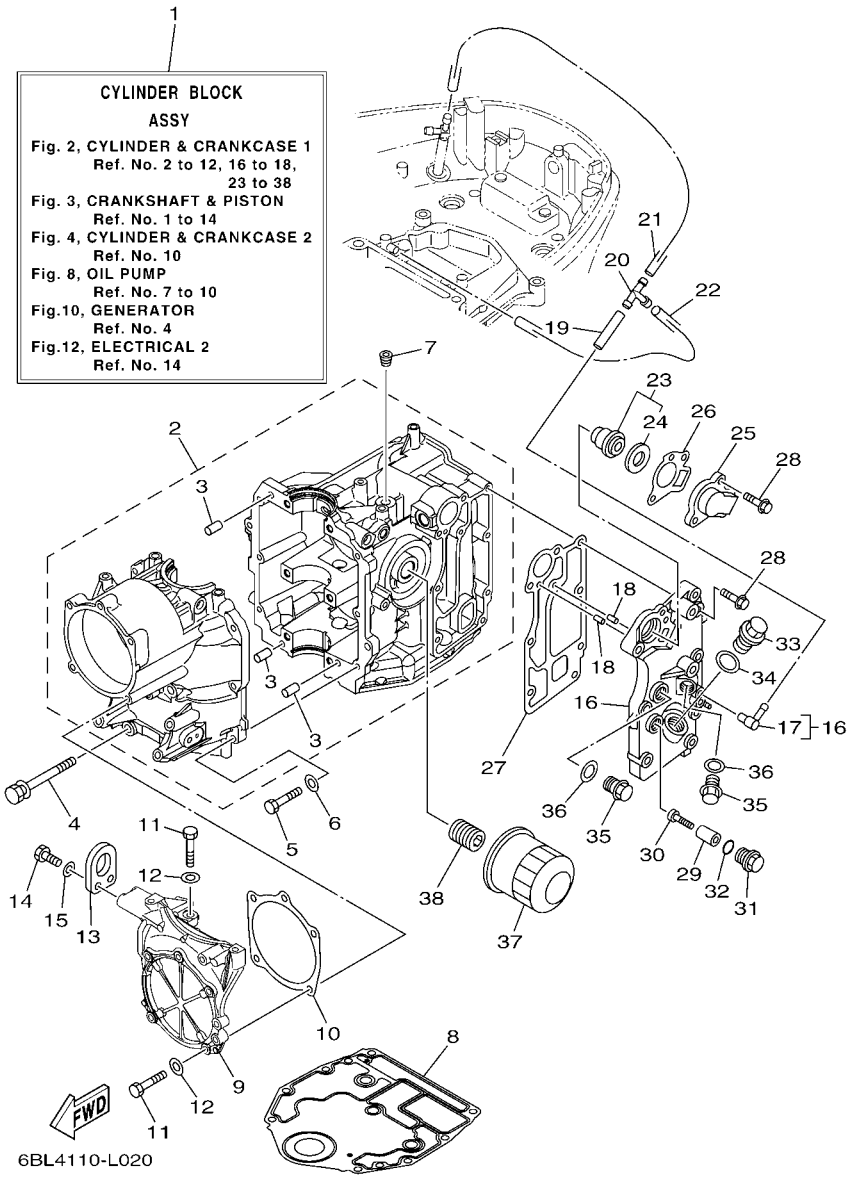

FIG. 2 CYLINDER & CRANKCASE 1 CYLINDRE & CARTER 1

REF. NO.	PART NO. N° PIECES	DESCRIPTION DESCRIPTION	6DN3					REMARKS REMARQUES
28	90119–06MA5	BOLT, WITH WASHER BOULON, AVEC RONDELLE	8					
29	6G8–11325–00	ANODE ANODE	1					
30	97880–05025	SCREW, PAN HEAD VIS, TETE TRONCONIQUE	1					
31	6G8–11197–01	PLUG, BLIND PLOT, BORGNE	1					
32	93210–13M63	O-RING JOINT TORIQUE	1					
33	90340–18M09	PLUG, STRAIGHT SCREW PLOT, FILETE DROIT	1					
34	90430–18130	GASKET JOINT	1					
35	90340–14M06	PLUG, STRAIGHT SCREW PLOT, FILETE DROIT	2					
36	90430–14115	GASKET JOINT	2					
37	5GH–13440–20	ELEMENT ASSY, OIL CLEANER ELEMENT, FILTRE A HUILE	1					
38	6C5–12858–00	BOLT, UNION BOULON, RACCORD	1					

FIG. 3 CRANKSHAFT & PISTON VILEBREQUIN & PISTON

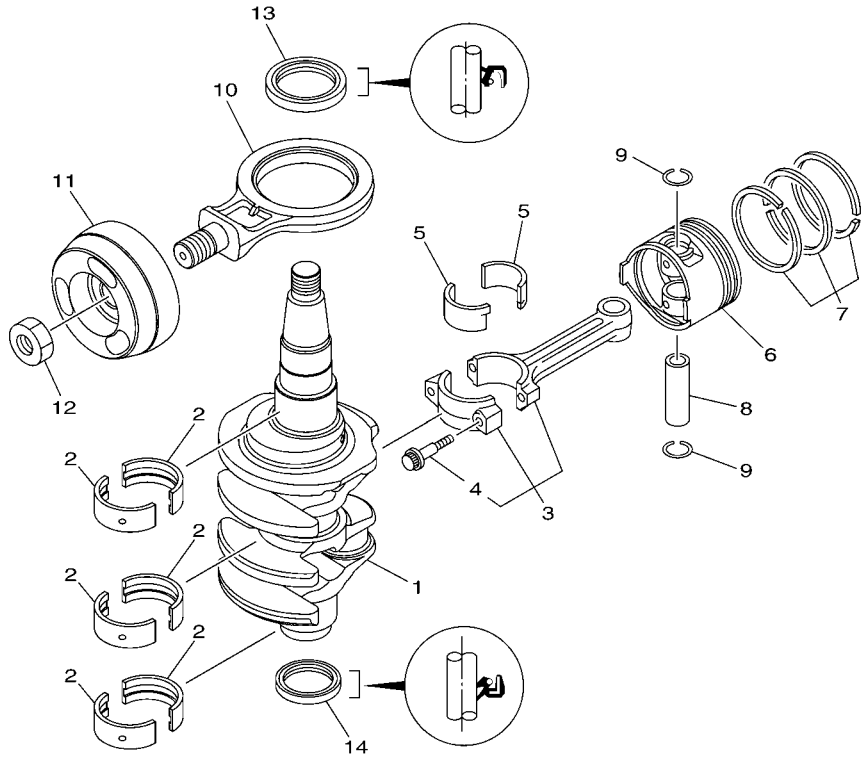

6BP1100-H030

REF. NO.	PART NO. N° PIECES	DESCRIPTION DESCRIPTION	6DN3					REMARKS REMARQUES
1	6BL–11411–00	CRANKSHAFT VILEBREQUIN COMPLET	1					
2	6BG–11416–10	PLANE BEARING, CRANKSHAFT 1 COUSSINET DE VILEBREQUIN 1	6					UR RED UR RED
	6BG–11416–20	PLANE BEARING, CRANKSHAFT 1 COUSSINET DE VILEBREQUIN 1	6					UR PINK UR PINK
	6BG–11416–30	PLANE BEARING, CRANKSHAFT 1 COUSSINET DE VILEBREQUIN 1	6					UR GREEN UR GREEN
3	6C5–11650–00	CONNECTING ROD ASSY BIELLE COMPLETTE	2					
4	6C5–11654–00	.BOLT, CONNECTING ROD .BOULON, BIELLE	2					
5	6CJ–11656–20	PLANE BEARING, CONNECTING ROD ROULEMENT DE BIELLE	4					UR PINK UR PINK
	6CJ–11656–30	PLANE BEARING, CONNECTING ROD ROULEMENT DE BIELLE	4					UR GREEN UR GREEN
	6CJ–11656–10	PLANE BEARING, CONNECTING ROD ROULEMENT DE BIELLE	4					UR RED UR RED
6	69W–11631–01–97	PISTON (STD) PISTON (STD)	2					
	69W–11635–01	PISTON (0.25MM O/S) PISTON (0.25MM O/S)	2					AP AP
	69W–11636–01	PISTON (0.50MM O/S) PISTON (0.50MM O/S)	2					AP AP
7	67C–11603–00	PISTON RING SET (STD) JEU DE SEGMENTS (STD)	2					
	67C–11604–00	PISTON RING SET (0.25MM O/S) JEU DE SEGMENTS (0.25MM O/S)	2					AP AP
	67C–11605–00	PISTON RING SET (0.50MM O/S) JEU DE SEGMENTS (0.50MM O/S)	2					AP AP
8	62Y–11633–00	PIN, PISTON AXE, PISTON	2					
9	93450–17129	CIRCLIP CIRCLIP, TYPE S	4					
10	6BL–11665–00	CONNECTING ROD ASSY 3 BIELLE COMPLETE	1					
11	6BL–11642–00	PISTON 2 (STD) PISTON 2 (STD)	1					
12	90170–20137	NUT ECROU	1					
13	93102–43M42	OIL SEAL JOINT SPY	1					
14	93101–35002	OIL SEAL JOINT SPY	1					

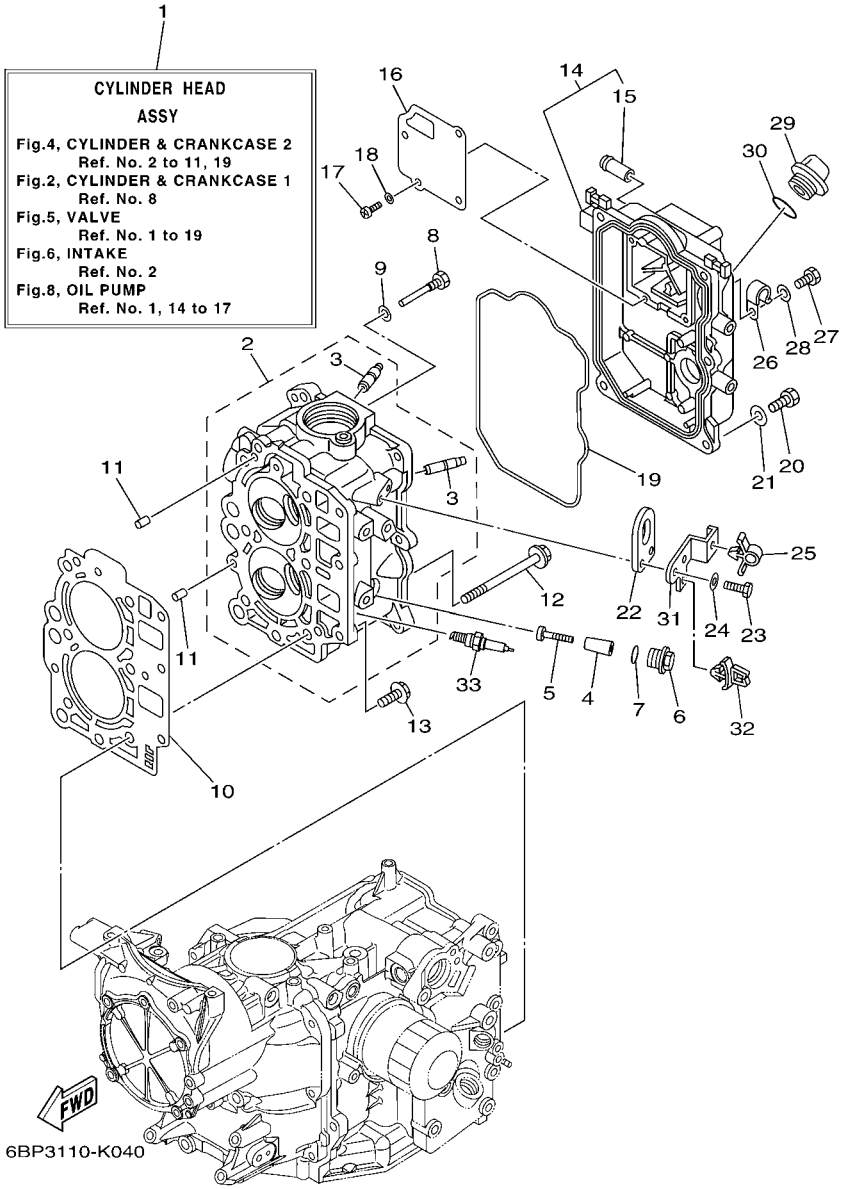

FIG. 4 CYLINDER & CRANKCASE 2 CYLINDRE & CARTER 2

REF. NO.	PART NO. N° PIECES	DESCRIPTION DESCRIPTION	6DN3					REMARKS REMARQUES
1	6BL–W009A–00–1S	CYLINDER HEAD ASSY CULASSE (ENS.)	1					
2	6BL–11111–00–1S	HEAD, CYLINDER 1 CULASSE	1					
3	62Y–11133–30	.GUIDE, VALVE 1 .GUIDE, SOUPAPE 1	4					
4	6BL–11325–00	ANODE ANODE	2					
5	98980–05035	SCREW, BIND VIS, DE PRESSION	2					
6	6G8–11197–01	PLUG, BLIND PLOT, BORGNE	2					
7	93210–13M63	O-RING JOINT TORIQUE	2					
8	90109–06M65	BOLT BOULON	1					
9	90430–06014	GASKET JOINT	1					
10	6BL–11181–00	GASKET, CYLINDER HEAD 1 JOINT, DE CULASSE 1	1					
11	93606–12019	PIN, DOWEL GOUPILLE	2					
12	90105–09005	BOLT, FLANGE BOULON	6					
13	90119–06MA3	BOLT, WITH WASHER BOULON, AVEC RONDELLE	3					
14	6BL–11191–00–1S	COVER, CYLINDER HEAD 1 COUVERCLE, CULASSE 1	1					
15	62Y–14485–00	.PIPE, JOINT .DURITE	1					
16	6BG–11168–00	COVER, BREATHER COUVERCLE, RENIFLARD	1					
17	98507–04010	SCREW, PAN HEAD VIS, TETE TRONCONIQUE	4					
18	92907–04600	WASHER RONDELLE	4					
19	6BL–11356–00	SEAL, CYLINDER 2 JOINT, SPY CYLINDRE	1					
20	97095–06020	BOLT BOULON	5					
21	92995–06600	WASHER RONDELLE	5					
22	62Y–11119–00	HANGER, ENGINE ANNEAU, LEVAGE	1					
23	97095–06020	BOLT BOULON	2					
24	92995–06600	WASHER RONDELLE	2					
25	90464–09023	CLAMP BRIDE	1					
26	90465–08M83	CLAMP BRIDE	1					
27	97095–06012	BOLT BOULON	1					

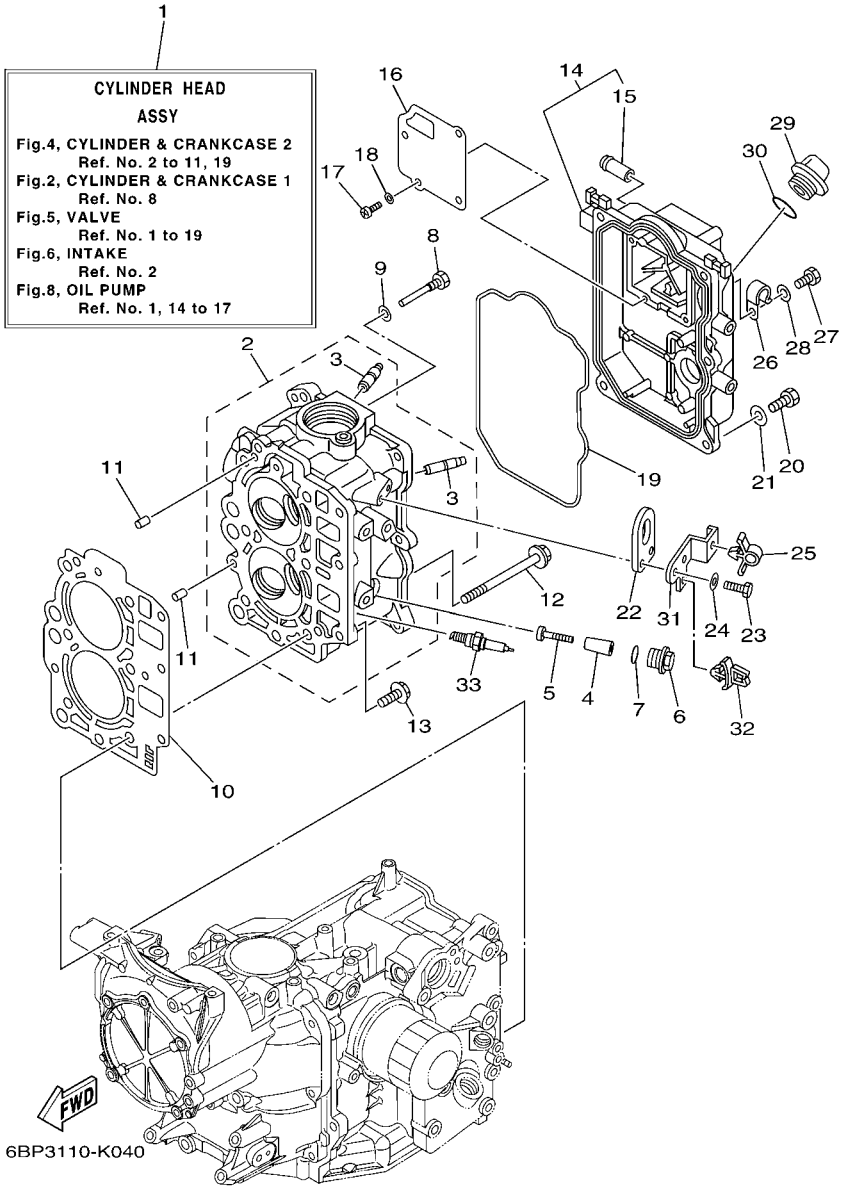

FIG. 4 CYLINDER & CRANKCASE 2 CYLINDRE & CARTER 2

REF. NO.	PART NO. N° PIECES	DESCRIPTION DESCRIPTION	6DN3					REMARKS REMARQUES
28	92995–06600	WASHER RONDELLE	1					
29	6G8–15363–00	PLUG, OIL PLOT, HUILE	1					
30	93210–24M79	O-RING JOINT TORIQUE	1					
31	6BL–82398–00	PLATE 3 PLAQUETTE 3	1					
32	90464–06001	CLAMP BRIDE	1					
33	94702–00418	PLUG, SPARK (NGK DPR6EB) BOUGIE D,ALLUMAGE (NGK DPR6EB)	2					

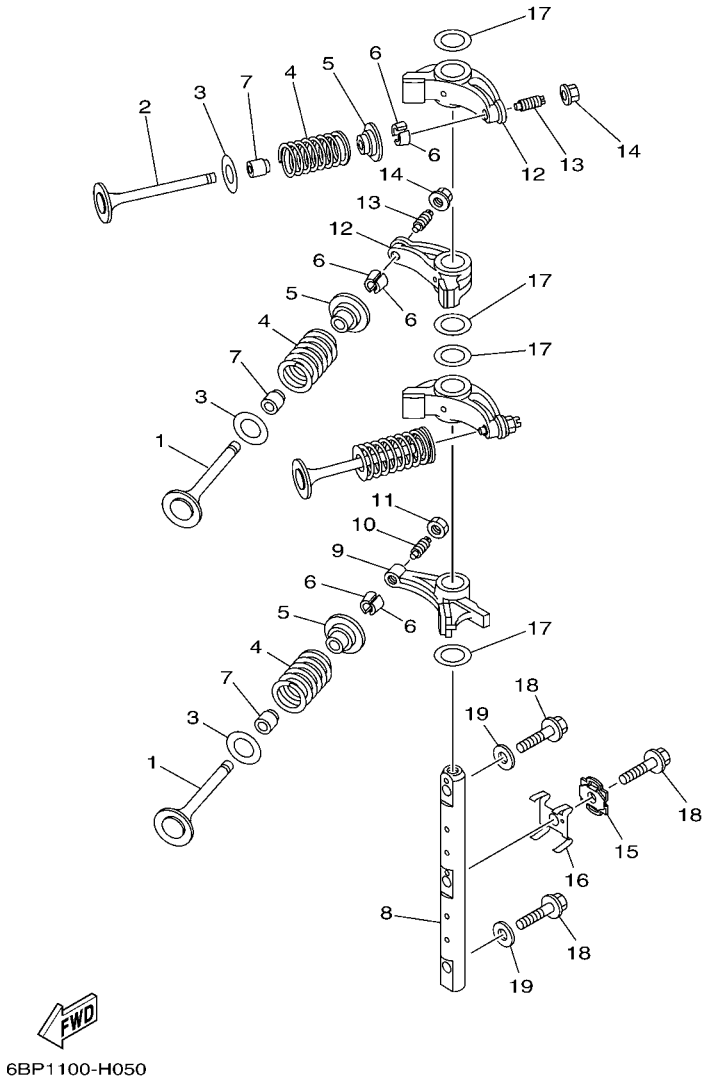

FIG. 5 VALVE SOUPAPE

REF. NO.	PART NO. N° PIECES	DESCRIPTION DESCRIPTION	6DN3					REMARKS REMARQUES
1	69W–12111–00	VALVE, INTAKE SOUPAPE, ADMISSION	2					
2	69W–12121–00	VALVE, EXHAUST SOUPAPE, ECHAPPEMENT	2					
3	62Y–12116–00	SEAT, VALVE SPRING SIEGE, RESSORT DE SOUPAPE	4					
4	51Y–12114–00	SPRING, VALVE OUTER RESSORT DE SOUPAPE, EXTERNE	4					
5	30X–12117–00	RETAINER, VALVE SPRING BUTEE DE RESSORT DE SOUPAPE	4					
6	30X–12118–00	COTTER, VALVE FRAISE, SOUPAPE	8					
7	51Y–12119–00	SEAL, VALVE STEM JOINT, QUEUE DE SOUPAPE	4					
8	6BL–12146–00	SHAFT, ROCKER AXE, CULBUTEUR	1					
9	62Y–12151–00	ARM, VALVE ROCKER CULBUTEUR	1					
10	64J–12159–00	SCREW, VALVE ADJUSTING VIS, REGLAGE DE SOUPAPE	1					
11	62Y–12158–00	NUT, LOCK CONTRE-ECROU	1					
12	6C5–12151–00	ARM, VALVE ROCKER CULBUTEUR	3					
13	6C5–12159–00	SCREW, VALVE ADJUSTING VIS, REGLAGE DE SOUPAPE	3					
14	6C5–12158–00	NUT, LOCK CONTRE-ECROU	3					
15	6BL–12231–00	GUIDE, STOPPER 1 GUIDE, BUTEE 1	1					
16	6BL–12233–00	PLATE, GUIDE STOPPER 1 PLAQUE, GUIDE BUTEE 1	1					
17	90201–16014	WASHER, PLATE RONDELLE, PLATE	4					
18	90105–08060	BOLT, FLANGE BOULON	3					
19	92990–08200	WASHER, PLAIN RONDELLE, PLATE	2					

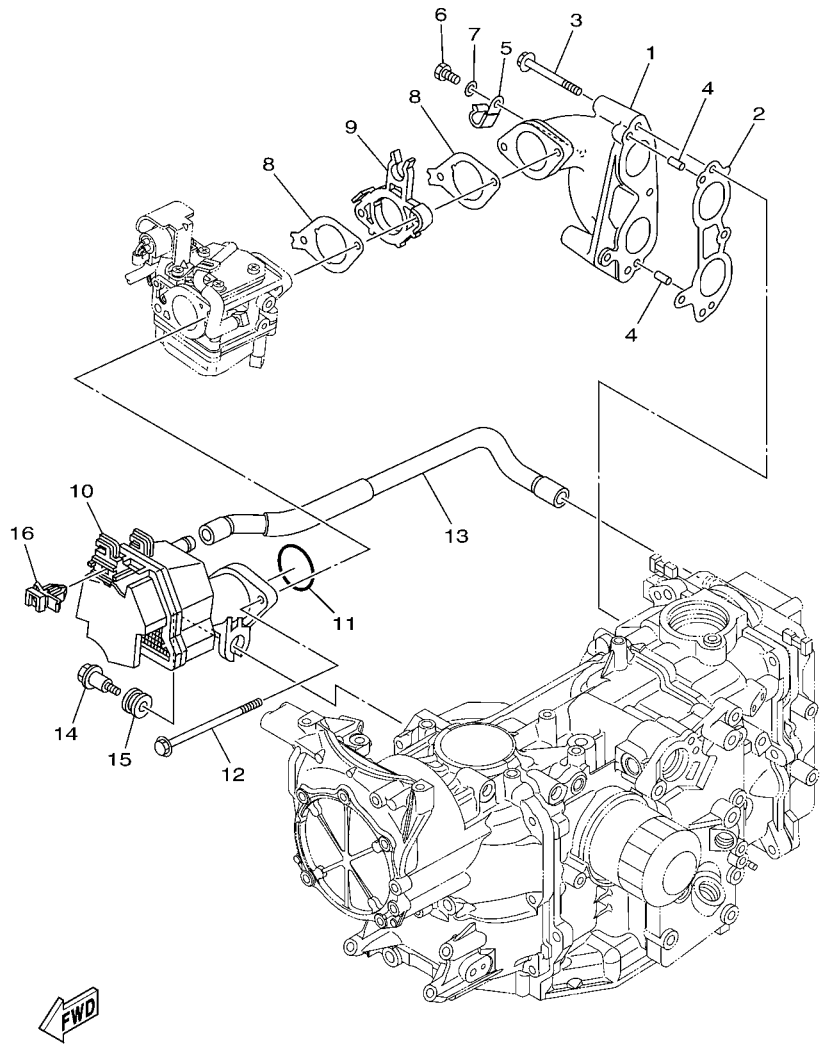

6BP1100-H060

FIG. 6 INTAKE ADMISSION

REF. NO.	PART NO. N° PIECES	DESCRIPTION DESCRIPTION	6DN3					REMARKS REMARQUES
1	6BL–13641–00–94	MANIFOLD, INTAKE 1 TUBULURE, ADMISSION 1	1					
2	6BL–13645–00	GASKET, MANIFOLD 1 JOINT, TUBULURE 1	1					
3	97595–06555	BOLT, WITH WASHER VIS HEXAGONAL AVC RONDELLE	4					
4	91690–50014	PIN, SPRING AGRAFFE	2					
5	90465–08M83	CLAMP BRIDE	1					
6	97095–06016	BOLT BOULON	1					
7	92995–06600	WASHER RONDELLE	1					
8	6BL–13646–00	GASKET, MANIFOLD 2 JOINT, TUBULURE 2	2					
9	6BL–14271–00	INSULATOR ISOLATEUR	1					
10	6BL–14440–00	SILENCER ASSY, INTAKE SIENCIEUX D'ADMISSION	1					
11	93210–39ME4	O-RING JOINT TORIQUE	1					
12	95895–06100	BOLT, FLANGE BOULON	2					
13	6BL–15373–00	PIPE, BREATHER DURITE DE RENIFLARD	1					
14	90109–06MA1	BOLT BOULON	1					
15	90480–16616	GROMMET PASSE-FIL	1					
16	90464–09M47	CLAMP BRIDE	1					

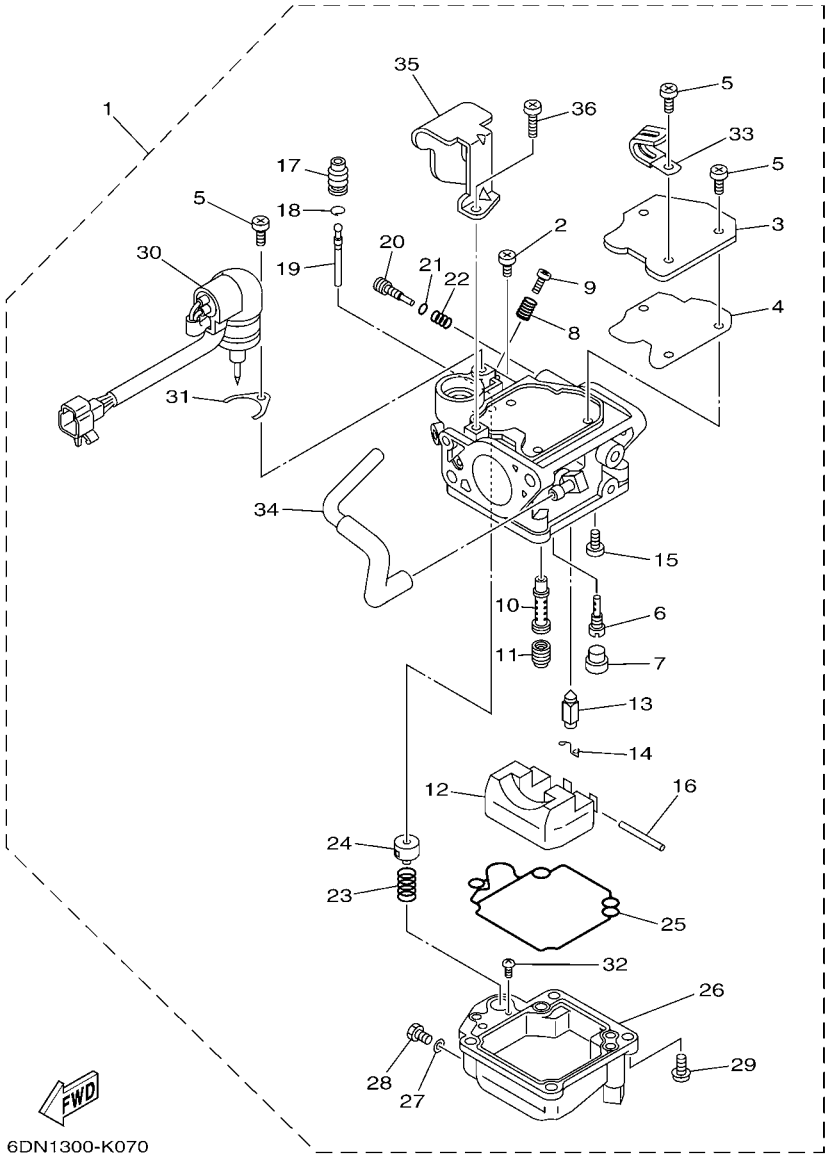

FIG. 7 CARBURETOR CARBURATEUR

REF. NO.	PART NO. N° PIECES	DESCRIPTION DESCRIPTION	6DN3					REMARKS REMARQUES
1	6DN–14301–00	CARBURETOR ASSY 1 CARBURATEUR COMPLET 1	1					
2	98580–04006	.SCREW, PAN HEAD .VIS	1					
3	65W–14572–00	.PLATE .PLAQUE	1					
4	65W–14126–10	.GASKET .JOINT	1					
5	97803–04010	.SCREW, PAN HEAD .VIS, CRUCIFORME	4					
6	676–14948–05	.JET (#45) .GICLEUR (#45)	1					
7	679–14966–00	.RUBBER CAP .CAOUTCHOUC CASQUILLO	1					
8	90501–10326	.SPRING, COMPRESSION .RESSORT, COMPRESSION	1					
9	63V–14523–00	.SCREW, STOP .VIS, BUTEE	1					
10	65W–14947–90	.JET, NEEDLE .GICLEUR DE STARTER	1					
11	6BL–14943–28	.JET, MAIN (#105) .GICLEUR, PRINCIPAL (#105)	1					
12	63V–14985–00	.FLOAT .FLOTTEUR	1					
13	6AH–14546–00	.VALVE, NEEDLE .POINTEAU	1					
14	663–14159–00	.CLIP .JONC	1					
15	98580–04008	.SCREW, PAN HEAD .VIS	1					
16	6H4–14548–00	.PIN, FLOAT ARM .AXE, BRAS DE FLOTTEUR	1					
17	65W–14373–02	.COVER, PLUNGER CAP .COUVERCLE DE PLONGEUR	1					
18	65W–1439G–00	.CLIP 1 .JONC 1	1					
19	65W–14379–00	.ROD, STARTER .TRINGLE, STARTER	1					
20	67C–14923–20	.SCREW, PILOT .VIS, RALENTI	1					
21	67C–14397–00	.O-RING .JOINT TORIQUE	1					
22	67C–14555–00	.SPRING .RESSORT	1					
23	65W–14335–00	.SPRING, PLUNGER .RESSORT, PLONGEUR	1					
24	65W–14371–00	.PLUNGER, STARTER .PLONGEUR, STARTER	1					
25	65W–14384–00	.GASKET, FLOAT CHAMBER .JOINT, CUVE DE FLOTTEUR	1					
26	65W–14980–20	.BODY, FLOAT CHAMBER .CORPS, CUVE DE FLOTTEUR	1					
27	65W–14398–00	.GASKET .JOINT	1					

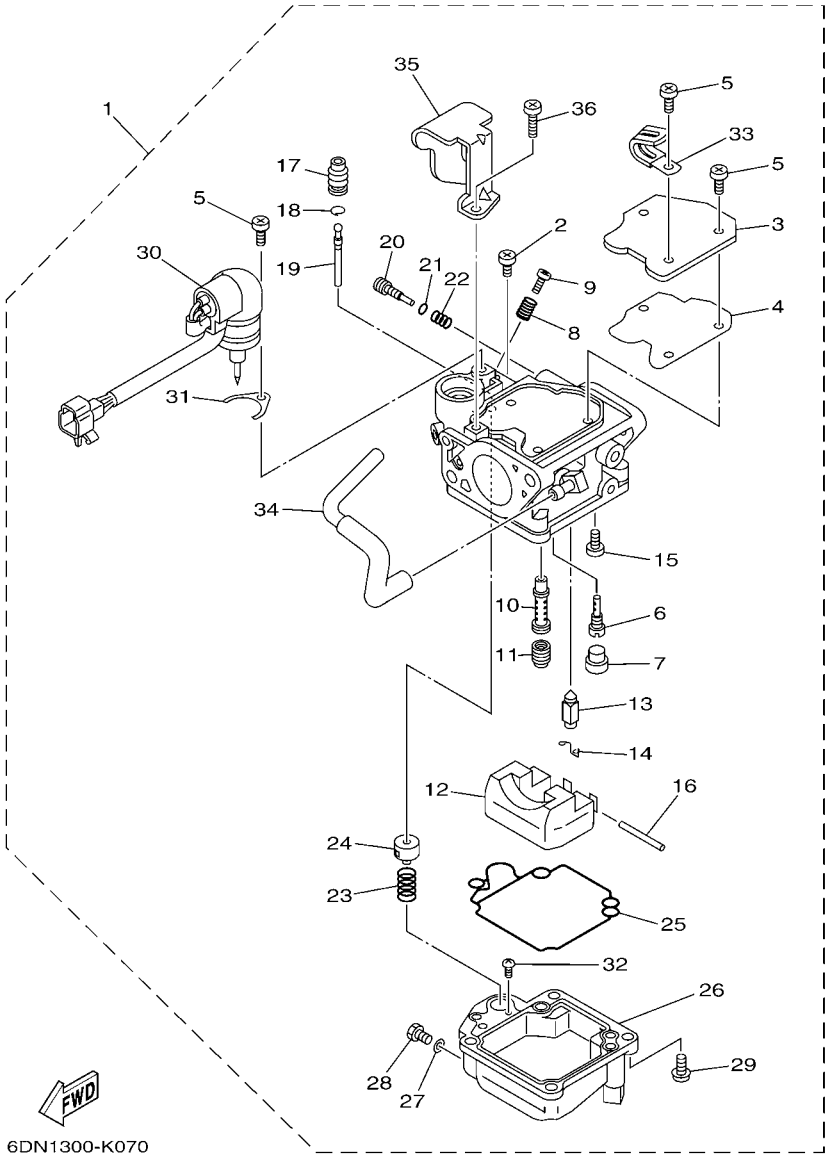

FIG. 7 CARBURETOR CARBURATEUR

REF. NO.	PART NO. N° PIECES	DESCRIPTION DESCRIPTION	6DN3					REMARKS REMARQUES
28	65W–14992–00	.SCREW, DRAIN .BOUCHON, PURGE	1					
29	97980–04114	.SCREW, WITH WASHER .VIS, AVEC RONDELLE	4					
30	6BL–14380–00	.PRIME STARTER ASSY .STARTER AUTOMATIQUE	1					
31	65W–14346–00	.PLATE .PLAQUE	1					
32	67C–14567–00	.SCREW .VIS	1					
33	67F–14255–00	.PLATE .PLAQUE	1					
34	65W–14807–00	.HOSE COMP. .DURITE (ENS.)	1					
35	6DN–14346–00	.PLATE .PLAQUE	1					
36	97980–04108	.SCREW, WITH WASHER .VIS, AVEC RONDELLE	2					

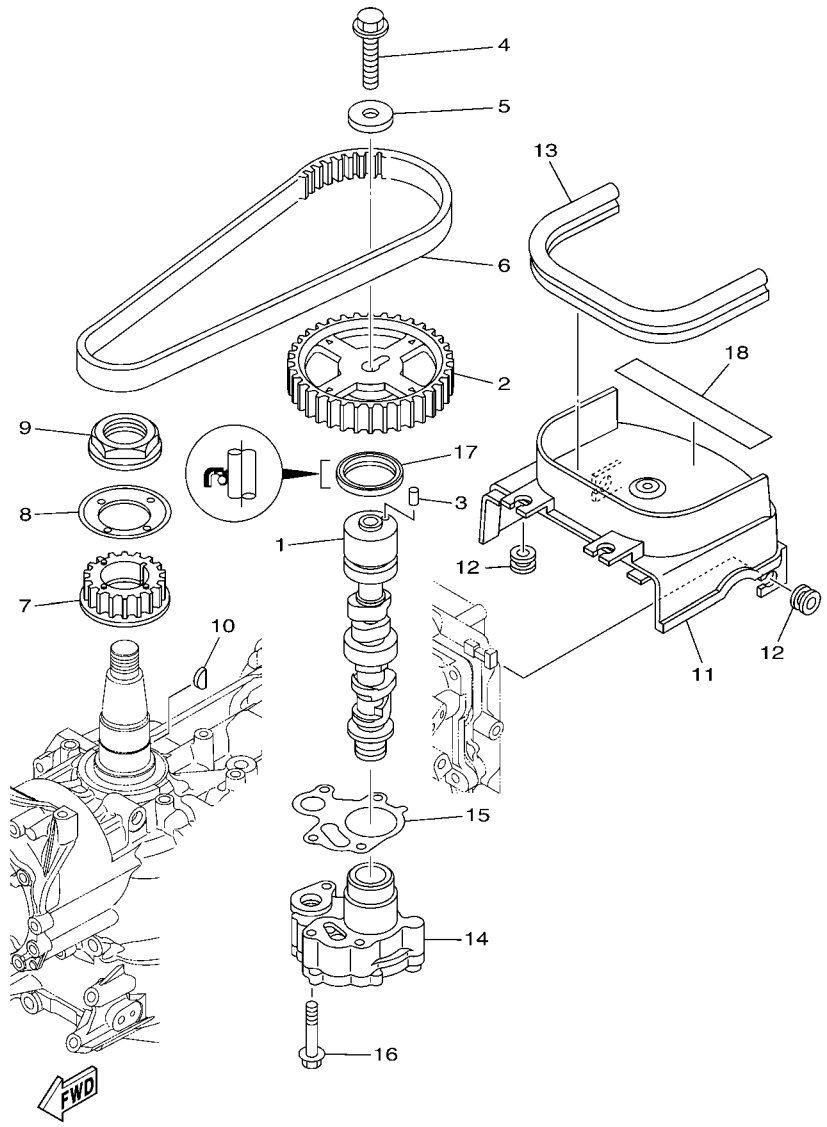

6BP1300-H080

FIG. 8 OIL PUMP — POMPE A HUILE

REF. NO.	PART NO. N° PIECES	DESCRIPTION DESCRIPTION	6DN3					REMARKS REMARQUES
1	6BL–12171–00	CAMSHAFT 1 ARBRE A CAMES 1	1					
2	6C5–11537–00	GEAR, DRIVEN PIGNON SECONDAIRE	1					
3	93605–17002	PIN, DOWEL AXE	1					
4	95817–10035	BOLT, FLANGE BOULON, A COLLERETTE	1					
5	90201–10144	WASHER, PLATE RONDELLE, PLATE	1					
6	6C5–46241–00	BELT COURROIE TRAPEZOIDALE	1					
7	6C5–11536–00	GEAR, DRIVE ENGRENAGE, MENANT	1					
8	62Y–11557–00	WASHER 1 RONDELLE 1	1					
9	90179–35001	NUT ECROU	1					
10	90280–03M01	KEY, WOODRUFF CLAVETTE, DEMI-LUNE	1					
11	6BL–46297–00	COVER, DUST COUVERCLE, POUSSIERE	1					
12	90480–12314	GROMMET PASSE-FIL	4					
13	6BL–42617–00	DAMPER, FORM BOURRELET, CAOUTCHOUC	1					
14	6BL–13300–00	OIL PUMP ASSY POMPE A HUILE COMPLETE	1					
15	6C5–13329–00	GASKET, PUMP COVER JOINT, COUVERCLE DE POMPE	1					
16	90119–06025	BOLT, WITH WASHER BOULON, AVEC RONDELLE	4					
17	93102–37M40	OIL SEAL JOINT SPY	1					
18	6BP–13437–60	MARK, CAUTION MAKER	1					

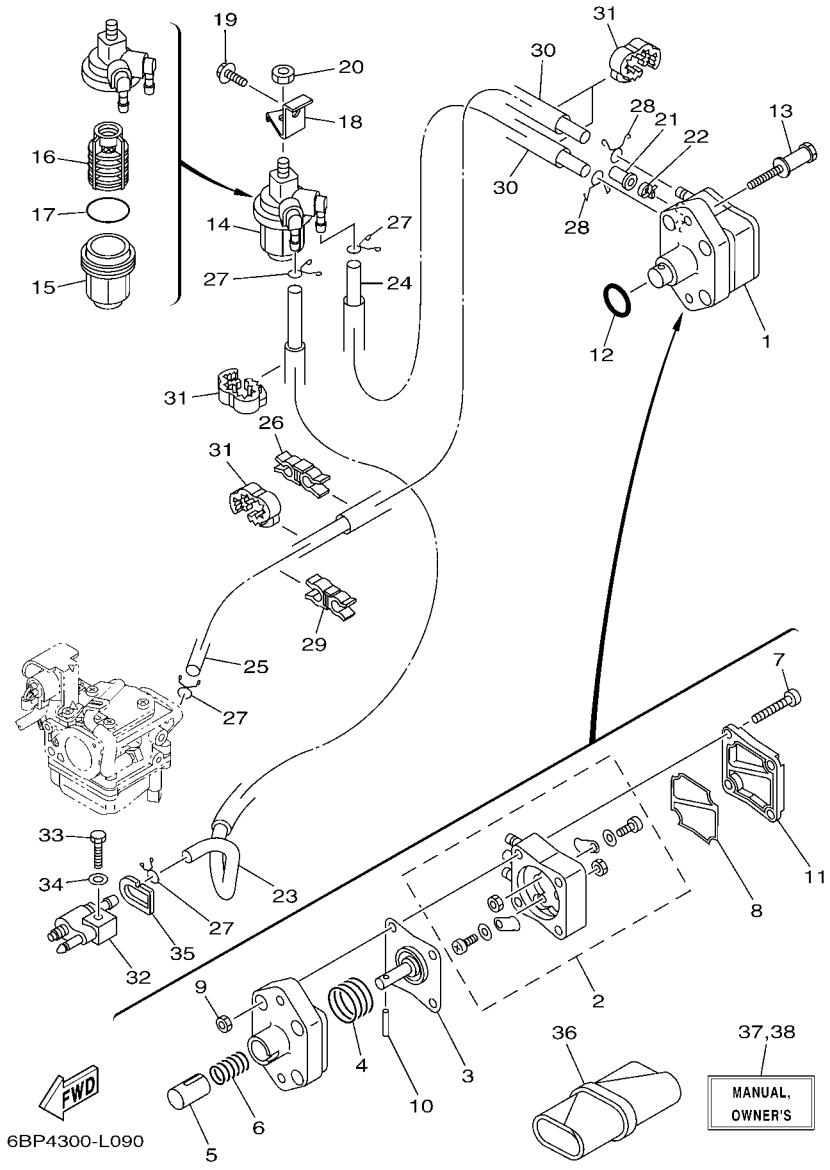

FIG. 9 FUEL CARBURANT

REF. NO.	PART NO. N° PIECES	DESCRIPTION DESCRIPTION	6DN3					REMARKS REMARQUES
1	62Y–24410–04	FUEL PUMP ASSY POMPE A ESSENCE	1					
2	62Y–24415–01	.BODY 4 .CORPS 4	1					
3	62Y–24411–02	.DIAPHRAGM .DIAPHRAGME	1					
4	62Y–24423–00	.SPRING, DIAPHRAGM .RESSORT, DIAPHRAGME	1					
5	62Y–13131–01	.PLUNGER .PLONGEUR	1					
6	62Y–24454–00	.SPRING .RESSORT	1					
7	62Y–24444–01	.SCREW .VIS	4					
8	6C5–24471–00	.DIAPHRAGM .DIAPHRAGME	1					
9	95380–05600	.NUT .ECROU	4					
10	62Y–24374–01	.PIN .PIN	1					
11	6C5–24414–00	.BODY 3 .CORPS 3	1					
12	93210–24M79	O-RING JOINT TORIQUE	1					
13	90109–06266	BOLT BOULON	2					
14	61N–24560–10	FILTER ASSY ENS FILTRE	1					
15	61N–24521–00	.CUP, FILTER .CUVETTE, FILTRE	1					
16	61N–24563–10	.ELEMENT, FILTER .ELEMENT, FILTRE	1					
17	93210–32738	.O-RING .JOINT TORIQUE	1					
18	6D5–24566–00	BRACKET, FILTER SUPPORT, FILTRE	1					
19	95895–08016	BOLT, FLANGE BOULON	1					
20	95380–08600	NUT ECROU	1					
21	6BL–24481–00	PLUG COUVERCLE	1					
22	90465–11M10	CLAMP BRIDE	1					
23	6BL–24311–00	PIPE, FUEL 1 DURITE A ESSENCE	1					
24	90445–10M20	HOSE (L150) DURITE (L150)	1					
25	90445–10MG7	HOSE (L350) DURITE (L350)	1					
26	90464–10M59	CLAMP BRIDE	1					
27	90467–09M17	CLIP JONC	4					

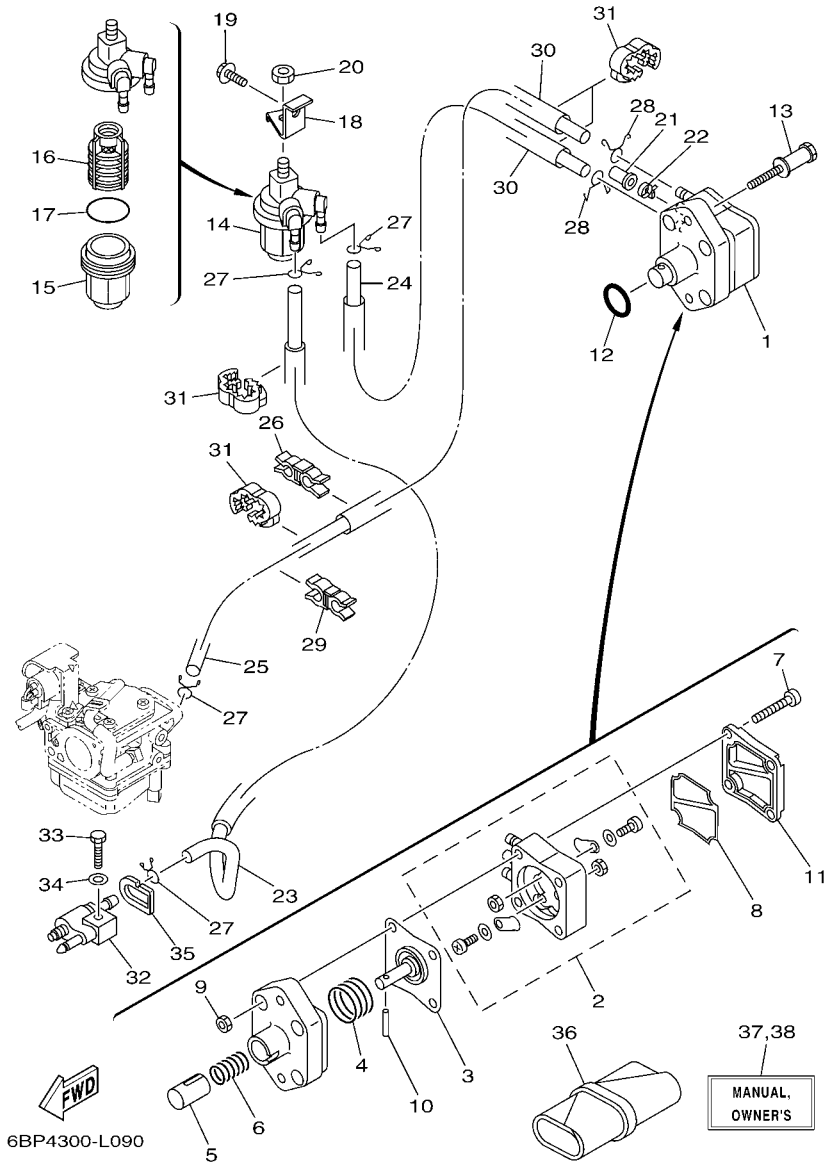

FIG. 9 FUEL CARBURANT

REF. NO.	PART NO. N° PIECES	DESCRIPTION DESCRIPTION	6DN3					REMARKS REMARQUES
28	90467–10M04	CLIP JONC	2					
29	90464–11009	CLAMP BRIDE	1					
30	90446–15003	HOSE (L100) DURITE (L100)	2					
31	90464–13227	CLAMP BRIDE	4					
32	6G1–24304–02	FUEL PIPE JOINT COMP. 1 DURITE RACCORDEMT. A ESSENCE	1					
33	97095–06025	BOLT BOULON	1					
34	92995–06600	WASHER RONDELLE	1					
35	61N–24329–00	SEAL JOINT	1					
36	62Y–28100–00	TOOL KIT TROUSSE A OUTILS	1					AP AP
37	6BP–28199–74–E0	MANUAL,OWNER'S MANUEL D'UTILISATION	1					UR (E) UR (E)
	6BP–28199–74–F0	MANUAL,OWNER'S MANUEL D'UTILISATION	1					UR (F) UR (F)
	6BP–28199–74–S0	MANUAL,OWNER'S MANUEL D'UTILISATION	1					UR (ES) UR (ES)
	6BP–28199–74–G0	MANUAL,OWNER'S MANUEL D'UTILISATION	1					UR (D) UR (D)
	6BP–28199–74–D0	MANUAL,OWNER'S MANUEL D'UTILISATION	1					UR (NL) UR (NL)
	6BP–28199–74–H0	MANUAL,OWNER'S MANUEL D'UTILISATION	1					UR (I) UR (I)
38	6BP–28199–84–K0	MANUAL,OWNER'S MANUEL D'UTILISATION	1					UR (DK) UR (DK)
	6BP–28199–84–R0	MANUAL,OWNER'S MANUEL D'UTILISATION	1					UR (GR) UR (GR)
	6BP–28199–84–P0	MANUAL,OWNER'S MANUEL D'UTILISATION	1					UR (P) UR (P)
	6BP–28199–84–N0	MANUAL,OWNER'S MANUEL D'UTILISATION	1					UR (N) UR (N)
	6BP–28199–84–M0	MANUAL,OWNER'S MANUEL D'UTILISATION	1					UR (S) UR (S)
	6BP–28199–84–L0	MANUAL,OWNER'S MANUEL D'UTILISATION	1					UR (SF) UR (SF)

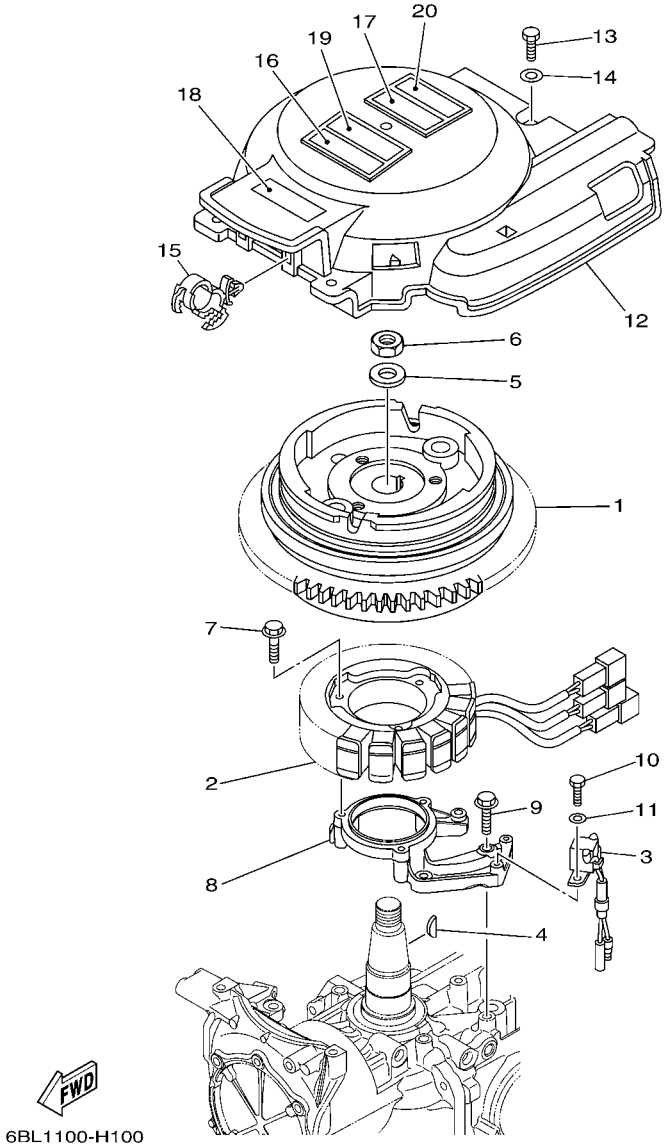

FIG. 10 GENERATOR GENERATRICE

REF. NO.	PART NO. N° PIECES	DESCRIPTION DESCRIPTION	6DN3					REMARKS REMARQUES
1	6BL–85550–00	ROTOR ASSY ROTOR CPLT	1					
2	6BL–85510–00	STATOR ASSY STATOR CPLT	1					
3	6AH–85580–00	COIL, PULSER BOBINE, PULSEUR	1					
4	6H4–11545–00	KEY, WOODRUFF CLAVETTE, DEMI-LUNE	1					
5	90201–21M18	WASHER, PLATE RONDELLE, PLATE	1					
6	90170–20137	NUT ECROU	1					
7	95023–06030	BOLT BOULON, A COLLERETTE	3					
8	6BG–85561–00–94	BASE, MAGNETO BASE, MAGNETO	1					
9	95023–06025	BOLT BOULON, A COLLERETTE	4					
10	97095–05016	BOLT BOULON	2					
11	92995–05600	WASHER RONDELLE	2					
12	6BL–81337–00	COVER, FLYWHEEL COUVERCLE, VOLANT	1					
13	97095–06020	BOLT BOULON	3					
14	92995–06600	WASHER RONDELLE	3					
15	90464–12183	CLAMP BRIDE	2					
16	6AH–81994–40	LABEL, SAFETY ETIQUETTE, SECURITE	1					
17	6AH–81995–40	LABEL, WARNING ETIQUETTE, AVERTISSEMENT	1					
18	6AG–81996–00	MARK MARQUE	1					
19	6AH–81994–50	LABEL, SAFETY ETIQUETTE, SECURITE	1					
20	6AH–81995–50	LABEL, WARNING ETIQUETTE, AVERTISSEMENT	1					

FIG. 11 ELECTRICAL 1 PARTIE ELECTRIQUE 1

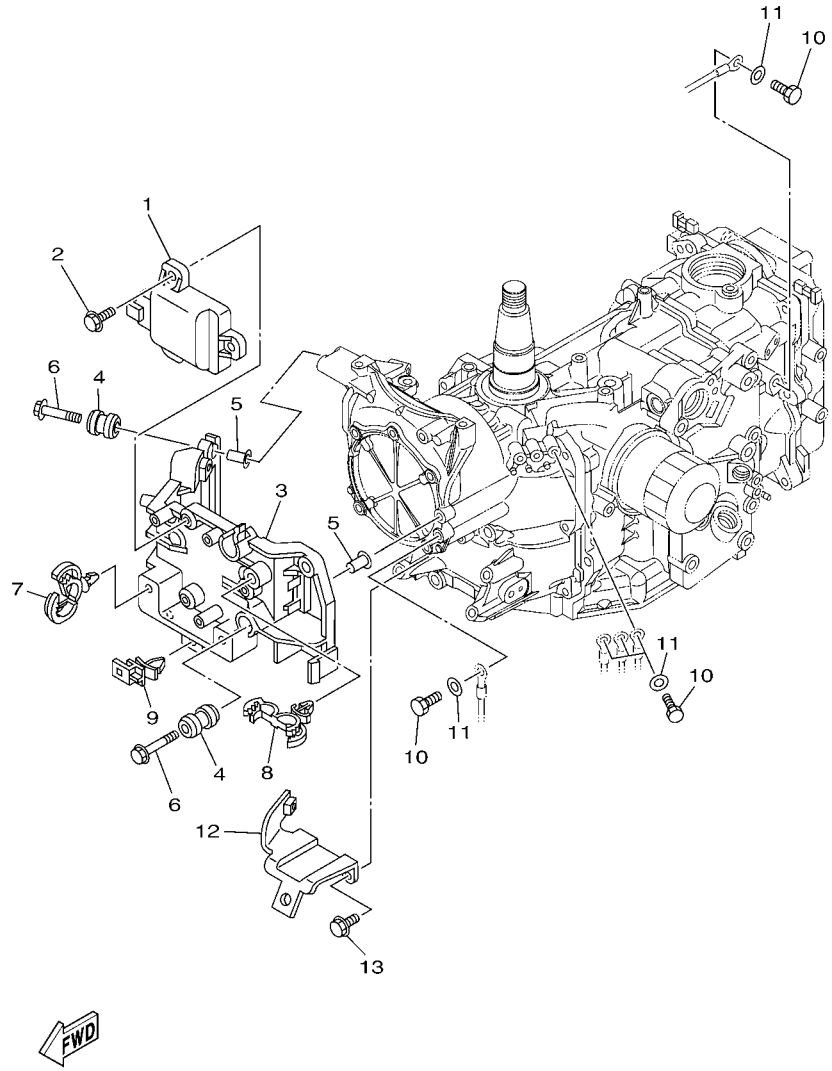

REF. NO.	PART NO. N° PIECES	DESCRIPTION DESCRIPTION	6DN3					REMARKS REMARQUES
1	6BL–85540–00	C.D.I. UNIT ASSY BLOC C.D.I.	1					
2	97575–06520	BOLT, WITH WASHER VIS HEXAGONAL AVC RONDELLE	3					
3	6BL–81948–00	BRACKET SUPPORT	1					
4	6A0–82317–00	DAMPER, IGNITION COIL AMORTISSEUR, BOBINE D'ALLUM	4					
5	90387–06119	COLLAR COLLERETTE	4					
6	95895–06030	BOLT, FLANGE BOULON	4					
7	90464–12183	CLAMP BRIDE	2					
8	90464–18246	CLAMP BRIDE	2					
9	90464–12002	CLAMP BRIDE	1					
10	97095–06016	BOLT BOULON	5					
11	92995–06600	WASHER RONDELLE	5					
12	6BL–82554–00	STAY, NEUTRAL SWITCH SUPPORT, CONT DE POINT-MORT	1					
13	95895–06014	BOLT, FLANGE BOULON	2					

FIG. 12 ELECTRICAL 2 PARTIE ELECTRIQUE 2

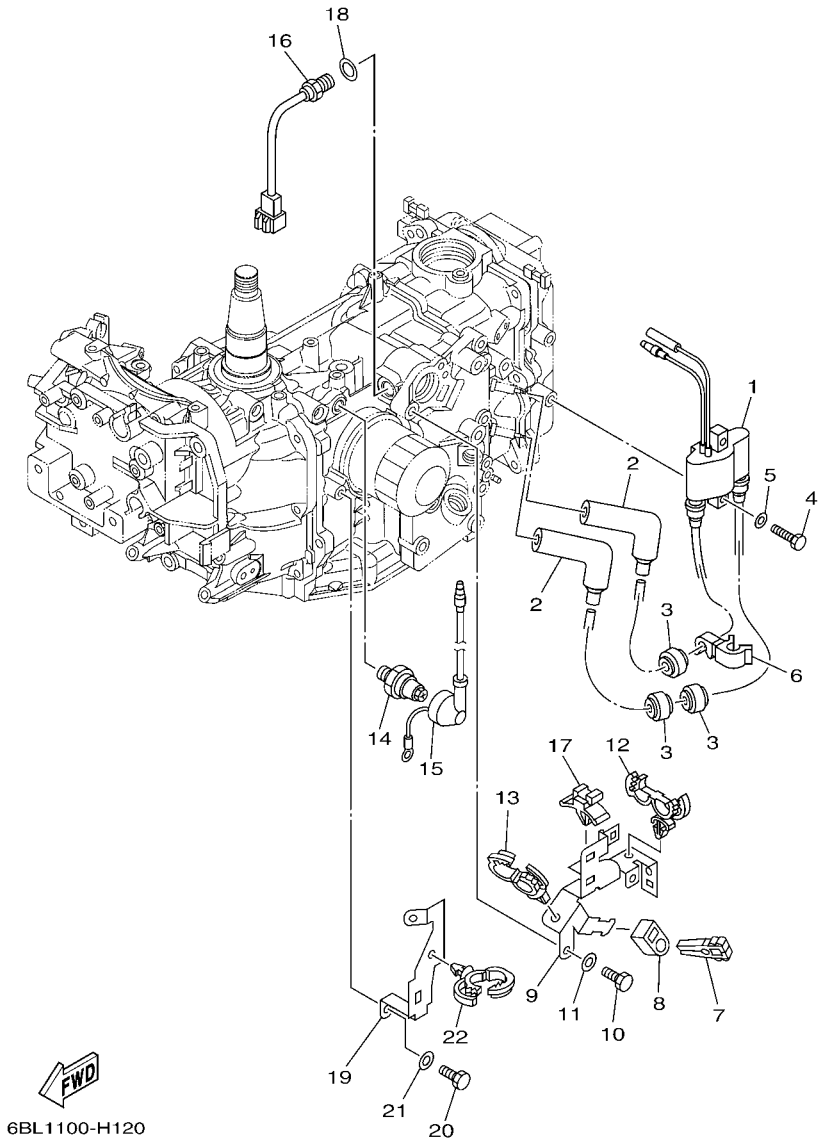

REF. NO.	PART NO. N° PIECES	DESCRIPTION DESCRIPTION	6DN3					REMARKS REMARQUES
1	6F5–85570–13	IGNITION COIL ASSY BOBINE D'ALLUMAGE (ENS.)	1					
2	6AH–82370–00	PLUG CAP ASSY ANTIPARASITE	2					
3	90480–25003	GROMMET PASSE-FIL	3					
4	97095–06025	BOLT BOULON	2					
5	92995–06600	WASHER RONDELLE	2					
6	90464–09018	CLAMP BRIDE	1					
7	67F–2812A–00	PULLER, FUSE TENDEUR, FUSIBLE	1					
8	67C–82155–00	BAND COLLIER	1					
9	6BL–8339X–00	CLAMP, CORD COLLIER, CORDON	1					
10	97095–06016	BOLT BOULON	2					
11	92995–06600	WASHER RONDELLE	2					
12	90464–18246	CLAMP BRIDE	1					
13	90464–20181	CLAMP BRIDE	1					
14	64J–82504–00	OIL PRESSURE SWITCH ASSY CONTACTEUR DE PRESSION D'HUILE	1					
15	68V–81315–00	LEAD WIRE ASSY FIL	1					
16	6CJ–85790–00	THERMOSENSOR ASSY SENSITOMETRE	1					
17	90464–09M47	CLAMP BRIDE	1					
18	90430–14115	GASKET JOINT	1					
19	6BL–82389–00	PLATE 2 PLAQUETTE 2	1					
20	97095–06016	BOLT BOULON	2					
21	92995–06600	WASHER RONDELLE	2					
22	90464–20181	CLAMP BRIDE	1					

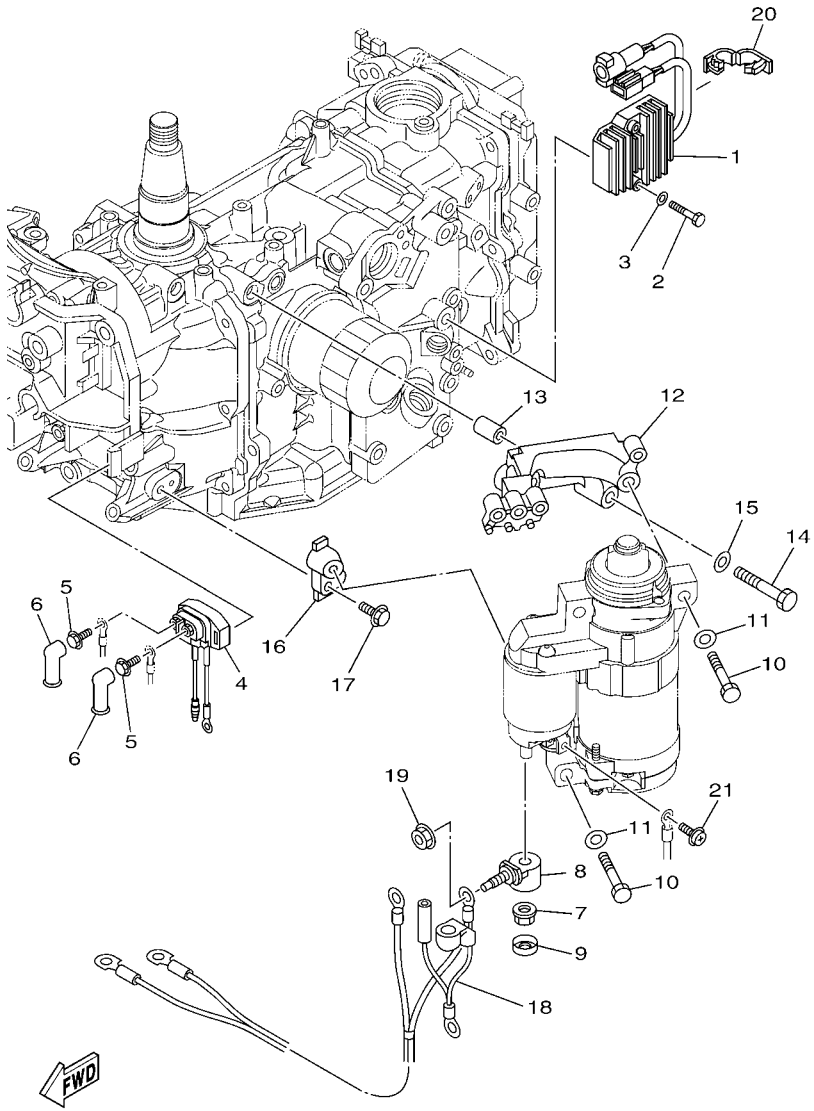

FIG. 13 ELECTRICAL 3 — PARTIE ELECTRIQUE 3

REF. NO.	PART NO. N° PIECES	DESCRIPTION DESCRIPTION	6DN3					REMARKS REMARQUES
1	6BL–81960–00	RECTIFIER & REGULATOR ASSY REDRESSEUR REGULATEUR CPLT	1					
2	97095–06040	BOLT BOULON	2					
3	92995–06600	WASHER RONDELLE	2					
4	68T–81940–00	STARTER RELAY ASSY LANCEUR RELAIS (ENS.)	1					
5	97595–06610	BOLT, WITH WASHER VIS HEXAGONAL AVC RONDELLE	2					
6	6G5–82119–10	COVER, LEAD WIRE GARNITURE, FIL	2					
7	6BL–8182A–00	NUT ECROU	1					
8	6BL–81925–00	TERMINAL BORNE	1					
9	6BL–8183X–00	CAP, TERMINAL COUVERCLE, BORNE	1					
10	97013–08045	BOLT BOULON	3					
11	92903–08600	WASHER, PLATE RONDELLE, PLATE	3					
12	6BL–81822–00	BRACKET, STARTING MOTOR SUPPORT, DEMARREUR ELECTRIQUE	1					
13	99590–10114	PIN, DOWEL GOUJON, D'ASSEMBLAGE	2					
14	97013–08045	BOLT BOULON	2					
15	92903–08600	WASHER, PLATE RONDELLE, PLATE	2					
16	6BL–81823–00	STAY, STARTING MOTOR SUPPORT	1					
17	97575–06520	BOLT, WITH WASHER VIS HEXAGONAL AVC RONDELLE	1					
18	6BL–82105–00	WIRE HARNESS FAISCEAU DE FILS	1					
19	90179–08003	NUT ECROU	1					
20	90464–18001	CLAMP BRIDE	1					
21	90159–05M12	SCREW, WITH WASHER VIS, AVEC RONDELLE	1					

FIG. 14 ELECTRICAL 4 PARTIE ELECTRIQUE 4

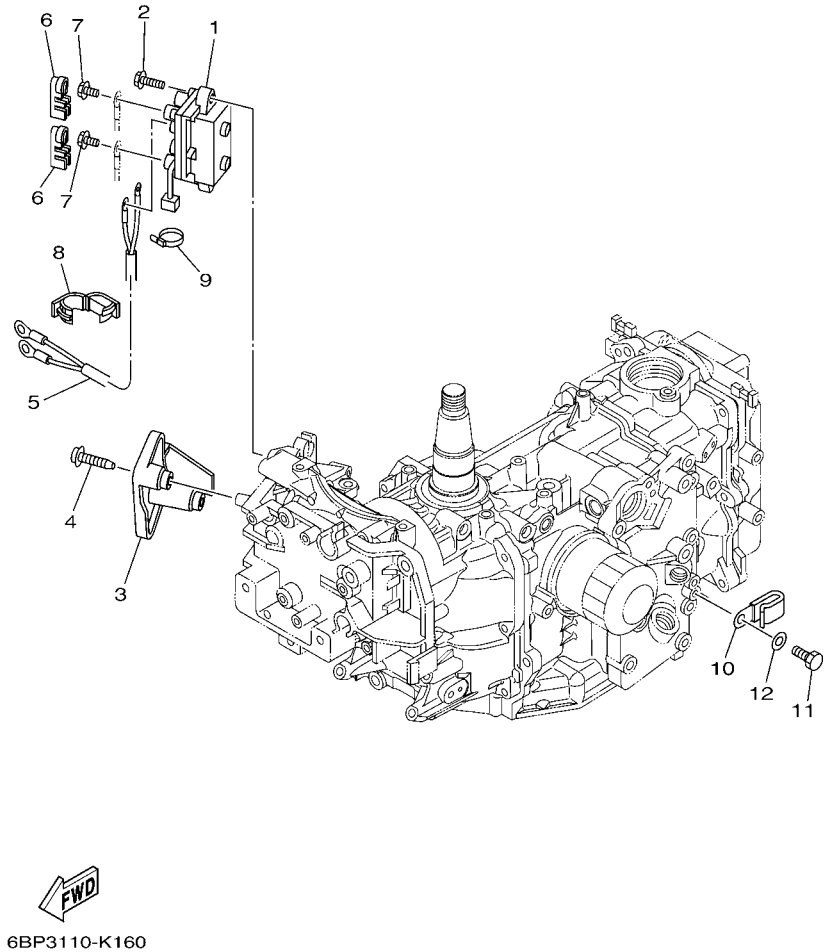

REF. NO.	PART NO. N° PIECES	DESCRIPTION DESCRIPTION	6DN3					REMARKS REMARQUES
1	63P–81950–00	RELAY ASSY RELAIS COMPLET	1					
2	97575–06520	BOLT, WITH WASHER VIS HEXAGONAL AVC RONDELLE	2					
3	6BL–81942–00	COVER COUVERCLE	1					
4	90167–05009	SCREW, TAPPING VIS, TETE FRAISEE	2					
5	6BL–81949–00	WIRE, LEAD FIL	1					
6	6P2–8183X–00	CAP, TERMINAL COUVERCLE, BORNE	2					
7	97595–06610	BOLT, WITH WASHER VIS HEXAGONAL AVC RONDELLE	2					
8	90464–18001	CLAMP BRIDE	1					
9	90465–11M10	CLAMP BRIDE	1					
10	90465–06M90	CLAMP BRIDE	1					
11	97095–06016	BOLT BOULON	1					
12	92995–06600	WASHER RONDELLE	1					

FIG. 15 ELECTRICAL 5 PARTIE ELECTRIQUE 5

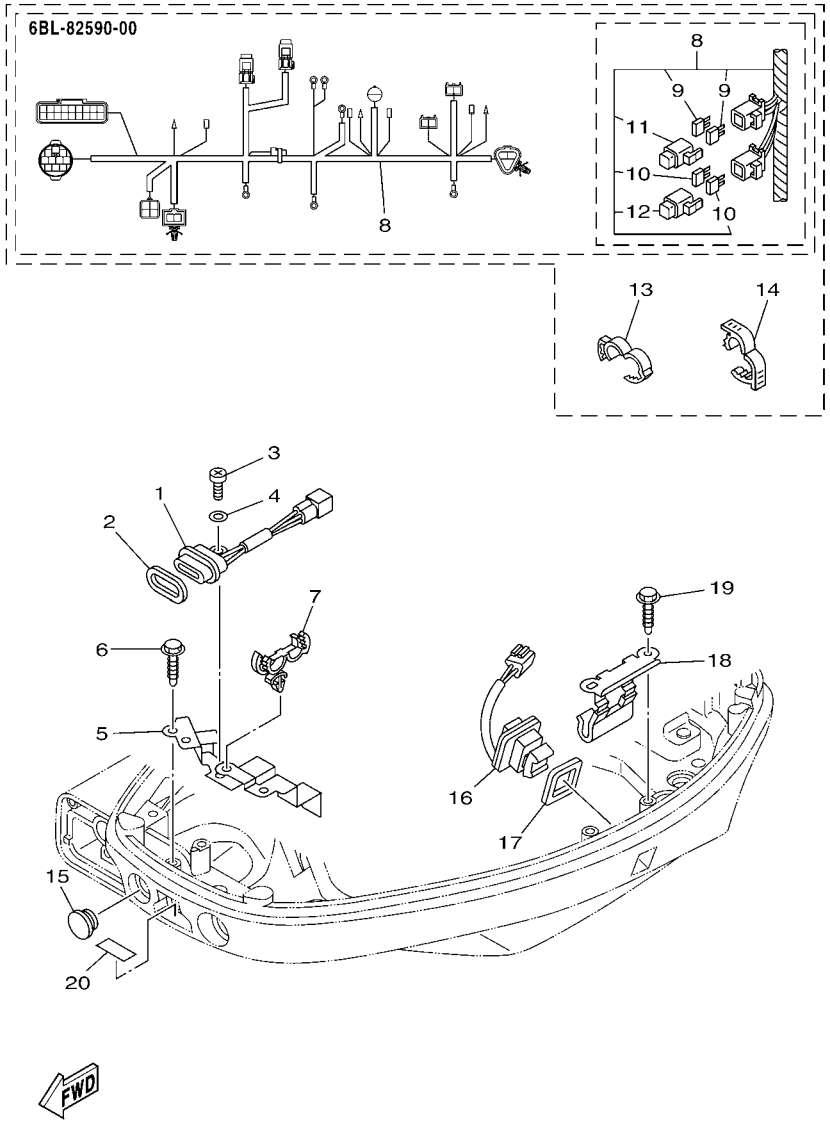

REF. NO.	PART NO. N° PIECES	DESCRIPTION DESCRIPTION	6DN3					REMARKS REMARQUES
1	62Y–84301–00	PILOT LIGHT ASSY 1 LAMPE-TEMOIN 1	1					
2	6H4–83589–00	GASKET GARNITURE	1					
3	97885–06012	SCREW, PAN HEAD VIS, A ENCOCHE	1					
4	92995–06600	WASHER RONDELLE	1					
5	6BL–82388–00	PLATE PLAQUETTE	1					
6	90109–06M86	BOLT BOULON	2					
7	90464–18246	CLAMP BRIDE	1					
8	6BL–82590–00	WIRE HARNESS ASSY FAISCEAU DE FILS COMPLET	1					
9	67F–82151–00	.FUSE (20A) .FUSIBLE (20A)	2					
10	67F–82151–10	.FUSE (30A) .FUSIBLE (30A)	2					
11	67F–8215B–10	.CAP (YELLOW) .BOUCHON (YELLOW)	1					
12	67F–8215B–20	.CAP (GREEN) .BOUCHON (GREEN)	1					
13	90464–16001	CLAMP BRIDE	1					
14	90464–18001	CLAMP BRIDE	1					
15	6G1–42725–00	GROMMET PASSE-FIL	1					
16	69J–82563–00	TRIM & TILT SWITCH ASSY INCLINER ET PARER COMMUTATEUR	1					
17	69J–82587–00	GASKET JOINT	1					
18	63P–83614–01	BRACKET SUPPORT	1					
19	90109–06M86	BOLT BOULON	2					
20	67C–85415–00	MARK, SIGNAL LAMP ETIQUETTE	1					

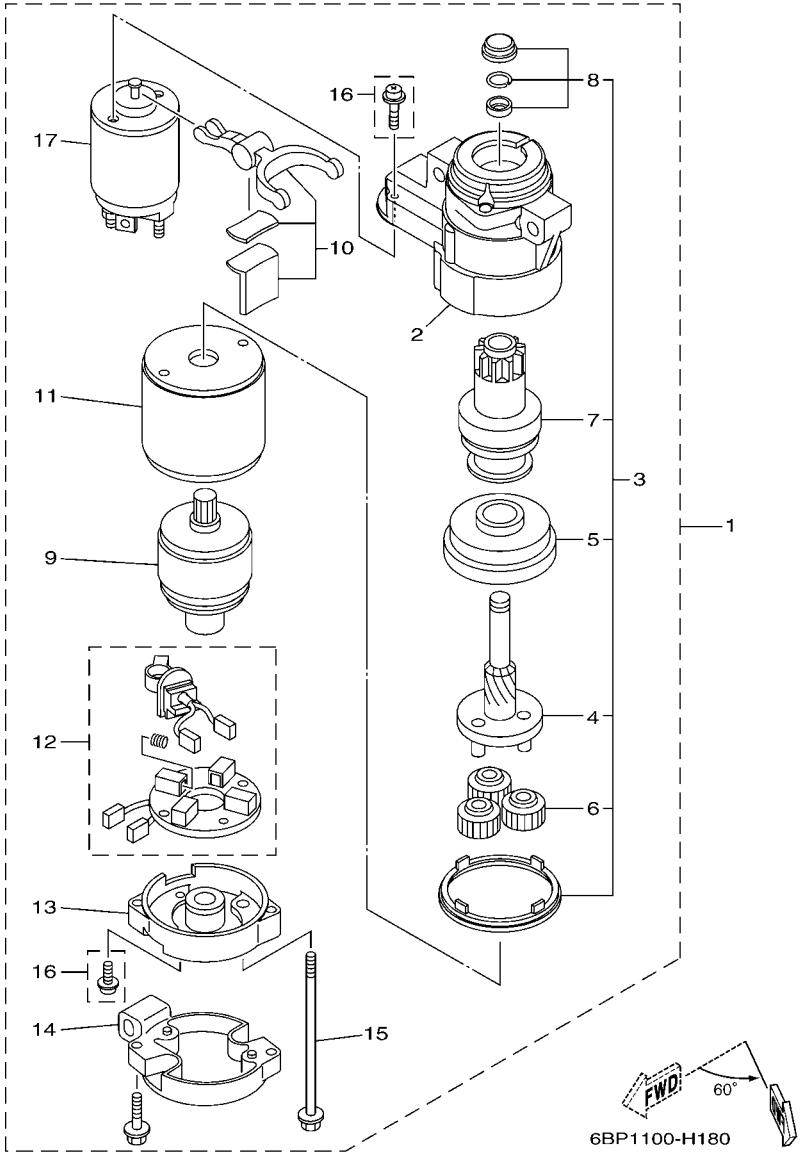

FIG. 16 STARTING MOTOR DEMARREUR ELECTRIQUE

REF. NO.	PART NO. N° PIECES	DESCRIPTION DESCRIPTION	6DN3					REMARKS REMARQUES
1	6BG–81800–00	STARTING MOTOR ASSY DEMARREUR ELECTRIQUE COMPLET	1					
2	6BG–81830–00	.FRONT BRACKET ASSY .SUPPORT AVANT	1					
3	6BG–81807–00	.GEAR ASSY, STARTING MOTOR .PIGNON, DEMARREUR ELECTRIQUE	1					
4	6BG–81836–00	..SPRING, LEVER ..RESSORT, LEVIER	1					
5	6BG–81891–00	..GEAR, RING ..ROUE DENTEE	1					
6	6AW–8183T–00	..GEAR, IDLER ..PIGNON, INTERMEDIAIRE	3					
7	6BG–81832–00	..CLUTCH, OVER RUN ..EMBRAYAGE, ROUE LIBRE	1					
8	6BG–81857–00	..RETAINER ..ARRETOIR	1					
9	6BG–81850–00	.ARMATURE ASSY .INDUIT	1					
10	6BG–81839–00	.LEVER ASSY .LEVIER COMPLET	1					
11	6BG–81810–00	.STATOR ASSY .STATOR COMPLET	1					
12	6BG–81840–00	.BRUSH HOLDER ASSY .SUPPORT DE CHARBON	1					
13	6BG–81820–00	.REAR BRACKET ASSY .SUPPORT ARRIERE COMPLET	1					
14	6BG–8182J–00	.BRACKET COMPLETE .SUPPORTE COMPLETE	1					
15	6BG–81826–00	.BOLT .BOULON	2					
16	6BG–81846–00	.SCREW SET .VIS	1					
17	6BG–81941–00	.STARTER RELAY ASSY .LANCEUR RELAIS (ENS.)	1					

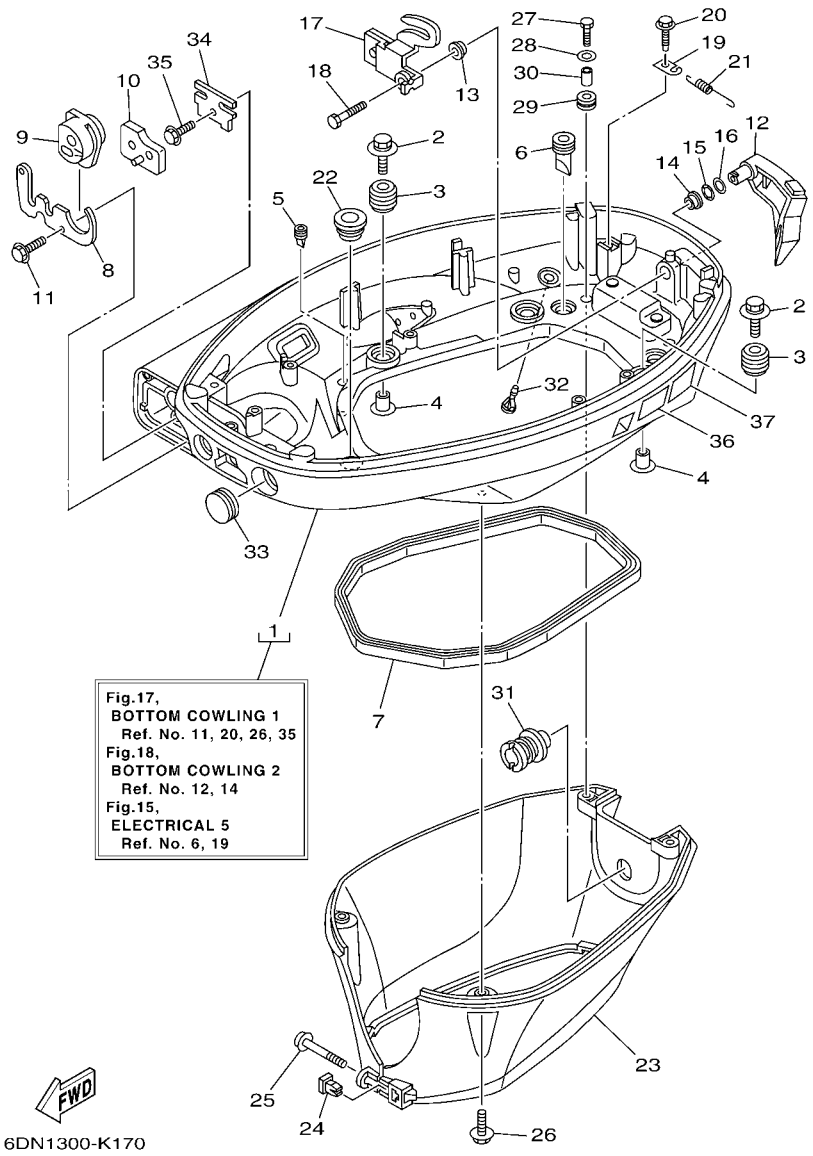

FIG. 17 BOTTOM COWLING 1 CAPOT INFERIEUR 1

REF. NO.	PART NO. N° PIECES	DESCRIPTION DESCRIPTION	6DN3					REMARKS REMARQUES
1	6BP–42710–00–4D	BOTTOM COWLING ASSY ENS. EMBASE	1					
2	90119–06M61	BOLT, WITH WASHER BOULON, AVEC RONDELLE	4					
3	6BG–42748–00	GROMMET PASSE-FIL	4					
4	90387–06M69	COLLAR COLLERETTE	4					
5	65W–42717–00	RUBBER, SEAL 2 JOINT EN CAOUTCHOUC 2	2					
6	61A–42717–00	RUBBER, SEAL 2 JOINT EN CAOUTCHOUC 2	2					
7	62Y–42716–00	RUBBER, SEAL 1 JOINT EN CAOUTCHOUC 1	1					
8	6BL–42761–00	STOPPER PLAQUETTE	1					
9	6BL–42725–01	GROMMET PASSE-FIL	1					
10	6BL–42727–00	GROMMET PASSE-FIL	1					
11	90109–06M86	BOLT BOULON	2					
12	6BL–42815–00–4D	LEVER, CLAMP LEVIER, PRESSE	1					
13	90386–12M37	BUSH DOUILLE	1					
14	90386–12MA2	BUSH DOUILLE	1					
15	90206–12052	WASHER, WAVE RONDELLE, ONDULEE	1					
16	90201–12M07	WASHER, PLATE RONDELLE, PLATE	1					
17	6BG–42816–00	LEVER, CLAMP LEVIER, PRESSE	1					
18	97095–06012	BOLT BOULON	1					
19	66T–43144–00	HOOK, SPRING CROCHET	1					
20	90109–06M86	BOLT BOULON	1					
21	90506–18023	SPRING, TENSION RESSORT, TENSION	1					
22	68U–42727–00	GROMMET PASSE-FIL	1					
23	6BP–42741–00	APRON CAPOT LATERAL	1					
24	60V–42756–00	STAY, CLAMP SUPPORT, COLLIER	1					
25	97980–04245	SCREW, WITH WASHER VIS, AVEC RONDELLE	1					
26	90109–06M86	BOLT BOULON	2					
27	97095–06014	BOLT BOULON	2					

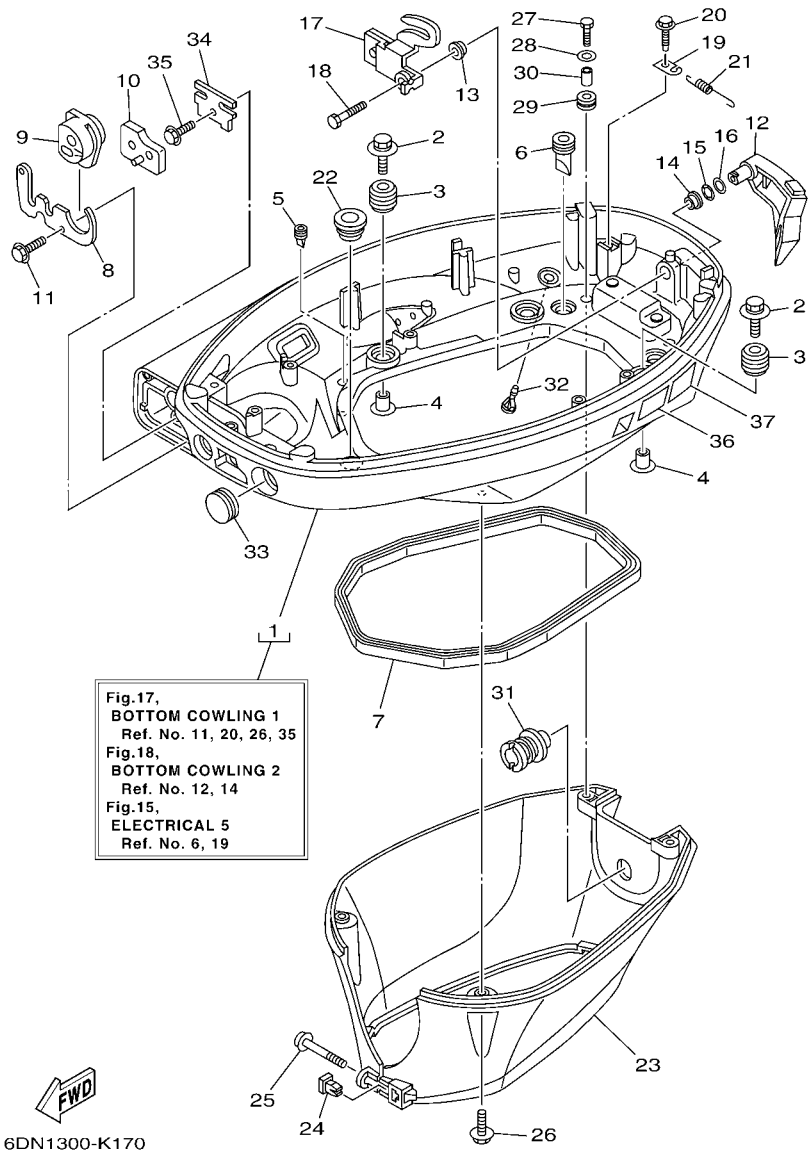

FIG. 17 BOTTOM COWLING 1 CAPOT INFERIEUR 1

REF. NO.	PART NO. N° PIECES	DESCRIPTION DESCRIPTION	6DN3					REMARKS REMARQUES
28	92995–06600	WASHER RONDELLE	2					
29	90480–13M24	GROMMET PASSE-FIL	2					
30	90387–06M43	COLLAR COLLERETTE	2					
31	6BP–42769–00	SEAL, RUBBER BOURRELET, CAOUTCHOUC	1					
32	6BL–44391–00	NIPPLE, HOSE RACCORD D'ESSENCE	1					
33	65W–42726–10	GROMMET PASSE-FIL	1					
34	6BL–48538–00	CLAMP, CABLE 1 COLLIER	1					
35	90109–06M86	BOLT BOULON	1					
36	6AH–42794–40	LABEL, WARNING (GENERAL) ETIQUETTE, AVERTISSEMENT	1					
37	6AH–42794–50	LABEL, WARNING (GENERAL) ETIQUETTE, AVERTISSEMENT	1					

FIG. 18 BOTTOM COWLING 2 CAPOT INFERIEUR 2

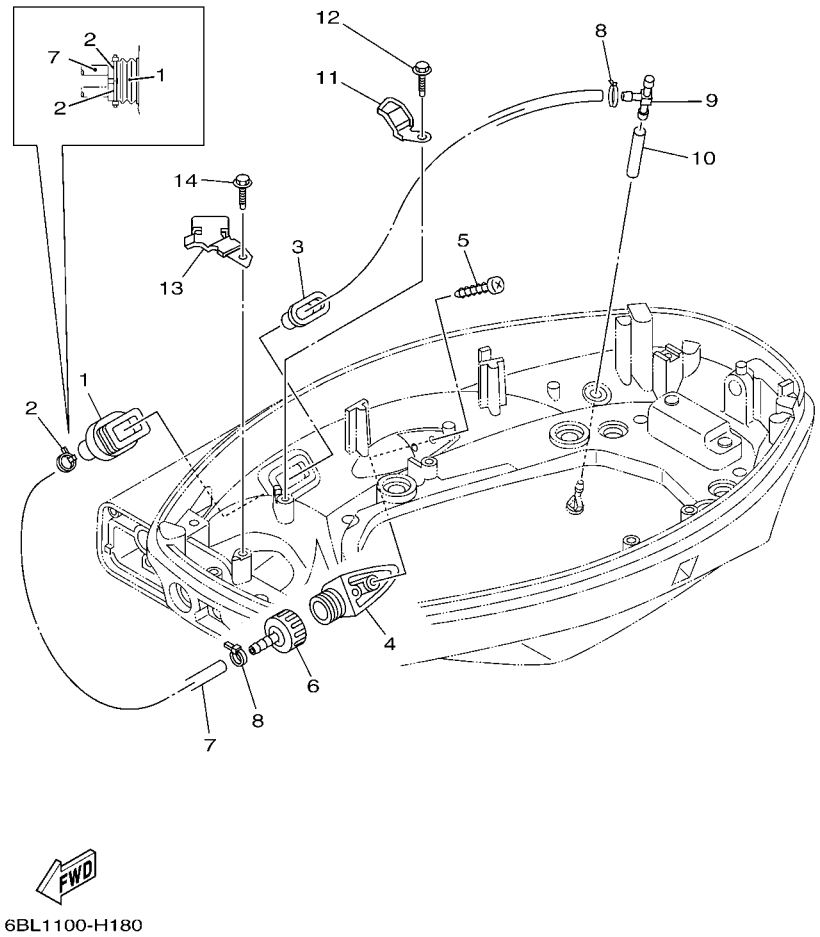

REF. NO.	PART NO. N° PIECES	DESCRIPTION DESCRIPTION	6DN3					REMARKS REMARQUES
1	6H1–42726–21	GROMMET PASSE-FIL	1					
2	90465–11M10	CLAMP BRIDE	2					
3	6BG–42384–00	SEAL, CAP JOINT, CAPUCHON	1					
4	6AW–12572–00	ADAPTER ADAPTATEUR	1					
5	97780–60520	SCREW, TAPPING VIS, TETE BOMBEE	2					
6	6R3–12580–00	JOINT ASSY ARTICULER (ENS.)	1					
7	90445–11153	HOSE (L460) DURITE (L460)	1					
8	90465–11M10	CLAMP BRIDE	2					
9	6C5–24378–00	PIPE, JOINT 3 DURITE RACCORDEMENT 3	1					
10	90445–09057	HOSE (L43) DURITE (L43)	1					
11	6BL–24396–00	PLATE PLAQUE	1					
12	90109–06M86	BOLT BOULON	1					
13	6BL–24364–00	STAY SUPPORT	1					
14	90109–06M86	BOLT BOULON	1					

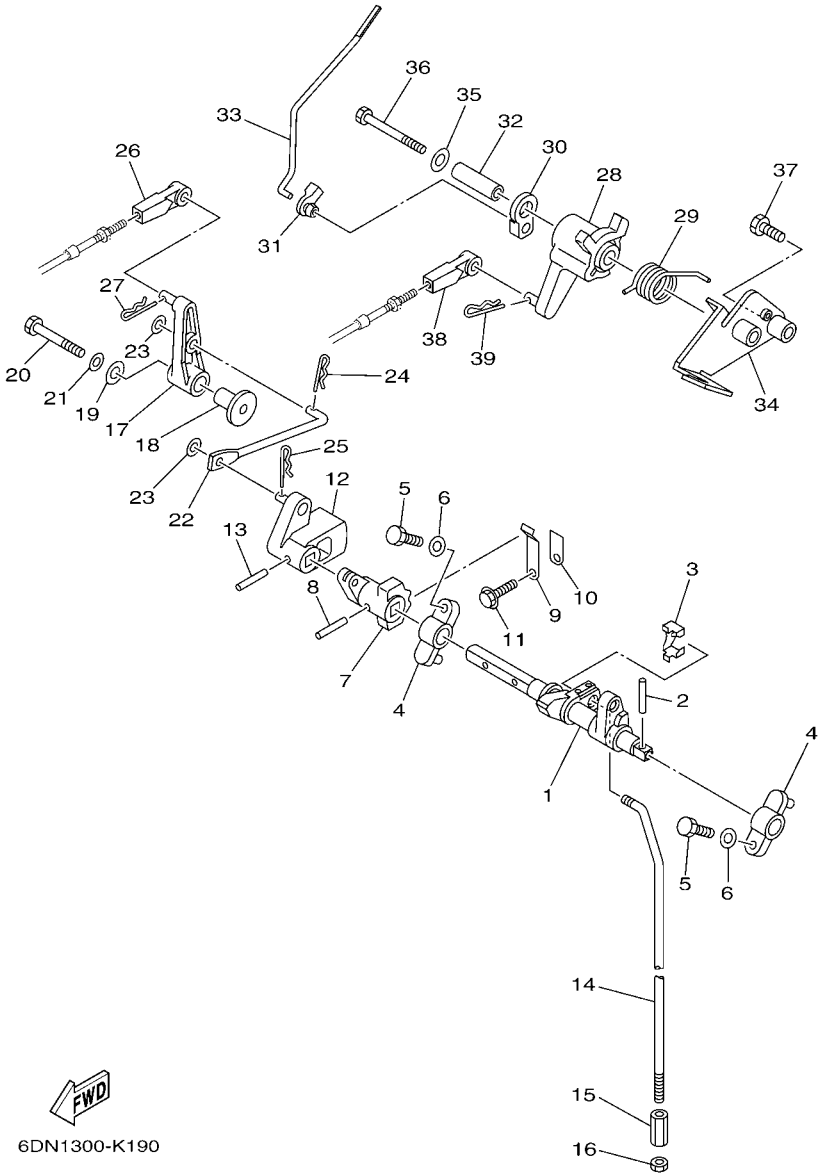

FIG. 19 CONTROL COMMANDE

REF. NO.	PART NO. N° PIECES	DESCRIPTION DESCRIPTION	6DN3					REMARKS REMARQUES
1	6BL–44121–00	LEVER, SHIFT ROD LEVIER, TIGE D'INVERSION	1					
2	90254–03M05	PIN, SPRING RIVET, TETE TRONCONIQUE	1					
3	6AH–26364–00	END, CABLE 2 EMBOUT, DE CABLE	1					
4	6G1–41662–01–94	BRACKET 2 SUPPORT 2	2					
5	97095–06020	BOLT BOULON	2					
6	92995–06600	WASHER RONDELLE	2					
7	6BL–44173–00	LEVER, SHIFT CONTROL POIGNEE, INVERSION	1					
8	90254–03M05	PIN, SPRING RIVET, TETE TRONCONIQUE	1					
9	65W–44116–00	SPRING RESSORT	1					
10	66R–44114–00	STOPPER PLAQUETTE	1					
11	95895–06014	BOLT, FLANGE BOULON	1					
12	6BL–44142–00	JOINT AXE	1					
13	90254–03M05	PIN, SPRING RIVET, TETE TRONCONIQUE	1					
14	6BP–44143–10	ROD, SHIFT TIGE D'EMBRAYAGE	1					
15	90170–06015	NUT ECROU	1					
16	95380–06700	NUT ECROU	1					
17	6BL–44125–00	LEVER, SHIFT ROD LEVIER, TIGE D'INVERSION	1					
18	90387–06M86	COLLAR COLLERETTE	1					
19	90201–06M31	WASHER, PLATE RONDELLE, PLATE	1					
20	97095–06035	BOLT BOULON	1					
21	92995–06600	WASHER RONDELLE	1					
22	6BL–44192–00	LINK, SHIFT ROD BIELLETTE	1					
23	90201–05M06	WASHER, PLATE RONDELLE, PLATE	2					
24	90468–10005	CLIP JONC	1					
25	90468–18001	CLIP JONC	1					
26	663–48344–00	CABLE END, REMOTE CONTROL CHAPE CABLE	1					
27	90468–18008	CLIP JONC	1					

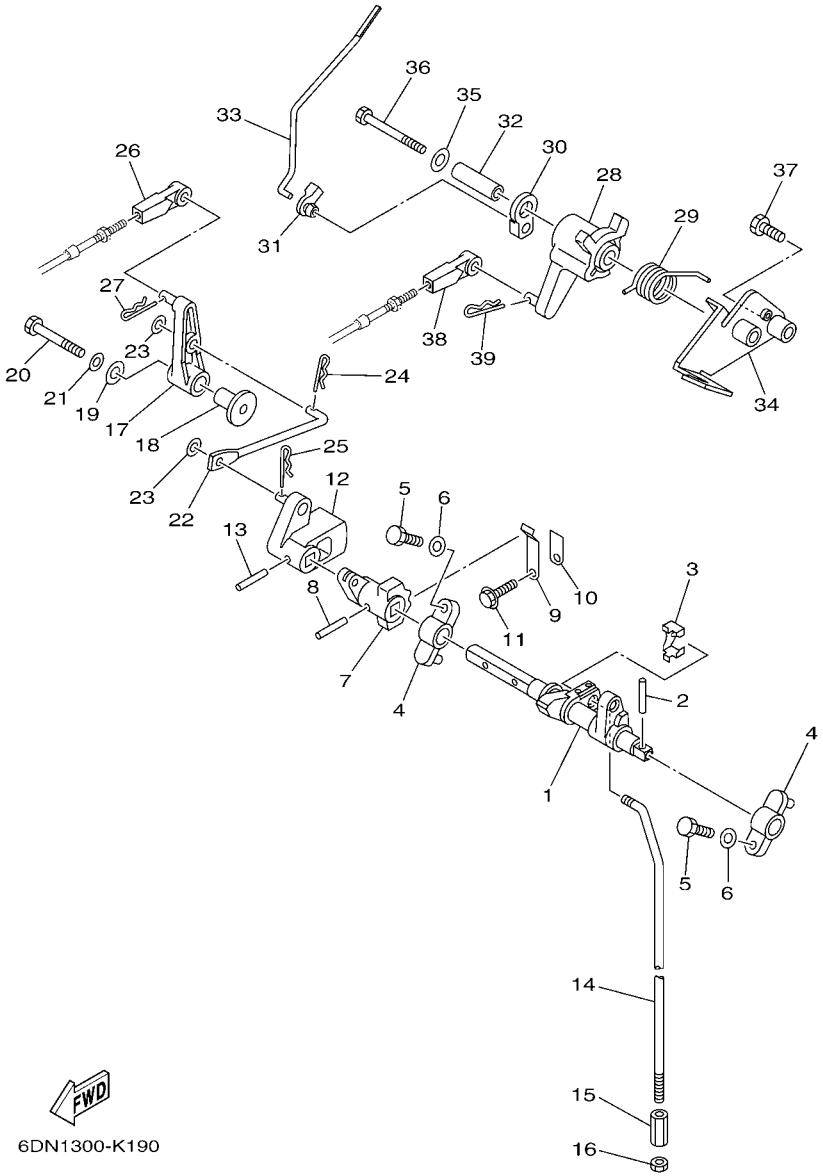

FIG. 19 CONTROL COMMANDE

REF. NO.	PART NO. N° PIECES	DESCRIPTION DESCRIPTION	6DN3					REMARKS REMARQUES
28	6BL–41638–00	PULLEY POULIE	1					
29	90508–20040	SPRING, TORSION RESSORT, TORSION	1					
30	6DN–41283–00	LEVER, FREE ACCEL. LEVIER	1					
31	6J8–41262–00	JOINT, CHOKE LEVER RACCORD, LEVIER DE STARTER	1					
32	90387–06139	COLLAR COLLERETTE	1					
33	6DN–41211–00	LINK, ACCEL. BIELLETTE, ACCELERATION	1					
34	6BL–14571–10	BRACKET, THROTTLE SUPPORT, ACCELERATEUR	1					
35	90201–06M31	WASHER, PLATE RONDELLE, PLATE	1					
36	97095–06065	BOLT BOULON	1					
37	97095–06025	BOLT BOULON	1					
38	663–48344–00	CABLE END, REMOTE CONTROL CHAPE CABLE	1					
39	90468–18008	CLIP JONC	1					

FIG. 20 BRACKET 1 SUPPORT 1

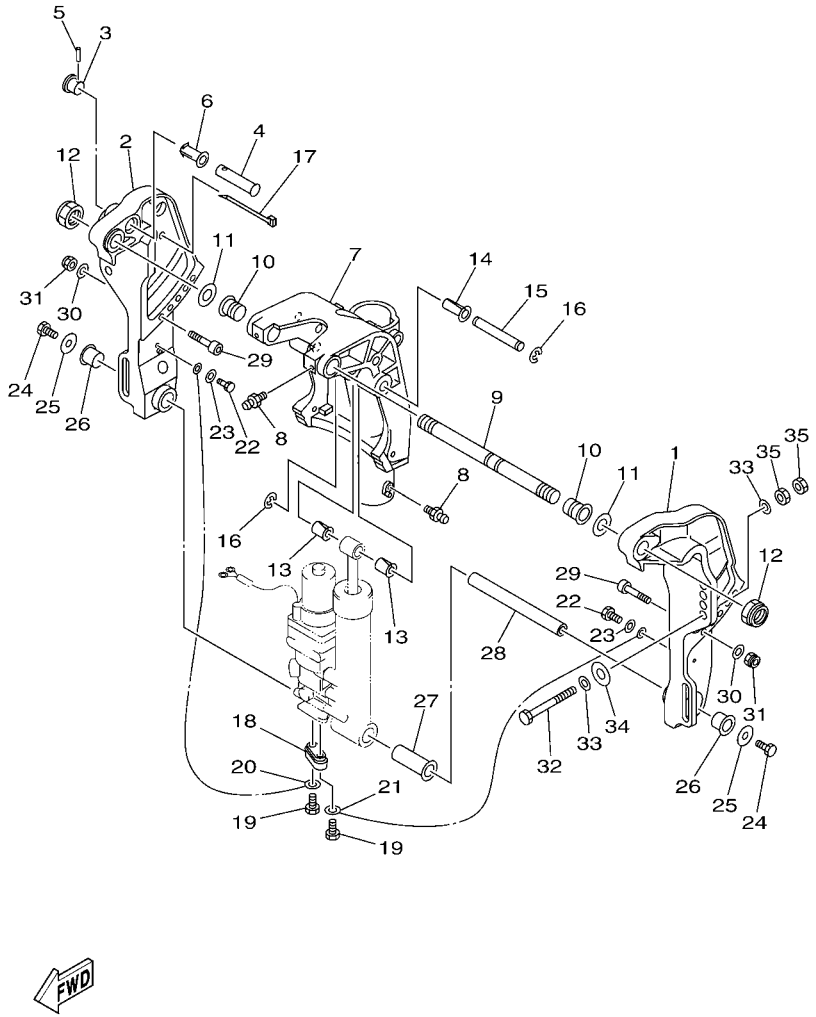

REF. NO.	PART NO. N° PIECES	DESCRIPTION DESCRIPTION	6DN3					REMARKS REMARQUES
1	65W–43111–10–4D	BRACKET, CLAMP 1 PRESSE 1	1					
2	65W–43112–10–4D	BRACKET, CLAMP 2 PRESSE 2	1					
3	65W–43192–00	KNOB, STOPPER BOUTON, BUTEE DE RELEVAGE	1					
4	65W–43191–00	SHAFT, STOPPER AXE, BUTEE	1					
5	91690–30018	PIN, SPRING AGRAFFE	1					
6	90386–14MA1	BUSH DOUILLE	1					
7	65W–43311–10–4D	BRACKET, SWIVEL 1 SUPPORT, PIVOT 1	1					
8	93700–06M03	NIPPLE, GREASE PION	3					
9	63D–43131–01	BOLT, CLAMP BRACKET BOULON, PRESSE	1					
10	90386–22M15	BUSH DOUILLE	2					
11	90201–22M03	WASHER, PLATE RONDELLE, PLATE	2					
12	90185–22043	NUT, SELF-LOCKING ECROU,AUTO-BLOQUANT	2					
13	90386–12MA0	BUSH DOUILLE	2					
14	90386–12M98	BUSH DOUILLE	1					
15	90249–12M38	PIN GOUPILLE	1					
16	99080–10600	CIRCLIP CIRCLIP	2					
17	90465–13M11	CLAMP BRIDE	2					
18	65W–45251–00	ANODE ANODE	1					
19	90101–06020	BOLT BOULON	2					
20	6H1–82148–00	WIRE, LEAD 4 FIL 4	1					
21	6U0–82127–00	WIRE, LEAD 2 FIL 2	1					
22	97095–06014	BOLT BOULON	2					
23	92995–06600	WASHER RONDELLE	2					
24	97080–08016	BOLT BOULON	2					
25	90201–08M00	WASHER, PLATE RONDELLE, PLATE	2					
26	90386–18M44	BUSH DOUILLE	2					
27	90386–18MA0	BUSH DOUILLE	1					

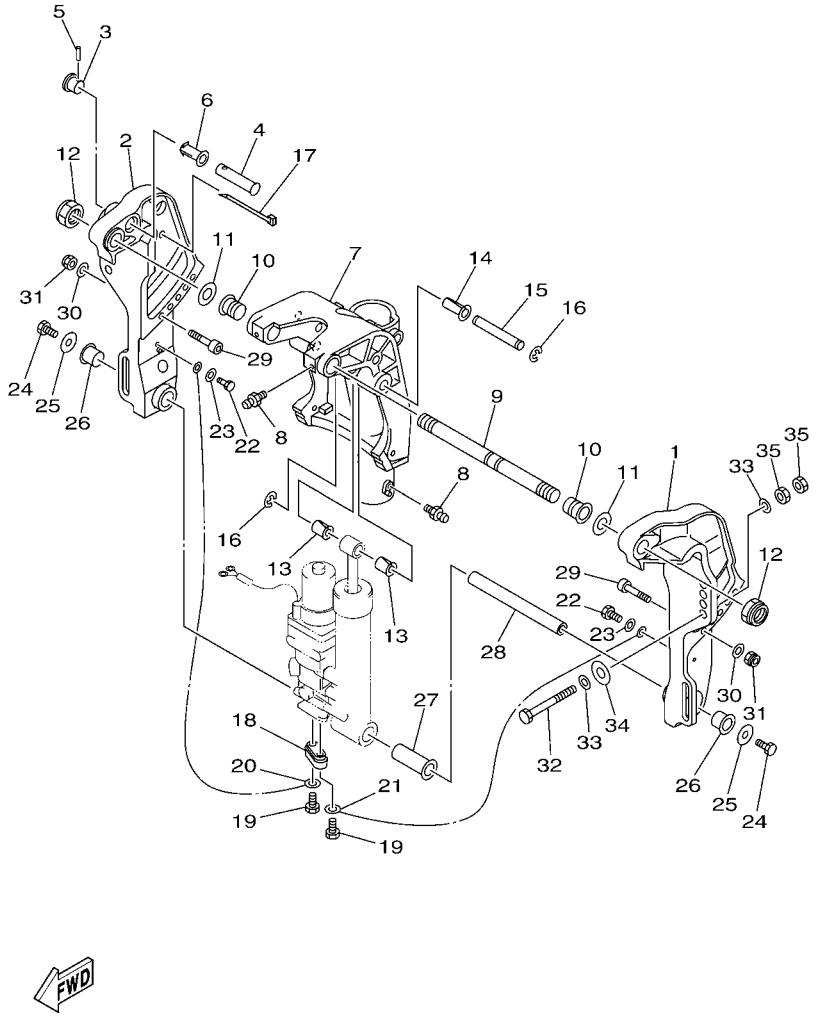

FIG. 20 BRACKET 1 SUPPORT 1

REF. NO.	PART NO. N° PIECES	DESCRIPTION DESCRIPTION	6DN3					REMARKS REMARQUES
28	90249–18M35	PIN GOUPILLE	1					
29	90110–10M02	BOLT, HEXAGON SOCKET HEAD BOULON, TETE HEXAGONALE CREUSE	2					
30	92995–10600	WASHER RONDELLE	2					
31	90185–10M13	NUT, SELF-LOCKING ECROU,AUTO-BLOQUANT	2					
32	90101–12M65	BOLT BOULON	4					
33	90201–12062	WASHER, PLATE RONDELLE, PLATE	8					
34	90201–12426	WASHER, PLATE RONDELLE, PLATE	4					
35	95380–12600	NUT ECROU	8					

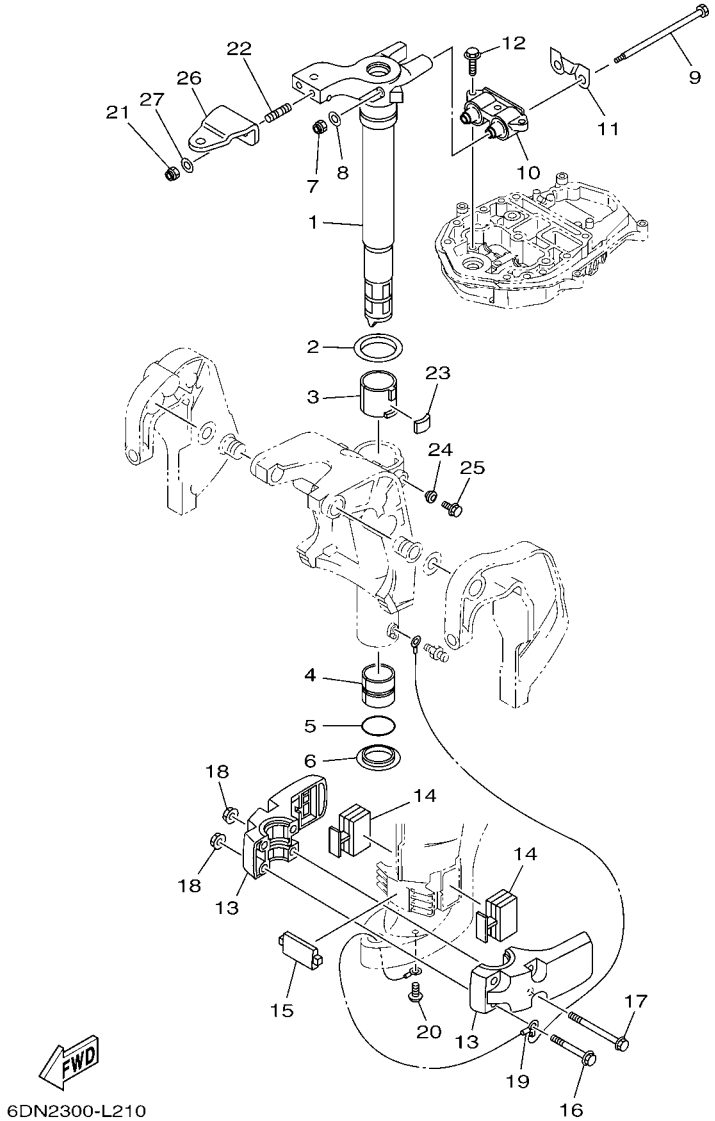

FIG. 21 BRACKET 2 SUPPORT 2

REF. NO.	PART NO. N° PIECES	DESCRIPTION DESCRIPTION	6DN3					REMARKS REMARQUES
1	65W–42511–11–4D	BRACKET, STEERING CADRE, DIRECTION	1					
2	90209–52M00	WASHER RONDELLE	1					
3	90386–52M02	BUSH DOUILLE	1					
4	90386–44M03	BUSH DOUILLE	1					
5	93210–43MJ0	O-RING JOINT TORIQUE	1					
6	90386–44M99	BUSH DOUILLE	1					
7	90185–08045	NUT, SELF-LOCKING ECROU,AUTO-BLOQUANT	2					
8	92995–08200	WASHER RONDELLE	2					
9	90101–08M86	BOLT BOULON	2					
10	67C–44514–20–94	MOUNT DAMPER, UPPER SIDE SILENT-BLOC, SUPERIEUR LATERAL	1					
11	66T–44526–30	PLATE PLAQUE	1					
12	97575–08530	BOLT, WITH WASHER VIS HEXAGONAL AVC RONDELLE	3					
13	65W–44551–11–4D	HOUSING, LOWER MOUNT RUBBER 1 BOITIER, SILENT-BLOC INFERIEUR	2					
14	65W–44555–00	MOUNT DAMPER, LOWER SIDE SILENT-BLOC, INFERIEUR LATERAL	2					
15	65W–44575–01	DAMPER, LOWER MOUNT RUBBER SILENT-BLOC, INFERIEUR	1					
16	97575–10580	BOLT, WITH WASHER VIS HEXAGONAL AVC RONDELLE	2					
17	90119–10M14	BOLT, WITH WASHER BOULON, AVEC RONDELLE	2					
18	90179–10M33	NUT ECROU	4					
19	65W–82127–10	WIRE, LEAD 2 FIL 2	1					
20	97885–06008	SCREW, PAN HEAD VIS, A ENCOCHE	1					
21	90185–10051	NUT, SELF-LOCKING ECROU,AUTO-BLOQUANT	2					
22	90116–10M70	BOLT, STUD GOUJON	2					
23	648–42528–00	PLATE, FRICTION PLAQUE, FRICTION	1					
24	65W–43373–00	SEAL, DAMPER JOINT	1					
25	90105–08M76	BOLT, FLANGE BOULON	1					
26	65W–48511–01	HOOK, STEERING ATTACHE, DIRECTION	1					
27	90201–10120	WASHER, PLATE RONDELLE, PLATE	2					

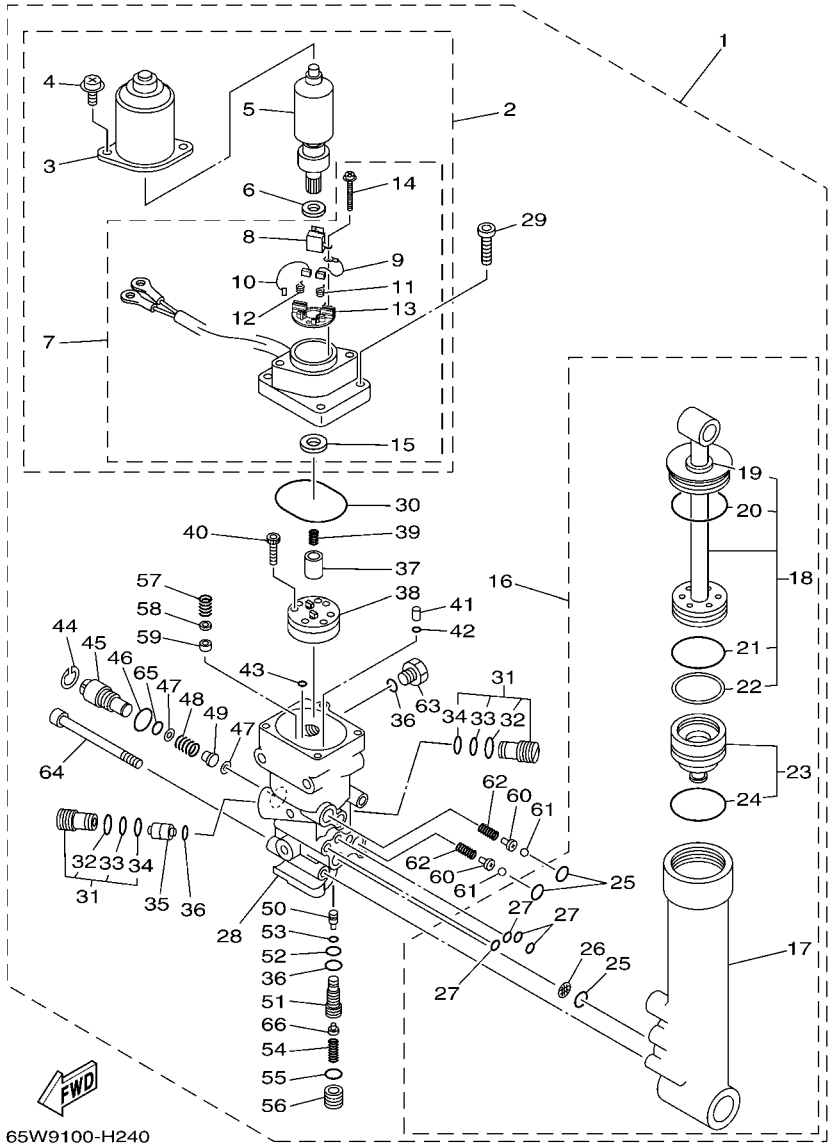

FIG. 22 POWER TRIM & TILT ASSY PUISSANCE PARER ET INCLINER

REF. NO.	PART NO. N° PIECES	DESCRIPTION DESCRIPTION	6DN3					REMARKS REMARQUES
1	65W–43800–03–4D	POWER TRIM & TILT ASSY PUISSANCE PARER ET INCLINER (E	1					
2	65W–43880–01	.MOTOR ASSY .MOTEUR (ENS.)	1					
3	65W–43804–01	..STATOR ASSY ..STATOR (ENS.)	1					
4	65W–43887–01	..BOLT ..BOULON	2					
5	65W–43805–01	..ARMATURE ASSY ..INDUIT (ENS.)	1					
6	65W–4387G–00	..WASHER ..RONDELLE	1					
7	65W–43881–01	..FRAME, END ..BATI	1					
8	65W–82181–00	...CIRCUIT BREAKER COMP. ...RUPTEUR COMPLET	1					
9	65W–43892–01	...BRUSH 2 ...BALAI 2	1					
10	65W–43891–01	...BRUSH 1 ...BALAI 1	1					
11	65W–4386K–01	...SPRING, BRUSH ...RESSORT, BALAI	1					
12	65W–4386L–00	...SPRING, BRUSH 2 ...RESSORT, BALAI 2	1					
13	65W–4380F–01	...PLATE, BRUSH HOLDER ...PLAQUE	1					
14	65W–43879–01	...SCREW, WITH WASHER ...VIS, AVEC RONDELLE	2					
15	65W–43882–01	...OIL SEAL ...JOINT SPI	1					
16	65W–43840–00	.POWER TILT ASSY .PUISSANCE INCLINER (ENS.)	1					
17	65W–4380K–00	..CYLINDER, TILT SUB ASSY ..CYLINDRE	1					
18	65W–43810–00	..TILT PISTON SUB ASSY ..INCLINER PISTON AUXILIAIRE(ENS	1					
19	65W–43812–00	...SEAL, DUST ...JOINT	1					
20	65W–43865–00	...O-RING ...JOINT TORIQUE	1					
21	6H1–43861–10	...O-RING ...JOINT TORIQUE	1					
22	65W–43871–00	...RING, BACK UP ...SEGMENT	1					
23	65W–4381B–00	..FREE PISTON SUB ASSY ..PISTON AUXILIAIRE (ENS.)	1					
24	6H1–43861–10	...O-RING ...JOINT TORIQUE	1					
25	93210–11368	..O-RING ..JOINT TORIQUE	3					
26	6H1–43816–00	..FILTER 1 ..FILTRE 1	1					
27	93210–064A5	..O-RING ..JOINT TORIQUE	4					

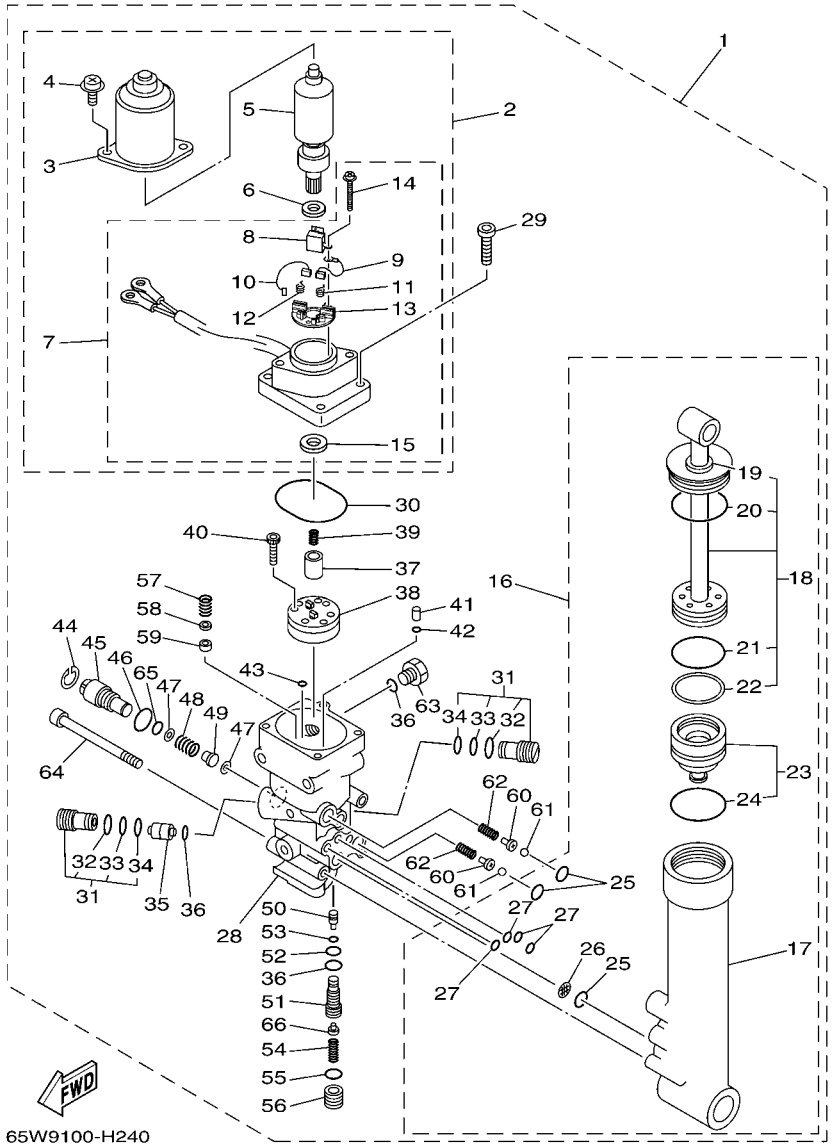

FIG. 22 POWER TRIM & TILT ASSY PUISSANCE PARER ET INCLINER

REF. NO.	PART NO. N° PIECES	DESCRIPTION DESCRIPTION	6DN3					REMARKS REMARQUES
28	65W–4380L–00	.HOUSING, TRIM & TILT SUB ASSY .CARTER	1					
29	65W–43888–00	.BOLT, SOCKET .BOULON	4					
30	93210–50768	.O-RING .JOINT TORIQUE	1					
31	6T4–43802–03	.VALVE SUB ASSY .CLAPET AUXILIAIRE (ENS.)	2					
32	6H1–43866–01	..O-RING ..JOINT TORIQUE	1					
33	93210–10M74	..O-RING ..JOINT TORIQUE	1					
34	93210–12N52	..O-RING ..JOINT TORIQUE	1					
35	62X–43841–00	.PISTON, SHUTTLE .PISTON	1					
36	93210–09165	.O-RING .JOINT TORIQUE	3					
37	65W–43831–00	.CONNECTOR, SHAFT .RACCORD	1					
38	65W–43830–00	.GEAR PUMP ASSY .POMPE A PIGNON (ENS.)	1					
39	6T4–43853–00	.SPRING, MAIN VALVE .RESSORT	1					
40	91318–04025	.BOLT .BOULON	4					
41	65W–43817–00	.FILTER 2 .FILTRE 2	2					
42	93210–04N50	.O-RING .JOINT TORIQUE	2					
43	93210–04N51	.O-RING .JOINT TORIQUE	2					
44	6H1–43875–00	.RING, SNAP .RESSORT	1					
45	6H1–43845–00	.SCREW, MANUAL RELEASE .VIS	1					
46	6D8–43863–00	.O-RING .JOINT TORIQUE	1					
47	6H1–43847–00	.SEAT, MANUAL VALVE .SIEGE	2					
48	65W–43854–00	.SPRING, MANUAL RELEASE .RESSORT	1					
49	65W–4382A–00	.ADAPTOR 1 .ADAPTEUR 1	1					
50	65W–43844–00	.PIN, VALVE SUPPORT .GOUPILLE	1					
51	65W–43851–00	.SEAT, RELIEF VALVE .SIEGE	1					
52	93210–08006	.O-RING .JOINT TORIQUE	1					
53	93210–03478	.O-RING .JOINT TORIQUE	1					
54	65W–43855–00	.SPRING, UP RELIEF .RESSORT	1					

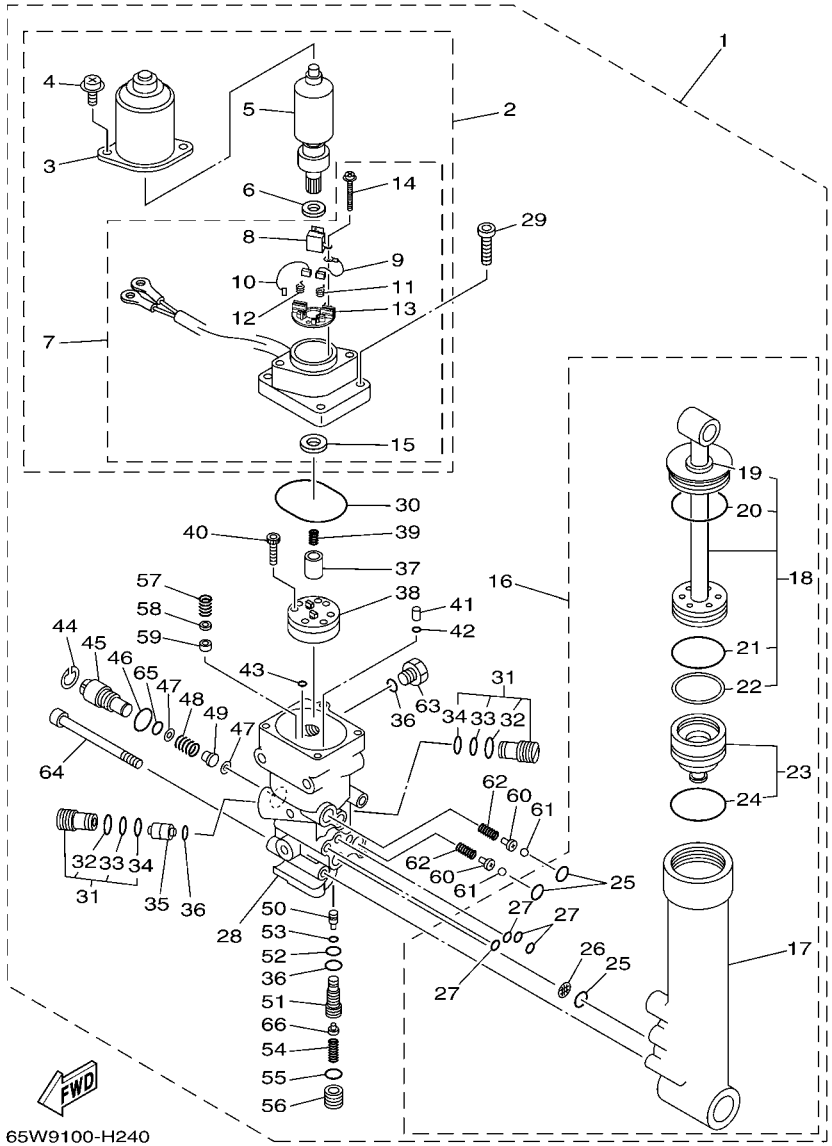

FIG. 22 POWER TRIM & TILT ASSY PUISSANCE PARER ET INCLINER

REF. NO.	PART NO. N° PIECES	DESCRIPTION DESCRIPTION	6DN3					REMARKS REMARQUES
55	93210–11073	.O-RING .JOINT TORIQUE	1					
56	65W–43843–00	.SCREW, VALVE LOCK .VIS	1					
57	6H1–43856–10	.SPRING, DOWN RELIEF .RESSORT	1					
58	6H1–43844–10	.PIN, VALVE SUPPORT .GOUPILLE	1					
59	6H1–4384F–10	.SEAL, MAIN VALVE .JOINT	1					
60	65W–4386A–00	.PIN, ABSORBER VALVE .GOUPILLE, SOUPAPE	2					
61	93501–08001	.BALL .BILLE	2					
62	65W–43853–00	.SPRING, MAIN VALVE .RESSORT	2					
63	6H1–43829–00	.PLUG, RESERVOIR .BOUCHON	1					
64	62X–43878–00	.BOLT, SOCKET .BOULON	3					
65	93210–10M74	.O-RING .JOINT TORIQUE	1					
66	6T4–43808–00	.SEAT VALVE COMP. 1 .SIEGE VALVE COMP. 1	1					

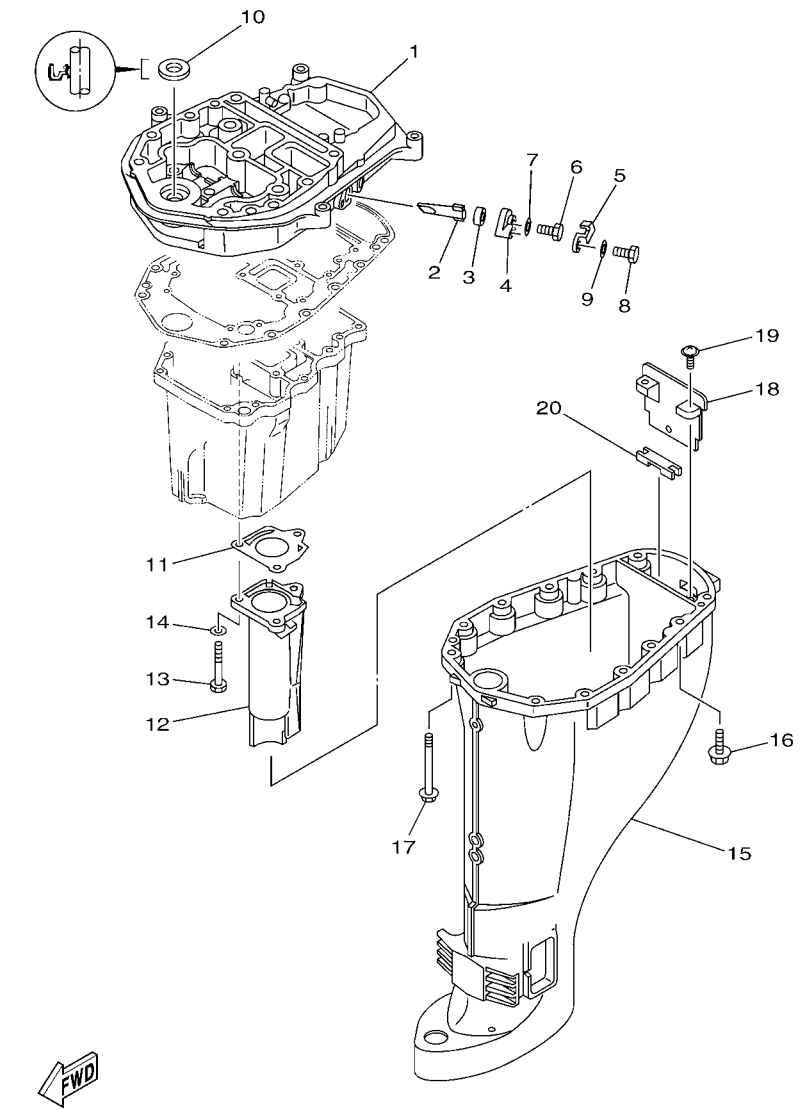

6BP3110-K300

FIG. 23 UPPER CASING FOURREAU

REF. NO.	PART NO. N° PIECES	DESCRIPTION DESCRIPTION	6DN3					REMARKS REMARQUES
1	67C–41137–13–CA	GUIDE, EXHAUST COLLECTEUR D'ECHAPPEMENT	1					
2	62Y–11325–00	ANODE ANODE	1					
3	66M–11328–00	GROMMET, ANODE PASSE-FIL	1					
4	66M–11327–00–94	COVER, ANODE COUVERCLE ANODE	1					
5	66M–12535–00	PLATE PLAQUE	1					
6	97095–05012	BOLT BOULON	1					
7	92995–05600	WASHER RONDELLE	1					
8	97013–06020	BOLT BOULON	1					
9	92903–06600	WASHER, PLATE RONDELLE, PLATE	1					
10	93110–16004	OIL SEAL JOINT SPY	1					
11	67C–41133–00	GASKET, EXHAUST MANIFOLD 1 JOINT, PIPE D'ECHAPPEMENT	1					
12	68U–41131–00–CA	MANIFOLD, EXT. 1 PIPE D'ECHAPPEMENT	1					
13	97075–06050	BOLT BOULON	3					
14	92995–06600	WASHER RONDELLE	3					
15	6D5–45111–10–4D	CASING, UPPER FOURREAU	1					
16	97575–08530	BOLT, WITH WASHER VIS HEXAGONAL AVC RONDELLE	4					
17	90119–08132	BOLT, WITH WASHER BOULON, AVEC RONDELLE	8					
18	65W–45151–00	COVER, UPPER CASING CAPUCHON, FOURREAU	1					
19	97980–05216	SCREW, WITH WASHER VIS, AVEC RONDELLE	2					
20	65W–45128–00	SEAL 2 JOINT 2	1					

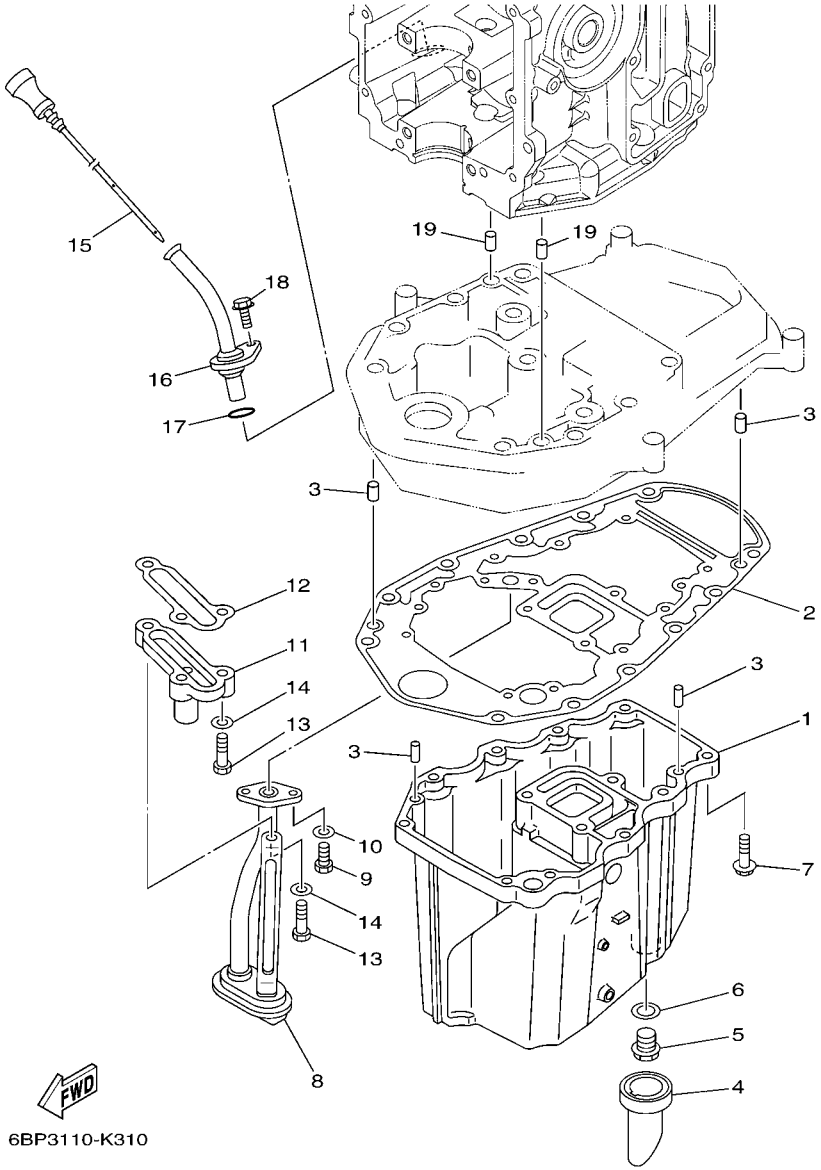

FIG. 24 OIL PAN — VENTILATEUR D'HUILE

REF. NO.	PART NO. N° PIECES	DESCRIPTION DESCRIPTION	6DN3					REMARKS REMARQUES
1	65W–15311–03–CA	OIL PAN VENTILATEUR D'HUILE	1					
2	69W–15312–00	GASKET, OIL PAN JOINT DE VENTILATEUR D'HUILE	1					
3	93606–12019	PIN, DOWEL GOUPILLE	4					
4	65W–15316–00	DAMPER 1 AMORTISSEUR 1	1					
5	90340–14M06	PLUG, STRAIGHT SCREW PLOT, FILETE DROIT	1					
6	90430–14M09	GASKET JOINT	1					
7	97575–06525	BOLT, WITH WASHER VIS HEXAGONAL AVC RONDELLE	10					
8	65W–13411–00	STRAINER, OIL FILTRE, HUILE	1					
9	97013–06016	BOLT BOULON	2					
10	92903–06600	WASHER, PLATE RONDELLE, PLATE	2					
11	6BG–11576–00–94	BODY, RELIEF CORPS DE SECURITE	1					
12	62Y–13475–00	GASKET JOINT	1					
13	97013–06025	BOLT BOULON	3					
14	92903–06600	WASHER, PLATE RONDELLE, PLATE	3					
15	6BL–15362–00	PLUG, OIL LEVEL PLOT, NIVEAU D'HUILE	1					
16	6BL–15377–00	GUIDE, INLET GUIDE D'ADMISSION	1					
17	93210–19MJ3	O-RING JOINT TORIQUE	1					
18	95895–06016	BOLT, FLANGE BOULON	1					
19	93608–12M05	PIN, DOWEL AXE	2					

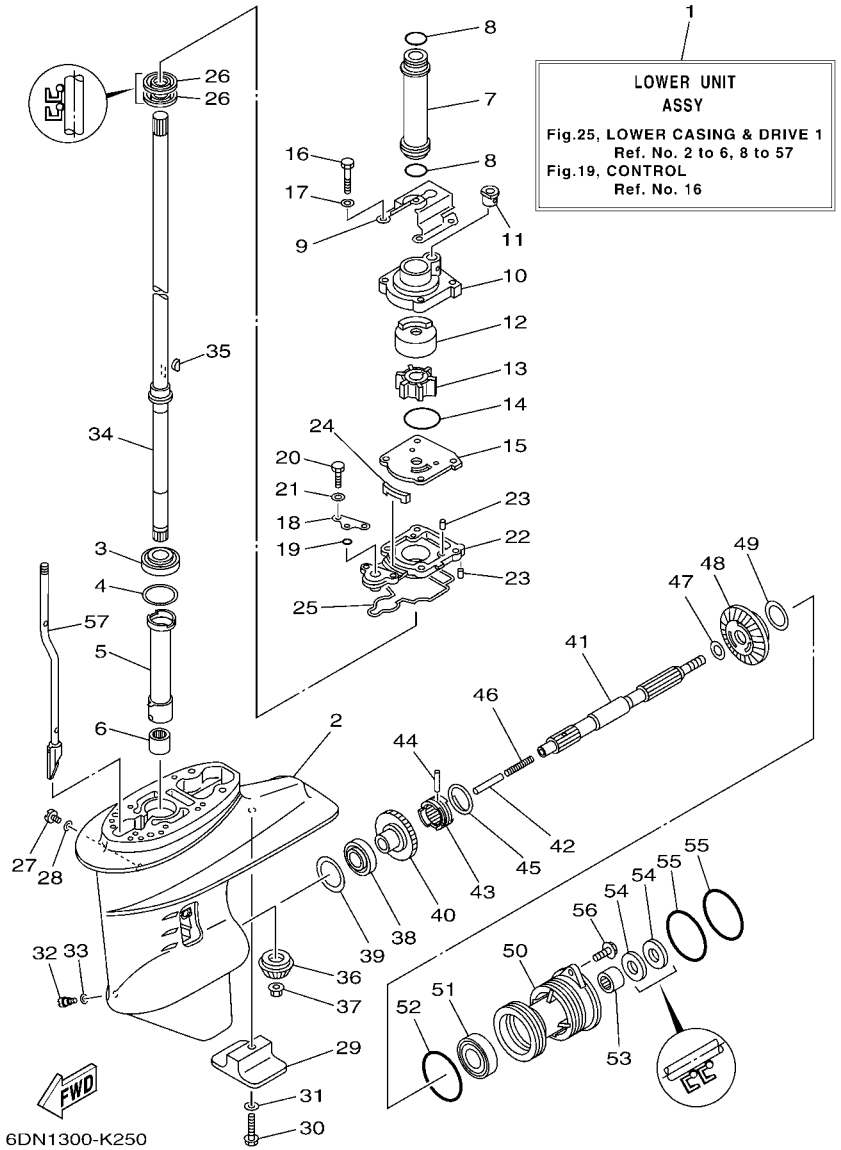

FIG. 25 LOWER CASING & DRIVE 1 BOITIER D'HELICE TRANSMISSION1

REF. NO.	PART NO. N° PIECES	DESCRIPTION DESCRIPTION	6DN3					REMARKS REMARQUES
1	65W–45300–11–4D	LOWER UNIT ASSY UNITE INFERIEURE (ENS.)	1					
2	61N–45311–02–4D	CASING, LOWER BOITIER D'HELICE	1					
3	93332–000W5	BEARING ROULEMENT	1					
4	61N–45587–00	SHIM (T:0.7MM) CALE (T:0.7MM)	1					UR UR
	61N–45587–10	SHIM (T:1.0MM) CALE (T:1.0MM)	1					UR UR
	61N–45587–20	SHIM (T:1.1MM) CALE (T:1.1MM)	1					UR UR
	61N–45587–30	SHIM (T:1.2MM) CALE (T:1.2MM)	1					UR UR
	61N–45587–40	SHIM (T:1.3MM) CALE (T:1.3MM)	1					UR UR
	61N–45587–50	SHIM (T:1.4MM) CALE (T:1.4MM)	1					UR UR
	61N–45587–60	SHIM (T:1.5MM) CALE (T:1.5MM)	1					UR UR
	61N–45587–70	SHIM (T:1.6MM) CALE (T:1.6MM)	1					UR UR
5	61N–45536–00	SLEEVE, DRIVE SHAFT MANCHON, ARBRE MOTEUR	1					
6	93315–220V7	BEARING ROULEMENT	1					
7	61N–44362–10	TUBE, WATER 2 TUBE D'EAU 2	1					
8	93210–26130	O-RING JOINT TORIQUE	2					
9	65W–44328–11	PLATE PLAQUETTE	1					
10	61N–44311–01	HOUSING, WATER PUMP CORPS, POMPE A EAU	1					
11	6L2–44367–00	DAMPER, WATER SEAL 3 JOINT TUBE D'EAU 3	1					
12	61N–44322–01	INSERT, CARTRIDGE CUVETTE	1					
13	6H4–44352–02	IMPELLER TURBINE	1					
14	93210–45161	O-RING JOINT TORIQUE	1					
15	61N–44323–00	OUTER PLATE, CARTRIDGE PLAQUE EXTERIEURE	1					
16	97095–06040	BOLT BOULON	4					
17	92995–06600	WASHER RONDELLE	4					
18	65W–44176–00	BRACKET SUPPORT	1					
19	93210–06ME6	O-RING JOINT TORIQUE	1					
20	97095–06025	BOLT BOULON	2					

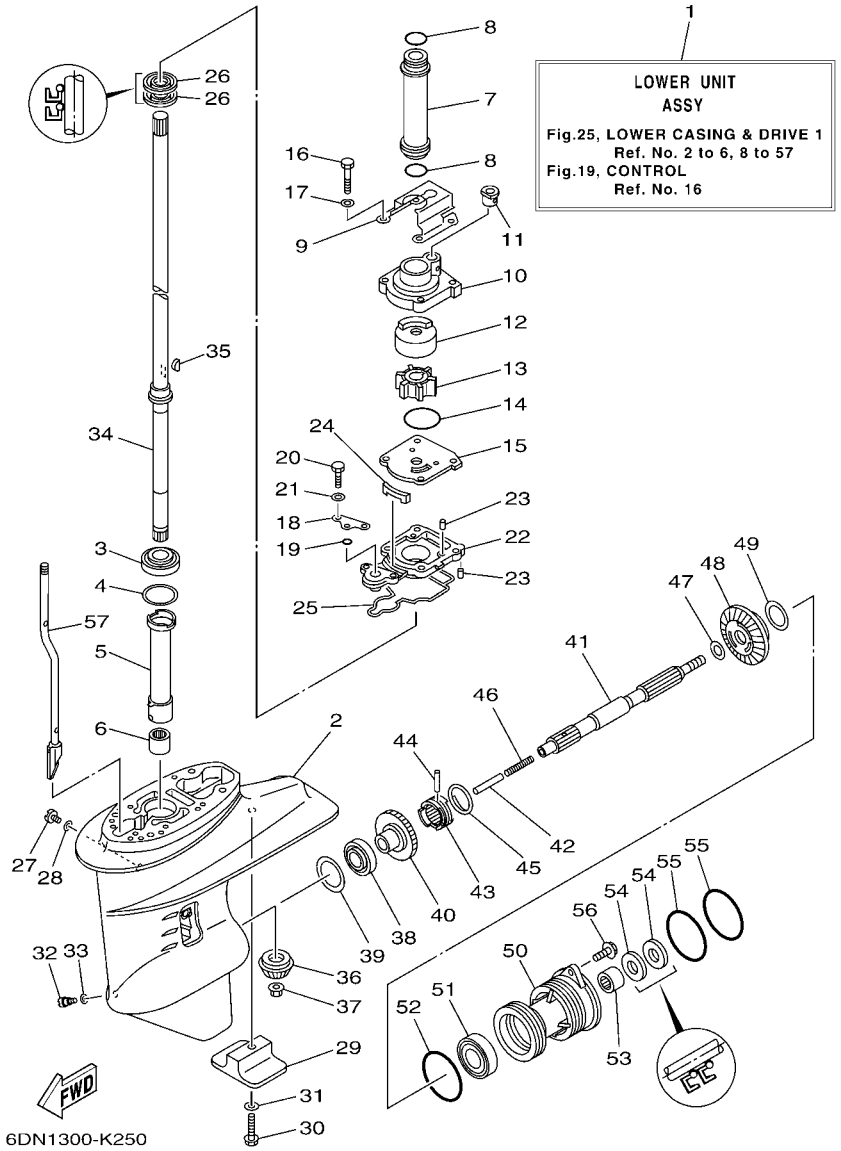

FIG. 25 LOWER CASING & DRIVE 1 BOITIER D'HELICE TRANSMISSION1

REF. NO.	PART NO. N° PIECES	DESCRIPTION DESCRIPTION	6DN3					REMARKS REMARQUES
21	92995–06600	WASHER RONDELLE	2					
22	65W–45331–00–CA	HOUSING, BEARING FLASQUE, ROULEMENT	1					
23	93604–10M03	PIN, DOWEL CLAVETTE	3					
24	61N–45127–00	SEAL JOINT	1					
25	61N–45315–00	PACKING, LOWER CASING JOINT, BOITIER D'HELICE	1					
26	93101–22067	OIL SEAL JOINT SPY	2					
27	90340–08002	PLUG, STRAIGHT SCREW PLOT, FILETE DROIT	1					
28	90430–08020	GASKET JOINT	1					
29	61N–45251–01	ANODE ANODE	1					
30	95895–06035	BOLT, FLANGE BOULON	1					
31	92990–06300	WASHER, INTERNAL TOOTH RONDELLE, DENTURE INTERNE	1					
32	688–45341–10	PLUG, DRAIN BOUCHON DE VIDANGE	1					
33	90430–08020	GASKET JOINT	1					
34	61N–45510–10	DRIVE SHAFT ASSY ARBRE MOTEUR (ENS.)	1					
35	90280–03024	KEY, WOODRUFF CLAVETTE, DEMI-LUNE	1					
36	61N–45551–00	PINION (13T) PIGNON D'ATTAQUE (13D)	1					
37	90179–10M14	NUT ECROU	1					
38	93332–00005	BEARING ROULEMENT	1					
39	6L2–45567–00	SHIM (T:1.0MM) CALE (T;1.0MM)	1					UR UR
	6L2–45567–10	SHIM (T:1.1MM) CALE (T:1.1MM)	1					UR UR
	6L2–45567–20	SHIM (T:1.2MM) CALE (T:1.2MM)	1					UR UR
	6L2–45567–30	SHIM (T:1.3MM) CALE (T:1.3MM)	1					UR UR
	6L2–45567–40	SHIM (T:1.4MM) CALE (T:1.4MM)	1					UR UR
40	61N–45560–10	GEAR 1 (27T) PIGNON 1 (27T)	1					
41	65W–45611–00	SHAFT, PROPELLER ARBRE, HELICE	1					
42	648–45635–00	PLUNGER, SHIFT POUSSOIR D'EMBRAYAGE	1					
43	664–45631–02	CLUTCH, DOG CRABOT	1					

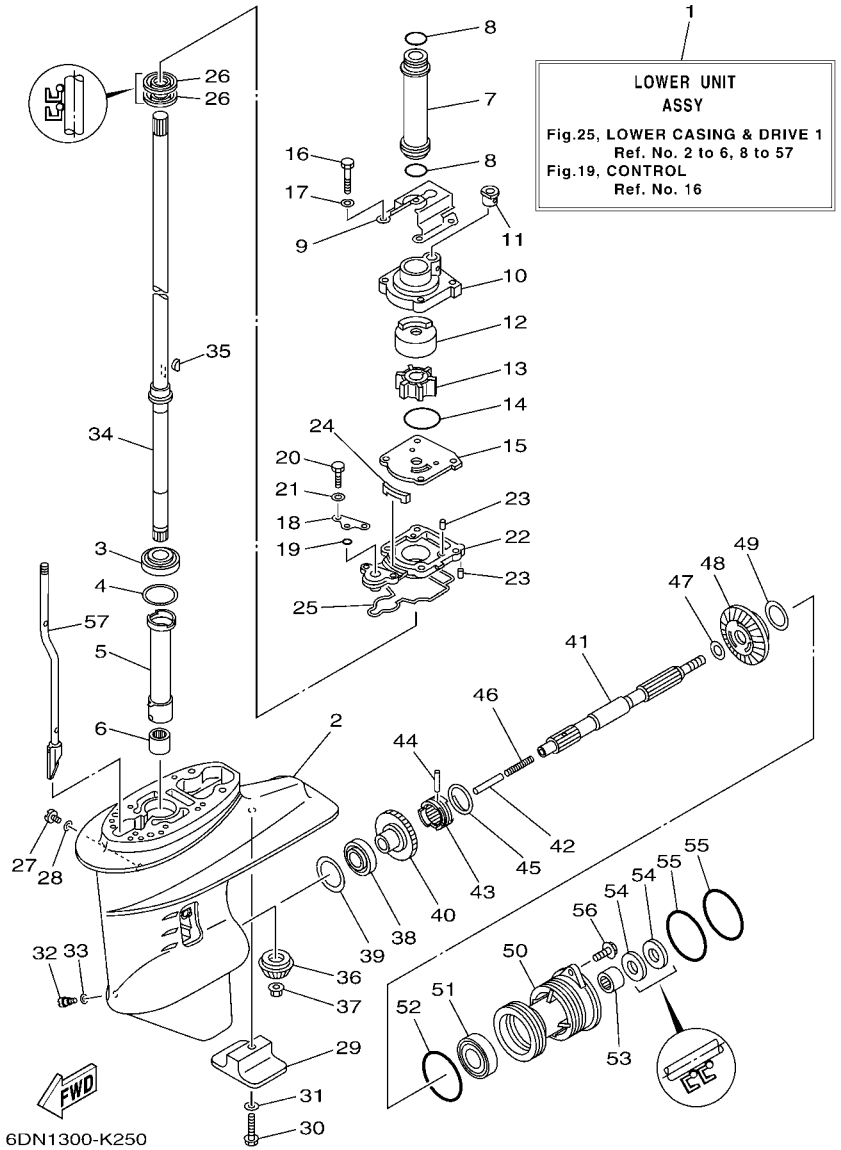

FIG. 25 LOWER CASING & DRIVE 1 BOITIER D'HELICE TRANSMISSION1

REF. NO.	PART NO. N° PIECES	DESCRIPTION DESCRIPTION	6DN3					REMARKS REMARQUES
44	90250–05010	PIN, STRAIGHT GOUPILLE, DROITE	1					
45	648–45633–00	RING, CROSS PIN JONC, GOUPILLE CRABOT	1					
46	90501–10065	SPRING, COMPRESSION RESSORT, COMPRESSION	1					
47	90201–20417	WASHER, PLATE RONDELLE, PLATE	1					
48	61N–45571–00	GEAR 2 (27T) PIGNON 2 (27T)	1					
49	6L2–45577–00	SHIM (T:1.0MM) CALE (T:1.0MM)	1					UR UR
	6L2–45577–10	SHIM (T:1.1MM) CALE (T:1.1MM)	1					UR UR
	6L2–45577–20	SHIM (T:1.2MM) CALE (T:1.2MM)	1					UR UR
	6L2–45577–30	SHIM (T:1.3MM) CALE (T:1.3MM)	1					UR UR
50	61N–45361–01–4D	CAP, LOWER CASING COUVERCLE, BOITIER D'HELICE	1					
51	93306–00612	BEARING ROULEMENT	1					
52	93210–64ME7	O-RING JOINT TORIQUE	1					
53	93315–22004	BEARING ROULEMENT	1					
54	93101–20M07	OIL SEAL JOINT SPY	2					
55	93210–65M50	O-RING JOINT TORIQUE	2					
56	97575–06520	BOLT, WITH WASHER VIS HEXAGONAL AVC RONDELLE	2					
57	65W–44150–11	SHIFT CAM ASSY CAME D'INVERSION	1					

FIG. 26 LOWER CASING & DRIVE 2 BOITIER D'HELICE TRANSMISSION2

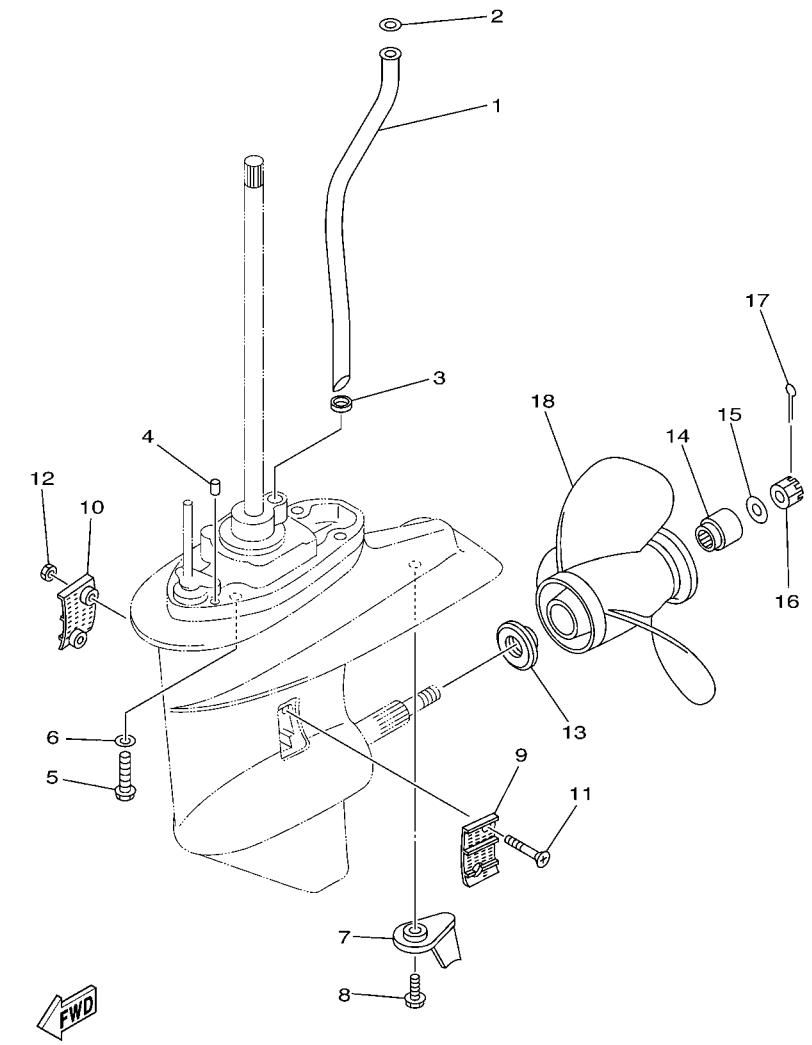

REF. NO.	PART NO. N° PIECES	DESCRIPTION DESCRIPTION	6DN3					REMARKS REMARQUES
1	65W–44361–12	TUBE, WATER 1 TUBE D'EAU 1	1					
2	90202–12060	WASHER, PLATE RONDELLE, PLATE	1					
3	90430–10002	GASKET JOINT	1					
4	93606–11M24	PIN, DOWEL GOUPILLE	2					
5	90105–10M12	BOLT, FLANGE BOULON	4					
6	92995–10600	WASHER RONDELLE	4					
7	61N–45371–00	TAB-TRIM ANODE DERIVE	1					
8	90119–06M48	BOLT, WITH WASHER BOULON, AVEC RONDELLE	1					
9	6L2–45214–00	COVER, WATER INLET 1 GRILLE, ENTREE D'EAU 1	1					
10	6L2–45215–00	COVER, WATER INLET 2 GRILLE, ENTREE D'EAU 2	1					
11	90151–05M05	SCREW, COUNTERSUNK VIS, TETE NOYEE	2					
12	90185–05002	NUT, NYLON ECROU,AUTO-BLOQUANT	2					
13	6L2–45987–01	SPACER 1 ENTRETOISE 1	1					
14	689–45997–00	SPACER 2 ENTRETOISE 2	1					
15	92990–14200	WASHER, PLAIN RONDELLE, PLATE	1					
16	90171–14013	NUT, CASTLE ECROU, CRENELE	1					
17	91490–30022	PIN. COTTER GOUPILLE	1					
18	664–45941–01	PROPELLER (3X9-7/8"X9"-F) HELICE (3X9-7/8"X9"-F)	1					UR UR
	664–45943–01	PROPELLER (3X9-7/8"X8"-F) HELICE (3X9-7/8"X8"-F)	1					UR UR
	664–45945–00	PROPELLER (3X9-7/8"X10-1/2"-F) HELICE (3X9-7/8"X10-1/2"-F)	1					UR UR
	664–45947–01	PROPELLER (3X9-7/8"X11-1/4"-F) HELICE (3X9-7/8"X11-1/4"-F)	1					UR UR
	664–45949–02	PROPELLER (3X9-7/8"X13"-F) HELICE (3X9-7/8"X13"-F)	1					UR UR
	664–45952–00	PROPELLER (3X9-7/8"X14"-F) HELICE (3X9-7/8"X14"-F)	1					UR UR
	664–45954–01	PROPELLER (3X9-7/8"X12"-F) HELICE (3X9-7/8"X12"-F)	1					UR UR
	664–45970–00	PROPELLER (3X9-1/8"X13"-F) HELICE (3X9-1/8"X13"-F)	1					UR UR
	664–45972–00	PROPELLER (3X9-1/8"X12"-F) HELICE (3X9-1/8"X12"-F)	1					UR UR

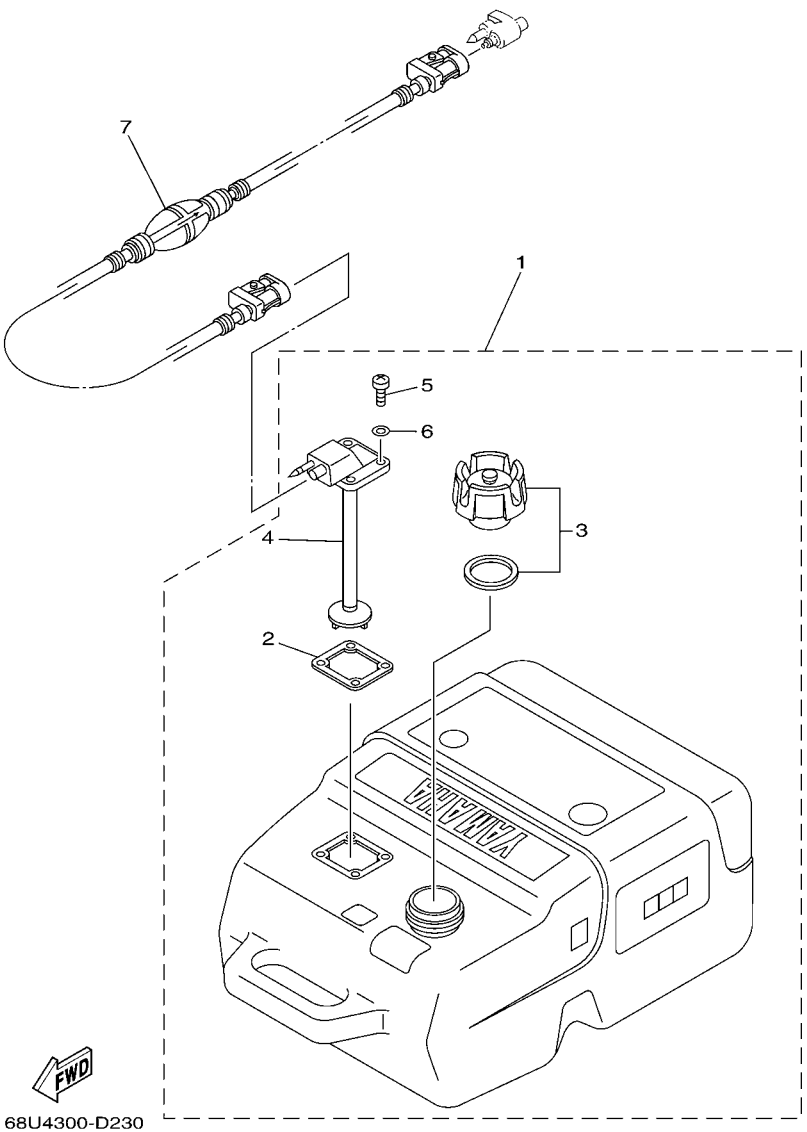

FIG. 27 FUEL TANK — RESERVOIR A CARBURANT

REF. NO.	PART NO. N° PIECES	DESCRIPTION DESCRIPTION	6DN3					REMARKS REMARQUES
1	6YK–24201–03	FUEL TANK ASSY (25L) RESERVOIR A ESSENCE (ENS.) 25L	1					AP AP
2	6YL–24268–01	.GASKET, FUEL METER .JOINT, JAUGE A CARBURANT	1					
3	6YK–24610–01	.CAP ASSY .BOUCHON	1					
4	6YK–24260–01	.FUEL METER ASSY .INDICATEUR DE CARBURANT	1					
5	90157–05M16	.SCREW, PAN HEAD .VIS, TETE TRONCONIQUE	4					
6	6YL–24329–00	.SEAL .JOINT	4					
7	6YL–24306–54	FUEL PIPE COMP. 1 DURITE A ESSENCE 1	1					AP AP

FIG. 28 STEERING GUIDE FIXATION DE DIRECTION

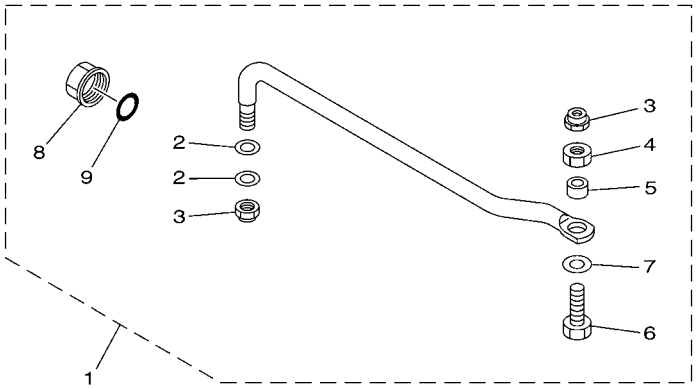

6BG1100-H340

REF. NO.	PART NO. N° PIECES	DESCRIPTION DESCRIPTION	6DN3					REMARKS REMARQUES
1	6BG–61350–00	STEERING GUIDE ATTACHMENT KIT FIXATIONS DE DIRECTION	1					AP AP
2	90201–10M20	.WASHER, PLATE .RONDELLE, PLATE	2					
3	90185–09M01	.NUT, SELF-LOCKING .ECROU,AUTO-BLOQUANT	2					
4	90170–09M03	.NUT .ECROU	1					
5	90387–10M42	.COLLAR .COLLERETTE	1					
6	90101–09M01	.BOLT .BOULON	1					
7	90201–10M63	.WASHER, PLATE .RONDELLE, PLATE	1					
8	6E5–43145–01	.CAP, CLAMP BRACKET .CAPUCHON, PRESSE	1					
9	93210–16275	.O-RING .JOINT TORIQUE	1					

FIG. 29 REMOTE CONTROL BOX BOITIER DE COMMANDE A DISTANCE

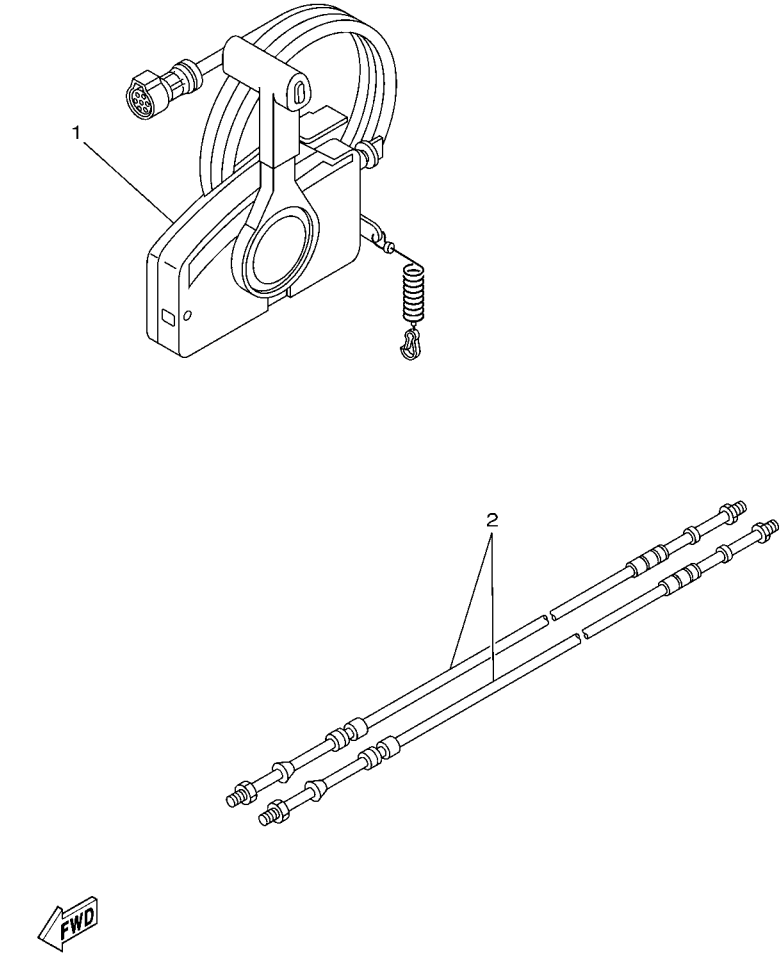

67M0100-8280

REF. NO.	PART NO. N° PIECES	DESCRIPTION DESCRIPTION	6DN3					REMARKS REMARQUES
1	703–48205–A6	REMOTE CONTROL ASSY (10P) BOITIER DE COMMANDE A DISTANCE	1					AP WITH PT/T SW. AP WITH PT/T SW.
2	701–48310–90	CABLE, REMOTE CONTROL L=11F CABLE, COMMANDE A DISTANCE:11F	2					UR UR
	701–48320–00	CABLE, REMOTE CONTROL L=12F CABLE, COMMANDE A DISTANCE:12F	2					UR UR
	701–48320–20	CABLE, REMOTE CONTROL L=13F CABLE, COMMANDE A DISTANCE:13F	2					UR UR
	701–48320–50	CABLE, REMOTE CONTROL L=15F CABLE, COMMANDE A DISTANCE:15F	2					UR UR

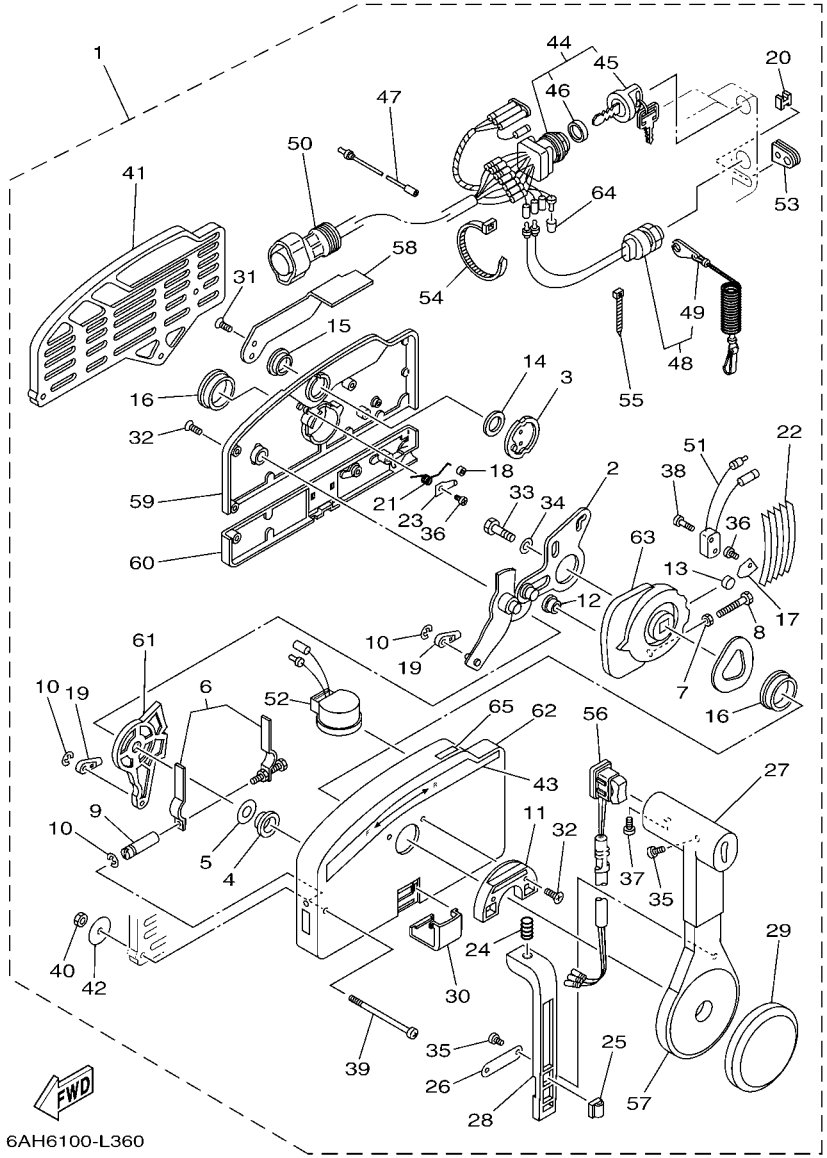

FIG. 30 REMOTE CONTROL ASSY BOITIER DE COMMANDE A DISTANCE

REF. NO.	PART NO. N° PIECES	DESCRIPTION DESCRIPTION	6DN3					REMARKS REMARQUES
1	703–48205–A6	REMOTE CONTROL ASSY (10P) BOITIER DE COMMANDE A DISTANCE	1					AP WITH PT/T SW. AP WITH PT/T SW.
2	703–48261–01	.ARM, THROTTLE .BRAS, ACCELERATION	1					
3	703–48153–00	.SHAFT, FREE ACCEL. .AXE	1					
4	703–48235–00	.BUSHING .COUSSINET	1					
5	703–48268–00	.SPACER .ENTRETOISE	1					
6	703–48264–00	.FRICTION, THROTTLE .FRICTION, ACCELERATION	1					
7	95380–05600	.NUT .ECROU	1					
8	97380–05025	.BOLT .BOULON, HEXAGONAL	1					
9	703–48265–00	.SHAFT, FRICTION .AXE, COPILOTE	1					
10	93430–06024	.CIRCLIP .CLIPS	3					
11	703–48245–00	.PLATE, LOCK .PLAQUE, VERROU	1					
12	703–48252–00	.ROLLER, CAM .POULIE	1					
13	701–48248–00	.ROLLER, FREE ACCEL. .POULIE	1					
14	703–48198–00	.WASHER, WAVE .RONDELLE, ELASTIQUE ONDULEE	1					
15	703–48243–00	.BUSHING .COUSSINET	1					
16	703–48236–00	.BUSHING 1 .POULIE	2					
17	703–48189–00	.RETAINER .FLASQUE	1					
18	703–48234–00	.ROLLER, DETENT .POULIE	1					
19	703–48345–01	.CABLE END, REMOTE CONTROL 2 .CHAPE CABLE	2					
20	703–48358–00	.ANCHOR, CABLE .COLLIER	1					
21	703–48244–00	.SPRING, FREE ACCEL. .RESSORT	1					
22	703–48238–00	.SPRING, DETENT .RESSORT	5					
23	703–48246–00	.SPACER .ENTRETOISE	1					
24	703–48227–00	.SPRING, NEUTRAL LOCK .RESSORT	1					
25	703–82594–00	.CLAMP .BRIDE	1					WITH PT/T SW. WITH PT/T SW.
26	703–48226–00	.PLATE, STOPPER .PLAQUETTE	1					
27	703–48222–00	.GRIP, CONTROL LEVER .POIGNEE, COMMANDE LEVIER	1					SINGLE SINGLE

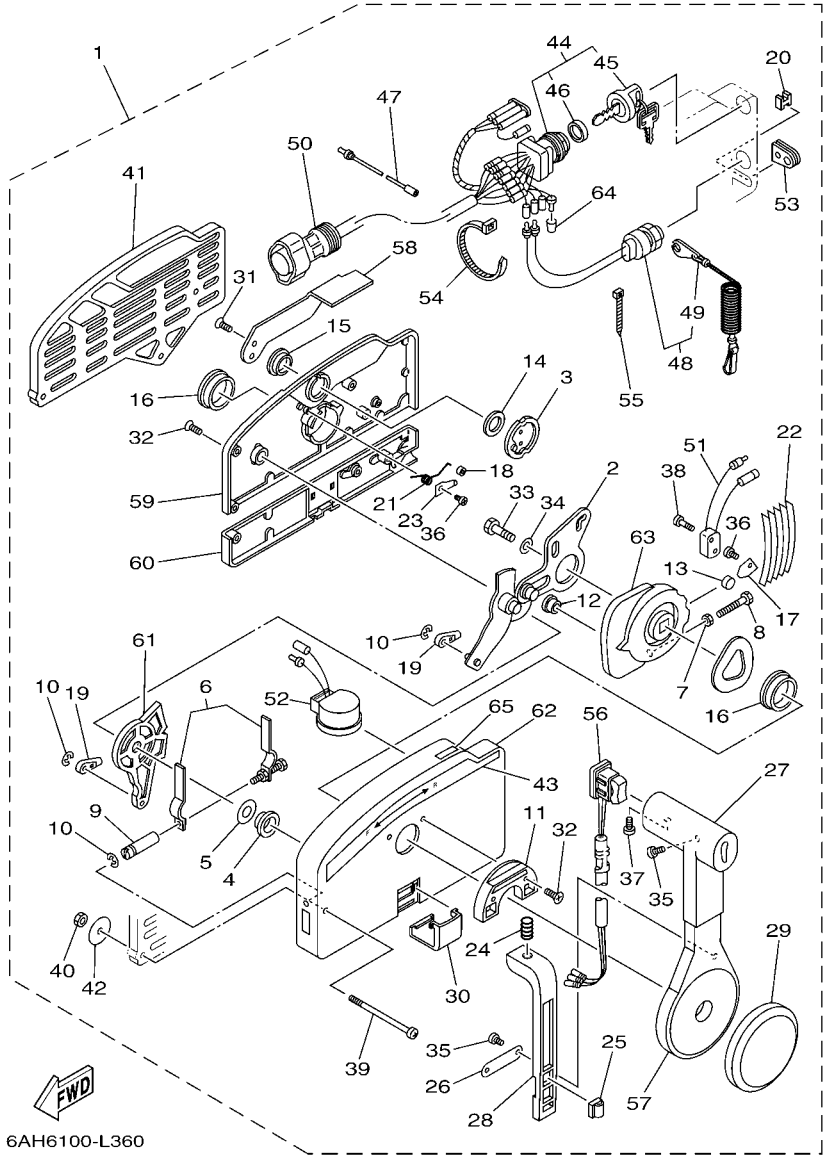

FIG. 30 REMOTE CONTROL ASSY BOITIER DE COMMANDE A DISTANCE

REF. NO.	PART NO. N° PIECES	DESCRIPTION DESCRIPTION	6DN3					REMARKS REMARQUES
28	703–48223–00	.LOCK, NEUTRAL .VERROU, NEUTRAL	1					
29	703–48225–00	.COVER .COUVERCLE	1					
30	703–48219–00	.COVER, LEAD .COUVERCLE	1					
31	703–48281–00	.SCREW .VIS	2					
32	703–48282–00	.SCREW .VIS	7					
33	97380–08030	.BOLT .BOULON, HEXAGONAL	1					
34	92990–08600	.WASHER, PLATE .RONDELLE, PLATE	1					
35	98580–04010	.SCREW, PAN HEAD .VIS	3					
36	98580–04006	.SCREW, PAN HEAD .VIS	2					
37	98580–05010	.SCREW, PAN HEAD .VIS	1					
38	98580–03015	.SCREW, PAN HEAD .VIS	2					
39	703–48291–10	.SCREW (M6) .VIS (M6)	3					
40	95380–06600	.NUT, HEXAGON .ECROU	3					
41	703–48293–10	.SPACER, REMOTE CONTROL .ENTRETOISE	1					SINGLE SINGLE
42	701–48287–00	.WASHER .RONDELLE	3					
43	703–48215–00	.GRAPHIC .ADHESIF	1					
44	703–82510–12	.MAIN SWITCH ASSY .CONTACTEUR A CLEF COMPLET	1					PRIME START PRIME START
45	676–82577–00	..CAP, KEY ..CABOCHON	1					
46	703–82532–00	..CAP ..COUVERCLE	1					
47	703–82531–00	.WIRE, LEAD (L70) .FIL (L70)	1					
48	688–82575–01	.ENGINE STOP SWITCH ASSY .COUPE CIRCUIT CPLT	1					
49	682–82556–00	..LANYARD, STOP SWITCH ..CORDON DU COUPE CIRCUIT	1					
50	688–8258A–20	.EXTENSION, WIRE HARNESS (4.9M) .EXTENSION, FAISCEAU DE FILS (4	1					(10P) (10P)
51	703–82540–00	.NEUTRAL SWITCH ASSY .CONTACTEUR DE POINT-MORT	1					
52	703–83383–B0	.BUZZER .RONFLEUR	1					
53	703–48284–00	.GROMMET .PASSE-FIL	1					
54	703–82591–00	.BAND .COLLIER	1					

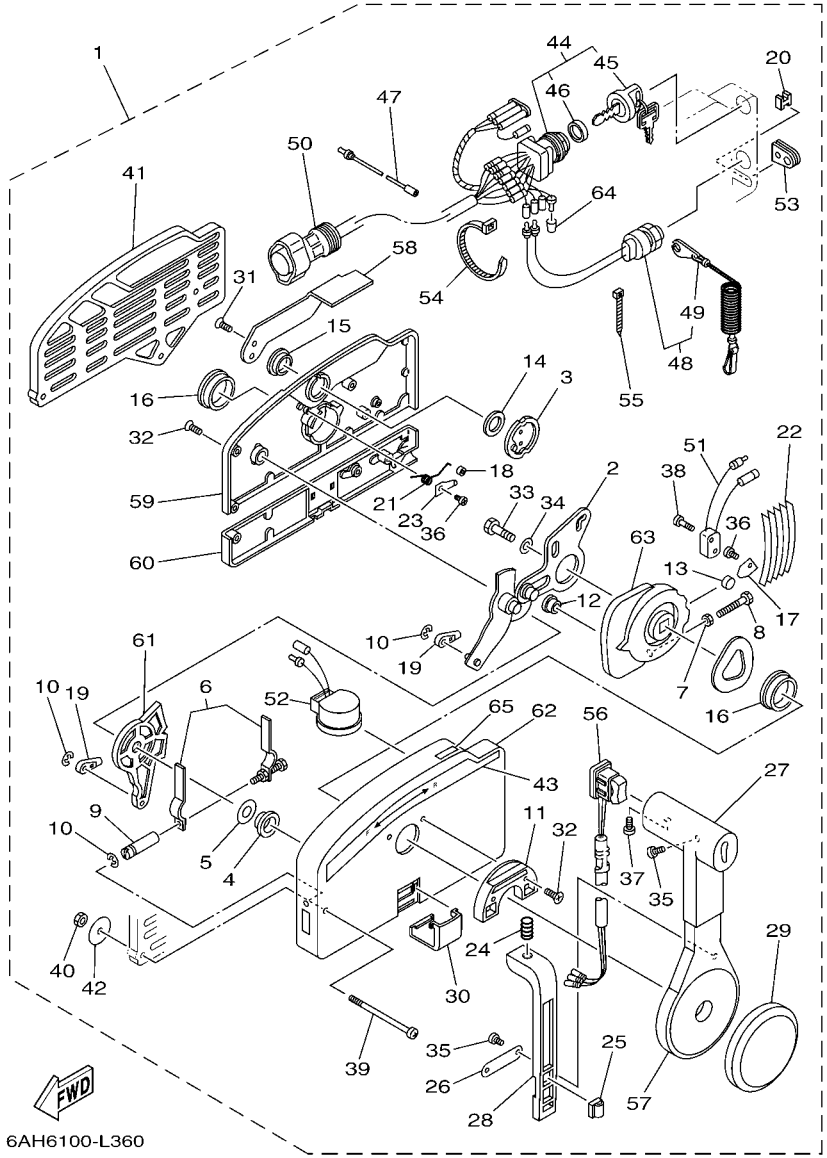

FIG. 30 REMOTE CONTROL ASSY — BOITIER DE COMMANDE A DISTANCE

REF. NO.	PART NO. N° PIECES	DESCRIPTION DESCRIPTION	6DN3					REMARKS REMARQUES
55	703–82592–00	.BAND .COLLIER	1					
56	703–82563–02	.TRIM & TILT SWITCH ASSY .INCLINER ET PARER COMMUTATEUR	1					WITH PT/T SW. WITH PT/T SW.
57	703–48221–00	.LEVER, CONTROL .LEVIER, COMMANDE	1					
58	703–48152–00	.KNOB, FREE ACCEL. .BOUTON	1					
59	703–48212–00	.BACK PLATE 1 .PLAQUETTE 1	1					
60	703–48213–00	.BACK PLATE 2 .PLAQUETTE 2	1					
61	703–48271–00	.ARM, SHIFT .BRAS	1					
62	703–48211–02	.HOUSING,1 .CORPS	1					
63	703–48232–00	.GEAR .PIGNON	1					
64	703–82542–00	.CAP .COUVERCLE	1					
65	703–48218–00	.GRAPHIC .ADHESIF	1					

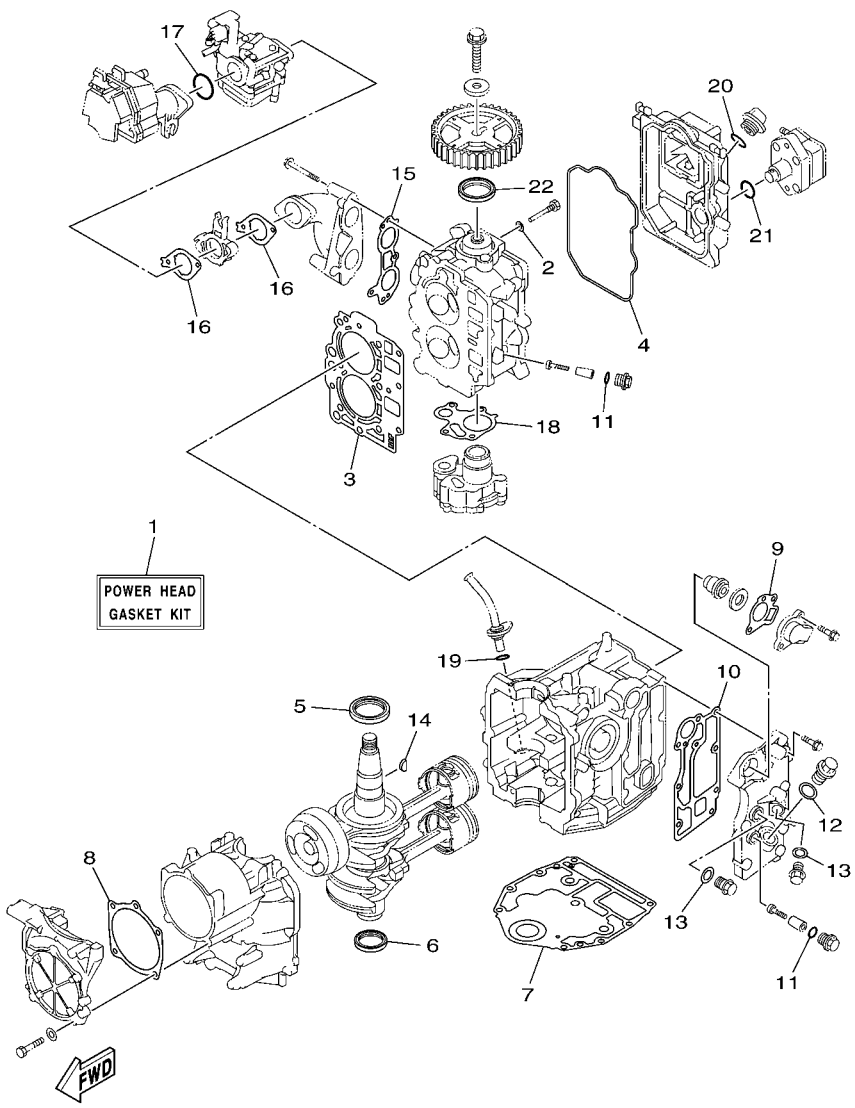

6BP1100-H380

FIG. 31 REPAIR KIT 1 — KITS DE REPARATION 1

REF. NO.	PART NO. N° PIECES	DESCRIPTION DESCRIPTION	6DN3					REMARKS REMARQUES
1	6BL–W0001–00	POWER HEAD GASKET KIT POCHETTE DE JINTS TETE MOTRICE	1					
2	90430–06014	.GASKET .JOINT	1					
3	6BL–11181–00	.GASKET, CYLINDER HEAD 1 .JOINT, DE CULASSE 1	1					
4	6BL–11356–00	.SEAL, CYLINDER 2 .JOINT, SPY CYLINDRE	1					
5	93102–43M42	.OIL SEAL .JOINT SPY	1					
6	93101–35002	.OIL SEAL .JOINT SPY	1					
7	6BG–11351–00	.GASKET, CYLINDER .JOINT, D'EMBASE	1					
8	6BL–15663–00	.SEAL .JOINT	1					
9	62Y–12414–00	.GASKET, COVER .JOINT, COUVERCLE	1					
10	6BL–41114–00	.GASKET, EXHAUST OUTER COVER .JOINT, COUVERCLE D'ECHAPPEMENT	1					
11	93210–13M63	.O-RING .JOINT TORIQUE	3					
12	90430–18130	.GASKET .JOINT	1					
13	90430–14115	.GASKET .JOINT	2					
14	90280–03M01	.KEY, WOODRUFF .CLAVETTE, DEMI-LUNE	1					
15	6BL–13645–00	.GASKET, MANIFOLD 1 .JOINT, TUBULURE 1	1					
16	6BL–13646–00	.GASKET, MANIFOLD 2 .JOINT, TUBULURE 2	2					
17	93210–39ME4	.O-RING .JOINT TORIQUE	1					
18	6C5–13329–00	.GASKET, PUMP COVER .JOINT, COUVERCLE DE POMPE	1					
19	93210–19MJ3	.O-RING .JOINT TORIQUE	1					
20	93210–24M79	.O-RING .JOINT TORIQUE	1					
21	93210–24M79	.O-RING .JOINT TORIQUE	1					
22	93102–37M40	.OIL SEAL .JOINT SPY	1					

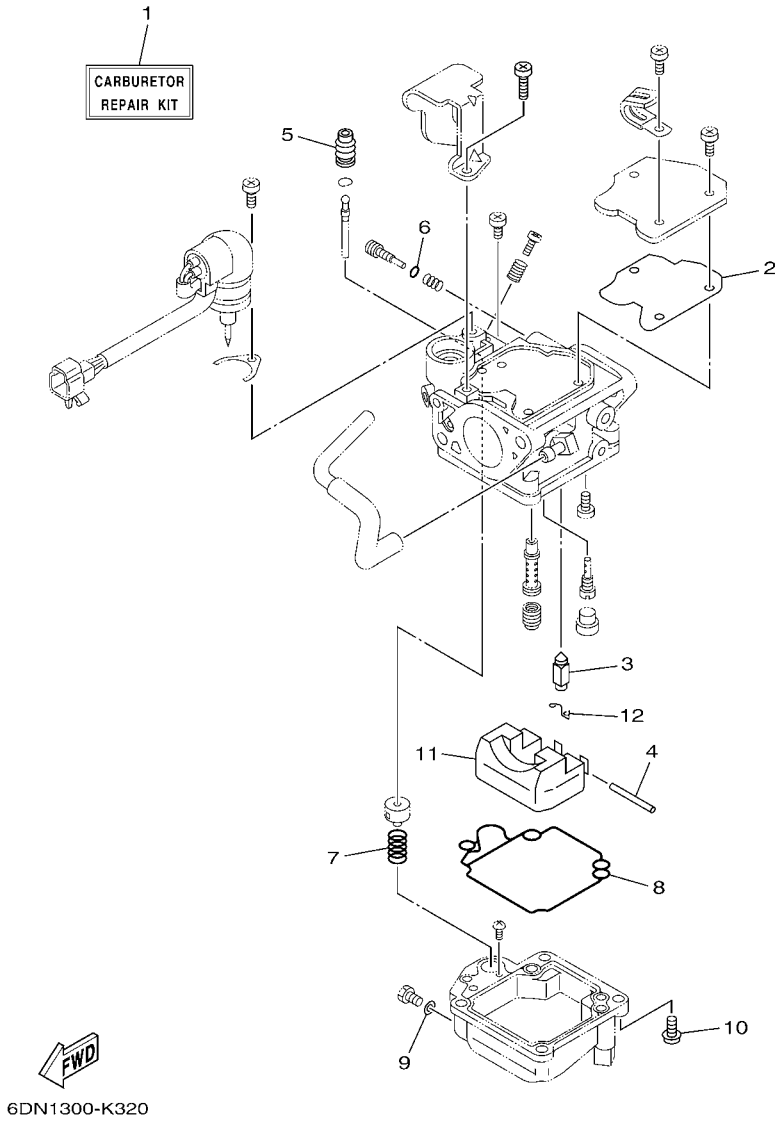

FIG. 32 REPAIR KIT 2 — KITS DE REPARATION 2

REF. NO.	PART NO. N° PIECES	DESCRIPTION DESCRIPTION	6DN3					REMARKS REMARQUES
1	6BL–W0093–00	CARBURETOR REPAIR KIT KIT DE REPARATION CARBURATEUR	1					
2	65W–14126–10	.GASKET .JOINT	1					
3	6AH–14546–00	.VALVE, NEEDLE .POINTEAU	1					
4	6H4–14548–00	.PIN, FLOAT ARM .AXE, BRAS DE FLOTTEUR	1					
5	65W–14373–02	.COVER, PLUNGER CAP .COUVERCLE DE PLONGEUR	1					
6	67C–14397–00	.O-RING .JOINT TORIQUE	1					
7	65W–14335–00	.SPRING, PLUNGER .RESSORT, PLONGEUR	1					
8	65W–14384–00	.GASKET, FLOAT CHAMBER .JOINT, CUVE DE FLOTTEUR	1					
9	65W–14398–00	.GASKET .JOINT	1					
10	97980–04114	.SCREW, WITH WASHER .VIS, AVEC RONDELLE	4					
11	63V–14985–00	.FLOAT .FLOTTEUR	1					
12	663–14159–00	.CLIP .JONC	1					

FIG. 33 REPAIR KIT 3 KITS DE PEPARATION 3

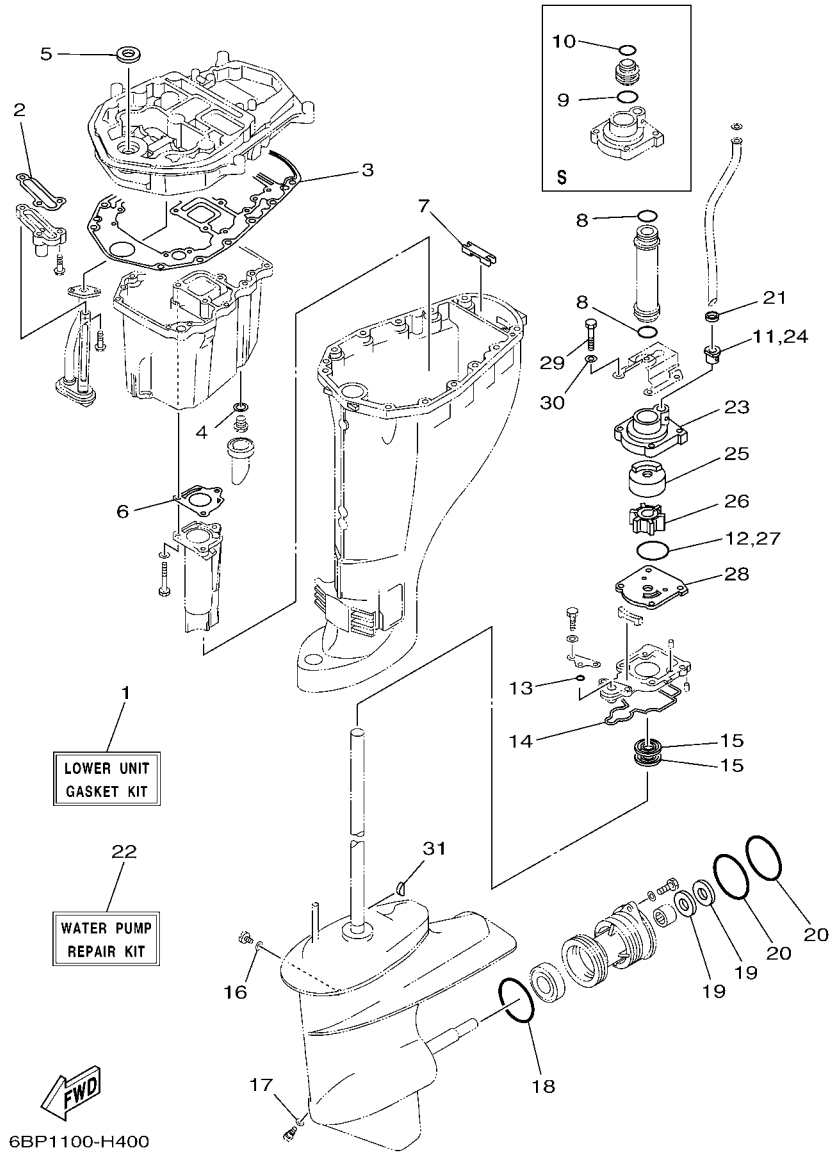

REF. NO.	PART NO. N° PIECES	DESCRIPTION DESCRIPTION	6DN3					REMARKS REMARQUES
1	65W–W0001–23	LOWER UNIT GASKET KIT POCHETTE DE JOINTS EMBASE	1					
2	62Y–13475–00	.GASKET .JOINT	1					
3	69W–15312–00	.GASKET, OIL PAN .JOINT DE VENTILATEUR D'HUILE	1					
4	90430–14M09	.GASKET .JOINT	1					
5	93110–16004	.OIL SEAL .JOINT SPY	1					
6	67C–41133–00	.GASKET, EXHAUST MANIFOLD 1 .JOINT, PIPE D'ECHAPPEMENT	1					
7	65W–45128–00	.SEAL 2 .JOINT 2	1					
8	93210–26130	.O-RING .JOINT TORIQUE	2					L(21.6") L(21.6")
9	93210–26130	.O-RING .JOINT TORIQUE	1					S(16.6") S(16.6")
10	93210–22164	.O-RING .JOINT TORIQUE	1					S(16.6") S(16.6")
11	6L2–44367–00	.DAMPER, WATER SEAL 3 .JOINT TUBE D'EAU 3	1					
12	93210–45161	.O-RING .JOINT TORIQUE	1					
13	93210–06ME6	.O-RING .JOINT TORIQUE	1					
14	61N–45315–00	.PACKING, LOWER CASING .JOINT, BOITIER D'HELICE	1					
15	93101–22067	.OIL SEAL .JOINT SPY	2					
16	90430–08020	.GASKET .JOINT	1					
17	90430–08020	.GASKET .JOINT	1					
18	93210–64ME7	.O-RING .JOINT TORIQUE	1					
19	93101–20M07	.OIL SEAL .JOINT SPY	2					
20	93210–65M50	.O-RING .JOINT TORIQUE	2					
21	90430–10002	.GASKET .JOINT	1					
22	61N–W0078–11	WATER PUMP REPAIR KIT KIT DE REPARATION DE LA POMPE	1					
23	61N–44311–01	.HOUSING, WATER PUMP .CORPS, POMPE A EAU	1					
24	6L2–44367–00	.DAMPER, WATER SEAL 3 .JOINT TUBE D'EAU 3	1					
25	61N–44322–01	.INSERT, CARTRIDGE .CUVETTE	1					
26	6H4–44352–02	.IMPELLER .TURBINE	1					
27	93210–45161	.O-RING .JOINT TORIQUE	1					

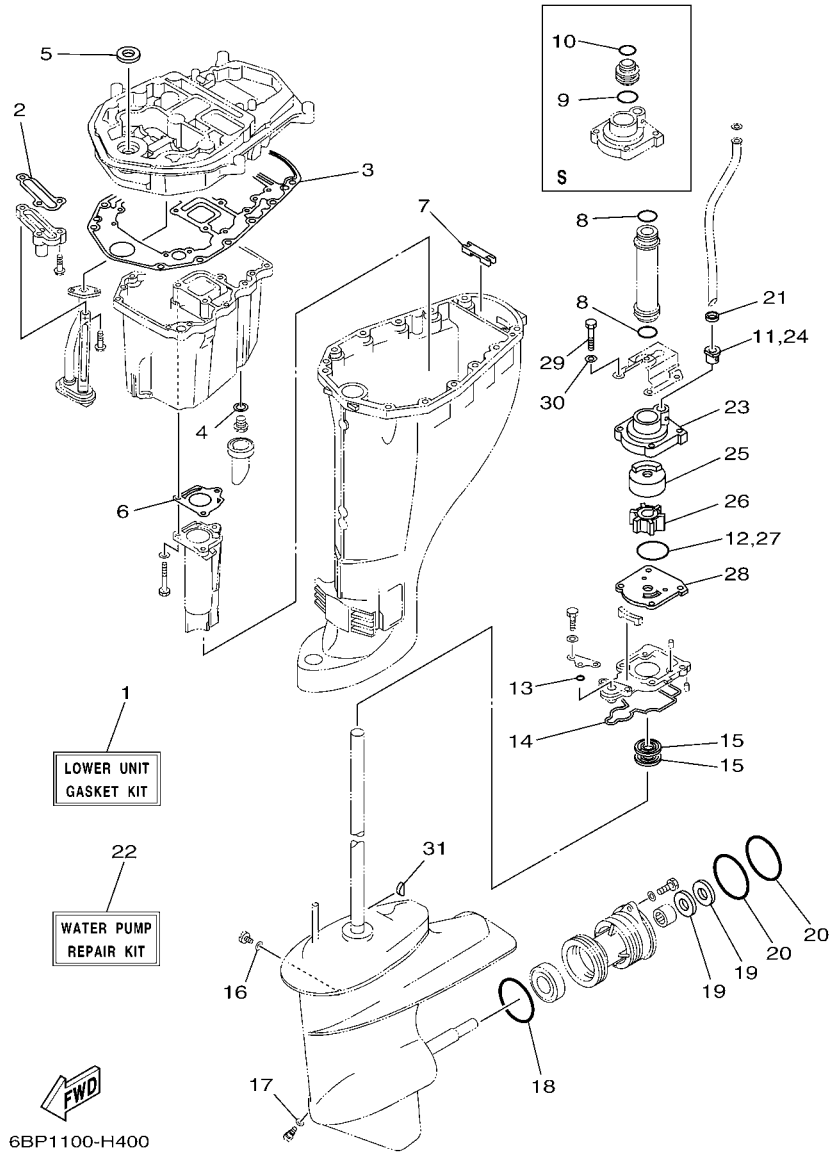

FIG. 33 REPAIR KIT 3 — KITS DE PEPARATION 3

REF. NO.	PART NO. N° PIECES	DESCRIPTION DESCRIPTION	6DN3					REMARKS REMARQUES
28	61N–44323–00	.OUTER PLATE, CARTRIDGE .PLAQUE EXTERIEURE	1					
29	97095–06040	.BOLT .BOULON	4					
30	92995–06600	.WASHER .RONDELLE	4					
31	90280–03024	.KEY, WOODRUFF .CLAVETTE, DEMI-LUNE	1					

NUMERICAL INDEX
INDEX NUMERIQUE

PART NO. N° PIECES	REF. NO.
6BL–11111–00–1S	4 – 2
62Y–11119–00	2 – 13
	4 – 22
62Y–11133–30	4 – 3
6BG–11168–00	4 – 16
6BL–11181–00	4 – 10
	31 – 3
6BL–11191–00–1S	4 – 14
6G8–11197–01	2 – 31
	4 – 6
62Y–11325–00	23 – 2
6BL–11325–00	4 – 4
6G8–11325–00	2 – 29
66M–11327–00–94	23 – 4
66M–11328–00	23 – 3
6BG–11351–00	2 – 8
	31 – 7
6BL–11356–00	4 – 19
	31 – 4
676–11372–00	2 – 17
6BL–11411–00	3 – 1
6BG–11416–10	3 – 2
6BG–11416–20	3 – 2
6BG–11416–30	3 – 2
6C5–11536–00	8 – 7
6C5–11537–00	8 – 2
6H4–11545–00	10 – 4
62Y–11557–00	8 – 8
6BG–11576–00–94	24 – 11
67C–11603–00	3 – 7
67C–11604–00	3 – 7
67C–11605–00	3 – 7
69W–11631–01–97	3 – 6
62Y–11633–00	3 – 8
69W–11635–01	3 – 6
69W–11636–01	3 – 6
6BL–11642–00	3 – 11
6C5–11650–00	3 – 3
6C5–11654–00	3 – 4
6CJ–11656–10	3 – 5
6CJ–11656–20	3 – 5
6CJ–11656–30	3 – 5
6BL–11665–00	3 – 10
69W–12111–00	5 – 1
51Y–12114–00	5 – 4
62Y–12116–00	5 – 3
30X–12117–00	5 – 5
30X–12118–00	5 – 6

PART NO. N° PIECES	REF. NO.
51Y–12119–00	5 – 7
69W–12121–00	5 – 2
6BL–12146–00	5 – 8
62Y–12151–00	5 – 9
6C5–12151–00	5 – 12
62Y–12158–00	5 – 11
6C5–12158–00	5 – 14
64J–12159–00	5 – 10
6C5–12159–00	5 – 13
6BL–12171–00	8 – 1
6BL–12231–00	5 – 15
6BL–12233–00	5 – 16
6G8–12411–03	2 – 23
688–12412–00	2 – 24
6C5–12413–00–9S	2 – 25
62Y–12414–00	2 – 26
	31 – 9
66M–12535–00	23 – 5
6AW–12572–00	18 – 4
6R3–12580–00	18 – 6
6C5–12858–00	2 – 38
62Y–13131–01	9 – 5
6BL–13300–00	8 – 14
6C5–13329–00	8 – 15
	31 – 18
65W–13411–00	24 – 8
67F–13434–20	1 – 18
6BP–13437–60	8 – 18
5GH–13440–20	2 – 37
62Y–13475–00	24 – 12
	33 – 2
6BL–13641–00–94	6 – 1
6BL–13645–00	6 – 2
	31 – 15
6BL–13646–00	6 – 8
	31 – 16
65W–14126–10	7 – 4
	32 – 2
663–14159–00	7 – 14
	32 – 12
67F–14255–00	7 – 33
6BL–14271–00	6 – 9
6DN–14301–00	7 – 1
65W–14335–00	7 – 23
	32 – 7
65W–14346–00	7 – 31
6DN–14346–00	7 – 35
65W–14371–00	7 – 24

PART NO. N° PIECES	REF. NO.
65W–14373–02	7 – 17
	32 – 5
65W–14379–00	7 – 19
6BL–14380–00	7 – 30
65W–14384–00	7 – 25
	32 – 8
67C–14397–00	7 – 21
	32 – 6
65W–14398–00	7 – 27
	32 – 9
65W–1439G–00	7 – 18
6BL–14440–00	6 – 10
62Y–14485–00	4 – 15
63V–14523–00	7 – 9
6AH–14546–00	7 – 13
	32 – 3
6H4–14548–00	7 – 16
	32 – 4
67C–14555–00	7 – 22
67C–14567–00	7 – 32
6BL–14571–10	19 – 34
65W–14572–00	7 – 3
65W–14807–00	7 – 34
67C–14923–20	7 – 20
6BL–14943–28	7 – 11
65W–14947–90	7 – 10
676–14948–05	7 – 6
679–14966–00	7 – 7
65W–14980–20	7 – 26
63V–14985–00	7 – 12
	32 – 11
65W–14992–00	7 – 28
6BL–15100–01	2 – 2
6BL–15121–00–1S	2 – 9
65W–15311–03–CA	24 – 1
69W–15312–00	24 – 2
	33 – 3
65W–15316–00	24 – 4
6BL–15362–00	24 – 15
6G8–15363–00	4 – 29
6BL–15373–00	6 – 13
6BL–15377–00	24 – 16
6BL–15663–00	2 – 10
	31 – 8
6YK–24201–03	27 – 1
6YK–24260–01	27 – 4
6YL–24268–01	27 – 2
6G1–24304–02	9 – 32

PART NO. N° PIECES	REF. NO.
6YL–24306–54	27 – 7
6BL–24311–00	9 – 23
61N–24329–00	9 – 35
6YL–24329–00	27 – 6
6BL–24364–00	18 – 13
62Y–24374–01	9 – 10
688–24378–00	2 – 20
6C5–24378–00	18 – 9
6BL–24396–00	18 – 11
62Y–24410–04	9 – 1
62Y–24411–02	9 – 3
6C5–24414–00	9 – 11
62Y–24415–01	9 – 2
62Y–24423–00	9 – 4
62Y–24444–01	9 – 7
62Y–24454–00	9 – 6
6C5–24471–00	9 – 8
6BL–24481–00	9 – 21
61N–24521–00	9 – 15
61N–24560–10	9 – 14
61N–24563–10	9 – 16
6D5–24566–00	9 – 18
6YK–24610–01	27 – 3
6AH–26364–00	19 – 3
62Y–28100–00	9 – 36
67F–2812A–00	12 – 7
6BP–28199–74–D0	9 – 37
6BP–28199–74–E0	9 – 37
6BP–28199–74–F0	9 – 37
6BP–28199–74–G0	9 – 37
6BP–28199–74–H0	9 – 37
6BP–28199–74–S0	9 – 37
6BP–28199–84–K0	9 – 38
6BP–28199–84–L0	9 – 38
6BP–28199–84–M0	9 – 38
6BP–28199–84–N0	9 – 38
6BP–28199–84–P0	9 – 38
6BP–28199–84–R0	9 – 38
6BL–41113–00–1S	2 – 16
6BL–41114–00	2 – 27
	31 – 10
68U–41131–00–CA	23 – 12
67C–41133–00	23 – 11
	33 – 6
67C–41137–13–CA	23 – 1
6DN–41211–00	19 – 33
6J8–41262–00	19 – 31
6DN–41283–00	19 – 30

PART NO. N° PIECES	REF. NO.
6BL–41638–00	19 – 28
6G1–41662–01–94	19 – 4
6BG–42384–00	18 – 3
65W–42511–11–4D	21 – 1
648–42528–00	21 – 23
6DN–42610–11	1 – 1
6BL–42613–00	1 – 2
6CJ–42615–00	1 – 11
6BL–42617–00	8 – 13
6BG–42649–00	1 – 7
6BL–42651–00	1 – 4
6BL–42652–00	1 – 8
6BG–42662–00	1 – 17
6BP–42675–10	1 – 14
6BP–42676–10	1 – 15
6DN–42677–10	1 – 12
6BP–42681–00	1 – 13
6AH–42697–10	1 – 16
6BP–42710–00–4D	17 – 1
62Y–42716–00	17 – 7
61A–42717–00	17 – 6
65W–42717–00	17 – 5
6G1–42725–00	15 – 15
6BL–42725–01	17 – 9
65W–42726–10	17 – 33
6H1–42726–21	18 – 1
68U–42727–00	17 – 22
6BL–42727–00	17 – 10
6BP–42741–00	17 – 23
6BG–42748–00	17 – 3
60V–42756–00	17 – 24
6BL–42761–00	17 – 8
6BP–42769–00	17 – 31
6AH–42794–40	17 – 36
6AH–42794–50	17 – 37
6BL–42815–00–4D	17 – 12
6BG–42816–00	17 – 17
6BG–42851–00	1 – 6
65W–43111–10–4D	20 – 1
65W–43112–10–4D	20 – 2
63D–43131–01	20 – 9
66T–43144–00	17 – 19
6E5–43145–01	28 – 8
65W–43191–00	20 – 4
65W–43192–00	20 – 3
65W–43311–10–4D	20 – 7
65W–43373–00	21 – 24
65W–43800–03–4D	22 – 1

PART NO. N° PIECES	REF. NO.
6T4–43802–03	22 – 31
65W–43804–01	22 – 3
65W–43805–01	22 – 5
6T4–43808–00	22 – 66
65W–4380F–01	22 – 13
65W–4380K–00	22 – 17
65W–4380L–00	22 – 28
65W–43810–00	22 – 18
65W–43812–00	22 – 19
6H1–43816–00	22 – 26
65W–43817–00	22 – 41
65W–4381B–00	22 – 23
6H1–43829–00	22 – 63
65W–4382A–00	22 – 49
65W–43830–00	22 – 38
65W–43831–00	22 – 37
65W–43840–00	22 – 16
62X–43841–00	22 – 35
65W–43843–00	22 – 56
65W–43844–00	22 – 50
6H1–43844–10	22 – 58
6H1–43845–00	22 – 45
6H1–43847–00	22 – 47
6H1–4384F–10	22 – 59
65W–43851–00	22 – 51
65W–43853–00	22 – 62
6T4–43853–00	22 – 39
65W–43854–00	22 – 48
65W–43855–00	22 – 54
6H1–43856–10	22 – 57
6H1–43861–10	22 – 21
	22 – 24
6D8–43863–00	22 – 46
65W–43865–00	22 – 20
6H1–43866–01	22 – 32
65W–4386A–00	22 – 60
65W–4386K–01	22 – 11
65W–4386L–00	22 – 12
65W–43871–00	22 – 22
6H1–43875–00	22 – 44
62X–43878–00	22 – 64
65W–43879–01	22 – 14
65W–4387G–00	22 – 6
65W–43880–01	22 – 2
65W–43881–01	22 – 7
65W–43882–01	22 – 15
65W–43887–01	22 – 4
65W–43888–00	22 – 29

NUMERICAL INDEX
INDEX NUMERIQUE

PART NO. N° PIECES	REF. NO.
65W–43891–01	22 – 10
65W–43892–01	22 – 9
66R–44114–00	19 – 10
65W–44116–00	19 – 9
6BL–44121–00	19 – 1
6BL–44125–00	19 – 17
6BL–44142–00	19 – 12
6BP–44143–10	19 – 14
65W–44150–11	25 – 57
6BL–44173–00	19 – 7
65W–44176–00	25 – 18
6BL–44192–00	19 – 22
61N–44311–01	25 – 10
	33 – 23
61N–44322–01	25 – 12
	33 – 25
61N–44323–00	25 – 15
	33 – 28
65W–44328–11	25 – 9
6H4–44352–02	25 – 13
	33 – 26
65W–44361–12	26 – 1
61N–44362–10	25 – 7
6L2–44367–00	25 – 11
	33 – 11
	33 – 24
6BL–44391–00	17 – 32
67C–44514–20–94	21 – 10
66T–44526–30	21 – 11
65W–44551–11–4D	21 – 13
65W–44555–00	21 – 14
65W–44575–01	21 – 15
6D5–45111–10–4D	23 – 15
61N–45127–00	25 – 24
65W–45128–00	23 – 20
	33 – 7
65W–45151–00	23 – 18
6L2–45214–00	26 – 9
6L2–45215–00	26 – 10
65W–45251–00	20 – 18
61N–45251–01	25 – 29
65W–45300–11–4D	25 – 1
61N–45311–02–4D	25 – 2
61N–45315–00	25 – 25
	33 – 14
65W–45331–00–CA	25 – 22
688–45341–10	25 – 32
61N–45361–01–4D	25 – 50

PART NO. N° PIECES	REF. NO.
61N–45371–00	26 – 7
61N–45510–10	25 – 34
61N–45536–00	25 – 5
61N–45551–00	25 – 36
61N–45560–10	25 – 40
6L2–45567–00	25 – 39
6L2–45567–10	25 – 39
6L2–45567–20	25 – 39
6L2–45567–30	25 – 39
6L2–45567–40	25 – 39
61N–45571–00	25 – 48
6L2–45577–00	25 – 49
6L2–45577–10	25 – 49
6L2–45577–20	25 – 49
6L2–45577–30	25 – 49
61N–45587–00	25 – 4
61N–45587–10	25 – 4
61N–45587–20	25 – 4
61N–45587–30	25 – 4
61N–45587–40	25 – 4
61N–45587–50	25 – 4
61N–45587–60	25 – 4
61N–45587–70	25 – 4
65W–45611–00	25 – 41
664–45631–02	25 – 43
648–45633–00	25 – 45
648–45635–00	25 – 42
664–45941–01	26 – 18
664–45943–01	26 – 18
664–45945–00	26 – 18
664–45947–01	26 – 18
664–45949–02	26 – 18
664–45952–00	26 – 18
664–45954–01	26 – 18
664–45970–00	26 – 18
664–45972–00	26 – 18
6L2–45987–01	26 – 13
689–45997–00	26 – 14
6C5–46241–00	8 – 6
6BL–46297–00	8 – 11
703–48152–00	30 – 58
703–48153–00	30 – 3
703–48189–00	30 – 17
703–48198–00	30 – 14
703–48205–A6	29 – 1
	30 – 1
703–48211–02	30 – 62
703–48212–00	30 – 59

PART NO. N° PIECES	REF. NO.
703–48213–00	30 – 60
703–48215–00	30 – 43
703–48218–00	30 – 65
703–48219–00	30 – 30
703–48221–00	30 – 57
703–48222–00	30 – 27
703–48223–00	30 – 28
703–48225–00	30 – 29
703–48226–00	30 – 26
703–48227–00	30 – 24
703–48232–00	30 – 63
703–48234–00	30 – 18
703–48235–00	30 – 4
703–48236–00	30 – 16
703–48238–00	30 – 22
703–48243–00	30 – 15
703–48244–00	30 – 21
703–48245–00	30 – 11
703–48246–00	30 – 23
701–48248–00	30 – 13
703–48252–00	30 – 12
703–48261–01	30 – 2
703–48264–00	30 – 6
703–48265–00	30 – 9
703–48268–00	30 – 5
703–48271–00	30 – 61
703–48281–00	30 – 31
703–48282–00	30 – 32
703–48284–00	30 – 53
701–48287–00	30 – 42
703–48291–10	30 – 39
703–48293–10	30 – 41
701–48310–90	29 – 2
701–48320–00	29 – 2
701–48320–20	29 – 2
701–48320–50	29 – 2
663–48344–00	19 – 26
	19 – 38
703–48345–01	30 – 19
703–48358–00	30 – 20
65W–48511–01	21 – 26
6BL–48538–00	17 – 34
6BG–61350–00	28 – 1
68V–81315–00	12 – 15
6BL–81337–00	10 – 12
6BG–81800–00	16 – 1
6BG–81807–00	16 – 3
6BG–81810–00	16 – 11

PART NO. N° PIECES	REF. NO.
6BG–81820–00	16 – 13
6BL–81822–00	13 – 12
6BL–81823–00	13 – 16
6BG–81826–00	16 – 15
6BL–8182A–00	13 – 7
6BG–8182J–00	16 – 14
6BG–81830–00	16 – 2
6BG–81832–00	16 – 7
6BG–81836–00	16 – 4
6BG–81839–00	16 – 10
6AW–8183T–00	16 – 6
6BL–8183X–00	13 – 9
6P2–8183X–00	14 – 6
6BG–81840–00	16 – 12
6BG–81846–00	16 – 16
6BG–81850–00	16 – 9
6BG–81857–00	16 – 8
6BG–81891–00	16 – 5
6BL–81925–00	13 – 8
68T–81940–00	13 – 4
6BG–81941–00	16 – 17
6BL–81942–00	14 – 3
6BL–81948–00	11 – 3
6BL–81949–00	14 – 5
63P–81950–00	14 – 1
6BL–81960–00	13 – 1
6AH–81994–40	10 – 16
6AH–81994–50	10 – 19
6AH–81995–40	10 – 17
6AH–81995–50	10 – 20
6AG–81996–00	10 – 18
6BL–82105–00	13 – 18
6G5–82119–10	13 – 6
6U0–82127–00	20 – 21
65W–82127–10	21 – 19
6H1–82148–00	20 – 20
67F–82151–00	15 – 9
67F–82151–10	15 – 10
67C–82155–00	12 – 8
67F–8215B–10	15 – 11
67F–8215B–20	15 – 12
65W–82181–00	22 – 8
6A0–82317–00	11 – 4
6AH–82370–00	12 – 2
6BL–82388–00	15 – 5
6BL–82389–00	12 – 19
6BL–82398–00	4 – 31
64J–82504–00	12 – 14

PART NO. N° PIECES	REF. NO.
703–82510–12	30 – 44
703–82531–00	30 – 47
703–82532–00	30 – 46
703–82540–00	30 – 51
703–82542–00	30 – 64
6BL–82554–00	11 – 12
682–82556–00	30 – 49
69J–82563–00	15 – 16
703–82563–02	30 – 56
688–82575–01	30 – 48
676–82577–00	30 – 45
69J–82587–00	15 – 17
688–8258A–20	30 – 50
6BL–82590–00	15 – 8
703–82591–00	30 – 54
703–82592–00	30 – 55
703–82594–00	30 – 25
703–83383–B0	30 – 52
6BL–8339X–00	12 – 9
6H4–83589–00	15 – 2
63P–83614–01	15 – 18
62Y–84301–00	15 – 1
67C–85415–00	15 – 20
6BL–85510–00	10 – 2
6BL–85540–00	11 – 1
6BL–85550–00	10 – 1
6BG–85561–00–94	10 – 8
6F5–85570–13	12 – 1
6AH–85580–00	10 – 3
6CJ–85790–00	12 – 16
6BL–W0001–00	31 – 1
65W–W0001–23	33 – 1
61N–W0078–11	33 – 22
6BL–W0093–00	32 – 1
6BL–W009A–00–1S	4 – 1
6BL–W009B–00–1S	2 – 1
90101–06020	20 – 19
90101–08M86	21 – 9
90101–09M01	28 – 6
90101–12M65	20 – 32
90105–08060	5 – 18
90105–08M76	21 – 25
90105–09005	4 – 12
90105–10M12	26 – 5
90109–06047	1 – 9
90109–06266	9 – 13
90109–06M65	4 – 8
90109–06M86	15 – 6

PART NO. N° PIECES	REF. NO.
90109–06M86	15 – 19
	17 – 11
	17 – 20
	17 – 26
	17 – 35
	18 – 12
	18 – 14
90109–06MA1	6 – 14
90110–10M02	20 – 29
90116–10M70	21 – 22
90119–06025	8 – 16
90119–06M48	26 – 8
90119–06M61	17 – 2
90119–06MA3	4 – 13
90119–06MA5	2 – 28
90119–08132	23 – 17
90119–08M01	2 – 4
90119–10M14	21 – 17
90151–05M05	26 – 11
90157–05M16	27 – 5
90159–05M12	13 – 21
90167–05009	14 – 4
90170–06015	19 – 15
90170–09M03	28 – 4
90170–20137	3 – 12
	10 – 6
90171–14013	26 – 16
90179–08003	13 – 19
90179–10M14	25 – 37
90179–10M33	21 – 18
90179–35001	8 – 9
90185–05002	26 – 12
90185–06M05	1 – 10
90185–08045	21 – 7
90185–09M01	28 – 3
90185–10051	21 – 21
90185–10M13	20 – 31
90185–22043	20 – 12
90201–05M06	19 – 23
90201–06M31	19 – 19
	19 – 35
90201–08M00	20 – 25
90201–10120	21 – 27
90201–10144	8 – 5
90201–10M20	28 – 2
90201–10M63	28 – 7
90201–12062	20 – 33
90201–12426	20 – 34

PART NO. N° PIECES	REF. NO.
90201–12M07	17 – 16
90201–16014	5 – 17
90201–20417	25 – 47
90201–21M18	10 – 5
90201–22M03	20 – 11
90202–12060	26 – 2
90206–12052	17 – 15
90209–52M00	21 – 2
90249–12M38	20 – 15
90249–18M35	20 – 28
90250–05010	25 – 44
90254–03M05	19 – 2
	19 – 8
	19 – 13
90280–03024	25 – 35
	33 – 31
90280–03M01	8 – 10
	31 – 14
90340–08002	25 – 27
90340–14M06	2 – 35
	24 – 5
90340–18M09	2 – 33
90344–51003	2 – 7
90386–12M37	17 – 13
90386–12M98	20 – 14
90386–12MA0	20 – 13
90386–12MA2	17 – 14
90386–14MA1	20 – 6
90386–18M44	20 – 26
90386–18MA0	20 – 27
90386–22M15	20 – 10
90386–44M03	21 – 4
90386–44M99	21 – 6
90386–52M02	21 – 3
90387–06119	11 – 5
90387–06139	19 – 32
90387–06M43	17 – 30
90387–06M69	17 – 4
90387–06M86	19 – 18
90387–10M42	28 – 5
90430–06014	4 – 9
	31 – 2
90430–08020	25 – 28
	25 – 33
	33 – 16
	33 – 17
90430–10002	26 – 3
	33 – 21

PART NO. N° PIECES	REF. NO.
90430–14115	2 – 36
	12 – 18
	31 – 13
90430–14M09	24 – 6
	33 – 4
90430–18130	2 – 34
	31 – 12
90445–09057	2 – 19
	18 – 10
90445–09104	2 – 22
90445–09251	2 – 21
90445–10M20	9 – 24
90445–10MG7	9 – 25
90445–11153	18 – 7
90446–15003	9 – 30
90464–06001	4 – 32
90464–09018	12 – 6
90464–09023	4 – 25
90464–09M47	6 – 16
	12 – 17
90464–10M59	9 – 26
90464–11009	9 – 29
90464–12002	11 – 9
90464–12183	10 – 15
	11 – 7
90464–13227	9 – 31
90464–16001	15 – 13
90464–18001	13 – 20
	14 – 8
	15 – 14
90464–18246	11 – 8
	12 – 12
	15 – 7
90464–20181	12 – 13
	12 – 22
90465–06M90	14 – 10
90465–08M83	4 – 26
	6 – 5
90465–11M10	9 – 22
	14 – 9
	18 – 2
	18 – 8
90465–13M11	20 – 17
90467–09M17	9 – 27
90467–10M04	9 – 28
90468–10005	19 – 24
90468–18001	19 – 25
90468–18008	19 – 27

PART NO. N° PIECES	REF. NO.
90468–18008	19 – 39
90480–12314	8 – 12
90480–13M24	17 – 29
90480–16616	6 – 15
90480–25003	12 – 3
90501–10065	25 – 46
90501–10326	7 – 8
90506–18023	17 – 21
90508–20040	19 – 29
91318–04025	22 – 40
91490–30022	26 – 17
91690–30018	20 – 5
91690–50014	6 – 4
92903–06600	2 – 6
	2 – 12
	23 – 9
	24 – 10
	24 – 14
92903–08600	13 – 11
	13 – 15
92907–04600	4 – 18
92990–06300	25 – 31
92990–08200	5 – 19
92990–08600	30 – 34
92990–14200	26 – 15
92995–05600	10 – 11
	23 – 7
92995–06600	2 – 15
	4 – 21
	4 – 24
	4 – 28
	6 – 7
	9 – 34
	10 – 14
	11 – 11
	12 – 5
	12 – 11
	12 – 21
	13 – 3
	14 – 12
	15 – 4
	17 – 28
	19 – 6
	19 – 21
	20 – 23
	23 – 14
	25 – 17
	25 – 21

PART NO. N° PIECES	REF. NO.
92995–06600	33 – 30
92995–08200	21 – 8
92995–10600	20 – 30
	26 – 6
93101–20M07	25 – 54
	33 – 19
93101–22067	25 – 26
	33 – 15
93101–35002	3 – 14
	31 – 6
93102–37M40	8 – 17
	31 – 22
93102–43M42	3 – 13
	31 – 5
93110–16004	23 – 10
	33 – 5
93210–03478	22 – 53
93210–04N50	22 – 42
93210–04N51	22 – 43
93210–064A5	22 – 27
93210–06ME6	25 – 19
	33 – 13
93210–08006	22 – 52
93210–09165	22 – 36
93210–10M74	22 – 33
	22 – 65
93210–11073	22 – 55
93210–11368	22 – 25
93210–12N52	22 – 34
93210–13M63	2 – 32
	4 – 7
	31 – 11
93210–16275	28 – 9
93210–19MJ3	24 – 17
	31 – 19
93210–22164	33 – 10
93210–24M79	4 – 30
	9 – 12
	31 – 20
	31 – 21
93210–26130	25 – 8
	33 – 8
	33 – 9
93210–32738	9 – 17
93210–39ME4	6 – 11
	31 – 17
93210–43MJ0	21 – 5
93210–45161	25 – 14

PART NO. N° PIECES	REF. NO.
93210–45161	33 – 12
	33 – 27
93210–50768	22 – 30
93210–64ME7	25 – 52
	33 – 18
93210–65M50	25 – 55
	33 – 20
93306–00612	25 – 51
93315–22004	25 – 53
93315–220V7	25 – 6
93332–00005	25 – 38
93332–000W5	25 – 3
93430–06024	30 – 10
93450–17129	3 – 9
93501–08001	22 – 61
93604–10M03	2 – 18
	25 – 23
93605–17002	8 – 3
93606–11M24	26 – 4
93606–12019	2 – 3
	4 – 11
	24 – 3
93608–12M05	24 – 19
93700–06M03	20 – 8
94702–00418	4 – 33
95023–06025	10 – 9
95023–06030	10 – 7
95380–05600	9 – 9
	30 – 7
95380–05800	1 – 5
95380–06600	30 – 40
95380–06700	19 – 16
95380–08600	9 – 20
95380–12600	20 – 35
95817–10035	8 – 4
95895–06014	11 – 13
	19 – 11
95895–06016	24 – 18
95895–06030	11 – 6
95895–06035	25 – 30
95895–06100	6 – 12
95895–08016	9 – 19
97013–06016	24 – 9
97013–06020	23 – 8
97013–06025	2 – 5
	2 – 11
	24 – 13
97013–08045	13 – 10

PART NO. N° PIECES	REF. NO.
97013–08045	13 – 14
97075–06050	23 – 13
97080–08016	20 – 24
97095–05012	23 – 6
97095–05016	10 – 10
97095–06012	4 – 27
	17 – 18
97095–06014	17 – 27
	20 – 22
97095–06016	6 – 6
	11 – 10
	12 – 10
	12 – 20
	14 – 11
97095–06020	2 – 14
	4 – 20
	4 – 23
	10 – 13
	19 – 5
97095–06025	9 – 33
	12 – 4
	19 – 37
	25 – 20
97095–06035	19 – 20
97095–06040	13 – 2
	25 – 16
	33 – 29
97095–06065	19 – 36
97380–05025	30 – 8
97380–08030	30 – 33
97575–06520	11 – 2
	13 – 17
	14 – 2
	25 – 56
97575–06525	24 – 7
97575–08530	21 – 12
	23 – 16
97575–10580	21 – 16
97595–06555	6 – 3
97595–06610	13 – 5
	14 – 7
97780–50616	1 – 3
97780–60520	18 – 5
97803–04010	7 – 5
97880–05025	2 – 30
97885–06008	21 – 20
97885–06012	15 – 3
97980–04108	7 – 36

NUMERICAL INDEX
INDEX NUMERIQUE

PART NO. N° PIECES	REF. NO.	PART NO. N° PIECES	REF. NO.	PART NO. N° PIECES	REF. NO.	PART NO. N° PIECES	REF. NO.	PART NO. N° PIECES	REF. NO.	PART NO. N° PIECES	REF. NO.
97980–04114	7 – 29										
	32 – 10										
97980–04245	17 – 25										
97980–05216	23 – 19										
98507–04010	4 – 17										
98580–03015	30 – 38										
98580–04006	7 – 2										
	30 – 36										
98580–04008	7 – 15										
98580–04010	30 – 35										
98580–05010	30 – 37										
98980–05035	4 – 5										
99080–10600	20 – 16										
99590–10114	13 – 13										