YAMAHA

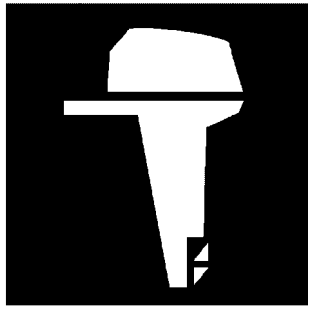

PARTS CATALOGUE
CATALOGUE DE PIECES DETACHEES

F350AET Y12 (6AW6)
FL350AET Y12 (6AX6)

YAMAHA
GENUINE
Parts & Accessories

1L6AW-300FA

( )

F350AET/FL350AET
PARTS CATALOGUE
©2024 by Yamaha Motor Co., Ltd.
1st edition, February 2024
All rights reserved.
Any reprinting or unauthorized use
without the written permission of
Yamaha Motor Co., Ltd.
is expressly prohibited.
Printed in Japan.

F350AET/FL350AET
CATALOGUE DE PIECES DETACHEES
©2024 par Yamaha Motor Co., Ltd.
1re édition, février 2024
Tous droits réservés
Toute réimpression ou utilisation
non autorisée sans la permission écrite
de Yamaha Motor Co., Ltd.
est formellement interdite.
Imprimé au Japon

FOREWORD

This Parts Catalogue is related to the parts for the model(s) on the cover page. When you are ordering replacement parts, please refer to this Parts Catalogue and quote both part numbers and part names correctly.

1. Modifications or additions which have been made after the issue of the Parts Catalogue will be announced in the Parts News.
   It is advisable that you make the necessary corrections to the Parts Catalogue according to the Parts News.

2. Abbreviations
   The following abbreviations are used in this Parts Catalogue.
   "UR" Use specified parts number.
   "UN" Use as many as needed.
   "AP" Alternate Parts
   "LM" Locally Made (Parts need to be ordered locally)
   "F#" Frame No. (Applicable machine No.)
   "O/S" Over Size

3. The number of components for assembly
   - Parts, which are to be supplied in an assembly, are listed with a dot (.) in front of the part name as shown below.
   - The numeral appearing to the right of each component part indicates the quantity of parts for each assembly unit.

PART NO.	DESCRIPTION	Q'TY	REMARKS
2F5–83310–60	FRONT FLASHER LIGHT ASSY	2	
115–83311–60	.BULB (6V–18W)	1	

4. Applicable colours of graphics are represented in the "REMARKS" as shown below.

PART NO.	DESCRIPTION	Q'TY	REMARKS
2N4–24110–00–X5	FUEL TANK COMP.	2	MXR
3J1–24240–10	.GRAPHIC, FUEL TANK	1	FOR MXR

5. Note that the illustrations for reference in finding parts numbers are not to be used for assembling. When assembling, please use the applicable service manual.

6. The asterisk (*) before a reference number indicates modified items after the first edition.

7. Applicable Serial No.
   Engine Serial No.

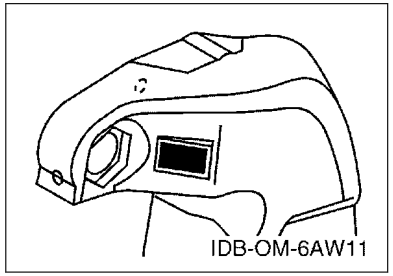

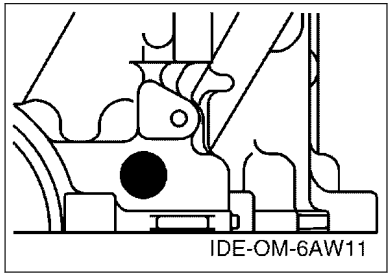

8. Applicable Engine Starting Serial No.

Model	Serial No.	Model	Serial No.
F350A	6AW-1006601	FL350A	6AX-1004130

9. Applicable Colour Code

Abbreviation	Colour Name	Colour Code
DBN1	DARK BLUISH GRAY 1	008D

10. Quantity Column Information

Column No.	Name Of Q'ty Column	Applicable Model
1	6AW6	F350AET
2	6AX6	FL350AET

AVANT–PROPOS

Ce catalogue de pièces détachées concerne les pièces pour le(s) modèle(s) indiqué(s) sur la page de couverture. Lorsque vous commandez des pièces de rechange, veuillez vous référer à ce catalogue de pieces détachées et indiquer clairement les numéros et les noms des pièces détachées.

1. Les modifications ou ajouts ayant été effectués après la parution du catalogue de pièces détachées seront décrits dans les Bulletins d'information concernant les pièces détachées.
   Il est recommandé que vous apportiez les corrections nécessaires au catalogue des pièces détachées en vous référant aux Bulletins d'information.

2. Abréviations
   Dans ce catalogue, les abréviations suivantes sont utilisées:
   "UR" Utiliser le numéro de pièces spécifié.
   "UN" Utiliser autant que nécessaire.
   "AP" Pièces de substitution
   "LM" Fabrication locale (les pièces doivent être commandées localement.)
   "F#" N° de cadre (applicable au N° de série)
   "O/S" Surdimensionné

3. Nombre de pièces d'un assemblage
   - Les pièces fournies comme composants d'un assemblage sont précédées d'un point (.) de la manière indiquée ci–dessous.
   - Le chiffre apparaissant à la droite de chaque composant indique la quantité de pièces pour chaque unité d'assemblage.

N° PIECES	DESCRIPTION	QTE	REMARQUES
2F5–83310–60	ENS. CLIGNOTANT AVANT	2	
115–83311–60	.AMPOULE (6V–18W)	1	

4. Les couleurs concernant les graphiques sont indiquées dans la colonne "REMARQUES", comme indiqué ci–dessous.

N° PIECES	DESCRIPTION	QTE	REMARQUES
2N4–24110–00–X5	RESERVOIR A ESSENCE.	2	MXR
3J1–24240–10	.GRAPHIQUE	1	POUR MXR

5. Veuillez noter que les illustrations sont indiquées à titre de référence pour trouver les numéros de pièces, non pour être utilisées lors de l'assemblage. Lors de l'assemblage, veuillez utiliser le manuel d'entretien adéquat.

6. L'astérisque (*) placé devant un numéro de référence indique des éléments qui ont été modifiés après la première édition.

7. N° de série applicable
   N° de Série du moteur

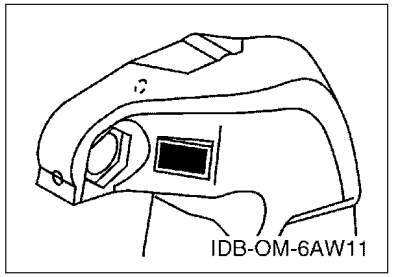

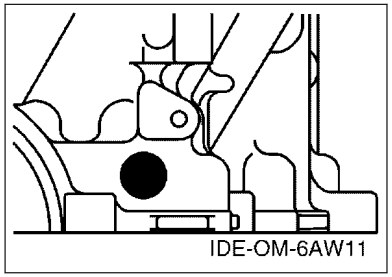

8. N° de série initial du moteur applicable

Modèle	N° de série	Modèle	N° de série
F350A	6AW-1006601	FL350A	6AX-1004130

9. Code couleur applicable

Abréviation	Nom de la couleur	Code couleur
DBN1	DARK BLUISH GRAY 1	008D

10. Informations relatives à la colonne Quantité

N° de la colonne	Nom de la colonne Qté	Modèle applicable
1	6AW6	F350AET
2	6AX6	FL350AET

CONTENTS

TOP COWLING..... 1
CYLINDER & CRANKCASE 1.....3
CRANKSHAFT & PISTON.....5
CYLINDER & CRANKCASE 2.....6
CYLINDER & CRANKCASE 3.....8
CYLINDER & CRANKCASE 4.....9
VALVE..... 10
INTAKE 1.....13
INTAKE 2.....15
INTAKE 3.....16
THROTTLE BODY ASSY 1.....18
THROTTLE BODY ASSY 2.....19
FUEL INJECTION PUMP 1..... 20
FUEL INJECTION PUMP 2..... 22
FUEL 1.....23
FUEL 2.....25
GENERATOR.....26
ELECTRICAL 1.....27
ELECTRICAL 2.....28
ELECTRICAL 3.....30
ELECTRICAL 4.....31
ELECTRICAL 5.....33
STARTING MOTOR..... 35
BOTTOM COWLING 1..... 36
BOTTOM COWLING 2..... 38
BOTTOM COWLING 3..... 40
CONTROL..... 41
BRACKET 1.....43
BRACKET 2.....46
POWER TRIM & TILT ASSY 1.....48
POWER TRIM & TILT ASSY 2.....51
UPPER CASING.....52
OIL PAN.....55
LOWER CASING & DRIVE 1..... 56
LOWER CASING & DRIVE 2..... 60
LOWER CASING & DRIVE 3..... 62
LOWER CASING & DRIVE 4..... 66
OPTIONAL PARTS 1.....68
OPTIONAL PARTS 2.....69
REPAIR KIT 1.....70
REPAIR KIT 2.....71

INDEX

NUMERICAL INDEX.....73

TABLE DES MATIERES

CAPOT SUPERIEUR..... 1
CYLINDRE & CARTER 1..... 3
VILEBREQUIN & PISTON.....5
CYLINDRE & CARTER 2..... 6
CYLINDRE & CARTER 3..... 8
CYLINDRE & CARTER 4..... 9
SOUPAPE..... 10
ADMISSION 1.....13
ADMISSION 2.....15
ADMISSION 3.....16
CARTER D'ACCELERATEUR 1.....18
CARTER D'ACCELERATEUR 2.....19
POMPE A INJECTEUR 1..... 20
POMPE A INJECTEUR 2..... 22
CARBURANT 1..... 23
CARBURANT 2..... 25
GENERATRICE.....26
PARTIE ELECTRIQUE 1.....27
PARTIE ELECTRIQUE 2.....28
PARTIE ELECTRIQUE 3.....30
PARTIE ELECTRIQUE 4.....31
PARTIE ELECTRIQUE 5.....33
DEMARREUR ELECTRIQUE.....35
CAPOT INFERIEUR 1.....36
CAPOT INFERIEUR 2.....38
CAPOT INFERIEUR 3.....40
COMMANDE..... 41
SUPPORT 1..... 43
SUPPORT 2..... 46
PUISSANCE PARER ET INCLINER 1..... 48
PUISSANCE PARER ET INCLINER 2..... 51
FOURREAU.....52
VENTILATEUR D'HUILE..... 55
BOITIER D'HELICE TRANSMISSION1.....56
BOITIER D'HELICE TRANSMISSION2.....60
BOITIER D'HELICE TRANSMISSION3.....62
BOITIER D'HELICE TRANSMISSION4.....66
PIECES OPTIONNELLES 1.....68
PIECES OPTIONNELLES 2.....69
KITS DE REPARATION 1..... 70
KITS DE REPARATION 2..... 71

INDEX

INDEX NUMERIQUE.....73

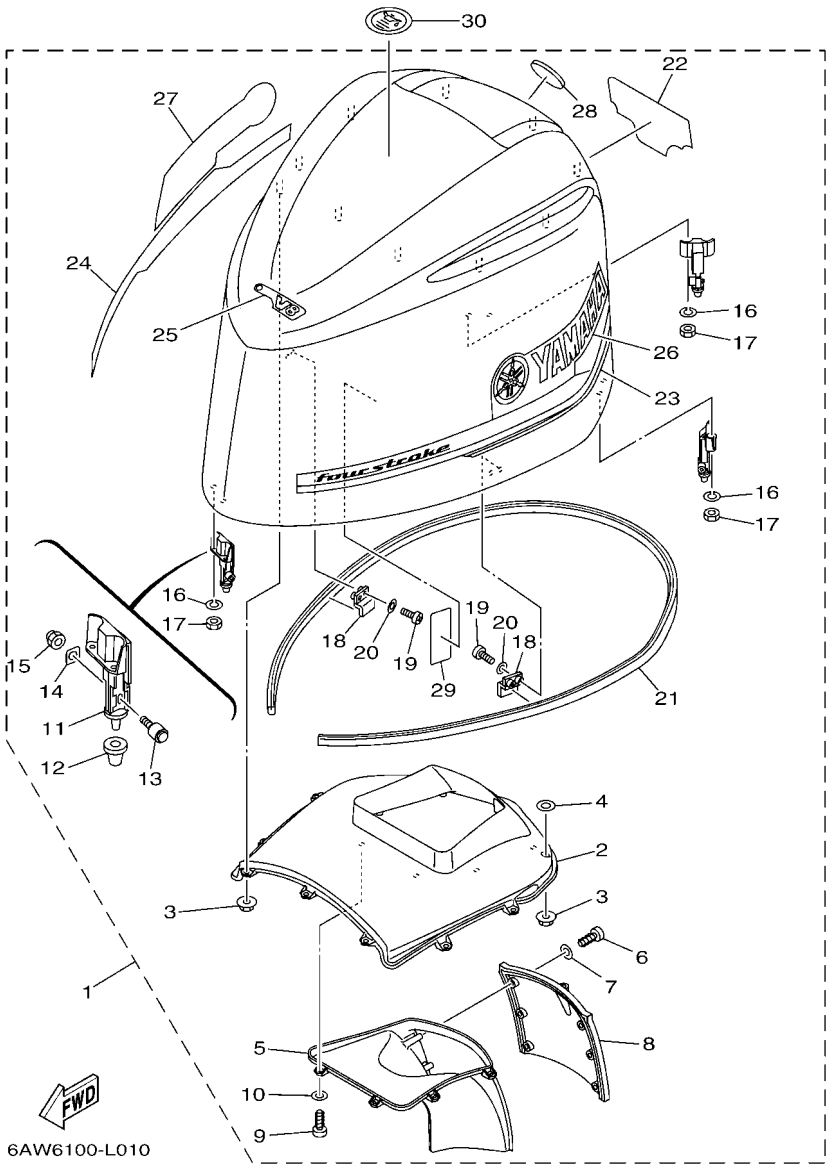

FIG. 1 TOP COWLING — CAPOT SUPERIEUR

REF. NO.	PART NO. N° PIECES	DESCRIPTION DESCRIPTION	6AW6	6AX6				REMARKS REMARQUES
1	6AW–42610–20	TOP COWLING ASSY CAPOT (ENS.)	1	1				
2	6AW–42613–00	.MOLDING, AIR DUCT .MANCHON A AIR	1	1				
3	90179–06M28	.NUT .ECROU	10	10				
4	6CB–42545–00	.WASHER, PLAIN .RONDELLE, PLATE	3	3				
5	6AW–42635–00	.DUCT, WATER SEPARATOR .CONDUIT, SEPARATEUR DE L'EAU	1	1				
6	97780–60516	.SCREW, TAPPING .VIS, TETE BOMBEE	6	6				
7	92995–06200	.WASHER .RONDELLE	6	6				
8	6AW–42532–00	.COVER .COUVERCLE	1	1				
9	97780–60516	.SCREW, TAPPING .VIS, TETE BOMBEE	7	7				
10	92995–06200	.WASHER .RONDELLE	7	7				
11	6AW–42647–00–9S	.HOLDER, CLAMP BAND .SUPPORT, SANDOW DE SERRAGE	3	3				
12	6AW–42663–00	.DAMPER .AMORTISSEUR	3	3				
13	6AW–4264A–00	.HOOK ASSY .CROCHET (ENS.)	3	3				
14	6AW–42646–10	.PLATE, CLAMP .PLAQUE, PRESSE	3	3				
15	95780–08300	.NUT, FLANGE .ECROU	3	3				
16	92990–06100	.WASHER, SPRING .RONDELLE, GROWER	6	6				
17	95380–06600	.NUT, HEXAGON .ECROU	6	6				
18	6AW–42477–00	.PLATE, LOCK .PLAQUE BUTEE	2	2				
19	97885–05010	.SCREW, PAN HEAD .VIS, A ENCOCHE	4	4				
20	92995–05600	.WASHER .RONDELLE	4	4				
21	6AW–42628–20	.SEAL .JOINT	1	1				
22	6AW–42678–00	.GRAPHIC, REAR .ADHESIF, ARRIERE	1	1				
23	6AW–42675–00	.GRAPHIC, SIDE 1 .EMBLEME	1	1				
24	6AW–42676–00	.GRAPHIC, SIDE 2 .EMBLEME	1	1				
25	6AW–42677–00	.GRAPHIC, FRONT .ADHESIF, AVANT	1	1				
26	6AW–42681–00	.MARK, COWLING .ADHESIF, CAPOT	1	1				
27	6AW–42682–00	.MARK, COWLING .ADHESIF, CAPOT	1	1				

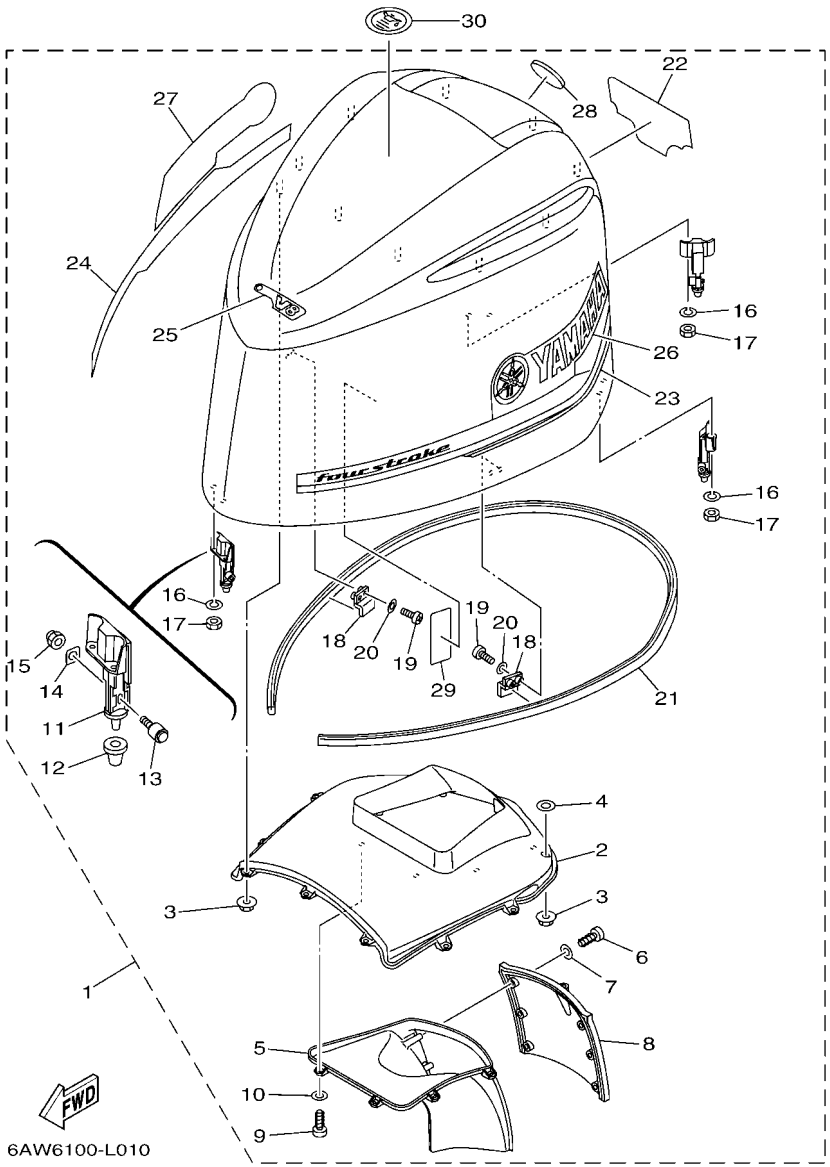

FIG. 1 TOP COWLING — CAPOT SUPERIEUR

REF. NO.	PART NO. N° PIECES	DESCRIPTION DESCRIPTION	6AW6	6AX6				REMARKS REMARQUES
28	6AW–42697–10	.TUNING FORK MARK .MARQUE, YAMAHA	1	1				
29	6AH–42735–00	.PROTECTOR .PROTECTEUR	1	1				
30	67F–13434–20	LABEL, CAUTION ETIQUETTE, ATTENTION	1	1				

FIG. 2 CYLINDER & CRANKCASE 1 — CYLINDRE & CARTER 1

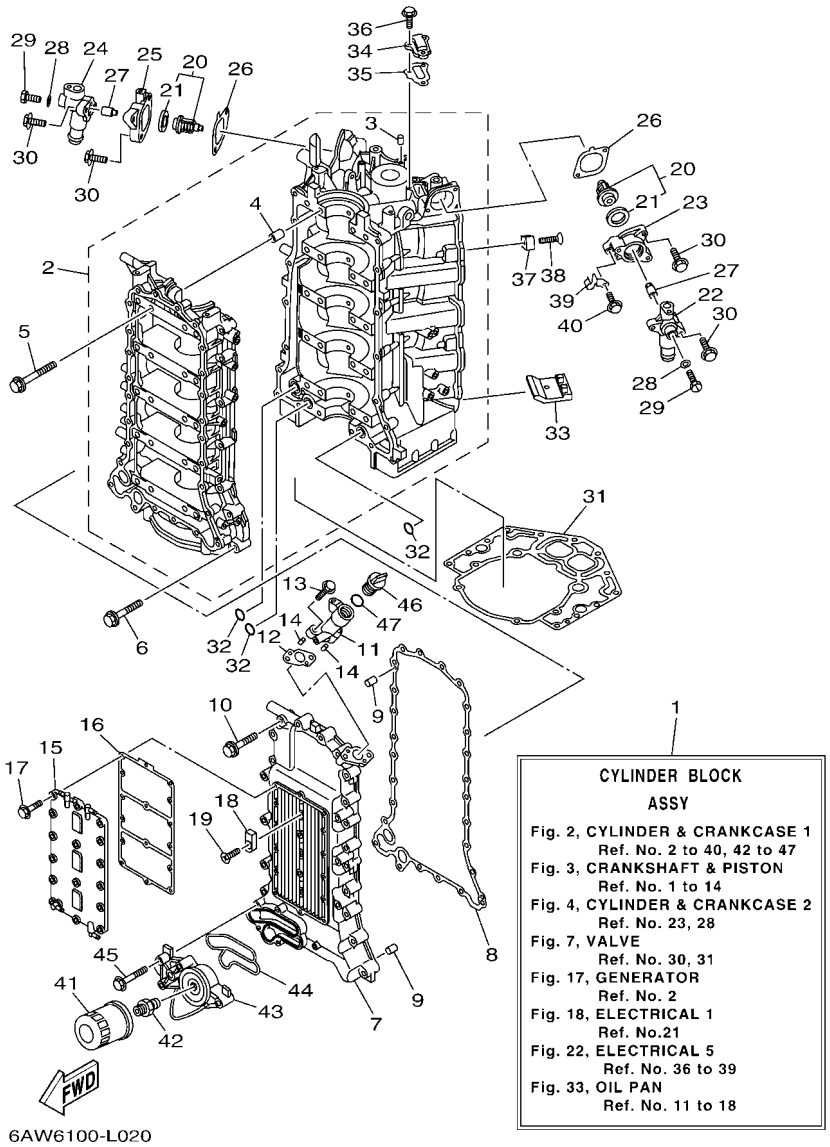

REF. NO.	PART NO. N° PIECES	DESCRIPTION DESCRIPTION	6AW6	6AX6				REMARKS REMARQUES
1	6AW–W009B–04–9S	CYLINDER BLOCK ASSY CYLINDRE GROUPE (ENS.)	1	1				OLD PART OLD PART
	6AW–W009B–05–9S	CYLINDER BLOCK ASSY CYLINDRE GROUPE (ENS.)	1	1				NEW PART NEW PART
2	6AW–15100–04	CRANKCASE ASSY CARTER DE MOTEUR COMPLET	1	1				
3	93606–12019	.PIN, DOWEL .GOUPILLE	3	3				
4	91814–18002	.PIN, DOWEL .GOUJON, D'ASSEMBLAGE	10	10				
5	6P2–15187–00	BOLT BOULON	20	20				
6	90105–08175	BOLT, FLANGE BOULON	18	18				
7	6AW–15411–02–9S	COVER, CRANKCASE 1 COUVERCLE 1, CARTER MOTEUR	1	1				
8	6AW–15451–00	GASKET, CRANKCASE COVER 1 JOINT, COUVERCLE DE CARTER 1	1	1				
9	93606–12019	PIN, DOWEL GOUPILLE	2	2				
10	90105–08175	BOLT, FLANGE BOULON	26	26				
11	6AW–15319–00–9S	JOINT JOINT	1	1				
12	6AW–15364–00	GASKET, OIL PLUG JOINT, PLOT D'HUILE	1	1				
13	90105–06155	BOLT, FLANGE BOULON	2	2				
14	93604–08062	PIN, DOWEL CLAVETTE	2	2				
15	6AW–15421–00–9S	COVER, CRANKCASE 2 COUVERCLE 2, CARTER MOTEUR	1	1				
16	6AW–15461–00	GASKET, CRANKCASE COVER 2 JOINT, COUVERCLE DE CARTER 2	1	1				
17	90105–06037	BOLT, FLANGE BOULON	16	16				
18	63P–11325–01	ANODE ANODE	3	3				
19	90151–06M02	SCREW, COUNTERSUNK VIS, TETE NOYEE	3	3				
20	6AW–12411–00	THERMOSTAT THERMOSTAT	2	2				
21	6AW–12412–00	.SEAL, THERMOSTAT .JOINT, THERMOSTAT	1	1				
22	6AW–12413–00–9S	COVER, THERMOSTAT COUVERCLE, THERMOSTAT	1	1				
23	6AW–12422–00–9S	COVER, HOUSING COUVERCLE DE CARTER DE POMPE	1	1				
24	6AW–1241B–00–9S	COVER, THERMOSTAT 2 COUVERCLE, THERMOSTAT 2	1	1				
25	6AW–1242B–00–9S	COVER, HOUSING 2 COUVERCLE DE CARTER DE POMPE 2	1	1				
26	6AW–12427–00	GASKET, HOUSING COVER 1 JOINT, COUVERCLE DE CARTER 1	2	2				

FIG. 2 CYLINDER & CRANKCASE 1 — CYLINDRE & CARTER 1

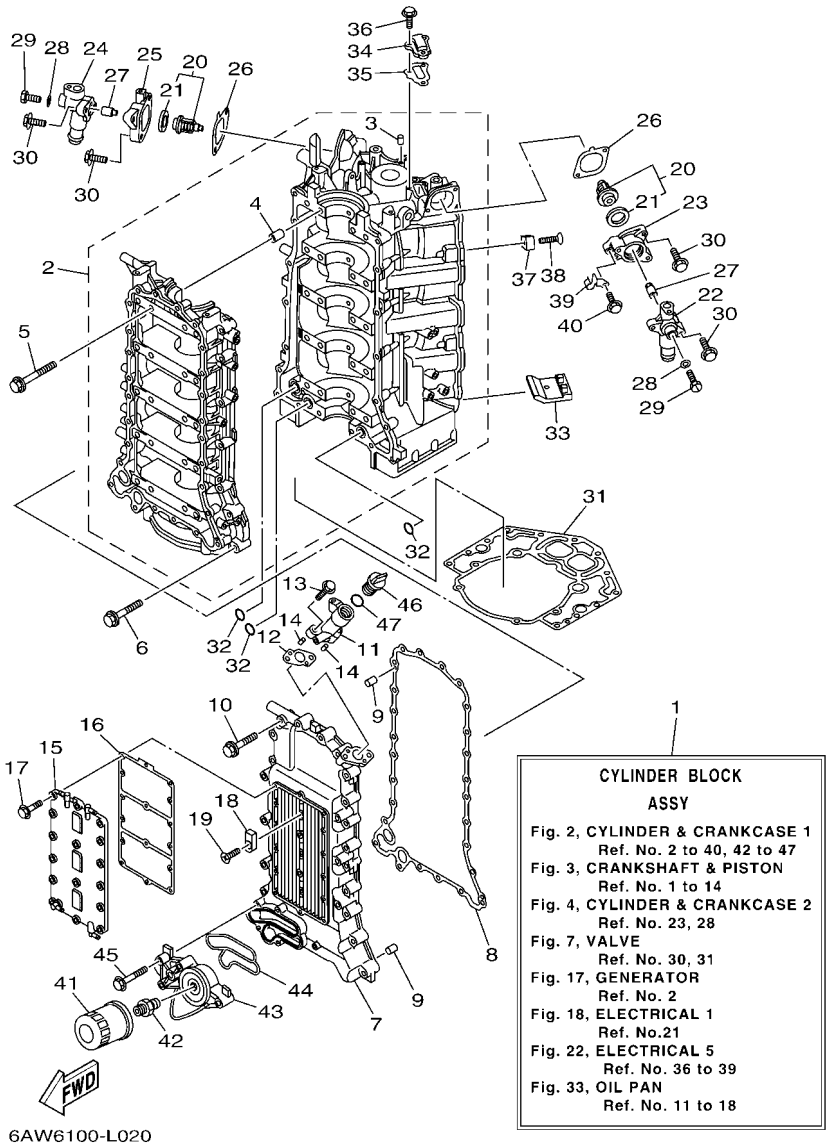

REF. NO.	PART NO. N° PIECES	DESCRIPTION DESCRIPTION	6AW6	6AX6				REMARKS REMARQUES
27	6AW–1132R–00	ANODE 6 ANODE 6	2	2				
28	90430–05002	GASKET JOINT	2	2				
29	90105–05012	BOLT, FLANGE BOULON	2	2				
30	90105–06028	BOLT, FLANGE BOULON	8	8				
31	6AW–11351–00	GASKET, CYLINDER JOINT, D'EMBASE	1	1				
32	93210–26658	O-RING JOINT TORIQUE	3	3				
33	6AW–14664–00	GROMMET, WATER SHUT PASSE-FIL	2	2				
34	6AW–1131M–00–9S	COVER COUVERCLE	1	1				
35	6AW–11381–00	GASKET 1 JOINT 1	1	1				
36	90105–06039	BOLT, FLANGE BOULON	3	3				
37	6AW–1132P–00	ANODE 5 ANODE 5	8	8				
38	98780–06530	SCREW, FLAT HEAD VIS A TETE FRAISEE	8	8				
39	90462–12008	CLAMP BRIDE	1	1				
40	95895–06012	BOLT, FLANGE BOULON	1	1				
41	N26–13440–00	ELEMENT ASSY, OIL CLEANER ELEMENT, FILTRE A HUILE	1	1				
42	90401–19001	BOLT, UNION BOULON, RACCORD	1	1				
43	6AW–13446–00–9S	CONNECTOR CONNECTEUR	1	1				
44	6AW–13477–00	GASKET JOINT	1	1				
45	95885–06045	BOLT, FLANGE BOULON, A COLLERETTE	5	5				
46	6G8–15363–00	PLUG, OIL PLOT, HUILE	1	1				
47	93210–24M79	O-RING JOINT TORIQUE	1	1				

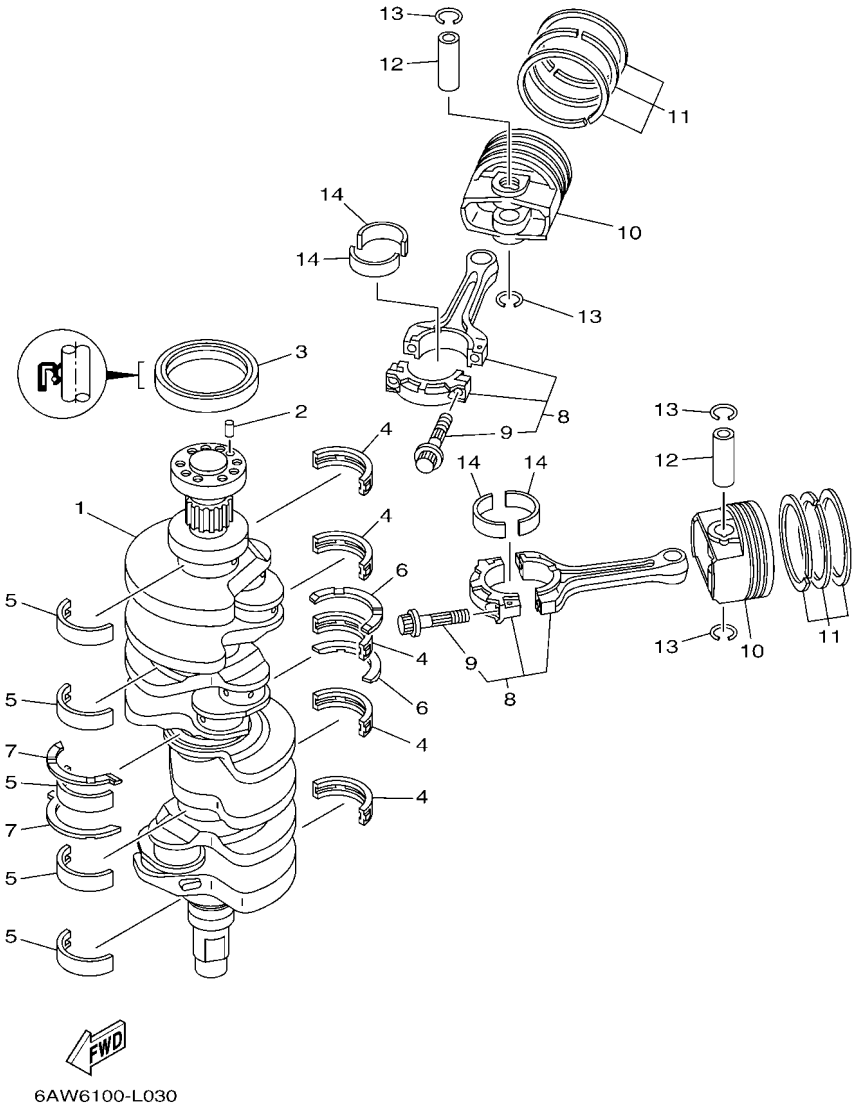

FIG. 3 CRANKSHAFT & PISTON — VILEBREQUIN & PISTON

REF. NO.	PART NO. N° PIECES	DESCRIPTION DESCRIPTION	6AW6	6AX6				REMARKS REMARQUES
1	6AW–11411–10	CRANKSHAFT VILEBREQUIN COMPLET	1	1				
2	93606–12019	PIN, DOWEL GOUPILLE	1	1				
3	93102–85004	OIL SEAL JOINT SPY	1	1				
4	6AW–11416–00	PLANE BEARING, CRANKSHAFT 1 COUSSINET DE VILEBREQUIN 1	5	5				UR YELLOW UR YELLOW
	6AW–11416–10	PLANE BEARING, CRANKSHAFT 1 COUSSINET DE VILEBREQUIN 1	5	5				UR GREEN UR GREEN
	6AW–11416–20	PLANE BEARING, CRANKSHAFT 1 COUSSINET DE VILEBREQUIN 1	5	5				UR BROWN UR BROWN
	6AW–11416–30	PLANE BEARING, CRANKSHAFT 1 COUSSINET DE VILEBREQUIN 1	5	5				UR BLACK UR BLACK
	6AW–11416–40	PLANE BEARING, CRANKSHAFT 1 COUSSINET DE VILEBREQUIN 1	5	5				UR BLUE UR BLUE
5	6AW–11417–00	PLANE BEARING, CRANKSHAFT 2 COUSSINET DE VILEBREQUIN 2	5	5				UR YELLOW UR YELLOW
	6AW–11417–10	PLANE BEARING, CRANKSHAFT 2 COUSSINET DE VILEBREQUIN 2	5	5				UR GREEN UR GREEN
	6AW–11417–20	PLANE BEARING, CRANKSHAFT 2 COUSSINET DE VILEBREQUIN 2	5	5				UR BROWN UR BROWN
	6AW–11417–30	PLANE BEARING, CRANKSHAFT 2 COUSSINET DE VILEBREQUIN 2	5	5				UR BLACK UR BLACK
	6AW–11417–40	PLANE BEARING, CRANKSHAFT 2 COUSSINET DE VILEBREQUIN 2	5	5				UR BLUE UR BLUE
6	6AW–11426–00	BEARING, THRUST 1 ROULEMENT DE BUTEE 1	2	2				OLD PART OLD PART
	6AW–11426–01	BEARING, THRUST 1 ROULEMENT DE BUTEE 1	2	2				NEW PART NEW PART
7	6AW–11427–00	BEARING, THRUST 2 ROULEMENT DE BUTEE 2	2	2				OLD PART OLD PART
	6AW–11427–01	BEARING, THRUST 2 ROULEMENT DE BUTEE 2	2	2				NEW PART NEW PART
8	6AW–W1165–00	CONNECTING ROD ASSY BIELLE COMPLETTE	8	8				
9	63P–11654–10	.BOLT, CONNECTING ROD .BOULON, BIELLE	2	2				
10	6AW–11631–10–93	PISTON (STD) PISTON (STD)	8	8				
11	6AW–11603–00	PISTON RING SET (STD) JEU DE SEGMENTS (STD)	8	8				
12	63P–11633–10	PIN, PISTON AXE, PISTON	8	8				
13	63P–11634–00	CLIP, PISTON PIN AGRAFE, AXE DE PISTON	16	16				
14	6AW–11656–00	PLANE BEARING, CONNECTING ROD ROULEMENT DE BIELLE	16	16				UR GREEN UR GREEN
	6AW–11656–10	PLANE BEARING, CONNECTING ROD ROULEMENT DE BIELLE	16	16				UR BLUE UR BLUE
	6AW–11656–20	PLANE BEARING, CONNECTING ROD ROULEMENT DE BIELLE	16	16				UR RED UR RED
	6AW–11656–30	PLANE BEARING, CONNECTING ROD ROULEMENT DE BIELLE	16	16				UR PURPLE UR PURPLE

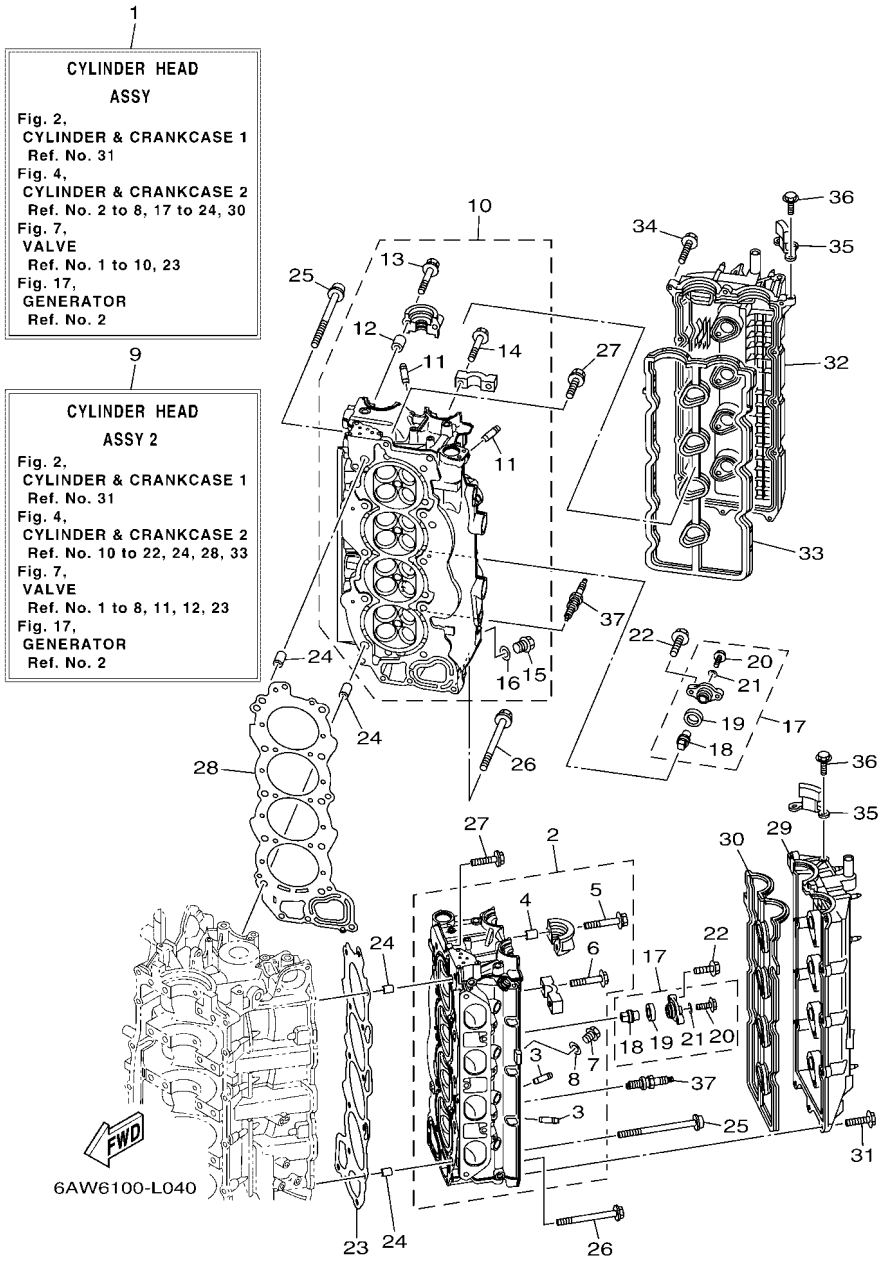

FIG. 4 CYLINDER & CRANKCASE 2 — CYLINDRE & CARTER 2

REF. NO.	PART NO. N° PIECES	DESCRIPTION DESCRIPTION	6AW6	6AX6				REMARKS REMARQUES
1	6AW–W009A–01–9S	CYLINDER HEAD ASSY CULASSE (ENS.)	1	1				
2	6AW–11110–10	CYLINDER HEAD ASSY JEU DE CULASSE	1	1				
3	6S5–11133–10	.GUIDE, VALVE 1 .GUIDE, SOUPAPE 1	16	16				
4	91809–08006	.PIN, DOWEL .GOUJON, D'ASSEMBLAGE	4	4				
5	90119–07001	.BOLT, WITH WASHER .BOULON, AVEC RONDELLE	4	4				
6	90119–07234	.BOLT, WITH WASHER .BOULON, AVEC RONDELLE	16	16				
7	90340–18M09	.PLUG, STRAIGHT SCREW .PLOT, FILETE DROIT	1	1				
8	90430–18130	.GASKET .JOINT	1	1				
9	6AW–W009C–01–9S	CYLINDER HEAD ASSY 2 CULASSE 2	1	1				
10	6AW–11120–10	CYLINDER HEAD ASSY 2 CULASSE 2	1	1				
11	6S5–11133–10	.GUIDE, VALVE 1 .GUIDE, SOUPAPE 1	16	16				
12	91809–08006	.PIN, DOWEL .GOUJON, D'ASSEMBLAGE	4	4				
13	90119–07001	.BOLT, WITH WASHER .BOULON, AVEC RONDELLE	4	4				
14	90119–07234	.BOLT, WITH WASHER .BOULON, AVEC RONDELLE	16	16				
15	90340–18M09	.PLUG, STRAIGHT SCREW .PLOT, FILETE DROIT	1	1				
16	90430–18130	.GASKET .JOINT	1	1				
17	67F–11301–00	ANODE COVER ASSY COUVERCLE ANODE (ENS.)	10	10				
18	67F–11325–01	.ANODE .ANODE	1	1				
19	67F–11328–00	.GROMMET, ANODE .PASSE-FIL	1	1				
20	90105–06M07	.BOLT, FLANGE .BOULON	1	1				
21	90430–06M03	.GASKET .JOINT	1	1				
22	95885–08025	BOLT, FLANGE BOULON, A COLLERETTE	20	20				
23	6AW–11181–00	GASKET, CYLINDER HEAD 1 JOINT, DE CULASSE 1	1	1				
24	90387–11005	COLLAR COLLERETTE	4	4				
25	90155–11002	SCREW, FLAT FILLISTER VIS, TETE OVALE PLATE	20	20				
26	90105–08220	BOLT, FLANGE BOULON	6	6				
27	90119–08115	BOLT, WITH WASHER BOULON, AVEC RONDELLE	2	2				

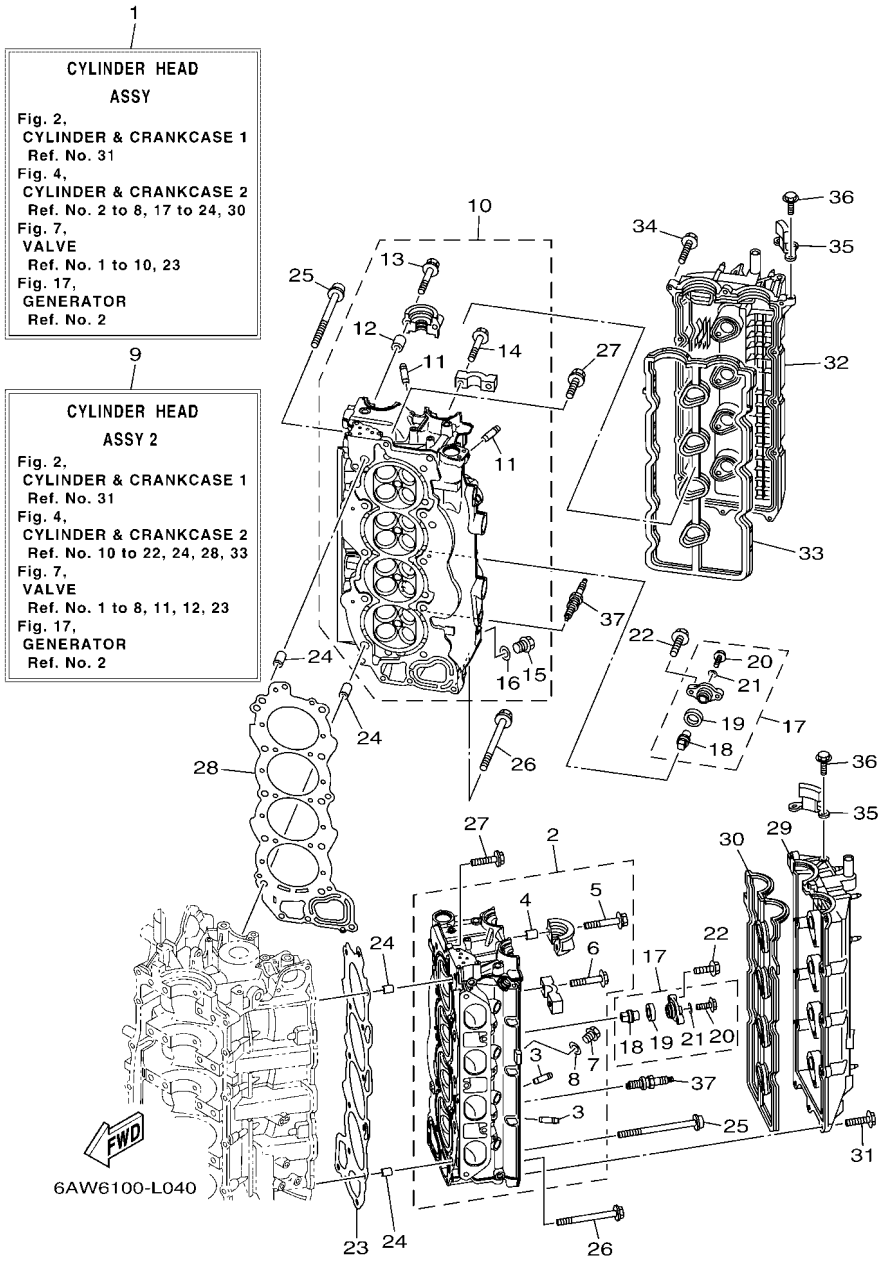

FIG. 4 CYLINDER & CRANKCASE 2 — CYLINDRE & CARTER 2

REF. NO.	PART NO. N° PIECES	DESCRIPTION DESCRIPTION	6AW6	6AX6				REMARKS REMARQUES
28	6AW–11182–00	GASKET, CYLINDER HEAD 2 JOINT, CULASSE 2	1	1				
29	6AW–11191–10	COVER, CYLINDER HEAD 1 COUVERCLE, CULASSE 1	1	1				
30	6AW–11193–10	GASKET, HEAD COVER 1 JOINT, COUVERCLE DE CULASSE 1	1	1				
31	95895–06030	BOLT, FLANGE BOULON	16	16				
32	6AW–11192–10	COVER, CYLINDER HEAD 2 COUVERCLE, CULASSE 2	1	1				
33	6AW–11194–10	GASKET, HEAD COVER 2 JOINT, COUVERCLE DE CULASSE 2	1	1				
34	95895–06030	BOLT, FLANGE BOULON	16	16				
35	6AW–15142–00	GUIDE 1 GUIDE 1	2	2				
36	95885–06014	BOLT, FLANGE BOULON, A COLLERETTE	4	4				
37	94702–00400	PLUG, SPARK (NGK LFR6A-11) BOUGIE D'ALLUMAGE(NGK LFR6A-11	8	8				

FIG. 5 CYLINDER & CRANKCASE 3 — CYLINDRE & CARTER 3

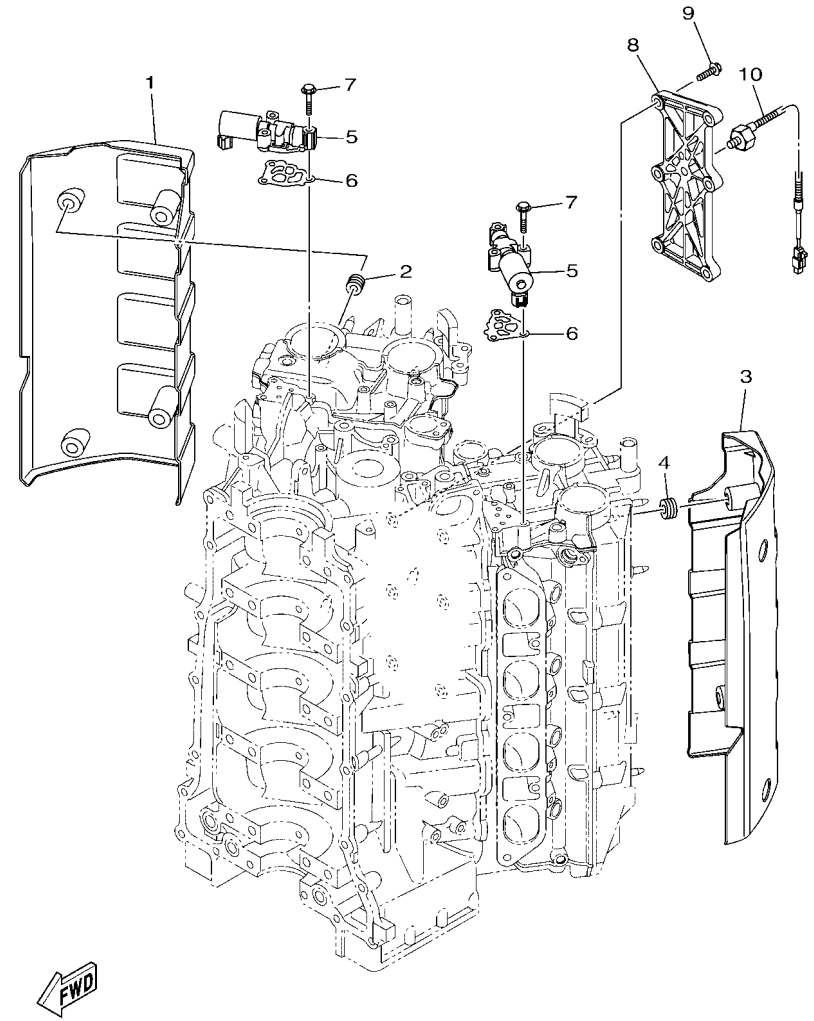

6AW6100-L050

REF. NO.	PART NO. N° PIECES	DESCRIPTION DESCRIPTION	6AW6	6AX6				REMARKS REMARQUES
1	6AW–11186–10	COVER, CYLINDER HEAD SIDE 2 COUVERCLE LATERAL DE CULASSE 2	1	1				
2	90480–12314	GROMMET PASSE-FIL	4	4				
3	6AW–11187–10	COVER, CYLINDER HEAD SIDE 3 COUVERCLE LATERAL DE CULASSE 3	1	1				
4	90480–12314	GROMMET PASSE-FIL	4	4				
5	6CB–86120–00	SOLENOID VALVE ASSY SOLENOIDE	2	2				
6	6CB–1242F–00	GASKET, FILTER JOINT, FILTRE	2	2				
7	90105–06035	BOLT, FLANGE BOULON	6	6				
8	6AW–1135A–00	BRACKET SUPPORT	1	1				
9	90105–08240	BOLT, FLANGE BOULON	6	6				
10	6P2–85780–00	SENSOR, KNOCK SONDE DE COGNEMENT	1	1				

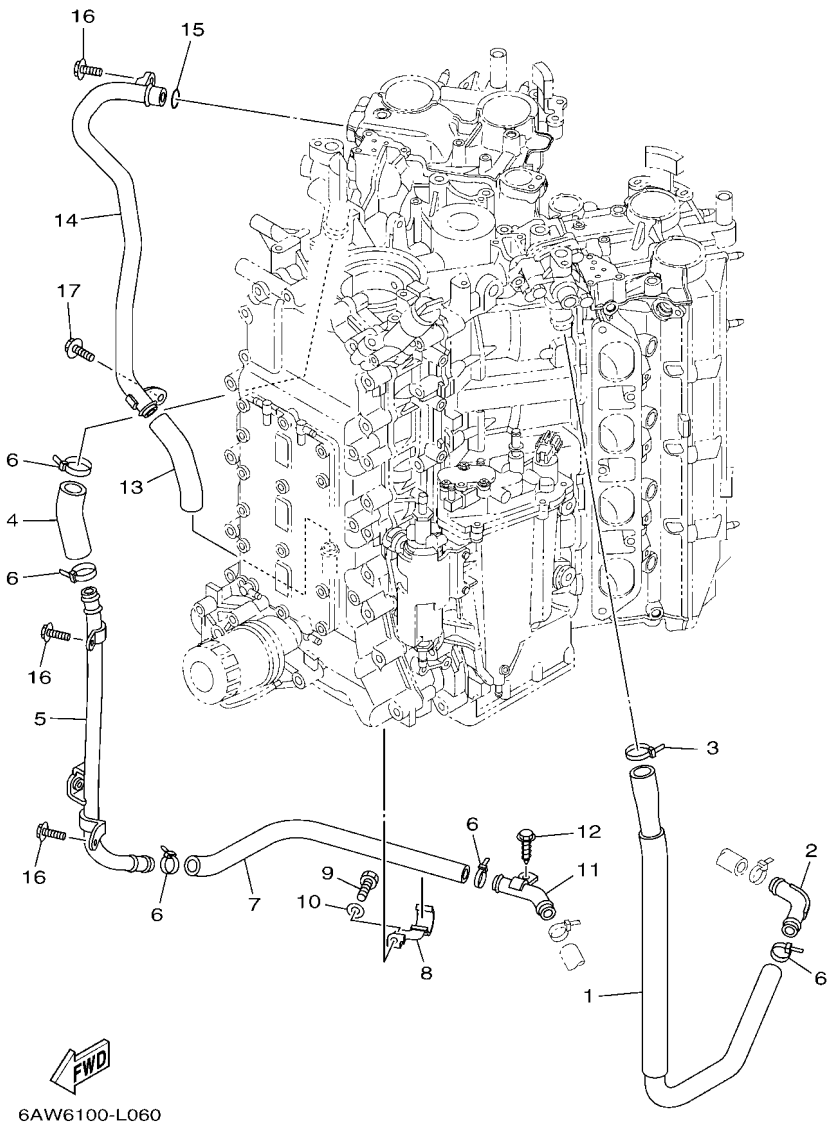

FIG. 6 CYLINDER & CRANKCASE 4 — CYLINDRE & CARTER 4

REF. NO.	PART NO. N° PIECES	DESCRIPTION DESCRIPTION	6AW6	6AX6				REMARKS REMARQUES
1	6AW–1243A–00	HOSE 1 DURITE 1	1	1				
2	6AW–12477–00	PIPE 7 DURITE 7	1	1				
3	90465–11M59	CLAMP BRIDE	1	1				
4	6AW–1243E–00	HOSE 2 DURITE 2	1	1				
5	6AW–12484–00	PIPE 4 DURITE 4	1	1				
6	90465–11M59	CLAMP BRIDE	5	5				
7	6AW–1244G–00	HOSE, 4 DURITE 4	1	1				
8	6AW–12491–10	CLAMP 1 COLLIER 1	1	1				
9	97095–06014	BOLT BOULON	1	1				
10	92995–06600	WASHER RONDELLE	1	1				
11	6AW–12476–00	PIPE 6 DURITE 6	1	1				
12	90109–06M86	BOLT BOULON	1	1				
13	6AW–1244J–00	HOSE 6 DURITE 6	1	1				
14	6AW–11378–00	HOSE 2 2 DURITE	1	1				
15	93210–207A0	O-RING JOINT TORIQUE	1	1				
16	95885–06014	BOLT, FLANGE BOULON, A COLLERETTE	3	3				
17	95885–06010	BOLT, FLANGE BOULON, A COLLERETTE	1	1				

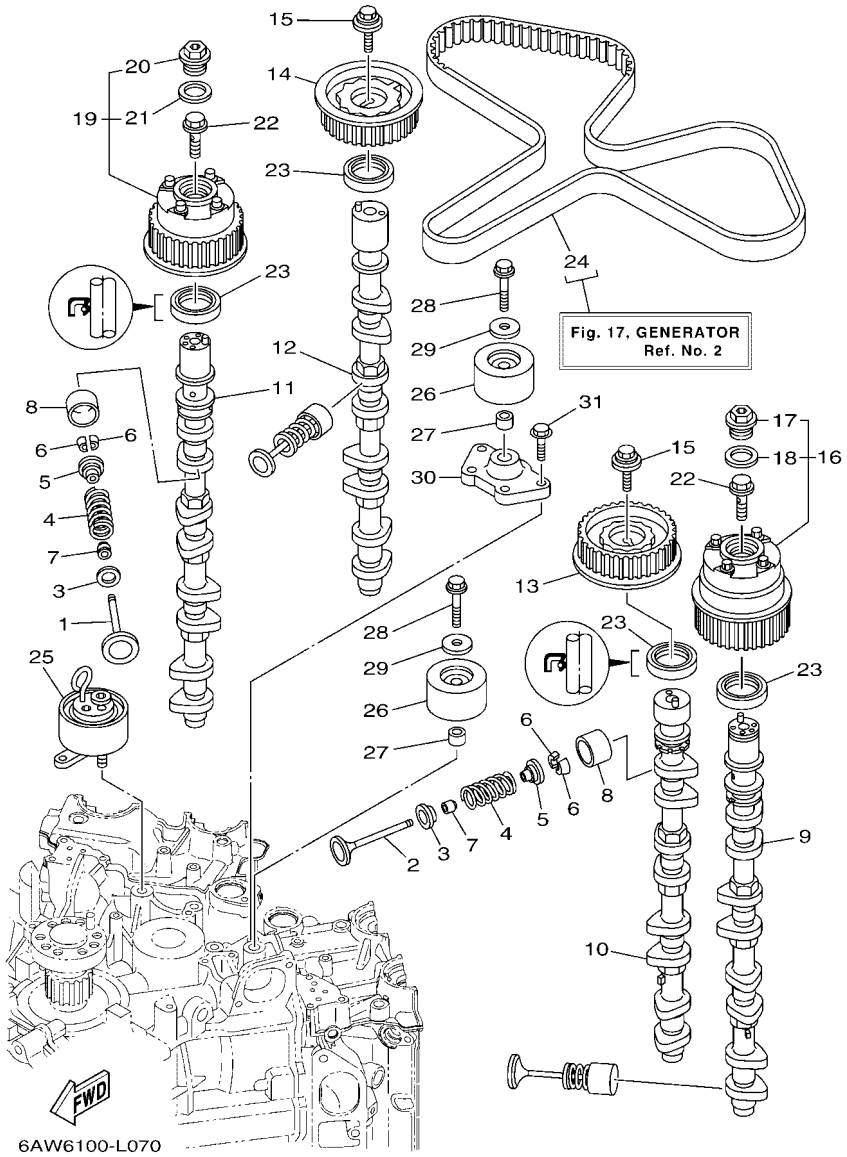

FIG. 7 VALVE SOUPAPE

REF. NO.	PART NO. N° PIECES	DESCRIPTION DESCRIPTION	6AW6	6AX6				REMARKS REMARQUES
1	6CB–12111–00	VALVE, INTAKE SOUPAPE, ADMISSION	16	16				
2	6CB–12121–00	VALVE, EXHAUST SOUPAPE, ECHAPPEMENT	16	16				
3	K0F–A3743–00	SEAT, VALVE SPRING SIEGE, RESSORT DE SOUPAPE	32	32				
4	6CB–12113–00	SPRING, VALVE INNER RESSORT DE SOUPAPE, INTERNE	32	32				
5	K0F–A3741–00	RETAINER, VALVE SPRING BUTEE DE RESSORT DE SOUPAPA	32	32				
6	K0F–A3742–00	LOCK, VALVE SPRING RETAINER FRAISE, SOUPAPE	64	64				
7	51Y–12119–00	SEAL, VALVE STEM JOINT, QUEUE DE SOUPAPE	32	32				
8	K0F–A3751–00	LIFTER, VALVE (3.000) LEVE-SOUPAPE (3.000)	32	32				UR UR
	K0F–A3751–10	LIFTER, VALVE (3.025) LEVE-SOUPAPE (3.025)	32	32				UR UR
	K0F–A3751–20	LIFTER, VALVE (3.050) LEVE-SOUPAPE (3.050)	32	32				UR UR
	K0F–A3751–30	LIFTER, VALVE (3.075) LEVE-SOUPAPE (3.075)	32	32				UR UR
	K0F–A3751–40	LIFTER, VALVE (3.100) LEVE-SOUPAPE (3.100)	32	32				UR UR
	K0F–A3751–50	LIFTER, VALVE (3.122) LEVE-SOUPAPE (3.122)	32	32				UR UR
	K0F–A3751–60	LIFTER, VALVE (3.142) LEVE-SOUPAPE (3.142)	32	32				UR UR
	K0F–A3751–70	LIFTER, VALVE (3.162) LEVE-SOUPAPE (3.162)	32	32				UR UR
	K0F–A3751–80	LIFTER, VALVE (3.182) LEVE-SOUPAPE (3.182)	32	32				UR UR
	K0F–A3751–90	LIFTER, VALVE (3.202) LEVE-SOUPAPE (3.202)	32	32				UR UR
	K0F–A3751–A0	LIFTER, VALVE (3.222) LEVE-SOUPAPE (3.222)	32	32				UR UR
	K0F–A3751–B0	LIFTER, VALVE (3.242) LEVE-SOUPAPE (3.242)	32	32				UR UR
	K0F–A3751–C0	LIFTER, VALVE (3.262) LEVE-SOUPAPE (3.262)	32	32				UR UR
	K0F–A3751–D0	LIFTER, VALVE (3.282) LEVE-SOUPAPE (3.282)	32	32				UR UR
	K0F–A3751–E0	LIFTER, VALVE (3.302) LEVE-SOUPAPE (3.302)	32	32				UR UR
	K0F–A3751–F0	LIFTER, VALVE (3.322) LEVE-SOUPAPE (3.322)	32	32				UR UR
	K0F–A3751–G0	LIFTER, VALVE (3.342) LEVE-SOUPAPE (3.342)	32	32				UR UR
	K0F–A3751–H0	LIFTER, VALVE (3.362) LEVE-SOUPAPE (3.362)	32	32				UR UR
	K0F–A3751–J0	LIFTER, VALVE ((3.382) LEVE-SOUPAPE ((3.382)	32	32				UR UR
	K0F–A3751–K0	LIFTER, VALVE (3.402) LEVE-SOUPAPE (3.402)	32	32				UR UR

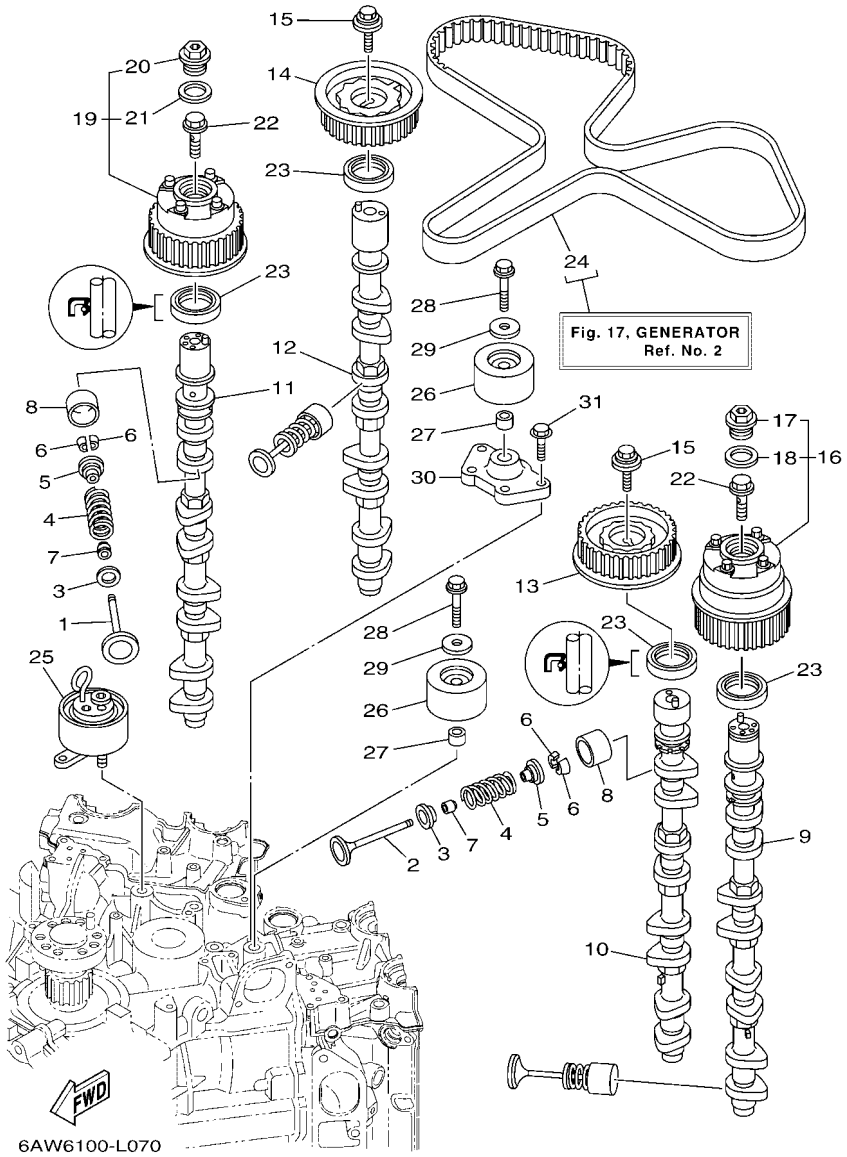

FIG. 7 VALVE — SOUPAPE

REF. NO.	PART NO. N° PIECES	DESCRIPTION DESCRIPTION	6AW6	6AX6				REMARKS REMARQUES
8	K0F–A3751–L0	LIFTER, VALVE (3.422) LEVE-SOUPAPE (3.422)	32	32				UR UR
	K0F–A3751–M0	LIFTER, VALVE (3.442) LEVE-SOUPAPE (3.442)	32	32				UR UR
	K0F–A3751–N0	LIFTER, VALVE (3.462) LEVE-SOUPAPE (3.462)	32	32				UR UR
	K0F–A3751–P0	LIFTER, VALVE (3.482) LEVE-SOUPAPE (3.482)	32	32				UR UR
	K0F–A3751–R0	LIFTER, VALVE (3.502) LEVE-SOUPAPE (3.502)	32	32				UR UR
	K0F–A3751–S0	LIFTER, VALVE (3.522) LEVE-SOUPAPE (3.522)	32	32				UR UR
	K0F–A3751–T0	LIFTER, VALVE (3.542) LEVE-SOUPAPE (3.542)	32	32				UR UR
	K0F–A3753–00	LIFTER, VALVE (3.562) LEVE-SOUPAPE (3.562)	32	32				UR UR
	K0F–A3753–10	LIFTER, VALVE (3.582) LEVE-SOUPAPE (3.582)	32	32				UR UR
	K0F–A3753–20	LIFTER, VALVE (3.602) LEVE-SOUPAPE (3.602)	32	32				UR UR
	K0F–A3753–30	LIFTER, VALVE (3.625) LEVE-SOUPAPE (3.625)	32	32				UR UR
	K0F–A3753–40	LIFTER, VALVE (3.650) LEVE-SOUPAPE (3.650)	32	32				UR UR
	K0F–A3753–50	LIFTER, VALVE (3.675) LEVE-SOUPAPE (3.675)	32	32				UR UR
	K0F–A3753–60	LIFTER, VALVE (3.700) LEVE-SOUPAPE (3.700)	32	32				UR UR
	K0F–A3753–70	LIFTER, VALVE (3.725) LEVE-SOUPAPE (3.725)	32	32				UR UR
9	6AW–12171–10	CAMSHAFT 1 ARBRE A CAMES 1	1	1				
10	6AW–12181–10	CAMSHAFT 2 ARBRE A CAMES 2	1	1				
11	6AW–12172–10	CAMSHAFT 3 ARBRE A CAMES 3	1	1				
12	6AW–12182–10	CAMSHAFT 4 ARBRE A CAMES 4	1	1				
13	6AW–11537–00	GEAR, DRIVEN PIGNON SECONDAIRE	1	1				
14	6AW–11567–00	GEAR, DRIVEN 2 PIGNON SECONDAIRE 2	1	1				
15	90119–10050	BOLT, WITH WASHER BOULON, AVEC RONDELLE	2	2				
16	6AW–12645–00	PULLEY ASSY 1 POULIE COMPLET 1	1	1				
17	6P2–12623–00	.BOLT .BOULON	1	1				
18	6P2–12663–00	.GASKET .JOINT	1	1				
19	6AW–1264A–00	PULLEY ASSY 2 POULIE COMPLET 2	1	1				
20	6P2–12623–00	.BOLT .BOULON	1	1				

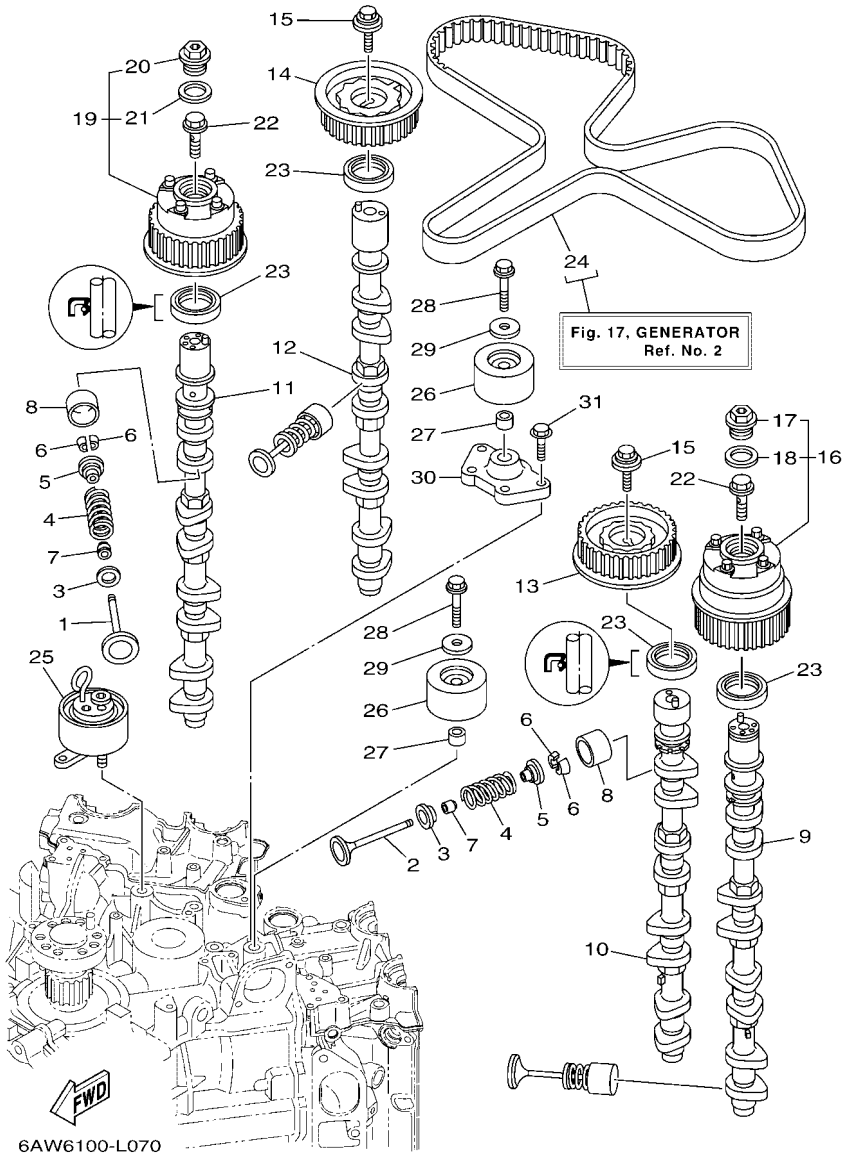

FIG. 7 VALVE SOUPAPE

REF. NO.	PART NO. N° PIECES	DESCRIPTION DESCRIPTION	6AW6	6AX6				REMARKS REMARQUES
21	6P2–12663–00	.GASKET .JOINT	1	1				
22	6P2–12615–00	BOLT BOULON	2	2				
23	93102–38008	OIL SEAL JOINT SPY	4	4				
24	6AW–W4624–00	BELT (WITH ROTOR BOLTS) COURROIE (AVEC BOULON)	1	1				
25	6P2–11590–01	TENSIONER ASSY TENDEUR (ENS.)	1	1				
26	6P2–15512–00	GEAR, IDLER 1 PIGNON, INTERMEDIAIRE 1	2	2				
27	99530–14016	PIN, DOWEL GOUJON, D'ASSEMBLAGE	2	2				
28	90119–10M07	BOLT, WITH WASHER BOULON, AVEC RONDELLE	2	2				
29	90201–10M01	WASHER, PLATE RONDELLE, PLATE	2	2				
30	6AW–15544–00	STAY 1 SUPPORT 1	1	1				
31	90105–08178	BOLT, FLANGE BOULON	4	4				

FIG. 8 INTAKE 1 — ADMISSION 1

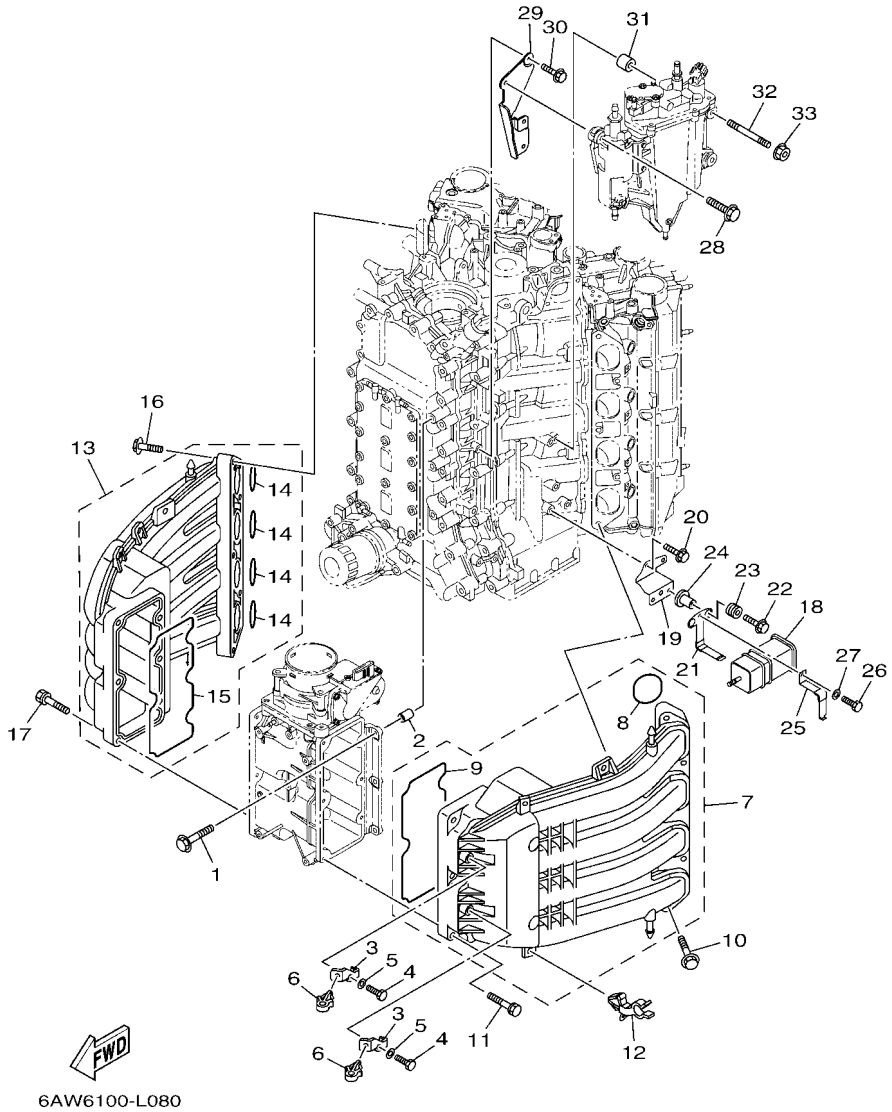

REF. NO.	PART NO. N° PIECES	DESCRIPTION DESCRIPTION	6AW6	6AX6				REMARKS REMARQUES
1	95875–08035	BOLT, FLANGE BOULON, A COLLERETTE	6	6				
2	99530–10114	PIN, DOWEL GOUJON, D'ASSEMBLAGE	2	2				
3	6AW–13782–00	STAY SUPPORT	2	2				
4	97095–06012	BOLT BOULON	2	2				
5	92995–06600	WASHER RONDELLE	2	2				
6	90464–09023	CLAMP BRIDE	2	2				
7	6AW–13641–10	MANIFOLD, INTAKE 1 TUBULURE, ADMISSION 1	1	1				
8	6AW–13645–00	.GASKET, MANIFOLD 1 .JOINT, TUBULURE 1	4	4				
9	6AW–13646–00	.GASKET, MANIFOLD 2 .JOINT, TUBULURE 2	1	1				
10	90119–08022	BOLT, WITH WASHER BOULON, AVEC RONDELLE	5	5				
11	90119–06MA6	BOLT, WITH WASHER BOULON, AVEC RONDELLE	5	5				
12	90464–17006	CLAMP BRIDE	2	2				
13	6AW–13641–10	MANIFOLD, INTAKE 1 TUBULURE, ADMISSION 1	1	1				
14	6AW–13645–00	.GASKET, MANIFOLD 1 .JOINT, TUBULURE 1	4	4				
15	6AW–13646–00	.GASKET, MANIFOLD 2 .JOINT, TUBULURE 2	1	1				
16	90119–08022	BOLT, WITH WASHER BOULON, AVEC RONDELLE	5	5				
17	90119–06MA6	BOLT, WITH WASHER BOULON, AVEC RONDELLE	5	5				
18	6P2–24170–00	CANISTER ASSY BANDE, RASERVOIR A ESSENCE	1	1				
19	6AW–2134X–10	BRACKET, CANISTER SUPPORT	1	1				
20	95875–06016	BOLT, FLANGE BOULON, A COLLERETTE	2	2				
21	69J–2134X–00	BRACKET, CANISTER SUPPORT	1	1				
22	90119–06M17	BOLT, WITH WASHER BOULON, AVEC RONDELLE	2	2				
23	90480–10M23	GROMMET PASSE-FIL	2	2				
24	90387–06M60	COLLAR COLLERETTE	2	2				
25	69J–2419A–01	HOLDER SUPPORT	1	1				
26	97095–06016	BOLT BOULON	1	1				
27	92995–06600	WASHER RONDELLE	1	1				

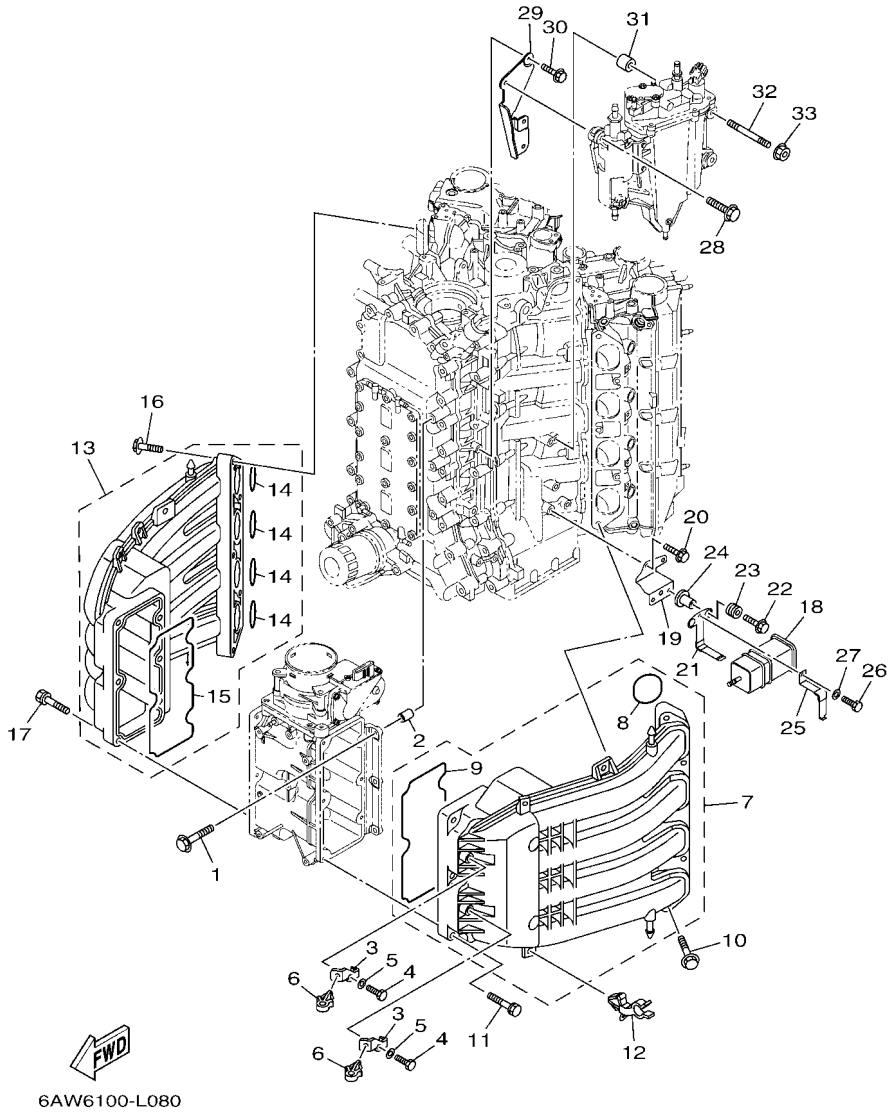

FIG. 8 INTAKE 1 — ADMISSION 1

REF. NO.	PART NO. N° PIECES	DESCRIPTION DESCRIPTION	6AW6	6AX6				REMARKS REMARQUES
28	90119–06M24	BOLT, WITH WASHER BOULON, AVEC RONDELLE	2	2				
29	6AW–24419–00	BRKT., SEPARATOR SUPPORT	1	1				
30	95875–06016	BOLT, FLANGE BOULON, A COLLERETTE	2	2				
31	90387–06276	COLLAR COLLERETTE	2	2				
32	90116–06046	BOLT, STUD GOUJON	2	2				
33	90179–06M28	NUT ECROU	2	2				

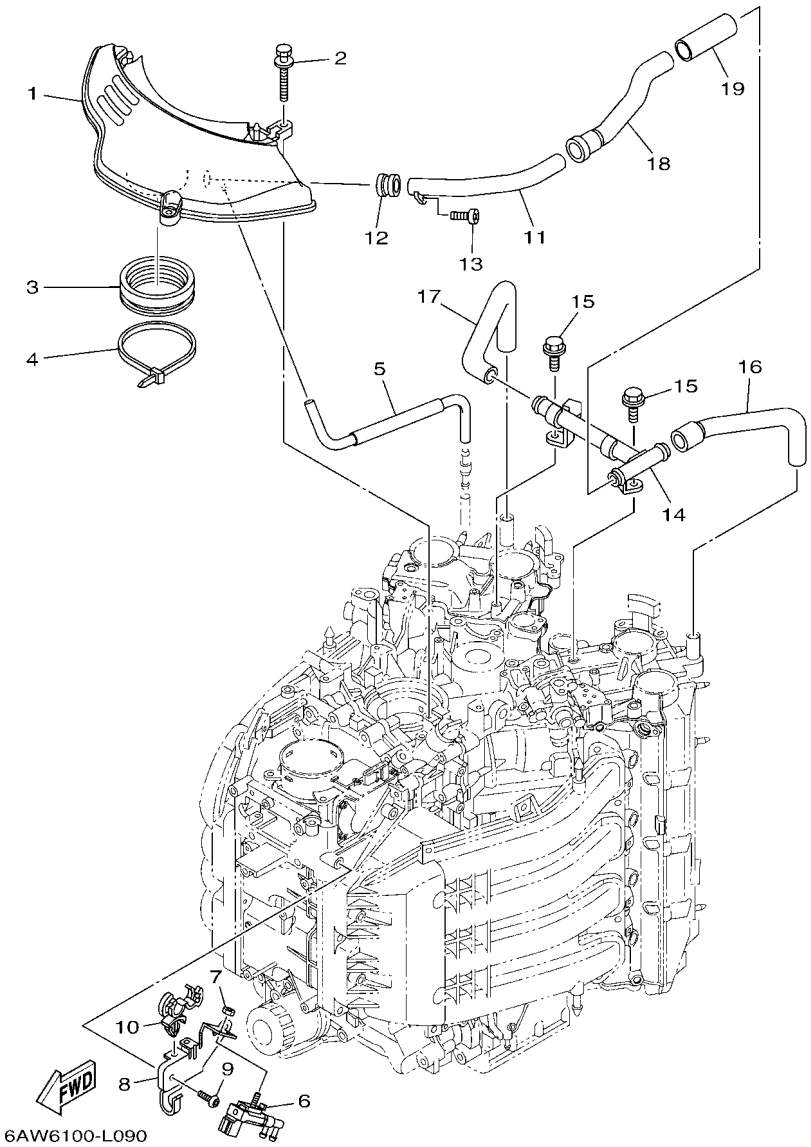

FIG. 9 INTAKE 2 — ADMISSION 2

REF. NO.	PART NO. N° PIECES	DESCRIPTION DESCRIPTION	6AW6	6AX6				REMARKS REMARQUES
1	6AW–14440–00	SILENCER ASSY, INTAKE SIENCIEUX D'ADMISSION	1	1				
2	90119–06M35	BOLT, WITH WASHER BOULON, AVEC RONDELLE	3	3				
3	6AW–1441J–00	PIPE, SILENCER DURITE, DE SILENCIEUX	1	1				
4	90464–99004	CLAMP BRIDE	1	1				
5	6AW–14419–00	PIPE DURITE	1	1				
6	6C5–86120–00	SOLENOID VALVE ASSY SOLENOIDE	1	1				
7	95380–06600	NUT, HEXAGON ECROU	1	1				
8	6AW–8611A–00	HOLDER SOLENOID SUPPORT SOLENOIDE	1	1				
9	90111–06111	BOLT,HEX. SOCKET BUTTON BOULON	2	2				
10	90464–18246	CLAMP BRIDE	1	1				
11	6AW–15373–00	PIPE, BREATHER DURITE DE RENIFLARD	1	1				
12	6AW–14445–00	GROMMET RONDELLE CAOUTCHOUC	1	1				
13	97780–60620	SCREW, TAPPING VIS, TETE BOMBEE	1	1				
14	6AW–15393–00	PIPE, BREATHER 2 DURITE, RENIFLARD 2	1	1				
15	97575–06514	BOLT, WITH WASHER VIS HEXAGONAL AVC RONDELLE	2	2				
16	6AW–1531A–00	HOSE, BREATHER 1 DURITE DE RENIFLARD 1	1	1				
17	6AW–1531A–10	HOSE, BREATHER 1 DURITE DE RENIFLARD 1	1	1				
18	6AW–1532A–00	HOSE, BREATHER 2 DURITE DE RENIFLARD 2	1	1				
19	90446–32002	HOSE (L90) DURITE (L90)	1	1				

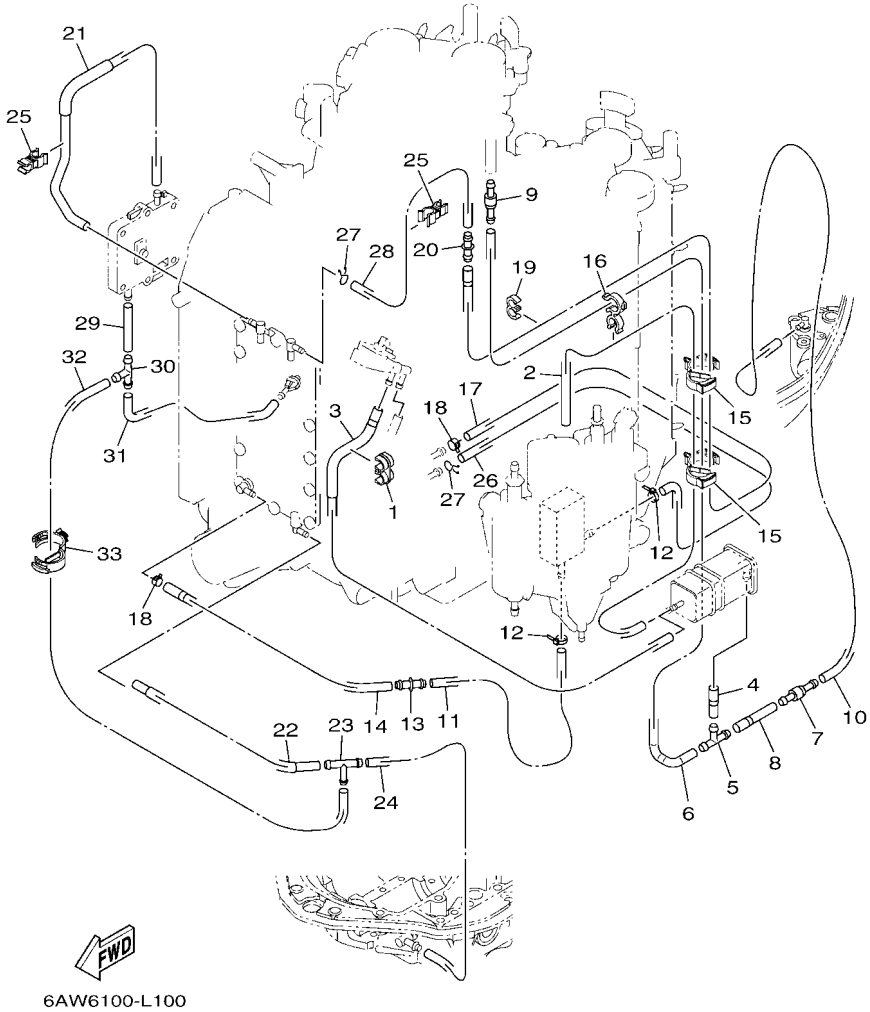

FIG. 10 INTAKE 3 — ADMISSION 3

REF. NO.	PART NO. N° PIECES	DESCRIPTION DESCRIPTION	6AW6	6AX6				REMARKS REMARQUES
1	90464–12224	CLAMP BRIDE	1	1				
2	6AW–1475A–10	PIPE 1 DURITE 1	1	1				
3	6AW–24312–10	PIPE 2 DURITE 2	1	1				
4	6AW–13545–10	HOSE 1 DURITE 1	1	1				
5	688–24378–00	PIPE, JOINT 3 DURITE RACCORDEMENT 3	1	1				
6	6AW–13548–10	HOSE, AIR 4 DURITE, A AIR 4	1	1				
7	6E5–21744–00	BREATHER RENIFLARD	1	1				
8	6CB–13548–00	HOSE, AIR 4 DURITE, A AIR 4	1	1				
9	6E5–21744–00	BREATHER RENIFLARD	1	1				
10	6AW–13547–10	HOSE 3 DURITE 3	1	1				
11	90445–09104	HOSE (L300) DURITE (L300)	1	1				
12	90465–11M10	CLAMP BRIDE	2	2				
13	6CE–24376–00	PIPE, JOINT 1 DURITE 1, RACCORDEMENT	1	1				
14	6AW–12589–00	HOSE 6 TUYAU 6	1	1				
15	90464–32002	CLAMP BRIDE	2	2				
16	90464–09M42	CLAMP BRIDE	1	1				
17	6AW–12576–20	HOSE 1 TUYAU 1	1	1				
18	90467–11136	CLIP JONC	2	2				
19	90464–60067	CLAMP BRIDE	1	1				
20	6CE–24376–00	PIPE, JOINT 1 DURITE 1, RACCORDEMENT	1	1				
21	6AW–12577–00	HOSE 2 TUYAU 2	1	1				
22	6AW–12578–00	HOSE 3 TUYAU 3	1	1				
23	68F–14485–00	PIPE, JOINT DURITE	1	1				
24	6AW–12579–10	HOSE 4 TUYAU 4	1	1				
25	90464–10010	CLAMP BRIDE	2	2				
26	90445–09120	HOSE (L600) DURITE (L600)	1	1				
27	90467–08M10	CLIP JONC	2	2				

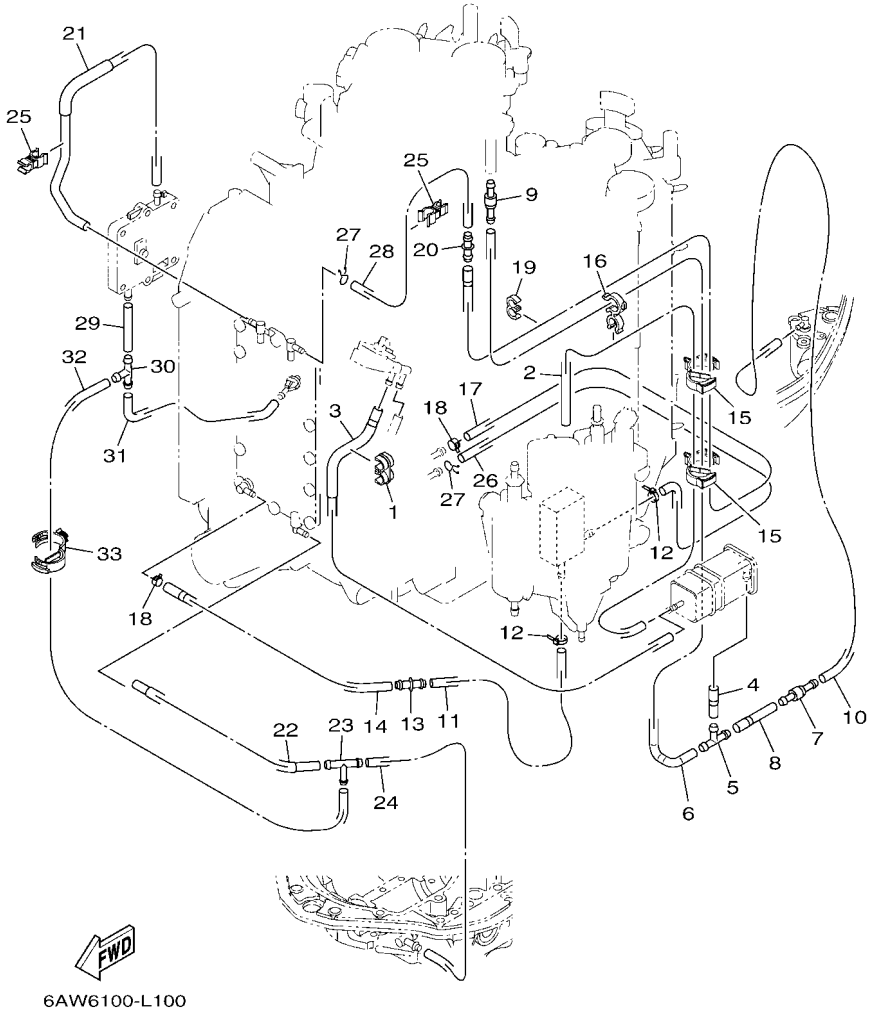

FIG. 10 INTAKE 3 — ADMISSION 3

REF. NO.	PART NO. N° PIECES	DESCRIPTION DESCRIPTION	6AW6	6AX6				REMARKS REMARQUES
28	6AW–12483–00	PIPE 3 DURITE 3	1	1				
29	90445–09026	HOSE (L68) DURITE (L68)	1	1				
30	688–24378–00	PIPE, JOINT 3 DURITE RACCORDEMENT 3	1	1				
31	6AW–12482–10	PIPE 2 DURITE 2	1	1				
32	6AW–12588–00	HOSE 5 TUYAU 5	1	1				
33	90464–30003	CLAMP BRIDE	1	1				

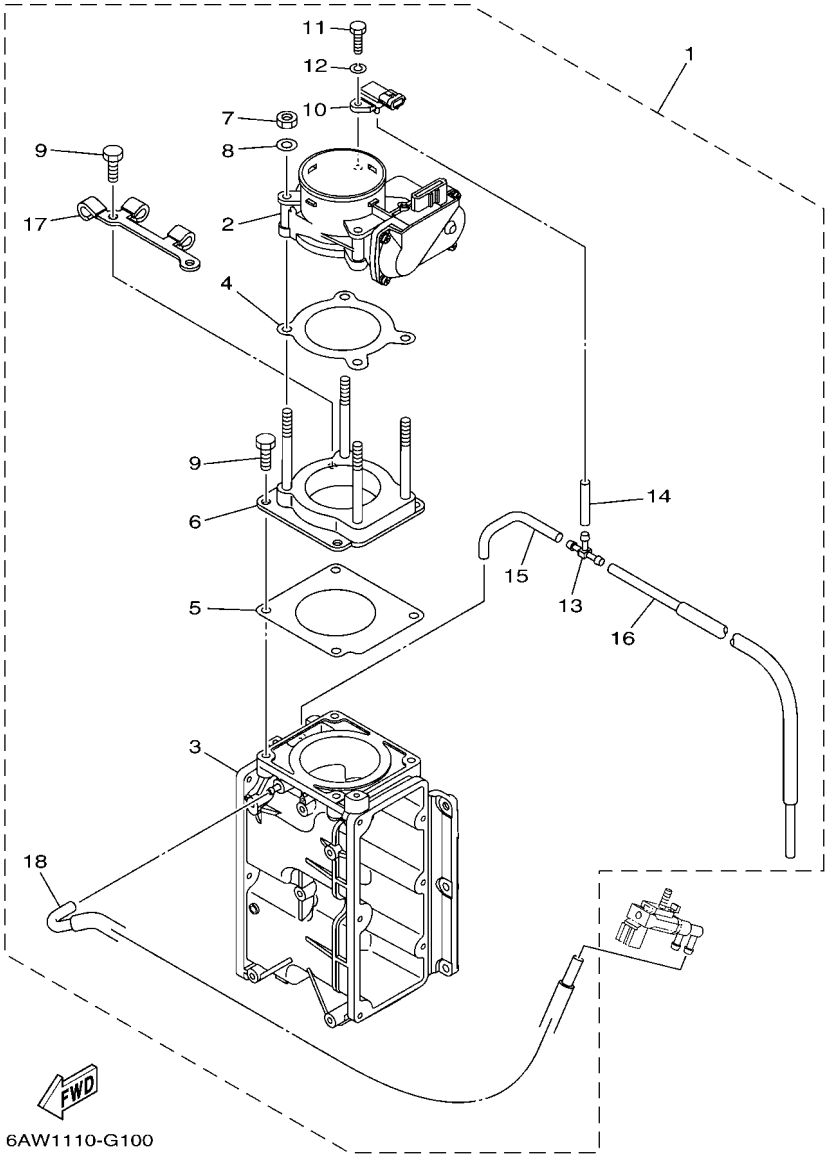

FIG. 11 THROTTLE BODY ASSY 1 — CARTER D'ACCELERATEUR 1

REF. NO.	PART NO. N° PIECES	DESCRIPTION DESCRIPTION	6AW6	6AX6				REMARKS REMARQUES
1	6AW–13750–01	THROTTLE BODY ASSY CARTER D'ACCELERATEUR COMPLET	1	1				
2	6AW–13751–00	.BODY, THROTTLE 1 .CARTER 1	1	1				
3	6AW–13711–01	.MIXING BODY .CHAMBRE DE MELANGE	1	1				
4	6AW–13556–00	.GASKET, MANIFOLD .JOINT, TUBULURE	1	1				
5	6AW–13557–00	.GASKET .JOINT	1	1				
6	6AW–14360–00	.THROTTLE DAMPER ASSY .AMORIISSEUR D'ACCELERATEUR	1	1				
7	6P2–13588–00	.NUT .ECROU	4	4				
8	6P2–13578–00	.WASHER .RONDELLE	4	4				
9	6P2–14496–00	.BOLT .BOULON	4	4				
10	6P2–82380–00	.SENSOR, PRESSURE .SONDE DE PRESSION	1	1				
11	6P2–13573–00	.BOLT 1 .BOULON 1	1	1				
12	68V–14356–00	.WASHER, SPRING .RONDELLE	1	1				
13	4N0–14251–00	.NIPPLE .RACCORD	1	1				
14	5JW–24311–00	.PIPE, FUEL 1 .DURITE A ESSENCE	1	1				
15	6AW–82364–00	.HOSE 2 .DURITE 2	1	1				
16	6AW–82365–00	.HOSE 3 .DURITE 3	1	1				
17	6AW–11188–00	.CLIP, PIPE .AGRAFE, TUBE	1	1				
18	6AW–82366–00	.HOSE 4 .DURITE 4	1	1				

FIG. 12 THROTTLE BODY ASSY 2 — CARTER D'ACCELERATEUR 2

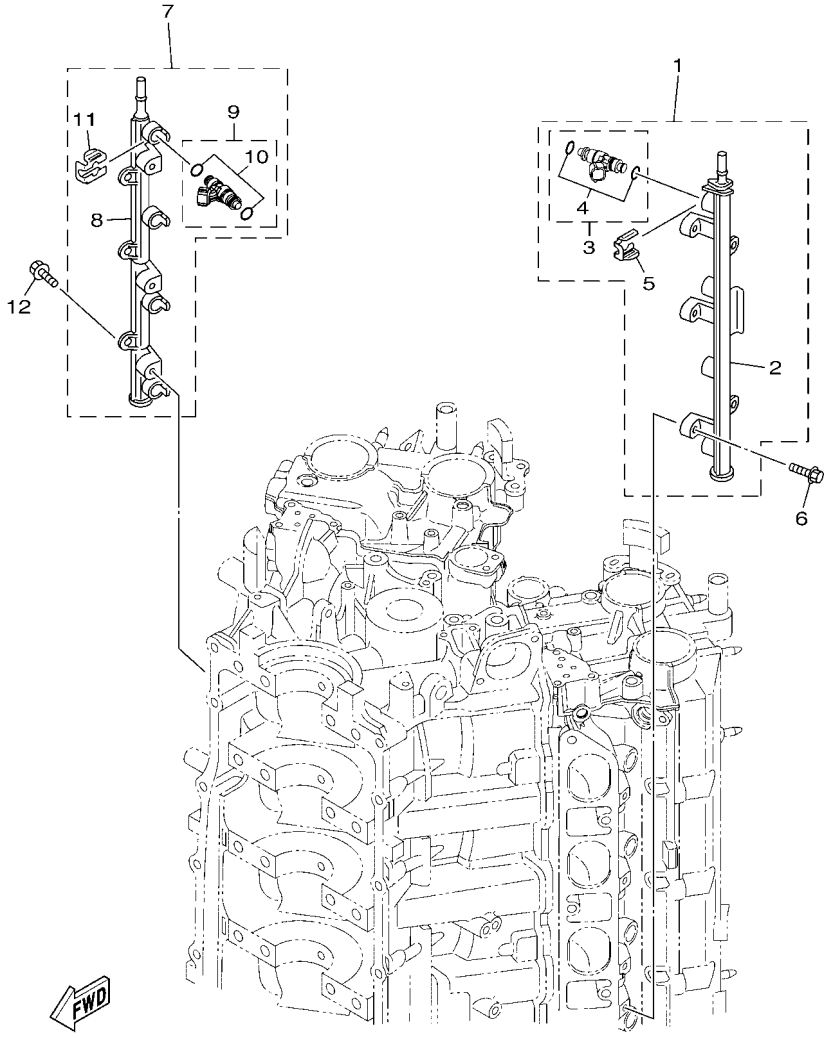

6AW6100-L120

REF. NO.	PART NO. N° PIECES	DESCRIPTION DESCRIPTION	6AW6	6AX6				REMARKS REMARQUES
1	6AW–13160–10	DELIVERY PIPE ASSY 1 ENS. TUBE DE REFOULEMENT 1	1	1				
2	6AW–13161–10	.PIPE, DELIVERY 1 .DURITE REFOULEMENT 1	1	1				
3	6AW–13761–00	.INJECTOR .INJECTEUR	4	4				
4	6AW–1410B–00	..PACKING KIT ..POCHETTE DE JOINTS	1	1				
5	6AW–13577–10	.CLIP .AGRAFE	4	4				
6	90105–06M08	BOLT, FLANGE BOULON	3	3				
7	6AW–13170–10	DELIVERY PIPE ASSY 2 ENS. TUBE DE REFOULEMENT 2	1	1				
8	6AW–13171–10	.PIPE, DELIVERY 2 .DURITE REFOULEMENT	1	1				
9	6AW–13761–00	.INJECTOR .INJECTEUR	4	4				
10	6AW–1410B–00	..PACKING KIT ..POCHETTE DE JOINTS	1	1				
11	6AW–13577–10	.CLIP .AGRAFE	4	4				
12	90105–06M08	BOLT, FLANGE BOULON	3	3				

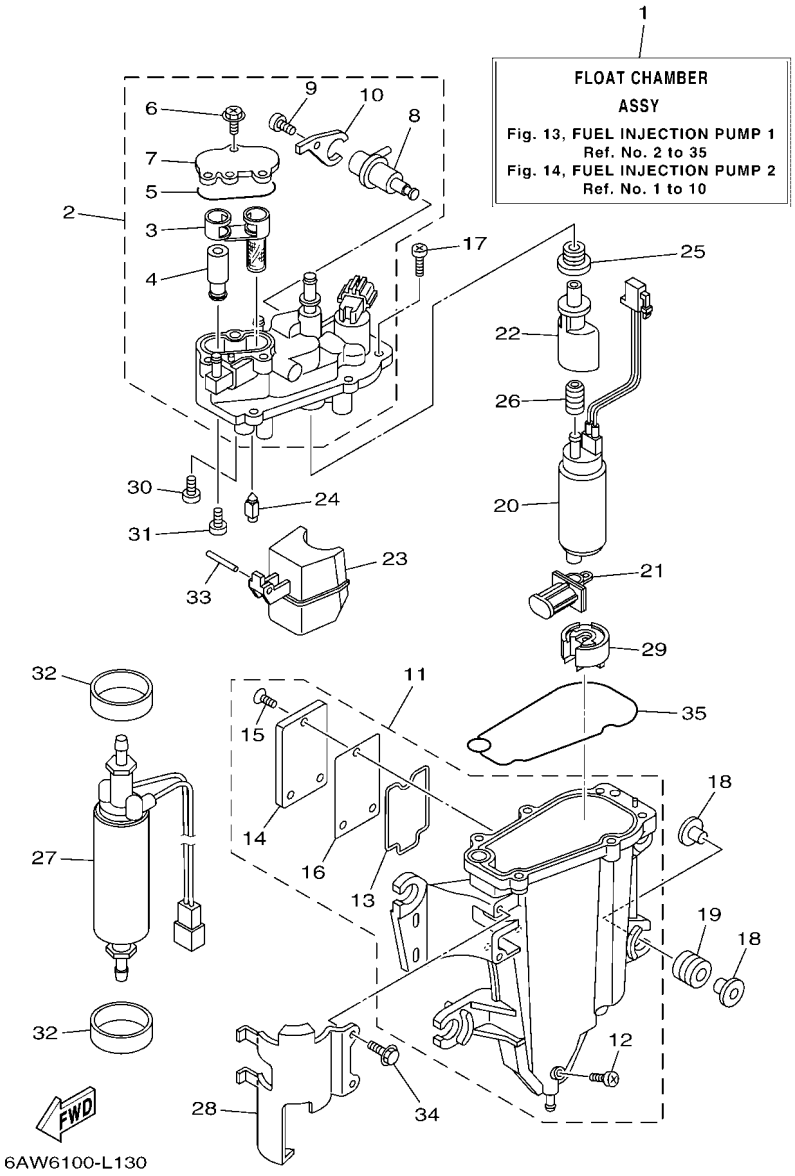

FIG. 13 FUEL INJECTION PUMP 1 POMPE A INJECTEUR 1

REF. NO.	PART NO. N° PIECES	DESCRIPTION DESCRIPTION	6AW6	6AX6				REMARKS REMARQUES
1	6AW–14180–20	FLOAT CHAMBER ASSY CUVE DE FLOTTEUR	1	1				
2	6AW–14182–10	COVER, FLOAT CHAMBER COUVERCLE, CUVE DE FLOTTEUR	1	1				
3	6CB–24501–01	.FILTER, FUEL .FILTRE	1	1				
4	6CB–24460–00	.RELIEF VALVE ASSY .SOUPAPE DE SECURITE COMPLET	1	1				
5	6CB–13016–00	.O-RING .JOINT TORIQUE	1	1				
6	6CB–14216–00	.SCREW .VIS	3	3				
7	6CB–24217–00	.COVER .COUVERCLE	1	1				
8	6CB–13906–01	.REGULATOR, PRESSURE .REGULATEUR DE PRESSION	1	1				
9	6CB–14564–00	.SCREW .VIS	1	1				
10	6CB–14146–00	.PLATE .PLAQUE	1	1				
11	6CB–14181–09	BODY, FLOAT CHAMBER 1 CORPS, CUVE DE FLOTTEUR 1	1	1				
12	6P2–14191–00	.PLUG, DRAIN .PLOT, VIDANGE	1	1				
13	6CB–14239–00	.SEAL .JOINT	1	1				
14	6CB–24452–10	.COVER .COUVERCLE	1	1				
15	6CB–14429–01	.SCREW .VIS	3	3				
16	6CB–24482–00	.GASKET 1 .JOINT 1	1	1				
17	63P–14567–00	SCREW VIS	6	6				
18	69J–13716–00	COLLAR COLLERETTE	8	8				
19	6CB–13593–00	DAMPER AMORTISSEUR	4	4				
20	6AW–13907–10	FUEL PUMP COMP. POMPE A CARBURANT COMP.	1	1				
21	63P–13915–00	FILTER FILTRE	1	1				
22	6AW–13132–00	JOINT RACCORD	1	1				
23	6CB–14985–00	FLOAT FLOTTEUR	1	1				
24	6CB–14546–00	VALVE, NEEDLE POINTEAU	1	1				
25	6CB–1447B–00	BUSH 1 DOUILLE 1	1	1				
26	6AW–13781–00	DAMPER, PUMP AMORTISSEUR, POMPE	1	1				
27	6CB–24410–00	FUEL PUMP ASSY POMPE A ESSENCE	1	1				

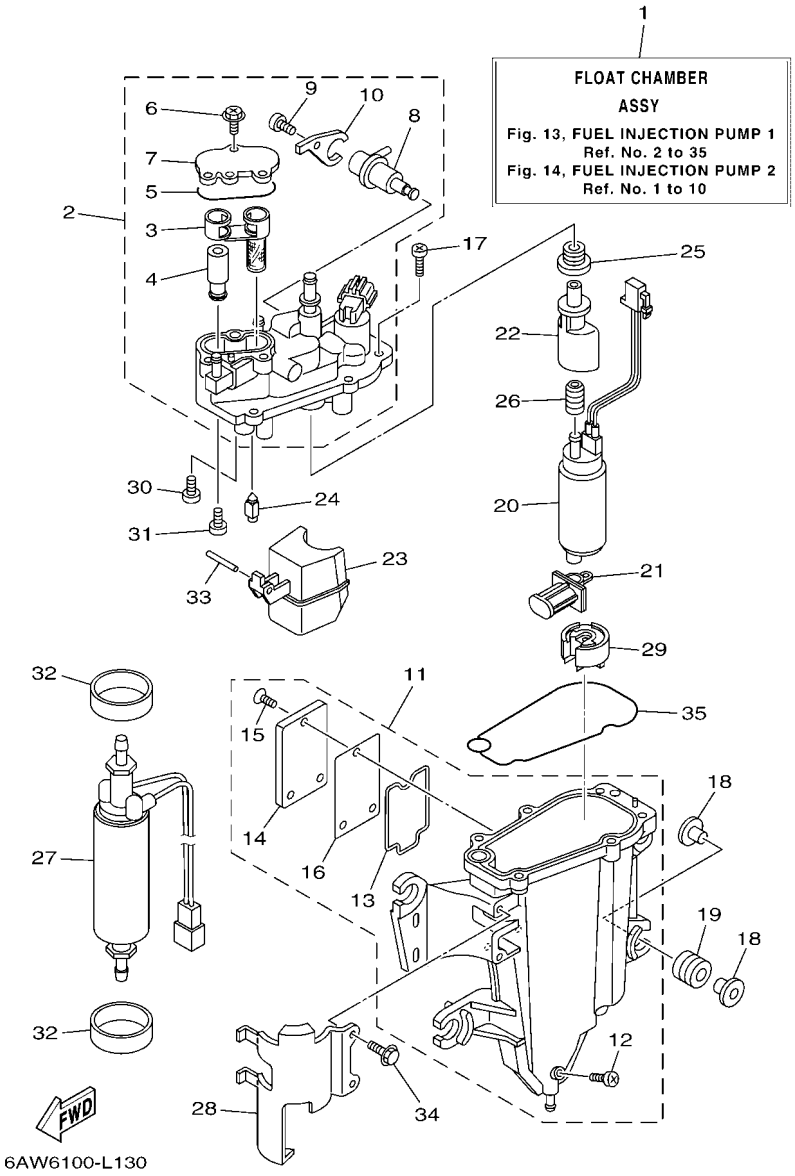

FIG. 13 FUEL INJECTION PUMP 1 — POMPE A INJECTEUR 1

REF. NO.	PART NO. N° PIECES	DESCRIPTION DESCRIPTION	6AW6	6AX6				REMARKS REMARQUES
28	6AW–24491–10	BRACKET, FUEL PUMP SUPPORT, POMPE A ESSENCE	1	1				
29	6AW–13784–00	COVER, PUMP COUVERCLE, POMPE	1	1				
30	4SV–24453–00	SCREW VIS	1	1				
31	98507–04008	SCREW, PAN HEAD VIS, TETE TRONCONIQUE	1	1				
32	6CB–24492–00	BUSH, FUEL PUMP BAGUE	2	2				
33	6P2–14386–00	PIN, FLOAT AXE, FLOTTEUR	1	1				
34	6CB–24592–00	BOLT BOLTE	2	2				
35	6CB–14984–00	GASKET, FLOAT CHAMBER JOINT, CUVE DE FLOTTEUR	1	1				

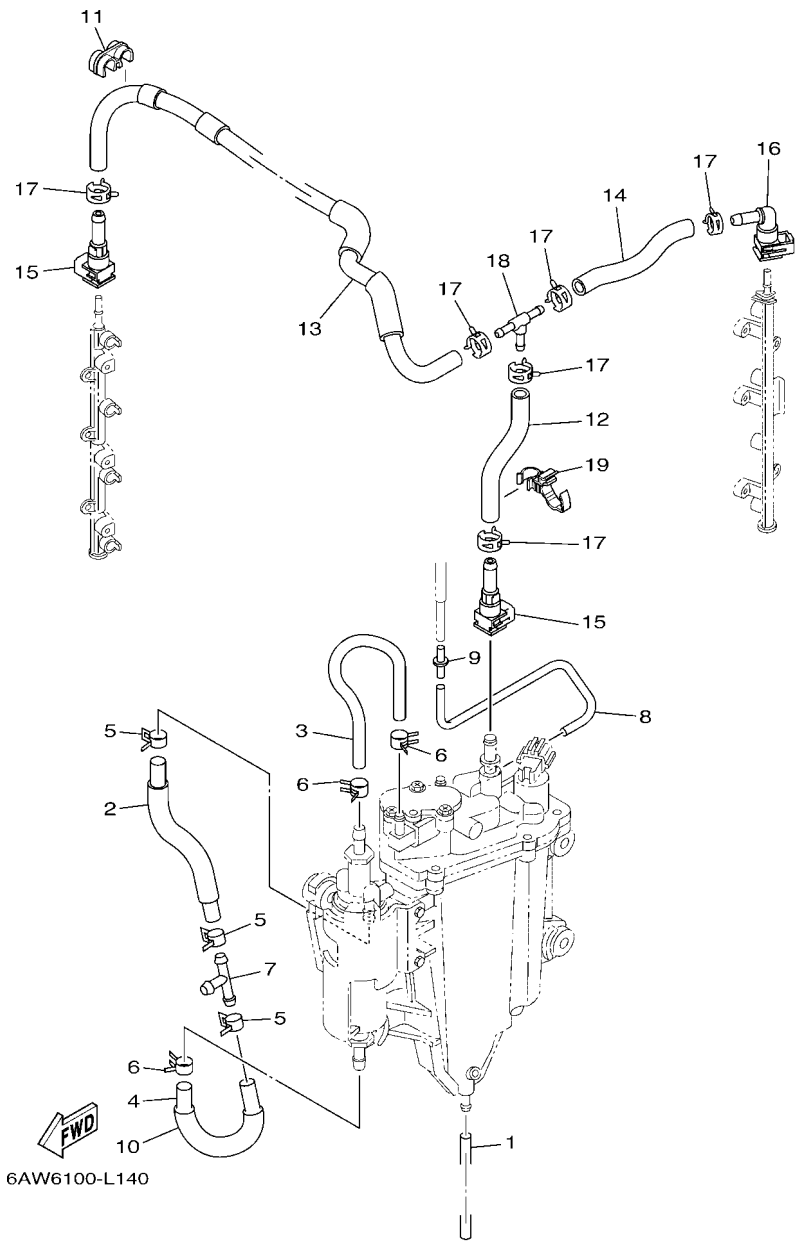

FIG. 14 FUEL INJECTION PUMP 2 — POMPE A INJECTEUR 2

REF. NO.	PART NO. N° PIECES	DESCRIPTION DESCRIPTION	6AW6	6AX6				REMARKS REMARQUES
1	6P2–14149–00	PIPE DURITE	1	1				
2	6AW–24323–20	PIPE 12 DURITE 12	1	1				
3	6AW–24324–20	PIPE 13 DURITE 13	1	1				
4	6AW–24317–20	PIPE 7 DURITE 7	1	1				
5	69J–14137–00	CLIP JONC	3	3				
6	68V–13577–00	CLIP AGRAFE	3	3				
7	6E5–24378–00	PIPE, JOINT 3 DURITE, RACCORDEMENT 3	1	1				
8	6AW–13532–00	HOSE, VACUUM SENSING 3 DURITE 3	1	1				
9	6P2–24376–00	PIPE, JOINT 1 DURITE 1, RACCORDEMENT	1	1				
10	90446–18002	HOSE DURITE	1	1				
11	90464–12224	CLAMP BRIDE	1	1				
12	6AW–13971–30	PIPE, FUEL 1 TUBE 1, CARBURANT	1	1				
13	6AW–13973–30	PIPE, FUEL 3 TUBE 3, CARBURANT	1	1				
14	6AW–13974–30	PIPE, FUEL 4 TUBE 4, CARBURANT	1	1				
15	6AW–24300–10	FUEL PIPE JOINT DURITE RACCORDEMT. A ESSENCE	2	2				
16	6AW–24300–00	FUEL PIPE JOINT DURITE RACCORDEMT. A ESSENCE	1	1				
17	68V–13577–00	CLIP AGRAFE	6	6				
18	6CB–24461–00	PIPE, JOINT DURITE, RACCORDEMENT	1	1				
19	90464–12012	CLAMP BRIDE	1	1				

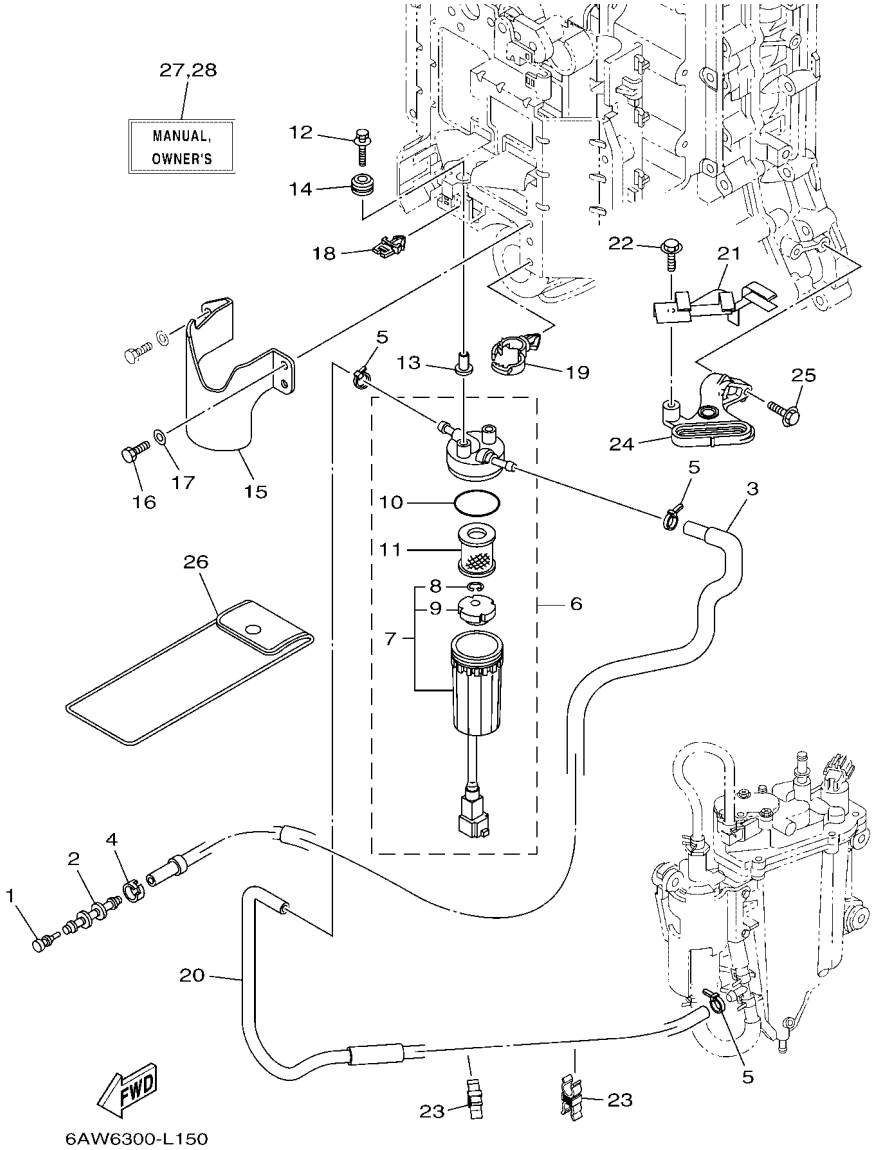

FIG. 15 FUEL 1 — CARBURANT 1

REF. NO.	PART NO. N° PIECES	DESCRIPTION DESCRIPTION	6AW6	6AX6				REMARKS REMARQUES
1	689–85547–00	DAMPER AMORTISSEUR	1	1				
2	6AW–24377–01	PIPE, JOINT 2 DURITE RACCORDEMENT 2	1	1				
3	6AW–24311–01	PIPE, FUEL 1 DURITE A ESSENCE	1	1				FOR F(L)350AET FOR F(L)350AET
	6AW–24311–11	PIPE, FUEL 1 DURITE A ESSENCE	1	1				FOR F(L)350AET2 FOR F(L)350AET2
4	6E5–24351–51	BAND 1 COLLIER 1	1	1				
5	90465–11M10	CLAMP BRIDE	3	3				
6	6P3–24560–22	FILTER ASSY ENS FILTRE	1	1				
7	6P3–24562–21	.CUP, FILTER .CUVETTE, FILTRE	1	1				
8	6P3–24519–00	..CLIP ..JONC	1	1				
9	6P3–24469–00	..FLOAT, WATER LEVEL ..FLOTTEUR	1	1				
10	6P3–24564–00	.GASKET .JOINT	1	1				
11	6P3–24563–01	.ELEMENT, FILTER .ELEMENT, FILTRE	1	1				
12	90119–06M17	BOLT, WITH WASHER BOULON, AVEC RONDELLE	2	2				
13	90387–06M60	COLLAR COLLERETTE	2	2				
14	90480–10M23	GROMMET PASSE-FIL	2	2				
15	6AW–24596–00	COVER COUVERCLE	1	1				
16	97095–06012	BOLT BOULON	2	2				
17	92995–06600	WASHER RONDELLE	2	2				
18	90464–11121	CLAMP BRIDE	1	1				
19	90464–20181	CLAMP BRIDE	1	1				
20	6AW–24313–00	PIPE 3 DURITE 3	1	1				FOR F(L)350AET FOR F(L)350AET
	6AW–24313–10	PIPE 3 DURITE 3	1	1				FOR F(L)350AET2 FOR F(L)350AET2
21	6AW–24422–00	PLATE PLAQUETTE	1	1				
22	95895–06012	BOLT, FLANGE BOULON	1	1				
23	90464–11009	CLAMP BRIDE	2	2				
24	6AW–44117–00	BRACKET SUPPORT	1	1				
25	95895–06025	BOLT, FLANGE BOULON	2	2				

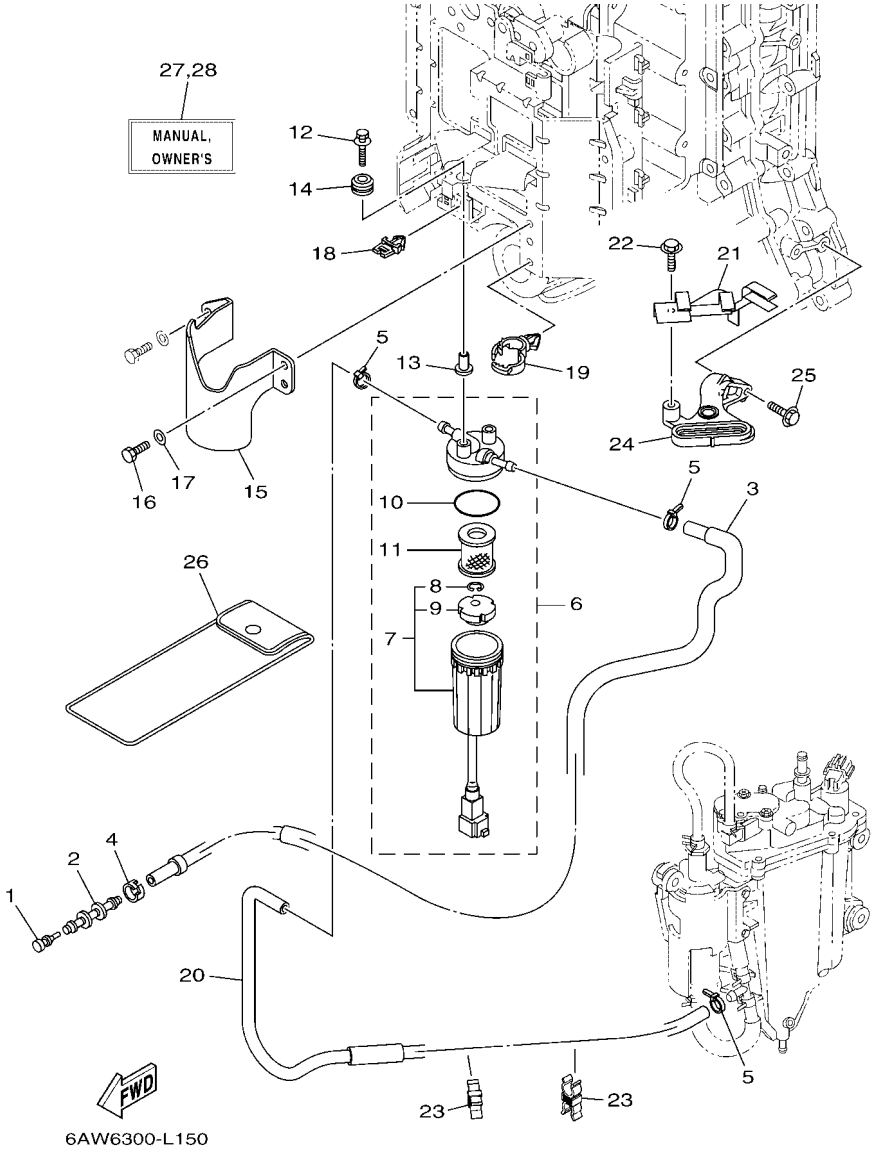

FIG. 15 FUEL 1 — CARBURANT 1

REF. NO.	PART NO. N° PIECES	DESCRIPTION DESCRIPTION	6AW6	6AX6				REMARKS REMARQUES
26	69J–28100–01	TOOL KIT TROUSSE A OUTILS	1	1				AP AP
27	6AW–28199–78–E0	MANUAL,OWNER'S MANUEL D'UTILISATION	1	1				UR (E) UR (E)
	6AW–28199–78–F0	MANUAL,OWNER'S MANUEL D'UTILISATION	1	1				UR (F) UR (F)
	6AW–28199–78–S0	MANUAL,OWNER'S MANUEL D'UTILISATION	1	1				UR (ES) UR (ES)
	6AW–28199–78–G0	MANUAL,OWNER'S MANUEL D'UTILISATION	1	1				UR (D) UR (D)
	6AW–28199–78–D0	MANUAL,OWNER'S MANUEL D'UTILISATION	1	1				UR (NL) UR (NL)
	6AW–28199–78–H0	MANUAL,OWNER'S MANUEL D'UTILISATION	1	1				UR (I) UR (I)
28	6AW–28199–88–K0	MANUAL,OWNER'S MANUEL D'UTILISATION	1	1				UR (DK) UR (DK)
	6AW–28199–88–R0	MANUAL,OWNER'S MANUEL D'UTILISATION	1	1				UR (GR) UR (GR)
	6AW–28199–88–P0	MANUAL,OWNER'S MANUEL D'UTILISATION	1	1				UR (P) UR (P)
	6AW–28199–88–N0	MANUAL,OWNER'S MANUEL D'UTILISATION	1	1				UR (N) UR (N)
	6AW–28199–88–M0	MANUAL,OWNER'S MANUEL D'UTILISATION	1	1				UR (S) UR (S)
	6AW–28199–88–L0	MANUAL,OWNER'S MANUEL D'UTILISATION	1	1				UR (SF) UR (SF)

FIG. 16 FUEL 2 — CARBURANT 2

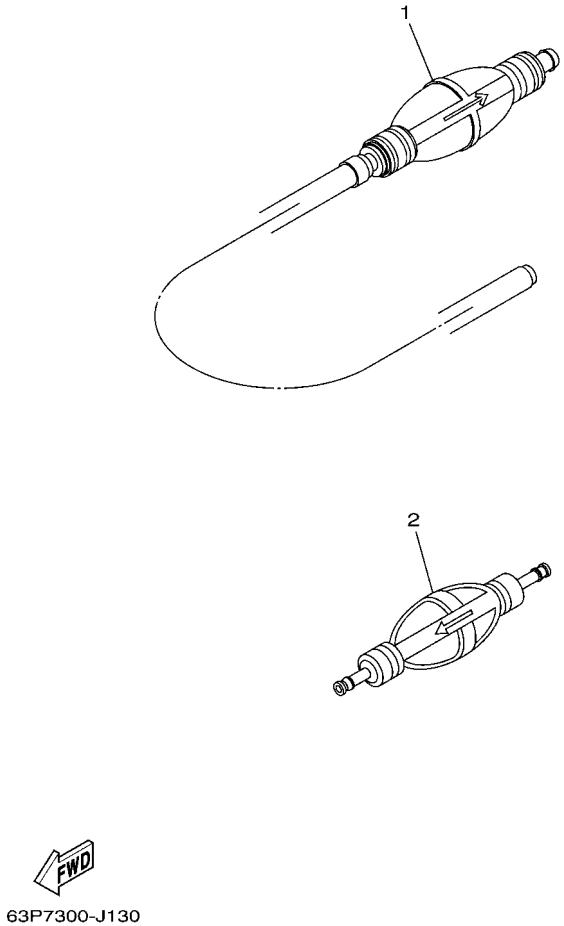

REF. NO.	PART NO. N° PIECES	DESCRIPTION DESCRIPTION	6AW6	6AX6				REMARKS REMARQUES
1	6YK–24307–42	FUEL PIPE COMP. 2 DURITE A ESSENCE 2	1	1				AP F(L)350AET AP F(L)350AET
2	6AW–24360–01	PRIMER PUMP ASSY POMPE D'AMORCAGE	1	1				AP F(L)350AET2 AP F(L)350AET2

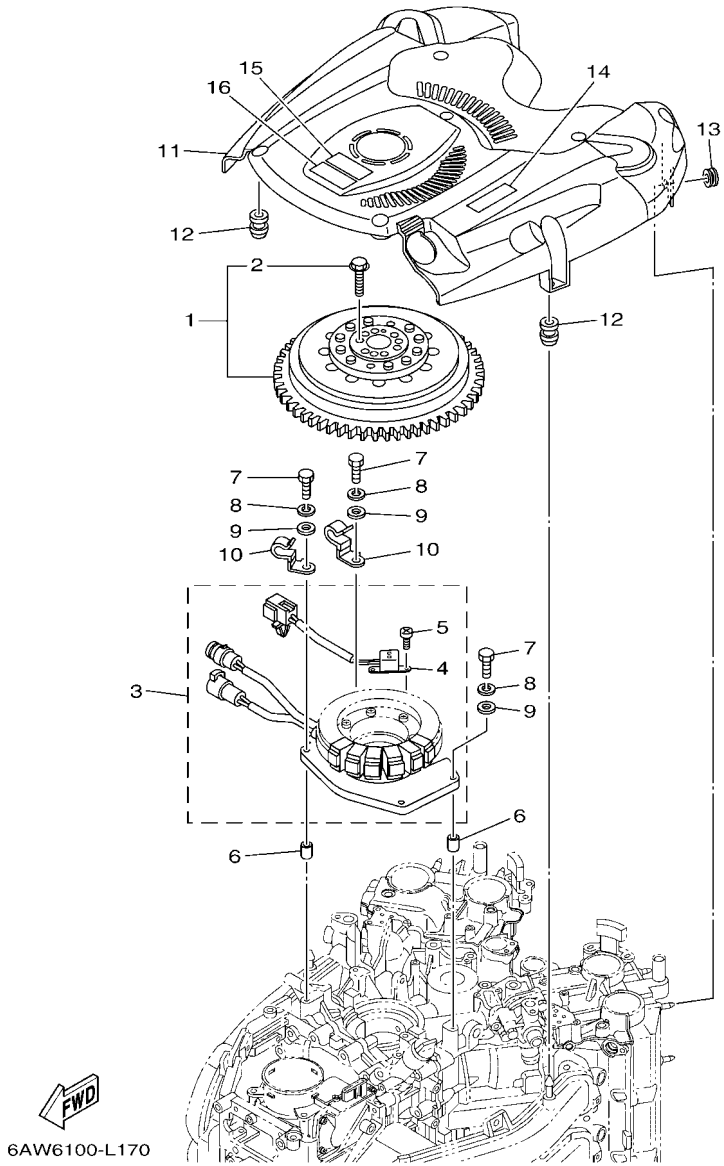

FIG. 17 GENERATOR — GENERATRICE

REF. NO.	PART NO. N° PIECES	DESCRIPTION DESCRIPTION	6AW6	6AX6				REMARKS REMARQUES
1	6AW–W8145–01	ROTOR ASSY WITH BOLTS ROTOR COMPLET AVEC BOULON	1	1				
2	6AW–W9011–00	.BOLT SET (FOR ROTOR ASSY) .BOULON ENS. (POUR ROTOR COMPL)	1	1				
3	6AW–81460–00	BASE ASSY ENS. FLASQUE	1	1				
4	6AW–85580–00	.COIL, PULSER .BOBINE, PULSEUR	1	1				
5	63D–81345–00	.SCREW, WITH WASHER (M5X12) .VIS, AVEC RONDELLE (M5X12)	2	2				
6	99530–08012	PIN, DOWEL GOUJON, D'ASSEMBLAGE	2	2				
7	97095–06030	BOLT BOULON	4	4				
8	92995–06100	WASHER, SPRING RONDELLE, GROWER	4	4				
9	92995–06600	WASHER RONDELLE	4	4				
10	90462–10042	CLAMP BRIDE	2	2				
11	6AW–81337–01	COVER, FLYWHEEL COUVERCLE, VOLANT	1	1				
12	663–82317–01	DAMPER, IGNITION COIL AMORTISSEUR, BOBINE D'ALLUM	4	4				
13	90480–12314	GROMMET PASSE-FIL	2	2				
14	6AW–13437–61	MARK, CAUTION MAKER	1	1				
15	6AH–81994–40	LABEL, SAFETY ETIQUETTE, SECURITE	1	1				
16	6AH–81994–50	LABEL, SAFETY ETIQUETTE, SECURITE	1	1				

FIG. 18 ELECTRICAL 1 — PARTIE ELECTRIQUE 1

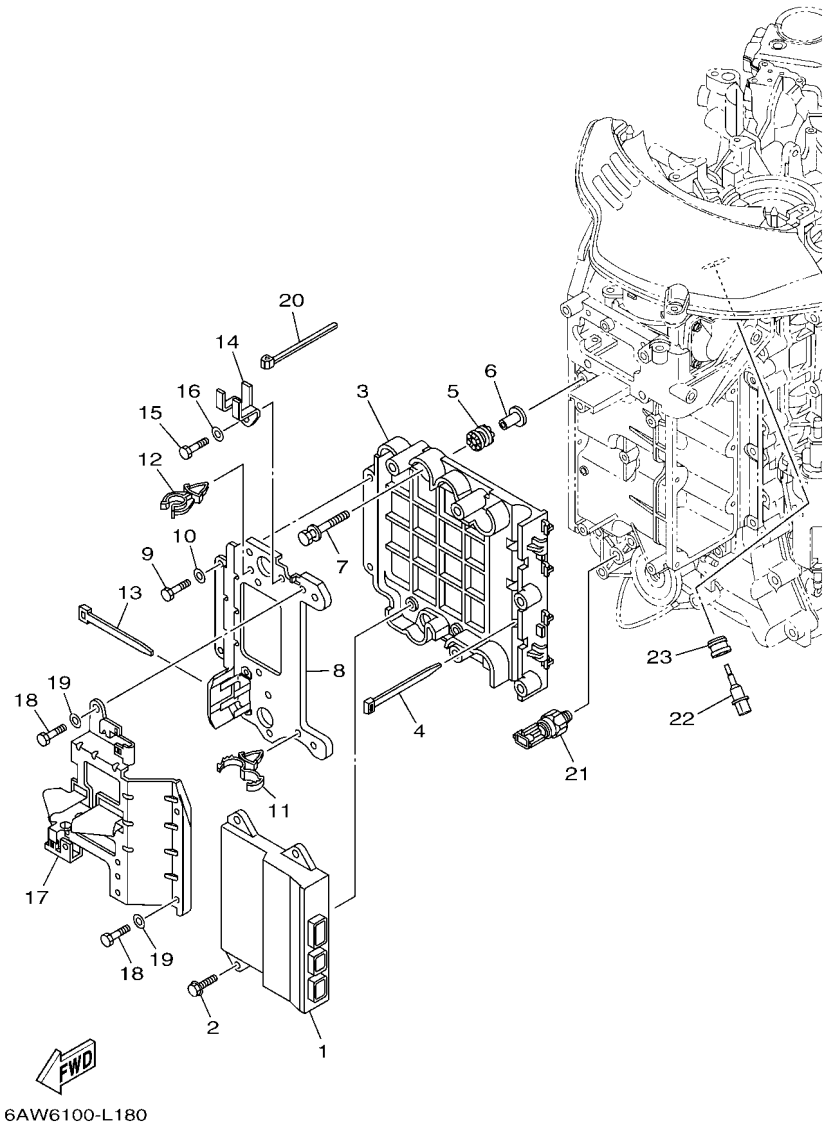

REF. NO.	PART NO. N° PIECES	DESCRIPTION DESCRIPTION	6AW6	6AX6				REMARKS REMARQUES
1	6AW–8591A–41	ENGINE CONTROL UNIT ASSY BLOC DE CONTROL	1	1				
2	90119–06M82	BOLT, WITH WASHER BOULON, AVEC RONDELLE	4	4				
3	6AW–85991–00	BRACKET, UNIT SUPPORT COMPLET	1	1				
4	90465–14M66	CLAMP BRIDE	4	4				
5	60V–85564–00	GROMMET RONDELLE CAOUTCHOUC	4	4				
6	90387–06176	COLLAR COLLERETTE	4	4				
7	68F–85119–00	BOLT BOULON	4	4				
8	6AW–8591C–00	CASE, ECU CAISSE, ECU	1	1				
9	97095–06012	BOLT BOULON	5	5				
10	92995–06600	WASHER RONDELLE	5	5				
11	90464–18246	CLAMP BRIDE	1	1				
12	90464–16240	CLAMP BRIDE	1	1				
13	90465–13M24	CLAMP BRIDE	1	1				
14	6AW–82544–01	CLAMP COLLIER	1	1				
15	97095–06012	BOLT BOULON	1	1				
16	92995–06600	WASHER RONDELLE	1	1				
17	6AW–82588–00	PLATE PLAQUE	1	1				
18	97095–06012	BOLT BOULON	4	4				
19	92995–06600	WASHER RONDELLE	4	4				
20	90465–14M66	CLAMP BRIDE	1	1				
21	6AW–83651–00	SENDER, OIL PRESSURE RACCORD, PRESSION D'HUILE	1	1				
22	63P–85886–00	SENSOR, AIR TEMPERATURE SONDE	1	1				
23	63P–14435–00	GROMMET RONDELLE CAOUTCHOUC	1	1				

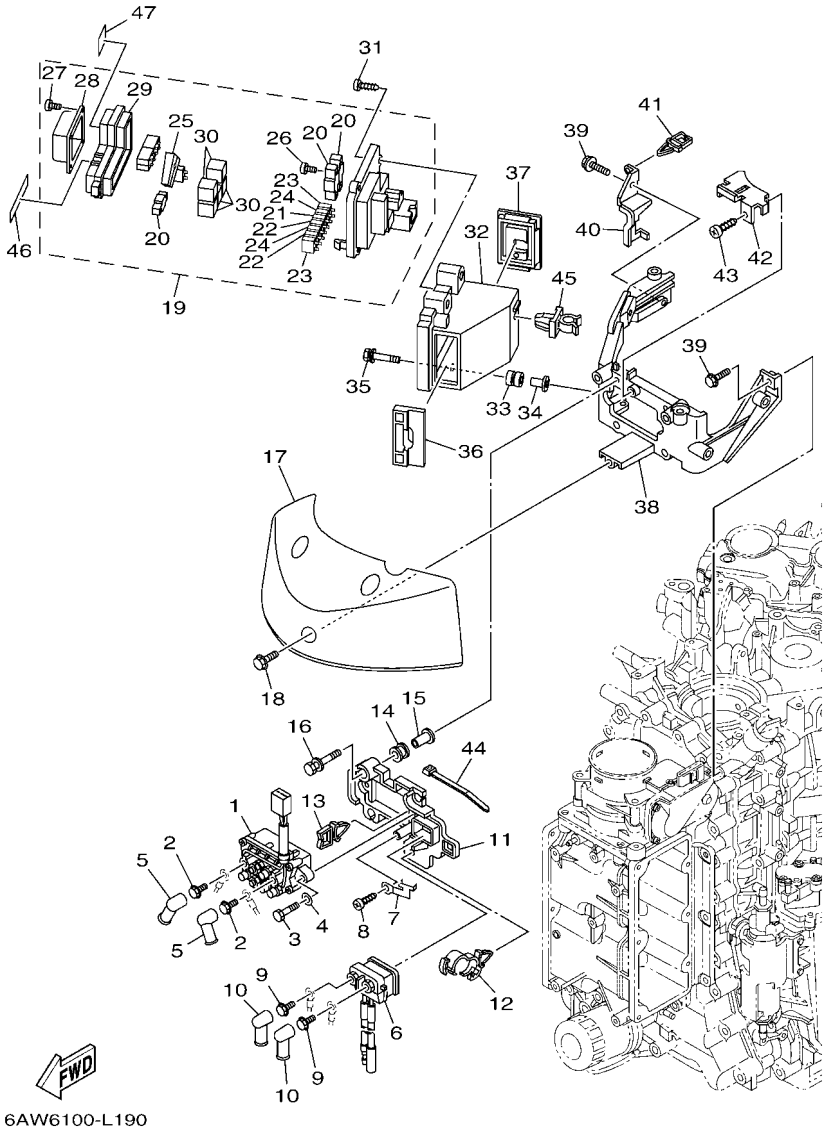

FIG. 19 ELECTRICAL 2 — PARTIE ELECTRIQUE 2

REF. NO.	PART NO. N° PIECES	DESCRIPTION DESCRIPTION	6AW6	6AX6				REMARKS REMARQUES
1	6AW–81950–00	RELAY ASSY RELAIS COMPLET	1	1				
2	97595–06610	BOLT, WITH WASHER VIS HEXAGONAL AVC RONDELLE	2	2				
3	97013–06020	BOLT BOULON	2	2				
4	92903–06600	WASHER, PLATE RONDELLE, PLATE	2	2				
5	6G5–82119–10	COVER, LEAD WIRE GARNITURE, FIL	2	2				
6	6AW–8194A–00	RELAY RELAIS	1	1				
7	68V–81953–00	STAY, RELAY SUPPORT, RELAIS	1	1				
8	97780–60620	SCREW, TAPPING VIS, TETE BOMBEE	1	1				
9	97595–06610	BOLT, WITH WASHER VIS HEXAGONAL AVC RONDELLE	2	2				
10	6G5–82119–00	COVER, LEAD WIRE GARNITURE, FIL	2	2				
11	6AW–81952–00	HOLDER, RELAY SUPPORT, RELAIS	1	1				
12	90464–12183	CLAMP BRIDE	1	1				
13	90464–11121	CLAMP BRIDE	1	1				
14	6A0–82317–00	DAMPER, IGNITION COIL AMORTISSEUR, BOBINE D'ALLUM	4	4				
15	90387–06119	COLLAR COLLERETTE	4	4				
16	90119–06M59	BOLT, WITH WASHER BOULON, AVEC RONDELLE	4	4				
17	6AW–81942–00	COVER COUVERCLE	1	1				
18	95895–06016	BOLT, FLANGE BOULON	3	3				
19	6AW–82170–01	FUSE BOX ASSY BOITE A FUSIBLES	1	1				
20	6P2–82151–00	.FUSE (60A) .FUSIBLE (60A)	3	3				
21	67F–82151–00	.FUSE (20A) .FUSIBLE (20A)	2	2				
22	67F–82151–10	.FUSE (30A) .FUSIBLE (30A)	3	3				
23	67F–82151–40	.FUSE (10A) .FUSIBLE (10A)	3	3				
24	67F–82151–50	.FUSE (15A) .FUSIBLE (15A)	3	3				
25	67F–2812A–00	.PULLER, FUSE .TENDEUR, FUSIBLE	1	1				
26	68F–82846–00	.SCREW, PAN HEAD (M5) .VIS, TETE TRONCONIQUE (M5)	4	4				
27	6P2–82113–00	.SCREW .VIS	4	4				

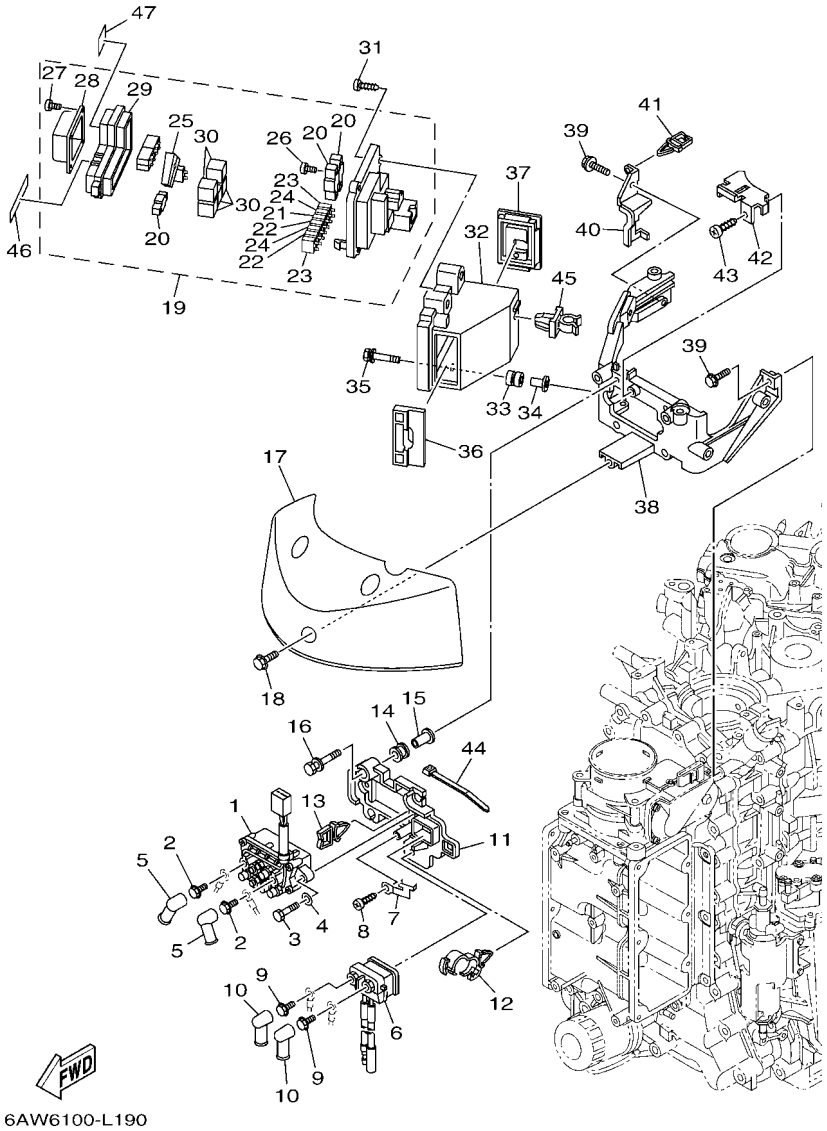

FIG. 19 ELECTRICAL 2 — PARTIE ELECTRIQUE 2

REF. NO.	PART NO. N° PIECES	DESCRIPTION DESCRIPTION	6AW6	6AX6				REMARKS REMARQUES
28	6P2–81639–00	.RELAY COVER .COUVERCLE	1	1				
29	6P2–85544–00	.CASE .BOITIER	1	1				
30	68F–8195A–00	.RELAY ASSY .RELAIS COMPLET	5	5				
31	97780–50620	SCREW, TAPPING VIS, TETE BOMBEE	4	4				
32	6AW–82171–00	STAY, FUSE BOX SUPPORT, BOITE A FUSIBLES	1	1				
33	6A0–82317–00	DAMPER, IGNITION COIL AMORTISSEUR, BOBINE D'ALLUM	3	3				
34	90387–06119	COLLAR COLLERETTE	3	3				
35	90119–06M59	BOLT, WITH WASHER BOULON, AVEC RONDELLE	3	3				
36	6AW–82572–00	GROMMET 1 VIS	1	1				
37	6AW–82573–00	GROMMET 2 PASSE-FIL 2	1	1				
38	6AW–81948–00	BRACKET SUPPORT	1	1				
39	95895–06020	BOLT, FLANGE BOULON	4	4				
40	6AW–81678–00	CLAMP 2 BRIDE 2	1	1				
41	90464–11121	CLAMP BRIDE	1	1				
42	6AW–81443–00	CLAMP, LEAD 1 BRIDE, FIL 1	1	1				
43	97780–50514	SCREW, TAPPING VIS, TETE BOMBEE	1	1				
44	90465–11M10	CLAMP BRIDE	2	2				
45	90464–09008	CLAMP BRIDE	1	1				
46	6AW–81919–20	GRAPHIC, REGULATOR ADHESIF, REGULATEUR	1	1				
47	6AW–81919–31	GRAPHIC, REGULATOR ADHESIF, REGULATEUR	1	1				

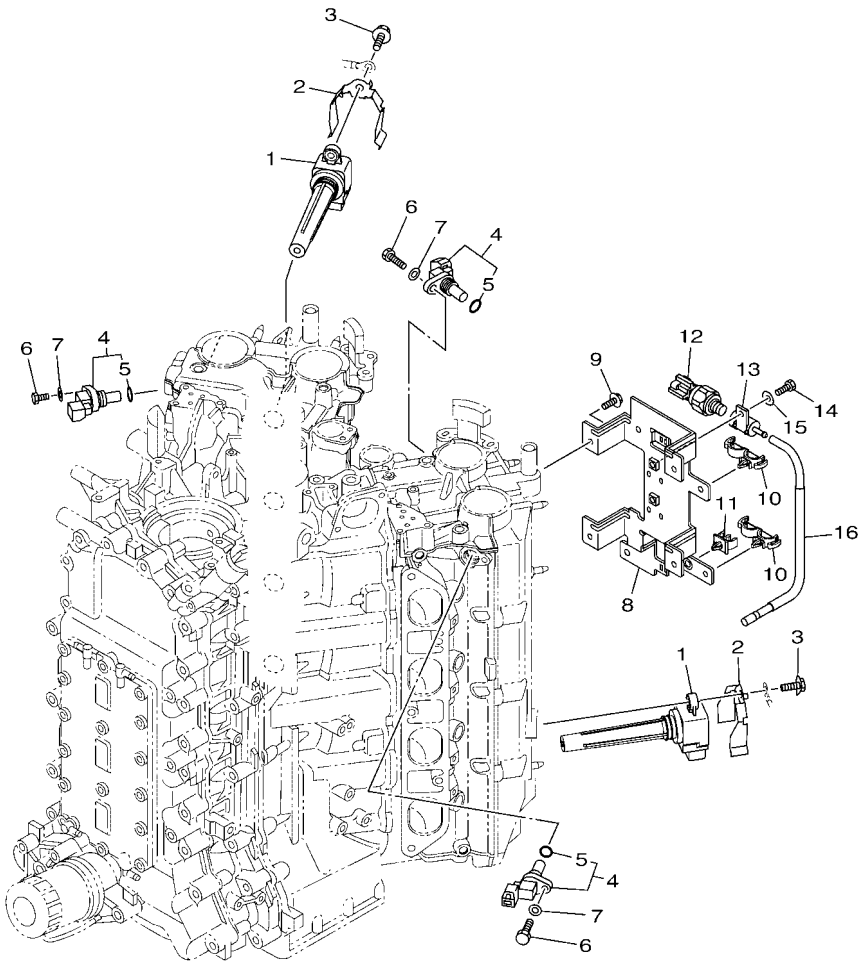

6AW6100-L200

FIG. 20 ELECTRICAL 3 — PARTIE ELECTRIQUE 3

REF. NO.	PART NO. N° PIECES	DESCRIPTION DESCRIPTION	6AW6	6AX6				REMARKS REMARQUES
1	6CB–82310–00	IGNITION COIL ASSY BOBINE D'ALLUMAGE	8	8				
2	6AW–81539–00	PLATE, COIL PLAQUE, BOBINE	8	8				
3	95895–06025	BOLT, FLANGE BOULON	8	8				
4	6P2–85896–00	SENSOR, CAM POSITION SONDE DE CAME	3	3				
5	6P2–85075–00	.O-RING .JOINT TORIQUE	1	1				
6	97095–06020	BOLT BOULON	3	3				
7	92995–06600	WASHER RONDELLE	3	3				
8	6AW–8366G–10	BRACKET 3 SUPPORT 3	1	1				
9	95895–06016	BOLT, FLANGE BOULON	4	4				
10	90464–18246	CLAMP BRIDE	2	2				
11	90464–07009	CLAMP BRIDE	1	1				
12	6AW–8366B–00	SENSOR, WATER PRESSURE SONDE DE PRESSION D'EAU	1	1				
13	60V–8366D–00	ADAPTOR, INPUT CONNECTEUR 3	1	1				
14	97095–06016	BOLT BOULON	1	1				
15	92995–06600	WASHER RONDELLE	1	1				
16	6AW–82353–10	HOSE DURITE	1	1				

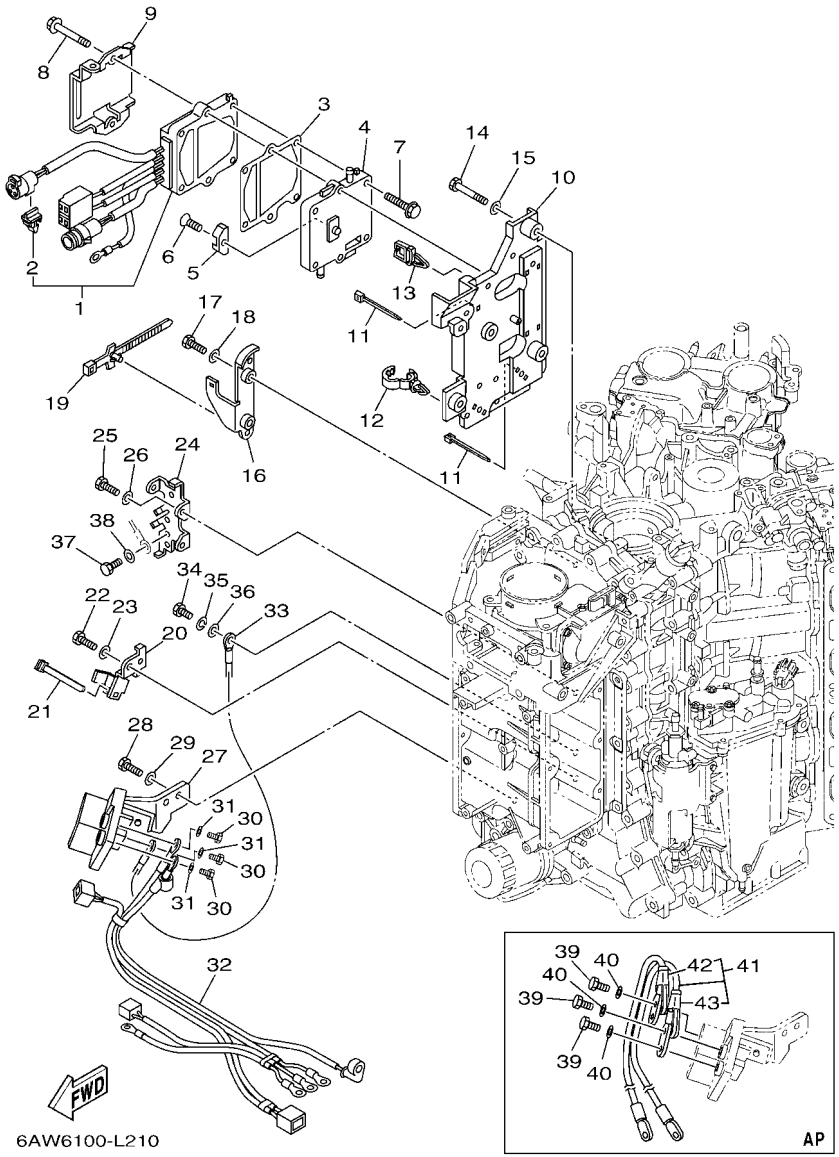

FIG. 21 ELECTRICAL 4 — PARTIE ELECTRIQUE 4

REF. NO.	PART NO. N° PIECES	DESCRIPTION DESCRIPTION	6AW6	6AX6				REMARKS REMARQUES
1	6AW–81960–01	RECTIFIER & REGULATOR ASSY REDRESSEUR REGULATEUR CPLT	1	1				
2	90464–12002	.CLAMP .BRIDE	1	1				
3	6AW–81975–00	PLATE, RECTIFIER FITTING PLAQUE, FIXATION DU REDRESSEUR	1	1				
4	6AW–81972–00–9S	COVER, RECTIFIER COUVERCLE, REDRESSEUR	1	1				
5	6E5–11325–00	ANODE ANODE	1	1				
6	98780–04015	SCREW, FLAT HEAD VIS A TETE FRAISEE	1	1				
7	90119–06MA3	BOLT, WITH WASHER BOULON, AVEC RONDELLE	4	4				
8	90119–06MA5	BOLT, WITH WASHER BOULON, AVEC RONDELLE	2	2				
9	6AW–82581–00	STAY, CORD CLAMP SUPPORT, COLLIER DE CORDON	1	1				
10	6AW–8235A–00	CASE 1 CAISSE 1	1	1				
11	90465–14M66	CLAMP BRIDE	5	5				
12	90464–13249	CLAMP BRIDE	1	1				
13	90464–11121	CLAMP BRIDE	1	1				
14	97095–06016	BOLT BOULON	4	4				
15	92995–06600	WASHER RONDELLE	4	4				
16	6AW–83614–01	BRACKET SUPPORT	1	1				
17	97095–06014	BOLT BOULON	2	2				
18	92995–06600	WASHER RONDELLE	2	2				
19	90464–44002	CLAMP BRIDE	2	2				
20	6AW–81328–00	CLAMP COLLIER	1	1				
21	90465–14M66	CLAMP BRIDE	1	1				
22	97095–06016	BOLT BOULON	1	1				
23	92995–06600	WASHER RONDELLE	1	1				
24	6AW–81218–00	TERMINAL BORNE	1	1				
25	97095–06016	BOLT BOULON	2	2				
26	92995–06600	WASHER RONDELLE	2	2				
27	6AW–81925–01	TERMINAL BORNE	1	1				

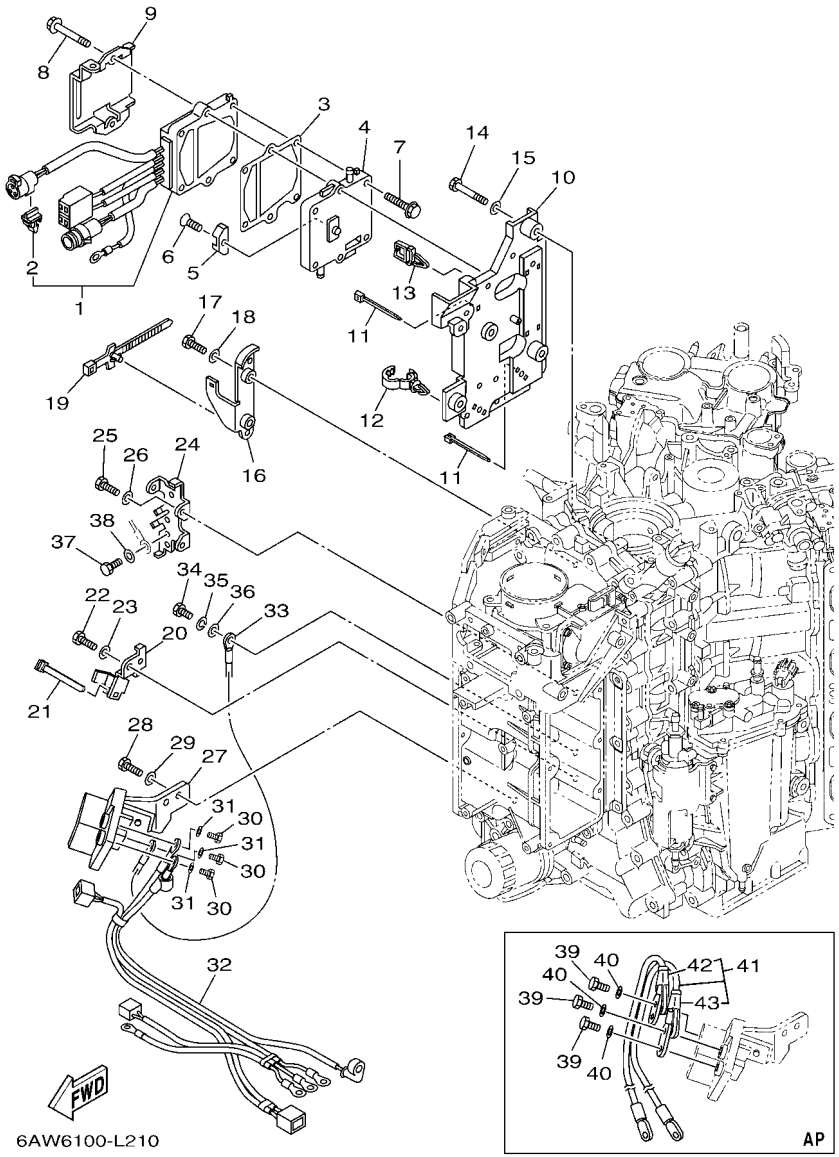

FIG. 21 ELECTRICAL 4 — PARTIE ELECTRIQUE 4

REF. NO.	PART NO. N° PIECES	DESCRIPTION DESCRIPTION	6AW6	6AX6				REMARKS REMARQUES
28	97095–08020	BOLT BOULON	2	2				
29	92995–08600	WASHER RONDELLE	2	2				
30	90101–08022	BOLT BOULON	3	3				
31	92990–08600	WASHER, PLATE RONDELLE, PLATE	3	3				
32	6AW–8259M–00	WIRE HARNESS ASSY 2 FAISCEAU DE FILS	1	1				
33	6AW–82117–01	WIRE, LEAD FIL	1	1				
34	97095–06016	BOLT BOULON	1	1				
35	92995–06100	WASHER, SPRING RONDELLE, GROWER	1	1				
36	92995–06600	WASHER RONDELLE	1	1				
37	97095–06010	BOLT BOULON	4	4				
38	92995–06600	WASHER RONDELLE	4	4				
39	97095–08016	BOLT BOULON	3	3				AP AP
40	92995–08600	WASHER RONDELLE	3	3				AP AP
41	6AW–82105–00	WIRE HARNESS FAISCEAU DE FILS	1	1				AP AP
42	6AW–82119–00	.COVER, LEAD WIRE .GARNITURE, FIL	1	1				
43	6AW–82119–20	.COVER, LEAD WIRE .GARNITURE, FIL	1	1				

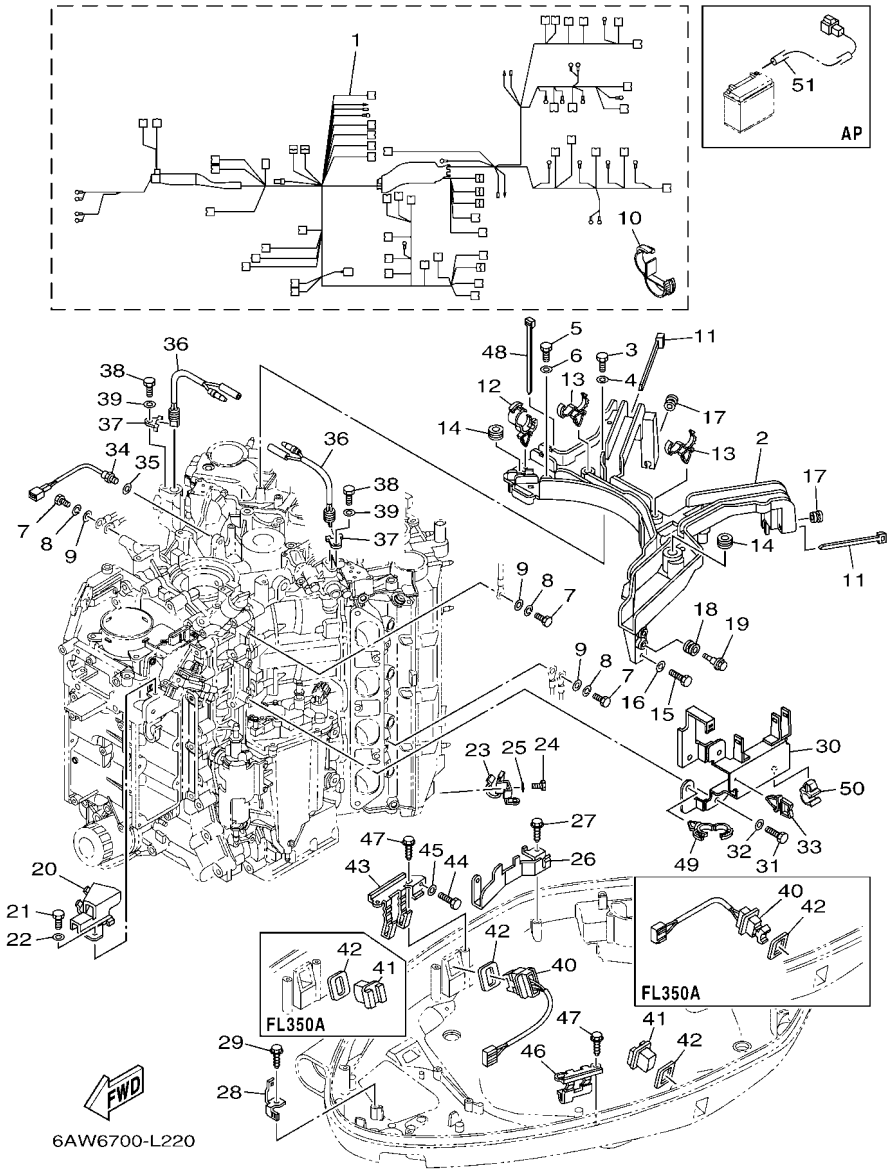

FIG. 22 ELECTRICAL 5 — PARTIE ELECTRIQUE 5

REF. NO.	PART NO. N° PIECES	DESCRIPTION DESCRIPTION	6AW6	6AX6				REMARKS REMARQUES
1	6AW–82590–20	WIRE HARNESS ASSY FAISCEAU DE FILS COMPLET	1	1				
2	6AW–82589–01	PROTECTER, WIRE HARNESS PROTECTEUR, FAISCEAU DE FILS	1	1				
3	97095–06035	BOLT BOULON	2	2				
4	92995–06600	WASHER RONDELLE	2	2				
5	97095–06025	BOLT BOULON	1	1				
6	92995–06600	WASHER RONDELLE	1	1				
7	97095–06016	BOLT BOULON	3	3				
8	92995–06100	WASHER, SPRING RONDELLE, GROWER	3	3				
9	92995–06600	WASHER RONDELLE	3	3				
10	90464–25005	CLAMP BRIDE	1	1				
11	90465–13M18	CLAMP BRIDE	2	2				
12	90464–20181	CLAMP BRIDE	1	1				
13	90464–18246	CLAMP BRIDE	2	2				
14	90480–19368	GROMMET PASSE-FIL	2	2				
15	97095–06012	BOLT BOULON	1	1				
16	92995–06600	WASHER RONDELLE	1	1				
17	90480–12314	GROMMET PASSE-FIL	2	2				
18	90480–12314	GROMMET PASSE-FIL	2	2				
19	90109–06MA1	BOLT BOULON	2	2				
20	6AW–82388–00	PLATE PLAQUETTE	1	1				
21	97095–06014	BOLT BOULON	1	1				
22	92995–06600	WASHER RONDELLE	1	1				
23	6AW–81677–00	CLAMP 1 BRIDE 1	1	1				
24	97095–06014	BOLT BOULON	1	1				
25	92995–06600	WASHER RONDELLE	1	1				
26	6AW–8257G–00	CLAMP, CORD COLLIER, CORDON	1	1				
27	90109–06M86	BOLT BOULON	1	1				

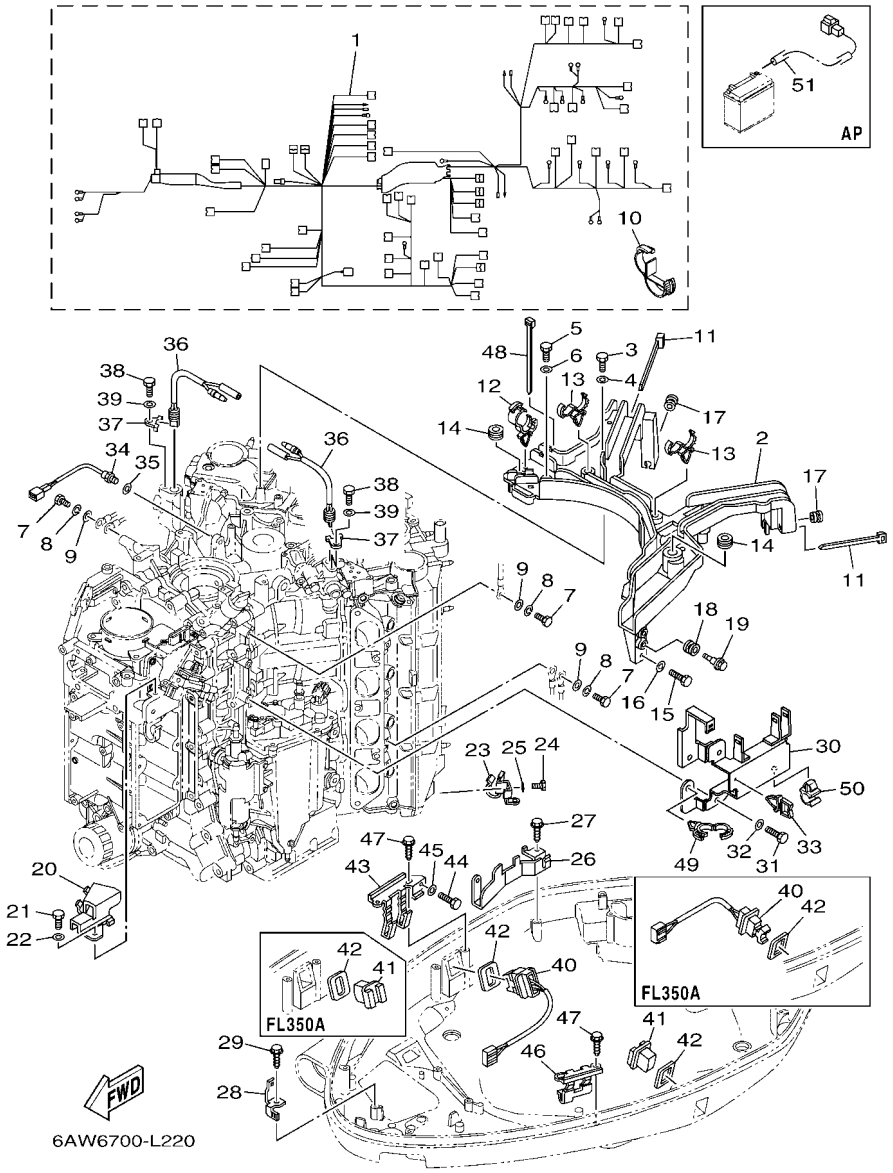

FIG. 22 ELECTRICAL 5 — PARTIE ELECTRIQUE 5

REF. NO.	PART NO. N° PIECES	DESCRIPTION DESCRIPTION	6AW6	6AX6				REMARKS REMARQUES
28	6AW–42743–00	BRACKET SUPPORT	1	1				
29	90109–06M86	BOLT BOULON	1	1				
30	6AW–81845–10	PLATE PLAQUE	1	1				
31	97095–06014	BOLT BOULON	2	2				
32	92995–06600	WASHER RONDELLE	2	2				
33	90464–11121	CLAMP BRIDE	1	1				
34	61A–85790–00	THERMOSENSOR ASSY SENSITOMETRE	1	1				
35	92990–10600	WASHER, PLATE RONDELLE, PLATE	1	1				
36	6AW–82560–00	THERMO SWITCH ASSY THERMO-CONTACT COMPLET	2	2				
37	6E9–82588–00	PLATE PLAQUE	2	2				
38	97095–06016	BOLT BOULON	2	2				
39	92995–06600	WASHER RONDELLE	2	2				
40	6AW–82563–00	TRIM & TILT SWITCH ASSY INCLINER ET PARER COMMUTATEUR	1	1				
41	69J–42723–01	COVER, BOTTOM COUVERCLE	1	1				
42	69J–82587–00	GASKET JOINT	2	2				
43	6AX–83614–00	BRACKET SUPPORT	1	1				
44	97095–06014	BOLT BOULON	1	1				
45	92995–06600	WASHER RONDELLE	1	1				
46	63P–83614–01	BRACKET SUPPORT	1	1				
47	90109–06M86	BOLT BOULON	4	4				
48	90465–14M66	CLAMP BRIDE	1	1				
49	90464–20181	CLAMP BRIDE	2	2				
50	90464–08051	CLAMP BRIDE	2	2				
51	69J–81949–02	WIRE, LEAD (ISOLATOR, 3.8M) FIL (ISOLATOR, 3.8M)	1	1				AP AP

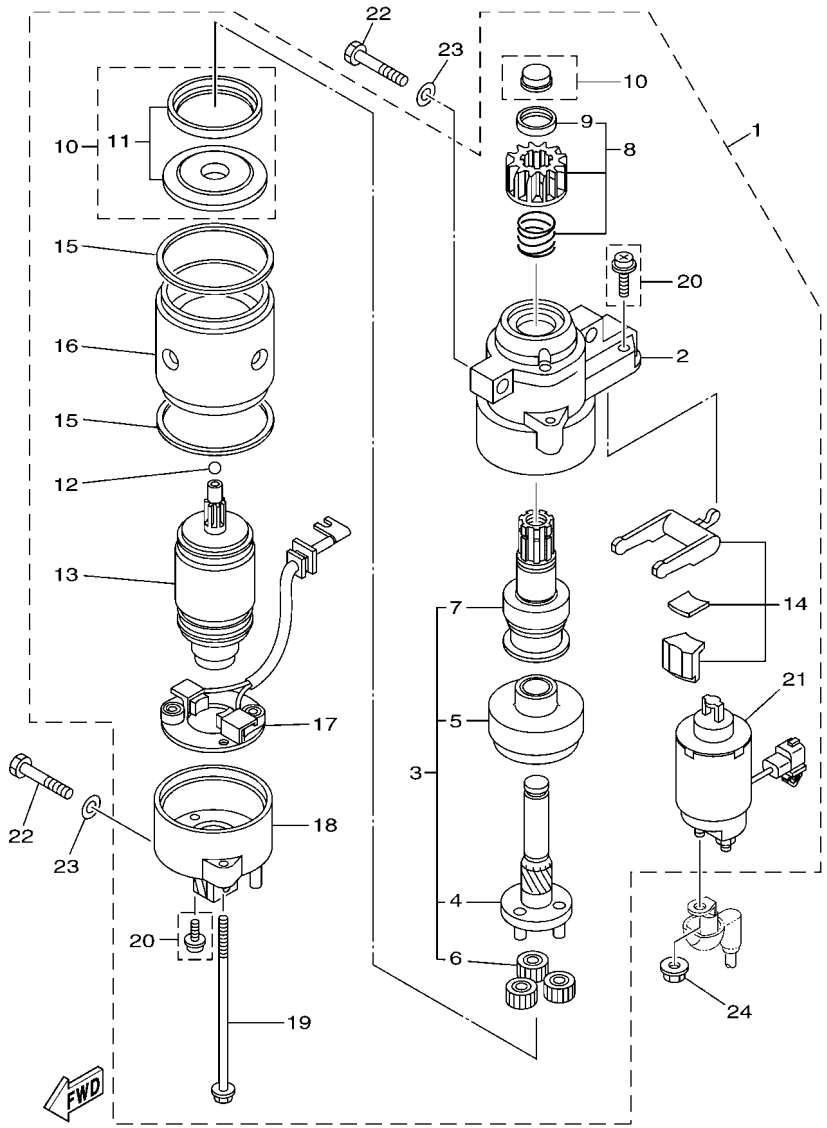

6AW1110-G220

FIG. 23 STARTING MOTOR — DEMARREUR ELECTRIQUE

REF. NO.	PART NO. N° PIECES	DESCRIPTION DESCRIPTION	6AW6	6AX6				REMARKS REMARQUES
1	6AW–81800–00	STARTING MOTOR ASSY DEMARREUR ELECTRIQUE COMPLET	1	1				
2	6AW–81830–00	.FRONT BRACKET ASSY .SUPPORT AVANT	1	1				
3	6AW–81807–00	.GEAR ASSY, STARTING MOTOR .PIGNON, DEMARREUR ELECTRIQUE	1	1				
4	6AW–81836–00	..SHAFT, PINION ..AXE, PIGNON	1	1				
5	6AW–81891–00	..GEAR, RING ..ROUE DENTEE	1	1				
6	6AW–8183T–00	..GEAR, IDLER ..PIGNON, INTERMEDIAIRE	3	3				
7	6AW–81832–00	..CLUTCH, OVER RUN ..EMBRAYAGE, ROUE LIBRE	1	1				
8	6AW–81808–00	.PINION ASSY .PIGNON	1	1				
9	6AW–81857–00	..RETAINER ..ARRETOIR	1	1				
10	6AW–81862–00	.CAP .COUVERCLE	1	1				
11	6AW–8183R–00	..PACKING SET ..POCHETTE DE JOINTS	1	1				
12	6AW–81854–00	.BALL, STEEL .BALLE, ACIER	1	1				
13	6AW–81850–00	.ARMATURE ASSY .INDUIT	1	1				
14	6AW–81839–00	.LEVER ASSY .LEVIER COMPLET	1	1				
15	6AW–81842–00	.PACKING .JOINTS	2	2				
16	6AW–81810–00	.STATOR ASSY .STATOR COMPLET	1	1				
17	6AW–81840–00	.BRUSH HOLDER ASSY .SUPPORT DE CHARBON	1	1				
18	6AW–81820–00	.REAR BRACKET ASSY .SUPPORT ARRIERE COMPLET	1	1				
19	6AW–81826–00	.BOLT .BOULON	1	1				
20	6AW–81846–00	.SCREW .VIS	1	1				
21	6AW–81941–00	.STARTER RELAY ASSY .LANCEUR RELAIS (ENS.)	1	1				
22	97013–08045	BOLT BOULON	3	3				
23	92903–08600	WASHER, PLATE RONDELLE, PLATE	3	3				
24	90179–08003	NUT ECROU	1	1				

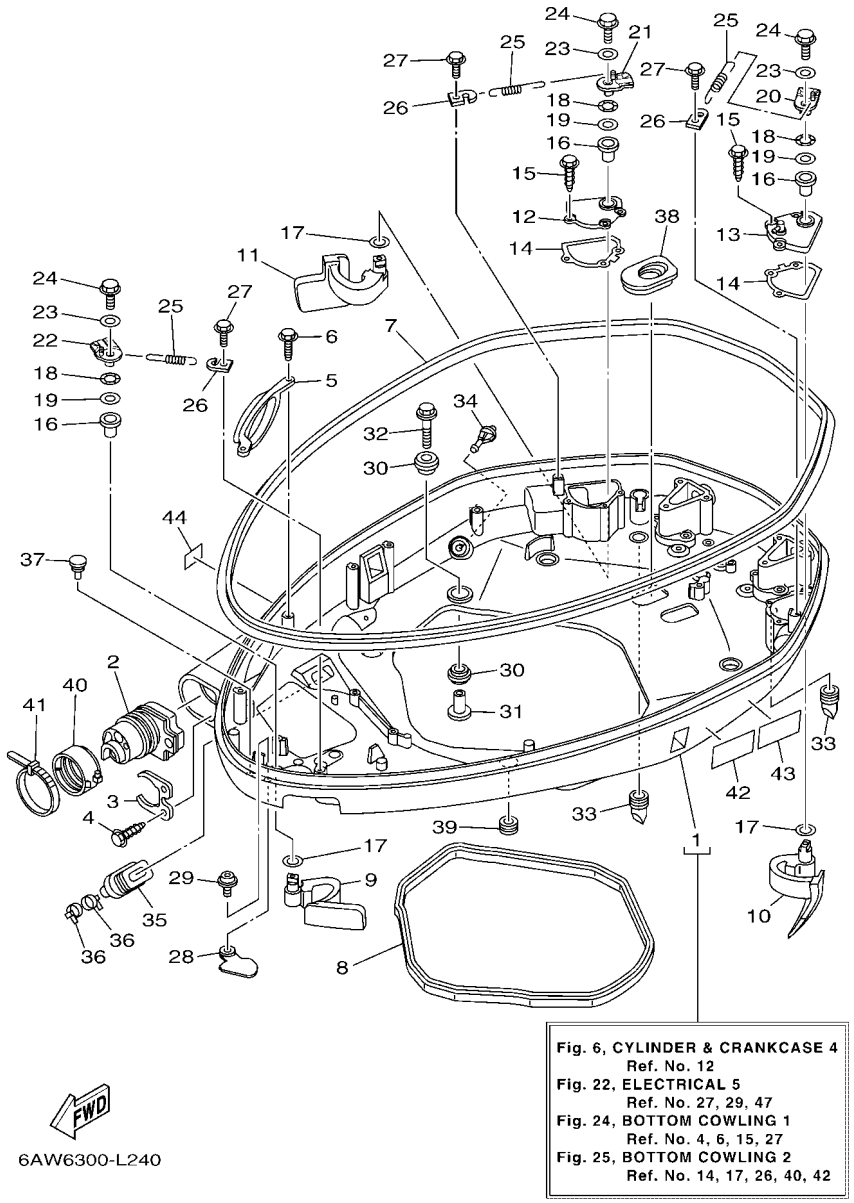

FIG. 24 BOTTOM COWLING 1 — CAPOT INFERIEUR 1

REF. NO.	PART NO. N° PIECES	DESCRIPTION DESCRIPTION	6AW6	6AX6				REMARKS REMARQUES
1	6AW–42710–01–8D	BOTTOM COWLING ASSY ENS. EMBASE	1	1				
2	6AW–42725–01	GROMMET PASSE-FIL	1	1				
3	6AW–42761–00	STOPPER PLAQUETTE	1	1				
4	90109–06M86	BOLT BOULON	2	2				
5	6AW–42735–00	PROTECTOR PROTECTEUR	1	1				
6	90109–06M86	BOLT BOULON	2	2				
7	6AW–42615–00	SEAL JOINT	1	1				
8	63P–42716–00	RUBBER, SEAL 1 JOINT EN CAOUTCHOUC 1	1	1				
9	6AW–42815–00–8D	LEVER, CLAMP LEVIER, PRESSE	1	1				
10	6AW–42816–01–8D	LEVER, CLAMP LEVIER, PRESSE	1	1				
11	6AW–42817–01–8D	LEVER, CLAMP LEVIER, PRESSE	1	1				
12	6AW–42828–00–9S	PLATE, CLAMP PLAQUE, PRESSE	1	1				
13	6AW–42829–00–9S	PLATE, CLAMP 2 PLAQUE, PRESSE 2	1	1				
14	6AW–42722–00	GASKET 2 JOINT 2	2	2				
15	90109–06M81	BOLT BOULON	6	6				
16	90381–15002	BUSH, SOLID DOUILLE, SOLIDE	3	3				
17	90202–15M37	WASHER, PLATE RONDELLE, PLATE	3	3				
18	90206–15M18	WASHER, WAVE RONDELLE, ONDULEE	3	3				
19	90201–156J2	WASHER, PLATE RONDELLE, PLATE	3	3				
20	6AW–42818–01	LEVER, CLAMP LEVIER, PRESSE	1	1				
21	6AW–42819–01	LEVER, CLAMP LEVIER, PRESSE	1	1				
22	6AW–4281A–01	LEVER, CLAMP 6 LEVIER, PRESSE 6	1	1				
23	90201–06M30	WASHER, PLATE RONDELLE, PLATE	3	3				
24	90105–06155	BOLT, FLANGE BOULON	3	3				
25	90506–22001	SPRING, TENSION RESSORT, TENSION	3	3				
26	66T–43144–00	HOOK, SPRING CROCHET	3	3				
27	90109–06M86	BOLT BOULON	3	3				

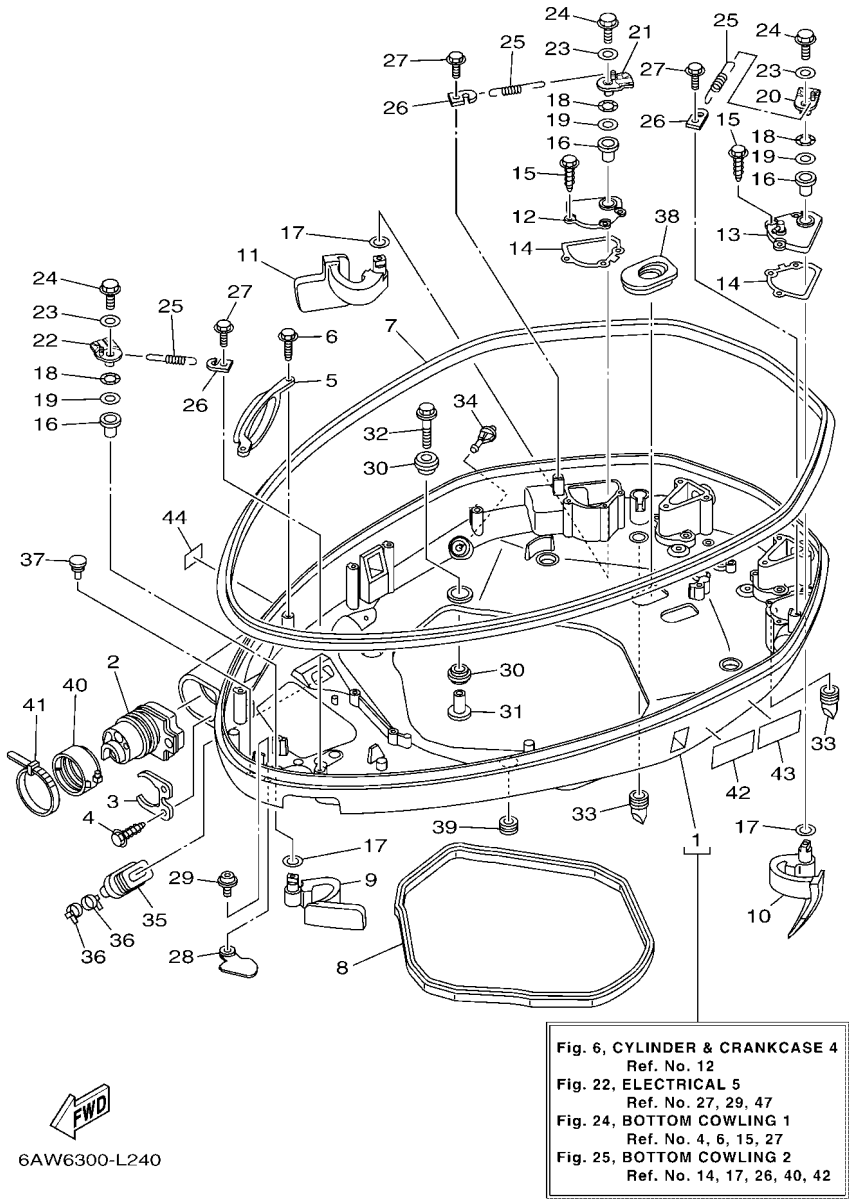

FIG. 24 BOTTOM COWLING 1 — CAPOT INFERIEUR 1

REF. NO.	PART NO. N° PIECES	DESCRIPTION DESCRIPTION	6AW6	6AX6				REMARKS REMARQUES
28	6AW–42851–00	COVER, CLAMP COUVERCLE, BRIDE	1	1				
29	90111–06094	BOLT,HEX. SOCKET BUTTON BOULON	1	1				
30	90480–22M81	GROMMET PASSE-FIL	12	12				
31	90387–08M37	COLLAR COLLERETTE	6	6				
32	90119–08M22	BOLT, WITH WASHER BOULON, AVEC RONDELLE	6	6				
33	61A–42717–00	RUBBER, SEAL 2 JOINT EN CAOUTCHOUC 2	2	2				
34	6P2–44391–00	NIPPLE, HOSE RACCORD D'ESSENCE	1	1				
35	6H1–42726–21	GROMMET PASSE-FIL	1	1				
36	90465–11M10	CLAMP BRIDE	2	2				
37	6H4–42748–00	GROMMET PASSE-FIL	1	1				
38	6AW–42726–00	GROMMET PASSE-FIL	2	2				
39	90480–16007	GROMMET PASSE-FIL	1	1				
40	68F–42753–00	FASTNER ATTACHE	1	1				AP AP
41	90464–20258	CLAMP BRIDE	1	1				AP AP
42	6AH–42794–40	LABEL, WARNING (GENERAL) ETIQUETTE, AVERTISSEMENT	1	1				
43	6AH–42794–50	LABEL, WARNING (GENERAL) ETIQUETTE, AVERTISSEMENT	1	1				
44	6AH–81996–00	MARK MARQUE	1	1				

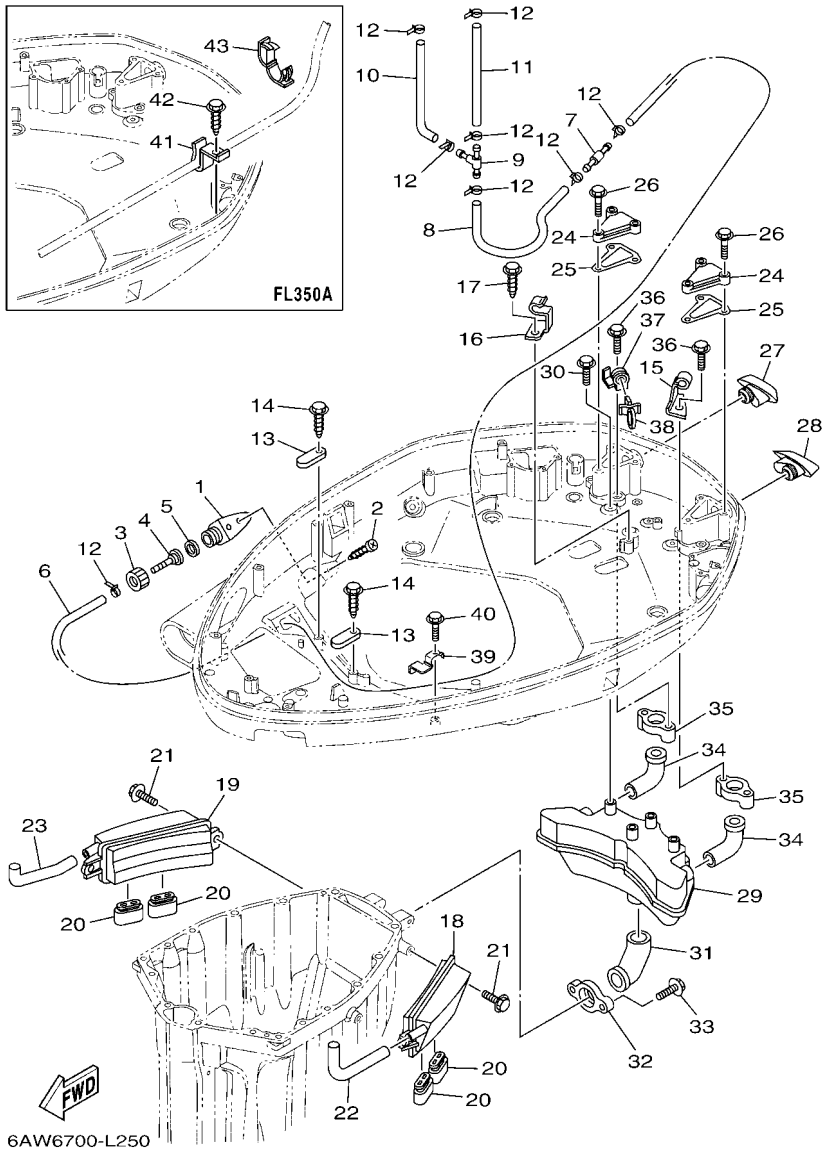

FIG. 25 BOTTOM COWLING 2 — CAPOT INFERIEUR 2

REF. NO.	PART NO. N° PIECES	DESCRIPTION DESCRIPTION	6AW6	6AX6				REMARKS REMARQUES
1	6AW–12572–00	ADAPTER ADAPTATEUR	1	1				
2	97780–60520	SCREW, TAPPING VIS, TETE BOMBEE	2	2				
3	6R3–12581–00	JOINT, HOSE 1 JOINT DE TUYAU	1	1				
4	6AW–12582–00	JOINT, HOSE 2 RACCORD DE TUYAU 1	1	1				
5	6R3–12583–00	GASKET, HOSE JOINT JOINT	1	1				
6	90445–14015	HOSE (L1520) DURITE (L1520)	1	1				
7	6AW–42785–00	PIPE DURITE	1	1				
8	90445–14013	HOSE (L480) DURITE (L480)	1	1				
9	6AW–42169–00	JOINT AXE	1	1				
10	66V–24314–00	PIPE 4 DURITE 4	1	1				
11	90445–116J1	HOSE (L185) DURITE (L185)	1	1				
12	90465–11M10	CLAMP BRIDE	8	8				
13	6E5–82588–00	PLATE PLAQUE	2	2				
14	90109–06M81	BOLT BOULON	2	2				
15	90465–08M82	CLAMP BRIDE	1	1				
16	6AW–42744–00	STAY SUPPORT	1	1				
17	90109–06M86	BOLT BOULON	1	1				
18	6AW–42733–00	BOX, DRAIN BOITIER, VIDANGE	1	1				
19	6AW–42734–00	BOX, DRAIN 2 BOITIER, VIDANGE 2	1	1				
20	69J–42717–00	RUBBER, SEAL 2 JOINT EN CAOUTCHOUC 2	4	4				
21	95895–06016	BOLT, FLANGE BOULON	4	4				
22	6AW–42786–00	HOSE, DRAIN 1 DURITE, VIDANGE 1	1	1				
23	6AW–42787–00	HOSE, DRAIN 2 DURITE, VIDANGE 2	1	1				
24	6AW–42723–00–9S	COVER, BOTTOM COUVERCLE	2	2				
25	6AW–42721–00	GASKET 1 JOINT 1	2	2				
26	90109–06M81	BOLT BOULON	6	6				
27	6AW–42769–00	SEAL, RUBBER BOURRELET, CAOUTCHOUC	1	1				

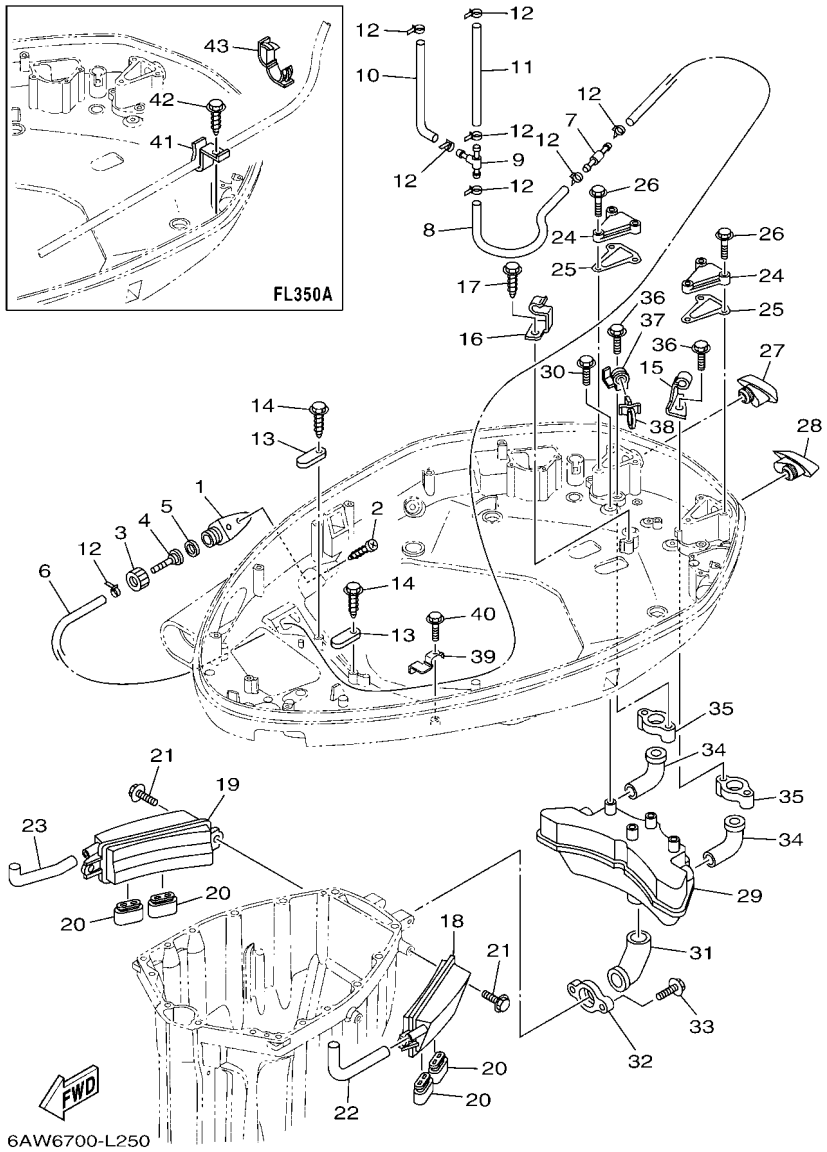

FIG. 25 BOTTOM COWLING 2 — CAPOT INFERIEUR 2

REF. NO.	PART NO. N° PIECES	DESCRIPTION DESCRIPTION	6AW6	6AX6				REMARKS REMARQUES
28	6AW–42629–00	SEAL JOINT	1	1				
29	6AW–14750–00	SILENCER ASSY SILENCIEUX	1	1				
30	95875–06016	BOLT, FLANGE BOULON, A COLLERETTE	4	4				
31	6AW–1475E–00	PIPE 2 DURITE	1	1				
32	6AW–14763–00	SPACER ENTRETOISE	1	1				
33	95875–06025	BOLT, FLANGE BOULON, A COLLERETTE	2	2				
34	6AW–1475F–00	PIPE 3 DURITE 3	2	2				
35	6AW–14764–00–CA	SPACER ENTRETOISE	2	2				
36	95875–06016	BOLT, FLANGE BOULON, A COLLERETTE	4	4				
37	6AW–8339X–00	CLAMP, CORD COLLIER, CORDON	1	1				
38	90464–12001	CLAMP BRIDE	1	1				
39	6AW–42767–00	BRACKET SUPPORT	1	1				
40	90109–06M86	BOLT BOULON	1	1				
41	6AX–8257G–00	CLAMP, CORD COLLIER, CORDON		1				
42	90109–06M86	BOLT BOULON		1				
43	90464–18001	CLAMP BRIDE		2				

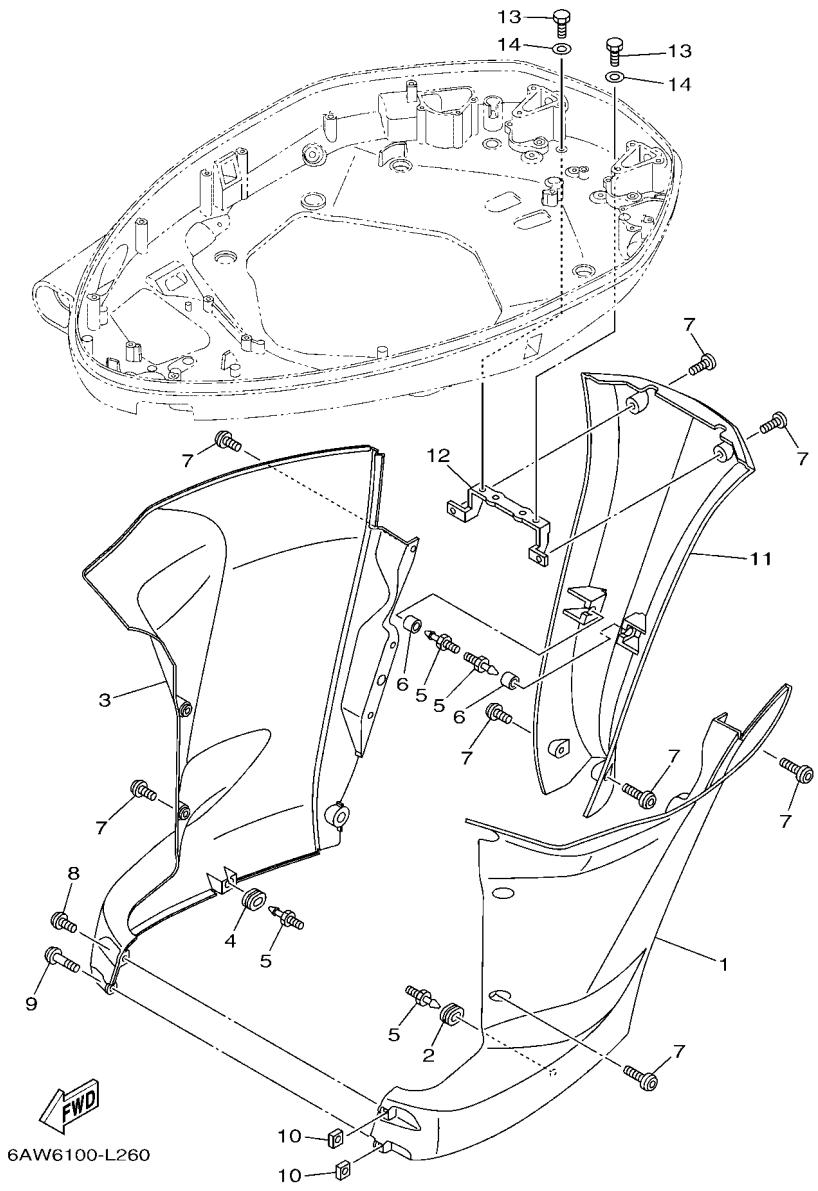

FIG. 26 BOTTOM COWLING 3 — CAPOT INFERIEUR 3

REF. NO.	PART NO. N° PIECES	DESCRIPTION DESCRIPTION	6AW6	6AX6				REMARKS REMARQUES
1	6AW–42741–00–8D	APRON CAPOT LATERAL	1	1				
2	90480–14M17	GROMMET PASSE-FIL	1	1				
3	6AW–42771–00–8D	APRON CAPOT LATERAL	1	1				
4	90480–14M17	GROMMET PASSE-FIL	1	1				
5	69J–42774–10	STAY, APRON 1 COUSSINET	4	4				
6	90386–07001	BUSH DOUILLE	2	2				
7	90111–06111	BOLT,HEX. SOCKET BUTTON BOULON	14	14				
8	90111–06111	BOLT,HEX. SOCKET BUTTON BOULON	1	1				
9	90111–06113	BOLT,HEX. SOCKET BUTTON BOULON	1	1				
10	90173–06001	NUT, SQUARE ECROU, CARRE	2	2				
11	6AW–45151–01–8D	COVER, UPPER CASING CAPUCHON, FOURREAU	1	1				
12	6AW–42775–00	STAY, APRON 2 COUSSINET	1	1				
13	97095–06014	BOLT BOULON	2	2				
14	92995–06600	WASHER RONDELLE	2	2				

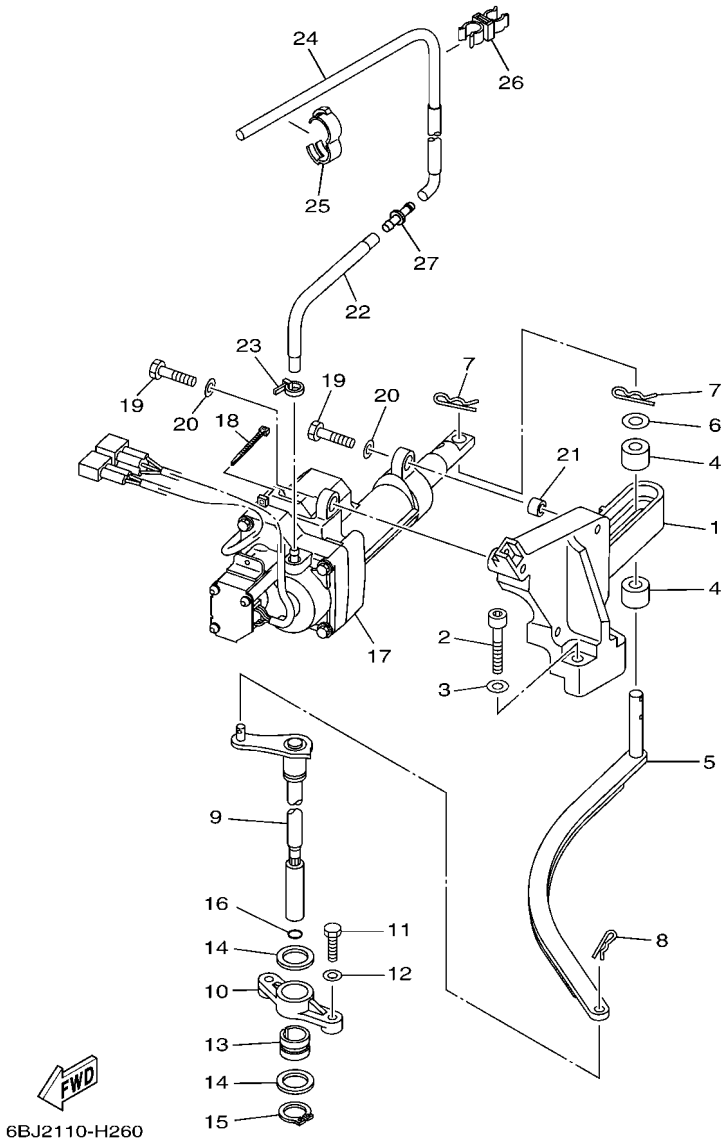

FIG. 27 CONTROL — COMMANDE

REF. NO.	PART NO. N° PIECES	DESCRIPTION DESCRIPTION	6AW6	6AX6				REMARKS REMARQUES
1	6AW–44176–00	BRACKET SUPPORT	1	1				
2	90110–08085	BOLT, HEXAGON SOCKET HEAD BOULON, TETE HEXAGONALE CREUSE	2	2				
3	92990–08600	WASHER, PLATE RONDELLE, PLATE	2	2				
4	6AW–44122–00	BUSHING, SHIFT ROD LEVER DOUILLE, LEVIER D'EMBRAYAGE	2	2				
5	6AW–44121–00	LEVER, SHIFT ROD LEVIER, TIGE D'INVERSION	1	1				
6	90201–11008	WASHER, PLATE RONDELLE, PLATE	1	1				
7	90468–180A0	CLIP JONC	2	2				
8	90468–18008	CLIP JONC	1	1				
9	6AW–44120–00	HANDLE GEAR SHIFT ASSY LEVIER D'EMBRAYAGE	1	1				X(25.1") X(25.1")
	6AW–44120–10	HANDLE GEAR SHIFT ASSY LEVIER D'EMBRAYAGE	1	1				U(30.1") U(30.1")
10	6AW–44118–00	BRACKET SUPPORT	1	1				
11	97095–06025	BOLT BOULON	2	2				
12	92995–06600	WASHER RONDELLE	2	2				
13	90380–19001	BUSH, SOLID DOUILLE, SOLIDE	1	1				
14	90202–19001	WASHER, PLATE RONDELLE, PLATE	2	2				
15	93410–19088	CIRCLIP CLIPS	1	1				
16	93210–09165	O-RING JOINT TORIQUE	1	1				
17	6AW–4820A–11	ACTUATOR UNIT ACTUATOR UNIT	1	1				
18	90465–11M10	CLAMP BRIDE	1	1				
19	97080–08030	BOLT BOULON	4	4				
20	92900–08600	WASHER RONDELLE	4	4				
21	90387–08M31	COLLAR COLLERETTE	2	2				
22	6AW–24314–10	PIPE 4 DURITE 4	1	1				
23	90465–11M10	CLAMP BRIDE	1	1				
24	6AW–24314–00	PIPE 4 DURITE 4	1	1				
25	90464–16001	CLAMP BRIDE	1	1				
26	90464–10M59	CLAMP BRIDE	1	1				

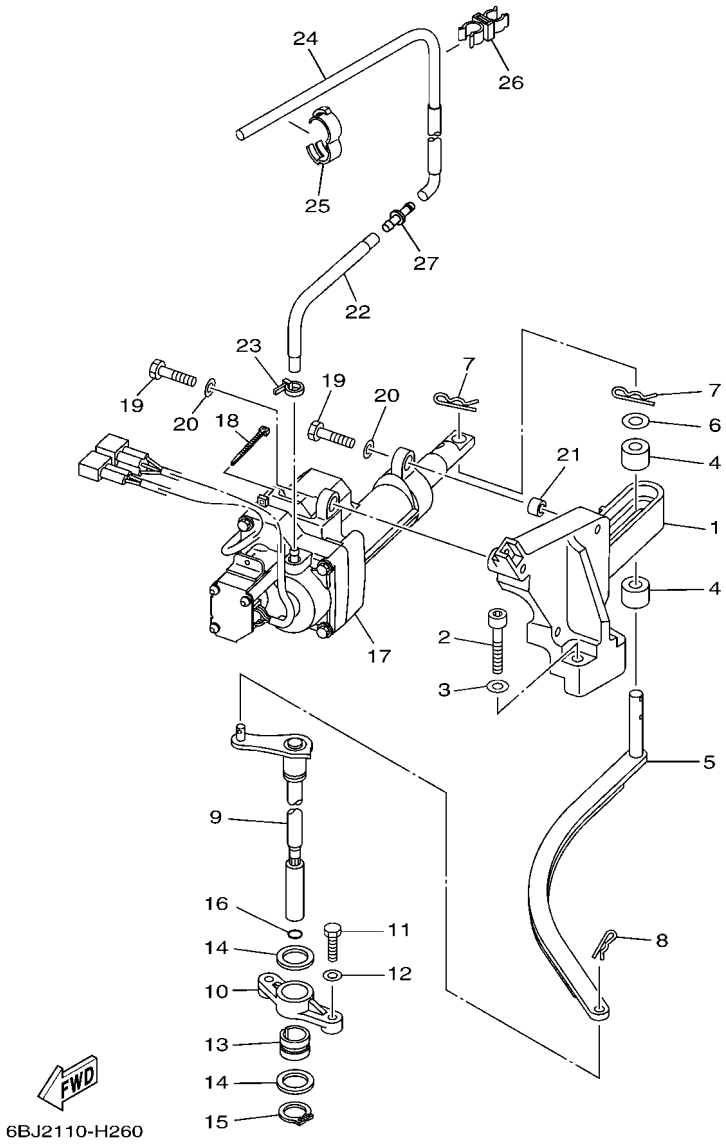

FIG. 27 CONTROL — COMMANDE

REF. NO.	PART NO. N° PIECES	DESCRIPTION DESCRIPTION	6AW6	6AX6				REMARKS REMARQUES
27	6G8–24376–00	PIPE, JOINT 1 DURITE 1, RACCORDEMENT	1	1				

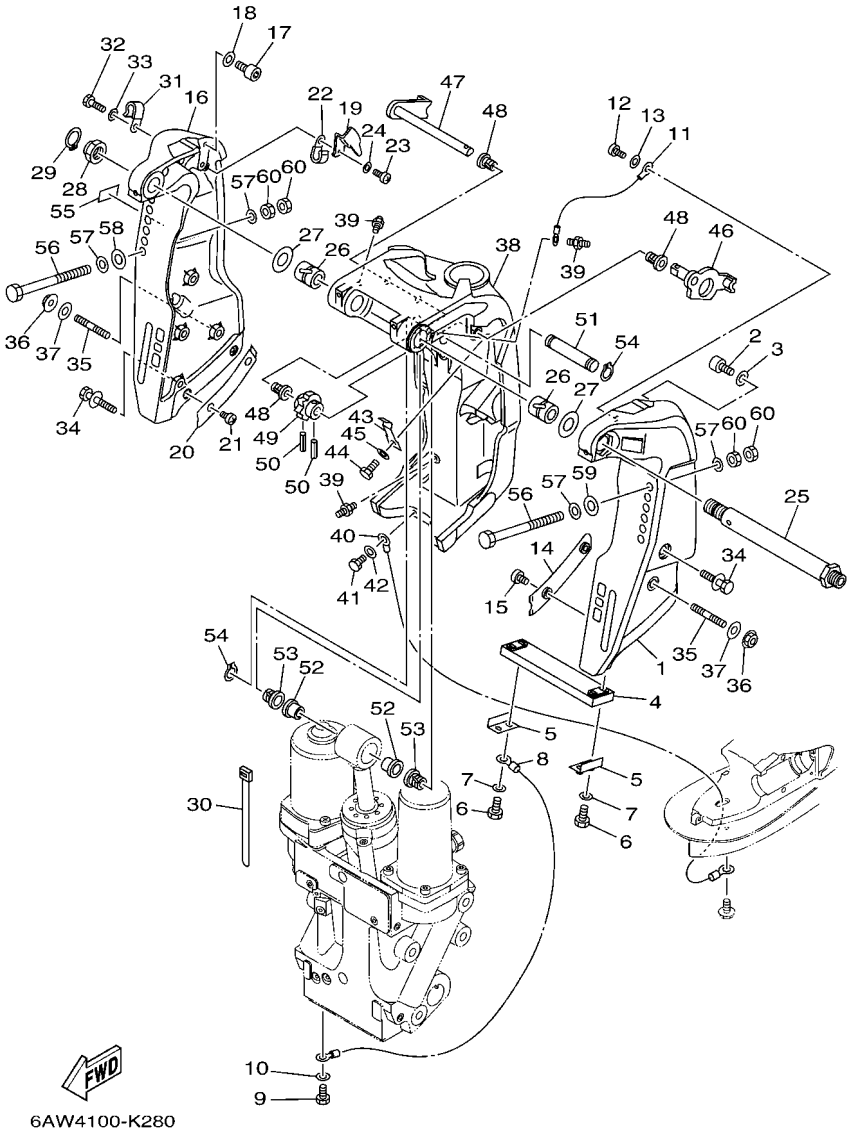

FIG. 28 BRACKET 1 — SUPPORT 1

REF. NO.	PART NO. N° PIECES	DESCRIPTION DESCRIPTION	6AW6	6AX6				REMARKS REMARQUES
1	6AW–43111–00–8D	BRACKET, CLAMP 1 PRESSE 1	1	1				
2	91314–10020	BOLT, HEXAGON SOCKET HEAD BOULON, TETE HEXAGONALE CREUSE	1	1				
3	90201–10049	WASHER, PLATE RONDELLE, PLATE	1	1				
4	6AW–45251–00	ANODE ANODE	1	1				
5	6G5–44526–00	PLATE PLAQUE	2	2				
6	97095–06030	BOLT BOULON	4	4				
7	92995–06600	WASHER RONDELLE	4	4				
8	6H1–82148–00	WIRE, LEAD 4 FIL 4	1	1				
9	97095–06010	BOLT BOULON	1	1				
10	92995–06600	WASHER RONDELLE	1	1				
11	6H1–82148–00	WIRE, LEAD 4 FIL 4	1	1				
12	97885–06012	SCREW, PAN HEAD VIS, A ENCOCHE	1	1				
13	92995–06600	WASHER RONDELLE	1	1				
14	61A–43132–00	WASHER, FRICTION RONDELLE, FRICTION	1	1				
15	97885–06010	SCREW, PAN HEAD VIS, A ENCOCHE	2	2				
16	6AW–43112–00–8D	BRACKET, CLAMP 2 PRESSE 2	1	1				
17	91314–10020	BOLT, HEXAGON SOCKET HEAD BOULON, TETE HEXAGONALE CREUSE	1	1				
18	90201–10049	WASHER, PLATE RONDELLE, PLATE	1	1				
19	6AW–43113–00	PLATE, CLAMP BRACKET PLAQUETTE, PRESSE	1	1				
20	61A–43133–00	WASHER,FRICTION RONDELLE	1	1				
21	97885–06010	SCREW, PAN HEAD VIS, A ENCOCHE	2	2				
22	90465–08M83	CLAMP BRIDE	1	1				
23	97885–06012	SCREW, PAN HEAD VIS, A ENCOCHE	1	1				
24	92995–06600	WASHER RONDELLE	1	1				
25	6R3–43131–10	BOLT, CLAMP BRACKET BOULON, PRESSE	1	1				
26	90386–25003	BUSH DOUILLE	2	2				
27	90201–26014	WASHER, PLATE RONDELLE, PLATE	2	2				

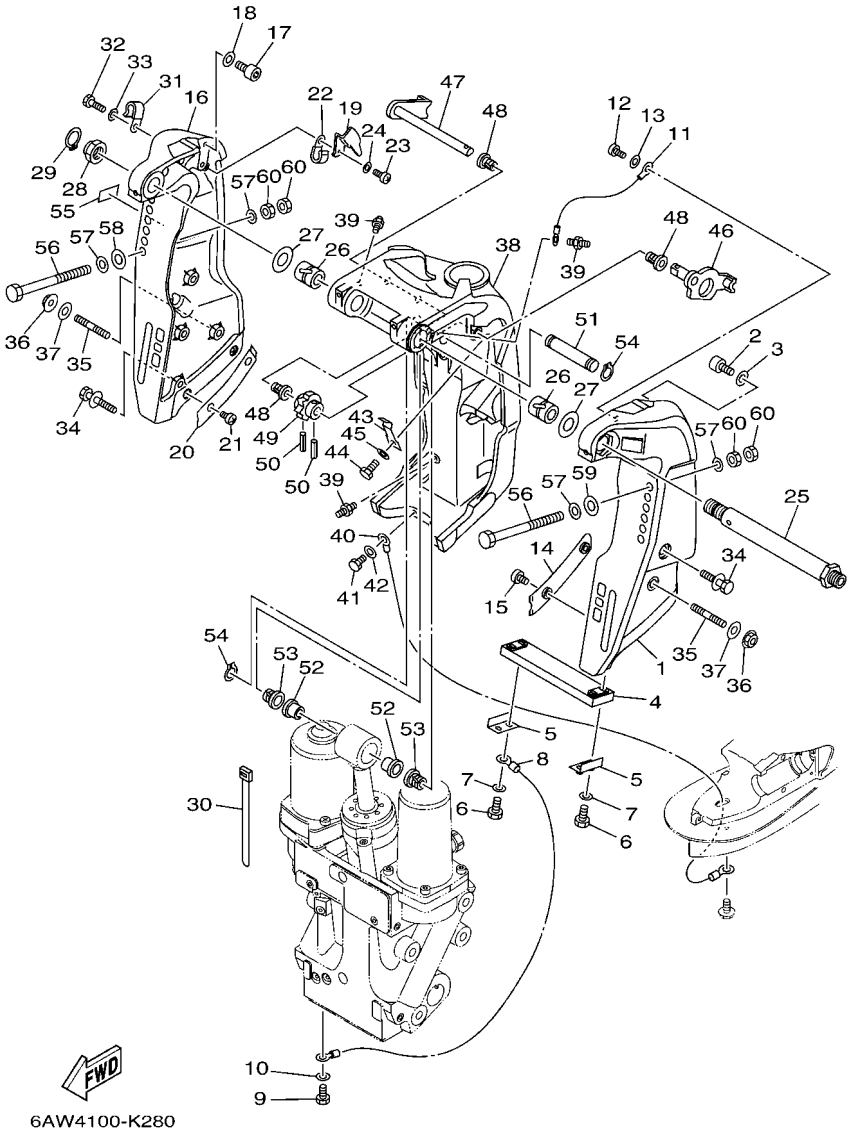

FIG. 28 BRACKET 1 — SUPPORT 1

REF. NO.	PART NO. N° PIECES	DESCRIPTION DESCRIPTION	6AW6	6AX6				REMARKS REMARQUES
28	90185–22007	NUT, SELF-LOCKING ECROU,AUTO-BLOQUANT	1	1				
29	93410–21089	CIRCLIP CLIPS	1	1				
30	90465–11M10	CLAMP BRIDE	3	3				
31	90465–08M83	CLAMP BRIDE	1	1				
32	97095–06014	BOLT BOULON	1	1				
33	92995–06600	WASHER RONDELLE	1	1				
34	90119–10039	BOLT, WITH WASHER BOULON, AVEC RONDELLE	6	6				
35	90116–10047	BOLT, STUD GOUJON	2	2				
36	95780–10300	NUT, FLANGE ECROU	2	2				
37	90201–10048	WASHER, PLATE RONDELLE, PLATE	2	2				
38	6AW–43311–00–8D	BRACKET, SWIVEL 1 SUPPORT, PIVOT 1	1	1				
39	93700–06M03	NIPPLE, GREASE PION	3	3				
40	6E5–82147–00	WIRE, LEAD 5 FIL 5	1	1				
41	97095–06010	BOLT BOULON	1	1				
42	92995–06600	WASHER RONDELLE	1	1				
43	6AW–44116–00	SPRING RESSORT	1	1				
44	97095–06010	BOLT BOULON	1	1				
45	92995–06600	WASHER RONDELLE	1	1				
46	6AW–43181–01	LEVER, TILT STOP 1 LEVIER VERROUILLAGE RELEVAGE 1	1	1				
47	6AW–43185–01	LEVER, TILT STOP 2 LEVIER VERROUILLAGE RELEVAGE 2	1	1				
48	90386–10M16	BUSH DOUILLE	3	3				
49	6AW–43148–00	COLLAR, DISTANCE ENTRETOISE	1	1				
50	91690–30020	PIN, SPRING AGRAFFE	2	2				
51	6AW–43126–01	PIN, UPPER SHOCK MOUNT AXE, SUPERIEUR AMORTISSEUR	1	1				
52	90386–18M63	BUSH DOUILLE	2	2				
53	90386–18M14	BUSH DOUILLE	2	2				
54	93410–18M05	CIRCLIP CLIPS	2	2				

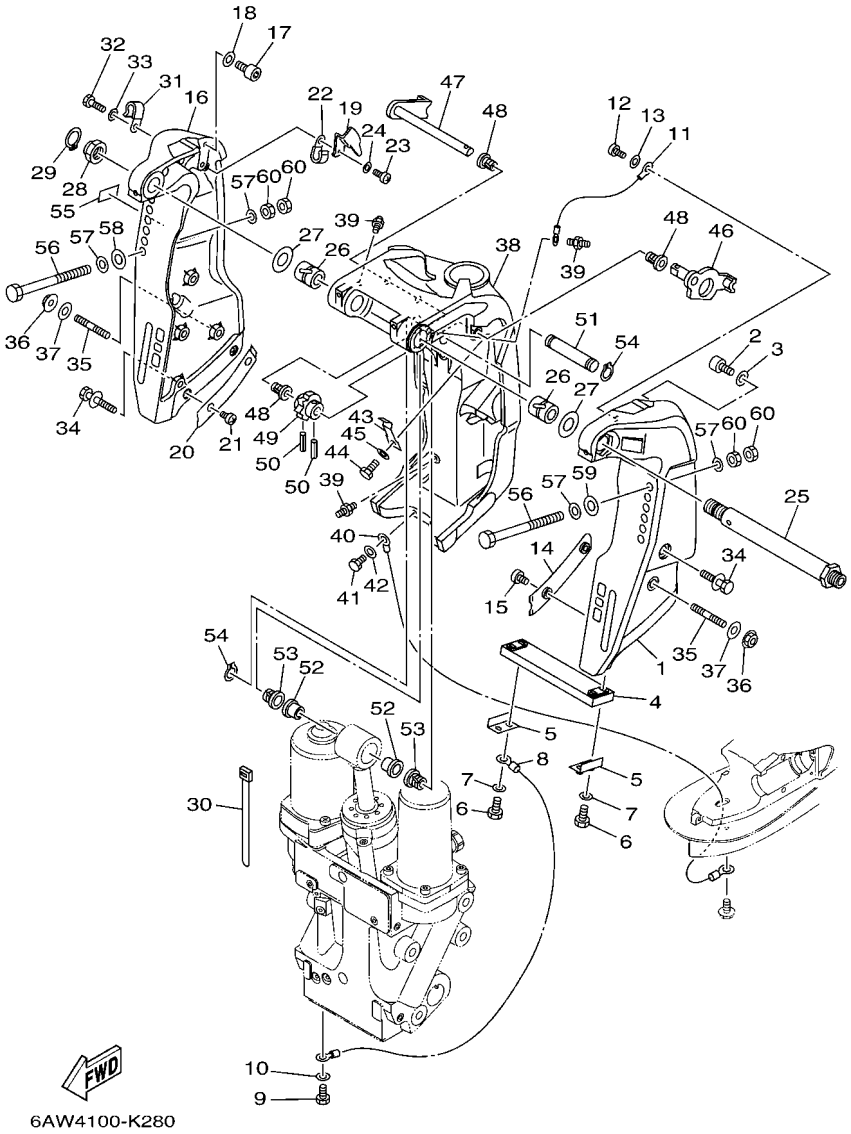

FIG. 28 BRACKET 1 SUPPORT 1

REF. NO.	PART NO. N° PIECES	DESCRIPTION DESCRIPTION	6AW6	6AX6				REMARKS REMARQUES
55	63V–82377–50	LABEL (SPARK,IGNITION) ETIQUETTE	1	1				FOR F(L)350AET2 FOR F(L)350AET2
56	90101–12031	BOLT (150MM) BOULON (150MM)	6	6				
	90101–12036	BOLT (170MM) BOULON (170MM)	2	2				AP AP
57	90201–12060	WASHER, PLATE RONDELLE, PLATE	12	12				
58	90201–12426	WASHER, PLATE RONDELLE, PLATE	2	2				
59	90201–13M19	WASHER, PLATE RONDELLE, PLATE	4	4				
60	95380–12600	NUT ECROU	12	12				

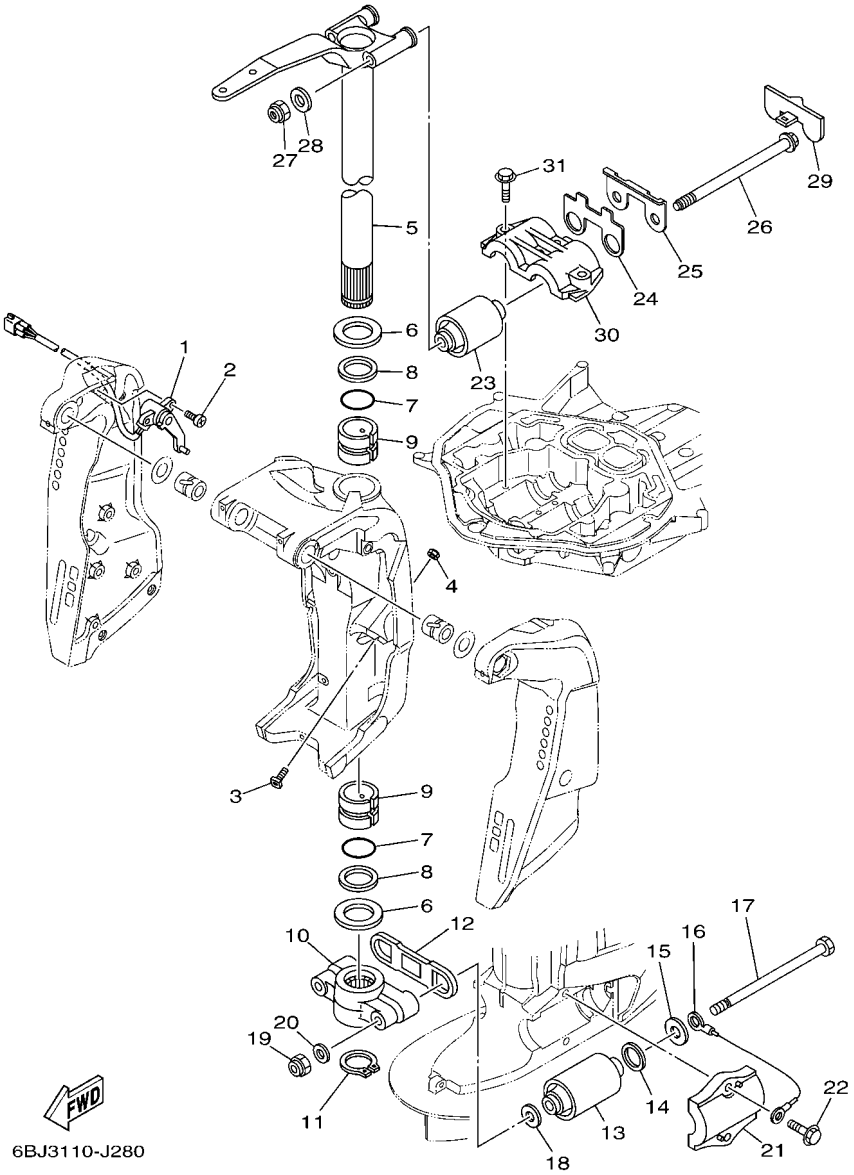

FIG. 29 BRACKET 2 — SUPPORT 2

REF. NO.	PART NO. N° PIECES	DESCRIPTION DESCRIPTION	6AW6	6AX6				REMARKS REMARQUES
1	6AW–83672–00	TRIM SENDER INCLINER RACCORD	1	1				
2	97885–06016	SCREW, PAN HEAD VIS, A ENCOCHE	2	2				
3	6AW–43376–00	BOLT, THRUST RECEIVER BOULON	2	2				
4	95780–10300	NUT, FLANGE ECROU	2	2				
5	6AW–42510–01–8D	STEERING BRACKET ASSY DIRECTION SUPPORT (ENS.)	1	1				
6	90201–46008	WASHER, PLATE RONDELLE, PLATE	2	2				
7	93210–43001	O-RING JOINT TORIQUE	2	2				
8	90202–45001	WASHER, PLATE RONDELLE, PLATE	2	2				
9	90386–45002	BUSH DOUILLE	2	2				
10	6AW–44551–00–CA	HOUSING, LOWER MOUNT RUBBER 1 BOITIER, SILENT-BLOC INFERIEUR	1	1				
11	93410–44087	CIRCLIP CLIPS	1	1				
12	6AW–44575–00	DAMPER, LOWER MOUNT RUBBER SILENT-BLOC, INFERIEUR	1	1				
13	6AW–44555–00	MOUNT DAMPER, LOWER SIDE SILENT-BLOC, INFERIEUR LATERAL	2	2				
14	90202–32M19	WASHER, PLATE RONDELLE, PLATE	2	2				
15	90201–16016	WASHER, PLATE RONDELLE, PLATE	2	2				
16	6AW–82149–00	WIRE, LEAD 3 FIL 3	1	1				
17	90101–14004	BOLT BOULON	2	2				
18	90201–15M58	WASHER, PLATE RONDELLE, PLATE	2	2				
19	90185–14M00	NUT, SELF-LOCKING ECROU,AUTO-BLOQUANT	2	2				
20	92995–14600	WASHER RONDELLE	2	2				
21	6AW–44552–00–CA	HOUSING, LOWER MOUNT RUBBER 2 BOITIER, SILENT-BLOC INFERIEUR	2	2				
22	90119–10024	BOLT, WITH WASHER BOULON, AVEC RONDELLE	4	4				
23	6AW–44514–01–94	MOUNT DAMPER, UPPER SIDE SILENT-BLOC, SUPERIEUR LATERAL	2	2				
24	6AW–44532–00	STOPPER, UPPER MOUNT PLAQUETTE	1	1				
25	6AW–44526–00	PLATE PLAQUE	1	1				
26	90105–16003	BOLT, FLANGE BOULON	2	2				
27	90185–16008	NUT, SELF-LOCKING ECROU,AUTO-BLOQUANT	2	2				

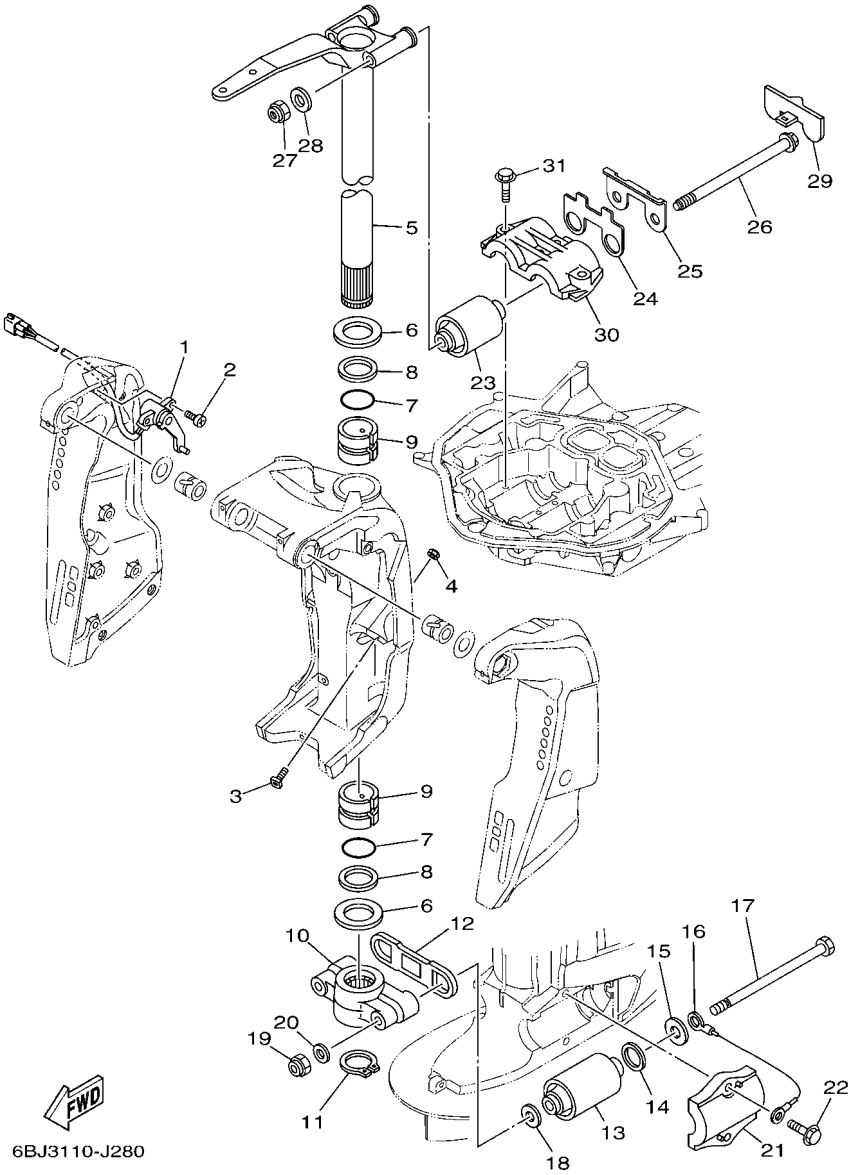

FIG. 29 BRACKET 2 — SUPPORT 2

REF. NO.	PART NO. N° PIECES	DESCRIPTION DESCRIPTION	6AW6	6AX6				REMARKS REMARQUES
28	90201–16030	WASHER, PLATE RONDELLE, PLATE	2	2				
29	6AW–44533–00	DAMPER, UPPER MOUNT RUBBER COUVERCLE, SUSPENSION INFERIEU	1	1				
30	6AW–44511–01–CA	COVER, UPPER MOUNT COUVERCLE, SUSPENSION SUPERIEU	1	1				
31	90119–10024	BOLT, WITH WASHER BOULON, AVEC RONDELLE	4	4				

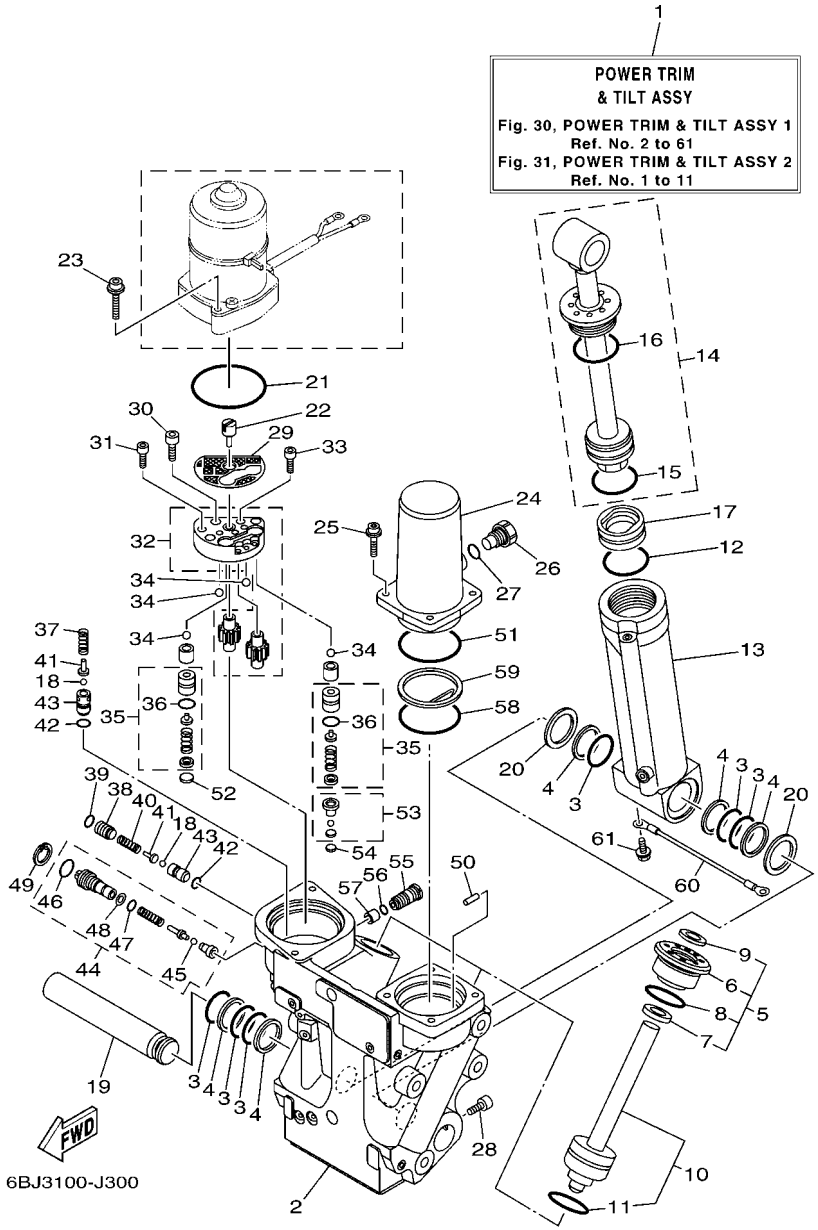

FIG. 30 POWER TRIM & TILT ASSY 1 — PUISSANCE PARER ET INCLINER 1

REF. NO.	PART NO. N° PIECES	DESCRIPTION DESCRIPTION	6AW6	6AX6				REMARKS REMARQUES
1	6AW–43800–02	POWER TRIM & TILT ASSY PUISSANCE PARER ET INCLINER (E	1	1				
2	6AW–43825–01	HOUSING, TRIM & TILT CARTER	1	1				
3	6AW–4389H–00	O-RING JOINT TORIQUE	6	6				
4	6AW–43871–00	RING, BACK UP SEGMENT	5	5				
5	6AW–4380R–00	CYLINDER END SUB ASSY CYLINDRE RACCORD (ENS.)	2	2				
6	6AW–43821–00	.SCREW, TRIM CYLINDER END .VIS	1	1				
7	6AW–4384J–00	.SEAL, TRIM DOWN .JOINT	1	1				
8	6E5–43862–00	.O-RING .JOINT TORIQUE	1	1				
9	6AW–43822–00	.SEAL, TRIM DUST .JOINT	1	1				
10	6AW–43820–01	TRIM PISTON SUB ASSY PARER PISTON AUXILIAIRE (ENS.)	2	2				
11	6G5–43864–00	.O-RING .JOINT TORIQUE	1	1				
12	6E5–43862–00	O-RING JOINT TORIQUE	1	1				
13	6AW–43813–00	CYLINDER, TILT CYLINDRE	1	1				
14	6AW–43810–01	TILT PISTON SUB ASSY INCLINER PISTON AUXILIAIRE(ENS	1	1				
15	6E5–43862–00	.O-RING .JOINT TORIQUE	1	1				
16	64E–43866–00	.O-RING .JOINT TORIQUE	1	1				
17	6AW–43814–00	PISTON, FREE PISTON	1	1				
18	64E–43858–00	BALL BILLE	2	2				
19	6AW–4381A–00	SHAFT AXE	1	1				
20	6AW–4387G–00	WASHER RONDELLE	2	2				
21	64E–43868–00	O-RING JOINT TORIQUE	1	1				
22	64E–43831–00	CONNECTOR, SHAFT RACCORD	1	1				
23	6AW–43879–00	SCREW, WITH WASHER VIS, AVEC RONDELLE	2	2				
24	6AW–43828–00	BODY, RESERVOIR CORPS	1	1				
25	6AW–43887–00	BOLT BOULON	4	4				
26	6AW–43829–00	PLUG, RESERVOIR BOUCHON	1	1				
27	6AW–43897–00	O-RING JOINT TORIQUE	1	1				

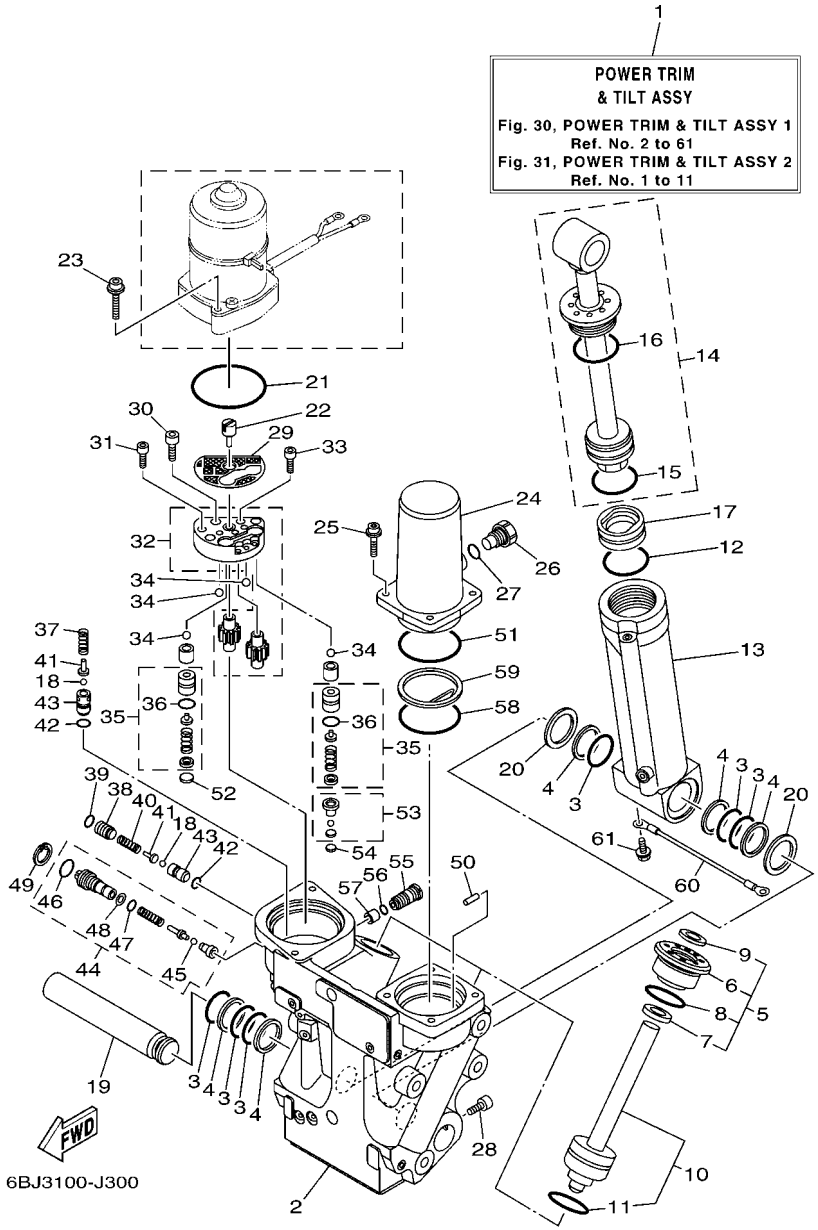

FIG. 30 POWER TRIM & TILT ASSY 1 — PUISSANCE PARER ET INCLINER 1

REF. NO.	PART NO. N° PIECES	DESCRIPTION DESCRIPTION	6AW6	6AX6				REMARKS REMARQUES
28	6AW–4388E–00	BOLT ,SCREW VIS	1	1				
29	64E–43817–11	FILTER 2 FILTRE 2	1	1				
30	6AW–43878–00	BOLT, SOCKET BOULON	4	4				
31	6AW–43888–00	BOLT, SOCKET BOULON	3	3				
32	6AW–43830–00	GEAR PUMP ASSY POMPE A PIGNON (ENS.)	1	1				
33	6AW–43886–00	BOLT BOULON	1	1				
34	6AW–43858–00	BALL BILLE	4	4				
35	6AW–43802–00	VALVE SUB ASSY CLAPET AUXILIAIRE (ENS.)	2	2				
36	6E5–43896–00	.O-RING .JOINT TORIQUE	1	1				
37	6AW–43856–00	SPRING, DOWN RELIEF RESSORT	1	1				
38	6AW–4388J–00	PLUG 2 BOUCHON 2	1	1				
39	6AW–43869–00	O-RING JOINT TORIQUE	1	1				
40	6AW–4384H–00	SPRING RESSORT	1	1				
41	6AW–43844–00	PIN, VALVE SUPPORT GOUPILLE	2	2				
42	6G5–43863–00	O-RING JOINT TORIQUE	2	2				
43	6AW–4382G–00	VALVE SEAT JEU DE POINTEAUX	2	2				
44	6AW–43860–01	MANUAL VALVE SUB-ASSY SOUPAPE, MANUEL (ENS.)	1	1				
45	64E–43858–00	.BALL .BILLE	1	1				
46	72X–85075–L0	.O-RING .JOINT TORIQUE	1	1				
47	64E–4387A–00	.O-RING .JOINT TORIQUE	1	1				
48	64E–43873–00	.RING, BACK UP .RESSORT	1	1				
49	6AW–43875–00	RING, SNAP RESSORT	1	1				
50	6AW–4381G–00	PIN 1 GOUPILLE 1	1	1				
51	6AW–43861–00	O-RING JOINT TORIQUE	1	1				
52	6AW–43817–00	FILTER 2 FILTRE 2	1	1				
53	6AW–43809–00	SEAT VALVE COMP. 2 SIEGE VALVE COMP. 2	1	1				
54	64E–43816–00	FILTER 1 FILTRE 1	1	1				

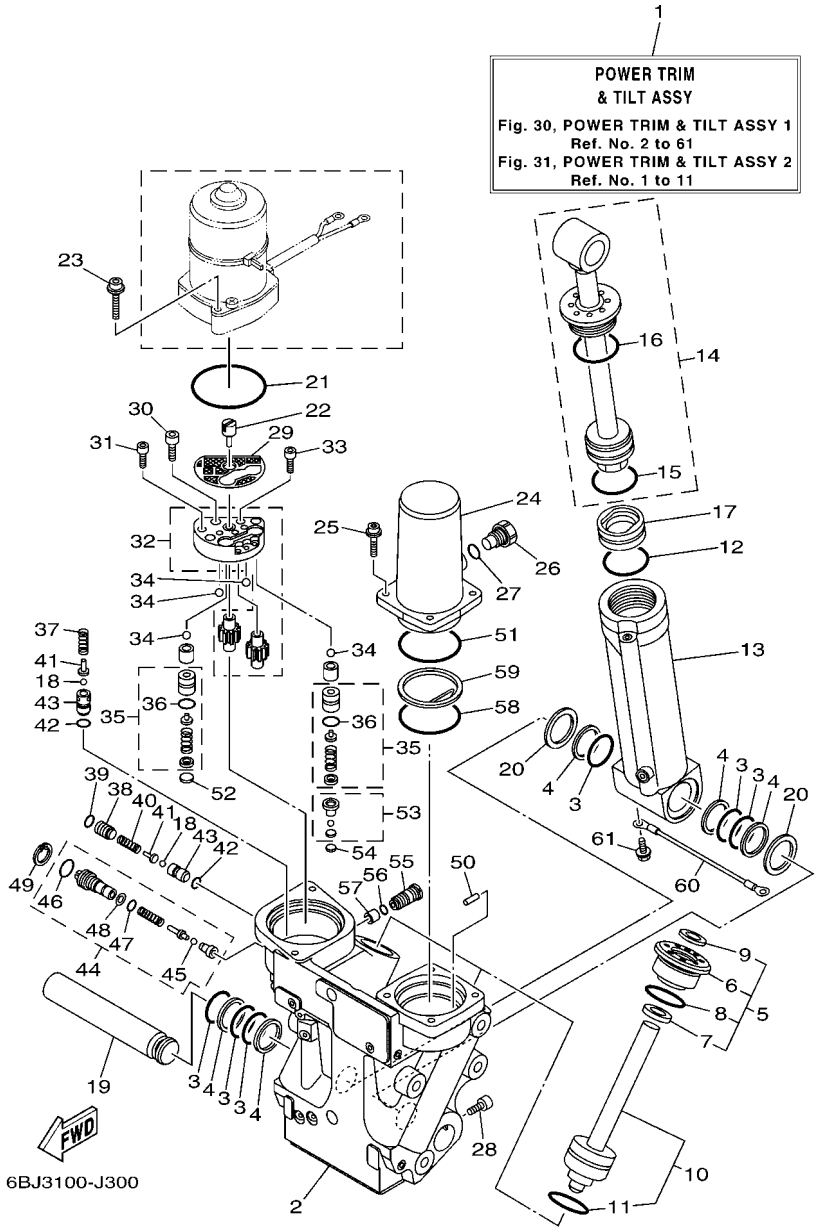

FIG. 30 POWER TRIM & TILT ASSY 1 — PUISSANCE PARER ET INCLINER 1

REF. NO.	PART NO. N° PIECES	DESCRIPTION DESCRIPTION	6AW6	6AX6				REMARKS REMARQUES
55	6AX–4388J–00	PLUG 2 BOUCHON 2	1	1				
56	64E–43865–00	O-RING JOINT TORIQUE	1	1				
57	6AW–4388H–00	PLUG BOUCHON	1	1				
58	6AW–4389J–00	O-RING JOINT TORIQUE	1	1				
59	6AW–43899–00	PLATE STOPPER PLAQUETTE	1	1				
60	6H1–82148–00	WIRE, LEAD 4 FIL 4	1	1				
61	97595–06510	BOLT, WITH WASHER VIS HEXAGONAL AVC RONDELLE	1	1				

FIG. 31 POWER TRIM & TILT ASSY 2 — PUISSANCE PARER ET INCLINER 2

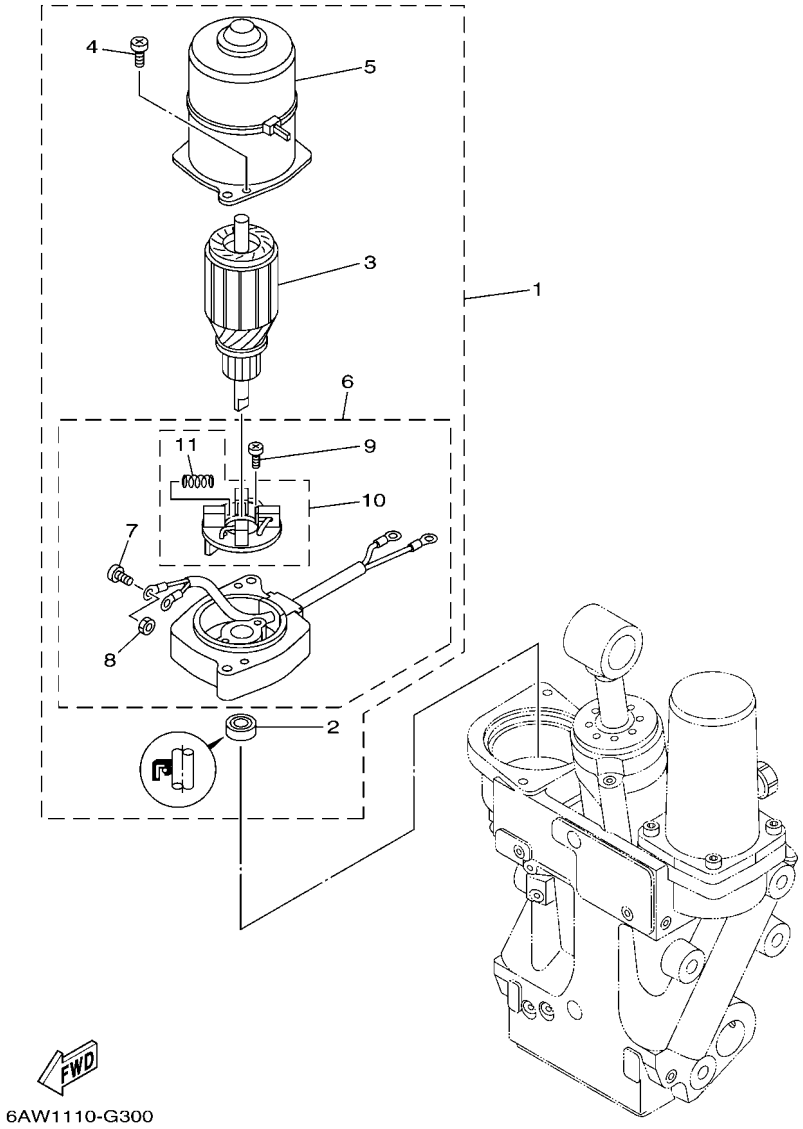

REF. NO.	PART NO. N° PIECES	DESCRIPTION DESCRIPTION	6AW6	6AX6				REMARKS REMARQUES
1	6AW–43880–01	MOTOR ASSY MOTEUR (ENS.)	1	1				
2	6AW–43882–00	.OIL SEAL .JOINT SPI	1	1				
3	6AW–43805–00	.ARMATURE ASSY .INDUIT (ENS.)	1	1				
4	6AW–43843–00	.SCREW .VIS	2	2				
5	6AW–43804–00	.STATOR ASSY .STATOR (ENS.)	1	1				
6	6AW–43881–11	.FRAME, END .BATI	1	1				
7	6AX–43887–00	..BOLT ..BOULON	2	2				
8	6AW–43138–00	..NUT ..ECROU	2	2				
9	6AW–43842–00	..SCREW ..VIS	2	2				
10	6AW–4380J–00	..HOLDER, BRUSH ..PORTE-BALAI	1	1				
11	6AW–4386K–00	...SPRING, BRUSH ...RESSORT, BALAI	4	4				

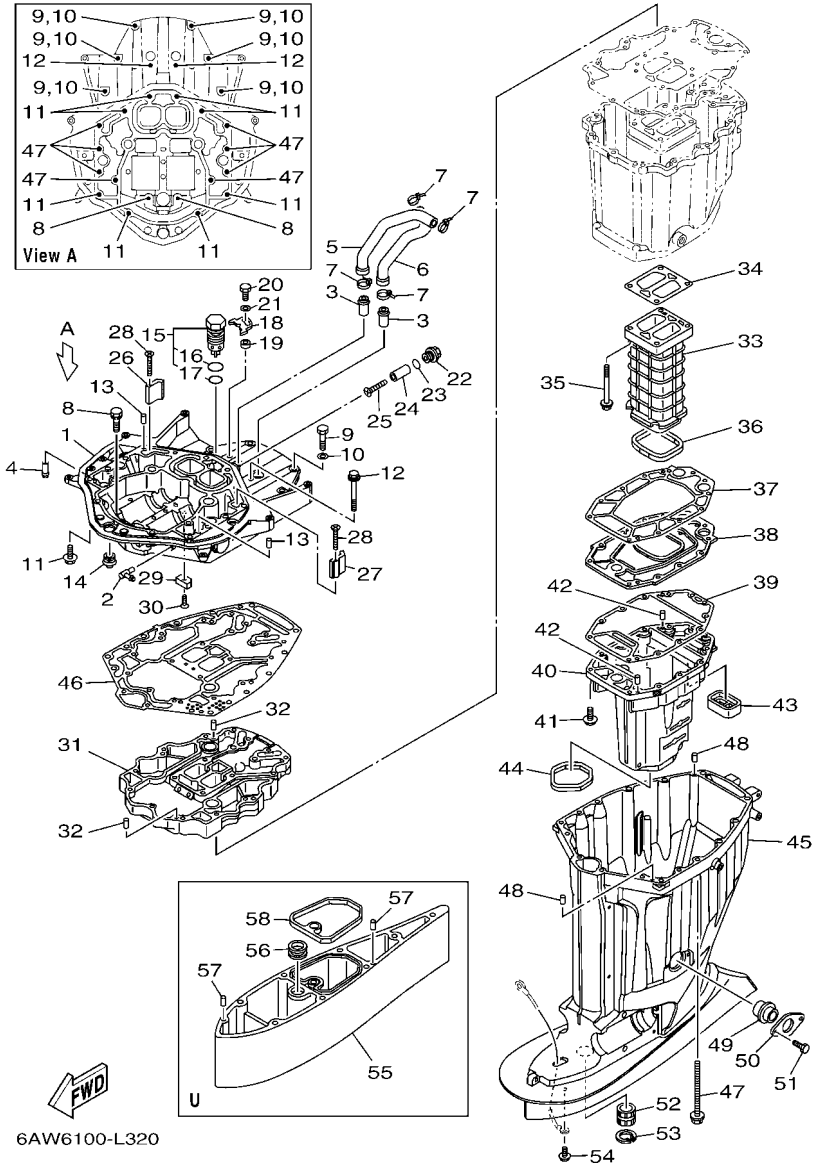

FIG. 32 UPPER CASING FOURREAU

REF. NO.	PART NO. N° PIECES	DESCRIPTION DESCRIPTION	6AW6	6AX6				REMARKS REMARQUES
1	6AW–41137–11–CA	GUIDE, EXHAUST COLLECTEUR D'ECHAPPEMENT	1	1				
2	6H1–11372–00	NIPPLE, HOSE RACCORD, TUYAU	1	1				
3	6AW–1475G–00	PIPE 4 DURITE 4	2	2				
4	6AW–1475J–00	PIPE DURITE	2	2				
5	6AW–1244H–00	HOSE 5 DURITE 5	1	1				
6	6AW–1243F–00	HOSE,3 DURITE 3	1	1				
7	90465–11M59	CLAMP BRIDE	4	4				
8	90119–08102	BOLT, WITH WASHER BOULON, AVEC RONDELLE	2	2				
9	97075–10045	BOLT BOULON	6	6				
10	92995–10600	WASHER RONDELLE	6	6				
11	90119–10040	BOLT, WITH WASHER BOULON, AVEC RONDELLE	8	8				
12	97575–10585	BOLT, WITH WASHER VIS HEXAGONAL AVC RONDELLE	2	2				
13	93608–16M16	PIN, DOWEL AXE	2	2				
14	6AW–42724–00	GROMMET PASSE-FIL	1	1				
15	6AW–11371–10	PRESSURE CONTROL VALVE ASSY SOUPAPE, COMMANDE DE PRESSION	1	1				
16	93210–347A1	.O-RING .JOINT TORIQUE	1	1				
17	93210–28543	.O-RING .JOINT TORIQUE	1	1				
18	69J–12233–00	PLATE, GUIDE STOPPER 1 PLAQUE, GUIDE BUTEE 1	1	1				
19	90387–06037	COLLAR COLLERETTE	1	1				
20	97095–06020	BOLT BOULON	1	1				
21	92995–06600	WASHER RONDELLE	1	1				
22	6AW–11197–00	PLUG, BLIND PLOT, BORGNE	1	1				
23	93210–19758	O-RING JOINT TORIQUE	1	1				
24	6AW–1132S–00	ANODE 7 ANODE 7	1	1				
25	98780–05550	SCREW, FLAT HEAD VIS A TETE FRAISEE	1	1				
26	6AW–1132T–00	ANODE 8 ANODE 8	1	1				
27	6AW–1132U–00	ANODE 9 ANODE 9	1	1				

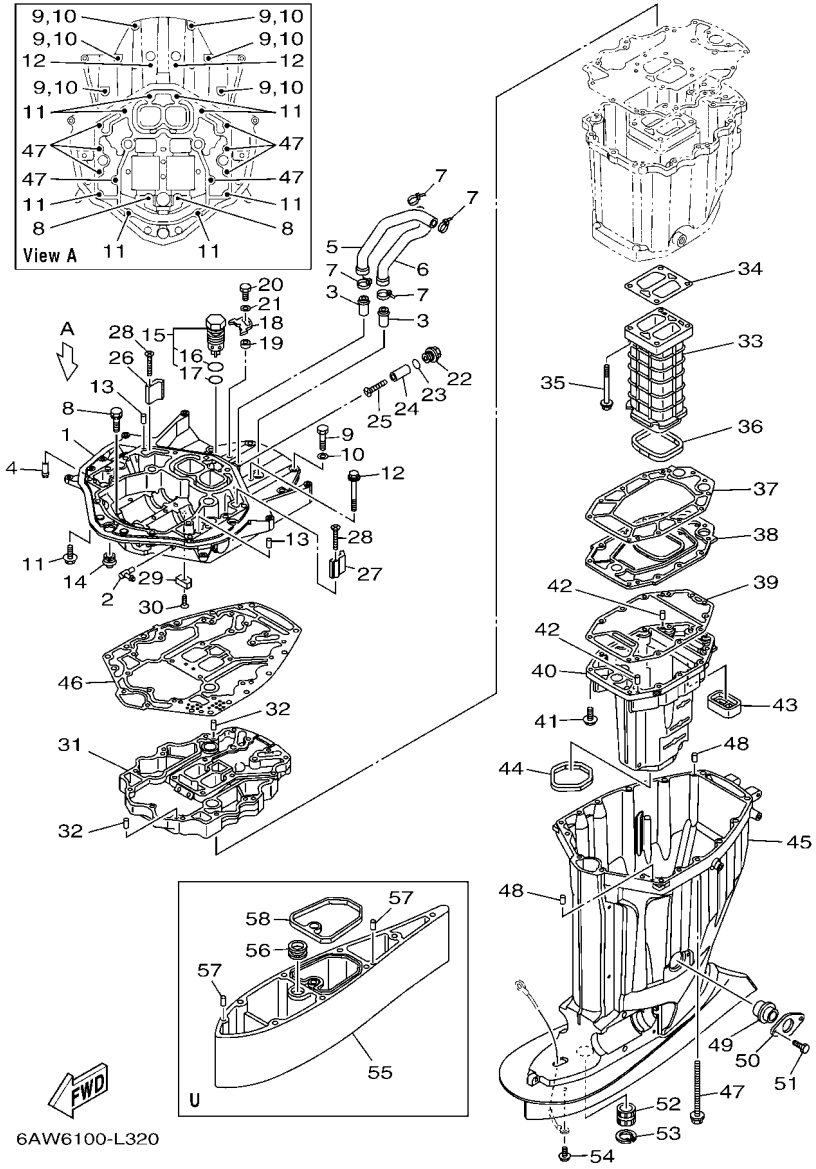

FIG. 32 UPPER CASING — FOURREAU

REF. NO.	PART NO. N° PIECES	DESCRIPTION DESCRIPTION	6AW6	6AX6				REMARKS REMARQUES
28	98780–05550	SCREW, FLAT HEAD VIS A TETE FRAISEE	2	2				
29	63P–11325–11	ANODE ANODE	1	1				
30	90151–06M02	SCREW, COUNTERSUNK VIS, TETE NOYEE	1	1				
31	6AW–41131–01–CA	MANIFOLD, EXT. 1 PIPE D'ECHAPPEMENT	1	1				
32	93608–16M16	PIN, DOWEL AXE	2	2				
33	6AW–41132–00–9S	MANIFOLD, EXHAUST PIPE D'ECHAPPEMENT	1	1				
34	6AW–41134–02	GASKET, EXHAUST MANIFOLD JOINT, PIPE D'ECHAPPEMENT	1	1				
35	90119–08117	BOLT, WITH WASHER BOULON, AVEC RONDELLE	4	4				
36	6AW–41138–00	SEAL, EXT. 1 JOINT DE GROUPE 1	1	1				
37	6AW–41135–00	GASKET, EXHAUST MANIFOLD JOINT, PIPE D'ECHAPPEMENT	1	1				
38	6AW–45181–01–9S	PLATE PLAQUETTE	1	1				
39	6AW–41136–00	GASKET, EXHAUST MANIFOLD 4 JOINT, PIPE D'ECHAPPEMENT 4	1	1				
40	6AW–14711–00–9S	MUFFLER 1 POT D'ECHAPPEMENT 1	1	1				
41	97575–08535	BOLT, WITH WASHER VIS HEXAGONAL AVC RONDELLE	12	12				
42	93606–19M23	PIN, DOWEL GOUPILLE	2	2				
43	6AW–45127–00	SEAL JOINT	1	1				
44	69J–45123–00	GASKET, MUFFLER JOINT, POT DE DETENTE	1	1				
45	6AW–45111–10–8D	CASING, UPPER FOURREAU	1	1				
46	6AW–45113–00	GASKET, UPPER CASING JOINT, TUBE D'ARBRE	1	1				
47	90119–10007	BOLT, WITH WASHER BOULON, AVEC RONDELLE	8	8				
48	93608–16M16	PIN, DOWEL AXE	2	2				
49	69J–15316–00	DAMPER 1 AMORTISSEUR 1	1	1				
50	69J–45152–10	COVER, UPPER CASING 2 CAPUCHON FOURREAU	1	1				
51	97095–06014	BOLT BOULON	2	2				
52	6AW–45318–00	BUSHING, DRIVE SHAFT DOUILLE, ARBRE MOTEUR	1	1				
53	93420–38091	CIRCLIP CIRCLIP, TYPE S	1	1				
54	95895–06010	BOLT, FLANGE BOULON	1	1				

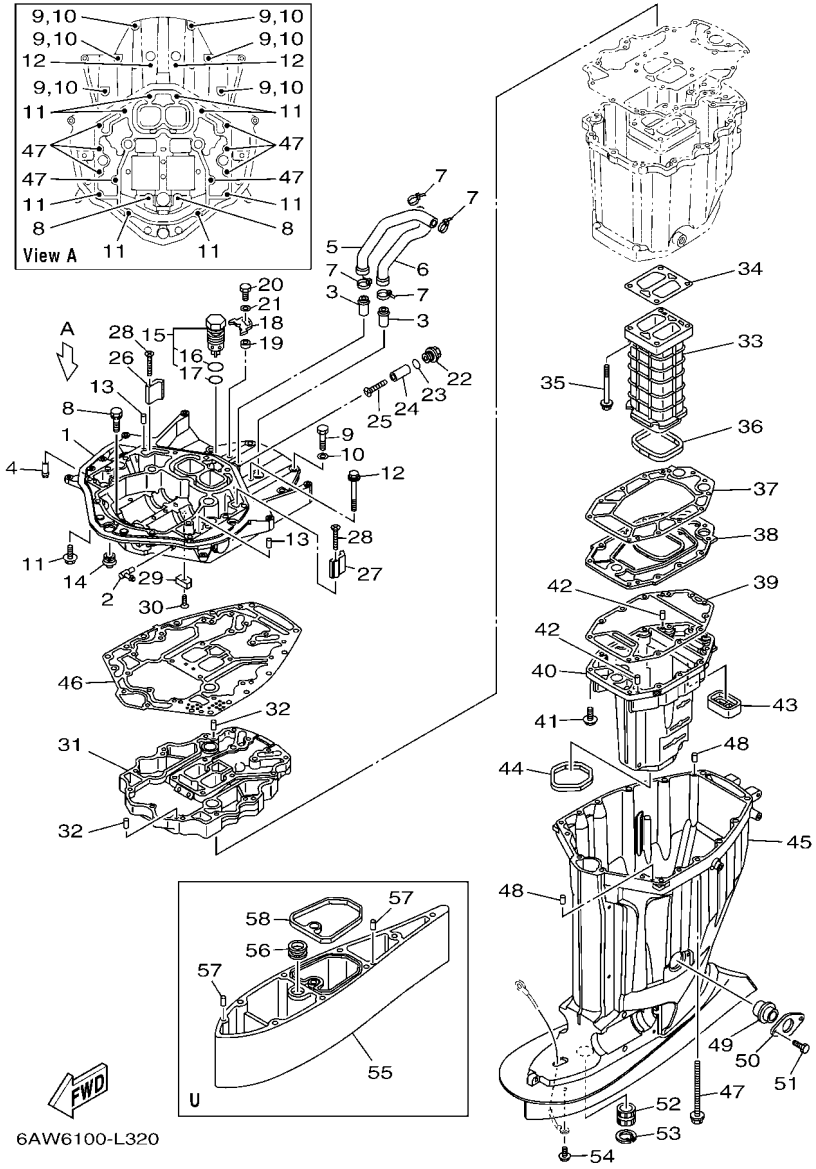

FIG. 32 UPPER CASING FOURREAU

REF. NO.	PART NO. N° PIECES	DESCRIPTION DESCRIPTION	6AW6	6AX6				REMARKS REMARQUES
55	6AW–45211–10–8D	EXTENSION EXTENSION	1	1				U(30.1") U(30.1")
56	6AW–44366–00	DAMPER, WATER SEAL 2 JOINT, TUBE D'EAU 2	1	1				U(30.1") U(30.1")
57	93608–12M05	PIN, DOWEL AXE	2	2				U(30.1") U(30.1")
58	6AW–45159–00	DAMPER CAOUTCHOUC, JOINT	1	1				U(30.1") U(30.1")

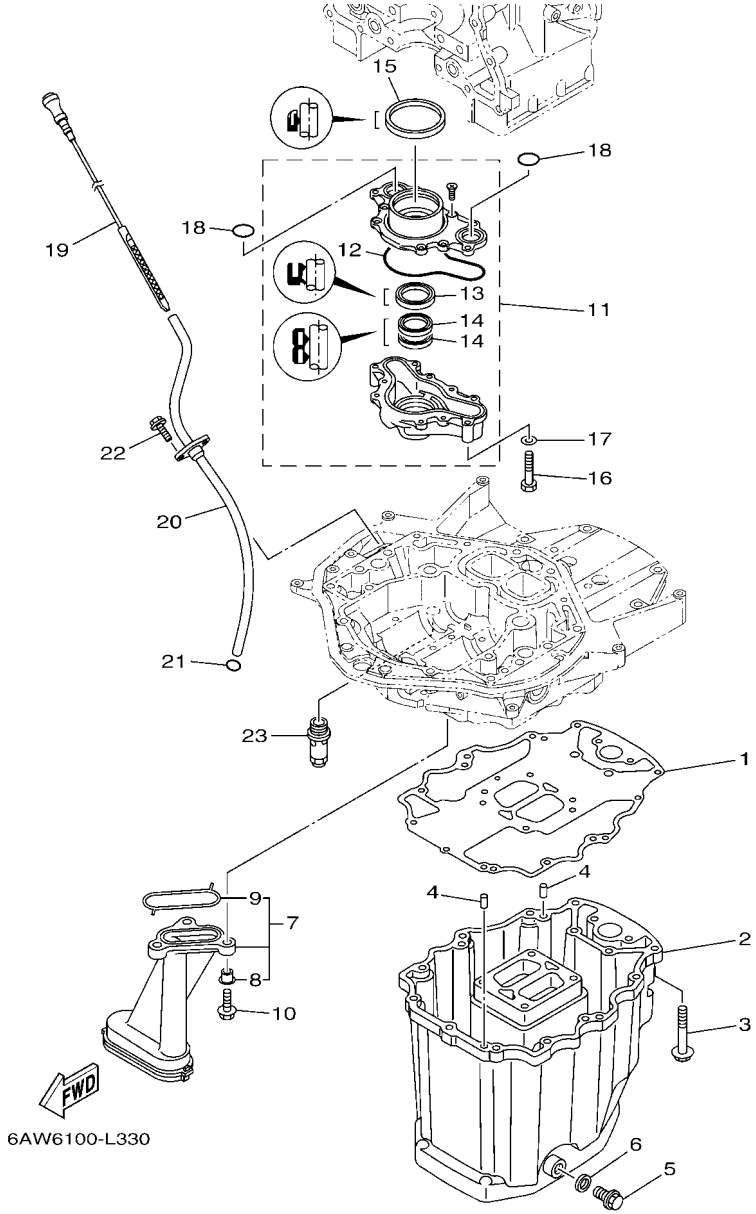

FIG. 33 OIL PAN — VENTILATEUR D'HUILE

REF. NO.	PART NO. N° PIECES	DESCRIPTION DESCRIPTION	6AW6	6AX6				REMARKS REMARQUES
1	6AW–15312–00	GASKET, OIL PAN JOINT DE VENTILATEUR D'HUILE	1	1				
2	6AW–15311–00–CA	OIL PAN VENTILATEUR D'HUILE	1	1				
3	97575–08570	BOLT, WITH WASHER VIS HEXAGONAL AVC RONDELLE	13	13				
4	93608–16M16	PIN, DOWEL AXE	2	2				
5	90340–14M06	PLUG, STRAIGHT SCREW PLOT, FILETE DROIT	1	1				
6	90430–14M09	GASKET JOINT	1	1				
7	6AW–13411–00	STRAINER, OIL FILTRE, HUILE	1	1				
8	90387–06263	.COLLAR .COLLERETTE	3	3				
9	6AW–13415–00	.SEAL, OIL STRAINER .JOINT, FILTRE A HUILE	1	1				
10	95812–06025	BOLT, FLANGE BOULON	3	3				
11	6AW–13300–02	OIL PUMP ASSY POMPE A HUILE COMPLETE	1	1				
12	6CB–13329–00	.GASKET, PUMP COVER .JOINT, COUVERCLE DE POMPE	1	1				
13	6AW–13119–00	.OIL SEAL .JOINT SPY	1	1				
14	6AW–13631–00	.OIL SEAL .JOINT SPY	2	2				
15	69J–11355–00	SEAL, CYLINDER 1 JOINT, SPY CYLINDRE	1	1				
16	97075–06050	BOLT BOULON	4	4				
17	92995–06600	WASHER RONDELLE	4	4				
18	93210–26658	O-RING JOINT TORIQUE	2	2				
19	6AW–15362–01	PLUG, OIL LEVEL PLOT, NIVEAU D'HUILE	1	1				
20	6AW–15377–00	GUIDE, INLET GUIDE D'ADMISSION	1	1				
21	93210–19MJ3	O-RING JOINT TORIQUE	1	1				
22	95875–06016	BOLT, FLANGE BOULON, A COLLERETTE	2	2				
23	6AW–13490–01	RELIEF VALVE ASSY SOUPAPE DE SECURITE COMPLET	1	1				

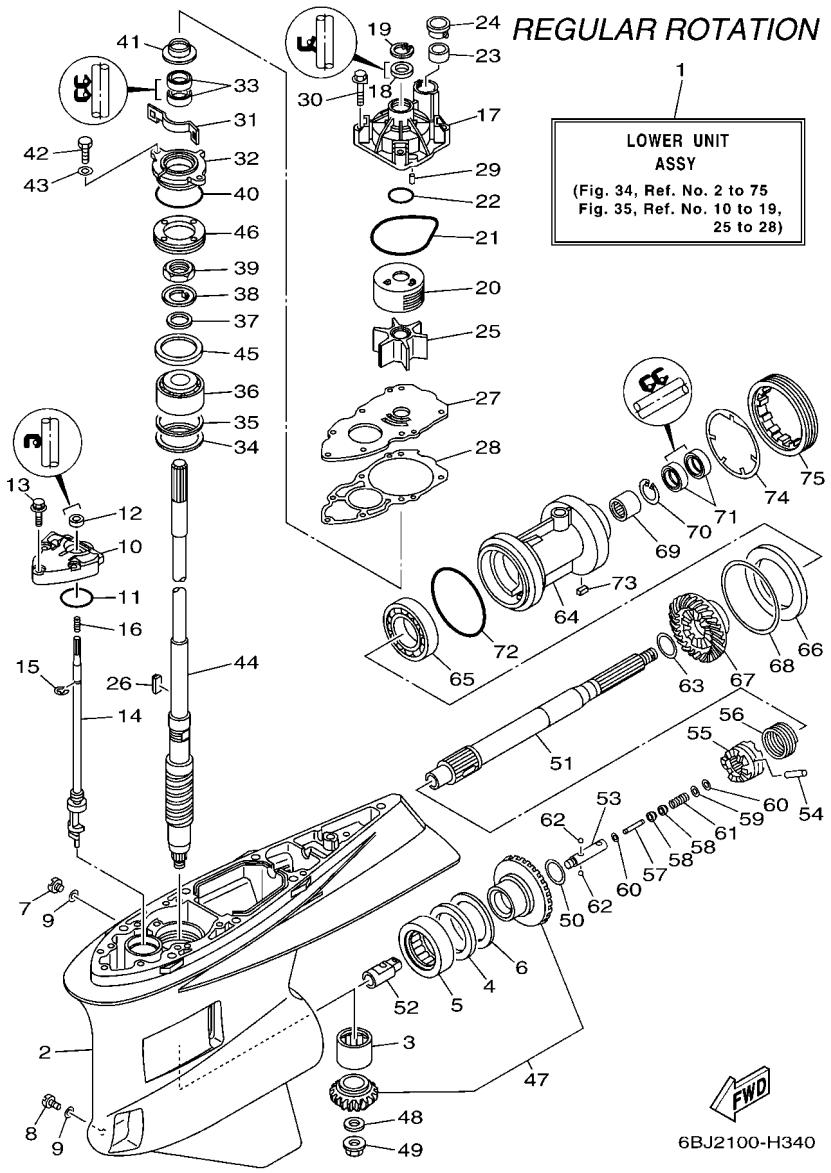

FIG. 34 LOWER CASING & DRIVE 1 — BOITIER D'HELICE TRANSMISSION1

REF. NO.	PART NO. N° PIECES	DESCRIPTION DESCRIPTION	6AW6	6AX6				REMARKS REMARQUES
1	6AW–45300–20–8D	LOWER UNIT ASSY UNITE INFERIEURE (ENS.)	1					X(25.1"),RH X(25.1"),RH
	6AW–45300–30–8D	LOWER UNIT ASSY UNITE INFERIEURE (ENS.)	1					U(30.1"),RH U(30.1"),RH
2	6AW–45311–01–8D	CASING, LOWER BOITIER D'HELICE	1					
3	93311–93590	BEARING ROULEMENT	1					
4	93340–67011	BEARING CERVEAUX DE DIRECTION	1					
5	93390–00031	BEARING ROULEMENT	1					
6	6AW–45567–00	SHIM (T:2.00MM) CALE (T:2.00MM)	1					UR UR
	6AW–45567–10	SHIM (T:2.03MM) CALE (T:2.03MM)	1					UR UR
	6AW–45567–20	SHIM (T:2.06MM) CALE (T:2.06MM)	1					UR UR
	6AW–45567–30	SHIM (T:2.09MM) CALE (T:2.09MM)	1					UR UR
	6AW–45567–40	SHIM (T:2.12MM) CALE (T:2.12MM)	1					UR UR
	6AW–45567–50	SHIM (T:2.15MM) CALE (T:2.15MM)	1					UR UR
7	90340–08002	PLUG, STRAIGHT SCREW PLOT, FILETE DROIT	1					
8	688–45341–10	PLUG, DRAIN BOUCHON DE VIDANGE	1					
9	90430–08020	GASKET JOINT	2					
10	6AW–45321–00	PLATE PLAQUETTE	1					
11	93210–48214	O-RING JOINT TORIQUE	1					
12	93101–12M70	OIL SEAL JOINT SPY	1					
13	90119–08M26	BOLT, WITH WASHER BOULON, AVEC RONDELLE	3					
14	6AW–44150–00	SHIFT CAM ASSY CAME D'INVERSION	1					
15	99002–10600	CLIP CIRCLIP	1					
16	90501–127J4	SPRING, COMPRESSION RESSORT, COMPRESSION	1					
17	6AW–44311–00	HOUSING, WATER PUMP CORPS, POMPE A EAU	1					
18	93109–24001	OIL SEAL JOINT SPY	1					
19	93420–35085	CIRCLIP CIRCLIP, TYPE S	1					
20	6AW–44322–00	INSERT, CARTRIDGE CUVETTE	1					
21	93210–94003	O-RING JOINT TORIQUE	1					

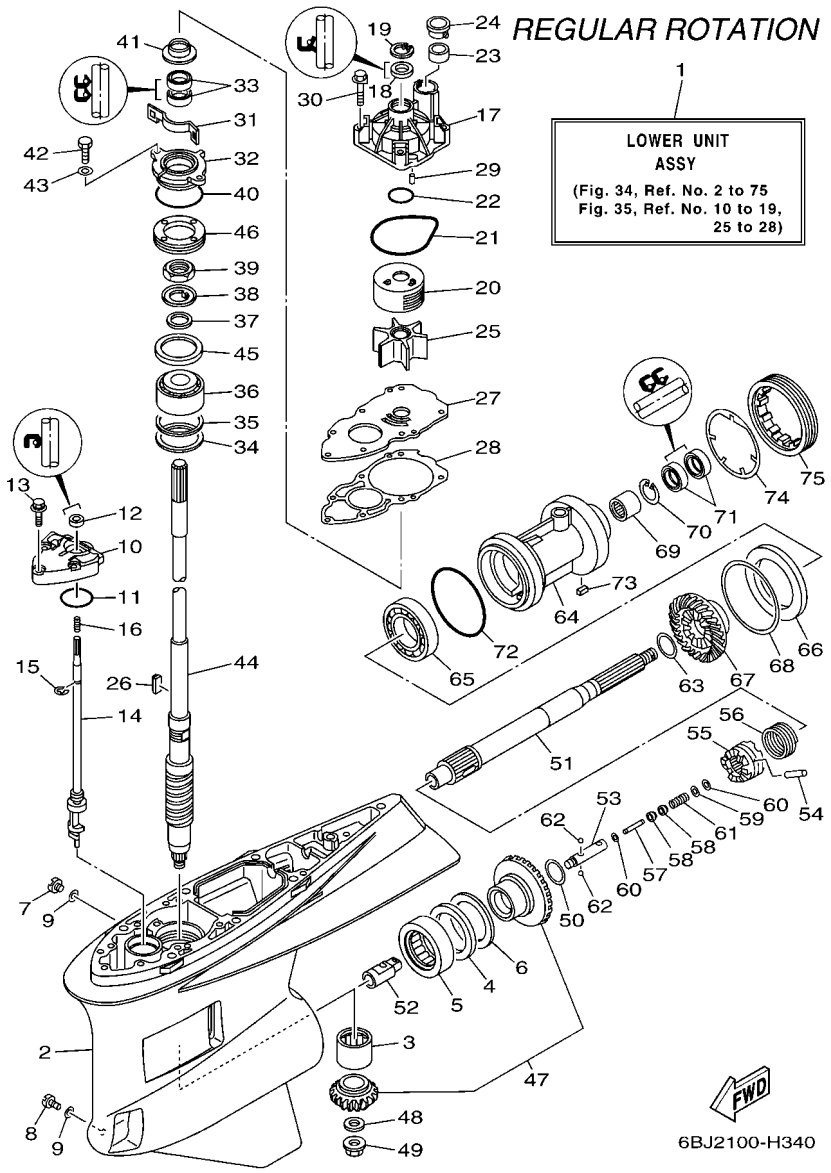

FIG. 34 LOWER CASING & DRIVE 1 — BOITIER D'HELICE TRANSMISSION1

REF. NO.	PART NO. N° PIECES	DESCRIPTION DESCRIPTION	6AW6	6AX6				REMARKS REMARQUES
22	93210–37160	O-RING JOINT TORIQUE	1					
23	6AW–44365–00	DAMPER, WATER SEAL 1 JOINT, TUBE D'EAU 1	1					
24	6AW–44312–00	COVER, WATER PUMP HOUSING COUVERCLE	1					
25	6AW–44352–00	IMPELLER TURBINE	1					
26	6AW–44336–00	KEY CLAVETTE	1					
27	6AW–44323–00	OUTER PLATE, CARTRIDGE PLAQUE EXTERIEURE	1					
28	6AW–44315–00	GASKET, WATER PUMP JOINT, POMPE A EAU	1					
29	93606–12019	PIN, DOWEL GOUPILLE	2					
30	90119–08M14	BOLT, WITH WASHER BOULON, AVEC RONDELLE	4					
31	6AW–45723–00	PLATE, SEAL PLAQUE, JOINT	1					
32	6AW–45335–00–CA	HOUSING, OIL SEAL LOGEMENT DE JOINT SPY	1					
33	93101–28004	OIL SEAL JOINT SPY	2					
34	90201–68008	WASHER, PLATE RONDELLE, PLATE	1					
35	6AW–45587–00	SHIM (T:0.10MM) CALE (T:0.10MM)	1					UR UR
	6AW–45587–10	SHIM (T:0.12MM) CALE (T:0.12MM)	1					UR UR
	6AW–45587–20	SHIM (T:0.15MM) CALE (T:0.15MM)	1					UR UR
	6AW–45587–30	SHIM (T:0.18MM) CALE (T:0.18MM)	1					UR UR
	6AW–45587–40	SHIM (T:0.30MM) CALE (T:0.30MM)	1					UR UR
	6AW–45587–50	SHIM (T:0.40MM) CALE (T:0.40MM)	1					UR UR
	6AW–45587–60	SHIM (T:0.50MM) CALE (T:0.50MM)	1					UR UR
36	93399–99962	BEARING ROULEMENT	1					
37	90201–301U7	WASHER, PLATE RONDELLE, PLATE	1					
38	90214–30003	WASHER, CLAW RONDELLE, A GRIFFES	1					
39	90170–30M18	NUT ECROU	1					
40	93210–69MG6	O-RING JOINT TORIQUE	1					
41	6AW–45344–00	COVER, OIL SEAL FLASQE, JOINT D'HUILE	1					
42	97095–08020	BOLT BOULON	2					

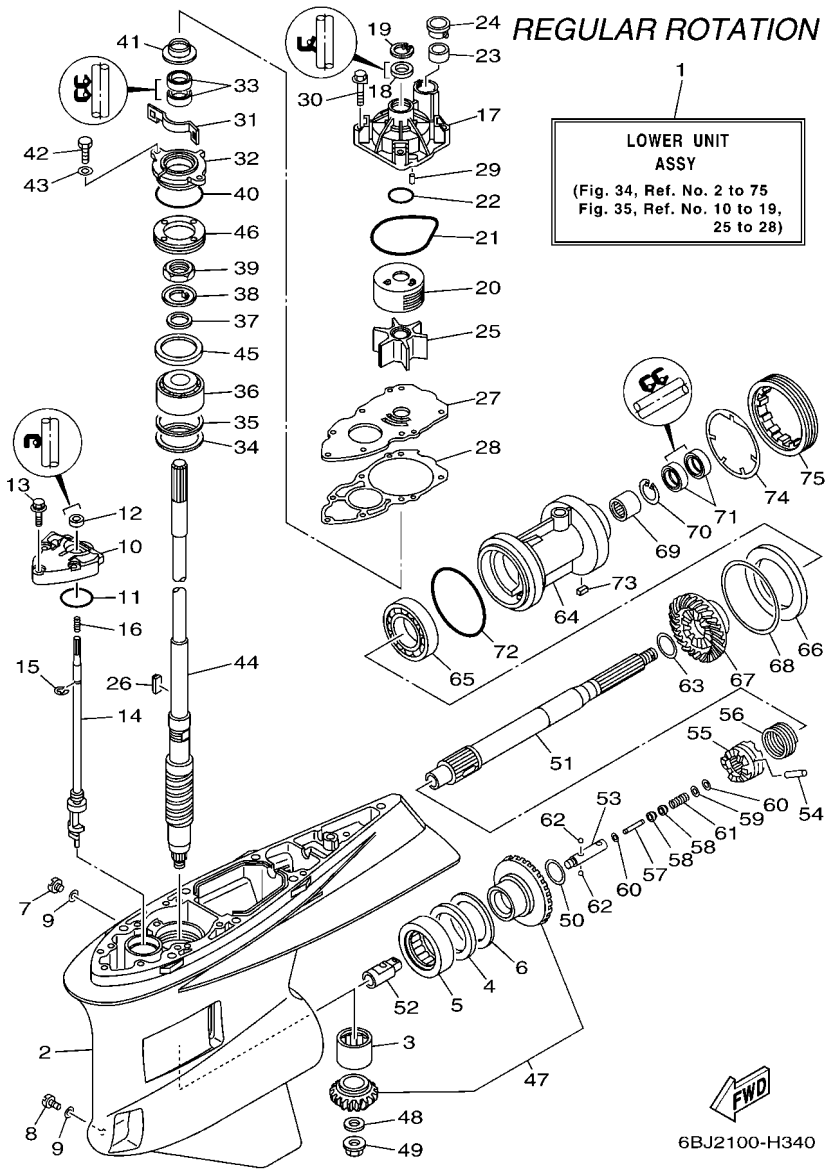

FIG. 34 LOWER CASING & DRIVE 1 — BOITIER D'HELICE TRANSMISSION1

REF. NO.	PART NO. N° PIECES	DESCRIPTION DESCRIPTION	6AW6	6AX6				REMARKS REMARQUES
43	92995–08600	WASHER RONDELLE	2					
44	6AW–45501–00	DRIVE SHAFT COMP. ARBRE MOTEUR COMP.	1					X(25.1") X(25.1")
	6AW–45501–10	DRIVE SHAFT COMP. ARBRE MOTEUR COMP.	1					U(30.1") U(30.1")
45	6T5–45539–00	SPACER 2 ENTRETOISE 2	1					
46	6AW–45244–00	NUT ECROU	1					
47	6AW–45550–00	GEAR SET KIT, PIGNON	1					
48	90201–18023	WASHER, PLATE RONDELLE, PLATE	1					
49	90179–18009	NUT ECROU	1					
50	90201–35015	WASHER, PLATE RONDELLE, PLATE	1					
51	6AW–45611–00	SHAFT, PROPELLER ARBRE, HELICE	1					
52	6AW–45641–00	SHIFTER EMBRAYAGE	1					
53	61A–45634–01	SLIDE, SHIFT CONTRE-POUSSOIR	1					
54	6AW–45632–00	PIN, CROSS GOUPILLE DE CRABOT	1					
55	6AW–45631–00	CLUTCH, DOG CRABOT	1					
56	6AW–45633–00	RING, CROSS PIN JONC, GOUPILLE CRABOT	1					
57	6H1–45668–00	SHAFT, FREE 1 AXE 1	1					
58	61A–45635–00	PLUNGER, SHIFT POUSSOIR D'EMBRAYAGE	2					
59	90201–02M00	WASHER, PLATE RONDELLE, PLATE	1					
60	90183–02M03	NUT, SPRING ECROU, RESSORT	2					
61	90501–10M77	SPRING, COMPRESSION RESSORT, COMPRESSION	1					
62	93501–04011	BALL BILLE	2					
63	6AW–45612–00	WASHER, THRUST RONDELLE, DE BUTEE	1					
64	6AW–45332–00	HOUSING, BEARING FLASQUE, ROULEMENT	1					
65	93306–21101	BEARING ROULEMENT	1					
66	6AW–45576–00	WASHER, THRUST 2 RONDELLE DE CALAGE 2	1					
67	6AW–45571–00	GEAR 2 (26T) PIGNON 2 (26T)	1					
68	6AW–45577–00	SHIM (T:0.10MM) CALE (T:0.10MM)	1					UR UR

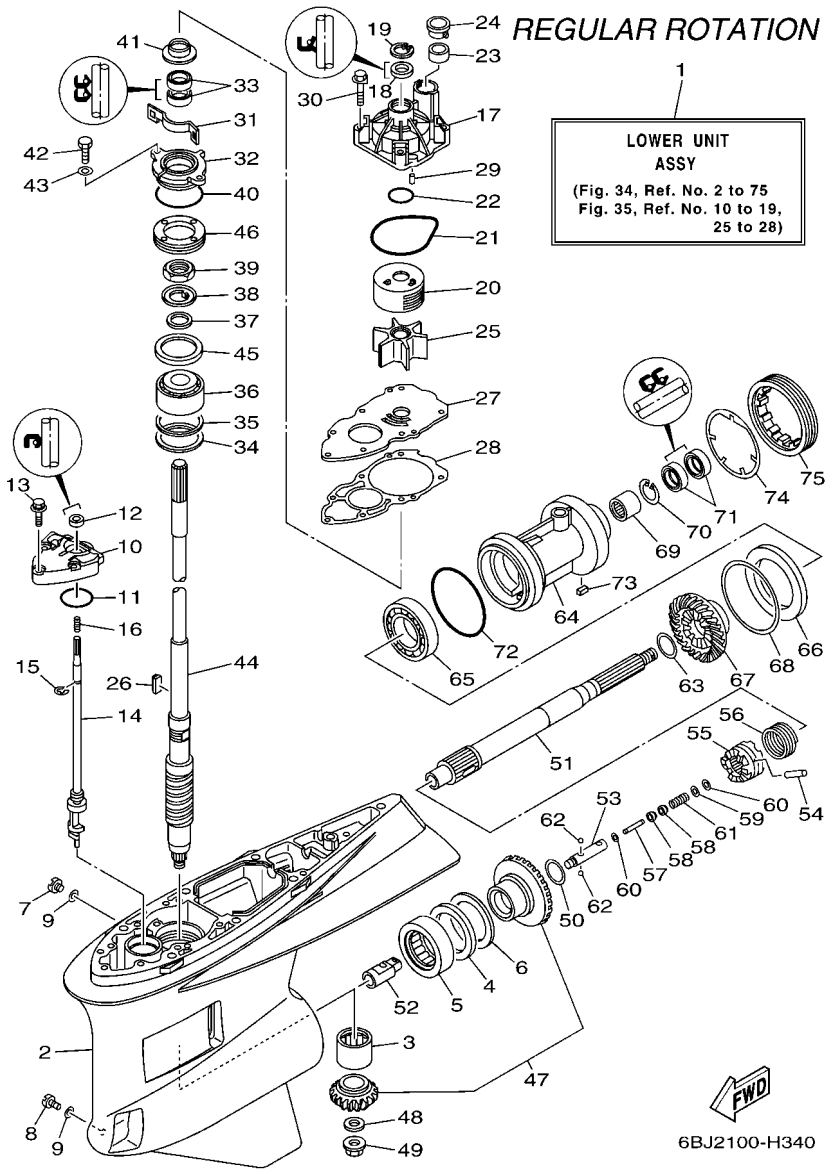

FIG. 34 LOWER CASING & DRIVE 1 — BOITIER D'HELICE TRANSMISSION1

REF. NO.	PART NO. N° PIECES	DESCRIPTION DESCRIPTION	6AW6	6AX6				REMARKS REMARQUES
68	6AW–45577–10	SHIM (T:0.12MM) CALE (T:0.12MM)	1					UR UR
	6AW–45577–20	SHIM (T:0.15MM) CALE (T:0.15MM)	1					UR UR
	6AW–45577–30	SHIM (T:0.18MM) CALE (T:0.18MM)	1					UR UR
	6AW–45577–40	SHIM (T:0.30MM) CALE (T:0.30MM)	1					UR UR
	6AW–45577–50	SHIM (T:0.40MM) CALE (T:0.40MM)	1					UR UR
	6AW–45577–60	SHIM (T:0.50MM) CALE (T:0.50MM)	1					UR UR
69	93311–63591	BEARING ROULEMENT	1					
70	99009–47500	CIRCLIP CIRCLIP	1					
71	93101–35018	OIL SEAL JOINT SPY	2					
72	93211–10232	O-RING JOINT TORIQUE	1					
73	90282–05008	KEY, STRAIGHT CLAVETTE, DROITE	1					
74	6AW–45383–00	WASHER, CLAW FREIN D'ECROU	1					
75	6AW–45384–00	NUT ECROU	1					

FIG. 35 LOWER CASING & DRIVE 2 — BOITIER D'HELICE TRANSMISSION2

REGULAR ROTATION

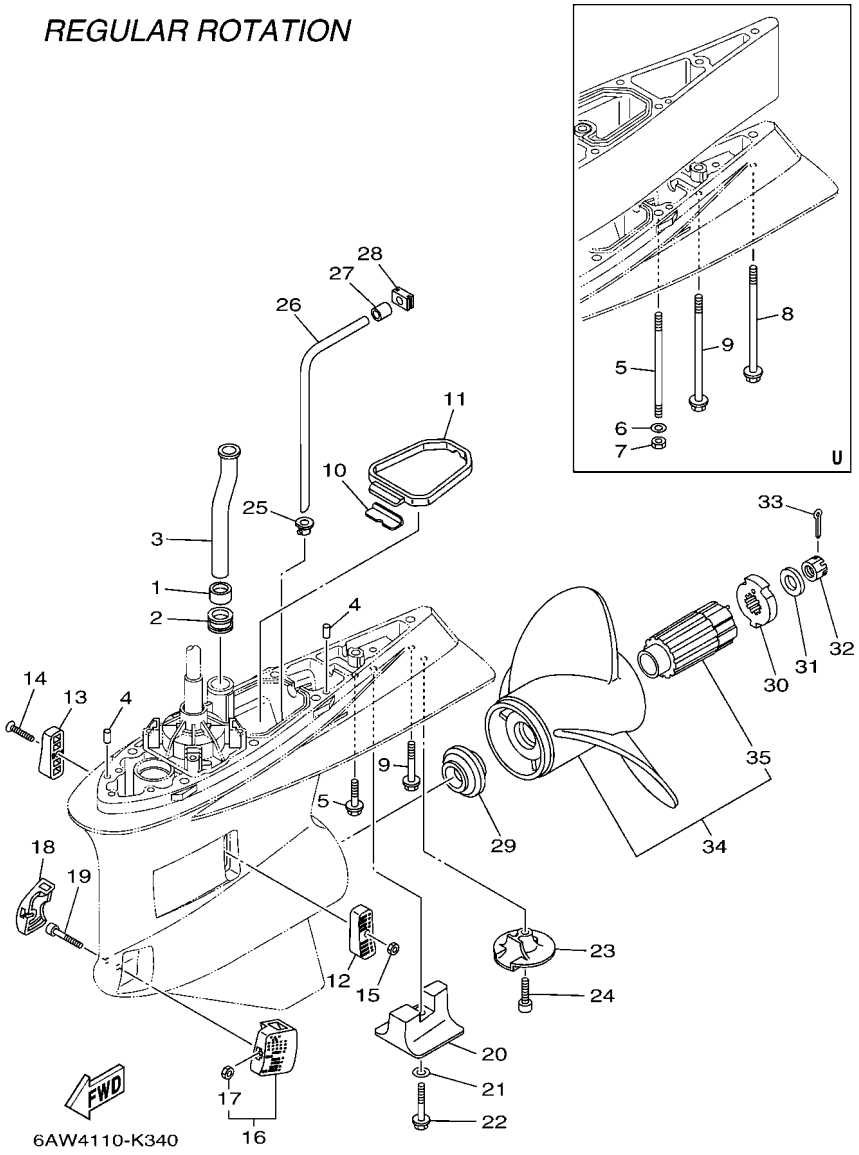

REF. NO.	PART NO. N° PIECES	DESCRIPTION DESCRIPTION	6AW6	6AX6				REMARKS REMARQUES
1	6AW–44365–00	DAMPER, WATER SEAL 1 JOINT, TUBE D'EAU 1	1					
2	6AW–44366–00	DAMPER, WATER SEAL 2 JOINT, TUBE D'EAU 2	1					
3	6AW–44361–00	TUBE, WATER 1 TUBE D'EAU 1	1					X(25.1") X(25.1")
	6AW–44361–10	TUBE, WATER 1 TUBE D'EAU 1	1					U(30.1") U(30.1")
4	93608–12M05	PIN, DOWEL AXE	2					
5	90119–10038	BOLT, WITH WASHER BOULON, AVEC RONDELLE	7					X(25.1") X(25.1")
	90116–10041	BOLT, STUD GOUJON	6					U(30.1") U(30.1")
6	90201–10048	WASHER, PLATE RONDELLE, PLATE	6					U(30.1") U(30.1")
7	90170–10009	NUT ECROU	6					U(30.1") U(30.1")
8	90119–10008	BOLT, WITH WASHER BOULON, AVEC RONDELLE	1					U(30.1") U(30.1")
9	97575–10570	BOLT, WITH WASHER VIS HEXAGONAL AVC RONDELLE	1					X(25.1") X(25.1")
	90119–10009	BOLT, WITH WASHER BOULON, AVEC RONDELLE	1					U(30.1") U(30.1")
10	61A–45376–00	GUIDE, SEAL DAMPER BUTEE, JOINT CAOUTCHOUC	1					
11	6AW–45375–00	DAMPER, SEAL BOURRELET, CAOUTCHOUC	1					
12	6AW–45214–00	COVER, WATER INLET 1 GRILLE, ENTREE D'EAU 1	1					
13	6AW–45215–00	COVER, WATER INLET 2 GRILLE, ENTREE D'EAU 2	1					
14	90152–05003	SCREW, COUNTERSUNK VIS, TETE NOYEE	1					
15	90185–05002	NUT, NYLON ECROU,AUTO-BLOQUANT	1					
16	6AW–45224–00	COVER, WATER INLET 3 GRILLE, ENTREE D'EAU 3	1					
17	90185–05002	.NUT, NYLON .ECROU,AUTO-BLOQUANT	1					
18	6AW–45225–00	COVER, WATER INLET 4 GRILLE, ENTREE D'EAU 4	1					
19	90110–05050	BOLT, HEXAGON SOCKET HEAD BOULON, TETE HEXAGONALE CREUSE	1					
20	6AW–45373–00	ANODE ANODE	1					
21	92990–10300	WASHER RONDELLE, PLATE	1					
22	90105–10257	BOLT, FLANGE BOULON	1					
23	6AW–45619–00	CAP CAPUCHON	1					
24	90110–10018	BOLT, HEXAGON SOCKET HEAD BOULON, TETE HEXAGONALE CREUSE	1					

FIG. 35 LOWER CASING & DRIVE 2 — BOITIER D'HELICE TRANSMISSION2

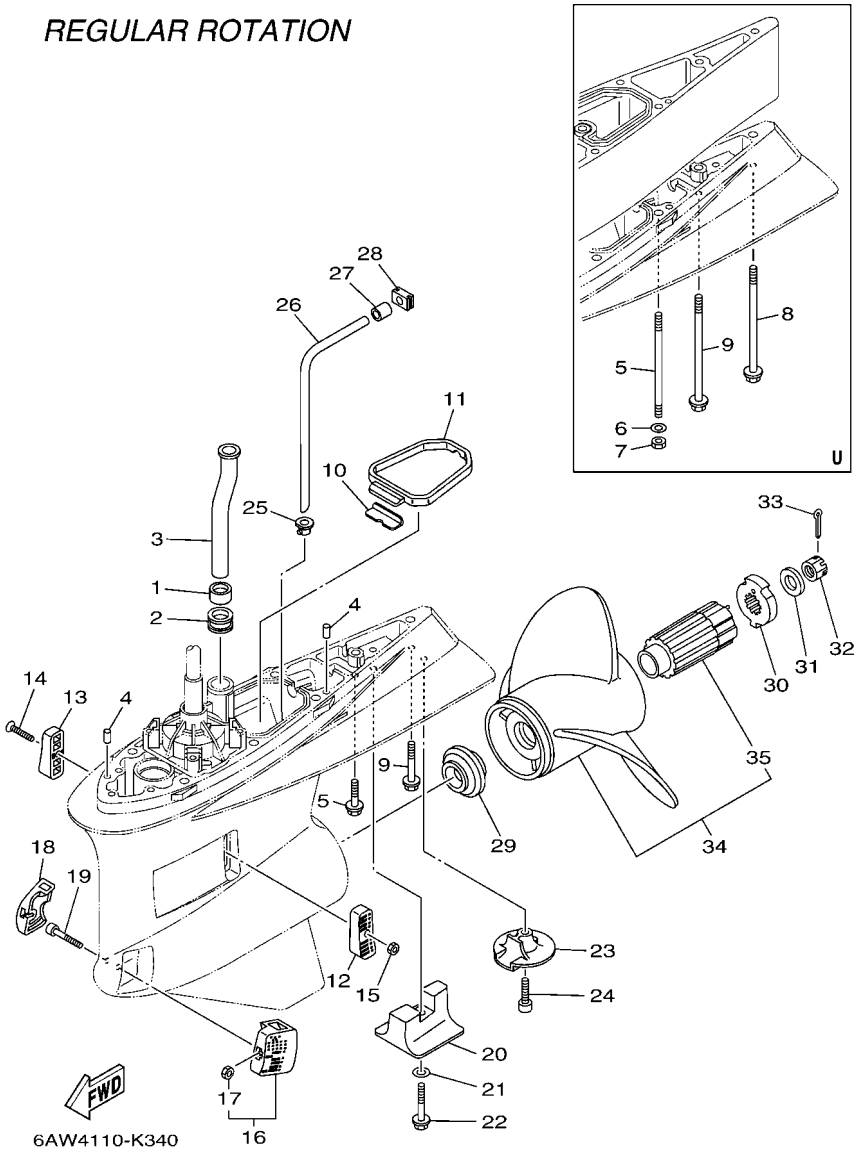

REF. NO.	PART NO. N° PIECES	DESCRIPTION DESCRIPTION	6AW6	6AX6				REMARKS REMARQUES
25	6AW–44367–00	DAMPER, WATER SEAL 3 JOINT TUBE D'EAU 3	1					
26	6AW–44362–00	TUBE, WATER 2 TUBE D'EAU 2	1					
27	6AW–44375–00	GROMMET, WATER TUBE 1 PASSE-FIL, TUBE D'EAU 1	1					
28	6AW–44376–00	GROMMET, WATER TUBE 2 PASSE-FIL, TUBE D'EAU 2	1					
29	6AW–45987–00	SPACER 1 ENTRETOISE 1	1					
30	6AW–45997–10	SPACER 2 ENTRETOISE 2	1					
31	90201–19M01	WASHER, PLATE RONDELLE, PLATE	1					
32	90171–18M04	NUT, CASTLE ECROU, CRENELE	1					
33	91490–40030	PIN. COTTER GOUPILLE	1					
34	6AW–45970–10	PROPELLER (3X16-1/4"X15"-X) HELICE (3X16-1/4"X15"-X)	1					UR SWS XL PROP. UR SWS XL PROP.
	6AW–45972–10	PROPELLER (3X16-1/4"X17"-X) HELICE (3X16-1/4"X17"-X)	1					UR SWS XL PROP. UR SWS XL PROP.
	6AW–45974–10	PROPELLER (3X15-1/2"X19"-X) HELICE (3X15-1/2"X19"-X)	1					UR SWS XL PROP. UR SWS XL PROP.
	6AW–45976–10	PROPELLER (3X15-1/4"X21"-X) HELICE (3X15-1/4"X21"-X)	1					UR SWS XL PROP. UR SWS XL PROP.
	6AW–45978–10	PROPELLER (3X15-1/4"X23"-X) HELICE (3X15-1/4"X23"-X)	1					UR SWS XL PROP. UR SWS XL PROP.
35	6AW–45C80–00	.PROPELLER DAMPER RUBBER ASSY .AMORTISSEUR HELICE (ENS.)	1					

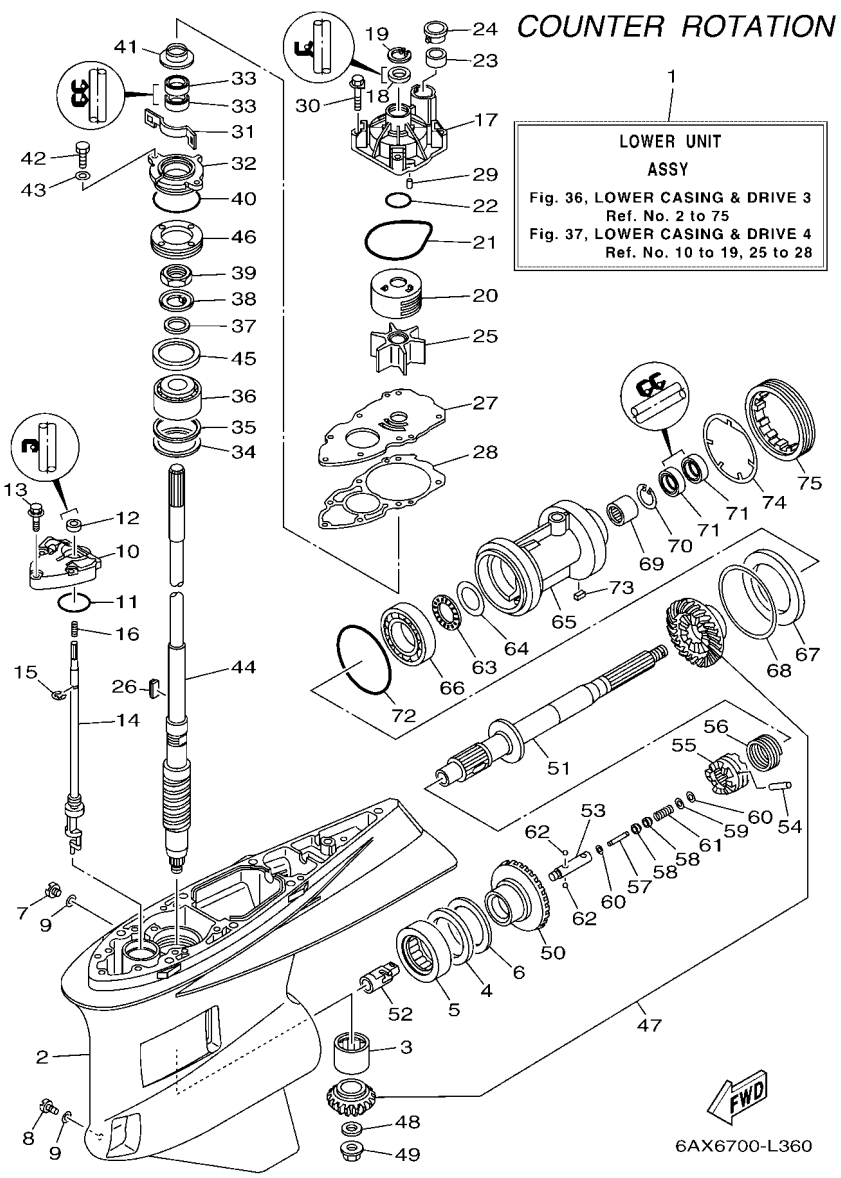

FIG. 36 LOWER CASING & DRIVE 3 — BOITIER D'HELICE TRANSMISSION3

REF. NO.	PART NO. N° PIECES	DESCRIPTION DESCRIPTION	6AW6	6AX6				REMARKS REMARQUES
1	6AX–45300–20–8D	LOWER UNIT ASSY UNITE INFERIEURE (ENS.)		1				X(25.1"),LH X(25.1"),LH
	6AX–45300–30–8D	LOWER UNIT ASSY UNITE INFERIEURE (ENS.)		1				U(30.1"),LH U(30.1"),LH
2	6AW–45311–01–8D	CASING, LOWER BOITIER D'HELICE		1				
3	93311–93590	BEARING ROULEMENT		1				
4	93340–67011	BEARING CERVEAUX DE DIRECTION		1				
5	93390–00031	BEARING ROULEMENT		1				
6	6AW–45567–00	SHIM (T:2.00MM) CALE (T:2.00MM)		1				UR UR
	6AW–45567–10	SHIM (T:2.03MM) CALE (T:2.03MM)		1				UR UR
	6AW–45567–20	SHIM (T:2.06MM) CALE (T:2.06MM)		1				UR UR
	6AW–45567–30	SHIM (T:2.09MM) CALE (T:2.09MM)		1				UR UR
	6AW–45567–40	SHIM (T:2.12MM) CALE (T:2.12MM)		1				UR UR
	6AW–45567–50	SHIM (T:2.15MM) CALE (T:2.15MM)		1				UR UR
7	90340–08002	PLUG, STRAIGHT SCREW PLOT, FILETE DROIT		1				
8	688–45341–10	PLUG, DRAIN BOUCHON DE VIDANGE		1				
9	90430–08020	GASKET JOINT		2				
10	6AW–45321–00	PLATE PLAQUETTE		1				
11	93210–48214	O-RING JOINT TORIQUE		1				
12	93101–12M70	OIL SEAL JOINT SPY		1				
13	90119–08M26	BOLT, WITH WASHER BOULON, AVEC RONDELLE		3				
14	6AX–44150–00	SHIFT CAM ASSY CAME D'INVERSION		1				
15	99002–10600	CLIP CIRCLIP		1				
16	90501–127J4	SPRING, COMPRESSION RESSORT, COMPRESSION		1				
17	6AW–44311–00	HOUSING, WATER PUMP CORPS, POMPE A EAU		1				
18	93109–24001	OIL SEAL JOINT SPY		1				
19	93420–35085	CIRCLIP CIRCLIP, TYPE S		1				
20	6AW–44322–00	INSERT, CARTRIDGE CUVETTE		1				
21	93210–94003	O-RING JOINT TORIQUE		1				

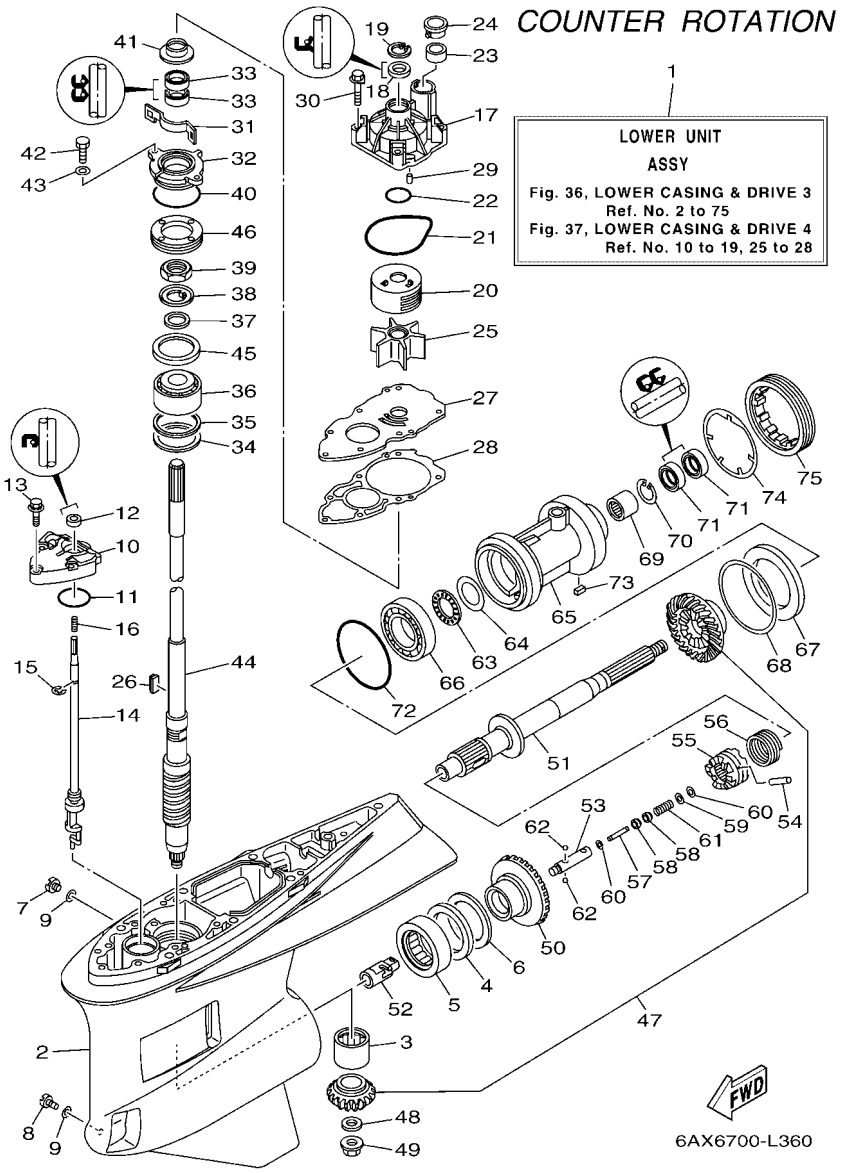

FIG. 36 LOWER CASING & DRIVE 3 — BOITIER D'HELICE TRANSMISSION3

REF. NO.	PART NO. N° PIECES	DESCRIPTION DESCRIPTION	6AW6	6AX6				REMARKS REMARQUES
22	93210–37160	O-RING JOINT TORIQUE		1				
23	6AW–44365–00	DAMPER, WATER SEAL 1 JOINT, TUBE D'EAU 1		1				
24	6AW–44312–00	COVER, WATER PUMP HOUSING COUVERCLE		1				
25	6AW–44352–00	IMPELLER TURBINE		1				
26	6AW–44336–00	KEY CLAVETTE		1				
27	6AW–44323–00	OUTER PLATE, CARTRIDGE PLAQUE EXTERIEURE		1				
28	6AW–44315–00	GASKET, WATER PUMP JOINT, POMPE A EAU		1				
29	93606–12019	PIN, DOWEL GOUPILLE		2				
30	90119–08M14	BOLT, WITH WASHER BOULON, AVEC RONDELLE		4				
31	6AW–45723–00	PLATE, SEAL PLAQUE, JOINT		1				
32	6AW–45335–00–CA	HOUSING, OIL SEAL LOGEMENT DE JOINT SPY		1				
33	93101–28004	OIL SEAL JOINT SPY		2				
34	90201–68008	WASHER, PLATE RONDELLE, PLATE		1				
35	6AW–45587–00	SHIM (T:0.10MM) CALE (T:0.10MM)		1				UR UR
	6AW–45587–10	SHIM (T:0.12MM) CALE (T:0.12MM)		1				UR UR
	6AW–45587–20	SHIM (T:0.15MM) CALE (T:0.15MM)		1				UR UR
	6AW–45587–30	SHIM (T:0.18MM) CALE (T:0.18MM)		1				UR UR
	6AW–45587–40	SHIM (T:0.30MM) CALE (T:0.30MM)		1				UR UR
	6AW–45587–50	SHIM (T:0.40MM) CALE (T:0.40MM)		1				UR UR
	6AW–45587–60	SHIM (T:0.50MM) CALE (T:0.50MM)		1				UR UR
36	93399–99962	BEARING ROULEMENT		1				
37	90201–301U7	WASHER, PLATE RONDELLE, PLATE		1				
38	90214–30003	WASHER, CLAW RONDELLE, A GRIFFES		1				
39	90170–30M18	NUT ECROU		1				
40	93210–69MG6	O-RING JOINT TORIQUE		1				
41	6AW–45344–00	COVER, OIL SEAL FLASQE, JOINT D'HUILE		1				
42	97095–08020	BOLT BOULON		2				

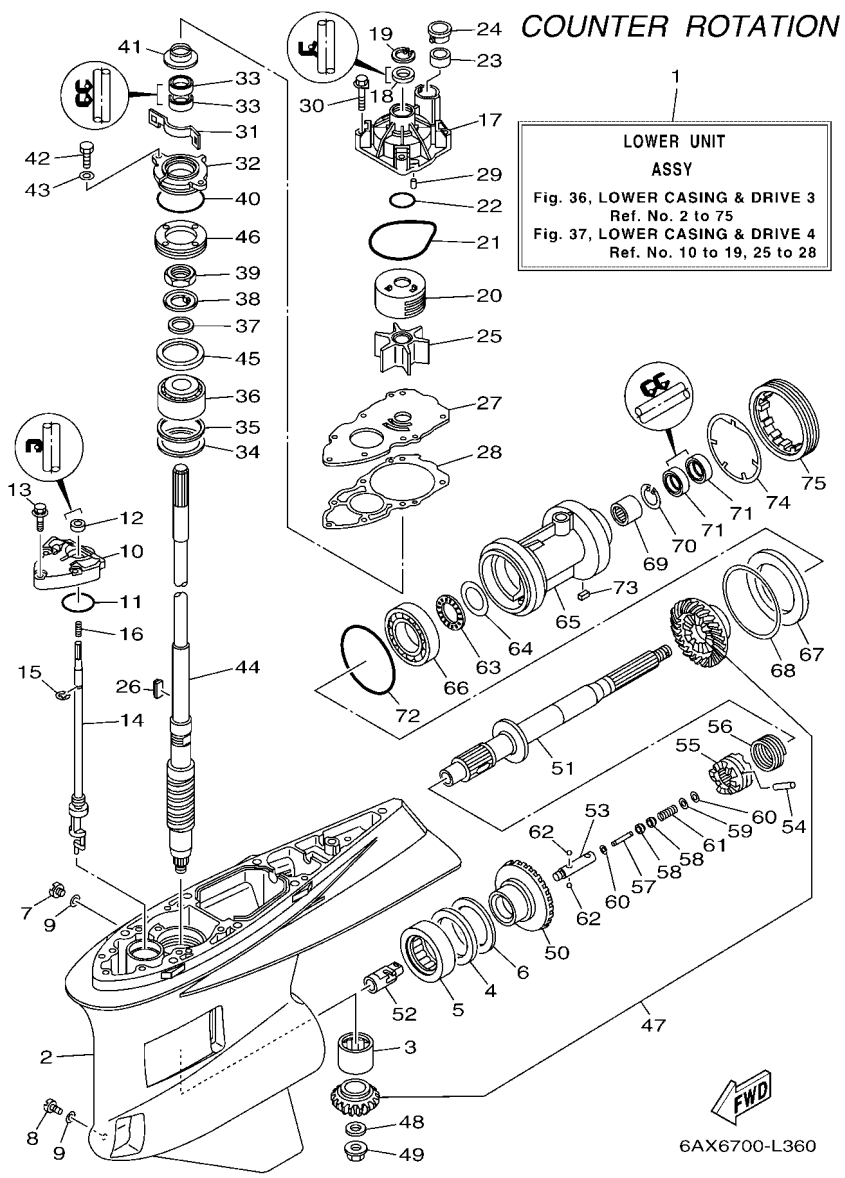

FIG. 36 LOWER CASING & DRIVE 3 — BOITIER D'HELICE TRANSMISSION3

REF. NO.	PART NO. N° PIECES	DESCRIPTION DESCRIPTION	6AW6	6AX6				REMARKS REMARQUES
43	92995–08600	WASHER RONDELLE		2				
44	6AW–45501–00	DRIVE SHAFT COMP. ARBRE MOTEUR COMP.		1				X(25.1") X(25.1")
	6AW–45501–10	DRIVE SHAFT COMP. ARBRE MOTEUR COMP.		1				U(30.1") U(30.1")
45	6T5–45539–00	SPACER 2 ENTRETOISE 2		1				
46	6AW–45244–00	NUT ECROU		1				
47	6AX–45550–00	GEAR SET KIT, PIGNON		1				
48	90201–18023	WASHER, PLATE RONDELLE, PLATE		1				
49	90179–18009	NUT ECROU		1				
50	6AX–45560–00	GEAR 1 (26T) PIGNON 1 (26T)		1				
51	6AX–45611–00	SHAFT, PROPELLER ARBRE, HELICE		1				
52	6AX–45641–00	SHIFTER EMBRAYAGE		1				
53	61A–45634–01	SLIDE, SHIFT CONTRE-POUSSOIR		1				
54	6AW–45632–00	PIN, CROSS GOUPILLE DE CRABOT		1				
55	6AW–45631–00	CLUTCH, DOG CRABOT		1				
56	6AW–45633–00	RING, CROSS PIN JONC, GOUPILLE CRABOT		1				
57	6H1–45668–00	SHAFT, FREE 1 AXE 1		1				
58	61A–45635–00	PLUNGER, SHIFT POUSSOIR D'EMBRAYAGE		2				
59	90201–02M00	WASHER, PLATE RONDELLE, PLATE		1				
60	90183–02M03	NUT, SPRING ECROU, RESSORT		2				
61	90501–10M77	SPRING, COMPRESSION RESSORT, COMPRESSION		1				
62	93501–04011	BALL BILLE		2				
63	93341–440U5	BEARING CERVEAUX DE DIRECTION		1				
64	6K1–45578–01	SHIM (T:0.10MM) CALE (T:0.10MM)		1				UR UR
	6K1–45578–10	SHIM (T:0.12MM) CALE (T:0.12MM)		1				UR UR
	6K1–45578–20	SHIM (T:0.15MM) CALE (T:0.15MM)		1				UR UR
	6K1–45578–30	SHIM (T:0.18MM) CALE (T:0.18MM)		1				UR UR
	6K1–45578–40	SHIM (T:0.30MM) CALE (T:0.30MM)		1				UR UR

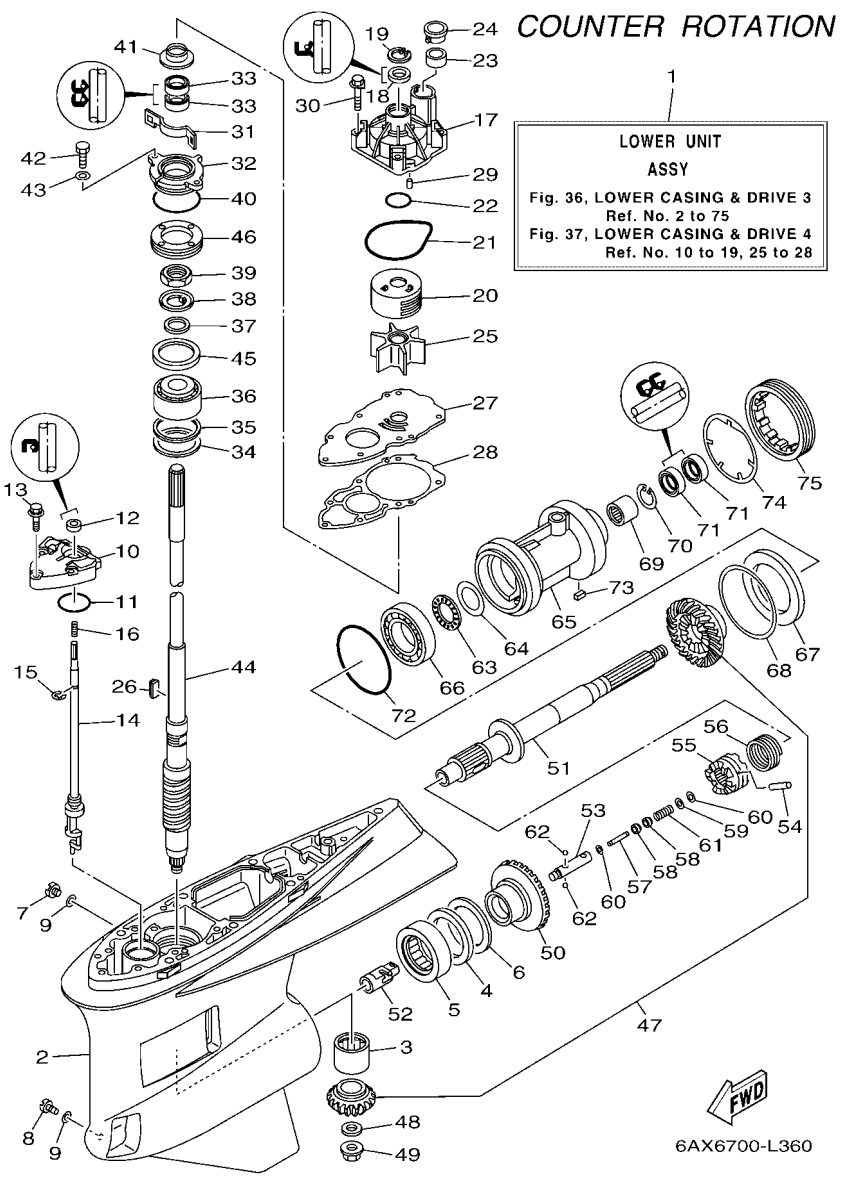

FIG. 36 LOWER CASING & DRIVE 3 — BOITIER D'HELICE TRANSMISSION3

REF. NO.	PART NO. N° PIECES	DESCRIPTION DESCRIPTION	6AW6	6AX6				REMARKS REMARQUES
64	6K1–45578–50	SHIM (T:0.40MM) CALE (T:0.40MM)		1				UR UR
	6K1–45578–60	SHIM (T:0.50MM) CALE (T:0.50MM)		1				UR UR
65	6AX–45332–00	HOUSING, BEARING FLASQUE, ROULEMENT		1				
66	93332–000A2	BEARING ROULEMENT		1				
67	6AW–45576–00	WASHER, THRUST 2 RONDELLE DE CALAGE 2		1				
68	6AW–45577–00	SHIM (T:0.10MM) CALE (T:0.10MM)		1				UR UR
	6AW–45577–10	SHIM (T:0.12MM) CALE (T:0.12MM)		1				UR UR
	6AW–45577–20	SHIM (T:0.15MM) CALE (T:0.15MM)		1				UR UR
	6AW–45577–30	SHIM (T:0.18MM) CALE (T:0.18MM)		1				UR UR
	6AW–45577–40	SHIM (T:0.30MM) CALE (T:0.30MM)		1				UR UR
	6AW–45577–50	SHIM (T:0.40MM) CALE (T:0.40MM)		1				UR UR
	6AW–45577–60	SHIM (T:0.50MM) CALE (T:0.50MM)		1				UR UR
69	93311–63591	BEARING ROULEMENT		1				
70	99009–47500	CIRCLIP CIRCLIP		1				
71	93101–35018	OIL SEAL JOINT SPY		2				
72	93211–10232	O-RING JOINT TORIQUE		1				
73	90282–05008	KEY, STRAIGHT CLAVETTE, DROITE		1				
74	6AW–45383–00	WASHER, CLAW FREIN D'ECROU		1				
75	6AW–45384–00	NUT ECROU		1				

FIG. 37 LOWER CASING & DRIVE 4 — BOITIER D'HELICE TRANSMISSION4

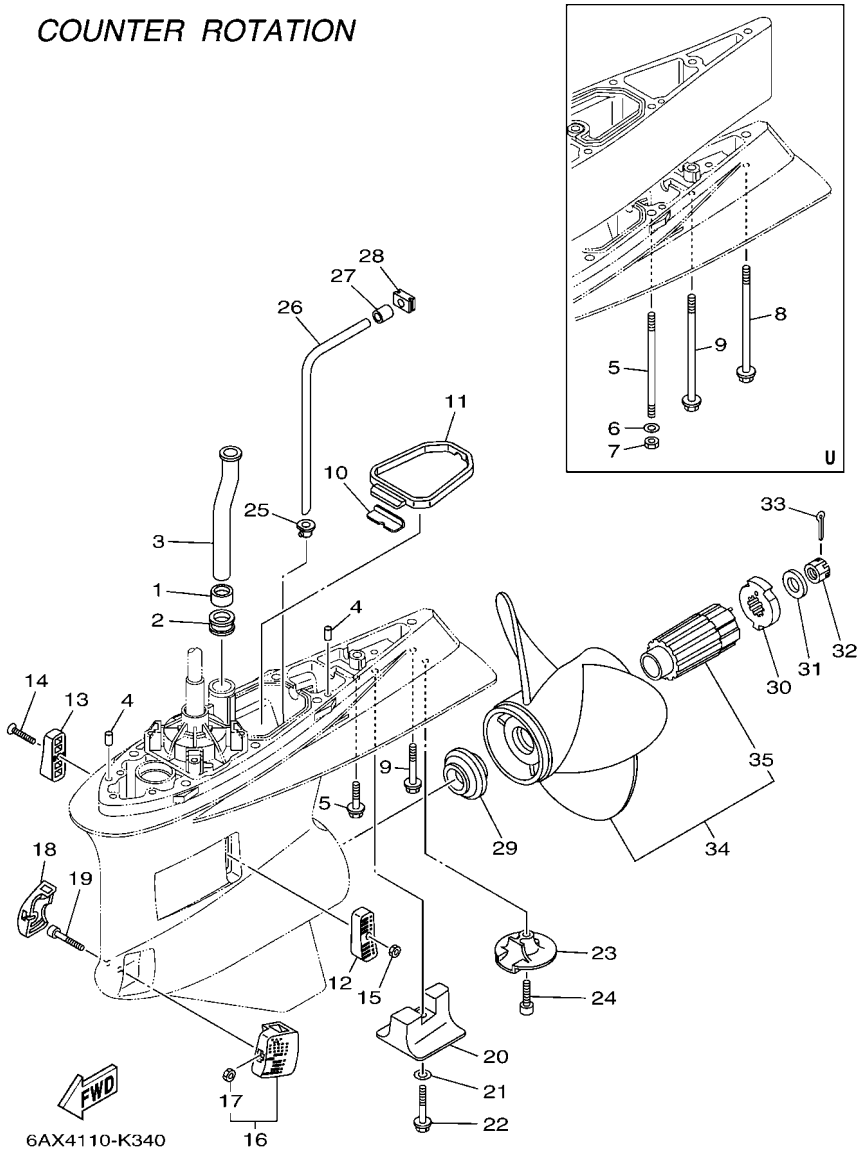

REF. NO.	PART NO. N° PIECES	DESCRIPTION DESCRIPTION	6AW6	6AX6				REMARKS REMARQUES
1	6AW–44365–00	DAMPER, WATER SEAL 1 JOINT, TUBE D'EAU 1		1				
2	6AW–44366–00	DAMPER, WATER SEAL 2 JOINT, TUBE D'EAU 2		1				
3	6AW–44361–00	TUBE, WATER 1 TUBE D'EAU 1		1				X(25.1") X(25.1")
	6AW–44361–10	TUBE, WATER 1 TUBE D'EAU 1		1				U(30.1") U(30.1")
4	93608–12M05	PIN, DOWEL AXE		2				
5	90119–10038	BOLT, WITH WASHER BOULON, AVEC RONDELLE		7				X(25.1") X(25.1")
	90116–10041	BOLT, STUD GOUJON		6				U(30.1") U(30.1")
6	90201–10048	WASHER, PLATE RONDELLE, PLATE		6				U(30.1") U(30.1")
7	90170–10009	NUT ECROU		6				U(30.1") U(30.1")
8	90119–10008	BOLT, WITH WASHER BOULON, AVEC RONDELLE		1				U(30.1") U(30.1")
9	97575–10570	BOLT, WITH WASHER VIS HEXAGONAL AVC RONDELLE		1				X(25.1") X(25.1")
	90119–10009	BOLT, WITH WASHER BOULON, AVEC RONDELLE		1				U(30.1") U(30.1")
10	61A–45376–00	GUIDE, SEAL DAMPER BUTEE, JOINT CAOUTCHOUC		1				
11	6AW–45375–00	DAMPER, SEAL BOURRELET, CAOUTCHOUC		1				
12	6AW–45214–00	COVER, WATER INLET 1 GRILLE, ENTREE D'EAU 1		1				
13	6AW–45215–00	COVER, WATER INLET 2 GRILLE, ENTREE D'EAU 2		1				
14	90152–05003	SCREW, COUNTERSUNK VIS, TETE NOYEE		1				
15	90185–05002	NUT, NYLON ECROU,AUTO-BLOQUANT		1				
16	6AW–45224–00	COVER, WATER INLET 3 GRILLE, ENTREE D'EAU 3		1				
17	90185–05002	.NUT, NYLON .ECROU,AUTO-BLOQUANT		1				
18	6AW–45225–00	COVER, WATER INLET 4 GRILLE, ENTREE D'EAU 4		1				
19	90110–05050	BOLT, HEXAGON SOCKET HEAD BOULON, TETE HEXAGONALE CREUSE		1				
20	6AW–45373–00	ANODE ANODE		1				
21	92990–10300	WASHER RONDELLE, PLATE		1				
22	90105–10257	BOLT, FLANGE BOULON		1				
23	6AW–45619–00	CAP CAPUCHON		1				
24	90110–10018	BOLT, HEXAGON SOCKET HEAD BOULON, TETE HEXAGONALE CREUSE		1				

FIG. 37 LOWER CASING & DRIVE 4 — BOITIER D'HELICE TRANSMISSION4

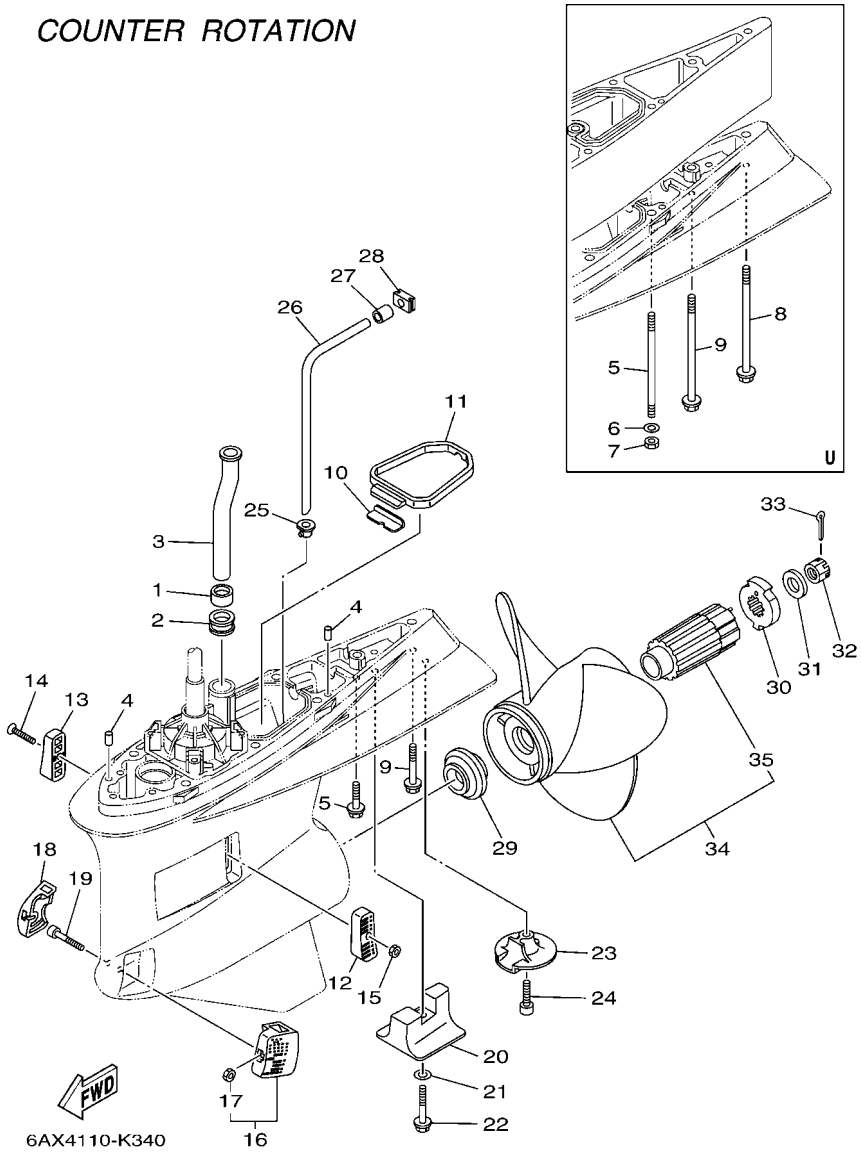

REF. NO.	PART NO. N° PIECES	DESCRIPTION DESCRIPTION	6AW6	6AX6				REMARKS REMARQUES
25	6AW–44367–00	DAMPER, WATER SEAL 3 JOINT TUBE D'EAU 3		1				
26	6AW–44362–00	TUBE, WATER 2 TUBE D'EAU 2		1				
27	6AW–44375–00	GROMMET, WATER TUBE 1 PASSE-FIL, TUBE D'EAU 1		1				
28	6AW–44376–00	GROMMET, WATER TUBE 2 PASSE-FIL, TUBE D'EAU 2		1				
29	6AW–45987–00	SPACER 1 ENTRETOISE 1		1				
30	6AW–45997–10	SPACER 2 ENTRETOISE 2		1				
31	90201–19M01	WASHER, PLATE RONDELLE, PLATE		1				
32	90171–18M04	NUT, CASTLE ECROU, CRENELE		1				
33	91490–40030	PIN. COTTER GOUPILLE		1				
34	6AX–45970–10	PROPELLER (3X16-1/4"X15"-XL) HELICE (3X16-1/4"X15"-XL)		1				UR SWS XL PROP. UR SWS XL PROP.
	6AX–45972–10	PROPELLER (3X16-1/4"X17"-XL) HELICE (3X16-1/4"X17"-XL)		1				UR SWS XL PROP. UR SWS XL PROP.
	6AX–45974–10	PROPELLER (3X15-1/2"X19"-XL) HELICE (3X15-1/2"X19"-XL)		1				UR SWS XL PROP. UR SWS XL PROP.
	6AX–45976–10	PROPELLER (3X15-1/4"X21"-XL) HELICE (3X15-1/4"X21"-XL)		1				UR SWS XL PROP. UR SWS XL PROP.
	6AX–45978–10	PROPELLER (3X15-1/4"X23"-XL) HELICE (3X15-1/4"X23"-XL)		1				UR SWS XL PROP. UR SWS XL PROP.
35	6AW–45C80–00	.PROPELLER DAMPER RUBBER ASSY .AMORTISSEUR HELICE (ENS.)		1				

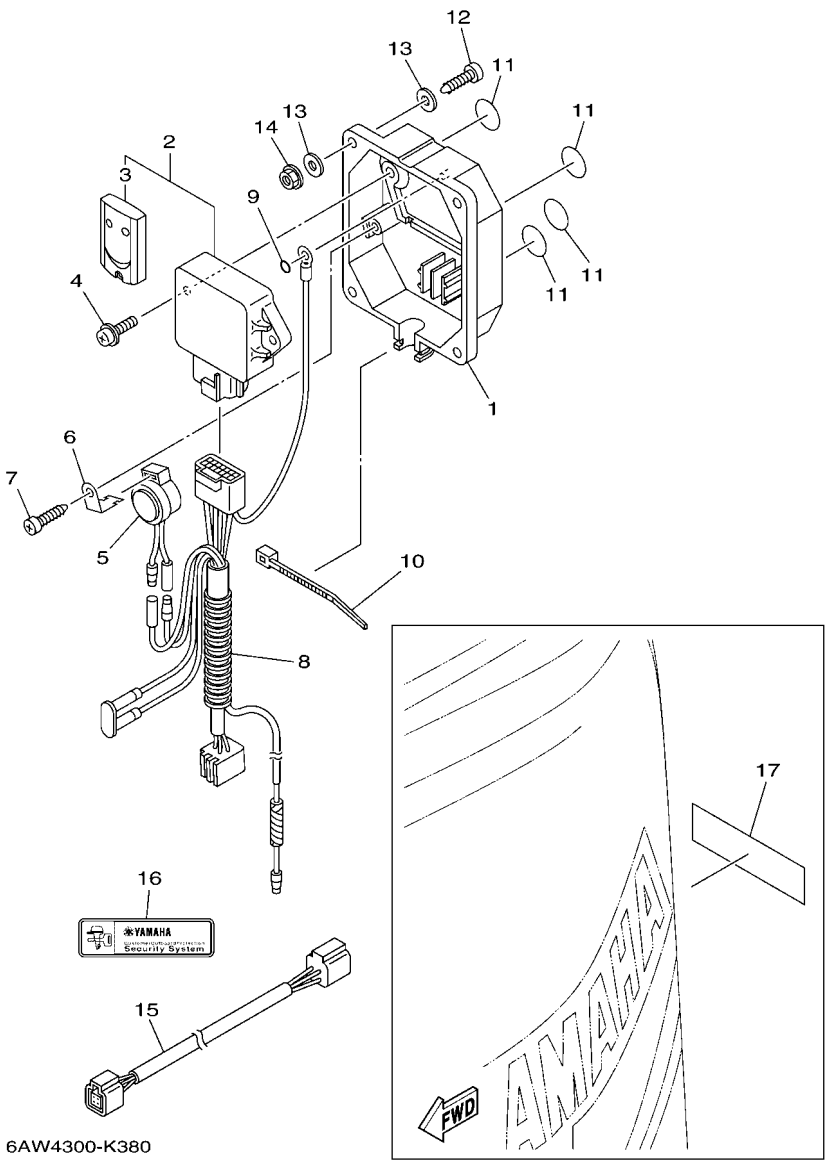

FIG. 38 OPTIONAL PARTS 1 — PIECES OPTIONNELLES 1

REF. NO.	PART NO. N° PIECES	DESCRIPTION DESCRIPTION	6AW6	6AX6				REMARKS REMARQUES
1	6Y8–86267–00	CASE COMPLETE 1 CARTER (ENS.) 1	1					
2	6Y8–86260–02	REMOTE CONTROL UNIT ASSY UNITE DE TELECOMMANDE (ENS.)	1					UR FOR EUR UR FOR EUR
	6Y8–86260–12	REMOTE CONTROL UNIT ASSY UNITE DE TELECOMMANDE (ENS.)	1					AP FOR USA/CAN AP FOR USA/CAN
3	6AA–86261–00	.TRANSMITTER COMP .TRANSMETTEUR	2					FOR 6Y8-86260-02 FOR 6Y8-86260-02
	6AA–86261–22	.TRANSMITTER COMP .TRANSMETTEUR	2					FOR 6Y8-86260-12 FOR 6Y8-86260-12
4	97980–06216	SCREW, WITH WASHER VIS, AVEC RONDELLE	2					
5	6X4–83383–00	BUZZER RONFLEUR	1					
6	6X4–83386–00	STAY, BUZZER SUPPOR, RONFLEUR	1					
7	97780–60620	SCREW, TAPPING VIS, TETE BOMBEE	1					
8	6Y8–82509–10	WIRE, SUB LEAD FIL, SECONDAIRE	1					
9	93210–04279	O-RING JOINT TORIQUE	1					
10	90465–11M10	CLAMP BRIDE	1					
11	6Y8–8454G–00	PATCH 1 TAMPON 1	4					
12	90167–06M00	SCREW, TAPPING VIS, TETE FRAISEE	4					UR UR
	97880–06035	SCREW, PAN HEAD VIS, TETE TRONCONIQUE	4					UR UR
13	90201–06M30	WASHER, PLATE RONDELLE, PLATE	8					
14	95780–06300	NUT, FLANGE ECROU	4					
15	6Y8–82521–11	2FT PIGTAIL BUS FIL	1					
16	6Y8–48277–00	STICKER 1 ETIQUETTE 1	1					UR FOR EUR UR FOR EUR
	6Y8–48277–00	STICKER 1 ETIQUETTE 1	4					AP FOR USA/CAN AP FOR USA/CAN
17	6Y8–48277–00	STICKER 1 ETIQUETTE 1	1	1				

FIG. 39 OPTIONAL PARTS 2 — PIECES OPTIONNELLES 2

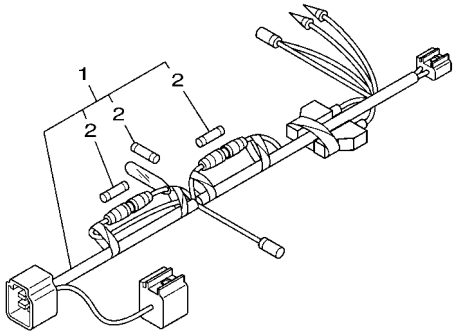

6AX4110-K350

REF. NO.	PART NO. N° PIECES	DESCRIPTION DESCRIPTION	6AW6	6AX6				REMARKS REMARQUES
1	6Y8–81315–00	LEAD WIRE ASSY FIL		1				
2	6TA–82151–00	.FUSE(5A) .FUSIBLE (5A)		3				

FIG. 40 REPAIR KIT 1 — KITS DE REPARATION 1

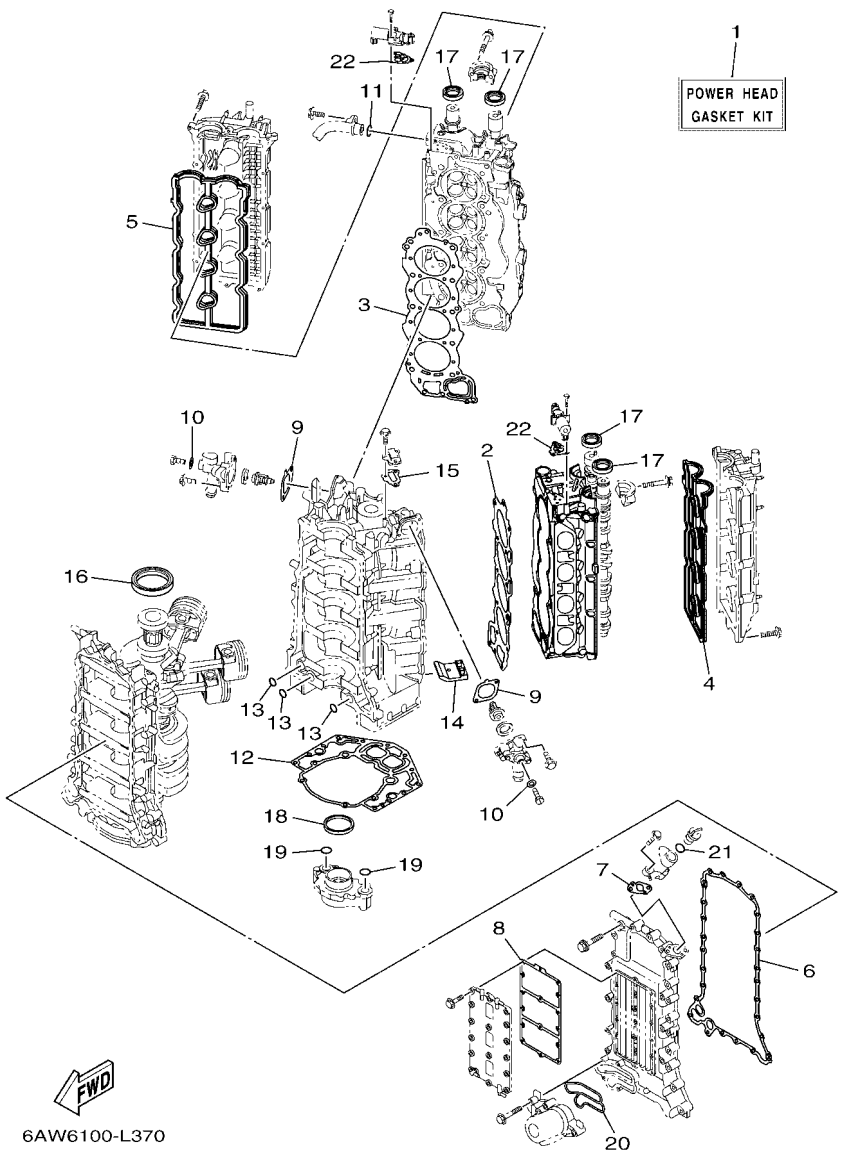

REF. NO.	PART NO. N° PIECES	DESCRIPTION DESCRIPTION	6AW6	6AX6				REMARKS REMARQUES
1	6AW–W0001–01	POWER HEAD GASKET KIT POCHETTE DE JINTS TETE MOTRICE	1	1				
2	6AW–11181–00	.GASKET, CYLINDER HEAD 1 .JOINT, DE CULASSE 1	1	1				
3	6AW–11182–00	.GASKET, CYLINDER HEAD 2 .JOINT, CULASSE 2	1	1				
4	6AW–11193–10	.GASKET, HEAD COVER 1 .JOINT, COUVERCLE DE CULASSE 1	1	1				
5	6AW–11194–10	.GASKET, HEAD COVER 2 .JOINT, COUVERCLE DE CULASSE 2	1	1				
6	6AW–15451–00	.GASKET, CRANKCASE COVER 1 .JOINT, COUVERCLE DE CARTER 1	1	1				
7	6AW–15364–00	.GASKET, OIL PLUG .JOINT, PLOT D'HUILE	1	1				
8	6AW–15461–00	.GASKET, CRANKCASE COVER 2 .JOINT, COUVERCLE DE CARTER 2	1	1				
9	6AW–12427–00	.GASKET, HOUSING COVER 1 .JOINT, COUVERCLE DE CARTER 1	2	2				
10	90430–05002	.GASKET .JOINT	2	2				
11	93210–207A0	.O-RING .JOINT TORIQUE	1	1				
12	6AW–11351–00	.GASKET, CYLINDER .JOINT, D'EMBASE	1	1				
13	93210–26658	.O-RING .JOINT TORIQUE	3	3				
14	6AW–14664–00	.GROMMET, WATER SHUT .PASSE-FIL	2	2				
15	6AW–11381–00	.GASKET 1 .JOINT 1	1	1				
16	93102–85004	.OIL SEAL .JOINT SPY	1	1				
17	93102–38008	.OIL SEAL .JOINT SPY	4	4				
18	69J–11355–00	.SEAL, CYLINDER 1 .JOINT, SPY CYLINDRE	1	1				
19	93210–26658	.O-RING .JOINT TORIQUE	2	2				
20	6AW–13477–00	.GASKET .JOINT	1	1				
21	93210–24M79	.O-RING .JOINT TORIQUE	1	1				
22	6CB–1242F–00	.GASKET, FILTER .JOINT, FILTRE	2	2				

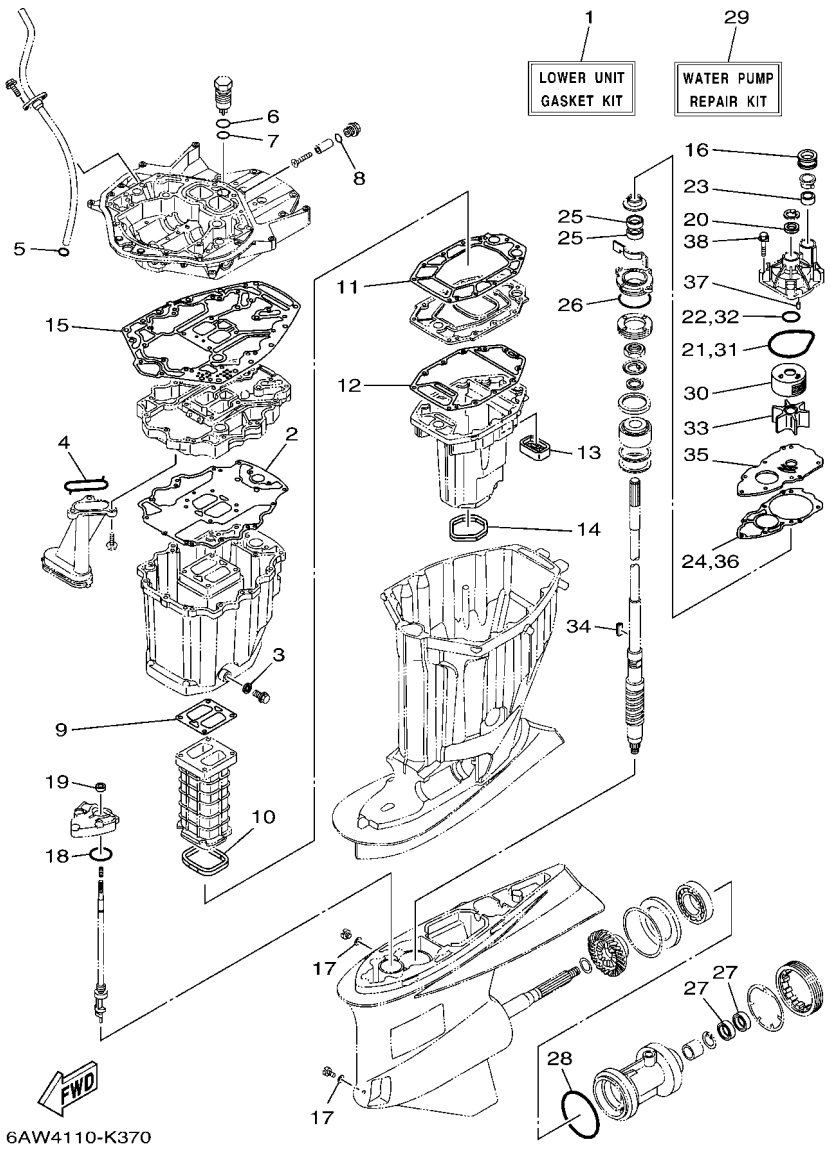

FIG. 41 REPAIR KIT 2 — KITS DE REPARATION 2

REF. NO.	PART NO. N° PIECES	DESCRIPTION DESCRIPTION	6AW6	6AX6				REMARKS REMARQUES
1	6AW–W0001–21	LOWER UNIT GASKET KIT POCHETTE DE JOINTS EMBASE	1	1				
2	6AW–15312–00	.GASKET, OIL PAN .JOINT DE VENTILATEUR D'HUILE	1	1				
3	90430–14M09	.GASKET .JOINT	1	1				
4	6AW–13415–00	.SEAL, OIL STRAINER .JOINT, FILTRE A HUILE	1	1				
5	93210–19MJ3	.O-RING .JOINT TORIQUE	1	1				
6	93210–347A1	.O-RING .JOINT TORIQUE	1	1				
7	93210–28543	.O-RING .JOINT TORIQUE	1	1				
8	93210–19758	.O-RING .JOINT TORIQUE	1	1				
9	6AW–41134–02	.GASKET, EXHAUST MANIFOLD .JOINT, PIPE D'ECHAPPEMENT	1	1				
10	6AW–41138–00	.SEAL, EXT. 1 .JOINT DE GROUPE 1	1	1				
11	6AW–41135–00	.GASKET, EXHAUST MANIFOLD .JOINT, PIPE D'ECHAPPEMENT	1	1				
12	6AW–41136–00	.GASKET, EXHAUST MANIFOLD 4 .JOINT, PIPE D'ECHAPPEMENT 4	1	1				
13	6AW–45127–00	.SEAL .JOINT	1	1				
14	69J–45123–00	.GASKET, MUFFLER .JOINT, POT DE DETENTE	1	1				
15	6AW–45113–00	.GASKET, UPPER CASING .JOINT, TUBE D'ARBRE	1	1				
16	6AW–44366–00	.DAMPER, WATER SEAL 2 .JOINT, TUBE D'EAU 2	1	1				
17	90430–08020	.GASKET .JOINT	2	2				
18	93210–48214	.O-RING .JOINT TORIQUE	1	1				
19	93101–12M70	.OIL SEAL .JOINT SPY	1	1				
20	93109–24001	.OIL SEAL .JOINT SPY	1	1				
21	93210–94003	.O-RING .JOINT TORIQUE	1	1				
22	93210–37160	.O-RING .JOINT TORIQUE	1	1				
23	6AW–44365–00	.DAMPER, WATER SEAL 1 .JOINT, TUBE D'EAU 1	1	1				
24	6AW–44315–00	.GASKET, WATER PUMP .JOINT, POMPE A EAU	1	1				
25	93101–28004	.OIL SEAL .JOINT SPY	2	2				
26	93210–69MG6	.O-RING .JOINT TORIQUE	1	1				
27	93101–35018	.OIL SEAL .JOINT SPY	2	2				

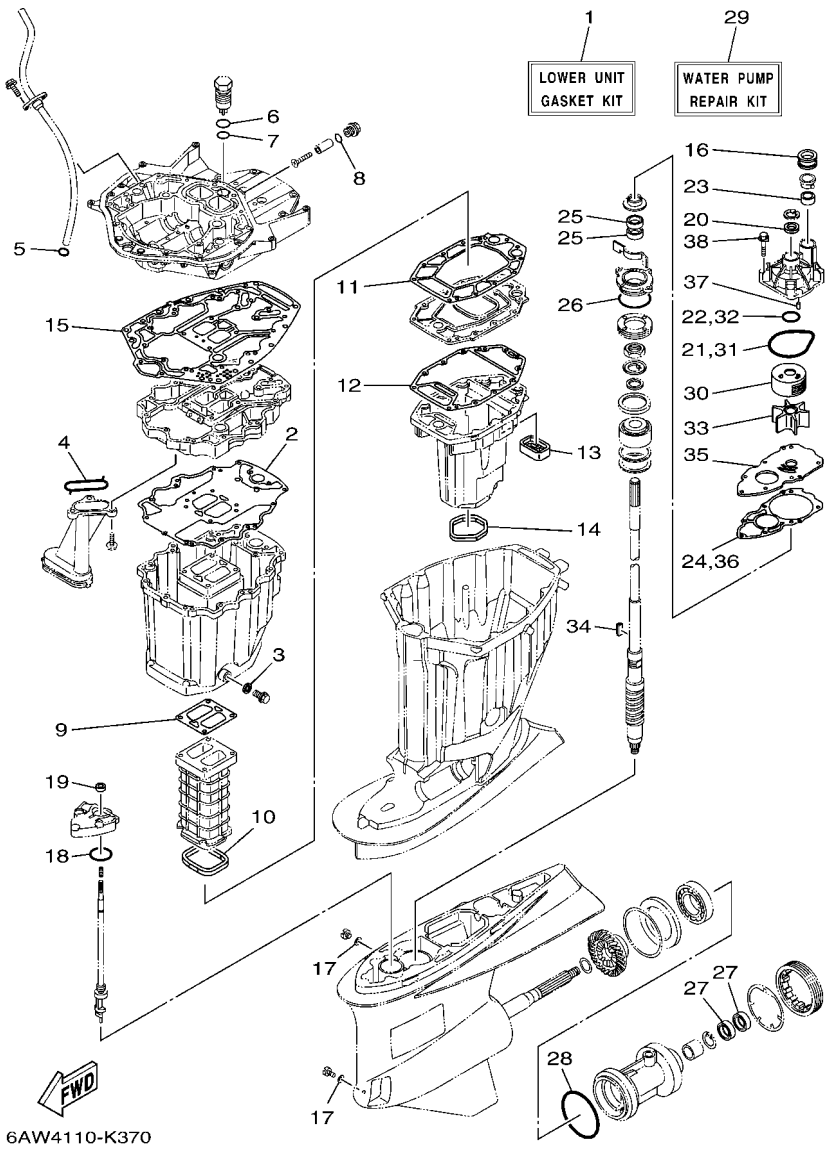

FIG. 41 REPAIR KIT 2 — KITS DE REPARATION 2

REF. NO.	PART NO. N° PIECES	DESCRIPTION DESCRIPTION	6AW6	6AX6				REMARKS REMARQUES
28	93211–10232	.O-RING .JOINT TORIQUE	1	1				
29	6AW–W0078–00	WATER PUMP REPAIR KIT KIT DE REPARATION DE LA POMPE	1	1				
30	6AW–44322–00	.INSERT, CARTRIDGE .CUVETTE	1	1				
31	93210–94003	.O-RING .JOINT TORIQUE	1	1				
32	93210–37160	.O-RING .JOINT TORIQUE	1	1				
33	6AW–44352–00	.IMPELLER .TURBINE	1	1				
34	6AW–44336–00	.KEY .CLAVETTE	1	1				
35	6AW–44323–00	.OUTER PLATE, CARTRIDGE .PLAQUE EXTERIEURE	1	1				
36	6AW–44315–00	.GASKET, WATER PUMP .JOINT, POMPE A EAU	1	1				
37	93606–12019	.PIN, DOWEL .GOUPILLE	2	2				
38	90119–08M14	.BOLT, WITH WASHER .BOULON, AVEC RONDELLE	4	4				

NUMERICAL INDEX
INDEX NUMERIQUE

PART NO. N° PIECES	REF. NO.
6AW–11110–10	4 – 2
6AW–11120–10	4 – 10
6S5–11133–10	4 – 3
	4 – 11
6AW–11181–00	4 – 23
	40 – 2
6AW–11182–00	4 – 28
	40 – 3
6AW–11186–10	5 – 1
6AW–11187–10	5 – 3
6AW–11188–00	11 – 17
6AW–11191–10	4 – 29
6AW–11192–10	4 – 32
6AW–11193–10	4 – 30
	40 – 4
6AW–11194–10	4 – 33
	40 – 5
6AW–11197–00	32 – 22
67F–11301–00	4 – 17
6AW–1131M–00–9S	2 – 34
6E5–11325–00	21 – 5
63P–11325–01	2 – 18
67F–11325–01	4 – 18
63P–11325–11	32 – 29
67F–11328–00	4 – 19
6AW–1132P–00	2 – 37
6AW–1132R–00	2 – 27
6AW–1132S–00	32 – 24
6AW–1132T–00	32 – 26
6AW–1132U–00	32 – 27
6AW–11351–00	2 – 31
	40 – 12
69J–11355–00	33 – 15
	40 – 18
6AW–1135A–00	5 – 8
6AW–11371–10	32 – 15
6H1–11372–00	32 – 2
6AW–11378–00	6 – 14
6AW–11381–00	2 – 35
	40 – 15
6AW–11411–10	3 – 1
6AW–11416–00	3 – 4
6AW–11416–10	3 – 4
6AW–11416–20	3 – 4
6AW–11416–30	3 – 4
6AW–11416–40	3 – 4
6AW–11417–00	3 – 5
6AW–11417–10	3 – 5

PART NO. N° PIECES	REF. NO.
6AW–11417–20	3 – 5
6AW–11417–30	3 – 5
6AW–11417–40	3 – 5
6AW–11426–00	3 – 6
6AW–11426–01	3 – 6
6AW–11427–00	3 – 7
6AW–11427–01	3 – 7
6AW–11537–00	7 – 13
6AW–11567–00	7 – 14
6P2–11590–01	7 – 25
6AW–11603–00	3 – 11
6AW–11631–10–93	3 – 10
63P–11633–10	3 – 12
63P–11634–00	3 – 13
63P–11654–10	3 – 9
6AW–11656–00	3 – 14
6AW–11656–10	3 – 14
6AW–11656–20	3 – 14
6AW–11656–30	3 – 14
6CB–12111–00	7 – 1
6CB–12113–00	7 – 4
51Y–12119–00	7 – 7
6CB–12121–00	7 – 2
6AW–12171–10	7 – 9
6AW–12172–10	7 – 11
6AW–12181–10	7 – 10
6AW–12182–10	7 – 12
69J–12233–00	32 – 18
6AW–12411–00	2 – 20
6AW–12412–00	2 – 21
6AW–12413–00–9S	2 – 22
6AW–1241B–00–9S	2 – 24
6AW–12422–00–9S	2 – 23
6AW–12427–00	2 – 26
	40 – 9
6AW–1242B–00–9S	2 – 25
6CB–1242F–00	5 – 6
	40 – 22
6AW–1243A–00	6 – 1
6AW–1243E–00	6 – 4
6AW–1243F–00	32 – 6
6AW–1244G–00	6 – 7
6AW–1244H–00	32 – 5
6AW–1244J–00	6 – 13
6AW–12476–00	6 – 11
6AW–12477–00	6 – 2
6AW–12482–10	10 – 31
6AW–12483–00	10 – 28

PART NO. N° PIECES	REF. NO.
6AW–12484–00	6 – 5
6AW–12491–10	6 – 8
6AW–12572–00	25 – 1
6AW–12576–20	10 – 17
6AW–12577–00	10 – 21
6AW–12578–00	10 – 22
6AW–12579–10	10 – 24
6R3–12581–00	25 – 3
6AW–12582–00	25 – 4
6R3–12583–00	25 – 5
6AW–12588–00	10 – 32
6AW–12589–00	10 – 14
6P2–12615–00	7 – 22
6P2–12623–00	7 – 17
	7 – 20
6AW–12645–00	7 – 16
6AW–1264A–00	7 – 19
6P2–12663–00	7 – 18
	7 – 21
6CB–13016–00	13 – 5
6AW–13119–00	33 – 13
6AW–13132–00	13 – 22
6AW–13160–10	12 – 1
6AW–13161–10	12 – 2
6AW–13170–10	12 – 7
6AW–13171–10	12 – 8
6AW–13300–02	33 – 11
6CB–13329–00	33 – 12
6AW–13411–00	33 – 7
6AW–13415–00	33 – 9
	41 – 4
67F–13434–20	1 – 30
6AW–13437–61	17 – 14
N26–13440–00	2 – 41
6AW–13446–00–9S	2 – 43
6AW–13477–00	2 – 44
	40 – 20
6AW–13490–01	33 – 23
6AW–13532–00	14 – 8
6AW–13545–10	10 – 4
6AW–13547–10	10 – 10
6CB–13548–00	10 – 8
6AW–13548–10	10 – 6
6AW–13556–00	11 – 4
6AW–13557–00	11 – 5
6P2–13573–00	11 – 11
68V–13577–00	14 – 6
	14 – 17

PART NO. N° PIECES	REF. NO.
6AW–13577–10	12 – 5
	12 – 11
6P2–13578–00	11 – 8
6P2–13588–00	11 – 7
6CB–13593–00	13 – 19
6AW–13631–00	33 – 14
6AW–13641–10	8 – 7
	8 – 13
6AW–13645–00	8 – 8
	8 – 14
6AW–13646–00	8 – 9
	8 – 15
6AW–13711–01	11 – 3
69J–13716–00	13 – 18
6AW–13750–01	11 – 1
6AW–13751–00	11 – 2
6AW–13761–00	12 – 3
	12 – 9
6AW–13781–00	13 – 26
6AW–13782–00	8 – 3
6AW–13784–00	13 – 29
6CB–13906–01	13 – 8
6AW–13907–10	13 – 20
63P–13915–00	13 – 21
6AW–13971–30	14 – 12
6AW–13973–30	14 – 13
6AW–13974–30	14 – 14
6AW–1410B–00	12 – 4
	12 – 10
69J–14137–00	14 – 5
6CB–14146–00	13 – 10
6P2–14149–00	14 – 1
6AW–14180–20	13 – 1
6CB–14181–09	13 – 11
6AW–14182–10	13 – 2
6P2–14191–00	13 – 12
6CB–14216–00	13 – 6
6CB–14239–00	13 – 13
4N0–14251–00	11 – 13
68V–14356–00	11 – 12
6AW–14360–00	11 – 6
6P2–14386–00	13 – 33
6AW–14419–00	9 – 5
6AW–1441J–00	9 – 3
6CB–14429–01	13 – 15
63P–14435–00	18 – 23
6AW–14440–00	9 – 1
6AW–14445–00	9 – 12

PART NO. N° PIECES	REF. NO.
6CB–1447B–00	13 – 25
68F–14485–00	10 – 23
6P2–14496–00	11 – 9
6CB–14546–00	13 – 24
6CB–14564–00	13 – 9
63P–14567–00	13 – 17
6AW–14664–00	2 – 33
	40 – 14
6AW–14711–00–9S	32 – 40
6AW–14750–00	25 – 29
6AW–1475A–10	10 – 2
6AW–1475E–00	25 – 31
6AW–1475F–00	25 – 34
6AW–1475G–00	32 – 3
6AW–1475J–00	32 – 4
6AW–14763–00	25 – 32
6AW–14764–00–CA	25 – 35
6CB–14984–00	13 – 35
6CB–14985–00	13 – 23
6AW–15100–04	2 – 2
6AW–15142–00	4 – 35
6P2–15187–00	2 – 5
6AW–15319–00–CA	33 – 2
6AW–15312–00	33 – 1
	41 – 2
69J–15316–00	32 – 49
6AW–15319–00–9S	2 – 11
6AW–1531A–00	9 – 16
6AW–1531A–10	9 – 17
6AW–1532A–00	9 – 18
6AW–15362–01	33 – 19
6G8–15363–00	2 – 46
6AW–15364–00	2 – 12
	40 – 7
6AW–15373–00	9 – 11
6AW–15377–00	33 – 20
6AW–15393–00	9 – 14
6AW–15411–02–9S	2 – 7
6AW–15421–00–9S	2 – 15
6AW–15451–00	2 – 8
	40 – 6
6AW–15461–00	2 – 16
	40 – 8
6P2–15512–00	7 – 26
6AW–15544–00	7 – 30
69J–2134X–00	8 – 21
6AW–2134X–10	8 – 19
6E5–21744–00	10 – 7

PART NO. N° PIECES	REF. NO.
6E5–21744–00	10 – 9
6P2–24170–00	8 – 18
69J–2419A–01	8 – 25
6CB–24217–00	13 – 7
6AW–24300–00	14 – 16
6AW–24300–10	14 – 15
6YK–24307–42	16 – 1
5JW–24311–00	11 – 14
6AW–24311–01	15 – 3
6AW–24311–11	15 – 3
6AW–24312–10	10 – 3
6AW–24313–00	15 – 20
6AW–24313–10	15 – 20
66V–24314–00	25 – 10
6AW–24314–00	27 – 24
6AW–24314–10	27 – 22
6AW–24317–20	14 – 4
6AW–24323–20	14 – 2
6AW–24324–20	14 – 3
6E5–24351–51	15 – 4
6AW–24360–01	16 – 2
6CE–24376–00	10 – 13
	10 – 20
6G8–24376–00	27 – 27
6P2–24376–00	14 – 9
6AW–24377–01	15 – 2
688–24378–00	10 – 5
	10 – 30
6E5–24378–00	14 – 7
6CB–24410–00	13 – 27
6AW–24419–00	8 – 29
6AW–24422–00	15 – 21
6CB–24452–10	13 – 14
4SV–24453–00	13 – 30
6CB–24460–00	13 – 4
6CB–24461–00	14 – 18
6P3–24469–00	15 – 9
6CB–24482–00	13 – 16
6AW–24491–10	13 – 28
6CB–24492–00	13 – 32
6CB–24501–01	13 – 3
6P3–24519–00	15 – 8
6P3–24560–22	15 – 6
6P3–24562–21	15 – 7
6P3–24563–01	15 – 11
6P3–24564–00	15 – 10
6CB–24592–00	13 – 34
6AW–24596–00	15 – 15

PART NO. N° PIECES	REF. NO.
69J–28100–01	15 – 26
67F–2812A–00	19 – 25
6AW–28199–78–D0	15 – 27
6AW–28199–78–E0	15 – 27
6AW–28199–78–F0	15 – 27
6AW–28199–78–G0	15 – 27
6AW–28199–78–H0	15 – 27
6AW–28199–78–S0	15 – 27
6AW–28199–88–K0	15 – 28
6AW–28199–88–L0	15 – 28
6AW–28199–88–M0	15 – 28
6AW–28199–88–N0	15 – 28
6AW–28199–88–P0	15 – 28
6AW–28199–88–R0	15 – 28
6AW–41131–01–CA	32 – 31
6AW–41132–00–9S	32 – 33
6AW–41134–02	32 – 34
	41 – 9
6AW–41135–00	32 – 37
	41 – 11
6AW–41136–00	32 – 39
	41 – 12
6AW–41137–11–CA	32 – 1
6AW–41138–00	32 – 36
	41 – 10
6AW–42169–00	25 – 9
6AW–42477–00	1 – 18
6AW–42510–01–8D	29 – 5
6AW–42532–00	1 – 8
6CB–42545–00	1 – 4
6AW–42610–20	1 – 1
6AW–42613–00	1 – 2
6AW–42615–00	24 – 7
6AW–42628–20	1 – 21
6AW–42629–00	25 – 28
6AW–42635–00	1 – 5
6AW–42646–10	1 – 14
6AW–42647–00–9S	1 – 11
6AW–4264A–00	1 – 13
6AW–42663–00	1 – 12
6AW–42675–00	1 – 23
6AW–42676–00	1 – 24
6AW–42677–00	1 – 25
6AW–42678–00	1 – 22
6AW–42681–00	1 – 26
6AW–42682–00	1 – 27
6AW–42697–10	1 – 28
6AW–42710–01–8D	24 – 1

PART NO. N° PIECES	REF. NO.
63P–42716–00	24 – 8
61A–42717–00	24 – 33
69J–42717–00	25 – 20
6AW–42721–00	25 – 25
6AW–42722–00	24 – 14
6AW–42723–00–9S	25 – 24
69J–42723–01	22 – 41
6AW–42724–00	32 – 14
6AW–42725–01	24 – 2
6AW–42726–00	24 – 38
6H1–42726–21	24 – 35
6AW–42733–00	25 – 18
6AW–42734–00	25 – 19
6AH–42735–00	1 – 29
6AW–42735–00	24 – 5
6AW–42741–00–8D	26 – 1
6AW–42743–00	22 – 28
6AW–42744–00	25 – 16
6H4–42748–00	24 – 37
68F–42753–00	24 – 40
6AW–42761–00	24 – 3
6AW–42767–00	25 – 39
6AW–42769–00	25 – 27
6AW–42771–00–8D	26 – 3
69J–42774–10	26 – 5
6AW–42775–00	26 – 12
6AW–42785–00	25 – 7
6AW–42786–00	25 – 22
6AW–42787–00	25 – 23
6AH–42794–40	24 – 42
6AH–42794–50	24 – 43
6AW–42815–00–8D	24 – 9
6AW–42816–01–8D	24 – 10
6AW–42817–01–8D	24 – 11
6AW–42818–01	24 – 20
6AW–42819–01	24 – 21
6AW–4281A–01	24 – 22
6AW–42828–00–9S	24 – 12
6AW–42829–00–9S	24 – 13
6AW–42851–00	24 – 28
6AW–43111–00–8D	28 – 1
6AW–43112–00–8D	28 – 16
6AW–43113–00	28 – 19
6AW–43126–01	28 – 51
6R3–43131–10	28 – 25
61A–43132–00	28 – 14
61A–43133–00	28 – 20
6AW–43138–00	31 – 8

PART NO. N° PIECES	REF. NO.
66T–43144–00	24 – 26
6AW–43148–00	28 – 49
6AW–43181–01	28 – 46
6AW–43185–01	28 – 47
6AW–43311–00–8D	28 – 38
6AW–43376–00	29 – 3
6AW–43800–02	30 – 1
6AW–43802–00	30 – 35
6AW–43804–00	31 – 5
6AW–43805–00	31 – 3
6AW–43809–00	30 – 53
6AW–4380J–00	31 – 10
6AW–4380R–00	30 – 5
6AW–43810–01	30 – 14
6AW–43813–00	30 – 13
6AW–43814–00	30 – 17
64E–43816–00	30 – 54
6AW–43817–00	30 – 52
64E–43817–11	30 – 29
6AW–4381A–00	30 – 19
6AW–4381G–00	30 – 50
6AW–43820–01	30 – 10
6AW–43821–00	30 – 6
6AW–43822–00	30 – 9
6AW–43825–01	30 – 2
6AW–43828–00	30 – 24
6AW–43829–00	30 – 26
6AW–4382G–00	30 – 43
6AW–43830–00	30 – 32
64E–43831–00	30 – 22
6AW–43842–00	31 – 9
6AW–43843–00	31 – 4
6AW–43844–00	30 – 41
6AW–4384H–00	30 – 40
6AW–4384J–00	30 – 7
6AW–43856–00	30 – 37
64E–43858–00	30 – 18
	30 – 45
6AW–43858–00	30 – 34
6AW–43860–01	30 – 44
6AW–43861–00	30 – 51
6E5–43862–00	30 – 8
	30 – 12
	30 – 15
6G5–43863–00	30 – 42
6G5–43864–00	30 – 11
64E–43865–00	30 – 56
64E–43866–00	30 – 16

PART NO. N° PIECES	REF. NO.
64E–43868–00	30 – 21
6AW–43869–00	30 – 39
6AW–4386K–00	31 – 11
6AW–43871–00	30 – 4
64E–43873–00	30 – 48
6AW–43875–00	30 – 49
6AW–43878–00	30 – 30
6AW–43879–00	30 – 23
64E–4387A–00	30 – 47
6AW–4387G–00	30 – 20
6AW–43880–01	31 – 1
6AW–43881–11	31 – 6
6AW–43882–00	31 – 2
6AW–43886–00	30 – 33
6AW–43887–00	30 – 25
6AX–43887–00	31 – 7
6AW–43888–00	30 – 31
6AW–4388E–00	30 – 28
6AW–4388H–00	30 – 57
6AW–4388J–00	30 – 38
6AX–4388J–00	30 – 55
6E5–43896–00	30 – 36
6AW–43897–00	30 – 27
6AW–43899–00	30 – 59
6AW–4389H–00	30 – 3
6AW–4389J–00	30 – 58
6AW–44116–00	28 – 43
6AW–44117–00	15 – 24
6AW–44118–00	27 – 10
6AW–44120–00	27 – 9
6AW–44120–10	27 – 9
6AW–44121–00	27 – 5
6AW–44122–00	27 – 4
6AW–44150–00	34 – 14
6AX–44150–00	36 – 14
6AW–44176–00	27 – 1
6AW–44311–00	34 – 17
	36 – 17
6AW–44312–00	34 – 24
	36 – 24
6AW–44315–00	34 – 28
	36 – 28
	41 – 24
	41 – 36
6AW–44322–00	34 – 20
	36 – 20
	41 – 30
6AW–44323–00	34 – 27

PART NO. N° PIECES	REF. NO.
6AW–44323–00	36 – 27
	41 – 35
6AW–44336–00	34 – 26
	36 – 26
	41 – 34
6AW–44352–00	34 – 25
	36 – 25
	41 – 33
6AW–44361–00	35 – 3
	37 – 3
6AW–44361–10	35 – 3
	37 – 3
6AW–44362–00	35 – 26
	37 – 26
6AW–44365–00	34 – 23
	35 – 1
	36 – 23
	37 – 1
	41 – 23
6AW–44366–00	32 – 56
	35 – 2
	37 – 2
	41 – 16
6AW–44367–00	35 – 25
	37 – 25
6AW–44375–00	35 – 27
	37 – 27
6AW–44376–00	35 – 28
	37 – 28
6P2–44391–00	24 – 34
6AW–44511–01–CA	29 – 30
6AW–44514–01–94	29 – 23
6AW–44526–00	29 – 25
6G5–44526–00	28 – 5
6AW–44532–00	29 – 24
6AW–44533–00	29 – 29
6AW–44551–00–CA	29 – 10
6AW–44552–00–CA	29 – 21
6AW–44555–00	29 – 13
6AW–44575–00	29 – 12
6AW–45111–10–8D	32 – 45
6AW–45113–00	32 – 46
	41 – 15
69J–45123–00	32 – 44
	41 – 14
6AW–45127–00	32 – 43
	41 – 13
6AW–45151–01–8D	26 – 11

PART NO. N° PIECES	REF. NO.
69J–45152–10	32 – 50
6AW–45159–00	32 – 58
6AW–45181–01–9S	32 – 38
6AW–45211–10–8D	32 – 55
6AW–45214–00	35 – 12
	37 – 12
6AW–45215–00	35 – 13
	37 – 13
6AW–45224–00	35 – 16
	37 – 16
6AW–45225–00	35 – 18
	37 – 18
6AW–45244–00	34 – 46
	36 – 46
6AW–45251–00	28 – 4
6AW–45300–20–8D	34 – 1
6AX–45300–20–8D	36 – 1
6AW–45300–30–8D	34 – 1
6AX–45300–30–8D	36 – 1
6AW–45311–01–8D	34 – 2
	36 – 2
6AW–45318–00	32 – 52
6AW–45321–00	34 – 10
	36 – 10
6AW–45332–00	34 – 64
6AX–45332–00	36 – 65
6AW–45335–00–CA	34 – 32
	36 – 32
688–45341–10	34 – 8
	36 – 8
6AW–45344–00	34 – 41
	36 – 41
6AW–45373–00	35 – 20
	37 – 20
6AW–45375–00	35 – 11
	37 – 11
61A–45376–00	35 – 10
	37 – 10
6AW–45383–00	34 – 74
	36 – 74
6AW–45384–00	34 – 75
	36 – 75
6AW–45501–00	34 – 44
	36 – 44
6AW–45501–10	34 – 44
	36 – 44
6T5–45539–00	34 – 45
	36 – 45

NUMERICAL INDEX
INDEX NUMERIQUE

PART NO. N° PIECES	REF. NO.
6AW–45550–00	34 – 47
6AX–45550–00	36 – 47
6AX–45560–00	36 – 50
6AW–45567–00	34 – 6
	36 – 6
6AW–45567–10	34 – 6
	36 – 6
6AW–45567–20	34 – 6
	36 – 6
6AW–45567–30	34 – 6
	36 – 6
6AW–45567–40	34 – 6
	36 – 6
6AW–45567–50	34 – 6
	36 – 6
6AW–45571–00	34 – 67
6AW–45576–00	34 – 66
	36 – 67
6AW–45577–00	34 – 68
	36 – 68
6AW–45577–10	34 – 68
	36 – 68
6AW–45577–20	34 – 68
	36 – 68
6AW–45577–30	34 – 68
	36 – 68
6AW–45577–40	34 – 68
	36 – 68
6AW–45577–50	34 – 68
	36 – 68
6AW–45577–60	34 – 68
	36 – 68
6K1–45578–01	36 – 64
6K1–45578–10	36 – 64
6K1–45578–20	36 – 64
6K1–45578–30	36 – 64
6K1–45578–40	36 – 64
6K1–45578–50	36 – 64
6K1–45578–60	36 – 64
6AW–45587–00	34 – 35
	36 – 35
6AW–45587–10	34 – 35
	36 – 35
6AW–45587–20	34 – 35
	36 – 35
6AW–45587–30	34 – 35
	36 – 35
6AW–45587–40	34 – 35

PART NO. N° PIECES	REF. NO.
6AW–45587–40	36 – 35
6AW–45587–50	34 – 35
	36 – 35
6AW–45587–60	34 – 35
	36 – 35
6AW–45611–00	34 – 51
6AX–45611–00	36 – 51
6AW–45612–00	34 – 63
6AW–45619–00	35 – 23
	37 – 23
6AW–45631–00	34 – 55
	36 – 55
6AW–45632–00	34 – 54
	36 – 54
6AW–45633–00	34 – 56
	36 – 56
61A–45634–01	34 – 53
	36 – 53
61A–45635–00	34 – 58
	36 – 58
6AW–45641–00	34 – 52
6AX–45641–00	36 – 52
6H1–45668–00	34 – 57
	36 – 57
6AW–45723–00	34 – 31
	36 – 31
6AW–45970–10	35 – 34
6AX–45970–10	37 – 34
6AW–45972–10	35 – 34
6AX–45972–10	37 – 34
6AW–45974–10	35 – 34
6AX–45974–10	37 – 34
6AW–45976–10	35 – 34
6AX–45976–10	37 – 34
6AW–45978–10	35 – 34
6AX–45978–10	37 – 34
6AW–45987–00	35 – 29
	37 – 29
6AW–45997–10	35 – 30
	37 – 30
6AW–45C80–00	35 – 35
	37 – 35
6AW–4820A–11	27 – 17
6Y8–48277–00	38 – 16
	38 – 16
	38 – 17
6AW–81218–00	21 – 24
6Y8–81315–00	39 – 1

PART NO. N° PIECES	REF. NO.
6AW–81328–00	21 – 20
6AW–81337–01	17 – 11
63D–81345–00	17 – 5
6AW–81443–00	19 – 42
6AW–81460–00	17 – 3
6AW–81539–00	20 – 2
6P2–81639–00	19 – 28
6AW–81677–00	22 – 23
6AW–81678–00	19 – 40
6AW–81800–00	23 – 1
6AW–81807–00	23 – 3
6AW–81808–00	23 – 8
6AW–81810–00	23 – 16
6AW–81820–00	23 – 18
6AW–81826–00	23 – 19
6AW–81830–00	23 – 2
6AW–81832–00	23 – 7
6AW–81836–00	23 – 4
6AW–81839–00	23 – 14
6AW–8183R–00	23 – 11
6AW–8183T–00	23 – 6
6AW–81840–00	23 – 17
6AW–81842–00	23 – 15
6AW–81845–10	22 – 30
6AW–81846–00	23 – 20
6AW–81850–00	23 – 13
6AW–81854–00	23 – 12
6AW–81857–00	23 – 9
6AW–81862–00	23 – 10
6AW–81891–00	23 – 5
6AW–81919–20	19 – 46
6AW–81919–31	19 – 47
6AW–81925–01	21 – 27
6AW–81941–00	23 – 21
6AW–81942–00	19 – 17
6AW–81948–00	19 – 38
69J–81949–02	22 – 51
6AW–8194A–00	19 – 6
6AW–81950–00	19 – 1
6AW–81952–00	19 – 11
68V–81953–00	19 – 7
68F–8195A–00	19 – 30
6AW–81960–01	21 – 1
6AW–81972–00–9S	21 – 4
6AW–81975–00	21 – 3
6AH–81994–40	17 – 15
6AH–81994–50	17 – 16
6AH–81996–00	24 – 44

PART NO. N° PIECES	REF. NO.
6AW–82105–00	21 – 41
6P2–82113–00	19 – 27
6AW–82117–01	21 – 33
6AW–82119–00	21 – 42
6G5–82119–00	19 – 10
6G5–82119–10	19 – 5
6AW–82119–20	21 – 43
6E5–82147–00	28 – 40
6H1–82148–00	28 – 8
	28 – 11
	30 – 60
6AW–82149–00	29 – 16
67F–82151–00	19 – 21
6P2–82151–00	19 – 20
6TA–82151–00	39 – 2
67F–82151–10	19 – 22
67F–82151–40	19 – 23
67F–82151–50	19 – 24
6AW–82170–01	19 – 19
6AW–82171–00	19 – 32
6CB–82310–00	20 – 1
6A0–82317–00	19 – 14
	19 – 33
663–82317–01	17 – 12
6AW–82353–10	20 – 16
6AW–8235A–00	21 – 10
6AW–82364–00	11 – 15
6AW–82365–00	11 – 16
6AW–82366–00	11 – 18
63V–82377–50	28 – 55
6P2–82380–00	11 – 10
6AW–82388–00	22 – 20
6Y8–82509–10	38 – 8
6Y8–82521–11	38 – 15
6AW–82544–01	18 – 14
6AW–82560–00	22 – 36
6AW–82563–00	22 – 40
6AW–82572–00	19 – 36
6AW–82573–00	19 – 37
6AW–8257G–00	22 – 26
6AX–8257G–00	25 – 41
6AW–82581–00	21 – 9
69J–82587–00	22 – 42
6AW–82588–00	18 – 17
6E5–82588–00	25 – 13
6E9–82588–00	22 – 37
6AW–82589–01	22 – 2
6AW–82590–20	22 – 1

PART NO. N° PIECES	REF. NO.
6AW–8259M–00	21 – 32
68F–82846–00	19 – 26
6X4–83383–00	38 – 5
6X4–83386–00	38 – 6
6AW–8339X–00	25 – 37
6AX–83614–00	22 – 43
63P–83614–01	22 – 46
6AW–83614–01	21 – 16
6AW–83651–00	18 – 21
6AW–8366B–00	20 – 12
60V–8366D–00	20 – 13
6AW–8366G–10	20 – 8
6AW–83672–00	29 – 1
6Y8–8454G–00	38 – 11
6P2–85075–00	20 – 5
72X–85075–L0	30 – 46
68F–85119–00	18 – 7
6P2–85544–00	19 – 29
689–85547–00	15 – 1
60V–85564–00	18 – 5
6AW–85580–00	17 – 4
6P2–85780–00	5 – 10
61A–85790–00	22 – 34
63P–85886–00	18 – 22
6P2–85896–00	20 – 4
6AW–8591A–41	18 – 1
6AW–8591C–00	18 – 8
6AW–85991–00	18 – 3
6AW–8611A–00	9 – 8
6C5–86120–00	9 – 6
6CB–86120–00	5 – 5
6Y8–86260–02	38 – 2
6Y8–86260–12	38 – 2
6AA–86261–00	38 – 3
6AA–86261–22	38 – 3
6Y8–86267–00	38 – 1
K0F–A3741–00	7 – 5
K0F–A3742–00	7 – 6
K0F–A3743–00	7 – 3
K0F–A3751–00	7 – 8
K0F–A3751–10	7 – 8
K0F–A3751–20	7 – 8
K0F–A3751–30	7 – 8
K0F–A3751–40	7 – 8
K0F–A3751–50	7 – 8
K0F–A3751–60	7 – 8
K0F–A3751–70	7 – 8
K0F–A3751–80	7 – 8

PART NO. N° PIECES	REF. NO.
K0F–A3751–90	7 – 8
K0F–A3751–A0	7 – 8
K0F–A3751–B0	7 – 8
K0F–A3751–C0	7 – 8
K0F–A3751–D0	7 – 8
K0F–A3751–E0	7 – 8
K0F–A3751–F0	7 – 8
K0F–A3751–G0	7 – 8
K0F–A3751–H0	7 – 8
K0F–A3751–J0	7 – 8
K0F–A3751–K0	7 – 8
K0F–A3751–L0	7 – 8
K0F–A3751–M0	7 – 8
K0F–A3751–N0	7 – 8
K0F–A3751–P0	7 – 8
K0F–A3751–R0	7 – 8
K0F–A3751–S0	7 – 8
K0F–A3751–T0	7 – 8
K0F–A3753–00	7 – 8
K0F–A3753–10	7 – 8
K0F–A3753–20	7 – 8
K0F–A3753–30	7 – 8
K0F–A3753–40	7 – 8
K0F–A3753–50	7 – 8
K0F–A3753–60	7 – 8
K0F–A3753–70	7 – 8
6AW–W0001–01	40 – 1
6AW–W0001–21	41 – 1
6AW–W0078–00	41 – 29
6AW–W009A–01–9S	4 – 1
6AW–W009B–04–9S	2 – 1
6AW–W009B–05–9S	2 – 1
6AW–W009C–01–9S	4 – 9
6AW–W1165–00	3 – 8
6AW–W4624–00	7 – 24
6AW–W8145–01	17 – 1
6AW–W9011–00	17 – 2
90101–08022	21 – 30
90101–12031	28 – 56
90101–12036	28 – 56
90101–14004	29 – 17
90105–05012	2 – 29
90105–06028	2 – 30
90105–06035	5 – 7
90105–06037	2 – 17
90105–06039	2 – 36
90105–06155	2 – 13
	24 – 24

PART NO. N° PIECES	REF. NO.
90105–06M07	4 – 20
90105–06M08	12 – 6
	12 – 12
90105–08175	2 – 6
	2 – 10
90105–08178	7 – 31
90105–08220	4 – 26
90105–08240	5 – 9
90105–10257	35 – 22
	37 – 22
90105–16003	29 – 26
90109–06M81	24 – 15
	25 – 14
	25 – 26
90109–06M86	6 – 12
	22 – 27
	22 – 29
	22 – 47
	24 – 4
	24 – 6
	24 – 27
	25 – 17
	25 – 40
	25 – 42
90109–06MA1	22 – 19
90110–05050	35 – 19
	37 – 19
90110–08085	27 – 2
90110–10018	35 – 24
	37 – 24
90111–06094	24 – 29
90111–06111	9 – 9
	26 – 7
	26 – 8
90111–06113	26 – 9
90116–06046	8 – 32
90116–10041	35 – 5
	37 – 5
90116–10047	28 – 35
90119–06M17	8 – 22
	15 – 12
90119–06M24	8 – 28
90119–06M35	9 – 2
90119–06M59	19 – 16
	19 – 35
90119–06M82	18 – 2
90119–06MA3	21 – 7
90119–06MA5	21 – 8

PART NO. N° PIECES	REF. NO.
90119–06MA6	8 – 11
	8 – 17
90119–07001	4 – 5
	4 – 13
90119–07234	4 – 6
	4 – 14
90119–08022	8 – 10
	8 – 16
90119–08102	32 – 8
90119–08115	4 – 27
90119–08117	32 – 35
90119–08M14	34 – 30
	36 – 30
	41 – 38
90119–08M22	24 – 32
90119–08M26	34 – 13
	36 – 13
90119–10007	32 – 47
90119–10008	35 – 8
	37 – 8
90119–10009	35 – 9
	37 – 9
90119–10024	29 – 22
	29 – 31
90119–10038	35 – 5
	37 – 5
90119–10039	28 – 34
90119–10040	32 – 11
90119–10050	7 – 15
90119–10M07	7 – 28
90151–06M02	2 – 19
	32 – 30
90152–05003	35 – 14
	37 – 14
90155–11002	4 – 25
90167–06M00	38 – 12
90170–10009	35 – 7
	37 – 7
90170–30M18	34 – 39
	36 – 39
90171–18M04	35 – 32
	37 – 32
90173–06001	26 – 10
90179–06M28	1 – 3
	8 – 33
90179–08003	23 – 24
90179–18009	34 – 49
	36 – 49

PART NO. N° PIECES	REF. NO.
90183–02M03	34 – 60
	36 – 60
90185–05002	35 – 15
	35 – 17
	37 – 15
	37 – 17
90185–14M00	29 – 19
90185–16008	29 – 27
90185–22007	28 – 28
90201–02M00	34 – 59
	36 – 59
90201–06M30	24 – 23
	38 – 13
90201–10048	28 – 37
	35 – 6
	37 – 6
90201–10049	28 – 3
	28 – 18
90201–10M01	7 – 29
90201–11008	27 – 6
90201–12060	28 – 57
90201–12426	28 – 58
90201–13M19	28 – 59
90201–156J2	24 – 19
90201–15M58	29 – 18
90201–16016	29 – 15
90201–16030	29 – 28
90201–18023	34 – 48
	36 – 48
90201–19M01	35 – 31
	37 – 31
90201–26014	28 – 27
90201–301U7	34 – 37
	36 – 37
90201–35015	34 – 50
90201–46008	29 – 6
90201–68008	34 – 34
	36 – 34
90202–15M37	24 – 17
90202–19001	27 – 14
90202–32M19	29 – 14
90202–45001	29 – 8
90206–15M18	24 – 18
90214–30003	34 – 38
	36 – 38
90282–05008	34 – 73
	36 – 73
90340–08002	34 – 7

PART NO. N° PIECES	REF. NO.
90340–08002	36 – 7
90340–14M06	33 – 5
90340–18M09	4 – 7
	4 – 15
90380–19001	27 – 13
90381–15002	24 – 16
90386–07001	26 – 6
90386–10M16	28 – 48
90386–18M14	28 – 53
90386–18M63	28 – 52
90386–25003	28 – 26
90386–45002	29 – 9
90387–06037	32 – 19
90387–06119	19 – 15
	19 – 34
90387–06176	18 – 6
90387–06263	33 – 8
90387–06276	8 – 31
90387–06M60	8 – 24
	15 – 13
90387–08M31	27 – 21
90387–08M37	24 – 31
90387–11005	4 – 24
90401–19001	2 – 42
90430–05002	2 – 28
	40 – 10
90430–06M03	4 – 21
90430–08020	34 – 9
	36 – 9
	41 – 17
90430–14M09	33 – 6
	41 – 3
90430–18130	4 – 8
	4 – 16
90445–09026	10 – 29
90445–09104	10 – 11
90445–09120	10 – 26
90445–116J1	25 – 11
90445–14013	25 – 8
90445–14015	25 – 6
90446–18002	14 – 10
90446–32002	9 – 19
90462–10042	17 – 10
90462–12008	2 – 39
90464–07009	20 – 11
90464–08051	22 – 50
90464–09008	19 – 45
90464–09023	8 – 6

PART NO. N° PIECES	REF. NO.
90464–09M42	10 – 16
90464–10010	10 – 25
90464–10M59	27 – 26
90464–11009	15 – 23
90464–11121	15 – 18
	19 – 13
	19 – 41
	21 – 13
	22 – 33
90464–12001	25 – 38
90464–12002	21 – 2
90464–12012	14 – 19
90464–12183	19 – 12
90464–12224	10 – 1
	14 – 11
90464–13249	21 – 12
90464–16001	27 – 25
90464–16240	18 – 12
90464–17006	8 – 12
90464–18001	25 – 43
90464–18246	9 – 10
	18 – 11
	20 – 10
	22 – 13
90464–20181	15 – 19
	22 – 12
	22 – 49
90464–20258	24 – 41
90464–25005	22 – 10
90464–30003	10 – 33
90464–32002	10 – 15
90464–44002	21 – 19
90464–60067	10 – 19
90464–99004	9 – 4
90465–08M82	25 – 15
90465–08M83	28 – 22
	28 – 31
90465–11M10	10 – 12
	15 – 5
	19 – 44
	24 – 36
	25 – 12
	27 – 18
	27 – 23
	28 – 30
	38 – 10
90465–11M59	6 – 3
	6 – 6

PART NO. N° PIECES	REF. NO.
90465–11M59	32 – 7
90465–13M18	22 – 11
90465–13M24	18 – 13
90465–14M66	18 – 4
	18 – 20
	21 – 11
	21 – 21
	22 – 48
90467–08M10	10 – 27
90467–11136	10 – 18
90468–18008	27 – 8
90468–180A0	27 – 7
90480–10M23	8 – 23
	15 – 14
90480–12314	5 – 2
	5 – 4
	17 – 13
	22 – 17
	22 – 18
90480–14M17	26 – 2
	26 – 4
90480–16007	24 – 39
90480–19368	22 – 14
90480–22M81	24 – 30
90501–10M77	34 – 61
	36 – 61
90501–127J4	34 – 16
	36 – 16
90506–22001	24 – 25
91314–10020	28 – 2
	28 – 17
91490–40030	35 – 33
	37 – 33
91690–30020	28 – 50
91809–08006	4 – 4
	4 – 12
91814–18002	2 – 4
92900–08600	27 – 20
92903–06600	19 – 4
92903–08600	23 – 23
92990–06100	1 – 16
92990–08600	21 – 31
	27 – 3
92990–10300	35 – 21
	37 – 21
92990–10600	22 – 35
92995–05600	1 – 20
92995–06100	17 – 8

NUMERICAL INDEX
INDEX NUMERIQUE

PART NO. N° PIECES	REF. NO.
92995–06100	21 – 35
	22 – 8
92995–06200	1 – 7
	1 – 10
92995–06600	6 – 10
	8 – 5
	8 – 27
	15 – 17
	17 – 9
	18 – 10
	18 – 16
	18 – 19
	20 – 7
	20 – 15
	21 – 15
	21 – 18
	21 – 23
	21 – 26
	21 – 36
	21 – 38
	22 – 4
	22 – 6
	22 – 9
	22 – 16
	22 – 22
	22 – 25
	22 – 32
	22 – 39
	22 – 45
	26 – 14
	27 – 12
	28 – 7
	28 – 10
	28 – 13
	28 – 24
	28 – 33
	28 – 42
	28 – 45
	32 – 21
	33 – 17
92995–08600	21 – 29
	21 – 40
	34 – 43
	36 – 43
92995–10600	32 – 10
92995–14600	29 – 20
93101–12M70	34 – 12
	36 – 12

PART NO. N° PIECES	REF. NO.
93101–12M70	41 – 19
93101–28004	34 – 33
	36 – 33
	41 – 25
93101–35018	34 – 71
	36 – 71
	41 – 27
93102–38008	7 – 23
	40 – 17
93102–85004	3 – 3
	40 – 16
93109–24001	34 – 18
	36 – 18
	41 – 20
93210–04279	38 – 9
93210–09165	27 – 16
93210–19758	32 – 23
	41 – 8
93210–19MJ3	33 – 21
	41 – 5
93210–207A0	6 – 15
	40 – 11
93210–24M79	2 – 47
	40 – 21
93210–26658	2 – 32
	33 – 18
	40 – 13
	40 – 19
93210–28543	32 – 17
	41 – 7
93210–347A1	32 – 16
	41 – 6
93210–37160	34 – 22
	36 – 22
	41 – 22
	41 – 32
93210–43001	29 – 7
93210–48214	34 – 11
	36 – 11
	41 – 18
93210–69MG6	34 – 40
	36 – 40
	41 – 26
93210–94003	34 – 21
	36 – 21
	41 – 21
	41 – 31
93211–10232	34 – 72

PART NO. N° PIECES	REF. NO.
93211–10232	36 – 72
	41 – 28
93306–21101	34 – 65
93311–63591	34 – 69
	36 – 69
93311–93590	34 – 3
	36 – 3
93332–000A2	36 – 66
93340–67011	34 – 4
	36 – 4
93341–440U5	36 – 63
93390–00031	34 – 5
	36 – 5
93399–99962	34 – 36
	36 – 36
93410–18M05	28 – 54
93410–19088	27 – 15
93410–21089	28 – 29
93410–44087	29 – 11
93420–35085	34 – 19
	36 – 19
93420–38091	32 – 53
93501–04011	34 – 62
	36 – 62
93604–08062	2 – 14
93606–12019	2 – 3
	2 – 9
	3 – 2
	34 – 29
	36 – 29
	41 – 37
93606–19M23	32 – 42
93608–12M05	32 – 57
	35 – 4
	37 – 4
93608–16M16	32 – 13
	32 – 32
	32 – 48
	33 – 4
93700–06M03	28 – 39
94702–00400	4 – 37
95380–06600	1 – 17
	9 – 7
95380–12600	28 – 60
95780–06300	38 – 14
95780–08300	1 – 15
95780–10300	28 – 36
	29 – 4

PART NO. N° PIECES	REF. NO.
95812–06025	33 – 10
95875–06016	8 – 20
	8 – 30
	25 – 30
	25 – 36
	33 – 22
95875–06025	25 – 33
95875–08035	8 – 1
95885–06010	6 – 17
95885–06014	4 – 36
	6 – 16
95885–06045	2 – 45
95885–08025	4 – 22
95895–06010	32 – 54
95895–06012	2 – 40
	15 – 22
95895–06016	19 – 18
	20 – 9
	25 – 21
95895–06020	19 – 39
95895–06025	15 – 25
	20 – 3
95895–06030	4 – 31
	4 – 34
97013–06020	19 – 3
97013–08045	23 – 22
97075–06050	33 – 16
97075–10045	32 – 9
97080–08030	27 – 19
97095–06010	21 – 37
	28 – 9
	28 – 41
	28 – 44
97095–06012	8 – 4
	15 – 16
	18 – 9
	18 – 15
	18 – 18
	22 – 15
97095–06014	6 – 9
	21 – 17
	22 – 21
	22 – 24
	22 – 31
	22 – 44
	26 – 13
	28 – 32
	32 – 51

PART NO. N° PIECES	REF. NO.
97095–06016	8 – 26
	20 – 14
	21 – 14
	21 – 22
	21 – 25
	21 – 34
	22 – 7
	22 – 38
97095–06020	20 – 6
	32 – 20
97095–06025	22 – 5
	27 – 11
97095–06030	17 – 7
	28 – 6
97095–06035	22 – 3
97095–08016	21 – 39
97095–08020	21 – 28
	34 – 42
	36 – 42
97575–06514	9 – 15
97575–08535	32 – 41
97575–08570	33 – 3
97575–10570	35 – 9
	37 – 9
97575–10585	32 – 12
97595–06510	30 – 61
97595–06610	19 – 2
	19 – 9
97780–50514	19 – 43
97780–50620	19 – 31
97780–60516	1 – 6
	1 – 9
97780–60520	25 – 2
97780–60620	9 – 13
	19 – 8
	38 – 7
97880–06035	38 – 12
97885–05010	1 – 19
97885–06010	28 – 15
	28 – 21
97885–06012	28 – 12
	28 – 23
97885–06016	29 – 2
97980–06216	38 – 4
98507–04008	13 – 31
98780–04015	21 – 6
98780–05550	32 – 25
	32 – 28

PART NO. N° PIECES	REF. NO.
98780–06530	2 – 38
99002–10600	34 – 15
	36 – 15
99009–47500	34 – 70
	36 – 70
99530–08012	17 – 6
99530–10114	8 – 2
99530–14016	7 – 27