YAMAHA

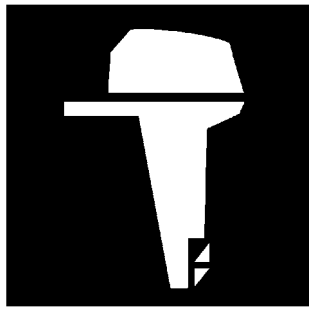

PARTS CATALOGUE
CATALOGUE DE PIECES DETACHEES

F40GET'12 (6CY2)

1L6CY-300F1

( )

YAMAHA GENUINE Parts & Accessories

2015/9/9

NEWS NO.	DATE	COMMENT
PE0-OM-120024	April,9,2012	MOD:FIG.23 BRACKET 2 LIST/ILLUSTRATION REVISION
PE0-OM-150028	Sep.,1,2015	COR:FUEL INJECTION PUMP 1 ILLUSTRATION CORRECTION

F40GET
PARTS CATALOGUE
©2011 by Yamaha Motor Co., Ltd.
1st edition, September 2011
All rights reserved.
Any reprinting or unauthorized use
without the written permission of
Yamaha Motor Co., Ltd.
is expressly prohibited.
Printed in Japan.

F40GET
CATALOGUE DE PIECES DETACHEES
©2011 par Yamaha Motor Co., Ltd.
1re édition, septembre 2011
Tous droits réservés
Toute réimpression ou utilisation
non autorisée sans la permission écrite
de la Yamaha Motor Co., Ltd.
est formellement interdite.
Imprimé au Japon

FOREWORD

This Parts Catalogue is related to the parts for the model(s) on the cover page. When you are ordering replacement parts, please refer to this Parts Catalogue and quote both part numbers and part names correctly.

1. Modifications or additions which have been made after the issue of the Parts Catalogue will be announced in the Parts News.
   It is advisable that you make the necessary corrections to the Parts Catalogue according to the Parts News.

2. Abbreviations
   The following abbreviations are used in this Parts Catalogue.

   "UR" Use specified parts number.
   "UN" Use as many as needed.
   "AP" Alternate Parts
   "LM" Locally Made (Parts need to be ordered locally)
   "F#" Frame No. (Applicable machine No.)
   "O/S" Over Size

3. The number of components for assembly
   - Parts, which are to be supplied in an assembly, are listed with a dot (.) in front of the part name as shown below.
   - The numeral appearing to the right of each component part indicates the quantity of parts for each assembly unit.

PART NO.	DESCRIPTION	Q'TY	REMARKS
2F5–83310–60	FRONT FLASHER LIGHT ASSY	2	
115–83311–60	.BULB (6V–18W)	1	

4. Applicable colours of graphics are represented in the "REMARKS" as shown below.

PART NO.	DESCRIPTION	Q'TY	REMARKS
2N4–24110–00–X5	FUEL TANK COMP.	2	MXR
3J1–24240–10	.GRAPHIC, FUEL TANK	1	FOR MXR

5. Note that the illustrations for reference in finding parts numbers are not to be used for assembling. When assembling, please use the applicable service manual.

6. The asterisk (*) before a reference number indicates modified items after the first edition.

7. Applicable Serial No.

   Engine Serial No.

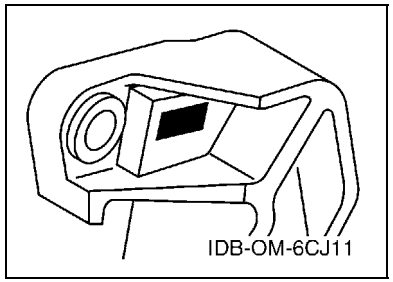

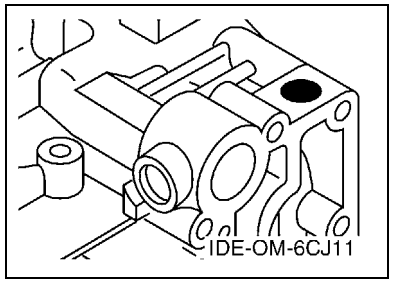

8. Applicable Engine Starting Serial No.

Model	Serial No.	Model	Serial No.
F40G	6CY-1001012		

9. Applicable Colour Code

Abbreviation	Colour Name	Colour Code
DBN1	DARK BLUISH GRAY 1	008D

10. Quantity Column Information

Column No.	Name Of Q'ty Column	Applicable Model
1	6CY2	F40GET

AVANT–PROPOS

Ce catalogue de pièces détachées concerne les pièces pour le(s) modèle(s) indiqué(s) sur la page de couverture. Lorsque vous commandez des pièces de rechange, veuillez vous référer à ce catalogue de pieces détachées et indiquer clairement les numéros et les noms des pièces détachées.

1. Les modifications ou ajouts ayant été effectués après la parution du catalogue de pièces détachées seront décrits dans les Bulletins d'information concernant les pièces détachées.
   Il est recommandé que vous apportiez les corrections nécessaires au catalogue des pièces détachées en vous référant aux Bulletins d'information.

2. Abréviations
   Dans ce catalogue, les abréviations suivantes sont utilisées:

   "UR" Utiliser le numéro de pièces spécifié.
   "UN" Utiliser autant que nécessaire.
   "AP" Pièces de substitution
   "LM" Fabrication locale (les pièces doivent être commandées localement.)
   "F#" N° de cadre (applicable au N° de série)
   "O/S" Surdimensionné

3. Nombre de pièces d'un assemblage
   - Les pièces fournies comme composants d'un assemblage sont précédées d'un point (.) de la manière indiquée ci–dessous.
   - Le chiffre apparaissant à la droite de chaque composant indique la quantité de pièces pour chaque unité d'assemblage.

N° PIECES	DESCRIPTION	QTE	REMARQUES
2F5–83310–60	ENS. CLIGNOTANT AVANT	2	
115–83311–60	.AMPOULE (6V–18W)	1	

4. Les couleurs concernant les graphiques sont indiquées dans la colonne "REMARQUES", comme indiqué ci–dessous.

N° PIECES	DESCRIPTION	QTE	REMARQUES
2N4–24110–00–X5	RESERVOIR A ESSENCE.	2	MXR
3J1–24240–10	.GRAPHIQUE	1	POUR MXR

5. Veuillez noter que les illustrations sont indiquées à titre de référence pour trouver les numéros de pièces, non pour être utilisées lors de l'assemblage. Lors de l'assemblage, veuillez utiliser le manuel d'entretien adéquat.

6. L'astérisque (*) placé devant un numéro de référence indique des éléments qui ont été modifiés après la première édition.

7. N° de série applicable

   N° de Série du moteur

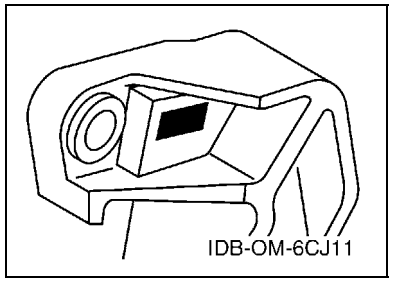

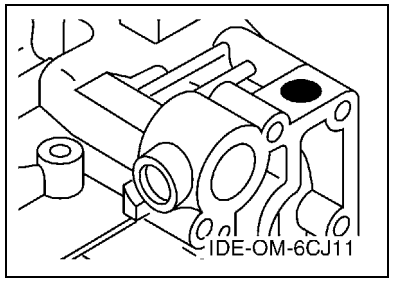

8. N° de série initial du moteur applicable

Modèle	N° de série	Modèle	N° de série
F40G	6CY-1001012		

9. Code couleur applicable

Abréviation	Nom de la couleur	Code couleur
DBN1	DARK BLUISH GRAY 1	008D

10. Informations relatives à la colonne Quantité

N° de la colonne	Nom de la colonne Qté	Modèle applicable
1	6CY2	F40GET

CONTENTS

TOP COWLING 1
CYLINDER & CRANKCASE 1 2
CRANKSHAFT & PISTON 4
CYLINDER & CRANKCASE 2 5
VALVE 7
INTAKE 1 8
INTAKE 2 9
INTAKE 3 10
FUEL INJECTION PUMP 1 11
FUEL INJECTION PUMP 2 12
OIL PUMP 13
FUEL 14
GENERATOR 16
ELECTRICAL 1 17
ELECTRICAL 2 19
ELECTRICAL 3 20
ELECTRICAL 4 21
STARTING MOTOR 23
BOTTOM COWLING 1 24
BOTTOM COWLING 2 26
CONTROL 27
BRACKET 1 29
BRACKET 2 31
POWER TRIM & TILT ASSY 1 33
POWER TRIM & TILT ASSY 2 36
UPPER CASING 37
OIL PAN 38
LOWER CASING & DRIVE 1 39
LOWER CASING & DRIVE 2 42
FUEL TANK 44
STEERING GUIDE 45
OPTIONAL PARTS 46
REPAIR KIT 1 47
REPAIR KIT 2 48

INDEX

NUMERICAL INDEX 50

TABLE DES MATIERES

CAPOT SUPERIEUR 1
CYLINDRE & CARTER 1 2
VILEBREQUIN & PISTON 4
CYLINDRE & CARTER 2 5
SOUPAPE 7
ADMISSION 1 8
ADMISSION 2 9
ADMISSION 3 10
POMPE A INJECTEUR 1 11
POMPE A INJECTEUR 2 12
POMPE A HUILE 13
CARBURANT 14
GENERATRICE 16
PARTIE ELECTRIQUE 1 17
PARTIE ELECTRIQUE 2 19
PARTIE ELECTRIQUE 3 20
PARTIE ELECTRIQUE 4 21
DEMARREUR ELECTRIQUE 23
CAPOT INFERIEUR 1 24
CAPOT INFERIEUR 2 26
COMMANDE 27
SUPPORT 1 29
SUPPORT 2 31
PUISSANCE PARER ET INCLINER 1 33
PUISSANCE PARER ET INCLINER 2 36
FOURREAU 37
VENTILATEUR D'HUILE 38
BOITIER D'HELICE TRANSMISSION1 39
BOITIER D'HELICE TRANSMISSION2 42
RESERVOIR A CARBURANT 44
FIXATION DE DIRECTION 45
PIECES OPTIONNELLES 46
KITS DE REPARATION 1 47
KITS DE REPARATION 2 48

INDEX

INDEX NUMERIQUE 50

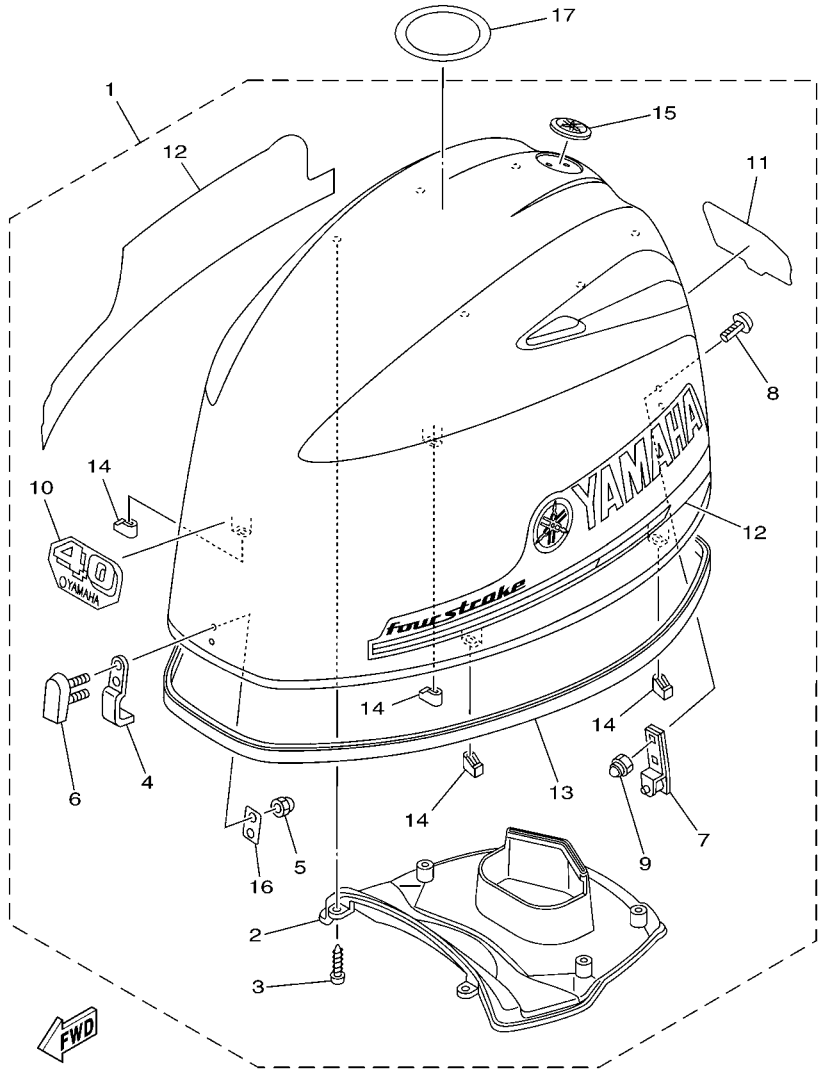

6CY1300-K010

FIG. 1 TOP COWLING — CAPOT SUPERIEUR

REF. NO.	PART NO. N° PIECES	DESCRIPTION DESCRIPTION	6CY2					REMARKS REMARQUES
1	6CY–42610–00	TOP COWLING ASSY CAPOT (ENS.)	1					
2	6CJ–42613–00	.MOLDING, AIR DUCT .MANCHON A AIR	1					
3	97780–50616	.SCREW, TAPPING .VIS, TETE BOMBEE	6					
4	6BG–42651–00	.HOOK .CROCHET	1					
5	95380–05800	.NUT .ECROU	2					
6	6BG–42851–00	.COVER, CLAMP .COUVERCLE, BRIDE	1					
7	6BG–42652–00	.HOOK .CROCHET	1					
8	90109–06047	.BOLT .BOULON	2					
9	90185–06M05	.NUT, SELF-LOCKING .ECROU,AUTO-BLOQUANT	2					
10	6BG–42677–00	.GRAPHIC, FRONT .ADHESIF, AVANT	1					
11	6BG–42678–00	.GRAPHIC, REAR .ADHESIF, ARRIERE	1					
12	6CJ–W0070–00	.GRAPHIC SET .JEU DIEMBLEMES	1					
13	6CJ–42615–00	.SEAL .JOINT	1					
14	6BG–42662–00	.DAMPER .AMORTISSEUR	4					
15	6AH–42697–01	.TUNING FORK MARK .MARQUE, YAMAHA	1					
16	6BG–42649–00	.HOLDER, CLAMP BAND .SUPPORT, SANDOW DE SERRAGE	1					
17	67F–13434–20	LABEL, CAUTION ETIQUETTE, ATTENTION	1					

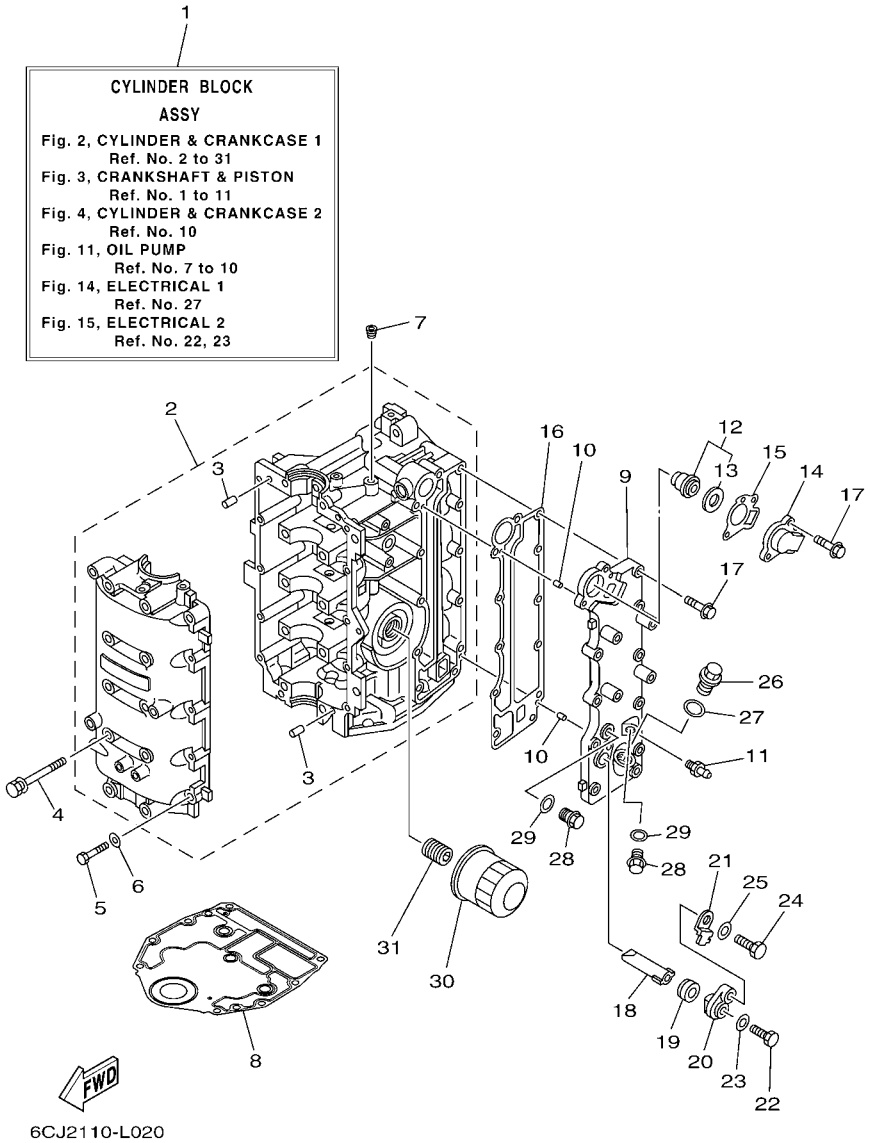

FIG. 2 CYLINDER & CRANKCASE 1 CYLINDRE & CARTER 1

REF. NO.	PART NO. N° PIECES	DESCRIPTION DESCRIPTION	6CY2					REMARKS REMARQUES
1	6CJ–W009B–00–9S	CYLINDER BLOCK ASSY CYLINDRE GROUPE (ENS.)	1					
2	6CJ–15100–00	CRANKCASE ASSY CARTER DE MOTEUR COMPLET	1					
3	93606–12019	.PIN, DOWEL .GOUPILLE	4					
4	90119–08154	BOLT, WITH WASHER BOULON, AVEC RONDELLE	10					
5	97013–06035	BOLT BOULON	10					
6	92903–06600	WASHER, PLATE RONDELLE, PLATE	10					
7	90344–51003	PLUG, TAPER SCREW PLOT, FILETE CONIQUE	1					
8	6BG–11351–00	GASKET, CYLINDER JOINT, D'EMBASE	1					
9	6C5–41113–11–9S	OUTER COVER, EXHAUST COUVERCLE, ECHAPPEMENT	1					
10	93604–10M03	PIN, DOWEL CLAVETTE	2					
11	62Y–12481–10	PIPE 1 DURITE 1	1					
12	6G8–12411–03	THERMOSTAT THERMOSTAT	1					
13	688–12412–00	.SEAL, THERMOSTAT .JOINT, THERMOSTAT	1					
14	6C5–12413–00–9S	COVER, THERMOSTAT COUVERCLE, THERMOSTAT	1					
15	62Y–12414–00	GASKET, COVER JOINT, COUVERCLE	1					
16	6C5–41114–10	GASKET, EXHAUST OUTER COVER JOINT, COUVERCLE D'ECHAPPEMENT	1					
17	90119–06MA5	BOLT, WITH WASHER BOULON, AVEC RONDELLE	12					
18	62Y–11325–00	ANODE ANODE	1					
19	66M–11328–00	GROMMET, ANODE PASSE-FIL	1					
20	66M–11327–00–94	COVER, ANODE COUVERCLE ANODE	1					
21	66M–12535–00	PLATE PLAQUE	1					
22	97095–05012	BOLT BOULON	1					
23	92995–05600	WASHER RONDELLE	1					
24	97095–06020	BOLT BOULON	1					
25	92995–06600	WASHER RONDELLE	1					
26	90340–18M09	PLUG, STRAIGHT SCREW PLOT, FILETE DROIT	1					
27	90430–18130	GASKET JOINT	1					

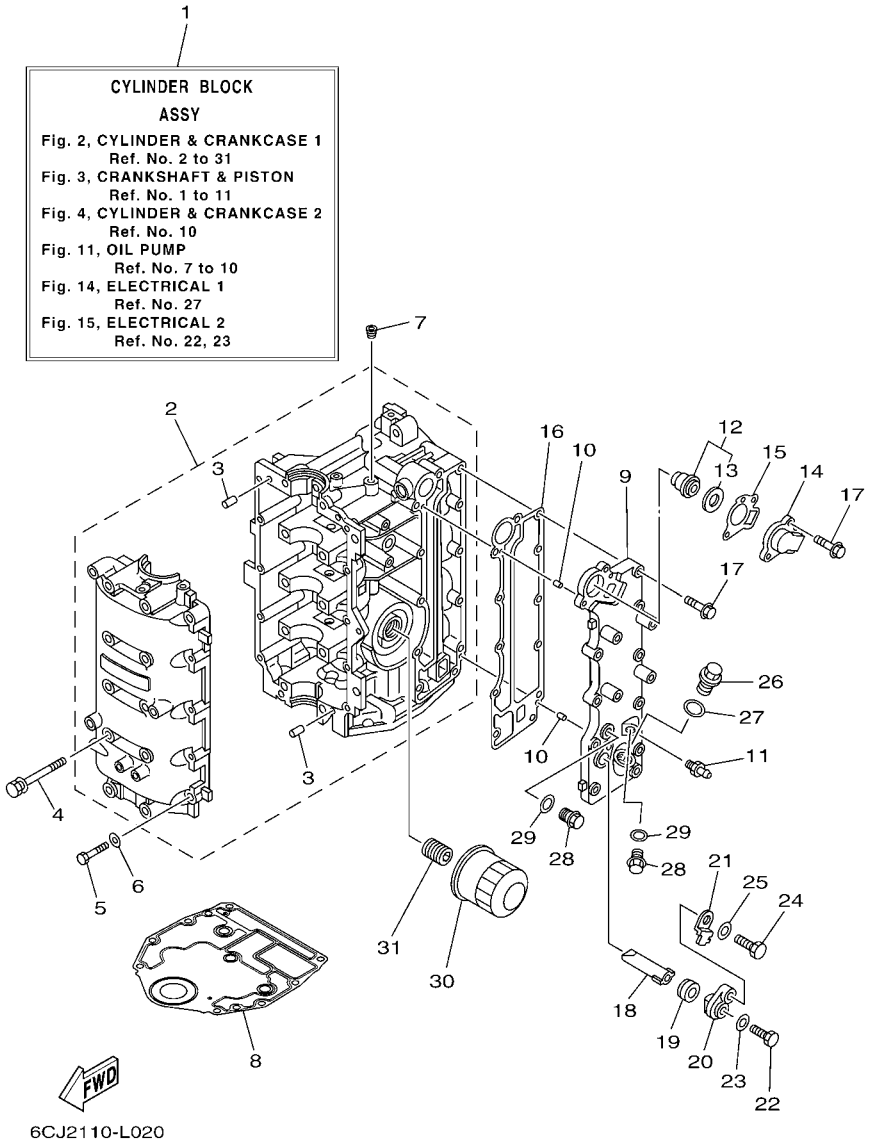

FIG. 2 CYLINDER & CRANKCASE 1 CYLINDRE & CARTER 1

REF. NO.	PART NO. N° PIECES	DESCRIPTION DESCRIPTION	6CY2					REMARKS REMARQUES
28	90340–14M06	PLUG, STRAIGHT SCREW PLOT, FILETE DROIT	2					
29	90430–14115	GASKET JOINT	2					
30	5GH–13440–20	ELEMENT ASSY, OIL CLEANER ELEMENT, FILTRE A HUILE	1					
31	6C5–12858–00	BOLT, UNION BOULON, RACCORD	1					

FIG. 3 CRANKSHAFT & PISTON VILEBREQUIN & PISTON

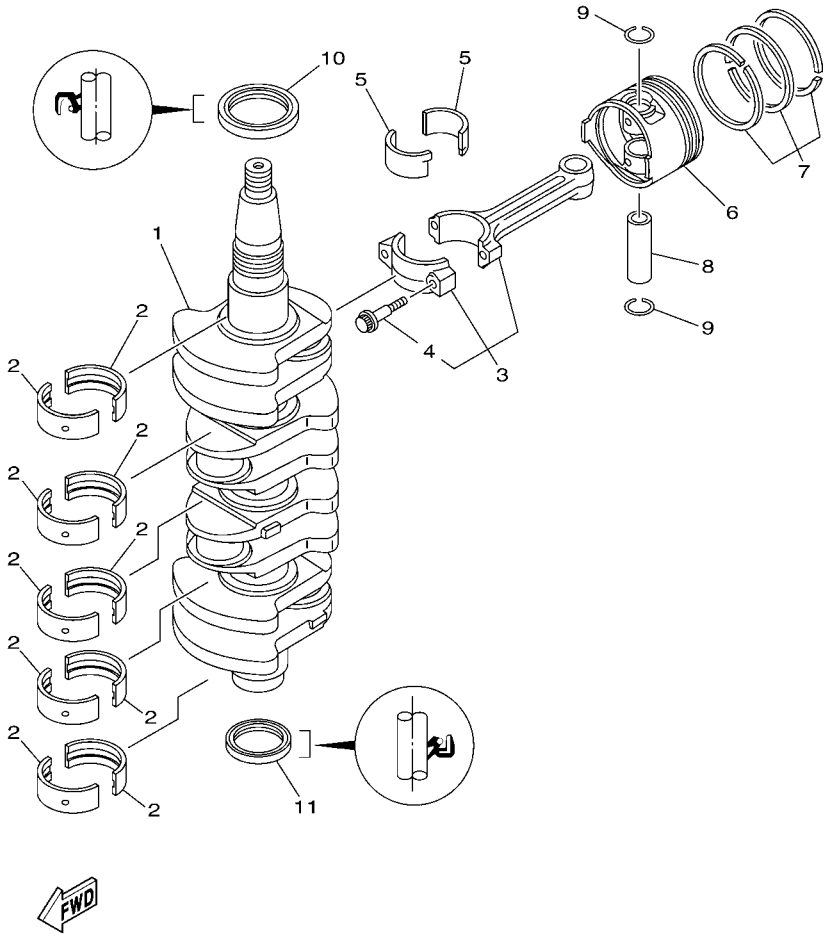

REF. NO.	PART NO. N° PIECES	DESCRIPTION DESCRIPTION	6CY2					REMARKS REMARQUES
1	6C5–11411–01	CRANKSHAFT VILEBREQUIN COMPLET	1					
2	6BG–11416–00	PLANE BEARING, CRANKSHAFT 1 COUSSINET DE VILEBREQUIN 1	10					UR YELLOW UR YELLOW
	6BG–11416–10	PLANE BEARING, CRANKSHAFT 1 COUSSINET DE VILEBREQUIN 1	10					UR RED UR RED
	6BG–11416–20	PLANE BEARING, CRANKSHAFT 1 COUSSINET DE VILEBREQUIN 1	10					UR PINK UR PINK
	6BG–11416–30	PLANE BEARING, CRANKSHAFT 1 COUSSINET DE VILEBREQUIN 1	10					UR GREEN UR GREEN
3	6C5–11650–00	CONNECTING ROD ASSY BIELLE COMPLETTE	4					
4	6C5–11654–00	.BOLT, CONNECTING ROD .BOULON, BIELLE	2					
5	6CJ–11656–00	PLANE BEARING, CONNECTING ROD ROULEMENT DE BIELLE	8					UR YELLOW UR YELLOW
	6CJ–11656–10	PLANE BEARING, CONNECTING ROD ROULEMENT DE BIELLE	8					UR RED UR RED
	6CJ–11656–20	PLANE BEARING, CONNECTING ROD ROULEMENT DE BIELLE	8					UR PINK UR PINK
	6CJ–11656–30	PLANE BEARING, CONNECTING ROD ROULEMENT DE BIELLE	8					UR GREEN UR GREEN
6	6CJ–11631–00–96	PISTON (STD) PISTON (STD)	4					
	6CJ–11635–00	PISTON (0.25MM O/S) PISTON (0.25MM O/S)	4					AP AP
	6CJ–11636–00	PISTON (0.50MM O/S) PISTON (0.50MM O/S)	4					AP AP
7	67C–11603–00	PISTON RING SET (STD) JEU DE SEGMENTS (STD)	4					
	67C–11604–00	PISTON RING SET (0.25MM O/S) JEU DE SEGMENTS (0.25MM O/S)	4					AP AP
	67C–11605–00	PISTON RING SET (0.50MM O/S) JEU DE SEGMENTS (0.50MM O/S)	4					AP AP
8	62Y–11633–00	PIN, PISTON AXE, PISTON	4					
9	93450–17129	CIRCLIP CIRCLIP, TYPE S	8					
10	93102–43004	OIL SEAL JOINT SPY	1					
11	93101–35002	OIL SEAL JOINT SPY	1					

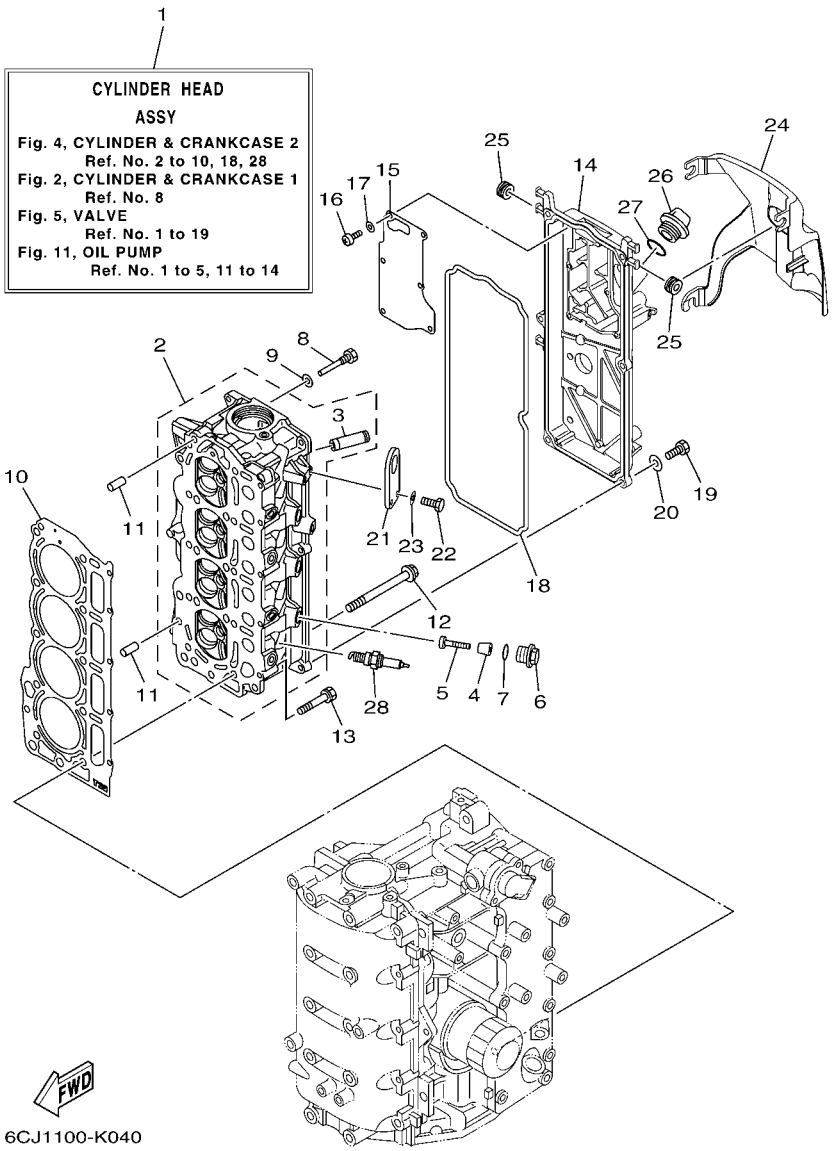

FIG. 4 CYLINDER & CRANKCASE 2 CYLINDRE & CARTER 2

REF. NO.	PART NO. N° PIECES	DESCRIPTION DESCRIPTION	6CY2					REMARKS REMARQUES
1	6CJ–W009A–00–9S	CYLINDER HEAD ASSY CULASSE (ENS.)	1					
2	6CJ–11111–00–9S	HEAD, CYLINDER 1 CULASSE	1					
3	6AH–11133–10	.GUIDE, VALVE 1 .GUIDE, SOUPAPE 1	16					
4	6G8–11325–00	ANODE ANODE	3					
5	97880–05025	SCREW, PAN HEAD VIS, TETE TRONCONIQUE	3					
6	6G8–11197–01	PLUG, BLIND PLOT, BORGNE	3					
7	93210–13M63	O-RING JOINT TORIQUE	3					
8	90109–06M65	BOLT BOULON	1					
9	90430–06014	GASKET JOINT	1					
10	6CJ–11181–00	GASKET, CYLINDER HEAD 1 JOINT, DE CULASSE 1	1					
11	99530–08012	PIN, DOWEL GOUJON, D'ASSEMBLAGE	2					
12	90105–09009	BOLT, FLANGE BOULON	10					
13	90119–06MA6	BOLT, WITH WASHER BOULON, AVEC RONDELLE	5					
14	6CJ–11191–00–9S	COVER, CYLINDER HEAD 1 COUVERCLE, CULASSE 1	1					
15	6C5–11168–00	COVER, BREATHER COUVERCLE, RENIFLARD	1					
16	98507–04010	SCREW, PAN HEAD VIS, TETE TRONCONIQUE	6					
17	92907–04600	WASHER RONDELLE	6					
18	6CJ–11356–00	SEAL, CYLINDER 2 JOINT, SPY CYLINDRE	1					
19	97095–06020	BOLT BOULON	6					
20	92995–06600	WASHER RONDELLE	6					
21	6CJ–11119–00	HANGER, ENGINE ANNEAU, LEVAGE	1					
22	97095–06020	BOLT BOULON	2					
23	92995–06600	WASHER RONDELLE	2					
24	6CJ–11192–00	COVER, CYLINDER HEAD 2 COUVERCLE, CULASSE 2	1					
25	90480–12314	GROMMET PASSE-FIL	3					
26	6G8–15363–00	PLUG, OIL PLOT, HUILE	1					
27	93210–24M79	O-RING JOINT TORIQUE	1					

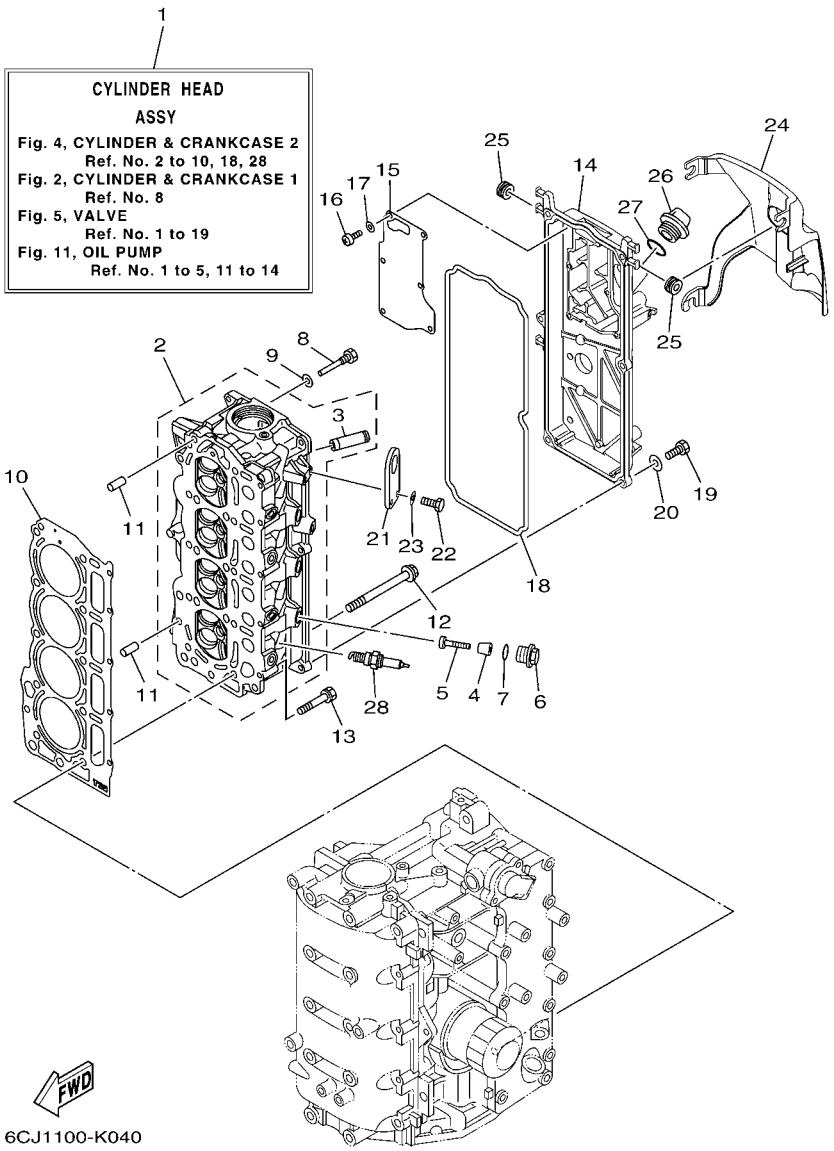

FIG. 4 CYLINDER & CRANKCASE 2 CYLINDRE & CARTER 2

REF. NO.	PART NO. N° PIECES	DESCRIPTION DESCRIPTION	6CY2					REMARKS REMARQUES
28	94702–00429	PLUG, SPARK (NGK LKR7E) BOUGIE D,ALLUMAGE (NGK LKR7E)	4					

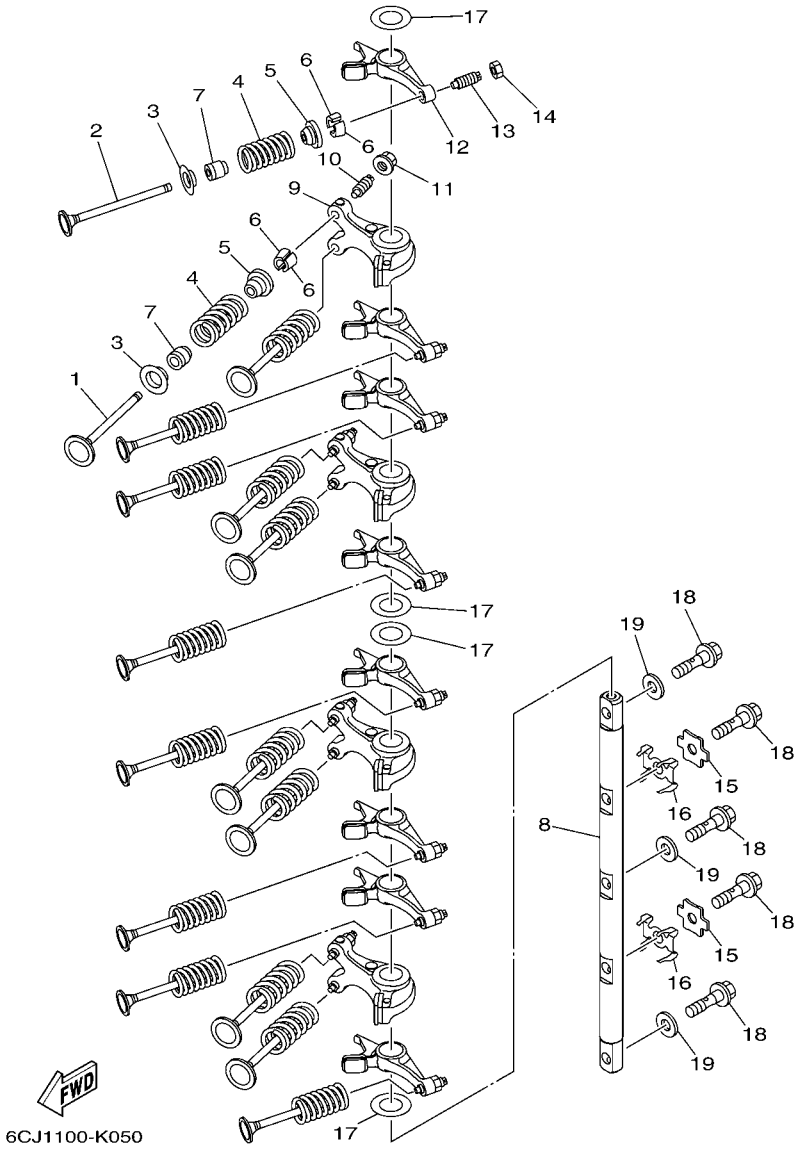

FIG. 5 VALVE SOUPAPE

REF. NO.	PART NO. N° PIECES	DESCRIPTION DESCRIPTION	6CY2					REMARKS REMARQUES
1	6CJ–12111–00	VALVE, INTAKE SOUPAPE, ADMISSION	8					
2	6CJ–12121–00	VALVE, EXHAUST SOUPAPE, ECHAPPEMENT	8					
3	6CJ–12116–00	SEAT, VALVE SPRING SIEGE, RESSORT DE SOUPAPE	16					
4	6CJ–12113–00	SPRING, VALVE INNER RESSORT DE SOUPAPE, INTERNE	16					
5	3LD–12117–00	RETAINER, VALVE SPRING BUTEE DE RESSORT DE SOUPAPE	16					
6	3LD–12118–00	COTTER, VALVE FRAISE, SOUPAPE	32					
7	51Y–12119–00	SEAL, VALVE STEM JOINT, QUEUE DE SOUPAPE	16					
8	6CJ–12146–00	SHAFT, ROCKER AXE, CULBUTEUR	1					
9	6CJ–12151–00	ARM, VALVE ROCKER CULBUTEUR	4					
10	6C5–12159–00	SCREW, VALVE ADJUSTING VIS, REGLAGE DE SOUPAPE	8					
11	6C5–12158–00	NUT, LOCK CONTRE-ECROU	8					
12	6CJ–12161–00	ARM, VALVE ROCKER 2 CULBUTEUR 2	8					
13	64J–12159–00	SCREW, VALVE ADJUSTING VIS, REGLAGE DE SOUPAPE	8					
14	62Y–12158–00	NUT, LOCK CONTRE-ECROU	8					
15	6CJ–12231–00	GUIDE, STOPPER 1 GUIDE, BUTEE 1	2					
16	6CJ–12233–00	PLATE, GUIDE STOPPER 1 PLAQUE, GUIDE BUTEE 1	2					
17	90201–16014	WASHER, PLATE RONDELLE, PLATE	4					
18	90401–08011	BOLT, UNION BOULON, RACCORD	5					
19	92990–08200	WASHER, PLAIN RONDELLE, PLATE	3					

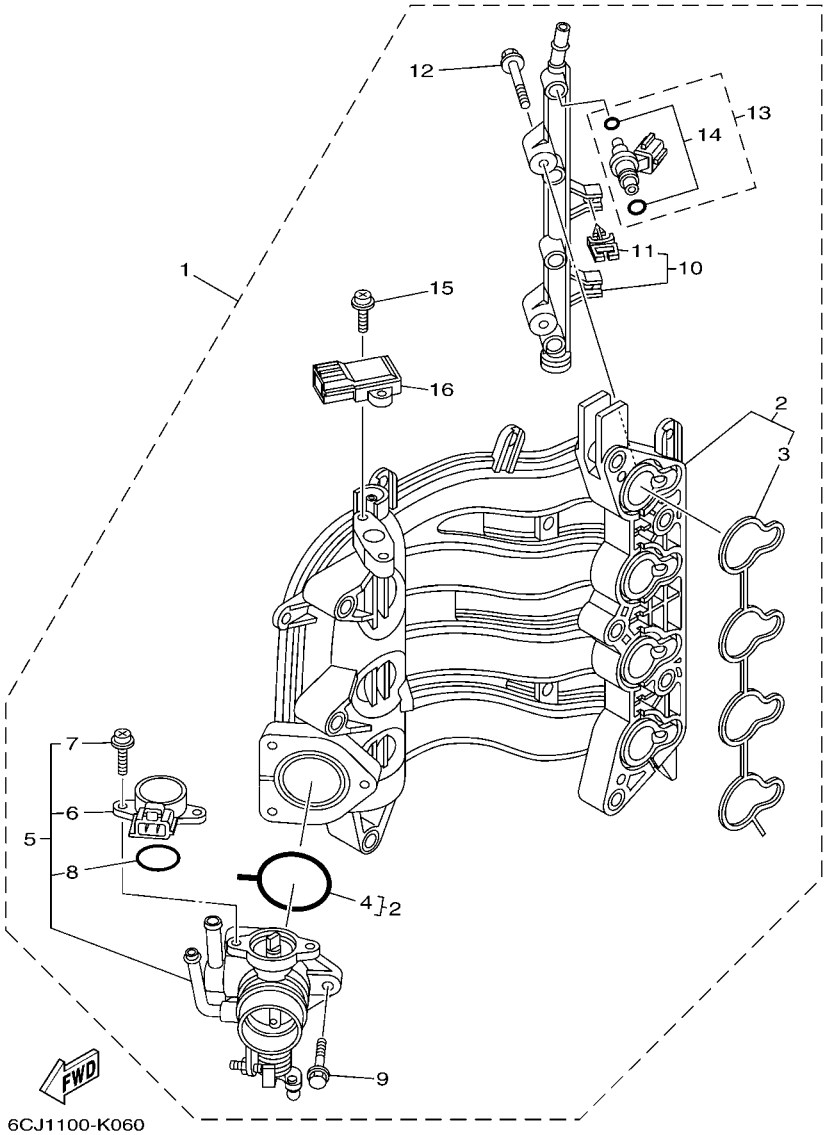

FIG. 6 INTAKE 1 — ADMISSION 1

REF. NO.	PART NO. N° PIECES	DESCRIPTION DESCRIPTION	6CY2					REMARKS REMARQUES
1	6CJ–14200–00	INTAKE ASSY ADMISSION (ENS.)	1					
2	6CJ–13641–00	.MANIFOLD, INTAKE 1 .TUBULURE, ADMISSION 1	1					
3	6C5–13645–00	..GASKET, MANIFOLD 1 ..JOINT, TUBULURE 1	1					
4	6C5–13557–00	..GASKET ..JOINT	1					
5	6CJ–13750–00	.THROTTLE BODY ASSY .CARTER D'ACCELERATEUR COMPLET	1					
6	6C5–85885–00	..THROTTLE SENSOR ASSY ..SENSITOMETRE (ENS.)	1					
7	6C5–81145–00	..SCREW 1 ..VIS 1	2					
8	6C5–8182L–00	..O-RING 1 ..JOINT TORIQUE 1	1					
9	6C5–14496–00	.BOLT .BOULON	3					
10	6C5–13161–00	.PIPE, DELIVERY 1 .DURITE REFOULEMENT 1	1					
11	90464–07M56	..CLAMP ..BRIDE	2					
12	6C5–14446–00	.BOLT .BOULON	2					
13	6C5–13761–00	.INJECTOR .INJECTEUR	4					
14	6C5–1410B–00	..PACKING KIT ..POCHETTE DE JOINTS	1					
15	6C5–81146–00	.SCREW 2 .VIS 2	2					
16	68F–83688–00	.SENSOR ASSY .SONDE (ENS.)	1					

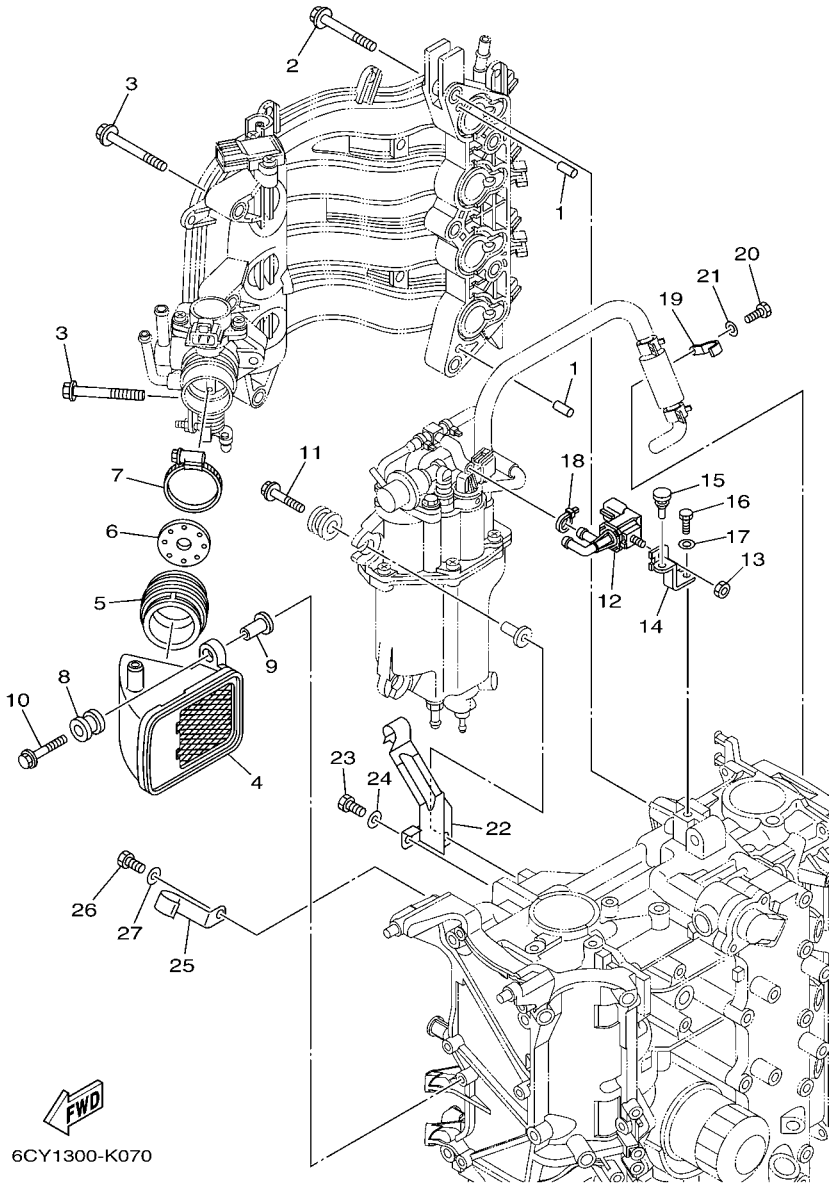

FIG. 7 INTAKE 2 — ADMISSION 2

REF. NO.	PART NO. N° PIECES	DESCRIPTION DESCRIPTION	6CY2					REMARKS REMARQUES
1	93608–12M05	PIN, DOWEL AXE	2					
2	90119–08069	BOLT, WITH WASHER BOULON, AVEC RONDELLE	5					
3	90119–06087	BOLT, WITH WASHER BOULON, AVEC RONDELLE	5					
4	6C5–14440–00	SILENCER ASSY, INTAKE SIENCIEUX D'ADMISSION	1					
5	6C1–14453–01	JOINT, AIR CLEANER 1 RACCORD, FILTRE A AIR 1	1					
6	6CY–14477–00	PLATE PLAQUE	1					
7	90450–50001	HOSE CLAMP ASSY BRIDE, DE DURITE	1					
8	6A0–82317–00	DAMPER, IGNITION COIL AMORTISSEUR, BOBINE D'ALLUM	2					
9	90387–06119	COLLAR COLLERETTE	2					
10	90119–06106	BOLT, WITH WASHER BOULON, AVEC RONDELLE	2					
11	90119–06M61	BOLT, WITH WASHER BOULON, AVEC RONDELLE	3					
12	6C5–86120–00	SOLENOID VALVE ASSY SOLENOIDE	1					
13	95380–06600	NUT, HEXAGON ECROU	1					
14	6BG–86112–00	STAY, SOLENOID SUPPORT, SOLENOIDE	1					
15	90480–06M19	GROMMET PASSE-FIL	1					
16	97095–06016	BOLT BOULON	1					
17	92995–06600	WASHER RONDELLE	1					
18	90465–11M10	CLAMP BRIDE	1					
19	6CJ–13428–00	BRACKET, STRAINER 1 SUPPORT, FILTRE 1	1					
20	97095–06016	BOLT BOULON	1					
21	92995–06600	WASHER RONDELLE	1					
22	6C5–15378–00	HOLDER SUPPORT	1					
23	97095–06014	BOLT BOULON	1					
24	92995–06600	WASHER RONDELLE	1					
25	6C5–15378–11	HOLDER SUPPORT	1					
26	97095–06016	BOLT BOULON	1					
27	92995–06600	WASHER RONDELLE	1					

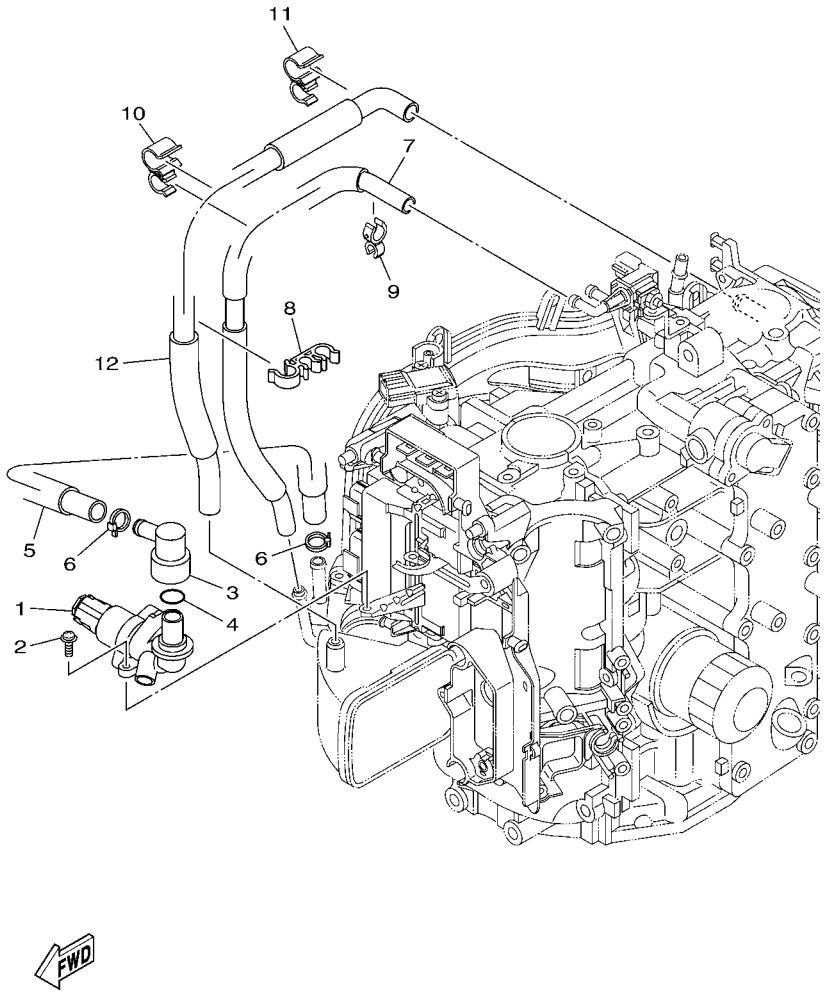

6CJ1100-K080

FIG. 8 INTAKE 3 — ADMISSION 3

REF. NO.	PART NO. N° PIECES	DESCRIPTION DESCRIPTION	6CY2					REMARKS REMARQUES
1	6C5–13713–00	VALVE, IDLE SPEED CONTROL SOUPAPE, AJUSTEMENT DE VITESSE	1					
2	97980–05214	SCREW, WITH WASHER VIS, AVEC RONDELLE	2					
3	6CJ–11372–00	NIPPLE, HOSE RACCORD, TUYAU	1					
4	93210–33003	O-RING JOINT TORIQUE	1					
5	6CJ–13543–00	HOSE, AIR DURITE, A AIR	1					
6	90465–11M10	CLAMP BRIDE	2					
7	6CJ–12576–00	HOSE 1 TUYAU 1	1					
8	90464–15008	CLAMP BRIDE	1					
9	90464–12006	CLAMP BRIDE	1					
10	90464–15007	CLAMP BRIDE	1					
11	90464–15007	CLAMP BRIDE	1					
12	6CJ–1531A–00	HOSE, BREATHER 1 DURITE DE RENIFLARD 1	1					

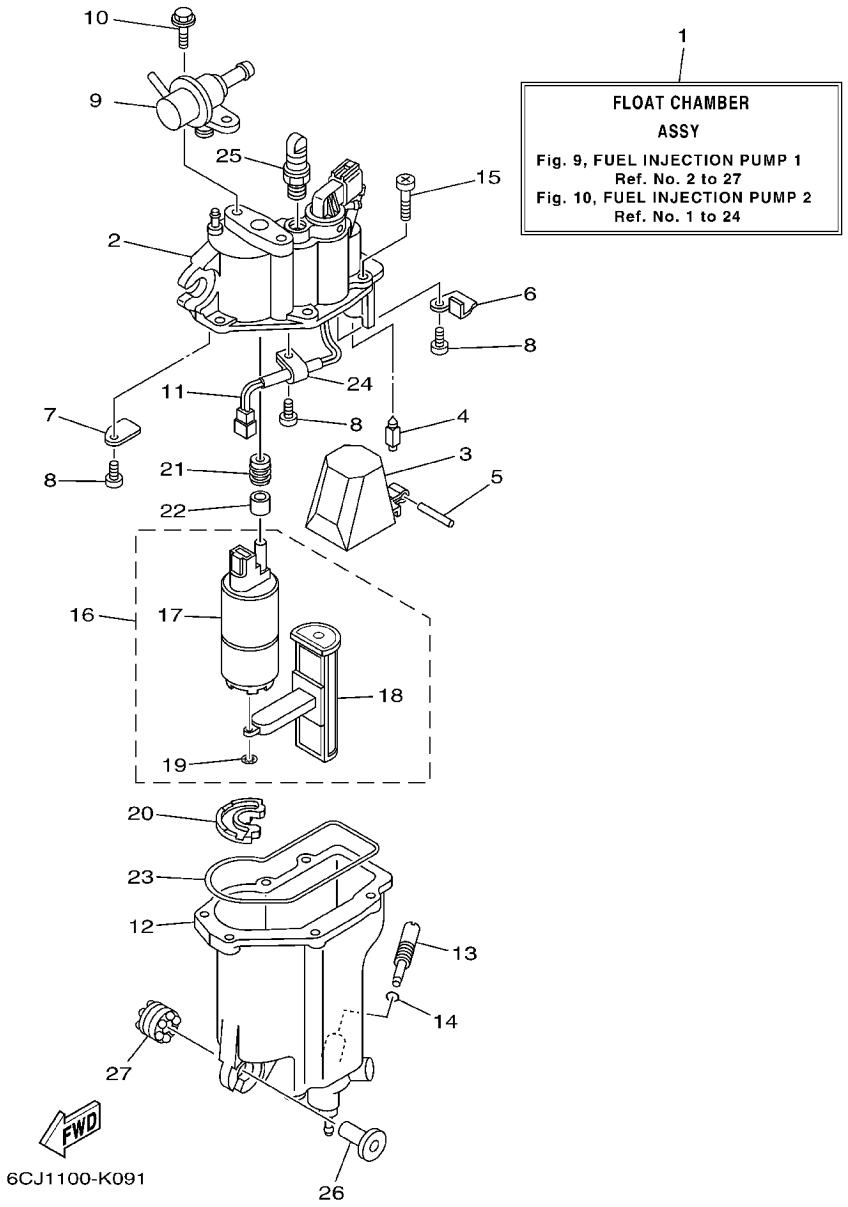

FIG. 9 FUEL INJECTION PUMP 1 POMPE A INJECTEUR 1

REF. NO.	PART NO. N° PIECES	DESCRIPTION DESCRIPTION	6CY2					REMARKS REMARQUES
1	6CJ–14180–01	FLOAT CHAMBER ASSY CUVE DE FLOTTEUR	1					
2	6C5–14182–10	COVER, FLOAT CHAMBER COUVERCLE, CUVE DE FLOTTEUR	1					
3	6C5–14985–00	FLOAT FLOTTEUR	1					
4	6C5–14546–10	VALVE, NEEDLE POINTEAU	1					
5	6C5–14386–00	PIN, FLOAT AXE, FLOTTEUR	1					
6	6C5–2441R–10	PLATE, BAFFLE 1 SEPARATEUR 1	1					
7	6C5–2441T–10	PLATE, BAFFLE 2 SEPARATEUR 2	1					
8	6C5–24453–00	SCREW VIS	3					
9	6C5–13906–01	REGULATOR, PRESSURE REGULATEUR DE PRESSION	1					
10	6C5–24592–00	BOLT BOLTE	2					
11	6C5–87226–00	WIRE HARNESS ASSY ENS. FAISCEAU ELECTRIQUE	1					
12	6C5–14960–10	BODY ASSY CARTER (ENS.)	1					
13	6C5–14191–00	PLUG, DRAIN PLOT, VIDANGE	1					
14	6C5–14397–00	O-RING JOINT TORIQUE	1					
15	6C5–14567–00	SCREW VIS	6					
16	6C5–13910–10	FUEL PUMP ASSY POMPE A ESSENCE COMPLET	1					
17	6C5–13907–00	.FUEL PUMP COMP. .POMPE A CARBURANT COMP.	1					
18	6C5–13915–00	.FILTER .FILTRE	1					
19	6C5–14127–10	.CLIP .JONC	1					
20	6C5–13593–00	DAMPER AMORTISSEUR	1					
21	6C5–13781–00	DAMPER, PUMP AMORTISSEUR, POMPE	1					
22	6C5–13716–00	COLLAR COLLERETTE	1					
23	6C5–14984–00	GASKET, FLOAT CHAMBER JOINT, CUVE DE FLOTTEUR	1					
24	6C5–21337–10	CLAMP, CABLE COLLIER, CABLE	1					
25	6C5–14225–00	CAP COUVERCLE	1					
26	90387–06M03	COLLAR COLLERETTE	3					
27	69L–85516–00	SPACER ENTRETOISE	3					

FIG. 10 FUEL INJECTION PUMP 2 POMPE A INJECTEUR 2

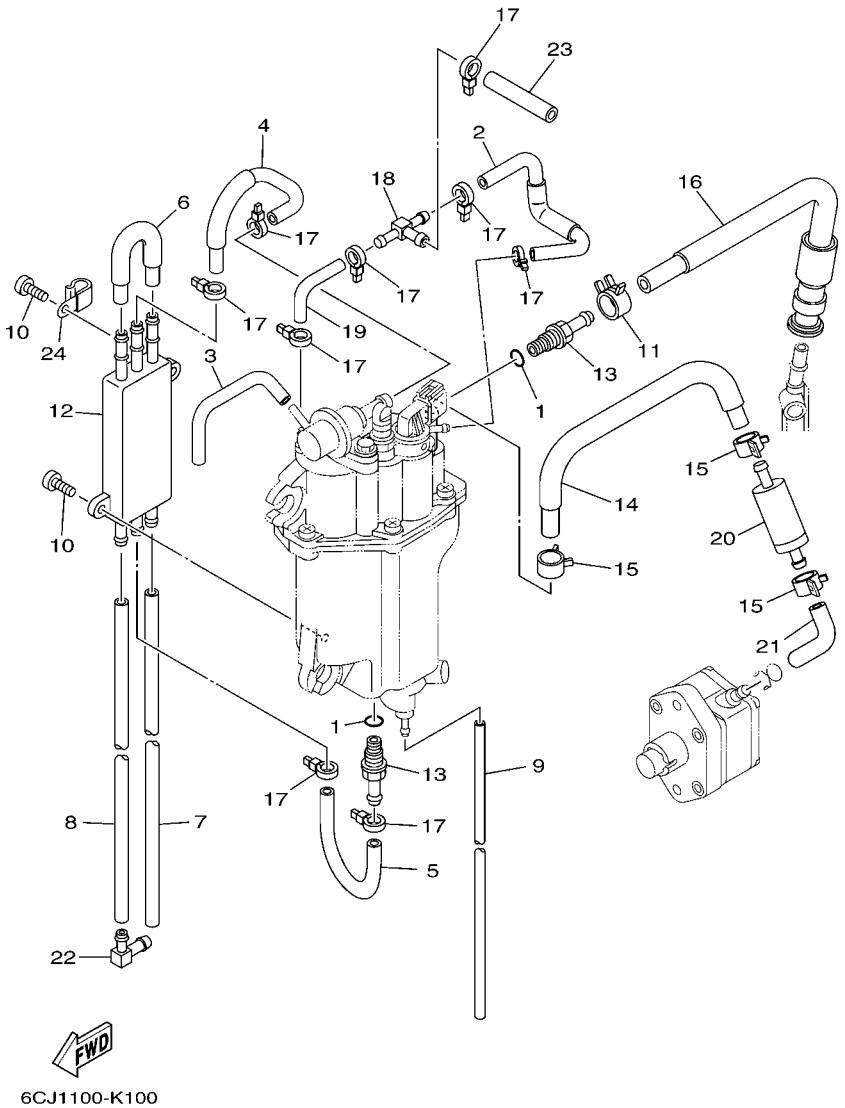

REF. NO.	PART NO. N° PIECES	DESCRIPTION DESCRIPTION	6CY2					REMARKS REMARQUES
1	6C5–13739–00	O-RING JOINT TORIQUE	2					
2	6CJ–13546–00	HOSE 2 DURITE 2	1					
3	6C5–13542–00	HOSE, VACUUM SENSING 1 DURITE 1	1					
4	6CJ–24321–00	PIPE 10 DURITE 10	1					
5	6C5–24322–00	PIPE 11 DURITE 11	1					
6	6CJ–24323–00	PIPE 12 DURITE 12	1					
7	6CJ–24324–00	PIPE 13 DURITE 13	1					
8	6CJ–24325–00	PIPE 14 DURITE 14	1					
9	6BG–14149–00	PIPE DURITE	1					
10	6C5–24444–00	SCREW VIS	2					
11	6C5–13577–00	CLIP AGRAFE	1					
12	6C5–21841–00	COOLER RADIATEUR	1					
13	6C5–14251–00	NIPPLE RACCORD	2					
14	6C5–14148–00	PIPE DURITE	1					
15	6BG–24387–00	CLIP SANDOW	3					
16	6CJ–13974–10	PIPE, FUEL 4 TUBE 4, CARBURANT	1					
17	90465–11M10	CLAMP BRIDE	9					
18	6C5–24379–00	PIPE, JOINT 4 DURITE RACCORDEMENT 4	1					
19	6BG–13545–00	HOSE 1 DURITE 1	1					
20	6C5–24251–00	STRAINER 1 FILTRE 1	1					
21	6CJ–2451B–00	HOSE, FUEL INLET DURITE	1					
22	6C5–1410F–00	CONNECTOR CONNECTEUR	1					
23	6C5–13547–00	HOSE 3 DURITE 3	1					
24	90465–08M83	CLAMP BRIDE	1					

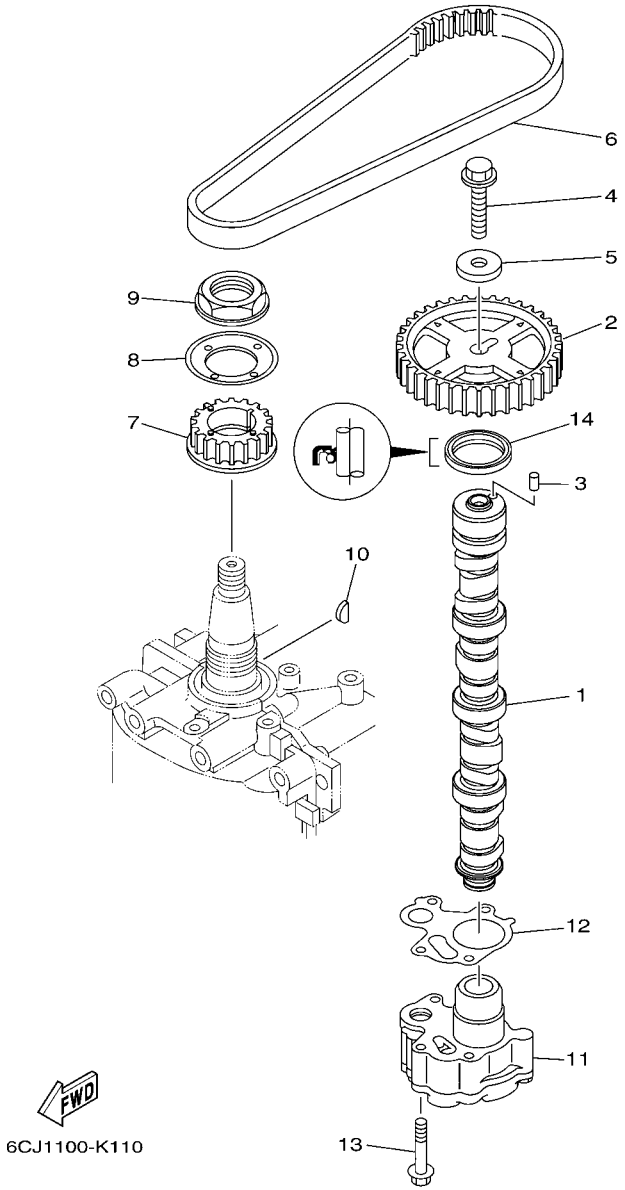

FIG. 11 OIL PUMP POMPE A HUILE

REF. NO.	PART NO. N° PIECES	DESCRIPTION DESCRIPTION	6CY2					REMARKS REMARQUES
1	6CJ–12171–00	CAMSHAFT 1 ARBRE A CAMES 1	1					
2	6C5–11537–00	GEAR, DRIVEN PIGNON SECONDAIRE	1					
3	93605–17002	PIN, DOWEL AXE	1					
4	95817–10035	BOLT, FLANGE BOULON, A COLLERETTE	1					
5	90201–10144	WASHER, PLATE RONDELLE, PLATE	1					
6	6C5–46241–00	BELT COURROIE TRAPEZOIDALE	1					
7	6C5–11536–00	GEAR, DRIVE ENGRENAGE, MENANT	1					
8	62Y–11557–00	WASHER 1 RONDELLE 1	1					
9	90179–35001	NUT ECROU	1					
10	90280–03M01	KEY, WOODRUFF CLAVETTE, DEMI-LUNE	1					
11	6CJ–13300–00	OIL PUMP ASSY POMPE A HUILE COMPLETE	1					
12	6C5–13329–00	GASKET, PUMP COVER JOINT, COUVERCLE DE POMPE	1					
13	90119–06025	BOLT, WITH WASHER BOULON, AVEC RONDELLE	4					
14	93102–37M40	OIL SEAL JOINT SPY	1					

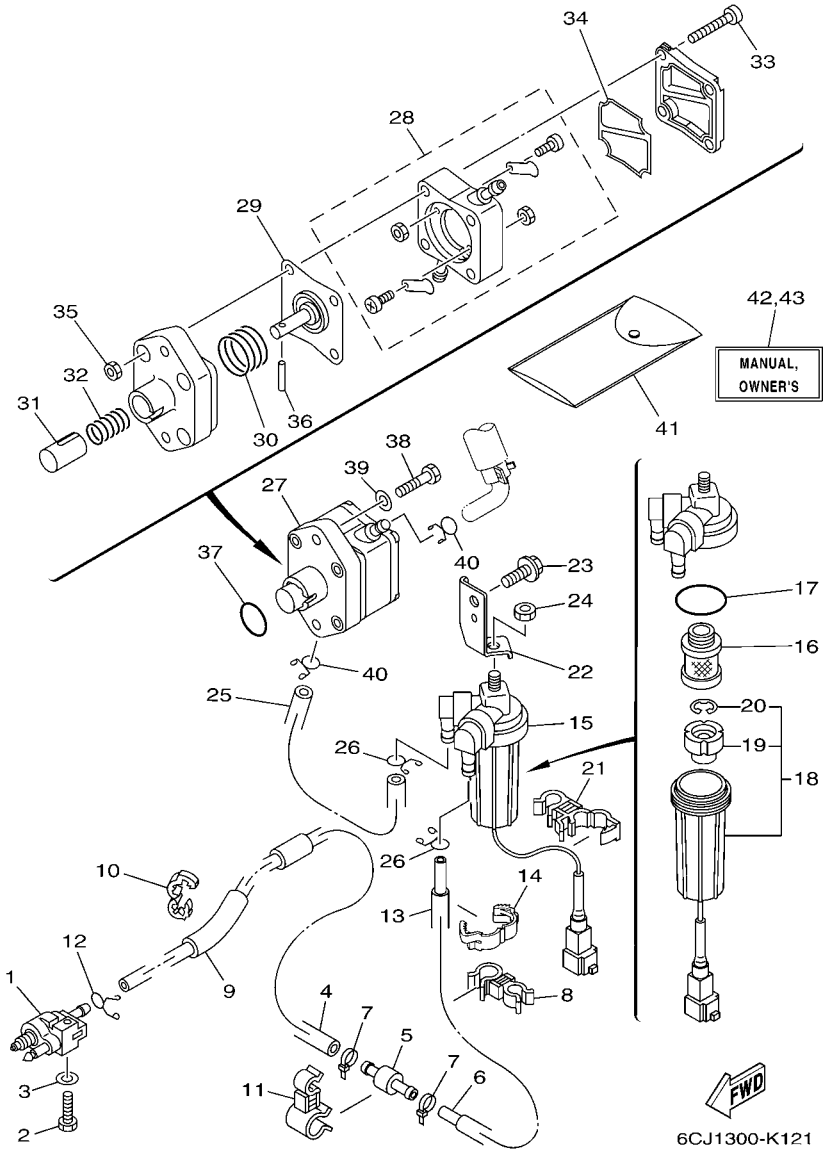

FIG. 12 FUEL CARBURANT

REF. NO.	PART NO. N° PIECES	DESCRIPTION DESCRIPTION	6CY2					REMARKS REMARQUES
1	6G1–24304–02	FUEL PIPE JOINT COMP. 1 DURITE RACCORDEMT. A ESSENCE	1					
2	97095–06025	BOLT BOULON	1					
3	92995–06600	WASHER RONDELLE	1					
4	6BG–24313–00	PIPE 3 DURITE 3	1					
5	67F–24377–00	PIPE, JOINT 2 DURITE RACCORDEMENT 2	1					
6	90445–133F0	HOSE (L195) DURITE (L195)	1					
7	90465–11M10	CLAMP BRIDE	2					
8	90464–12004	CLAMP BRIDE	1					
9	90446–13M11	HOSE (L65) DURITE (L65)	1					
10	90464–13227	CLAMP BRIDE	1					
11	90464–16017	CLAMP BRIDE	1					
12	90467–09M17	CLIP JONC	1					
13	90446–15006	HOSE (L150) DURITE (L150)	1					
14	90464–14010	CLAMP BRIDE	1					
15	6D8–24560–00	FILTER ASSY ENS FILTRE	1					
16	6D8–24563–00	.ELEMENT, FILTER .ELEMENT, FILTRE	1					
17	6D8–24564–00	.GASKET .JOINT	1					
18	6D8–24562–00	.CUP, FILTER .CUVETTE, FILTRE	1					
19	6D8–24469–00	..FLOAT, WATER LEVEL ..FLOTTEUR	1					
20	6D8–24519–00	..CLIP ..JONC	1					
21	90464–12012	CLAMP BRIDE	1					
22	6CJ–24566–00	BRACKET, FILTER SUPPORT, FILTRE	1					
23	95895–08016	BOLT, FLANGE BOULON	1					
24	95380–08600	NUT ECROU	1					
25	6BG–24311–00	PIPE, FUEL 1 DURITE A ESSENCE	1					
26	90467–11M08	CLIP JONC	2					
27	6CJ–24410–00	FUEL PUMP ASSY POMPE A ESSENCE	1					

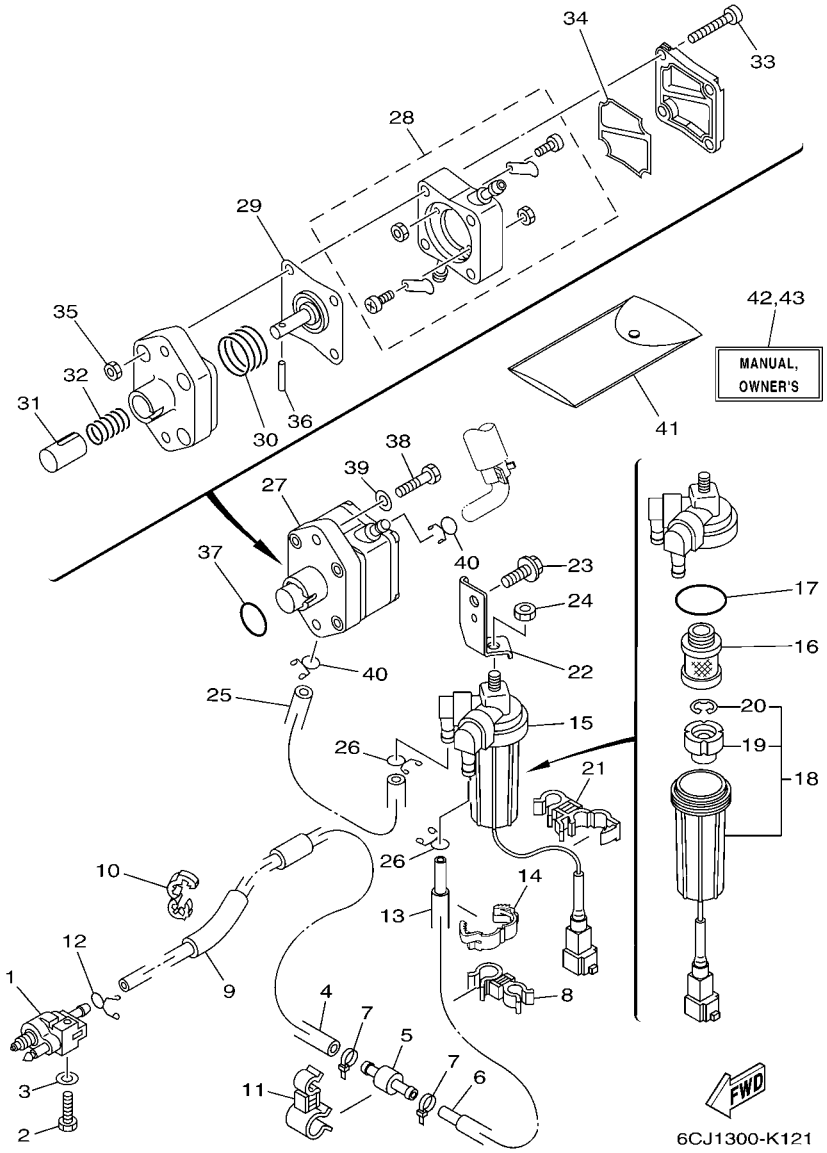

FIG. 12 FUEL CARBURANT

REF. NO.	PART NO. N° PIECES	DESCRIPTION DESCRIPTION	6CY2					REMARKS REMARQUES
28	6CJ–24415–00	.BODY 4 .CORPS 4	1					
29	62Y–24411–02	.DIAPHRAGM .DIAPHRAGME	1					
30	62Y–24423–00	.SPRING, DIAPHRAGM .RESSORT, DIAPHRAGME	1					
31	6CJ–13131–00	.PLUNGER .PLONGEUR	1					
32	6CJ–24454–00	.SPRING .RESSORT	1					
33	62Y–24444–01	.SCREW .VIS	4					
34	6C5–24471–00	.DIAPHRAGM .DIAPHRAGME	1					
35	95380–05600	.NUT .ECROU	4					
36	6CJ–24374–00	.PIN .GOUPILLE	1					
37	93210–24M79	O-RING JOINT TORIQUE	1					
38	97095–06030	BOLT BOULON	2					
39	92995–06600	WASHER RONDELLE	2					
40	90467–10M04	CLIP JONC	2					
41	6CJ–28100–00	TOOL KIT TROUSSE A OUTILS	1					AP AP
42	6C1–28199–79–E0	MANUAL,OWNER'S MANUEL D'UTILISATION	1					UR (E) UR (E)
	6C1–28199–79–F0	MANUAL,OWNER'S MANUEL D'UTILISATION	1					UR (F) UR (F)
	6C1–28199–79–S0	MANUAL,OWNER'S MANUEL D'UTILISATION	1					UR (ES) UR (ES)
	6C1–28199–79–G0	MANUAL,OWNER'S MANUEL D'UTILISATION	1					UR (D) UR (D)
	6C1–28199–79–D0	MANUAL,OWNER'S MANUEL D'UTILISATION	1					UR (NL) UR (NL)
	6C1–28199–79–H0	MANUAL,OWNER'S MANUEL D'UTILISATION	1					UR (I) UR (I)
43	6C1–28199–89–K0	MANUAL,OWNER'S MANUEL D'UTILISATION	1					UR (DK) UR (DK)
	6C1–28199–89–R0	MANUAL,OWNER'S MANUEL D'UTILISATION	1					UR (GR) UR (GR)
	6C1–28199–89–P0	MANUAL,OWNER'S MANUEL D'UTILISATION	1					UR (P) UR (P)
	6C1–28199–89–N0	MANUAL,OWNER'S MANUEL D'UTILISATION	1					UR (N) UR (N)
	6C1–28199–89–M0	MANUAL,OWNER'S MANUEL D'UTILISATION	1					UR (S) UR (S)
	6C1–28199–89–L0	MANUAL,OWNER'S MANUEL D'UTILISATION	1					UR (SF) UR (SF)

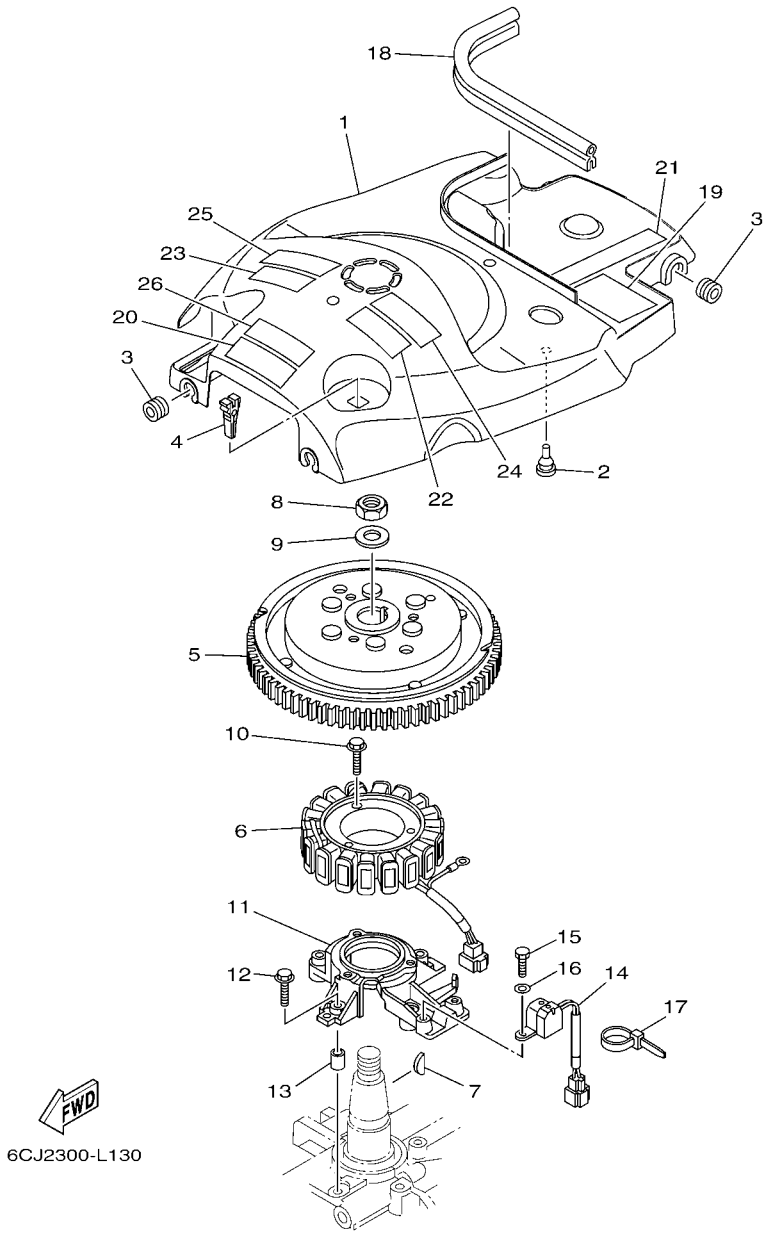

FIG. 13 GENERATOR GENERATRICE

REF. NO.	PART NO. N° PIECES	DESCRIPTION DESCRIPTION	6CY2					REMARKS REMARQUES
1	6CJ–81337–00	COVER, FLYWHEEL COUVERCLE, VOLANT	1					
2	90480–06M19	GROMMET PASSE-FIL	1					
3	90480–12314	GROMMET PASSE-FIL	4					
4	67F–2812A–00	PULLER, FUSE TENDEUR, FUSIBLE	1					
5	6C5–81450–00	ROTOR ASSY ROTOR COMPLET	1					
6	6C5–81410–01	STATOR ASSY STATOR COMPLET	1					
7	6H4–11545–00	KEY, WOODRUFF CLAVETTE, DEMI-LUNE	1					
8	90170–20137	NUT ECROU	1					
9	90201–21M18	WASHER, PLATE RONDELLE, PLATE	1					
10	95023–06030	BOLT BOULON, A COLLERETTE	3					
11	6C5–85561–00	BASE, MAGNETO BASE, MAGNETO	1					
12	95023–06030	BOLT BOULON, A COLLERETTE	4					
13	99530–08012	PIN, DOWEL GOUJON, D'ASSEMBLAGE	2					
14	62Y–85580–00	COIL, PULSER BOBINE, PULSEUR	1					
15	97095–05012	BOLT BOULON	2					
16	92995–05600	WASHER RONDELLE	2					
17	90465–13M97	CLAMP BRIDE	1					
18	6BG–42617–00	DAMPER, FORM BOURRELET, CAOUTCHOUC	1					
19	62Y–83626–00	MARK 6 MARK 6	1					
20	6CJ–81919–00	GRAPHIC, REGULATOR ADHESIF, REGULATEUR	1					
21	6C5–13437–62	MARK, CAUTION MAKER	1					
22	6AH–81995–40	LABEL, WARNING ETIQUETTE, AVERTISSEMENT	1					
23	6AH–81995–50	LABEL, WARNING ETIQUETTE, AVERTISSEMENT	1					
24	6AH–81994–40	LABEL, SAFETY ETIQUETTE, SECURITE	1					
25	6AH–81994–50	LABEL, SAFETY ETIQUETTE, SECURITE	1					
26	6AG–81996–00	MARK MARQUE	1					

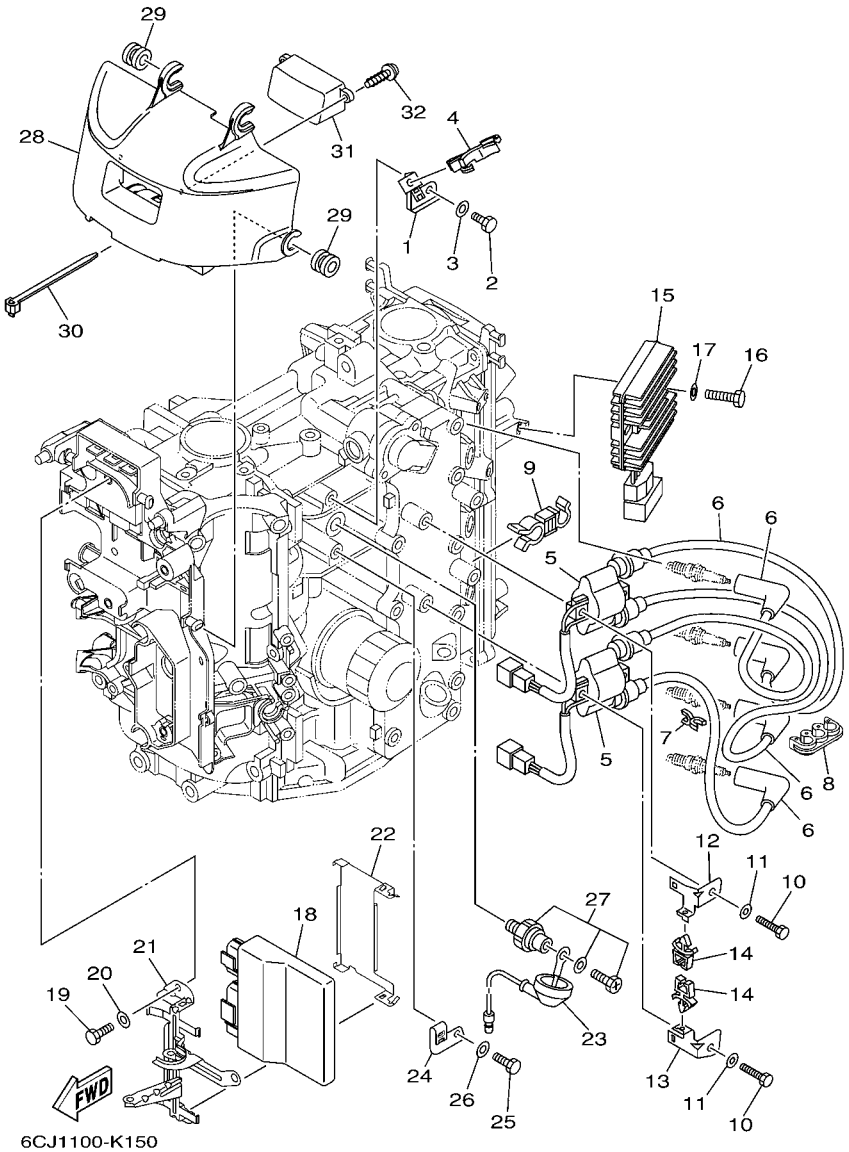

FIG. 14 ELECTRICAL 1 — PARTIE ELECTRIQUE 1

REF. NO.	PART NO. N° PIECES	DESCRIPTION DESCRIPTION	6CY2					REMARKS REMARQUES
1	6C5–85525–00	PLATE PLAQUE	1					
2	97095–06014	BOLT BOULON	1					
3	92995–06600	WASHER RONDELLE	1					
4	90464–18246	CLAMP BRIDE	1					
5	63P–82310–01	IGNITION COIL ASSY BOBINE D'ALLUMAGE	2					
6	6CJ–82340–00	HIGH TENSION CORD ASSY 1 CABLE HAUTE TENSION 1	4					
7	90464–07M41	CLAMP BRIDE	1					
8	90464–07M05	CLAMP BRIDE	1					
9	90464–13013	CLAMP BRIDE	1					
10	97095–06025	BOLT BOULON	4					
11	92995–06600	WASHER RONDELLE	4					
12	6C5–82316–01	BRACKET, IGNITION COIL SUPPORT, BOBINE D'ALLUMAGE	1					
13	6C5–82316–11	BRACKET, IGNITION COIL SUPPORT, BOBINE D'ALLUMAGE	1					
14	90464–06001	CLAMP BRIDE	2					
15	68V–81960–10	RECTIFIER & REGULATOR ASSY REDRESSEUR REGULATEUR CPLT	1					
16	97095–06025	BOLT BOULON	2					
17	92995–06600	WASHER RONDELLE	2					
18	6CJ–8591A–10	ENGINE CONTROL UNIT ASSY BLOC DE CONTROL	1					
19	97095–06016	BOLT BOULON	3					
20	92995–06600	WASHER RONDELLE	3					
21	6CJ–82588–00	PLATE PLAQUE	1					
22	6CJ–8253B–00	PLATE, LOCK PLAQUE BUTEE	1					
23	68V–81315–00	LEAD WIRE ASSY FIL	1					
24	6CJ–82388–00	PLATE PLAQUETTE	1					
25	97095–06014	BOLT BOULON	1					
26	92995–06600	WASHER RONDELLE	1					
27	64J–82504–00	OIL PRESSURE SWITCH ASSY CONTACTEUR DE PRESSION D'HUILE	1					

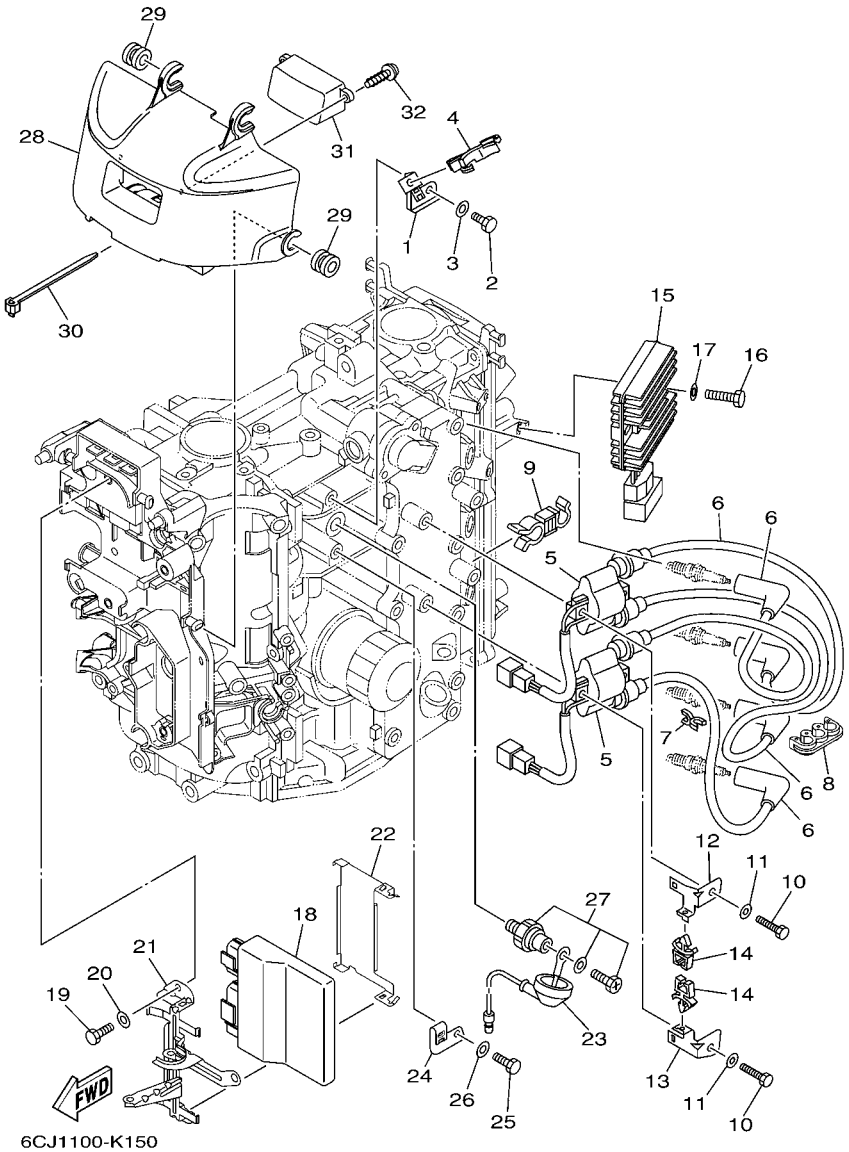

FIG. 14 ELECTRICAL 1 — PARTIE ELECTRIQUE 1

REF. NO.	PART NO. N° PIECES	DESCRIPTION DESCRIPTION	6CY2					REMARKS REMARQUES
28	6CJ–81942–00	COVER COUVERCLE	1					
29	90480–12314	GROMMET PASSE-FIL	4					
30	90465–13M24	CLAMP BRIDE	1					
31	6CJ–83559–00	COVER, METER COUVERCLE, COMPTEUR	1					
32	90167–05009	SCREW, TAPPING VIS, TETE FRAISEE	2					

FIG. 15 ELECTRICAL 2 PARTIE ELECTRIQUE 2

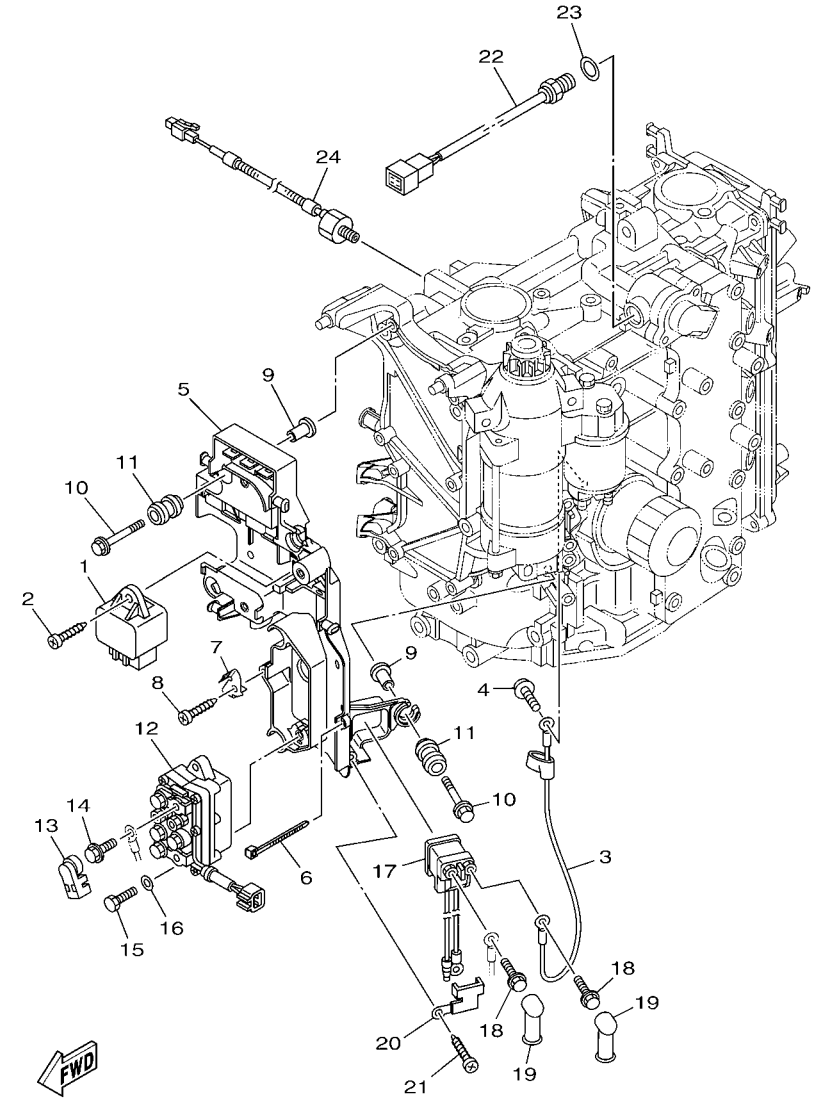

6CJ1100-K160

REF. NO.	PART NO. N° PIECES	DESCRIPTION DESCRIPTION	6CY2					REMARKS REMARQUES
1	60E–81950–00	RELAY ASSY RELAIS COMPLET	1					
2	97780–60620	SCREW, TAPPING VIS, TETE BOMBEE	1					
3	6C5–81815–00	CORD, STARTER MOTOR FIL, DEMARREUR ELECTRIQUE	1					
4	90159–04005	SCREW, WITH WASHER VIS, AVEC RONDELLE	1					
5	6CJ–81948–00	BRACKET SUPPORT	1					
6	90465–13M97	CLAMP BRIDE	4					
7	6CJ–85548–00	HOLDER SUPPORT	1					
8	97780–60620	SCREW, TAPPING VIS, TETE BOMBEE	1					
9	90387–06119	COLLAR COLLERETTE	6					
10	90119–06M59	BOLT, WITH WASHER BOULON, AVEC RONDELLE	6					
11	6A0–82317–00	DAMPER, IGNITION COIL AMORTISSEUR, BOBINE D'ALLUM	6					
12	63P–81950–00	RELAY ASSY RELAIS COMPLET	1					
13	6P2–8183X–00	CAP, TERMINAL COUVERCLE, BORNE	2					
14	97595–06610	BOLT, WITH WASHER VIS HEXAGONAL AVC RONDELLE	2					
15	97095–06020	BOLT BOULON	2					
16	92995–06600	WASHER RONDELLE	2					
17	68V–8194A–00	RELAY RELAIS	1					
18	97595–06610	BOLT, WITH WASHER VIS HEXAGONAL AVC RONDELLE	2					
19	6G5–82119–00	COVER, LEAD WIRE GARNITURE, FIL	2					
20	68F–81953–00	STAY, RELAY SUPPORT, RELAIS	1					
21	97780–60620	SCREW, TAPPING VIS, TETE BOMBEE	1					
22	6CJ–85790–00	THERMOSENSOR ASSY SENSITOMETRE	1					
23	90430–14115	GASKET JOINT	1					
24	6CJ–85780–00	SENSOR, KNOCK SONDE DE COGNEMENT	1					

FIG. 16 ELECTRICAL 3 PARTIE ELECTRIQUE 3

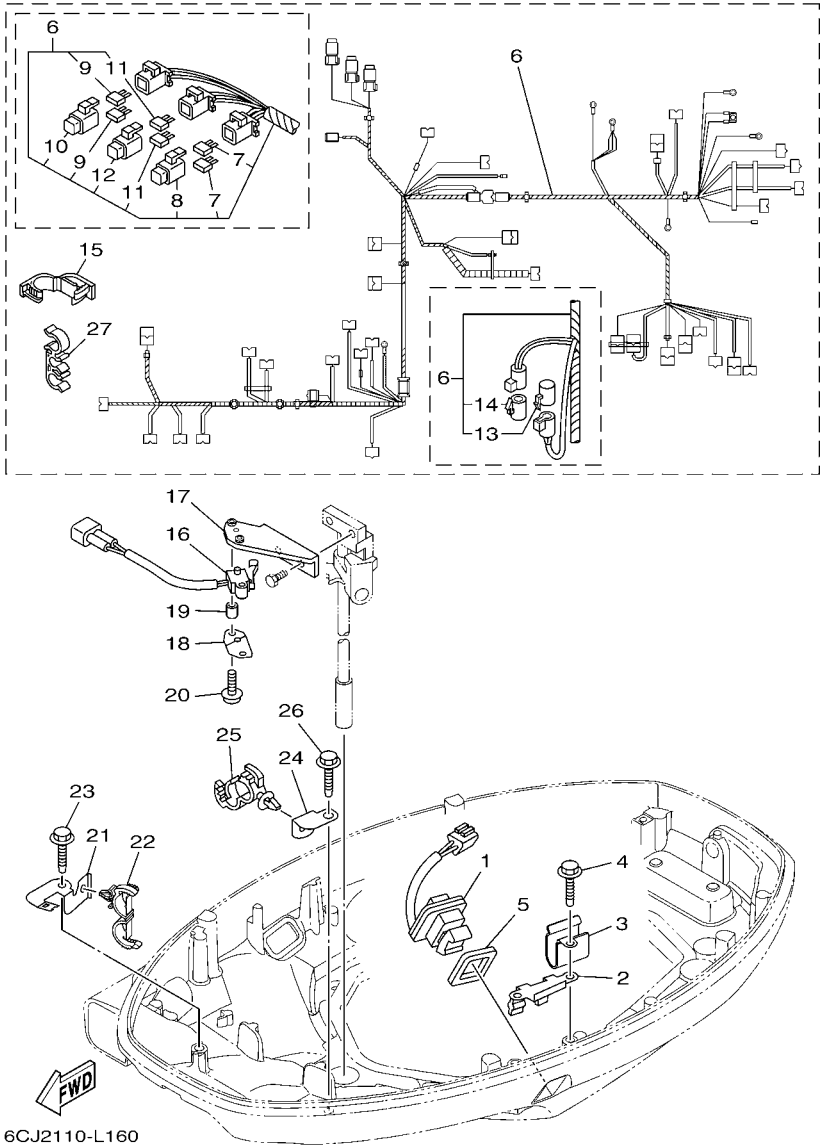

REF. NO.	PART NO. N° PIECES	DESCRIPTION DESCRIPTION	6CY2					REMARKS REMARQUES
1	69J–82563–00	TRIM & TILT SWITCH ASSY INCLINER ET PARER COMMUTATEUR	1					
2	6BG–83614–00	BRACKET SUPPORT	1					
3	90465–08M89	CLAMP BRIDE	1					
4	90109–06M86	BOLT BOULON	2					
5	69J–82587–00	GASKET JOINT	1					
6	6CJ–82590–00	WIRE HARNESS ASSY FAISCEAU DE FILS COMPLET	1					
7	67F–82151–00	.FUSE (20A) .FUSIBLE (20A)	2					
8	67F–8215B–10	.CAP (YELLOW) .BOUCHON (YELLOW)	1					
9	67F–82151–10	.FUSE (30A) .FUSIBLE (30A)	2					
10	67F–8215B–20	.CAP (GREEN) .BOUCHON (GREEN)	1					
11	5JJ–82151–10	.FUSE (15A-BL) .FUSIBLE (15A-BL)	2					
12	67F–8215B–00	.CAP (BLACK) .BOUCHON (NOIR)	1					
13	6P2–82582–00	.CAP 1 (FEMALE) .BOUCHON 1 (FEMME)	1					
14	6P2–82582–10	.CAP 1 (MALE) .BOUCHON 1 (MALE)	1					
15	90464–18004	CLAMP BRIDE	1					
16	60V–8259F–00	SWITCH ASSY COMMUTATEUR	1					
17	6CJ–82554–00	STAY, NEUTRAL SWITCH SUPPORT, CONT DE POINT-MORT	1					
18	61A–82588–01	PLATE PLAQUE	1					
19	90387–04001	COLLAR COLLERETTE	1					
20	97985–04116	SCREW, WITH WASHER VIS, AVEC RONDELLE	2					
21	6BG–42811–01	STAY SUPPORT	1					
22	90464–18205	CLAMP BRIDE	1					
23	90109–06M86	BOLT BOULON	1					
24	63P–42756–00	STAY, CLAMP SUPPORT, COLLIER	1					
25	90464–20181	CLAMP BRIDE	1					
26	90109–06M86	BOLT BOULON	1					
27	90464–15008	CLAMP BRIDE	2					

FIG. 17 ELECTRICAL 4 PARTIE ELECTRIQUE 4

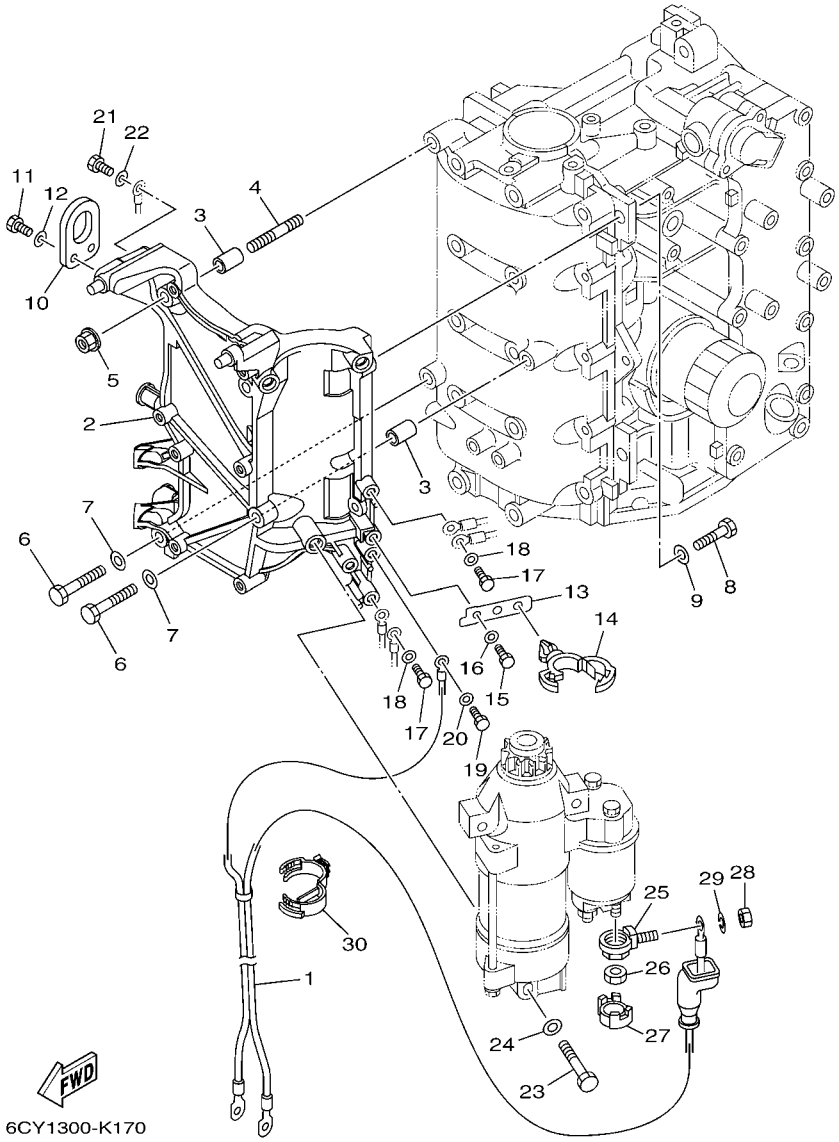

REF. NO.	PART NO. N° PIECES	DESCRIPTION DESCRIPTION	6CY2					REMARKS REMARQUES
1	6C5–82105–U0	WIRE HARNESS FAISCEAU DE FILS	1					
2	6CJ–81822–00–94	BRACKET, STARTING MOTOR SUPPORT, DEMARREUR ELECTRIQUE	1					
3	99590–10114	PIN, DOWEL GOUJON, D'ASSEMBLAGE	2					
4	95680–08330	BOLT, STUD GOUJON	1					
5	90179–08M34	NUT ECROU	1					
6	97095–08035	BOLT BOULON	2					
7	92995–08600	WASHER RONDELLE	2					
8	97095–08025	BOLT BOULON	2					
9	92995–08600	WASHER RONDELLE	2					
10	62Y–11119–00	HANGER, ENGINE ANNEAU, LEVAGE	1					
11	97095–06020	BOLT BOULON	2					
12	92995–06600	WASHER RONDELLE	2					
13	6CJ–85525–00	PLATE PLAQUE	1					
14	90464–20181	CLAMP BRIDE	1					
15	97095–06016	BOLT BOULON	1					
16	92995–06600	WASHER RONDELLE	1					
17	97095–06016	BOLT BOULON	2					
18	92995–06600	WASHER RONDELLE	2					
19	97095–06016	BOLT BOULON	1					
20	92995–06600	WASHER RONDELLE	1					
21	97095–06016	BOLT BOULON	1					
22	92995–06600	WASHER RONDELLE	1					
23	97013–08045	BOLT BOULON	3					
24	92903–08600	WASHER, PLATE RONDELLE, PLATE	3					
25	60V–81925–00	TERMINAL BORNE	1					
26	90179–08003	NUT ECROU	1					
27	68F–82582–00	COVER, WIRE HARNESS COUVERCLE, FAISCEAU DE FILS	1					

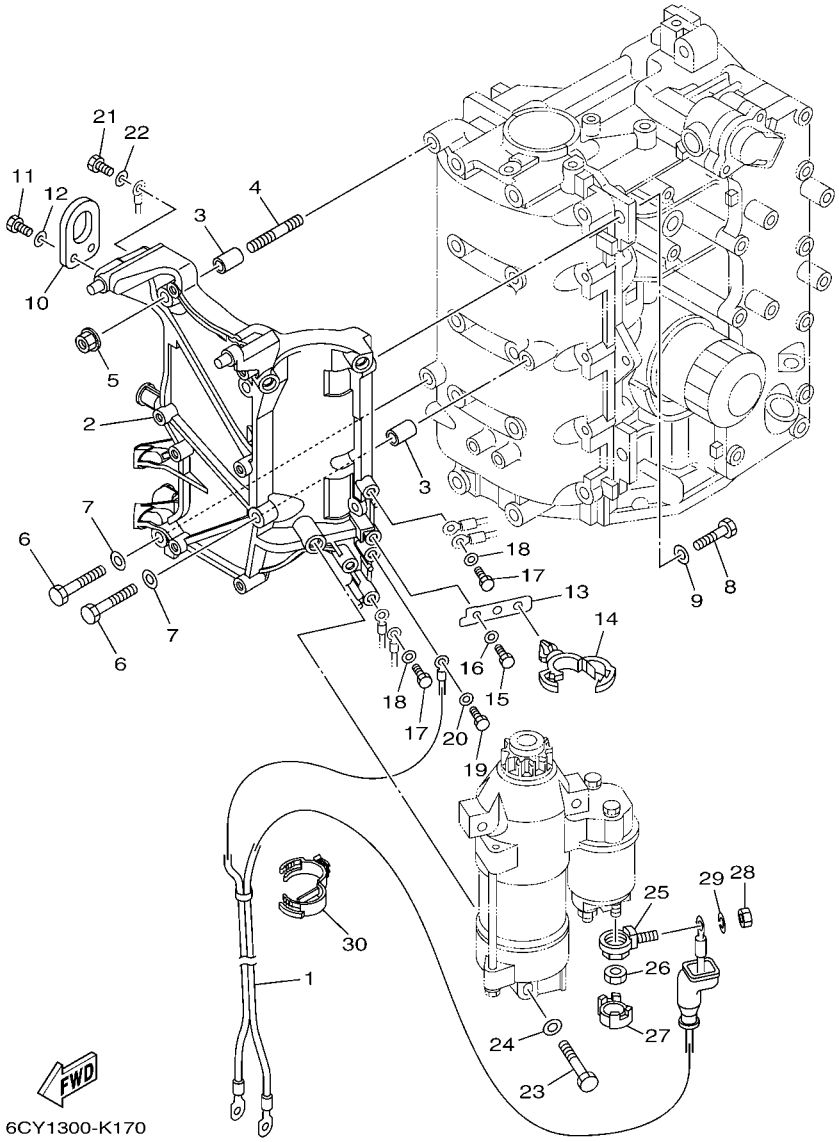

FIG. 17 ELECTRICAL 4 — PARTIE ELECTRIQUE 4

REF. NO.	PART NO. N° PIECES	DESCRIPTION DESCRIPTION	6CY2					REMARKS REMARQUES
28	95333–08600	NUT ECROU	1					
29	92903–08100	WASHER, SPRING RONDELLE, GROWER	1					
30	90464–30003	CLAMP BRIDE	1					

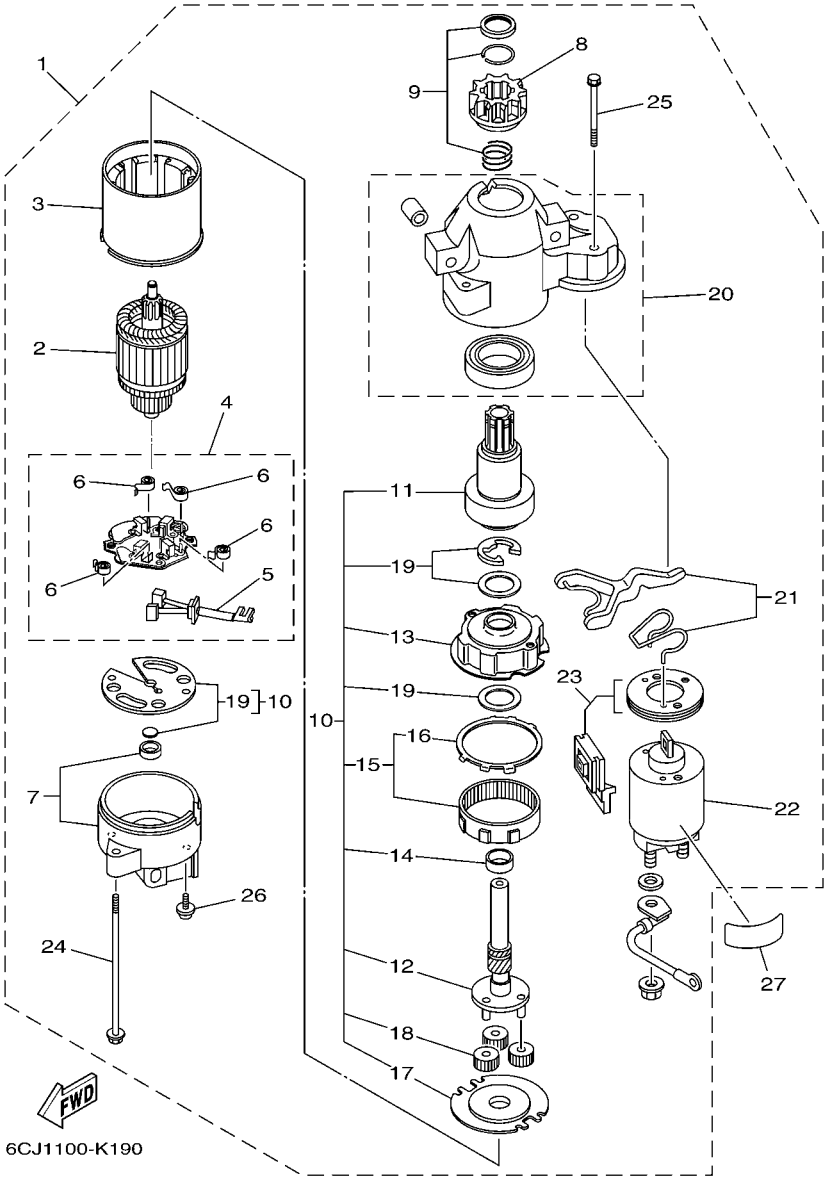

FIG. 18 STARTING MOTOR DEMARREUR ELECTRIQUE

REF. NO.	PART NO. N° PIECES	DESCRIPTION DESCRIPTION	6CY2					REMARKS REMARQUES
1	6CJ–81800–00	STARTING MOTOR ASSY DEMARREUR ELECTRIQUE COMPLET	1					
2	67F–81850–00	.ARMATURE ASSY .INDUIT	1					
3	67F–81810–00	.STATOR ASSY .STATOR COMPLET	1					
4	69J–81840–00	.BRUSH HOLDER ASSY .SUPPORT DE CHARBON	1					
5	69J–81801–00	..BRUSH SET ..CHARBON	1					
6	67F–81813–00	..SPRING, BRUSH ..RESSORT, DE CHARBON	4					
7	68F–81820–00	.REAR BRACKET ASSY .SUPPORT ARRIERE COMPLET	1					
8	67F–81808–00	.PINION ASSY .PIGNON	1					
9	67F–81857–00	.PINION STOPPER SET .BUTEE PIGNON	1					
10	67F–81807–00	.GEAR ASSY, STARTING MOTOR .PIGNON, DEMARREUR ELECTRIQUE	1					
11	67F–81832–00	..CLUTCH, OVER RUN ..EMBRAYAGE, ROUE LIBRE	1					
12	67F–81836–00	..SHAFT, PINION ..AXE, PIGNON	1					
13	67F–81821–00	..BRACKET, CENTER 1 ..SUPPORT, CENTRE 1	1					
14	67F–81841–00	..BEARING ..ROULEMENT	1					
15	67F–81891–00	..GEAR, RING ..ROUE DENTEE	1					
16	67F–8183R–00	...GASKET ...JOINT	1					
17	67F–81830–00	..BRACKET, CENTER 2 ..SUPPORT, CENTRE 2	1					
18	60V–8183T–00	..GEAR, IDLER ..PIGNON, INTERMEDIAIRE	3					
19	67F–81809–00	..WASHER KIT ..JEU DE RONDELLES	1					
20	60X–81842–00	.COVER .COUVERCLE	1					
21	6C5–81839–00	.LEVER ASSY .LEVIER COMPLET	1					
22	6C5–81941–00	.STARTER RELAY ASSY .LANCEUR RELAIS (ENS.)	1					
23	6C5–81869–00	.COVER, DUST .COUVERCLE, POUSSIERE	1					
24	6K7–81826–11	.BOLT .BOULON	2					
25	69J–81828–00	.SCREW 2 .VIS 2	2					
26	67F–81846–00	.SCREW .VIS	2					
27	67F–83627–01	LABEL, CAUTION 7 ETIQUETTE, RECOMMANDATION 7	1					

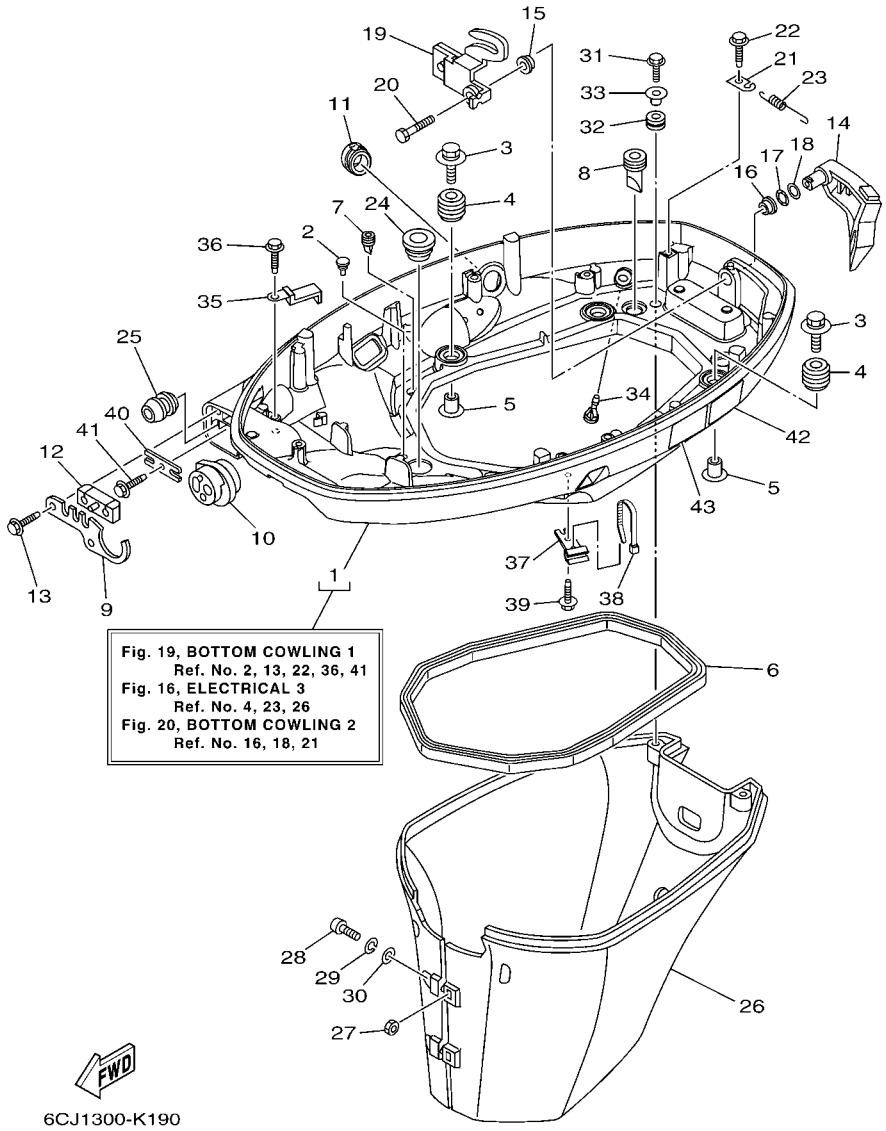

FIG. 19 BOTTOM COWLING 1 CAPOT INFERIEUR 1

REF. NO.	PART NO. N° PIECES	DESCRIPTION DESCRIPTION	6CY2					REMARKS REMARQUES
1	6CJ–42710–00–8D	BOTTOM COWLING ASSY ENS. EMBASE	1					
2	6H4–42748–00	GROMMET PASSE-FIL	3					
3	90119–06M61	BOLT, WITH WASHER BOULON, AVEC RONDELLE	4					
4	6BG–42748–00	GROMMET PASSE-FIL	4					
5	90387–06M69	COLLAR COLLERETTE	4					
6	62Y–42716–00	RUBBER, SEAL 1 JOINT EN CAOUTCHOUC 1	1					
7	65W–42717–00	RUBBER, SEAL 2 JOINT EN CAOUTCHOUC 2	2					
8	61A–42717–00	RUBBER, SEAL 2 JOINT EN CAOUTCHOUC 2	2					
9	6BG–42761–00	STOPPER PLAQUETTE	1					
10	6CJ–42725–00	GROMMET PASSE-FIL	1					
11	6CJ–42726–00	GROMMET PASSE-FIL	1					
12	6BG–42727–00	GROMMET PASSE-FIL	1					
13	90109–06M86	BOLT BOULON	2					
14	6BG–42815–00–8D	LEVER, CLAMP LEVIER, PRESSE	1					
15	90386–12M37	BUSH DOUILLE	1					
16	90386–12MA2	BUSH DOUILLE	1					
17	90206–12052	WASHER, WAVE RONDELLE, ONDULEE	1					
18	90201–12M07	WASHER, PLATE RONDELLE, PLATE	1					
19	6BG–42816–00	LEVER, CLAMP LEVIER, PRESSE	1					
20	97095–06014	BOLT BOULON	1					
21	66T–43144–00	HOOK, SPRING CROCHET	1					
22	90109–06M86	BOLT BOULON	1					
23	90506–18023	SPRING, TENSION RESSORT, TENSION	1					
24	68U–42727–00	GROMMET PASSE-FIL	1					
25	6BG–24329–00	SEAL JOINT	1					
26	6BG–42741–10–8D	APRON CAPOT LATERAL	1					
27	95380–06600	NUT, HEXAGON ECROU	2					

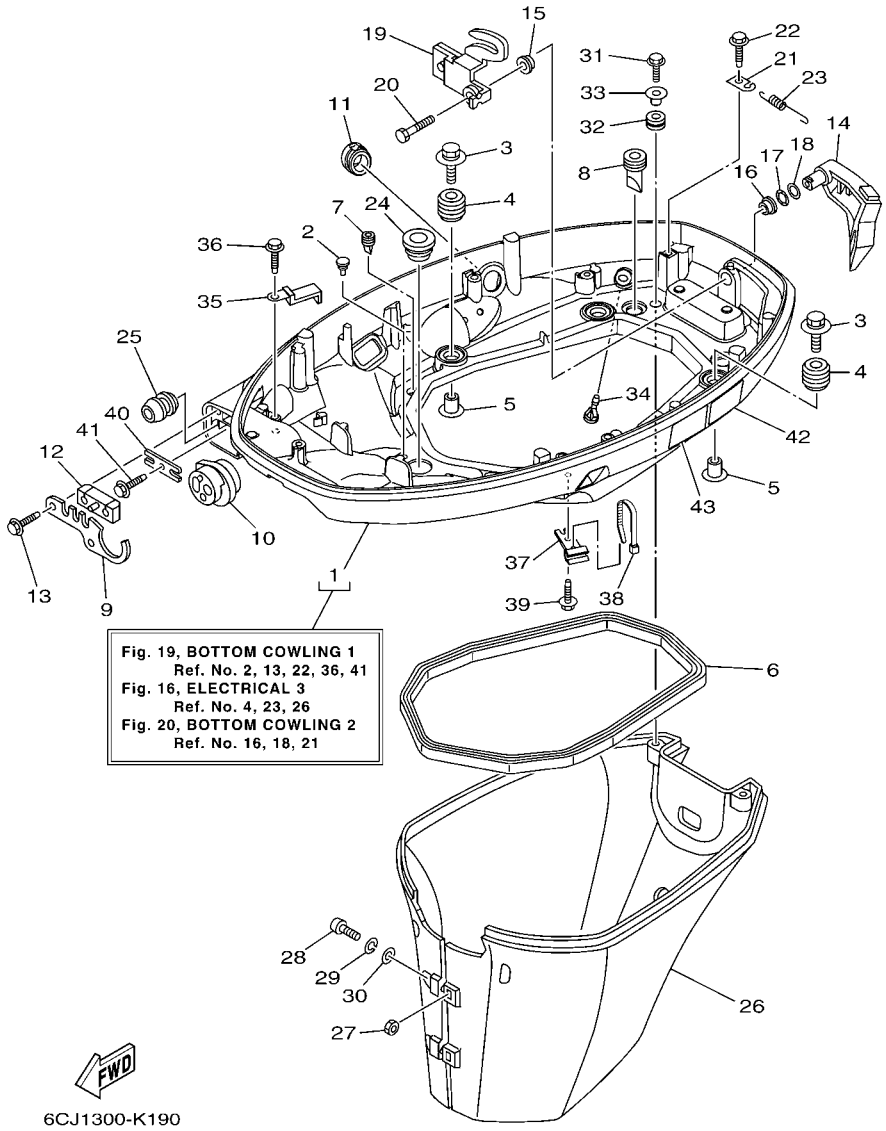

FIG. 19 BOTTOM COWLING 1 CAPOT INFERIEUR 1

REF. NO.	PART NO. N° PIECES	DESCRIPTION DESCRIPTION	6CY2					REMARKS REMARQUES
28	97880–06025	SCREW, PAN HEAD VIS, TETE TRONCONIQUE	2					
29	92990–06100	WASHER, SPRING RONDELLE, GROWER	2					
30	92990–06600	WASHER, PLATE RONDELLE, PLATE	2					
31	90109–06M80	BOLT BOULON	2					
32	90480–13M24	GROMMET PASSE-FIL	2					
33	90387–06M43	COLLAR COLLERETTE	2					
34	6BL–44391–00	NIPPLE, HOSE RACCORD D'ESSENCE	1					
35	90462–20005	CLAMP BRIDE	1					
36	90109–06M86	BOLT BOULON	1					
37	90464–09M49	CLAMP BRIDE	1					
38	90465–11M10	CLAMP BRIDE	1					
39	90109–06M86	BOLT BOULON	1					
40	6BG–48538–00	CLAMP, CABLE 1 COLLIER	1					
41	90109–06M86	BOLT BOULON	1					
42	6AH–42794–40	LABEL, WARNING (GENERAL) ETIQUETTE, AVERTISSEMENT	1					
43	6AH–42794–50	LABEL, WARNING (GENERAL) ETIQUETTE, AVERTISSEMENT	1					

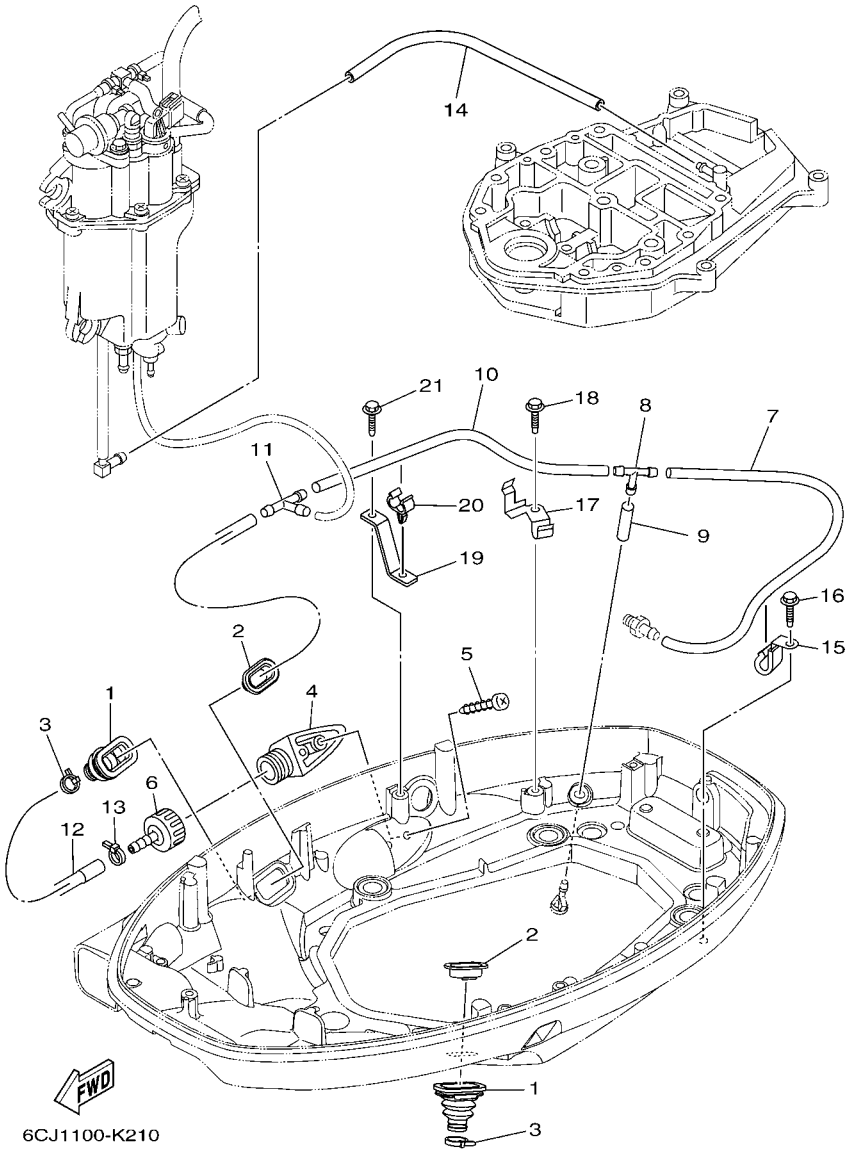

FIG. 20 BOTTOM COWLING 2 CAPOT INFERIEUR 2

REF. NO.	PART NO. N° PIECES	DESCRIPTION DESCRIPTION	6CY2					REMARKS REMARQUES
1	6BG–42724–00	GROMMET PASSE-FIL	2					
2	6BG–42384–00	SEAL, CAP JOINT, CAPUCHON	2					
3	90465–11M10	CLAMP BRIDE	2					
4	6AW–12572–00	ADAPTER ADAPTATEUR	1					
5	97780–60520	SCREW, TAPPING VIS, TETE BOMBEE	2					
6	6R3–12580–00	JOINT ASSY ARTICULER (ENS.)	1					
7	90445–09036	HOSE (L400) DURITE (L400)	1					
8	688–24378–00	PIPE, JOINT 3 DURITE RACCORDEMENT 3	1					
9	90445–09220	HOSE (L30) DURITE (L30)	1					
10	90445–096H2	HOSE (L280) DURITE (L280)	1					
11	688–24378–00	PIPE, JOINT 3 DURITE RACCORDEMENT 3	1					
12	6BG–12481–00	PIPE 1 DURITE 1	1					
13	90465–11M10	CLAMP BRIDE	1					
14	90445–09304	HOSE (L310) DURITE (L310)	1					
15	90462–08067	CLAMP BRIDE	1					
16	90109–06M86	BOLT BOULON	1					
17	6BG–24136–01	CLAMP 2 COLLIER 2	1					
18	90109–06M86	BOLT BOULON	1					
19	6CJ–24135–00	CLAMP 1 COLLIER 1	1					
20	90464–09130	CLAMP BRIDE	1					
21	90109–06M86	BOLT BOULON	1					

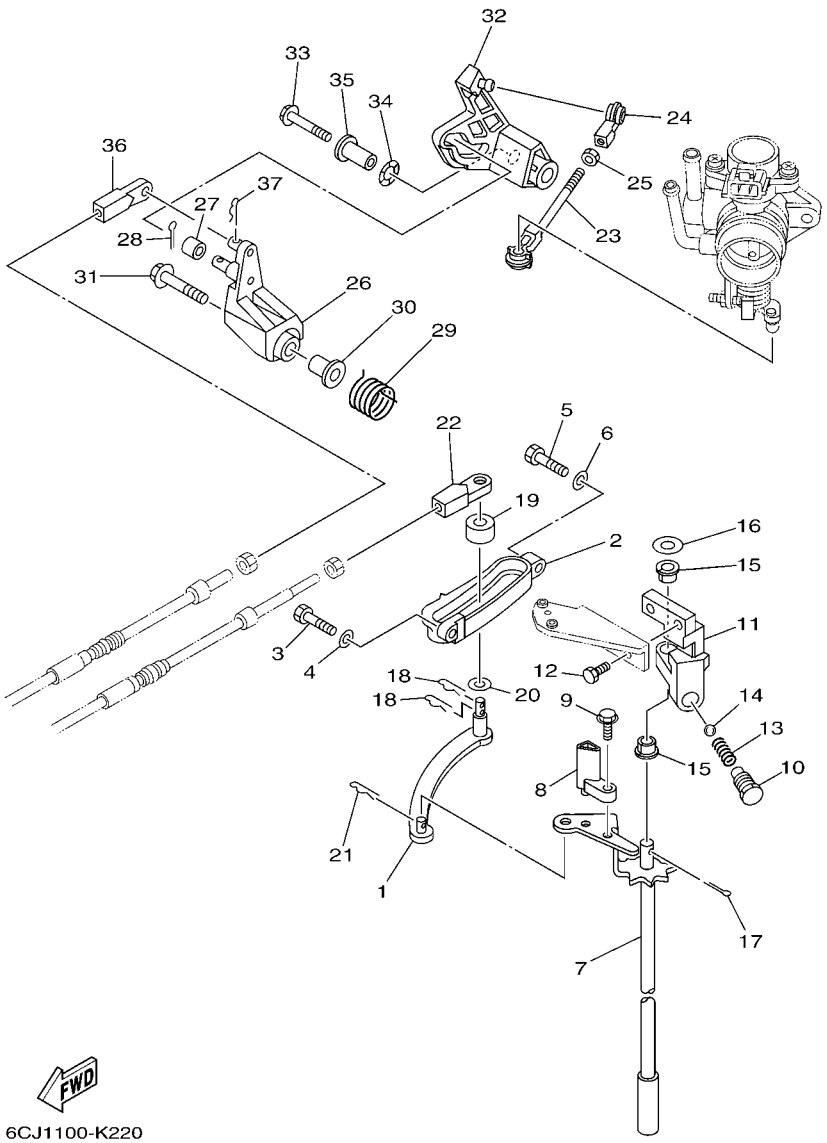

FIG. 21 CONTROL COMMANDE

REF. NO.	PART NO. N° PIECES	DESCRIPTION DESCRIPTION	6CY2					REMARKS REMARQUES
1	69W–44121–00	LEVER, SHIFT ROD LEVIER, TIGE D'INVERSION	1					
2	62Y–44117–01–94	BRACKET SUPPORT	1					
3	97095–06020	BOLT BOULON	1					
4	92995–06600	WASHER RONDELLE	1					
5	97095–06025	BOLT BOULON	1					
6	92995–06600	WASHER RONDELLE	1					
7	6C5–44120–01	HANDLE GEAR SHIFT ASSY LEVIER D'EMBRAYAGE	1					L(21.0") L(21.0")
8	6C5–44122–00	BUSHING, SHIFT ROD LEVER DOUILLE, LEVIER D'EMBRAYAGE	1					
9	97595–05514	BOLT, WITH WASHER VIS HEXAGONAL AVC RONDELLE	1					
10	62Y–42715–01	BUSHING COUSSINET	1					
11	62Y–44118–00–94	BRACKET SUPPORT	1					
12	90101–06054	BOLT BOULON	2					
13	90501–12082	SPRING, COMPRESSION RESSORT, COMPRESSION	1					
14	93501–04M02	BALL BILLE	1					
15	90386–90M90	BUSH DOUILLE	2					
16	90201–10M20	WASHER, PLATE RONDELLE, PLATE	1					
17	91490–20015	PIN. COTTER GOUPILLE	1					
18	90468–18008	CLIP JONC	2					
19	688–44122–00	BUSHING, SHIFT ROD LEVER DOUILLE, LEVIER D'EMBRAYAGE	1					
20	90202–07M07	WASHER, PLATE RONDELLE, PLATE	1					
21	90468–18008	CLIP JONC	1					
22	69W–48344–00	CABLE END, REMOTE CONTROL CHAPE CABLE	1					
23	688–41211–01	LINK, ACCEL. BIELLETTE, ACCELERATION	1					
24	6H4–41237–00	JOINT, LINK RACCORD	1					
25	95380–05700	NUT ECROU	1					
26	62Y–42154–00	LEVER, THROTTLE CONTROL LEVIER DE COMMANDE D'AVANCE	1					
27	6C5–42171–00	BUSHING COUSSINET	1					

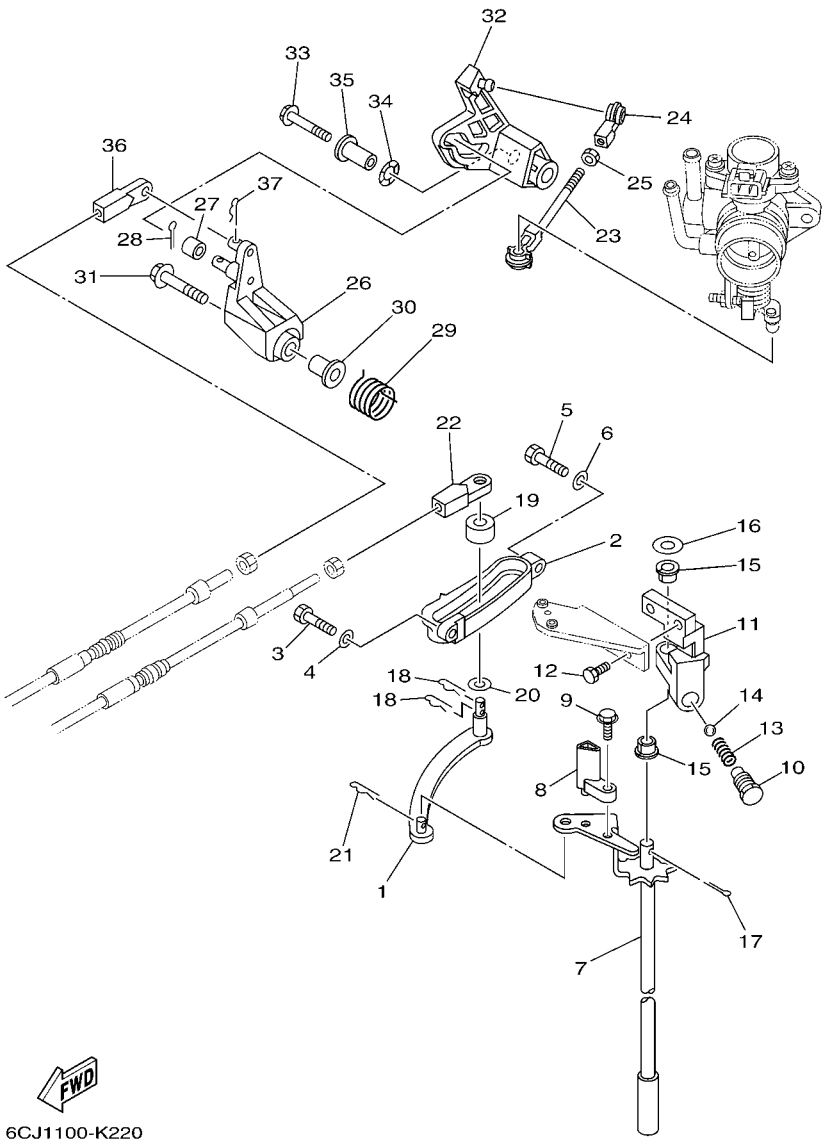

FIG. 21 CONTROL COMMANDE

REF. NO.	PART NO. N° PIECES	DESCRIPTION DESCRIPTION	6CY2					REMARKS REMARQUES
28	91490–16010	PIN. COTTER GOUPILLE	1					
29	62Y–44135–00	SPRING RESSORT	1					
30	90387–06M45	COLLAR COLLERETTE	1					
31	90119–06106	BOLT, WITH WASHER BOULON, AVEC RONDELLE	1					
32	6BG–42335–00	LEVER, ACCEL. CONTROL LEVIER, ACCELERATION	1					
33	95895–06045	BOLT, FLANGE BOULON	1					
34	90206–10M04	WASHER, WAVE RONDELLE, ONDULEE	1					
35	90387–06225	COLLAR COLLERETTE	1					
36	69W–48344–00	CABLE END, REMOTE CONTROL CHAPE CABLE	1					
37	90468–18008	CLIP JONC	1					

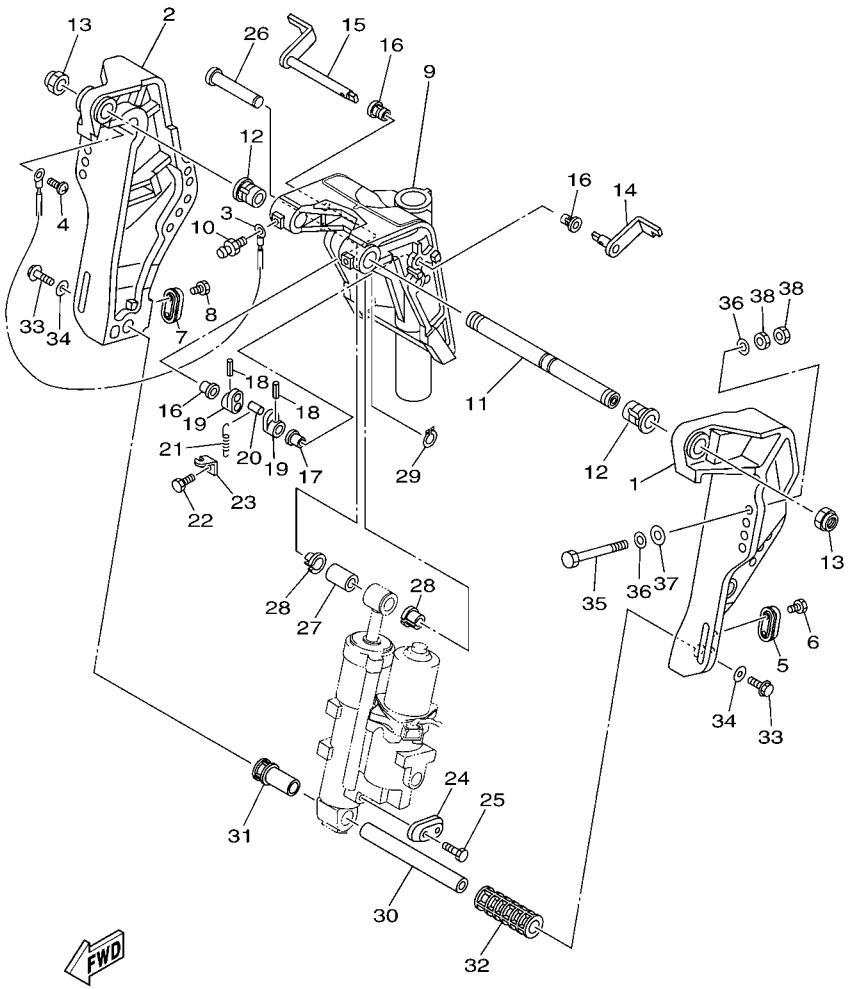

FIG. 22 BRACKET 1 SUPPORT 1

REF. NO.	PART NO. N° PIECES	DESCRIPTION DESCRIPTION	6CY2					REMARKS REMARQUES
1	6C5–43111–01–8D	BRACKET, CLAMP 1 PRESSE 1	1					
2	6C5–43112–01–8D	BRACKET, CLAMP 2 PRESSE 2	1					
3	6E5–82148–00	WIRE, LEAD 4 FIL 4	1					
4	97885–06008	SCREW, PAN HEAD VIS, A ENCOCHE	1					
5	65W–45251–00	ANODE ANODE	1					
6	90101–06020	BOLT BOULON	2					
7	65W–45251–00	ANODE ANODE	1					
8	90101–06020	BOLT BOULON	2					
9	6C5–43311–01–8D	BRACKET, SWIVEL 1 SUPPORT, PIVOT 1	1					
10	93700–06M03	NIPPLE, GREASE PION	3					
11	63D–43131–01	BOLT, CLAMP BRACKET BOULON, PRESSE	1					
12	90386–22MA4	BUSH DOUILLE	2					
13	90185–22M11	NUT, SELF-LOCKING ECROU,AUTO-BLOQUANT	2					
14	6C5–43181–00	LEVER, TILT STOP 1 LEVIER VERROUILLAGE RELEVAGE 1	1					
15	6C5–43185–00	LEVER, TILT STOP 2 LEVIER VERROUILLAGE RELEVAGE 2	1					
16	90386–10M16	BUSH DOUILLE	3					
17	90386–10025	BUSH DOUILLE	1					
18	91690–30020	PIN, SPRING AGRAFFE	2					
19	6G5–43148–00	COLLAR, DISTANCE ENTRETOISE	2					
20	90249–06M19	PIN GOUPILLE	1					
21	90506–14M24	SPRING, TENSION RESSORT, TENSION	1					
22	97095–06010	BOLT BOULON	1					
23	6G5–43144–00	HOOK, SPRING CROCHET	1					
24	65W–45251–00	ANODE ANODE	1					
25	90101–06020	BOLT BOULON	2					
26	6E5–43126–02	PIN, UPPER SHOCK MOUNT AXE, SUPERIEUR AMORTISSEUR	1					
27	90386–18M92	BUSH DOUILLE	1					

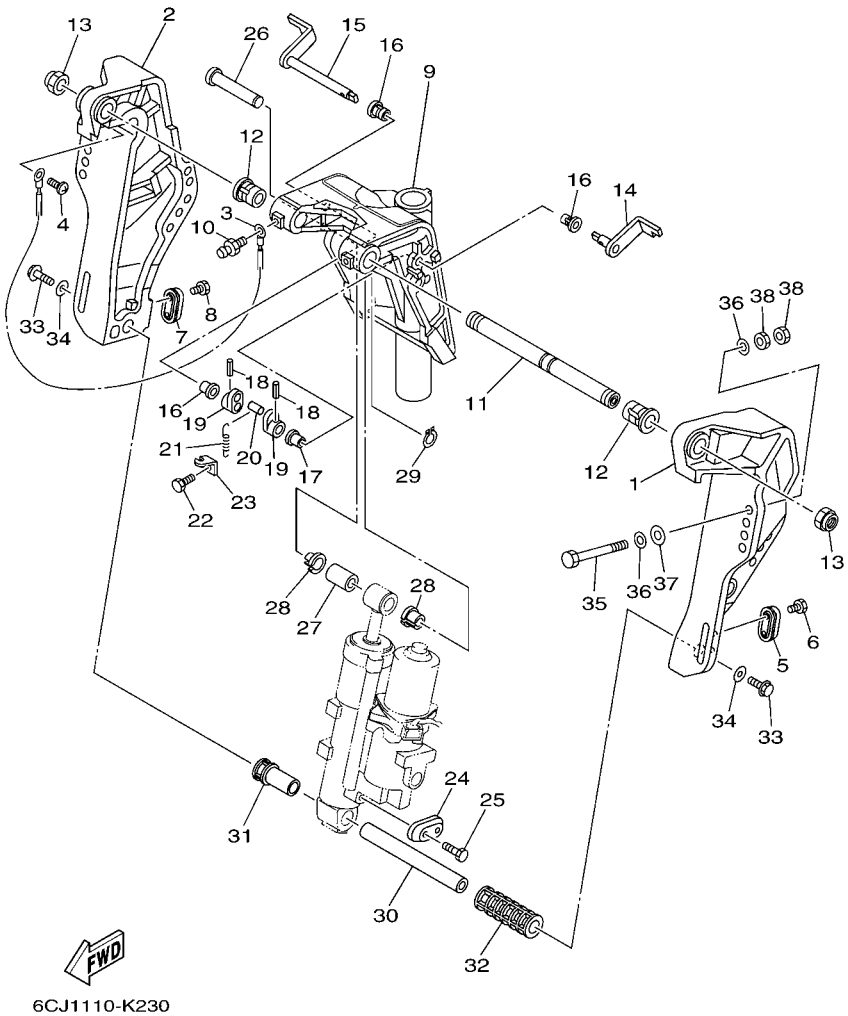

FIG. 22 BRACKET 1 SUPPORT 1

REF. NO.	PART NO. N° PIECES	DESCRIPTION DESCRIPTION	6CY2					REMARKS REMARQUES
28	90386–18M35	BUSH DOUILLE	2					
29	93410–18M05	CIRCLIP CLIPS	1					
30	6CJ–43818–00	PIN, LOWER SHOCK MOUNT AXE, INFERIEUR AMORTISSEUR	1					
31	6C5–43833–00	PIPE TUYAU	1					
32	6C5–43834–00	PIPE TUYAU	1					
33	97575–10530	BOLT, WITH WASHER VIS HEXAGONAL AVC RONDELLE	2					
34	90201–10060	WASHER, PLATE RONDELLE, PLATE	2					
35	90101–12M65	BOLT BOULON	4					
36	90201–12062	WASHER, PLATE RONDELLE, PLATE	8					
37	90201–12426	WASHER, PLATE RONDELLE, PLATE	4					
38	95380–12600	NUT ECROU	8					

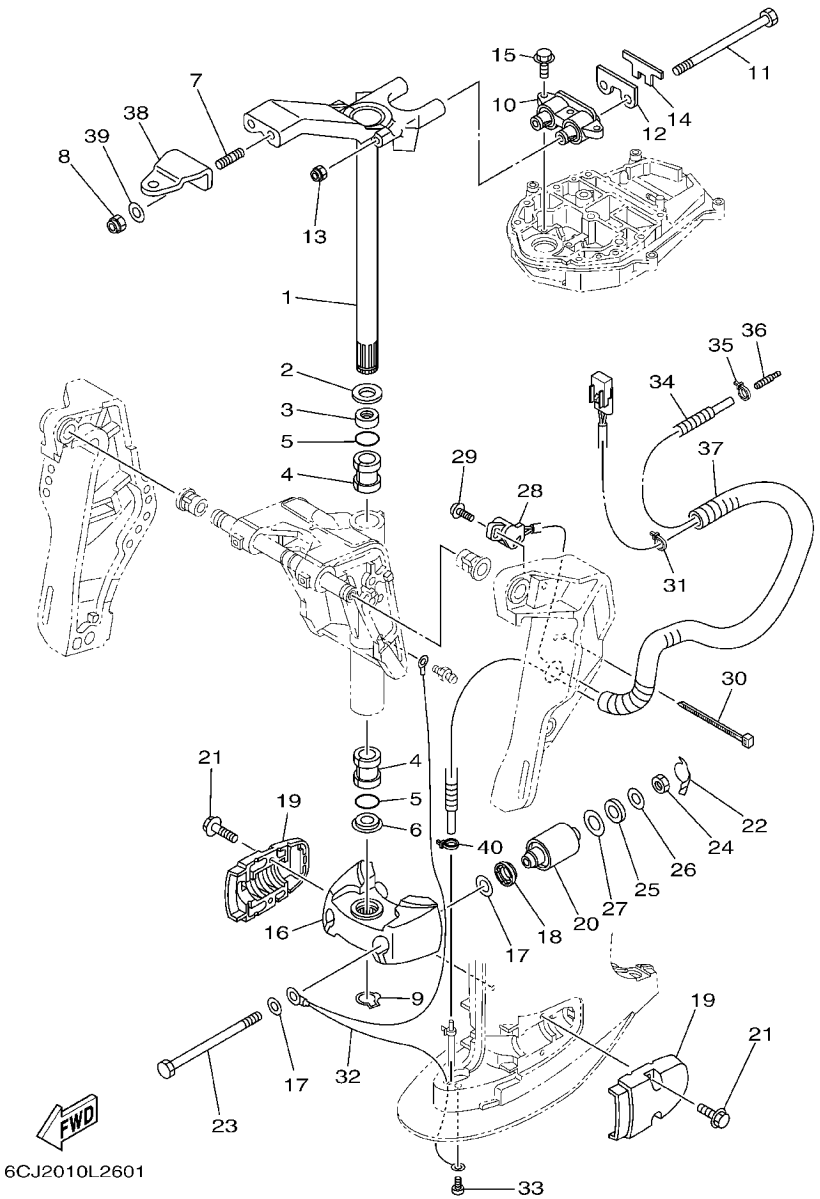

FIG. 23 BRACKET 2 SUPPORT 2

REF. NO.	PART NO. N° PIECES	DESCRIPTION DESCRIPTION	6CY2					REMARKS REMARQUES
1	69W–42510–01–8D	STEERING BRACKET ASSY DIRECTION SUPPORT (ENS.)	1					
2	90201–30M00	WASHER, PLATE RONDELLE, PLATE	1					
3	90386–30M78	BUSH DOUILLE	1					
4	90386–30M77	BUSH DOUILLE	2					
5	93210–29M94	O-RING JOINT TORIQUE	2					
6	90386–30M60	BUSH DOUILLE	1					
7	90116–10038	BOLT, STUD GOUJON	2					
8	90185–10051	NUT, SELF-LOCKING ECROU,AUTO-BLOQUANT	2					
9	93410–28M06	CIRCLIP CLIPS	1					
10	6CJ–44514–00–94	MOUNT DAMPER, UPPER SIDE SILENT-BLOC, SUPERIEUR LATERAL	1					
11	90101–08M15	BOLT BOULON	2					
12	6CJ–44526–00	PLATE PLAQUE	1					
13	90185–08045	NUT, SELF-LOCKING ECROU,AUTO-BLOQUANT	2					
14	6CJ–44533–00	DAMPER, UPPER MOUNT RUBBER COUVERCLE, SUSPENSION INFERIEU	1					
15	97575–08530	BOLT, WITH WASHER VIS HEXAGONAL AVC RONDELLE	3					
16	6C5–44551–00–8D	HOUSING, LOWER MOUNT RUBBER 1 BOITIER, SILENT-BLOC INFERIEUR	1					
17	90201–12M16	WASHER, PLATE RONDELLE, PLATE	4					
18	6C5–43885–00	GROMMET PASSE-FIL	2					
19	6C5–44552–00–8D	HOUSING, LOWER MOUNT RUBBER 2 BOITIER, SILENT-BLOC INFERIEUR	2					
20	69W–44555–00–94	MOUNT DAMPER, LOWER SIDE SILENT-BLOC, INFERIEUR LATERAL	2					
21	90119–08131	BOLT, WITH WASHER BOULON, AVEC RONDELLE	4					
22	6CJ–44575–00	DAMPER, LOWER MOUNT RUBBER SILENT-BLOC, INFERIEUR	2					
23	90109–12MA3	BOLT BOULON	2					
24	95380–12600	NUT ECROU	2					
25	90202–21100	WASHER, PLATE RONDELLE, PLATE	2					
26	90201–13M19	WASHER, PLATE RONDELLE, PLATE	2					
27	90201–22M05	WASHER, PLATE RONDELLE, PLATE	2					

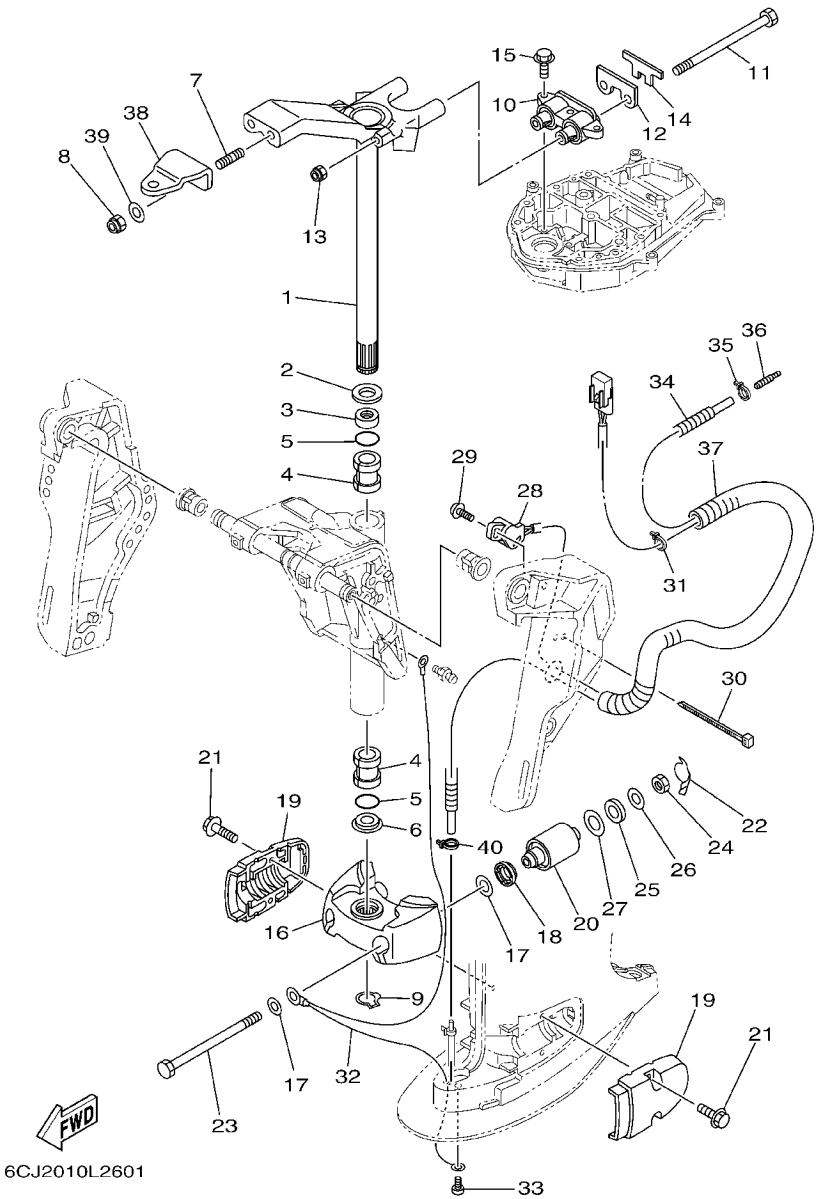

FIG. 23 BRACKET 2 SUPPORT 2

REF. NO.	PART NO. N° PIECES	DESCRIPTION DESCRIPTION	6CY2					REMARKS REMARQUES
28	63D–83672–11	TRIM SENDER INCLINER RACCORD	1					
29	97985–06216	SCREW, WITH WASHER VIS, AVEC RONDELLE	2					
30	90464–76001	CLAMP BRIDE	1					
31	90465–11M10	CLAMP BRIDE	1					
32	67C–82127–10	WIRE, LEAD 2 FIL 2	1					
33	97885–06008	SCREW, PAN HEAD VIS, A ENCOCHE	1					
34	6CJ–44385–00	HOSE, WATER 1 TUBE D'EAU 1	1					
35	90465–11M10	CLAMP BRIDE	1					
36	6E5–83558–00	END, NIPPLE RACCORD DE NIPPLE	1					
37	90447–19009	TUBE DURITE	1					
38	65W–48511–00	HOOK, STEERING ATTACHE, DIRECTION	1					
39	90201–10120	WASHER, PLATE RONDELLE, PLATE	2					
40	90465–11M10	CLAMP BRIDE	1					

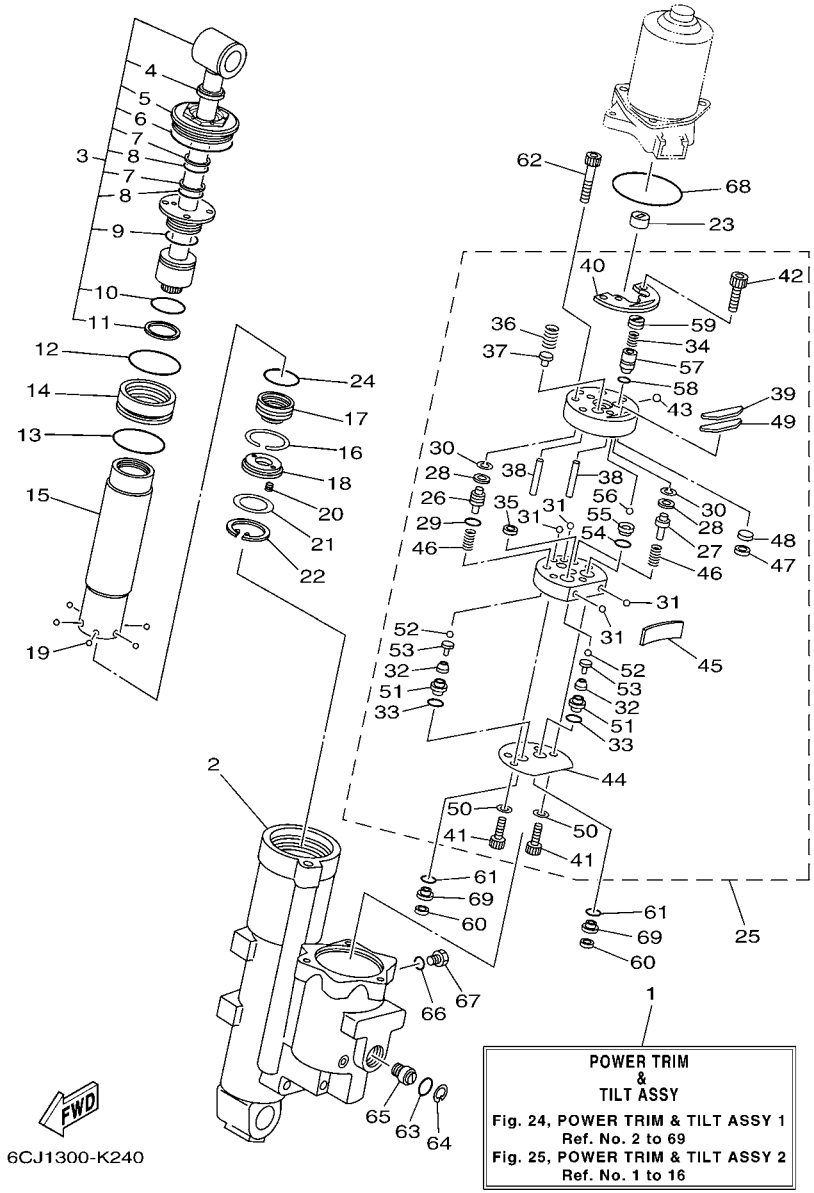

FIG. 24 POWER TRIM & TILT ASSY 1 PUISSANCE PARER ET INCLINER 1

REF. NO.	PART NO. N° PIECES	DESCRIPTION DESCRIPTION	6CY2					REMARKS REMARQUES
1	6CJ–43800–00–8D	POWER TRIM & TILT ASSY PUISSANCE PARER ET INCLINER (E	1					
2	6CJ–4380K–00	CYLINDER, TILT SUB ASSY CYLINDRE	1					
3	6CJ–43810–00	TILT PISTON SUB ASSY INCLINER PISTON AUXILIAIRE(ENS	1					
4	62Y–43822–00	.SEAL, TRIM DUST .JOINT	1					
5	68S–43821–00	.SCREW, TRIM CYLINDER END .VIS	1					
6	62X–43861–00	.O-RING .JOINT TORIQUE	1					
7	62X–43872–00	.RING, BACK UP .RESSORT	2					
8	6C5–43863–00	.O-RING .JOINT TORIQUE	2					
9	62X–43862–00	.O-RING .JOINT TORIQUE	1					
10	93210–29375	.O-RING .JOINT TORIQUE	1					
11	62X–43871–00	.RING, BACK UP .SEGMENT	1					
12	93210–44383	O-RING JOINT TORIQUE	1					
13	6CJ–43861–00	O-RING JOINT TORIQUE	1					
14	6CJ–4388A–00	PISTON, TRIM PISTON	1					
15	6CJ–22471–00	CYLINDER, SHOCK ABSORBER CYLINDRE, AMORTISSEUR	1					
16	67F–43875–00	RING, SNAP RESSORT	1					
17	69W–4381B–00	FREE PISTON SUB ASSY PISTON AUXILIAIRE (ENS.)	1					
18	62X–43899–00	PLATE STOPPER PLAQUETTE	1					
19	93503–16003	BALL BILLES	6					
20	62X–4384H–00	SPRING RESSORT	2					
21	1UF–22434–00	PLATE, VALVE 1 PLATEAU, SOUPAPE 1	1					
22	62X–43875–00	RING, SNAP RESSORT	1					
23	6H1–43831–10	CONNECTOR, SHAFT RACCORD	1					
24	67F–43863–00	O-RING JOINT TORIQUE	1					
25	6CJ–43830–00	GEAR PUMP ASSY POMPE A PIGNON (ENS.)	1					
26	6CJ–43841–00	.PISTON, SHUTTLE .PISTON	1					
27	6CJ–4384M–00	.PISTON, SHUTTLE 2 .PISTON 2	1					

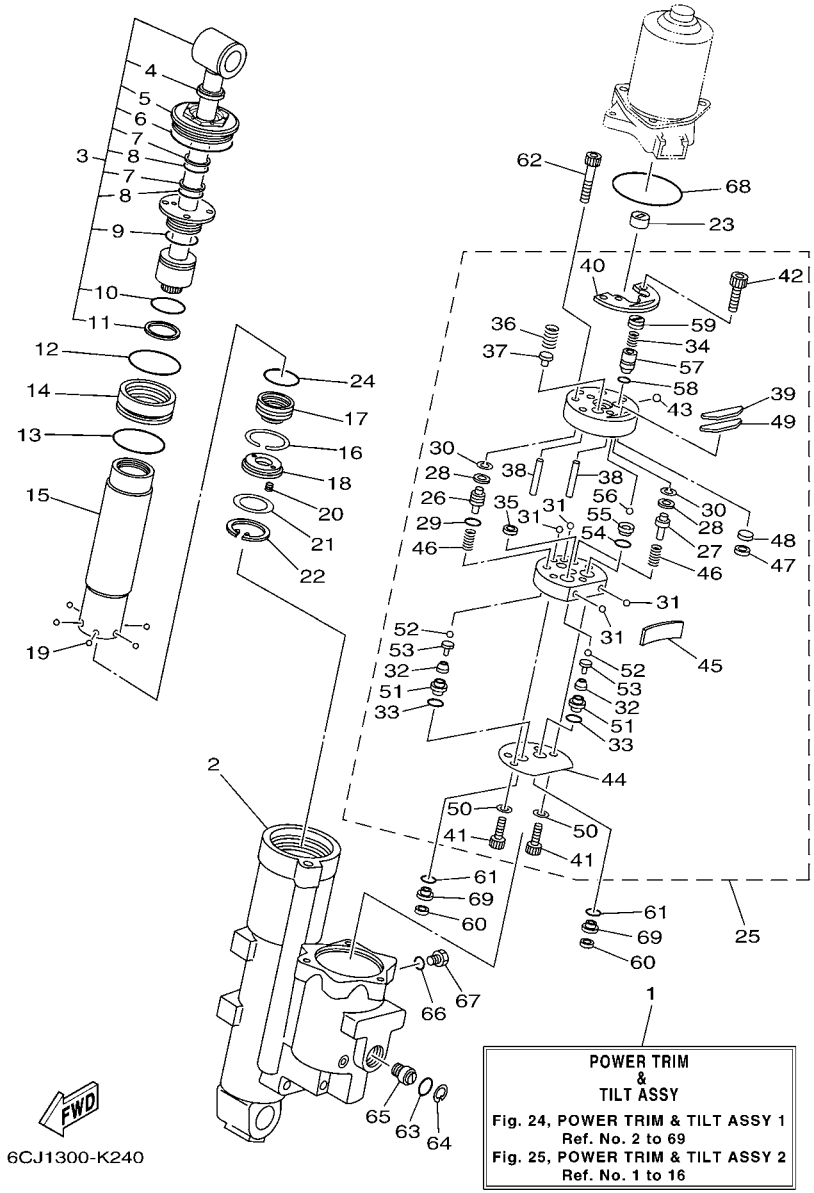

FIG. 24 POWER TRIM & TILT ASSY 1 PUISSANCE PARER ET INCLINER 1

REF. NO.	PART NO. N° PIECES	DESCRIPTION DESCRIPTION	6CY2					REMARKS REMARQUES
28	69A–4384F–00	.SEAL, MAIN VALVE .JOINT	2					
29	6H1–43883–00	.O-RING .JOINT TORIQUE	1					
30	99002–03600	.CLIP .CIRCLIP	2					
31	93505–32038	.BALL .BILLE	4					
32	69J–43853–00	.SPRING, MAIN VALVE .RESSORT	2					
33	69J–4389J–00	.O-RING .JOINT TORIQUE	2					
34	69J–43855–00	.SPRING, UP RELIEF .RESSORT	1					
35	6H1–4384F–10	.SEAL, MAIN VALVE .JOINT	1					
36	69W–43856–00	.SPRING, DOWN RELIEF .RESSORT	1					
37	6H1–43844–10	.PIN, VALVE SUPPORT .GOUPILLE	1					
38	93604–26256	.PIN, DOWEL .CLAVETTE	2					
39	6CJ–43816–00	.FILTER 1 .FILTRE 1	1					
40	69W–4382L–00	.CAP, RELIEF VALVE .CAPUCHON	1					
41	91318–05020	.BOLT .BOULON	2					
42	91318–05008	.BOLT .BOULON	2					
43	93501–08001	.BALL .BILLE	1					
44	69W–4384G–00	.SEAL, RELIEF VALVE .JOINT	1					
45	69W–43854–00	.SPRING, MANUAL RELEASE .RESSORT	1					
46	69J–43894–00	.SPRING, SHUTTLE RETURN .RESSORT	2					
47	62Y–4387J–00	.WASHER, SPECIAL 2 .RONDELLE	1					
48	62Y–22434–00	.PLATE, VALVE 1 .PLATEAU, SOUPAPE 1	1					
49	62Y–43871–00	.RING, BACK UP .SEGMENT	1					
50	62Y–4387G–00	.WASHER .RONDELLE	2					
51	6CJ–43893–00	.WASHER .RONDELLE	2					
52	93505–32038	.BALL .BILLE	2					
53	65W–4386A–00	.PIN, ABSORBER VALVE .GOUPILLE, SOUPAPE	2					
54	93210–08391	.O-RING .JOINT TORIQUE	1					

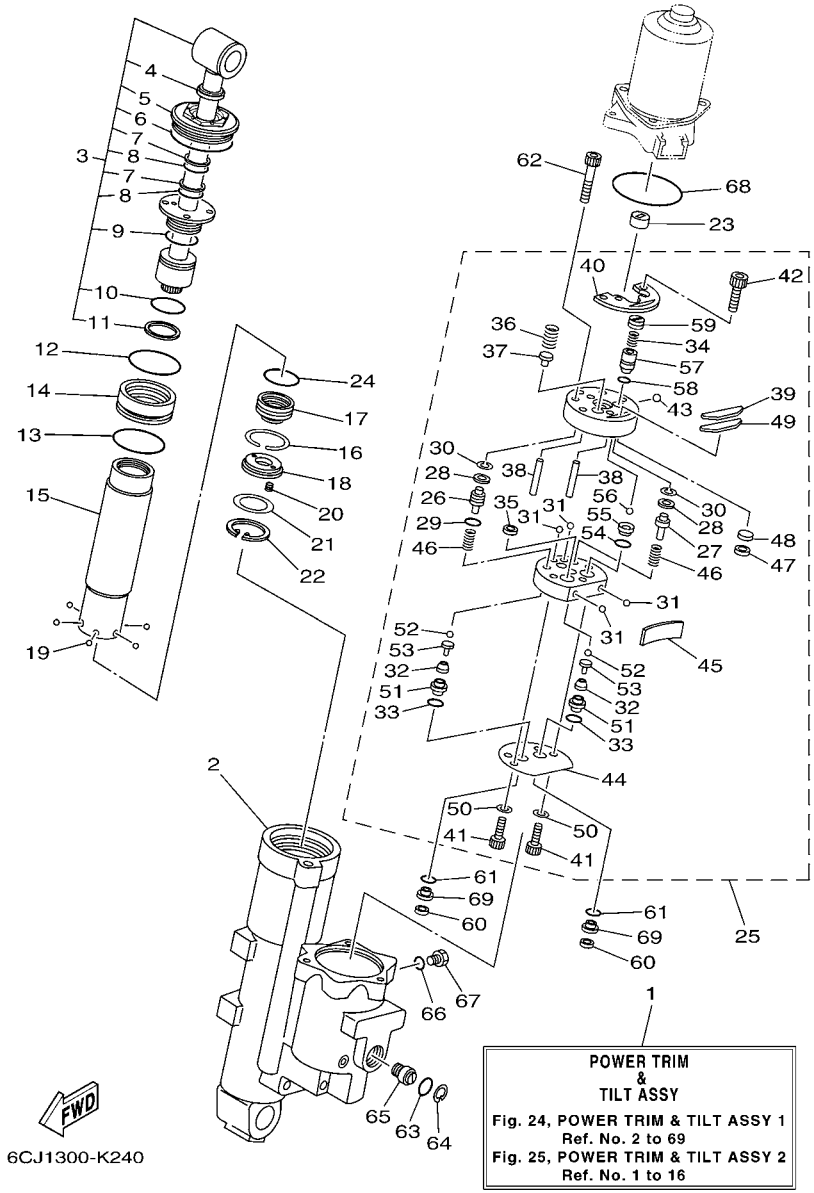

FIG. 24 POWER TRIM & TILT ASSY 1 PUISSANCE PARER ET INCLINER 1

REF. NO.	PART NO. N° PIECES	DESCRIPTION DESCRIPTION	6CY2					REMARKS REMARQUES
55	69J–43851–00	.SEAT, RELIEF VALVE .SIEGE	1					
56	93501–08001	.BALL .BILLE	1					
57	6CJ–43844–00	.PIN, VALVE SUPPORT .GOUPILLE	1					
58	93210–064A5	.O-RING .JOINT TORIQUE	1					
59	6CJ–43843–00	.SCREW, VALVE LOCK .VIS	1					
60	6H1–43816–00	FILTER 1 FILTRE 1	2					
61	69J–4389J–00	O-RING JOINT TORIQUE	2					
62	91318–06040	BOLT BOULON	3					
63	6D8–43863–00	O-RING JOINT TORIQUE	1					
64	6H1–43875–00	RING, SNAP RESSORT	1					
65	62Y–43845–00	SCREW, MANUAL RELEASE VIS	1					
66	93210–09165	O-RING JOINT TORIQUE	1					
67	6H1–43829–00	PLUG, RESERVOIR BOUCHON	1					
68	62X–43865–00	O-RING JOINT TORIQUE	1					
69	6CJ–43899–00	PLATE STOPPER PLAQUETTE	2					

FIG. 25 POWER TRIM & TILT ASSY 2 PUISSANCE PARER ET INCLINER 2

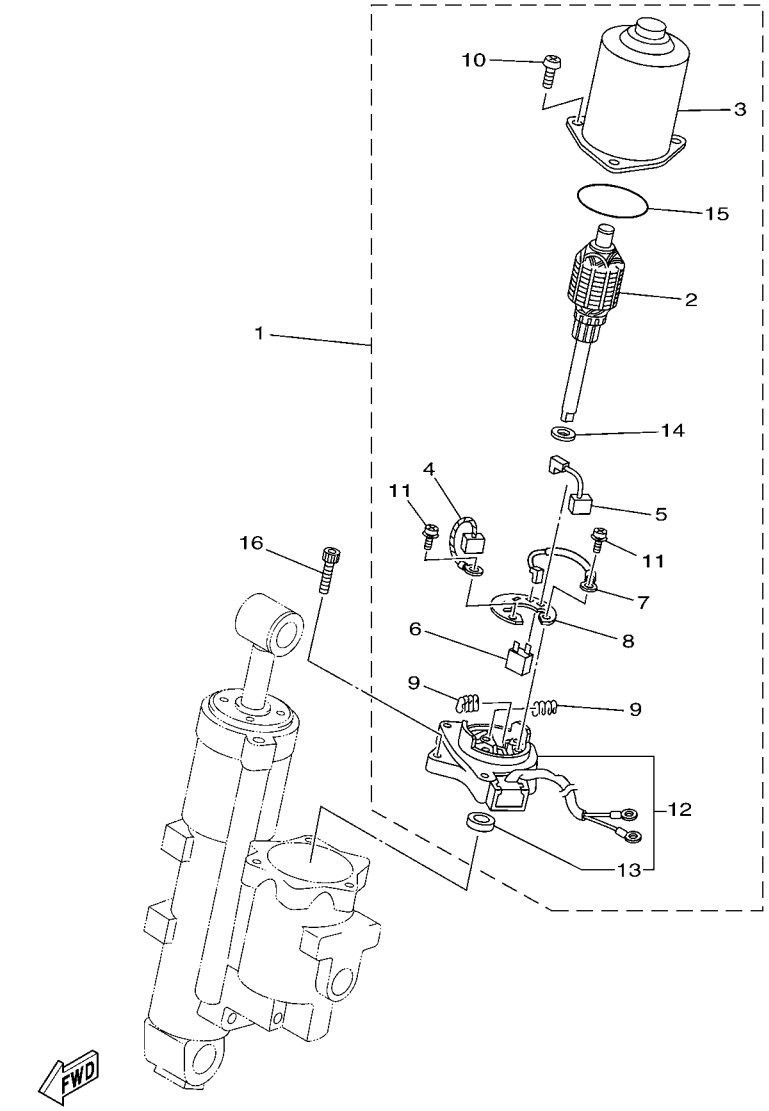

REF. NO.	PART NO. N° PIECES	DESCRIPTION DESCRIPTION	6CY2					REMARKS REMARQUES
1	69W–43880–01	MOTOR ASSY MOTEUR (ENS.)	1					
2	69W–43805–01	.ARMATURE ASSY .INDUIT (ENS.)	1					
3	62X–43804–01	.STATOR ASSY .STATOR (ENS.)	1					
4	62Y–43892–00	.BRUSH 2 .BALAI 2	1					
5	62Y–43891–00	.BRUSH 1 .BALAI 1	1					
6	69W–82181–00	.CIRCUIT BREAKER COMP. .RUPTEUR COMPLET	1					
7	62X–43807–00	.WIRE SUB ASSY .AUXILIAIRE CABLE (ENS.)	1					
8	69W–4380F–00	.PLATE, BRUSH HOLDER .PLAQUE	1					
9	62X–4386K–00	.SPRING, BRUSH .RESSORT, BALAI	2					
10	97880–05020	.SCREW, PAN HEAD .VIS, TETE TRONCONIQUE	3					
11	97602–04216	.SCREW, PAN HEAD WITH WASHER .VIS	2					
12	69W–43881–00	.FRAME, END .BATI	1					
13	93102–08414	..OIL SEAL ..JOINT SPY	1					
14	90201–083J8	.WASHER, PLATE .RONDELLE, PLATE	1					
15	93210–52449	.O-RING .JOINT TORIQUE	1					
16	62X–43888–00	BOLT, SOCKET BOULON	3					

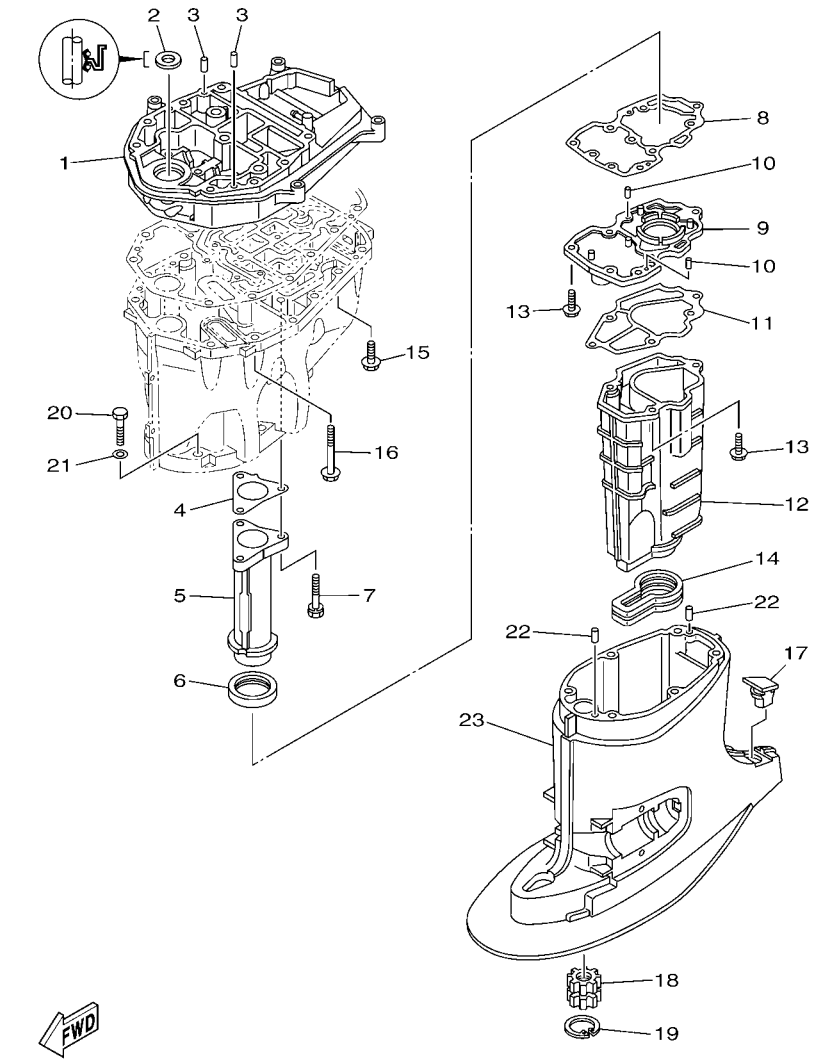

FIG. 26 UPPER CASING FOURREAU

REF. NO.	PART NO. N° PIECES	DESCRIPTION DESCRIPTION	6CY2					REMARKS REMARQUES
1	6C5–41137–02–CA	GUIDE, EXHAUST COLLECTEUR D'ECHAPPEMENT	1					
2	93103–18011	OIL SEAL JOINT SPY	1					
3	93608–12M05	PIN, DOWEL AXE	2					
4	6C5–41133–00	GASKET, EXHAUST MANIFOLD 1 JOINT, PIPE D'ECHAPPEMENT	1					
5	6C5–41131–00–CA	MANIFOLD, EXT. 1 PIPE D'ECHAPPEMENT	1					
6	6C5–46132–00	GASKET 1 JOINT 1	1					
7	90119–06261	BOLT, WITH WASHER BOULON, AVEC RONDELLE	3					
8	6C5–41134–00	GASKET, EXHAUST MANIFOLD JOINT, PIPE D'ECHAPPEMENT	1					
9	6CJ–45181–00–CA	PLATE PLAQUETTE	1					
10	93604–10M03	PIN, DOWEL CLAVETTE	2					
11	6C5–41135–00	GASKET, EXHAUST MANIFOLD JOINT, PIPE D'ECHAPPEMENT	1					
12	6CJ–14711–00–9S	MUFFLER 1 POT D'ECHAPPEMENT 1	1					
13	97575–06525	BOLT, WITH WASHER VIS HEXAGONAL AVC RONDELLE	6					
14	6C5–45123–00	GASKET, MUFFLER JOINT, POT DE DETENTE	1					
15	90119–08102	BOLT, WITH WASHER BOULON, AVEC RONDELLE	4					
16	90119–08132	BOLT, WITH WASHER BOULON, AVEC RONDELLE	8					
17	6C5–45155–00	CAP CAPUCHON	1					
18	69W–45318–00	BUSHING, DRIVE SHAFT DOUILLE, ARBRE MOTEUR	1					
19	93420–36M01	CIRCLIP CIRCLIP, TYPE S	1					
20	97075–10045	BOLT BOULON	6					
21	92995–10600	WASHER RONDELLE	6					
22	93606–12019	PIN, DOWEL GOUPILLE	2					
23	6C5–45111–00–8D	CASING, UPPER FOURREAU	1					

FIG. 27 OIL PAN — VENTILATEUR D'HUILE

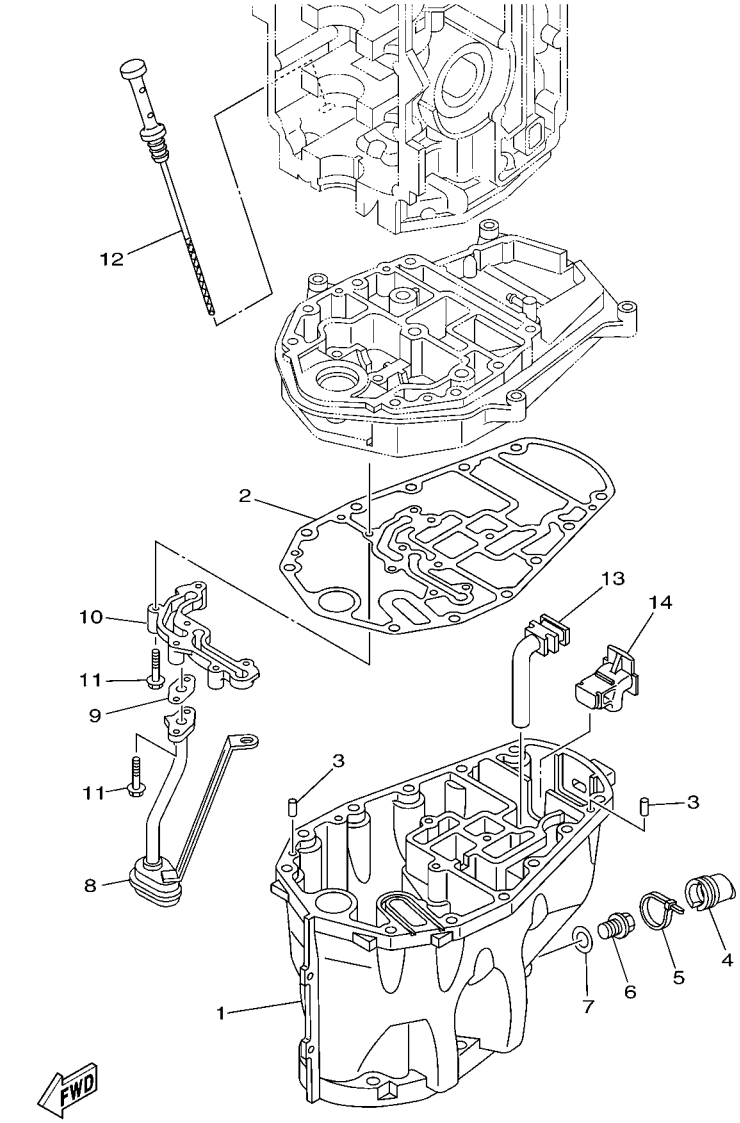

REF. NO.	PART NO. N° PIECES	DESCRIPTION DESCRIPTION	6CY2					REMARKS REMARQUES
1	6C5–15311–01–CA	OIL PAN VENTILATEUR D'HUILE	1					
2	6C5–15312–01	GASKET, OIL PAN JOINT DE VENTILATEUR D'HUILE	1					
3	93606–12019	PIN, DOWEL GOUPILLE	2					
4	6CJ–15316–00	DAMPER 1 AMORTISSEUR 1	1					
5	90465–11M59	CLAMP BRIDE	1					
6	90340–14M06	PLUG, STRAIGHT SCREW PLOT, FILETE DROIT	1					
7	90430–14M09	GASKET JOINT	1					
8	6CJ–13411–00	STRAINER, OIL FILTRE, HUILE	1					
9	6C5–13414–01	GASKET, STRAINER COVER JOINT, COUVERCLE DE FILTRE	1					
10	6CJ–15333–00	COVER COUVERCLE	1					
11	95812–06035	BOLT, FLANGE BOULON	6					
12	6C5–15362–00	PLUG, OIL LEVEL PLOT, NIVEAU D'HUILE	1					
13	6C5–45135–01	PIPE TUYAU	1					
14	6C5–45136–01	PIPE DURITE	1					

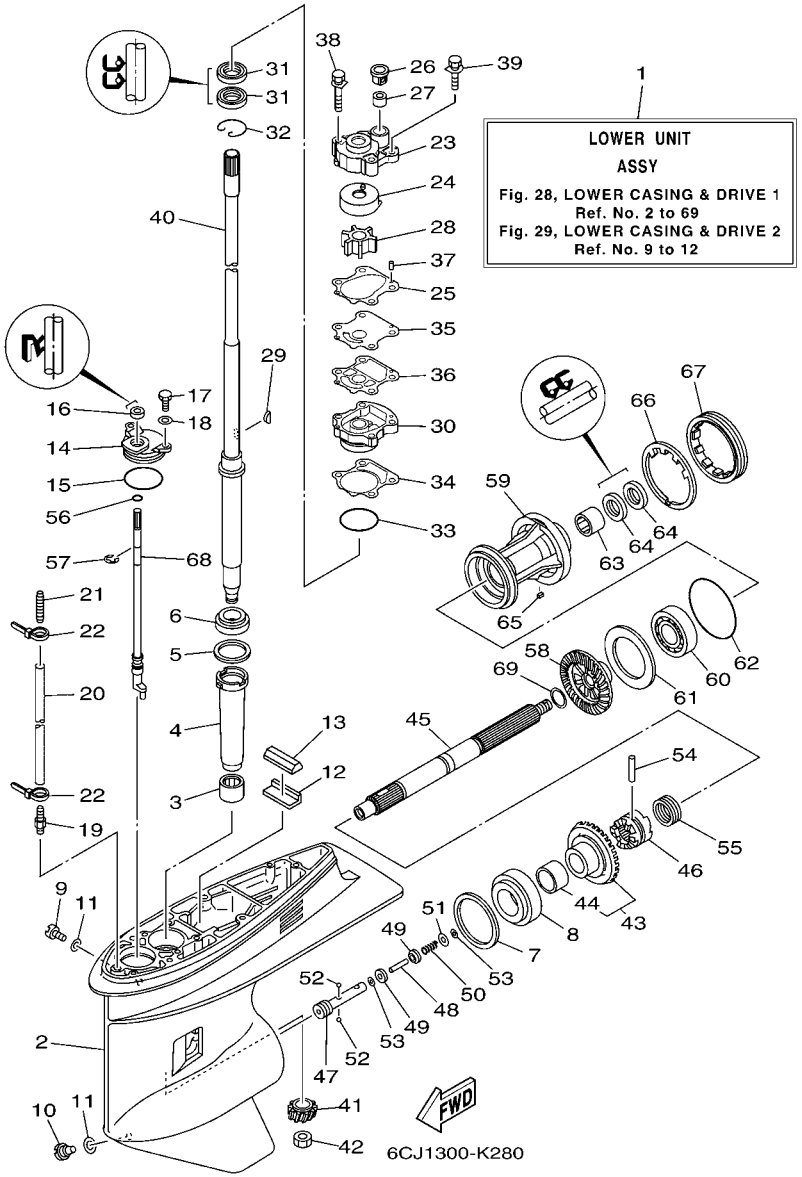

FIG. 28 LOWER CASING & DRIVE 1 BOITIER D'HELICE TRANSMISSION1

REF. NO.	PART NO. N° PIECES	DESCRIPTION DESCRIPTION	6CY2					REMARKS REMARQUES
1	6CJ–45300–30–8D	LOWER UNIT ASSY UNITE INFERIEURE (ENS.)	1					L(21.0") L(21.0")
2	67F–45301–00–8D	CASING, LOWER BEQUILLE	1					
3	93315–52563	BEARING ROULEMENT	1					
4	688–45536–01	SLEEVE, DRIVE SHAFT MANCHON, ARBRE MOTEUR	1					
5	688–45587–01	SHIM (T:0.10MM) CALE (T:0.10MM)	1					UR UR
	688–45587–10	SHIM (T:0.12MM) CALE (T:0.12MM)	1					UR UR
	688–45587–20	SHIM (T:0.15MM) CALE (T:0.15MM)	1					UR UR
	688–45587–30	SHIM (T:0.18MM) CALE (T:0.18MM)	1					UR UR
	688–45587–40	SHIM (T:0.30MM) CALE (T:0.30MM)	1					UR UR
	688–45587–50	SHIM (T:0.40MM) CALE (T:0.40MM)	1					UR UR
	688–45587–60	SHIM (T:0.50MM) CALE (T:0.50MM)	1					UR UR
6	93332–000U3	BEARING ROULEMENT	1					
7	688–45567–01	SHIM (T:0.10MM) CALE (T:0.10MM)	1					UR UR
	688–45567–10	SHIM (T:0.12MM) CALE (T:0.12MM)	1					UR UR
	688–45567–20	SHIM (T:0.15MM) CALE (T:0.15MM)	1					UR UR
	688–45567–30	SHIM (T:0.18MM) CALE (T:0.18MM)	1					UR UR
	688–45567–40	SHIM (T:0.30MM) CALE (T:0.30MM)	1					UR UR
	688–45567–50	SHIM (T:0.40MM) CALE (T:0.40MM)	1					UR UR
	688–45567–60	SHIM (T:0.50MM) CALE (T:0.50MM)	1					UR UR
8	93332–00095	BEARING ROULEMENT	1					
9	90340–08002	PLUG, STRAIGHT SCREW PLOT, FILETE DROIT	1					
10	688–45341–10	PLUG, DRAIN BOUCHON DE VIDANGE	1					
11	90430–08020	GASKET JOINT	2					
12	663–45376–00	GUIDE, SEAL DAMPER BUTEE, JOINT CAOUTCHOUC	1					
13	688–45375–00	DAMPER, SEAL BOURRELET, CAOUTCHOUC	1					
14	688–45321–00	PLATE PLAQUETTE	1					
15	93210–49046	O-RING JOINT TORIQUE	1					

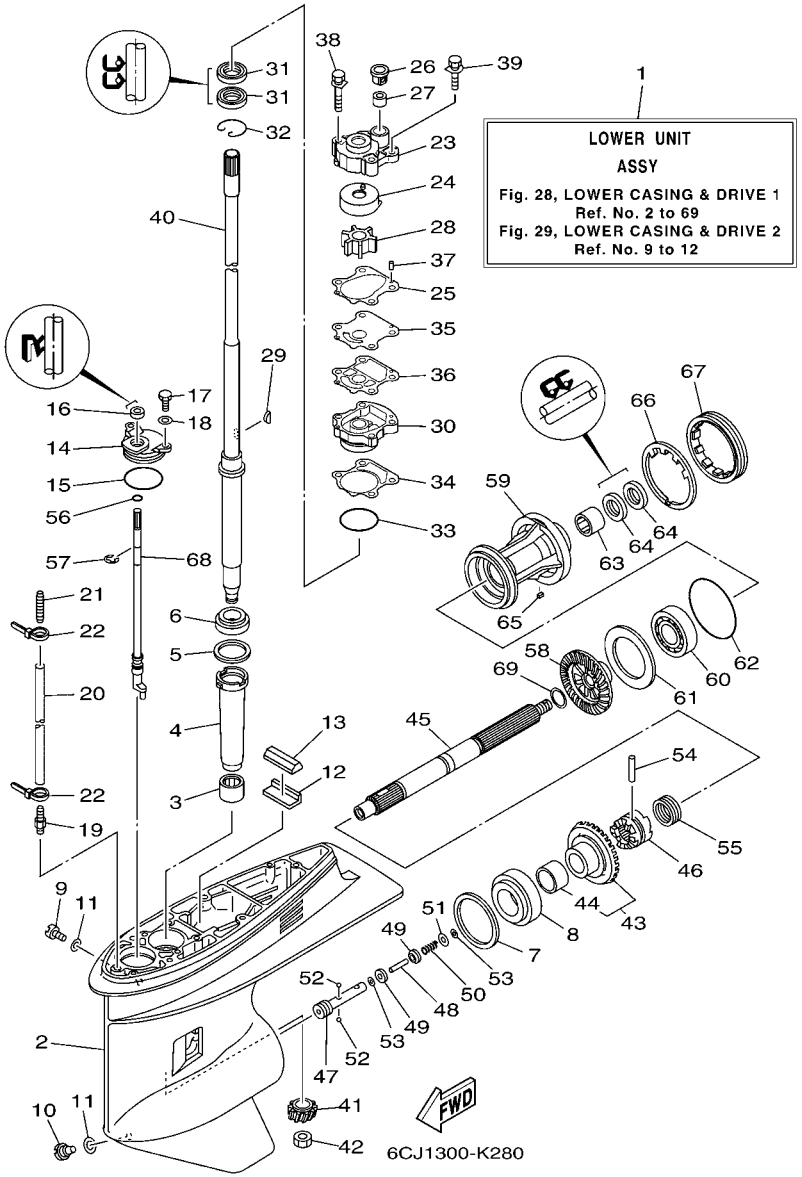

FIG. 28 LOWER CASING & DRIVE 1 BOITIER D'HELICE TRANSMISSION1

REF. NO.	PART NO. N° PIECES	DESCRIPTION DESCRIPTION	6CY2					REMARKS REMARQUES
16	93106–09014	OIL SEAL JOINT SPY	1					
17	97095–06016	BOLT BOULON	2					
18	92995–06600	WASHER RONDELLE	2					
19	6E5–45378–00	NIPPLE, HOSE RACCORD, TUYAU	1					
20	90445–07ME8	HOSE (L80) DURITE (L80)	1					L(21.0") L(21.0")
21	6E5–83558–10	END, NIPPLE RACCORD DE NIPPLE	1					
22	90465–11M10	CLAMP BRIDE	2					
23	6CJ–44311–00	HOUSING, WATER PUMP CORPS, POMPE A EAU	1					
24	63D–44322–00	INSERT, CARTRIDGE CUVETTE	1					
25	6CJ–44315–00	GASKET, WATER PUMP JOINT, POMPE A EAU	1					
26	63D–44312–00	COVER, WATER PUMP HOUSING COUVERCLE	1					
27	663–44366–00	DAMPER, WATER SEAL 2 JOINT, TUBE D'EAU 2	1					
28	6H3–44352–00	IMPELLER TURBINE	1					
29	90280–03M03	KEY, WOODRUFF CLAVETTE, DEMI-LUNE	1					
30	6CJ–44341–00–CA	HOUSING, WATER PUMP CORPS, POMPE A EAU	1					
31	93101–23070	OIL SEAL JOINT SPY	2					
32	93450–40165	CIRCLIP CIRCLIP, TYPE S	1					
33	93210–46044	O-RING JOINT TORIQUE	1					
34	6CJ–44316–00	GASKET, WATER PUMP JOINT, POMPE A EAU	1					
35	6CJ–44323–00	OUTER PLATE, CARTRIDGE PLAQUE EXTERIEURE	1					
36	6CJ–44324–00	GASKET, CARTRIDGE JOINT	1					
37	93604–10M03	PIN, DOWEL CLAVETTE	2					
38	90119–08M33	BOLT, WITH WASHER BOULON, AVEC RONDELLE	2					
39	90119–08M14	BOLT, WITH WASHER BOULON, AVEC RONDELLE	2					
40	64J–45501–30	DRIVE SHAFT COMP. ARBRE MOTEUR COMP.	1					L(21.0") L(21.0")
41	6CJ–45551–00	PINION (12T) PIGNON D'ATTAQUE (12D)	1					
42	90170–16M01	NUT ECROU	1					

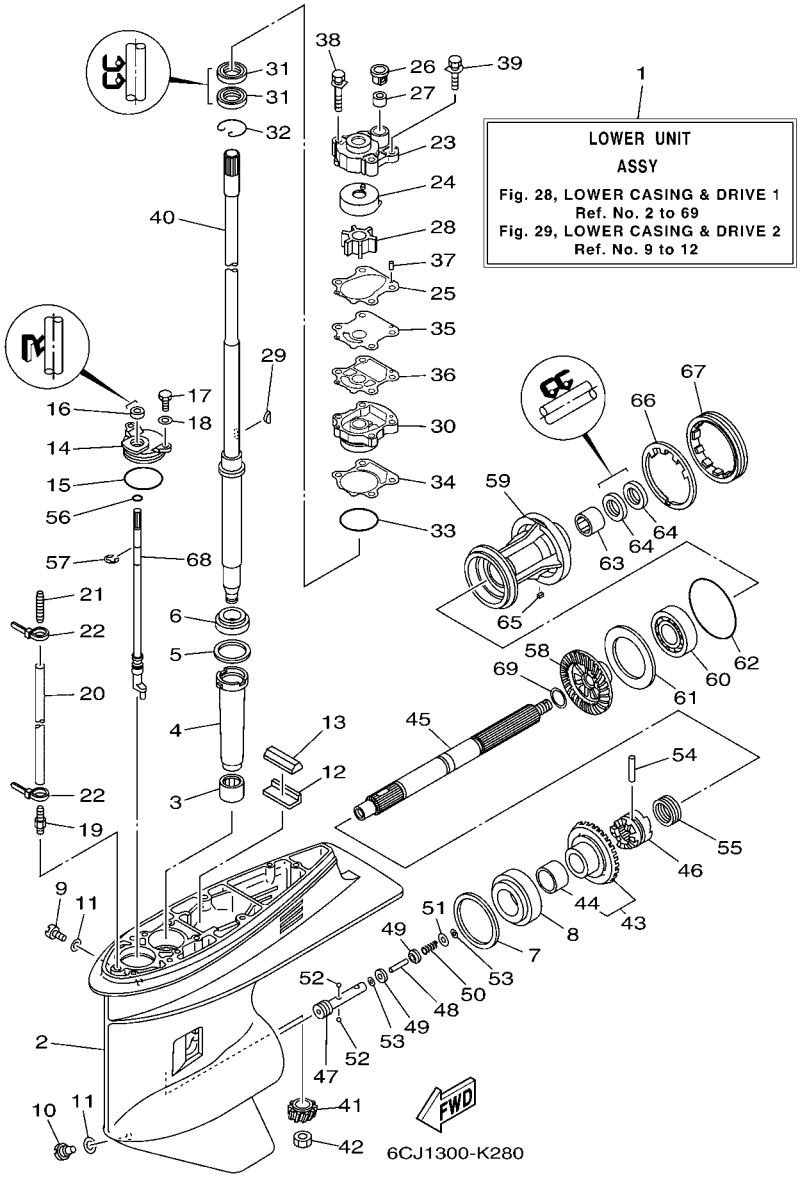

FIG. 28 LOWER CASING & DRIVE 1 BOITIER D'HELICE TRANSMISSION1

REF. NO.	PART NO. N° PIECES	DESCRIPTION DESCRIPTION	6CY2					REMARKS REMARQUES
43	6CJ–45560–00	GEAR 1 (28T) PIGNON 1 (28T)	1					
44	93317–322V0	.BEARING .ROULEMENT	1					
45	67F–45611–01	SHAFT, PROPELLER ARBRE, HELICE	1					
46	6D8–45631–00	CLUTCH, DOG CRABOT	1					
47	67F–45634–00	SLIDE, SHIFT CONTRE-POUSSOIR	1					
48	6H1–45668–00	SHAFT, FREE 1 AXE 1	1					
49	6H1–45635–00	PLUNGER, SHIFT POUSSOIR D'EMBRAYAGE	2					
50	90501–12M48	SPRING, COMPRESSION RESSORT, COMPRESSION	1					
51	90201–03313	WASHER, PLATE RONDELLE, PLATE	1					
52	93503–16003	BALL BILLES	2					
53	90183–02M03	NUT, SPRING ECROU, RESSORT	2					
54	90250–07M02	PIN, STRAIGHT GOUPILLE, DROITE	1					
55	688–45633–00	RING, CROSS PIN JONC, GOUPILLE CRABOT	1					
56	93210–07003	O-RING JOINT TORIQUE	1					
57	99001–08600	CIRCLIP CIRCLIP	1					
58	68S–45571–00	GEAR 2 (28T) PIGNON 2 (28T)	1					
59	67F–45331–00–CA	HOUSING, BEARING FLASQUE, ROULEMENT	1					
60	93306–207U0	BEARING ROULEMENT	1					
61	67F–45576–00	WASHER, THRUST 2 RONDELLE DE CALAGE 2	1					
62	93210–86M39	O-RING JOINT TORIQUE	1					
63	93317–325U0	BEARING ROULEMENT	1					
64	93101–25M03	OIL SEAL JOINT SPY	2					
65	90282–04010	KEY, STRAIGHT CLAVETTE, DROITE	1					
66	688–45383–02	WASHER, CLAW FREIN D'ECROU	1					
67	688–45384–02	NUT ECROU	1					
68	64J–44150–01	SHIFT CAM ASSY CAME D'INVERSION	1					
69	90201–25M05	WASHER, PLATE RONDELLE, PLATE	1					

FIG. 29 LOWER CASING & DRIVE 2 BOITIER D'HELICE TRANSMISSION2

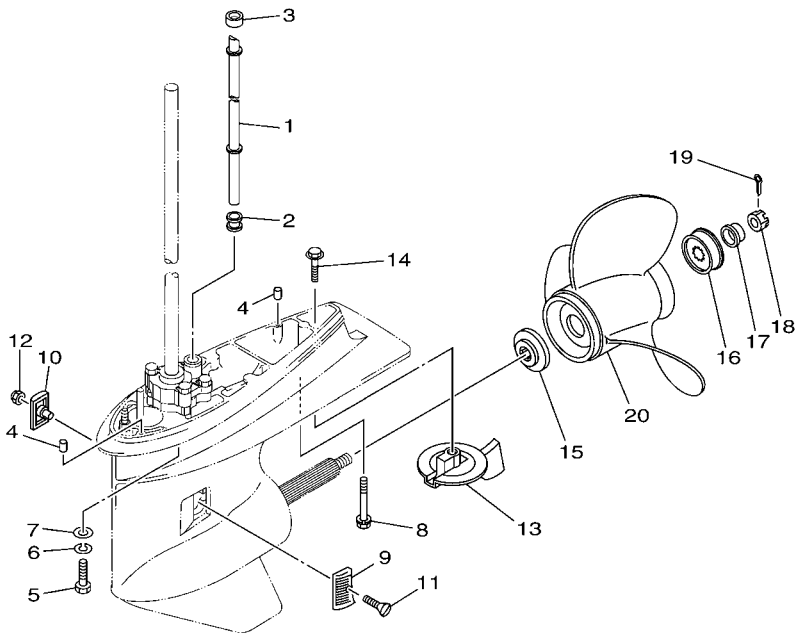

6CJ1100-K300

REF. NO.	PART NO. N° PIECES	DESCRIPTION DESCRIPTION	6CY2					REMARKS REMARQUES
1	6CJ–44361–00	TUBE, WATER 1 TUBE D'EAU 1	1					L(21.0") L(21.0")
2	663–44367–00	DAMPER, WATER SEAL 3 JOINT TUBE D'EAU 3	1					
3	663–44366–00	DAMPER, WATER SEAL 2 JOINT, TUBE D'EAU 2	1					
4	93606–12019	PIN, DOWEL GOUPILLE	2					
5	97075–10040	BOLT BOULON	4					L(21.0") L(21.0")
6	92995–10100	WASHER RONDELLE	4					L(21.0") L(21.0")
7	92995–10600	WASHER RONDELLE	4					L(21.0") L(21.0")
8	90119–08M84	BOLT, WITH WASHER BOULON, AVEC RONDELLE	1					L(21.0") L(21.0")
9	6H1–45214–00	COVER, WATER INLET 1 GRILLE, ENTREE D'EAU 1	1					
10	6H1–45215–00	COVER, WATER INLET 2 GRILLE, ENTREE D'EAU 2	1					
11	90151–05M00	SCREW, COUNTERSUNK VIS, TETE NOYEE	1					
12	90185–05002	NUT, NYLON ECROU,AUTO-BLOQUANT	1					
13	67F–45371–00	TAB-TRIM ANODE DERIVE	1					
14	90105–10M67	BOLT, FLANGE BOULON	1					
15	688–45987–01	SPACER 1 ENTRETOISE 1	1					
16	67F–45997–00	SPACER 2 ENTRETOISE 2	1					
17	90389–25M00	BUSH DOUILLE	1					
18	90171–16011	NUT, CASTLE ECROU, CRENELE	1					
19	91490–40025	PIN. COTTER GOUPILLE	1					
20	6E5–45941–00	PROPELLER (3X13"X19"-K) HELICE (3X13"X19"-K)	1					UR UR
	6E5–45943–00	PROPELLER (3X12-5/8"X21"-K) HELICE (3X12-5/8"X21"-K)	1					UR UR
	6E5–45945–01	PROPELLER (3X13-1/4"X17"-K) HELICE (3X13-1/4"X17"-K)	1					UR UR
	6E5–45947–00	PROPELLER (3X13-1/2"X15"-K) HELICE (3X13-1/2"X15"-K)	1					UR UR
	6E5–45949–00	PROPELLER (3X13-5/8"X13"-K) HELICE (3X13-5/8"X13"-K)	1					UR UR
	6E5–45952–00	PROPELLER (3X13"X23"-K) HELICE (3X13"X23"-K)	1					UR UR
	6E5–45954–00	PROPELLER (3X14"X11"-K) HELICE (3X14"X11"-K)	1					UR UR
	6E5–45956–00	PROPELLER (3X13"X25"-K) HELICE (3X13"X25"-K)	1					UR UR

FIG. 29 LOWER CASING & DRIVE 2 BOITIER D'HELICE TRANSMISSION2

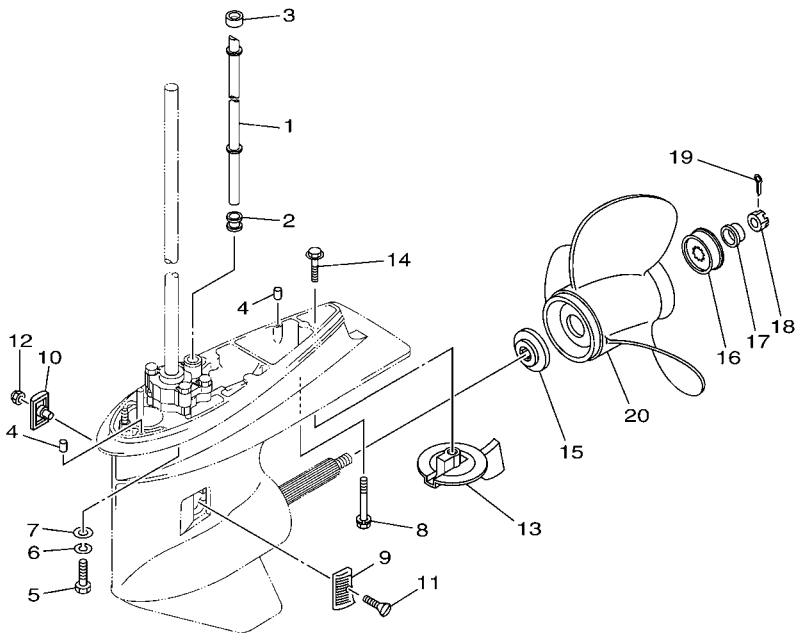

6CJ1100-K300

REF. NO.	PART NO. N° PIECES	DESCRIPTION DESCRIPTION	6CY2					REMARKS REMARQUES
20	6E5–45958–00	PROPELLER (3X13-5/8"X14"-K) HELICE (3X13-5/8"X14"-K)	1					UR UR
	688–45970–03	PROPELLER (3X13"X19"-K) HELICE (3X13"X19"-K)	1					UR UR
	688–45972–02	PROPELLER (3X13"X21"-K) HELICE (3X13"X21"-K)	1					UR UR
	688–45974–02	PROPELLER (3X13"X23"-K) HELICE (3X13"X23"-K)	1					UR UR
	688–45976–01	PROPELLER (3X13"X25"-K) HELICE (3X13"X25"-K)	1					UR UR
	688–45978–60	PROPELLER (3X13-1/2"X16"-K) HELICE (3X13-1/2"X16"-K)	1					UR UR
	688–45930–02	PROPELLER (3X13"X17"-K2) HELICE (3X13"X17"-K2)	1					UR UR
	688–45932–60	PROPELLER (3X13-1/2"X14"-K) HELICE (3X13-1/2"X14"-K)	1					UR UR
	68V–45941–00	PROPELLER (3X13-1/2"X17"-K) HELICE (3X13-1/2"X17"-K)	1					UR UR
	68V–45943–00	PROPELLER (3X13-1/2"X19"-K) HELICE (3X13-1/2"X19"-K)	1					UR UR

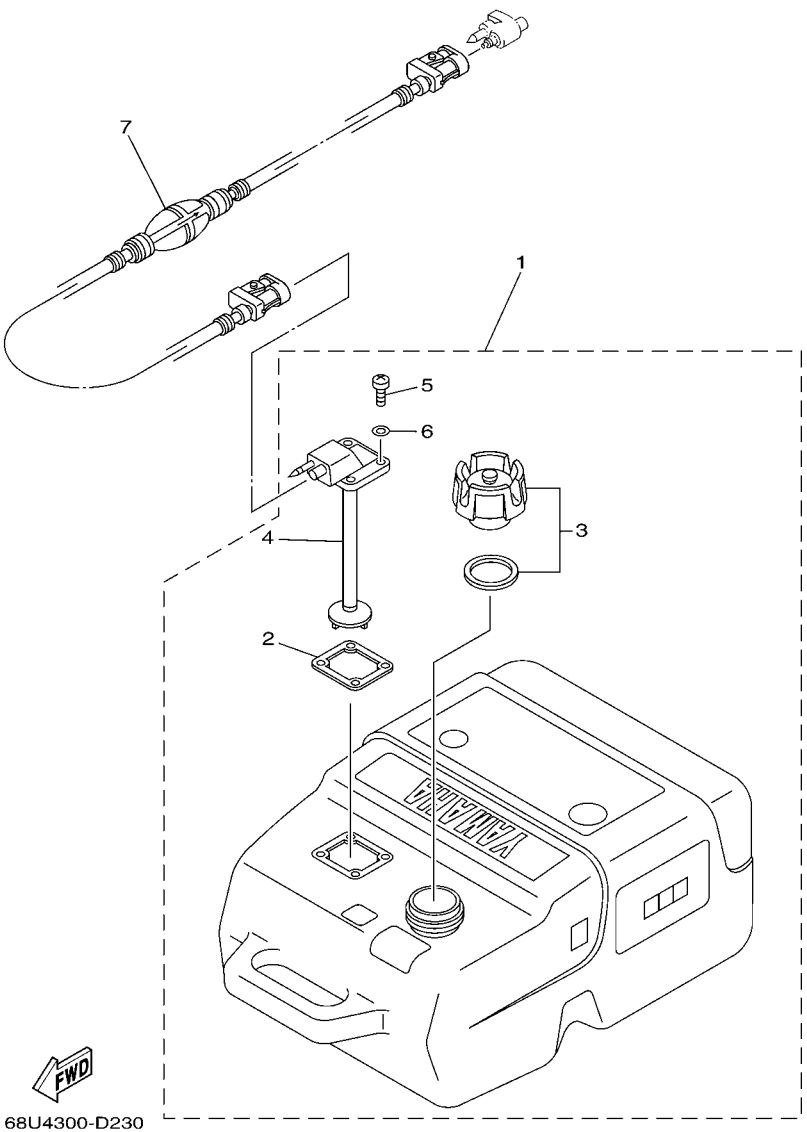

FIG. 30 FUEL TANK — RESERVOIR A CARBURANT

REF. NO.	PART NO. N° PIECES	DESCRIPTION DESCRIPTION	6CY2					REMARKS REMARQUES
1	6YK–24201–03	FUEL TANK ASSY (25L) RESERVOIR A ESSENCE (ENS.) 25L	1					AP AP
2	6YL–24268–01	.GASKET, FUEL METER .JOINT, JAUGE A CARBURANT	1					
3	6YK–24610–01	.CAP ASSY .BOUCHON	1					
4	6YK–24260–01	.FUEL METER ASSY .INDICATEUR DE CARBURANT	1					
5	90157–05M16	.SCREW, PAN HEAD .VIS, TETE TRONCONIQUE	4					
6	6YL–24329–00	.SEAL .JOINT	4					
7	6YL–24306–54	FUEL PIPE COMP. 1 DURITE A ESSENCE 1	1					AP AP

FIG. 31 STEERING GUIDE FIXATION DE DIRECTION

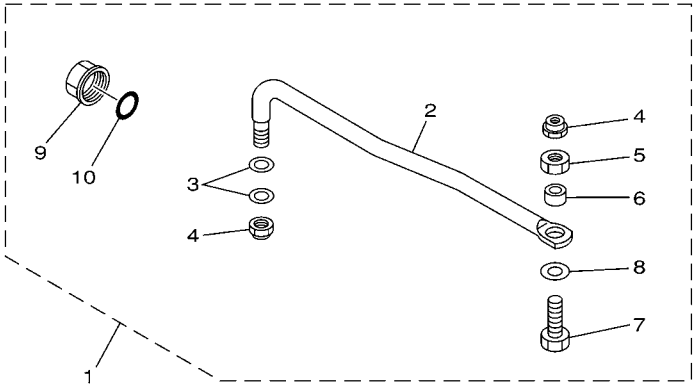

65W0010-8210

REF. NO.	PART NO. N° PIECES	DESCRIPTION DESCRIPTION	6CY2					REMARKS REMARQUES
1	65W–61350–00	STEERING GUIDE ATTACHMENT KIT FIXATIONS DE DIRECTION	1					AP AP
2	65W–61351–00	.ROD, STEERING LINK .RENVOI DE DIRECTION	1					
3	90201–10M20	.WASHER, PLATE .RONDELLE, PLATE	2					
4	90185–09M01	.NUT, SELF-LOCKING .ECROU,AUTO-BLOQUANT	2					
5	90170–09M03	.NUT .ECROU	1					
6	90387–10M42	.COLLAR .COLLERETTE	1					
7	90101–09M01	.BOLT .BOULON	1					
8	90201–10M63	.WASHER, PLATE .RONDELLE, PLATE	1					
9	6E5–43145–01	.CAP, CLAMP BRACKET .CAPUCHON, PRESSE	1					
10	93210–16275	.O-RING .JOINT TORIQUE	1					

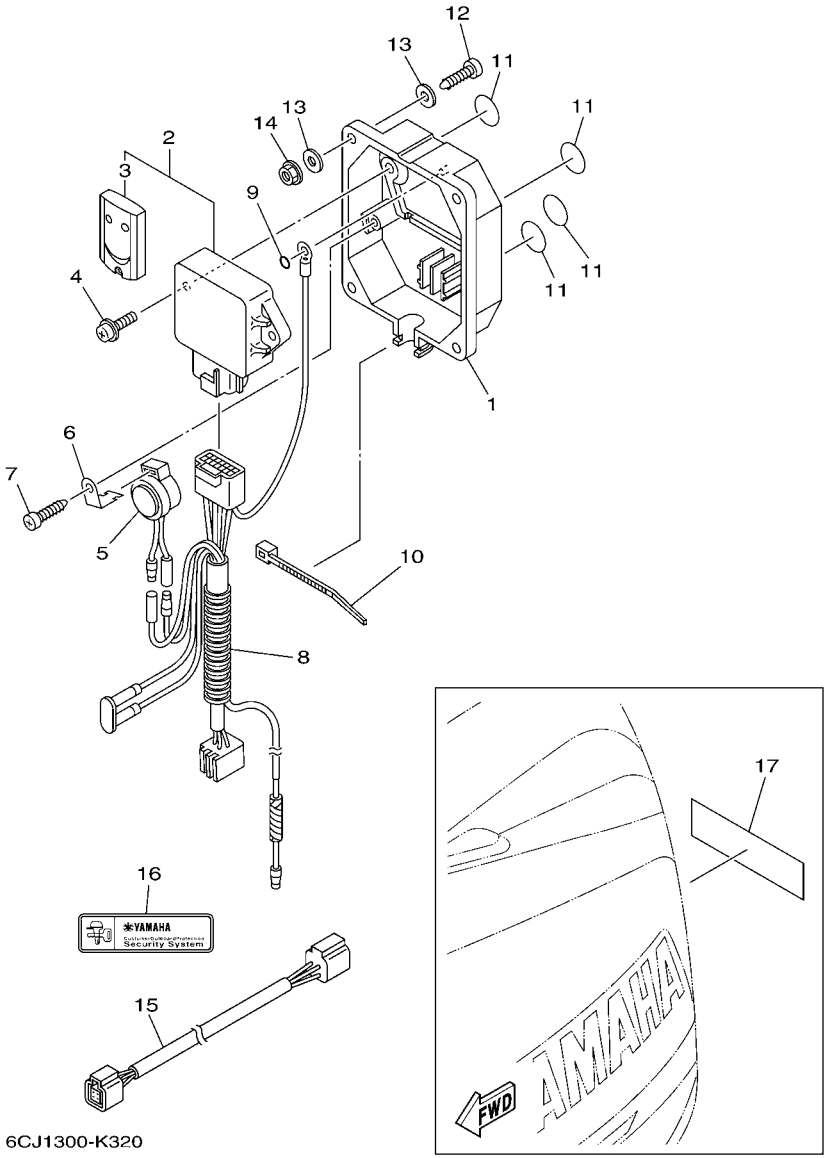

FIG. 32 OPTIONAL PARTS PIECES OPTIONNELLES

REF. NO.	PART NO. N° PIECES	DESCRIPTION DESCRIPTION	6CY2					REMARKS REMARQUES
1	6Y8–86267–00	CASE COMPLETE 1 CARTER (ENS.) 1	1					
2	6Y8–86260–02	REMOTE CONTROL UNIT ASSY UNITE DE TELECOMMANDE (ENS.)	1					
3	6AA–86261–00	.TRANSMITTER COMP .TRANSMETTEUR	2					
4	97980–06216	SCREW, WITH WASHER VIS, AVEC RONDELLE	2					
5	6X4–83383–00	BUZZER RONFLEUR	1					
6	6X4–83386–00	STAY, BUZZER SUPPOR, RONFLEUR	1					
7	97780–60620	SCREW, TAPPING VIS, TETE BOMBEE	1					
8	6Y8–82509–10	WIRE, SUB LEAD FIL, SECONDAIRE	1					
9	93210–04279	O-RING JOINT TORIQUE	1					
10	90465–11M10	CLAMP BRIDE	1					
11	6Y8–8454G–00	PATCH 1 TAMPON 1	4					
12	90167–06M00	SCREW, TAPPING VIS, TETE FRAISEE	4					UR UR
	97880–06035	SCREW, PAN HEAD VIS, TETE TRONCONIQUE	4					UR UR
13	90201–06M30	WASHER, PLATE RONDELLE, PLATE	8					
14	95780–06300	NUT, FLANGE ECROU	4					
15	6Y8–82521–11	2FT PIGTAIL BUS FIL	1					
16	6Y8–48277–00	STICKER 1 ETIQUETTE 1	1					
17	6Y8–48277–00	STICKER 1 ETIQUETTE 1	1					

FIG. 33 REPAIR KIT 1 — KITS DE REPARATION 1

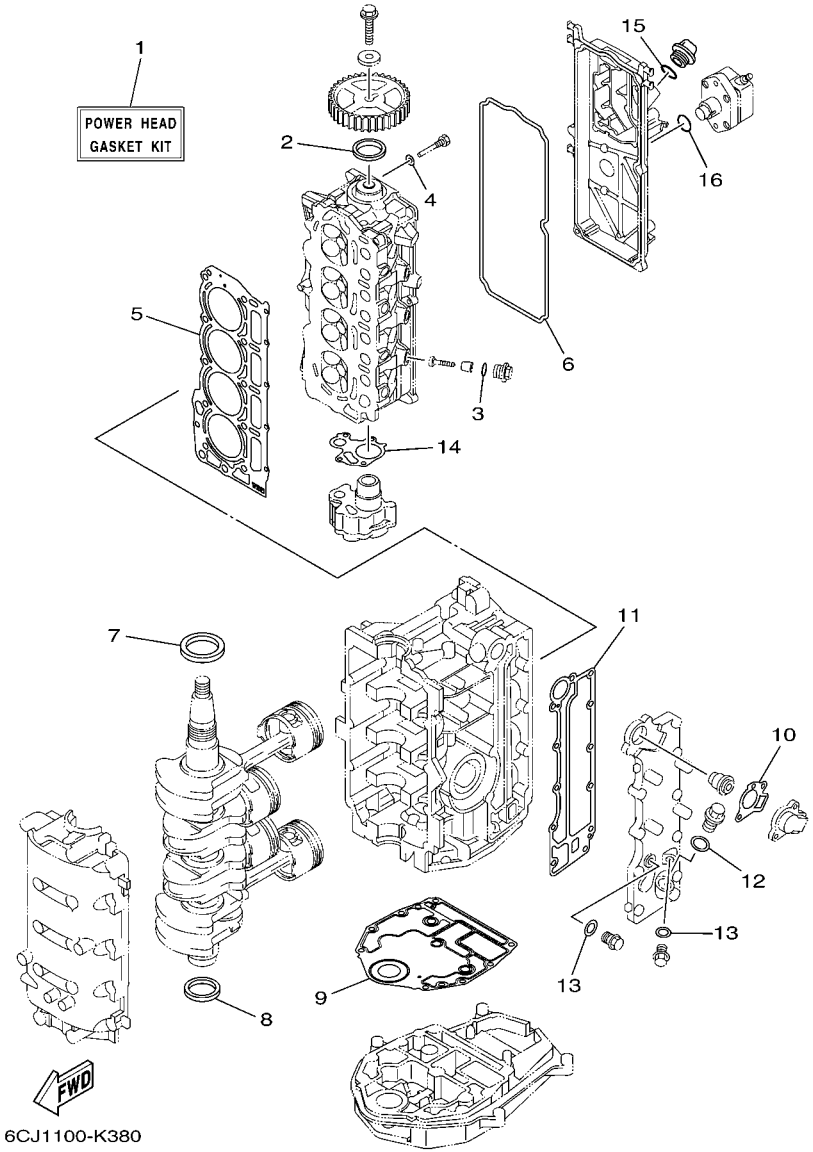

REF. NO.	PART NO. N° PIECES	DESCRIPTION DESCRIPTION	6CY2					REMARKS REMARQUES
1	6CJ–W0001–00	POWER HEAD GASKET KIT POCHETTE DE JINTS TETE MOTRICE	1					
2	93102–37M40	.OIL SEAL .JOINT SPY	1					
3	93210–13M63	.O-RING .JOINT TORIQUE	3					
4	90430–06014	.GASKET .JOINT	1					
5	6CJ–11181–00	.GASKET, CYLINDER HEAD 1 .JOINT, DE CULASSE 1	1					
6	6CJ–11356–00	.SEAL, CYLINDER 2 .JOINT, SPY CYLINDRE	1					
7	93102–43004	.OIL SEAL .JOINT SPY	1					
8	93101–35002	.OIL SEAL .JOINT SPY	1					
9	6BG–11351–00	.GASKET, CYLINDER .JOINT, D'EMBASE	1					
10	62Y–12414–00	.GASKET, COVER .JOINT, COUVERCLE	1					
11	6C5–41114–10	.GASKET, EXHAUST OUTER COVER .JOINT, COUVERCLE D'ECHAPPEMENT	1					
12	90430–18130	.GASKET .JOINT	1					
13	90430–14115	.GASKET .JOINT	2					
14	6C5–13329–00	.GASKET, PUMP COVER .JOINT, COUVERCLE DE POMPE	1					
15	93210–24M79	.O-RING .JOINT TORIQUE	1					
16	93210–24M79	.O-RING .JOINT TORIQUE	1					

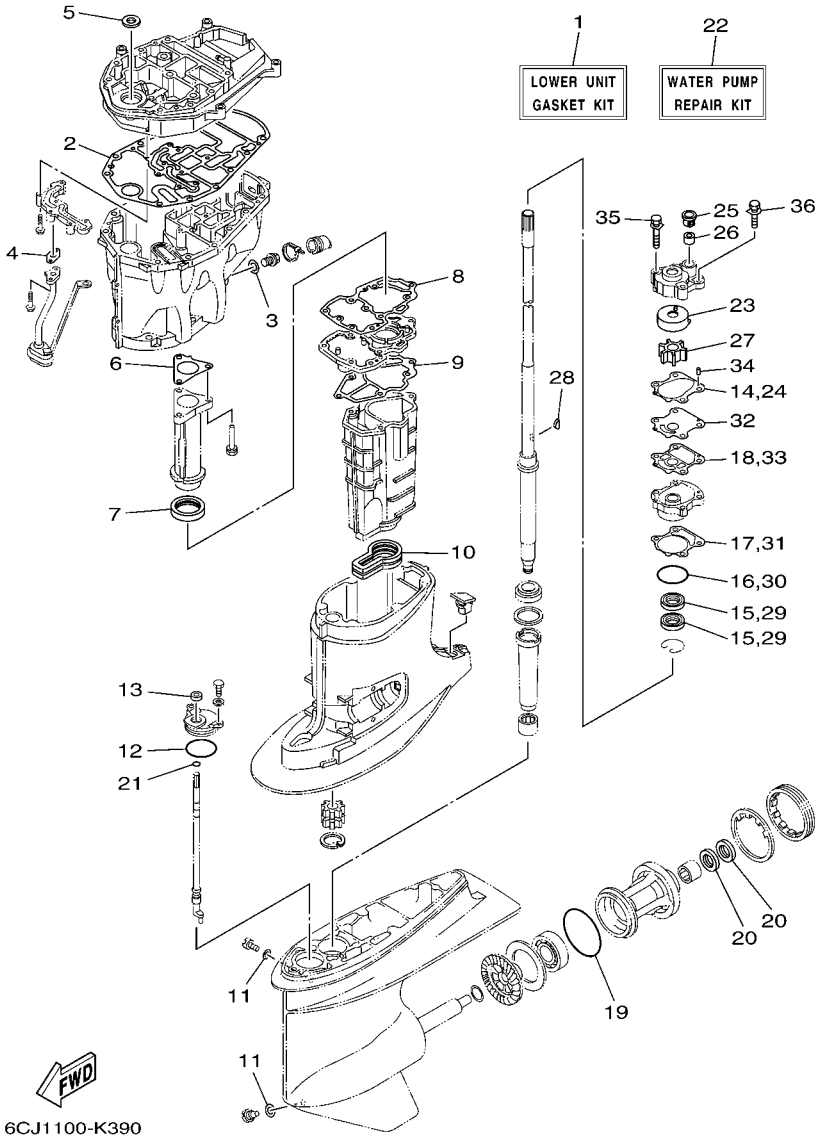

FIG. 34 REPAIR KIT 2 — KITS DE REPARATION 2

REF. NO.	PART NO. N° PIECES	DESCRIPTION DESCRIPTION	6CY2					REMARKS REMARQUES
1	6CJ–W0001–20	LOWER UNIT GASKET KIT POCHETTE DE JOINTS EMBASE	1					
2	6C5–15312–01	.GASKET, OIL PAN .JOINT DE VENTILATEUR D'HUILE	1					
3	90430–14M09	.GASKET .JOINT	1					
4	6C5–13414–01	.GASKET, STRAINER COVER .JOINT, COUVERCLE DE FILTRE	1					
5	93103–18011	.OIL SEAL .JOINT SPY	1					
6	6C5–41133–00	.GASKET, EXHAUST MANIFOLD 1 .JOINT, PIPE D'ECHAPPEMENT	1					
7	6C5–46132–00	.GASKET 1 .JOINT 1	1					
8	6C5–41134–00	.GASKET, EXHAUST MANIFOLD .JOINT, PIPE D'ECHAPPEMENT	1					
9	6C5–41135–00	.GASKET, EXHAUST MANIFOLD .JOINT, PIPE D'ECHAPPEMENT	1					
10	6C5–45123–00	.GASKET, MUFFLER .JOINT, POT DE DETENTE	1					
11	90430–08020	.GASKET .JOINT	2					
12	93210–49046	.O-RING .JOINT TORIQUE	1					
13	93106–09014	.OIL SEAL .JOINT SPY	1					
14	6CJ–44315–00	.GASKET, WATER PUMP .JOINT, POMPE A EAU	1					
15	93101–23070	.OIL SEAL .JOINT SPY	2					
16	93210–46044	.O-RING .JOINT TORIQUE	1					
17	6CJ–44316–00	.GASKET, WATER PUMP .JOINT, POMPE A EAU	1					
18	6CJ–44324–00	.GASKET, CARTRIDGE .JOINT	1					
19	93210–86M39	.O-RING .JOINT TORIQUE	1					
20	93101–25M03	.OIL SEAL .JOINT SPY	2					
21	93210–07003	.O-RING .JOINT TORIQUE	1					
22	6CJ–W0078–00	WATER PUMP REPAIR KIT KIT DE REPARATION DE LA POMPE	1					
23	63D–44322–00	.INSERT, CARTRIDGE .CUVETTE	1					
24	6CJ–44315–00	.GASKET, WATER PUMP .JOINT, POMPE A EAU	1					
25	63D–44312–00	.COVER, WATER PUMP HOUSING .COUVERCLE	1					
26	663–44366–00	.DAMPER, WATER SEAL 2 .JOINT, TUBE D'EAU 2	1					
27	6H3–44352–00	.IMPELLER .TURBINE	1					

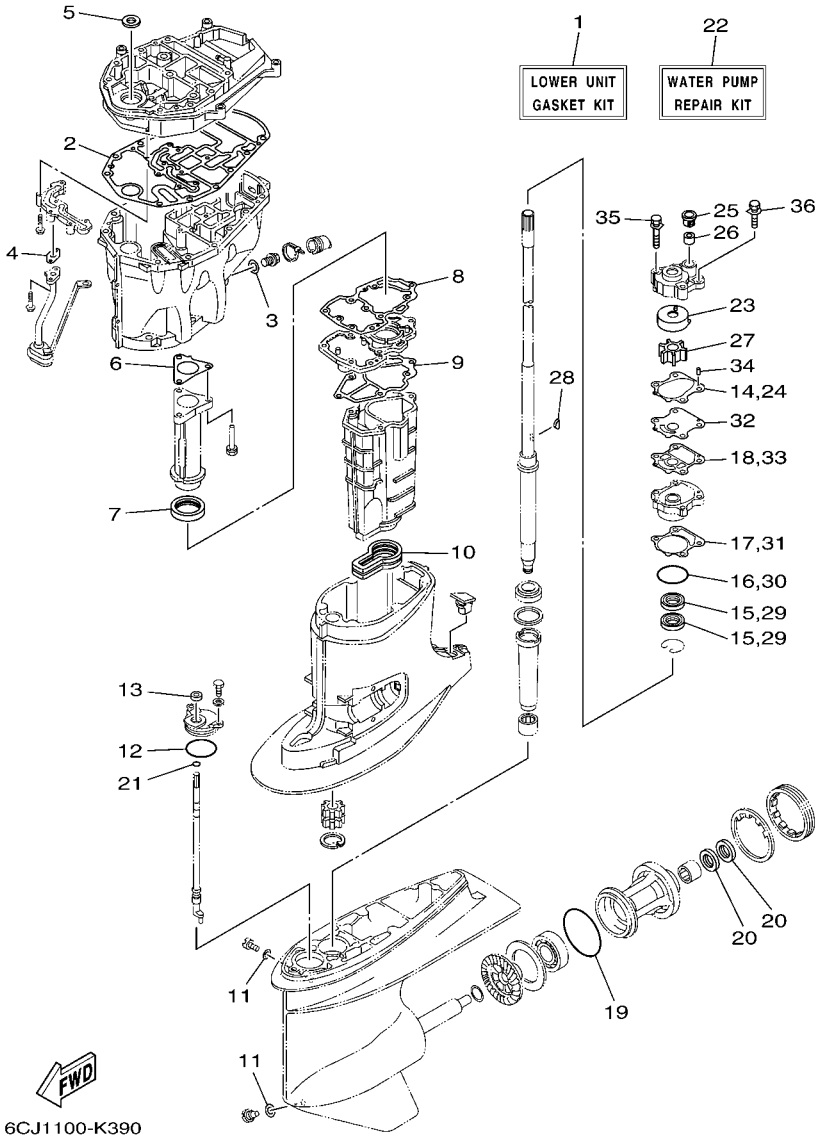

FIG. 34 REPAIR KIT 2 — KITS DE REPARATION 2

REF. NO.	PART NO. N° PIECES	DESCRIPTION DESCRIPTION	6CY2					REMARKS REMARQUES
28	90280–03M03	.KEY, WOODRUFF .CLAVETTE, DEMI-LUNE	1					
29	93101–23070	.OIL SEAL .JOINT SPY	2					
30	93210–46044	.O-RING .JOINT TORIQUE	1					
31	6CJ–44316–00	.GASKET, WATER PUMP .JOINT, POMPE A EAU	1					
32	6CJ–44323–00	.OUTER PLATE, CARTRIDGE .PLAQUE EXTERIEURE	1					
33	6CJ–44324–00	.GASKET, CARTRIDGE .JOINT	1					
34	93604–10M03	.PIN, DOWEL .CLAVETTE	2					
35	90119–08M33	.BOLT, WITH WASHER .BOULON, AVEC RONDELLE	2					
36	90119–08M14	.BOLT, WITH WASHER .BOULON, AVEC RONDELLE	2					

NUMERICAL INDEX
INDEX NUMERIQUE

PART NO. N° PIECES	REF. NO.
6CJ–11111–00–9S	4 – 2
62Y–11119–00	17 – 10
6CJ–11119–00	4 – 21
6AH–11133–10	4 – 3
6C5–11168–00	4 – 15
6CJ–11181–00	4 – 10
	33 – 5
6CJ–11191–00–9S	4 – 14
6CJ–11192–00	4 – 24
6G8–11197–01	4 – 6
62Y–11325–00	2 – 18
6G8–11325–00	4 – 4
66M–11327–00–94	2 – 20
66M–11328–00	2 – 19
6BG–11351–00	2 – 8
	33 – 9
6CJ–11356–00	4 – 18
	33 – 6
6CJ–11372–00	8 – 3
6C5–11411–01	3 – 1
6BG–11416–00	3 – 2
6BG–11416–10	3 – 2
6BG–11416–20	3 – 2
6BG–11416–30	3 – 2
6C5–11536–00	11 – 7
6C5–11537–00	11 – 2
6H4–11545–00	13 – 7
62Y–11557–00	11 – 8
67C–11603–00	3 – 7
67C–11604–00	3 – 7
67C–11605–00	3 – 7
6CJ–11631–00–96	3 – 6
62Y–11633–00	3 – 8
6CJ–11635–00	3 – 6
6CJ–11636–00	3 – 6
6C5–11650–00	3 – 3
6C5–11654–00	3 – 4
6CJ–11656–00	3 – 5
6CJ–11656–10	3 – 5
6CJ–11656–20	3 – 5
6CJ–11656–30	3 – 5
6CJ–12111–00	5 – 1
6CJ–12113–00	5 – 4
6CJ–12116–00	5 – 3
3LD–12117–00	5 – 5
3LD–12118–00	5 – 6
51Y–12119–00	5 – 7
6CJ–12121–00	5 – 2

PART NO. N° PIECES	REF. NO.
6CJ–12146–00	5 – 8
6CJ–12151–00	5 – 9
62Y–12158–00	5 – 14
6C5–12158–00	5 – 11
64J–12159–00	5 – 13
6C5–12159–00	5 – 10
6CJ–12161–00	5 – 12
6CJ–12171–00	11 – 1
6CJ–12231–00	5 – 15
6CJ–12233–00	5 – 16
6G8–12411–03	2 – 12
688–12412–00	2 – 13
6C5–12413–00–9S	2 – 14
62Y–12414–00	2 – 15
	33 – 10
6BG–12481–00	20 – 12
62Y–12481–10	2 – 11
66M–12535–00	2 – 21
6AW–12572–00	20 – 4
6CJ–12576–00	8 – 7
6R3–12580–00	20 – 6
6C5–12858–00	2 – 31
6CJ–13131–00	12 – 31
6C5–13161–00	6 – 10
6CJ–13300–00	11 – 11
6C5–13329–00	11 – 12
	33 – 14
6CJ–13411–00	27 – 8
6C5–13414–01	27 – 9
	34 – 4
6CJ–13428–00	7 – 19
67F–13434–20	1 – 17
6C5–13437–62	13 – 21
5GH–13440–20	2 – 30
6C5–13542–00	10 – 3
6CJ–13543–00	8 – 5
6BG–13545–00	10 – 19
6CJ–13546–00	10 – 2
6C5–13547–00	10 – 23
6C5–13557–00	6 – 4
6C5–13577–00	10 – 11
6C5–13593–00	9 – 20
6CJ–13641–00	6 – 2
6C5–13645–00	6 – 3
6C5–13713–00	8 – 1
6C5–13716–00	9 – 22
6C5–13739–00	10 – 1
6CJ–13750–00	6 – 5

PART NO. N° PIECES	REF. NO.
6C5–13761–00	6 – 13
6C5–13781–00	9 – 21
6C5–13906–01	9 – 9
6C5–13907–00	9 – 17
6C5–13910–10	9 – 16
6C5–13915–00	9 – 18
6CJ–13974–10	10 – 16
6C5–1410B–00	6 – 14
6C5–1410F–00	10 – 22
6C5–14127–10	9 – 19
6C5–14148–00	10 – 14
6BG–14149–00	10 – 9
6CJ–14180–01	9 – 1
6C5–14182–10	9 – 2
6C5–14191–00	9 – 13
6CJ–14200–00	6 – 1
6C5–14225–00	9 – 25
6C5–14251–00	10 – 13
6C5–14386–00	9 – 5
6C5–14397–00	9 – 14
6C5–14440–00	7 – 4
6C5–14446–00	6 – 12
6C1–14453–01	7 – 5
6CY–14477–00	7 – 6
6C5–14496–00	6 – 9
6C5–14546–10	9 – 4
6C5–14567–00	9 – 15
6CJ–14711–00–9S	26 – 12
6C5–14960–10	9 – 12
6C5–14984–00	9 – 23
6C5–14985–00	9 – 3
6CJ–15100–00	2 – 2
6C5–15311–01–CA	27 – 1
6C5–15312–01	27 – 2
	34 – 2
6CJ–15316–00	27 – 4
6CJ–1531A–00	8 – 12
6CJ–15333–00	27 – 10
6C5–15362–00	27 – 12
6G8–15363–00	4 – 26
6C5–15378–00	7 – 22
6C5–15378–11	7 – 25
6C5–21337–10	9 – 24
6C5–21841–00	10 – 12
1UF–22434–00	24 – 21
62Y–22434–00	24 – 48
6CJ–22471–00	24 – 15
6CJ–24135–00	20 – 19

PART NO. N° PIECES	REF. NO.
6BG–24136–01	20 – 17
6YK–24201–03	30 – 1
6C5–24251–00	10 – 20
6YK–24260–01	30 – 4
6YL–24268–01	30 – 2
6G1–24304–02	12 – 1
6YL–24306–54	30 – 7
6BG–24311–00	12 – 25
6BG–24313–00	12 – 4
6CJ–24321–00	10 – 4
6C5–24322–00	10 – 5
6CJ–24323–00	10 – 6
6CJ–24324–00	10 – 7
6CJ–24325–00	10 – 8
6BG–24329–00	19 – 25
6YL–24329–00	30 – 6
6CJ–24374–00	12 – 36
67F–24377–00	12 – 5
688–24378–00	20 – 8
	20 – 11
6C5–24379–00	10 – 18
6BG–24387–00	10 – 15
6CJ–24410–00	12 – 27
62Y–24411–02	12 – 29
6CJ–24415–00	12 – 28
6C5–2441R–10	9 – 6
6C5–2441T–10	9 – 7
62Y–24423–00	12 – 30
6C5–24444–00	10 – 10
62Y–24444–01	12 – 33
6C5–24453–00	9 – 8
6CJ–24454–00	12 – 32
6D8–24469–00	12 – 19
6C5–24471–00	12 – 34
6D8–24519–00	12 – 20
6CJ–2451B–00	10 – 21
6D8–24560–00	12 – 15
6D8–24562–00	12 – 18
6D8–24563–00	12 – 16
6D8–24564–00	12 – 17
6CJ–24566–00	12 – 22
6C5–24592–00	9 – 10
6YK–24610–01	30 – 3
6CJ–28100–00	12 – 41
67F–2812A–00	13 – 4
6C1–28199–79–D0	12 – 42
6C1–28199–79–E0	12 – 42
6C1–28199–79–F0	12 – 42

PART NO. N° PIECES	REF. NO.
6C1–28199–79–G0	12 – 42
6C1–28199–79–H0	12 – 42
6C1–28199–79–S0	12 – 42
6C1–28199–89–K0	12 – 43
6C1–28199–89–L0	12 – 43
6C1–28199–89–M0	12 – 43
6C1–28199–89–N0	12 – 43
6C1–28199–89–P0	12 – 43
6C1–28199–89–R0	12 – 43
6C5–41113–11–9S	2 – 9
6C5–41114–10	2 – 16
	33 – 11
6C5–41131–00–CA	26 – 5
6C5–41133–00	26 – 4
	34 – 6
6C5–41134–00	26 – 8
	34 – 8
6C5–41135–00	26 – 11
	34 – 9
6C5–41137–02–CA	26 – 1
688–41211–01	21 – 23
6H4–41237–00	21 – 24
62Y–42154–00	21 – 26
6C5–42171–00	21 – 27
6BG–42335–00	21 – 32
6BG–42384–00	20 – 2
69W–42510–01–8D	23 – 1
6CY–42610–00	1 – 1
6CJ–42613–00	1 – 2
6CJ–42615–00	1 – 13
6BG–42617–00	13 – 18
6BG–42649–00	1 – 16
6BG–42651–00	1 – 4
6BG–42652–00	1 – 7
6BG–42662–00	1 – 14
6BG–42677–00	1 – 10
6BG–42678–00	1 – 11
6AH–42697–01	1 – 15
6CJ–42710–00–8D	19 – 1
62Y–42715–01	21 – 10
62Y–42716–00	19 – 6
61A–42717–00	19 – 8
65W–42717–00	19 – 7
6BG–42724–00	20 – 1
6CJ–42725–00	19 – 10
6CJ–42726–00	19 – 11
68U–42727–00	19 – 24
6BG–42727–00	19 – 12

PART NO. N° PIECES	REF. NO.
6BG–42741–10–8D	19 – 26
6BG–42748–00	19 – 4
6H4–42748–00	19 – 2
63P–42756–00	16 – 24
6BG–42761–00	19 – 9
6AH–42794–40	19 – 42
6AH–42794–50	19 – 43
6BG–42811–01	16 – 21
6BG–42815–00–8D	19 – 14
6BG–42816–00	19 – 19
6BG–42851–00	1 – 6
6C5–43111–01–8D	22 – 1
6C5–43112–01–8D	22 – 2
6E5–43126–02	22 – 26
63D–43131–01	22 – 11
66T–43144–00	19 – 21
6G5–43144–00	22 – 23
6E5–43145–01	31 – 9
6G5–43148–00	22 – 19
6C5–43181–00	22 – 14
6C5–43185–00	22 – 15
6C5–43311–01–8D	22 – 9
6CJ–43800–00–8D	24 – 1
62X–43804–01	25 – 3
69W–43805–01	25 – 2
62X–43807–00	25 – 7
69W–4380F–00	25 – 8
6CJ–4380K–00	24 – 2
6CJ–43810–00	24 – 3
6CJ–43816–00	24 – 39
6H1–43816–00	24 – 60
6CJ–43818–00	22 – 30
69W–4381B–00	24 – 17
68S–43821–00	24 – 5
62Y–43822–00	24 – 4
6H1–43829–00	24 – 67
69W–4382L–00	24 – 40
6CJ–43830–00	24 – 25
6H1–43831–10	24 – 23
6C5–43833–00	22 – 31
6C5–43834–00	22 – 32
6CJ–43841–00	24 – 26
6CJ–43843–00	24 – 59
6CJ–43844–00	24 – 57
6H1–43844–10	24 – 37
62Y–43845–00	24 – 65
69A–4384F–00	24 – 28
6H1–4384F–10	24 – 35

NUMERICAL INDEX
INDEX NUMERIQUE

PART NO. N° PIECES	REF. NO.
69W–4384G–00	24 – 44
62X–4384H–00	24 – 20
6CJ–4384M–00	24 – 27
69J–43851–00	24 – 55
69J–43853–00	24 – 32
69W–43854–00	24 – 45
69J–43855–00	24 – 34
69W–43856–00	24 – 36
62X–43861–00	24 – 6
6CJ–43861–00	24 – 13
62X–43862–00	24 – 9
67F–43863–00	24 – 24
6C5–43863–00	24 – 8
6D8–43863–00	24 – 63
62X–43865–00	24 – 68
65W–4386A–00	24 – 53
62X–4386K–00	25 – 9
62X–43871–00	24 – 11
62Y–43871–00	24 – 49
62X–43872–00	24 – 7
62X–43875–00	24 – 22
67F–43875–00	24 – 16
6H1–43875–00	24 – 64
62Y–4387G–00	24 – 50
62Y–4387J–00	24 – 47
69W–43880–01	25 – 1
69W–43881–00	25 – 12
6H1–43883–00	24 – 29
6C5–43885–00	23 – 18
62X–43888–00	25 – 16
6CJ–4388A–00	24 – 14
62Y–43891–00	25 – 5
62Y–43892–00	25 – 4
6CJ–43893–00	24 – 51
69J–43894–00	24 – 46
62X–43899–00	24 – 18
6CJ–43899–00	24 – 69
69J–4389J–00	24 – 33
	24 – 61
62Y–44117–01–94	21 – 2
62Y–44118–00–94	21 – 11
6C5–44120–01	21 – 7
69W–44121–00	21 – 1
688–44122–00	21 – 19
6C5–44122–00	21 – 8
62Y–44135–00	21 – 29
64J–44150–01	28 – 68
6CJ–44311–00	28 – 23

PART NO. N° PIECES	REF. NO.
63D–44312–00	28 – 26
	34 – 25
6CJ–44315–00	28 – 25
	34 – 14
	34 – 24
6CJ–44316–00	28 – 34
	34 – 17
	34 – 31
63D–44322–00	28 – 24
	34 – 23
6CJ–44323–00	28 – 35
	34 – 32
6CJ–44324–00	28 – 36
	34 – 18
	34 – 33
6CJ–44341–00–CA	28 – 30
6H3–44352–00	28 – 28
	34 – 27
6CJ–44361–00	29 – 1
663–44366–00	28 – 27
	29 – 3
	34 – 26
663–44367–00	29 – 2
6CJ–44385–00	23 – 34
6BL–44391–00	19 – 34
6CJ–44514–00–94	23 – 10
6CJ–44526–00	23 – 12
6CJ–44533–00	23 – 14
6C5–44551–00–8D	23 – 16
6C5–44552–00–8D	23 – 19
69W–44555–00–94	23 – 20
6CJ–44575–00	23 – 22
6C5–45111–00–8D	26 – 23
6C5–45123–00	26 – 14
	34 – 10
6C5–45135–01	27 – 13
6C5–45136–01	27 – 14
6C5–45155–00	26 – 17
6CJ–45181–00–CA	26 – 9
6H1–45214–00	29 – 9
6H1–45215–00	29 – 10
65W–45251–00	22 – 5
	22 – 7
	22 – 24
6CJ–45300–30–8D	28 – 1
67F–45301–00–8D	28 – 2
69W–45318–00	26 – 18
688–45321–00	28 – 14

PART NO. N° PIECES	REF. NO.
67F–45331–00–CA	28 – 59
688–45341–10	28 – 10
67F–45371–00	29 – 13
688–45375–00	28 – 13
663–45376–00	28 – 12
6E5–45378–00	28 – 19
688–45383–02	28 – 66
688–45384–02	28 – 67
64J–45501–30	28 – 40
688–45536–01	28 – 4
6CJ–45551–00	28 – 41
6CJ–45560–00	28 – 43
688–45567–01	28 – 7
688–45567–10	28 – 7
688–45567–20	28 – 7
688–45567–30	28 – 7
688–45567–40	28 – 7
688–45567–50	28 – 7
688–45567–60	28 – 7
68S–45571–00	28 – 58
67F–45576–00	28 – 61
688–45587–01	28 – 5
688–45587–10	28 – 5
688–45587–20	28 – 5
688–45587–30	28 – 5
688–45587–40	28 – 5
688–45587–50	28 – 5
688–45587–60	28 – 5
67F–45611–01	28 – 45
6D8–45631–00	28 – 46
688–45633–00	28 – 55
67F–45634–00	28 – 47
6H1–45635–00	28 – 49
6H1–45668–00	28 – 48
688–45930–02	29 – 20
688–45932–60	29 – 20
68V–45941–00	29 – 20
6E5–45941–00	29 – 20
68V–45943–00	29 – 20
6E5–45943–00	29 – 20
6E5–45945–01	29 – 20
6E5–45947–00	29 – 20
6E5–45949–00	29 – 20
6E5–45952–00	29 – 20
6E5–45954–00	29 – 20
6E5–45956–00	29 – 20
6E5–45958–00	29 – 20
688–45970–03	29 – 20

PART NO. N° PIECES	REF. NO.
688–45972–02	29 – 20
688–45974–02	29 – 20
688–45976–01	29 – 20
688–45978–60	29 – 20
688–45987–01	29 – 15
67F–45997–00	29 – 16
6C5–46132–00	26 – 6
	34 – 7
6C5–46241–00	11 – 6
6Y8–48277–00	32 – 16
	32 – 17
69W–48344–00	21 – 22
	21 – 36
65W–48511–00	23 – 38
6BG–48538–00	19 – 40
65W–61350–00	31 – 1
65W–61351–00	31 – 2
6C5–81145–00	6 – 7
6C5–81146–00	6 – 15
68V–81315–00	14 – 23
6CJ–81337–00	13 – 1
6C5–81410–01	13 – 6
6C5–81450–00	13 – 5
6CJ–81800–00	18 – 1
69J–81801–00	18 – 5
67F–81807–00	18 – 10
67F–81808–00	18 – 8
67F–81809–00	18 – 19
67F–81810–00	18 – 3
67F–81813–00	18 – 6
6C5–81815–00	15 – 3
68F–81820–00	18 – 7
67F–81821–00	18 – 13
6CJ–81822–00–94	17 – 2
6K7–81826–11	18 – 24
69J–81828–00	18 – 25
6C5–8182L–00	6 – 8
67F–81830–00	18 – 17
67F–81832–00	18 – 11
67F–81836–00	18 – 12
6C5–81839–00	18 – 21
67F–8183R–00	18 – 16
60V–8183T–00	18 – 18
6P2–8183X–00	15 – 13
69J–81840–00	18 – 4
67F–81841–00	18 – 14
60X–81842–00	18 – 20
67F–81846–00	18 – 26

PART NO. N° PIECES	REF. NO.
67F–81850–00	18 – 2
67F–81857–00	18 – 9
6C5–81869–00	18 – 23
67F–81891–00	18 – 15
6CJ–81919–00	13 – 20
60V–81925–00	17 – 25
6C5–81941–00	18 – 22
6CJ–81942–00	14 – 28
6CJ–81948–00	15 – 5
68V–8194A–00	15 – 17
60E–81950–00	15 – 1
63P–81950–00	15 – 12
68F–81953–00	15 – 20
68V–81960–10	14 – 15
6AH–81994–40	13 – 24
6AH–81994–50	13 – 25
6AH–81995–40	13 – 22
6AH–81995–50	13 – 23
6AG–81996–00	13 – 26
6C5–82105–U0	17 – 1
6G5–82119–00	15 – 19
67C–82127–10	23 – 32
6E5–82148–00	22 – 3
67F–82151–00	16 – 7
5JJ–82151–10	16 – 11
67F–82151–10	16 – 9
67F–8215B–00	16 – 12
67F–8215B–10	16 – 8
67F–8215B–20	16 – 10
69W–82181–00	25 – 6
63P–82310–01	14 – 5
6C5–82316–01	14 – 12
6C5–82316–11	14 – 13
6A0–82317–00	7 – 8
	15 – 11
6CJ–82340–00	14 – 6
6CJ–82388–00	14 – 24
64J–82504–00	14 – 27
6Y8–82509–10	32 – 8
6Y8–82521–11	32 – 15
6CJ–8253B–00	14 – 22
6CJ–82554–00	16 – 17
69J–82563–00	16 – 1
68F–82582–00	17 – 27
6P2–82582–00	16 – 13
6P2–82582–10	16 – 14
69J–82587–00	16 – 5
6CJ–82588–00	14 – 21

PART NO. N° PIECES	REF. NO.
61A–82588–01	16 – 18
6CJ–82590–00	16 – 6
60V–8259F–00	16 – 16
6X4–83383–00	32 – 5
6X4–83386–00	32 – 6
6E5–83558–00	23 – 36
6E5–83558–10	28 – 21
6CJ–83559–00	14 – 31
6BG–83614–00	16 – 2
62Y–83626–00	13 – 19
67F–83627–01	18 – 27
63D–83672–11	23 – 28
68F–83688–00	6 – 16
6Y8–8454G–00	32 – 11
69L–85516–00	9 – 27
6C5–85525–00	14 – 1
6CJ–85525–00	17 – 13
6CJ–85548–00	15 – 7
6C5–85561–00	13 – 11
62Y–85580–00	13 – 14
6CJ–85780–00	15 – 24
6CJ–85790–00	15 – 22
6C5–85885–00	6 – 6
6CJ–8591A–10	14 – 18
6BG–86112–00	7 – 14
6C5–86120–00	7 – 12
6Y8–86260–02	32 – 2
6AA–86261–00	32 – 3
6Y8–86267–00	32 – 1
6C5–87226–00	9 – 11
6CJ–W0001–00	33 – 1
6CJ–W0001–20	34 – 1
6CJ–W0070–00	1 – 12
6CJ–W0078–00	34 – 22
6CJ–W009A–00–9S	4 – 1
6CJ–W009B–00–9S	2 – 1
90101–06020	22 – 6
	22 – 8
	22 – 25
90101–06054	21 – 12
90101–08M15	23 – 11
90101–09M01	31 – 7
90101–12M65	22 – 35
90105–09009	4 – 12
90105–10M67	29 – 14
90109–06047	1 – 8
90109–06M65	4 – 8
90109–06M80	19 – 31

NUMERICAL INDEX
INDEX NUMERIQUE

PART NO. N° PIECES	REF. NO.
90109–06M86	16 – 4
	16 – 23
	16 – 26
	19 – 13
	19 – 22
	19 – 36
	19 – 39
	19 – 41
	20 – 16
	20 – 18
	20 – 21
90109–12MA3	23 – 23
90116–10038	23 – 7
90119–06025	11 – 13
90119–06087	7 – 3
90119–06106	7 – 10
	21 – 31
90119–06261	26 – 7
90119–06M59	15 – 10
90119–06M61	7 – 11
	19 – 3
90119–06MA5	2 – 17
90119–06MA6	4 – 13
90119–08069	7 – 2
90119–08102	26 – 15
90119–08131	23 – 21
90119–08132	26 – 16
90119–08154	2 – 4
90119–08M14	28 – 39
	34 – 36
90119–08M33	28 – 38
	34 – 35
90119–08M84	29 – 8
90151–05M00	29 – 11
90157–05M16	30 – 5
90159–04005	15 – 4
90167–05009	14 – 32
90167–06M00	32 – 12
90170–09M03	31 – 5
90170–16M01	28 – 42
90170–20137	13 – 8
90171–16011	29 – 18
90179–08003	17 – 26
90179–08M34	17 – 5
90179–35001	11 – 9
90183–02M03	28 – 53
90185–05002	29 – 12
90185–06M05	1 – 9

PART NO. N° PIECES	REF. NO.
90185–08045	23 – 13
90185–09M01	31 – 4
90185–10051	23 – 8
90185–22M11	22 – 13
90201–03313	28 – 51
90201–06M30	32 – 13
90201–083J8	25 – 14
90201–10060	22 – 34
90201–10120	23 – 39
90201–10144	11 – 5
90201–10M20	21 – 16
	31 – 3
90201–10M63	31 – 8
90201–12062	22 – 36
90201–12426	22 – 37
90201–12M07	19 – 18
90201–12M16	23 – 17
90201–13M19	23 – 26
90201–16014	5 – 17
90201–21M18	13 – 9
90201–22M05	23 – 27
90201–25M05	28 – 69
90201–30M00	23 – 2
90202–07M07	21 – 20
90202–21100	23 – 25
90206–10M04	21 – 34
90206–12052	19 – 17
90249–06M19	22 – 20
90250–07M02	28 – 54
90280–03M01	11 – 10
90280–03M03	28 – 29
	34 – 28
90282–04010	28 – 65
90340–08002	28 – 9
90340–14M06	2 – 28
	27 – 6
90340–18M09	2 – 26
90344–51003	2 – 7
90386–10025	22 – 17
90386–10M16	22 – 16
90386–12M37	19 – 15
90386–12MA2	19 – 16
90386–18M35	22 – 28
90386–18M92	22 – 27
90386–22MA4	22 – 12
90386–30M60	23 – 6
90386–30M77	23 – 4
90386–30M78	23 – 3

PART NO. N° PIECES	REF. NO.
90386–90M90	21 – 15
90387–04001	16 – 19
90387–06119	7 – 9
	15 – 9
90387–06225	21 – 35
90387–06M03	9 – 26
90387–06M43	19 – 33
90387–06M45	21 – 30
90387–06M69	19 – 5
90387–10M42	31 – 6
90389–25M00	29 – 17
90401–08011	5 – 18
90430–06014	4 – 9
	33 – 4
90430–08020	28 – 11
	34 – 11
90430–14115	2 – 29
	15 – 23
	33 – 13
90430–14M09	27 – 7
	34 – 3
90430–18130	2 – 27
	33 – 12
90445–07ME8	28 – 20
90445–09036	20 – 7
90445–09220	20 – 9
90445–09304	20 – 14
90445–096H2	20 – 10
90445–133F0	12 – 6
90446–13M11	12 – 9
90446–15006	12 – 13
90447–19009	23 – 37
90450–50001	7 – 7
90462–08067	20 – 15
90462–20005	19 – 35
90464–06001	14 – 14
90464–07M05	14 – 8
90464–07M41	14 – 7
90464–07M56	6 – 11
90464–09130	20 – 20
90464–09M49	19 – 37
90464–12004	12 – 8
90464–12006	8 – 9
90464–12012	12 – 21
90464–13013	14 – 9
90464–13227	12 – 10
90464–14010	12 – 14
90464–15007	8 – 10

PART NO. N° PIECES	REF. NO.
90464–15007	8 – 11
90464–15008	8 – 8
	16 – 27
90464–16017	12 – 11
90464–18004	16 – 15
90464–18205	16 – 22
90464–18246	14 – 4
90464–20181	16 – 25
	17 – 14
90464–30003	17 – 30
90464–76001	23 – 30
90465–08M83	10 – 24
90465–08M89	16 – 3
90465–11M10	7 – 18
	8 – 6
	10 – 17
	12 – 7
	19 – 38
	20 – 3
	20 – 13
	23 – 31
	23 – 35
	28 – 22
	32 – 10
90465–11M59	27 – 5
90465–13M24	14 – 30
90465–13M97	13 – 17
	15 – 6
90467–09M17	12 – 12
90467–10M04	12 – 40
90467–11M08	12 – 26
90468–18008	21 – 18
	21 – 21
	21 – 37
90480–06M19	7 – 15
	13 – 2
90480–12314	4 – 25
	13 – 3
	14 – 29
90480–13M24	19 – 32
90501–12082	21 – 13
90501–12M48	28 – 50
90506–14M24	22 – 21
90506–18023	19 – 23
91318–05008	24 – 42
91318–05020	24 – 41
91318–06040	24 – 62
91490–16010	21 – 28

PART NO. N° PIECES	REF. NO.
91490–20015	21 – 17
91490–40025	29 – 19
91690–30020	22 – 18
92903–06600	2 – 6
92903–08100	17 – 29
92903–08600	17 – 24
92907–04600	4 – 17
92990–06100	19 – 29
92990–06600	19 – 30
92990–08200	5 – 19
92995–05600	2 – 23
	13 – 16
92995–06600	2 – 25
	4 – 20
	4 – 23
	7 – 17
	7 – 21
	7 – 24
	7 – 27
	12 – 3
	12 – 39
	14 – 3
	14 – 11
	14 – 17
	14 – 20
	14 – 26
	15 – 16
	17 – 12
	17 – 16
	17 – 18
	17 – 20
	17 – 22
	21 – 4
	21 – 6
	28 – 18
92995–08600	17 – 7
	17 – 9
92995–10100	29 – 6
92995–10600	26 – 21
	29 – 7
93101–23070	28 – 31
	34 – 15
	34 – 29
93101–25M03	28 – 64
	34 – 20
93101–35002	3 – 11
	33 – 8
93102–08414	25 – 13

PART NO. N° PIECES	REF. NO.
93102–37M40	11 – 14
	33 – 2
93102–43004	3 – 10
	33 – 7
93103–18011	26 – 2
	34 – 5
93106–09014	28 – 16
	34 – 13
93210–04279	32 – 9
93210–064A5	24 – 58
93210–07003	28 – 56
	34 – 21
93210–08391	24 – 54
93210–09165	24 – 66
93210–13M63	4 – 7
	33 – 3
93210–16275	31 – 10
93210–24M79	4 – 27
	12 – 37
	33 – 15
	33 – 16
93210–29375	24 – 10
93210–29M94	23 – 5
93210–33003	8 – 4
93210–44383	24 – 12
93210–46044	28 – 33
	34 – 16
	34 – 30
93210–49046	28 – 15
	34 – 12
93210–52449	25 – 15
93210–86M39	28 – 62
	34 – 19
93306–207U0	28 – 60
93315–52563	28 – 3
93317–322V0	28 – 44
93317–325U0	28 – 63
93332–00095	28 – 8
93332–000U3	28 – 6
93410–18M05	22 – 29
93410–28M06	23 – 9
93420–36M01	26 – 19
93450–17129	3 – 9
93450–40165	28 – 32
93501–04M02	21 – 14
93501–08001	24 – 43
	24 – 56
93503–16003	24 – 19

NUMERICAL INDEX
INDEX NUMERIQUE

PART NO. N° PIECES	REF. NO.
93503–16003	28 – 52
93505–32038	24 – 31
	24 – 52
93604–10M03	2 – 10
	26 – 10
	28 – 37
	34 – 34
93604–26256	24 – 38
93605–17002	11 – 3
93606–12019	2 – 3
	26 – 22
	27 – 3
	29 – 4
93608–12M05	7 – 1
	26 – 3
93700–06M03	22 – 10
94702–00429	4 – 28
95023–06030	13 – 10
	13 – 12
95333–08600	17 – 28
95380–05600	12 – 35
95380–05700	21 – 25
95380–05800	1 – 5
95380–06600	7 – 13
	19 – 27
95380–08600	12 – 24
95380–12600	22 – 38
	23 – 24
95680–08330	17 – 4
95780–06300	32 – 14
95812–06035	27 – 11
95817–10035	11 – 4
95895–06045	21 – 33
95895–08016	12 – 23
97013–06035	2 – 5
97013–08045	17 – 23
97075–10040	29 – 5
97075–10045	26 – 20
97095–05012	2 – 22
	13 – 15
97095–06010	22 – 22
97095–06014	7 – 23
	14 – 2
	14 – 25
	19 – 20
97095–06016	7 – 16
	7 – 20
	7 – 26
97095–06016	14 – 19
	17 – 15
	17 – 17
	17 – 19
	17 – 21
	28 – 17
97095–06020	2 – 24
	4 – 19
	4 – 22
	15 – 15
	17 – 11
	21 – 3
97095–06025	12 – 2
	14 – 10
	14 – 16
	21 – 5
97095–06030	12 – 38
97095–08025	17 – 8
97095–08035	17 – 6
97575–06525	26 – 13
97575–08530	23 – 15
97575–10530	22 – 33
97595–05514	21 – 9
97595–06610	15 – 14
	15 – 18
97602–04216	25 – 11
97780–50616	1 – 3
97780–60520	20 – 5
97780–60620	15 – 2
	15 – 8
	15 – 21
	32 – 7
97880–05020	25 – 10
97880–05025	4 – 5
97880–06025	19 – 28
97880–06035	32 – 12
97885–06008	22 – 4
	23 – 33
97980–05214	8 – 2
97980–06216	32 – 4
97985–04116	16 – 20
97985–06216	23 – 29
98507–04010	4 – 16
99001–08600	28 – 57
99002–03600	24 – 30
99530–08012	4 – 11
	13 – 13
99590–10114	17 – 3