YAMAHA

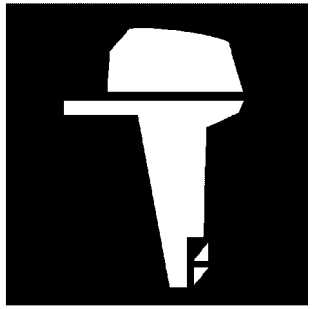

PARTS CATALOGUE
CATALOGUE DE PIECES DETACHEES

F80BET'12 (6D78)
F100DET'12 (6D98)

YAMAHA
GENUINE
Parts & Accessories

1L6D7-300F1

( )

F80BET/F100DET
PARTS CATALOGUE
©2025 by Yamaha Motor Co., Ltd.
1st edition, April 2025
All rights reserved.
Any reprinting or unauthorized use
without the written permission of
Yamaha Motor Co., Ltd.
is expressly prohibited.
Printed in Japan.

F80BET/F100DET
CATALOGUE DE PIECES DETACHEES
©2025 par Yamaha Motor Co., Ltd.
1re édition, avril 2025
Tous droits réservés
Toute réimpression ou utilisation
non autorisée sans la permission écrite
de Yamaha Motor Co., Ltd.
est formellement interdite.
Imprimé au Japon

FOREWORD

This Parts Catalogue is related to the parts for the model(s) on the cover page. When you are ordering replacement parts, please refer to this Parts Catalogue and quote both part numbers and part names correctly.

1. Modifications or additions which have been made after the issue of the Parts Catalogue will be announced in the Parts News.
   It is advisable that you make the necessary corrections to the Parts Catalogue according to the Parts News.

2. Abbreviations
   The following abbreviations are used in this Parts Catalogue.
   "UR" Use specified parts number.
   "UN" Use as many as needed.
   "AP" Alternate Parts
   "LM" Locally Made (Parts need to be ordered locally)
   "F#" Frame No. (Applicable machine No.)
   "O/S" Over Size

3. The number of components for assembly
   - Parts, which are to be supplied in an assembly, are listed with a dot (.) in front of the part name as shown below.
   - The numeral appearing to the right of each component part indicates the quantity of parts for each assembly unit.

PART NO.	DESCRIPTION	Q'TY	REMARKS
2F5–83310–60	FRONT FLASHER LIGHT ASSY	2	
115–83311–60	.BULB (6V–18W)	1	

4. Applicable colours of graphics are represented in the "REMARKS" as shown below.

PART NO.	DESCRIPTION	Q'TY	REMARKS
2N4–24110–00–X5	FUEL TANK COMP.	2	MXR
3J1–24240–10	.GRAPHIC, FUEL TANK	1	FOR MXR

5. Note that the illustrations for reference in finding parts numbers are not to be used for assembling. When assembling, please use the applicable service manual.

6. The asterisk (*) before a reference number indicates modified items after the first edition.

7. Applicable Serial No.
   Engine Serial No.

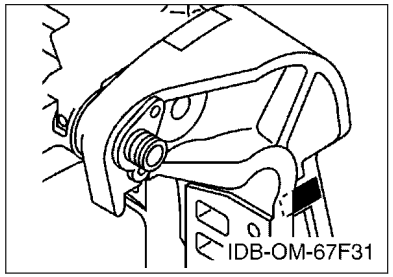

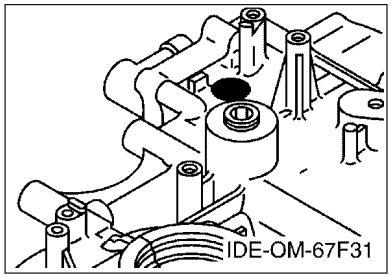

8. Applicable Engine Starting Serial No.

Model	Serial No.	Model	Serial No.
F80B	6D7-1013666	F100D	6D9-1018900

9. Applicable Colour Code

Abbreviation	Colour Name	Colour Code
DBN1	DARK BLUISH GRAY 1	008D

10. Quantity Column Information

Column No.	Name Of Q'ty Column	Applicable Model
1	6D78	F80BET
2	6D98	F100DET

AVANT–PROPOS

Ce catalogue de pièces détachées concerne les pièces pour le(s) modèle(s) indiqué(s) sur la page de couverture. Lorsque vous commandez des pièces de rechange, veuillez vous référer à ce catalogue de pieces détachées et indiquer clairement les numéros et les noms des pièces détachées.

1. Les modifications ou ajouts ayant été effectués après la parution du catalogue de pièces détachées seront décrits dans les Bulletins d'information concernant les pièces détachées.
   Il est recommandé que vous apportiez les corrections nécessaires au catalogue des pièces détachées en vous référant aux Bulletins d'information.

2. Abréviations
   Dans ce catalogue, les abréviations suivantes sont utilisées:
   "UR" Utiliser le numéro de pièces spécifié.
   "UN" Utiliser autant que nécessaire.
   "AP" Pièces de substitution
   "LM" Fabrication locale (les pièces doivent être commandées localement.)
   "F#" N° de cadre (applicable au N° de série)
   "O/S" Surdimensionné

3. Nombre de pièces d'un assemblage
   - Les pièces fournies comme composants d'un assemblage sont précédées d'un point (.) de la manière indiquée ci–dessous.
   - Le chiffre apparaissant à la droite de chaque composant indique la quantité de pièces pour chaque unité d'assemblage.

N° PIECES	DESCRIPTION	QTE	REMARQUES
2F5–83310–60	ENS. CLIGNOTANT AVANT	2	
115–83311–60	.AMPOULE (6V–18W)	1	

4. Les couleurs concernant les graphiques sont indiquées dans la colonne "REMARQUES", comme indiqué ci–dessous.

N° PIECES	DESCRIPTION	QTE	REMARQUES
2N4–24110–00–X5	RESERVOIR A ESSENCE.	2	MXR
3J1–24240–10	.GRAPHIQUE	1	POUR MXR

5. Veuillez noter que les illustrations sont indiquées à titre de référence pour trouver les numéros de pièces, non pour être utilisées lors de l'assemblage. Lors de l'assemblage, veuillez utiliser le manuel d'entretien adéquat.

6. L'astérisque (*) placé devant un numéro de référence indique des éléments qui ont été modifiés après la première édition.

7. N° de série applicable
   N° de Série du moteur

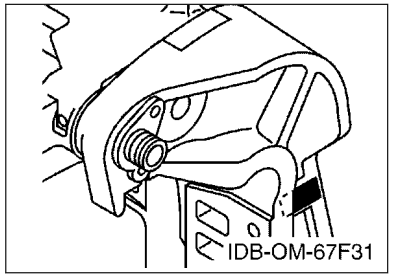

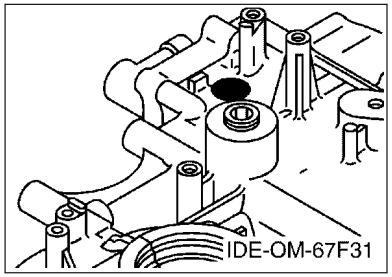

8. N° de série initial du moteur applicable

Modèle	N° de série	Modèle	N° de série
F80B	6D7-1013666	F100D	6D9-1018900

9. Code couleur applicable

Abréviation	Nom de la couleur	Code couleur
DBN1	DARK BLUISH GRAY 1	008D

10. Informations relatives à la colonne Quantité

N° de la colonne	Nom de la colonne Qté	Modèle applicable
1	6D78	F80BET
2	6D98	F100DET

CONTENTS

TOP COWLING..... 1
CYLINDER & CRANKCASE 1.....2
CRANKSHAFT & PISTON.....4
CYLINDER & CRANKCASE 2.....5
VALVE..... 7
INTAKE 1.....9
INTAKE 2.....10
INTAKE 3.....11
FUEL INJECTION PUMP 1..... 13
FUEL INJECTION PUMP 2..... 14
FUEL.....15
GENERATOR..... 17
ELECTRICAL 1.....18
ELECTRICAL 2.....20
ELECTRICAL 3.....22
ELECTRICAL 4.....24
STARTING MOTOR..... 25
BOTTOM COWLING..... 27
CONTROL..... 30
BRACKET 1.....32
BRACKET 2.....34
OPTIONAL PARTS 1.....36
POWER TRIM & TILT ASSY 1..... 37
POWER TRIM & TILT ASSY 2..... 41
UPPER CASING.....42
OIL PAN.....44
LOWER CASING & DRIVE 1..... 46
LOWER CASING & DRIVE 2..... 50
FUEL TANK..... 52
STEERING GUIDE..... 53
OPTIONAL PARTS 2.....54
REPAIR KIT 1.....55
REPAIR KIT 2.....56

INDEX

NUMERICAL INDEX.....58

TABLE DES MATIERES

CAPOT SUPERIEUR..... 1
CYLINDRE & CARTER 1..... 2
VILEBREQUIN & PISTON.....4
CYLINDRE & CARTER 2..... 5
SOUPAPE..... 7
ADMISSION 1.....9
ADMISSION 2.....10
ADMISSION 3.....11
POMPE A INJECTEUR 1..... 13
POMPE A INJECTEUR 2..... 14
CARBURANT..... 15
GENERATRICE.....17
PARTIE ELECTRIQUE 1.....18
PARTIE ELECTRIQUE 2.....20
PARTIE ELECTRIQUE 3.....22
PARTIE ELECTRIQUE 4.....24
DEMARREUR ELECTRIQUE.....25
CAPOT INFERIEUR.....27
COMMANDE..... 30
SUPPORT 1..... 32
SUPPORT 2..... 34
PIECES OPTIONNELLES 1.....36
PUISSANCE PARER ET INCLINER 1..... 37
PUISSANCE PARER ET INCLINER 2..... 41
FOURREAU.....42
VENTILATEUR D'HUILE..... 44
BOITIER D'HELICE TRANSMISSION1.....46
BOITIER D'HELICE TRANSMISSION2.....50
RESERVOIR A CARBURANT.....52
FIXATION DE DIRECTION..... 53
PIECES OPTIONNELLES 2.....54
KITS DE REPARATION 1..... 55
KITS DE REPARATION 2..... 56

INDEX

INDEX NUMERIQUE.....58

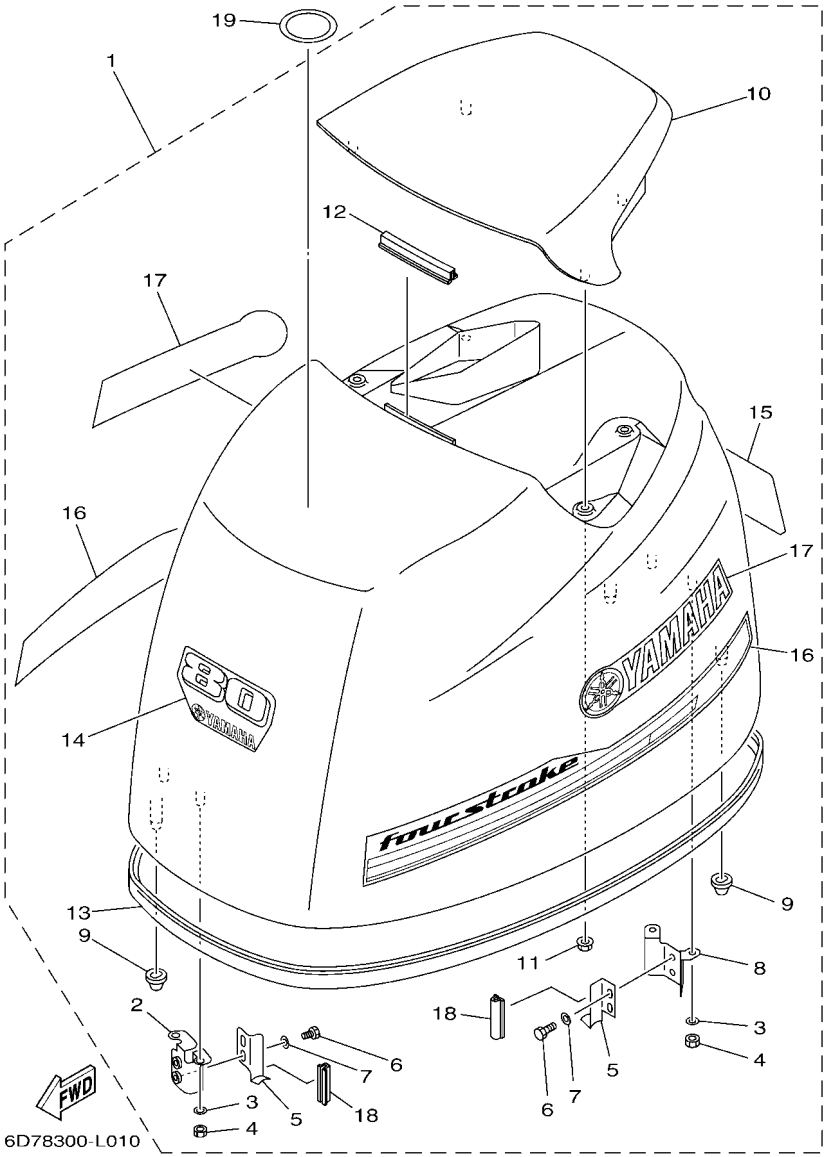

FIG. 1 TOP COWLING — CAPOT SUPERIEUR

REF. NO.	PART NO. N° PIECES	DESCRIPTION DESCRIPTION	6D78	6D98				REMARKS REMARQUES
1	6D7–42610–20	TOP COWLING ASSY CAPOT (ENS.)	1					
	6D9–42610–20	TOP COWLING ASSY CAPOT (ENS.)		1				
2	67F–42647–00	.HOLDER, CLAMP BAND .SUPPORT, SANDOW DE SERRAGE	1	1				
3	92990–06100	.WASHER, SPRING .RONDELLE, GROWER	4	4				
4	95380–06600	.NUT, HEXAGON .ECROU	4	4				
5	68V–42652–00	.HOOK .CROCHET	2	2				
6	97095–06012	.BOLT .BOULON	4	4				
7	92995–06600	.WASHER .RONDELLE	4	4				
8	67F–42649–00	.HOLDER, CLAMP BAND .SUPPORT, SANDOW DE SERRAGE	1	1				
9	67F–42662–00	.DAMPER .AMORTISSEUR	3	3				
10	67F–42613–00–8D	.MOLDING, AIR DUCT .MANCHON A AIR	1	1				
11	90179–06M24	.NUT .ECROU	4	4				
12	61N–42628–00	.SEAL .JOINT	1	1				
13	67F–42615–00	.SEAL .JOINT	1	1				
14	6D7–42677–10	.GRAPHIC, FRONT .ADHESIF, AVANT	1					
	60C–42677–10	.GRAPHIC, FRONT .ADHESIF, AVANT		1				
15	6D7–42678–20	.GRAPHIC, REAR .ADHESIF, ARRIERE	1					
	6D9–42678–20	.GRAPHIC, REAR .ADHESIF, ARRIERE		1				
16	6D6–W0070–00	.GRAPHIC SET .JEU DIEMBLEMES	1	1				
17	6D6–42681–00	.MARK, COWLING .ADHESIF, CAPOT	2	2				
18	67F–42628–00	.SEAL .JOINT	2	2				
19	67F–13434–20	LABEL, CAUTION ETIQUETTE, ATTENTION	1	1				

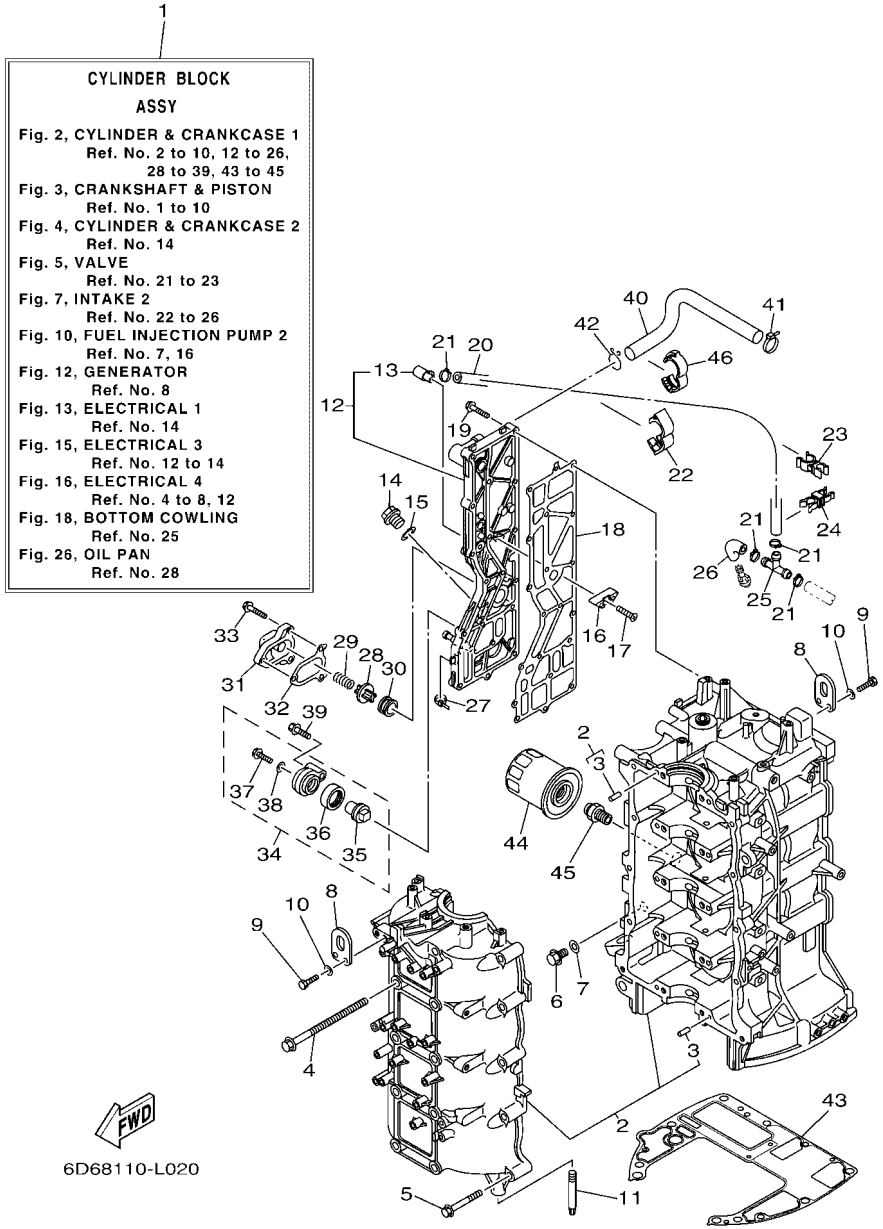

FIG. 2 CYLINDER & CRANKCASE 1 — CYLINDRE & CARTER 1

REF. NO.	PART NO. N° PIECES	DESCRIPTION DESCRIPTION	6D78	6D98				REMARKS REMARQUES
1	6D8–W009B–05–9S	CYLINDER BLOCK ASSY CYLINDRE GROUPE (ENS.)	1	1				
2	6D8–15100–01	CRANKCASE ASSY CARTER DE MOTEUR COMPLET	1	1				
3	93606–12019	.PIN, DOWEL .GOUPILLE	10	10				
4	90119–10M88	BOLT, WITH WASHER BOULON, AVEC RONDELLE	10	10				
5	90119–08M66	BOLT, WITH WASHER BOULON, AVEC RONDELLE	10	10				
6	90340–14M06	PLUG, STRAIGHT SCREW PLOT, FILETE DROIT	1	1				
7	90430–14115	GASKET JOINT	1	1				
8	62Y–11119–00	HANGER, ENGINE ANNEAU, LEVAGE	2	2				
9	97095–06020	BOLT BOULON	4	4				
10	92995–06600	WASHER RONDELLE	4	4				
11	67F–15142–00	GUIDE 1 GUIDE 1	2	2				
12	6D8–41113–40–9S	OUTER COVER, EXHAUST COUVERCLE, ECHAPPEMENT	1	1				
13	676–11372–00	.NIPPLE, HOSE .RACCORD, TUYAU	1	1				
14	90340–18M09	PLUG, STRAIGHT SCREW PLOT, FILETE DROIT	1	1				
15	90430–18130	GASKET JOINT	1	1				
16	6E5–11325–00	ANODE ANODE	3	3				
17	98780–04016	SCREW, FLAT HEAD VIS A TETE FRAISEE	3	3				
18	67F–41114–A2	GASKET, EXHAUST OUTER COVER JOINT, COUVERCLE D'ECHAPPEMENT	1	1				
19	90119–06MA4	BOLT, WITH WASHER BOULON, AVEC RONDELLE	18	18				
20	6D8–42541–00	PIPE 1 TUYAU 1	1	1				
21	90465–11M10	CLAMP BRIDE	4	4				
22	90464–18004	CLAMP BRIDE	1	1				
23	90464–10010	CLAMP BRIDE	1	1				
24	90464–11009	CLAMP BRIDE	1	1				
25	688–24378–00	PIPE, JOINT 3 DURITE RACCORDEMENT 3	1	1				
26	61A–24316–00	PIPE 6 DURITE 6	1	1				
27	90465–11M10	CLAMP BRIDE	1	1				

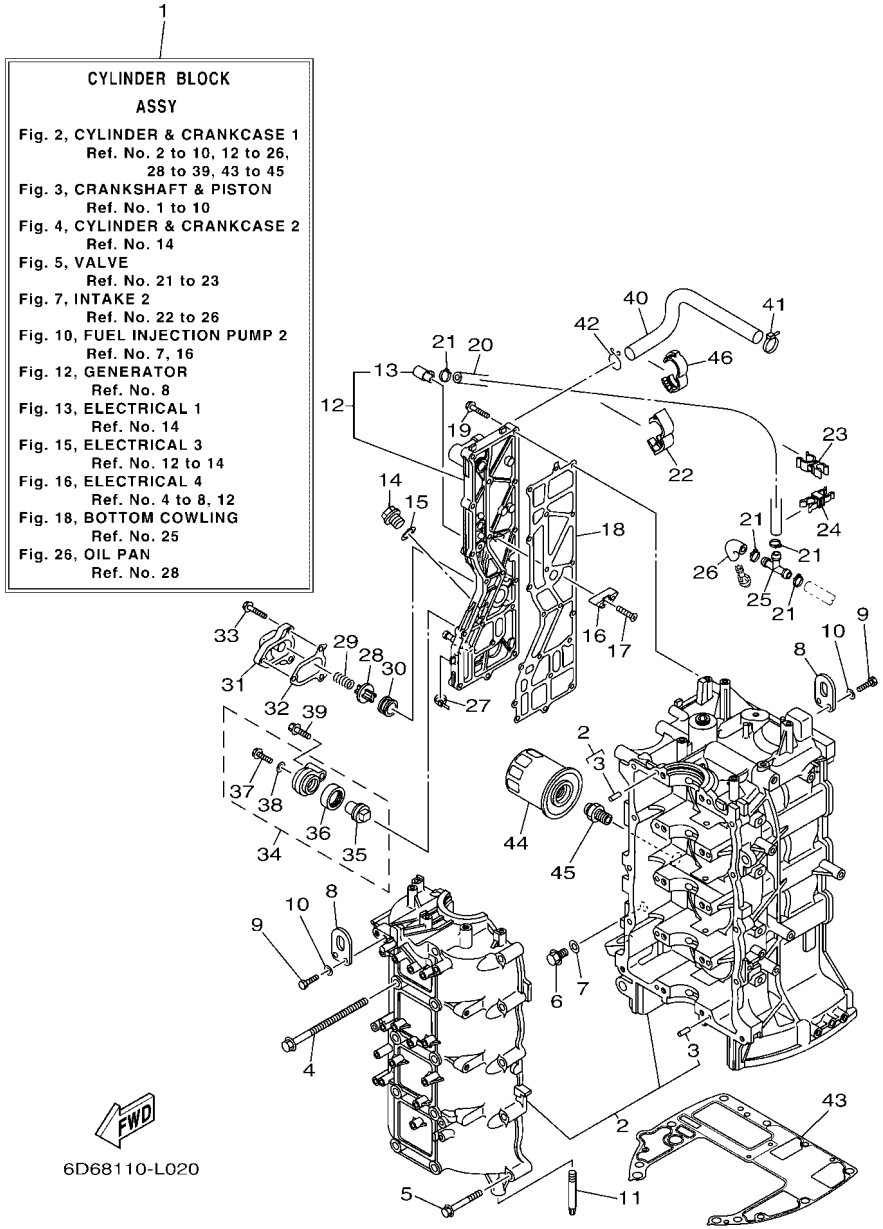

FIG. 2 CYLINDER & CRANKCASE 1 — CYLINDRE & CARTER 1

REF. NO.	PART NO. N° PIECES	DESCRIPTION DESCRIPTION	6D78	6D98				REMARKS REMARQUES
28	6G5–12416–00	VALVE, PRESSURE CONTROL SOUPAPE DE CONTROLEUR PRESS	1	1				
29	90501–16M11	SPRING, COMPRESSION RESSORT, COMPRESSION	1	1				
30	90480–20M05	GROMMET PASSE-FIL	1	1				
31	67F–1246A–01–9S	COVER 1 COUVERCLE 1	1	1				
32	67F–12435–A0	GASKET JOINT	1	1				
33	90119–06MA2	BOLT, WITH WASHER BOULON, AVEC RONDELLE	3	3				
34	69J–11301–00	ANODE COVER ASSY COUVERCLE ANODE (ENS.)	1	1				
35	67F–11325–01	.ANODE .ANODE	1	1				
36	67F–11328–00	.GROMMET, ANODE .PASSE-FIL	1	1				
37	90105–06M07	.BOLT, FLANGE .BOULON	1	1				
38	90430–06M03	.GASKET .JOINT	1	1				
39	97575–08540	BOLT, WITH WASHER VIS HEXAGONAL AVC RONDELLE	1	1				
40	67F–1243A–00	HOSE 1 DURITE 1	1	1				
41	90465–11M59	CLAMP BRIDE	1	1				
42	90467–20M15	CLIP JONC	1	1				
43	68V–11351–00	GASKET, CYLINDER JOINT, D'EMBASE	1	1				
44	5GH–13440–00	ELEMENT ASSY, OIL CLEANER ELEMENT, FILTRE A HUILE	1	1				
45	90401–20007	BOLT, UNION BOULON, RACCORD	1	1				
46	90464–16001	CLAMP BRIDE	1	1				

FIG. 3 CRANKSHAFT & PISTON — VILEBREQUIN & PISTON

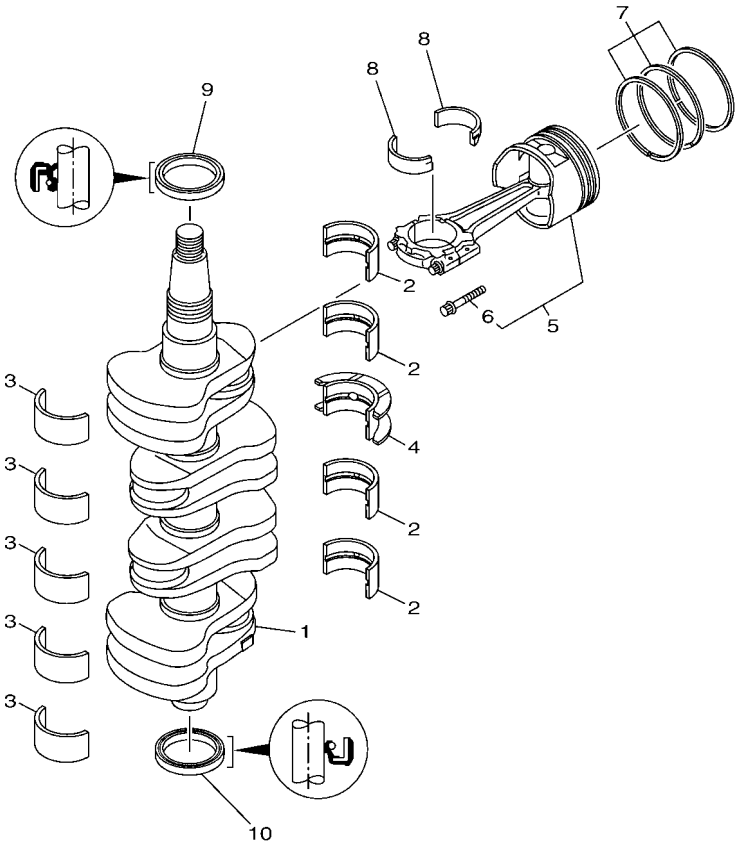

6D67110-K030

REF. NO.	PART NO. N° PIECES	DESCRIPTION DESCRIPTION	6D78	6D98				REMARKS REMARQUES
1	6D8–11411–00	CRANKSHAFT VILEBREQUIN COMPLET	1	1				
2	6D8–11416–00	PLANE BEARING, CRANKSHAFT 1 COUSSINET DE VILEBREQUIN 1	4	4				UR GREEN UR GREEN
	6D8–11416–10	PLANE BEARING, CRANKSHAFT 1 COUSSINET DE VILEBREQUIN 1	4	4				UR BLUE UR BLUE
	6D8–11416–20	PLANE BEARING, CRANKSHAFT 1 COUSSINET DE VILEBREQUIN 1	4	4				UR RED UR RED
3	6D8–11417–00	PLANE BEARING, CRANKSHAFT 2 COUSSINET DE VILEBREQUIN 2	5	5				UR YELLOW UR YELLOW
	6D8–11417–10	PLANE BEARING, CRANKSHAFT 2 COUSSINET DE VILEBREQUIN 2	5	5				UR GREEN UR GREEN
	6D8–11417–20	PLANE BEARING, CRANKSHAFT 2 COUSSINET DE VILEBREQUIN 2	5	5				UR BLUE UR BLUE
	6D8–11417–30	PLANE BEARING, CRANKSHAFT 2 COUSSINET DE VILEBREQUIN 2	5	5				UR RED UR RED
4	6D8–11418–00	PLANE BEARING, CRANKSHAFT 3 COUSSINET DE VILEBREQUIN 3	1	1				UR GREEN UR GREEN
	6D8–11418–10	PLANE BEARING, CRANKSHAFT 3 COUSSINET DE VILEBREQUIN 3	1	1				UR BLUE UR BLUE
	6D8–11418–20	PLANE BEARING, CRANKSHAFT 3 COUSSINET DE VILEBREQUIN 3	1	1				UR RED UR RED
5	6D8–W1164–21	PISTON/CON-ROD ASSY(STD) PISTON/BIELLE COMPLETTE(STD)	4	4				
	6D8–W1164–31	PISTON/CON-ROD ASSY(0.25MM OS) PISTON/BIELLE COMPLETTE:0.25MM	4	4				AP AP
6	K1C–A3275–00	.BOLT, CONNECTING ROD .BOULON, BIELLE	2	2				
7	6D8–11603–01	PISTON RING SET (STD) JEU DE SEGMENTS (STD)	4	4				
	6D8–11604–01	PISTON RING SET (0.25MM O/S) JEU DE SEGMENTS (0.25MM O/S)	4	4				AP AP
8	6D8–11656–00	PLANE BEARING, CONNECTING ROD ROULEMENT DE BIELLE	8	8				UR YELLOW UR YELLOW
	6D8–11656–10	PLANE BEARING, CONNECTING ROD ROULEMENT DE BIELLE	8	8				UR GREEN UR GREEN
	6D8–11656–20	PLANE BEARING, CONNECTING ROD ROULEMENT DE BIELLE	8	8				UR BLUE UR BLUE
	6D8–11656–30	PLANE BEARING, CONNECTING ROD ROULEMENT DE BIELLE	8	8				UR RED UR RED
9	93102–48008	OIL SEAL JOINT SPY	1	1				
10	93101–48001	OIL SEAL JOINT SPY	1	1				

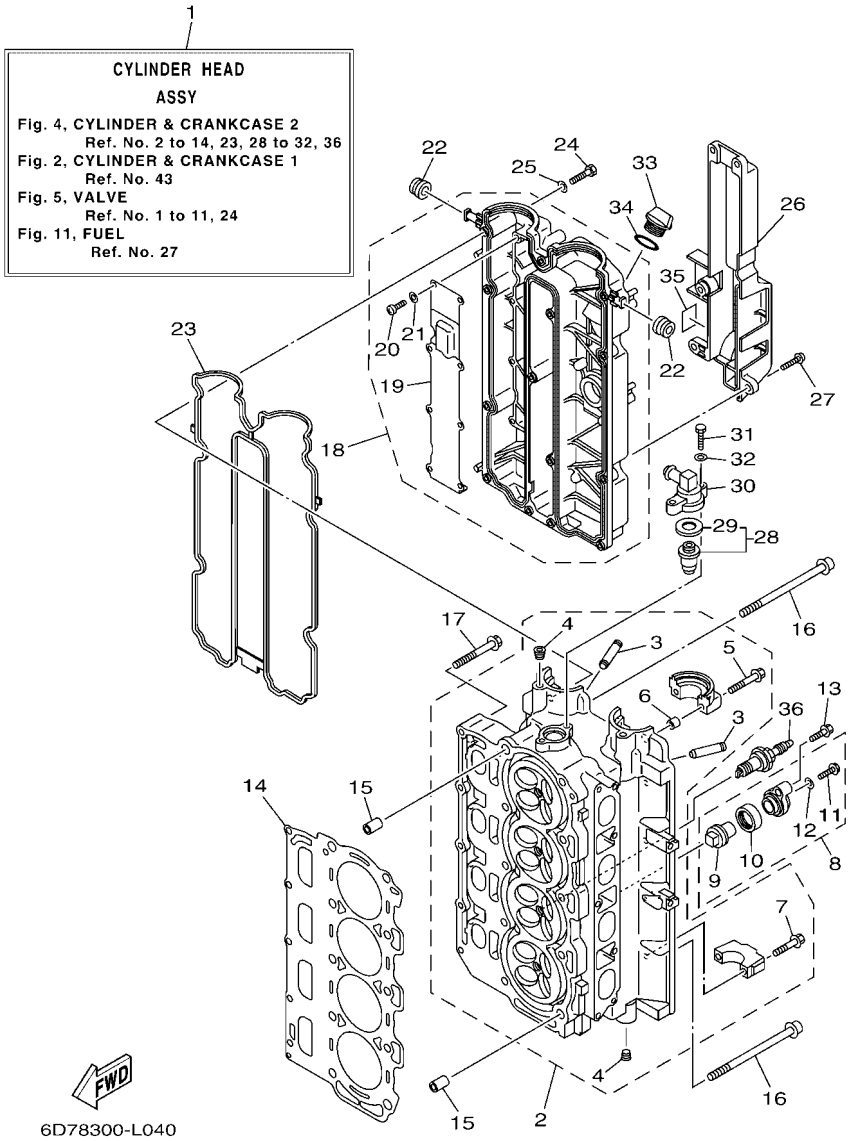

FIG. 4 CYLINDER & CRANKCASE 2 — CYLINDRE & CARTER 2

REF. NO.	PART NO. N° PIECES	DESCRIPTION DESCRIPTION	6D78	6D98				REMARKS REMARQUES
1	6D8–W009A–03–9S	CYLINDER HEAD ASSY CULASSE (ENS.)	1					
	6D9–W009A–03–9S	CYLINDER HEAD ASSY CULASSE (ENS.)		1				
2	6D8–11110–13–9S	CYLINDER HEAD ASSY JEU DE CULASSE	1	1				
3	67F–11133–10	.GUIDE, VALVE 1 .GUIDE, SOUPAPE 1	16	16				
4	90344–51019	.PLUG, TAPER SCREW .PLOT, FILETE CONIQUE	4	4				
5	90119–07235	.BOLT/WASHER-CAM CAPS .BOULON, AVEC RONDELLE	4	4				
6	91809–08006	.PIN, DOWEL .GOUJON, D'ASSEMBLAGE	4	4				
7	90119–07234	.BOLT, WITH WASHER .BOULON, AVEC RONDELLE	16	16				
8	69J–11301–00	ANODE COVER ASSY COUVERCLE ANODE (ENS.)	2	2				
9	67F–11325–01	.ANODE .ANODE	1	1				
10	67F–11328–00	.GROMMET, ANODE .PASSE-FIL	1	1				
11	90105–06M07	.BOLT, FLANGE .BOULON	1	1				
12	90430–06M03	.GASKET .JOINT	1	1				
13	97575–08540	BOLT, WITH WASHER VIS HEXAGONAL AVC RONDELLE	2	2				
14	67F–11181–03	GASKET, CYLINDER HEAD 1 JOINT, DE CULASSE 1	1	1				
15	99530–14016	PIN, DOWEL GOUJON, D'ASSEMBLAGE	2	2				
16	90155–10005	SCREW, FLAT FILLISTER VIS, TETE OVALE PLATE	10	10				
17	90119–08M91	BOLT, WITH WASHER BOULON, AVEC RONDELLE	5	5				
18	6D8–11191–01–9S	COVER, CYLINDER HEAD 1 COUVERCLE, CULASSE 1	1	1				
19	67F–11168–00	.COVER, BREATHER .COUVERCLE, RENIFLARD	1	1				
20	98507–04008	.SCREW, PAN HEAD .VIS, TETE TRONCONIQUE	8	8				
21	92907–04600	.WASHER .RONDELLE	8	8				
22	90480–12072	GROMMET PASSE-FIL	2	2				
23	6D8–11356–01	SEAL, CYLINDER 2 JOINT, SPY CYLINDRE	1	1				
24	97095–06030	BOLT BOULON	14	14				
25	92995–06600	WASHER RONDELLE	14	14				
26	67F–11192–01	COVER, CYLINDER HEAD 2 COUVERCLE, CULASSE 2	1	1				

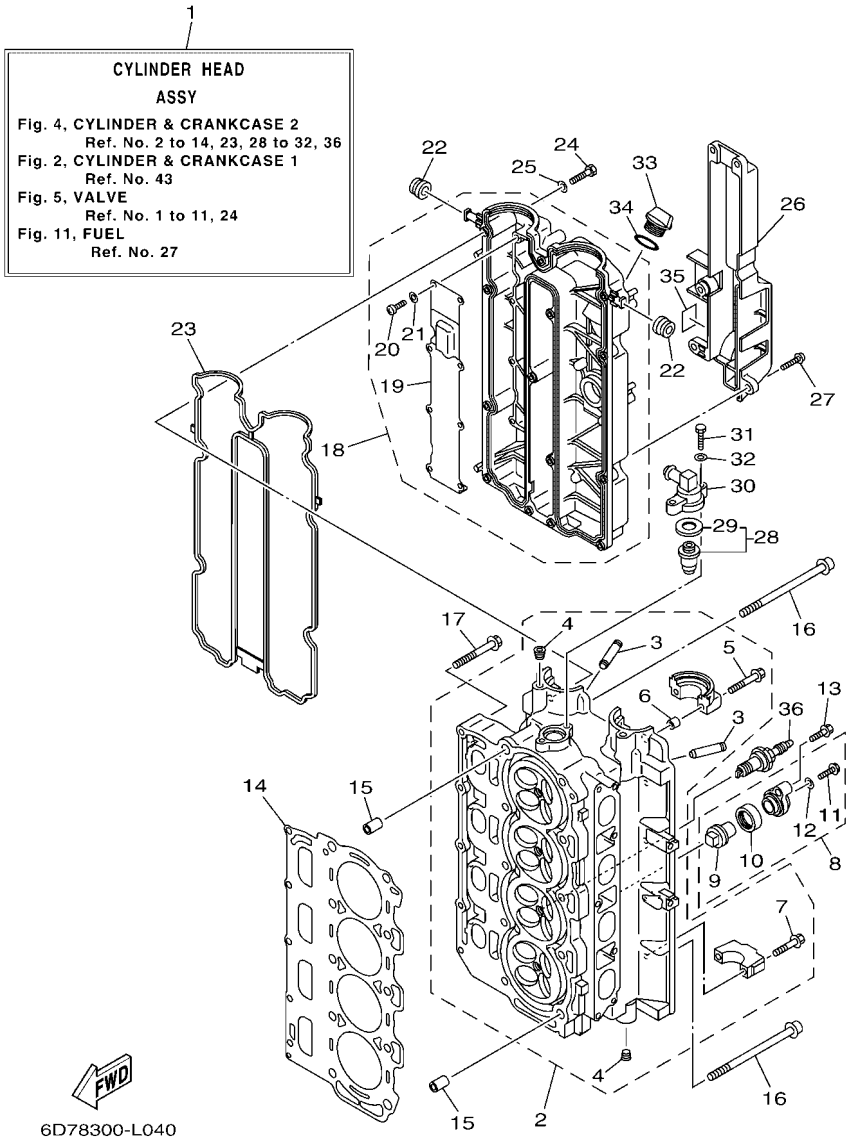

FIG. 4 CYLINDER & CRANKCASE 2 — CYLINDRE & CARTER 2

REF. NO.	PART NO. N° PIECES	DESCRIPTION DESCRIPTION	6D78	6D98				REMARKS REMARQUES
27	90159–06M29	SCREW, WITH WASHER VIS, AVEC RONDELLE	5	5				
28	67F–12411–01	THERMOSTAT THERMOSTAT	1					
	6D9–12411–00	THERMOSTAT THERMOSTAT		1				
29	67F–12412–00	.SEAL, THERMOSTAT .JOINT, THERMOSTAT	1	1				
30	68V–12413–00–9S	COVER, THERMOSTAT COUVERCLE, THERMOSTAT	1	1				
31	97095–06025	BOLT BOULON	2	2				
32	92995–06600	WASHER RONDELLE	2	2				
33	6G8–15363–00	PLUG, OIL PLOT, HUILE	1	1				
34	93210–24M79	O-RING JOINT TORIQUE	1	1				
35	6D8–83626–00	MARK 6 MARK 6	1	1				
36	94702–00391	PLUG, SPARK (NGK LFR5A-11) BOUGIE D'ALLUMAGE(NGK LFR5A-11	4	4				

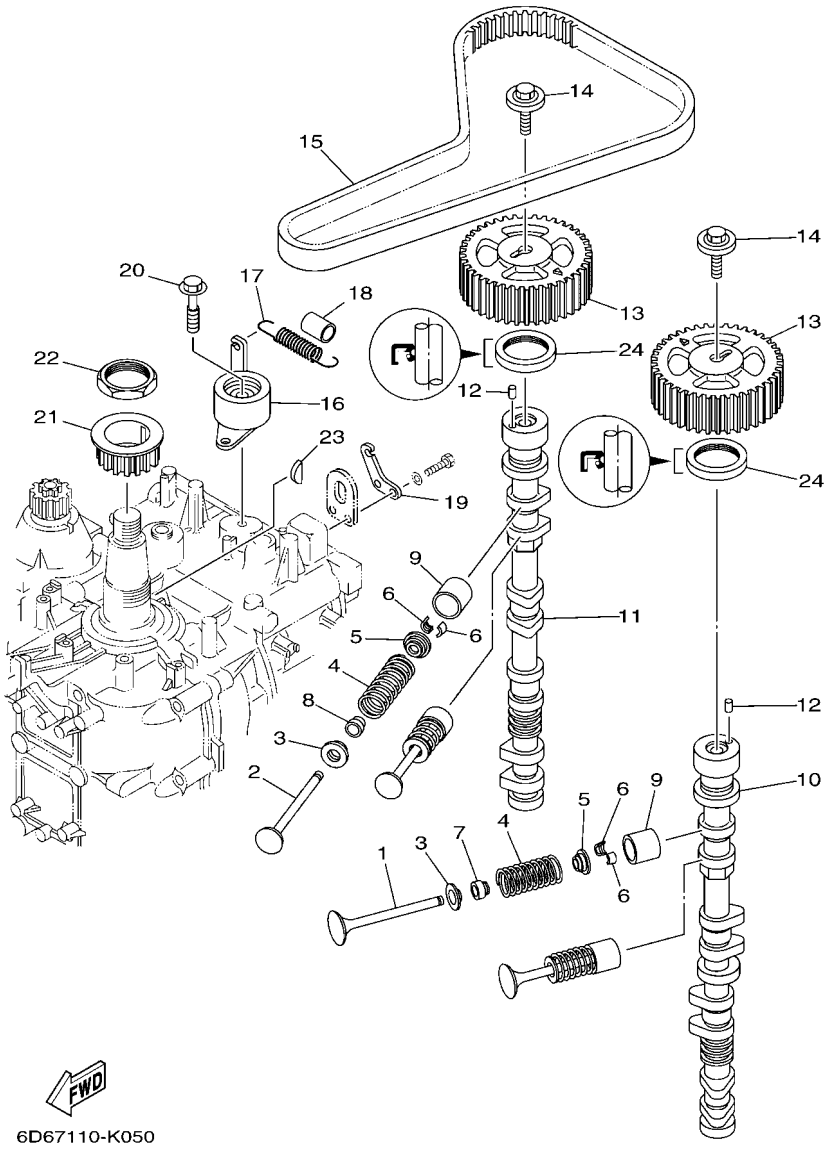

FIG. 5 VALVE — SOUPAPE

REF. NO.	PART NO. N° PIECES	DESCRIPTION DESCRIPTION	6D78	6D98				REMARKS REMARQUES
1	6D8–12111–00	VALVE, INTAKE SOUPAPE, ADMISSION	8	8				
2	6D8–12121–00	VALVE, EXHAUST SOUPAPE, ECHAPPEMENT	8	8				
3	6D8–12116–00	SEAT, VALVE SPRING SIEGE, RESSORT DE SOUPAPE	16	16				
4	6D8–12113–00	SPRING, VALVE INNER RESSORT DE SOUPAPE, INTERNE	16	16				
5	26H–12117–00	RETAINER, VALVE SPRING BUTEE DE RESSORT DE SOUPAPE	16	16				
6	4G0–12118–00	COTTER, VALVE FRAISE, SOUPAPE	32	32				
7	K0A–A3721–00	SEAL, VALVE STEM JOINT, QUEUE DE SOUPAPE	8	8				
8	K0A–A3722–00	SEAL, VALVE STEM 2 JOINT, QUEUE DE SOUPAPE 2	8	8				
9	6D8–12153–00	LIFTER, VALVE (12) LEVE-SOUPAPE (12)	16	16				UR UR
	6D8–12153–10	LIFTER, VALVE (14) LEVE-SOUPAPE (14)	16	16				UR UR
	6D8–12153–20	LIFTER, VALVE (16) LEVE-SOUPAPE (16)	16	16				UR UR
	6D8–12153–30	LIFTER, VALVE (18) LEVE-SOUPAPE (18)	16	16				UR UR
	6D8–12153–40	LIFTER, VALVE (20) LEVE-SOUPAPE (20)	16	16				UR UR
	6D8–12153–50	LIFTER, VALVE (22) LEVE-SOUPAPE (22)	16	16				UR UR
	6D8–12153–60	LIFTER, VALVE (24) LEVE-SOUPAPE (24)	16	16				UR UR
	6D8–12153–70	LIFTER, VALVE (26) LEVE-SOUPAPE (26)	16	16				UR UR
	6D8–12153–80	LIFTER, VALVE (28) LEVE-SOUPAPE (28)	16	16				UR UR
	6D8–12153–90	LIFTER, VALVE (30) LEVE-SOUPAPE (30)	16	16				UR UR
	6D8–12153–A0	LIFTER, VALVE (32) LEVE-SOUPAPE (32)	16	16				UR UR
	6D8–12153–B0	LIFTER, VALVE (34) LEVE-SOUPAPE (34)	16	16				UR UR
	6D8–12153–C0	LIFTER, VALVE (36) LEVE-SOUPAPE (36)	16	16				UR UR
	6D8–12153–D0	LIFTER, VALVE (38) LEVE-SOUPAPE (38)	16	16				UR UR
	6D8–12153–E0	LIFTER, VALVE (40) LEVE-SOUPAPE (40)	16	16				UR UR
	6D8–12153–F0	LIFTER, VALVE (42) LEVE-SOUPAPE (42)	16	16				UR UR
	6D8–12153–G0	LIFTER, VALVE (44) LEVE-SOUPAPE (44)	16	16				UR UR
	6D8–12153–H0	LIFTER, VALVE (46) LEVE-SOUPAPE (46)	16	16				UR UR
	6D8–12153–J0	LIFTER, VALVE (48) LEVE-SOUPAPE (48)	16	16				UR UR

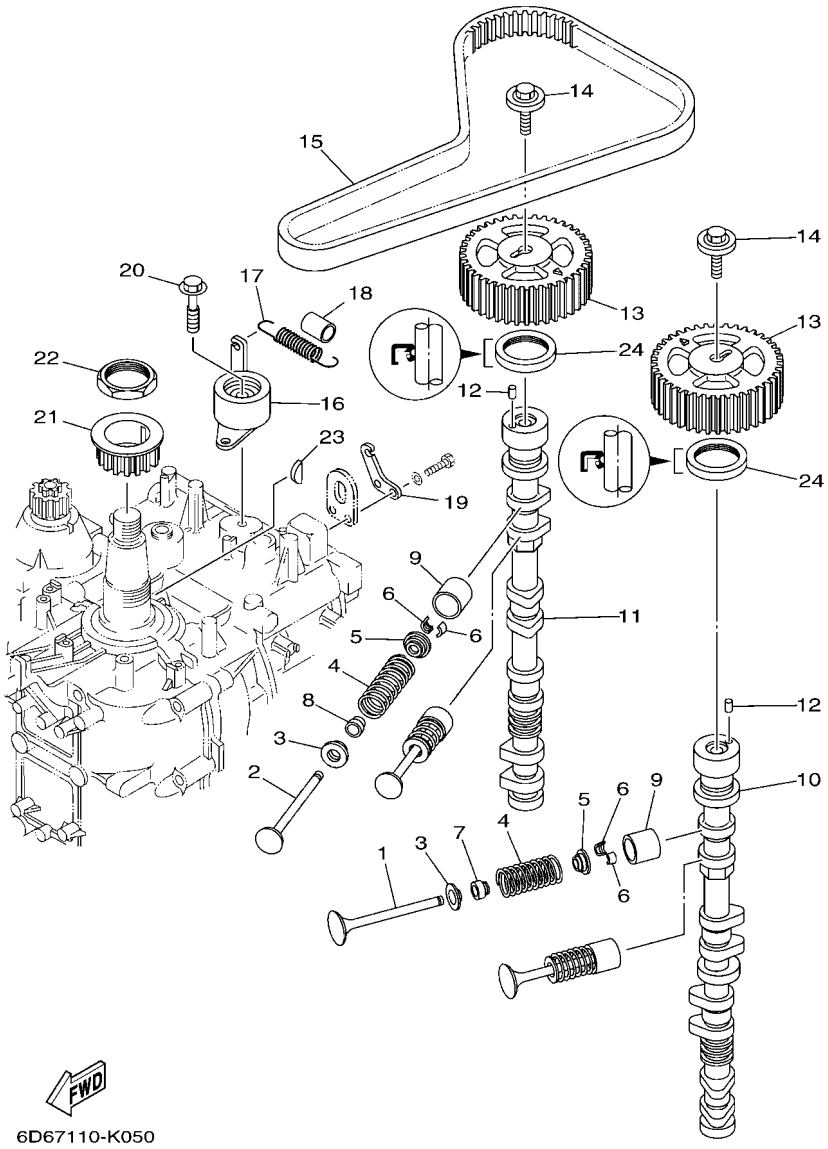

FIG. 5 VALVE — SOUPAPE

REF. NO.	PART NO. N° PIECES	DESCRIPTION DESCRIPTION	6D78	6D98				REMARKS REMARQUES
9	6D8–12153–K0	LIFTER, VALVE (50) LEVE-SOUPAPE (50)	16	16				UR UR
	6D8–12153–L0	LIFTER, VALVE (52) LEVE-SOUPAPE (52)	16	16				UR UR
	6D8–12153–M0	LIFTER, VALVE (54) LEVE-SOUPAPE (54)	16	16				UR UR
	6D8–12153–N0	LIFTER, VALVE (56) LEVE-SOUPAPE (56)	16	16				UR UR
	6D8–12153–P0	LIFTER, VALVE (58) LEVE-SOUPAPE (58)	16	16				UR UR
	6D8–12153–R0	LIFTER, VALVE (60) LEVE-SOUPAPE (60)	16	16				UR UR
	6D8–12153–S0	LIFTER, VALVE (62) LEVE-SOUPAPE (62)	16	16				UR UR
	6D8–12153–T0	LIFTER, VALVE (64) LEVE-SOUPAPE (64)	16	16				UR UR
	6D8–12153–U0	LIFTER, VALVE (66) LEVE-SOUPAPE (66)	16	16				UR UR
	6D8–12153–V0	LIFTER, VALVE (68) LEVE-SOUPAPE (68)	16	16				UR UR
10	6D8–12171–00	CAMSHAFT 1 ARBRE A CAMES 1	1					
	6D9–12171–00	CAMSHAFT 1 ARBRE A CAMES 1		1				
11	6D8–12181–00	CAMSHAFT 2 ARBRE A CAMES 2	1	1				
12	93605–10108	PIN, DOWEL AXE	2	2				
13	67F–11537–00	GEAR, DRIVEN PIGNON SECONDAIRE	2	2				
14	90119–10050	BOLT, WITH WASHER BOULON, AVEC RONDELLE	2	2				
15	67F–46241–00	BELT COURROIE TRAPEZOIDALE	1	1				
16	67F–11590–00	TENSIONER ASSY TENDEUR (ENS.)	1	1				
17	90506–16M39	SPRING, TENSION RESSORT, TENSION	1	1				
18	90445–15M03	HOSE (L23) DURITE (L23)	1	1				
19	67F–11595–00	PLATE,VALVE PLAQUE DE SOUPAPE	1	1				
20	90119–10M72	BOLT, WITH WASHER BOULON, AVEC RONDELLE	1	1				
21	6D8–11536–00	GEAR, DRIVE ENGRENAGE, MENANT	1	1				
22	90170–40008	NUT ECROU	1	1				
23	90280–04008	KEY, WOODRUFF CLAVETTE, DEMI-LUNE	1	1				
24	93102–38008	OIL SEAL JOINT SPY	2	2				

FIG. 6 INTAKE 1 — ADMISSION 1

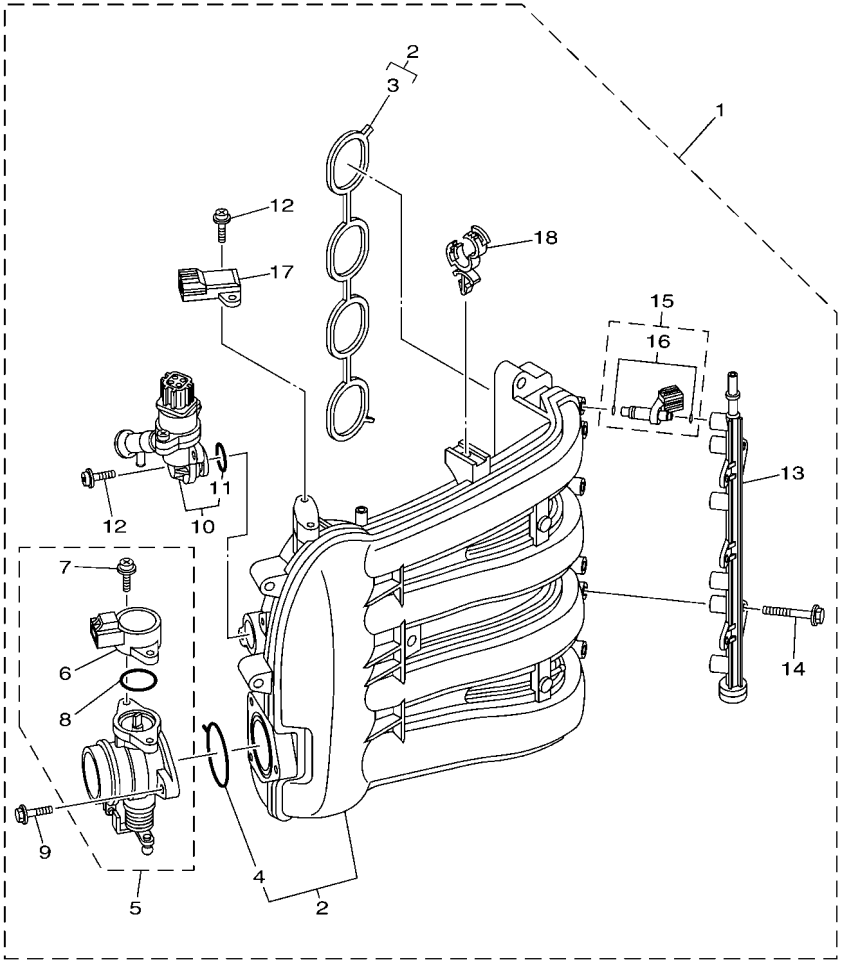

6D81100-D060

REF. NO.	PART NO. N° PIECES	DESCRIPTION DESCRIPTION	6D78	6D98				REMARKS REMARQUES
1	6D8–14200–00	INTAKE ASSY ADMISSION (ENS.)	1	1				
2	6D8–13641–00	.MANIFOLD 1 .TUBULURE 1	1	1				
3	6D8–13645–00	..GASKET, MANIFOLD 1 ..JOINT, TUBULURE 1	1	1				
4	6D8–13557–00	..GASKET ..JOINT	1	1				
5	6D8–13750–00	.THROTTLE BODY ASSY .CARTER D'ACCELERATEUR COMPLET	1	1				
6	6C5–85885–00	..THROTTLE SENSOR ASSY ..SENSITOMETRE (ENS.)	1	1				
7	6C5–81145–00	..SCREW 1 ..VIS 1	2	2				
8	6C5–8182L–00	..O-RING 1 ..JOINT TORIQUE 1	1	1				
9	6C5–14496–00	.BOLT .BOULON	3	3				
10	6D8–13105–01	.CONTROL VALVE ASSY .SOUPAPE DE CONTROLE COMPLET	1	1				
11	6C5–1319C–00	.O-RING .JOINT TORIQUE	1	1				
12	6C5–81146–00	.SCREW 2 .VIS 2	4	4				
13	6D8–13161–00	.PIPE, DELIVERY 1 .DURITE REFOULEMENT 1	1	1				
14	6C5–14446–00	.BOLT .BOULON	2	2				
15	6D8–13761–00	.INJECTOR .INJECTEUR	4	4				
16	6C5–1410B–00	..PACKING KIT ..POCHETTE DE JOINTS	1	1				
17	68F–83688–00	.SENSOR ASSY .SONDE (ENS.)	1	1				
18	90464–18246	.CLAMP .BRIDE	1	1				

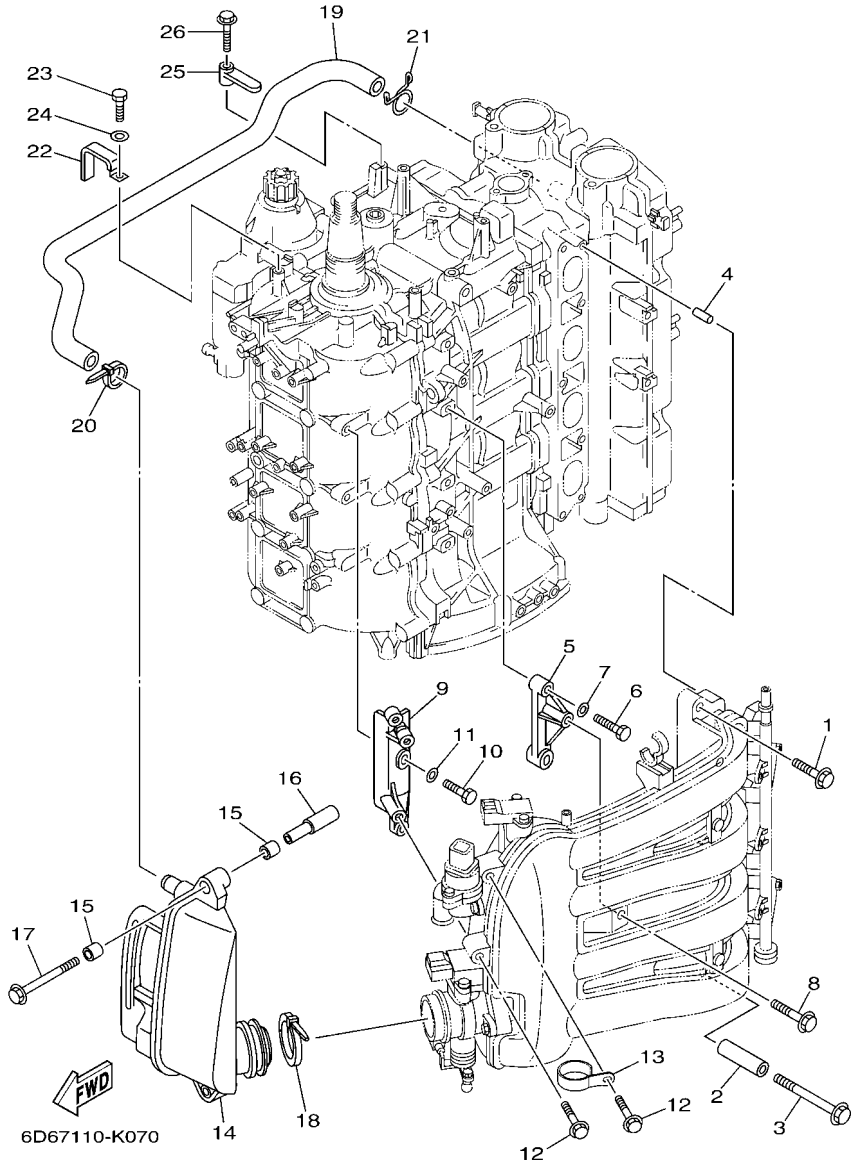

FIG. 7 INTAKE 2 — ADMISSION 2

REF. NO.	PART NO. N° PIECES	DESCRIPTION DESCRIPTION	6D78	6D98				REMARKS REMARQUES
1	90119–08069	BOLT, WITH WASHER BOULON, AVEC RONDELLE	4	4				
2	90387–08033	COLLAR COLLERETTE	1	1				
3	90119–08M03	BOLT, WITH WASHER BOULON, AVEC RONDELLE	1	1				
4	91690–50014	PIN, SPRING AGRAFFE	2	2				
5	6D8–14291–00	BRACKET 1 SUPPORT 1	1	1				
6	97095–06030	BOLT BOULON	2	2				
7	92995–06600	WASHER RONDELLE	2	2				
8	90119–06087	BOLT, WITH WASHER BOULON, AVEC RONDELLE	1	1				
9	6D8–14292–00	BRACKET 2 SUPPORT 2	1	1				
10	97095–06020	BOLT BOULON	2	2				
11	92995–06600	WASHER RONDELLE	2	2				
12	90119–06087	BOLT, WITH WASHER BOULON, AVEC RONDELLE	2	2				
13	6D8–13782–00	STAY SUPPORT	1	1				
14	6D6–14440–00	SILENCER ASSY, INTAKE SIENCIEUX D'ADMISSION	1					
	6D9–14440–01	SILENCER ASSY, INTAKE SIENCIEUX D'ADMISSION		1				
15	90386–08001	BUSH DOUILLE	4	4				
16	90387–07013	COLLAR COLLERETTE	2	2				
17	90119–06113	BOLT, WITH WASHER BOULON, AVEC RONDELLE	2	2				
18	90464–76001	CLAMP BRIDE	1	1				
19	6D8–15373–00	PIPE, BREATHER DURITE DE RENIFLARD	1	1				
20	90465–11M59	CLAMP BRIDE	1	1				
21	90467–20M15	CLIP JONC	1	1				
22	90465–12M03	CLAMP BRIDE	1	1				
23	97095–06012	BOLT BOULON	1	1				
24	92995–06600	WASHER RONDELLE	1	1				
25	6D8–82544–00	CLAMP COLLIER	1	1				
26	95895–06025	BOLT, FLANGE BOULON	1	1				

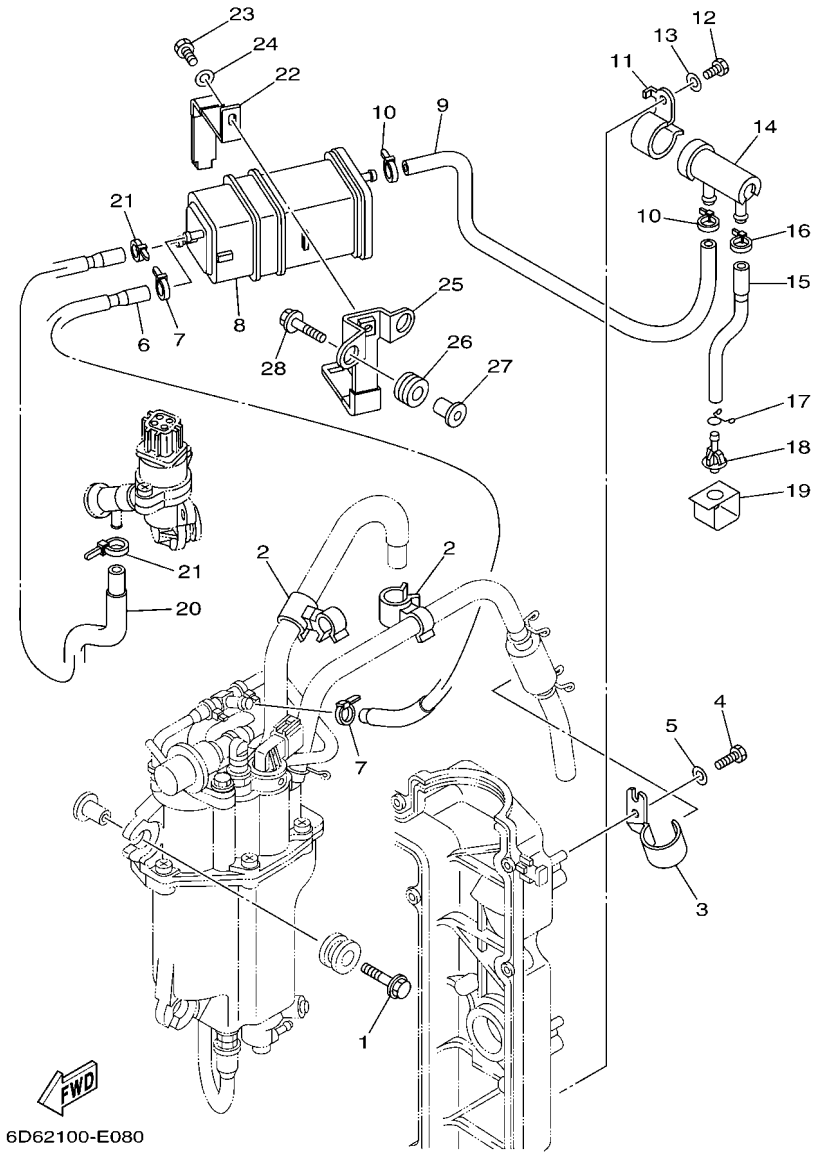

FIG. 8 INTAKE 3 — ADMISSION 3

REF. NO.	PART NO. N° PIECES	DESCRIPTION DESCRIPTION	6D78	6D98				REMARKS REMARQUES
1	90119–06M08	BOLT, WITH WASHER BOULON, AVEC RONDELLE	3	3				
2	90464–15007	CLAMP BRIDE	2	2				
3	6D8–13428–01	BRACKET, STRAINER 1 SUPPORT, FILTRE 1	1	1				
4	97095–06012	BOLT BOULON	1	1				
5	92995–06600	WASHER RONDELLE	1	1				
6	6D8–24314–01	PIPE 4 DURITE 4	1	1				
7	90465–11M10	CLAMP BRIDE	2	2				
8	69J–24170–00	CANISTER ASSY BANDE, RASERVOIR A ESSENCE	1	1				
9	6D8–24315–00	PIPE 5 DURITE 5	1	1				
10	90465–11M10	CLAMP BRIDE	2	2				
11	6D8–2417H–01	CLAMP 1 COLLIER 1	1	1				
12	97095–06010	BOLT BOULON	1	1				
13	92995–06600	WASHER RONDELLE	1	1				
14	69J–24502–00	FILTER, FUEL FILTRE	1	1				
15	6D8–24316–00	PIPE 6 DURITE 6	1	1				
16	90465–11M10	CLAMP BRIDE	1	1				
17	90467–09M03	CLIP JONC	1	1				
18	69J–44391–00	NIPPLE, HOSE RACCORD D'ESSENCE	1	1				
19	6D8–2413X–01	PLATE PLAQUE	1	1				
20	6D8–24317–01	PIPE 7 DURITE 7	1	1				
21	90465–11M10	CLAMP BRIDE	2	2				
22	69J–2419A–01	HOLDER SUPPORT	1	1				
23	97095–06016	BOLT BOULON	1	1				
24	92995–06600	WASHER RONDELLE	1	1				
25	6D8–2134X–00	BRACKET, CANISTER SUPPORT	1	1				
26	90480–10M23	GROMMET PASSE-FIL	2	2				
27	90387–06M60	COLLAR COLLERETTE	2	2				

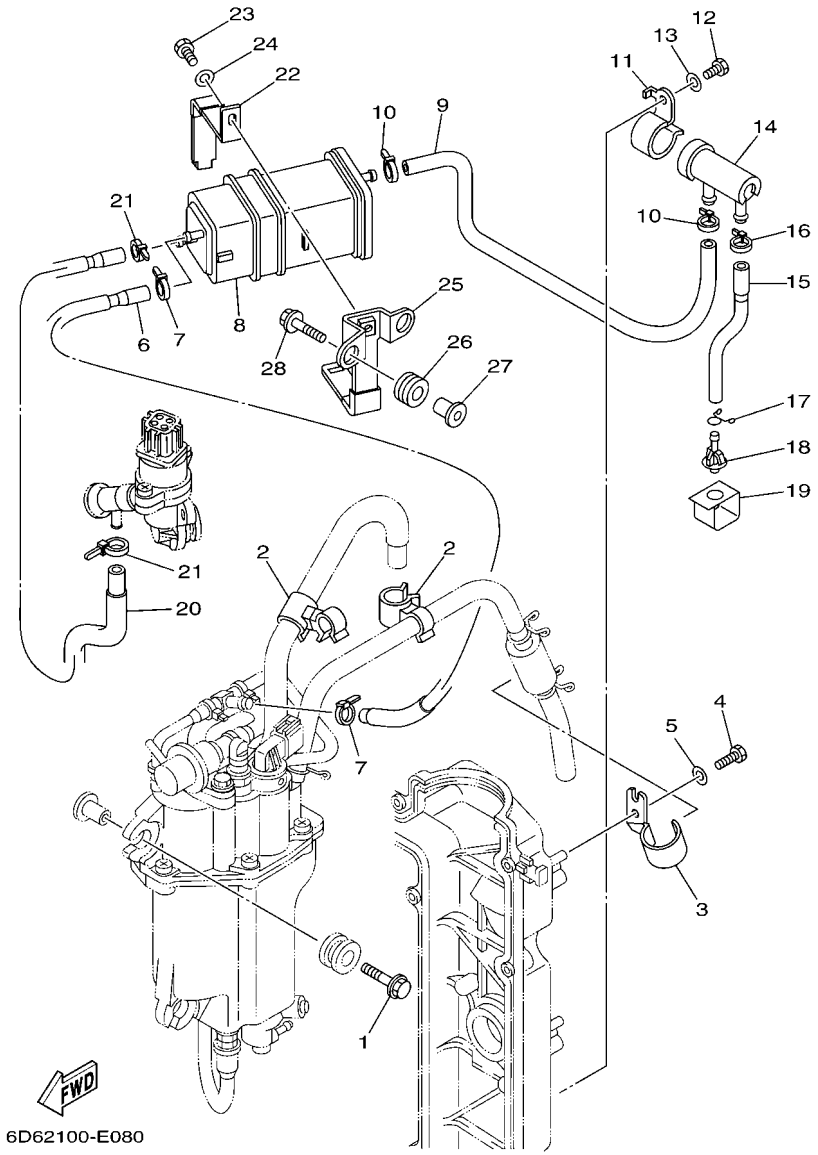

FIG. 8 INTAKE 3 — ADMISSION 3

REF. NO.	PART NO. N° PIECES	DESCRIPTION DESCRIPTION	6D78	6D98				REMARKS REMARQUES
28	90119–06M59	BOLT, WITH WASHER BOULON, AVEC RONDELLE	2	2				

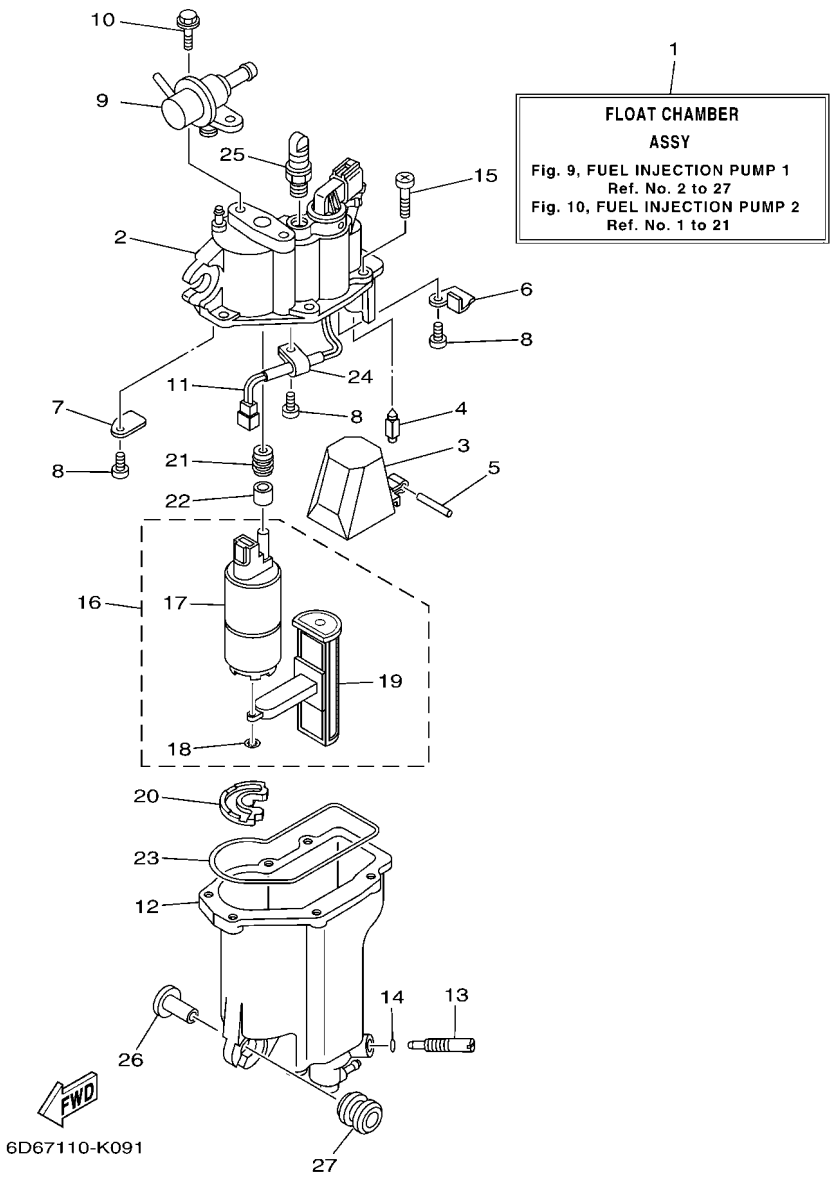

FIG. 9 FUEL INJECTION PUMP 1 POMPE A INJECTEUR 1

REF. NO.	PART NO. N° PIECES	DESCRIPTION DESCRIPTION	6D78	6D98				REMARKS REMARQUES
1	6D8–14180–21	FLOAT CHAMBER ASSY CUVE DE FLOTTEUR	1	1				
2	6D8–14182–10	COVER, FLOAT CHAMBER COUVERCLE, CUVE DE FLOTTEUR	1	1				
3	6C5–14985–00	FLOAT FLOTTEUR	1	1				
4	6C5–14546–10	VALVE, NEEDLE POINTEAU	1	1				
5	6C5–14386–00	PIN, FLOAT AXE, FLOTTEUR	1	1				
6	6C5–2441R–10	PLATE, BAFFLE 1 SEPARATEUR 1	1	1				
7	6C5–2441T–10	PLATE, BAFFLE 2 SEPARATEUR 2	1	1				
8	6C5–24453–00	SCREW VIS	3	3				
9	6C5–13906–01	REGULATOR, PRESSURE REGULATEUR DE PRESSION	1	1				
10	6C5–24592–00	BOLT BOLTE	2	2				
11	6C5–87226–00	WIRE HARNESS ASSY ENS. FAISCEAU ELECTRIQUE	1	1				
12	6D8–14960–10	BODY ASSY CARTER (ENS.)	1	1				
13	6C5–14191–00	PLUG, DRAIN PLOT, VIDANGE	1	1				
14	6C5–14397–00	O-RING JOINT TORIQUE	1	1				
15	6C5–14567–00	SCREW VIS	6	6				
16	6C5–13910–10	FUEL PUMP ASSY POMPE A ESSENCE COMPLET	1	1				
17	6C5–13907–00	.FUEL PUMP COMP. .POMPE A CARBURANT COMP.	1	1				
18	6C5–14127–10	.CLIP .JONC	1	1				
19	6C5–13915–00	.FILTER .FILTRE	1	1				
20	6C5–13593–00	DAMPER AMORTISSEUR	1	1				
21	6C5–13781–00	DAMPER, PUMP AMORTISSEUR, POMPE	1	1				
22	6C5–13716–00	COLLAR COLLERETTE	1	1				
23	6C5–14984–00	GASKET, FLOAT CHAMBER JOINT, CUVE DE FLOTTEUR	1	1				
24	6C5–21337–10	CLAMP, CABLE COLLIER, CABLE	1	1				
25	6C5–14225–00	CAP COUVERCLE	1	1				
26	90387–06M69	COLLAR COLLERETTE	3	3				
27	90480–09M12	GROMMET PASSE-FIL	3	3				

FIG. 10 FUEL INJECTION PUMP 2 — POMPE A INJECTEUR 2

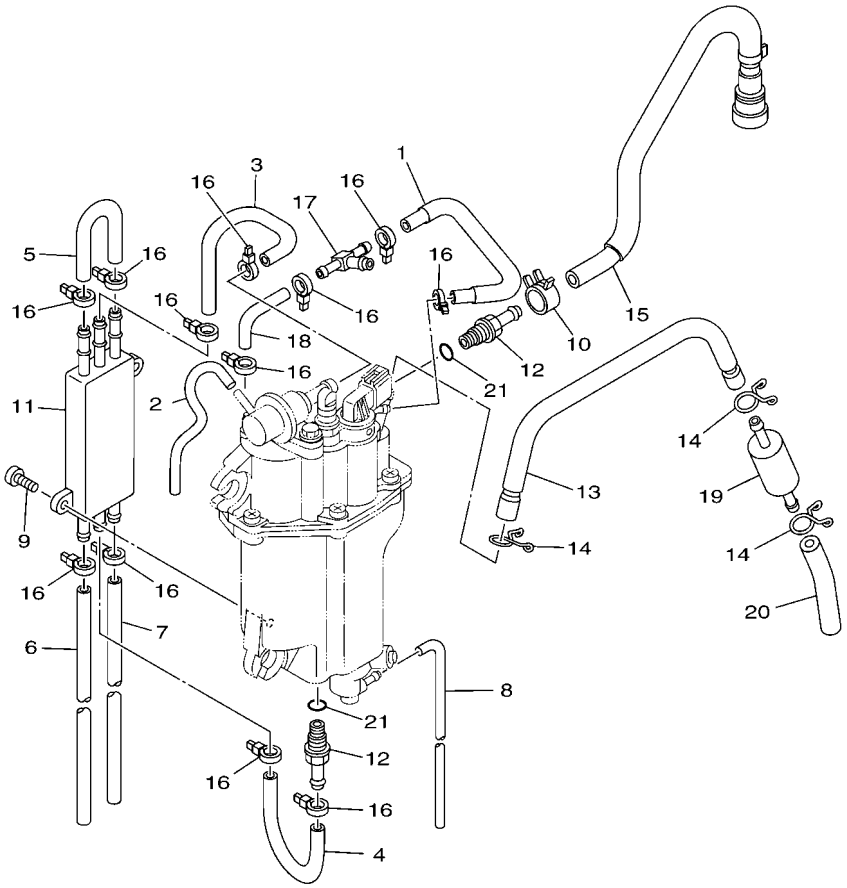

6D67110-K100

REF. NO.	PART NO. N° PIECES	DESCRIPTION DESCRIPTION	6D78	6D98				REMARKS REMARQUES
1	6D8–13546–01	HOSE 2 DURITE 2	1	1				
2	6D8–13542–01	HOSE, VACUUM SENSING 1 DURITE 1	1	1				
3	6C5–24321–00	PIPE 10 DURITE 10	1	1				
4	6C5–24322–00	PIPE 11 DURITE 11	1	1				
5	6C5–24323–00	PIPE 12 DURITE 12	1	1				
6	6D8–24324–01	PIPE 13 DURITE 13	1	1				
7	6D8–24325–10	PIPE 14 DURITE 14	1	1				
8	6BG–14149–00	PIPE DURITE	1	1				
9	6C5–24444–00	SCREW VIS	2	2				
10	6C5–13577–00	CLIP AGRAFE	1	1				
11	6C5–21841–00	COOLER RADIATEUR	1	1				
12	6C5–14251–00	NIPPLE RACCORD	2	2				
13	6D8–14148–00	PIPE DURITE	1	1				
14	6C5–24387–00	CLIP SANDOW	3	3				
15	6D8–13974–00	PIPE, FUEL 4 TUBE 4, CARBURANT	1	1				
16	90465–11M10	CLAMP BRIDE	12	12				
17	6C5–24379–00	PIPE, JOINT 4 DURITE RACCORDEMENT 4	1	1				
18	6C5–13545–00	HOSE 1 DURITE 1	1	1				
19	6C5–24251–00	STRAINER 1 FILTRE 1	1	1				
20	6D8–2451B–00	HOSE, FUEL INLET DURITE	1	1				
21	6C5–13739–00	O-RING JOINT TORIQUE	2	2				

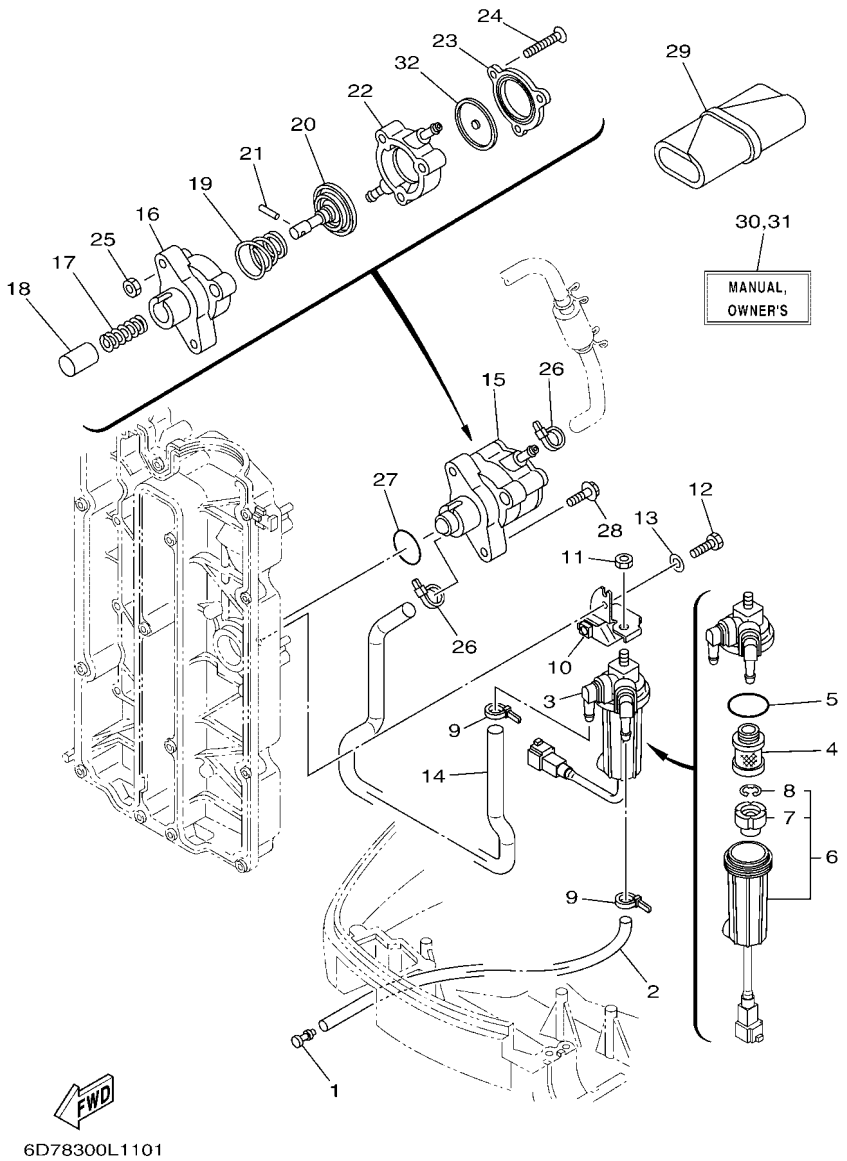

FIG. 11 FUEL — CARBURANT

REF. NO.	PART NO. N° PIECES	DESCRIPTION DESCRIPTION	6D78	6D98				REMARKS REMARQUES
1	689–85547–00	DAMPER AMORTISSEUR	1	1				
2	90445–13M37	HOSE (L2300) DURITE (L2300)	1	1				
3	6D8–24560–00	FILTER ASSY ENS FILTRE	1	1				
4	6D8–24563–00	.ELEMENT, FILTER .ELEMENT, FILTRE	1	1				
5	6D8–24564–00	.GASKET .JOINT	1	1				
6	6D8–24562–00	.CUP, FILTER .CUVETTE, FILTRE	1	1				
7	6D8–24469–00	..FLOAT, WATER LEVEL ..FLOTTEUR	1	1				
8	6D8–24519–00	..CLIP ..JONC	1	1				
9	90465–11M10	CLAMP BRIDE	2	2				
10	6D8–24566–00	BRACKET, FILTER SUPPORT, FILTRE	1	1				
11	95380–08600	NUT ECROU	1	1				
12	97095–06016	BOLT BOULON	1	1				
13	92995–06600	WASHER RONDELLE	1	1				
14	6D8–24311–00	PIPE, FUEL 1 DURITE A ESSENCE	1	1				
15	6D8–24410–10	FUEL PUMP ASSY POMPE A ESSENCE	1	1				
16	68V–24412–00	.BODY 1 .CORPS 1	1	1				
17	68V–24454–00	.SPRING .RESSORT	1	1				
18	63P–13131–00	.PLUNGER .PLONGEUR	1	1				
19	68V–24423–00	.SPRING, DIAPHRAGM .RESSORT, DIAPHRAGME	1	1				
20	68V–24411–00	.DIAPHRAGM .DIAPHRAGME	1	1				
21	68V–24374–00	.PIN .GOUPILLE	1	1				
22	68V–24413–10	.BODY 2 .CORPS 2	1	1				
23	6D8–24414–00	.BODY 3 .CORPS 3	1	1				
24	68V–24444–00	.SCREW .VIS	3	3				
25	68V–24149–00	.NUT .ECROU	3	3				
26	90465–11M10	CLAMP BRIDE	2	2				
27	93210–30682	O-RING JOINT TORIQUE	1	1				

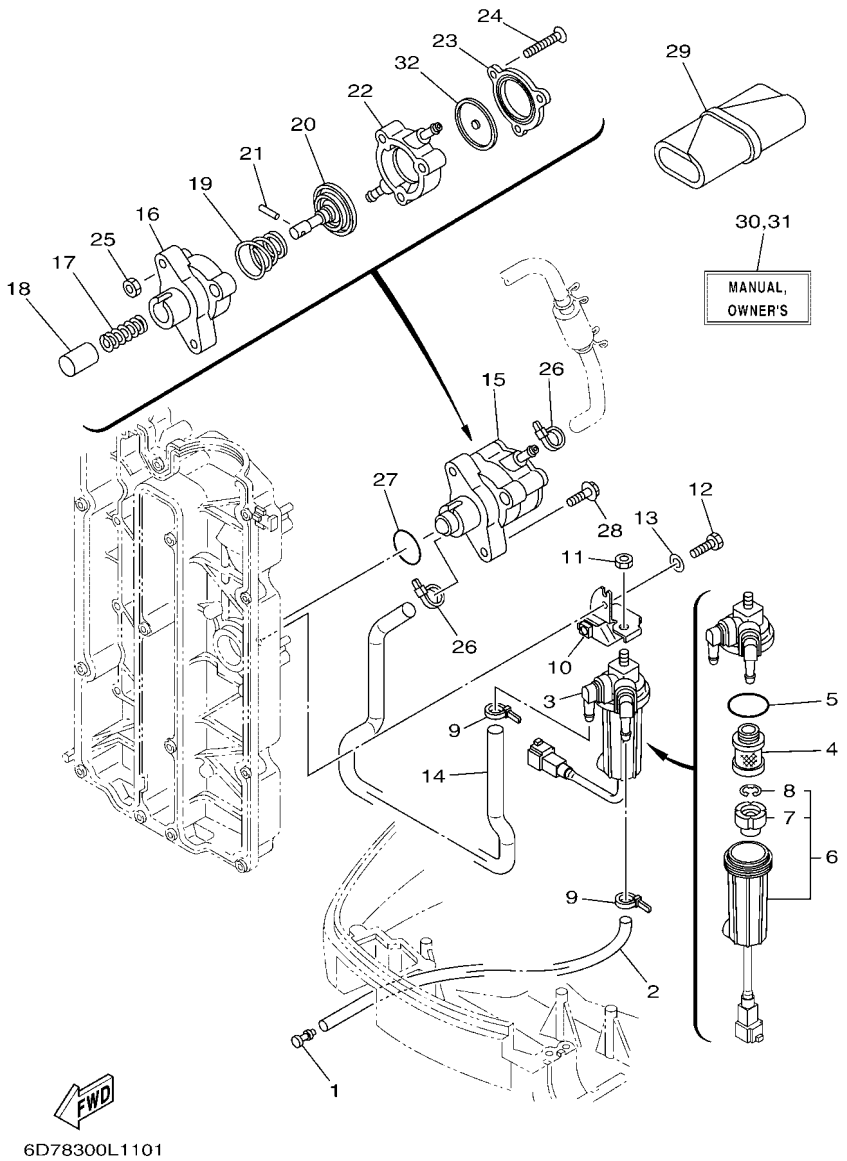

FIG. 11 FUEL — CARBURANT

REF. NO.	PART NO. N° PIECES	DESCRIPTION DESCRIPTION	6D78	6D98				REMARKS REMARQUES
28	90119–06M83	BOLT, WITH WASHER BOULON, AVEC RONDELLE	2	2				
29	67F–28100–01	TOOL KIT TROUSSE A OUTILS	1	1				AP AP
30	6D7–28199–78–E0	MANUAL,OWNER'S MANUEL D'UTILISATION	1	1				UR (E) UR (E)
	6D7–28199–78–F0	MANUAL,OWNER'S MANUEL D'UTILISATION	1	1				UR (F) UR (F)
	6D7–28199–78–S0	MANUAL,OWNER'S MANUEL D'UTILISATION	1	1				UR (ES) UR (ES)
	6D7–28199–78–G0	MANUAL,OWNER'S MANUEL D'UTILISATION	1	1				UR (D) UR (D)
	6D7–28199–78–D0	MANUAL,OWNER'S MANUEL D'UTILISATION	1	1				UR (NL) UR (NL)
	6D7–28199–78–H0	MANUAL,OWNER'S MANUEL D'UTILISATION	1	1				UR (I) UR (I)
31	6D7–28199–88–K0	MANUAL,OWNER'S MANUEL D'UTILISATION	1	1				UR (DK) UR (DK)
	6D7–28199–88–R0	MANUAL,OWNER'S MANUEL D'UTILISATION	1	1				UR (GR) UR (GR)
	6D7–28199–88–P0	MANUAL,OWNER'S MANUEL D'UTILISATION	1	1				UR (P) UR (P)
	6D7–28199–88–N0	MANUAL,OWNER'S MANUEL D'UTILISATION	1	1				UR (N) UR (N)
	6D7–28199–88–M0	MANUAL,OWNER'S MANUEL D'UTILISATION	1	1				UR (S) UR (S)
	6D7–28199–88–L0	MANUAL,OWNER'S MANUEL D'UTILISATION	1	1				UR (SF) UR (SF)
32	68V–24471–10	.DIAPHRAGM .DIAPHRAGME	1	1				

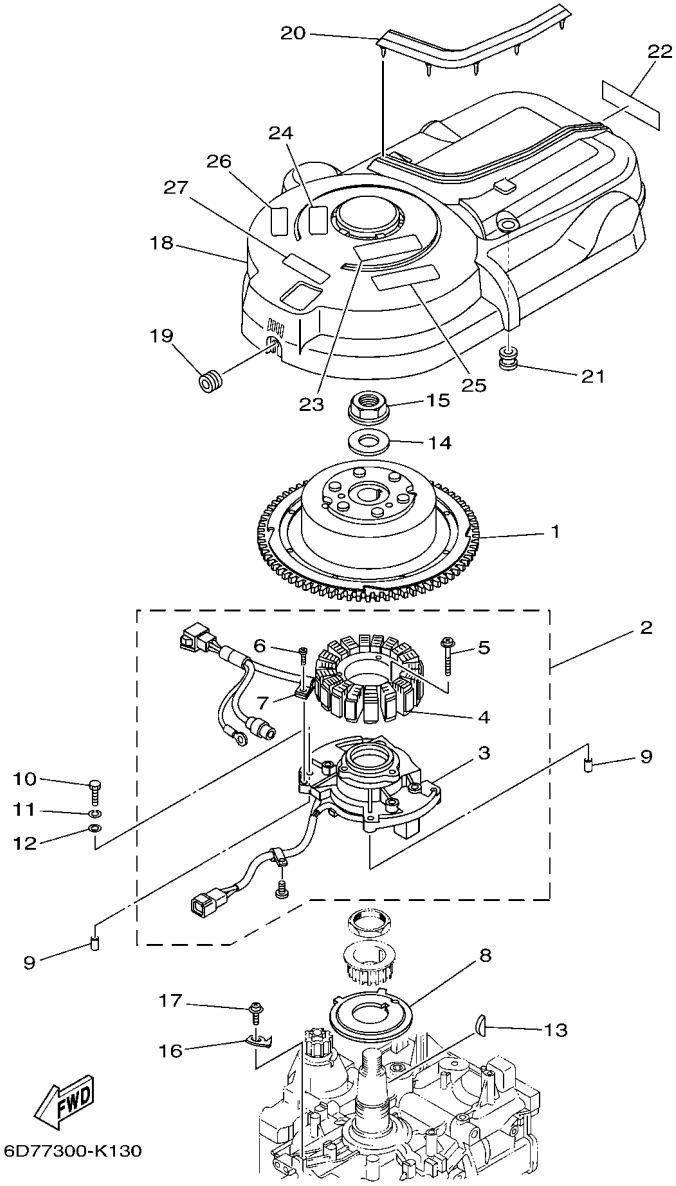

FIG. 12 GENERATOR — GENERATRICE

REF. NO.	PART NO. N° PIECES	DESCRIPTION DESCRIPTION	6D78	6D98				REMARKS REMARQUES
1	6D8–81450–00	ROTOR ASSY ROTOR COMPLET	1	1				
2	6D8–81460–00	BASE ASSY ENS. FLASQUE	1	1				
3	6D8–85580–00	.COIL, PULSER .BOBINE, PULSEUR	1	1				
4	6D8–81410–00	.STATOR ASSY .STATOR COMPLET	1	1				
5	63D–81345–20	.SCREW, WITH WASHER (M6X30) .VIS, AVEC RONDELLE (M6X30)	3	3				
6	97607–04110	.SCREW,WITH WASHER .VIS HEXAGONAL	1	1				
7	445–81328–20	.CLAMP .COLLIER	1	1				
8	68V–81673–00	ROTOR ROTOR	1	1				
9	99530–08012	PIN, DOWEL GOUJON, D'ASSEMBLAGE	2	2				
10	97095–06030	BOLT BOULON	4	4				
11	92995–06100	WASHER, SPRING RONDELLE, GROWER	4	4				
12	92995–06600	WASHER RONDELLE	4	4				
13	90280–05015	KEY, WOODRUFF CLAVETTE, DEMI-LUNE	1	1				
14	90201–24014	WASHER, PLATE RONDELLE, PLATE	1	1				
15	90179–24002	NUT ECROU	1	1				
16	6D8–81332–00	PLATE, TIMING PLATEAU, ALLUMAGE	1	1				
17	97985–06210	SCREW, WITH WASHER VIS, AVEC RONDELLE	1	1				
18	6D8–81337–00	COVER, FLYWHEEL COUVERCLE, VOLANT	1	1				
19	90480–12314	GROMMET PASSE-FIL	1	1				
20	6D8–85547–00	DAMPER AMORTISSEUR	1	1				
21	663–82317–01	DAMPER, IGNITION COIL AMORTISSEUR, BOBINE D'ALLUM	2	2				
22	68V–13437–62	MARK, CAUTION MAKER	1	1				
23	6AH–81995–40	LABEL, WARNING ETIQUETTE, AVERTISSEMENT	1	1				
24	6AH–81995–50	LABEL, WARNING ETIQUETTE, AVERTISSEMENT	1	1				
25	6AH–81994–40	LABEL, SAFETY ETIQUETTE, SECURITE	1	1				
26	6AH–81994–50	LABEL, SAFETY ETIQUETTE, SECURITE	1	1				
27	6AG–81996–00	MARK MARQUE	1	1				

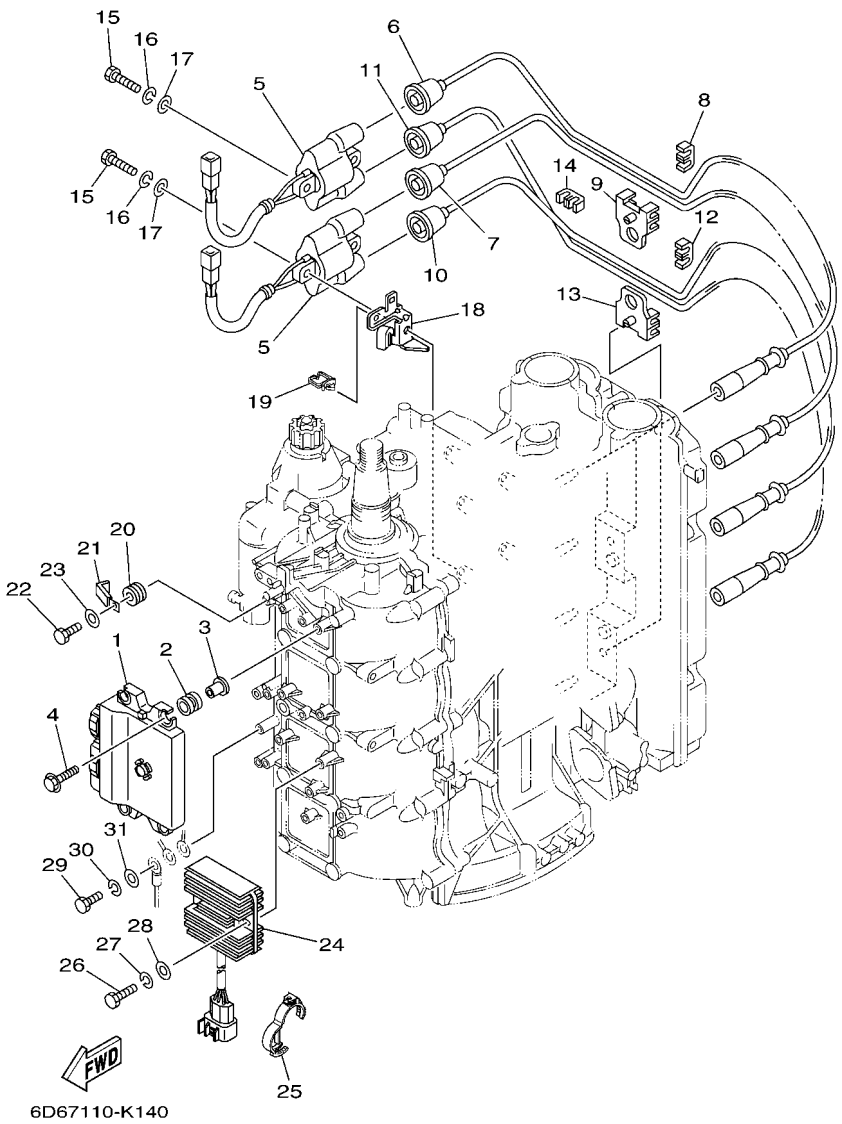

FIG. 13 ELECTRICAL 1 — PARTIE ELECTRIQUE 1

REF. NO.	PART NO. N° PIECES	DESCRIPTION DESCRIPTION	6D78	6D98				REMARKS REMARQUES
1	6D7–8591A–13	ENGINE CONTROL UNIT ASSY BLOC DE CONTROL	1					
	6D9–8591A–13	ENGINE CONTROL UNIT ASSY BLOC DE CONTROL		1				
2	68V–82317–00	DAMPER, IGNITION COIL AMORTISSEUR, BOBINE D'ALLUM	4	4				
3	90387–06119	COLLAR COLLERETTE	4	4				
4	90119–06M59	BOLT, WITH WASHER BOULON, AVEC RONDELLE	4	4				
5	63P–82310–01	IGNITION COIL ASSY BOBINE D'ALLUMAGE	2	2				
6	67F–82341–00	CORD, HIGH TENSION 1 CORDON, HAUTE-TENSION 1	1	1				#1 #1
7	67F–82342–00	CORD, HIGH TENSION 2 CORDON, HAUTE-TENSION 2	1	1				#2 #2
8	67F–82361–00	CLAMP, CORD COLLIER, CORDON	1	1				
9	67F–82362–00	CLAMP, CORD 2 COLLIER, CABLE 2	1	1				
10	67F–82343–00	CORD, HIGH TENSION 3 CORDON, HAUTE-TENSION 3	1	1				#3 #3
11	67F–82344–00	CORD, HIGH TENSION 4 CORDON, HAUTE TENSION 4	1	1				#4 #4
12	67F–82361–00	CLAMP, CORD COLLIER, CORDON	1	1				
13	67F–82362–00	CLAMP, CORD 2 COLLIER, CABLE 2	1	1				
14	67F–82361–00	CLAMP, CORD COLLIER, CORDON	1	1				
15	97095–06025	BOLT BOULON	4	4				
16	92995–06100	WASHER, SPRING RONDELLE, GROWER	4	4				
17	92995–06600	WASHER RONDELLE	4	4				
18	6D8–82388–01	PLATE PLAQUETTE	2	2				
19	90464–08004	CLAMP BRIDE	2	2				
20	90480–14329	GROMMET PASSE-FIL	1	1				
21	90465–08M23	CLAMP BRIDE	1	1				
22	97095–06014	BOLT BOULON	1	1				
23	92995–06600	WASHER RONDELLE	1	1				
24	6D8–81960–10	RECTIFIER & REGULATOR ASSY REDRESSEUR REGULATEUR CPLT	1	1				
25	90464–30003	CLAMP BRIDE	1	1				
26	97095–06025	BOLT BOULON	2	2				

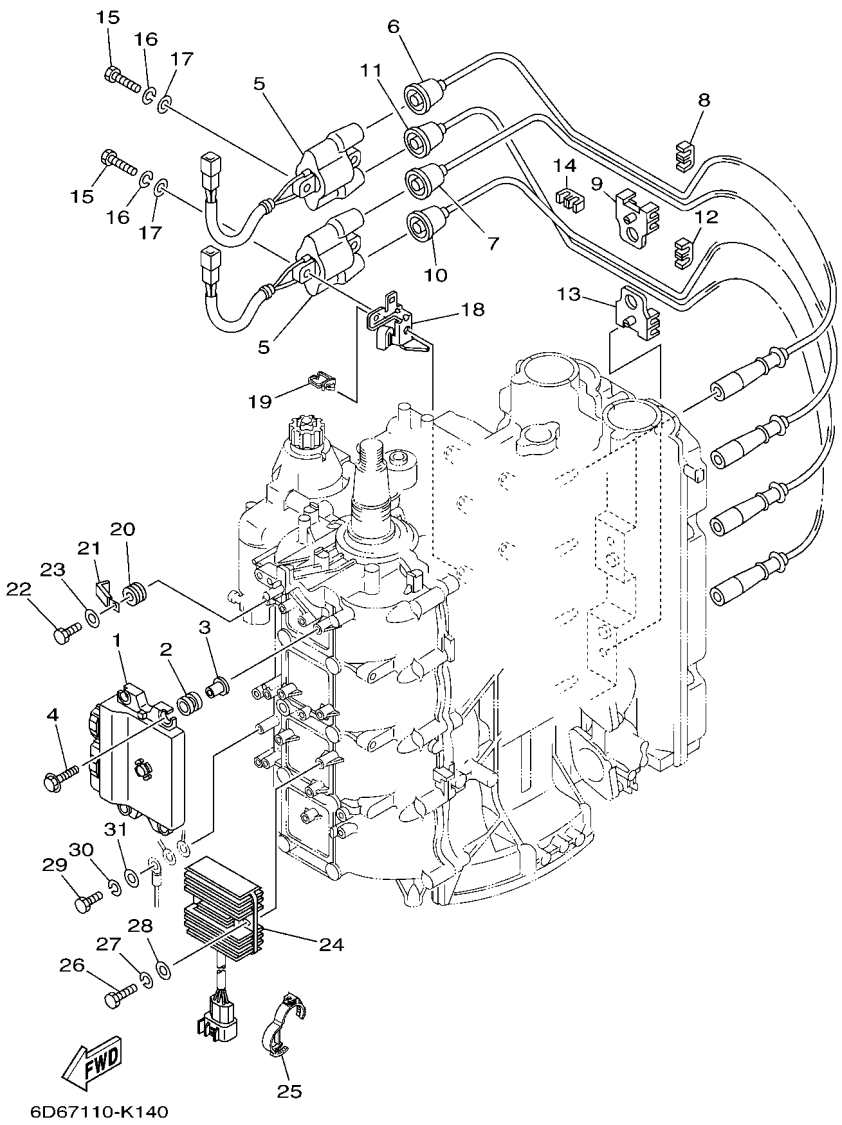

FIG. 13 ELECTRICAL 1 — PARTIE ELECTRIQUE 1

REF. NO.	PART NO. N° PIECES	DESCRIPTION DESCRIPTION	6D78	6D98				REMARKS REMARQUES
27	92995–06100	WASHER, SPRING RONDELLE, GROWER	2	2				
28	92995–06600	WASHER RONDELLE	2	2				
29	97095–06016	BOLT BOULON	1	1				
30	92995–06100	WASHER, SPRING RONDELLE, GROWER	1	1				
31	92995–06600	WASHER RONDELLE	1	1				

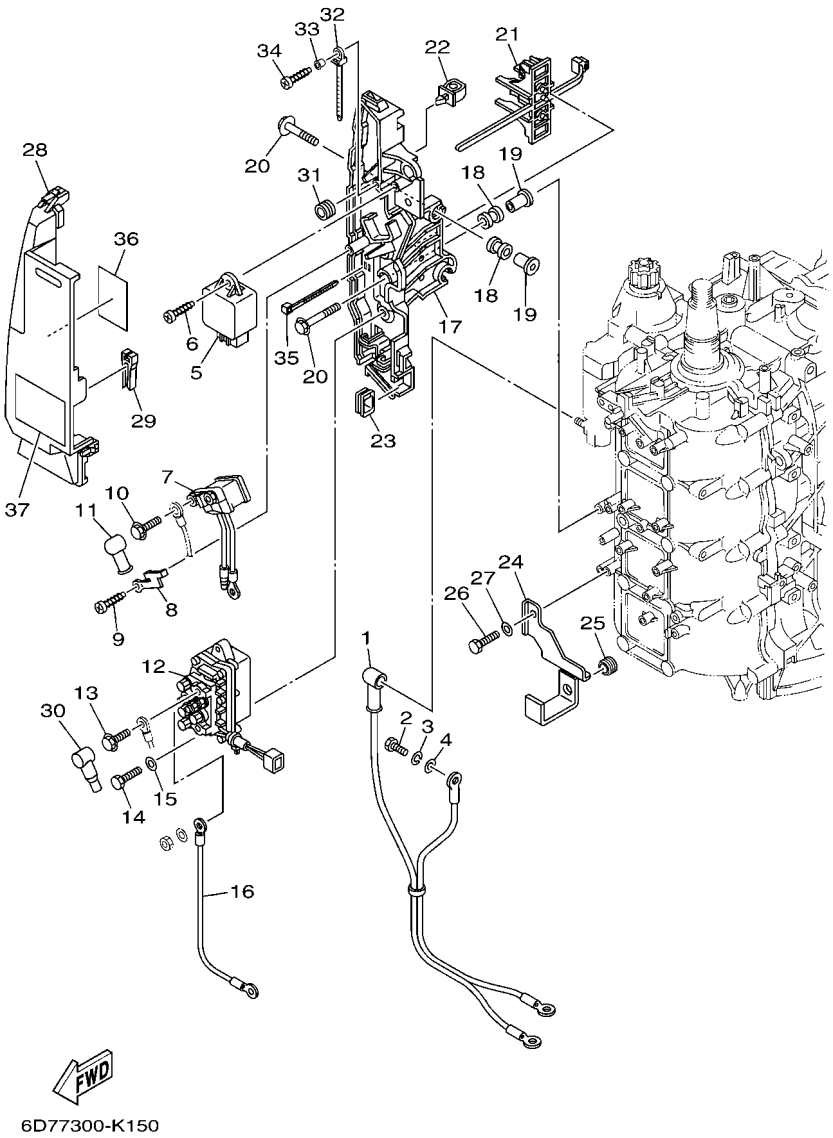

FIG. 14 ELECTRICAL 2 — PARTIE ELECTRIQUE 2

REF. NO.	PART NO. N° PIECES	DESCRIPTION DESCRIPTION	6D78	6D98				REMARKS REMARQUES
1	68V–82105–00	WIRE HARNESS FAISCEAU DE FILS	1	1				
2	97013–06020	BOLT BOULON	1	1				
3	92903–06100	WASHER, SPRING RONDELLE, GROWER	1	1				
4	92903–06600	WASHER, PLATE RONDELLE, PLATE	1	1				
5	60E–81950–00	RELAY ASSY RELAIS COMPLET	1	1				
6	97780–60625	SCREW, TAPPING VIS, TETE BOMBEE	1	1				
7	68V–8194A–00	RELAY RELAIS	1	1				
8	68V–81953–00	STAY, RELAY SUPPORT, RELAIS	1	1				
9	97780–60620	SCREW, TAPPING VIS, TETE BOMBEE	1	1				
10	97595–06610	BOLT, WITH WASHER VIS HEXAGONAL AVC RONDELLE	2	2				
11	6G5–82119–00	COVER, LEAD WIRE GARNITURE, FIL	2	2				
12	63P–81950–00	RELAY ASSY RELAIS COMPLET	1	1				
13	97595–06610	BOLT, WITH WASHER VIS HEXAGONAL AVC RONDELLE	2	2				
14	97013–06020	BOLT BOULON	2	2				
15	92903–06600	WASHER, PLATE RONDELLE, PLATE	2	2				
16	61A–81949–00	WIRE, LEAD FIL	1	1				
17	68V–81948–02	BRACKET SUPPORT	1	1				
18	6A0–82317–00	DAMPER, IGNITION COIL AMORTISSEUR, BOBINE D'ALLUM	5	5				
19	90387–06119	COLLAR COLLERETTE	5	5				
20	90119–06M59	BOLT, WITH WASHER BOULON, AVEC RONDELLE	5	5				
21	68V–82594–00	CLAMP BRIDE	1	1				
22	90464–12M58	CLAMP BRIDE	1	1				
23	6D8–81518–00	GROMMET PASSE-FIL	1	1				
24	6D8–81528–02	CLAMP 1 COLLIER 1	1	1				
25	90480–13M24	GROMMET PASSE-FIL	1	1				
26	97095–06014	BOLT BOULON	1	1				
27	92995–06600	WASHER RONDELLE	1	1				

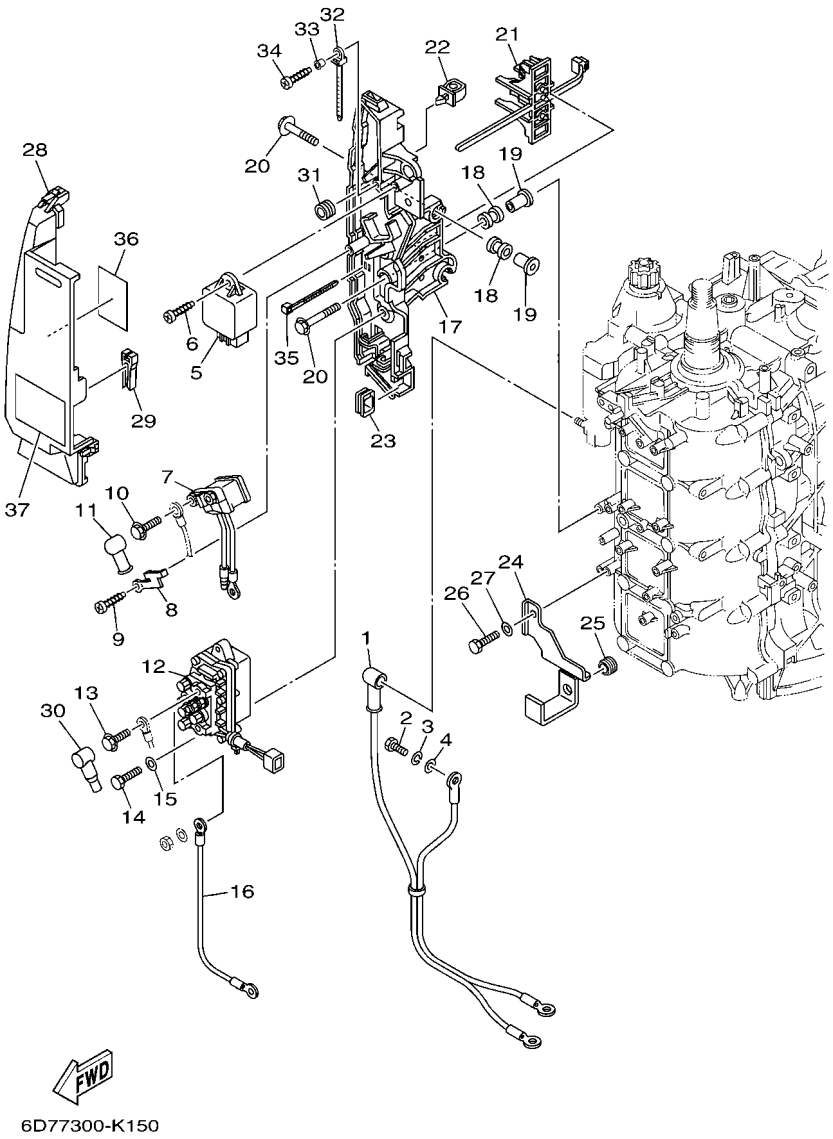

FIG. 14 ELECTRICAL 2 — PARTIE ELECTRIQUE 2

REF. NO.	PART NO. N° PIECES	DESCRIPTION DESCRIPTION	6D78	6D98				REMARKS REMARQUES
28	68V–81942–03	COVER COUVERCLE	1	1				
29	67F–2812A–00	PULLER, FUSE TENDEUR, FUSIBLE	1	1				
30	682–82119–01	COVER, LEAD WIRE GARNITURE, FIL	2	2				
31	6A0–82317–00	DAMPER, IGNITION COIL AMORTISSEUR, BOBINE D'ALLUM	1	1				
32	90465–12M53	CLAMP BRIDE	1	1				
33	90387–06M05	COLLAR COLLERETTE	1	1				
34	97780–60625	SCREW, TAPPING VIS, TETE BOMBEE	1	1				
35	90465–13M18	CLAMP BRIDE	2	2				
36	6D8–81919–00	GRAPHIC, REGULATOR ADHESIF, REGULATEUR	1	1				
37	6D8–81919–10	GRAPHIC, REGULATOR ADHESIF, REGULATEUR	1	1				

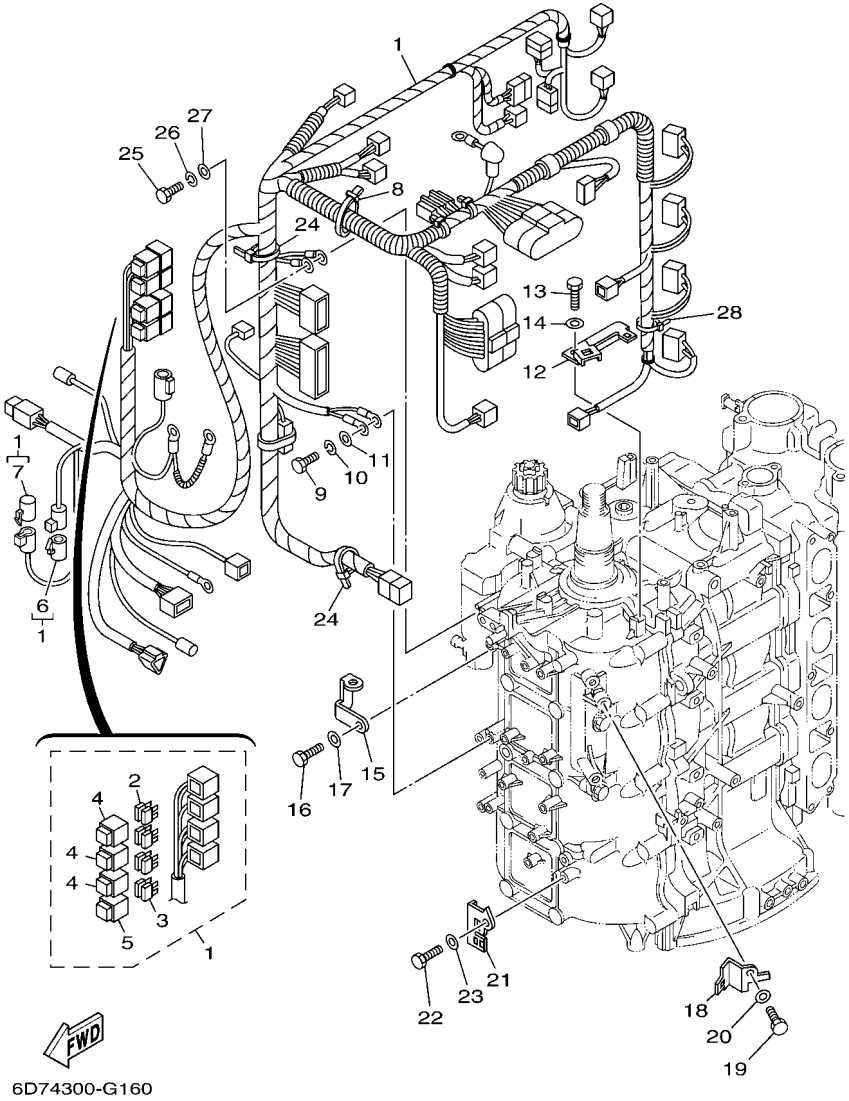

FIG. 15 ELECTRICAL 3 — PARTIE ELECTRIQUE 3

REF. NO.	PART NO. N° PIECES	DESCRIPTION DESCRIPTION	6D78	6D98				REMARKS REMARQUES
1	6D8–82590–30	WIRE HARNESS ASSY FAISCEAU DE FILS COMPLET	1	1				
2	67F–82151–00	.FUSE (20A) .FUSIBLE (20A)	6	6				
3	67F–82151–10	.FUSE (30A) .FUSIBLE (30A)	2	2				
4	67F–8215B–10	.CAP (YELLOW) .BOUCHON (YELLOW)	3	3				
5	67F–8215B–20	.CAP (GREEN) .BOUCHON (GREEN)	1	1				
6	6P2–82582–00	.CAP 1 (FEMALE) .BOUCHON 1 (FEMME)	1	1				
7	6P2–82582–10	.CAP 1 (MALE) .BOUCHON 1 (MALE)	1	1				
8	90464–76001	CLAMP BRIDE	1	1				
9	97095–06016	BOLT BOULON	1	1				
10	92995–06100	WASHER, SPRING RONDELLE, GROWER	1	1				
11	92995–06600	WASHER RONDELLE	1	1				
12	6D8–82588–01	PLATE PLAQUE	1	1				
13	97095–06012	BOLT BOULON	1	1				
14	92995–06600	WASHER RONDELLE	1	1				
15	6D8–82581–01	STAY, CORD CLAMP SUPPORT, COLLIER DE CORDON	1	1				
16	97095–06014	BOLT BOULON	1	1				
17	92995–06600	WASHER RONDELLE	1	1				
18	6D8–82389–01	PLATE 2 PLAQUETTE 2	1	1				
19	97095–06012	BOLT BOULON	1	1				
20	92995–06600	WASHER RONDELLE	1	1				
21	6D8–82398–01	PLATE 3 PLAQUETTE 3	1	1				
22	97095–06012	BOLT BOULON	1	1				
23	92995–06600	WASHER RONDELLE	1	1				
24	90465–13M18	CLAMP BRIDE	2	2				
25	97095–06016	BOLT BOULON	1	1				
26	92995–06100	WASHER, SPRING RONDELLE, GROWER	1	1				
27	92995–06600	WASHER RONDELLE	1	1				

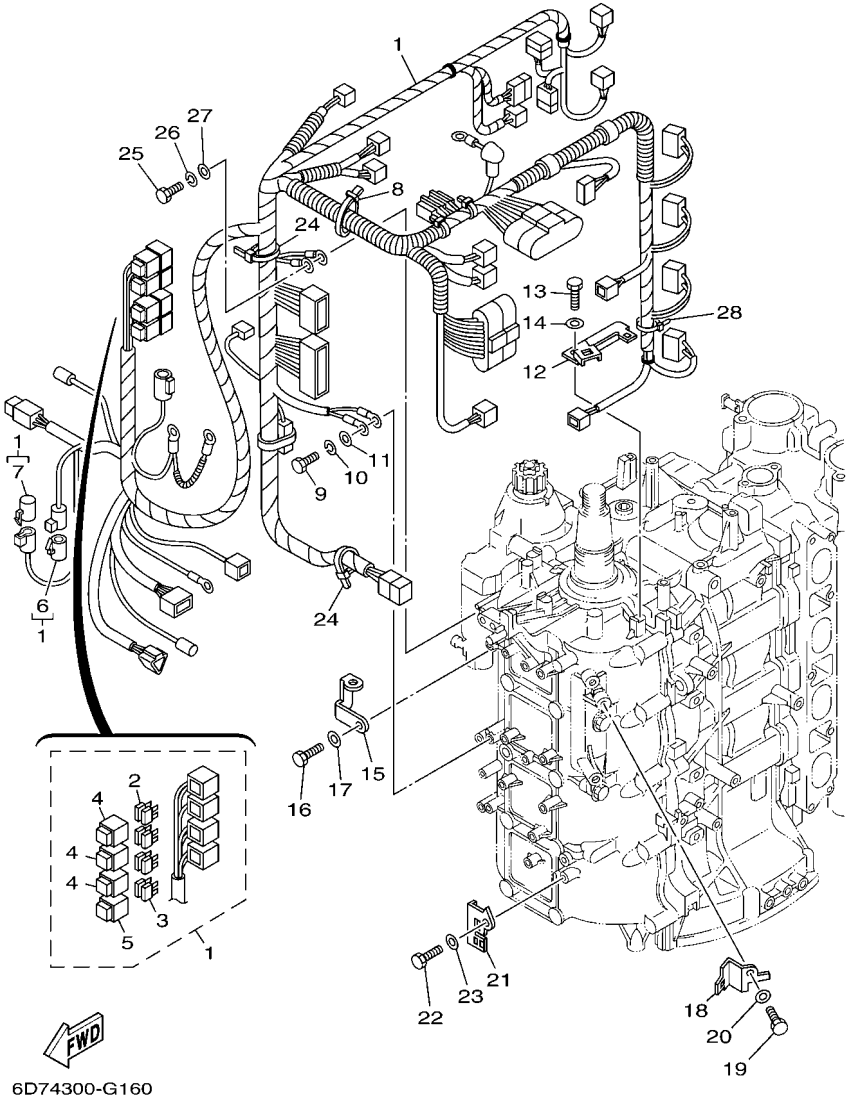

FIG. 15 ELECTRICAL 3 — PARTIE ELECTRIQUE 3

REF. NO.	PART NO. N° PIECES	DESCRIPTION DESCRIPTION	6D78	6D98				REMARKS REMARQUES
28	90465–13M11	CLAMP BRIDE	1	1				

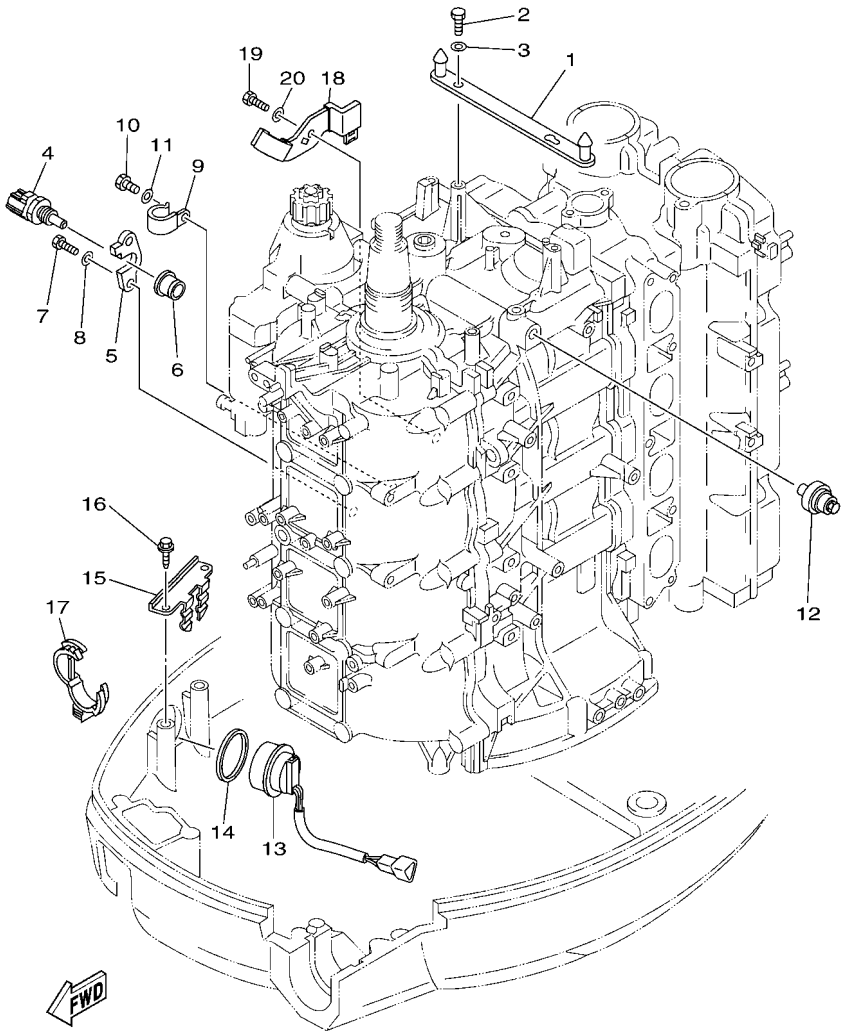

6D65110-H170

FIG. 16 ELECTRICAL 4 — PARTIE ELECTRIQUE 4

REF. NO.	PART NO. N° PIECES	DESCRIPTION DESCRIPTION	6D78	6D98				REMARKS REMARQUES
1	6D8–8132G–00	PLATE PLAQUE	1	1				
2	97095–06016	BOLT BOULON	2	2				
3	92995–06600	WASHER RONDELLE	2	2				
4	67F–85790–00	THERMOSENSOR ASSY SENSITOMETRE	1	1				
5	67F–85757–00	RETAINER ARRETOIR	1	1				
6	68V–85753–00	GASKET, SENDER UNIT JOINT, DE PERCEPTION	1	1				
7	97095–06016	BOLT BOULON	2	2				
8	92995–06600	WASHER RONDELLE	2	2				
9	90465–06M86	CLAMP BRIDE	1	1				
10	97095–06012	BOLT BOULON	1	1				
11	92995–06600	WASHER RONDELLE	1	1				
12	68V–82504–00	OIL PRESSURE SWITCH ASSY CONTACTEUR DE PRESSION D'HUILE	1	1				
13	63D–82563–10	TRIM & TILT SWITCH ASSY INCLINER ET PARER COMMUTATEUR	1	1				
14	6E5–82587–00	GASKET JOINT	1	1				
15	67F–83614–00	BRACKET SUPPORT	1	1				
16	90109–06M86	BOLT BOULON	2	2				
17	90464–30003	CLAMP BRIDE	2	2				
18	6D8–8252H–01	PLATE, HOLDER PLAQUE, SUPPORT	1	1				
19	97095–06012	BOLT BOULON	1	1				
20	92995–06600	WASHER RONDELLE	1	1				

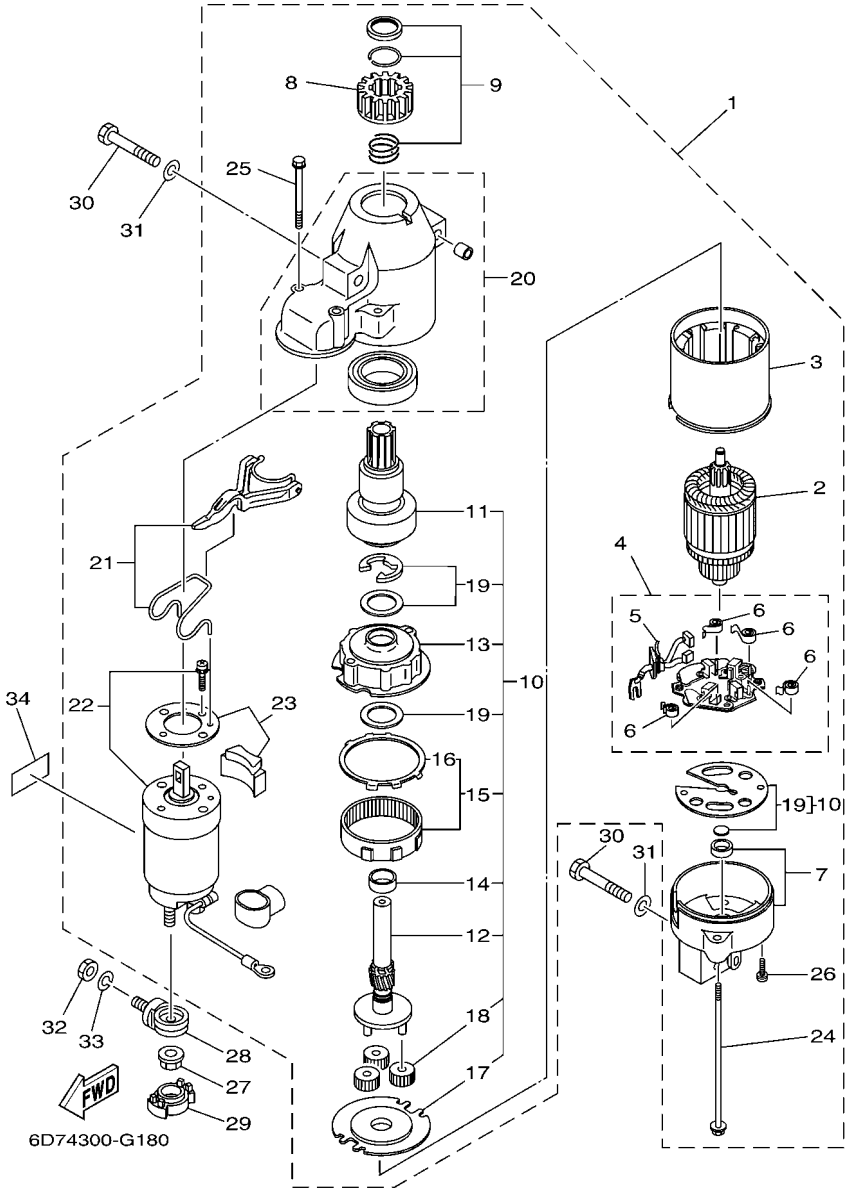

FIG. 17 STARTING MOTOR — DEMARREUR ELECTRIQUE

REF. NO.	PART NO. N° PIECES	DESCRIPTION DESCRIPTION	6D78	6D98				REMARKS REMARQUES
1	68V–81800–01	STARTING MOTOR ASSY DEMARREUR ELECTRIQUE COMPLET	1	1				
2	67F–81850–00	.ARMATURE ASSY .INDUIT	1	1				
3	67F–81810–00	.STATOR ASSY .STATOR COMPLET	1	1				
4	68F–81840–00	.BRUSH HOLDER ASSY .SUPPORT DE CHARBON	1	1				
5	67F–81801–00	..BRUSH SET ..CHARBON	1	1				
6	67F–81813–00	..SPRING, BRUSH ..RESSORT, DE CHARBON	4	4				
7	68F–81820–00	.REAR BRACKET ASSY .SUPPORT ARRIERE COMPLET	1	1				
8	67F–81808–00	.PINION ASSY .PIGNON	1	1				
9	67F–81857–00	.PINION STOPPER SET .BUTEE PIGNON	1	1				
10	67F–81807–00	.GEAR ASSY, STARTING MOTOR .PIGNON, DEMARREUR ELECTRIQUE	1	1				
11	67F–81832–00	..CLUTCH, OVER RUN ..EMBRAYAGE, ROUE LIBRE	1	1				
12	67F–81836–00	..SHAFT, PINION ..AXE, PIGNON	1	1				
13	67F–81821–00	..BRACKET, CENTER 1 ..SUPPORT, CENTRE 1	1	1				
14	67F–81841–00	..BEARING ..ROULEMENT	1	1				
15	67F–81891–00	..GEAR, RING ..ROUE DENTEE	1	1				
16	67F–8183R–00	...GASKET ...JOINT	1	1				
17	67F–81830–00	..BRACKET, CENTER 2 ..SUPPORT, CENTRE 2	1	1				
18	60V–8183T–00	..GEAR, IDLER ..PIGNON, INTERMEDIAIRE	3	3				
19	67F–81809–00	..WASHER KIT ..JEU DE RONDELLES	1	1				
20	67F–81842–00	.COVER .COUVERCLE	1	1				
21	67F–81839–00	.LEVER ASSY .LEVIER COMPLET	1	1				
22	68V–81941–01	.STARTER RELAY ASSY .LANCEUR RELAIS (ENS.)	1	1				
23	67F–81869–00	.COVER, DUST .COUVERCLE, POUSSIERE	1	1				
24	6K7–81826–11	.BOLT .BOULON	2	2				
25	67F–81828–00	.SCREW 2 .VIS 2	2	2				
26	67F–81846–00	.SCREW .VIS	2	2				
27	90179–08003	NUT ECROU	1	1				

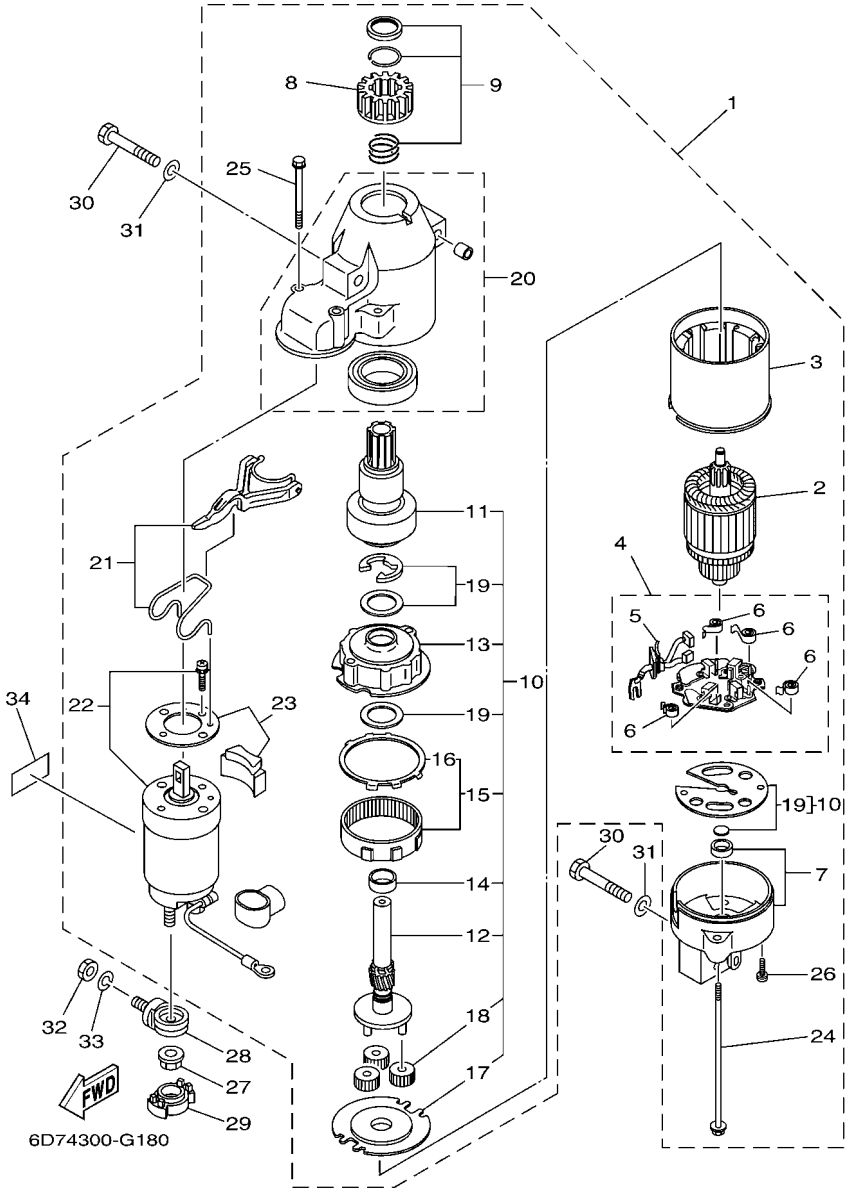

FIG. 17 STARTING MOTOR — DEMARREUR ELECTRIQUE

REF. NO.	PART NO. N° PIECES	DESCRIPTION DESCRIPTION	6D78	6D98				REMARKS REMARQUES
28	60V–81925–00	TERMINAL BORNE	1	1				
29	68F–82582–00	COVER, WIRE HARNESS COUVERCLE, FAISCEAU DE FILS	1	1				
30	97013–08045	BOLT BOULON	3	3				
31	92903–08600	WASHER, PLATE RONDELLE, PLATE	3	3				
32	95333–08600	NUT ECROU	1	1				
33	92903–08100	WASHER, SPRING RONDELLE, GROWER	1	1				
34	67F–83627–01	LABEL, CAUTION 7 ETIQUETTE, RECOMMANDATION 7	1	1				

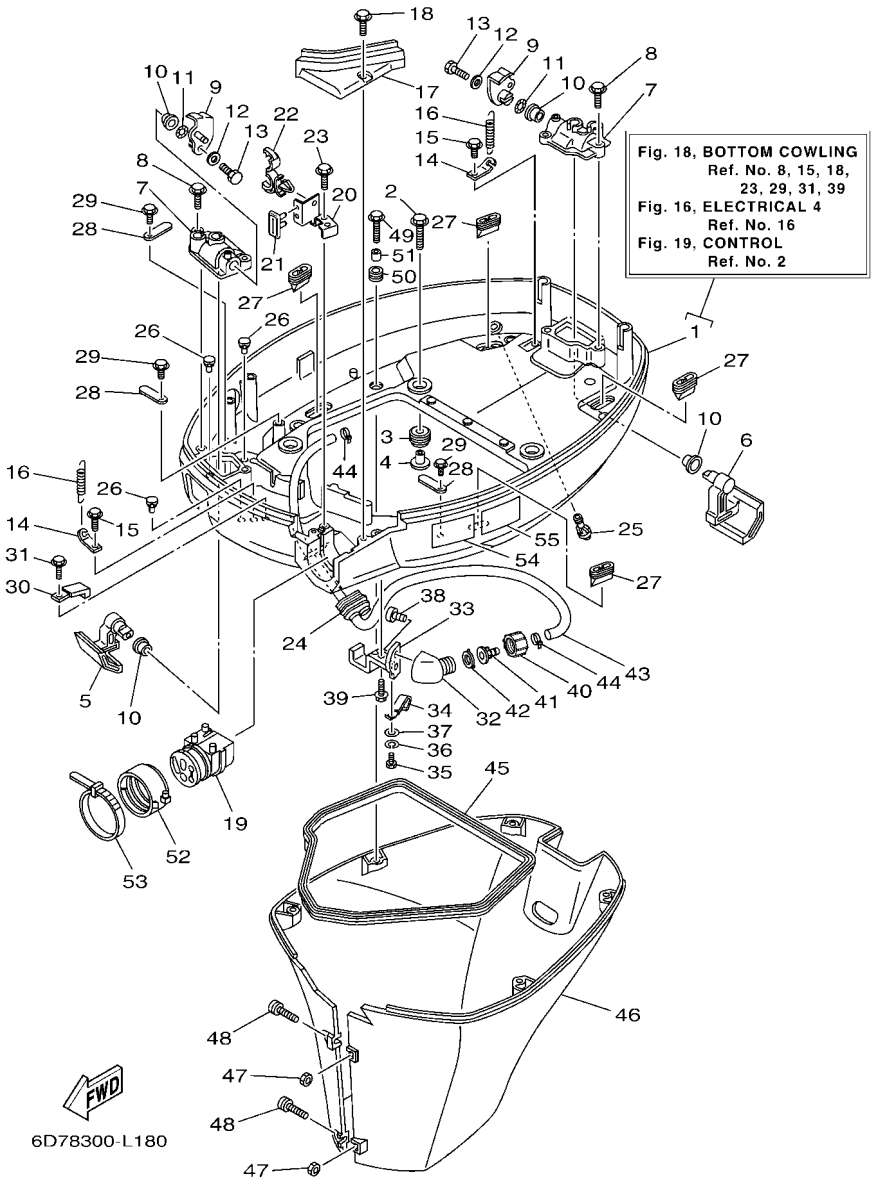

FIG. 18 BOTTOM COWLING — CAPOT INFERIEUR

REF. NO.	PART NO. N° PIECES	DESCRIPTION DESCRIPTION	6D78	6D98				REMARKS REMARQUES
1	6D8–42710–00–8D	BOTTOM COWLING ASSY ENS. EMBASE	1	1				
2	90119–08M22	BOLT, WITH WASHER BOULON, AVEC RONDELLE	4	4				
3	90480–22M15	GROMMET PASSE-FIL	4	4				
4	90387–08M37	COLLAR COLLERETTE	4	4				
5	67F–42815–00–8D	LEVER, CLAMP LEVIER, PRESSE	1	1				
6	67F–42816–00–8D	LEVER, CLAMP LEVIER, PRESSE	1	1				
7	67F–42828–00–8D	PLATE, CLAMP PLAQUE, PRESSE	2	2				
8	90109–06M82	BOLT BOULON	4	4				
9	68V–42818–01	LEVER, CLAMP LEVIER, PRESSE	2	2				
10	90386–15M73	BUSH DOUILLE	4	4				
11	90206–15M18	WASHER, WAVE RONDELLE, ONDULEE	2	2				
12	90201–06068	WASHER, PLATE RONDELLE, PLATE	2	2				
13	97095–06016	BOLT BOULON	2	2				
14	64D–43144–00	HOOK, SPRING CROCHET	2	2				
15	90109–06M86	BOLT BOULON	2	2				
16	90506–16M34	SPRING, TENSION RESSORT, TENSION	2	2				
17	67F–42738–00–8D	PLATE, FITTING ETRIER	1	1				
18	90109–06M96	BOLT BOULON	2	2				
19	68V–42725–00	GROMMET PASSE-FIL	1	1				
20	6D8–42756–02	STAY, CLAMP SUPPORT, COLLIER	1	1				
21	6D8–42717–00	RUBBER, SEAL 2 JOINT EN CAOUTCHOUC 2	1	1				
22	90464–18246	CLAMP BRIDE	1	1				
23	90109–06M86	BOLT BOULON	1	1				
24	6H1–42726–21	GROMMET PASSE-FIL	1	1				FLUSHING KIT FLUSHING KIT
25	6BL–44391–00	NIPPLE, HOSE RACCORD D'ESSENCE	1	1				
26	6H4–42748–00	GROMMET PASSE-FIL	3	3				
27	67F–42717–00	RUBBER, SEAL 2 JOINT EN CAOUTCHOUC 2	4	4				

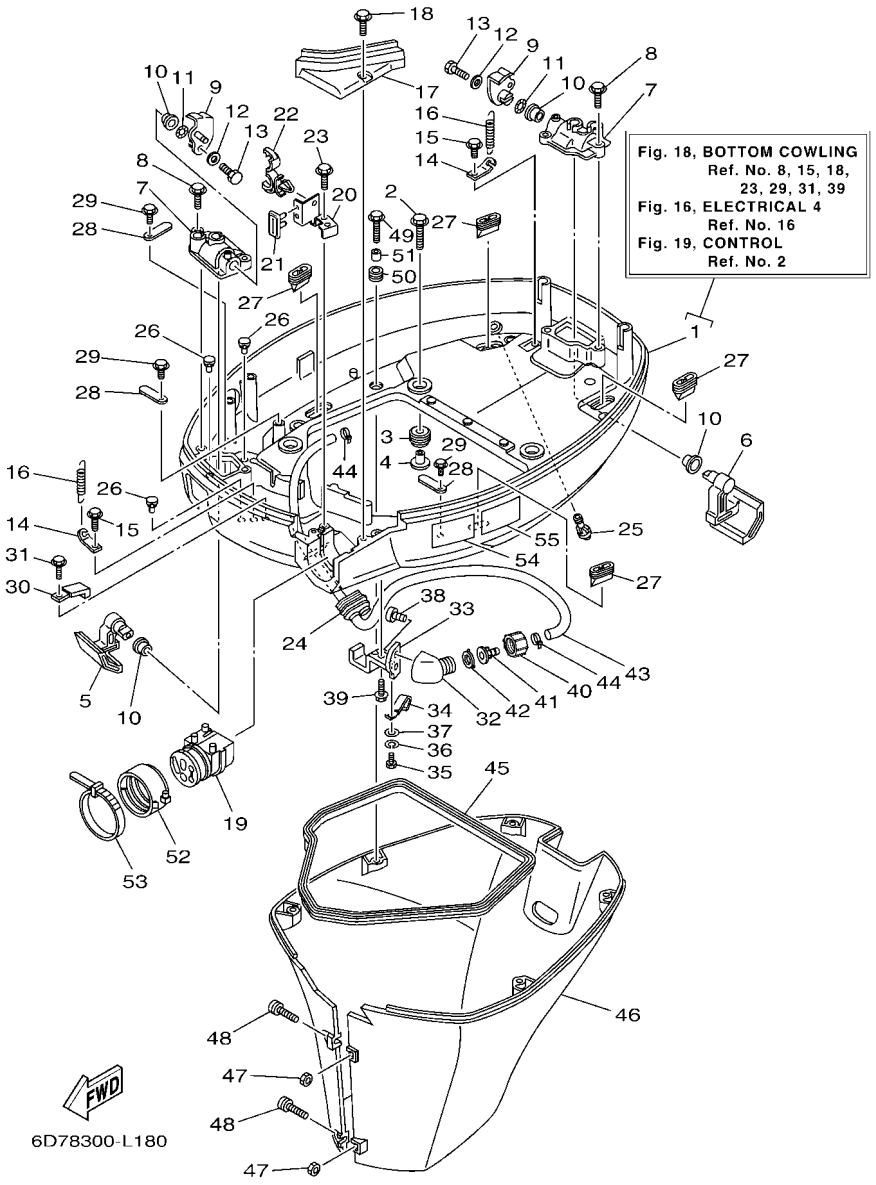

FIG. 18 BOTTOM COWLING — CAPOT INFERIEUR

REF. NO.	PART NO. N° PIECES	DESCRIPTION DESCRIPTION	6D78	6D98				REMARKS REMARQUES
28	6E5–82588–00	PLATE PLAQUE	3	3				
29	90109–06M81	BOLT BOULON	3	3				
30	90465–08M23	CLAMP BRIDE	1	1				
31	90109–06M86	BOLT BOULON	1	1				
32	68T–12572–00	ADAPTER ADAPTATEUR	1	1				FLUSHING KIT FLUSHING KIT
33	67F–12535–01	PLATE PLAQUE	1	1				FLUSHING KIT FLUSHING KIT
34	90462–06018	CLAMP BRIDE	1	1				FLUSHING KIT FLUSHING KIT
35	97095–06008	BOLT BOULON	1	1				FLUSHING KIT FLUSHING KIT
36	92995–06100	WASHER, SPRING RONDELLE, GROWER	1	1				FLUSHING KIT FLUSHING KIT
37	92995–06200	WASHER RONDELLE	1	1				FLUSHING KIT FLUSHING KIT
38	90167–06002	SCREW, TAPPING VIS, TETE FRAISEE	2	2				FLUSHING KIT FLUSHING KIT
39	90109–06M86	BOLT BOULON	1	1				FLUSHING KIT FLUSHING KIT
40	6R3–12581–00	JOINT, HOSE 1 JOINT DE TUYAU	1	1				FLUSHING KIT FLUSHING KIT
41	6R3–12582–00	JOINT, HOSE 2 RACCORD DE TUYAU 1	1	1				FLUSHING KIT FLUSHING KIT
42	6R3–12583–00	GASKET, HOSE JOINT JOINT	1	1				FLUSHING KIT FLUSHING KIT
43	67F–24312–00	PIPE 2 DURITE 2	1	1				FLUSHING KIT FLUSHING KIT
44	90465–11M10	CLAMP BRIDE	2	2				FLUSHING KIT FLUSHING KIT
45	61A–42716–00	RUBBER, SEAL 1 JOINT EN CAOUTCHOUC 1	1	1				
46	67F–42741–01–8D	APRON CAPOT LATERAL	1	1				
47	95380–06600	NUT, HEXAGON ECROU	2	2				
48	90159–06M28	SCREW, WITH WASHER VIS, AVEC RONDELLE	2	2				
49	90109–06M80	BOLT BOULON	5	5				
50	90480–13M24	GROMMET PASSE-FIL	5	5				
51	90387–06M43	COLLAR COLLERETTE	5	5				
52	68F–42753–00	FASTNER ATTACHE	1	1				AP AP
53	90464–20258	CLAMP BRIDE	1	1				AP AP
54	6AH–42794–40	LABEL, WARNING (GENERAL) ETIQUETTE, AVERTISSEMENT	1	1				

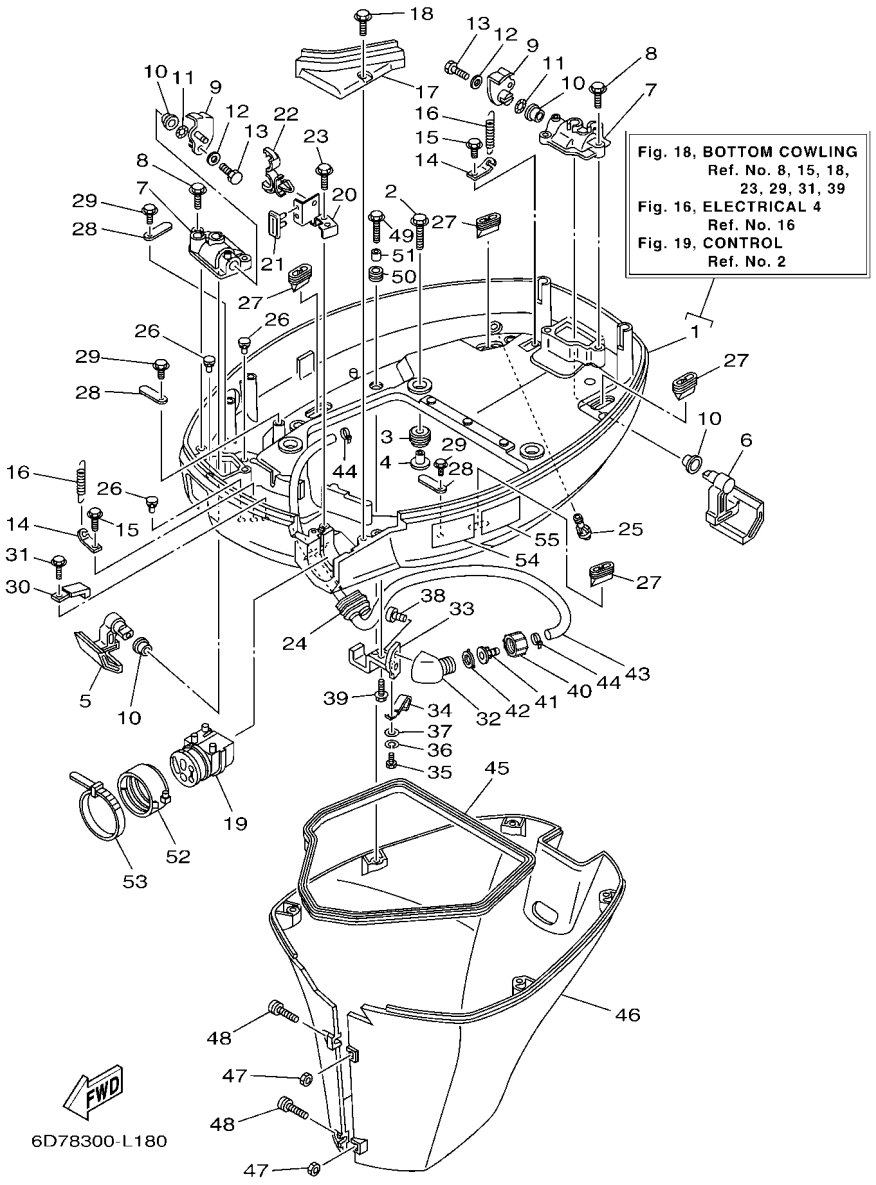

FIG. 18 BOTTOM COWLING — CAPOT INFERIEUR

REF. NO.	PART NO. N° PIECES	DESCRIPTION DESCRIPTION	6D78	6D98				REMARKS REMARQUES
55	6AH–42794–50	LABEL, WARNING (GENERAL) ETIQUETTE, AVERTISSEMENT	1	1				

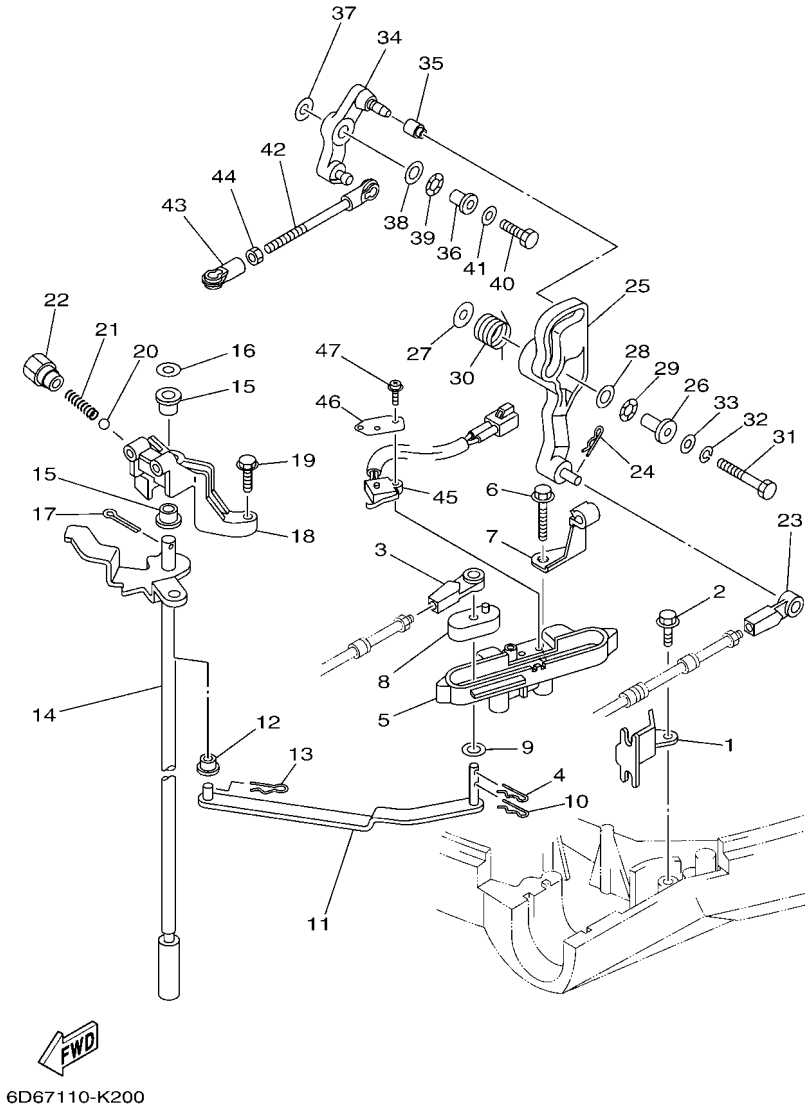

FIG. 19 CONTROL — COMMANDE

REF. NO.	PART NO. N° PIECES	DESCRIPTION DESCRIPTION	6D78	6D98				REMARKS REMARQUES
1	67F–48538–00	CLAMP, CABLE 1 COLLIER	1	1				
2	90109–06M86	BOLT BOULON	1	1				
3	663–48344–00	CABLE END, REMOTE CONTROL CHAPE CABLE	1	1				
4	90468–18008	CLIP JONC	1	1				
5	6D8–44117–00–94	BRACKET SUPPORT	1	1				
6	97595–06550	BOLT, WITH WASHER VIS HEXAGONAL AVC RONDELLE	2	2				
7	90462–10027	CLAMP BRIDE	1	1				
8	68V–44122–01	BUSHING, SHIFT ROD LEVER DOUILLE, LEVIER D'EMBRAYAGE	1	1				
9	90202–07M07	WASHER, PLATE RONDELLE, PLATE	1	1				
10	90468–18008	CLIP JONC	1	1				
11	67F–44121–00	LEVER, SHIFT ROD LEVIER, TIGE D'INVERSION	1	1				
12	90386–06M12	BUSH DOUILLE	1	1				
13	90468–18008	CLIP JONC	1	1				
14	67F–44120–10	HANDLE GEAR SHIFT ASSY LEVIER D'EMBRAYAGE	1	1				L(21.1") L(21.1")
	67F–44120–30	HANDLE GEAR SHIFT ASSY LEVIER D'EMBRAYAGE	1	1				X(26.1") X(26.1")
15	90386–90M90	BUSH DOUILLE	2	2				
16	90201–09M02	WASHER, PLATE RONDELLE, PLATE	1	1				
17	91490–20015	PIN. COTTER GOUPILLE	1	1				
18	67F–44118–00–94	BRACKET SUPPORT	1	1				
19	97575–06525	BOLT, WITH WASHER VIS HEXAGONAL AVC RONDELLE	2	2				
20	93501–04M02	BALL BILLE	1	1				
21	90501–12082	SPRING, COMPRESSION RESSORT, COMPRESSION	1	1				
22	648–42715–00	BUSHING COUSSINET	1	1				
23	663–48344–00	CABLE END, REMOTE CONTROL CHAPE CABLE	1	1				
24	90468–18008	CLIP JONC	1	1				
25	6D8–42154–00	LEVER, THROTTLE CONTROL LEVIER DE COMMANDE D'AVANCE	1	1				
26	90387–06M21	COLLAR COLLERETTE	1	1				

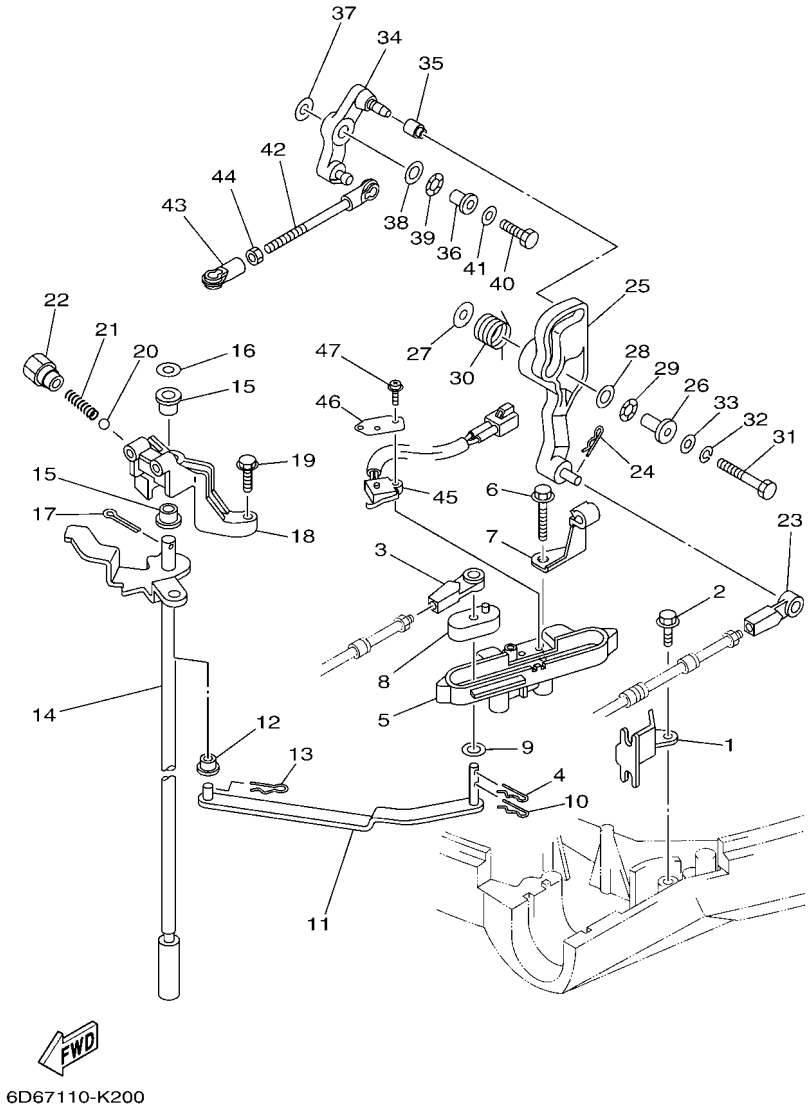

FIG. 19 CONTROL — COMMANDE

REF. NO.	PART NO. N° PIECES	DESCRIPTION DESCRIPTION	6D78	6D98				REMARKS REMARQUES
27	90201–06M62	WASHER, PLATE RONDELLE, PLATE	1	1				
28	90201–10M02	WASHER, PLATE RONDELLE, PLATE	1	1				
29	90206–10M04	WASHER, WAVE RONDELLE, ONDULEE	1	1				
30	67F–44135–00	SPRING RESSORT	1	1				
31	97095–06035	BOLT BOULON	1	1				
32	92995–06100	WASHER, SPRING RONDELLE, GROWER	1	1				
33	92995–06600	WASHER RONDELLE	1	1				
34	6D8–42157–00	LEVER, THROTTLE LEVIER DE AVANCE	1	1				
35	68V–42171–00	BUSHING COUSSINET	1	1				
36	90387–06013	COLLAR COLLERETTE	1	1				
37	90201–06M31	WASHER, PLATE RONDELLE, PLATE	1	1				
38	90201–10M02	WASHER, PLATE RONDELLE, PLATE	1	1				
39	90206–10M04	WASHER, WAVE RONDELLE, ONDULEE	1	1				
40	97095–06025	BOLT BOULON	1	1				
41	92995–06600	WASHER RONDELLE	1	1				
42	6D8–41237–00	JOINT, LINK RACCORD	1	1				
43	682–41237–00	JOINT, LINK RACCORD	1	1				
44	95380–05600	NUT ECROU	1	1				
45	60V–8259F–00	SWITCH ASSY COMMUTATEUR	1	1				
46	61A–82588–01	PLATE PLAQUE	1	1				
47	97985–04116	SCREW, WITH WASHER VIS, AVEC RONDELLE	2	2				

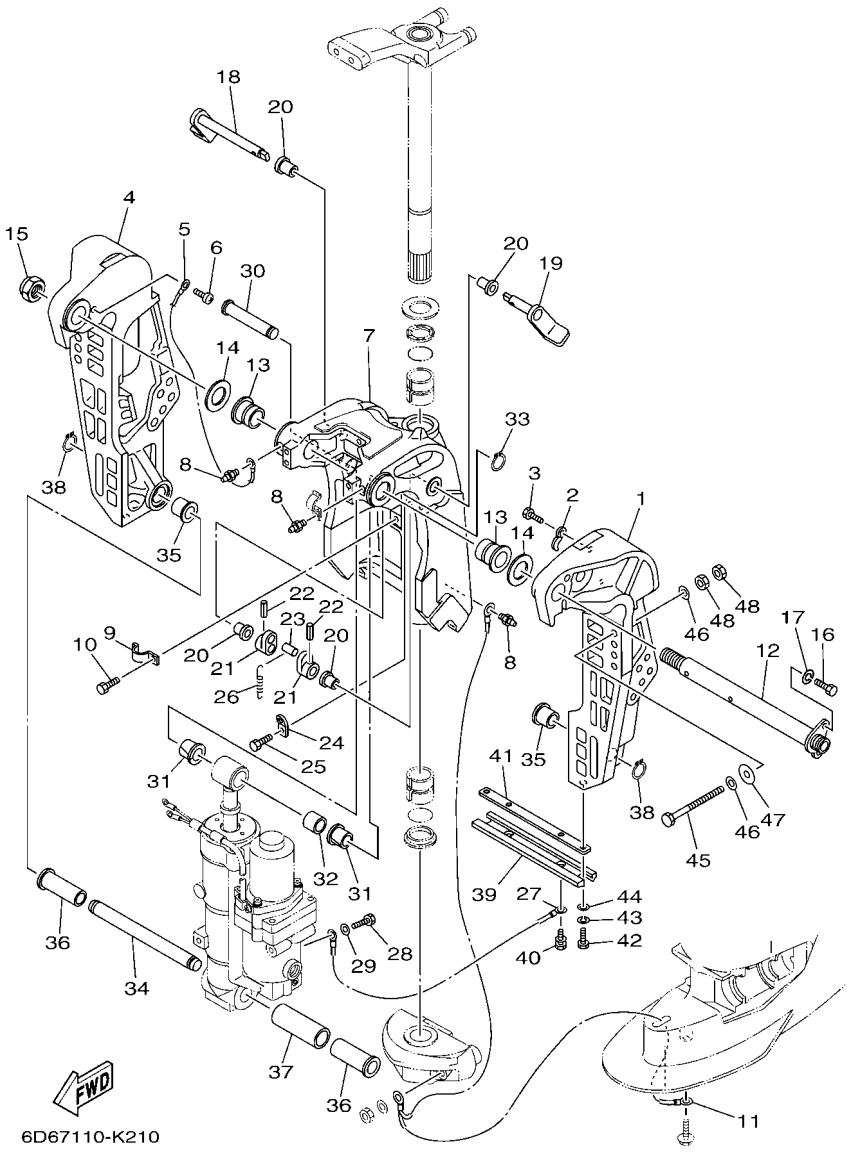

FIG. 20 BRACKET 1 — SUPPORT 1

REF. NO.	PART NO. N° PIECES	DESCRIPTION DESCRIPTION	6D78	6D98				REMARKS REMARQUES
1	67F–43111–00–8D	BRACKET, CLAMP 1 PRESSE 1	1	1				
2	90465–10M77	CLAMP BRIDE	2	2				
3	97095–06010	BOLT BOULON	2	2				
4	67F–43112–00–8D	BRACKET, CLAMP 2 PRESSE 2	1	1				
5	6E5–82148–00	WIRE, LEAD 4 FIL 4	1	1				
6	97880–06012	SCREW, PAN HEAD VIS, TETE TRONCONIQUE	1	1				
7	6D8–43311–00–8D	BRACKET, SWIVEL 1 SUPPORT, PIVOT 1	1	1				
8	93700–06M03	NIPPLE, GREASE PION	3	3				
9	90465–08M63	CLAMP BRIDE	1	1				
10	97095–06010	BOLT BOULON	1	1				
11	67F–82127–00	WIRE, LEAD 2 FIL 2	1	1				
12	64E–43131–01	BOLT, CLAMP BRACKET BOULON, PRESSE	1	1				
13	90386–25M31	BUSH DOUILLE	2	2				
14	90201–26M59	WASHER, PLATE RONDELLE, PLATE	2	2				
15	90185–22M11	NUT, SELF-LOCKING ECROU,AUTO-BLOQUANT	1	1				
16	97095–08020	BOLT BOULON	1	1				
17	92995–08100	WASHER RONDELLE	1	1				
18	6D8–43181–00	LEVER, TILT STOP 1 LEVIER VERROUILLAGE RELEVAGE 1	1	1				
19	6D8–43185–00	LEVER, TILT STOP 2 LEVIER VERROUILLAGE RELEVAGE 2	1	1				
20	90386–10M16	BUSH DOUILLE	4	4				
21	6G5–43148–00	COLLAR, DISTANCE ENTRETOISE	2	2				
22	91690–30020	PIN, SPRING AGRAFFE	2	2				
23	90249–06M19	PIN GOUPILLE	1	1				
24	66T–43144–00	HOOK, SPRING CROCHET	1	1				
25	97095–06010	BOLT BOULON	1	1				
26	90506–14M24	SPRING, TENSION RESSORT, TENSION	1	1				
27	6D8–82148–00	WIRE, LEAD 4 FIL 4	1	1				

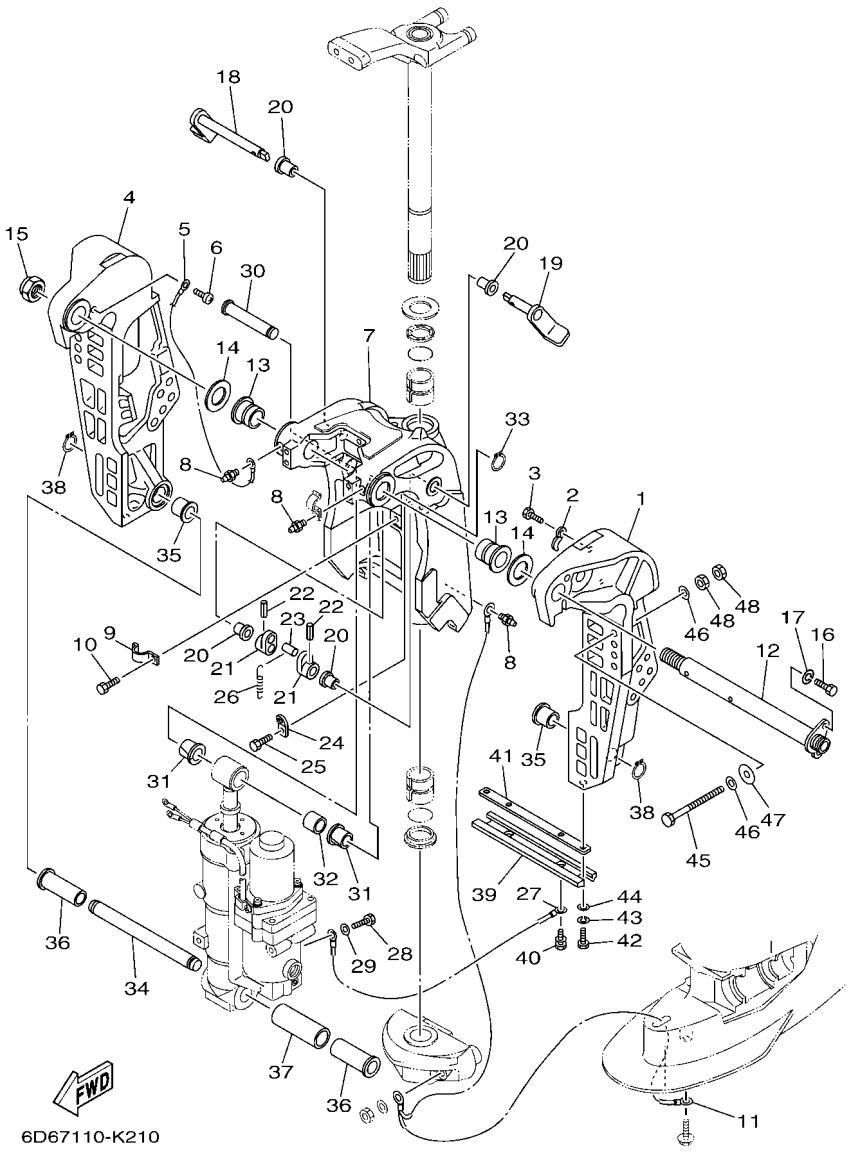

FIG. 20 BRACKET 1 — SUPPORT 1

REF. NO.	PART NO. N° PIECES	DESCRIPTION DESCRIPTION	6D78	6D98				REMARKS REMARQUES
28	97095–06010	BOLT BOULON	1	1				
29	92995–06600	WASHER RONDELLE	1	1				
30	6D8–43126–00	PIN, UPPER SHOCK MOUNT AXE, SUPERIEUR AMORTISSEUR	1	1				
31	90386–18M35	BUSH DOUILLE	2	2				
32	90386–18001	BUSH DOUILLE	1	1				
33	93410–18M05	CIRCLIP CLIPS	1	1				
34	67F–43818–00	PIN, LOWER SHOCK MOUNT AXE, INFERIEUR AMORTISSEUR	1	1				
35	90387–18M01	COLLAR COLLERETTE	2	2				
36	90386–18MA0	BUSH DOUILLE	2	2				
37	90387–22M01	COLLAR COLLERETTE	1	1				
38	93410–18M05	CIRCLIP CLIPS	2	2				
39	6H1–45251–03	ANODE ANODE	1	1				
40	90119–06M81	BOLT, WITH WASHER BOULON, AVEC RONDELLE	2	2				
41	6H1–44526–00	PLATE PLAQUE	1	1				
42	97095–06016	BOLT BOULON	2	2				
43	92995–06100	WASHER, SPRING RONDELLE, GROWER	2	2				
44	92995–06600	WASHER RONDELLE	2	2				
45	90101–12M03	BOLT (L:115MM) BOULON (L:115MM)	4	4				
46	90201–13M01	WASHER, PLATE RONDELLE, PLATE	8	8				
47	90201–12426	WASHER, PLATE RONDELLE, PLATE	4	4				
48	95380–12600	NUT ECROU	8	8				

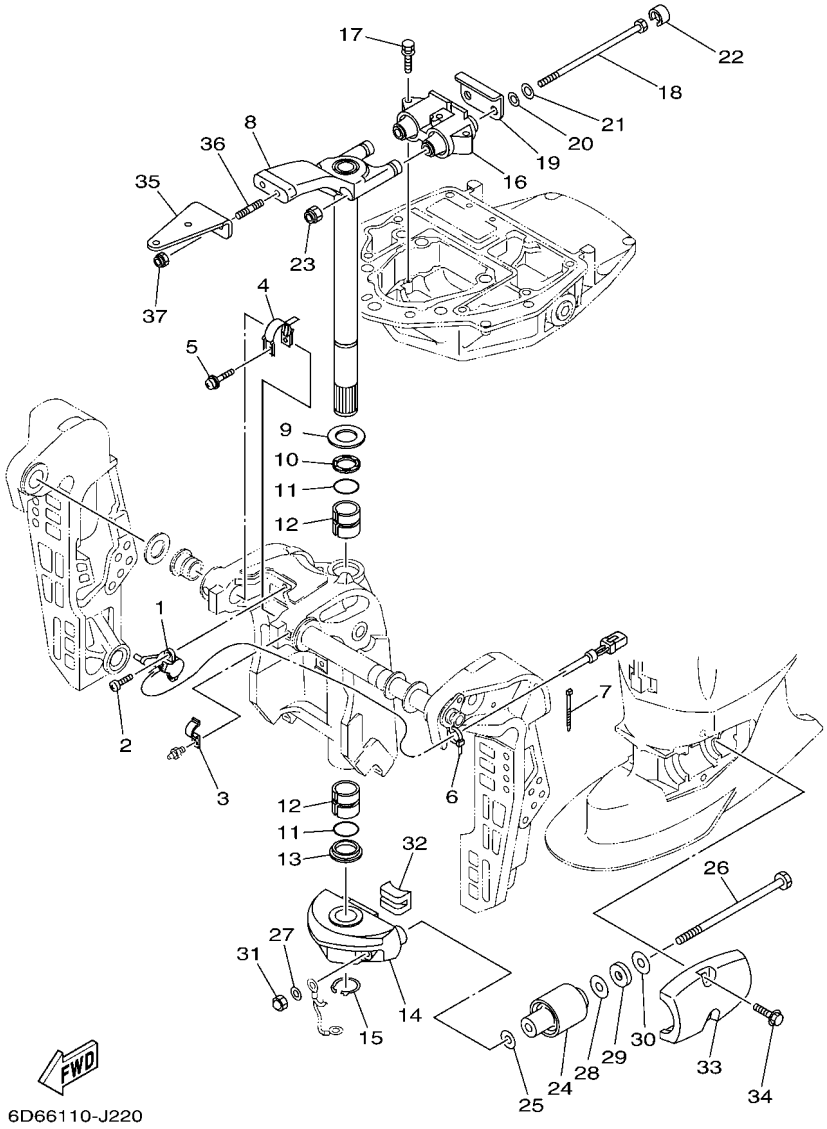

FIG. 21 BRACKET 2 — SUPPORT 2

REF. NO.	PART NO. N° PIECES	DESCRIPTION DESCRIPTION	6D78	6D98				REMARKS REMARQUES
1	67H–83672–01	TRIM SENDER INCLINER RACCORD	1	1				
2	97885–06016	SCREW, PAN HEAD VIS, A ENCOCHE	2	2				
3	90465–08M63	CLAMP BRIDE	1	1				
4	64E–43139–10	CAM, TRIM SENDER VILEBREQUIN TRUM	1	1				
5	90159–05059	SCREW, WITH WASHER VIS, AVEC RONDELLE	1	1				
6	90465–11M10	CLAMP BRIDE	1	1				
7	90465–11M10	CLAMP BRIDE	3	3				
8	67F–42510–11–8D	STEERING BRACKET ASSY DIRECTION SUPPORT (ENS.)	1	1				
9	90201–30M00	WASHER, PLATE RONDELLE, PLATE	1	1				
10	90386–30M78	BUSH DOUILLE	1	1				
11	93210–29M94	O-RING JOINT TORIQUE	2	2				
12	90386–30M77	BUSH DOUILLE	2	2				
13	90386–30M60	BUSH DOUILLE	1	1				
14	67F–44551–00–8D	HOUSING, LOWER MOUNT RUBBER 1 BOITIER, SILENT-BLOC INFERIEUR	1	1				
15	93410–28M06	CIRCLIP CLIPS	1	1				
16	67F–44514–01	MOUNT DAMPER, UPPER SIDE SILENT-BLOC, SUPERIEUR LATERAL	1	1				
17	90119–08091	BOLT, WITH WASHER BOULON, AVEC RONDELLE	3	3				
18	90109–12007	BOLT BOULON	2	2				
19	67F–44526–00	PLATE PLAQUE	1	1				
20	90201–12M16	WASHER, PLATE RONDELLE, PLATE	2	2				
21	90201–13M01	WASHER, PLATE RONDELLE, PLATE	2	2				
22	67F–44533–00	DAMPER, UPPER MOUNT RUBBER COUVERCLE, SUSPENSION INFERIEU	2	2				
23	95780–12300	NUT, FLANGE ECROU	2	2				
24	67F–44555–00	MOUNT DAMPER, LOWER SIDE SILENT-BLOC, INFERIEUR LATERAL	2	2				
25	90201–13M03	WASHER, PLATE RONDELLE, PLATE	2	2				
26	90109–12012	BOLT BOULON	2	2				
27	90201–12M16	WASHER, PLATE RONDELLE, PLATE	2	2				

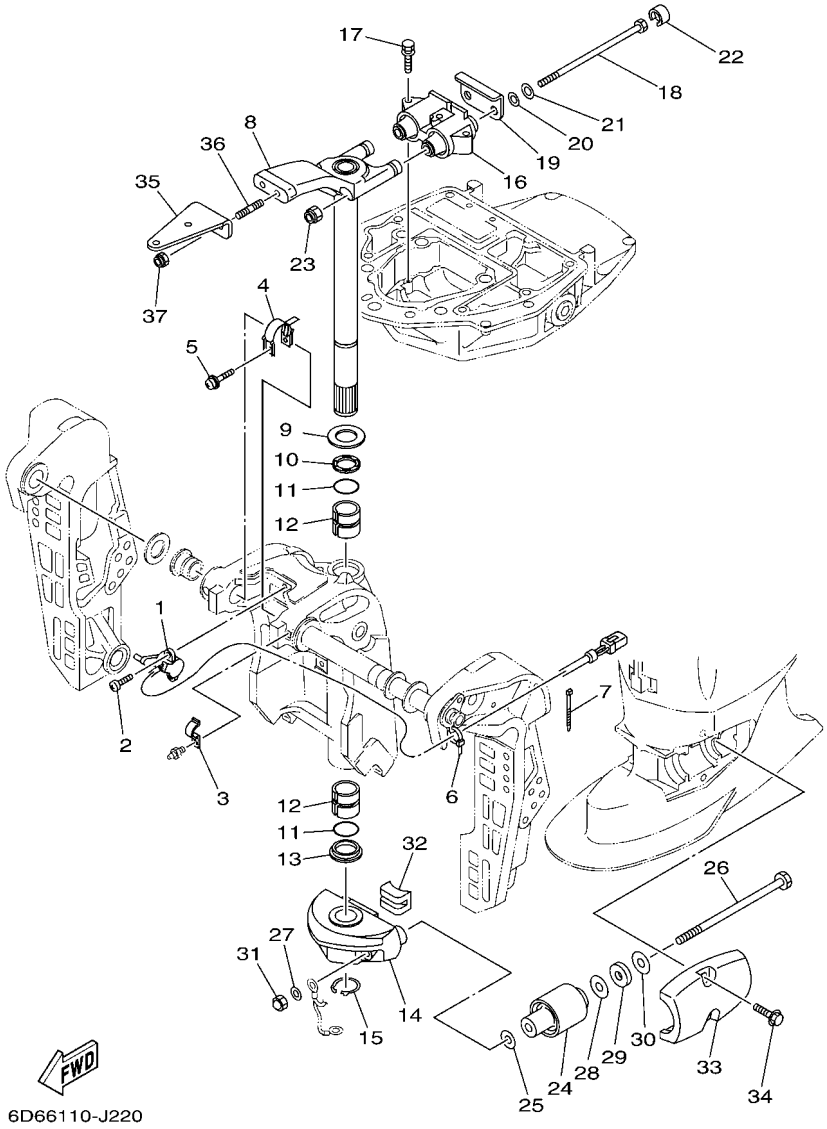

FIG. 21 BRACKET 2 — SUPPORT 2

REF. NO.	PART NO. N° PIECES	DESCRIPTION DESCRIPTION	6D78	6D98				REMARKS REMARQUES
28	90201–24M02	WASHER, PLATE RONDELLE, PLATE	2	2				
29	90202–25M04	WASHER, PLATE RONDELLE, PLATE	2	2				
30	90201–13M19	WASHER, PLATE RONDELLE, PLATE	2	2				
31	95380–12800	NUT, CROWN ECROU, BORGNE	2	2				
32	67F–44575–00	DAMPER, LOWER MOUNT RUBBER SILENT-BLOC, INFERIEUR	1	1				
33	67F–44553–00–8D	COVER, LOWER MOUNT COUVERCLE, SUSPENSION INFERIEU	2	2				
34	90119–10049	BOLT, WITH WASHER BOULON, AVEC RONDELLE	4	4				
35	67F–48511–00	HOOK, STEERING ATTACHE, DIRECTION	1	1				
36	90116–10175	BOLT, STUD GOUJON	2	2				
37	90185–10051	NUT, SELF-LOCKING ECROU,AUTO-BLOQUANT	2	2				

FIG. 22 OPTIONAL PARTS 1 — PIECES OPTIONNELLES 1

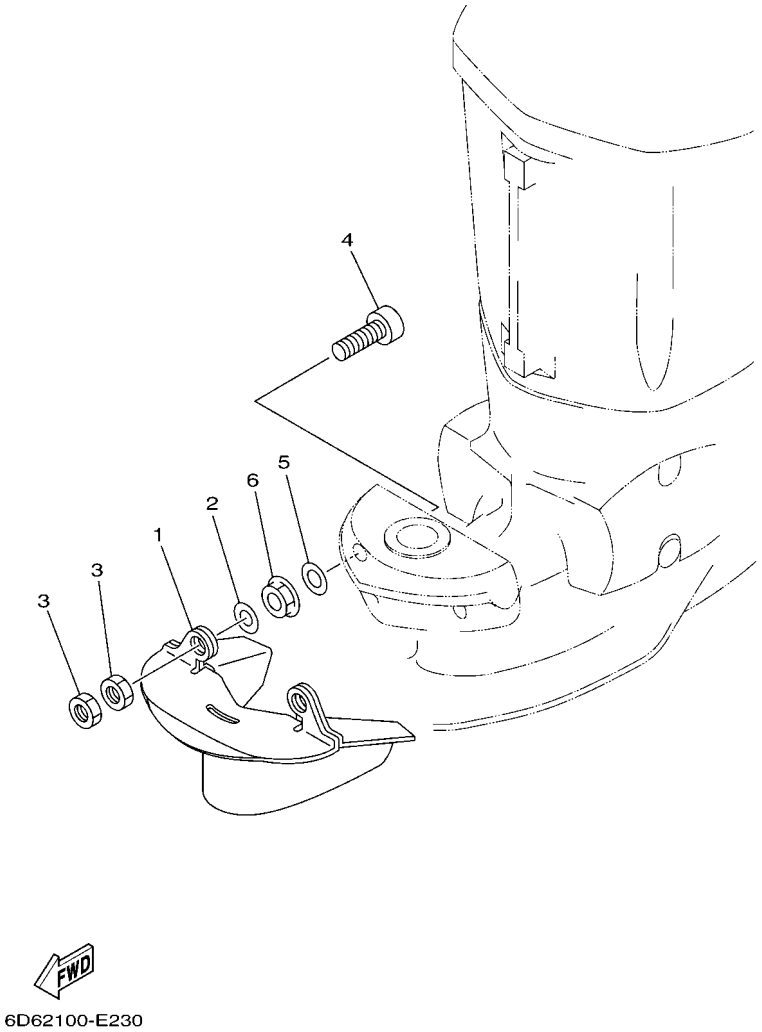

REF. NO.	PART NO. N° PIECES	DESCRIPTION DESCRIPTION	6D78	6D98				REMARKS REMARQUES
1	67F–45180–00–4D	PLATE, SPLASH PLAQUE, EAU	1	1				AP AP
2	90201–12M01	WASHER, PLATE RONDELLE, PLATE	2	2				AP AP
3	95380–12700	NUT ECROU	4	4				AP AP
4	90110–12M00	BOLT, HEXAGON SOCKET HEAD BOULON, TETE HEXAGONALE CREUSE	2	2				AP AP
5	90201–12M16	WASHER, PLATE RONDELLE, PLATE	2	2				AP AP
6	95780–12300	NUT, FLANGE ECROU	2	2				AP AP

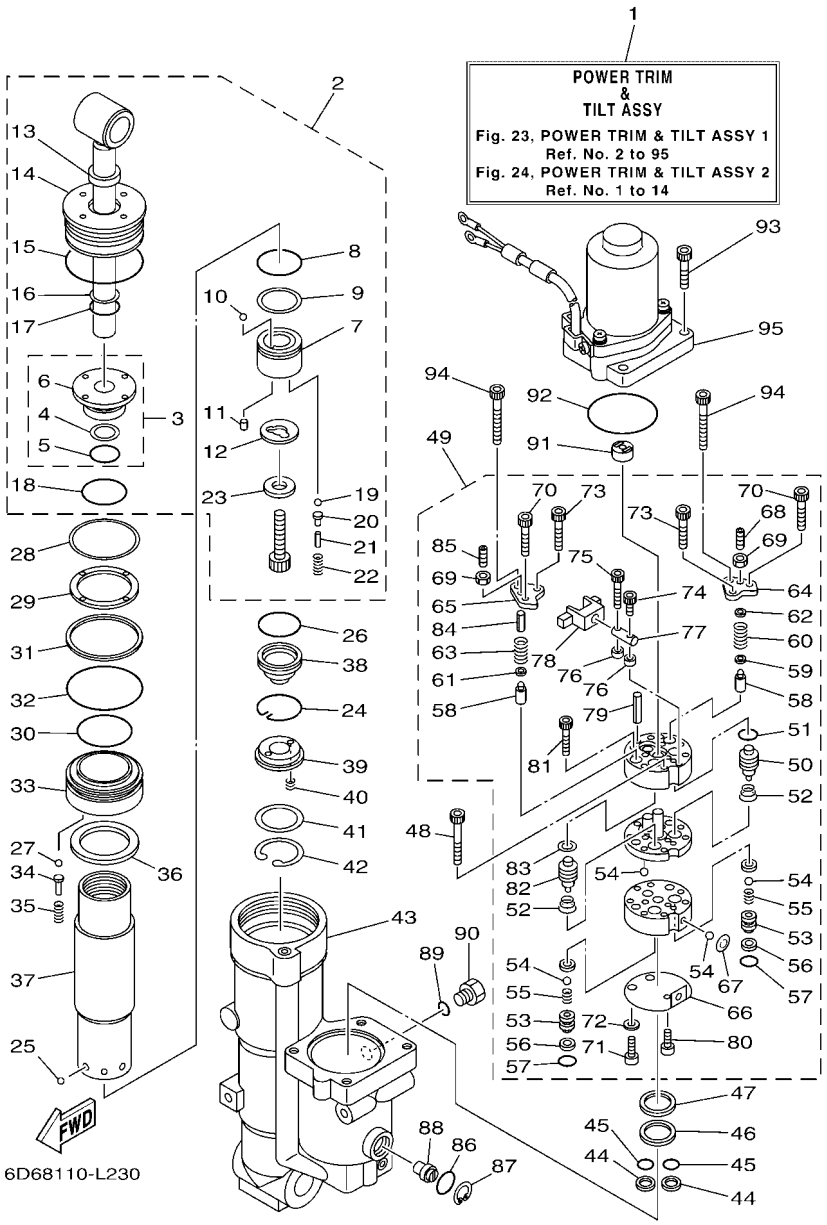

FIG. 23 POWER TRIM & TILT ASSY 1 — PUISSANCE PARER ET INCLINER 1

REF. NO.	PART NO. N° PIECES	DESCRIPTION DESCRIPTION	6D78	6D98				REMARKS REMARQUES
1	6D8–43800–01–8D	POWER TRIM & TILT ASSY PUISSANCE PARER ET INCLINER (E	1	1				
2	67F–43810–01	TILT PISTON SUB ASSY INCLINER PISTON AUXILIAIRE(ENS	1	1				
3	67F–4380R–00	.CYLINDER END SUB ASSY .CYLINDRE RACCORD (ENS.)	1	1				
4	6H1–43872–10	..RING, BACK UP ..RESSORT	1	1				
5	6D8–43863–00	..O-RING ..JOINT TORIQUE	1	1				
6	67F–43811–00	..SCREW, CYLINDER END ..VIS	1	1				
7	67F–4385A–01	.PISTON, TILT .PISTON	1	1				
8	93210–29375	.O-RING .JOINT TORIQUE	1	1				
9	62X–43871–00	.RING, BACK UP .SEGMENT	1	1				
10	93501–08001	.BALL .BILLE	1	1				
11	93602–07244	.PIN, DOWEL .GOUJON	2	2				
12	67F–22435–00	.PLATE, VALVE 2 .PLAQUE, CLAPET 2	1	1				
13	6H1–43812–00	.SEAL, DUST .JOINT	1	1				
14	67F–43821–00	.SCREW, TRIM CYLINDER END .VIS	1	1				
15	67F–43861–00	.O-RING .JOINT TORIQUE	1	1				
16	6H1–43872–10	.RING, BACK UP .RESSORT	1	1				
17	6D8–43863–00	.O-RING .JOINT TORIQUE	1	1				
18	62X–43862–00	.O-RING .JOINT TORIQUE	1	1				
19	93501–08001	.BALL .BILLE	2	2				
20	65W–4386A–00	.PIN, ABSORBER VALVE .GOUPILLE, SOUPAPE	2	2				
21	688–4386F–00	.PIN, STRAIGHT .RESSORT	2	2				
22	65W–43853–00	.SPRING, MAIN VALVE .RESSORT	2	2				
23	67F–43893–00	.WASHER .RONDELLE	1	1				
24	67F–43875–00	RING, SNAP RESSORT	1	1				
25	93503–16003	BALL BILLES	6	6				
26	67F–43863–00	O-RING JOINT TORIQUE	1	1				
27	93501–08001	BALL BILLE	5	5				

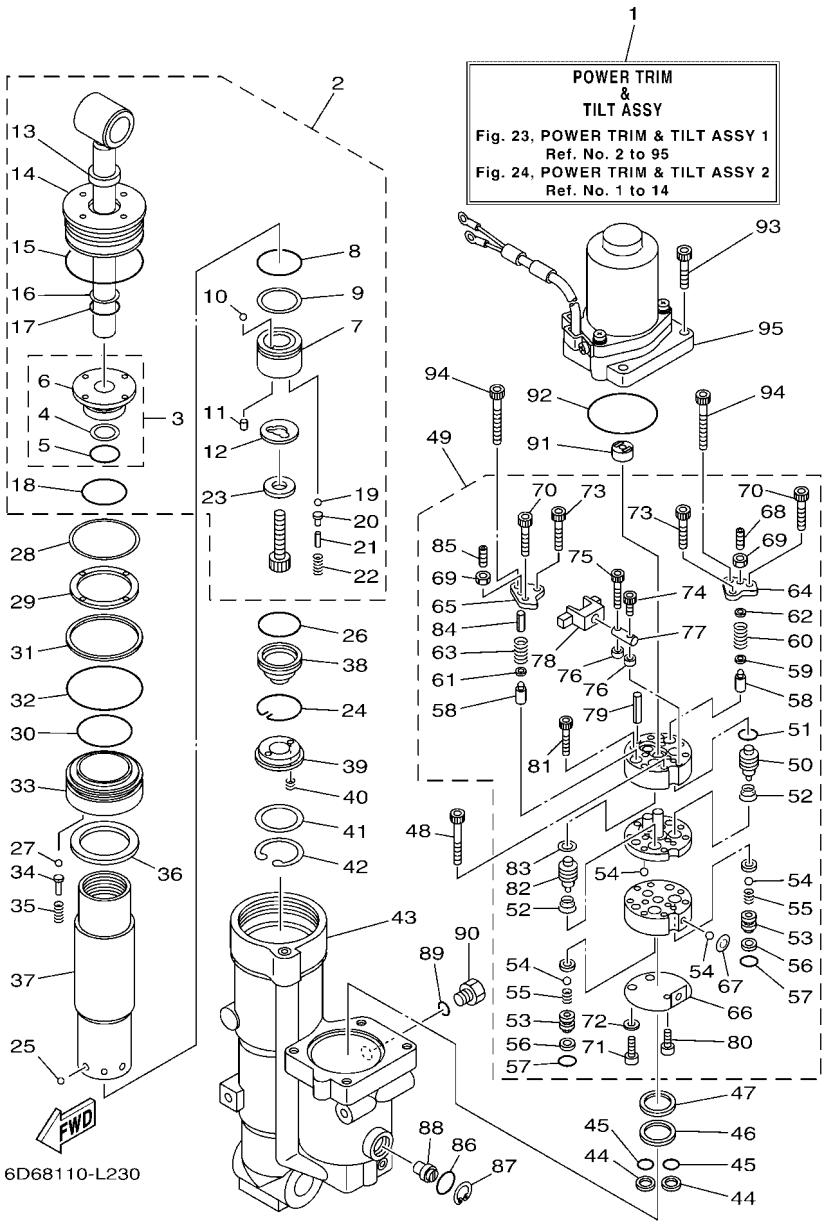

FIG. 23 POWER TRIM & TILT ASSY 1 — PUISSANCE PARER ET INCLINER 1

REF. NO.	PART NO. N° PIECES	DESCRIPTION DESCRIPTION	6D78	6D98				REMARKS REMARQUES
28	67F–43899–00	PLATE STOPPER PLAQUETTE	1	1				
29	67F–43816–00	FILTER 1 FILTRE 1	1	1				
30	67F–43862–00	O-RING JOINT TORIQUE	1	1				
31	67F–43871–00	RING, BACK UP SEGMENT	1	1				
32	62X–43865–00	O-RING JOINT TORIQUE	1	1				
33	67F–4388A–00	PISTON, TRIM PISTON	1	1				
34	6T4–4386A–00	PIN, ABSORBER VALVE GOUPILLE, SOUPAPE	5	5				
35	67F–43857–00	SPRING, ABSORBER VALVE RESSORT	5	5				
36	67F–4381J–00	PLATE PLAQUE	1	1				
37	67F–22471–01	CYLINDER, SHOCK ABSORBER CYLINDRE, AMORTISSEUR	1	1				
38	67F–4381B–00	FREE PISTON SUB ASSY PISTON AUXILIAIRE (ENS.)	1	1				
39	62X–43899–00	PLATE STOPPER PLAQUETTE	1	1				
40	62X–4384H–00	SPRING RESSORT	2	2				
41	1UF–22434–00	PLATE, VALVE 1 PLATEAU, SOUPAPE 1	1	1				
42	62X–43875–00	RING, SNAP RESSORT	1	1				
43	6D8–4380K–00	CYLINDER, TILT SUB ASSY CYLINDRE	1	1				
44	6C6–43817–00	FILTER 2 FILTRE 2	2	2				
45	69J–4389J–00	O-RING JOINT TORIQUE	2	2				
46	6C5–43816–00	FILTER 1 FILTRE 1	1	1				
47	6C5–4380G–00	PLATE PLAQUE	1	1				
48	91318–05045	BOLT BOULON	2	2				
49	6D8–43830–00	GEAR PUMP ASSY POMPE A PIGNON (ENS.)	1	1				
50	6C6–43841–00	.PISTON, SHUTTLE .PISTON	1	1				
51	6H1–43883–00	.O-RING .JOINT TORIQUE	1	1				
52	6C6–43894–00	.SPRING, SHUTTLE RETURN .RESSORT	2	2				
53	6C6–4382E–00	.ADAPTOR 2 .ADAPTEUR 2	2	2				
54	93505–32038	.BALL .BILLE	6	6				

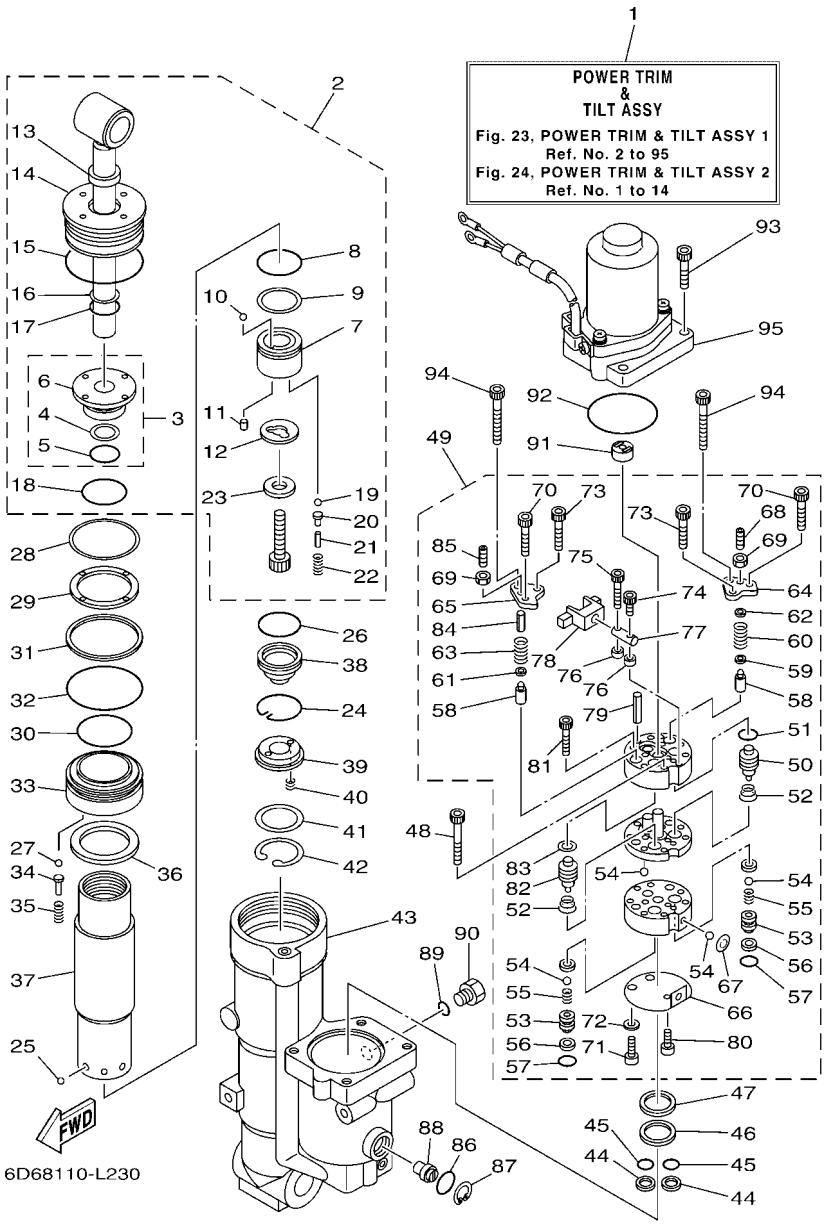

FIG. 23 POWER TRIM & TILT ASSY 1 — PUISSANCE PARER ET INCLINER 1

REF. NO.	PART NO. N° PIECES	DESCRIPTION DESCRIPTION	6D78	6D98				REMARKS REMARQUES
55	6C6–43853–00	.SPRING, MAIN VALVE .RESSORT	2	2				
56	6C6–4387G–00	.WASHER .RONDELLE	2	2				
57	69J–4389J–00	.O-RING .JOINT TORIQUE	2	2				
58	6C5–43851–00	.SEAT, RELIEF VALVE .SIEGE	2	2				
59	6C5–43893–00	.WASHER .RONDELLE	1	1				
60	6D8–43855–00	.SPRING, UP RELIEF .RESSORT	1	1				
61	6C6–43893–00	.WASHER .RONDELLE	1	1				
62	6C5–4381K–00	.HOLDER .SUPPORT	1	1				
63	6D8–43856–00	.SPRING, DOWN RELIEF .RESSORT	1	1				
64	6C5–4382K–00	.CAP, RELIEF VALVE .CHAPEAU	1	1				
65	6C5–4382L–00	.CAP, RELIEF VALVE .CAPUCHON	1	1				
66	6C5–43895–00	.SEAT, RELIEF VALVE .SIEGE	1	1				
67	6C5–43854–00	.SPRING, MANUAL RELEASE .RESSORT	1	1				
68	92A08–03110	.SCREW SET .VIS	1	1				
69	95302–03600	.NUT .ECROU	2	2				
70	91318–05030	.BOLT .BOULON	2	2				
71	6C6–43878–00	.BOLT, SOCKET .BOULON	2	2				
72	62Y–4387G–00	.WASHER .RONDELLE	2	2				
73	91318–04030	.BOLT .BOULON	2	2				
74	91318–03016	.BOLT .BOULON	1	1				
75	6C6–4388E–00	.PLUG, TAPER SCREW .BOUCHON	1	1				
76	6C6–4388F–00	.SPACER .ENTRETOISE	2	2				
77	6C6–4386G–00	.PIN, STRAIGHT 2 .RESSORT 2	1	1				
78	6C6–4386E–00	.LEVER 1 .LEVIER 1	1	1				
79	91609–50028	.PIN, SPRING .AXE DE RESSORT	2	2				
80	91318–03005	.BOLT .BOULON	1	1				
81	91318–05025	.BOLT .BOULON	2	2				

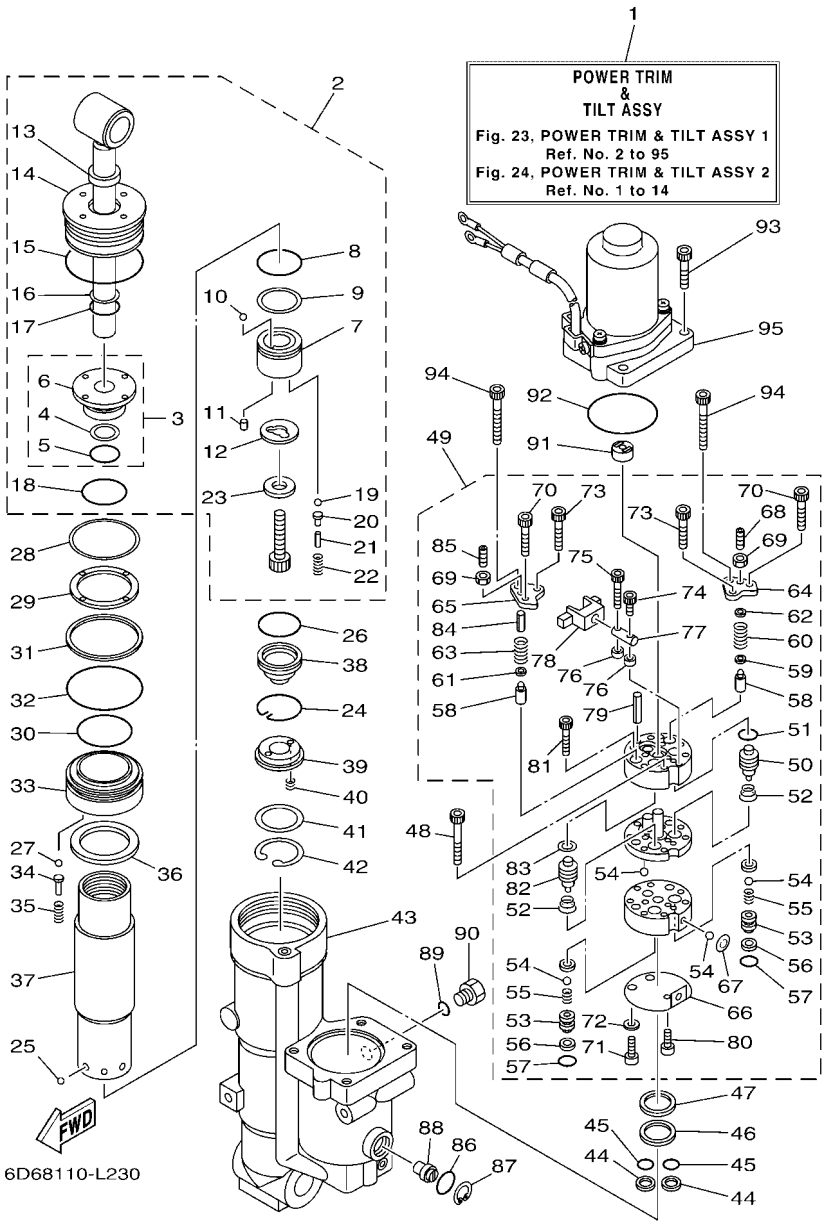

FIG. 23 POWER TRIM & TILT ASSY 1 — PUISSANCE PARER ET INCLINER 1

REF. NO.	PART NO. N° PIECES	DESCRIPTION DESCRIPTION	6D78	6D98				REMARKS REMARQUES
82	6C5–43841–00	.PISTON, SHUTTLE .PISTON	1	1				
83	6C5–43872–00	.RING, BACK UP .RESSORT	1	1				
84	6D8–4381G–00	.PIN 1 .GOUPILLE 1	1	1				
85	92A08–03012	.SCREW SET .VIS	1	1				
86	6D8–43863–00	O-RING JOINT TORIQUE	1	1				
87	6H1–43875–00	RING, SNAP RESSORT	1	1				
88	6D8–43845–00	SCREW, MANUAL RELEASE VIS	1	1				
89	93210–09165	O-RING JOINT TORIQUE	1	1				
90	6H1–43829–00	PLUG, RESERVOIR BOUCHON	1	1				
91	6D8–43831–00	CONNECTOR, SHAFT RACCORD	1	1				
92	93210–64488	O-RING JOINT TORIQUE	1	1				
93	65W–43888–00	BOLT, SOCKET BOULON	4	4				
94	91318–05050	BOLT BOULON	2	2				
95	6D8–43880–01	MOTOR ASSY MOTEUR (ENS.)	1	1				REFER TO FIG.24 REFER TO FIG.24

FIG. 24 POWER TRIM & TILT ASSY 2 — PUISSANCE PARER ET INCLINER 2

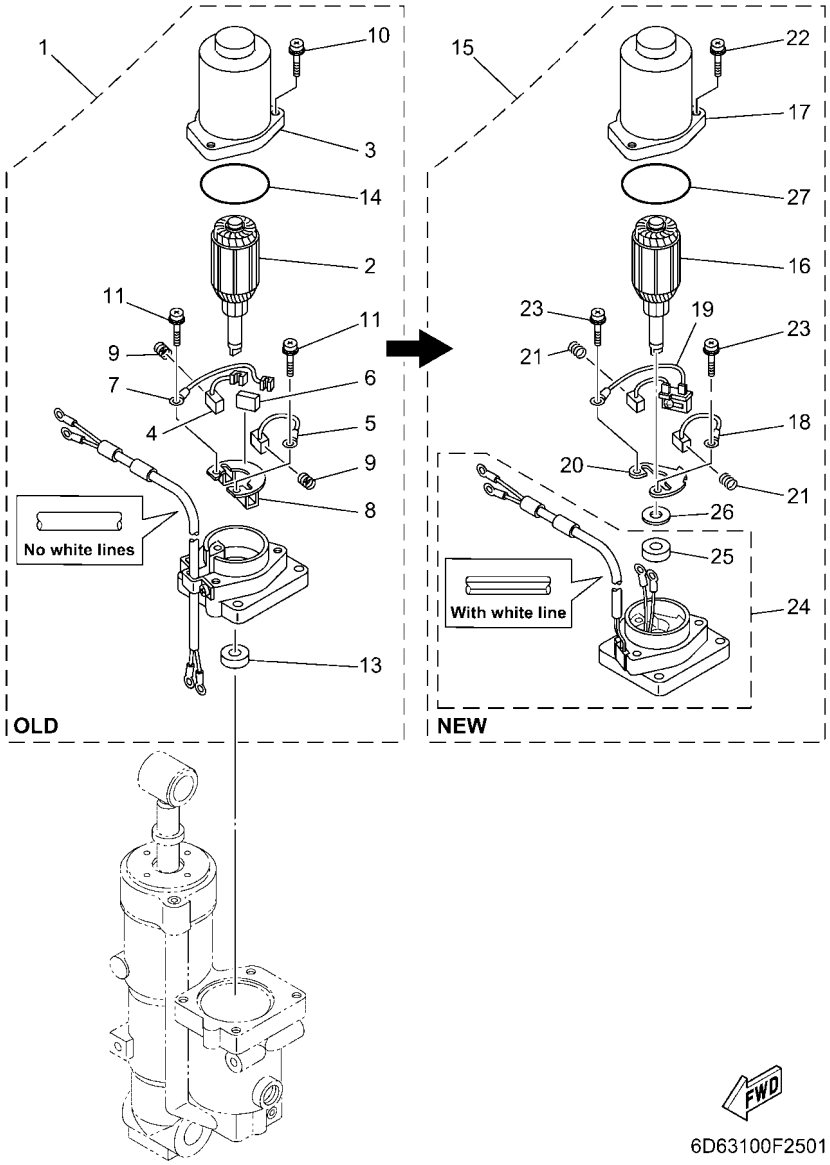

If you need FRAME, END: 6D8-43881-00/01
please order MOTOR ASSY: 6D8-43880-08

REF. NO.	PART NO. N° PIECES	DESCRIPTION DESCRIPTION	6D78	6D98				REMARKS REMARQUES
1	6D8–43880–01	MOTOR ASSY MOTEUR (ENS.)	1	1				
2	6D8–43805–01	.ARMATURE ASSY .INDUIT (ENS.)	1	1				
3	6D8–43804–01	.STATOR ASSY .STATOR (ENS.)	1	1				
4	6H1–43891–11	.BRUSH 1 .BALAI 1	1	1				
5	6H1–43892–11	.BRUSH 2 .BALAI 2	1	1				
6	6H1–82181–10	.CIRCUIT BREAKER COMP. .RUPTEUR COMPLET	1	1				
7	62X–43807–00	.WIRE SUB ASSY .AUXILIAIRE CABLE (ENS.)	1	1				
8	6H1–4380F–11	.PLATE, BRUSH HOLDER .PLAQUE	1	1				
9	62X–4386K–00	.SPRING, BRUSH .RESSORT, BALAI	2	2				
10	97980–05225	.SCREW, WITH WASHER .VIS, AVEC RONDELLE	3	3				
11	97602–04216	.SCREW, PAN HEAD WITH WASHER .VIS	2	2				
13	93102–08414	.OIL SEAL .JOINT SPY	1	1				
14	93210–554A9	.O-RING .JOINT TORIQUE	1	1				
15	6D8–43880–08	MOTOR ASSY MOTEUR (ENS.)	1	1				
16	6D8–43805–02	.ARMATURE ASSY .INDUIT (ENS.)	1	1				
17	6EK–43804–11	.STATOR ASSY .STATOR (ENS.)	1	1				
18	6EK–43892–00	.BRUSH 2 .BALAI 2	1	1				
19	63P–82181–20	.CIRCUIT BREAKER COMP. .RUPTEUR COMPLET	1	1				
20	6EK–4380F–00	.PLATE, BRUSH HOLDER .PLAQUE	1	1				
21	62X–4386K–00	.SPRING, BRUSH .RESSORT, BALAI	2	2				
22	63P–43879–10	.SCREW, WITH WASHER .VIS, AVEC RONDELLE	3	3				
23	97602–04316	.SCREW, PAN HEAD WITH WASHER .VIS, AVEC RONDELLE	2	2				
24	6D8–43881–09	.FRAME, END .BATI	1	1				
25	6LH–43882–00	..OIL SEAL ..JOINT SPY	1	1				
26	90206–14086	.WASHER, WAVE .RONDELLE, ONDULEE	2	2				
27	6EK–43862–01	.O-RING .JOINT TORIQUE	1	1				

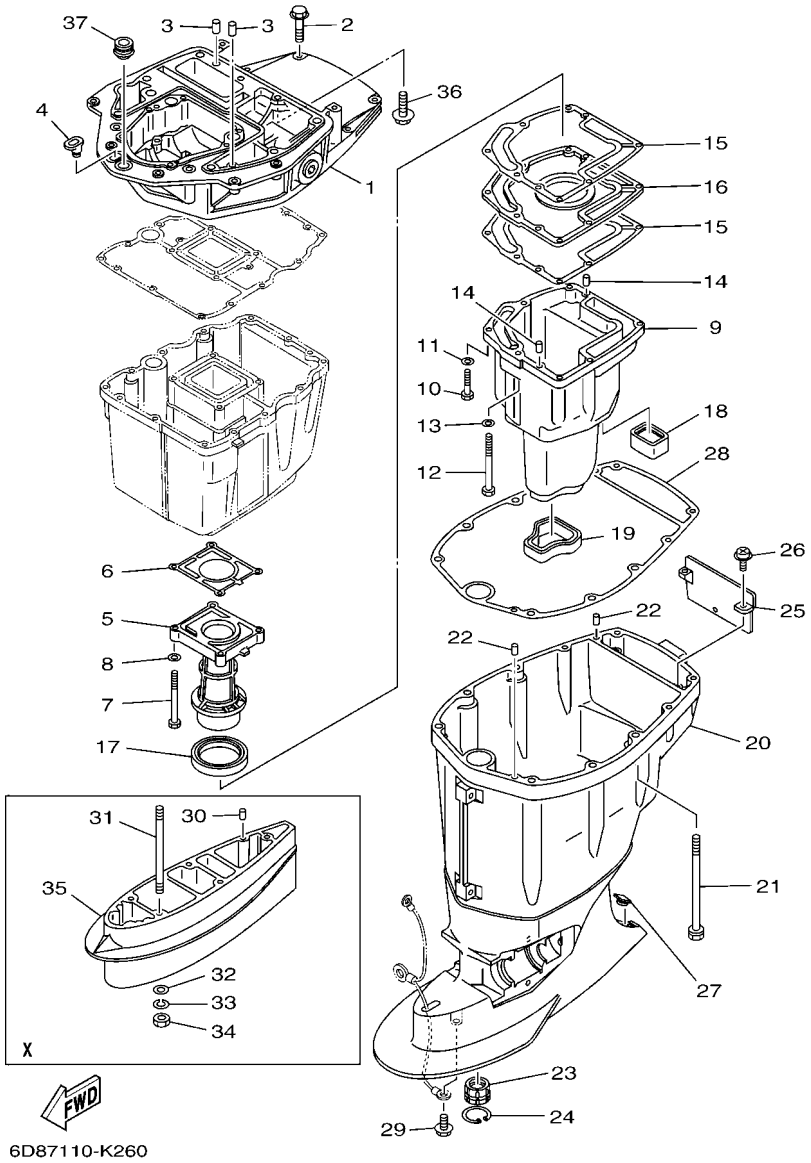

FIG. 25 UPPER CASING — FOURREAU

REF. NO.	PART NO. N° PIECES	DESCRIPTION DESCRIPTION	6D78	6D98				REMARKS REMARQUES
1	6D8–41137–00–CA	GUIDE, EXHAUST COLLECTEUR D'ECHAPPEMENT	1	1				
2	97575–08540	BOLT, WITH WASHER VIS HEXAGONAL AVC RONDELLE	4	4				
3	93608–16M16	PIN, DOWEL AXE	2	2				
4	6G1–42727–00	GROMMET PASSE-FIL	1	1				
5	67F–41131–01–CA	MANIFOLD, EXT. 1 PIPE D'ECHAPPEMENT	1	1				
6	67F–41133–A1	GASKET, EXHAUST MANIFOLD 1 JOINT, PIPE D'ECHAPPEMENT	1	1				
7	97075–06070	BOLT BOULON	4	4				
8	92995–06600	WASHER RONDELLE	4	4				
9	67F–14711–00–CA	MUFFLER 1 POT D'ECHAPPEMENT 1	1	1				
10	97075–06030	BOLT BOULON	6	6				
11	92995–06600	WASHER RONDELLE	6	6				
12	97075–06050	BOLT BOULON	1	1				
13	92995–06600	WASHER RONDELLE	1	1				
14	93606–19M23	PIN, DOWEL GOUPILLE	2	2				
15	67F–41134–A0	GASKET, EXHAUST MANIFOLD JOINT, PIPE D'ECHAPPEMENT	2	2				
16	67F–45181–00–CA	PLATE PLAQUETTE	1	1				
17	67F–41138–00	SEAL, EXT. 1 JOINT DE GROUPE 1	1	1				
18	67F–45127–00	SEAL JOINT	1	1				
19	67F–45123–00	GASKET, MUFFLER JOINT, POT DE DETENTE	1	1				
20	67F–45111–11–8D	CASING, UPPER FOURREAU	1	1				
21	90119–10M08	BOLT, WITH WASHER BOULON, AVEC RONDELLE	6	6				
22	93608–16M16	PIN, DOWEL AXE	2	2				
23	67F–45318–00	BUSHING, DRIVE SHAFT DOUILLE, ARBRE MOTEUR	1	1				
24	93420–36M01	CIRCLIP CIRCLIP, TYPE S	1	1				
25	67F–45151–00	COVER, UPPER CASING CAPUCHON, FOURREAU	1	1				
26	97980–06216	SCREW, WITH WASHER VIS, AVEC RONDELLE	2	2				
27	67F–45155–00	CAP CAPUCHON	1	1				

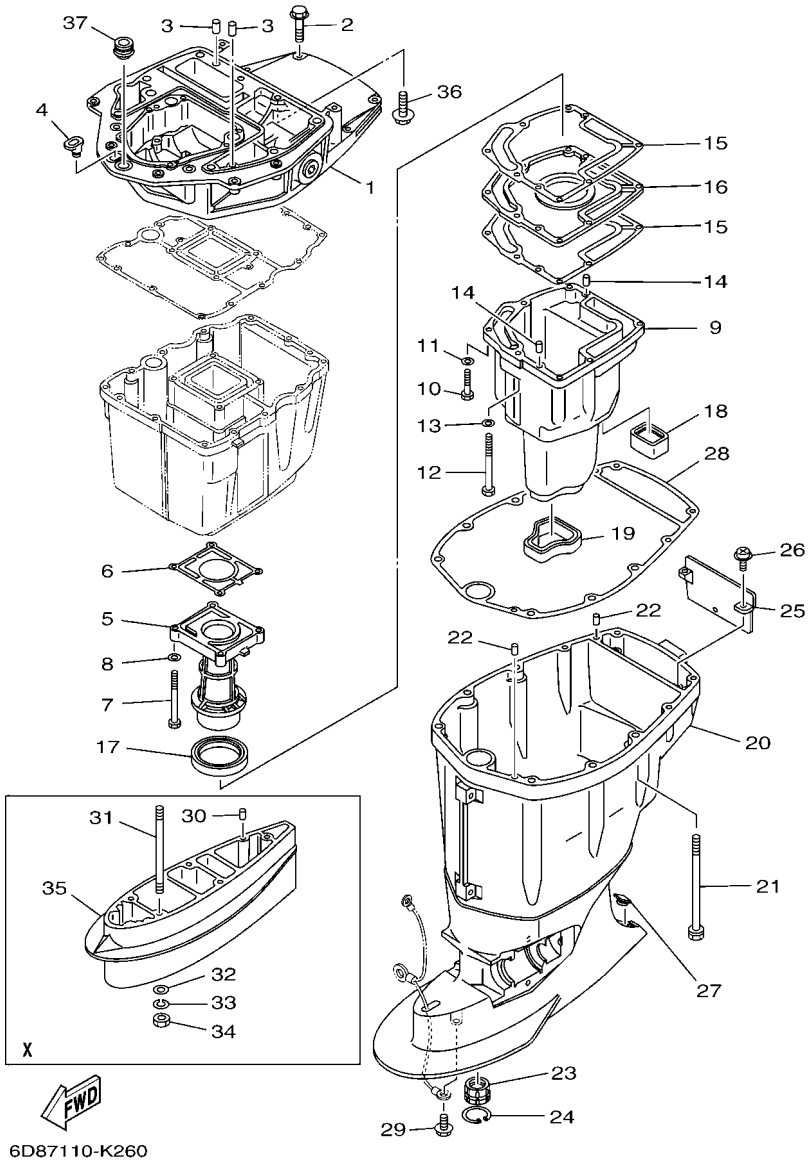

FIG. 25 UPPER CASING FOURREAU

REF. NO.	PART NO. N° PIECES	DESCRIPTION DESCRIPTION	6D78	6D98				REMARKS REMARQUES
28	67F–45113–00	GASKET, UPPER CASING JOINT, TUBE D'ARBRE	1	1				
29	95895–08014	BOLT, FLANGE BOULON	1	1				
30	93606–12019	PIN, DOWEL GOUPILLE	2	2				X(26.1") X(26.1")
31	90116–10M05	BOLT, STUD GOUJON	4	4				X(26.1") X(26.1")
32	92995–10600	WASHER RONDELLE	4	4				X(26.1") X(26.1")
33	92990–10100	WASHER, SPRING RONDELLE, GROWER	4	4				X(26.1") X(26.1")
34	95380–10600	NUT ECROU	4	4				X(26.1") X(26.1")
35	688–45211–01–8D	EXTENSION EXTENSION	1	1				X(26.1") X(26.1")
36	90119–08M58	BOLT, WITH WASHER BOULON, AVEC RONDELLE	2	2				
37	67F–42724–00	GROMMET PASSE-FIL	1	1				

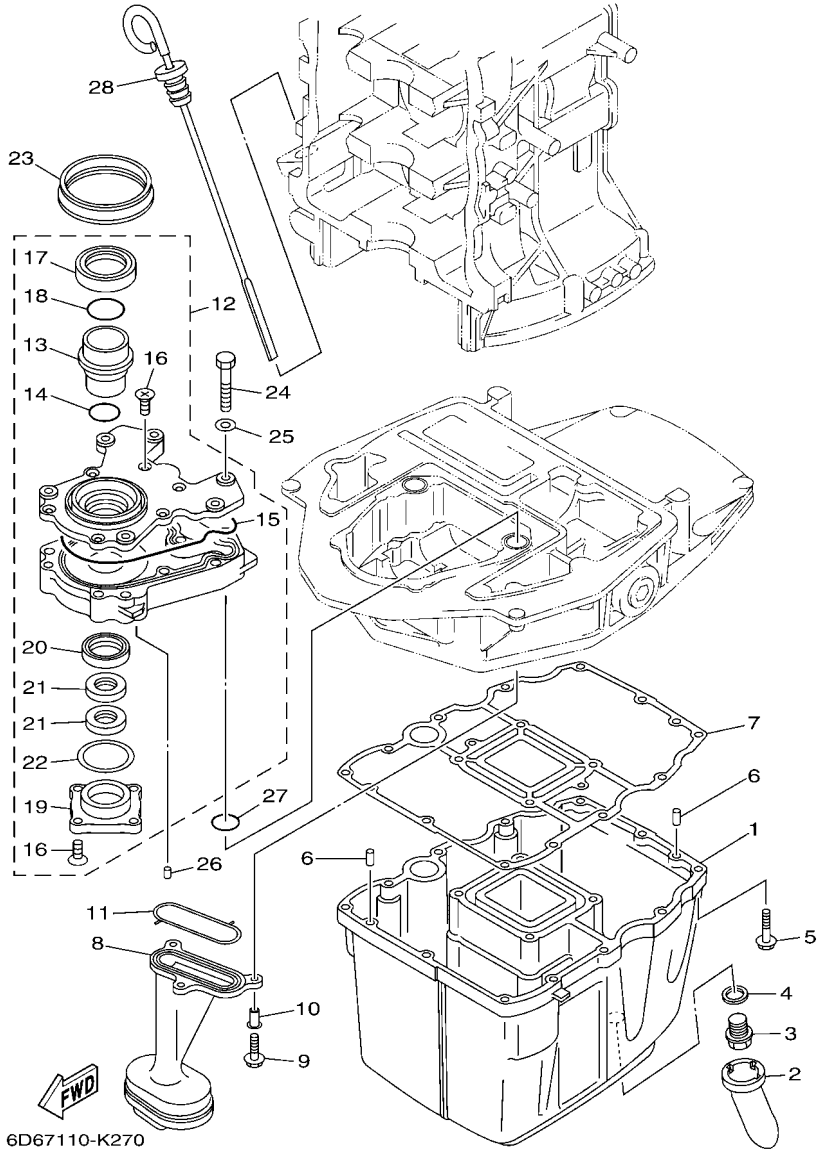

FIG. 26 OIL PAN — VENTILATEUR D'HUILE

REF. NO.	PART NO. N° PIECES	DESCRIPTION DESCRIPTION	6D78	6D98				REMARKS REMARQUES
1	67F–15311–03–CA	OIL PAN VENTILATEUR D'HUILE	1	1				
2	63P–15316–00	DAMPER 1 AMORTISSEUR 1	1	1				
3	90340–14M06	PLUG, STRAIGHT SCREW PLOT, FILETE DROIT	1	1				
4	90430–14M09	GASKET JOINT	1	1				
5	97575–06525	BOLT, WITH WASHER VIS HEXAGONAL AVC RONDELLE	12	12				
6	93606–12019	PIN, DOWEL GOUPILLE	2	2				
7	68V–15312–00	GASKET, OIL PAN JOINT DE VENTILATEUR D'HUILE	1	1				
8	67F–13411–00	STRAINER, OIL FILTRE, HUILE	1	1				
9	95812–06025	BOLT, FLANGE BOULON	3	3				
10	90387–06263	COLLAR COLLERETTE	3	3				
11	67F–13415–00	SEAL, OIL STRAINER JOINT, FILTRE A HUILE	1	1				
12	67F–13300–10	OIL PUMP ASSY POMPE A HUILE COMPLETE	1	1				
13	67F–13314–02	.SHAFT, PUMP .AXE DE POMPE	1	1				
14	67F–13473–01	.O-RING .JOINT TORIQUE	1	1				
15	67F–13329–00	.GASKET, PUMP COVER .JOINT, COUVERCLE DE POMPE	1	1				
16	67F–13495–00	.SCREW .VIS	10	10				
17	67F–13119–01	.OIL SEAL .JOINT SPY	1	1				
18	67F–13769–00	.O-RING .JOINT TORIQUE	1	1				
19	67F–13914–00	.HOUSING, PUMP .CORPS, POMPE	1	1				
20	67F–13631–03	.OIL SEAL .JOINT SPY	1	1				
21	67F–13149–00	.OIL SEAL .JOINT SPY	2	2				
22	67F–13339–00	.GASKET, PUMP COVER .BAINT, COUVERCLE DE POME	1	1				
23	67F–13338–00	SEAL JOINT	1	1				
24	97095–06045	BOLT BOULON	6	6				
25	92995–06600	WASHER RONDELLE	6	6				
26	93604–12M07	PIN, DOWEL CLAVETTE	2	2				
27	93210–19MJ1	O-RING JOINT TORIQUE	2	2				

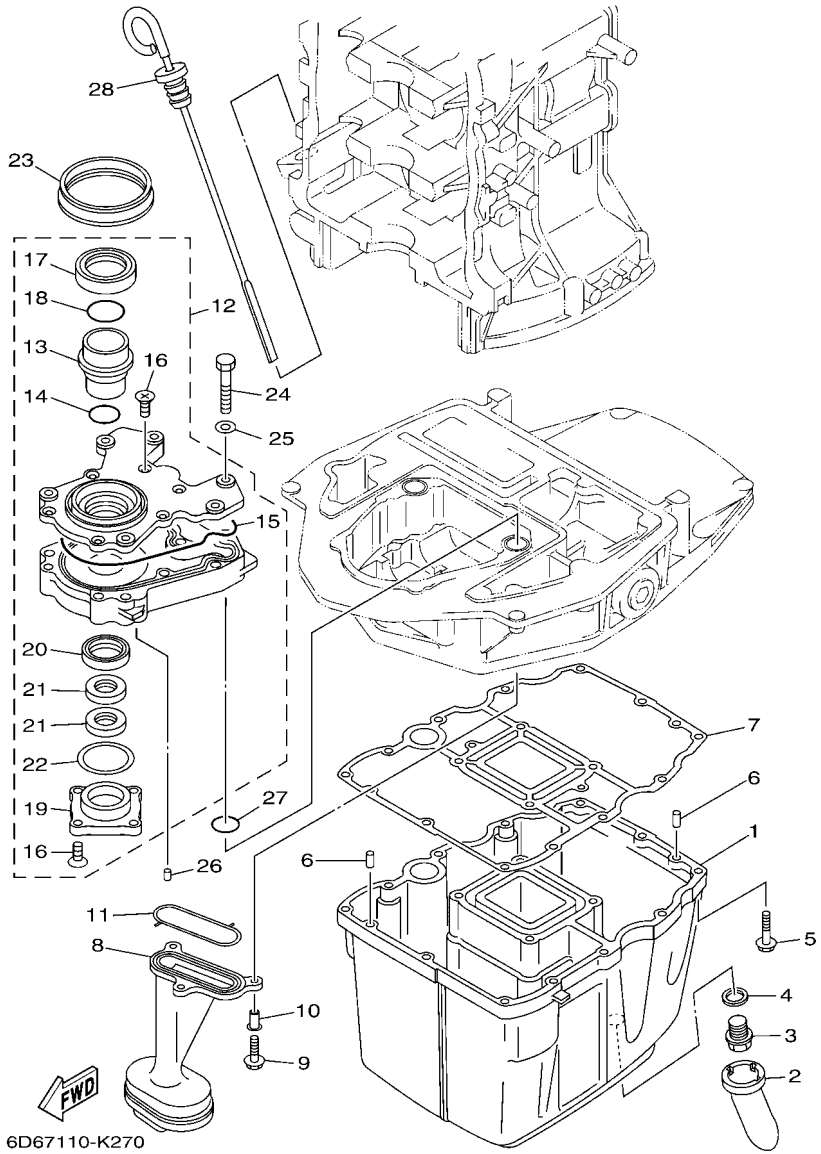

FIG. 26 OIL PAN — VENTILATEUR D'HUILE

REF. NO.	PART NO. N° PIECES	DESCRIPTION DESCRIPTION	6D78	6D98				REMARKS REMARQUES
28	6D8–15362–00	PLUG, OIL LEVEL PLOT, NIVEAU D'HUILE	1	1				

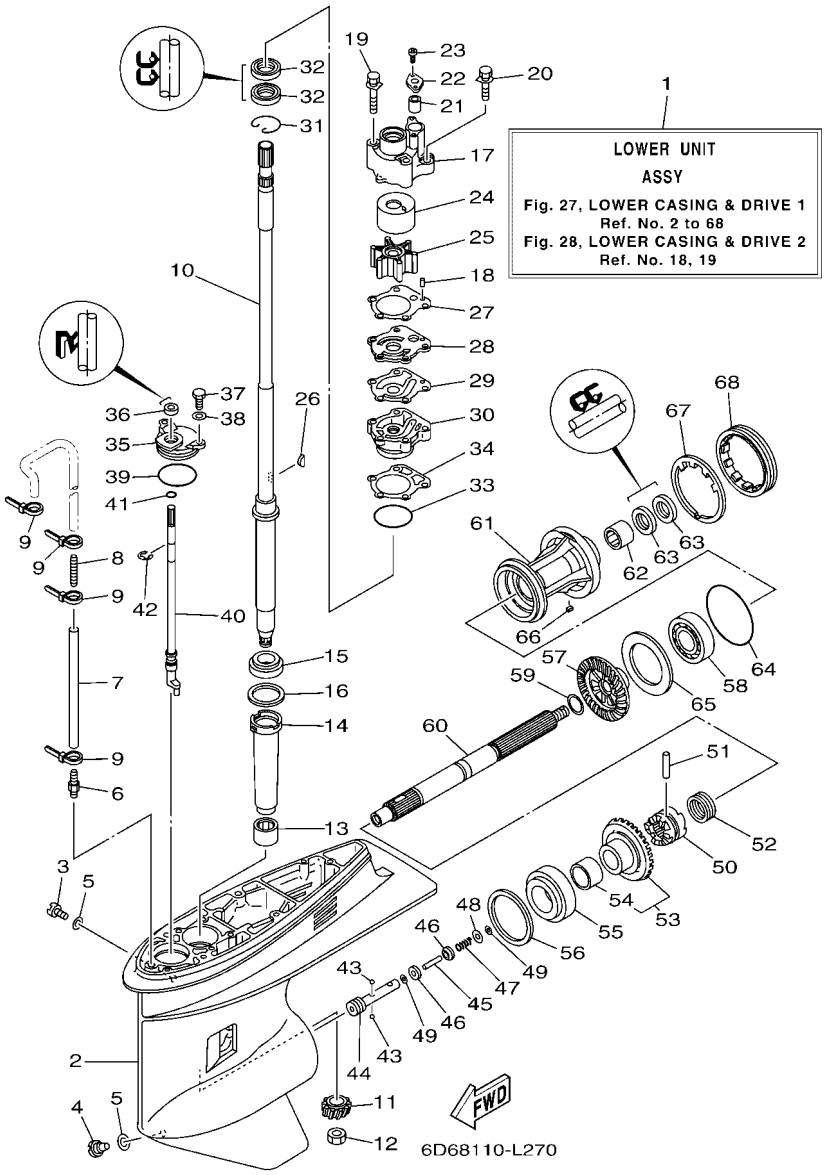

FIG. 27 LOWER CASING & DRIVE 1 — BOITIER D'HELICE TRANSMISSION1

REF. NO.	PART NO. N° PIECES	DESCRIPTION DESCRIPTION	6D78	6D98				REMARKS REMARQUES
1	6D9–45300–12–8D	LOWER UNIT ASSY UNITE INFERIEURE (ENS.)	1	1				L(21.1") L(21.1")
	6D9–45300–13–8D	LOWER UNIT ASSY UNITE INFERIEURE (ENS.)	1	1				6D7:1013859～, 6D9:1019324～ 6D7:1013859～, 6D9:1019324～
	6D9–45300–32–8D	LOWER UNIT ASSY UNITE INFERIEURE (ENS.)	1	1				X(26.1") X(26.1")
	6D9–45300–33–8D	LOWER UNIT ASSY UNITE INFERIEURE (ENS.)	1	1				6D7:1013859～, 6D9:1019324～ 6D7:1013859～, 6D9:1019324～
2	67F–45301–00–8D	CASING, LOWER BEQUILLE	1	1				
3	90340–08002	PLUG, STRAIGHT SCREW PLOT, FILETE DROIT	1	1				
4	688–45341–10	PLUG, DRAIN BOUCHON DE VIDANGE	1	1				
5	90430–08020	GASKET JOINT	2	2				
6	6E5–45378–00	NIPPLE, HOSE RACCORD, TUYAU	1	1				
7	90445–07M31	HOSE (L200) DURITE (L200)	1	1				L(21.1") L(21.1")
	90445–07M38	HOSE (L300) DURITE (L300)	1	1				X(26.1") X(26.1")
8	6E5–83558–10	END, NIPPLE RACCORD DE NIPPLE	1	1				
9	90465–11M10	CLAMP BRIDE	4	4				
10	67F–45501–10	DRIVE SHAFT COMP. ARBRE MOTEUR COMP.	1	1				L(21.1") L(21.1")
	67F–45501–30	DRIVE SHAFT COMP. ARBRE MOTEUR COMP.	1	1				X(26.1") X(26.1")
11	6D9–45551–00	PINION (13T) PIGNON D'ATTAQUE (13D)	1	1				
	6D9–45551–10	PINION (11T) PIGNON D'ATTAQUE (11D)	1	1				6D7:1013859～, 6D9:1019324～ 6D7:1013859～, 6D9:1019324～
12	90170–16M01	NUT ECROU	1	1				
13	93315–52563	BEARING ROULEMENT	1	1				
14	688–45536–01	SLEEVE, DRIVE SHAFT MANCHON, ARBRE MOTEUR	1	1				
15	93332–000U3	BEARING ROULEMENT	1	1				
16	688–45587–01	SHIM (T:0.10MM) CALE (T:0.10MM)	1	1				UR UR
	688–45587–10	SHIM (T:0.12MM) CALE (T:0.12MM)	1	1				UR UR
	688–45587–20	SHIM (T:0.15MM) CALE (T:0.15MM)	1	1				UR UR
	688–45587–30	SHIM (T:0.18MM) CALE (T:0.18MM)	1	1				UR UR
	688–45587–40	SHIM (T:0.30MM) CALE (T:0.30MM)	1	1				UR UR
	688–45587–50	SHIM (T:0.40MM) CALE (T:0.40MM)	1	1				UR UR

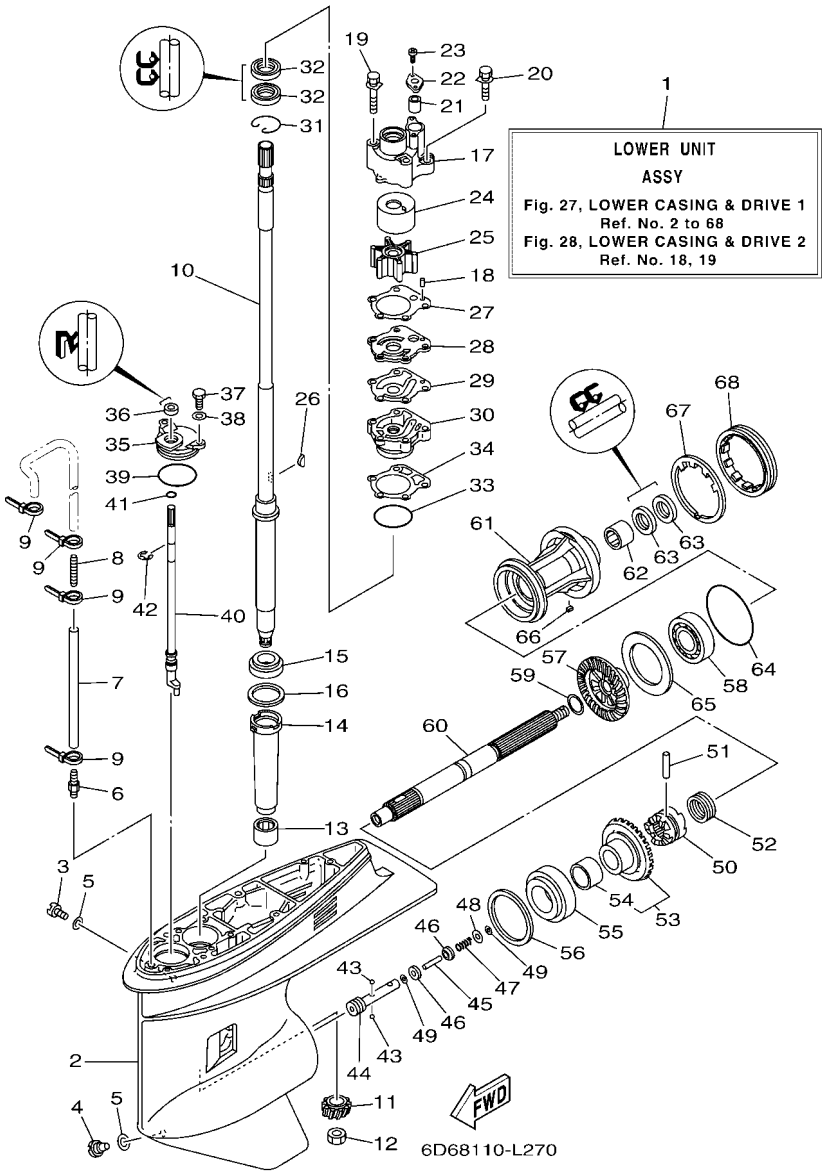

FIG. 27 LOWER CASING & DRIVE 1 — BOITIER D'HELICE TRANSMISSION1

REF. NO.	PART NO. N° PIECES	DESCRIPTION DESCRIPTION	6D78	6D98				REMARKS REMARQUES
16	688–45587–60	SHIM (T:0.50MM) CALE (T:0.50MM)	1	1				UR UR
17	67F–44311–01	HOUSING, WATER PUMP CORPS, POMPE A EAU	1	1				
18	93604–10M03	PIN, DOWEL CLAVETTE	2	2				
19	90119–08M87	BOLT, WITH WASHER BOULON, AVEC RONDELLE	2	2				
20	90119–08M13	BOLT, WITH WASHER BOULON, AVEC RONDELLE	2	2				
21	663–44366–00	DAMPER, WATER SEAL 2 JOINT, TUBE D'EAU 2	1	1				
22	90480–19M06	GROMMET PASSE-FIL	1	1				
23	90160–04006	SCREW, ROUND TAPPING VIS, TETE RONDE FRAISEE	2	2				
24	67F–44322–00	INSERT, CARTRIDGE CUVETTE	1	1				
25	67F–44352–00	IMPELLER TURBINE	1	1				
26	90280–04M04	KEY, WOODRUFF CLAVETTE, DEMI-LUNE	1	1				
27	688–44315–A0	GASKET, WATER PUMP JOINT, POMPE A EAU	1	1				
28	67F–44323–00	OUTER PLATE, CARTRIDGE PLAQUE EXTERIEURE	1	1				
29	688–44324–A0	GASKET, CARTRIDGE JOINT	1	1				
30	6D8–44341–01–CA	HOUSING, WATER PUMP CORPS, POMPE A EAU	1	1				
31	93450–44166	CIRCLIP CIRCLIP, TYPE S	1	1				
32	93101–25M03	OIL SEAL JOINT SPY	2	2				
33	93210–46044	O-RING JOINT TORIQUE	1	1				
34	688–44316–A0	GASKET, WATER PUMP JOINT, POMPE A EAU	1	1				
35	688–45321–00	PLATE PLAQUETTE	1	1				
36	93106–09014	OIL SEAL JOINT SPY	1	1				
37	97095–06016	BOLT BOULON	2	2				
38	92995–06600	WASHER RONDELLE	2	2				
39	93210–49046	O-RING JOINT TORIQUE	1	1				
40	67F–44150–01	SHIFT CAM ASSY CAME D'INVERSION	1	1				
41	93210–07003	O-RING JOINT TORIQUE	1	1				
42	99001–08600	CIRCLIP CIRCLIP	1	1				

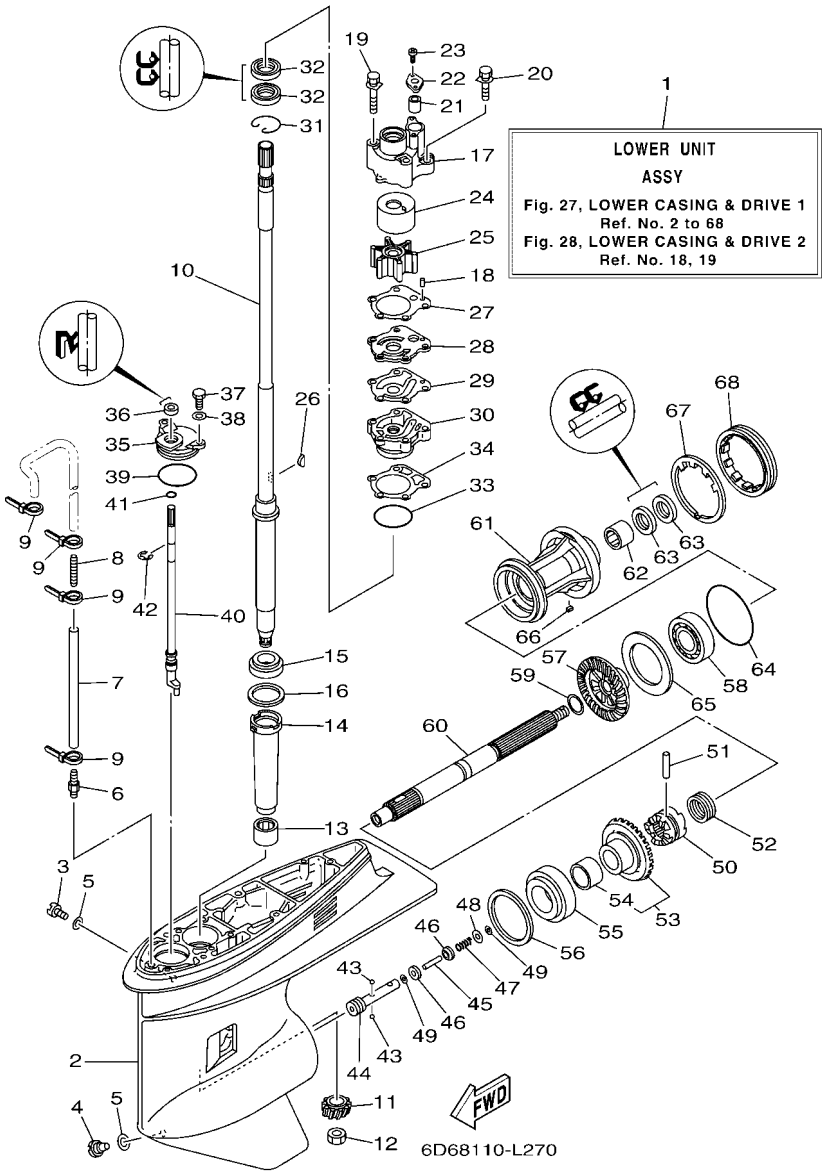

FIG. 27 LOWER CASING & DRIVE 1 — BOITIER D'HELICE TRANSMISSION1

REF. NO.	PART NO. N° PIECES	DESCRIPTION DESCRIPTION	6D78	6D98				REMARKS REMARQUES
43	93503–16003	BALL BILLES	2	2				
44	67F–45634–00	SLIDE, SHIFT CONTRE-POUSSOIR	1	1				
45	6H1–45668–00	SHAFT, FREE 1 AXE 1	1	1				
46	6H1–45635–00	PLUNGER, SHIFT POUSSOIR D'EMBRAYAGE	2	2				
47	90501–12M48	SPRING, COMPRESSION RESSORT, COMPRESSION	1	1				
48	90201–03313	WASHER, PLATE RONDELLE, PLATE	1	1				
49	90183–02M03	NUT, SPRING ECROU, RESSORT	2	2				
50	6D8–45631–00	CLUTCH, DOG CRABOT	1	1				
51	90250–07M02	PIN, STRAIGHT GOUPILLE, DROITE	1	1				
52	688–45633–00	RING, CROSS PIN JONC, GOUPILLE CRABOT	1	1				
53	67F–45560–00	GEAR 1 (30T) PIGNON 1 (30T)	1	1				
	6D9–45560–10	GEAR 1 (25T) PIGNON 1 (25D)	1	1				6D7:1013859～, 6D9:1019324～ 6D7:1013859～, 6D9:1019324～
54	93317–322V0	.BEARING .ROULEMENT	1	1				
55	93332–000UD	BEARING ROULEMENT	1	1				
56	688–45567–01	SHIM (T:0.10MM) CALE (T:0.10MM)	1	1				UR UR
	688–45567–10	SHIM (T:0.12MM) CALE (T:0.12MM)	1	1				UR UR
	688–45567–20	SHIM (T:0.15MM) CALE (T:0.15MM)	1	1				UR UR
	688–45567–30	SHIM (T:0.18MM) CALE (T:0.18MM)	1	1				UR UR
	688–45567–40	SHIM (T:0.30MM) CALE (T:0.30MM)	1	1				UR UR
	688–45567–50	SHIM (T:0.40MM) CALE (T:0.40MM)	1	1				UR UR
	688–45567–60	SHIM (T:0.50MM) CALE (T:0.50MM)	1	1				UR UR
57	6D9–45571–00	GEAR 2 (30T) PIGNON 2 (30T)	1	1				
	6D9–45571–10	GEAR 2 (25T) PIGNON 2 (25D)	1	1				6D7:1013859～, 6D9:1019324～ 6D7:1013859～, 6D9:1019324～
58	93306–207U0	BEARING ROULEMENT	1	1				
59	90201–25M05	WASHER, PLATE RONDELLE, PLATE	1	1				
60	67F–45611–01	SHAFT, PROPELLER ARBRE, HELICE	1	1				
61	67F–45331–00–CA	HOUSING, BEARING FLASQUE, ROULEMENT	1	1				

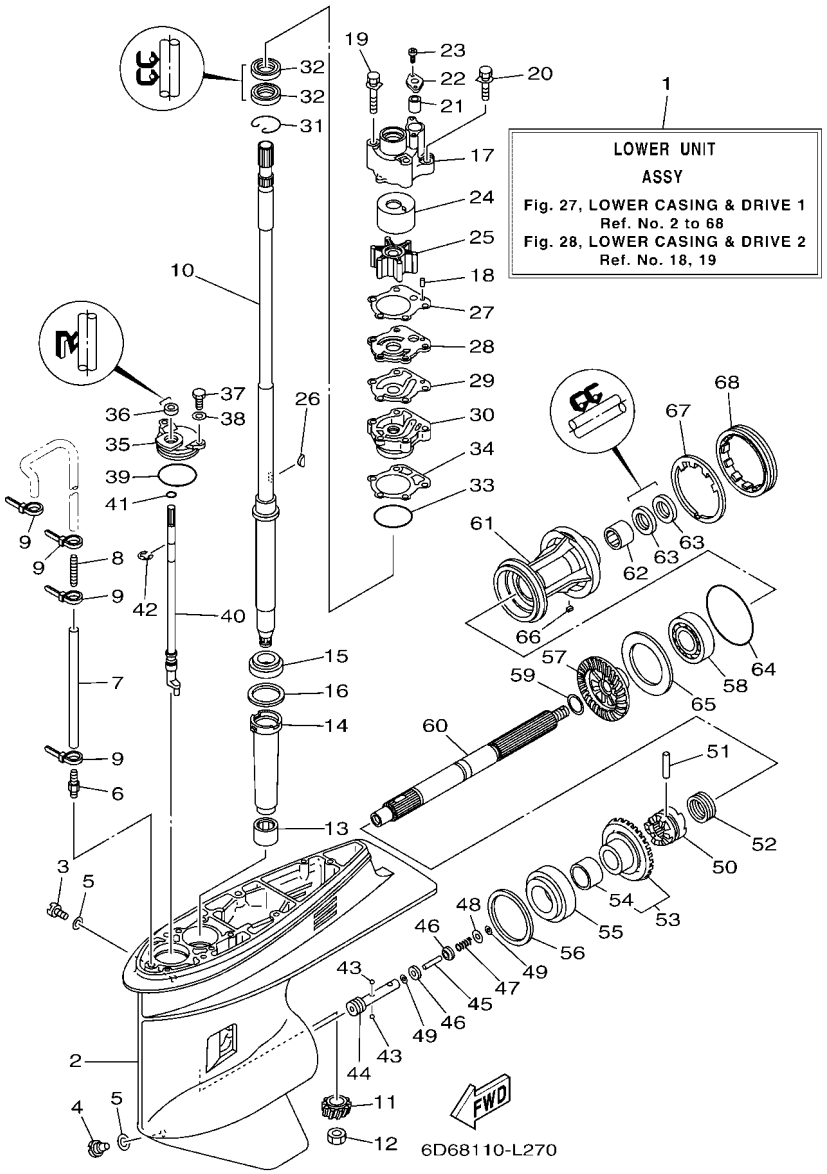

FIG. 27 LOWER CASING & DRIVE 1 — BOITIER D'HELICE TRANSMISSION1

REF. NO.	PART NO. N° PIECES	DESCRIPTION DESCRIPTION	6D78	6D98				REMARKS REMARQUES
62	93317–325U0	BEARING ROULEMENT	1	1				
63	93101–25M03	OIL SEAL JOINT SPY	2	2				
64	93210–86M39	O-RING JOINT TORIQUE	1	1				
65	67F–45576–00	WASHER, THRUST 2 RONDELLE DE CALAGE 2	1	1				
66	90282–04010	KEY, STRAIGHT CLAVETTE, DROITE	1	1				
67	688–45383–02	WASHER, CLAW FREIN D'ECROU	1	1				
68	688–45384–02	NUT ECROU	1	1				

FIG. 28 LOWER CASING & DRIVE 2 — BOITIER D'HELICE TRANSMISSION2

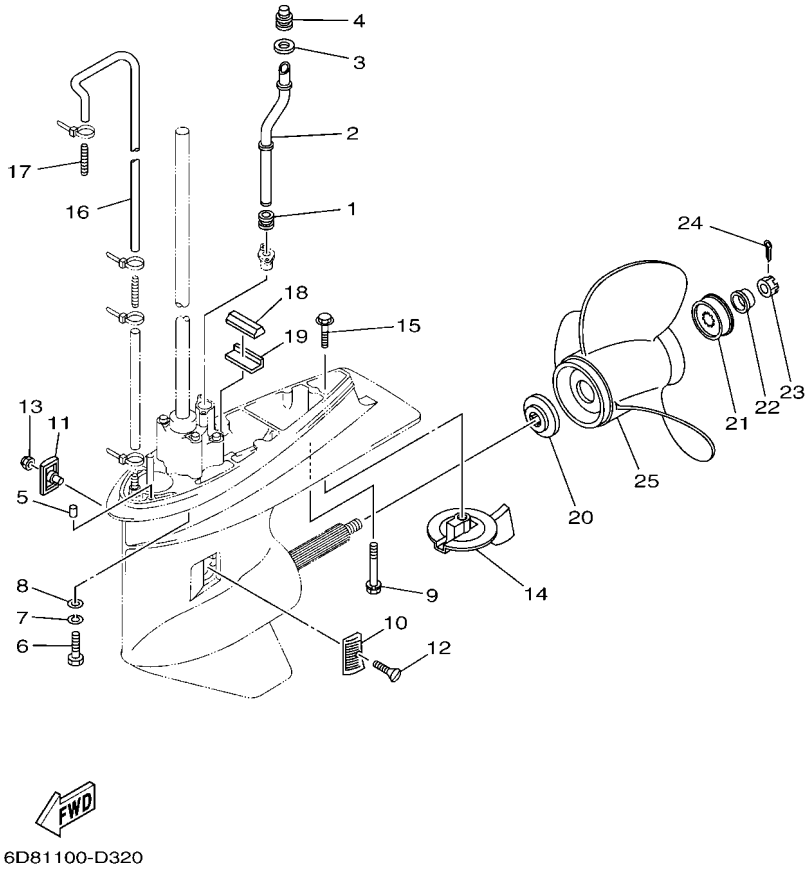

REF. NO.	PART NO. N° PIECES	DESCRIPTION DESCRIPTION	6D78	6D98				REMARKS REMARQUES
1	663–44367–00	DAMPER, WATER SEAL 3 JOINT TUBE D'EAU 3	1	1				
2	6D8–44361–00	TUBE, WATER 1 TUBE D'EAU 1	1	1				L(21.1") L(21.1")
	6D8–44361–10	TUBE, WATER 1 TUBE D'EAU 1	1	1				X(26.1") X(26.1")
3	6D8–44314–00	SPACER ENTRETOISE	1	1				
4	67F–44365–00	DAMPER, WATER SEAL 1 JOINT, TUBE D'EAU 1	1	1				
5	93606–12019	PIN, DOWEL GOUPILLE	2	2				
6	97075–10040	BOLT BOULON	4	4				L(21.1") L(21.1")
7	92995–10100	WASHER RONDELLE	4	4				L(21.1") L(21.1")
8	92995–10600	WASHER RONDELLE	4	4				L(21.1") L(21.1")
9	90119–08M84	BOLT, WITH WASHER BOULON, AVEC RONDELLE	1	1				L(21.1") L(21.1")
	90119–08M86	BOLT, WITH WASHER BOULON, AVEC RONDELLE	1	1				X(26.1") X(26.1")
10	6H1–45214–00	COVER, WATER INLET 1 GRILLE, ENTREE D'EAU 1	1	1				
11	6H1–45215–00	COVER, WATER INLET 2 GRILLE, ENTREE D'EAU 2	1	1				
12	90151–05M00	SCREW, COUNTERSUNK VIS, TETE NOYEE	1	1				
13	90185–05002	NUT, NYLON ECROU,AUTO-BLOQUANT	1	1				
14	67F–45371–00	TAB-TRIM ANODE DERIVE	1	1				
15	90105–10M67	BOLT, FLANGE BOULON	1	1				
16	90445–07ME0	HOSE (L1220) DURITE (L1220)	1	1				
17	6E5–83558–00	END, NIPPLE RACCORD DE NIPPLE	1	1				
18	688–45375–00	DAMPER, SEAL BOURRELET, CAOUTCHOUC	1	1				
19	663–45376–00	GUIDE, SEAL DAMPER BUTEE, JOINT CAOUTCHOUC	1	1				
20	688–45987–01	SPACER 1 ENTRETOISE 1	1	1				
21	67F–45997–00	SPACER 2 ENTRETOISE 2	1	1				
22	90389–25M00	BUSH DOUILLE	1	1				
23	90171–16011	NUT, CASTLE ECROU, CRENELE	1	1				
24	91490–40025	PIN. COTTER GOUPILLE	1	1				
25	6E5–45941–00	PROPELLER (3X13"X19"-K) HELICE (3X13"X19"-K)	1	1				UR UR

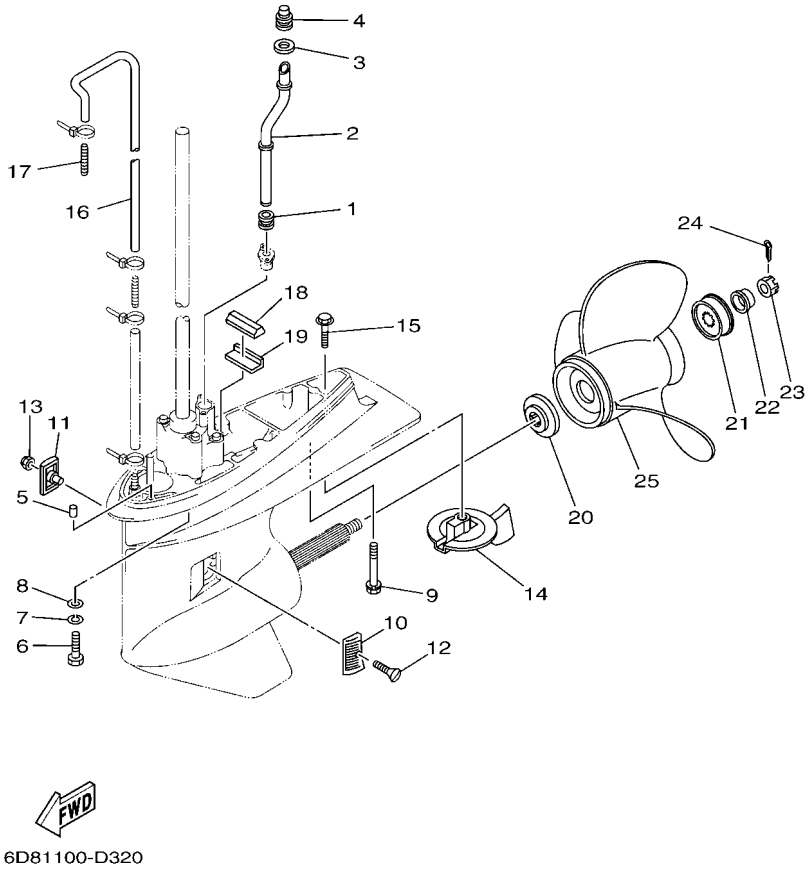

REF. NO.	PART NO. N° PIECES	DESCRIPTION DESCRIPTION	6D78	6D98				REMARKS REMARQUES
25	6E5–45943–00	PROPELLER (3X12-5/8"X21"-K) HELICE (3X12-5/8"X21"-K)	1	1				UR UR
	6E5–45945–01	PROPELLER (3X13-1/4"X17"-K) HELICE (3X13-1/4"X17"-K)	1	1				UR UR
	6E5–45947–00	PROPELLER (3X13-1/2"X15"-K) HELICE (3X13-1/2"X15"-K)	1	1				UR UR
	6E5–45949–00	PROPELLER (3X13-5/8"X13"-K) HELICE (3X13-5/8"X13"-K)	1	1				UR UR
	6E5–45952–00	PROPELLER (3X13"X23"-K) HELICE (3X13"X23"-K)	1	1				UR UR
	6E5–45954–00	PROPELLER (3X14"X11"-K) HELICE (3X14"X11"-K)	1	1				UR UR
	6E5–45956–00	PROPELLER (3X13"X25"-K) HELICE (3X13"X25"-K)	1	1				UR UR
	6E5–45958–00	PROPELLER (3X13-5/8"X14"-K) HELICE (3X13-5/8"X14"-K)	1	1				UR UR
	688–45970–03	PROPELLER (3X13"X19"-K) HELICE (3X13"X19"-K)	1	1				UR UR
	688–45972–02	PROPELLER (3X13"X21"-K) HELICE (3X13"X21"-K)	1	1				UR UR
	688–45974–02	PROPELLER (3X13"X23"-K) HELICE (3X13"X23"-K)	1	1				UR UR
	688–45976–01	PROPELLER (3X13"X25"-K) HELICE (3X13"X25"-K)	1	1				UR UR
	688–45978–60	PROPELLER (3X13-1/2"X16"-K) HELICE (3X13-1/2"X16"-K)	1	1				UR UR
	688–45930–02	PROPELLER (3X13"X17"-K2) HELICE (3X13"X17"-K2)	1	1				UR UR
	688–45932–60	PROPELLER (3X13-1/2"X14"-K) HELICE (3X13-1/2"X14"-K)	1	1				UR UR

FIG. 29 FUEL TANK — RESERVOIR A CARBURANT

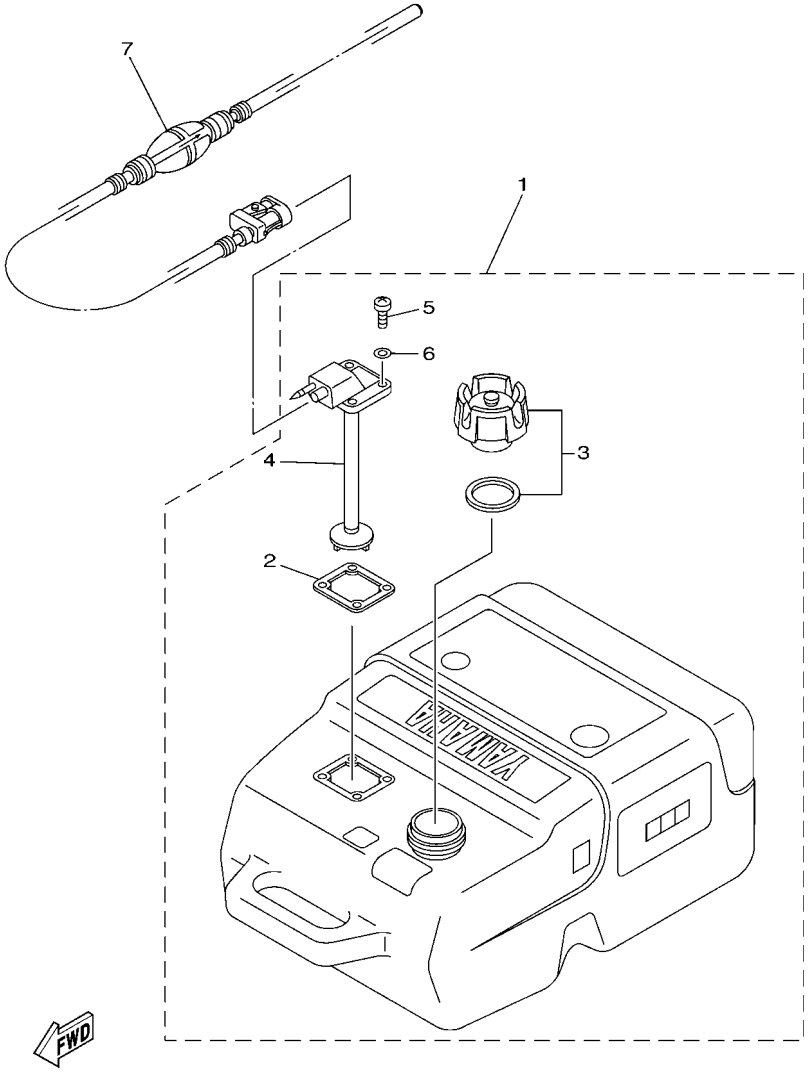

6D71300-D320

REF. NO.	PART NO. N° PIECES	DESCRIPTION DESCRIPTION	6D78	6D98				REMARKS REMARQUES
1	6YK–24201–03	FUEL TANK ASSY (25L) RESERVOIR A ESSENCE (ENS.) 25L	1	1				AP AP
2	6YL–24268–01	.GASKET, FUEL METER .JOINT, JAUGE A CARBURANT	1	1				
3	6YK–24610–01	.CAP ASSY .BOUCHON	1	1				
4	6YK–24260–01	.FUEL METER ASSY .INDICATEUR DE CARBURANT	1	1				
5	90157–05M16	.SCREW, PAN HEAD .VIS, TETE TRONCONIQUE	4	4				
6	6YL–24329–00	.SEAL .JOINT	4	4				
7	6YK–24306–44	FUEL PIPE COMP. 1 DURITE A ESSENCE 1	1	1				AP AP

FIG. 30 STEERING GUIDE — FIXATION DE DIRECTION

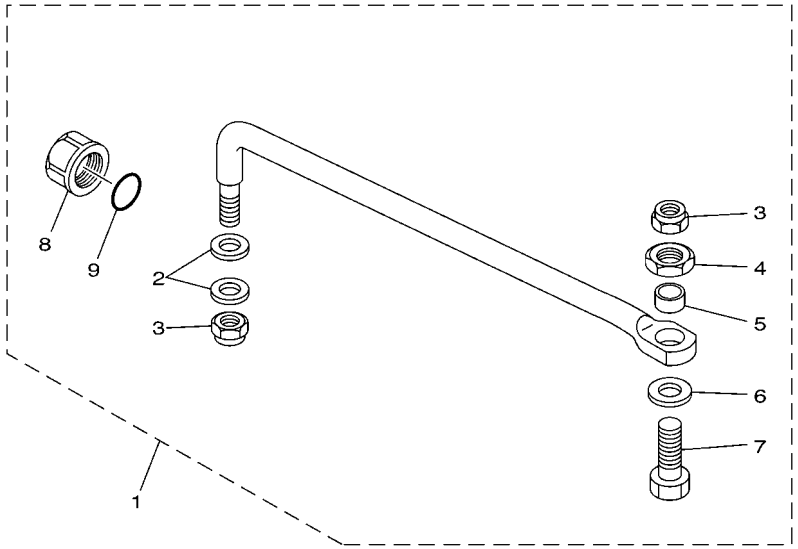

67F0010-9250

REF. NO.	PART NO. N° PIECES	DESCRIPTION DESCRIPTION	6D78	6D98				REMARKS REMARQUES
1	67F–61350–00	STEERING GUIDE ATTACHMENT KIT FIXATIONS DE DIRECTION	1	1				AP AP
2	90201–10M20	.WASHER, PLATE .RONDELLE, PLATE	2	2				
3	90185–09M01	.NUT, SELF-LOCKING .ECROU,AUTO-BLOQUANT	2	2				
4	90170–09M03	.NUT .ECROU	1	1				
5	90387–10M42	.COLLAR .COLLERETTE	1	1				
6	90201–10M63	.WASHER, PLATE .RONDELLE, PLATE	1	1				
7	90101–09M01	.BOLT .BOULON	1	1				
8	6E5–43145–01	.CAP, CLAMP BRACKET .CAPUCHON, PRESSE	1	1				
9	93210–16275	.O-RING .JOINT TORIQUE	1	1				

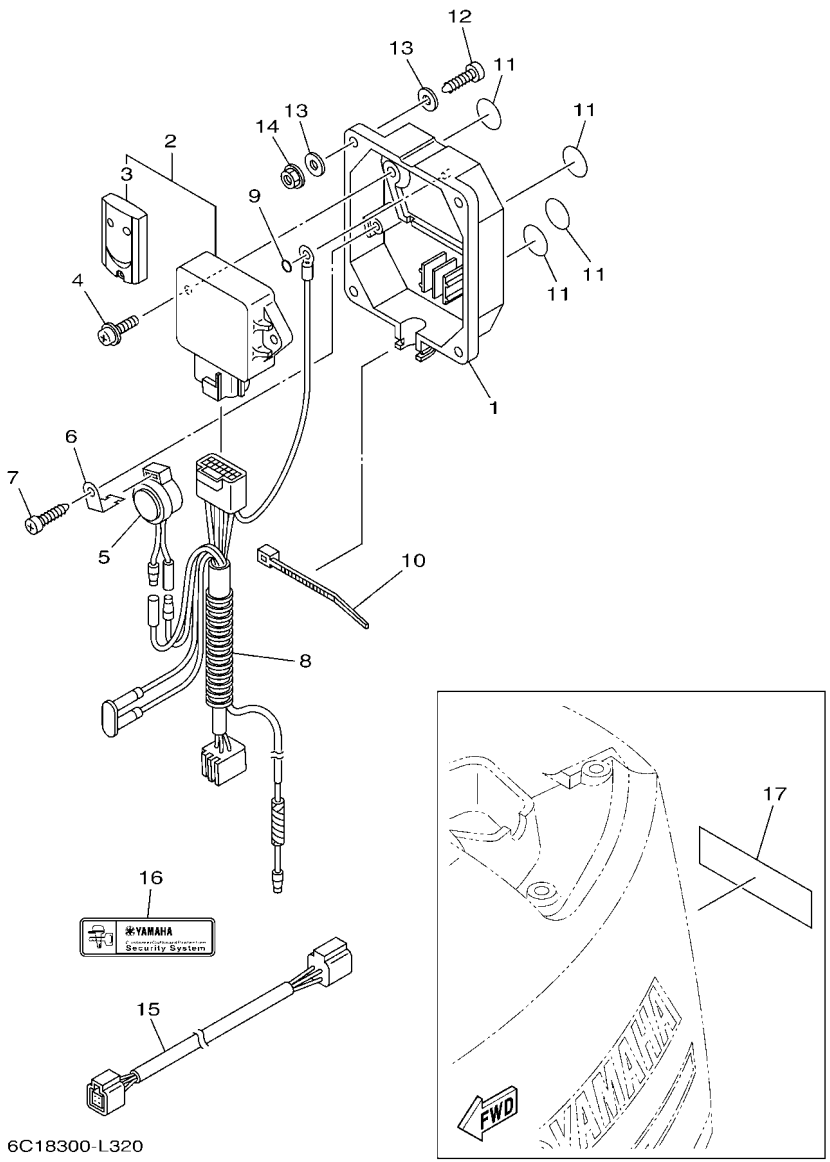

FIG. 31 OPTIONAL PARTS 2 — PIECES OPTIONNELLES 2

REF. NO.	PART NO. N° PIECES	DESCRIPTION DESCRIPTION	6D78	6D98				REMARKS REMARQUES
1	6Y8–86267–00	CASE COMPLETE 1 CARTER (ENS.) 1	1	1				
2	6Y8–86260–02	REMOTE CONTROL UNIT ASSY UNITE DE TELECOMMANDE (ENS.)	1	1				
3	6AA–86261–00	.TRANSMITTER COMP .TRANSMETTEUR	2	2				
4	97980–06216	SCREW, WITH WASHER VIS, AVEC RONDELLE	2	2				
5	6X4–83383–00	BUZZER RONFLEUR	1	1				
6	6X4–83386–00	STAY, BUZZER SUPPOR, RONFLEUR	1	1				
7	97780–60620	SCREW, TAPPING VIS, TETE BOMBEE	1	1				
8	6Y8–82509–10	WIRE, SUB LEAD FIL, SECONDAIRE	1	1				
9	93210–04279	O-RING JOINT TORIQUE	1	1				
10	90465–11M10	CLAMP BRIDE	1	1				
11	6Y8–8454G–00	PATCH 1 TAMPON 1	4	4				
12	90167–06M00	SCREW, TAPPING VIS, TETE FRAISEE	4	4				UR UR
	97880–06035	SCREW, PAN HEAD VIS, TETE TRONCONIQUE	4	4				UR UR
13	90201–06M30	WASHER, PLATE RONDELLE, PLATE	8	8				
14	95780–06300	NUT, FLANGE ECROU	4	4				
15	6Y8–82521–11	2FT PIGTAIL BUS FIL	1	1				
16	6Y8–48277–00	STICKER 1 ETIQUETTE 1	1	1				
17	6Y8–48277–00	STICKER 1 ETIQUETTE 1	1	1				

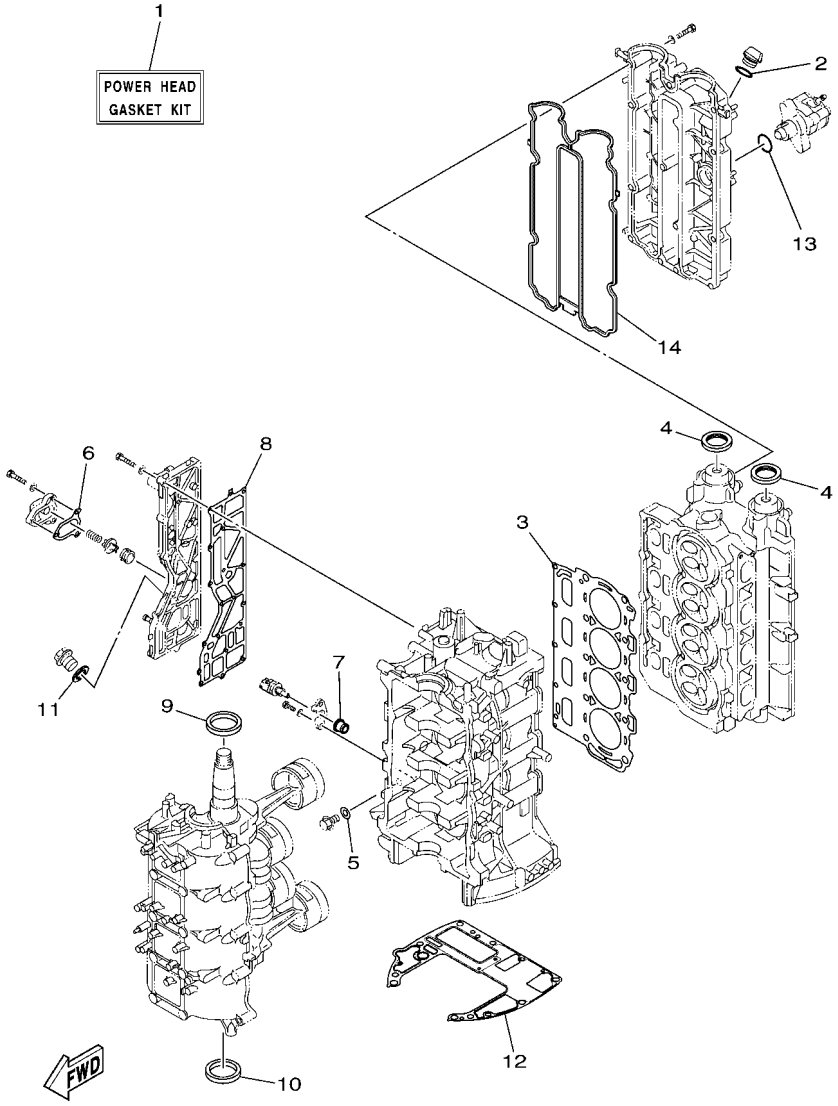

FIG. 32 REPAIR KIT 1 — KITS DE REPARATION 1

REF. NO.	PART NO. N° PIECES	DESCRIPTION DESCRIPTION	6D78	6D98				REMARKS REMARQUES
1	6D8–W0001–02	POWER HEAD GASKET KIT POCHETTE DE JINTS TETE MOTRICE	1	1				
2	93210–24M79	.O-RING .JOINT TORIQUE	1	1				
3	67F–11181–03	.GASKET, CYLINDER HEAD 1 .JOINT, DE CULASSE 1	1	1				
4	93102–38008	.OIL SEAL .JOINT SPY	2	2				
5	90430–14115	.GASKET .JOINT	1	1				
6	67F–12435–A0	.GASKET .JOINT	1	1				
7	68V–85753–00	.GASKET, SENDER UNIT .JOINT, DE PERCEPTION	1	1				
8	67F–41114–A2	.GASKET, EXHAUST OUTER COVER .JOINT, COUVERCLE D'ECHAPPEMENT	1	1				
9	93102–48008	.OIL SEAL .JOINT SPY	1	1				
10	93101–48001	.OIL SEAL .JOINT SPY	1	1				
11	90430–18130	.GASKET .JOINT	1	1				
12	68V–11351–00	.GASKET, CYLINDER .JOINT, D'EMBASE	1	1				
13	93210–30682	.O-RING .JOINT TORIQUE	1	1				
14	6D8–11356–01	.SEAL, CYLINDER 2 .JOINT, SPY CYLINDRE	1	1				

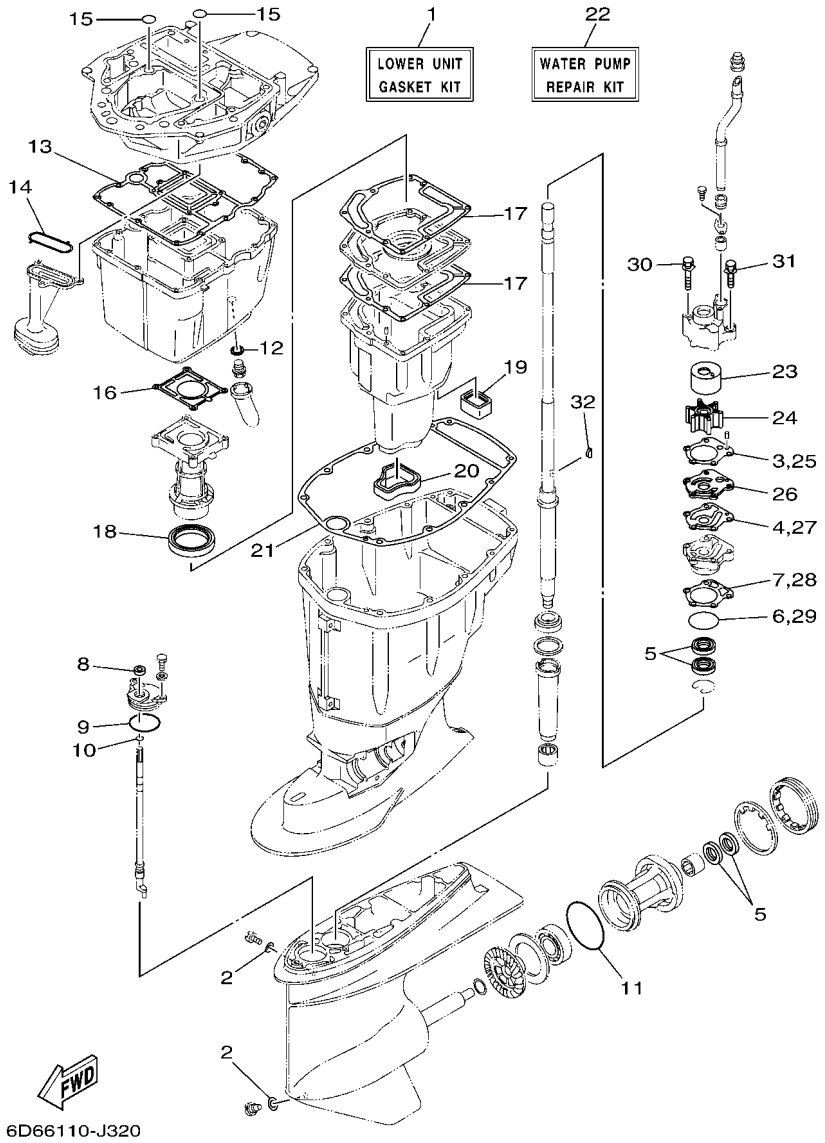

FIG. 33 REPAIR KIT 2 — KITS DE REPARATION 2

REF. NO.	PART NO. N° PIECES	DESCRIPTION DESCRIPTION	6D78	6D98				REMARKS REMARQUES
1	67F–W0001–21	LOWER UNIT GASKET KIT POCHETTE DE JOINTS EMBASE	1	1				
2	90430–08020	.GASKET .JOINT	2	2				
3	688–44315–A0	.GASKET, WATER PUMP .JOINT, POMPE A EAU	1	1				
4	688–44324–A0	.GASKET, CARTRIDGE .JOINT	1	1				
5	93101–25M03	.OIL SEAL .JOINT SPY	4	4				
6	93210–46044	.O-RING .JOINT TORIQUE	1	1				
7	688–44316–A0	.GASKET, WATER PUMP .JOINT, POMPE A EAU	1	1				
8	93106–09014	.OIL SEAL .JOINT SPY	1	1				
9	93210–49046	.O-RING .JOINT TORIQUE	1	1				
10	93210–07003	.O-RING .JOINT TORIQUE	1	1				
11	93210–86M39	.O-RING .JOINT TORIQUE	1	1				
12	90430–14M09	.GASKET .JOINT	1	1				
13	68V–15312–00	.GASKET, OIL PAN .JOINT DE VENTILATEUR D'HUILE	1	1				
14	67F–13415–00	.SEAL, OIL STRAINER .JOINT, FILTRE A HUILE	1	1				
15	93210–19MJ1	.O-RING .JOINT TORIQUE	2	2				
16	67F–41133–A1	.GASKET, EXHAUST MANIFOLD 1 .JOINT, PIPE D'ECHAPPEMENT	1	1				
17	67F–41134–A0	.GASKET, EXHAUST MANIFOLD .JOINT, PIPE D'ECHAPPEMENT	2	2				
18	67F–41138–00	.SEAL, EXT. 1 .JOINT DE GROUPE 1	1	1				
19	67F–45127–00	.SEAL .JOINT	1	1				
20	67F–45123–00	.GASKET, MUFFLER .JOINT, POT DE DETENTE	1	1				
21	67F–45113–00	.GASKET, UPPER CASING .JOINT, TUBE D'ARBRE	1	1				
22	67F–W0078–00	WATER PUMP REPAIR KIT KIT DE REPARATION DE LA POMPE	1	1				
23	67F–44322–00	.INSERT, CARTRIDGE .CUVETTE	1	1				
24	67F–44352–00	.IMPELLER .TURBINE	1	1				
25	688–44315–A0	.GASKET, WATER PUMP .JOINT, POMPE A EAU	1	1				
26	67F–44323–00	.OUTER PLATE, CARTRIDGE .PLAQUE EXTERIEURE	1	1				
27	688–44324–A0	.GASKET, CARTRIDGE .JOINT	1	1				

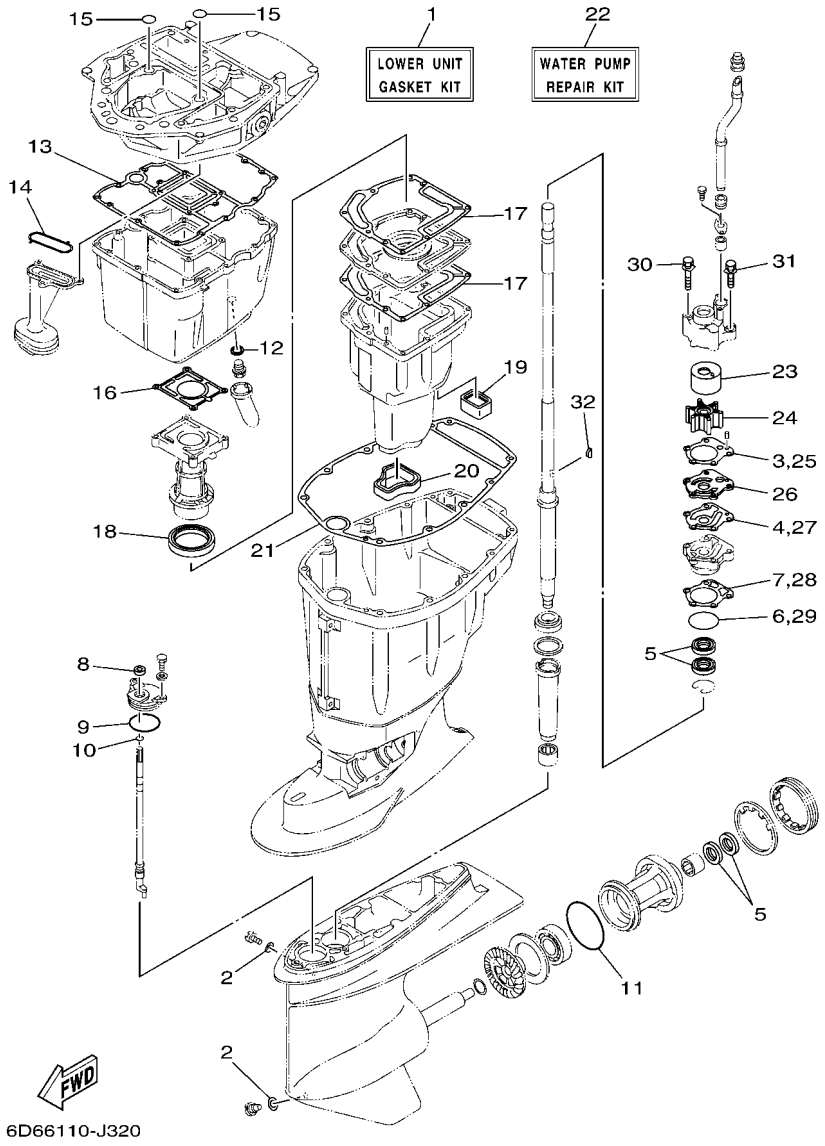

FIG. 33 REPAIR KIT 2 — KITS DE REPARATION 2

REF. NO.	PART NO. N° PIECES	DESCRIPTION DESCRIPTION	6D78	6D98				REMARKS REMARQUES
28	688–44316–A0	.GASKET, WATER PUMP .JOINT, POMPE A EAU	1	1				
29	93210–46044	.O-RING .JOINT TORIQUE	1	1				
30	90119–08M87	.BOLT, WITH WASHER .BOULON, AVEC RONDELLE	2	2				
31	90119–08M13	.BOLT, WITH WASHER .BOULON, AVEC RONDELLE	2	2				
32	90280–04M04	.KEY, WOODRUFF .CLAVETTE, DEMI-LUNE	1	1				

NUMERICAL INDEX
INDEX NUMERIQUE

PART NO. N° PIECES	REF. NO.
6D8–11110–13–9S	4 – 2
62Y–11119–00	2 – 8
67F–11133–10	4 – 3
67F–11168–00	4 – 19
67F–11181–03	4 – 14
	32 – 3
6D8–11191–01–9S	4 – 18
67F–11192–01	4 – 26
69J–11301–00	2 – 34
	4 – 8
6E5–11325–00	2 – 16
67F–11325–01	2 – 35
	4 – 9
67F–11328–00	2 – 36
	4 – 10
68V–11351–00	2 – 43
	32 – 12
6D8–11356–01	4 – 23
	32 – 14
676–11372–00	2 – 13
6D8–11411–00	3 – 1
6D8–11416–00	3 – 2
6D8–11416–10	3 – 2
6D8–11416–20	3 – 2
6D8–11417–00	3 – 3
6D8–11417–10	3 – 3
6D8–11417–20	3 – 3
6D8–11417–30	3 – 3
6D8–11418–00	3 – 4
6D8–11418–10	3 – 4
6D8–11418–20	3 – 4
6D8–11536–00	5 – 21
67F–11537–00	5 – 13
67F–11590–00	5 – 16
67F–11595–00	5 – 19
6D8–11603–01	3 – 7
6D8–11604–01	3 – 7
6D8–11656–00	3 – 8
6D8–11656–10	3 – 8
6D8–11656–20	3 – 8
6D8–11656–30	3 – 8
6D8–12111–00	5 – 1
6D8–12113–00	5 – 4
6D8–12116–00	5 – 3
26H–12117–00	5 – 5
4G0–12118–00	5 – 6
6D8–12121–00	5 – 2
6D8–12153–00	5 – 9

PART NO. N° PIECES	REF. NO.
6D8–12153–10	5 – 9
6D8–12153–20	5 – 9
6D8–12153–30	5 – 9
6D8–12153–40	5 – 9
6D8–12153–50	5 – 9
6D8–12153–60	5 – 9
6D8–12153–70	5 – 9
6D8–12153–80	5 – 9
6D8–12153–90	5 – 9
6D8–12153–A0	5 – 9
6D8–12153–B0	5 – 9
6D8–12153–C0	5 – 9
6D8–12153–D0	5 – 9
6D8–12153–E0	5 – 9
6D8–12153–F0	5 – 9
6D8–12153–G0	5 – 9
6D8–12153–H0	5 – 9
6D8–12153–J0	5 – 9
6D8–12153–K0	5 – 9
6D8–12153–L0	5 – 9
6D8–12153–M0	5 – 9
6D8–12153–N0	5 – 9
6D8–12153–P0	5 – 9
6D8–12153–R0	5 – 9
6D8–12153–S0	5 – 9
6D8–12153–T0	5 – 9
6D8–12153–U0	5 – 9
6D8–12153–V0	5 – 9
6D8–12171–00	5 – 10
6D9–12171–00	5 – 10
6D8–12181–00	5 – 11
6D9–12411–00	4 – 28
67F–12411–01	4 – 28
67F–12412–00	4 – 29
68V–12413–00–9S	4 – 30
6G5–12416–00	2 – 28
67F–12435–A0	2 – 32
	32 – 6
67F–1243A–00	2 – 40
67F–1246A–01–9S	2 – 31
67F–12535–01	18 – 33
68T–12572–00	18 – 32
6R3–12581–00	18 – 40
6R3–12582–00	18 – 41
6R3–12583–00	18 – 42
6D8–13105–01	6 – 10
67F–13119–01	26 – 17
63P–13131–00	11 – 18

PART NO. N° PIECES	REF. NO.
67F–13149–00	26 – 21
6D8–13161–00	6 – 13
6C5–1319C–00	6 – 11
67F–13300–10	26 – 12
67F–13314–02	26 – 13
67F–13329–00	26 – 15
67F–13338–00	26 – 23
67F–13339–00	26 – 22
67F–13411–00	26 – 8
67F–13415–00	26 – 11
	33 – 14
6D8–13428–01	8 – 3
67F–13434–20	1 – 19
68V–13437–62	12 – 22
5GH–13440–00	2 – 44
67F–13473–01	26 – 14
67F–13495–00	26 – 16
6D8–13542–01	10 – 2
6C5–13545–00	10 – 18
6D8–13546–01	10 – 1
6D8–13557–00	6 – 4
6C5–13577–00	10 – 10
6C5–13593–00	9 – 20
67F–13631–03	26 – 20
6D8–13641–00	6 – 2
6D8–13645–00	6 – 3
6C5–13716–00	9 – 22
6C5–13739–00	10 – 21
6D8–13750–00	6 – 5
6D8–13761–00	6 – 15
67F–13769–00	26 – 18
6C5–13781–00	9 – 21
6D8–13782–00	7 – 13
6C5–13906–01	9 – 9
6C5–13907–00	9 – 17
6C5–1910B–10	9 – 16
67F–13914–00	26 – 19
6C5–13915–00	9 – 19
6D8–13974–00	10 – 15
6C5–1410B–00	6 – 16
6C5–14127–10	9 – 18
6D8–14148–00	10 – 13
6BG–14149–00	10 – 8
6D8–14180–21	9 – 1
6D8–14182–10	9 – 2
6C5–14191–00	9 – 13
6D8–14200–00	6 – 1
6C5–14225–00	9 – 25

PART NO. N° PIECES	REF. NO.
6C5–14251–00	10 – 12
6D8–14291–00	7 – 5
6D8–14292–00	7 – 9
6C5–14386–00	9 – 5
6C5–14397–00	9 – 14
6D6–14440–00	7 – 14
6D9–14440–01	7 – 14
6C5–14446–00	6 – 14
6C5–14496–00	6 – 9
6C5–14546–10	9 – 4
6C5–14567–00	9 – 15
67F–14711–00–CA	25 – 9
6D8–14960–10	9 – 12
6C5–14984–00	9 – 23
6C5–14985–00	9 – 3
6D8–15100–01	2 – 2
67F–15142–00	2 – 11
67F–15311–03–CA	26 – 1
68V–15312–00	26 – 7
	33 – 13
63P–15316–00	26 – 2
6D8–15362–00	26 – 28
6G8–15363–00	4 – 33
6D8–15373–00	7 – 19
6C5–21337–10	9 – 24
6D8–2134X–00	8 – 25
6C5–21841–00	10 – 11
1UF–22434–00	23 – 41
67F–22435–00	23 – 12
67F–22471–01	23 – 37
6D8–2413X–01	8 – 19
68V–24149–00	11 – 25
69J–24170–00	8 – 8
6D8–2417H–01	8 – 11
69J–2419A–01	8 – 22
6YK–24201–03	29 – 1
6C5–24251–00	10 – 19
6YK–24260–01	29 – 4
6YL–24268–01	29 – 2
6YK–24306–44	29 – 7
6D8–24311–00	11 – 14
67F–24312–00	18 – 43
6D8–24314–01	8 – 6
6D8–24315–00	8 – 9
61A–24316–00	2 – 26
6D8–24316–00	8 – 15
6D8–24317–01	8 – 20
6C5–24321–00	10 – 3

PART NO. N° PIECES	REF. NO.
6C5–24322–00	10 – 4
6C5–24323–00	10 – 5
6D8–24324–01	10 – 6
6D8–24325–10	10 – 7
6YL–24329–00	29 – 6
68V–24374–00	11 – 21
688–24378–00	2 – 25
6C5–24379–00	10 – 17
6C5–24387–00	10 – 14
6D8–24410–10	11 – 15
68V–24411–00	11 – 20
68V–24412–00	11 – 16
68V–24413–10	11 – 22
6D8–24414–00	11 – 23
6C5–2441R–10	9 – 6
6C5–2441T–10	9 – 7
68V–24423–00	11 – 19
68V–24444–00	11 – 24
6C5–24444–00	10 – 9
6C5–24453–00	9 – 8
68V–24454–00	11 – 17
6D8–24469–00	11 – 7
68V–24471–10	11 – 32
69J–24502–00	8 – 14
6D8–24519–00	11 – 8
6D8–2451B–00	10 – 20
6D8–24560–00	11 – 3
6D8–24562–00	11 – 6
6D8–24563–00	11 – 4
6D8–24564–00	11 – 5
6D8–24566–00	11 – 10
6C5–24592–00	9 – 10
6YK–24610–01	29 – 3
67F–28100–01	11 – 29
67F–2812A–00	14 – 29
6D7–28199–78–D0	11 – 30
6D7–28199–78–E0	11 – 30
6D7–28199–78–F0	11 – 30
6D7–28199–78–G0	11 – 30
6D7–28199–78–H0	11 – 30
6D7–28199–78–S0	11 – 30
6D7–28199–88–K0	11 – 31
6D7–28199–88–L0	11 – 31
6D7–28199–88–M0	11 – 31
6D7–28199–88–N0	11 – 31
6D7–28199–88–P0	11 – 31
6D7–28199–88–R0	11 – 31
6D8–41113–40–9S	2 – 12

PART NO. N° PIECES	REF. NO.
67F–41114–A2	2 – 18
	32 – 8
67F–41131–01–CA	25 – 5
67F–41133–A1	25 – 6
	33 – 16
67F–41134–A0	25 – 15
	33 – 17
6D8–41137–00–CA	25 – 1
67F–41138–00	25 – 17
	33 – 18
682–41237–00	19 – 43
6D8–41237–00	19 – 42
6D8–42154–00	19 – 25
6D8–42157–00	19 – 34
68V–42171–00	19 – 35
67F–42510–11–8D	21 – 8
6D8–42541–00	2 – 20
6D7–42610–20	1 – 1
6D9–42610–20	1 – 1
67F–42613–00–8D	1 – 10
67F–42615–00	1 – 13
61N–42628–00	1 – 12
67F–42628–00	1 – 18
67F–42647–00	1 – 2
67F–42649–00	1 – 8
68V–42652–00	1 – 5
67F–42662–00	1 – 9
60C–42677–10	1 – 14
6D7–42677–10	1 – 14
6D7–42678–20	1 – 15
6D9–42678–20	1 – 15
6D6–42681–00	1 – 17
6D8–42710–00–8D	18 – 1
648–42715–00	19 – 22
61A–42716–00	18 – 45
67F–42717–00	18 – 27
6D8–42717–00	18 – 21
67F–42724–00	25 – 37
68V–42725–00	18 – 19
6H1–42726–21	18 – 24
6G1–42727–00	25 – 4
67F–42738–00–8D	18 – 17
67F–42741–01–8D	18 – 46
6H4–42748–00	18 – 26
68F–42753–00	18 – 52
6D8–42756–02	18 – 20
6AH–42794–40	18 – 54
6AH–42794–50	18 – 55

NUMERICAL INDEX
INDEX NUMERIQUE

PART NO. N° PIECES	REF. NO.
67F–42815–00–8D	18 – 5
67F–42816–00–8D	18 – 6
68V–42818–01	18 – 9
67F–42828–00–8D	18 – 7
67F–43111–00–8D	20 – 1
67F–43112–00–8D	20 – 4
6D8–43126–00	20 – 30
64E–43131–01	20 – 12
64E–43139–10	21 – 4
64D–43144–00	18 – 14
66T–43144–00	20 – 24
6E5–43145–01	30 – 8
6G5–43148–00	20 – 21
6D8–43181–00	20 – 18
6D8–43185–00	20 – 19
6D8–43311–00–8D	20 – 7
6D8–43800–01–8D	23 – 1
6D8–43804–01	24 – 3
6EK–43804–11	24 – 17
6D8–43805–01	24 – 2
6D8–43805–02	24 – 16
62X–43807–00	24 – 7
6EK–4380F–00	24 – 20
6H1–4380F–11	24 – 8
6C5–4380G–00	23 – 47
6D8–4380K–00	23 – 43
67F–4380R–00	23 – 3
67F–43810–01	23 – 2
67F–43811–00	23 – 6
6H1–43812–00	23 – 13
67F–43816–00	23 – 29
6C5–43816–00	23 – 46
6C6–43817–00	23 – 44
67F–43818–00	20 – 34
67F–4381B–00	23 – 38
6D8–4381G–00	23 – 84
67F–4381J–00	23 – 36
6C5–4381K–00	23 – 62
67F–43821–00	23 – 14
6H1–43829–00	23 – 90
6C6–4382E–00	23 – 53
6C5–4382K–00	23 – 64
6C5–4382L–00	23 – 65
6D8–43830–00	23 – 49
6D8–43831–00	23 – 91
6C5–43841–00	23 – 82
6C6–43841–00	23 – 50
6D8–43845–00	23 – 88

PART NO. N° PIECES	REF. NO.
62X–4384H–00	23 – 40
6C5–43851–00	23 – 58
65W–43853–00	23 – 22
6C6–43853–00	23 – 55
6C5–43854–00	23 – 67
6D8–43855–00	23 – 60
6D8–43856–00	23 – 63
67F–43857–00	23 – 35
67F–4385A–01	23 – 7
67F–43861–00	23 – 15
62X–43862–00	23 – 18
67F–43862–00	23 – 30
6EK–43862–01	24 – 27
67F–43863–00	23 – 26
6D8–43863–00	23 – 5
	23 – 17
	23 – 86
62X–43865–00	23 – 32
65W–4386A–00	23 – 20
6T4–4386A–00	23 – 34
6C6–4386E–00	23 – 78
688–4386F–00	23 – 21
6C6–4386G–00	23 – 77
62X–4386K–00	24 – 9
	24 – 21
62X–43871–00	23 – 9
67F–43871–00	23 – 31
6C5–43872–00	23 – 83
6H1–43872–10	23 – 4
	23 – 16
62X–43875–00	23 – 42
67F–43875–00	23 – 24
6H1–43875–00	23 – 87
6C6–43878–00	23 – 71
63P–43879–10	24 – 22
62Y–4387G–00	23 – 72
6C6–4387G–00	23 – 56
6D8–43880–01	23 – 95
	24 – 1
6D8–43880–08	24 – 15
6D8–43881–09	24 – 24
6LH–43882–00	24 – 25
6H1–43883–00	23 – 51
65W–43888–00	23 – 93
67F–4388A–00	23 – 33
6C6–4388E–00	23 – 75
6C6–4388F–00	23 – 76
6H1–43891–11	24 – 4

PART NO. N° PIECES	REF. NO.
6EK–43892–00	24 – 18
6H1–43892–11	24 – 5
67F–43893–00	23 – 23
6C5–43893–00	23 – 59
6C6–43893–00	23 – 61
6C6–43894–00	23 – 52
6C5–43895–00	23 – 66
62X–43899–00	23 – 39
67F–43899–00	23 – 28
69J–4389J–00	23 – 45
	23 – 57
6D8–44117–00–94	19 – 5
67F–44118–00–94	19 – 18
67F–44120–10	19 – 14
67F–44120–30	19 – 14
67F–44121–00	19 – 11
68V–44122–01	19 – 8
67F–44135–00	19 – 30
67F–44150–01	27 – 40
67F–44311–01	27 – 17
6D8–44314–00	28 – 3
688–44315–A0	27 – 27
	33 – 3
	33 – 25
688–44316–A0	27 – 34
	33 – 7
	33 – 28
67F–44322–00	27 – 24
	33 – 23
67F–44323–00	27 – 28
	33 – 26
688–44324–A0	27 – 29
	33 – 4
	33 – 27
6D8–44341–01–CA	27 – 30
67F–44352–00	27 – 25
	33 – 24
6D8–44361–00	28 – 2
6D8–44361–10	28 – 2
67F–44365–00	28 – 4
663–44366–00	27 – 21
663–44367–00	28 – 1
69J–44391–00	8 – 18
6BL–44391–00	18 – 25
67F–44514–01	21 – 16
67F–44526–00	21 – 19
6H1–44526–00	20 – 41
67F–44533–00	21 – 22

PART NO. N° PIECES	REF. NO.
67F–44551–00–8D	21 – 14
67F–44553–00–8D	21 – 33
67F–44555–00	21 – 24
67F–44575–00	21 – 32
67F–45111–11–8D	25 – 20
67F–45113–00	25 – 28
	33 – 21
67F–45123–00	25 – 19
	33 – 20
67F–45127–00	25 – 18
	33 – 19
67F–45151–00	25 – 25
67F–45155–00	25 – 27
67F–45180–00–4D	22 – 1
67F–45181–00–CA	25 – 16
688–45211–01–8D	25 – 35
6H1–45214–00	28 – 10
6H1–45215–00	28 – 11
6H1–45251–03	20 – 39
6D9–45300–12–8D	27 – 1
6D9–45300–13–8D	27 – 1
6D9–45300–32–8D	27 – 1
6D9–45300–33–8D	27 – 1
67F–45301–00–8D	27 – 2
67F–45318–00	25 – 23
688–45321–00	27 – 35
67F–45331–00–CA	27 – 61
688–45341–10	27 – 4
67F–45371–00	28 – 14
688–45375–00	28 – 18
663–45376–00	28 – 19
6E5–45378–00	27 – 6
688–45383–02	27 – 67
688–45384–02	27 – 68
67F–45501–10	27 – 10
67F–45501–30	27 – 10
688–45536–01	27 – 14
6D9–45551–00	27 – 11
6D9–45551–10	27 – 11
67F–45560–00	27 – 53
6D9–45560–10	27 – 53
688–45567–01	27 – 56
688–45567–10	27 – 56
688–45567–20	27 – 56
688–45567–30	27 – 56
688–45567–40	27 – 56
688–45567–50	27 – 56
688–45567–60	27 – 56

PART NO. N° PIECES	REF. NO.
6D9–45571–00	27 – 57
6D9–45571–10	27 – 57
67F–45576–00	27 – 65
688–45587–01	27 – 16
688–45587–10	27 – 16
688–45587–20	27 – 16
688–45587–30	27 – 16
688–45587–40	27 – 16
688–45587–50	27 – 16
688–45587–60	27 – 16
67F–45611–01	27 – 60
6D8–45631–00	27 – 50
688–45633–00	27 – 52
67F–45634–00	27 – 44
6H1–45635–00	27 – 46
6H1–45668–00	27 – 45
688–45930–02	28 – 25
688–45932–60	28 – 25
6E5–45941–00	28 – 25
6E5–45943–00	28 – 25
6E5–45945–01	28 – 25
6E5–45947–00	28 – 25
6E5–45949–00	28 – 25
6E5–45952–00	28 – 25
6E5–45954–00	28 – 25
6E5–45956–00	28 – 25
6E5–45958–00	28 – 25
688–45970–03	28 – 25
688–45972–02	28 – 25
688–45974–02	28 – 25
688–45976–01	28 – 25
688–45978–60	28 – 25
688–45987–01	28 – 20
67F–45997–00	28 – 21
67F–46241–00	5 – 15
6Y8–48277–00	31 – 16
	31 – 17
663–48344–00	19 – 3
	19 – 23
67F–48511–00	21 – 35
67F–48538–00	19 – 1
67F–61350–00	30 – 1
6C5–81145–00	6 – 7
6C5–81146–00	6 – 12
445–81328–20	12 – 7
6D8–8132G–00	16 – 1
6D8–81332–00	12 – 16
6D8–81337–00	12 – 18

PART NO. N° PIECES	REF. NO.
63D–81345–20	12 – 5
6D8–81410–00	12 – 4
6D8–81450–00	12 – 1
6D8–81460–00	12 – 2
6D8–81518–00	14 – 23
6D8–81528–02	14 – 24
68V–81673–00	12 – 8
68V–81800–01	17 – 1
67F–81801–00	17 – 5
67F–81807–00	17 – 10
67F–81808–00	17 – 8
67F–81809–00	17 – 19
67F–81810–00	17 – 3
67F–81813–00	17 – 6
68F–81820–00	17 – 7
67F–81821–00	17 – 13
6K7–81826–11	17 – 24
67F–81828–00	17 – 25
6C5–8182L–00	6 – 8
67F–81830–00	17 – 17
67F–81832–00	17 – 11
67F–81836–00	17 – 12
67F–81839–00	17 – 21
67F–8183R–00	17 – 16
60V–8183T–00	17 – 18
68F–81840–00	17 – 4
67F–81841–00	17 – 14
67F–81842–00	17 – 20
67F–81846–00	17 – 26
67F–81850–00	17 – 2
67F–81857–00	17 – 9
67F–81869–00	17 – 23
67F–81891–00	17 – 15
6D8–81919–00	14 – 36
6D8–81919–10	14 – 37
60V–81925–00	17 – 28
68V–81941–01	17 – 22
68V–81942–03	14 – 28
68V–81948–02	14 – 17
61A–81949–00	14 – 16
68V–8194A–00	14 – 7
60E–81950–00	14 – 5
63P–81950–00	14 – 12
68V–81953–00	14 – 8
6D8–81960–10	13 – 24
6AH–81994–40	12 – 25
6AH–81994–50	12 – 26
6AH–81995–40	12 – 23

NUMERICAL INDEX
INDEX NUMERIQUE

PART NO. N° PIECES	REF. NO.
6AH–81995–50	12 – 24
6AG–81996–00	12 – 27
68V–82105–00	14 – 1
6G5–82119–00	14 – 11
682–82119–01	14 – 30
67F–82127–00	20 – 11
6D8–82148–00	20 – 27
6E5–82148–00	20 – 5
67F–82151–00	15 – 2
67F–82151–10	15 – 3
67F–8215B–10	15 – 4
67F–8215B–20	15 – 5
6H1–82181–10	24 – 6
63P–82181–20	24 – 19
63P–82310–01	13 – 5
68V–82317–00	13 – 2
6A0–82317–00	14 – 18
	14 – 31
663–82317–01	12 – 21
67F–82341–00	13 – 6
67F–82342–00	13 – 7
67F–82343–00	13 – 10
67F–82344–00	13 – 11
67F–82361–00	13 – 8
	13 – 12
	13 – 14
67F–82362–00	13 – 9
	13 – 13
6D8–82388–01	13 – 18
6D8–82389–01	15 – 18
6D8–82398–01	15 – 21
68V–82504–00	16 – 12
6Y8–82509–10	31 – 8
6Y8–82521–11	31 – 15
6D8–8252H–01	16 – 18
6D8–82544–00	7 – 25
63D–82563–10	16 – 13
6D8–82581–01	15 – 15
68F–82582–00	17 – 29
6P2–82582–00	15 – 6
6P2–82582–10	15 – 7
6E5–82587–00	16 – 14
6E5–82588–00	18 – 28
61A–82588–01	19 – 46
6D8–82588–01	15 – 12
6D8–82590–30	15 – 1
68V–82594–00	14 – 21
60V–8259F–00	19 – 45

PART NO. N° PIECES	REF. NO.
6X4–83383–00	31 – 5
6X4–83386–00	31 – 6
6E5–83558–00	28 – 17
6E5–83558–10	27 – 8
67F–83614–00	16 – 15
6D8–83626–00	4 – 35
67F–83627–01	17 – 34
67H–83672–01	21 – 1
68F–83688–00	6 – 17
6Y8–8454G–00	31 – 11
689–85547–00	11 – 1
6D8–85547–00	12 – 20
6D8–85580–00	12 – 3
68V–85753–00	16 – 6
	32 – 7
67F–85757–00	16 – 5
67F–85790–00	16 – 4
6C5–85885–00	6 – 6
6D7–8591A–13	13 – 1
6D9–8591A–13	13 – 1
6Y8–86260–02	31 – 2
6AA–86261–00	31 – 3
6Y8–86267–00	31 – 1
6C5–87226–00	9 – 11
K1C–A3275–00	3 – 6
K0A–A3721–00	5 – 7
K0A–A3722–00	5 – 8
6D8–W0001–02	32 – 1
67F–W0001–21	33 – 1
6D6–W0070–00	1 – 16
67F–W0078–00	33 – 22
6D8–W009A–03–9S	4 – 1
6D9–W009A–03–9S	4 – 1
6D8–W009B–05–9S	2 – 1
6D8–W1164–21	3 – 5
6D8–W1164–31	3 – 5
90101–09M01	30 – 7
90101–12M03	20 – 45
90105–06M07	2 – 37
	4 – 11
90105–10M67	28 – 15
90109–06M80	18 – 49
90109–06M81	18 – 29
90109–06M82	18 – 8
90109–06M86	16 – 16
	18 – 15
	18 – 23
	18 – 31

PART NO. N° PIECES	REF. NO.
90109–06M86	18 – 39
	19 – 2
90109–06M96	18 – 18
90109–12007	21 – 18
90109–12012	21 – 26
90110–12M00	22 – 4
90116–10175	21 – 36
90116–10M05	25 – 31
90119–06087	7 – 8
	7 – 12
90119–06113	7 – 17
90119–06M08	8 – 1
90119–06M59	8 – 28
	13 – 4
	14 – 20
90119–06M81	20 – 40
90119–06M83	11 – 28
90119–06MA2	2 – 33
90119–06MA4	2 – 19
90119–07234	4 – 7
90119–07235	4 – 5
90119–08069	7 – 1
90119–08091	21 – 17
90119–08M03	7 – 3
90119–08M13	27 – 20
	33 – 31
90119–08M22	18 – 2
90119–08M58	25 – 36
90119–08M66	2 – 5
90119–08M84	28 – 9
90119–08M86	28 – 9
90119–08M87	27 – 19
	33 – 30
90119–08M91	4 – 17
90119–10049	21 – 34
90119–10050	5 – 14
90119–10M08	25 – 21
90119–10M72	5 – 20
90119–10M88	2 – 4
90151–05M00	28 – 12
90155–10005	4 – 16
90157–05M16	29 – 5
90159–05059	21 – 5
90159–06M28	18 – 48
90159–06M29	4 – 27
90160–04006	27 – 23
90167–06002	18 – 38
90167–06M00	31 – 12

PART NO. N° PIECES	REF. NO.
90170–09M03	30 – 4
90170–16M01	27 – 12
90170–40008	5 – 22
90171–16011	28 – 23
90179–06M24	1 – 11
90179–08003	17 – 27
90179–24002	12 – 15
90183–02M03	27 – 49
90185–05002	28 – 13
90185–09M01	30 – 3
90185–10051	21 – 37
90185–22M11	20 – 15
90201–03313	27 – 48
90201–06068	18 – 12
90201–06M30	31 – 13
90201–06M31	19 – 37
90201–06M62	19 – 27
90201–09M02	19 – 16
90201–10M02	19 – 28
	19 – 38
90201–10M20	30 – 2
90201–10M63	30 – 6
90201–12426	20 – 47
90201–12M01	22 – 2
90201–12M16	21 – 20
	21 – 27
	22 – 5
90201–13M01	20 – 46
	21 – 21
90201–13M03	21 – 25
90201–13M19	21 – 30
90201–24014	12 – 14
90201–24M02	21 – 28
90201–25M05	27 – 59
90201–26M59	20 – 14
90201–30M00	21 – 9
90202–07M07	19 – 9
90202–25M04	21 – 29
90206–10M04	19 – 29
	19 – 39
90206–14086	24 – 26
90206–15M18	18 – 11
90249–06M19	20 – 23
90250–07M02	27 – 51
90280–04008	5 – 23
90280–04M04	27 – 26
	33 – 32
90280–05015	12 – 13

PART NO. N° PIECES	REF. NO.
90282–04010	27 – 66
90340–08002	27 – 3
90340–14M06	2 – 6
	26 – 3
90340–18M09	2 – 14
90344–51019	4 – 4
90386–06M12	19 – 12
90386–08001	7 – 15
90386–10M16	20 – 20
90386–15M73	18 – 10
90386–18001	20 – 32
90386–18M35	20 – 31
90386–18MA0	20 – 36
90386–25M31	20 – 13
90386–30M60	21 – 13
90386–30M77	21 – 12
90386–30M78	21 – 10
90386–90M90	19 – 15
90387–06013	19 – 36
90387–06119	13 – 3
	14 – 19
90387–06263	26 – 10
90387–06M05	14 – 33
90387–06M21	19 – 26
90387–06M43	18 – 51
90387–06M60	8 – 27
90387–06M69	9 – 26
90387–07013	7 – 16
90387–08033	7 – 2
90387–08M37	18 – 4
90387–10M42	30 – 5
90387–18M01	20 – 35
90387–22M01	20 – 37
90389–25M00	28 – 22
90401–20007	2 – 45
90430–06M03	2 – 38
	4 – 12
90430–08020	27 – 5
	33 – 2
90430–14115	2 – 7
	32 – 5
90430–14M09	26 – 4
	33 – 12
90430–18130	2 – 15
	32 – 11
90445–07M31	27 – 7
90445–07M38	27 – 7
90445–07ME0	28 – 16

PART NO. N° PIECES	REF. NO.
90445–13M37	11 – 2
90445–15M03	5 – 18
90462–06018	18 – 34
90462–10027	19 – 7
90464–08004	13 – 19
90464–10010	2 – 23
90464–11009	2 – 24
90464–12M58	14 – 22
90464–15007	8 – 2
90464–16001	2 – 46
90464–18004	2 – 22
90464–18246	6 – 18
	18 – 22
90464–20258	18 – 53
90464–30003	13 – 25
	16 – 17
90464–76001	7 – 18
	15 – 8
90465–06M86	16 – 9
90465–08M23	13 – 21
	18 – 30
90465–08M63	20 – 9
	21 – 3
90465–10M77	20 – 2
90465–11M10	2 – 21
	2 – 27
	8 – 7
	8 – 10
	8 – 16
	8 – 21
	10 – 16
	11 – 9
	11 – 26
	18 – 44
	21 – 6
	21 – 7
	27 – 9
	31 – 10
90465–11M59	2 – 41
	7 – 20
90465–12M03	7 – 22
90465–12M53	14 – 32
90465–13M11	15 – 28
90465–13M18	14 – 35
	15 – 24
90467–09M03	8 – 17
90467–20M15	2 – 42
	7 – 21

NUMERICAL INDEX
INDEX NUMERIQUE

PART NO. N° PIECES	REF. NO.
90468–18008	19 – 4
	19 – 10
	19 – 13
	19 – 24
90480–09M12	9 – 27
90480–10M23	8 – 26
90480–12072	4 – 22
90480–12314	12 – 19
90480–13M24	14 – 25
	18 – 50
90480–14329	13 – 20
90480–19M06	27 – 22
90480–20M05	2 – 30
90480–22M15	18 – 3
90501–12082	19 – 21
90501–12M48	27 – 47
90501–16M11	2 – 29
90506–14M24	20 – 26
90506–16M34	18 – 16
90506–16M39	5 – 17
91318–03005	23 – 80
91318–03016	23 – 74
91318–04030	23 – 73
91318–05025	23 – 81
91318–05030	23 – 70
91318–05045	23 – 48
91318–05050	23 – 94
91490–20015	19 – 17
91490–40025	28 – 24
91609–50028	23 – 79
91690–30020	20 – 22
91690–50014	7 – 4
91809–08006	4 – 6
92903–06100	14 – 3
92903–06600	14 – 4
	14 – 15
92903–08100	17 – 33
92903–08600	17 – 31
92907–04600	4 – 21
92990–06100	1 – 3
92990–10100	25 – 33
92995–06100	12 – 11
	13 – 16
	13 – 27
	13 – 30
	15 – 10
	15 – 26
	18 – 36

PART NO. N° PIECES	REF. NO.
92995–06100	19 – 32
	20 – 43
92995–06200	18 – 37
92995–06600	1 – 7
	2 – 10
	4 – 25
	4 – 32
	7 – 7
	7 – 11
	7 – 24
	8 – 5
	8 – 13
	8 – 24
	11 – 13
	12 – 12
	13 – 17
	13 – 23
	13 – 28
	13 – 31
	14 – 27
	15 – 11
	15 – 14
	15 – 17
	15 – 20
	15 – 23
	15 – 27
	16 – 3
	16 – 8
	16 – 11
	16 – 20
	19 – 33
	19 – 41
	20 – 29
	20 – 44
	25 – 8
	25 – 11
	25 – 13
	26 – 25
	27 – 38
92995–08100	20 – 17
92995–10100	28 – 7
92995–10600	25 – 32
	28 – 8
92A08–03012	23 – 85
92A08–03110	23 – 68
93101–25M03	27 – 32
	27 – 63
	33 – 5

PART NO. N° PIECES	REF. NO.
93101–48001	3 – 10
	32 – 10
93102–08414	24 – 13
93102–38008	5 – 24
	32 – 4
93102–48008	3 – 9
	32 – 9
93106–09014	27 – 36
	33 – 8
93210–04279	31 – 9
93210–07003	27 – 41
	33 – 10
93210–09165	23 – 89
93210–16275	30 – 9
93210–19MJ1	26 – 27
	33 – 15
93210–24M79	4 – 34
	32 – 2
93210–29375	23 – 8
93210–29M94	21 – 11
93210–30682	11 – 27
	32 – 13
93210–46044	27 – 33
	33 – 6
	33 – 29
93210–49046	27 – 39
	33 – 9
93210–554A9	24 – 14
93210–64488	23 – 92
93210–86M39	27 – 64
	33 – 11
93306–207U0	27 – 58
93315–52563	27 – 13
93317–322V0	27 – 54
93317–325U0	27 – 62
93332–000U3	27 – 15
93332–000UD	27 – 55
93410–18M05	20 – 33
	20 – 38
93410–28M06	21 – 15
93420–36M01	25 – 24
93450–44166	27 – 31
93501–04M02	19 – 20
93501–08001	23 – 10
	23 – 19
	23 – 27
93503–16003	23 – 25
	27 – 43

PART NO. N° PIECES	REF. NO.
93505–32038	23 – 54
93602–07244	23 – 11
93604–10M03	27 – 18
93604–12M07	26 – 26
93605–10108	5 – 12
93606–12019	2 – 3
	25 – 30
	26 – 6
	28 – 5
93606–19M23	25 – 14
93608–16M16	25 – 3
	25 – 22
93700–06M03	20 – 8
94702–00391	4 – 36
95302–03600	23 – 69
95333–08600	17 – 32
95380–05600	19 – 44
95380–06600	1 – 4
	18 – 47
95380–08600	11 – 11
95380–10600	25 – 34
95380–12600	20 – 48
95380–12700	22 – 3
95380–12800	21 – 31
95780–06300	31 – 14
95780–12300	21 – 23
	22 – 6
95812–06025	26 – 9
95895–06025	7 – 26
95895–08014	25 – 29
97013–06020	14 – 2
	14 – 14
97013–08045	17 – 30
97075–06030	25 – 10
97075–06050	25 – 12
97075–06070	25 – 7
97075–10040	28 – 6
97095–06008	18 – 35
97095–06010	8 – 12
	20 – 3
	20 – 10
	20 – 25
	20 – 28
97095–06012	1 – 6
	7 – 23
	8 – 4
	15 – 13
	15 – 19

PART NO. N° PIECES	REF. NO.
97095–06012	15 – 22
	16 – 10
	16 – 19
97095–06014	13 – 22
	14 – 26
	15 – 16
97095–06016	8 – 23
	11 – 12
	13 – 29
	15 – 9
	15 – 25
	16 – 2
	16 – 7
	18 – 13
	20 – 42
	27 – 37
97095–06020	2 – 9
	7 – 10
97095–06025	4 – 31
	13 – 15
	13 – 26
	19 – 40
97095–06030	4 – 24
	7 – 6
	12 – 10
97095–06035	19 – 31
97095–06045	26 – 24
97095–08020	20 – 16
97575–06525	19 – 19
	26 – 5
97575–08540	2 – 39
	4 – 13
	25 – 2
97595–06550	19 – 6
97595–06610	14 – 10
	14 – 13
97602–04216	24 – 11
97602–04316	24 – 23
97607–04110	12 – 6
97780–60620	14 – 9
	31 – 7
97780–60625	14 – 6
	14 – 34
97880–06012	20 – 6
97880–06035	31 – 12
97885–06016	21 – 2
97980–05225	24 – 10
97980–06216	25 – 26

PART NO. N° PIECES	REF. NO.
97980–06216	31 – 4
97985–04116	19 – 47
97985–06210	12 – 17
98507–04008	4 – 20
98780–04016	2 – 17
99001–08600	27 – 42
99530–08012	12 – 9
99530–14016	4 – 15