YAMAHA

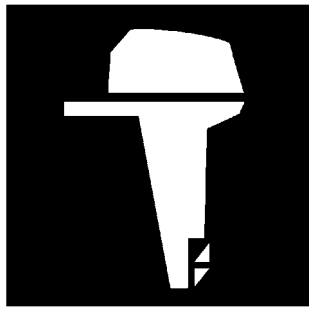

PARTS CATALOGUE
CATALOGUE DE PIECES DETACHEES

FT9.9GMH Y12 (6AV6)
FT9.9GE Y12 (6AV6)
FT9.9GEP Y12 (6AV6)

1L6AV-300FA

( )

YAMAHA
GENUINE
Parts & Accessories

FT9.9GMH
FT9.9GE/FT9.9GEP
PARTS CATALOGUE
©2012 by Yamaha Motor Co., Ltd.
1st edition, April 2012
All rights reserved.
Any reprinting or unauthorized use
without the written permission of
Yamaha Motor Co., Ltd.
is expressly prohibited.
Printed in Japan.

FT9.9GMH
FT9.9GE/FT9.9GEP
CATALOGUE DE PIECES DETACHEES
©2012 par Yamaha Motor Co., Ltd.
1re édition, avril 2012
Tous droits réservés
Toute réimpression ou utilisation
non autorisée sans la permission écrite
de la Yamaha Motor Co., Ltd.
est formellement interdite.
Imprimé au Japon

FOREWORD

This Parts Catalogue is related to the parts for the model(s) on the cover page. When you are ordering replacement parts, please refer to this Parts Catalogue and quote both part numbers and part names correctly.

1. Modifications or additions which have been made after the issue of the Parts Catalogue will be announced in the Parts News.
   It is advisable that you make the necessary corrections to the Parts Catalogue according to the Parts News.

2. Abbreviations
   The following abbreviations are used in this Parts Catalogue.

   "UR" Use specified parts number.
   "UN" Use as many as needed.
   "AP" Alternate Parts
   "LM" Locally Made (Parts need to be ordered locally)
   "F#" Frame No. (Applicable machine No.)
   "O/S" Over Size

3. The number of components for assembly
   - Parts, which are to be supplied in an assembly, are listed with a dot (.) in front of the part name as shown below.
   - The numeral appearing to the right of each component part indicates the quantity of parts for each assembly unit.

PART NO.	DESCRIPTION	Q'TY	REMARKS
2F5–83310–60	FRONT FLASHER LIGHT ASSY	2	
115–83311–60	.BULB (6V–18W)	1	

4. Applicable colours of graphics are represented in the "REMARKS" as shown below.

PART NO.	DESCRIPTION	Q'TY	REMARKS
2N4–24110–00–X5	FUEL TANK COMP.	2	MXR
3J1–24240–10	.GRAPHIC, FUEL TANK	1	FOR MXR

5. Note that the illustrations for reference in finding parts numbers are not to be used for assembling. When assembling, please use the applicable service manual.

6. The asterisk (*) before a reference number indicates modified items after the first edition.

7. Applicable Serial No.

   Engine Serial No.

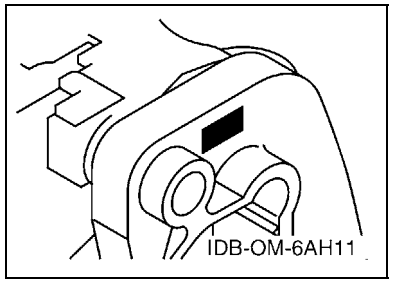

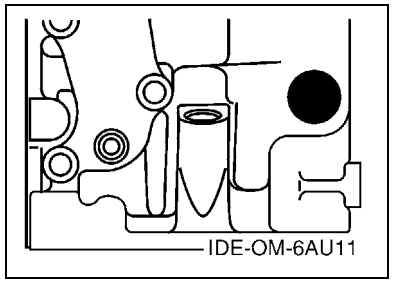

8. Applicable Engine Starting Serial No.

Model	Serial No.	Model	Serial No.
FT9.9G	6AVK-1014961		

9. Applicable Colour Code

Abbreviation	Colour Name	Colour Code
DBNM2	DARK BLUISH GRAY METALLIC 2	004D

10. Quantity Column Information

Column No.	Name Of Q'ty Column	Applicable Model
1	MH	FT9.9GMH
2	E	FT9.9GE
3	EP	FT9.9GEP

AVANT–PROPOS

Ce catalogue de pièces détachées concerne les pièces pour le(s) modèle(s) indiqué(s) sur la page de couverture. Lorsque vous commandez des pièces de rechange, veuillez vous référer à ce catalogue de pieces détachées et indiquer clairement les numéros et les noms des pièces détachées.

1. Les modifications ou ajouts ayant été effectués après la parution du catalogue de pièces détachées seront décrits dans les Bulletins d'information concernant les pièces détachées.
   Il est recommandé que vous apportiez les corrections nécessaires au catalogue des pièces détachées en vous référant aux Bulletins d'information.

2. Abréviations
   Dans ce catalogue, les abréviations suivantes sont utilisées:

   "UR" Utiliser le numéro de pièces spécifié.
   "UN" Utiliser autant que nécessaire.
   "AP" Pièces de substitution
   "LM" Fabrication locale (les pièces doivent être commandées localement.)
   "F#" N° de cadre (applicable au N° de série)
   "O/S" Surdimensionné

3. Nombre de pièces d'un assemblage
   - Les pièces fournies comme composants d'un assemblage sont précédées d'un point (.) de la manière indiquée ci–dessous.
   - Le chiffre apparaissant à la droite de chaque composant indique la quantité de pièces pour chaque unité d'assemblage.

N° PIECES	DESCRIPTION	QTE	REMARQUES
2F5–83310–60	ENS. CLIGNOTANT AVANT	2	
115–83311–60	.AMPOULE (6V–18W)	1	

4. Les couleurs concernant les graphiques sont indiquées dans la colonne "REMARQUES", comme indiqué ci–dessous.

N° PIECES	DESCRIPTION	QTE	REMARQUES
2N4–24110–00–X5	RESERVOIR A ESSENCE.	2	MXR
3J1–24240–10	.GRAPHIQUE	1	POUR MXR

5. Veuillez noter que les illustrations sont indiquées à titre de référence pour trouver les numéros de pièces, non pour être utilisées lors de l'assemblage. Lors de l'assemblage, veuillez utiliser le manuel d'entretien adéquat.

6. L'astérisque (*) placé devant un numéro de référence indique des éléments qui ont été modifiés après la première édition.

7. N° de série applicable

   N° de Série du moteur

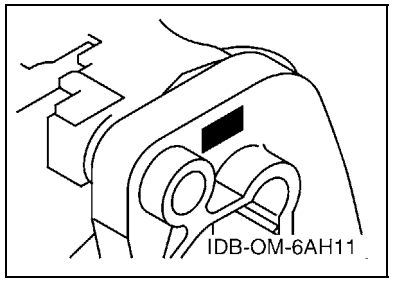

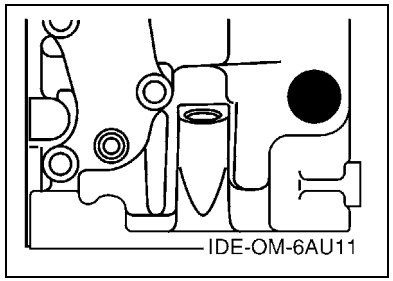

8. N° de série initial du moteur applicable

Modèle	N° de série	Modèle	N° de série
FT9.9G	6AVK-1014961		

9. Code couleur applicable

Abréviation	Nom de la couleur	Code couleur
DBNM2	DARK BLUISH GRAY METALLIC 2	004D

10. Informations relatives à la colonne Quantité

N° de la colonne	Nom de la colonne Qté	Modèle applicable
1	MH	FT9.9GMH
2	E	FT9.9GE
3	EP	FT9.9GEP

CONTENTS

TOP COWLING 1
CYLINDER & CRANKCASE 1 2
CRANKSHAFT & PISTON 3
CYLINDER & CRANKCASE 2 4
VALVE 5
INTAKE 6
CARBURETOR 7
OIL PUMP 9
FUEL 10
STARTER 12
GENERATOR 14
ELECTRICAL 1 16
ELECTRICAL 2 17
ELECTRICAL 3 18
ELECTRICAL 4 20
STARTING MOTOR 21
BOTTOM COWLING 22
STEERING 24
STEERING FRICTION 27
CONTROL 1 28
CONTROL 2 30
BRACKET 1 32
BRACKET 2 34
BRACKET 3 36
POWER TILT ASSY 37
UPPER CASING 40
OIL PAN 41
LOWER CASING & DRIVE 1 42
LOWER CASING & DRIVE 2 45
FUEL TANK 46
STEERING GUIDE 47
REMOTE CONTROL BOX 48
REMOTE CONTROL ASSY 49
REPAIR KIT 1 52
REPAIR KIT 2 53
REPAIR KIT 3 54

INDEX

NUMERICAL INDEX 55

TABLE DES MATIERES

CAPOT SUPERIEUR 1
CYLINDRE & CARTER 1 2
VILEBREQUIN & PISTON 3
CYLINDRE & CARTER 2 4
SOUPAPE 5
ADMISSION 6
CARBURATEUR 7
POMPE A HUILE 9
CARBURANT 10
DEMARREUR 12
GENERATRICE 14
PARTIE ELECTRIQUE 1 16
PARTIE ELECTRIQUE 2 17
PARTIE ELECTRIQUE 3 18
PARTIE ELECTRIQUE 4 20
DEMARREUR ELECTRIQUE 21
CAPOT INFERIEUR 22
DIRECTION 24
CUVETTE POIGNEE DE DIRECTION 27
COMMANDE 1 28
COMMANDE 2 30
SUPPORT 1 32
SUPPORT 2 34
SUPPORT 3 36
PUISSANCE PARER ET INCLINER 37
FOURREAU 40
VENTILATEUR D'HUILE 41
BOITIER D'HELICE TRANSMISSION1 42
BOITIER D'HELICE TRANSMISSION2 45
RESERVOIR A CARBURANT 46
FIXATION DE DIRECTION 47
BOITIER DE COMMANDE A DISTANCE 48
BOITIER DE COMMANDE A DISTANCE 49
KITS DE REPARATION 1 52
KITS DE REPARATION 2 53
KITS DE PEPARATION 3 54

INDEX

INDEX NUMERIQUE 55

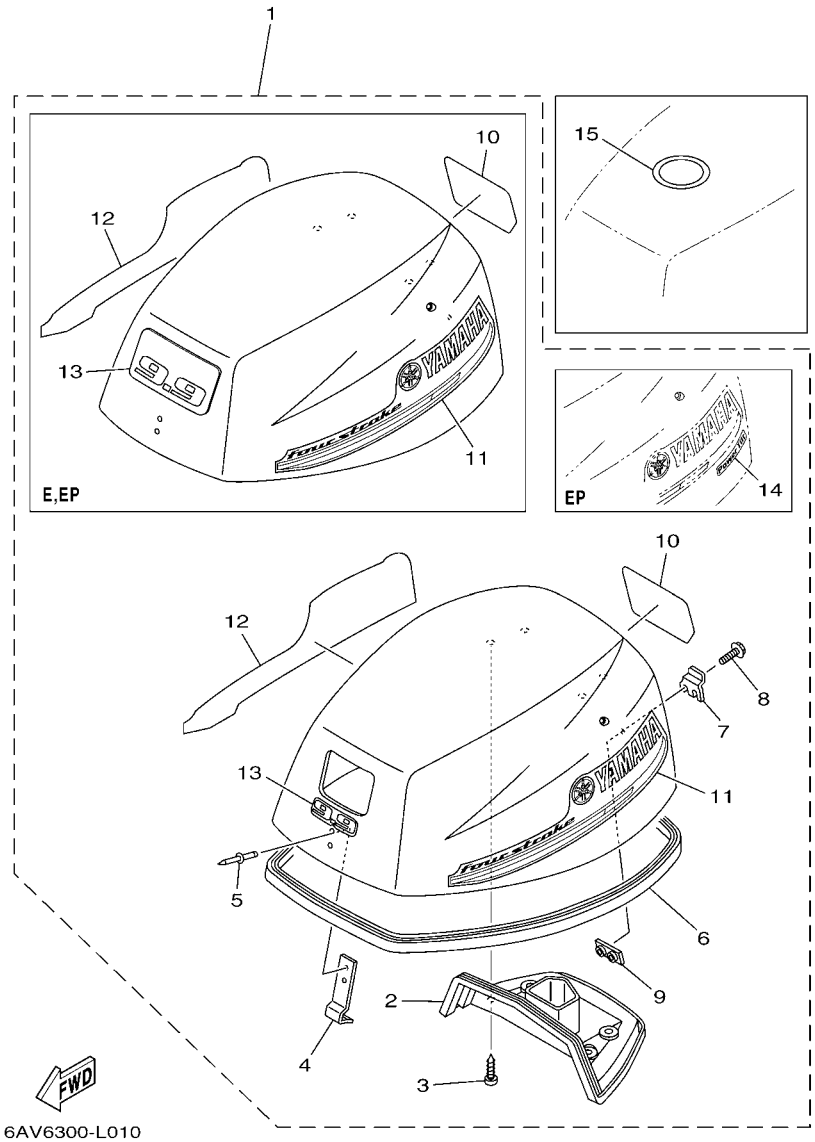

FIG. 1 TOP COWLING — CAPOT SUPERIEUR

REF. NO.	PART NO. N° PIECES	DESCRIPTION DESCRIPTION	MH	E	EP			REMARKS REMARQUES
1	6AV–42610–90	TOP COWLING ASSY CAPOT (ENS.)	1					
	6AV–42610–A0	TOP COWLING ASSY CAPOT (ENS.)		1				
	6AV–42610–C0	TOP COWLING ASSY CAPOT (ENS.)			1			
2	6AU–42613–00	.MOLDING, AIR DUCT .MANCHON A AIR	1	1	1			
3	97780–60516	.SCREW, TAPPING .VIS, TETE BOMBEE	4	4	4			
4	6G1–42651–02	.HOOK .CROCHET	1	1	1			
5	90266–04M04	.RIVET .RIVET	2	2	2			
6	68T–42615–00	.SEAL .JOINT	1	1	1			
7	68T–42652–00	.HOOK .CROCHET	1	1	1			
8	97595–05514	.BOLT, WITH WASHER .VIS HEXAGONAL AVC RONDELLE	2	2	2			
9	68T–42649–00	.HOLDER, CLAMP BAND .SUPPORT, SANDOW DE SERRAGE	1	1	1			
10	6AV–42678–10	.GRAPHIC, REAR .ADHESIF, ARRIERE	1	1	1			
11	60R–42675–00	.GRAPHIC, SIDE 1 .EMBLEME	1	1	1			
12	60R–42676–10	.GRAPHIC, SIDE 2 .EMBLEME	1					
	60R–42676–00	.GRAPHIC, SIDE 2 .EMBLEME		1	1			
13	6AU–42677–20	.GRAPHIC, FRONT .ADHESIF, AVANT	1					
	6AV–42686–20	.EMBLEM, FRONT .EMBLEME, AVANT		1	1			
14	60S–42675–00	.GRAPHIC, SIDE 1 .EMBLEME			1			
15	67F–13434–20	LABEL, CAUTION ETIQUETTE, ATTENTION	1	1	1			

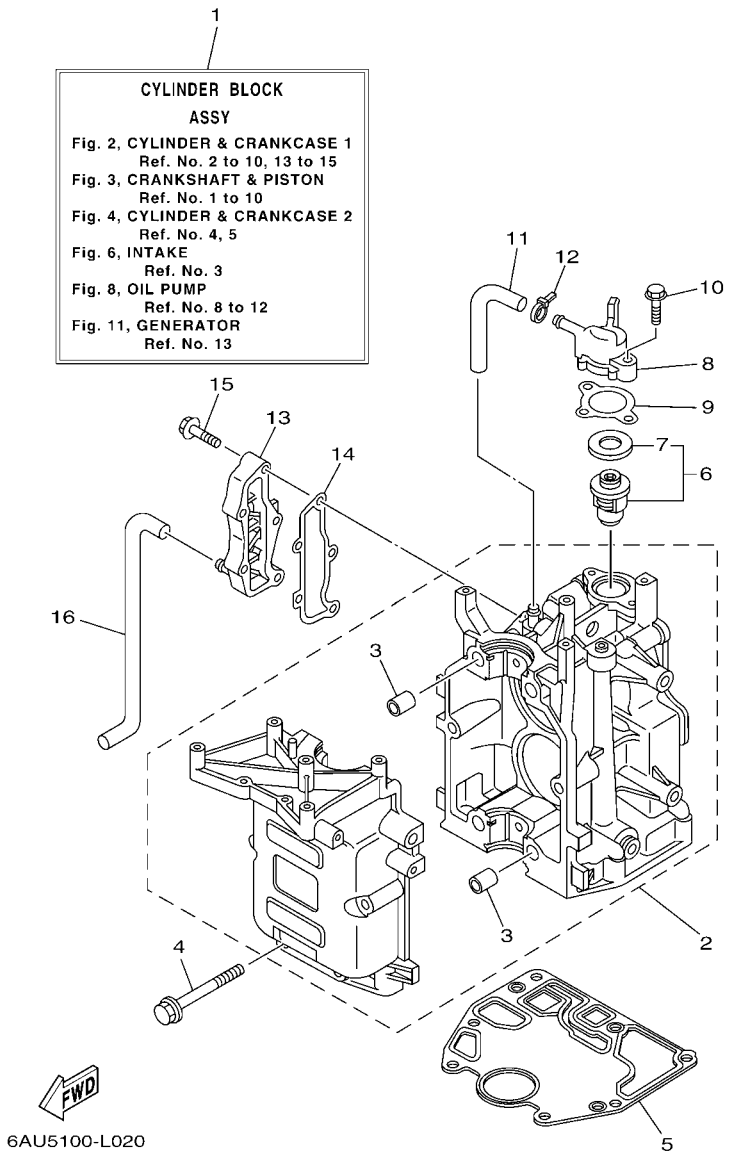

FIG. 2 CYLINDER & CRANKCASE 1 CYLINDRE & CARTER 1

REF. NO.	PART NO. N° PIECES	DESCRIPTION DESCRIPTION	MH	E	EP			REMARKS REMARQUES
1	6AU–W009B–00–1S	CYLINDER BLOCK ASSY CYLINDRE GROUPE (ENS.)	1	1	1			
2	6AU–15100–00	CRANKCASE ASSY CARTER DE MOTEUR COMPLET	1	1	1			
3	99530–12016	.PIN, DOWEL .GOUJON, D'ASSEMBLAGE	4	4	4			
4	90119–08M29	BOLT, WITH WASHER BOULON, AVEC RONDELLE	6	6	6			
5	68T–11351–00	GASKET, CYLINDER JOINT, D'EMBASE	1	1	1			
6	66M–12411–01	THERMOSTAT THERMOSTAT	1	1	1			
7	688–12412–00	.SEAL, THERMOSTAT .JOINT, THERMOSTAT	1	1	1			
8	68T–12413–00–1S	COVER, THERMOSTAT COUVERCLE, THERMOSTAT	1	1	1			
9	6G8–12414–A0	GASKET, COVER JOINT, COUVERCLE	1	1	1			
10	90119–06MA2	BOLT, WITH WASHER BOULON, AVEC RONDELLE	2	2	2			
11	68T–12481–00	PIPE 1 DURITE 1	1	1	1			
12	90465–11M10	CLAMP BRIDE	1	1	1			
13	6AU–41113–00–1S	OUTER COVER, EXHAUST COUVERCLE, ECHAPPEMENT	1	1	1			
14	68T–41114–A0	GASKET, EXHAUST OUTER COVER JOINT, COUVERCLE D'ECHAPPEMENT	1	1	1			
15	90119–06MA3	BOLT, WITH WASHER BOULON, AVEC RONDELLE	5	5	5			
16	68T–12482–00	PIPE 2 DURITE 2	1	1	1			

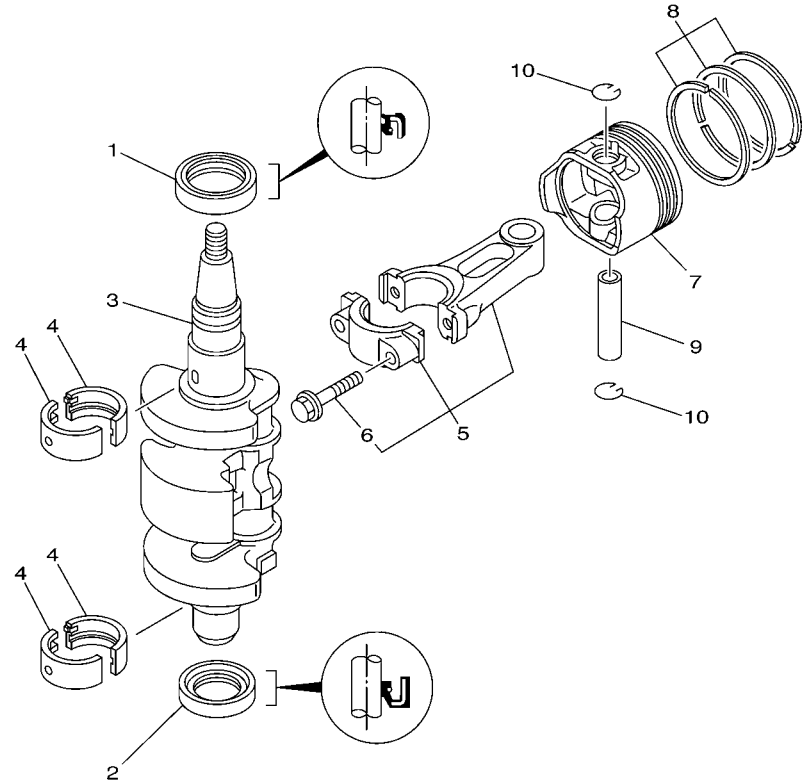

68R0010-0031

FIG. 3 CRANKSHAFT & PISTON — VILEBREQUIN & PISTON

REF. NO.	PART NO. N° PIECES	DESCRIPTION DESCRIPTION	MH	E	EP			REMARKS REMARQUES
1	93102–30M22	OIL SEAL JOINT SPY	1	1	1			
2	93101–25M69	OIL SEAL JOINT SPY	1	1	1			
3	6AU–11411–00	CRANKSHAFT VILEBREQUIN COMPLET	1	1	1			
4	68T–11416–01	PLANE BEARING, CRANKSHAFT 1 COUSSINET DE VILEBREQUIN 1	4	4	4			UR BROWN UR BROWN
	68T–11416–11	PLANE BEARING, CRANKSHAFT 1 COUSSINET DE VILEBREQUIN 1	4	4	4			UR BLACK UR BLACK
	68T–11416–21	PLANE BEARING, CRANKSHAFT 1 COUSSINET DE VILEBREQUIN 1	4	4	4			UR BLUE UR BLUE
5	6AU–11650–00	CONNECTING ROD ASSY BIELLE COMPLETTE	2	2	2			
6	67D–11654–00	.BOLT, CONNECTING ROD .BOULON, BIELLE	2	2	2			
7	6AU–11631–00–96	PISTON (STD) PISTON (STD)	2	2	2			
	6AU–11635–00	PISTON (0.25MM O/S) PISTON (0.25MM O/S)	2	2	2			AP AP
	6AU–11636–00	PISTON (0.50MM O/S) PISTON (0.50MM O/S)	2	2	2			AP AP
8	68T–11603–01	PISTON RING SET (STD) JEU DE SEGMENTS (STD)	2	2	2			
	68T–11604–01	PISTON RING SET (0.25MM O/S) JEU DE SEGMENTS (0.25MM O/S)	2	2	2			AP AP
	68T–11605–01	PISTON RING SET (0.50MM O/S) JEU DE SEGMENTS (0.50MM O/S)	2	2	2			AP AP
9	68T–11633–00	PIN, PISTON AXE, PISTON	2	2	2			
10	93450–15023	CIRCLIP CIRCLIP, TYPE S	4	4	4			

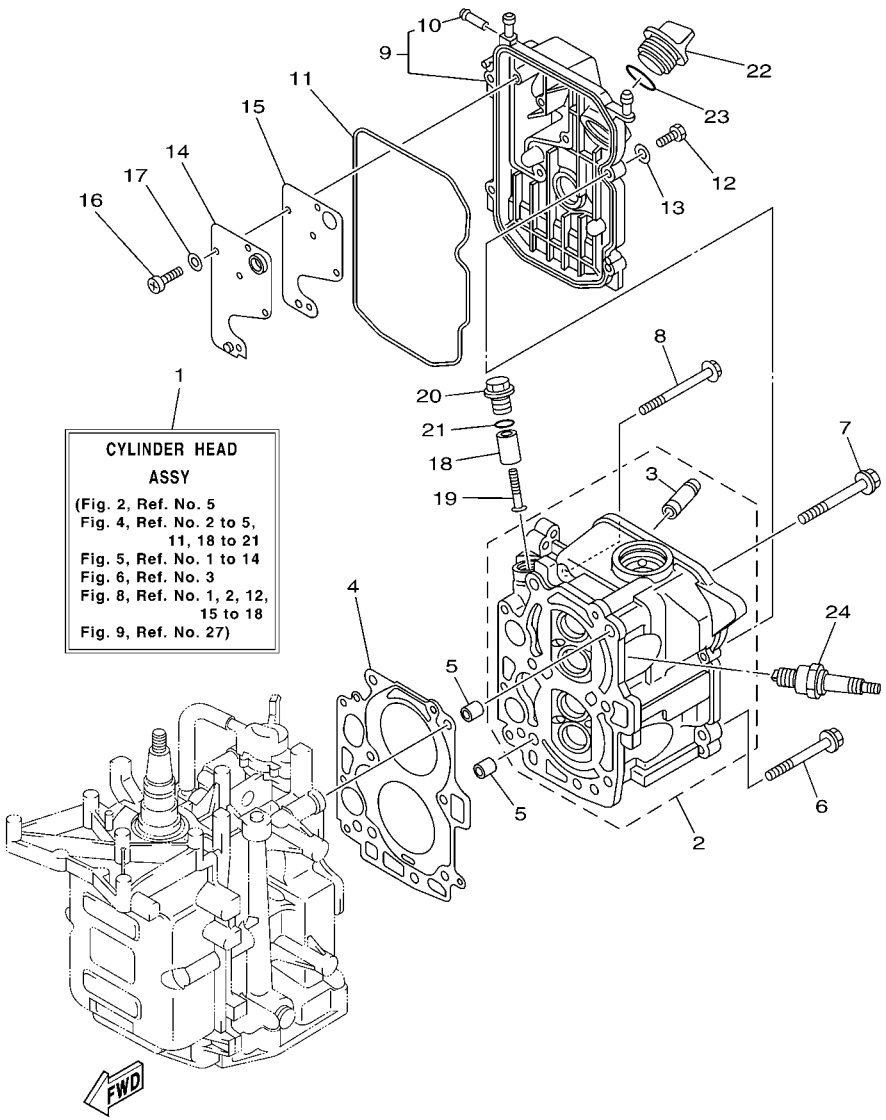

FIG. 4 CYLINDER & CRANKCASE 2 CYLINDRE & CARTER 2

REF. NO.	PART NO. N° PIECES	DESCRIPTION DESCRIPTION	MH	E	EP			REMARKS REMARQUES
1	6AU–W009A–01–1S	CYLINDER HEAD ASSY CULASSE (ENS.)	1	1	1			
2	6AU–11111–00–1S	HEAD, CYLINDER 1 CULASSE	1	1	1			
3	6AU–11133–10	.GUIDE, VALVE 1 .GUIDE, SOUPAPE 1	4	4	4			
4	68T–11181–00	GASKET, CYLINDER HEAD 1 JOINT, DE CULASSE 1	1	1	1			
5	99510–10114	PIN, DOWEL GOUJON, D'ASSEMBLAGE	2	2	2			
6	90105–08M36	BOLT, FLANGE BOULON	2	2	2			
7	90105–08M78	BOLT, FLANGE BOULON	4	4	4			
8	90119–06049	BOLT, WITH WASHER BOULON, AVEC RONDELLE	3	3	3			
9	68T–11191–00–1S	COVER, CYLINDER HEAD 1 COUVERCLE, CULASSE 1	1	1	1			
10	650–24378–00	.PIPE, JOINT 4 .DURITE RACCORDEMENT 3	1	1	1			
11	68T–11356–00	SEAL, CYLINDER 2 JOINT, SPY CYLINDRE	1	1	1			
12	97095–06020	BOLT BOULON	4	4	4			
13	92995–06600	WASHER RONDELLE	4	4	4			
14	68T–11168–00	COVER, BREATHER COUVERCLE, RENIFLARD	1	1	1			
15	68T–11169–A0	GASKET, BREATHER COVER JOINT, COUVERCLE DE RENIFLARD	1	1	1			
16	98507–04010	SCREW, PAN HEAD VIS, TETE TRONCONIQUE	5	5	5			
17	92907–04600	WASHER RONDELLE	5	5	5			
18	6G8–11325–00	ANODE ANODE	1	1	1			
19	97880–05025	SCREW, PAN HEAD VIS, TETE TRONCONIQUE	1	1	1			
20	6G8–11197–01	PLUG, BLIND PLOT, BORGNE	1	1	1			
21	93210–13M63	O-RING JOINT TORIQUE	1	1	1			
22	6G8–15363–00	PLUG, OIL PLOT, HUILE	1	1	1			
23	93210–24M79	O-RING JOINT TORIQUE	1	1	1			
24	94702–00274	PLUG, SPARK (NGK BR6HS-10) BOUGIE D'ALLUMAGE(NGK BR6HS-10	2	2	2			

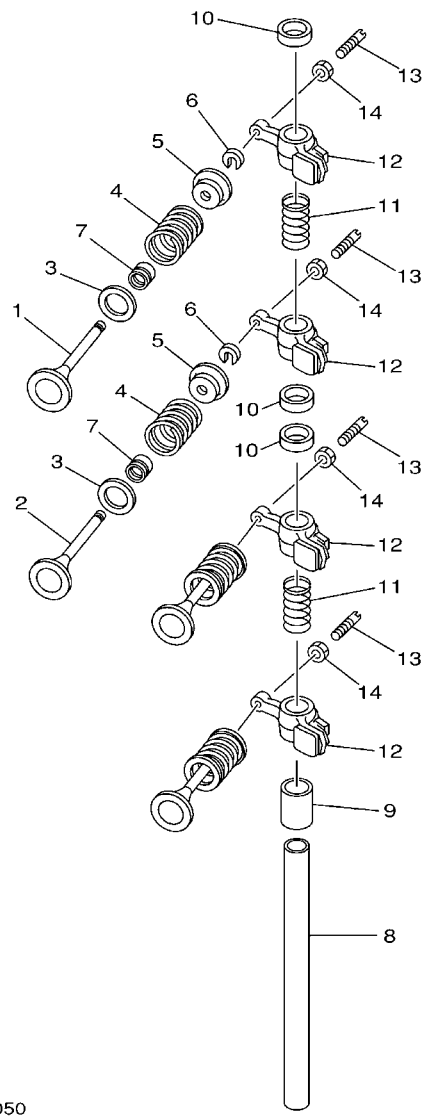

FIG. 5 VALVE SOUPAPE

REF. NO.	PART NO. N° PIECES	DESCRIPTION DESCRIPTION	MH	E	EP			REMARKS REMARQUES
1	6AU–12111–00	VALVE, INTAKE SOUPAPE, ADMISSION	2	2	2			
2	6AU–12121–00	VALVE, EXHAUST SOUPAPE, ECHAPPEMENT	2	2	2			
3	68T–12116–00	SEAT, VALVE SPRING SIEGE, RESSORT DE SOUPAPE	4	4	4			
4	60R–12113–00	SPRING, VALVE INNER RESSORT DE SOUPAPE, INTERNE	4	4	4			
5	7NJ–12117–00	RETAINER, VALVE SPRING BUTEE DE RESSORT DE SOUPAPE	4	4	4			
6	7NJ–12118–00	COTTER, VALVE FRAISE, SOUPAPE	4	4	4			
7	51Y–12119–00	SEAL, VALVE STEM JOINT, QUEUE DE SOUPAPE	4	4	4			
8	68T–12146–00	SHAFT, ROCKER AXE, CULBUTEUR	1	1	1			
9	90387–13M56	COLLAR COLLERETTE	1	1	1			
10	90387–14M03	COLLAR COLLERETTE	3	3	3			
11	90501–12M40	SPRING, COMPRESSION RESSORT, COMPRESSION	2	2	2			
12	68T–12151–00	ARM, VALVE ROCKER CULBUTEUR	4	4	4			
13	6G8–12159–00	SCREW, VALVE ADJUSTING VIS, REGLAGE DE SOUPAPE	4	4	4			
14	6G8–12158–00	NUT, LOCK CONTRE-ECROU	4	4	4			

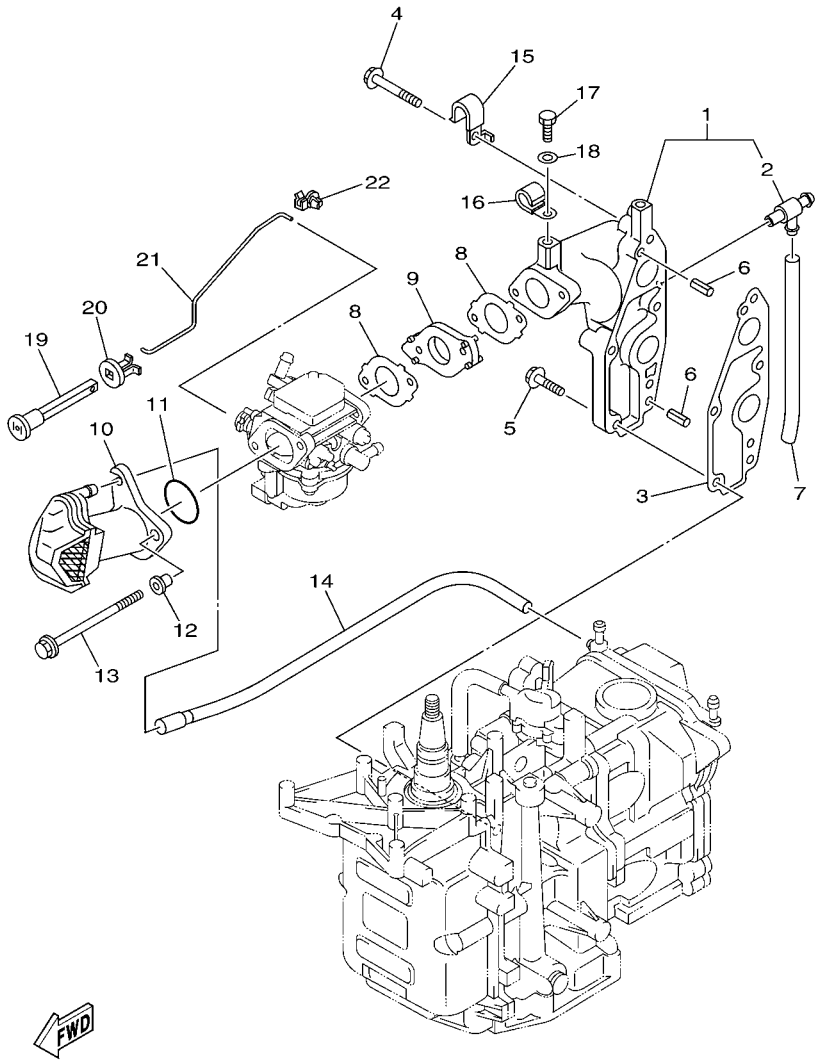

6AU1300-G060

FIG. 6 INTAKE — ADMISSION

REF. NO.	PART NO. N° PIECES	DESCRIPTION DESCRIPTION	MH	E	EP			REMARKS REMARQUES
1	68T–13641–20–1S	MANIFOLD, INTAKE 1 TUBULURE, ADMISSION 1	1	1	1			FLUSHING KIT FLUSHING KIT
2	67F–12482–00	.PIPE 2 .DURITE 2	1	1	1			
3	68T–13645–00	GASKET, MANIFOLD 1 JOINT, TUBULURE 1	1	1	1			
4	90119–06MA5	BOLT, WITH WASHER BOULON, AVEC RONDELLE	3	3	3			
5	90119–06MA3	BOLT, WITH WASHER BOULON, AVEC RONDELLE	2	2	2			
6	91690–50014	PIN, SPRING AGRAFFE	2	2	2			
7	90445–09M20	HOSE (L95) DURITE (L95)	1	1	1			FLUSHING KIT FLUSHING KIT
8	68T–13646–A0	GASKET, MANIFOLD 2 JOINT, TUBULURE 2	2	2	2			
9	68T–14271–00	INSULATOR ISOLATEUR	1	1	1			
10	6AU–14440–00	SILENCER ASSY, INTAKE SIENCIEUX D'ADMISSION	1	1	1			
11	93210–31MJ5	O-RING JOINT TORIQUE	1	1	1			
12	90387–06M70	COLLAR COLLERETTE	2	2	2			
13	97595–06585	BOLT, WITH WASHER VIS HEXAGONAL AVC RONDELLE	2	2	2			
14	68T–12483–00	PIPE 3 DURITE 3	1	1	1			
15	90465–08M99	CLAMP BRIDE	1	1	1			
16	90465–08M83	CLAMP BRIDE	1	1	1			FLUSHING KIT FLUSHING KIT
17	97095–06010	BOLT BOULON	1					FLUSHING KIT FLUSHING KIT
18	92995–06600	WASHER RONDELLE	1					FLUSHING KIT FLUSHING KIT
19	6H4–41271–02	KNOB, CHOKE BOUTON DE STARTER	1	1	1			
20	689–41273–00	GROMMET PASSE-FIL	1	1	1			
21	68T–41256–00	ROD, CHOKE 1 TRINGLE 1, STARTER	1	1	1			
22	6J8–41262–00	JOINT, CHOKE LEVER RACCORD, LEVIER DE STARTER	1	1	1			

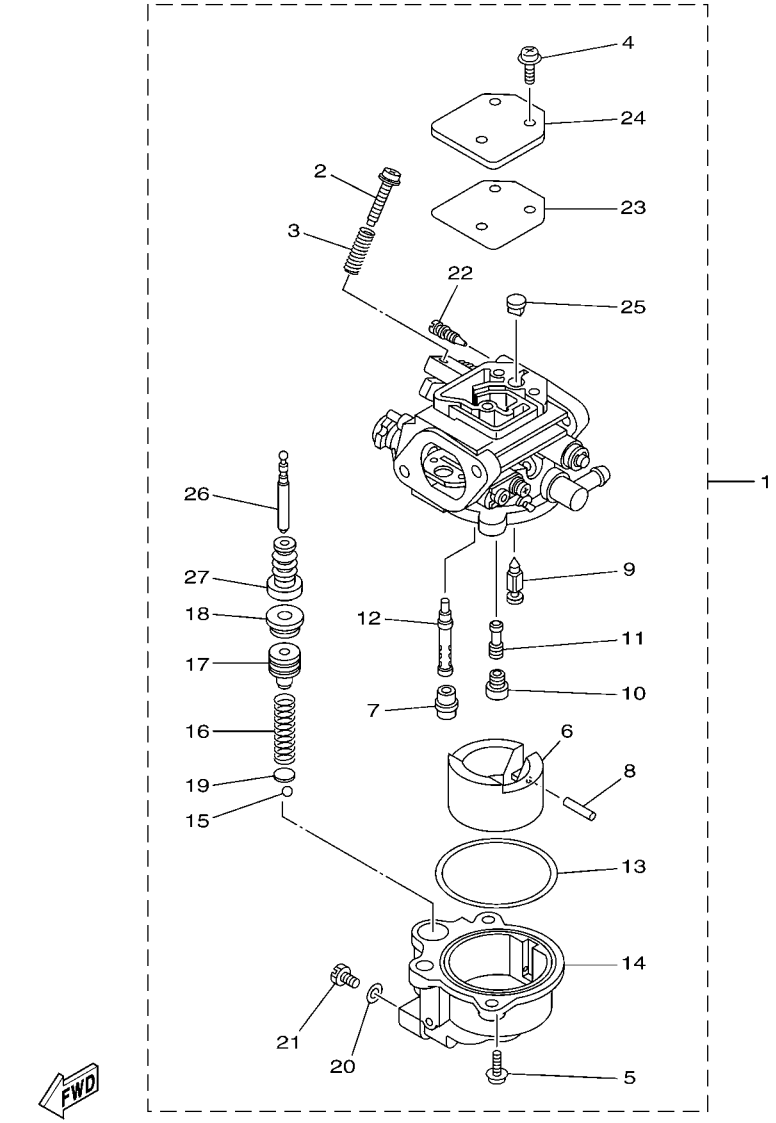

6AU3300-J070

FIG. 7 CARBURETOR CARBURATEUR

REF. NO.	PART NO. N° PIECES	DESCRIPTION DESCRIPTION	MH	E	EP			REMARKS REMARQUES
1	6AU–14301–21	CARBURETOR ASSY 1 CARBURATEUR COMPLET 1	1					
	6AU–14301–51	CARBURETOR ASSY 1 CARBURATEUR COMPLET 1		1	1			
2	6E5–14321–00	.SCREW, THROTTLE .VIS, ACCELERATEUR	1	1	1			
3	6J8–14334–00	.SPRING, THROTTLE .RESSORT, ACCELERATEUR	1	1	1			
4	97980–04110	.SCREW, WITH WASHER .VIS, AVEC RONDELLE	3	3	3			
5	97980–04112	.SCREW, WITH WASHER .VIS, AVEC RONDELLE	2	2	2			
6	6AU–14385–00	.FLOAT .FLOTTEUR	1	1	1			
7	67D–14966–00	.RUBBER CAP .CAOUTCHOUC CASQUILLO	1	1	1			
8	67D–14386–00	.PIN, FLOAT .AXE, FLOTTEUR	1	1	1			
9	68T–14546–00	.VALVE, NEEDLE .POINTEAU	1	1	1			
10	6AU–1492E–43	.JET, MAIN (#86) .GICLEUR, PRINCIPAL (#86)	1	1	1			
11	6AU–1492F–20	.JET, AIR SLOW (#40) .GICLEUR, AIR (#40)	1	1	1			
12	6AU–1492A–00	.NOZZLE, MAIN .PUITS D'AIGUILLE	1	1	1			
13	6AU–14984–00	.GASKET, FLOAT CHAMBER .JOINT, CUVE DE FLOTTEUR	1	1	1			
14	6AU–14982–50	.BODY, FLOAT CHAMBER .CORPS, CUVE DE FLOTTEUR	1	1	1			
15	6AU–1431B–00	.BALL .BILLE	1	1	1			
16	6AU–14335–50	.SPRING, PLUNGER .RESSORT, PLONGEUR	1	1	1			
17	6AU–14371–50	.PLUNGER, STARTER .PLONGEUR, STARTER	1	1	1			
18	6AU–1431A–30	.GUIDE .GUIDE	1	1	1			
19	6AU–14918–00	.RING .BAGUE	1	1	1			
20	6J8–14959–00	.GASKET .JOINT	1	1	1			
21	66T–14991–00	.PLUG, DRAIN .BOUCHON DE VIDANGE	1	1	1			
22	68T–14323–20	.SCREW, AIR ADJUSTING .VIS DE DOSEUR D'AIR	1	1	1			
23	67D–14536–00	.GASKET .JOINT	1	1	1			
24	67D–14527–00	.PLATE .PLAQUE	1	1	1			
25	68T–14126–00	.PLUG .PLOT	1	1	1			
26	6AU–14379–30	.ROD, STARTER .TRINGLE, STARTER	1	1	1			

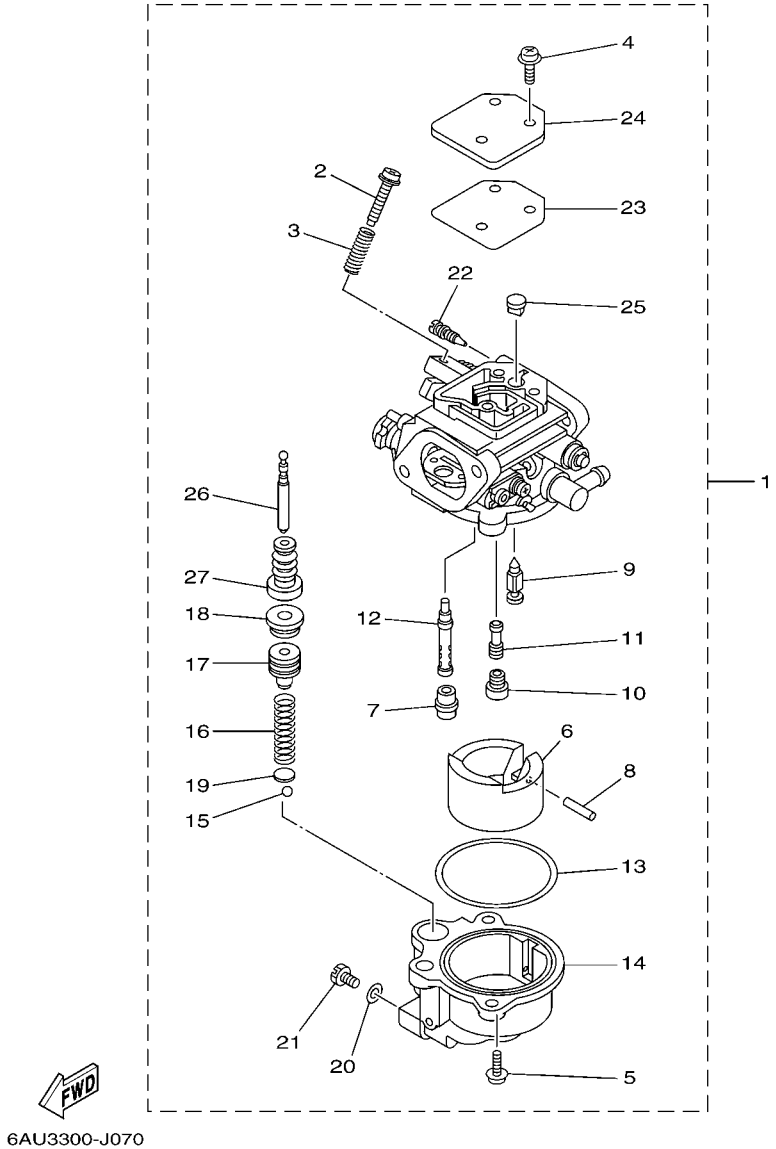

FIG. 7 CARBURETOR CARBURATEUR

REF. NO.	PART NO. N° PIECES	DESCRIPTION DESCRIPTION	MH	E	EP			REMARKS REMARQUES
27	6AU–14373–00	.COVER, PLUNGER CAP .COUVERCLE DE PLONGEUR	1	1	1			

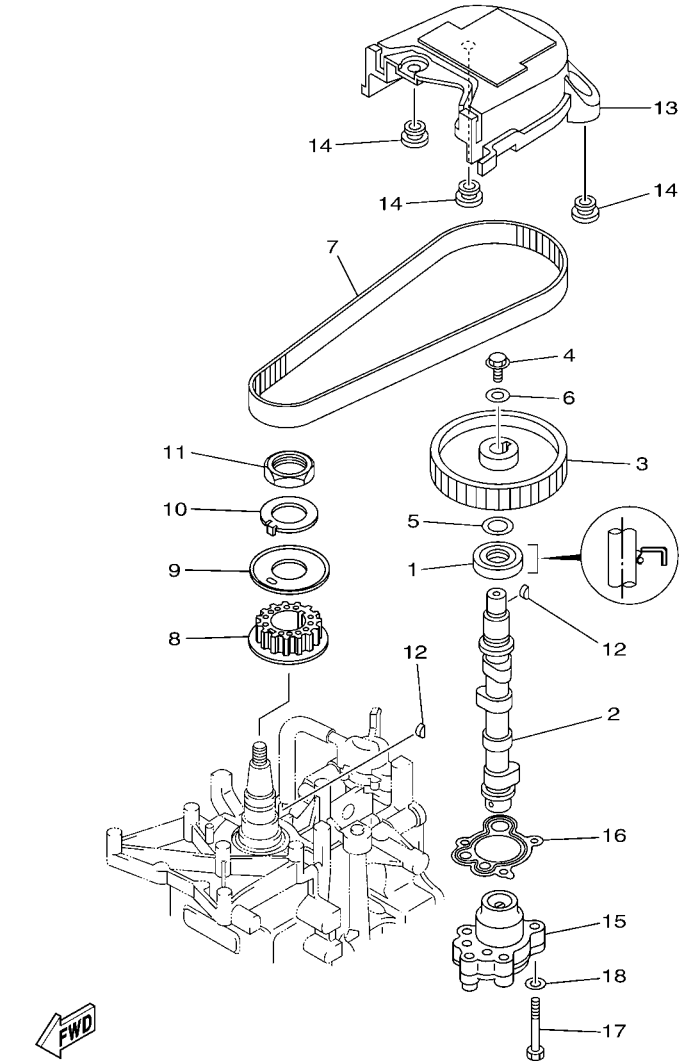

6AU4300-K080

FIG. 8 OIL PUMP — POMPE A HUILE

REF. NO.	PART NO. N° PIECES	DESCRIPTION DESCRIPTION	MH	E	EP			REMARKS REMARQUES
1	93102–18M21	OIL SEAL JOINT SPY	1	1	1			
2	68T–12171–00	CAMSHAFT 1 ARBRE A CAMES 1	1	1	1			
3	66M–11537–00–94	GEAR, DRIVEN PIGNON SECONDAIRE	1	1	1			
4	90105–06M14	BOLT FLANGE BOULON	1	1	1			
5	90201–13201	WASHER, PLATE RONDELLE, PLATE	1	1	1			
6	90201–06M94	WASHER, PLATE RONDELLE, PLATE	1	1	1			
7	68T–46241–00	BELT COURROIE TRAPEZOIDALE	1	1	1			
8	68T–11536–00	GEAR, DRIVE ENGRENAGE, MENANT	1	1	1			
9	68T–11557–00	WASHER 1 RONDELLE 1	1	1	1			
10	6G8–11587–01	WASHER, LOCK RONDELLE, FREIN	1	1	1			
11	90170–24M09	NUT ECROU	1	1	1			
12	90280–03M01	KEY, WOODRUFF CLAVETTE, DEMI-LUNE	2	2	2			
13	6AU–46297–00	COVER, DUST COUVERCLE, POUSSIERE	1	1	1			
14	90480–10627	GROMMET PASSE-FIL	3	3	3			
15	68T–13300–00	OIL PUMP ASSY POMPE A HUILE COMPLETE	1	1	1			
16	68T–13329–00	GASKET, PUMP COVER JOINT, COUVERCLE DE POMPE	1	1	1			
17	97095–06030	BOLT BOULON	3	3	3			
18	92995–06600	WASHER RONDELLE	3	3	3			

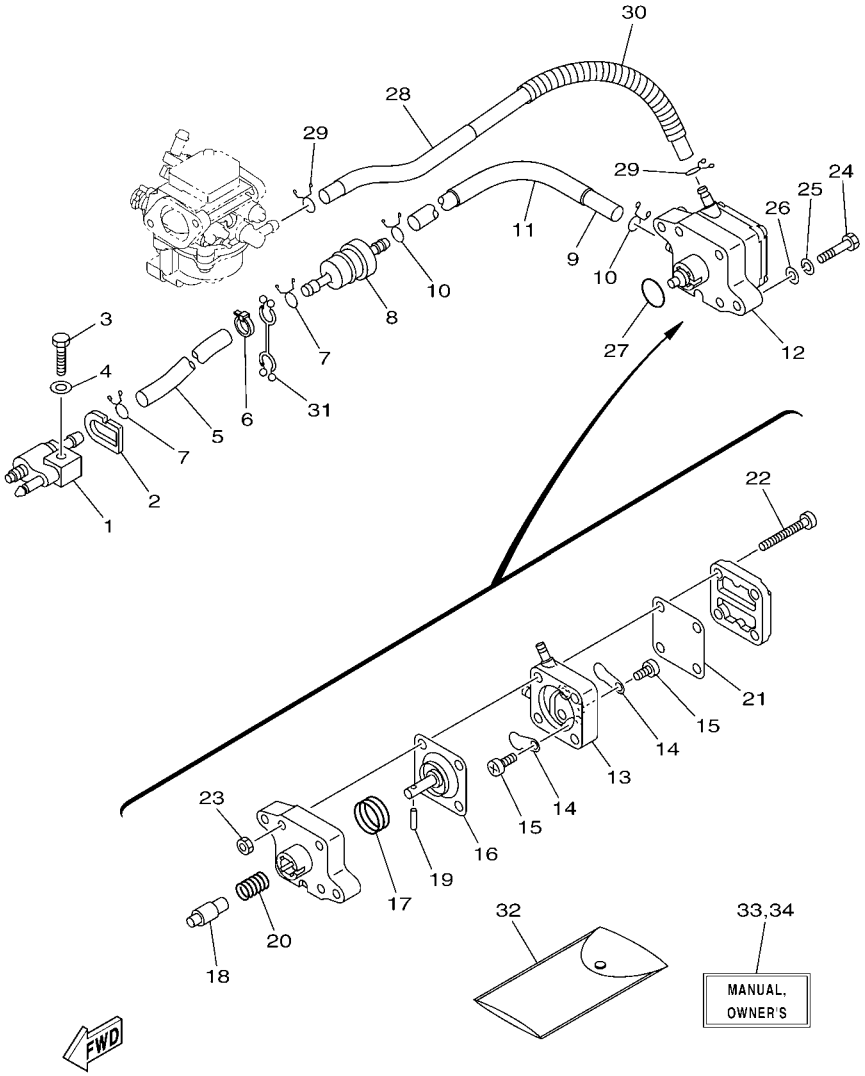

FIG. 9 FUEL CARBURANT

REF. NO.	PART NO. N° PIECES	DESCRIPTION DESCRIPTION	MH	E	EP			REMARKS REMARQUES
1	6G1–24304–02	FUEL PIPE JOINT COMP. 1 DURITE RACCORDEMT. A ESSENCE	1	1	1			
2	61N–24329–00	SEAL JOINT	1	1	1			
3	97095–06025	BOLT BOULON	1	1	1			
4	92995–06600	WASHER RONDELLE	1	1	1			
5	90445–10046	HOSE (L295) DURITE (L295)	1	1	1			
6	90465–11M10	CLAMP BRIDE	1	1	1			
7	90467–09M09	CLIP JONC	2	2	2			
8	68T–24251–01	STRAINER 1 FILTRE 1	1	1	1			
9	90445–10M50	HOSE (L170) DURITE (L170)	1	1	1			
10	90467–09M09	CLIP JONC	2	2	2			
11	90445–16010	HOSE (L140) DURITE (L140)	1	1	1			
12	68T–24410–01	FUEL PUMP ASSY POMPE A ESSENCE	1	1	1			
13	66M–24413–01	.BODY 2 .CORPS 2	1	1	1			
14	6A0–24421–01	.VALVE, CHECK .SOUPAPE, RETENUE	2	2	2			
15	6E7–14325–00	.SCREW, PAN HEAD .VIS TETE CONIQUE	2	2	2			
16	66M–24411–01	.DIAPHRAGM .DIAPHRAGME	1	1	1			
17	66M–24423–00	.SPRING, DIAPHRAGM .RESSORT, DIAPHRAGME	1	1	1			
18	66M–13131–00	.PLUNGER .PLONGEUR	1	1	1			
19	66M–24374–00	.PIN .GOUPILLE	1	1	1			
20	66M–24454–00	.SPRING .RESSORT	1	1	1			
21	66M–24471–01	.DIAPHRAGM .DIAPHRAGME	1	1	1			
22	66M–24444–00	.SCREW .VIS	4	4	4			
23	95380–04600	.NUT .ECROU	4	4	4			
24	97095–06030	BOLT BOULON	2	2	2			
25	92995–06100	WASHER, SPRING RONDELLE, GROWER	2	2	2			
26	92995–06600	WASHER RONDELLE	2	2	2			
27	93210–20M65	O-RING JOINT TORIQUE	1	1	1			

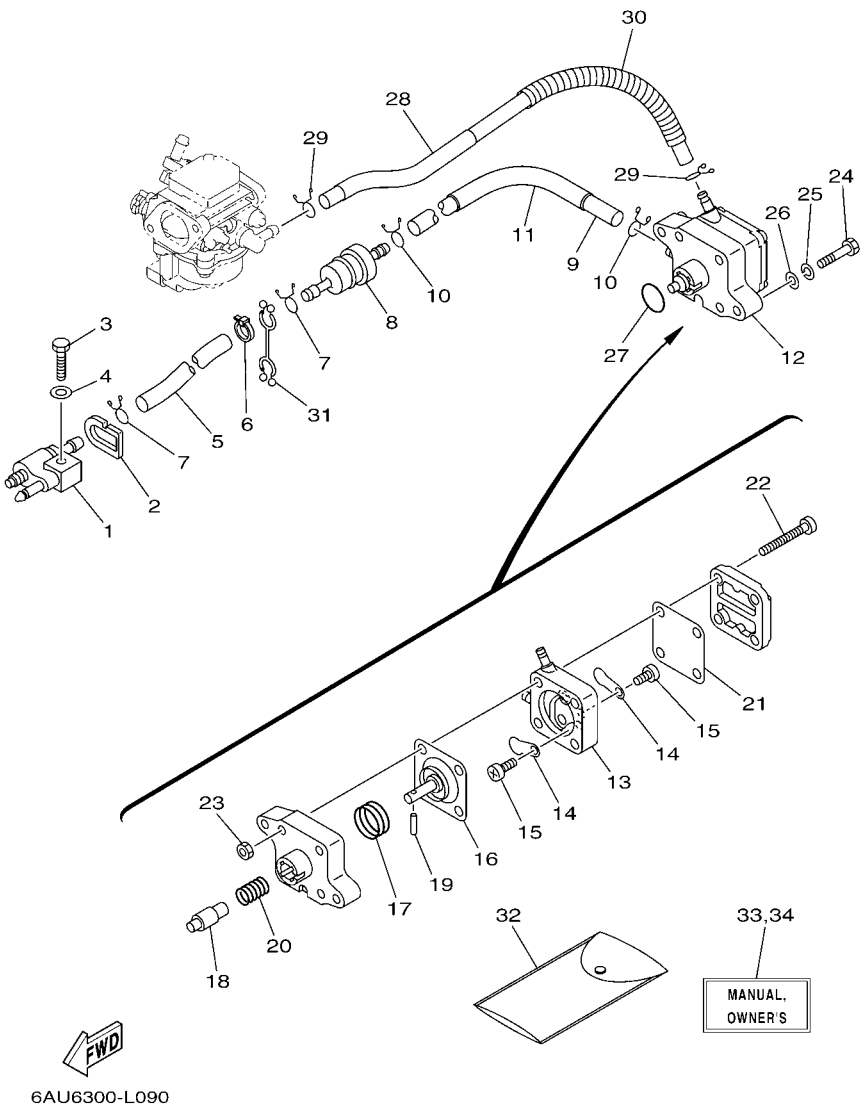

FIG. 9 FUEL CARBURANT

REF. NO.	PART NO. N° PIECES	DESCRIPTION DESCRIPTION	MH	E	EP			REMARKS REMARQUES
28	6AU–24311–00	PIPE, FUEL 1 DURITE A ESSENCE	1	1	1			
29	90467–09M09	CLIP JONC	2	2	2			
30	90447–10009	TUBE DURITE	1	1	1			
31	90464–10M53	CLAMP BRIDE	1	1	1			
32	68T–28100–00	TOOL KIT TROUSSE A OUTILS	1	1	1			AP AP
33	6AU–28199–75–E0	MANUAL,OWNER'S MANUEL D'UTILISATION	1	1	1			UR (E) UR (E)
	6AU–28199–75–F0	MANUAL,OWNER'S MANUEL D'UTILISATION	1	1	1			UR (F) UR (F)
	6AU–28199–75–S0	MANUAL,OWNER'S MANUEL D'UTILISATION	1	1	1			UR (ES) UR (ES)
	6AU–28199–75–G0	MANUAL,OWNER'S MANUEL D'UTILISATION	1	1	1			UR (D) UR (D)
	6AU–28199–75–D0	MANUAL,OWNER'S MANUEL D'UTILISATION	1	1	1			UR (NL) UR (NL)
	6AU–28199–75–H0	MANUAL,OWNER'S MANUEL D'UTILISATION	1	1	1			UR (I) UR (I)
34	6AU–28199–85–K0	MANUAL,OWNER'S MANUEL D'UTILISATION	1	1	1			UR (DK) UR (DK)
	6AU–28199–85–R0	MANUAL,OWNER'S MANUEL D'UTILISATION	1	1	1			UR (GR) UR (GR)
	6AU–28199–85–P0	MANUAL,OWNER'S MANUEL D'UTILISATION	1	1	1			UR (P) UR (P)
	6AU–28199–85–N0	MANUAL,OWNER'S MANUEL D'UTILISATION	1	1	1			UR (N) UR (N)
	6AU–28199–85–M0	MANUAL,OWNER'S MANUEL D'UTILISATION	1	1	1			UR (S) UR (S)
	6AU–28199–85–L0	MANUAL,OWNER'S MANUEL D'UTILISATION	1	1	1			UR (SF) UR (SF)

FIG. 10 STARTER DEMARREUR

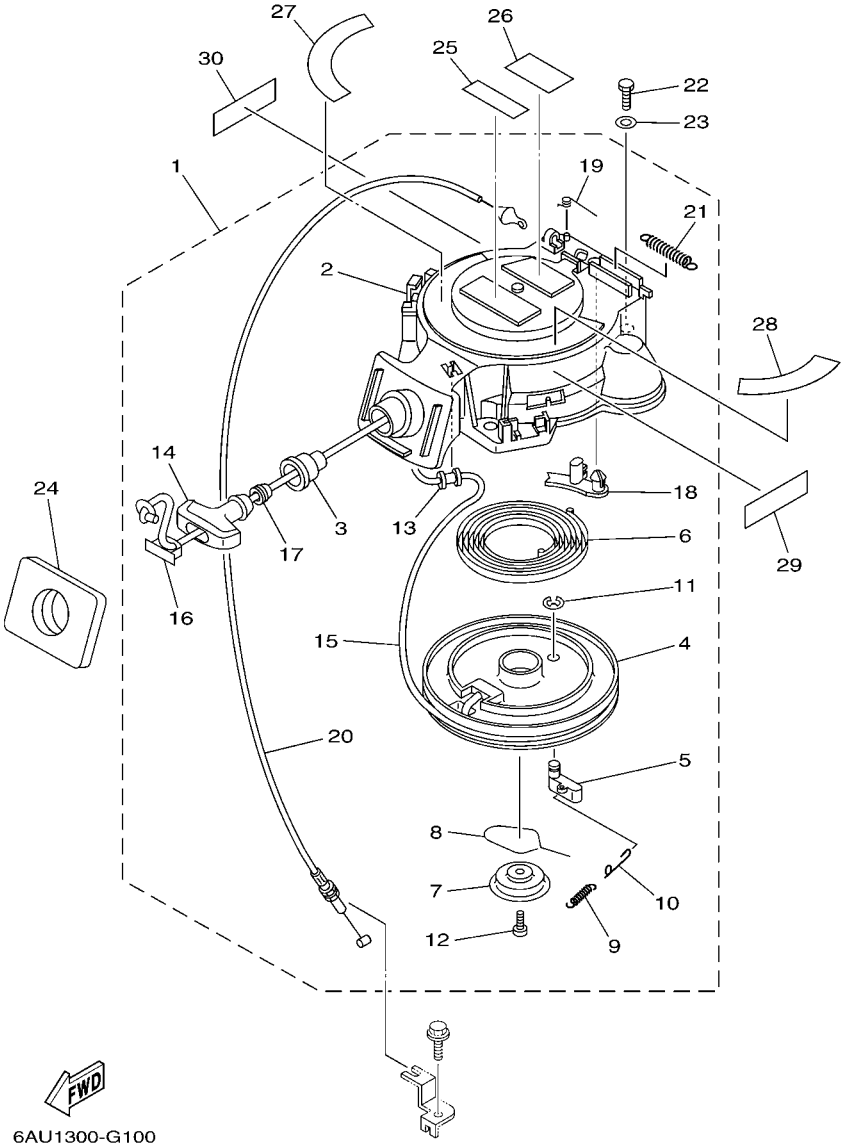

*1:CUT FROM 50M ROLLS,PART NO.90890-44373,CUTTING LENGTH 1.8M

*1:A PRELEVER SUR BOBINE 50M ,REFERENCE 90890-44373,
LONGUEUR DE COUPE 1.8M

REF. NO.	PART NO. N° PIECES	DESCRIPTION DESCRIPTION	MH	E	EP			REMARKS REMARQUES
1	68T–15710–13	STARTER ASSY DEMARREUR COMPLET	1					
2	68T–15711–03	.CASE, STARTER .CARTER DE DEMARREUR	1					
3	68T–15795–00	.GUIDE, ROPE .GUIDE DE CABLE	1					
4	63V–15714–00	.DRUM, SHEAVE .TAMBOUR, POULIE	1					
5	63V–15741–00	.PAWL, DRIVE .CLIQUET, ENTRAINEMENT	1					
6	63V–15713–00	.SPRING, STARTER .RESSORT DE DEMARREUR	1					
7	68T–15716–00	.PLATE, DRIVE .PLAQUE, ENTRAINEMENT	1					
8	63V–15705–01	.SPRING, DRIVE PAWL .RESSORT DE CLIQUET	1					
9	63V–15767–01	.SPRING .RESSORT	1					
10	68T–15784–00	.SPRING, RETURN .RESSORT, RAPPEL	1					
11	63V–15744–00	.CIRCLIP .CIRCLIP	1					
12	68T–15793–00	.SCREW .VIS	1					
13	68T–15764–00	.COLLAR 1 .COLLERETTE 1	1					
14	6G1–15755–00	.HANDLE, STARTER .POIGNEE, DE DEMARREUR	1					
15	*	.WIRE, STARTER (L:1800MM) .CABLE DE DEMARREUR (L:1800MM)	1					*1 *1
16	6G1–15779–00	.COVER .COUVERCLE	1					
17	6A0–15789–00	.DAMPER .AMORTISSEUR	1					
18	68T–15794–00	.STOPPER .BUTEE	1					
19	66T–15734–00	.SPRING, RETURN .RESSORT, RAPPEL	1					
20	68T–15770–00	.CABLE COMP., STARTER STOP .CABLE, BUTEE DE DEMAR	1					
21	66T–15731–00	.SPRING, RETURN .RESSORT, RAPPEL	1					
22	97095–06020	BOLT BOULON	3					
23	92995–06600	WASHER RONDELLE	3					
24	68T–15762–00	SEAL, RUBBER 2 JOINT CAOUTCHOUC 2	1					
25	6AH–81995–40	LABEL, WARNING ETIQUETTE, AVERTISSEMENT	1					
26	6AH–81995–50	LABEL, WARNING ETIQUETTE, AVERTISSEMENT	1					
27	6AU–13437–60	MARK, CAUTION MAKER	1					

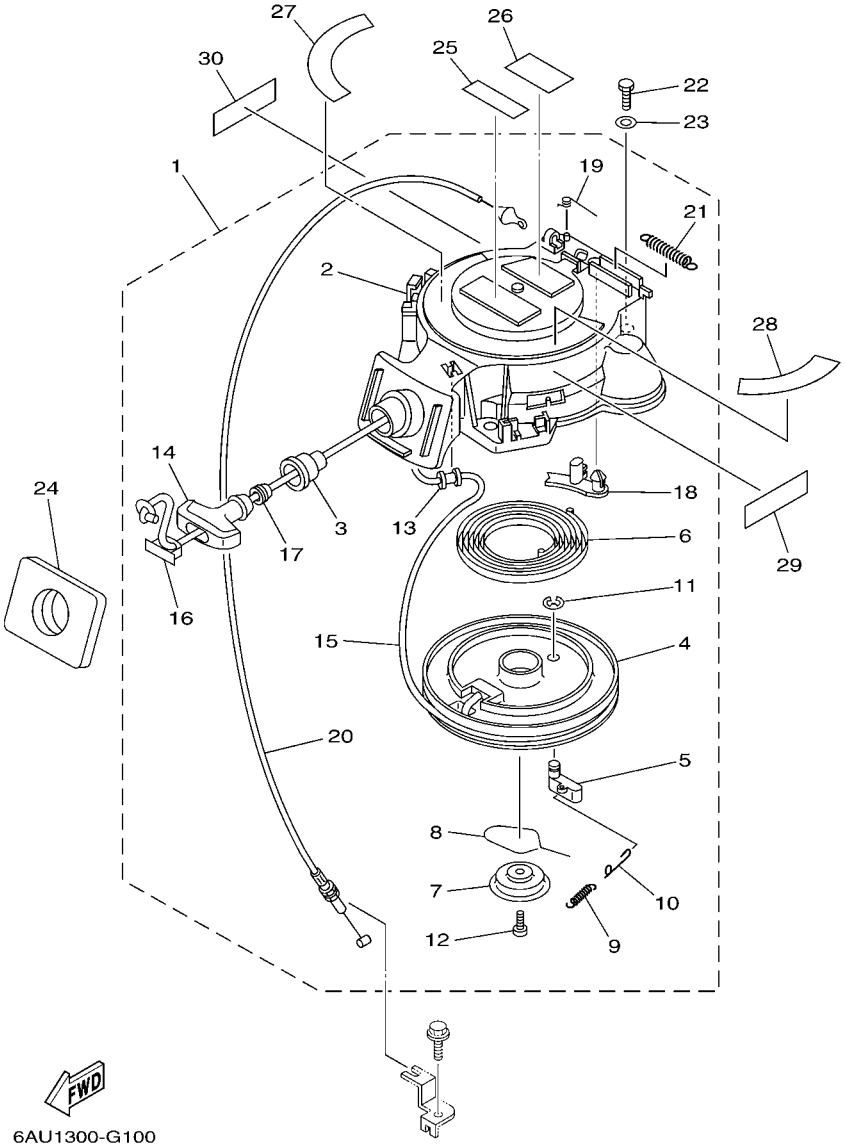

*1:CUT FROM 50M ROLLS,PART NO.90890-44373,CUTTING LENGTH 1.8M

*1:A PRELEVER SUR BOBINE 50M ,REFERENCE 90890-44373,
LONGUEUR DE COUPE 1.8M

FIG. 10 STARTER DEMARREUR

REF. NO.	PART NO. N° PIECES	DESCRIPTION DESCRIPTION	MH	E	EP			REMARKS REMARQUES
28	68T–85711–60	MARK, CAUTION MAKER	1					
29	6AH–81994–40	LABEL, SAFETY ETIQUETTE, SECURITE	1					
30	6AH–81994–50	LABEL, SAFETY ETIQUETTE, SECURITE	1					

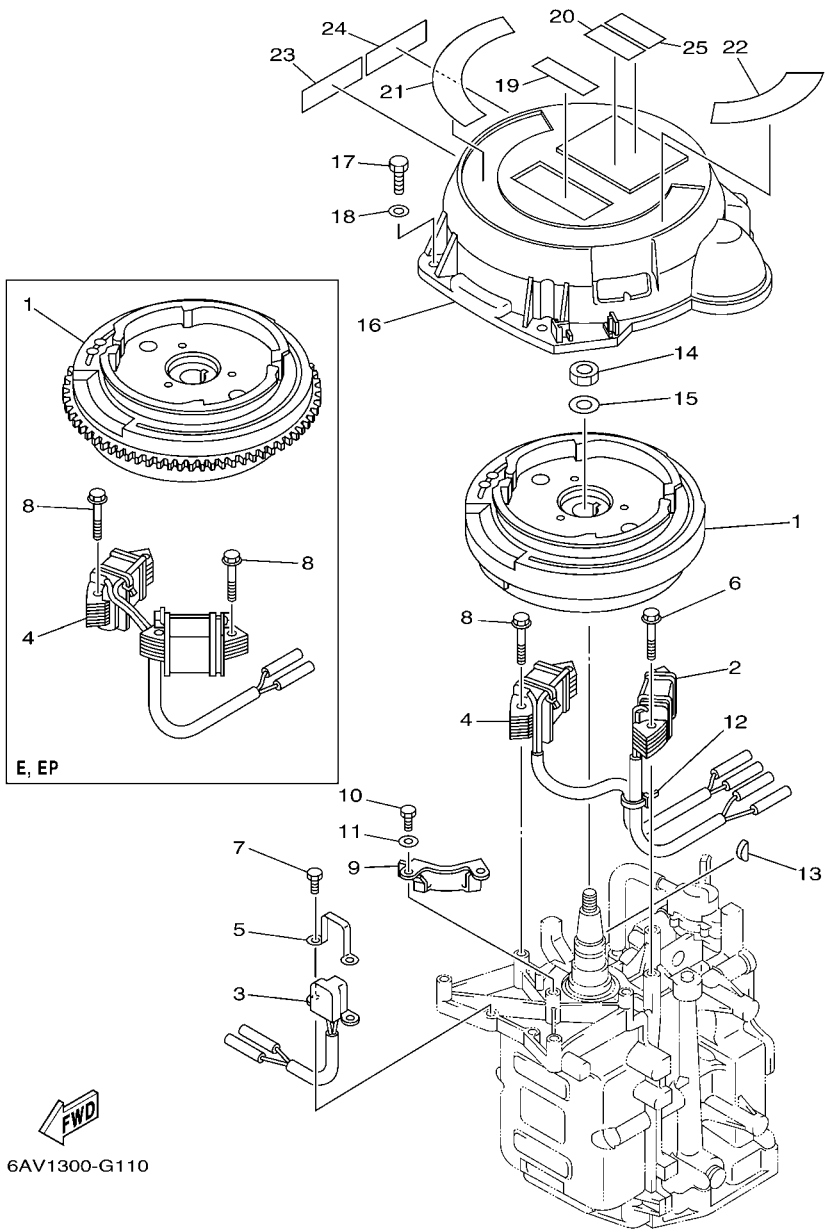

FIG. 11 GENERATOR GENERATRICE

REF. NO.	PART NO. N° PIECES	DESCRIPTION DESCRIPTION	MH	E	EP			REMARKS REMARQUES
1	68T–85550–01	ROTOR ASSY ROTOR CPLT	1					
	68T–85550–11	ROTOR ASSY ROTOR CPLT		1	1			
2	68T–85520–00	COIL, CHARGE BOBINE, CHARGE	1	1	1			
3	68T–85580–01	COIL, PULSER BOBINE, PULSEUR	1	1	1			
4	68T–85533–00	COIL, LIGHTING BOBINE, ECLAIRAGE	1					
	68T–85533–10	COIL, LIGHTING BOBINE, ECLAIRAGE		1	1			
5	6H2–85582–00	ATTACHMENT, PULSER SUPPORT, PULSEUR	1	1	1			
6	90119–06014	BOLT, WITH WASHER BOULON, AVEC RONDELLE	2	2	2			
7	97095–05010	BOLT BOULON	2	2	2			
8	90119–06MA1	BOLT, WITH WASHER BOULON, AVEC RONDELLE	2					
	90119–06MA1	BOLT, WITH WASHER BOULON, AVEC RONDELLE		4	4			
9	68T–81328–00	CLAMP COLLIER	1					
10	97013–06012	BOLT BOULON	2					
11	92903–06600	WASHER, PLATE RONDELLE, PLATE	2					
12	90465–11M10	CLAMP BRIDE	1	1	1			
13	90280–04M06	KEY, WOODRUFF CLAVETTE, DEMI-LUNE	1	1	1			
14	90170–12066	NUT ECROU	1	1	1			
15	90201–12472	WASHER, PLATE RONDELLE, PLATE	1	1	1			
16	6AV–81337–00	COVER, FLYWHEEL COUVERCLE, VOLANT		1	1			
17	97095–06020	BOLT BOULON		3	3			
18	92995–06600	WASHER RONDELLE		3	3			
19	6AH–81995–40	LABEL, WARNING ETIQUETTE, AVERTISSEMENT		1	1			
20	6AH–81995–50	LABEL, WARNING ETIQUETTE, AVERTISSEMENT		1	1			
21	6AU–13437–60	MARK, CAUTION MAKER		1	1			
22	68T–85711–60	MARK, CAUTION MAKER		1	1			
23	6AH–81994–40	LABEL, SAFETY ETIQUETTE, SECURITE		1	1			
24	6AH–81994–50	LABEL, SAFETY ETIQUETTE, SECURITE		1	1			

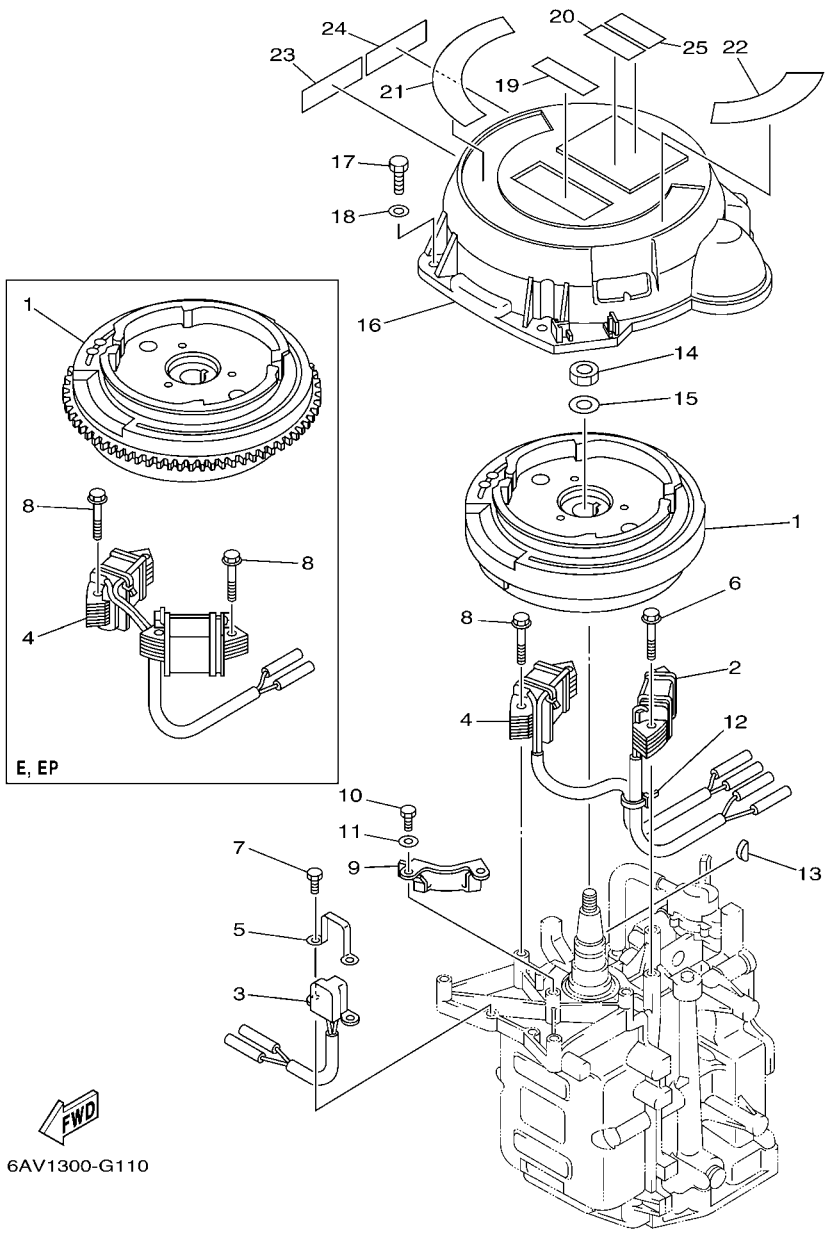

FIG. 11 GENERATOR GENERATRICE

REF. NO.	PART NO. N° PIECES	DESCRIPTION DESCRIPTION	MH	E	EP			REMARKS REMARQUES
25	6AG–81996–00	MARK MARQUE		1	1			

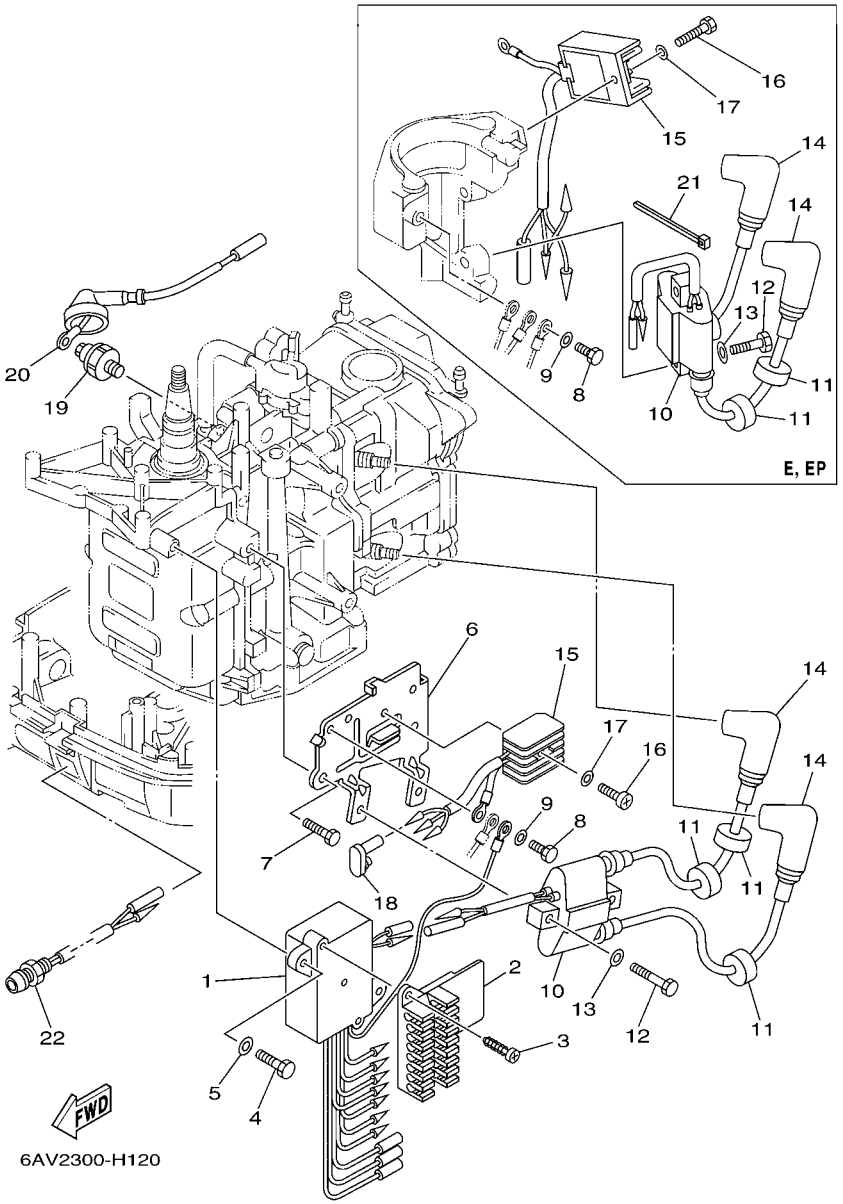

FIG. 12 ELECTRICAL 1 — PARTIE ELECTRIQUE 1

REF. NO.	PART NO. N° PIECES	DESCRIPTION DESCRIPTION	MH	E	EP			REMARKS REMARQUES
1	68T–85540–00	C.D.I. UNIT ASSY BLOC C.D.I.	1	1	1			
2	68T–82522–00	CLAMP, COUPLER BRIDE, DE CONNECTEUR	1	1	1			
3	97780–40512	SCREW, TAPPING VIS, TETE BOMBEE	2	2	2			
4	97095–06020	BOLT BOULON	2	2	2			
5	92995–06600	WASHER RONDELLE	2	2	2			
6	68T–85542–00	BRACKET SUPPORT	1					
7	97095–08012	BOLT BOULON	2					
8	97095–06012	BOLT BOULON	1	1	1			
9	92995–06600	WASHER RONDELLE	1	1	1			
10	680–85570–02	IGNITION COIL ASSY BOBINE D'ALLUMAGE (ENS.)	1	1	1			
11	90480–25003	GROMMET PASSE-FIL	3	3	3			
12	97095–06025	BOLT BOULON	2	2	2			
13	92995–06600	WASHER RONDELLE	2	2	2			
14	6E3–82370–21	PLUG CAP ASSY ANTIPARASITE	2	2	2			
15	664–81970–62	RECTIFIER ASSY REDRESSEUR COMPLET	1					
	68T–81960–00	RECTIFIER & REGULATOR ASSY REDRESSEUR REGULATEUR CPLT		1	1			
16	97880–05025	SCREW, PAN HEAD VIS, TETE TRONCONIQUE	1					
	97095–06012	BOLT BOULON		1	1			
17	92990–05600	WASHER, PLATE RONDELLE, PLATE	1					
	92995–06600	WASHER RONDELLE		1	1			
18	6A0–82119–00	COVER, LEAD WIRE GARNITURE, FIL	1					
19	67F–82504–00	OIL PRESSURE SWITCH ASSY CONTACTEUR DE PRESSION D'HUILE	1	1	1			
20	68T–82127–10	WIRE, LEAD 2 FIL 2	1	1	1			
21	90465–11M10	CLAMP BRIDE		1	1			
22	68T–85410–00	EMERGENCY SIGNAL LIGHT ASSY FEU DE DETRESSE	1	1	1			

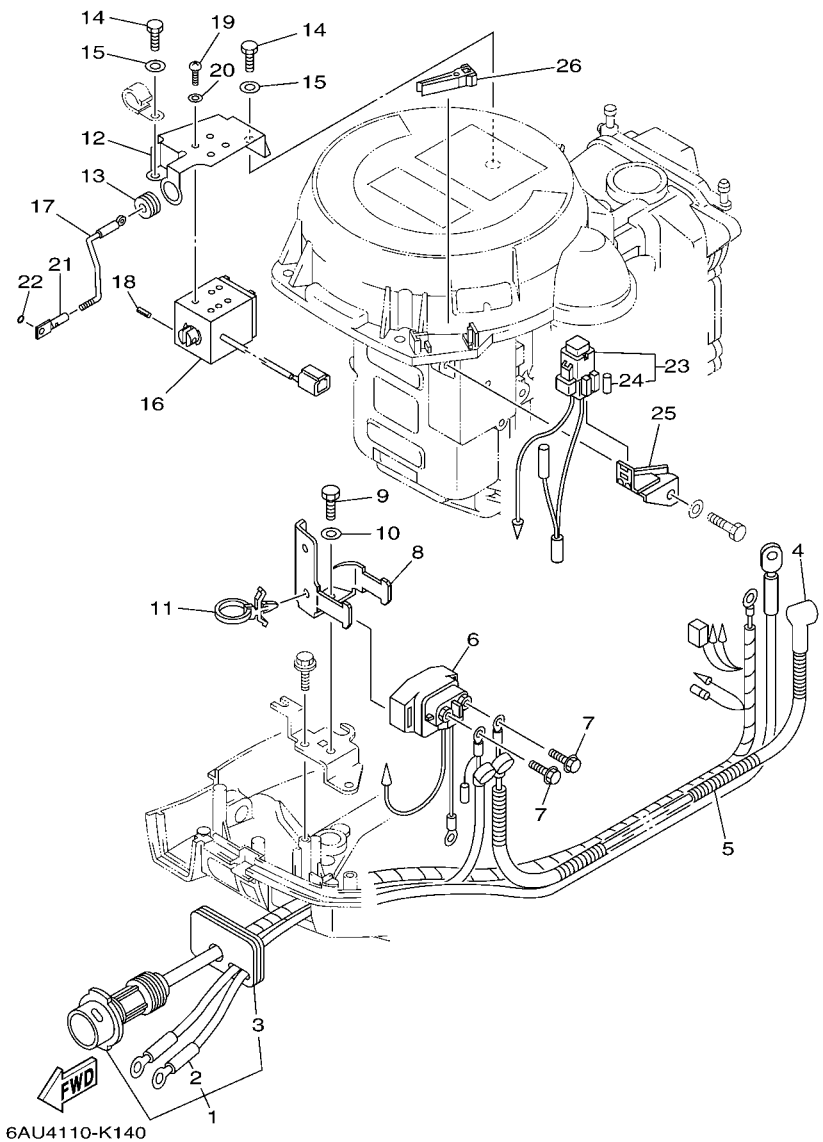

FIG. 13 ELECTRICAL 2 — PARTIE ELECTRIQUE 2

REF. NO.	PART NO. N° PIECES	DESCRIPTION DESCRIPTION	MH	E	EP			REMARKS REMARQUES
1	69G–82580–00	WIRE HARNESS ASSY 2 FAISCEAU DE FILS 2 CPLT		1				
2	69G–82105–00	.WIRE HARNESS (L: 3.0M) .FAISCEAU DE FILS (L: 3.0M)		1				
3	68T–42724–40	.GROMMET .PASSE-FIL		1				
4	6G8–82117–00	WIRE, LEAD FIL		1				
5	90446–10M86	HOSE (L140) DURITE (L140)		1				
6	68T–81940–00	STARTER RELAY ASSY LANCEUR RELAIS (ENS.)		1				
7	97595–06610	BOLT, WITH WASHER VIS HEXAGONAL AVC RONDELLE		2				
8	68T–81945–01	PLATE, SWITCH FITTING PLAQUE, FIXATION DU RELAIS		1				
9	97095–06012	BOLT BOULON		1				
10	92995–06600	WASHER RONDELLE		1				
11	90465–12M56	CLAMP BRIDE		1				
12	68T–86112–00	STAY, SOLENOID SUPPORT, SOLENOIDE		1				
13	90480–13018	GROMMET PASSE-FIL		1				
14	97095–06012	BOLT BOULON		2				
15	92995–06600	WASHER RONDELLE		2				
16	68T–86111–00	COIL, SOLENOID BOBINE		1				
17	68T–41237–00	JOINT, LINK RACCORD		1				
18	91690–30010	PIN, SPRING AGRAFFE		1				
19	97880–04008	SCREW, PAN HEAD VIS, TETE TRONCONIQUE		4				
20	92990–04600	WASHER, PLATE RONDELLE, PLATE		4				
21	68T–86117–00	HOOK, WIRE PULL CROCHET, TENSION DE CABLE		1				
22	93210–03261	O-RING JOINT TORIQUE		1				
23	68T–82150–00	FUSE HOLDER ASSY SUPPORT DE FUSIBLE		1				
24	66V–82151–00	.FUSE (10A-BL) .FUSIBLE (10A-BL)		2				
25	68T–82171–01	STAY, FUSE BOX SUPPORT, BOITE A FUSIBLES		1				
26	67F–2812A–00	PULLER, FUSE TENDEUR, FUSIBLE		1				

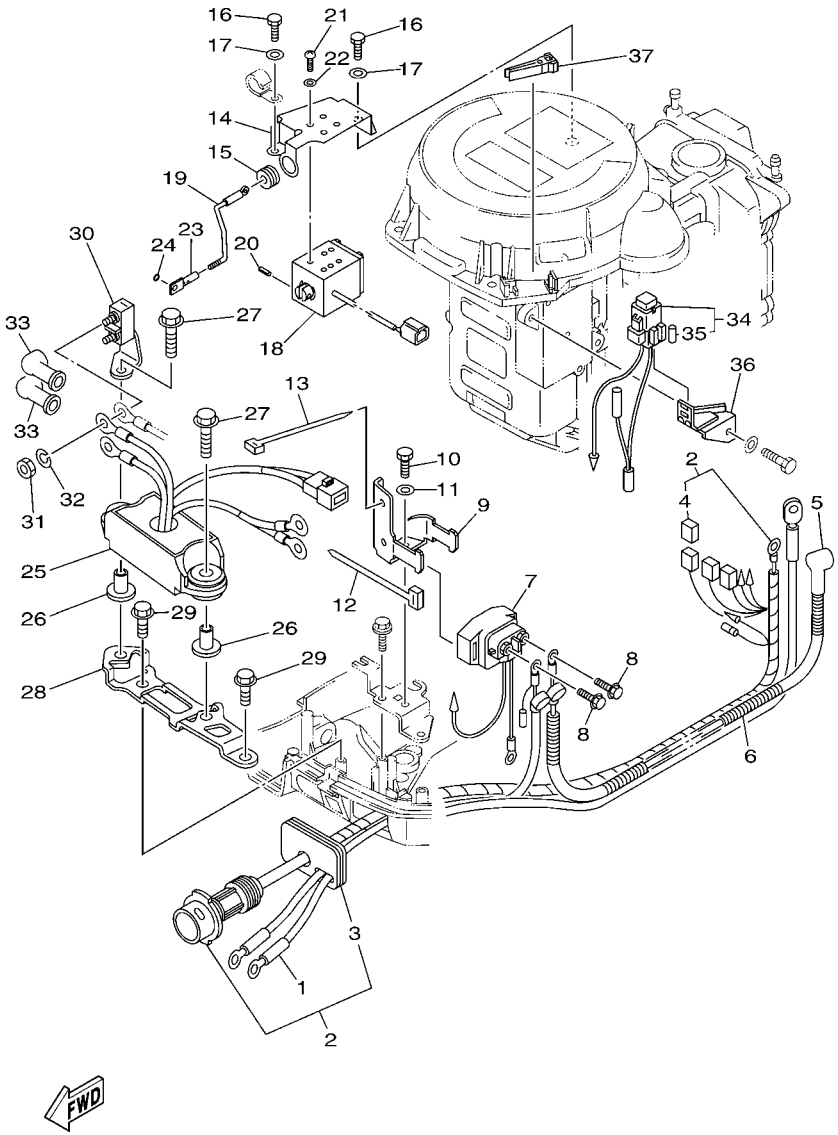

FIG. 14 ELECTRICAL 3 — PARTIE ELECTRIQUE 3

REF. NO.	PART NO. N° PIECES	DESCRIPTION DESCRIPTION	MH	E	EP			REMARKS REMARQUES
1	69G–82105–00	WIRE HARNESS (L: 3.0M) FAISCEAU DE FILS (L: 3.0M)			1			
2	69G–82590–10	WIRE HARNESS ASSY FAISCEAU DE FILS COMPLET			1			
3	68T–42724–40	.GROMMET .PASSE-FIL			1			
4	6N6–82582–00	.COVER, WIRE HARNESS .COUVERCLE, FAISCEAU DE FILS			1			
5	6G8–82117–00	WIRE, LEAD FIL			1			
6	90446–10M86	HOSE (L140) DURITE (L140)			1			
7	68T–81940–00	STARTER RELAY ASSY LANCEUR RELAIS (ENS.)			1			
8	97595–06610	BOLT, WITH WASHER VIS HEXAGONAL AVC RONDELLE			2			
9	68T–81945–01	PLATE, SWITCH FITTING PLAQUE, FIXATION DU RELAIS			1			
10	97095–06012	BOLT BOULON			1			
11	92995–06600	WASHER RONDELLE			1			
12	90465–13M11	CLAMP BRIDE			1			
13	90465–13M11	CLAMP BRIDE			1			
14	68T–86112–00	STAY, SOLENOID SUPPORT, SOLENOIDE			1			
15	90480–13018	GROMMET PASSE-FIL			1			
16	97095–06012	BOLT BOULON			2			
17	92995–06600	WASHER RONDELLE			2			
18	68T–86111–00	COIL, SOLENOID BOBINE			1			
19	68T–41237–00	JOINT, LINK RACCORD			1			
20	91690–30010	PIN, SPRING AGRAFFE			1			
21	97880–04008	SCREW, PAN HEAD VIS, TETE TRONCONIQUE			4			
22	92990–04600	WASHER, PLATE RONDELLE, PLATE			4			
23	68T–86117–00	HOOK, WIRE PULL CROCHET, TENSION DE CABLE			1			
24	93210–03261	O-RING JOINT TORIQUE			1			
25	69G–81950–00	RELAY ASSY RELAIS COMPLET			1			
26	90387–06M03	COLLAR COLLERETTE			2			
27	90119–06M56	BOLT, WITH WASHER BOULON, AVEC RONDELLE			2			

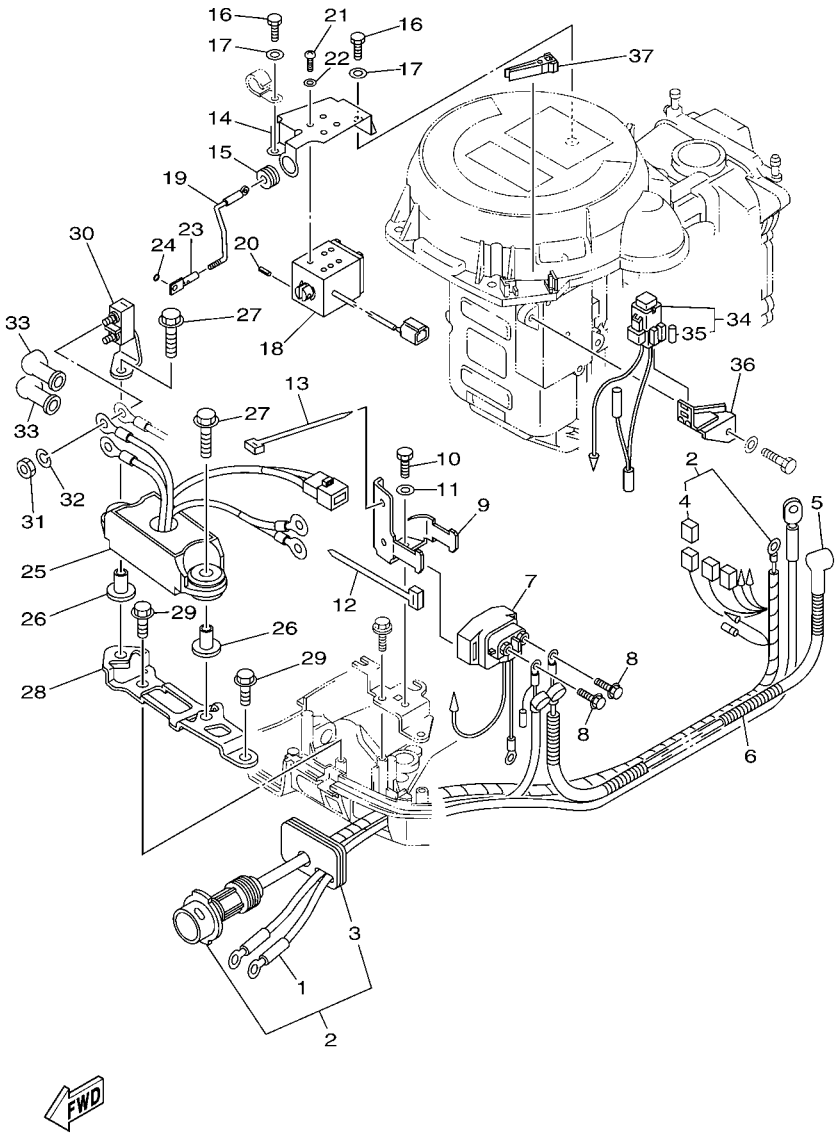

FIG. 14 ELECTRICAL 3 — PARTIE ELECTRIQUE 3

REF. NO.	PART NO. N° PIECES	DESCRIPTION DESCRIPTION	MH	E	EP			REMARKS REMARQUES
28	69G–81948–01	BRACKET SUPPORT			1			
29	90109–06M86	BOLT BOULON			2			
30	69G–81925–00	TERMINAL BORNE			1			
31	90170–06M30	NUT ECROU			2			
32	90204–06M00	WASHER, SPRING RONDELLE, GROWER			2			
33	6G5–82119–00	COVER, LEAD WIRE GARNITURE, FIL			2			
34	68T–82150–00	FUSE HOLDER ASSY SUPPORT DE FUSIBLE			1			
35	66V–82151–00	.FUSE (10A-BL) .FUSIBLE (10A-BL)			2			
36	68T–82171–01	STAY, FUSE BOX SUPPORT, BOITE A FUSIBLES			1			
37	67F–2812A–00	PULLER, FUSE TENDEUR, FUSIBLE			1			

FIG. 15 ELECTRICAL 4 PARTIE ELECTRIQUE 4

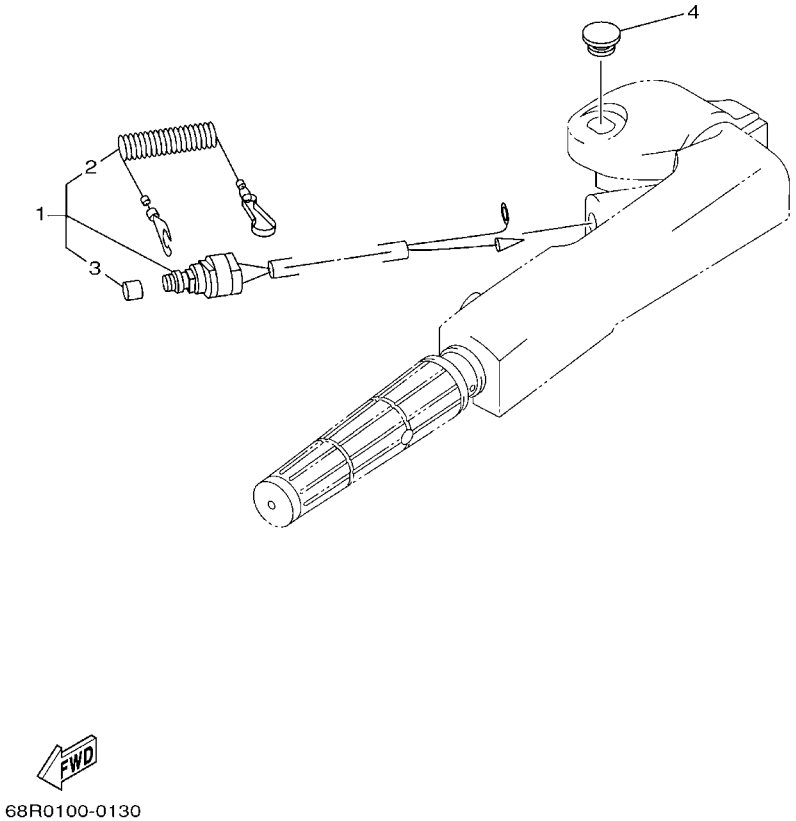

REF. NO.	PART NO. N° PIECES	DESCRIPTION DESCRIPTION	MH	E	EP			REMARKS REMARQUES
1	65W–82575–01	ENGINE STOP SWITCH ASSY COUPE CIRCUIT CPLT	1					
2	682–82556–00	.LANYARD, STOP SWITCH .CORDON DU COUPE CIRCUIT	1					
3	689–8257Y–00	.CAP .COUVERCLE	1					
4	6G1–42725–00	GROMMET PASSE-FIL	1					

FIG. 16 STARTING MOTOR DEMARREUR ELECTRIQUE

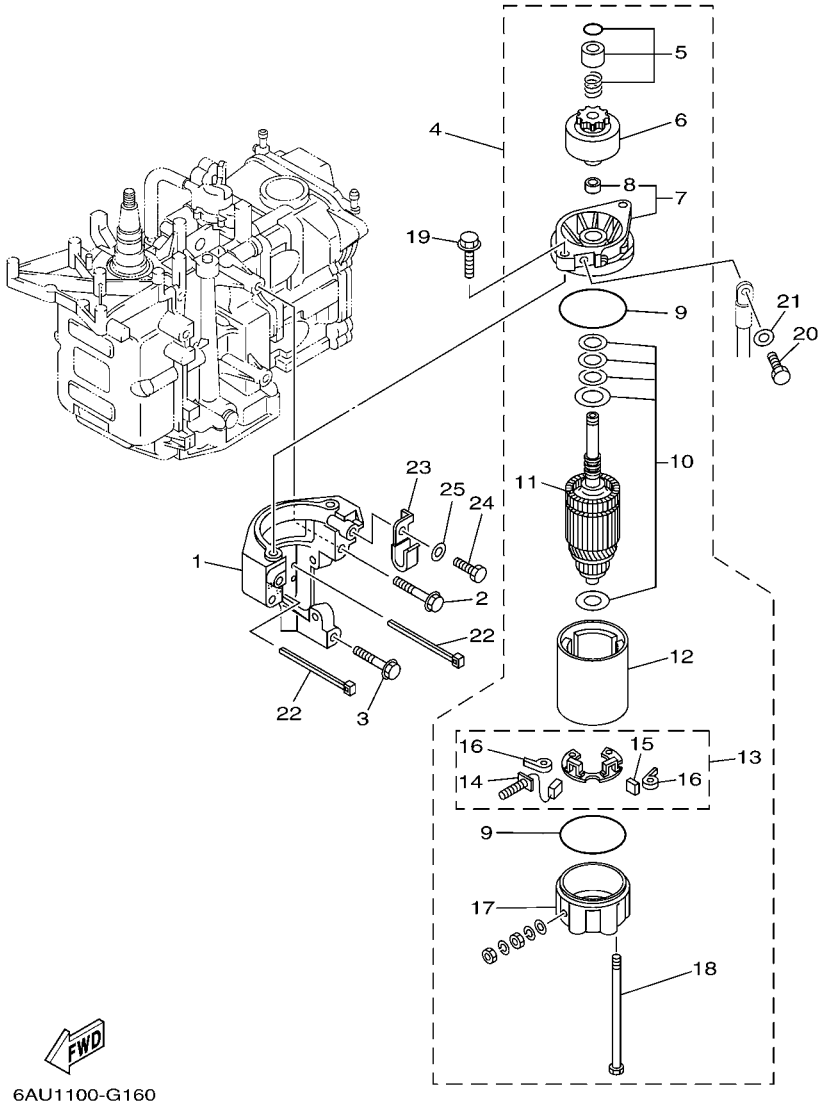

REF. NO.	PART NO. N° PIECES	DESCRIPTION DESCRIPTION	MH	E	EP			REMARKS REMARQUES
1	68T–81822–01–94	BRACKET, STARTING MOTOR SUPPORT, DEMARREUR ELECTRIQUE		1	1			
2	90119–08046	BOLT, WITH WASHER BOULON, AVEC RONDELLE		2	2			
3	90119–08020	BOLT, WITH WASHER BOULON, AVEC RONDELLE		1	1			
4	68T–81800–00	STARTING MOTOR ASSY DEMARREUR ELECTRIQUE COMPLET		1	1			
5	68T–81857–00	.RETAINER .ARRETOIR		1	1			
6	689–81807–12	.GEAR ASSY, STARTING MOTOR .PIGNON, DEMARREUR ELECTRIQUE		1	1			
7	6F5–81830–10	.FRONT BRACKET ASSY .SUPPORT AVANT		1	1			
8	689–81831–00	..METAL, FRONT ..METAL, AVANT		1	1			
9	689–81847–11	.O-RING .JOINT TORIQUE		2	2			
10	689–81809–11	.WASHER KIT .JEU DE RONDELLES		1	1			
11	689–81850–11	.ARMATURE ASSY .INDUIT		1	1			
12	689–81810–11	.STATOR ASSY .STATOR COMPLET		1	1			
13	689–81840–11	.BRUSH HOLDER ASSY .SUPPORT DE CHARBON		1	1			
14	689–81811–11	..BRUSH 1 ..CHARBON 1		1	1			
15	689–81812–11	..BRUSH 2 ..CHARBON 2		1	1			
16	689–81813–10	..SPRING, BRUSH ..RESSORT, DE CHARBON		2	2			
17	689–81820–11	.REAR BRACKET ASSY .SUPPORT ARRIERE COMPLET		1	1			
18	689–81826–10	.BOLT .BOULON		2	2			
19	90119–08M76	BOLT, WITH WASHER BOULON, AVEC RONDELLE		2	2			
20	97095–08016	BOLT BOULON		1	1			
21	92995–08600	WASHER RONDELLE		1	1			
22	90465–11M10	CLAMP BRIDE		2	2			
23	90465–08M99	CLAMP BRIDE		1	1			
24	97095–06012	BOLT BOULON		1	1			
25	92995–06600	WASHER RONDELLE		1	1			

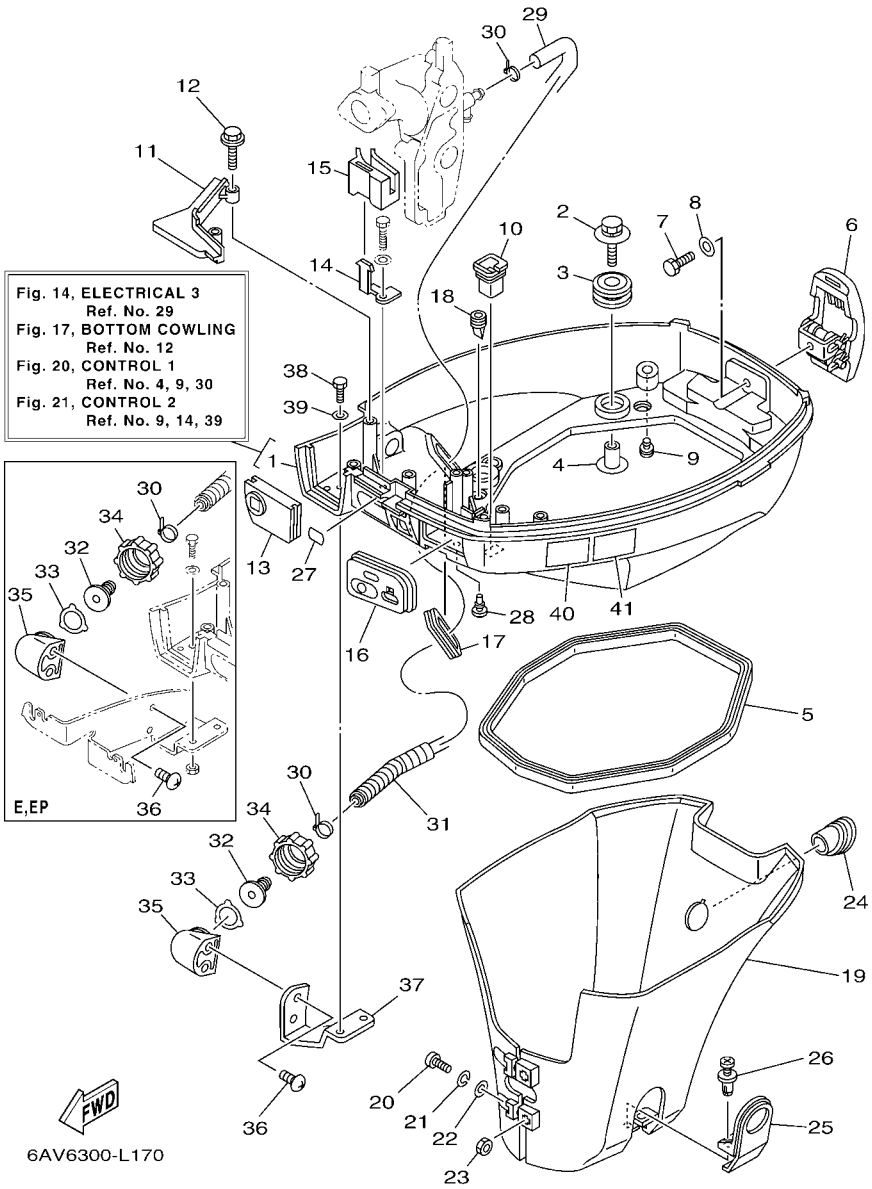

FIG. 17 BOTTOM COWLING CAPOT INFERIEUR

REF. NO.	PART NO. N° PIECES	DESCRIPTION DESCRIPTION	MH	E	EP			REMARKS REMARQUES
1	68T–42710–01–4D	BOTTOM COWLING ASSY ENS. EMBASE	1	1	1			WITH TAPPING BOLT WITH TAPPING BOLT
2	68F–85119–00	BOLT BOULON	4	4	4			
3	90480–21M82	GROMMET PASSE-FIL	4	4	4			
4	90387–06176	COLLAR COLLERETTE	4	4	4			
5	68T–42716–10	RUBBER, SEAL 1 JOINT EN CAOUTCHOUC 1	1	1	1			
6	6AU–42801–00	COWLING CLAMP COMP. BRIDE DE CAPOT COMP.	1	1	1			
7	97095–06012	BOLT BOULON	1	1	1			
8	92995–06600	WASHER RONDELLE	1	1	1			
9	6BL–44391–00	NIPPLE, HOSE RACCORD D'ESSENCE	1	1	1			
10	682–42727–00	GROMMET PASSE-FIL	1	1	1			
11	68T–42738–00–4D	PLATE, FITTING ETRIER	1	1	1			
12	90109–06M81	BOLT BOULON	2	2	2			
13	68T–42725–00	GROMMET PASSE-FIL	1					
	68T–42725–10	GROMMET PASSE-FIL		1	1			
14	68T–26393–00	HOLDER SUPPORT	1					
15	68T–26367–00	PROTECTOR PROTECTEUR	1					
16	68T–42724–20	GROMMET PASSE-FIL	1					
17	688–42726–10	GROMMET PASSE-FIL	1	1				FLUSHING KIT FLUSHING KIT
	69G–42726–00	GROMMET PASSE-FIL			1			FLUSHING KIT FLUSHING KIT
18	65W–42717–00	RUBBER, SEAL 2 JOINT EN CAOUTCHOUC 2	2	2	2			
19	68T–42741–00	APRON CAPOT LATERAL	1	1	1			
20	97885–06030	SCREW, PAN HEAD VIS, A ENCOCHE	2	2	2			
21	92995–06100	WASHER, SPRING RONDELLE, GROWER	2	2	2			
22	92995–06600	WASHER RONDELLE	2	2	2			
23	95380–06600	NUT, HEXAGON ECROU	2	2	2			
24	68T–42717–00	RUBBER, SEAL 2 JOINT EN CAOUTCHOUC 2	1	1	1			
25	68T–42771–00	APRON CAPOT LATERAL	1	1	1			

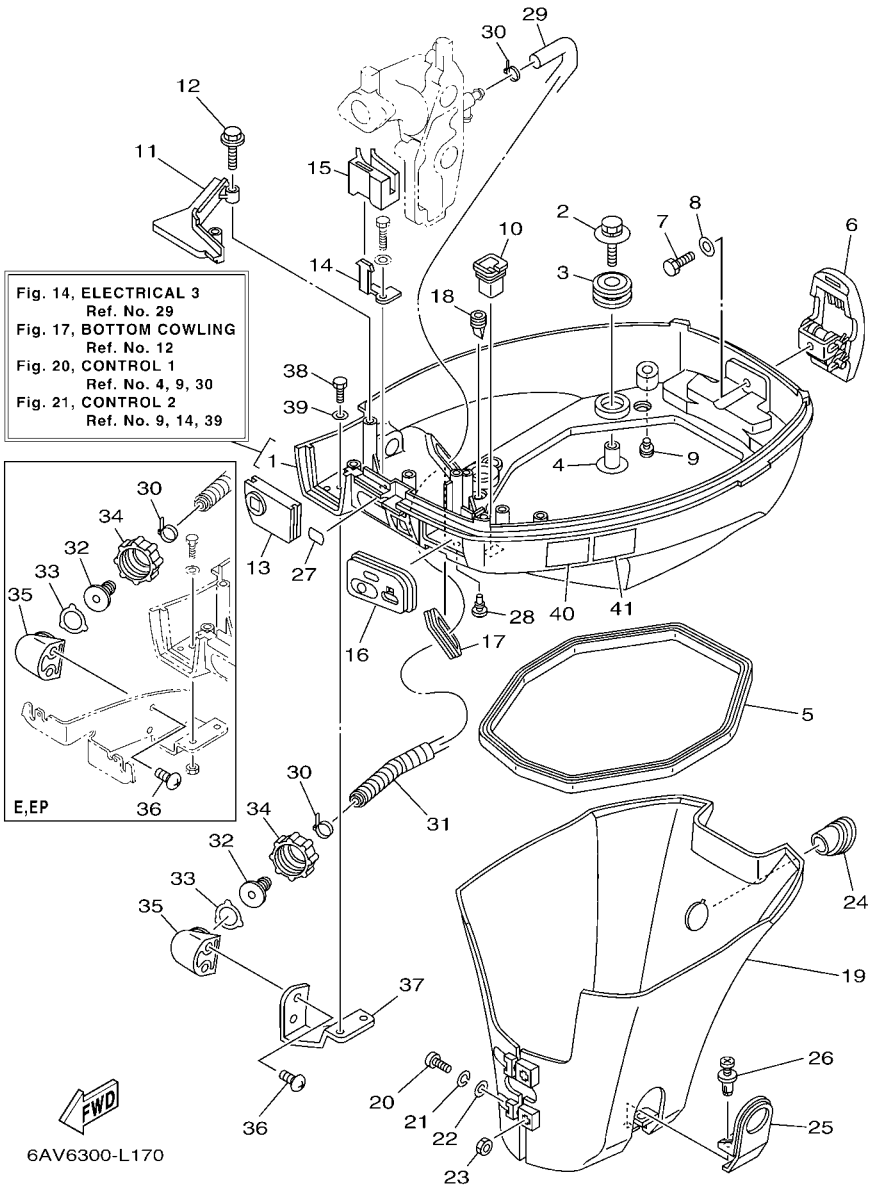

FIG. 17 BOTTOM COWLING CAPOT INFERIEUR

REF. NO.	PART NO. N° PIECES	DESCRIPTION DESCRIPTION	MH	E	EP			REMARKS REMARQUES
26	90338–06M20	PLUG PLOT	2	2	2			
27	65W–84342–00	SEAT, EMBLEM SIEGE, EMBLEME	1	1	1			
28	90480–06M19	GROMMET PASSE-FIL		1	1			
29	6E5–12481–00	PIPE 1 DURITE 1	1	1	1			FLUSHING KIT FLUSHING KIT
30	90465–11M10	CLAMP BRIDE	2	2	2			FLUSHING KIT FLUSHING KIT
31	90447–13M00	TUBE DURITE	1	1	1			FLUSHING KIT FLUSHING KIT
32	6R3–12582–00	JOINT, HOSE 2 RACCORD DE TUYAU 1	1	1	1			FLUSHING KIT FLUSHING KIT
33	6R3–12583–00	GASKET, HOSE JOINT JOINT	1	1	1			FLUSHING KIT FLUSHING KIT
34	6R3–12581–00	JOINT, HOSE 1 JOINT DE TUYAU	1	1	1			FLUSHING KIT FLUSHING KIT
35	68T–12572–00	ADAPTER ADAPTATEUR	1	1	1			FLUSHING KIT FLUSHING KIT
36	90167–06002	SCREW, TAPPING VIS, TETE FRAISEE	2	2	2			FLUSHING KIT FLUSHING KIT
37	68T–12535–00	PLATE PLAQUE	1					FLUSHING KIT FLUSHING KIT
38	97095–06012	BOLT BOULON	2					FLUSHING KIT FLUSHING KIT
39	92995–06600	WASHER RONDELLE	2					FLUSHING KIT FLUSHING KIT
40	6AH–42794–40	LABEL, WARNING (GENERAL) ETIQUETTE, AVERTISSEMENT	1	1	1			
41	6AH–42794–50	LABEL, WARNING (GENERAL) ETIQUETTE, AVERTISSEMENT	1	1	1			

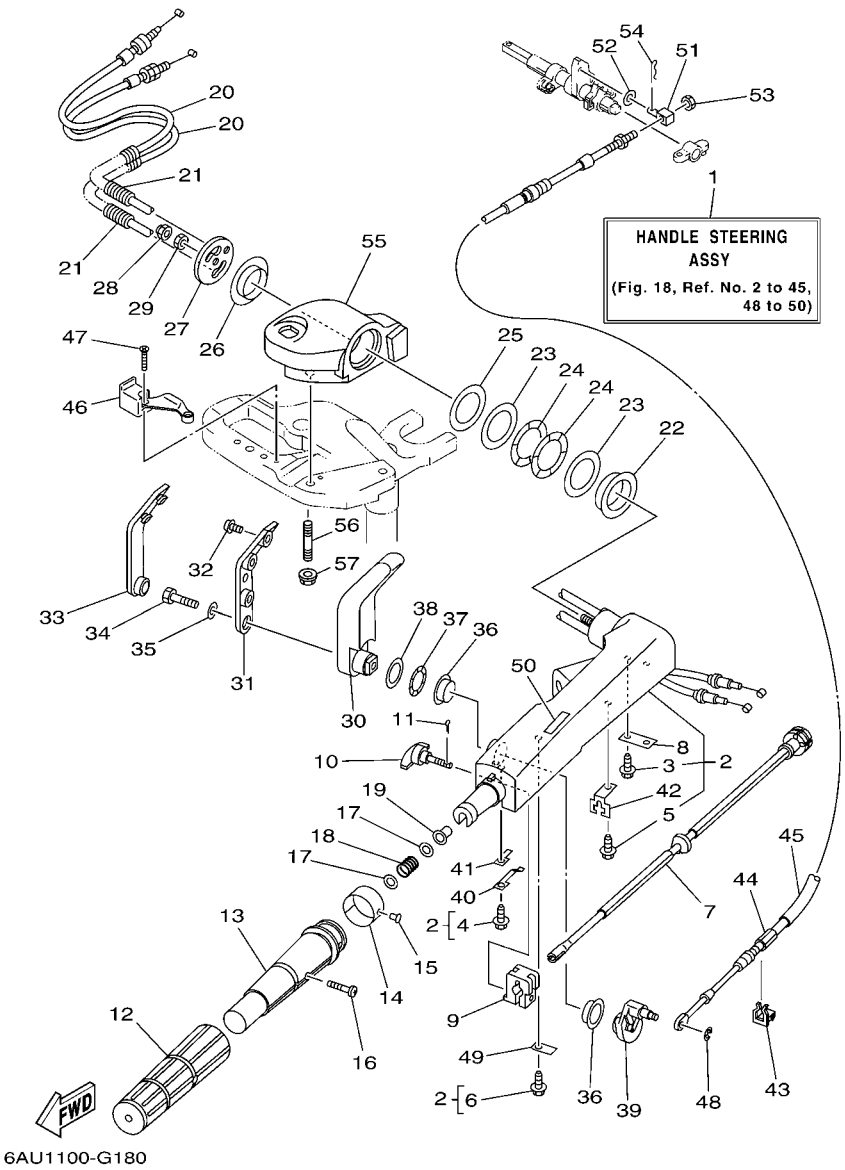

FIG. 18 STEERING DIRECTION

REF. NO.	PART NO. N° PIECES	DESCRIPTION DESCRIPTION	MH	E	EP			REMARKS REMARQUES
1	69G–W0084–01–4D	HANDLE STEERING ASSY BARRE FRANCHE (ENS.)	1					
2	66R–42101–01–4D	HANDLE, STEERING POIGNEE	1					
3	90109–06M86	.BOLT .BOULON	2					
4	90109–06M80	.BOLT .BOULON	1					
5	90109–06M80	.BOLT .BOULON	1					
6	90109–06M80	.BOLT .BOULON	1					
7	69G–42138–00	LEVER, THROTTLE LEVIER, ACCELERATEUR	1					
8	65W–42159–00	STAY SUPPORT	1					
9	6G1–42126–00	FRICTION, STEERING HANDLE GRIP CUVETTE, POIGNEE DE DIRECTION	1					
10	65W–42125–00	BOLT, FRICTION ADJUSTING BOULON	1					
11	91490–16010	PIN. COTTER GOUPILLE	1					
12	67D–42177–00	RUBBER, HANDLE CAOUTCHOUC, POIGNEE	1					
13	67D–42119–01	GRIP, STEERING HANDLE POIGNEE, BARRE FRANCHE	1					
14	6AU–42137–01	INDICATOR, THROTTLE INDICATEUR, ACCELERATION	1					
15	90269–02M09	RIVET RIVET	1					
16	90152–05011	SCREW, COUNTERSUNK VIS, TETE NOYEE	1					
17	90201–10M02	WASHER, PLATE RONDELLE, PLATE	2					
18	90501–23215	SPRING, COMPRESSION RESSORT, COMPRESSION	1					
19	90386–08032	BUSH DOUILLE	1					
20	68T–26301–11	THROTTLE CABLE ASSY CABLE D'ACCELERATEUR	2					
21	90447–07005	TUBE DURITE	2					
22	66R–42171–00	BUSHING COUSSINET	1					
23	90201–43M00	WASHER, PLATE RONDELLE, PLATE	2					
24	90206–43M22	WASHER, WAVE RONDELLE, ONDULEE	2					
25	90202–43M57	WASHER, PLATE RONDELLE, PLATE	1					
26	90386–40M99	BUSH DOUILLE	1					
27	65W–42131–01	COVER, HANDLE STEERING COUVERCLE	1					

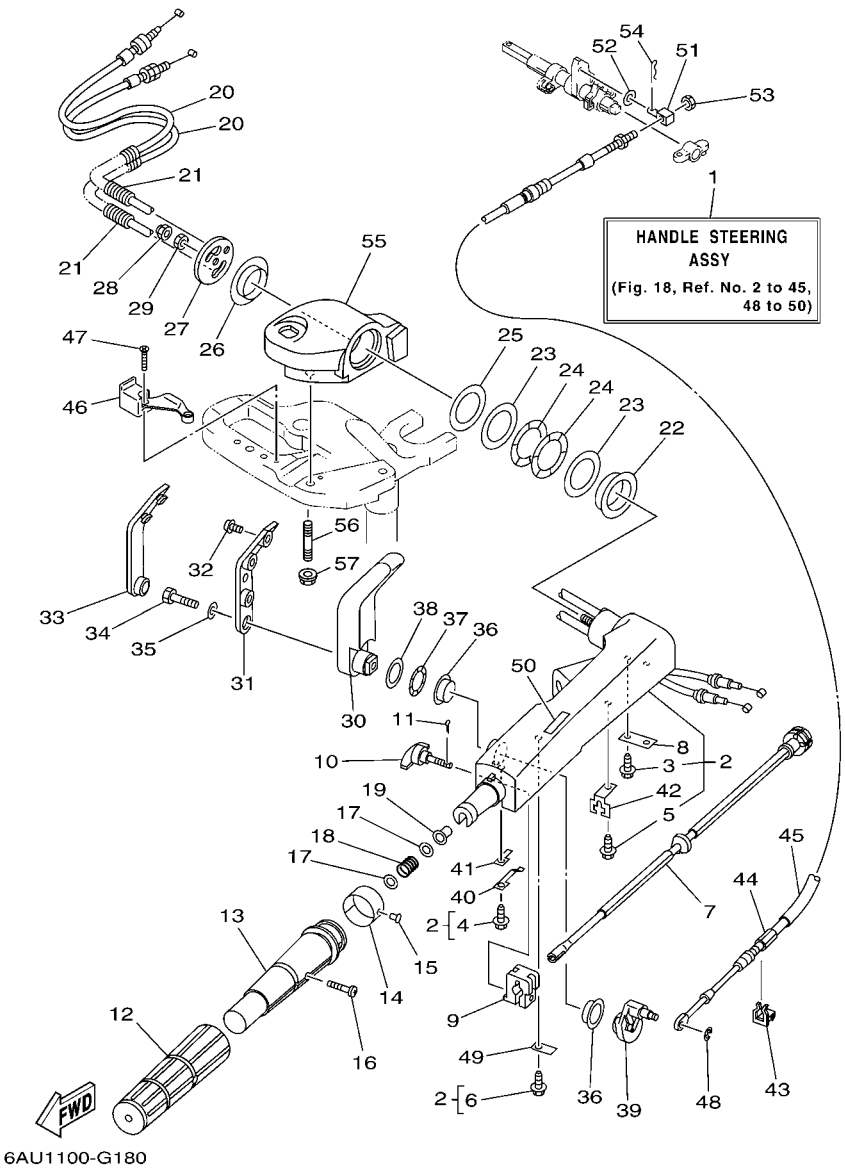

FIG. 18 STEERING DIRECTION

REF. NO.	PART NO. N° PIECES	DESCRIPTION DESCRIPTION	MH	E	EP			REMARKS REMARQUES
28	95780–10300	NUT, FLANGE ECROU	1					
29	95380–10700	NUT ECROU	1					
30	66R–44111–00–4D	HANDLE, GEAR SHIFT POIGNEE, LEVIER D'EMBRAYAGE	1					
31	66R–44173–00	LEVER, SHIFT CONTROL POIGNEE, INVERSION	1					
32	90159–06M18	SCREW, WITH WASHER VIS, AVEC RONDELLE	3					
33	66R–42129–00	BUSHING, RUBBER DOUILLE, CAOUTCHOUC	1					
34	97095–08030	BOLT BOULON	1					
35	92995–08600	WASHER RONDELLE	1					
36	90386–26MA3	BUSH DOUILLE	2					
37	90206–26M25	WASHER, WAVE RONDELLE, ONDULEE	1					
38	90202–26M59	WASHER, PLATE RONDELLE, PLATE	1					
39	68T–44113–01	CAM PLATE, HANDLE CAME, VERROUILLAGE	1					
40	66R–44116–00	SPRING RESSORT	1					
41	66R–44118–00	BRACKET SUPPORT	1					
42	66R–48538–00	CLAMP, CABLE 1 COLLIER	1					
43	63D–48538–00	CLAMP, CABLE 1 COLLIER	1					
44	68T–48321–01	CABLE CABLE	1					
45	90446–15002	HOSE DURITE	1					
46	68T–82594–10	CLAMP BRIDE	1					
47	90151–05003	SCREW, COUNTERSUNK VIS, TETE NOYEE	2					
48	99080–04600	CIRCLIP CIRCLIP	1					
49	66R–44114–00	STOPPER PLAQUETTE	1					
50	6E0–44191–11	INDICATOR, SHIFT ETIQUETTE, EMBRAYAGE	1					
51	66R–48344–00	CABLE END, REMOTE CONTROL CHAPE CABLE	1					
52	90201–06M62	WASHER, PLATE RONDELLE, PLATE	1					
53	90170–05M38	NUT ECROU	1					
54	91490–20012	PIN. COTTER GOUPILLE	1					

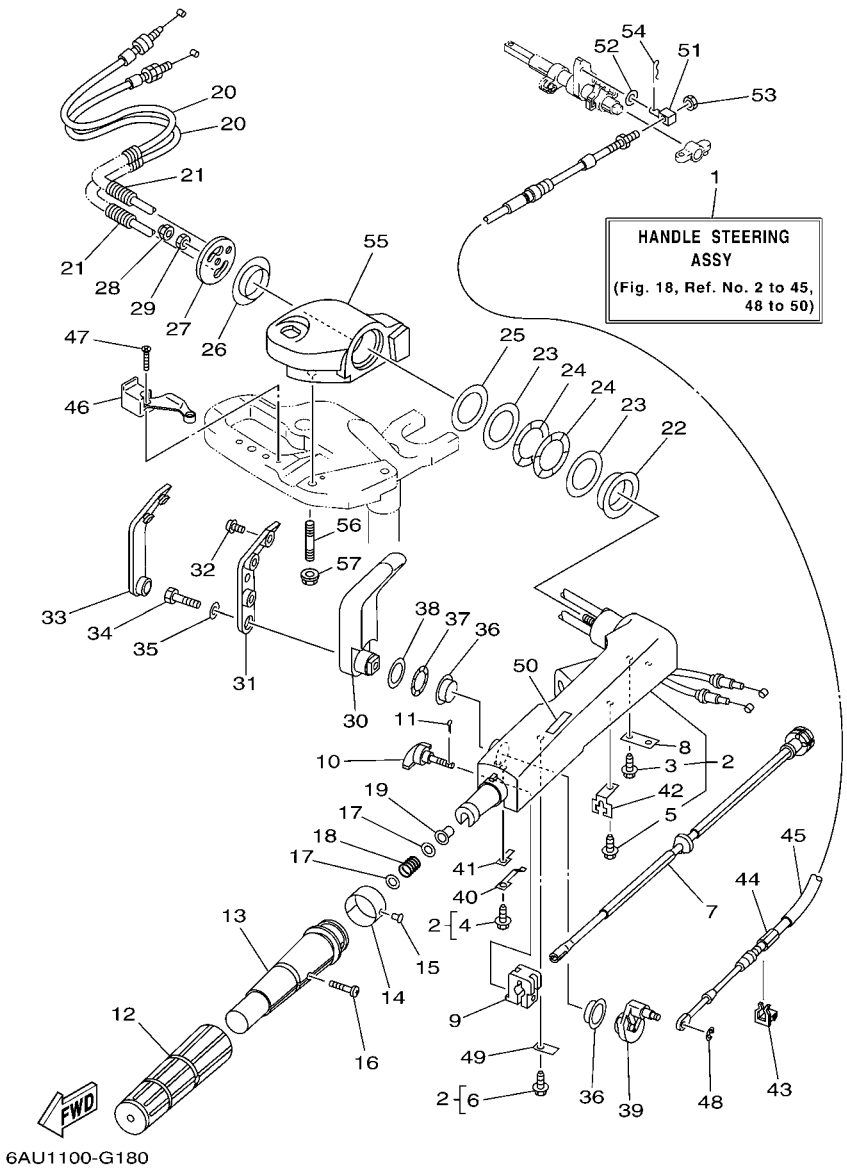

FIG. 18 STEERING DIRECTION

REF. NO.	PART NO. N° PIECES	DESCRIPTION DESCRIPTION	MH	E	EP			REMARKS REMARQUES
55	6AU–42121–10–4D	BRACKET SUPPORT	1					
56	90116–10040	BOLT, STUD GOUJON	2					
57	90179–10M33	NUT ECROU	2					

FIG. 19 STEERING FRICTION CUVETTE POIGNEE DE DIRECTION

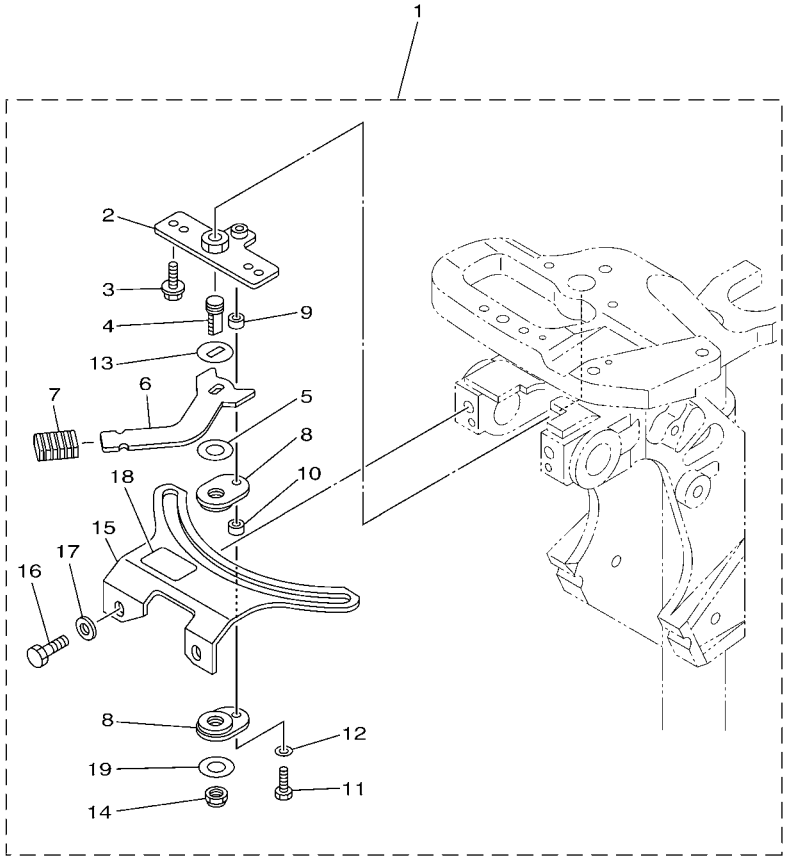

6AU5110-L180

REF. NO.	PART NO. N° PIECES	DESCRIPTION DESCRIPTION	MH	E	EP			REMARKS REMARQUES
1	6AH–42508–01	STEERING FRICTION ASSY DIRECTION FRICTION (ENS.)	1					
2	68T–42525–01	.PLATE, FRICTION .PLAQUE, FRICTION	1					
3	90119–05018	.BOLT, WITH WASHER .BOULON, AVEC RONDELLE	2					
4	67C–42562–00	.SHAFT, STEERING LOCK .ARBRE,ANTIVOL DE DIRECTION	1					
5	90202–10M56	.WASHER, PLATE .RONDELLE, PLATE	1					
6	68T–42561–00	.KNOB, STEERING LOCK .BOUTON	1					
7	689–43633–00	.COVER, TILT LEVER .COUVERCLE	1					
8	65W–42528–00	.PLATE, FRICTION .PLAQUE, FRICTION	2					
9	90387–05053	.COLLAR .COLLERETTE	1					
10	90387–05054	.COLLAR .COLLERETTE	1					
11	97095–05020	.BOLT .BOULON	1					
12	92995–05600	.WASHER .RONDELLE	1					
13	90209–10M26	.WASHER .RONDELLE	1					
14	90185–10M14	.NUT, SELF-LOCKING .ECROU,AUTO-BLOQUANT	1					
15	6AH–42527–00	.PLATE, FRICTION .PLAQUE, FRICTION	1					
16	90101–08022	.BOLT .BOULON	2					
17	90201–08065	.WASHER, PLATE .RONDELLE, PLATE	2					
18	68T–43155–00	.MARK 1 .ETIQUETTE 1	1					
19	90201–106M5	.WASHER, PLATE .RONDELLE, PLATE	1					

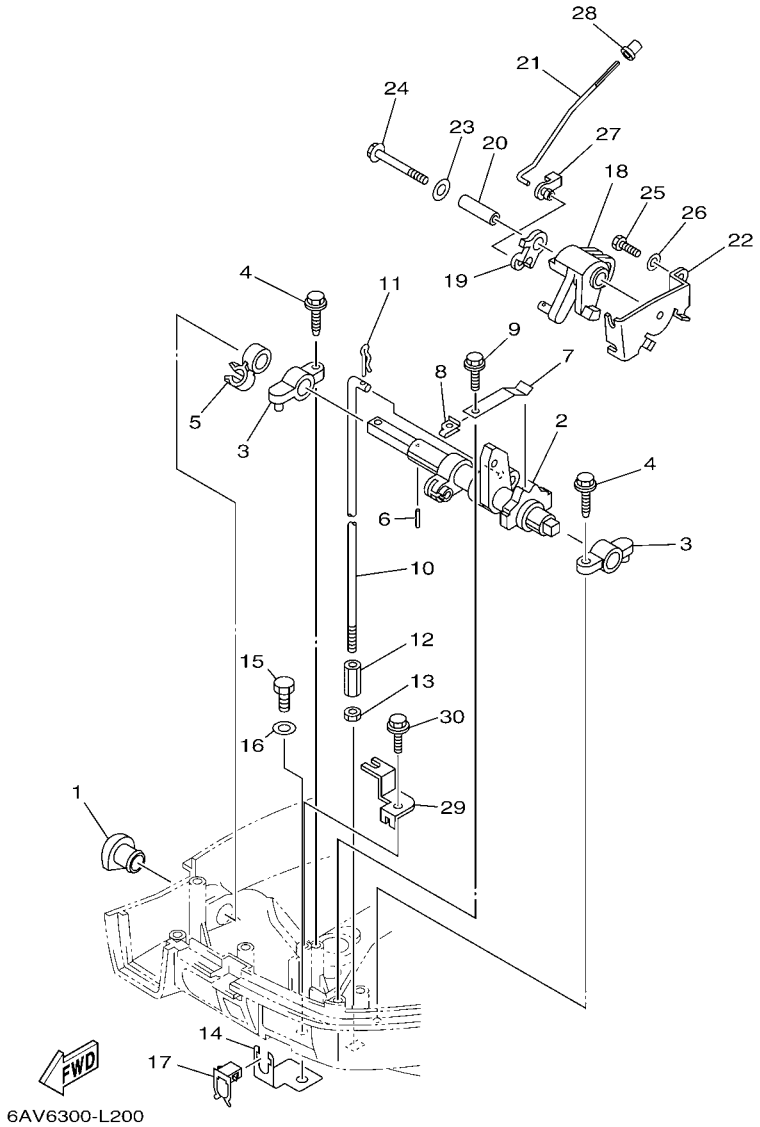

FIG. 20 CONTROL 1 COMMANDE 1

REF. NO.	PART NO. N° PIECES	DESCRIPTION DESCRIPTION	MH	E	EP			REMARKS REMARQUES
1	68T–42726–00	GROMMET PASSE-FIL	1					
2	68T–44121–02	LEVER, SHIFT ROD LEVIER, TIGE D'INVERSION	1					
3	6G1–41662–01–94	BRACKET 2 SUPPORT 2	2					
4	90109–06M81	BOLT BOULON	2					
5	90464–10M60	CLAMP BRIDE	1					
6	91690–30014	PIN, SPRING AGRAFFE	1					
7	65W–44116–00	SPRING RESSORT	1					
8	66R–44117–00	BRACKET SUPPORT	1					
9	90109–06M86	BOLT BOULON	1					
10	68T–44143–10	ROD, SHIFT TIGE D'EMBRAYAGE	1					
11	90468–18001	CLIP JONC	1					
12	61N–44146–00	CONNECTOR, SHIFT ROD CONNECTEUR, TIGE D'INVERSION	1					
13	95380–06700	NUT ECROU	1					
14	68T–48538–00	CLAMP, CABLE 1 COLLIER	1					
15	97095–06012	BOLT BOULON	1					
16	92995–06600	WASHER RONDELLE	1					
17	63D–48538–00	CLAMP, CABLE 1 COLLIER	1					
18	68T–41638–00	PULLEY POULIE	1					
19	68T–41283–00	LEVER, FREE ACCEL. LEVIER	1					
20	90387–06M59	COLLAR COLLERETTE	1					
21	6AU–41211–00	LINK, ACCEL. BIELLETTE, ACCELERATION	1					
22	68T–14497–00	STAY, THROTTLE WIRE SUPPORT DE BOISSEAU	1					
23	90201–06M62	WASHER, PLATE RONDELLE, PLATE	1					
24	97595–06545	BOLT, WITH WASHER VIS HEXAGONAL AVC RONDELLE	1					
25	97095–06012	BOLT BOULON	1					
26	92995–06600	WASHER RONDELLE	1					
27	661–41262–02	JOINT, CHOKE LEVER RACCORD, LEVIER DE STARTER	1					

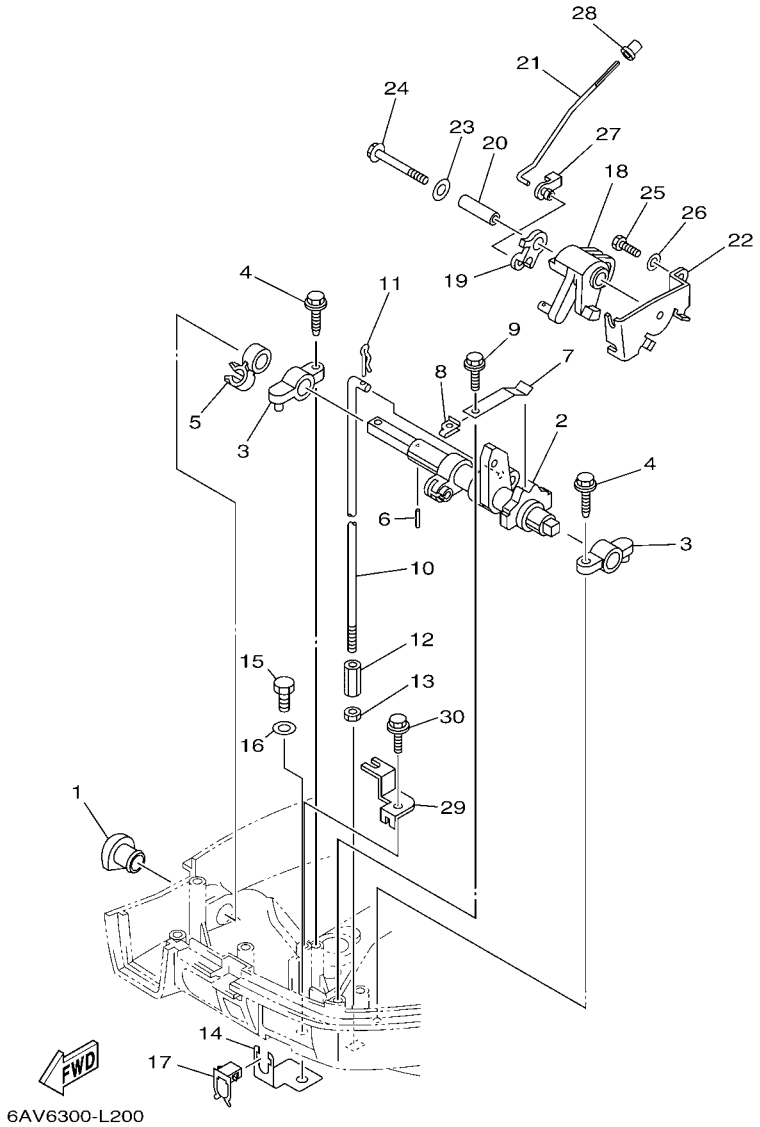

FIG. 20 CONTROL 1 COMMANDE 1

REF. NO.	PART NO. N° PIECES	DESCRIPTION DESCRIPTION	MH	E	EP			REMARKS REMARQUES
28	647–14395–60	CAP, OVERFLOW PIPE COUVRE DE DURITE REFOULEMENT	1					
29	68T–15774–00	STAY 4 SUPPORT 4	1					
30	90109–06M86	BOLT BOULON	1					

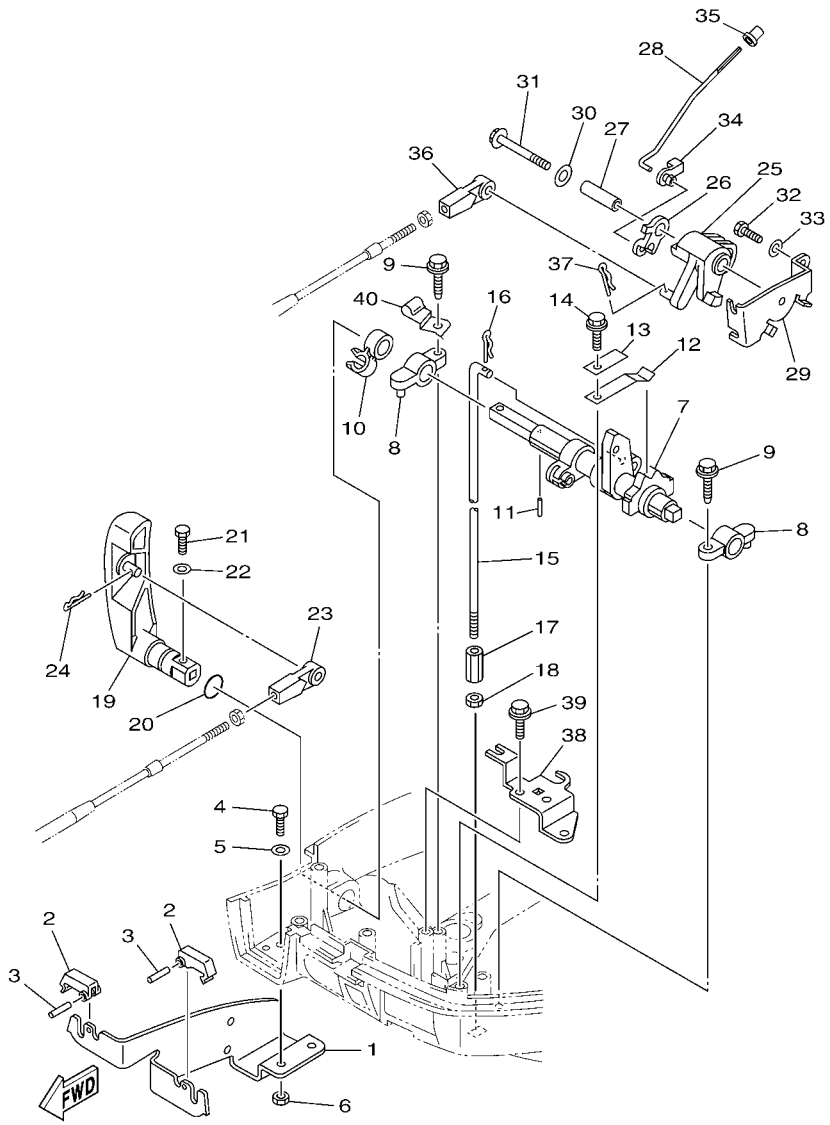

FIG. 21 CONTROL 2 COMMANDE 2

REF. NO.	PART NO. N° PIECES	DESCRIPTION DESCRIPTION	MH	E	EP			REMARKS REMARQUES
1	68T–48531–00	BRACKET, REMOTE CONTROL 1 ETRIER 1, COMMANDE A DISTANCE		1	1			
2	682–48538–50	CLAMP, CABLE 1 COLLIER		2	2			
3	91690–30012	PIN, SPRING AGRAFFE		2	2			
4	97095–06012	BOLT BOULON		2	2			
5	92995–06600	WASHER RONDELLE		2	2			
6	95380–06600	NUT, HEXAGON ECROU		2	2			
7	68T–44121–02	LEVER, SHIFT ROD LEVIER, TIGE D'INVERSION		1	1			
8	6G1–41662–01–94	BRACKET 2 SUPPORT 2		2	2			
9	90109–06M81	BOLT BOULON		2	2			
10	90464–10M60	CLAMP BRIDE		1	1			
11	91690–30014	PIN, SPRING AGRAFFE		1	1			
12	65W–44116–00	SPRING RESSORT		1	1			
13	66R–44114–00	STOPPER PLAQUETTE		1	1			
14	90109–06M86	BOLT BOULON		1	1			
15	68T–44143–10	ROD, SHIFT TIGE D'EMBRAYAGE		1	1			
16	90468–18001	CLIP JONC		1	1			
17	61N–44146–00	CONNECTOR, SHIFT ROD CONNECTEUR, TIGE D'INVERSION		1	1			
18	95380–06700	NUT ECROU		1	1			
19	6AU–44111–10	HANDLE, GEAR SHIFT POIGNEE, LEVIER D'EMBRAYAGE		1	1			
20	93210–12327	O-RING JOINT TORIQUE		1	1			
21	97095–05016	BOLT BOULON		1	1			
22	92995–05600	WASHER RONDELLE		1	1			
23	663–48344–00	CABLE END, REMOTE CONTROL CHAPE CABLE		1	1			
24	90468–18008	CLIP JONC		1	1			
25	68T–41638–00	PULLEY POULIE		1	1			
26	68T–41283–00	LEVER, FREE ACCEL. LEVIER		1	1			
27	90387–06M59	COLLAR COLLERETTE		1	1			

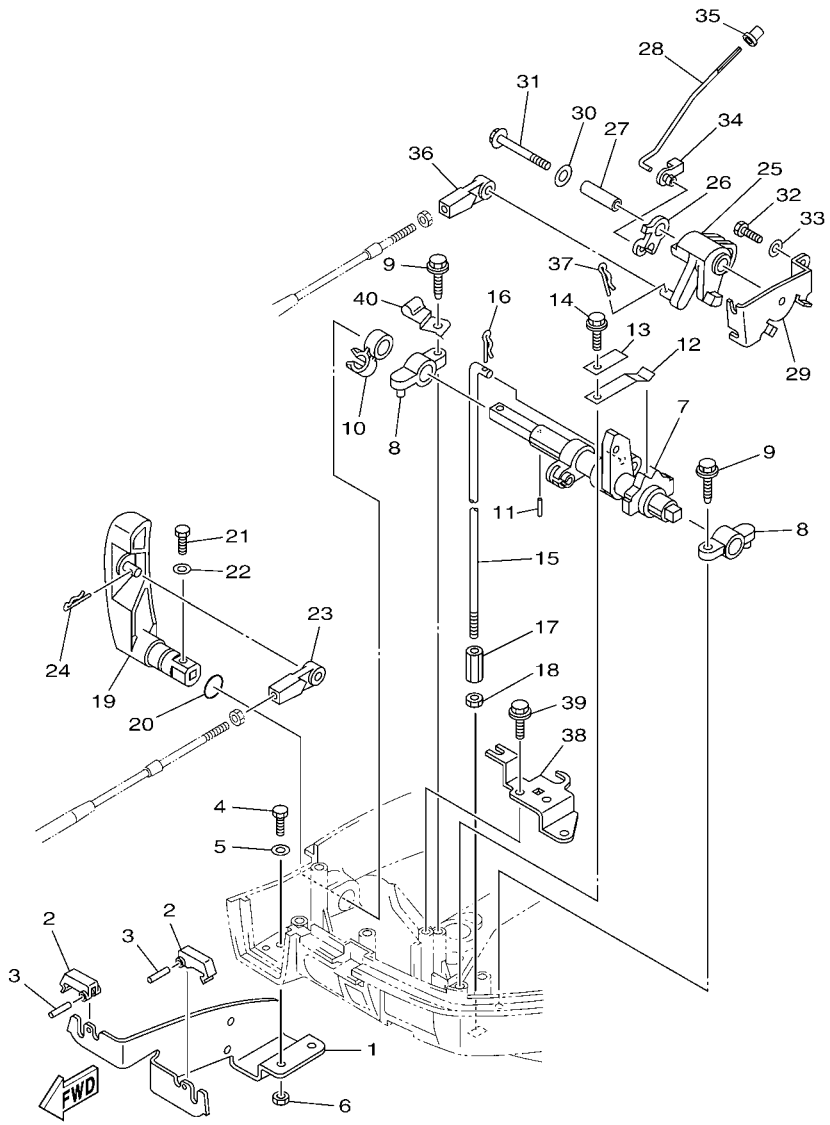

FIG. 21 CONTROL 2 — COMMANDE 2

REF. NO.	PART NO. N° PIECES	DESCRIPTION DESCRIPTION	MH	E	EP			REMARKS REMARQUES
28	6AU–41211–00	LINK, ACCEL. BIELLETTE, ACCELERATION		1	1			
29	68T–14497–00	STAY, THROTTLE WIRE SUPPORT DE BOISSEAU		1	1			
30	90201–06M62	WASHER, PLATE RONDELLE, PLATE		1	1			
31	97595–06545	BOLT, WITH WASHER VIS HEXAGONAL AVC RONDELLE		1	1			
32	97095–06012	BOLT BOULON		1	1			
33	92995–06600	WASHER RONDELLE		1	1			
34	661–41262–02	JOINT, CHOKE LEVER RACCORD, LEVIER DE STARTER		1	1			
35	647–14395–60	CAP, OVERFLOW PIPE COUVRE DE DURITE REFOULEMENT		1	1			
36	663–48344–00	CABLE END, REMOTE CONTROL CHAPE CABLE		1	1			
37	90468–18008	CLIP JONC		1	1			
38	68T–15774–10	STAY 4 SUPPORT 4		1	1			
39	90109–06M86	BOLT BOULON		2	2			
40	90465–08027	CLAMP BRIDE			1			

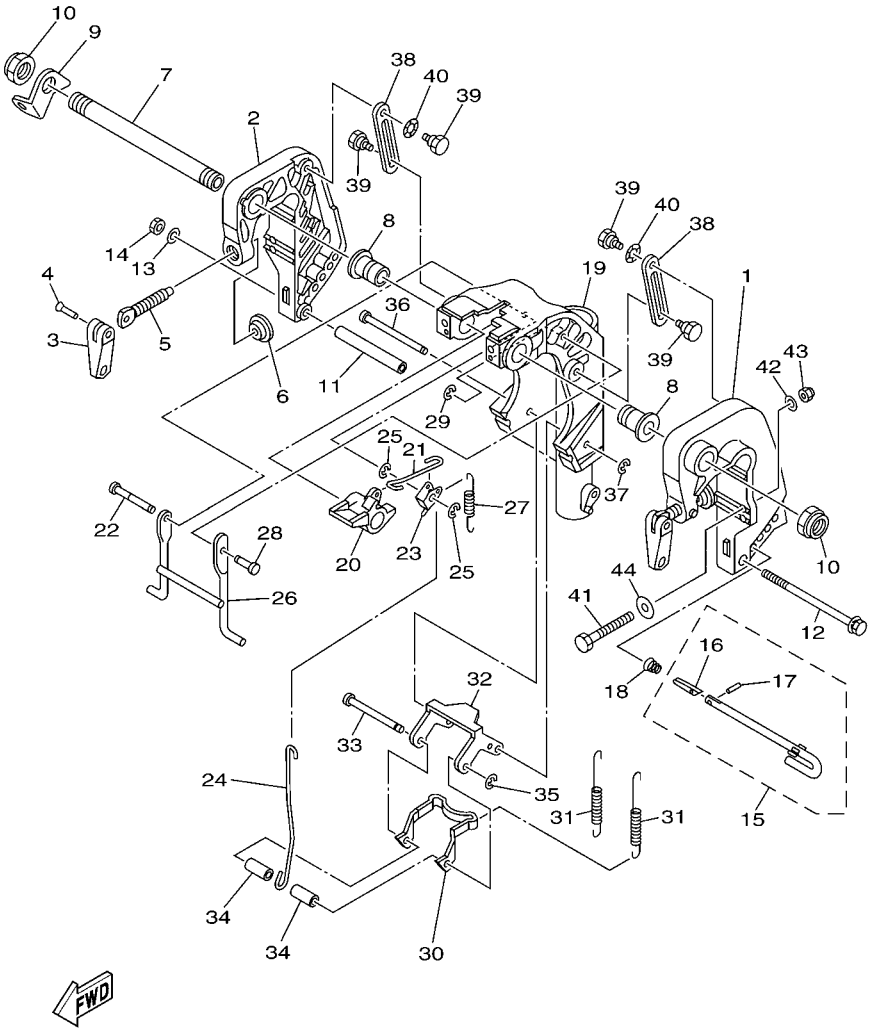

FIG. 22 BRACKET 1 SUPPORT 1

REF. NO.	PART NO. N° PIECES	DESCRIPTION DESCRIPTION	MH	E	EP			REMARKS REMARQUES
1	6AH–43111–00–4D	BRACKET, CLAMP 1 PRESSE 1	1	1				
2	6AH–43112–00–4D	BRACKET, CLAMP 2 PRESSE 2	1	1				
3	6E0–43118–01	HANDLE, TRANSOM CLAMP POIGNEE DE VIS DE PRESSE	2	2				
4	90243–04M01	PIN GOUPILLE	2	2				
5	6E7–43116–00	SCREW, TRANSOM CLAMP VIS DE PRESSE	2	2				
6	648–43114–01	PAD, TRANSOM CLAMP RONDELLE D'APPUI	2	2				
7	63W–43131–01	BOLT, CLAMP BRACKET BOULON, PRESSE	1					
	69A–43131–00	BOLT, CLAMP BRACKET BOULON, PRESSE		1				FOR REMOTE CONTROL FOR REMOTE CONTROL
8	90386–22MA4	BUSH DOUILLE	2	2				
9	66R–43113–00	PLATE, CLAMP BRACKET PLAQUETTE, PRESSE	1	1				
10	90185–22043	NUT, SELF-LOCKING ECROU,AUTO-BLOQUANT	2	2				
11	90387–06M13	COLLAR COLLERETTE	1	1				
12	90101–06M18	BOLT BOULON	1	1				
13	92990–06600	WASHER, PLATE RONDELLE, PLATE	1	1				
14	95380–06700	NUT ECROU	1	1				
15	6L2–43160–01	TILT ROD ASSY BROCHE D'INCLINAISON (ENS.)	1	1				
16	689–43165–00	.PLATE, TILT LOCK .TAQUET, BROCHE INCLINAISON	1	1				
17	91690–30008	.PIN, SPRING .AGRAFFE	1	1				
18	90502–10M07	SPRING, CONICAL RESSORT, CONIQUE	1	1				
19	6AU–43311–10–4D	BRACKET, SWIVEL 1 SUPPORT, PIVOT 1	1	1				
20	6AH–43631–00	LEVER, TILT LEVIER, INCLINAISON	1	1				
21	6AH–43616–00	ROD, TILT LOCK TIGE	1	1				
22	68T–43646–00	SHAFT, LEVER AXE, LEIVER	1	1				
23	6AH–43641–00	LEVER, TILT LEVIER, INCLINAISON	1	1				
24	6AH–43617–00	ROD, TILT LOCK TIGE	1	1				
25	99080–05600	CIRCLIP CIRCLIP	2	2				
26	6AH–43350–00	RECEIVER ASSY RECEIVER ASSY	1	1				

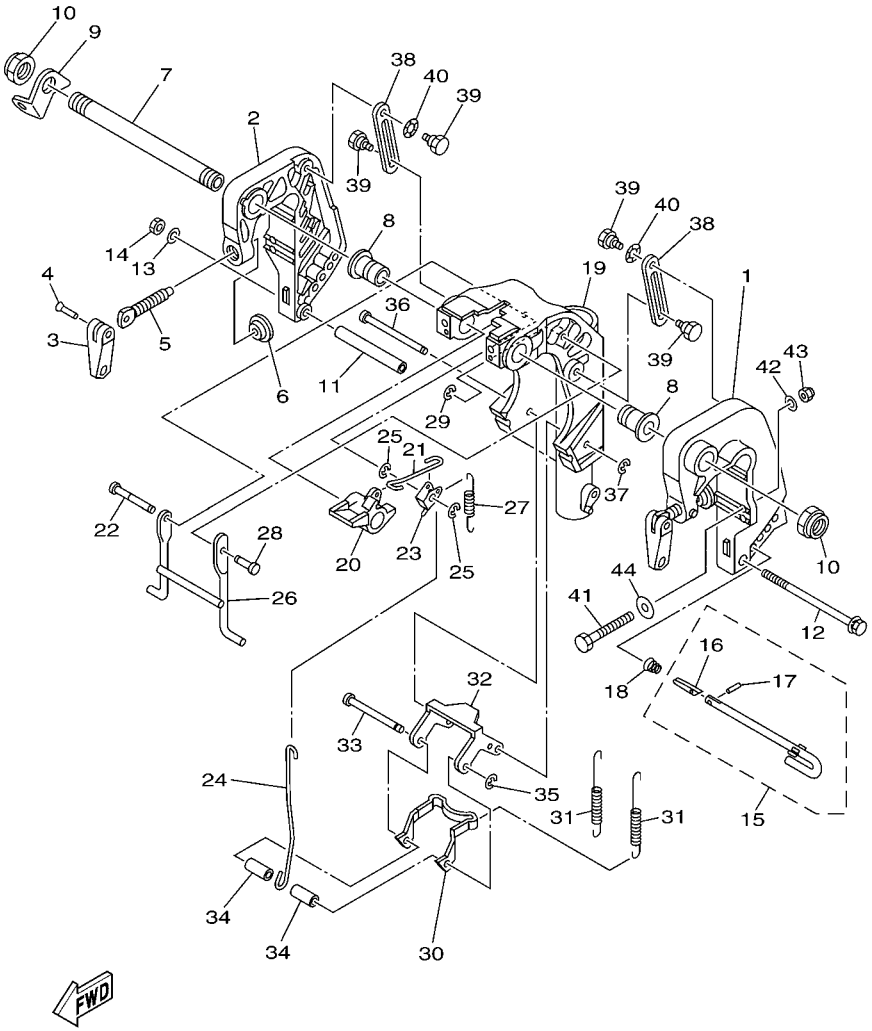

FIG. 22 BRACKET 1 SUPPORT 1

REF. NO.	PART NO. N° PIECES	DESCRIPTION DESCRIPTION	MH	E	EP			REMARKS REMARQUES
27	90506–20025	SPRING, TENSION RESSORT, TENSION	1	1				
28	63V–43191–00	SHAFT, STOPPER AXE, BUTEE	1	1				
29	99080–05600	CIRCLIP CIRCLIP	1	1				
30	6AH–43614–00	PLATE, TILT LOCK ETRIER, VERROUILLAGE MARCHE AR	1	1				
31	90506–23016	SPRING, TENSION RESSORT, TENSION	2	2				
32	6AH–43615–00	PLATE, TILT LOCK ETRIER, VERROUILLAGE MARCHE AR	1	1				
33	68T–43611–00	SHAFT, TILT LOCK AXE, VERROUILLAGE MARCHE AR	1	1				
34	90387–06138	COLLAR COLLERETTE	2	2				
35	93430–04M03	CIRCLIP CLIPS	1	1				
36	68T–43659–00	SHAFT, REVERSE LOCK AXE, VERROUILLAGE MARCHE AR	1	1				
37	99080–05600	CIRCLIP CIRCLIP	1	1				
38	6AH–43627–00	STOPPER PLAQUETTE	2	2				
39	90109–06M84	BOLT BOULON	4	4				
40	90206–10M24	WASHER, WAVE RONDELLE, ONDULEE	2	2				
41	90101–08M88	BOLT BOULON	2	2				
42	92990–08600	WASHER, PLATE RONDELLE, PLATE	2	2				
43	90185–08057	NUT, SELF-LOCKING ECROU,AUTO-BLOQUANT	2	2				
44	90201–08MA4	WASHER, PLATE RONDELLE, PLATE	2	2				

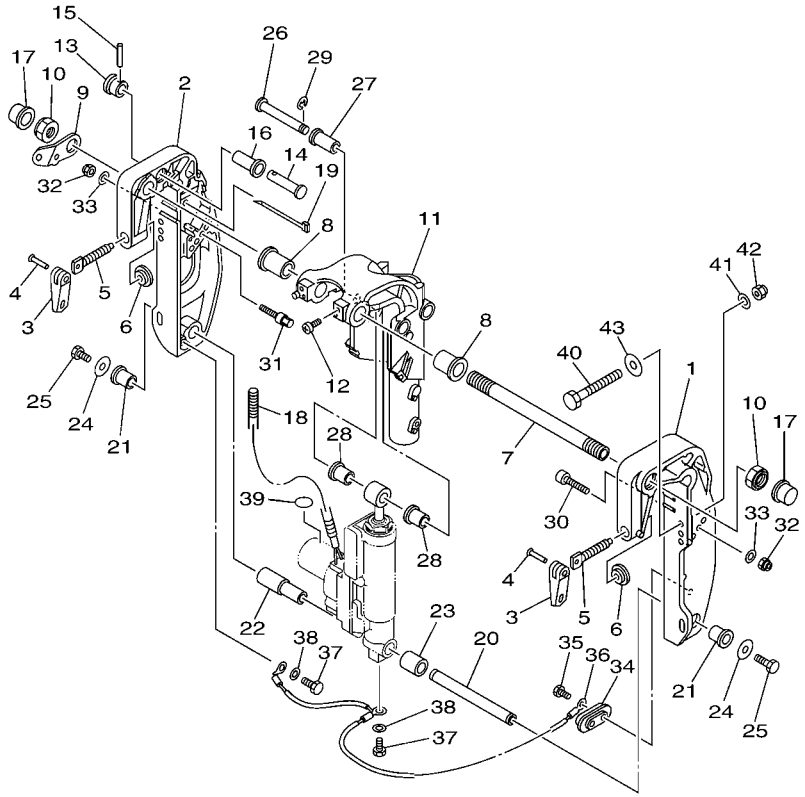

60S3110-F240

FIG. 23 BRACKET 2 SUPPORT 2

REF. NO.	PART NO. N° PIECES	DESCRIPTION DESCRIPTION	MH	E	EP			REMARKS REMARQUES
1	69A–43111–01–4D	BRACKET, CLAMP 1 PRESSE 1			1			
2	69A–43112–01–4D	BRACKET, CLAMP 2 PRESSE 2			1			
3	6E0–43118–01	HANDLE, TRANSOM CLAMP POIGNEE DE VIS DE PRESSE			2			
4	90243–04M01	PIN GOUPILLE			2			
5	6E7–43116–00	SCREW, TRANSOM CLAMP VIS DE PRESSE			2			
6	648–43114–01	PAD, TRANSOM CLAMP RONDELLE D'APPUI			2			
7	69A–43131–00	BOLT, CLAMP BRACKET BOULON, PRESSE			1			FOR REMOTE CONTROL FOR REMOTE CONTROL
8	90386–22MA4	BUSH DOUILLE			2			
9	69A–43113–00	PLATE, CLAMP BRACKET PLAQUETTE, PRESSE			1			
10	90185–22043	NUT, SELF-LOCKING ECROU,AUTO-BLOQUANT			2			
11	69G–43311–11–4D	BRACKET, SWIVEL 1 SUPPORT, PIVOT 1			1			
12	97885–08010	SCREW, PAN HEAD VIS, A ENCOCHE			2			
13	65W–43192–00	KNOB, STOPPER BOUTON, BUTEE DE RELEVAGE			1			
14	65W–43191–00	SHAFT, STOPPER AXE, BUTEE			1			
15	91690–30018	PIN, SPRING AGRAFFE			1			
16	90386–14MA1	BUSH DOUILLE			1			
17	6G5–43145–01	CAP, CLAMP BRACKET CAPUCHON, PRESSE			2			
18	90447–10001	TUBE DURITE			1			
19	90465–13M97	CLAMP BRIDE			1			
20	69G–43818–00	PIN, LOWER SHOCK MOUNT AXE, INFERIEUR AMORTISSEUR			1			
21	90386–16MA7	BUSH DOUILLE			2			
22	90386–16MA8	BUSH DOUILLE			1			
23	90387–16M02	COLLAR COLLERETTE			1			
24	90201–08M00	WASHER, PLATE RONDELLE, PLATE			2			
25	97080–08016	BOLT BOULON			2			
26	90249–12M36	PIN GOUPILLE			1			
27	90381–12M10	BUSH, SOLID DOUILLE, SOLIDE			1			

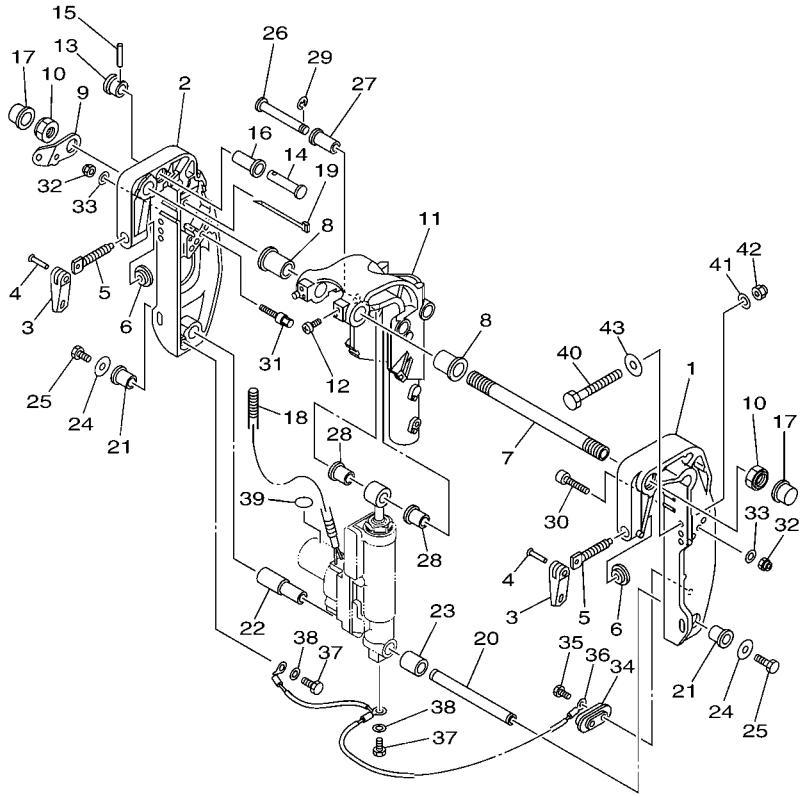

60S3110-F240

FIG. 23 BRACKET 2 SUPPORT 2

REF. NO.	PART NO. N° PIECES	DESCRIPTION DESCRIPTION	MH	E	EP			REMARKS REMARQUES
28	90381–12M11	BUSH, SOLID DOUILLE, SOLIDE			2			
29	99080–10600	CIRCLIP CIRCLIP			1			
30	90110–08M05	BOLT, HEXAGON SOCKET HEAD BOULON, TETE HEXAGONALE CREUSE			1			
31	90109–08010	BOLT BOULON			1			
32	90185–08057	NUT, SELF-LOCKING ECROU,AUTO-BLOQUANT			2			
33	92990–08600	WASHER, PLATE RONDELLE, PLATE			2			
34	65W–45251–00	ANODE ANODE			1			
35	90101–06020	BOLT BOULON			2			
36	63V–82127–00	WIRE, LEAD 2 FIL 2			1			
37	97095–06010	BOLT BOULON			2			
38	92995–06600	WASHER RONDELLE			2			
39	69A–43155–00	MARK 1 ETIQUETTE 1			1			
40	90101–08M88	BOLT BOULON			2			
41	92990–08600	WASHER, PLATE RONDELLE, PLATE			2			
42	90185–08057	NUT, SELF-LOCKING ECROU,AUTO-BLOQUANT			2			
43	90201–08MA4	WASHER, PLATE RONDELLE, PLATE			2			

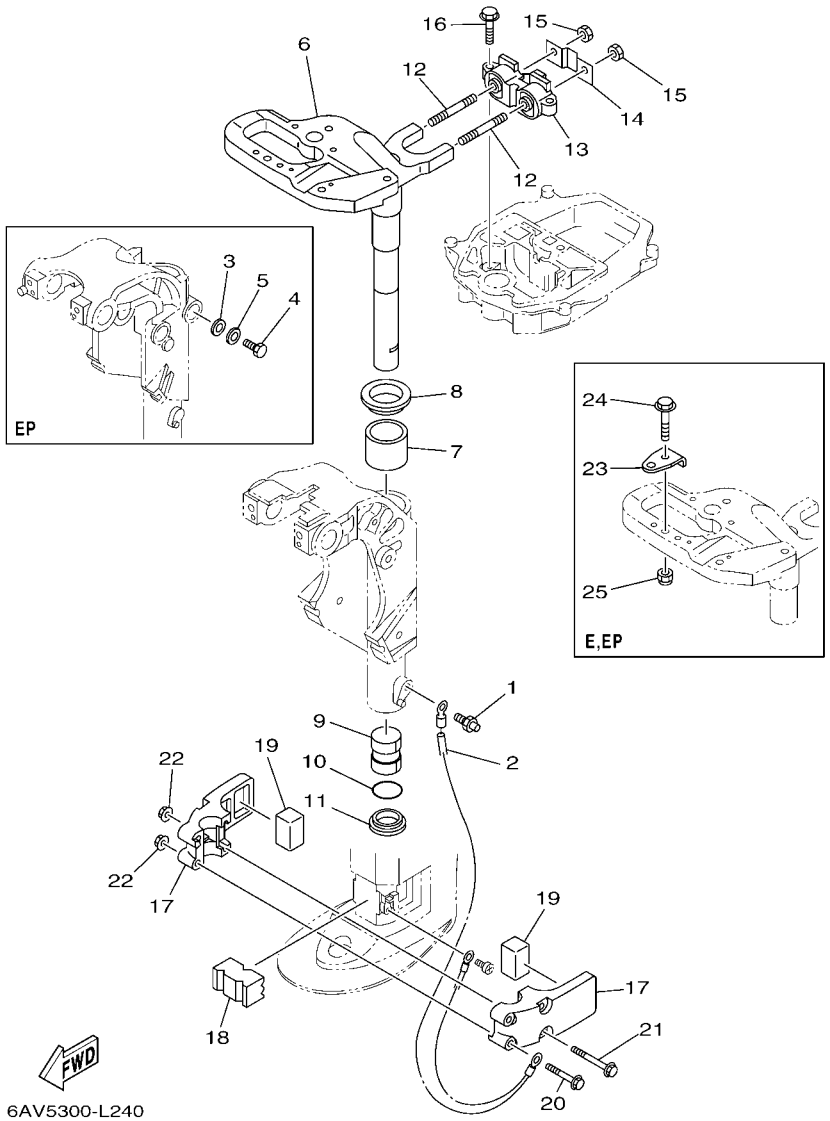

FIG. 24 BRACKET 3 SUPPORT 3

REF. NO.	PART NO. N° PIECES	DESCRIPTION DESCRIPTION	MH	E	EP			REMARKS REMARQUES
1	93700–06M03	NIPPLE, GREASE PION	1	1	1			
2	68T–82127–00	WIRE, LEAD 2 FIL 2	1	1	1			
3	92995–06600	WASHER RONDELLE			1			
4	97095–06014	BOLT BOULON			1			
5	92995–06600	WASHER RONDELLE			1			
6	6AU–42511–10–4D	BRACKET, STEERING CADRE, DIRECTION	1	1	1			
7	90386–40001	BUSH DOUILLE	1	1	1			
8	90209–40008	WASHER RONDELLE	1	1	1			
9	90386–30048	BUSH DOUILLE	1	1	1			
10	93210–29M94	O-RING JOINT TORIQUE	1	1	1			
11	90386–30M60	BUSH DOUILLE	1	1	1			
12	90116–08M54	BOLT, STUD GOUJON	2	2	2			
13	68T–44517–10	MOUNT RUBBER SILENT-BLOC	1	1	1			
14	68T–44526–00	PLATE PLAQUE	1	1	1			
15	95380–08600	NUT ECROU	2	2	2			
16	97575–06525	BOLT, WITH WASHER VIS HEXAGONAL AVC RONDELLE	2	2	2			
17	6AU–44551–00–4D	HOUSING, LOWER MOUNT RUBBER 1 BOITIER, SILENT-BLOC INFERIEUR	2	2	2			
18	6AU–44557–00	MOUNT DAMPER, LOWER FRONT SILENT-BLOC, INFERIEUR AVANT	1	1	1			
19	682–44555–30	MOUNT DAMPER, LOWER SIDE SILENT-BLOC, INFERIEUR LATERAL	2	2	2			
20	90119–06012	BOLT, WITH WASHER BOULON, AVEC RONDELLE	2	2	2			
21	90119–06198	BOLT, WITH WASHER BOULON, AVEC RONDELLE	2	2	2			
22	90179–06M28	NUT ECROU	4	4	4			
23	63V–48511–01	HOOK, STEERING ATTACHE, DIRECTION		1	1			
24	97575–08535	BOLT, WITH WASHER VIS HEXAGONAL AVC RONDELLE		1	1			
25	90185–08057	NUT, SELF-LOCKING ECROU,AUTO-BLOQUANT		1	1			

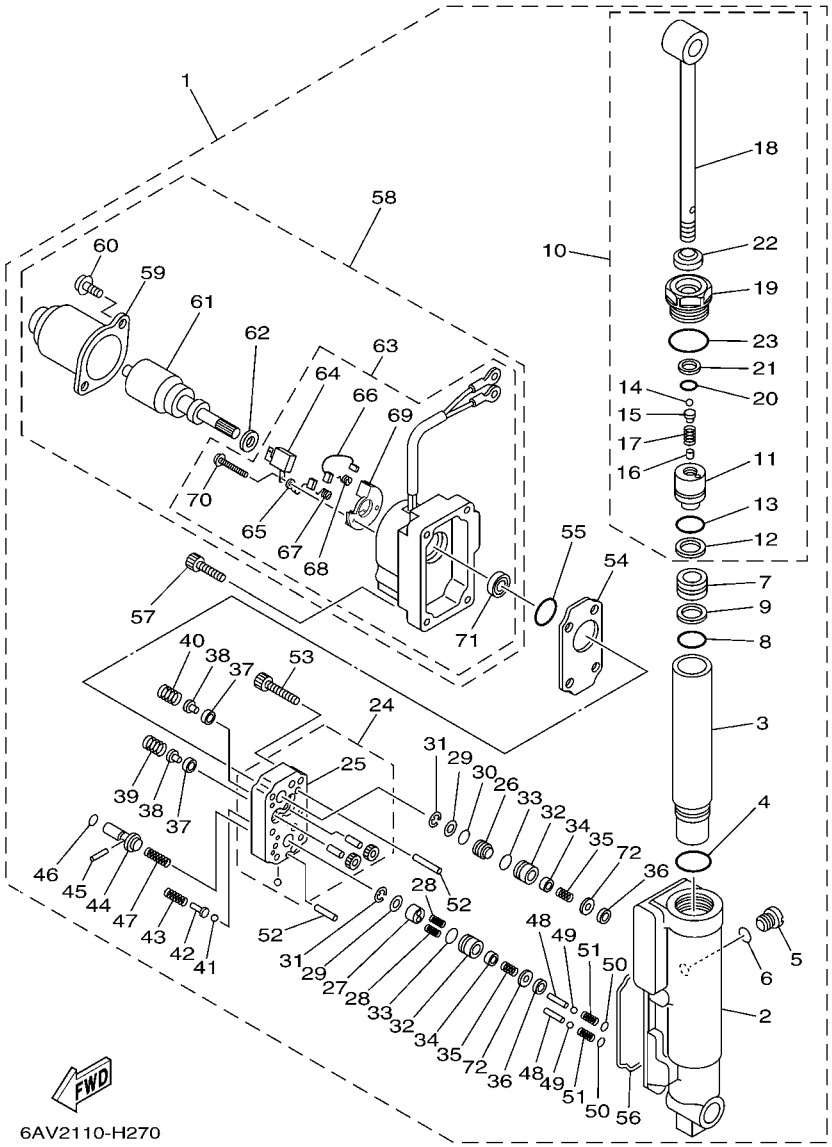

FIG. 25 POWER TILT ASSY — PUISSANCE PARER ET INCLINER

REF. NO.	PART NO. N° PIECES	DESCRIPTION DESCRIPTION	MH	E	EP			REMARKS REMARQUES
1	69G–43840–02–4D	POWER TILT ASSY PUISSANCE INCLINER (ENS.)			1			
2	69A–4380K–00	.CYLINDER, TILT SUB ASSY .CYLINDRE			1			
3	69A–22471–00	.CASE, CYLINDER .BOITIER, CYLINDRE			1			
4	93210–27666	.O-RING .JOINT TORIQUE			1			
5	6H1–4388E–11	.PLUG, TAPER SCREW .BOUCHON			1			
6	93210–07003	.O-RING .JOINT TORIQUE			1			
7	69A–43814–00	.PISTON, FREE .PISTON			1			
8	93210–21276	.O-RING .JOINT TORIQUE			1			
9	69A–43872–00	.RING, BACK UP .RESSORT			1			
10	69A–43810–00	.TILT PISTON SUB ASSY .INCLINER PISTON AUXILIAIRE(ENS			1			
11	69A–4380D–00	..PISTON COMP. ..PISTON COMP.			1			
12	93210–21276	..O-RING ..JOINT TORIQUE			1			
13	69A–43872–00	..RING, BACK UP ..RESSORT			1			
14	93505–32038	..BALL ..BILLE			1			
15	65W–4386A–00	..PIN, ABSORBER VALVE ..GOUPILLE, SOUPAPE			1			
16	93604–06136	..PIN, DOWEL ..CLAVETTE			1			
17	69A–43857–00	..SPRING, ABSORBER VALVE ..RESSORT			1			
18	69A–43801–00	..ROD ..TIGE			1			
19	69A–43811–01	..SCREW, CYLINDER END ..VIS, CYLINDRE RACCORD			1			
20	6H1–43866–00	..O-RING ..JOINT TORIQUE			1			
21	69A–43871–00	..RING, BACK UP ..SEGMENT			1			
22	69A–43812–00	..SEAL, DUST ..JOINT			1			
23	69A–43869–00	..O-RING ..JOINT TORIQUE			1			
24	69A–43830–00	.GEAR PUMP ASSY .POMPE A PIGNON (ENS.)			1			
25	69A–4380C–00	..GEAR HOUSING ASSY ..CARTER COMP,ENGRENAGE			1			
26	69A–43841–00	.PISTON, SHUTTLE .PISTON			1			
27	69A–4384M–00	.PISTON, SHUTTLE 2 .PISTON 2			1			

FIG. 25 POWER TILT ASSY — PUISSANCE PARER ET INCLINER

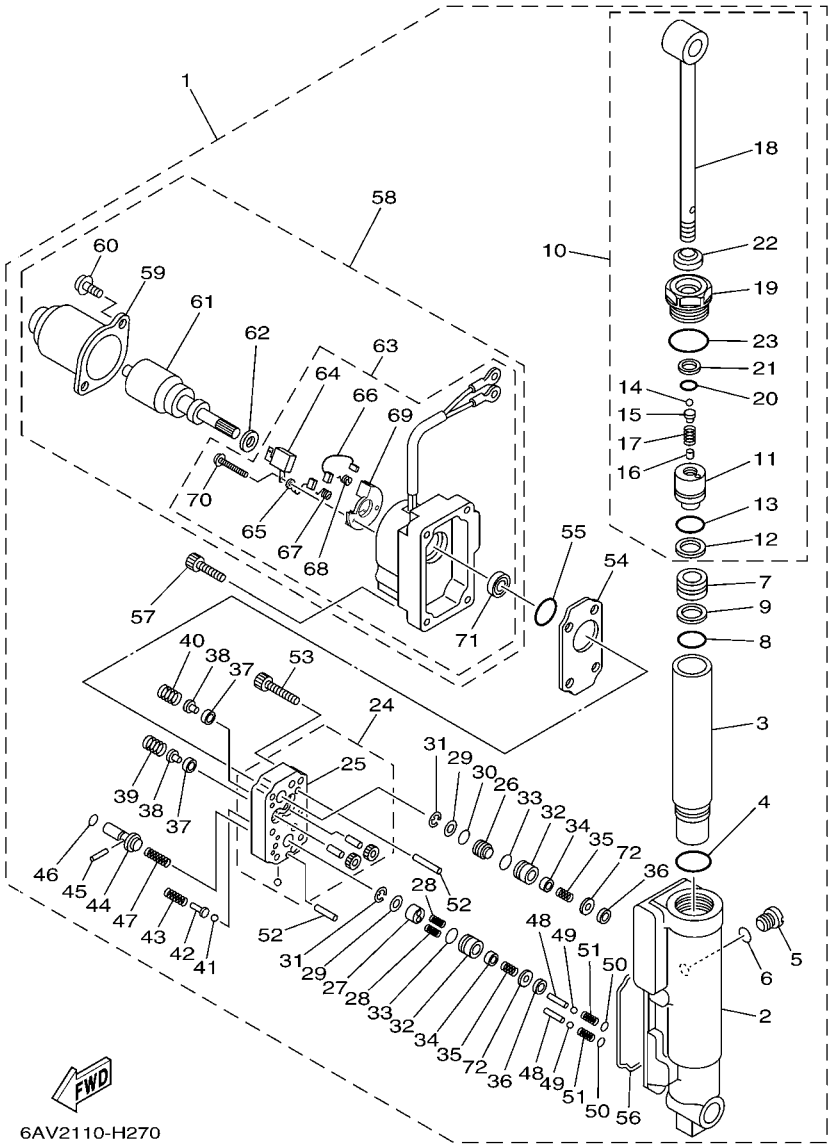

REF. NO.	PART NO. N° PIECES	DESCRIPTION DESCRIPTION	MH	E	EP			REMARKS REMARQUES
28	62Y–43894–00	.SPRING, SHUTTLE RETURN .RESSORT			2			
29	69A–4384F–00	.SEAL, MAIN VALVE .JOINT			2			
30	6H1–43883–00	.O-RING .JOINT TORIQUE			1			
31	99002–03600	.CLIP .CIRCLIP			2			
32	69G–4382G–00	.VALVE SEAT .JEU DE POINTEAUX			2			
33	93210–12N52	.O-RING .JOINT TORIQUE			2			
34	6T4–43808–00	.SEAT VALVE COMP. 1 .SIEGE VALVE COMP. 1			2			
35	69G–43853–00	.SPRING, MAIN VALVE .RESSORT			2			
36	69J–4381C–00	.FILTER 3 .FILTRE 3			2			
37	6H1–4384G–11	.SEAL, RELIEF VALVE .JOINT			2			
38	6H1–43844–10	.PIN, VALVE SUPPORT .GOUPILLE			2			
39	69A–43855–00	.SPRING, UP RELIEF .RESSORT			1			
40	6H1–43856–10	.SPRING, DOWN RELIEF .RESSORT			1			
41	93501–08001	.BALL .BILLE			2			
42	69A–4386A–00	.PIN, ABSORBER VALVE .GOUPILLE, SOUPAPE			2			
43	69A–43824–00	.SPRING, DOWN RELIEF 2 .RESSORT 2			2			
44	69A–43848–00	.ROD, MANUAL RELEASE .TIGE			1			
45	93602–15250	.PIN, DOWEL .GOUJON			1			
46	93210–06001	.O-RING .JOINT TORIQUE			1			
47	69A–43854–00	.SPRING, MANUAL RELEASE .RESSORT			1			
48	69A–4381G–00	.PIN 1 .GOUPILLE 1			2			
49	93501–08001	.BALL .BILLE			2			
50	6H1–43883–00	.O-RING .JOINT TORIQUE			2			
51	69A–4384H–00	.SPRING .RESSORT			2			
52	93606–14081	.PIN, DOWEL .GOUPILLE			2			
53	91318–05025	.BOLT .BOULON			6			
54	69A–43816–01	.FILTER 1 .FILTRE 1			1			

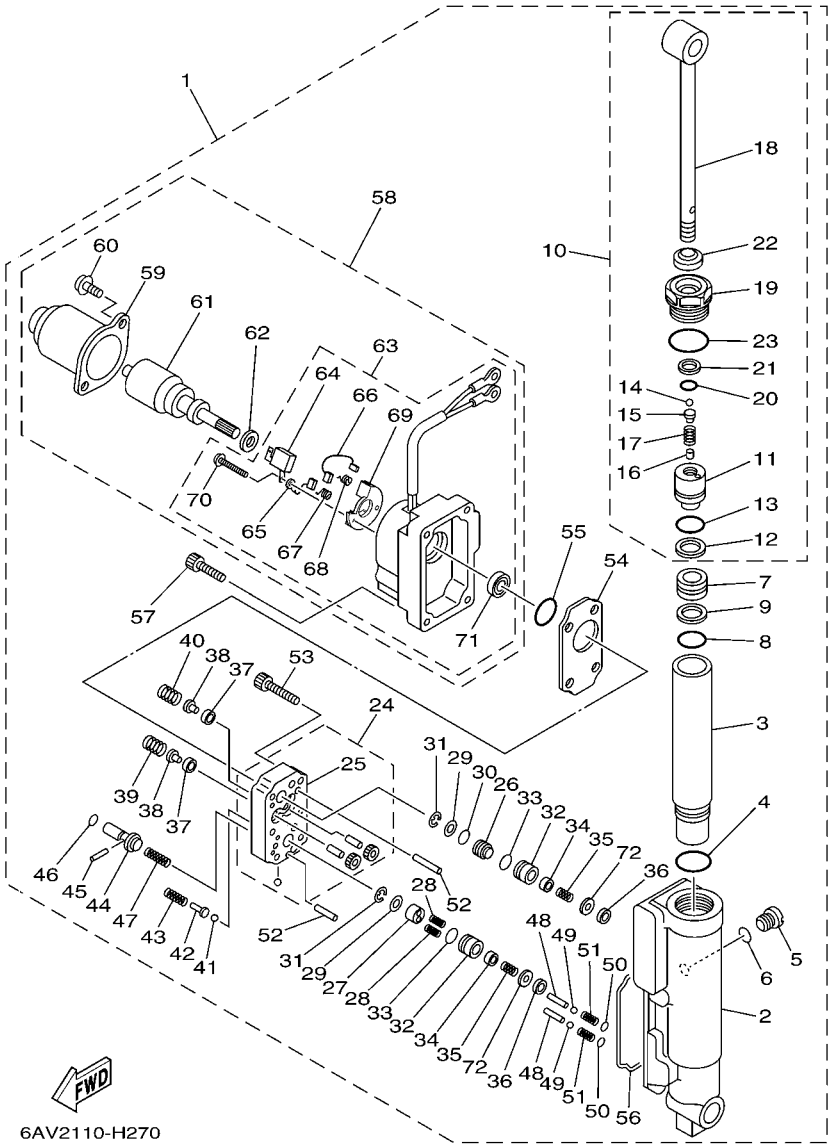

FIG. 25 POWER TILT ASSY — PUISSANCE PARER ET INCLINER

REF. NO.	PART NO. N° PIECES	DESCRIPTION DESCRIPTION	MH	E	EP			REMARKS REMARQUES
55	N35–43862–10	.O-RING .JOINT TORIQUE			1			
56	69A–23129–00	.GASKET, DRAIN PLUG .JOINT, PLOT DE VIDANGE			1			
57	69A–43878–00	.BOLT, SOCKET .BOULON			4			
58	69G–43880–01	.MOTOR ASSY .MOTEUR (ENS.)			1			
59	65W–43804–01	..STATOR ASSY ..STATOR (ENS.)			1			
60	65W–43887–01	..BOLT ..BOULON			2			
61	65W–43805–01	..ARMATURE ASSY ..INDUIT (ENS.)			1			
62	65W–4387G–00	..WASHER ..RONDELLE			1			
63	69G–43881–01	..FRAME, END ..BATI			1			
64	65W–82181–00	...CIRCUIT BREAKER COMP. ...RUPTEUR COMPLET			1			
65	65W–43892–01	...BRUSH 2 ...BALAI 2			1			
66	65W–43891–01	...BRUSH 1 ...BALAI 1			1			
67	65W–4386K–01	...SPRING, BRUSH ...RESSORT, BALAI			1			
68	65W–4386L–00	...SPRING, BRUSH 2 ...RESSORT, BALAI 2			1			
69	65W–4380F–01	...PLATE, BRUSH HOLDER ...PLAQUE			1			
70	65W–43879–01	...SCREW, WITH WASHER ...VIS, AVEC RONDELLE			2			
71	65W–43882–01	...OIL SEAL ...JOINT SPI			1			
72	69G–4388F–00	.SPACER .ENTRETOISE			2			

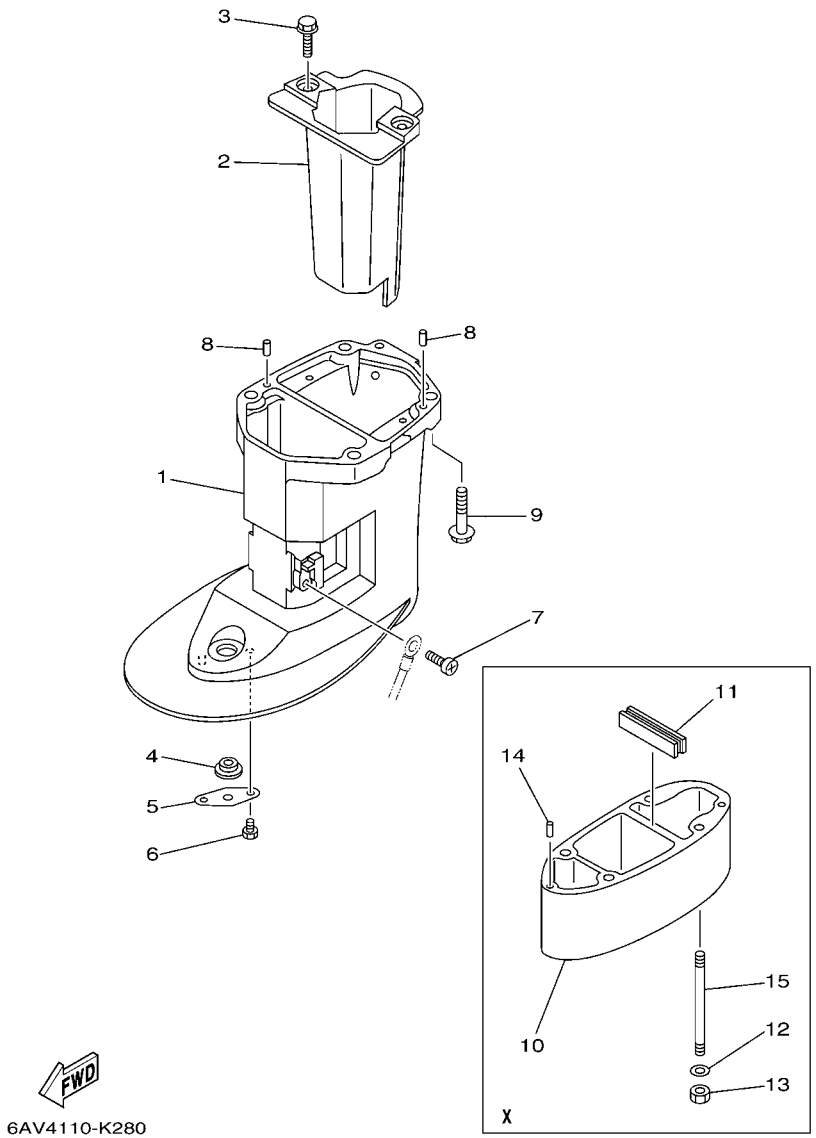

FIG. 26 UPPER CASING FOURREAU

REF. NO.	PART NO. N° PIECES	DESCRIPTION DESCRIPTION	MH	E	EP			REMARKS REMARQUES
1	6AU–45111–10–4D	CASING, UPPER FOURREAU	1	1	1			
2	6AU–14711–00–CA	MUFFLER 1 POT D'ECHAPPEMENT 1	1	1	1			
3	97575–06514	BOLT, WITH WASHER VIS HEXAGONAL AVC RONDELLE	2	2	2			
4	90480–14M54	GROMMET PASSE-FIL	1	1	1			
5	68T–45321–00	PLATE PLAQUETTE	1	1	1			
6	97095–06008	BOLT BOULON	1	1	1			
7	97885–05008	SCREW, PAN HEAD VIS, A ENCOCHE	1	1	1			
8	93604–12M07	PIN, DOWEL CLAVETTE	2	2	2			
9	97575–08535	BOLT, WITH WASHER VIS HEXAGONAL AVC RONDELLE	4	4	4			
10	69G–45211–20–4D	EXTENSION EXTENSION	1	1				X(24.3") X(24.3")
11	63V–45127–00	SEAL JOINT	1	1				X(24.3") X(24.3")
12	92990–08600	WASHER, PLATE RONDELLE, PLATE	4	4				X(24.3") X(24.3")
13	95380–08600	NUT ECROU	4	4				X(24.3") X(24.3")
14	93604–12M07	PIN, DOWEL CLAVETTE	2	2				X(24.3") X(24.3")
15	90116–08M62	BOLT, STUD GOUJON	4	4				X(24.3") X(24.3")

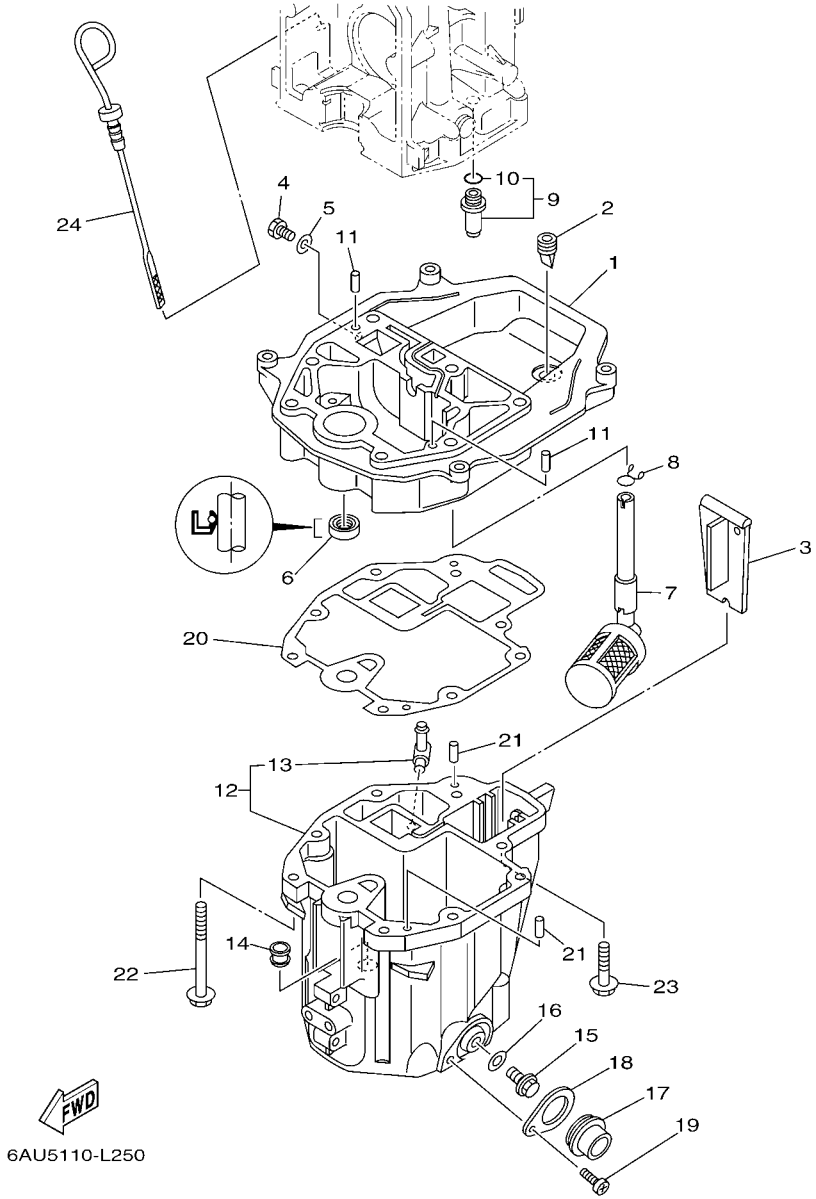

FIG. 27 OIL PAN — VENTILATEUR D'HUILE

REF. NO.	PART NO. N° PIECES	DESCRIPTION DESCRIPTION	MH	E	EP			REMARKS REMARQUES
1	68T–41137–00–CA	GUIDE, EXHAUST COLLECTEUR D'ECHAPPEMENT	1	1	1			
2	65W–42717–00	RUBBER, SEAL 2 JOINT EN CAOUTCHOUC 2	1	1	1			
3	68T–45181–00	PLATE PLAQUETTE	1	1	1			
4	97095–08014	BOLT BOULON	1	1	1			
5	90430–08143	GASKET JOINT	1	1	1			
6	93101–12M70	OIL SEAL JOINT SPY	1	1	1			
7	68T–13421–01	STRAINER 2 FILTRE 2	1	1	1			
8	90467–11M08	CLIP JONC	1	1	1			
9	6G8–11575–00	RELIEF VALVE ASSY SOUPAPE DE RENTREE D'AIR	1	1	1			
10	93210–12M62	.O-RING .JOINT TORIQUE	1	1	1			
11	93606–19M23	PIN, DOWEL GOUPILLE	2	2	2			
12	68T–15311–01–CA	OIL PAN VENTILATEUR D'HUILE	1	1	1			
13	6H1–11372–00	.NIPPLE, HOSE .RACCORD, TUYAU	1	1	1			
14	90480–10M28	GROMMET PASSE-FIL	1	1	1			
15	90340–10M10	PLUG, STRAIGHT SCREW PLOT, FILETE DROIT	1	1	1			
16	90430–10M11	GASKET JOINT	1	1	1			
17	68T–15316–00	DAMPER 1 AMORTISSEUR 1	1	1	1			
18	68T–15317–00	SPACER, ENGINE MOUNT ENTRETOISE DE SUPPORT	1	1	1			
19	97885–05008	SCREW, PAN HEAD VIS, A ENCOCHE	1	1	1			
20	68T–13475–00	GASKET JOINT	1	1	1			
21	93604–12M07	PIN, DOWEL CLAVETTE	2	2	2			
22	90119–08005	BOLT, WITH WASHER BOULON, AVEC RONDELLE	6	6	6			
23	97575–08530	BOLT, WITH WASHER VIS HEXAGONAL AVC RONDELLE	2	2	2			
24	68T–15362–00	PLUG, OIL LEVEL PLOT, NIVEAU D'HUILE	1	1	1			

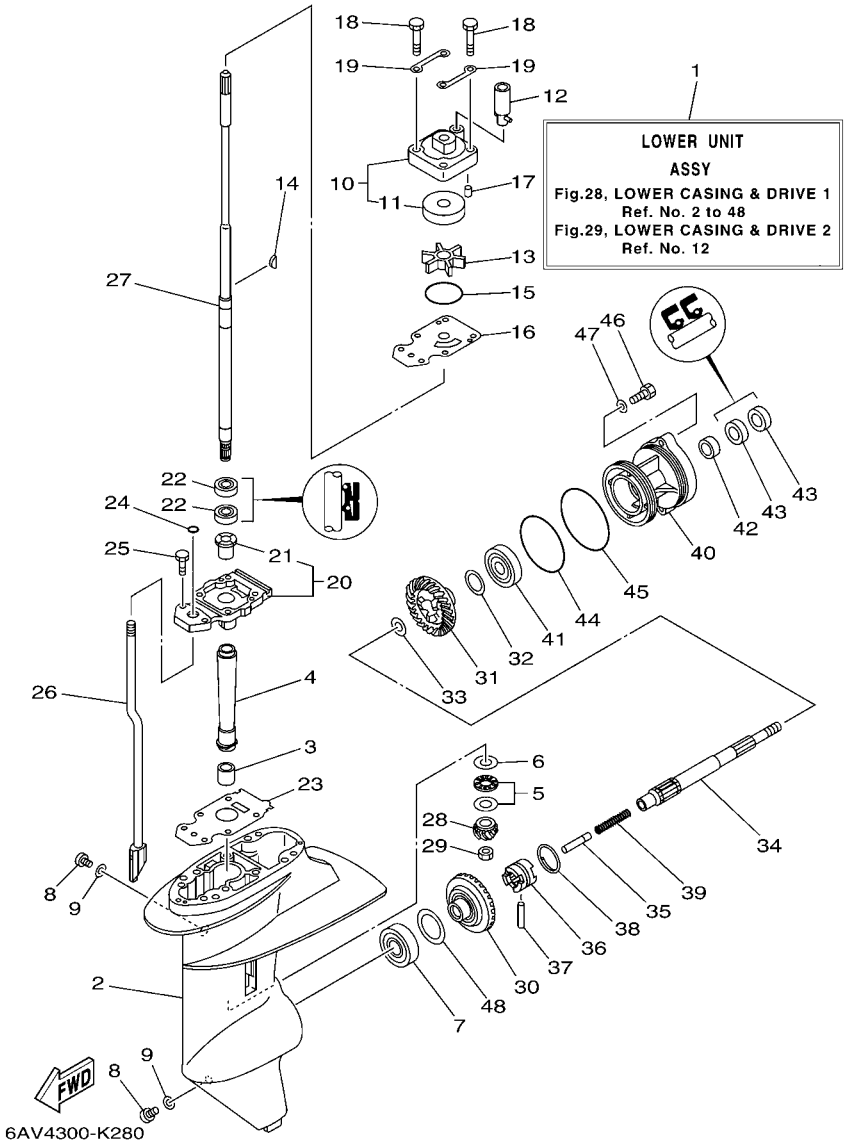

FIG. 28 LOWER CASING & DRIVE 1 BOITIER D'HELICE TRANSMISSION1

REF. NO.	PART NO. N° PIECES	DESCRIPTION DESCRIPTION	MH	E	EP			REMARKS REMARQUES
1	69G–45300–11–4D	LOWER UNIT ASSY UNITE INFERIEURE (ENS.)	1	1	1			L(21.7") L(21.7")
	69G–45300–21–4D	LOWER UNIT ASSY UNITE INFERIEURE (ENS.)	1	1				X(24.3") X(24.3")
2	66R–45311–01–4D	CASING, LOWER BOITIER D'HELICE	1	1	1			
3	93315–314V8	BEARING ROULEMENT	1	1	1			
4	66R–45536–00	SLEEVE, DRIVE SHAFT MANCHON, ARBRE MOTEUR	1	1	1			
5	93341–41416	BEARING CERVEAUX DE DIRECTION	1	1	1			
6	66R–45587–00	SHIM (T:1.13MM) CALE (T:1.13MM)	1	1	1			UR UR
	66R–45587–10	SHIM (T:1.20MM) CALE (T:1.20MM)	1	1	1			UR UR
7	93332–00005	BEARING ROULEMENT	1	1	1			
8	90340–08002	PLUG, STRAIGHT SCREW PLOT, FILETE DROIT	2	2	2			
9	90430–08020	GASKET JOINT	2	2	2			
10	63V–44301–00	WATER PUMP HOUSING COMP. CARTER, POMPE A EAU (ENS)	1	1	1			
11	63V–44322–00	.INSERT, CARTRIDGE .CUVETTE	1	1	1			
12	68T–44366–00	DAMPER, WATER SEAL 2 JOINT, TUBE D'EAU 2	1	1	1			
13	63V–44352–01	IMPELLER TURBINE	1	1	1			
14	664–44338–00	KEY, WOODRUFF CLAVETTE, VOLANT	1	1	1			
15	93210–44398	O-RING JOINT TORIQUE	1	1	1			
16	68T–44323–00	OUTER PLATE, CARTRIDGE PLAQUE EXTERIEURE	1	1	1			
17	93604–12M07	PIN, DOWEL CLAVETTE	2	2	2			
18	97095–08045	BOLT BOULON	4	4	4			
19	63V–44328–01	PLATE PLAQUETTE	2	2	2			
20	69G–45331–01–CA	HOUSING, BEARING FLASQUE, ROULEMENT	1	1	1			
21	626–45316–09	.BUSHING, DRIVE SHAFT .DOUILLE, ARBRE MOTEUR	1	1	1			
22	93101–20048	OIL SEAL JOINT SPY	2	2	2			
23	69G–45315–A0	PACKING, LOWER CASING JOINT, BOITIER D'HELICE	1	1	1			
24	93210–06ME6	O-RING JOINT TORIQUE	1	1	1			
25	97080–08025	BOLT BOULON	2	2	2			

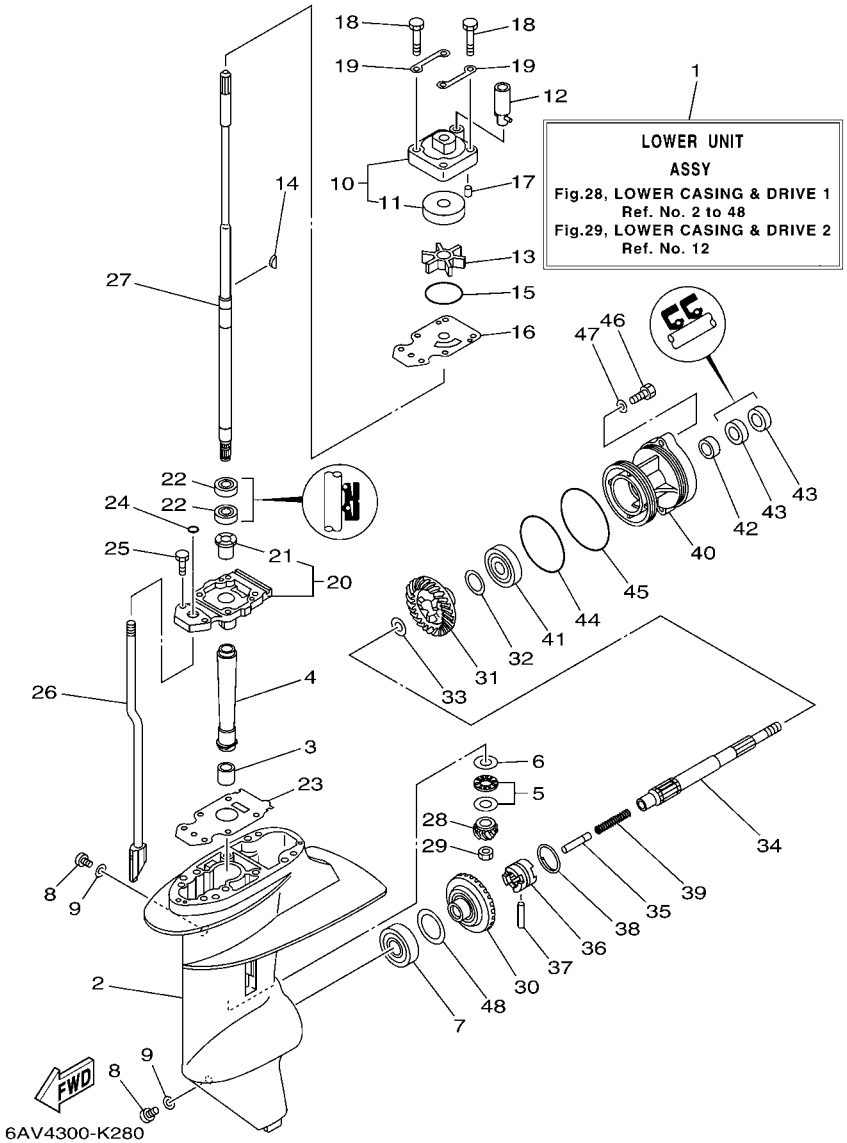

FIG. 28 LOWER CASING & DRIVE 1 BOITIER D'HELICE TRANSMISSION1

REF. NO.	PART NO. N° PIECES	DESCRIPTION DESCRIPTION	MH	E	EP			REMARKS REMARQUES
26	69G–44150–10	SHIFT CAM ASSY CAME D'INVERSION	1	1	1			L(21.7") L(21.7")
	69G–44150–20	SHIFT CAM ASSY CAME D'INVERSION	1	1				X(24.3") X(24.3")
27	69G–45510–10	DRIVE SHAFT ASSY ARBRE MOTEUR (ENS.)	1	1	1			L(21.7") L(21.7")
	69G–45510–20	DRIVE SHAFT ASSY ARBRE MOTEUR (ENS.)	1	1				X(24.3") X(24.3")
28	66R–45551–00	PINION (13T) PIGNON D'ATTAQUE (13D)	1	1	1			
29	90179–08M06	NUT ECROU	1	1	1			
30	66R–45560–01	GEAR 1 (38T) PIGNON 1 (38T)	1	1	1			
31	66R–45571–00	GEAR 2 (38T) PIGNON 2 (38T)	1	1	1			
32	626–45577–00	SHIM (T:0.10MM) CALE (T:0.10MM)	1	1	1			UR UR
	626–45577–10	SHIM (T:0.20MM) CALE (T:0.20MM)	1	1	1			UR UR
	626–45577–20	SHIM (T:0.30MM) CALE (T:0.30MM)	1	1	1			UR UR
	626–45577–30	SHIM (T:0.40MM) CALE (T:0.40MM)	1	1	1			UR UR
	626–45577–40	SHIM (T:0.50MM) CALE (T:0.50MM)	1	1	1			UR UR
33	90201–17682	WASHER, PLATE RONDELLE, PLATE	1	1	1			
34	683–45611–00	SHAFT, PROPELLER ARBRE, HELICE	1	1	1			
35	650–45635–00	PLUNGER, SHIFT POUSSOIR D'EMBRAYAGE	1	1	1			
36	69G–45631–00	CLUTCH, DOG CRABOT	1	1	1			
37	90250–05010	PIN, STRAIGHT GOUPILLE, DROITE	1	1	1			
38	648–45633–00	RING, CROSS PIN JONC, GOUPILLE CRABOT	1	1	1			
39	90501–14M09	SPRING, COMPRESSION RESSORT, COMPRESSION	1	1	1			
40	66R–45361–00–4D	CAP, LOWER CASING COUVERCLE, BOITIER D'HELICE	1	1	1			
41	93306–00501	BEARING ROULEMENT	1	1	1			
42	93315–317U2	BEARING ROULEMENT	1	1	1			
43	93101–17054	OIL SEAL JOINT SPY	2	2	2			
44	93210–74M68	O-RING JOINT TORIQUE	1	1	1			
45	93210–74316	O-RING JOINT TORIQUE	1	1	1			
46	97095–06025	BOLT BOULON	2	2	2			

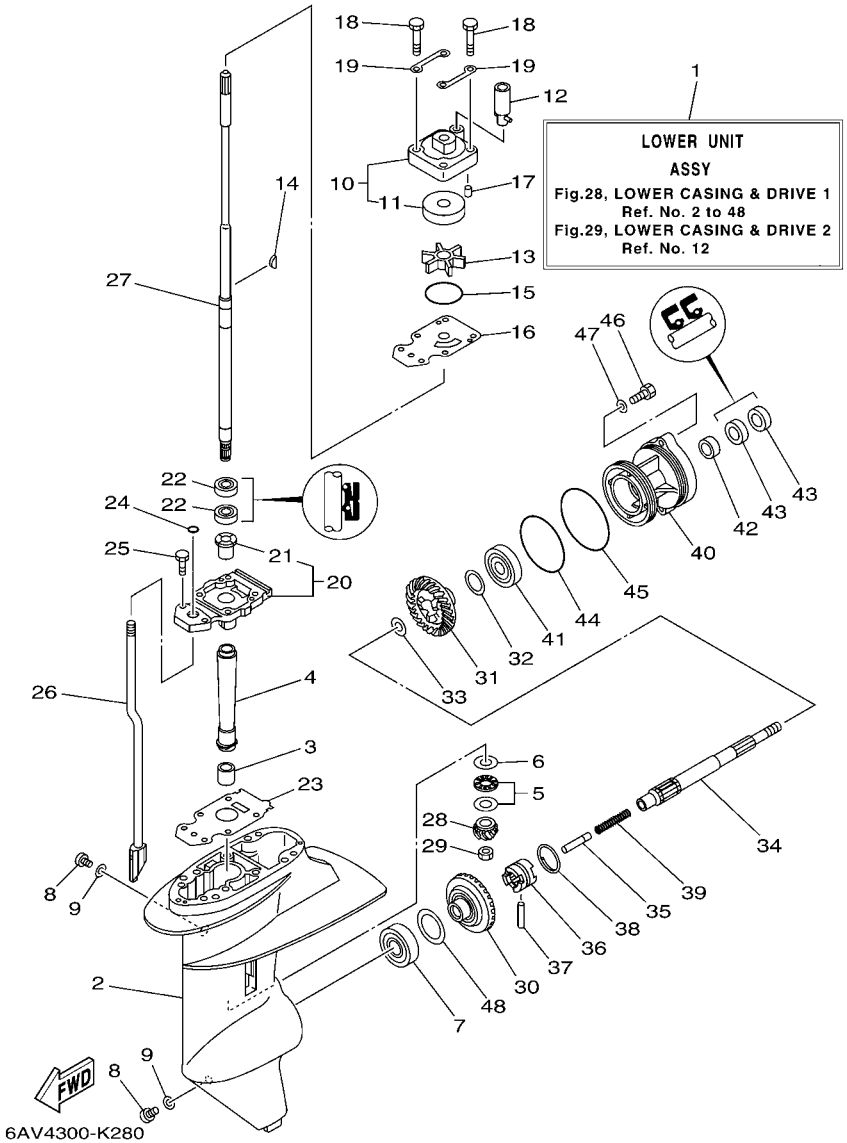

FIG. 28 LOWER CASING & DRIVE 1 BOITIER D'HELICE TRANSMISSION1

REF. NO.	PART NO. N° PIECES	DESCRIPTION DESCRIPTION	MH	E	EP			REMARKS REMARQUES
47	92995–06600	WASHER RONDELLE	2	2	2			
48	626–45577–00	SHIM (T:0.10MM) CALE (T:0.10MM)	1	1	1			UR UR
	626–45577–10	SHIM (T:0.20MM) CALE (T:0.20MM)	1	1	1			UR UR
	626–45577–20	SHIM (T:0.30MM) CALE (T:0.30MM)	1	1	1			UR UR
	626–45577–30	SHIM (T:0.40MM) CALE (T:0.40MM)	1	1	1			UR UR
	626–45577–40	SHIM (T:0.50MM) CALE (T:0.50MM)	1	1	1			UR UR

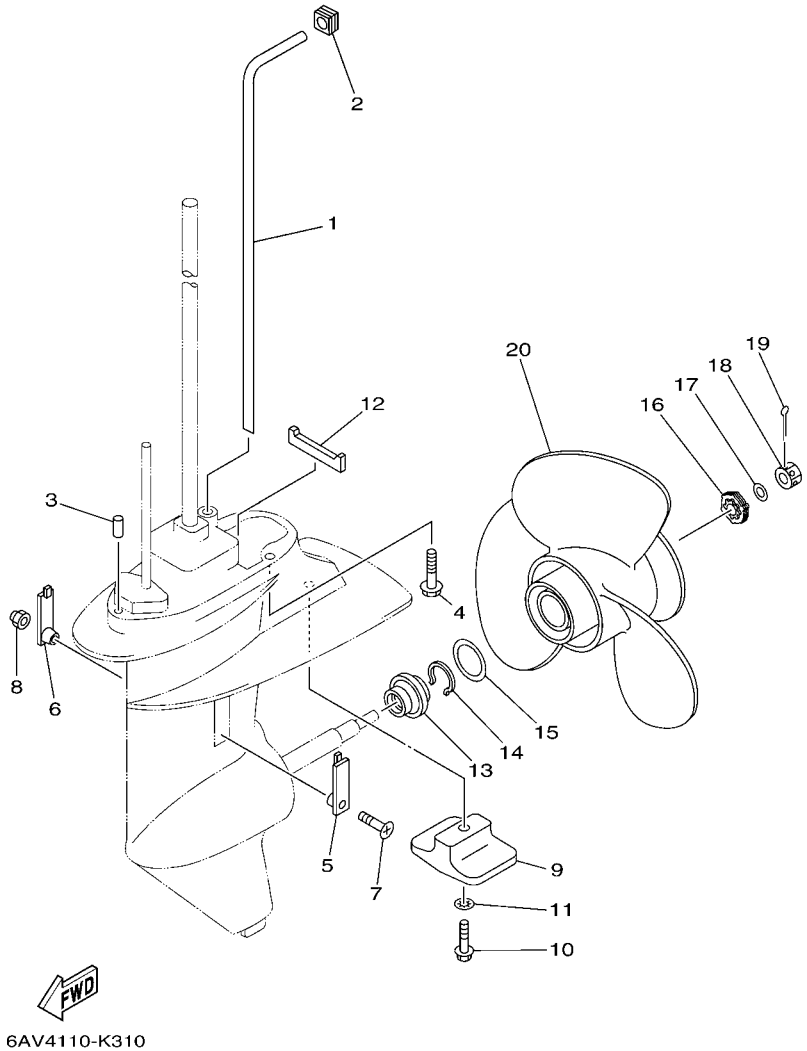

FIG. 29 LOWER CASING & DRIVE 2 BOITIER D'HELICE TRANSMISSION2

REF. NO.	PART NO. N° PIECES	DESCRIPTION DESCRIPTION	MH	E	EP			REMARKS REMARQUES
1	68T–44361–10	TUBE, WATER 1 TUBE D'EAU 1	1	1	1			L(21.7") L(21.7")
	69G–44361–20	TUBE, WATER 1 TUBE D'EAU 1	1	1				X(24.3") X(24.3")
2	63V–44365–10	DAMPER, WATER SEAL 1 JOINT, TUBE D'EAU 1	1	1	1			
3	93604–12M07	PIN, DOWEL CLAVETTE	2	2	2			
4	97575–08535	BOLT, WITH WASHER VIS HEXAGONAL AVC RONDELLE	4	4	4			L(21.7") L(21.7")
5	6G1–45214–00	COVER, WATER INLET 1 GRILLE, ENTREE D'EAU 1	1	1	1			
6	63V–45215–00	COVER, WATER INLET 2 GRILLE, ENTREE D'EAU 2	1	1	1			
7	90152–05011	SCREW, COUNTERSUNK VIS, TETE NOYEE	1	1	1			
8	90185–05002	NUT, NYLON ECROU,AUTO-BLOQUANT	1	1	1			
9	61N–45251–01	ANODE ANODE	1	1	1			
10	95895–06030	BOLT, FLANGE BOULON	1	1	1			
11	92990–06300	WASHER, INTERNAL TOOTH RONDELLE, DENTURE INTERNE	1	1	1			
12	63V–45375–00	DAMPER, SEAL BOURRELET, CAOUTCHOUC	1	1	1			
13	6G8–45987–02	SPACER 1 ENTRETOISE 1	1	1	1			
14	93450–10M04	CIRCLIP CIRCLIP, TYPE S	1	1	1			
15	90201–31MA3	WASHER, PLATE RONDELLE, PLATE	1	1	1			
16	6G8–45997–00	SPACER 2 ENTRETOISE 2	1	1	1			
17	90201–10M02	WASHER, PLATE RONDELLE, PLATE	1	1	1			
18	90171–10M07	NUT, CASTLE ECROU, CRENELE	1	1	1			
19	91490–30025	PIN. COTTER GOUPILLE	1	1	1			
20	69G–45943–00	PROPELLER (3X11-3/4"X7-R) HELICE (3X11-3/4"X7-R)	1	1	1			

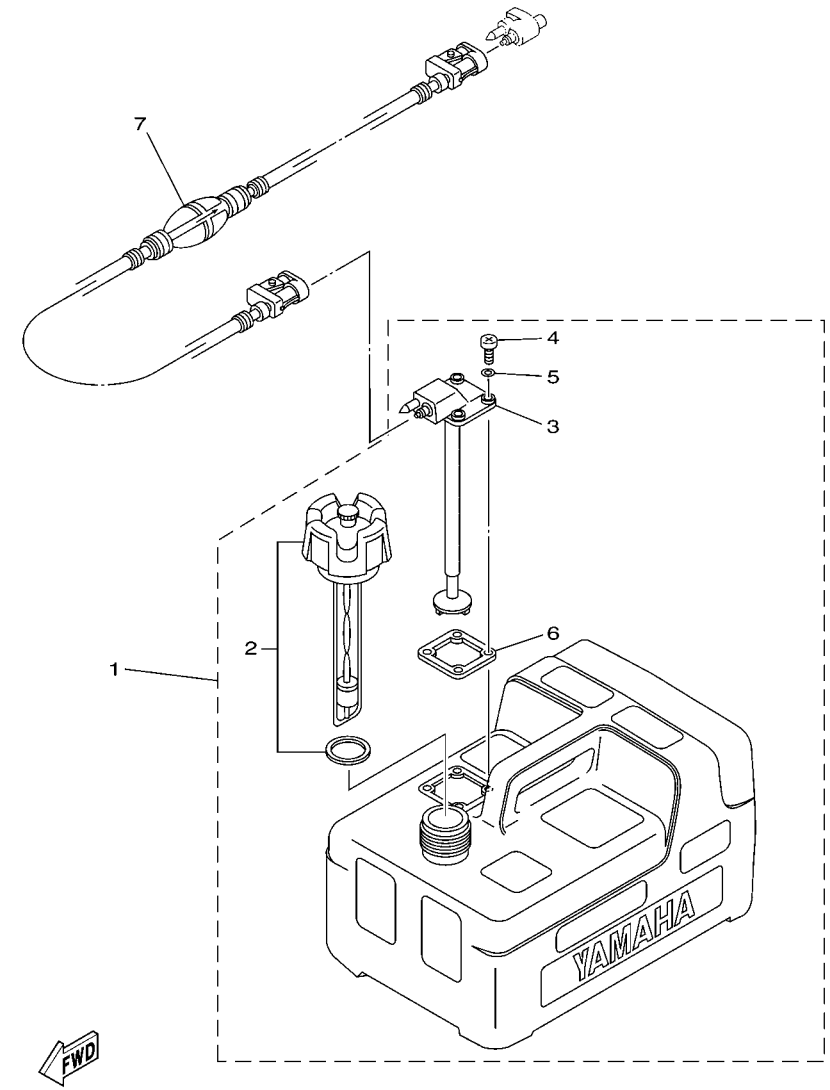

66M4100-D270

FIG. 30 FUEL TANK — RESERVOIR A CARBURANT

REF. NO.	PART NO. N° PIECES	DESCRIPTION DESCRIPTION	MH	E	EP			REMARKS REMARQUES
1	6YL–24201–05	FUEL TANK ASSY (12L) RESERVOIR A ESSENCE (ENS.) 12L	1	1	1			AP AP
2	6YL–24610–01	.CAP ASSY .BOUCHON	1	1	1			
3	6YL–24260–01	.FUEL METER ASSY .INDICATEUR DE CARBURANT	1	1	1			
4	90157–05M16	.SCREW, PAN HEAD .VIS, TETE TRONCONIQUE	4	4	4			
5	6YL–24329–00	.SEAL .JOINT	4	4	4			
6	6YL–24268–01	.GASKET, FUEL METER .JOINT, JAUGE A CARBURANT	1	1	1			
7	6YL–24306–54	FUEL PIPE COMP. 1 DURITE A ESSENCE 1	1	1	1			AP AP

FIG. 31 STEERING GUIDE FIXATION DE DIRECTION

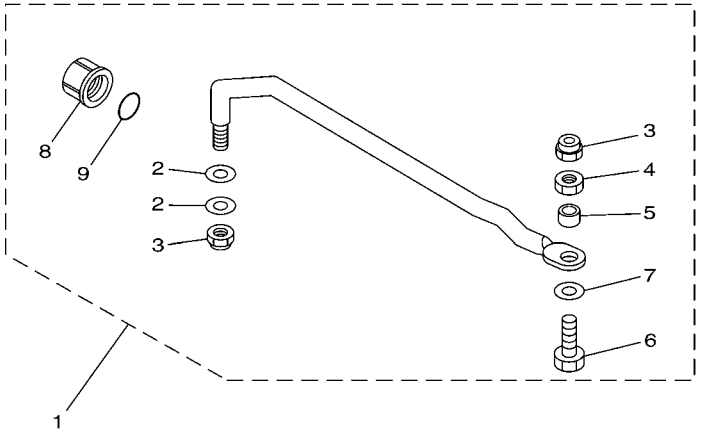

6AU1100-G300

REF. NO.	PART NO. N° PIECES	DESCRIPTION DESCRIPTION	MH	E	EP			REMARKS REMARQUES
1	68T–61350–10	STEERING GUIDE ATTACHMENT KIT FIXATIONS DE DIRECTION		1	1			AP AP
2	90201–10M20	.WASHER, PLATE .RONDELLE, PLATE		2	2			
3	90185–09M01	.NUT, SELF-LOCKING .ECROU,AUTO-BLOQUANT		2	2			
4	90170–09M03	.NUT .ECROU		1	1			
5	90387–10M42	.COLLAR .COLLERETTE		1	1			
6	6E5–61355–00	.BOLT .BOULON		1	1			
7	90201–10M63	.WASHER, PLATE .RONDELLE, PLATE		1	1			
8	6E5–43145–01	.CAP, CLAMP BRACKET .CAPUCHON, PRESSE		1	1			
9	93210–16275	.O-RING .JOINT TORIQUE		1	1			

FIG. 32 REMOTE CONTROL BOX BOITIER DE COMMANDE A DISTANCE

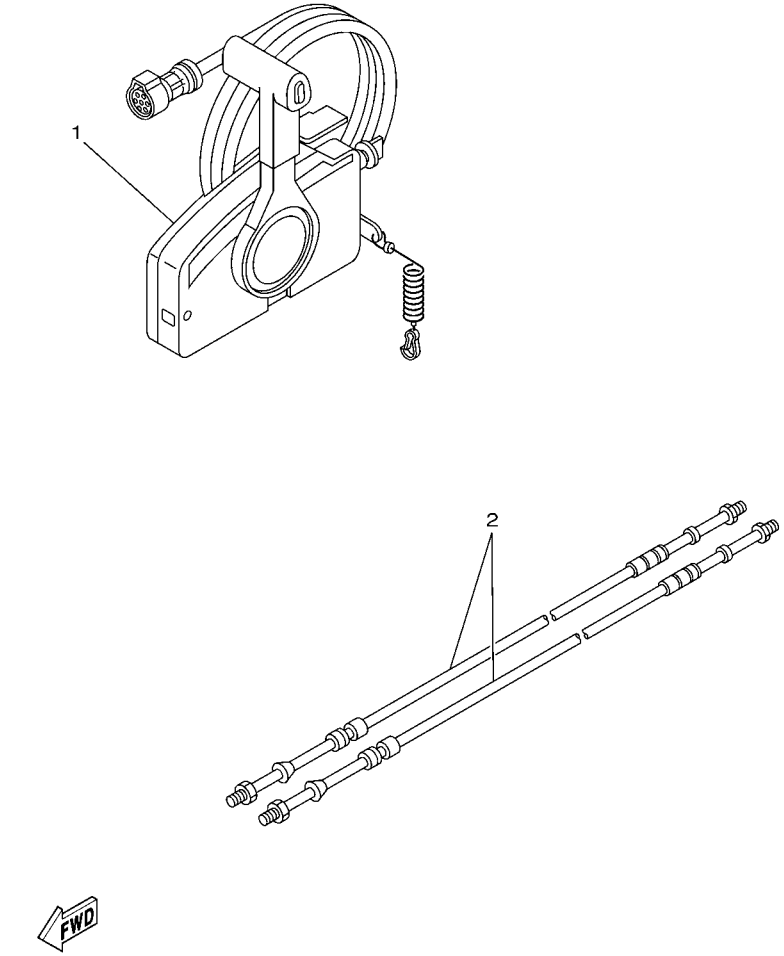

67M0100-8280

REF. NO.	PART NO. N° PIECES	DESCRIPTION DESCRIPTION	MH	E	EP			REMARKS REMARQUES
1	703–48205–1A	REMOTE CONTROL ASSY (10P) BOITIER DE COMMANDE A DISTANCE			1			AP WITH PT/T SW. AP WITH PT/T SW.
	703–48201–18	REMOTE CONTROL ASSY (10P) BOITIER DE COMMANDE A DISTANCE		1				AP WITHOUT PT/T SW. AP WITHOUT PT/T SW.
2	701–48310–80	CABLE, REMOTE CONTROL L=10F CABLE, COMMANDE A DISTANCE:10F		2	2			UR UR
	701–48310–90	CABLE, REMOTE CONTROL L=11F CABLE, COMMANDE A DISTANCE:11F		2	2			UR UR
	701–48320–00	CABLE, REMOTE CONTROL L=12F CABLE, COMMANDE A DISTANCE:12F		2	2			UR UR

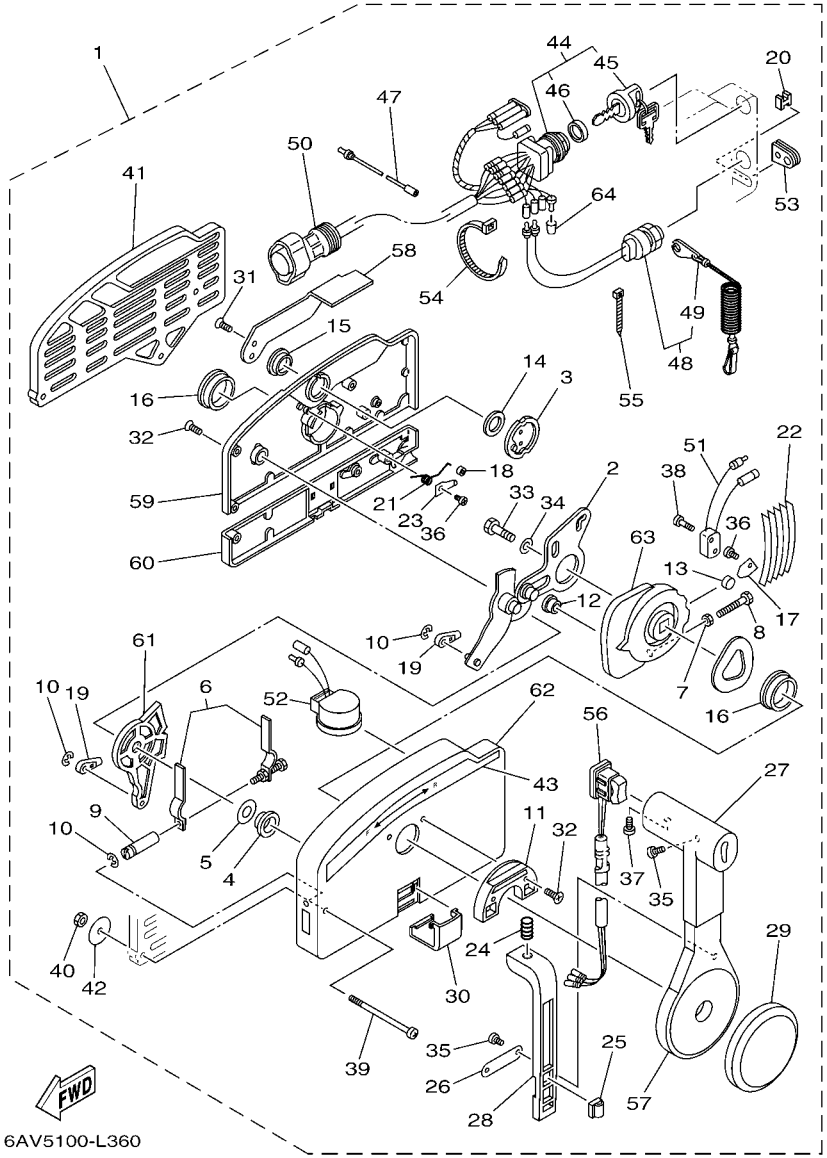

FIG. 33 REMOTE CONTROL ASSY BOITIER DE COMMANDE A DISTANCE

REF. NO.	PART NO. N° PIECES	DESCRIPTION DESCRIPTION	MH	E	EP			REMARKS REMARQUES
1	703–48205–1A	REMOTE CONTROL ASSY (10P) BOITIER DE COMMANDE A DISTANCE			1			AP WITH PT/T SW. AP WITH PT/T SW.
	703–48201–18	REMOTE CONTROL ASSY (10P) BOITIER DE COMMANDE A DISTANCE		1				AP WITHOUT PT/T SW. AP WITHOUT PT/T SW.
2	703–48261–01	.ARM, THROTTLE .BRAS, ACCELERATION		1	1			
3	703–48153–00	.SHAFT, FREE ACCEL. .AXE		1	1			
4	703–48235–00	.BUSHING .COUSSINET		1	1			
5	703–48268–00	.SPACER .ENTRETOISE		1	1			
6	703–48264–00	.FRICTION, THROTTLE .FRICTION, ACCELERATION		1	1			
7	95380–05600	.NUT .ECROU		1	1			
8	97380–05025	.BOLT .BOULON, HEXAGONAL		1	1			
9	703–48265–00	.SHAFT, FRICTION .AXE, COPILOTE		1	1			
10	93430–06024	.CIRCLIP .CLIPS		3	3			
11	703–48245–00	.PLATE, LOCK .PLAQUE, VERROU		1	1			
12	703–48252–00	.ROLLER, CAM .POULIE		1	1			
13	701–48248–00	.ROLLER, FREE ACCEL. .POULIE		1	1			
14	703–48198–00	.WASHER, WAVE .RONDELLE, ELASTIQUE ONDULEE		1	1			
15	703–48243–00	.BUSHING .COUSSINET		1	1			
16	703–48236–00	.BUSHING 1 .POULIE		2	2			
17	703–48189–00	.RETAINER .FLASQUE		1	1			
18	703–48234–00	.ROLLER, DETENT .POULIE		1	1			
19	703–48345–01	.CABLE END, REMOTE CONTROL 2 .CHAPE CABLE		2	2			
20	703–48358–00	.ANCHOR, CABLE .COLLIER		1	1			
21	703–48244–00	.SPRING, FREE ACCEL. .RESSORT		1	1			
22	703–48238–00	.SPRING, DETENT .RESSORT		5	5			
23	703–48246–00	.SPACER .ENTRETOISE		1	1			
24	703–48227–00	.SPRING, NEUTRAL LOCK .RESSORT		1	1			
25	703–82594–00	.CLAMP .BRIDE			1			WITH PT/T SW. WITH PT/T SW.
26	703–48226–00	.PLATE, STOPPER .PLAQUETTE		1	1			

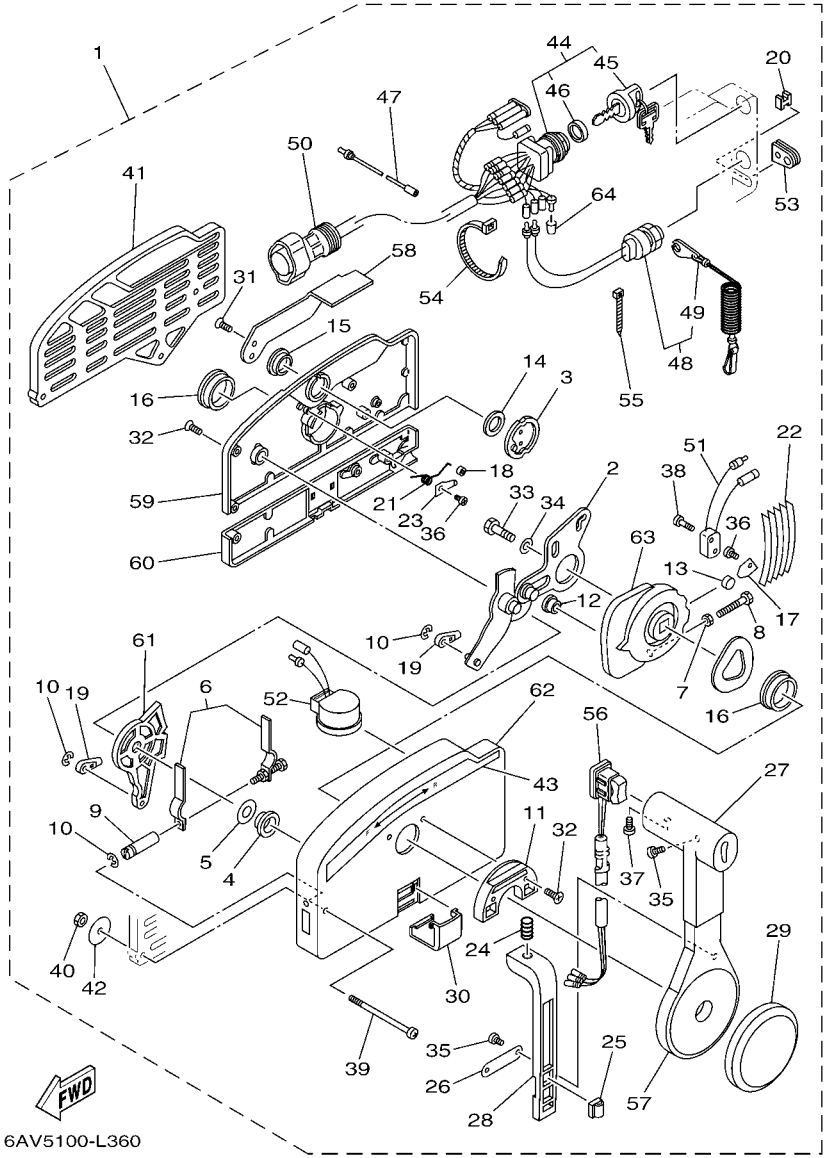

FIG. 33 REMOTE CONTROL ASSY BOITIER DE COMMANDE A DISTANCE

REF. NO.	PART NO. N° PIECES	DESCRIPTION DESCRIPTION	MH	E	EP			REMARKS REMARQUES
27	703–48222–00	.GRIP, CONTROL LEVER .POIGNEE, COMMANDE LEVIER		1	1			SINGLE SINGLE
28	703–48223–00	.LOCK, NEUTRAL .VERROU, NEUTRAL		1	1			
29	703–48225–00	.COVER .COUVERCLE		1	1			
30	703–48219–00	.COVER, LEAD .COUVERCLE		1	1			
31	703–48281–00	.SCREW .VIS		2	2			
32	703–48282–00	.SCREW .VIS		7	7			
33	97380–08030	.BOLT .BOULON, HEXAGONAL		1	1			
34	92990–08600	.WASHER, PLATE .RONDELLE, PLATE		1	1			
35	98580–04010	.SCREW, PAN HEAD .VIS		3	3			
36	98580–04006	.SCREW, PAN HEAD .VIS		2	2			
37	98580–05010	.SCREW, PAN HEAD .VIS		1	1			
38	98580–03015	.SCREW, PAN HEAD .VIS		2	2			
39	703–48291–10	.SCREW (M6) .VIS (M6)		3	3			
40	95380–06600	.NUT, HEXAGON .ECROU		3	3			
41	703–48293–10	.SPACER, REMOTE CONTROL .ENTRETOISE		1	1			SINGLE SINGLE
42	701–48287–00	.WASHER .RONDELLE		3	3			
43	703–48215–00	.GRAPHIC .ADHESIF		1	1			
44	703–82510–43	.MAIN SWITCH ASSY .CONTACTEUR A CLEF COMPLET		1	1			
45	703–82577–00	..CAP, KEY ..CABOCHON		1	1			
46	6K1–82532–00	..CAP ..COUVERCLE		1	1			
47	703–82531–00	.WIRE, LEAD (L70) .FIL (L70)		1	1			
48	688–82575–01	.ENGINE STOP SWITCH ASSY .COUPE CIRCUIT CPLT		1	1			
49	682–82556–00	..LANYARD, STOP SWITCH ..CORDON DU COUPE CIRCUIT		1	1			
50	688–8258A–20	.EXTENSION, WIRE HARNESS (4.9M) .EXTENSION, FAISCEAU DE FILS (4		1	1			(10P) (10P)
51	703–82540–00	.NEUTRAL SWITCH ASSY .CONTACTEUR DE POINT-MORT		1	1			
52	703–83383–11	.BUZZER .RONFLEUR		1	1			
53	703–48284–00	.GROMMET .PASSE-FIL		1	1			

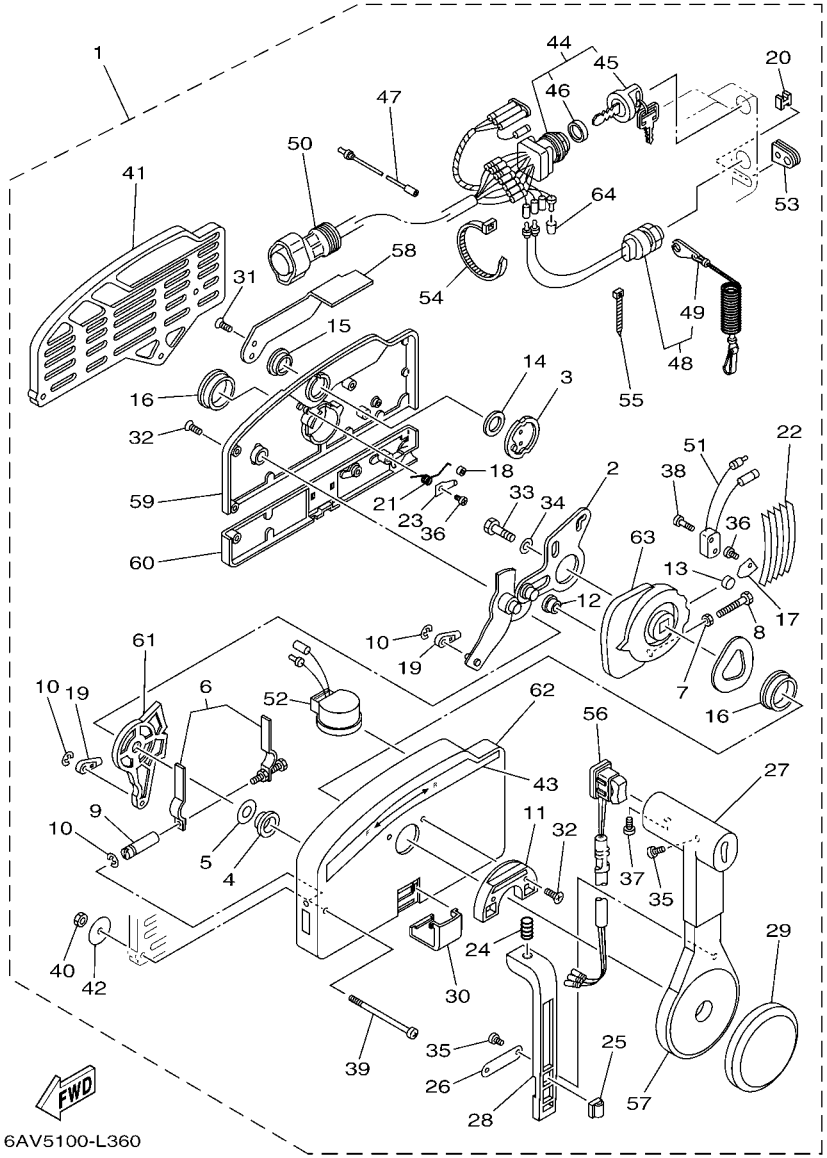

FIG. 33 REMOTE CONTROL ASSY BOITIER DE COMMANDE A DISTANCE

REF. NO.	PART NO. N° PIECES	DESCRIPTION DESCRIPTION	MH	E	EP			REMARKS REMARQUES
54	703–82591–00	.BAND .COLLIER		1	1			
55	703–82592–00	.BAND .COLLIER		1	1			
56	703–82563–02	.TRIM & TILT SWITCH ASSY .INCLINER ET PARER COMMUTATEUR			1			WITH PT/T SW. WITH PT/T SW.
	703–48224–00	.COVER, CONTROL LEVER .COUVERCLE		1				WITHOUT PT/T SW. WITHOUT PT/T SW.
57	703–48221–00	.LEVER, CONTROL .LEVIER, COMMANDE		1	1			
58	703–48152–00	.KNOB, FREE ACCEL. .BOUTON		1	1			
59	703–48212–00	.BACK PLATE 1 .PLAQUETTE 1		1	1			
60	703–48213–00	.BACK PLATE 2 .PLAQUETTE 2		1	1			
61	703–48271–00	.ARM, SHIFT .BRAS		1	1			
62	703–48211–02	.HOUSING,1 .CORPS		1	1			
63	703–48232–00	.GEAR .PIGNON		1	1			
64	703–82542–00	.CAP .COUVERCLE		2				FOR 703-48201-18 FOR 703-48201-18

FIG. 34 REPAIR KIT 1 — KITS DE REPARATION 1

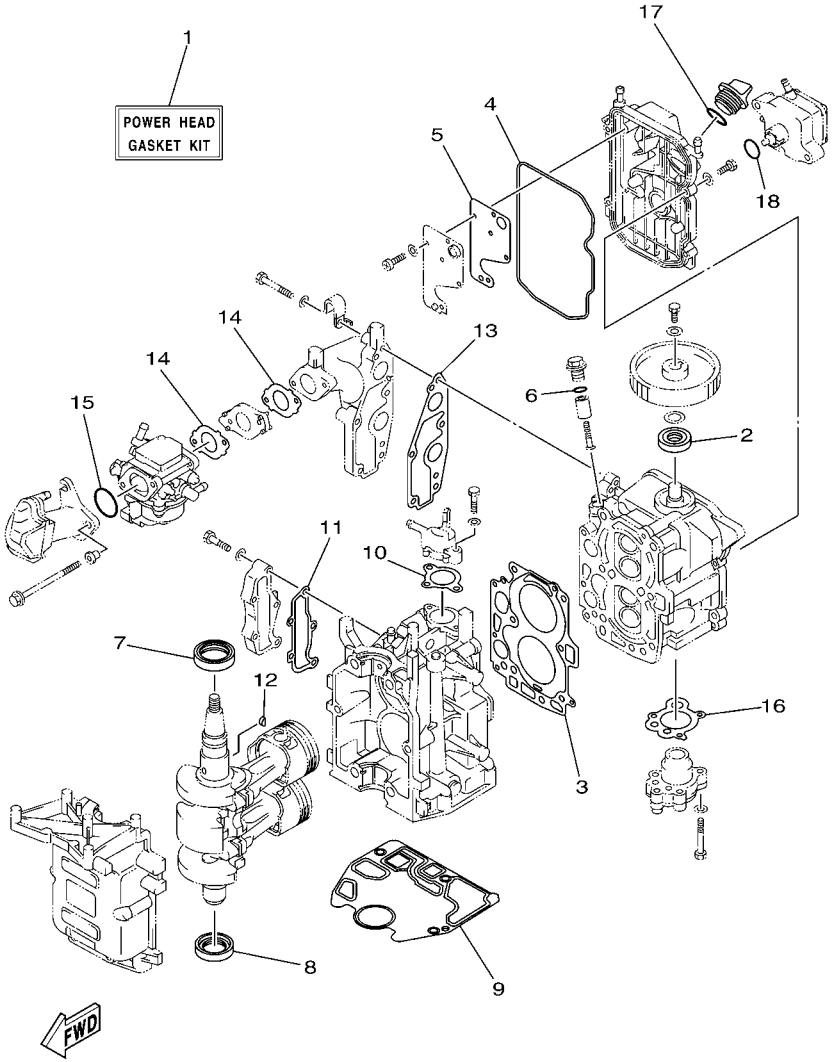

6AU1100-G340

REF. NO.	PART NO. N° PIECES	DESCRIPTION DESCRIPTION	MH	E	EP			REMARKS REMARQUES
1	6AU–W0001–00	POWER HEAD GASKET KIT POCHETTE DE JINTS TETE MOTRICE	1	1	1			
2	93102–18M21	.OIL SEAL .JOINT SPY	1	1	1			
3	68T–11181–00	.GASKET, CYLINDER HEAD 1 .JOINT, DE CULASSE 1	1	1	1			
4	68T–11356–00	.SEAL, CYLINDER 2 .JOINT, SPY CYLINDRE	1	1	1			
5	68T–11169–A0	.GASKET, BREATHER COVER .JOINT, COUVERCLE DE RENIFLARD	1	1	1			
6	93210–13M63	.O-RING .JOINT TORIQUE	1	1	1			
7	93102–30M22	.OIL SEAL .JOINT SPY	1	1	1			
8	93101–25M69	.OIL SEAL .JOINT SPY	1	1	1			
9	68T–11351–00	.GASKET, CYLINDER .JOINT, D'EMBASE	1	1	1			
10	6G8–12414–A0	.GASKET, COVER .JOINT, COUVERCLE	1	1	1			
11	68T–41114–A0	.GASKET, EXHAUST OUTER COVER .JOINT, COUVERCLE D'ECHAPPEMENT	1	1	1			
12	90280–03M01	.KEY, WOODRUFF .CLAVETTE, DEMI-LUNE	1	1	1			
13	68T–13645–00	.GASKET, MANIFOLD 1 .JOINT, TUBULURE 1	1	1	1			
14	68T–13646–A0	.GASKET, MANIFOLD 2 .JOINT, TUBULURE 2	2	2	2			
15	93210–31MJ5	.O-RING .JOINT TORIQUE	1	1	1			
16	68T–13329–00	.GASKET, PUMP COVER .JOINT, COUVERCLE DE POMPE	1	1	1			
17	93210–24M79	.O-RING .JOINT TORIQUE	1	1	1			
18	93210–20M65	.O-RING .JOINT TORIQUE	1	1	1			

FIG. 35 REPAIR KIT 2 — KITS DE REPARATION 2

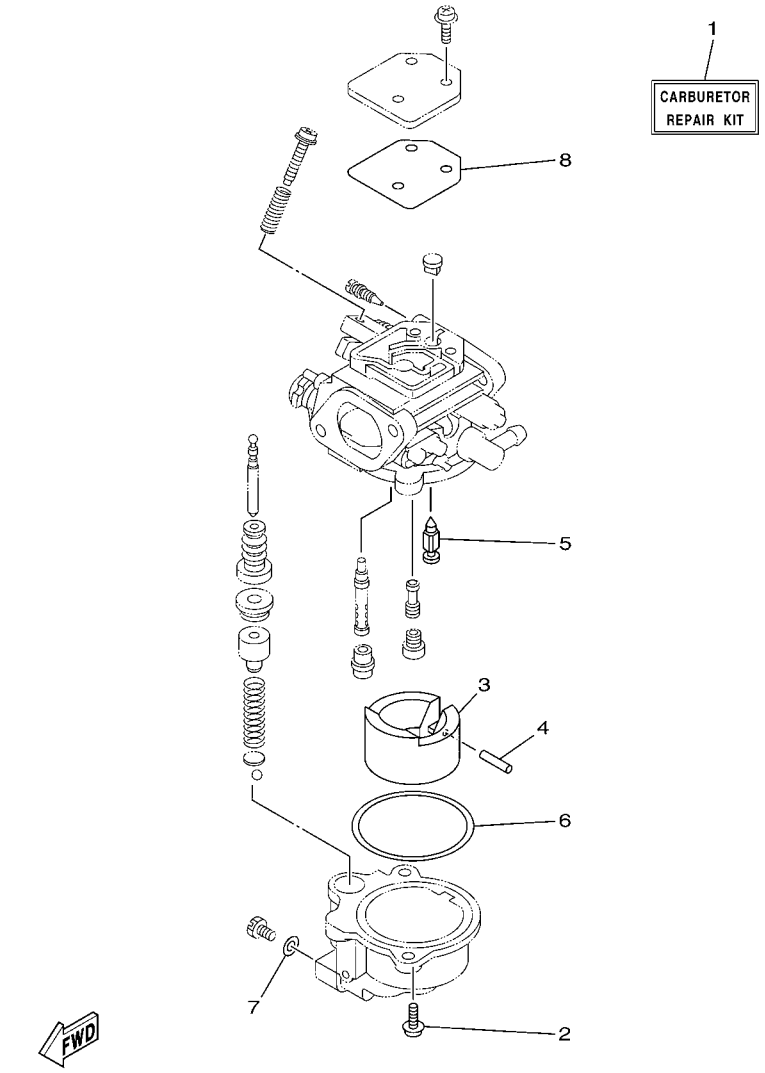

REF. NO.	PART NO. N° PIECES	DESCRIPTION DESCRIPTION	MH	E	EP			REMARKS REMARQUES
1	6AU–W0093–00	CARBURETOR REPAIR KIT KIT DE REPARATION CARBURATEUR	1	1	1			
2	97980–04112	.SCREW, WITH WASHER .VIS, AVEC RONDELLE	2	2	2			
3	6AU–14385–00	.FLOAT .FLOTTEUR	1	1	1			
4	67D–14386–00	.PIN, FLOAT .AXE, FLOTTEUR	1	1	1			
5	68T–14546–00	.VALVE, NEEDLE .POINTEAU	1	1	1			
6	6AU–14984–00	.GASKET, FLOAT CHAMBER .JOINT, CUVE DE FLOTTEUR	1	1	1			
7	6J8–14959–00	.GASKET .JOINT	1	1	1			
8	67D–14536–00	.GASKET .JOINT	1	1	1			

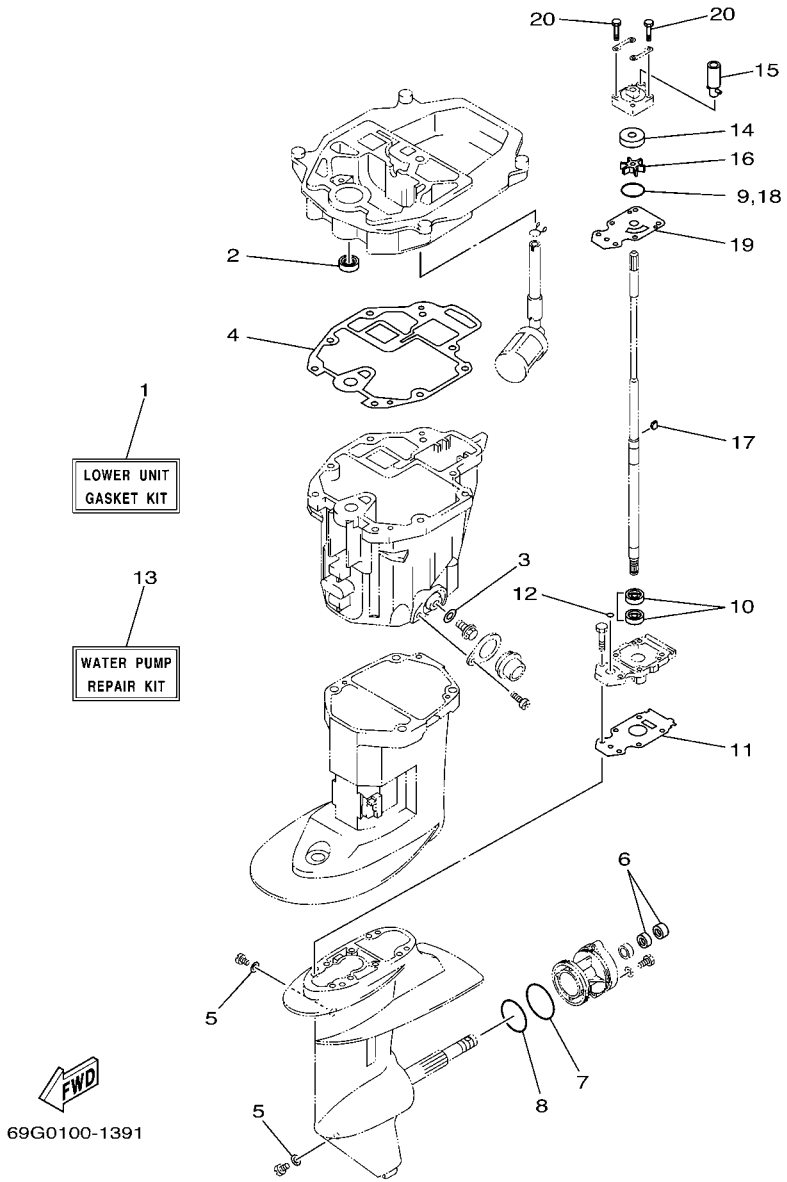

FIG. 36 REPAIR KIT 3 — KITS DE PEPARATION 3

REF. NO.	PART NO. N° PIECES	DESCRIPTION DESCRIPTION	MH	E	EP			REMARKS REMARQUES
1	69G–W0001–20	LOWER UNIT GASKET KIT POCHETTE DE JOINTS EMBASE	1	1	1			
2	93101–12M70	.OIL SEAL .JOINT SPY	1	1	1			
3	90430–10M11	.GASKET .JOINT	1	1	1			
4	68T–13475–00	.GASKET .JOINT	1	1	1			
5	90430–08020	.GASKET .JOINT	2	2	2			
6	93101–17054	.OIL SEAL .JOINT SPY	2	2	2			
7	93210–74316	.O-RING .JOINT TORIQUE	1	1	1			
8	93210–74M68	.O-RING .JOINT TORIQUE	1	1	1			
9	93210–44398	.O-RING .JOINT TORIQUE	1	1	1			
10	93101–20048	.OIL SEAL .JOINT SPY	2	2	2			
11	69G–45315–A0	.PACKING, LOWER CASING .JOINT, BOITIER D'HELICE	1	1	1			
12	93210–06ME6	.O-RING .JOINT TORIQUE	1	1	1			
13	69G–W0078–00	WATER PUMP REPAIR KIT KIT DE REPARATION DE LA POMPE	1	1	1			
14	63V–44322–00	.INSERT, CARTRIDGE .CUVETTE	1	1	1			
15	68T–44366–00	.DAMPER, WATER SEAL 2 .JOINT, TUBE D'EAU 2	1	1	1			
16	63V–44352–01	.IMPELLER .TURBINE	1	1	1			
17	664–44338–00	.KEY, WOODRUFF .CLAVETTE, VOLANT	1	1	1			
18	93210–44398	.O-RING .JOINT TORIQUE	1	1	1			
19	68T–44323–00	.OUTER PLATE, CARTRIDGE .PLAQUE EXTERIEURE	1	1	1			
20	97095–08045	.BOLT .BOULON	4	4	4			

NUMERICAL INDEX
INDEX NUMERIQUE

PART NO. N° PIECES	REF. NO.
6AU–11111–00–1S	4 – 2
6AU–11133–10	4 – 3
68T–11168–00	4 – 14
68T–11169–A0	4 – 15
	34 – 5
68T–11181–00	4 – 4
	34 – 3
68T–11191–00–1S	4 – 9
6G8–11197–01	4 – 20
6G8–11325–00	4 – 18
68T–11351–00	2 – 5
	34 – 9
68T–11356–00	4 – 11
	34 – 4
6H1–11372–00	27 – 13
6AU–11411–00	3 – 3
68T–11416–01	3 – 4
68T–11416–11	3 – 4
68T–11416–21	3 – 4
68T–11536–00	8 – 8
66M–11537–00–94	8 – 3
68T–11557–00	8 – 9
6G8–11575–00	27 – 9
6G8–11587–01	8 – 10
68T–11603–01	3 – 8
68T–11604–01	3 – 8
68T–11605–01	3 – 8
6AU–11631–00–96	3 – 7
68T–11633–00	3 – 9
6AU–11635–00	3 – 7
6AU–11636–00	3 – 7
6AU–11650–00	3 – 5
67D–11654–00	3 – 6
6AU–12111–00	5 – 1
60R–12113–00	5 – 4
68T–12116–00	5 – 3
7NJ–12117–00	5 – 5
7NJ–12118–00	5 – 6
51Y–12119–00	5 – 7
6AU–12121–00	5 – 2
68T–12146–00	5 – 8
68T–12151–00	5 – 12
6G8–12158–00	5 – 14
6G8–12159–00	5 – 13
68T–12171–00	8 – 2
66M–12411–01	2 – 6
688–12412–00	2 – 7
68T–12413–00–1S	2 – 8

PART NO. N° PIECES	REF. NO.
6G8–12414–A0	2 – 9
	34 – 10
68T–12481–00	2 – 11
6E5–12481–00	17 – 29
67F–12482–00	6 – 2
68T–12482–00	2 – 16
68T–12483–00	6 – 14
68T–12535–00	17 – 37
68T–12572–00	17 – 35
6R3–12581–00	17 – 34
6R3–12582–00	17 – 32
6R3–12583–00	17 – 33
66M–13131–00	9 – 18
68T–13300–00	8 – 15
68T–13329–00	8 – 16
	34 – 16
68T–13421–01	27 – 7
67F–13434–20	1 – 15
6AU–13437–60	10 – 27
	11 – 21
68T–13475–00	27 – 20
	36 – 4
68T–13641–20–1S	6 – 1
68T–13645–00	6 – 3
	34 – 13
68T–13646–A0	6 – 8
	34 – 14
68T–14126–00	7 – 25
68T–14271–00	6 – 9
6AU–14301–21	7 – 1
6AU–14301–51	7 – 1
6AU–1431A–30	7 – 18
6AU–1431B–00	7 – 15
6E5–14321–00	7 – 2
68T–14323–20	7 – 22
6E7–14325–00	9 – 15
6J8–14334–00	7 – 3
6AU–14335–50	7 – 16
6AU–14371–50	7 – 17
6AU–14373–00	7 – 27
6AU–14379–30	7 – 26
6AU–14385–00	7 – 6
	35 – 3
67D–14386–00	7 – 8
	35 – 4
647–14395–60	20 – 28
	21 – 35
6AU–14440–00	6 – 10

PART NO. N° PIECES	REF. NO.
68T–14497–00	20 – 22
	21 – 29
67D–14527–00	7 – 24
67D–14536–00	7 – 23
	35 – 8
68T–14546–00	7 – 9
	35 – 5
6AU–14711–00–CA	26 – 2
6AU–14918–00	7 – 19
6AU–1492A–00	7 – 12
6AU–1492E–43	7 – 10
6AU–1492F–20	7 – 11
6J8–14959–00	7 – 20
	35 – 7
67D–14966–00	7 – 7
6AU–14982–50	7 – 14
6AU–14984–00	7 – 13
	35 – 6
66T–14991–00	7 – 21
6AU–15100–00	2 – 2
68T–15311–01–CA	27 – 12
68T–15316–00	27 – 17
68T–15317–00	27 – 18
68T–15362–00	27 – 24
6G8–15363–00	4 – 22
63V–15705–01	10 – 8
68T–15710–13	10 – 1
68T–15711–03	10 – 2
63V–15713–00	10 – 6
63V–15714–00	10 – 4
68T–15716–00	10 – 7
66T–15731–00	10 – 21
66T–15734–00	10 – 19
63V–15741–00	10 – 5
63V–15744–00	10 – 11
6G1–15755–00	10 – 14
68T–15762–00	10 – 24
68T–15764–00	10 – 13
63V–15767–01	10 – 9
68T–15770–00	10 – 20
68T–15774–00	20 – 29
68T–15774–10	21 – 38
6G1–15779–00	10 – 16
68T–15784–00	10 – 10
6A0–15789–00	10 – 17
68T–15793–00	10 – 12
68T–15794–00	10 – 18
68T–15795–00	10 – 3

PART NO. N° PIECES	REF. NO.
69A–22471–00	25 – 3
69A–23129–00	25 – 56
6YL–24201–05	30 – 1
68T–24251–01	9 – 8
6YL–24260–01	30 – 3
6YL–24268–01	30 – 6
6G1–24304–02	9 – 1
6YL–24306–54	30 – 7
6AU–24311–00	9 – 28
61N–24329–00	9 – 2
6YL–24329–00	30 – 5
66M–24374–00	9 – 19
650–24378–00	4 – 10
68T–24410–01	9 – 12
66M–24411–01	9 – 16
66M–24413–01	9 – 13
6A0–24421–01	9 – 14
66M–24423–00	9 – 17
66M–24444–00	9 – 22
66M–24454–00	9 – 20
66M–24471–01	9 – 21
6YL–24610–01	30 – 2
68T–26301–11	18 – 20
68T–26367–00	17 – 15
68T–26393–00	17 – 14
68T–28100–00	9 – 32
67F–2812A–00	13 – 26
	14 – 37
6AU–28199–75–D0	9 – 33
6AU–28199–75–E0	9 – 33
6AU–28199–75–F0	9 – 33
6AU–28199–75–G0	9 – 33
6AU–28199–75–H0	9 – 33
6AU–28199–75–S0	9 – 33
6AU–28199–85–K0	9 – 34
6AU–28199–85–L0	9 – 34
6AU–28199–85–M0	9 – 34
6AU–28199–85–N0	9 – 34
6AU–28199–85–P0	9 – 34
6AU–28199–85–R0	9 – 34
6AU–41113–00–1S	2 – 13
68T–41114–A0	2 – 14
	34 – 11
68T–41137–00–CA	27 – 1
6AU–41211–00	20 – 21
	21 – 28
68T–41237–00	13 – 17
	14 – 19

PART NO. N° PIECES	REF. NO.
68T–41256–00	6 – 21
6J8–41262–00	6 – 22
661–41262–02	20 – 27
	21 – 34
6H4–41271–02	6 – 19
689–41273–00	6 – 20
68T–41283–00	20 – 19
	21 – 26
68T–41638–00	20 – 18
	21 – 25
6G1–41662–01–94	20 – 3
	21 – 8
66R–42101–01–4D	18 – 2
67D–42119–01	18 – 13
6AU–42121–10–4D	18 – 55
65W–42125–00	18 – 10
6G1–42126–00	18 – 9
66R–42129–00	18 – 33
65W–42131–01	18 – 27
6AU–42137–01	18 – 14
69G–42138–00	18 – 7
65W–42159–00	18 – 8
66R–42171–00	18 – 22
67D–42177–00	18 – 12
6AH–42508–01	19 – 1
6AU–42511–10–4D	24 – 6
68T–42525–01	19 – 2
6AH–42527–00	19 – 15
65W–42528–00	19 – 8
68T–42561–00	19 – 6
67C–42562–00	19 – 4
6AV–42610–90	1 – 1
6AV–42610–A0	1 – 1
6AV–42610–C0	1 – 1
6AU–42613–00	1 – 2
68T–42615–00	1 – 6
68T–42649–00	1 – 9
6G1–42651–02	1 – 4
68T–42652–00	1 – 7
60R–42675–00	1 – 11
60S–42675–00	1 – 14
60R–42676–00	1 – 12
60R–42676–10	1 – 12
6AU–42677–20	1 – 13
6AV–42678–10	1 – 10
6AV–42686–20	1 – 13
68T–42710–01–4D	17 – 1
68T–42716–10	17 – 5

PART NO. N° PIECES	REF. NO.
65W–42717–00	17 – 18
	27 – 2
68T–42717–00	17 – 24
68T–42724–20	17 – 16
68T–42724–40	13 – 3
	14 – 3
68T–42725–00	17 – 13
6G1–42725–00	15 – 4
68T–42725–10	17 – 13
68T–42726–00	20 – 1
69G–42726–00	17 – 17
688–42726–10	17 – 17
682–42727–00	17 – 10
68T–42738–00–4D	17 – 11
68T–42741–00	17 – 19
68T–42771–00	17 – 25
6AH–42794–40	17 – 40
6AH–42794–50	17 – 41
6AU–42801–00	17 – 6
6AH–43111–00–4D	22 – 1
69A–43111–01–4D	23 – 1
6AH–43112–00–4D	22 – 2
69A–43112–01–4D	23 – 2
66R–43113–00	22 – 9
69A–43113–00	23 – 9
648–43114–01	22 – 6
	23 – 6
6E7–43116–00	22 – 5
	23 – 5
6E0–43118–01	22 – 3
	23 – 3
69A–43131–00	22 – 7
	23 – 7
63W–43131–01	22 – 7
6E5–43145–01	31 – 8
6G5–43145–01	23 – 17
68T–43155–00	19 – 18
69A–43155–00	23 – 39
6L2–43160–01	22 – 15
689–43165–00	22 – 16
63V–43191–00	22 – 28
65W–43191–00	23 – 14
65W–43192–00	23 – 13
6AU–43311–10–4D	22 – 19
69G–43311–11–4D	23 – 11
6AH–43350–00	22 – 26
68T–43611–00	22 – 33
6AH–43614–00	22 – 30

NUMERICAL INDEX
INDEX NUMERIQUE

PART NO. N° PIECES	REF. NO.
6AH–43615–00	22 – 32
6AH–43616–00	22 – 21
6AH–43617–00	22 – 24
6AH–43627–00	22 – 38
6AH–43631–00	22 – 20
689–43633–00	19 – 7
6AH–43641–00	22 – 23
68T–43646–00	22 – 22
68T–43659–00	22 – 36
69A–43801–00	25 – 18
65W–43804–01	25 – 59
65W–43805–01	25 – 61
6T4–43808–00	25 – 34
69A–4380C–00	25 – 25
69A–4380D–00	25 – 11
65W–4380F–01	25 – 69
69A–4380K–00	25 – 2
69A–43810–00	25 – 10
69A–43811–01	25 – 19
69A–43812–00	25 – 22
69A–43814–00	25 – 7
69A–43816–01	25 – 54
69G–43818–00	23 – 20
69J–4381C–00	25 – 36
69A–4381G–00	25 – 48
69A–43824–00	25 – 43
69G–4382G–00	25 – 32
69A–43830–00	25 – 24
69G–43840–02–4D	25 – 1
69A–43841–00	25 – 26
6H1–43844–10	25 – 38
69A–43848–00	25 – 44
69A–4384F–00	25 – 29
6H1–4384G–11	25 – 37
69A–4384H–00	25 – 51
69A–4384M–00	25 – 27
69G–43853–00	25 – 35
69A–43854–00	25 – 47
69A–43855–00	25 – 39
6H1–43856–10	25 – 40
69A–43857–00	25 – 17
N35–43862–10	25 – 55
6H1–43866–00	25 – 20
69A–43869–00	25 – 23
65W–4386A–00	25 – 15
69A–4386A–00	25 – 42
65W–4386K–01	25 – 67
65W–4386L–00	25 – 68

PART NO. N° PIECES	REF. NO.
69A–43871–00	25 – 21
69A–43872–00	25 – 9
	25 – 13
69A–43878–00	25 – 57
65W–43879–01	25 – 70
65W–4387G–00	25 – 62
69G–43880–01	25 – 58
69G–43881–01	25 – 63
65W–43882–01	25 – 71
6H1–43883–00	25 – 30
	25 – 50
65W–43887–01	25 – 60
6H1–4388E–11	25 – 5
69G–4388F–00	25 – 72
65W–43891–01	25 – 66
65W–43892–01	25 – 65
62Y–43894–00	25 – 28
66R–44111–00–4D	18 – 30
6AU–44111–10	21 – 19
68T–44113–01	18 – 39
66R–44114–00	18 – 49
	21 – 13
65W–44116–00	20 – 7
	21 – 12
66R–44116–00	18 – 40
66R–44117–00	20 – 8
66R–44118–00	18 – 41
68T–44121–02	20 – 2
	21 – 7
68T–44143–10	20 – 10
	21 – 15
61N–44146–00	20 – 12
	21 – 17
69G–44150–10	28 – 26
69G–44150–20	28 – 26
66R–44173–00	18 – 31
6E0–44191–11	18 – 50
63V–44301–00	28 – 10
63V–44322–00	28 – 11
	36 – 14
68T–44323–00	28 – 16
	36 – 19
63V–44328–01	28 – 19
664–44338–00	28 – 14
	36 – 17
63V–44352–01	28 – 13
	36 – 16
68T–44361–10	29 – 1

PART NO. N° PIECES	REF. NO.
69G–44361–20	29 – 1
63V–44365–10	29 – 2
68T–44366–00	28 – 12
	36 – 15
6BL–44391–00	17 – 9
68T–44517–10	24 – 13
68T–44526–00	24 – 14
6AU–44551–00–4D	24 – 17
682–44555–30	24 – 19
6AU–44557–00	24 – 18
6AU–45111–10–4D	26 – 1
63V–45127–00	26 – 11
68T–45181–00	27 – 3
69G–45211–20–4D	26 – 10
6G1–45214–00	29 – 5
63V–45215–00	29 – 6
65W–45251–00	23 – 34
61N–45251–01	29 – 9
69G–45300–11–4D	28 – 1
69G–45300–21–4D	28 – 1
66R–45311–01–4D	28 – 2
69G–45315–A0	28 – 23
	36 – 11
626–45316–09	28 – 21
68T–45321–00	26 – 5
69G–45331–01–CA	28 – 20
66R–45361–00–4D	28 – 40
63V–45375–00	29 – 12
69G–45510–10	28 – 27
69G–45510–20	28 – 27
66R–45536–00	28 – 4
66R–45551–00	28 – 28
66R–45560–01	28 – 30
66R–45571–00	28 – 31
626–45577–00	28 – 32
	28 – 48
626–45577–10	28 – 32
	28 – 48
626–45577–20	28 – 32
	28 – 48
626–45577–30	28 – 32
	28 – 48
626–45577–40	28 – 32
	28 – 48
66R–45587–00	28 – 6
66R–45587–10	28 – 6
683–45611–00	28 – 34
69G–45631–00	28 – 36

PART NO. N° PIECES	REF. NO.
648–45633–00	28 – 38
650–45635–00	28 – 35
69G–45943–00	29 – 20
6G8–45987–02	29 – 13
6G8–45997–00	29 – 16
68T–46241–00	8 – 7
6AU–46297–00	8 – 13
703–48152–00	33 – 58
703–48153–00	33 – 3
703–48189–00	33 – 17
703–48198–00	33 – 14
703–48201–18	32 – 1
	33 – 1
703–48205–1A	32 – 1
	33 – 1
703–48211–02	33 – 62
703–48212–00	33 – 59
703–48213–00	33 – 60
703–48215–00	33 – 43
703–48219–00	33 – 30
703–48221–00	33 – 57
703–48222–00	33 – 27
703–48223–00	33 – 28
703–48224–00	33 – 56
703–48225–00	33 – 29
703–48226–00	33 – 26
703–48227–00	33 – 24
703–48232–00	33 – 63
703–48234–00	33 – 18
703–48235–00	33 – 4
703–48236–00	33 – 16
703–48238–00	33 – 22
703–48243–00	33 – 15
703–48244–00	33 – 21
703–48245–00	33 – 11
703–48246–00	33 – 23
701–48248–00	33 – 13
703–48252–00	33 – 12
703–48261–01	33 – 2
703–48264–00	33 – 6
703–48265–00	33 – 9
703–48268–00	33 – 5
703–48271–00	33 – 61
703–48281–00	33 – 31
703–48282–00	33 – 32
703–48284–00	33 – 53
701–48287–00	33 – 42
703–48291–10	33 – 39

PART NO. N° PIECES	REF. NO.
703–48293–10	33 – 41
701–48310–80	32 – 2
701–48310–90	32 – 2
701–48320–00	32 – 2
68T–48321–01	18 – 44
663–48344–00	21 – 23
	21 – 36
66R–48344–00	18 – 51
703–48345–01	33 – 19
703–48358–00	33 – 20
63V–48511–01	24 – 23
68T–48531–00	21 – 1
63D–48538–00	18 – 43
	20 – 17
66R–48538–00	18 – 42
68T–48538–00	20 – 14
682–48538–50	21 – 2
68T–61350–10	31 – 1
6E5–61355–00	31 – 6
68T–81328–00	11 – 9
6AV–81337–00	11 – 16
68T–81800–00	16 – 4
689–81807–12	16 – 6
689–81809–11	16 – 10
689–81810–11	16 – 12
689–81811–11	16 – 14
689–81812–11	16 – 15
689–81813–10	16 – 16
689–81820–11	16 – 17
68T–81822–01–94	16 – 1
689–81826–10	16 – 18
6F5–81830–10	16 – 7
689–81831–00	16 – 8
689–81840–11	16 – 13
689–81847–11	16 – 9
689–81850–11	16 – 11
68T–81857–00	16 – 5
69G–81925–00	14 – 30
68T–81940–00	13 – 6
	14 – 7
68T–81945–01	13 – 8
	14 – 9
69G–81948–01	14 – 28
69G–81950–00	14 – 25
68T–81960–00	12 – 15
664–81970–62	12 – 15
6AH–81994–40	10 – 29
	11 – 23

PART NO. N° PIECES	REF. NO.
6AH–81994–50	10 – 30
	11 – 24
6AH–81995–40	10 – 25
	11 – 19
6AH–81995–50	10 – 26
	11 – 20
6AG–81996–00	11 – 25
69G–82105–00	13 – 2
	14 – 1
6G8–82117–00	13 – 4
	14 – 5
6A0–82119–00	12 – 18
6G5–82119–00	14 – 33
63V–82127–00	23 – 36
68T–82127–00	24 – 2
68T–82127–10	12 – 20
68T–82150–00	13 – 23
	14 – 34
66V–82151–00	13 – 24
	14 – 35
68T–82171–01	13 – 25
	14 – 36
65W–82181–00	25 – 64
6E3–82370–21	12 – 14
67F–82504–00	12 – 19
703–82510–43	33 – 44
68T–82522–00	12 – 2
703–82531–00	33 – 47
6K1–82532–00	33 – 46
703–82540–00	33 – 51
703–82542–00	33 – 64
682–82556–00	15 – 2
	33 – 49
703–82563–02	33 – 56
65W–82575–01	15 – 1
688–82575–01	33 – 48
703–82577–00	33 – 45
689–8257Y–00	15 – 3
69G–82580–00	13 – 1
6N6–82582–00	14 – 4
688–8258A–20	33 – 50
69G–82590–10	14 – 2
703–82591–00	33 – 54
703–82592–00	33 – 55
703–82594–00	33 – 25
68T–82594–10	18 – 46
703–83383–11	33 – 52
65W–84342–00	17 – 27

PART NO. N° PIECES	REF. NO.
68F–85119–00	17 – 2
68T–85410–00	12 – 22
68T–85520–00	11 – 2
68T–85533–00	11 – 4
68T–85533–10	11 – 4
68T–85540–00	12 – 1
68T–85542–00	12 – 6
68T–85550–01	11 – 1
68T–85550–11	11 – 1
680–85570–02	12 – 10
68T–85580–01	11 – 3
6H2–85582–00	11 – 5
68T–85711–60	10 – 28
	11 – 22
68T–86111–00	13 – 16
	14 – 18
68T–86112–00	13 – 12
	14 – 14
68T–86117–00	13 – 21
	14 – 23
6AU–W0001–00	34 – 1
69G–W0001–20	36 – 1
69G–W0078–00	36 – 13
69G–W0084–01–4D	18 – 1
6AU–W0093–00	35 – 1
6AU–W009A–01–1S	4 – 1
6AU–W009B–00–1S	2 – 1
90101–06020	23 – 35
90101–06M18	22 – 12
90101–08022	19 – 16
90101–08M88	22 – 41
	23 – 40
90105–06M14	8 – 4
90105–08M36	4 – 6
90105–08M78	4 – 7
90109–06M80	18 – 4
	18 – 5
	18 – 6
90109–06M81	17 – 12
	20 – 4
	21 – 9
90109–06M84	22 – 39
90109–06M86	14 – 29
	18 – 3
	20 – 9
	20 – 30
	21 – 14
	21 – 39

PART NO. N° PIECES	REF. NO.
90109–08010	23 – 31
90110–08M05	23 – 30
90116–08M54	24 – 12
90116–08M62	26 – 15
90116–10040	18 – 56
90119–05018	19 – 3
90119–06012	24 – 20
90119–06014	11 – 6
90119–06049	4 – 8
90119–06198	24 – 21
90119–06M56	14 – 27
90119–06MA1	11 – 8
	11 – 8
90119–06MA2	2 – 10
90119–06MA3	2 – 15
	6 – 5
90119–06MA5	6 – 4
90119–08005	27 – 22
90119–08020	16 – 3
90119–08046	16 – 2
90119–08M29	2 – 4
90119–08M76	16 – 19
90151–05003	18 – 47
90152–05011	18 – 16
	29 – 7
90157–05M16	30 – 4
90159–06M18	18 – 32
90167–06002	17 – 36
90170–05M38	18 – 53
90170–06M30	14 – 31
90170–09M03	31 – 4
90170–12066	11 – 14
90170–24M09	8 – 11
90171–10M07	29 – 18
90179–06M28	24 – 22
90179–08M06	28 – 29
90179–10M33	18 – 57
90185–05002	29 – 8
90185–08057	22 – 43
	23 – 32
	23 – 42
	24 – 25
90185–09M01	31 – 3
90185–10M14	19 – 14
90185–22043	22 – 10
	23 – 10
90201–06M62	18 – 52
	20 – 23

PART NO. N° PIECES	REF. NO.
90201–06M62	21 – 30
90201–06M94	8 – 6
90201–08065	19 – 17
90201–08M00	23 – 24
90201–08MA4	22 – 44
	23 – 43
90201–106M5	19 – 19
90201–10M02	18 – 17
	29 – 17
90201–10M20	31 – 2
90201–10M63	31 – 7
90201–12472	11 – 15
90201–13201	8 – 5
90201–17682	28 – 33
90201–31MA3	29 – 15
90201–43M00	18 – 23
90202–10M56	19 – 5
90202–26M59	18 – 38
90202–43M57	18 – 25
90204–06M00	14 – 32
90206–10M24	22 – 40
90206–26M25	18 – 37
90206–43M22	18 – 24
90209–10M26	19 – 13
90209–40008	24 – 8
90243–04M01	22 – 4
	23 – 4
90249–12M36	23 – 26
90250–05010	28 – 37
90266–04M04	1 – 5
90269–02M09	18 – 15
90280–03M01	8 – 12
	34 – 12
90280–04M06	11 – 13
90338–06M20	17 – 26
90340–08002	28 – 8
90340–10M10	27 – 15
90381–12M10	23 – 27
90381–12M11	23 – 28
90386–08032	18 – 19
90386–14MA1	23 – 16
90386–16MA7	23 – 21
90386–16MA8	23 – 22
90386–22MA4	22 – 8
	23 – 8
90386–26MA3	18 – 36
90386–30048	24 – 9
90386–30M60	24 – 11

PART NO. N° PIECES	REF. NO.
90386–40001	24 – 7
90386–40M99	18 – 26
90387–05053	19 – 9
90387–05054	19 – 10
90387–06138	22 – 34
90387–06176	17 – 4
90387–06M03	14 – 26
90387–06M13	22 – 11
90387–06M59	20 – 20
	21 – 27
90387–06M70	6 – 12
90387–10M42	31 – 5
90387–13M56	5 – 9
90387–14M03	5 – 10
90387–16M02	23 – 23
90430–08020	28 – 9
	36 – 5
90430–08143	27 – 5
90430–10M11	27 – 16
	36 – 3
90445–09M20	6 – 7
90445–10046	9 – 5
90445–10M50	9 – 9
90445–16010	9 – 11
90446–10M86	13 – 5
	14 – 6
90446–15002	18 – 45
90447–07005	18 – 21
90447–10001	23 – 18
90447–10009	9 – 30
90447–13M00	17 – 31
90464–10M53	9 – 31
90464–10M60	20 – 5
	21 – 10
90465–08027	21 – 40
90465–08M83	6 – 16
90465–08M99	6 – 15
	16 – 23
90465–11M10	2 – 12
	9 – 6
	11 – 12
	12 – 21
	16 – 22
	17 – 30
90465–12M56	13 – 11
90465–13M11	14 – 12
	14 – 13
90465–13M97	23 – 19

PART NO. N° PIECES	REF. NO.
90467–09M09	9 – 7
	9 – 10
	9 – 29
90467–11M08	27 – 8
90468–18001	20 – 11
	21 – 16
90468–18008	21 – 24
	21 – 37
90480–06M19	17 – 28
90480–10627	8 – 14
90480–10M28	27 – 14
90480–13018	13 – 13
	14 – 15
90480–14M54	26 – 4
90480–21M82	17 – 3
90480–25003	12 – 11
90501–12M40	5 – 11
90501–14M09	28 – 39
90501–23215	18 – 18
90502–10M07	22 – 18
90506–20025	22 – 27
90506–23016	22 – 31
91318–05025	25 – 53
91490–16010	18 – 11
91490–20012	18 – 54
91490–30025	29 – 19
91690–30008	22 – 17
91690–30010	13 – 18
	14 – 20
91690–30012	21 – 3
91690–30014	20 – 6
	21 – 11
91690–30018	23 – 15
91690–50014	6 – 6
92903–06600	11 – 11
92907–04600	4 – 17
92990–04600	13 – 20
	14 – 22
92990–05600	12 – 17
92990–06300	29 – 11
92990–06600	22 – 13
92990–08600	22 – 42
	23 – 33
	23 – 41
	26 – 12
	33 – 34
92995–05600	19 – 12
	21 – 22

PART NO. N° PIECES	REF. NO.
92995–06100	9 – 25
	17 – 21
92995–06600	4 – 13
	6 – 18
	8 – 18
	9 – 4
	9 – 26
	10 – 23
	11 – 18
	12 – 5
	12 – 9
	12 – 13
	12 – 17
	13 – 10
	13 – 15
	14 – 11
	14 – 17
	16 – 25
	17 – 8
	17 – 22
	17 – 39
	20 – 16
	20 – 26
	21 – 5
	21 – 33
	23 – 38
	24 – 3
	24 – 5
	28 – 47
92995–08600	16 – 21
	18 – 35
93101–12M70	27 – 6
	36 – 2
93101–17054	28 – 43
	36 – 6
93101–20048	28 – 22
	36 – 10
93101–25M69	3 – 2
	34 – 8
93102–18M21	8 – 1
	34 – 2
93102–30M22	3 – 1
	34 – 7
93210–03261	13 – 22
	14 – 24
93210–06001	25 – 46
93210–06ME6	28 – 24
	36 – 12

PART NO. N° PIECES	REF. NO.
93210–07003	25 – 6
93210–12327	21 – 20
93210–12M62	27 – 10
93210–12N52	25 – 33
93210–13M63	4 – 21
	34 – 6
93210–16275	31 – 9
93210–20M65	9 – 27
	34 – 18
93210–21276	25 – 8
	25 – 12
93210–24M79	4 – 23
	34 – 17
93210–27666	25 – 4
93210–29M94	24 – 10
93210–31MJ5	6 – 11
	34 – 15
93210–44398	28 – 15
	36 – 9
	36 – 18
93210–74316	28 – 45
	36 – 7
93210–74M68	28 – 44
	36 – 8
93306–00501	28 – 41
93315–314V8	28 – 3
93315–317U2	28 – 42
93332–00005	28 – 7
93341–41416	28 – 5
93430–04M03	22 – 35
93430–06024	33 – 10
93450–10M04	29 – 14
93450–15023	3 – 10
93501–08001	25 – 41
	25 – 49
93505–32038	25 – 14
93602–15250	25 – 45
93604–06136	25 – 16
93604–12M07	26 – 8
	26 – 14
	27 – 21
	28 – 17
	29 – 3
93606–14081	25 – 52
93606–19M23	27 – 11
93700–06M03	24 – 1
94702–00274	4 – 24
95380–04600	9 – 23

PART NO. N° PIECES	REF. NO.
95380–05600	33 – 7
95380–06600	17 – 23
	21 – 6
	33 – 40
95380–06700	20 – 13
	21 – 18
	22 – 14
95380–08600	24 – 15
	26 – 13
95380–10700	18 – 29
95780–10300	18 – 28
95895–06030	29 – 10
97013–06012	11 – 10
97080–08016	23 – 25
97080–08025	28 – 25
97095–05010	11 – 7
97095–05016	21 – 21
97095–05020	19 – 11
97095–06008	26 – 6
97095–06010	6 – 17
	23 – 37
97095–06012	12 – 8
	12 – 16
	13 – 9
	13 – 14
	14 – 10
	14 – 16
	16 – 24
	17 – 7
	17 – 38
	20 – 15
	20 – 25
	21 – 4
	21 – 32
97095–06014	24 – 4
97095–06020	4 – 12
	10 – 22
	11 – 17
	12 – 4
97095–06025	9 – 3
	12 – 12
	28 – 46
97095–06030	8 – 17
	9 – 24
97095–08012	12 – 7
97095–08014	27 – 4
97095–08016	16 – 20
97095–08030	18 – 34

PART NO. N° PIECES	REF. NO.
97095–08045	28 – 18
	36 – 20
97380–05025	33 – 8
97380–08030	33 – 33
97575–06514	26 – 3
97575–06525	24 – 16
97575–08530	27 – 23
97575–08535	24 – 24
	26 – 9
	29 – 4
97595–05514	1 – 8
97595–06545	20 – 24
	21 – 31
97595–06585	6 – 13
97595–06610	13 – 7
	14 – 8
97780–40512	12 – 3
97780–60516	1 – 3
97880–04008	13 – 19
	14 – 21
97880–05025	4 – 19
	12 – 16
97885–05008	26 – 7
	27 – 19
97885–06030	17 – 20
97885–08010	23 – 12
97980–04110	7 – 4
97980–04112	7 – 5
	35 – 2
98507–04010	4 – 16
98580–03015	33 – 38
98580–04006	33 – 36
98580–04010	33 – 35
98580–05010	33 – 37
99002–03600	25 – 31
99080–04600	18 – 48
99080–05600	22 – 25
	22 – 29
	22 – 37
99080–10600	23 – 29
99510–10114	4 – 5
99530–12016	2 – 3

PART NO. N° PIECES	REF. NO.

PART NO. N° PIECES	REF. NO.

PART NO. N° PIECES	REF. NO.