YAMAHA

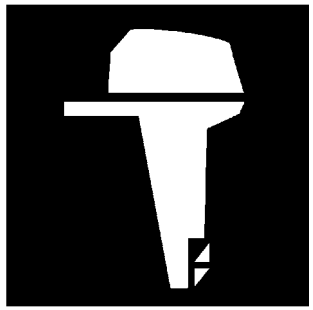

PARTS CATALOGUE
CATALOGUE DE PIECES DETACHEES

40XMH'13 (66TT)

1M66T-300F1

( )

YAMAHA
GENUINE
Parts & Accessories

40XMH
PARTS CATALOGUE
©2013 by Yamaha Motor Co., Ltd.
1st edition, June 2013
All rights reserved.
Any reprinting or unauthorized use
without the written permission of
Yamaha Motor Co., Ltd.
is expressly prohibited.
Printed in Japan.

40XMH
CATALOGUE DE PIECES DETACHEES
©2013 par Yamaha Motor Co., Ltd.
1re édition, juin 2013
Tous droits réservés
Toute réimpression ou utilisation
non autorisée sans la permission écrite
de la Yamaha Motor Co., Ltd.
est formellement interdite.
Imprimé au Japon

FOREWORD

This Parts Catalogue is related to the parts for the model(s) on the cover page. When you are ordering replacement parts, please refer to this Parts Catalogue and quote both part numbers and part names correctly.

1. Modifications or additions which have been made after the issue of the Parts Catalogue will be announced in the Parts News.
   It is advisable that you make the necessary corrections to the Parts Catalogue according to the Parts News.

2. Abbreviations
   The following abbreviations are used in this Parts Catalogue.

   "UR" Use specified parts number.
   "UN" Use as many as needed.
   "AP" Alternate Parts
   "LM" Locally Made (Parts need to be ordered locally)
   "F#" Frame No. (Applicable machine No.)
   "O/S" Over Size

3. The number of components for assembly
   - Parts, which are to be supplied in an assembly, are listed with a dot (.) in front of the part name as shown below.
   - The numeral appearing to the right of each component part indicates the quantity of parts for each assembly unit.

PART NO.	DESCRIPTION	Q'TY	REMARKS
2F5–83310–60	FRONT FLASHER LIGHT ASSY	2	
115–83311–60	.BULB (6V–18W)	1	

4. Applicable colours of graphics are represented in the "REMARKS" as shown below.

PART NO.	DESCRIPTION	Q'TY	REMARKS
2N4–24110–00–X5	FUEL TANK COMP.	2	MXR
3J1–24240–10	.GRAPHIC, FUEL TANK	1	FOR MXR

5. Note that the illustrations for reference in finding parts numbers are not to be used for assembling. When assembling, please use the applicable service manual.

6. The asterisk (*) before a reference number indicates modified items after the first edition.

7. Applicable Serial No.

   Engine Serial No.

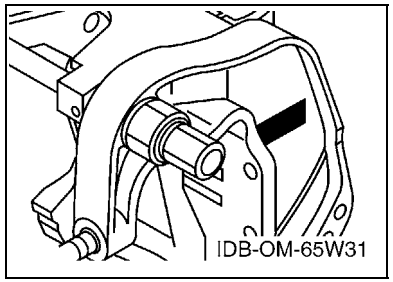

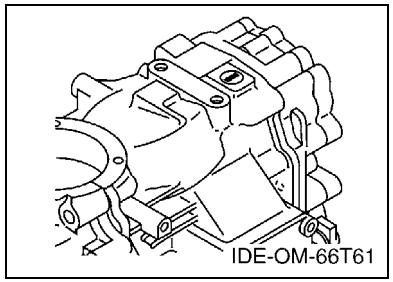

8. Applicable Engine Starting Serial No.

Model	Serial No.	Model	Serial No.
40X	66TK-1153081		

9. Applicable Colour Code

Abbreviation	Colour Name	Colour Code
DBNM2	DARK BLUISH GRAY METALLIC 2	004D

10. Quantity Column Information

Column No.	Name Of Q'ty Column	Applicable Model
1	66TT	40XMH

AVANT–PROPOS

Ce catalogue de pièces détachées concerne les pièces pour le(s) modèle(s) indiqué(s) sur la page de couverture. Lorsque vous commandez des pièces de rechange, veuillez vous référer à ce catalogue de pieces détachées et indiquer clairement les numéros et les noms des pièces détachées.

1. Les modifications ou ajouts ayant été effectués après la parution du catalogue de pièces détachées seront décrits dans les Bulletins d'information concernant les pièces détachées.
   Il est recommandé que vous apportiez les corrections nécessaires au catalogue des pièces détachées en vous référant aux Bulletins d'information.

2. Abréviations
   Dans ce catalogue, les abréviations suivantes sont utilisées:

   "UR" Utiliser le numéro de pièces spécifié.
   "UN" Utiliser autant que nécessaire.
   "AP" Pièces de substitution
   "LM" Fabrication locale (les pièces doivent être commandées localement.)
   "F#" N° de cadre (applicable au N° de série)
   "O/S" Surdimensionné

3. Nombre de pièces d'un assemblage
   - Les pièces fournies comme composants d'un assemblage sont précédées d'un point (.) de la manière indiquée ci–dessous.
   - Le chiffre apparaissant à la droite de chaque composant indique la quantité de pièces pour chaque unité d'assemblage.

N° PIECES	DESCRIPTION	QTE	REMARQUES
2F5–83310–60	ENS. CLIGNOTANT AVANT	2	
115–83311–60	.AMPOULE (6V–18W)	1	

4. Les couleurs concernant les graphiques sont indiquées dans la colonne "REMARQUES", comme indiqué ci–dessous.

N° PIECES	DESCRIPTION	QTE	REMARQUES
2N4–24110–00–X5	RESERVOIR A ESSENCE.	2	MXR
3J1–24240–10	.GRAPHIQUE	1	POUR MXR

5. Veuillez noter que les illustrations sont indiquées à titre de référence pour trouver les numéros de pièces, non pour être utilisées lors de l'assemblage. Lors de l'assemblage, veuillez utiliser le manuel d'entretien adéquat.

6. L'astérisque (*) placé devant un numéro de référence indique des éléments qui ont été modifiés après la première édition.

7. N° de série applicable

   N° de Série du moteur

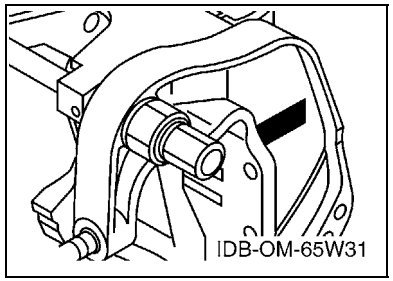

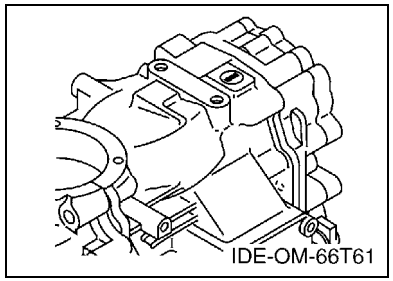

8. N° de série initial du moteur applicable

Modèle	N° de série	Modèle	N° de série
40X	66TK-1153081		

9. Code couleur applicable

Abréviation	Nom de la couleur	Code couleur
DBNM2	DARK BLUISH GRAY METALLIC 2	004D

10. Informations relatives à la colonne Quantité

N° de la colonne	Nom de la colonne Qté	Modèle applicable
1	66TT	40XMH

CONTENTS

SCHEDULED SERVICE PARTS 1
TOP COWLING 2
CYLINDER & CRANKCASE 3
CRANKSHAFT & PISTON 5
INTAKE 6
CARBURETOR 7
FUEL 8
STARTER 10
GENERATOR 12
ELECTRICAL 13
BOTTOM COWLING 14
STEERING 16
CONTROL 18
REMO CON ATTACHMENT 19
BRACKET 1 20
BRACKET 2 23
UPPER CASING 24
LOWER CASING & DRIVE 1 25
LOWER CASING & DRIVE 2 28
FUEL TANK 30
OPTIONAL PARTS 31
REPAIR KIT 1 32
REPAIR KIT 2 34
REPAIR KIT 3 35

INDEX

NUMERICAL INDEX 36

TABLE DES MATIERES

PIECES MAINTENANCE PERIODIQUE 1
CAPOT SUPERIEUR 2
CYLINDRE & CARTER 3
VILEBREQUIN & PISTON 5
ADMISSION 6
CARBURATEUR 7
CARBURANT 8
DEMARREUR 10
GENERATRICE 12
ELECTRIQUE 13
CAPOT INFERIEUR 14
DIRECTION 16
COMMANDE 18
COMMANDE A DISTANCE 19
SUPPORT 1 20
SUPPORT 2 23
FOURREAU 24
BOITIER D'HELICE TRANSMISSION1 25
BOITIER D'HELICE TRANSMISSION2 28
RESERVOIR A CARBURANT 30
PIECES OPTIONNELLES 31
KITS DE REPARATION 1 32
KITS DE REPARATION 2 34
KITS DE PEPARATION 3 35

INDEX

INDEX NUMERIQUE 36

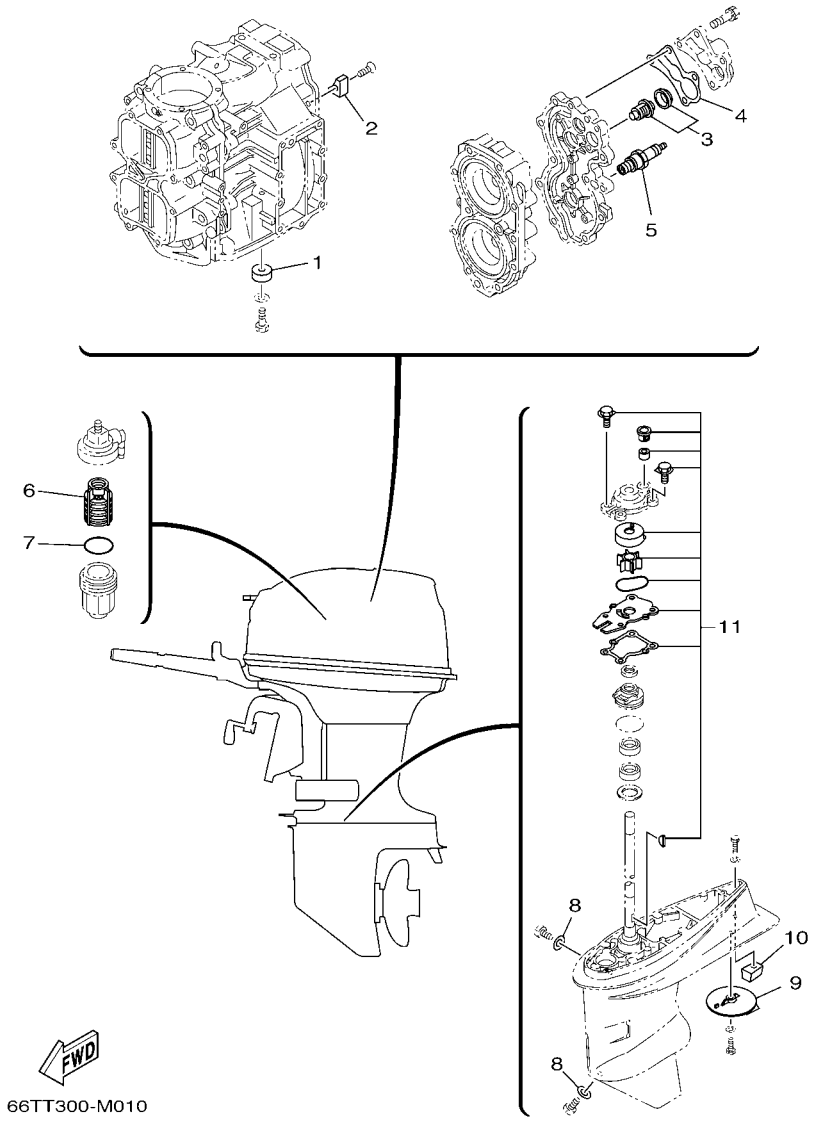

FIG. 1 SCHEDULED SERVICE PARTS PIECES MAINTENANCE PERIODIQUE

REF. NO.	PART NO. N° PIECES	DESCRIPTION DESCRIPTION	66TT					REMARKS REMARQUES
1	676–45251–00	ANODE ANODE	1					
2	676–11325–00	ANODE ANODE	1					
3	6E5–12411–02	THERMOSTAT THERMOSTAT	1					
4	676–12414–A1	GASKET, COVER JOINT, COUVERCLE	1					
5	94702–00040	PLUG, SPARK (NGK B7HS) BOUGIE D'ALLUMAGE (NGK B7HS)	2					UR UR
	94702–00272	PLUG, SPARK (NGK BR7HS) BOUGIE D'ALLUMAGE (NGK BR7HS)	2					UR UR
6	61N–24563–00	ELEMENT, FILTER ELEMENT, FILTRE	1					
7	93210–32738	O-RING JOINT TORIQUE	1					
8	90430–08020	GASKET JOINT	2					
9	664–45371–01	TAB-TRIM ANODE DERIVE	1					
10	67C–45251–00	ANODE ANODE	1					
11	66T–W0078–00	WATER PUMP REPAIR KIT KIT DE REPARATION DE LA POMPE	1					

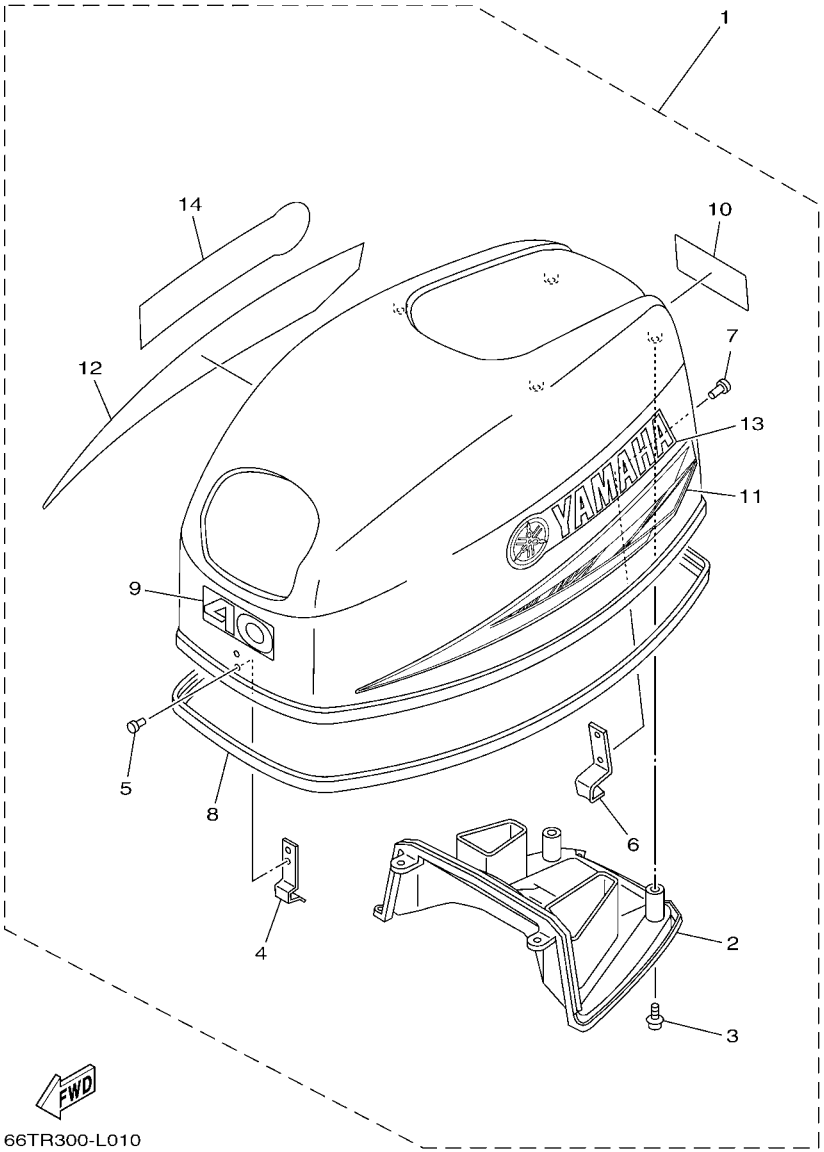

FIG. 2 TOP COWLING — CAPOT SUPERIEUR

REF. NO.	PART NO. N° PIECES	DESCRIPTION DESCRIPTION	66TT					REMARKS REMARQUES
1	66T–42610–00	TOP COWLING ASSY CAPOT (ENS.)	1					
2	66T–42613–01	.MOLDING, AIR DUCT .MANCHON A AIR	1					
3	90167–05017	.SCREW, TAPPING .VIS, TETE FRAISEE	4					
4	6E0–42651–02	.HOOK .CROCHET	1					
5	90266–04M04	.RIVET .RIVET	2					
6	6F5–42652–01	.HOOK .CROCHET	1					
7	90266–04M01	.RIVET .RIVET	2					
8	66T–42615–02	.SEAL .JOINT	1					
9	63D–42678–40	.GRAPHIC, REAR .ADHESIF, ARRIERE	1					
10	63D–42678–40	.GRAPHIC, REAR .ADHESIF, ARRIERE	1					
11	688–42675–40	.GRAPHIC, SIDE 1 .EMBLEME	1					
12	688–42676–40	.GRAPHIC, SIDE 2 .EMBLEME	1					
13	63D–42681–40	.MARK, COWLING .ADHESIF, CAPOT	1					
14	63D–42681–40	.MARK, COWLING .ADHESIF, CAPOT	1					

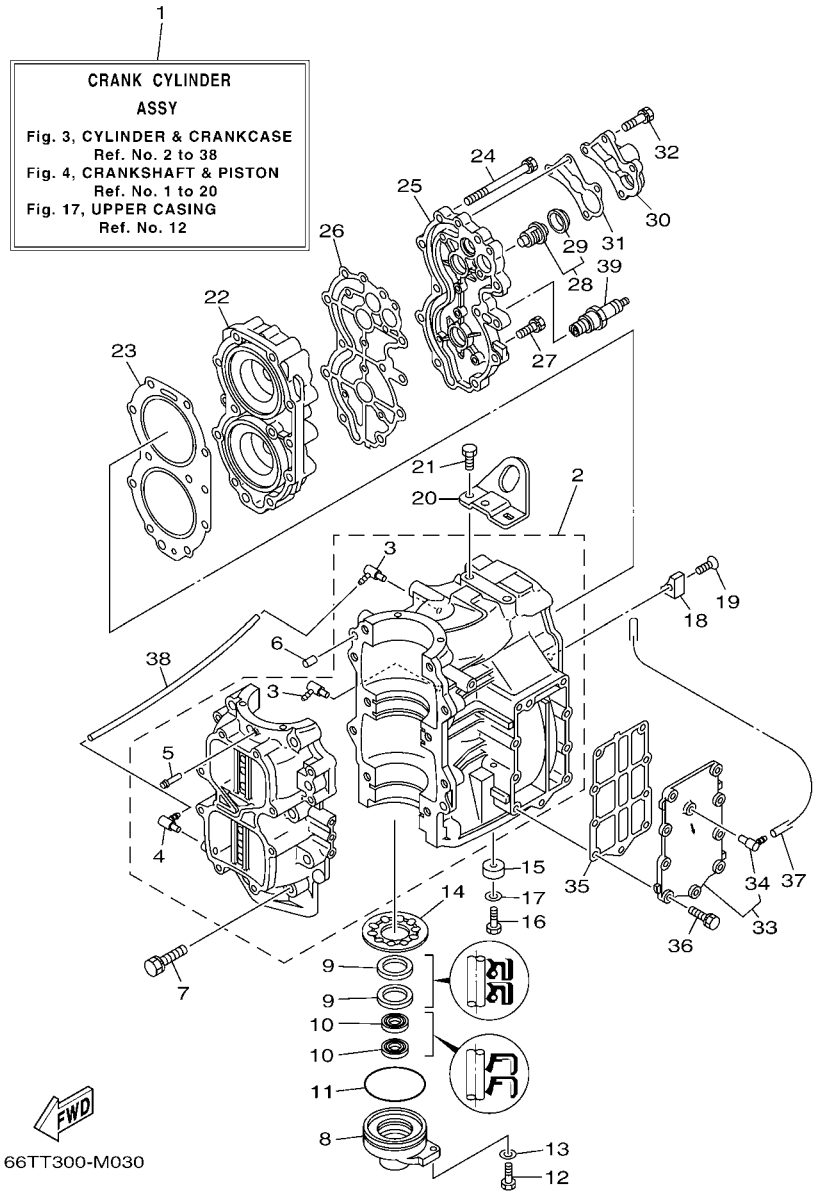

FIG. 3 CYLINDER & CRANKCASE CYLINDRE & CARTER

REF. NO.	PART NO. N° PIECES	DESCRIPTION DESCRIPTION	66TT					REMARKS REMARQUES
1	66T–W0090–02–1S	CRANK CYLINDER ASSY EMBIELLAGE CYLINDRE (ENS.)	1					
2	66T–15100–02	CRANKCASE ASSY CARTER DE MOTEUR COMPLET	1					
3	6E5–13552–01	.NOZZLE .GICLEUR	2					
4	6E5–13552–01	.NOZZLE .GICLEUR	1					
5	624–14485–00	.PIPE, JOINT .DURITE	1					
6	93608–12063	PIN, DOWEL AXE	2					
7	90119–10005	BOLT, WITH WASHER BOULON, AVEC RONDELLE	10					
8	66T–15396–01–CA	HOUSING, OIL SEAL LOGEMENT DE JOINT SPY	1					
9	93102–30M56	OIL SEAL JOINT SPY	2					
10	93101–16001	OIL SEAL JOINT SPY	2					
11	93210–65M50	O-RING JOINT TORIQUE	1					
12	97095–06020	BOLT BOULON	1					
13	92995–06600	WASHER RONDELLE	1					
14	66T–11565–00	WASHER, BEARING COVER RONDELLE, COUV DE ROULEMENT	1					
15	676–45251–00	ANODE ANODE	1					
16	97095–06020	BOLT BOULON	1					
17	92995–06600	WASHER RONDELLE	1					
18	676–11325–00	ANODE ANODE	1					
19	90141–06M00	SCREW, COUNTERSUNK VIS, TETE NOYEE	1					
20	66T–11119–00	HANGER, ENGINE ANNEAU, LEVAGE	1					
21	90101–08002	BOLT BOULON	2					
22	66T–11111–01–1S	HEAD, CYLINDER 1 CULASSE	1					
23	66T–11181–A3	GASKET, CYLINDER HEAD 1 JOINT, DE CULASSE 1	1					
24	90119–08MA5	BOLT, WITH WASHER BOULON, AVEC RONDELLE	11					
25	66T–11191–00–1S	COVER, CYLINDER HEAD 1 COUVERCLE, CULASSE 1	1					
26	66T–11193–A3	GASKET, HEAD COVER 1 JOINT, COUVERCLE DE CULASSE 1	1					
27	90119–06MA3	BOLT, WITH WASHER BOULON, AVEC RONDELLE	4					

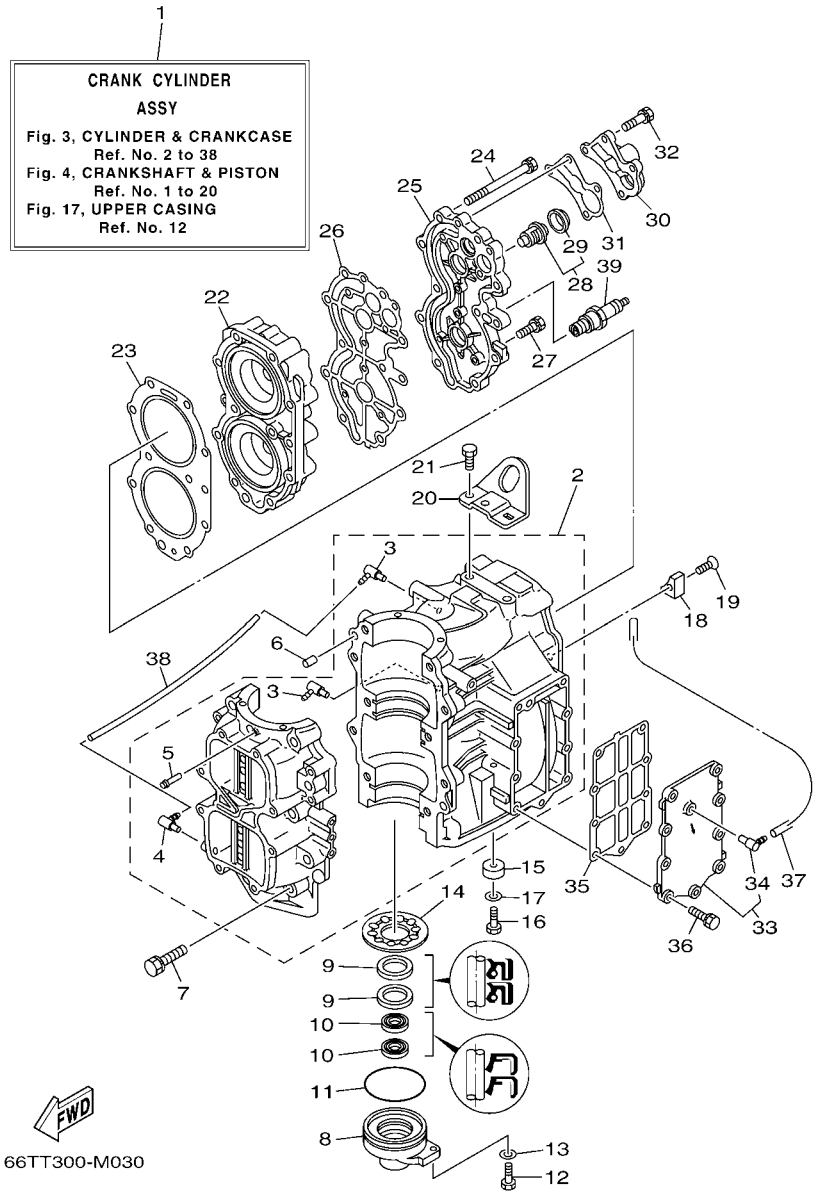

FIG. 3 CYLINDER & CRANKCASE CYLINDRE & CARTER

REF. NO.	PART NO. N° PIECES	DESCRIPTION DESCRIPTION	66TT					REMARKS REMARQUES
28	6E5–12411–02	THERMOSTAT THERMOSTAT	1					
29	6E5–12412–00	.SEAL, THERMOSTAT .JOINT, THERMOSTAT	1					
30	676–12413–00–1S	COVER, THERMOSTAT COUVERCLE, THERMOSTAT	1					
31	676–12414–A1	GASKET, COVER JOINT, COUVERCLE	1					
32	90119–06MA5	BOLT, WITH WASHER BOULON, AVEC RONDELLE	4					
33	66T–41113–00–1S	OUTER COVER, EXHAUST COUVERCLE, ECHAPPEMENT	1					
34	676–11372–00	.NIPPLE, HOSE .RACCORD, TUYAU	1					
35	66T–41114–A0	GASKET, EXHAUST OUTER COVER JOINT, COUVERCLE D'ECHAPPEMENT	1					
36	90119–06MA3	BOLT, WITH WASHER BOULON, AVEC RONDELLE	9					
37	90445–09M75	HOSE (L370) DURITE (L370)	1					
38	90445–07M08	HOSE (L220) DURITE (L220)	1					
39	94702–00272	PLUG, SPARK (NGK BR7HS) BOUGIE D'ALLUMAGE (NGK BR7HS)	2					

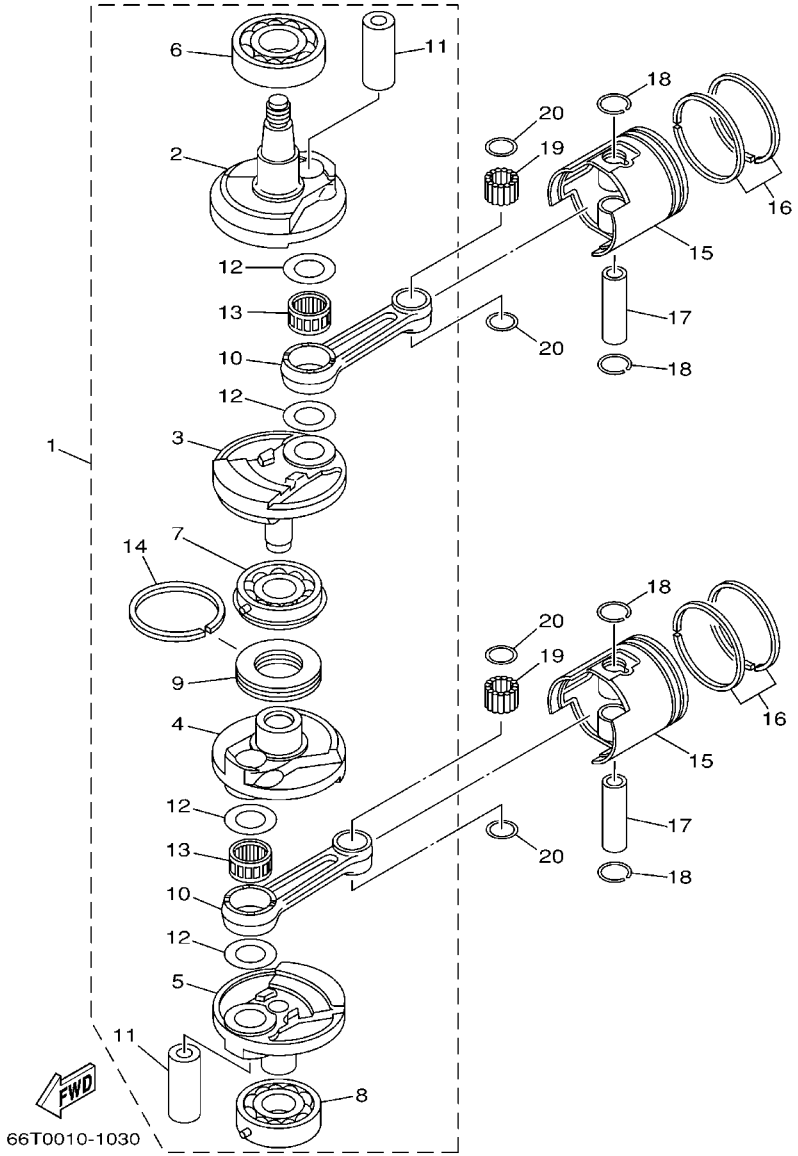

FIG. 4 CRANKSHAFT & PISTON VILEBREQUIN & PISTON

REF. NO.	PART NO. N° PIECES	DESCRIPTION DESCRIPTION	66TT					REMARKS REMARQUES
1	66T–11400–01	CRANKSHAFT ASSY VILEBREQUIN COMPLET	1					
2	66T–11412–00	.CRANK 1 .MASSOLOTTE DE VILEBREQUIN 1	1					
3	66T–11422–00	.CRANK 2 .MASSOLOTTE DE VILEBREQUIN 2	1					
4	66T–11432–00	.CRANK 3 .MASSOLOTTE DE VILEBREQUIN 3	1					
5	66T–11442–00	.CRANK 4 .MASSOLOTTE DE VILEBREQUIN 4	1					
6	93306–307U0	.BEARING .ROULEMENT	1					
7	93332–000UE	.BEARING .ROULEMENT	1					
8	93306–306V5	.BEARING .ROULEMENT	1					
9	6F5–11515–00	.SEAL, LABYRINTH 1 .JOINT, LABYRINTHE 1	1					
10	6F5–11651–00	.ROD, CONNECTING .BIELLE NUE	2					
11	66T–11681–00	.PIN, CRANK 1 .MANETON, VILEBREQUIN 1	2					
12	90209–27012	.WASHER .RONDELLE	4					
13	93310–727U0	.BEARING .ROULEMENT	2					
14	93440–68M03	.CIRCLIP .CIRCLIP	1					
15	66T–11631–01–93	PISTON (STD) PISTON (STD)	2					
	66T–11635–01	PISTON (0.25MM O/S) PISTON (0.25MM O/S)	2					AP AP
	66T–11636–01	PISTON (0.50MM O/S) PISTON (0.50MM O/S)	2					AP AP
16	66T–11603–00	PISTON RING SET (STD) JEU DE SEGMENTS (STD)	2					
	66T–11604–00	PISTON RING SET (0.25MM O/S) JEU DE SEGMENTS (0.25MM O/S)	2					AP AP
	66T–11605–00	PISTON RING SET (0.50MM O/S) JEU DE SEGMENTS (0.50MM O/S)	2					AP AP
17	6F5–11633–00	PIN, PISTON AXE, PISTON	2					
18	663–11634–00	CLIP, PISTON PIN AGRAFE, AXE DE PISTON	4					
19	93603–21111	PIN, DOWEL CLAVETTE	56					
20	90201–20417	WASHER, PLATE RONDELLE, PLATE	4					

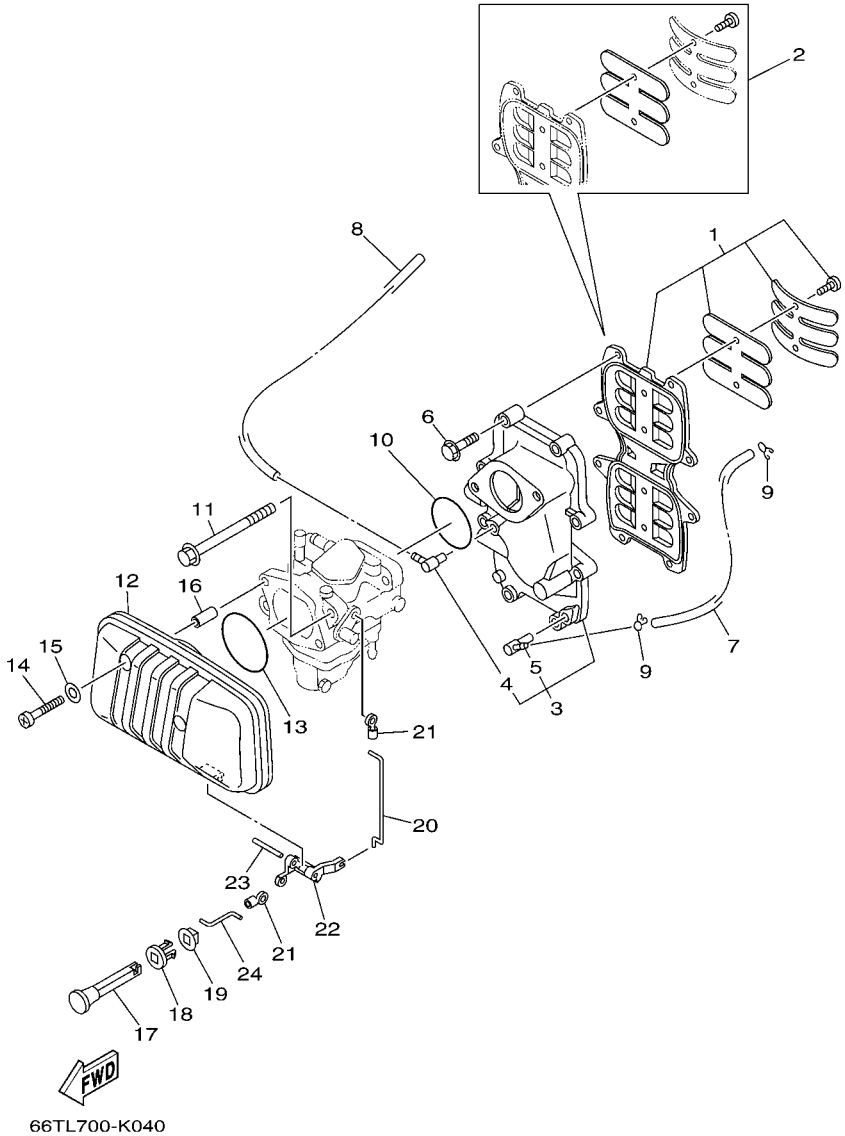

FIG. 5 INTAKE — ADMISSION

REF. NO.	PART NO. N° PIECES	DESCRIPTION DESCRIPTION	66TT					REMARKS REMARQUES
1	66T–13610–00	REED VALVE ASSY CLAPET COMPLET	1					
2	66T–W0004–00	.REED SET .JEU DE CLAPETS	1					
3	66T–13641–02–1S	MANIFOLD, INTAKE 1 TUBULURE, ADMISSION 1	1					
4	6E5–13552–01	.NOZZLE .GICLEUR	1					
5	650–11372–01	.NIPPLE, HOSE .RACCORD, TUYAU	1					
6	97513–06535	BOLT, WITH WASHER VIS HEXAGONAL AVC RONDELLE	8					
7	90445–07M24	HOSE (L240) DURITE (L240)	1					
8	90445–07MA4	HOSE (L280) DURITE (L280)	1					
9	90467–06016	CLIP JONC	2					
10	93210–46M16	O-RING JOINT TORIQUE	1					
11	90119–08M03	BOLT, WITH WASHER BOULON, AVEC RONDELLE	2					
12	66T–14440–00	SILENCER ASSY, INTAKE SIENCIEUX D'ADMISSION	1					
13	93210–54M54	O-RING JOINT TORIQUE	1					
14	97885–06040	SCREW, PAN HEAD VIS, A ENCOCHE	2					
15	92995–06600	WASHER RONDELLE	2					
16	90387–06M80	COLLAR COLLERETTE	2					
17	6H4–41271–02	KNOB, CHOKE BOUTON DE STARTER	1					
18	689–41273–00	GROMMET PASSE-FIL	1					
19	6J8–41274–00	GROMMET 2 PASSE-FIL 2	1					
20	66T–41256–00	ROD, CHOKE 1 TRINGLE 1, STARTER	1					
21	661–41262–02	JOINT, CHOKE LEVER RACCORD, LEVIER DE STARTER	2					
22	66T–41252–00	LEVER, CHOKE 1 LEVIER 1	1					
23	91690–40032	PIN, SPRING AGRAFFE	1					
24	66T–41257–00	ROD, CHOKE 2 TRINGLE 2, STARTER	1					

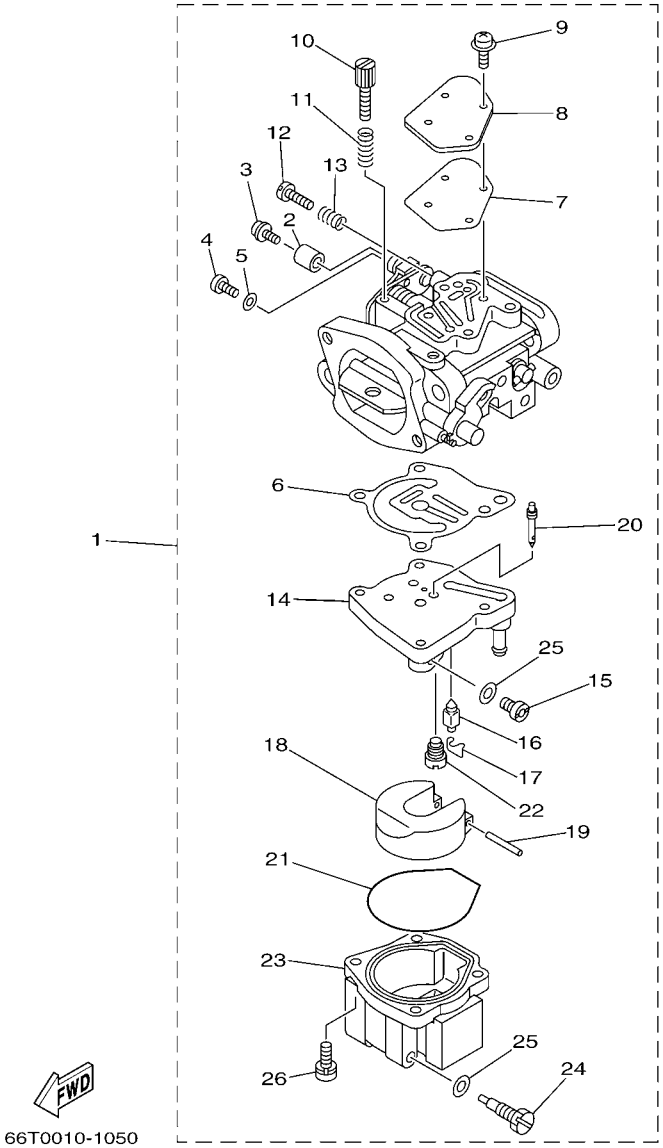

FIG. 6 CARBURETOR CARBURATEUR

REF. NO.	PART NO. N° PIECES	DESCRIPTION DESCRIPTION	66TT					REMARKS REMARQUES
1	66T–14301–03	CARBURETOR ASSY 1 CARBURATEUR COMPLET 1	1					
2	66T–14578–00	.COLLAR .COLLERETTE	1					
3	66T–14584–00	.STOPPER .PLAQUETTE	1					
4	66T–14592–00	.SCREW .VIS	1					
5	92990–05600	.WASHER, PLATE .RONDELLE, PLATE	1					
6	66T–14384–01	.GASKET, FLOAT CHAMBER .JOINT, CUVE DE FLOTTEUR	1					
7	66T–14536–01	.GASKET .JOINT	1					
8	66T–14527–00	.PLATE .PLAQUE	1					
9	97980–04110	.SCREW, WITH WASHER .VIS, AVEC RONDELLE	4					
10	66T–14523–00	.SCREW, STOP .VIS, BUTEE	1					
11	6J8–14334–00	.SPRING, THROTTLE .RESSORT, ACCELERATEUR	1					
12	6E5–14323–03	.SCREW, AIR ADJUSTING .VIS DE DOSEUR D'AIR	1					
13	6E5–14223–00	.SPRING, AIR ADJUSTING .RESSORT, DOSAGE DE L'AIR	1					
14	66T–14945–02	.SPACER ASSY (#38) .BRIDE, ENTRETOISE 1 (#38)	1					
15	61A–1492E–85	.JET, MAIN (#170) .GICLEUR, PRINCIPAL (#170)	1					
16	6E5–14546–00	.VALVE, NEEDLE .POINTEAU	1					
17	6E5–14159–00	.CLIP .JONC	1					
18	6E5–14385–02	.FLOAT .FLOTTEUR	1					
19	6E5–14386–02	.PIN, FLOAT .AXE, FLOTTEUR	1					
20	66T–1492F–35	.JET, AIR SLOW (#70) .GICLEUR, AIR (#70)	1					
21	66T–14984–00	.GASKET, FLOAT CHAMBER .JOINT, CUVE DE FLOTTEUR	1					
22	66T–14992–00	.PLUG .BOUCHON	1					
23	66T–14981–00	.BODY, FLOAT CHAMBER .CORPS, CUVE DE FLOTTEUR	1					
24	66T–14991–00	.PLUG, DRAIN .BOUCHON DE VIDANGE	1					
25	66T–14959–00	.GASKET .JOINT	2					
26	97980–05125	.SCREW, WITH WASHER .VIS, AVEC RONDELLE	4					

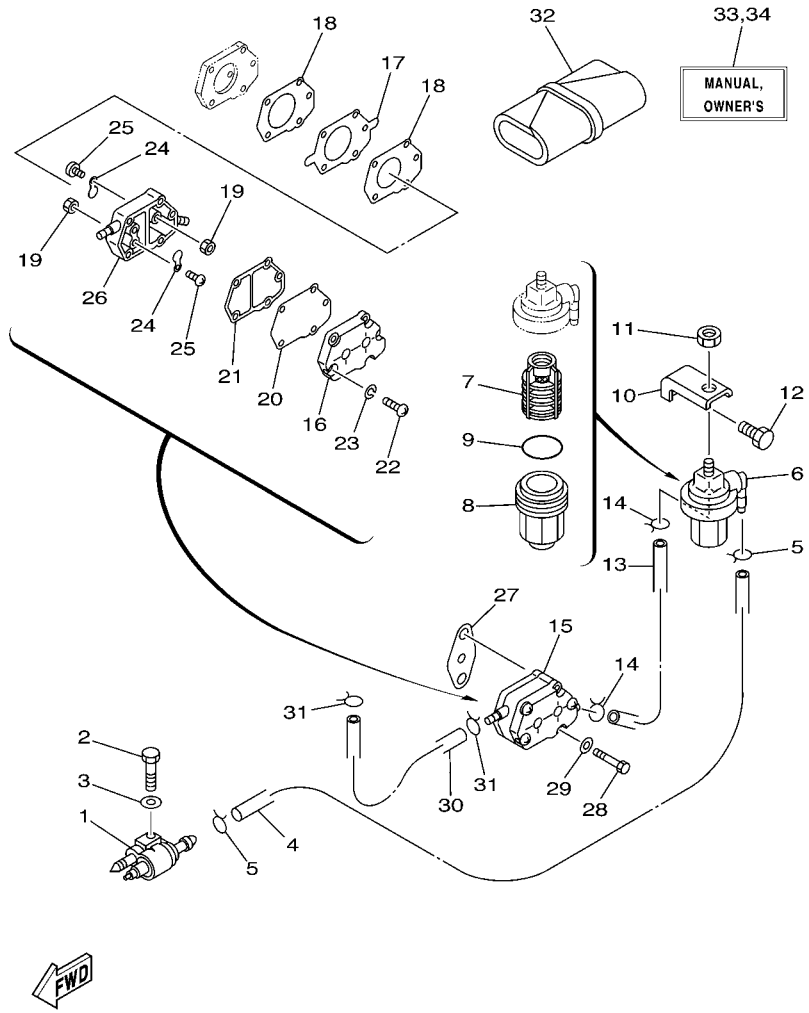

66T4300-3060

FIG. 7 FUEL — CARBURANT

REF. NO.	PART NO. N° PIECES	DESCRIPTION DESCRIPTION	66TT					REMARKS REMARQUES
1	6G1–24304–02	FUEL PIPE JOINT COMP. 1 DURITE RACCORDEMT. A ESSENCE	1					
2	97095–06030	BOLT BOULON	1					
3	92995–06600	WASHER RONDELLE	1					
4	90445–09M08	HOSE (L550) DURITE (L550)	1					
5	90467–08004	CLIP JONC	2					
6	61N–24560–00	FILTER ASSY ENS FILTRE	1					
7	61N–24563–00	.ELEMENT, FILTER .ELEMENT, FILTRE	1					
8	61N–24521–00	.CUP, FILTER .CUVETTE, FILTRE	1					
9	93210–32738	.O-RING .JOINT TORIQUE	1					
10	648–24566–02	BRACKET, FILTER SUPPORT, FILTRE	1					
11	95380–08600	NUT ECROU	1					
12	97013–06014	BOLT BOULON	1					
13	90445–09086	HOSE (L170) DURITE (L170)	1					
14	90467–08004	CLIP JONC	2					
15	692–24410–00	FUEL PUMP ASSY POMPE A ESSENCE	1					
16	6A0–24413–00	.BODY 2 .CORPS 2	1					
17	692–24411–00	.DIAPHRAGM .DIAPHRAGME	1					
18	648–24434–01	.GASKET, BODY .JOINT, CORPS	2					
19	95380–03600	.NUT .ECROU	2					
20	663–24411–00	.DIAPHRAGM .DIAPHRAGME	1					
21	648–24435–02	.GASKET, BODY 2 .JOINT, CORPS 2	1					
22	98503–05028	.SCREW, PAN HEAD .VIS	3					
23	92990–05100	.WASHER, SPRING .RONDELLE, GROWER	3					
24	6A0–24421–01	.VALVE, CHECK .SOUPAPE, RETENUE	2					
25	6A0–14325–00	.SCREW, PAN HEAD .VIS TETE CONIQUE	2					
26	6A0–24412–02	.BODY 1 .CORPS 1	1					
27	650–24431–A0	GASKET, FUEL PUMP 1 JOINT 1 DE POMPE A ESSENCE	1					

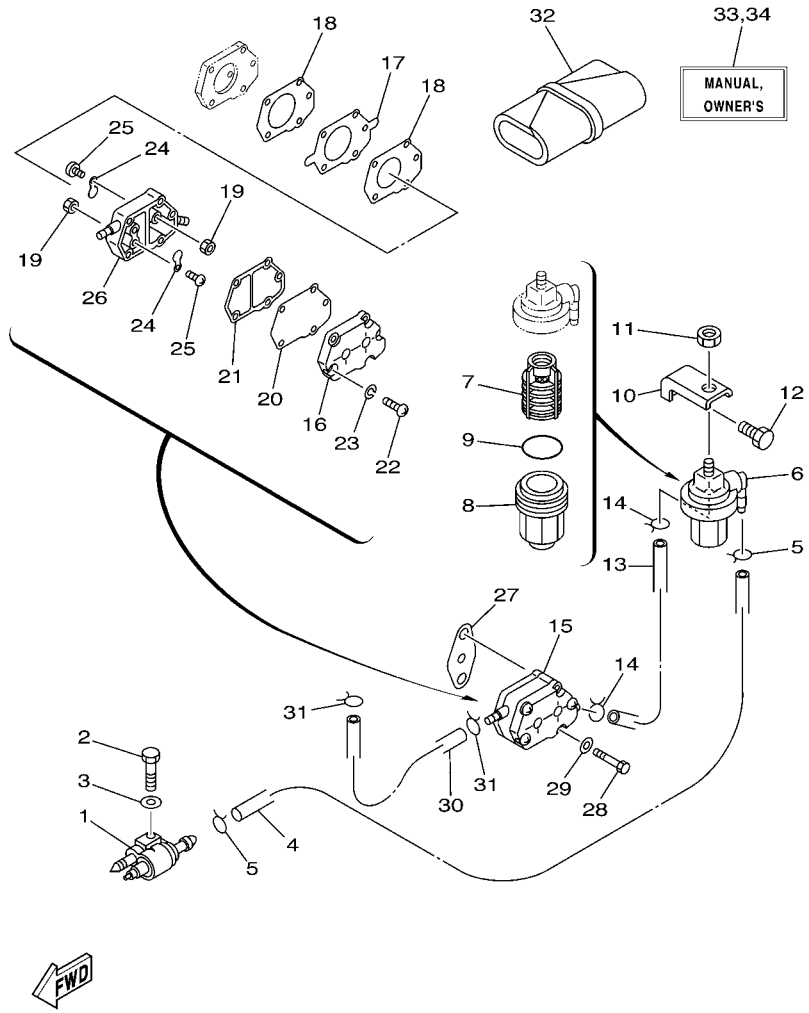

FIG. 7 FUEL CARBURANT

REF. NO.	PART NO. N° PIECES	DESCRIPTION DESCRIPTION	66TT					REMARKS REMARQUES
28	97095–06040	BOLT BOULON	2					
29	92995–06600	WASHER RONDELLE	2					
30	90445–09086	HOSE (L170) DURITE (L170)	1					
31	90467–08004	CLIP JONC	2					
32	676–W2810–01	TOOL KIT TROUSSE A OUTILS	1					AP AP
33	66T–28199–7B–E0	MANUAL,OWNER'S MANUEL D'UTILISATION	1					UR (E) UR (E)
	66T–28199–7B–F0	MANUAL,OWNER'S MANUEL D'UTILISATION	1					UR (F) UR (F)
	66T–28199–7B–S0	MANUAL,OWNER'S MANUEL D'UTILISATION	1					UR (ES) UR (ES)
	66T–28199–7B–G0	MANUAL,OWNER'S MANUEL D'UTILISATION	1					UR (D) UR (D)
	66T–28199–7B–D0	MANUAL,OWNER'S MANUEL D'UTILISATION	1					UR (NL) UR (NL)
	66T–28199–7B–H0	MANUAL,OWNER'S MANUEL D'UTILISATION	1					UR (I) UR (I)
34	66T–28199–8B–K0	MANUAL,OWNER'S MANUEL D'UTILISATION	1					UR (DK) UR (DK)
	66T–28199–8B–R0	MANUAL,OWNER'S MANUEL D'UTILISATION	1					UR (GR) UR (GR)
	66T–28199–8B–P0	MANUAL,OWNER'S MANUEL D'UTILISATION	1					UR (P) UR (P)
	66T–28199–8B–N0	MANUAL,OWNER'S MANUEL D'UTILISATION	1					UR (N) UR (N)
	66T–28199–8B–M0	MANUAL,OWNER'S MANUEL D'UTILISATION	1					UR (S) UR (S)
	66T–28199–8B–L0	MANUAL,OWNER'S MANUEL D'UTILISATION	1					UR (SF) UR (SF)

FIG. 8 STARTER DEMARREUR

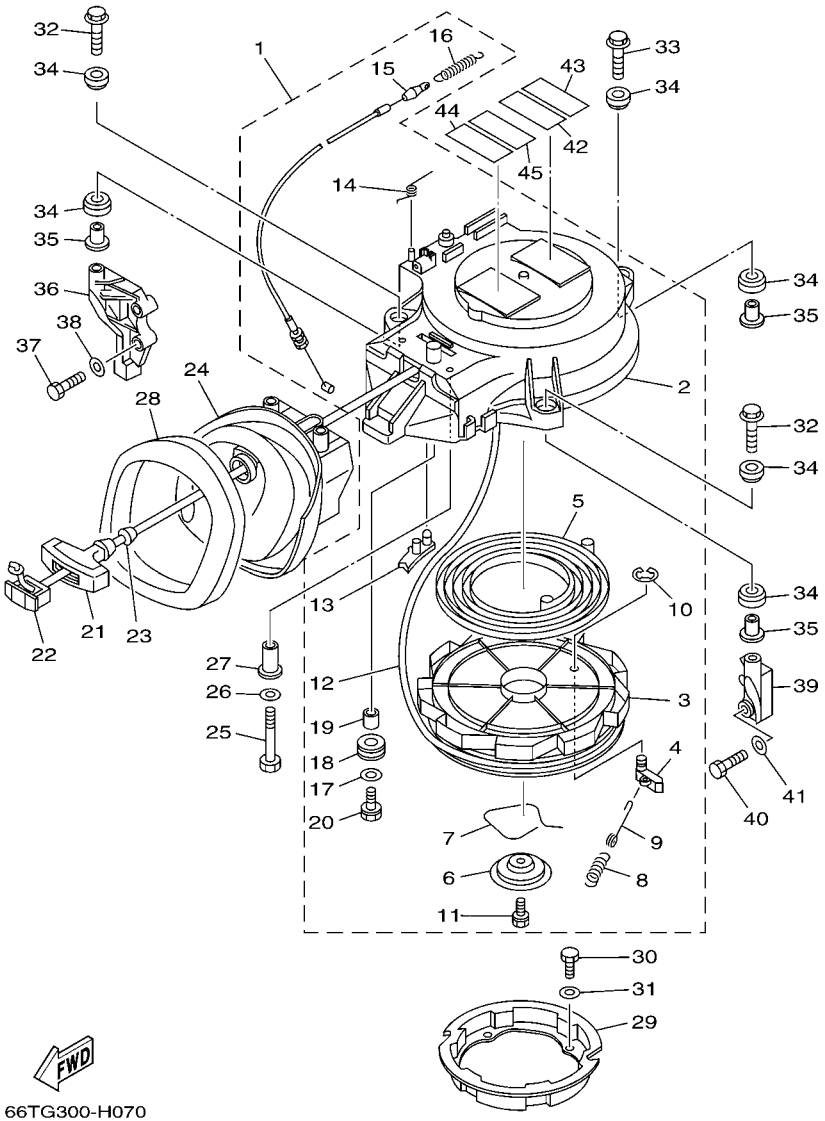

*1:CUT FROM 50M ROLLS,PART NO.90890-44374,CUTTING LENGTH 1.8M

*1:A PRELEVER SUR BOBINE 50M ,REFERENCE 90890-44374,
LONGUEUR DE COUPE 1.8M

REF. NO.	PART NO. N° PIECES	DESCRIPTION DESCRIPTION	66TT					REMARKS REMARQUES
1	66T–15710–01	STARTER ASSY DEMARREUR COMPLET	1					
2	66T–15711–01	.CASE, STARTER .CARTER DE DEMARREUR	1					
3	66T–15714–00	.DRUM, SHEAVE .TAMBOUR, POULIE	1					
4	63V–15741–00	.PAWL, DRIVE .CLIQUET, ENTRAINEMENT	1					
5	66T–15713–00	.SPRING, STARTER .RESSORT DE DEMARREUR	1					
6	66T–15716–00	.PLATE, DRIVE .PLAQUE, ENTRAINEMENT	1					
7	66T–15705–00	.SPRING, DRIVE PAWL .RESSORT DE CLIQUET	1					
8	66T–15767–00	.SPRING .RESSORT	1					
9	66T–15784–00	.SPRING, RETURN .RESSORT, RAPPEL	1					
10	63V–15744–00	.CIRCLIP .CIRCLIP	1					
11	63V–15768–00	.BOLT .BOULON	1					
12	*	.WIRE, STARTER (L:1800MM) .CABLE DE DEMARREUR (L:1800MM)	1					*1 *1
13	66T–15794–00	.STOPPER .BUTEE	1					
14	66T–15734–00	.SPRING, RETURN .RESSORT, RAPPEL	1					
15	66T–15770–00	.CABLE COMP., STARTER STOP .CABLE, BUTEE DE DEMAR	1					
16	66T–15731–00	.SPRING, RETURN .RESSORT, RAPPEL	1					
17	6F5–15791–00	.WASHER, LOCK .RONDELLE-FREIN	1					
18	6F5–15752–00	.ROLLER, WIRE .GALET, CABLE	1					
19	6F5–15753–00	.BUSH .CHARBON	1					
20	6F5–15768–00	.BOLT .BOULON	1					
21	689–15755–01	HANDLE, STARTER POIGNEE, DE DEMARREUR	1					
22	6F5–15779–02	COVER COUVERCLE	1					
23	697–15789–00	DAMPER AMORTISSEUR	1					
24	66T–15758–01	GUIDE, ROPE GUIDE DE CABLE	1					
25	97095–06035	BOLT BOULON	2					
26	92995–06600	WASHER RONDELLE	2					
27	90387–06M66	COLLAR COLLERETTE	2					

FIG. 8 STARTER DEMARREUR

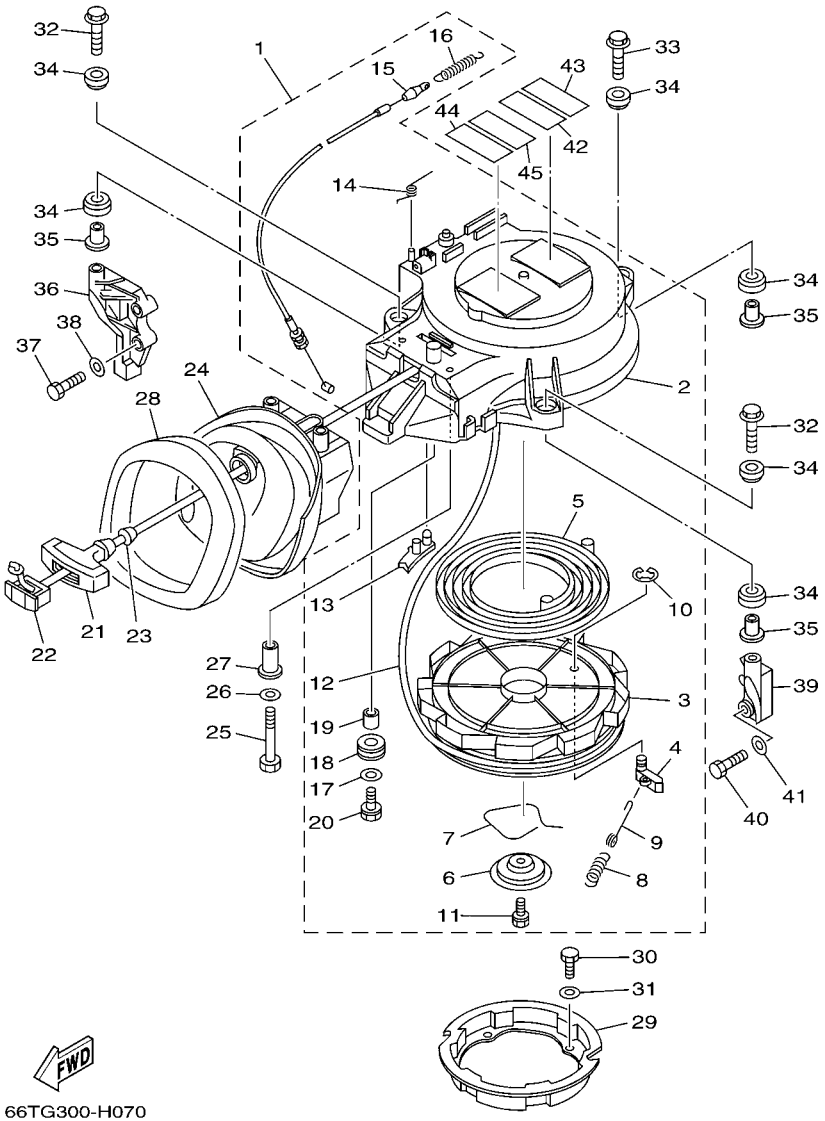

*1:CUT FROM 50M ROLLS,PART NO.90890-44374,CUTTING LENGTH 1.8M

*1:A PRELEVER SUR BOBINE 50M ,REFERENCE 90890-44374,
LONGUEUR DE COUPE 1.8M

REF. NO.	PART NO. N° PIECES	DESCRIPTION DESCRIPTION	66TT					REMARKS REMARQUES
28	66T–15762–01	SEAL, RUBBER 2 JOINT CAOUTCHOUC 2	1					
29	66T–15723–00	PULLEY, STARTER POULIE DE DEMARREUR	1					
30	97095–06010	BOLT BOULON	4					
31	92995–06600	WASHER RONDELLE	4					
32	90119–08M10	BOLT, WITH WASHER BOULON, AVEC RONDELLE	2					
33	90119–08M51	BOLT, WITH WASHER BOULON, AVEC RONDELLE	1					
34	90385–12M04	BUSH DOUILLE	6					
35	90387–08M05	COLLAR COLLERETTE	3					
36	66T–15771–00–94	STAY 1 SUPPORT 1	1					
37	97013–06030	BOLT BOULON	2					
38	92903–06600	WASHER, PLATE RONDELLE, PLATE	2					
39	66T–15772–00–94	STAY 2 SUPPORT 2	1					
40	97013–06030	BOLT BOULON	2					
41	92903–06600	WASHER, PLATE RONDELLE, PLATE	2					
42	6AH–81994–40	LABEL, SAFETY ETIQUETTE, SECURITE	1					
43	6AH–81994–50	LABEL, SAFETY ETIQUETTE, SECURITE	1					
44	6AH–81995–40	LABEL, WARNING ETIQUETTE, AVERTISSEMENT	1					
45	6AH–81995–50	LABEL, WARNING ETIQUETTE, AVERTISSEMENT	1					

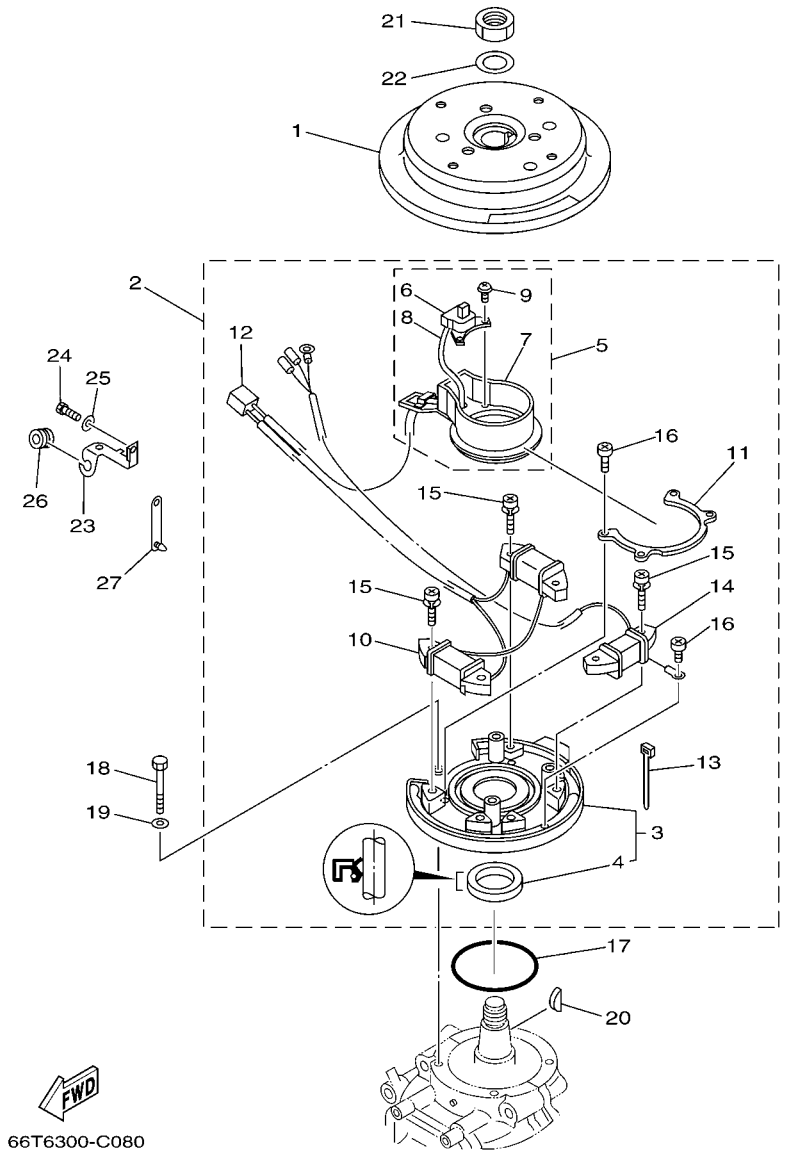

FIG. 9 GENERATOR GENERATRICE

REF. NO.	PART NO. N° PIECES	DESCRIPTION DESCRIPTION	66TT					REMARKS REMARQUES
1	66T–85550–10	ROTOR ASSY ROTOR CPLT	1					
2	66T–85560–01	BASE ASSY ENS. FLASQUE	1					
3	66T–85561–00	.BASE, MAGNETO .BASE, MAGNETO	1					
4	93102–35008	..OIL SEAL ..JOINT SPY	1					
5	66T–85580–00	.PULSER COIL ASSY .ENS.BOBINE DIMPULSIONS	1					
6	66T–85596–00	..COIL, PULSER 1 ..BOBINE, IMPULSIONS 1	1					
7	66T–85582–00	..ATTACHMENT, PULSER ..FIXATION, PULSEUR	1					
8	66T–85515–00	..LEAD WIRE ASSY ..FIL	1					
9	97902–04108	..SCREW, WITH WASHER ..VIS, AVEC RONDELLE	2					
10	66T–85520–00	.COIL, CHARGE .BOBINE, CHARGE	1					
11	66T–41611–00	.RETAINER, MAGNETO BASE .FLASQUE, PLATEAU D'AVANCE	1					
12	9E471–04305	.CONNECTOR .CONNECTEUR	1					
13	66T–81328–00	.CLAMP .COLLIER	1					
14	66T–85533–00	.COIL, LIGHTING .BOBINE, ECLAIRAGE	1					
15	97902–06125	.SCREW, WITH WASHER .VIS, AVEC RONDELLE	6					
16	97802–04006	.SCREW, PAN HEAD .VIS	5					
17	93210–75M51	O-RING JOINT TORIQUE	1					
18	97095–06040	BOLT BOULON	4					
19	92995–06600	WASHER RONDELLE	4					
20	90280–05015	KEY, WOODRUFF CLAVETTE, DEMI-LUNE	1					
21	90170–20137	NUT ECROU	1					
22	90201–21M18	WASHER, PLATE RONDELLE, PLATE	1					
23	90465–15M74	CLAMP BRIDE	1					
24	97095–06016	BOLT BOULON	1					
25	92995–06600	WASHER RONDELLE	1					
26	90480–10M71	GROMMET PASSE-FIL	1					
27	90464–12M00	CLAMP BRIDE	1					

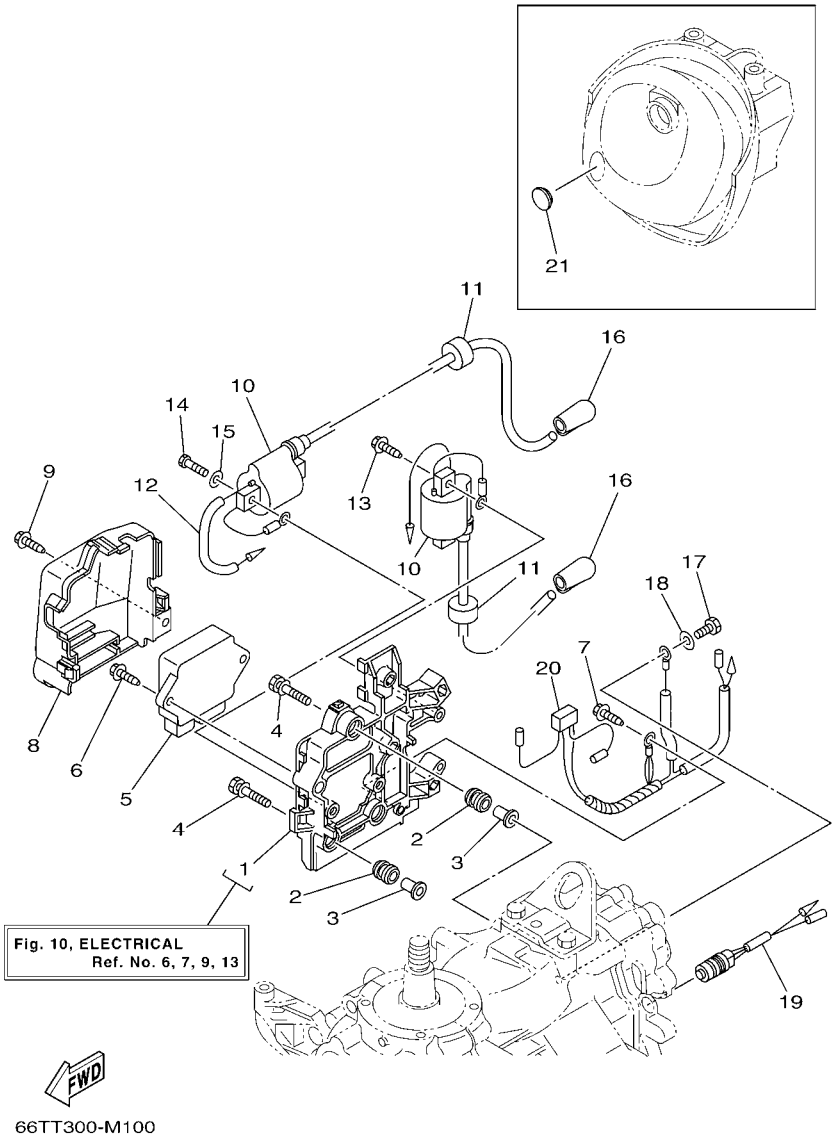

Fig. 10, ELECTRICAL
Ref. No. 6, 7, 9, 13

FIG. 10 ELECTRICAL — ELECTRIQUE

REF. NO.	PART NO. N° PIECES	DESCRIPTION DESCRIPTION	66TT					REMARKS REMARQUES
1	66T–8554B–01–94	BRACKET SUPPORT	1					
2	6A0–82317–00	DAMPER, IGNITION COIL AMORTISSEUR, BOBINE D'ALLUM	3					
3	90387–06119	COLLAR COLLERETTE	3					
4	90119–06M65	BOLT, WITH WASHER BOULON, AVEC RONDELLE	3					
5	66T–85540–01	C.D.I. UNIT ASSY BLOC C.D.I.	1					
6	90109–06M81	BOLT BOULON	2					
7	90109–06M80	BOLT BOULON	1					
8	66T–81916–01	COVER, TERMINAL COUVERCLE, BORNE	1					
9	90109–06M81	BOLT BOULON	1					
10	66T–85570–00	IGNITION COIL ASSY BOBINE D'ALLUMAGE (ENS.)	2					
11	90480–25161	GROMMET PASSE-FIL	2					
12	90446–03MA3	HOSE DURITE	1					
13	90109–06M81	BOLT BOULON	2					
14	97095–06025	BOLT BOULON	2					
15	92995–06600	WASHER RONDELLE	2					
16	6E3–82370–21	PLUG CAP ASSY ANTIPARASITE	2					
17	97095–06012	BOLT BOULON	1					
18	92995–06600	WASHER RONDELLE	1					
19	688–82560–10	THERMO SWITCH ASSY THERMO-CONTACT COMPLET	1					
20	66T–82519–00	WIRE, EARTH LEAD FIL, MASSE	1					
21	6G1–42725–00	GROMMET PASSE-FIL	1					

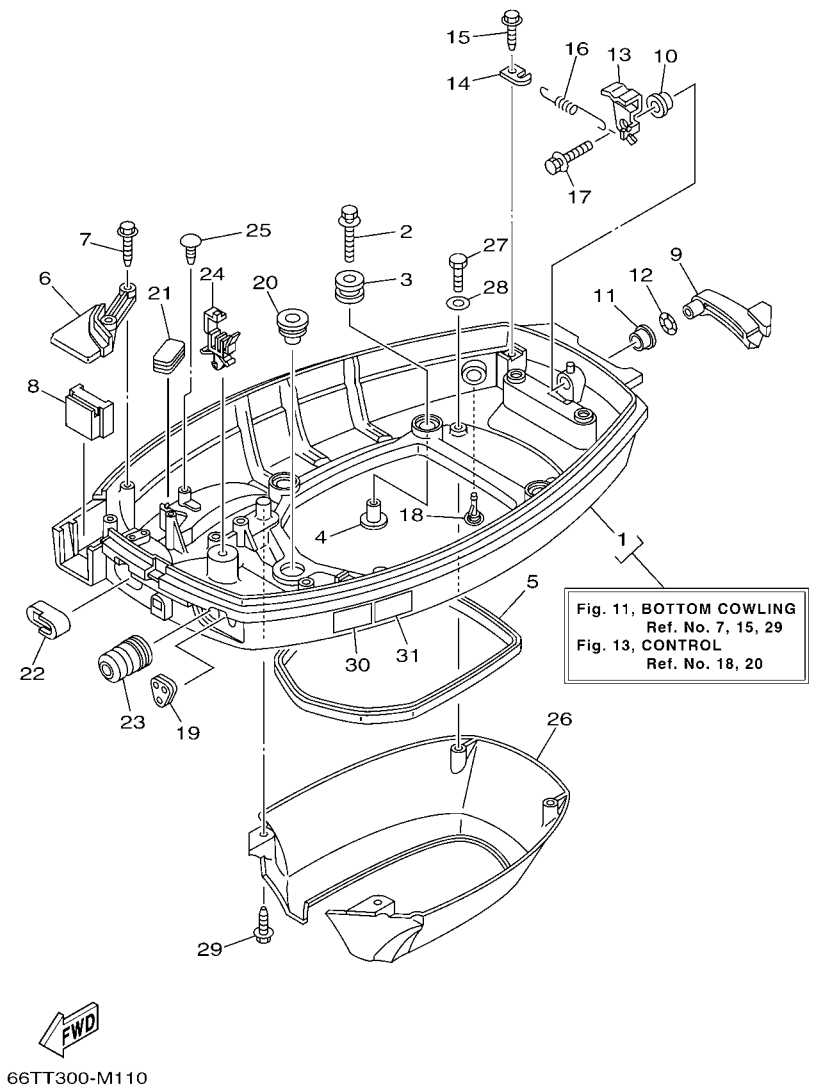

FIG. 11 BOTTOM COWLING CAPOT INFERIEUR

REF. NO.	PART NO. N° PIECES	DESCRIPTION DESCRIPTION	66TT					REMARKS REMARQUES
1	66T–42710–01–4D	BOTTOM COWLING ASSY ENS. EMBASE	1					
2	90119–06M61	BOLT, WITH WASHER BOULON, AVEC RONDELLE	4					
3	90480–09M21	GROMMET PASSE-FIL	4					
4	90387–06M41	COLLAR COLLERETTE	4					
5	66T–42716–00	RUBBER, SEAL 1 JOINT EN CAOUTCHOUC 1	1					
6	66T–42738–00–CA	PLATE, FITTING ETRIER	1					
7	90109–06M81	BOLT BOULON	2					
8	66T–42725–00	GROMMET PASSE-FIL	1					
9	66T–42815–01–4D	LEVER, CLAMP LEVIER, PRESSE	1					
10	90386–12M37	BUSH DOUILLE	1					
11	90386–12MA2	BUSH DOUILLE	1					
12	90206–12052	WASHER, WAVE RONDELLE, ONDULEE	1					
13	66T–42816–00	LEVER, CLAMP LEVIER, PRESSE	1					
14	66T–43144–00	HOOK, SPRING CROCHET	1					
15	90109–06M86	BOLT BOULON	1					
16	90506–16M34	SPRING, TENSION RESSORT, TENSION	1					
17	90119–06M73	BOLT, WITH WASHER BOULON, AVEC RONDELLE	1					
18	6E5–44391–00	NIPPLE, HOSE RACCORD D'ESSENCE	1					
19	65W–26326–00	GROMMET RONDELLE CAOUTCHOUC	1					
20	676–42727–00	GROMMET PASSE-FIL	1					
21	6H4–42726–00	GROMMET PASSE-FIL	1					
22	66T–24329–00	SEAL JOINT	1					
23	65W–42726–00	GROMMET PASSE-FIL	1					
24	90465–25M57	CLAMP BRIDE	1					
25	90338–05M03	PLUG PLOT	1					
26	66T–42741–00	APRON CAPOT LATERAL	1					
27	97095–06016	BOLT BOULON	2					

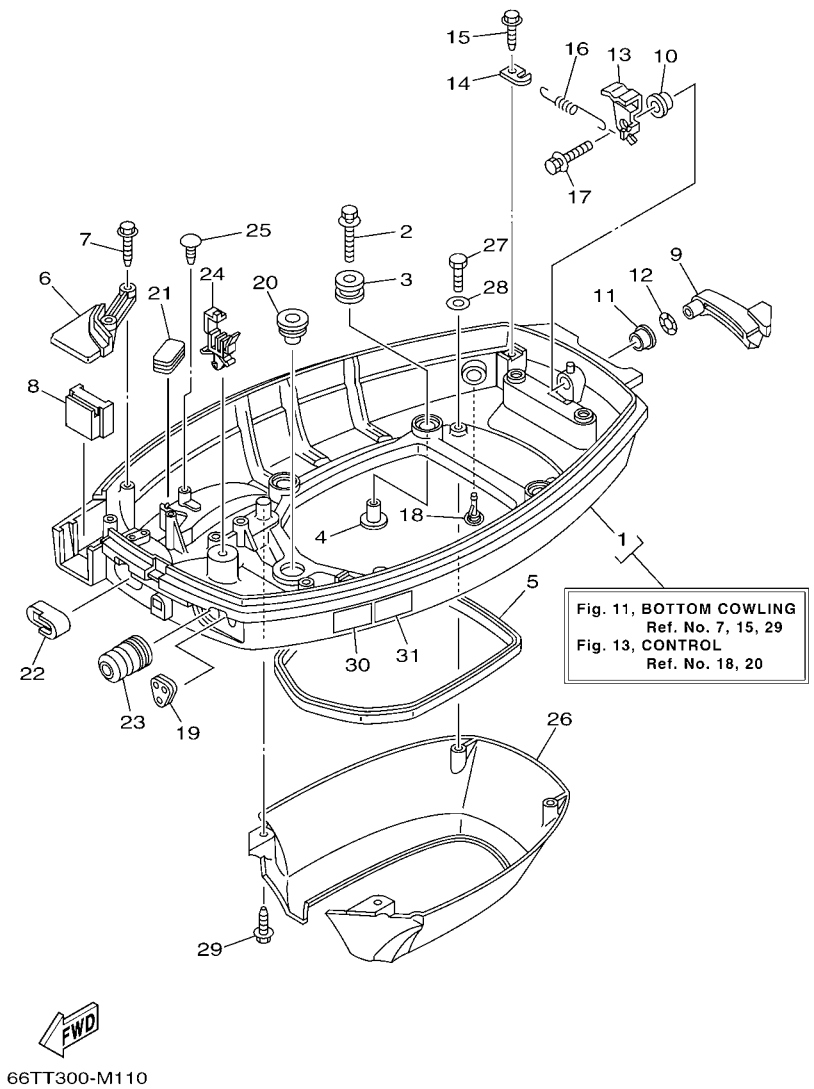

FIG. 11 BOTTOM COWLING CAPOT INFERIEUR

REF. NO.	PART NO. N° PIECES	DESCRIPTION DESCRIPTION	66TT					REMARKS REMARQUES
28	92995–06600	WASHER RONDELLE	2					
29	90109–06M80	BOLT BOULON	2					
30	6AH–42794–40	LABEL, WARNING (GENERAL) ETIQUETTE, AVERTISSEMENT	1					
31	6AH–42794–50	LABEL, WARNING (GENERAL) ETIQUETTE, AVERTISSEMENT	1					

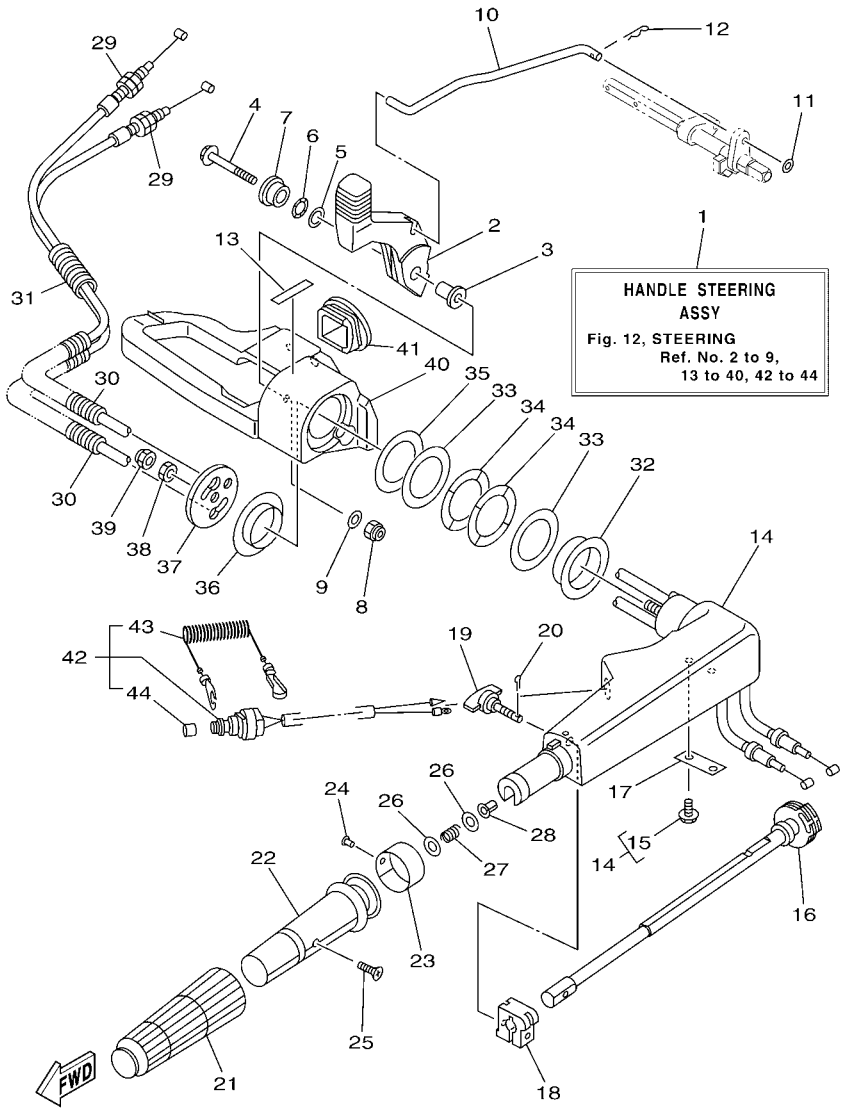

FIG. 12 STEERING DIRECTION

REF. NO.	PART NO. N° PIECES	DESCRIPTION DESCRIPTION	66TT					REMARKS REMARQUES
1	66T–W0084–02–4D	HANDLE STEERING ASSY BARRE FRANCHE (ENS.)	1					
2	66T–44111–02	HANDLE, GEAR SHIFT POIGNEE, LEVIER D'EMBRAYAGE	1					
3	90387–06M86	COLLAR COLLERETTE	1					
4	97595–06550	BOLT, WITH WASHER VIS HEXAGONAL AVC RONDELLE	1					
5	90201–12M07	WASHER, PLATE RONDELLE, PLATE	1					
6	90206–12052	WASHER, WAVE RONDELLE, ONDULEE	1					
7	66T–42123–00	BOLT, HANDLE JOINT BOULON	1					
8	95780–06300	NUT, FLANGE ECROU	1					
9	92995–06200	WASHER RONDELLE	1					
10	66T–44124–00	LINK, SHIFT ROD BIELLETTE	1					
11	92990–06200	WASHER, PLAIN RONDELLE, PLATE	1					
12	90468–18008	CLIP JONC	1					
13	6E0–44191–11	INDICATOR, SHIFT ETIQUETTE, EMBRAYAGE	1					
14	65W–42101–01–4D	HANDLE, STEERING POIGNEE	1					
15	90109–06M86	.BOLT .BOULON	2					
16	65W–42138–00	LEVER, THROTTLE LEVIER, ACCELERATEUR	1					
17	65W–42159–00	STAY SUPPORT	1					
18	6G1–42126–00	FRICTION, STEERING HANDLE GRIP CUVETTE, POIGNEE DE DIRECTION	1					
19	65W–42125–00	BOLT, FRICTION ADJUSTING BOULON	1					
20	91490–20010	PIN. COTTER GOUPILLE	1					
21	6G1–42177–00	RUBBER, HANDLE CAOUTCHOUC, POIGNEE	1					
22	664–42119–00	GRIP, STEERING HANDLE POIGNEE, BARRE FRANCHE	1					
23	6G1–42137–10	INDICATOR, THROTTLE INDICATEUR, ACCELERATION	1					
24	90269–02M09	RIVET RIVET	1					
25	90152–05011	SCREW, COUNTERSUNK VIS, TETE NOYEE	1					
26	90201–10M02	WASHER, PLATE RONDELLE, PLATE	2					
27	90501–23215	SPRING, COMPRESSION RESSORT, COMPRESSION	1					

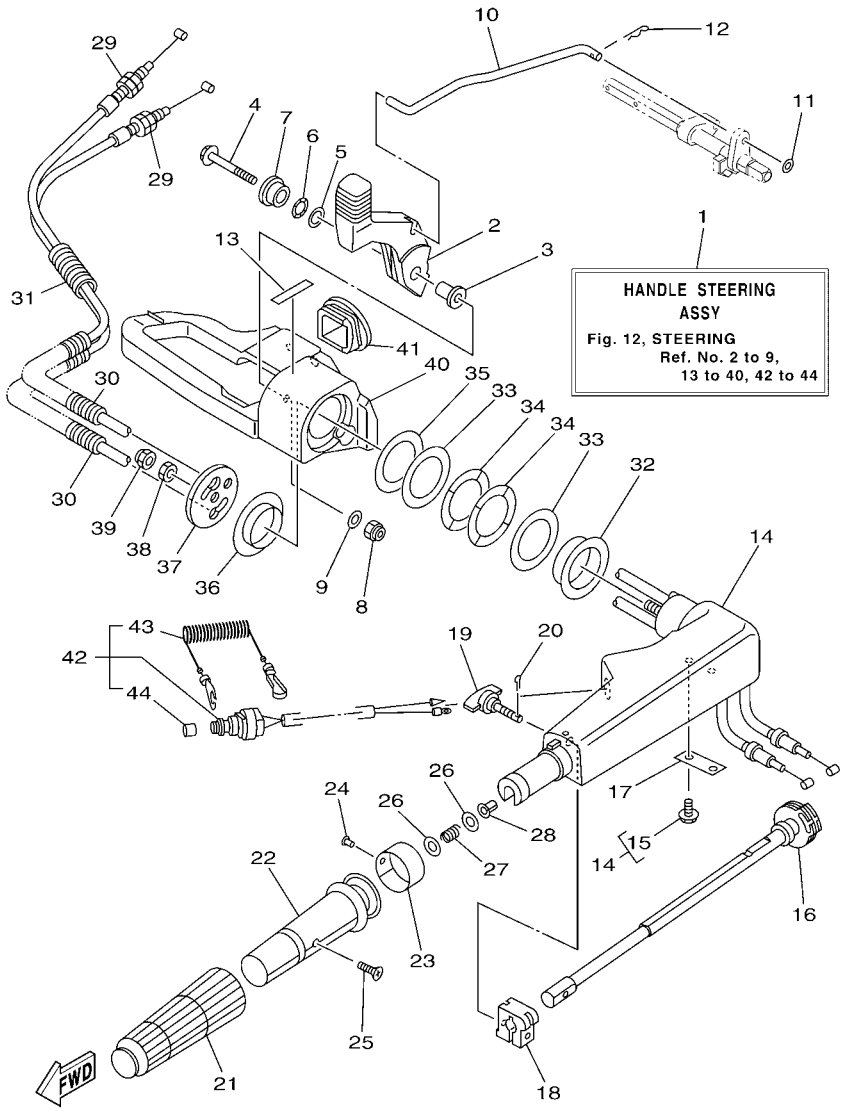

FIG. 12 STEERING DIRECTION

REF. NO.	PART NO. N° PIECES	DESCRIPTION DESCRIPTION	66TT					REMARKS REMARQUES
28	90386–08032	BUSH DOUILLE	1					
29	66T–26301–00	THROTTLE CABLE ASSY CABLE D'ACCELERATEUR	2					
30	90446–10M87	HOSE (L75) DURITE (L75)	2					
31	90446–10M86	HOSE (L140) DURITE (L140)	2					
32	90386–40MA0	BUSH DOUILLE	1					
33	90201–43M00	WASHER, PLATE RONDELLE, PLATE	2					
34	90206–43M22	WASHER, WAVE RONDELLE, ONDULEE	2					
35	90202–43M57	WASHER, PLATE RONDELLE, PLATE	1					
36	90386–40M99	BUSH DOUILLE	1					
37	65W–42131–01	COVER, HANDLE STEERING COUVERCLE	1					
38	95380–10700	NUT ECROU	1					
39	95780–10300	NUT, FLANGE ECROU	1					
40	65W–42121–01–4D	BRACKET SUPPORT	1					
41	66T–41273–00	GROMMET PASSE-FIL	1					
42	66T–82575–01	ENGINE STOP SWITCH ASSY COUPE CIRCUIT CPLT	1					
43	682–82556–00	.LANYARD, STOP SWITCH .CORDON DU COUPE CIRCUIT	1					
44	689–8257Y–00	.CAP .COUVERCLE	1					

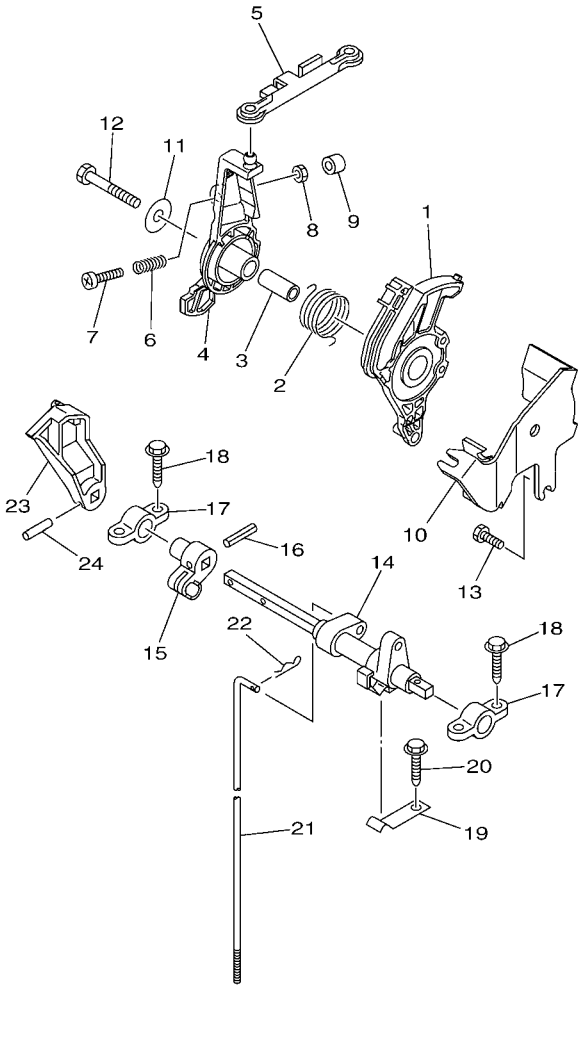

66TT300-M130

FIG. 13 CONTROL COMMANDE

REF. NO.	PART NO. N° PIECES	DESCRIPTION DESCRIPTION	66TT					REMARKS REMARQUES
1	66T–41638–10	PULLEY POULIE	1					
2	66T–42167–00	SPRING 1 RESSORT1	1					
3	90387–08M16	COLLAR COLLERETTE	1					
4	66T–41631–10	LEVER, MAGNETO CONTROL LEVIER, COMMANDE D'AVANCE	1					
5	66T–41237–00	JOINT, LINK RACCORD	1					
6	90501–10M84	SPRING, COMPRESSION RESSORT, COMPRESSION	1					
7	97880–06035	SCREW, PAN HEAD VIS, TETE TRONCONIQUE	1					
8	95380–06700	NUT ECROU	1					
9	688–44194–00	CAP CAPUCHON	1					
10	66T–14497–10	STAY, THROTTLE WIRE SUPPORT DE BOISSEAU	1					
11	90201–08M54	WASHER, PLATE RONDELLE, PLATE	1					
12	97095–08045	BOLT BOULON	1					
13	97095–06014	BOLT BOULON	1					
14	66T–44121–00	LEVER, SHIFT ROD LEVIER, TIGE D'INVERSION	1					
15	66M–44122–00	BUSHING, SHIFT ROD LEVER DOUILLE, LEVIER D'EMBRAYAGE	1					
16	90254–03M05	PIN, SPRING RIVET, TETE TRONCONIQUE	1					
17	6F5–41662–00	BRACKET 2 SUPPORT 2	2					
18	90109–06M81	BOLT BOULON	4					
19	682–44116–01	SPRING RESSORT	1					
20	90109–06M80	BOLT BOULON	1					
21	66T–44143–10	ROD, SHIFT TIGE D'EMBRAYAGE	1					L(21.7") L(21.7")
22	91490–16012	PIN. COTTER GOUPILLE	1					
23	66T–44125–01	LEVER, SHIFT ROD LEVIER, TIGE D'INVERSION	1					
24	90254–03M04	PIN, SPRING RIVET, TETE TRONCONIQUE	1					

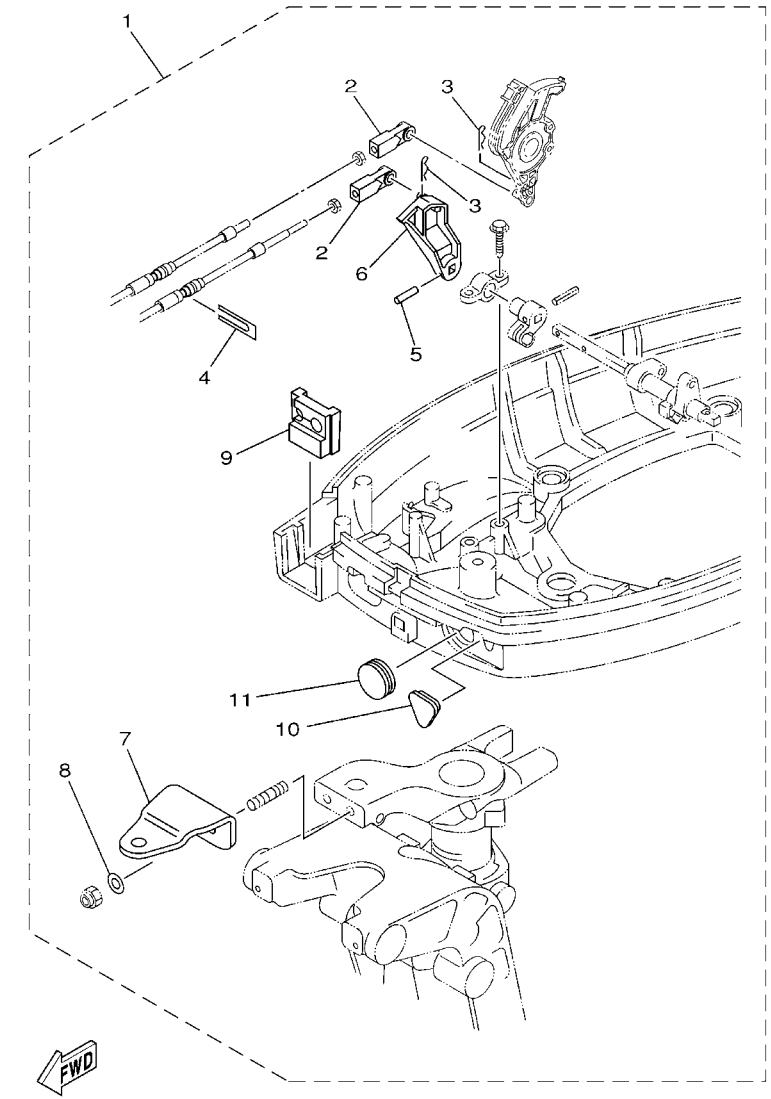

66TT700-M170

FIG. 14 REMO CON ATTACHMENT COMMANDE A DISTANCE

REF. NO.	PART NO. N° PIECES	DESCRIPTION DESCRIPTION	66TT					REMARKS REMARQUES
1	66T–48501–01	REMOTE CONT. ATTACHMENT ASSY. COMMANDE A DISTANCE (KIT)	1					AP AP
2	663–48344–00	.CABLE END, REMOTE CONTROL .CHAPE CABLE	2					
3	90468–18008	.CLIP .JONC	2					
4	6H3–48538–00	.CLAMP, CABLE 1 .COLLIER	1					
5	90254–03M04	.PIN, SPRING .RIVET, TETE TRONCONIQUE	1					
6	66T–44125–01	.LEVER, SHIFT ROD .LEVIER, TIGE D'INVERSION	1					
7	65W–48511–01	.HOOK, STEERING .ATTACHE, DIRECTION	1					
8	90201–10120	.WASHER, PLATE .RONDELLE, PLATE	2					
9	66T–42725–30	.GROMMET .PASSE-FIL	1					
10	65W–26326–10	.GROMMET .RONDELLE CAOUTCHOUC	1					
11	65W–42726–10	.GROMMET .PASSE-FIL	1					

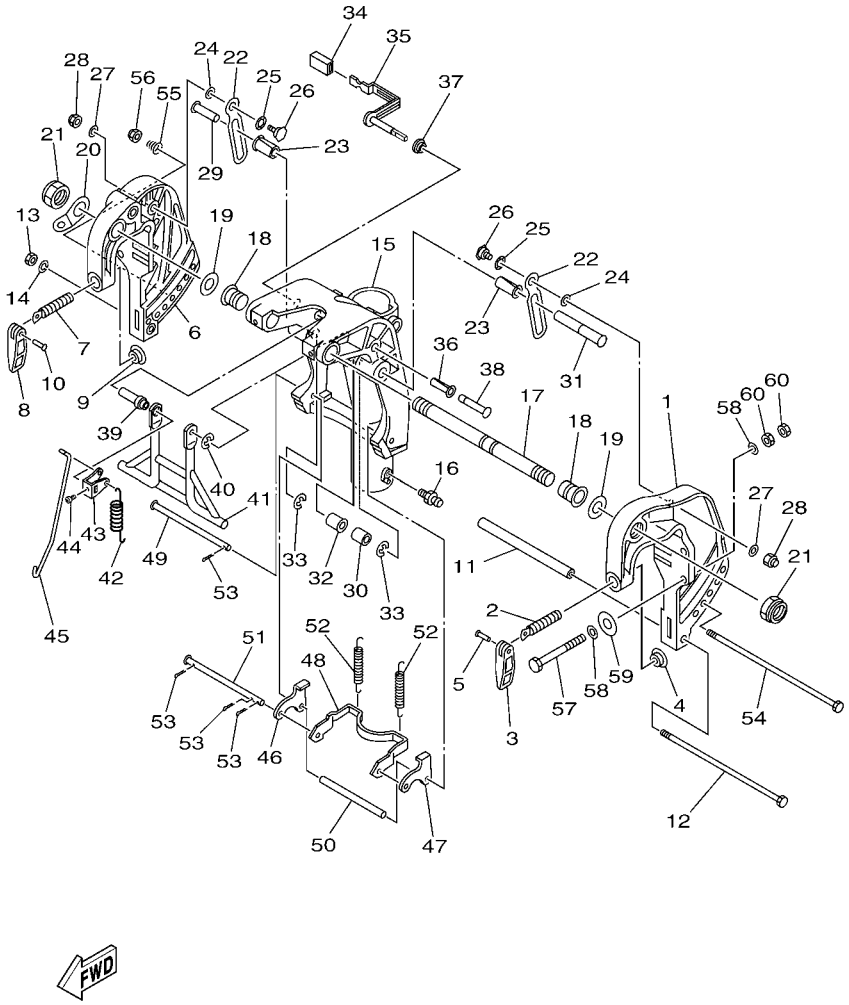

FIG. 15 BRACKET 1 SUPPORT 1

REF. NO.	PART NO. N° PIECES	DESCRIPTION DESCRIPTION	66TT					REMARKS REMARQUES
1	66T–43111–01–4D	BRACKET, CLAMP 1 PRESSE 1	1					
2	90149–14M12	SCREW VIS	1					
3	663–43118–01–4D	HANDLE, TRANSOM CLAMP POIGNEE DE VIS DE PRESSE	1					
4	648–43114–01	PAD, TRANSOM CLAMP RONDELLE D'APPUI	1					
5	90243–04007	PIN GOUPILLE	1					
6	66T–43112–01–4D	BRACKET, CLAMP 2 PRESSE 2	1					
7	90149–14M12	SCREW VIS	1					
8	663–43118–01–4D	HANDLE, TRANSOM CLAMP POIGNEE DE VIS DE PRESSE	1					
9	648–43114–01	PAD, TRANSOM CLAMP RONDELLE D'APPUI	1					
10	90243–04007	PIN GOUPILLE	1					
11	90387–08M29	COLLAR COLLERETTE	1					
12	90101–08M76	BOLT BOULON	1					
13	95380–08600	NUT ECROU	1					
14	92990–08100	WASHER, SPRING RONDELLE, GROWER	1					
15	65W–43311–10–4D	BRACKET, SWIVEL 1 SUPPORT, PIVOT 1	1					L(21.7") L(21.7")
16	93700–06M03	NIPPLE, GREASE PION	3					
17	63D–43131–01	BOLT, CLAMP BRACKET BOULON, PRESSE	1					
18	90386–22M15	BUSH DOUILLE	2					
19	90201–22M03	WASHER, PLATE RONDELLE, PLATE	2					
20	6J8–43113–01	PLATE, CLAMP BRACKET PLAQUETTE, PRESSE	1					
21	90185–22043	NUT, SELF-LOCKING ECROU,AUTO-BLOQUANT	2					
22	66T–43627–00	STOPPER PLAQUETTE	2					
23	90386–12M98	BUSH DOUILLE	2					
24	90202–12031	WASHER, PLATE RONDELLE, PLATE	2					
25	90206–12M00	WASHER, WAVE RONDELLE, ONDULEE	2					
26	90109–08M90	BOLT BOULON	2					
27	90201–08M07	WASHER, PLATE RONDELLE, PLATE	2					

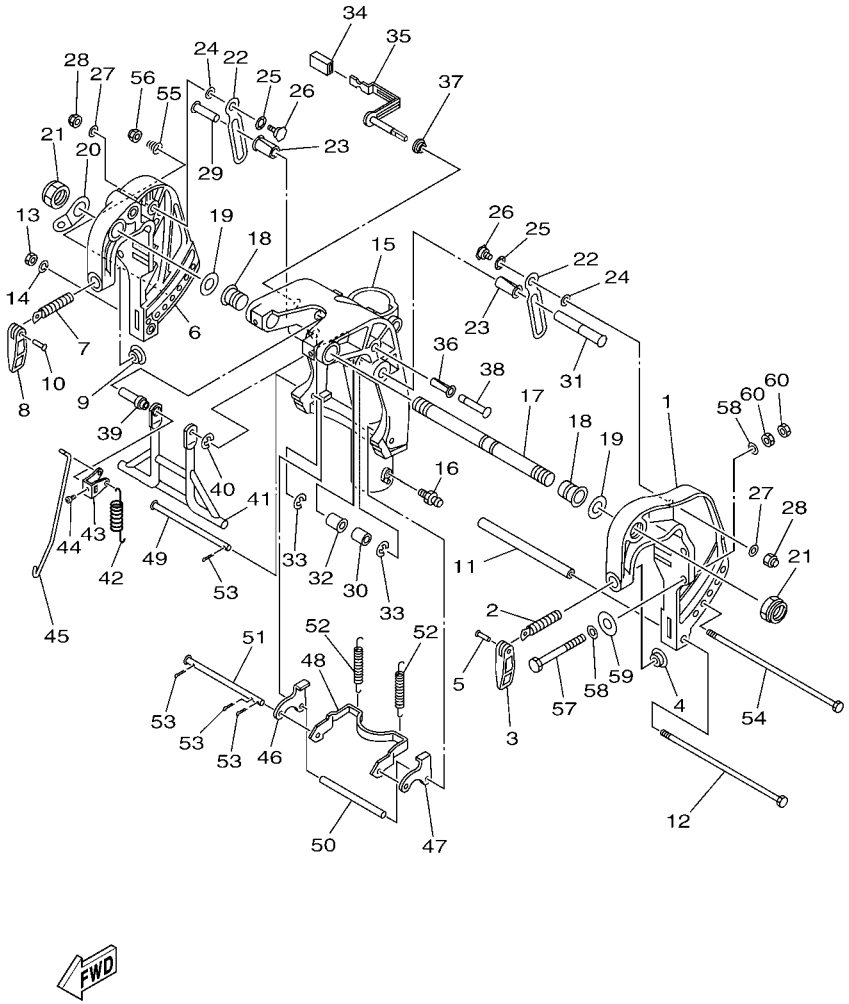

FIG. 15 BRACKET 1 SUPPORT 1

REF. NO.	PART NO. N° PIECES	DESCRIPTION DESCRIPTION	66TT					REMARKS REMARQUES
28	90185–08057	NUT, SELF-LOCKING ECROU,AUTO-BLOQUANT	2					
29	90249–12M34	PIN GOUPILLE	1					
30	90387–12M04	COLLAR COLLERETTE	1					
31	90249–12M39	PIN GOUPILLE	1					
32	90386–12MA0	BUSH DOUILLE	1					
33	99080–10600	CIRCLIP CIRCLIP	2					
34	682–43318–01	COVER CAPUCHON	1					
35	65W–43630–11	TILT LEVER ASSY LEVIER D'INCLINAISON	1					
36	90386–10M99	BUSH DOUILLE	1					
37	90386–07MA2	BUSH DOUILLE	1					
38	90249–10M31	PIN GOUPILLE	1					
39	90387–07M05	COLLAR COLLERETTE	1					
40	99080–08600	CIRCLIP CIRCLIP	1					
41	66T–43350–02	RECEIVER ASSY RECEIVER ASSY	1					
42	90506–20M37	SPRING, TENSION RESSORT, TENSION	1					
43	66T–43631–11	LEVER, TILT LEVIER, INCLINAISON	1					
44	90157–05014	SCREW, PAN HEAD VIS, TETE TRONCONIQUE	1					
45	65W–43616–00	ROD, TILT LOCK TIGE	1					
46	65W–43614–01	PLATE, TILT LOCK ETRIER, VERROUILLAGE MARCHE AR	1					
47	65W–43615–01	PLATE, TILT LOCK ETRIER, VERROUILLAGE MARCHE AR	1					
48	65W–43613–00	ARM, TILT LOCK GUIDE	1					
49	90249–07M32	PIN GOUPILLE	1					
50	90387–07M29	COLLAR COLLERETTE	1					
51	90249–07M33	PIN GOUPILLE	1					
52	90506–30M00	SPRING, TENSION RESSORT, TENSION	2					
53	91490–20012	PIN. COTTER GOUPILLE	4					
54	90101–08M28	BOLT BOULON	1					

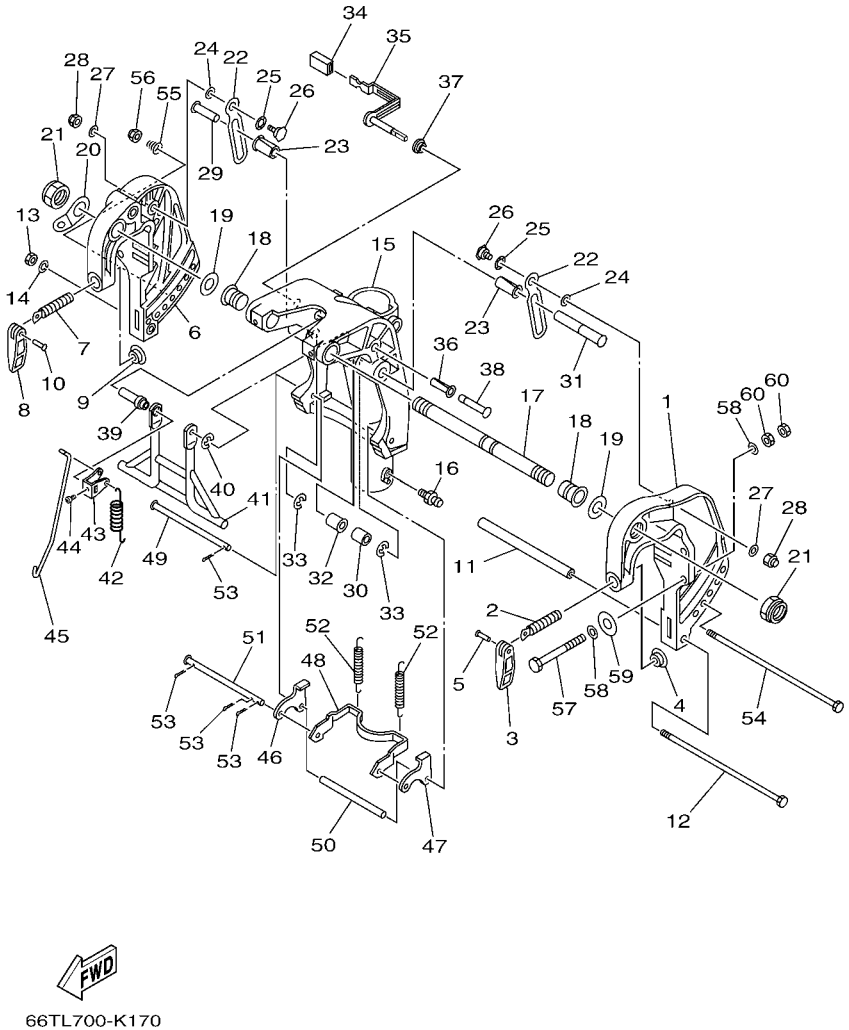

FIG. 15 BRACKET 1 SUPPORT 1

REF. NO.	PART NO. N° PIECES	DESCRIPTION DESCRIPTION	66TT					REMARKS REMARQUES
55	90502–10M06	SPRING, CONICAL RESSORT, CONIQUE	1					
56	90185–08057	NUT, SELF-LOCKING ECROU,AUTO-BLOQUANT	1					
57	90101–10M58	BOLT BOULON	4					
58	92995–10600	WASHER RONDELLE	8					
59	90201–12426	WASHER, PLATE RONDELLE, PLATE	4					
60	95380–10600	NUT ECROU	8					

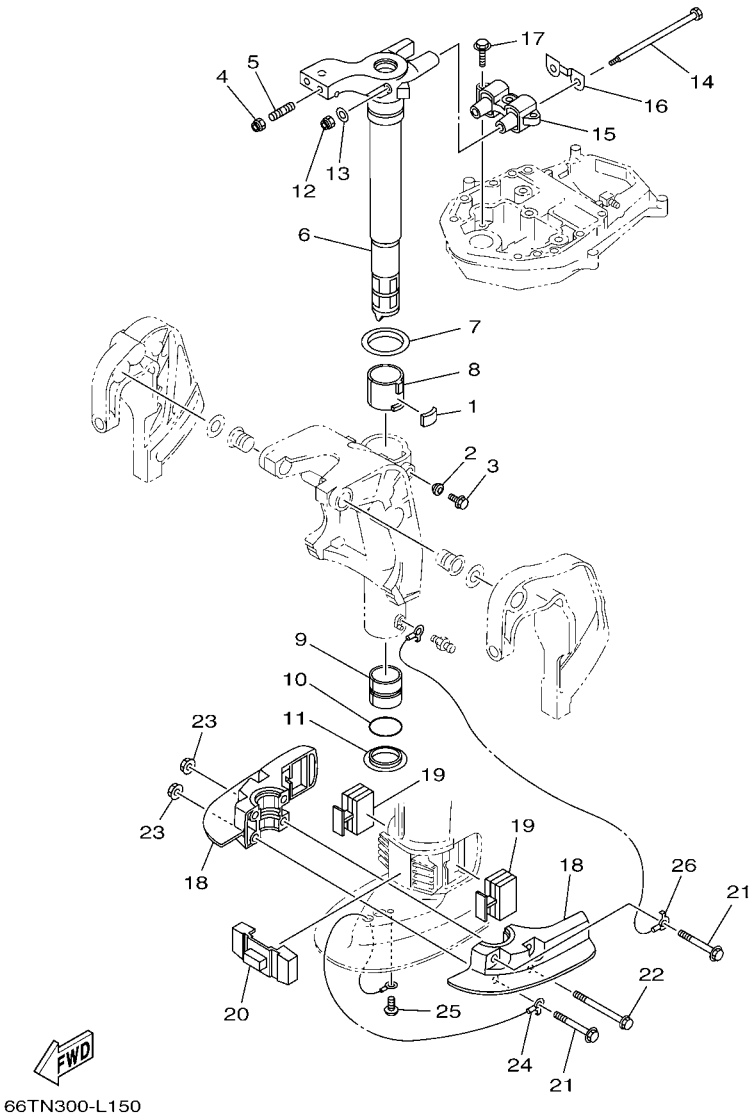

FIG. 16 BRACKET 2 SUPPORT 2

REF. NO.	PART NO. N° PIECES	DESCRIPTION DESCRIPTION	66TT					REMARKS REMARQUES
1	648–42528–00	PLATE, FRICTION PLAQUE, FRICTION	1					
2	65W–43373–00	SEAL, DAMPER JOINT	1					
3	90105–08M76	BOLT, FLANGE BOULON	1					
4	90185–10051	NUT, SELF-LOCKING ECROU,AUTO-BLOQUANT	2					
5	90116–10M28	BOLT, STUD GOUJON	2					
6	65W–42511–11–4D	BRACKET, STEERING CADRE, DIRECTION	1					L(21.7") L(21.7")
7	90209–52M00	WASHER RONDELLE	1					
8	90386–52M02	BUSH DOUILLE	1					
9	90386–44M03	BUSH DOUILLE	1					
10	93210–43MJ0	O-RING JOINT TORIQUE	1					
11	90386–44M99	BUSH DOUILLE	1					
12	90185–08045	NUT, SELF-LOCKING ECROU,AUTO-BLOQUANT	2					
13	92995–08200	WASHER RONDELLE	2					
14	90101–08M86	BOLT BOULON	2					
15	66T–44514–00–4D	MOUNT DAMPER, UPPER SIDE SILENT-BLOC, SUPERIEUR LATERAL	1					
16	66T–44526–00	PLATE PLAQUE	1					
17	97575–08530	BOLT, WITH WASHER VIS HEXAGONAL AVC RONDELLE	3					
18	65W–44551–00–4D	HOUSING, LOWER MOUNT RUBBER 1 BOITIER, SILENT-BLOC INFERIEUR	2					
19	65W–44555–10	MOUNT DAMPER, LOWER SIDE SILENT-BLOC, INFERIEUR LATERAL	2					
20	66T–44575–00	DAMPER, LOWER MOUNT RUBBER SILENT-BLOC, INFERIEUR	1					
21	97575–10570	BOLT, WITH WASHER VIS HEXAGONAL AVC RONDELLE	2					
22	90119–10M04	BOLT, WITH WASHER BOULON, AVEC RONDELLE	2					
23	90179–10M33	NUT ECROU	4					
24	66T–82127–10	WIRE, LEAD 2 FIL 2	1					
25	97885–06008	SCREW, PAN HEAD VIS, A ENCOCHE	1					
26	66T–82127–00	WIRE, LEAD 2 FIL 2	1					L(21.7") L(21.7")

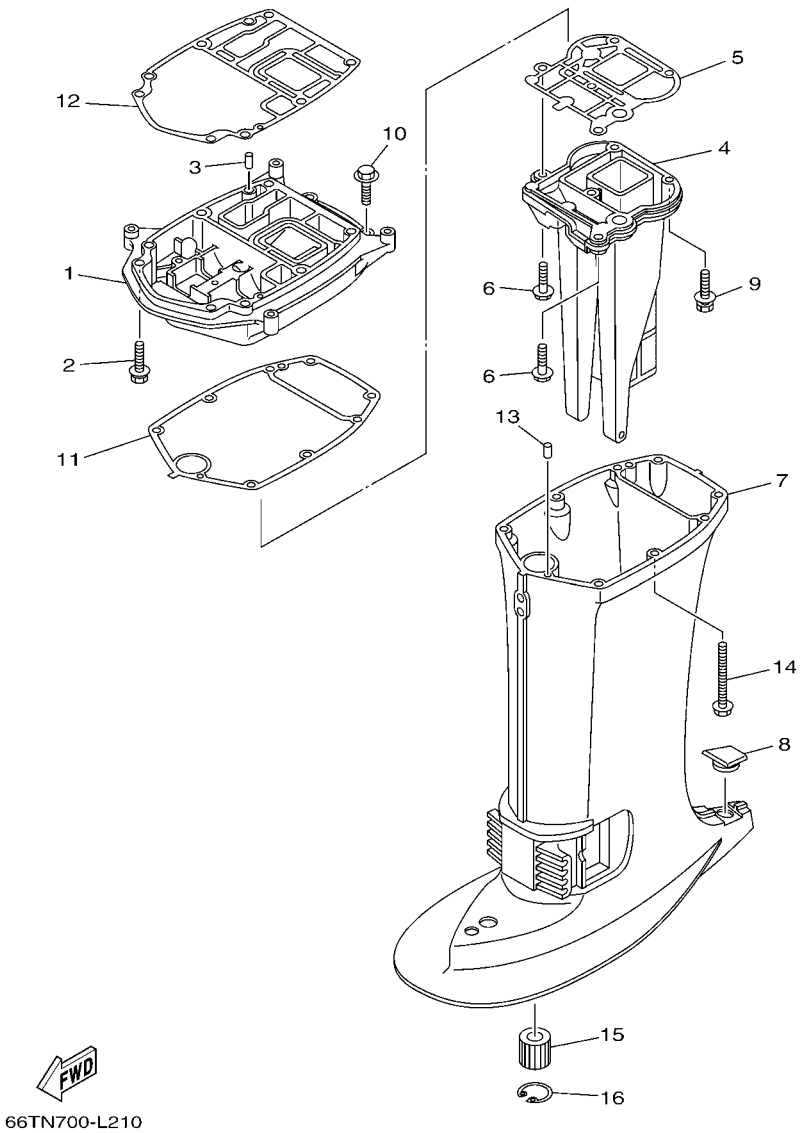

FIG. 17 UPPER CASING FOURREAU

REF. NO.	PART NO. N° PIECES	DESCRIPTION DESCRIPTION	66TT					REMARKS REMARQUES
1	66T–41137–00–CA	GUIDE, EXHAUST COLLECTEUR D'ECHAPPEMENT	1					
2	90119–08M79	BOLT, WITH WASHER BOULON, AVEC RONDELLE	2					
3	93606–12019	PIN, DOWEL GOUPILLE	2					
4	66T–41131–10–CA	MANIFOLD, EXT. 1 PIPE D'ECHAPPEMENT	1					L(21.7") L(21.7")
5	66T–41133–A0	GASKET, EXHAUST MANIFOLD 1 JOINT, PIPE D'ECHAPPEMENT	1					
6	97575–08530	BOLT, WITH WASHER VIS HEXAGONAL AVC RONDELLE	2					
7	66T–45111–10–4D	CASING, UPPER FOURREAU	1					L(21.7") L(21.7")
8	63D–45155–00	CAP CAPUCHON	1					
9	97575–08545	BOLT, WITH WASHER VIS HEXAGONAL AVC RONDELLE	3					
10	97575–08530	BOLT, WITH WASHER VIS HEXAGONAL AVC RONDELLE	2					
11	66T–45114–A0	GASKET, UPPER CASING JOINT, TUBE D'ARBRE	1					
12	66T–45113–A0	GASKET, UPPER CASING JOINT, TUBE D'ARBRE	1					
13	93606–12019	PIN, DOWEL GOUPILLE	2					
14	90119–08M42	BOLT, WITH WASHER BOULON, AVEC RONDELLE	6					
15	679–45318–00	BUSHING, DRIVE SHAFT DOUILLE, ARBRE MOTEUR	1					L(21.7") L(21.7")
16	93420–30042	CIRCLIP CIRCLIP, TYPE S	1					L(21.7") L(21.7")

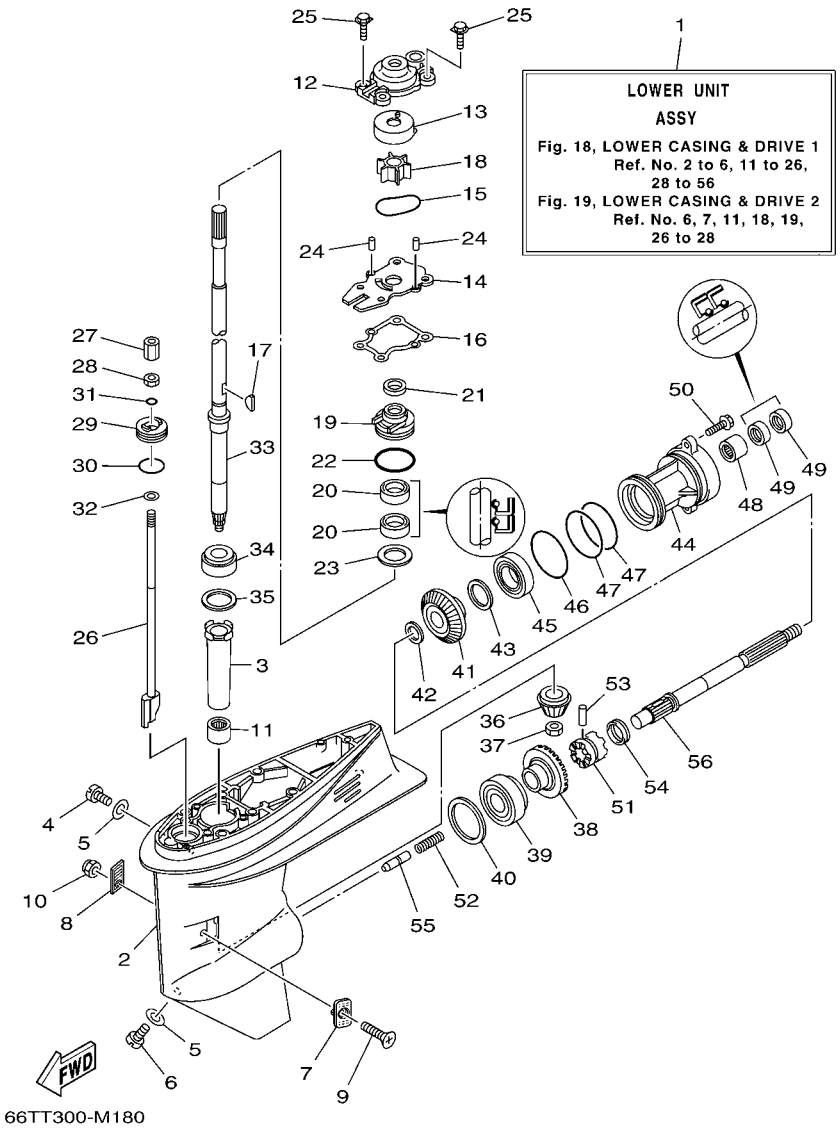

FIG. 18 LOWER CASING & DRIVE 1 BOITIER D'HELICE TRANSMISSION1

REF. NO.	PART NO. N° PIECES	DESCRIPTION DESCRIPTION	66TT					REMARKS REMARQUES
1	66T–45300–12–4D	LOWER UNIT ASSY UNITE INFERIEURE (ENS.)	1					L(21.7") L(21.7")
2	66T–45311–01–4D	CASING, LOWER BOITIER D'HELICE	1					
3	6H4–45536–00	SLEEVE, DRIVE SHAFT MANCHON, ARBRE MOTEUR	1					
4	90340–08002	PLUG, STRAIGHT SCREW PLOT, FILETE DROIT	1					
5	90430–08020	GASKET JOINT	2					
6	688–45341–10	PLUG, DRAIN BOUCHON DE VIDANGE	1					
7	63D–45214–00	COVER, WATER INLET 1 GRILLE, ENTREE D'EAU 1	1					
8	63D–45215–00	COVER, WATER INLET 2 GRILLE, ENTREE D'EAU 2	1					
9	90152–05010	SCREW, COUNTERSUNK VIS, TETE NOYEE	1					
10	95380–05600	NUT ECROU	1					
11	93315–32224	BEARING ROULEMENT	1					
12	66T–44311–00	HOUSING, WATER PUMP CORPS, POMPE A EAU	1					
13	63D–44322–00	INSERT, CARTRIDGE CUVETTE	1					
14	66T–44323–00	OUTER PLATE, CARTRIDGE PLAQUE EXTERIEURE	1					
15	93210–59MG7	O-RING JOINT TORIQUE	1					
16	63D–44316–00	GASKET, WATER PUMP JOINT, POMPE A EAU	1					
17	90280–03M03	KEY, WOODRUFF CLAVETTE, DEMI-LUNE	1					
18	6H4–44352–02	IMPELLER TURBINE	1					
19	6BG–44341–00	HOUSING, WATER PUMP CORPS, POMPE A EAU	1					
20	93101–22M60	OIL SEAL JOINT SPY	2					
21	66T–45344–01	COVER, OIL SEAL FLASQE, JOINT D'HUILE	1					
22	93210–48001	O-RING JOINT TORIQUE	1					
23	90201–27M00	WASHER, PLATE RONDELLE, PLATE	1					
24	93604–08062	PIN, DOWEL CLAVETTE	2					
25	90119–08M15	BOLT, WITH WASHER BOULON, AVEC RONDELLE	4					
26	66T–44150–11	SHIFT CAM ASSY CAME D'INVERSION	1					L(21.7") L(21.7")
27	61N–44146–00	CONNECTOR, SHIFT ROD CONNECTEUR, TIGE D'INVERSION	1					

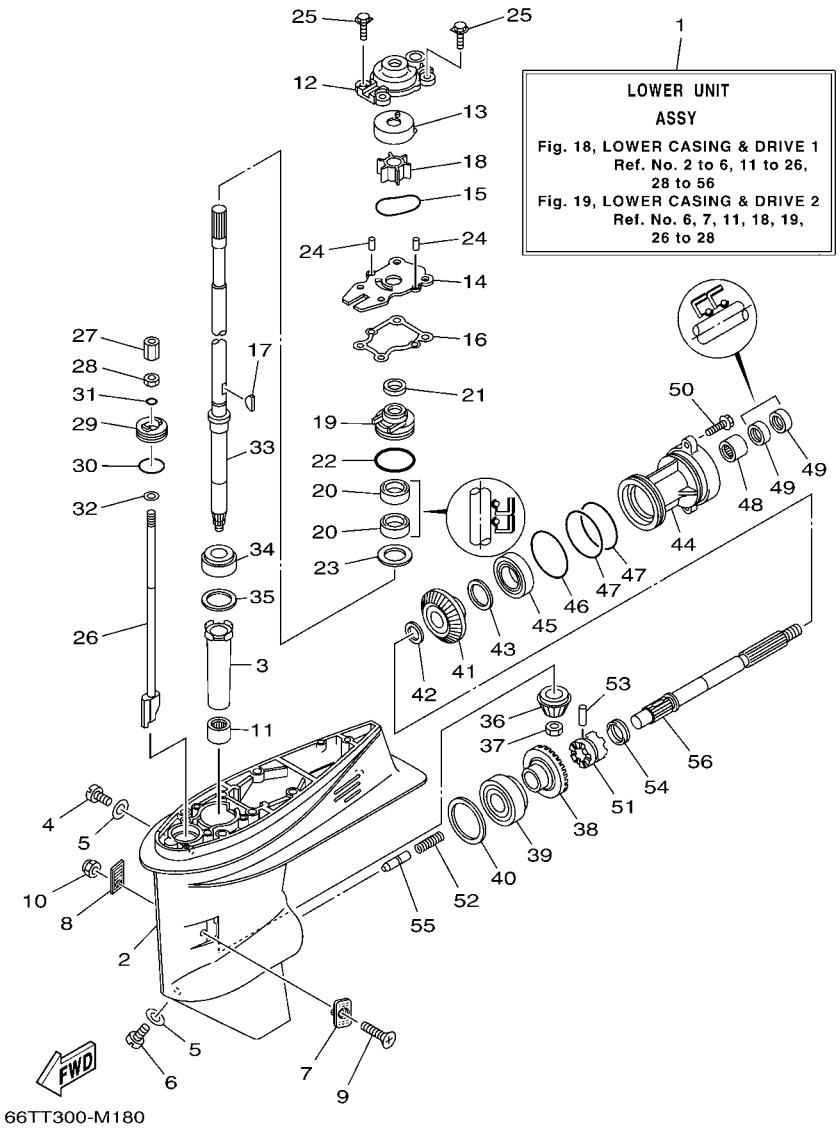

FIG. 18 LOWER CASING & DRIVE 1 BOITIER D'HELICE TRANSMISSION1

REF. NO.	PART NO. N° PIECES	DESCRIPTION DESCRIPTION	66TT					REMARKS REMARQUES
28	95380–06700	NUT ECROU	1					
29	66T–45321–00	PLATE PLAQUETTE	1					
30	93210–33MG4	O-RING JOINT TORIQUE	1					
31	93210–06ME6	O-RING JOINT TORIQUE	1					
32	92990–06600	WASHER, PLATE RONDELLE, PLATE	1					
33	66T–45501–11	DRIVE SHAFT COMP. ARBRE MOTEUR COMP.	1					L(21.7") L(21.7")
34	93332–00001	BEARING ROULEMENT	1					
35	663–45587–01	SHIM (T:0.10MM) CALE (T:0.10MM)	1					UR UR
	663–45587–10	SHIM (T:0.12MM) CALE (T:0.12MM)	1					UR UR
	663–45587–20	SHIM (T:0.15MM) CALE (T:0.15MM)	1					UR UR
	663–45587–30	SHIM (T:0.18MM) CALE (T:0.18MM)	1					UR UR
	663–45587–40	SHIM (T:0.30MM) CALE (T:0.30MM)	1					UR UR
	663–45587–50	SHIM (T:0.40MM) CALE (T:0.40MM)	1					UR UR
	663–45587–60	SHIM (T:0.50MM) CALE (T:0.50MM)	1					UR UR
36	66T–45551–00	PINION (13T) PIGNON D'ATTAQUE (13D)	1					
37	90170–12138	NUT ECROU	1					
38	66T–45560–01	GEAR 1 (26T) PIGNON 1 (26T)	1					
39	93332–00003	BEARING ROULEMENT	1					
40	663–45567–01	SHIM (T:0.10MM) CALE (T:0.10MM)	1					UR UR
	663–45567–10	SHIM (T:0.12MM) CALE (T:0.12MM)	1					UR UR
	663–45567–20	SHIM (T:0.15MM) CALE (T:0.15MM)	1					UR UR
	663–45567–30	SHIM (T:0.18MM) CALE (T:0.18MM)	1					UR UR
	663–45567–40	SHIM (T:0.30MM) CALE (T:0.30MM)	1					UR UR
	663–45567–50	SHIM (T:0.40MM) CALE (T:0.40MM)	1					UR UR
	663–45567–60	SHIM (T:0.50MM) CALE (T:0.50MM)	1					UR UR
41	66T–45571–00	GEAR 2 (26T) PIGNON 2 (26T)	1					
42	90201–22429	WASHER, PLATE RONDELLE, PLATE	1					

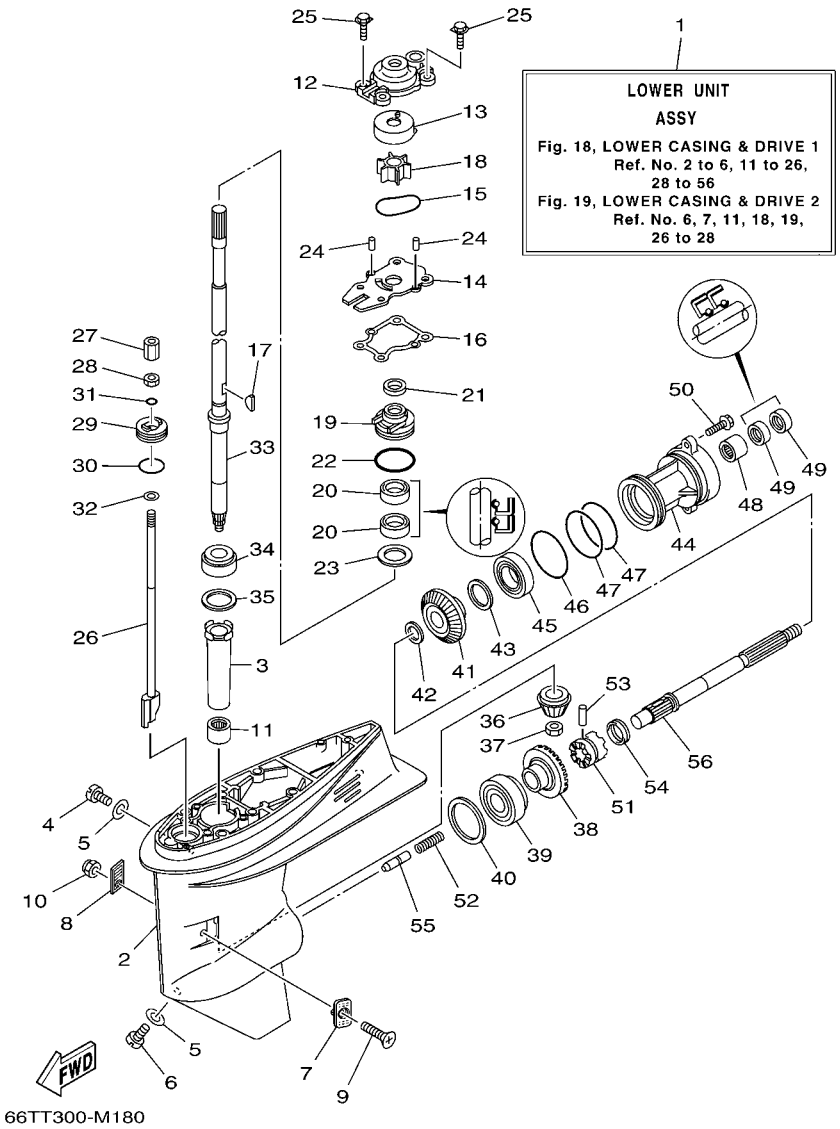

FIG. 18 LOWER CASING & DRIVE 1 BOITIER D'HELICE TRANSMISSION1

REF. NO.	PART NO. N° PIECES	DESCRIPTION DESCRIPTION	66TT					REMARKS REMARQUES
43	63D–45577–00	SHIM (T:0.10MM) CALE (T:0.10MM)	1					UR UR
	63D–45577–10	SHIM (T:0.12MM) CALE (T:0.12MM)	1					UR UR
	63D–45577–20	SHIM (T:0.15MM) CALE (T:0.15MM)	1					UR UR
	63D–45577–30	SHIM (T:0.18MM) CALE (T:0.18MM)	1					UR UR
	63D–45577–40	SHIM (T:0.30MM) CALE (T:0.30MM)	1					UR UR
	63D–45577–50	SHIM (T:0.40MM) CALE (T:0.40MM)	1					UR UR
	63D–45577–60	SHIM (T:0.50MM) CALE (T:0.50MM)	1					UR UR
44	63D–45361–02–4D	CAP, LOWER CASING COUVERCLE, BOITIER D'HELICE	1					
45	93306–001U1	BEARING ROULEMENT	1					
46	93210–69MG6	O-RING JOINT TORIQUE	1					
47	93210–74MG5	O-RING JOINT TORIQUE	2					
48	93317–22204	BEARING ROULEMENT	1					
49	93101–22M00	OIL SEAL JOINT SPY	2					
50	90105–08M61	BOLT, FLANGE BOULON	2					
51	66T–45631–00	CLUTCH, DOG CRABOT	1					
52	90501–15M01	SPRING, COMPRESSION RESSORT, COMPRESSION	1					
53	90250–06023	PIN, STRAIGHT GOUPILLE, DROITE	1					
54	663–45633–00	RING, CROSS PIN JONC, GOUPILLE CRABOT	1					
55	66T–45635–00	PLUNGER, SHIFT POUSSOIR D'EMBRAYAGE	1					
56	66T–45611–00	SHAFT, PROPELLER ARBRE, HELICE	1					

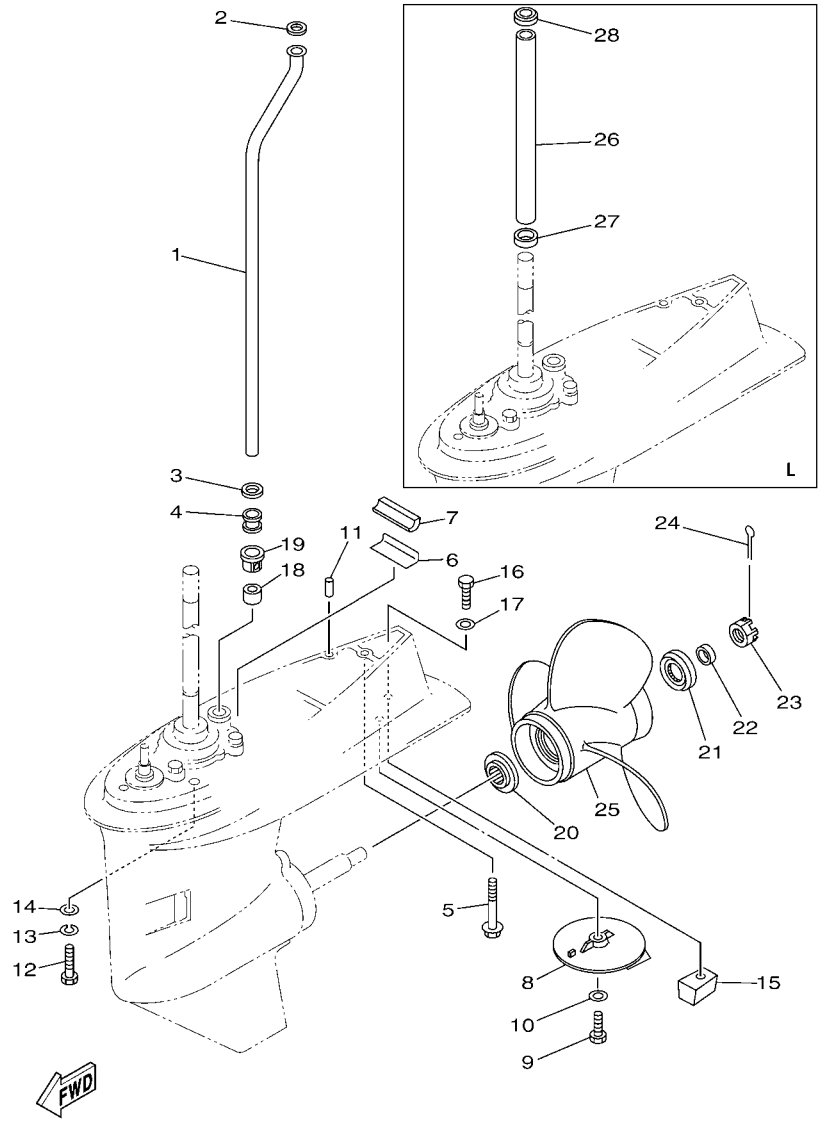

66TT700-M240

FIG. 19 LOWER CASING & DRIVE 2 BOITIER D'HELICE TRANSMISSION2

REF. NO.	PART NO. N° PIECES	DESCRIPTION DESCRIPTION	66TT					REMARKS REMARQUES
1	66T–44361–10	TUBE, WATER 1 TUBE D'EAU 1	1					L(21.7") L(21.7")
2	90202–12060	WASHER, PLATE RONDELLE, PLATE	1					
3	90430–12072	GASKET JOINT	1					
4	663–44367–00	DAMPER, WATER SEAL 3 JOINT TUBE D'EAU 3	1					
5	97575–08565	BOLT, WITH WASHER VIS HEXAGONAL AVC RONDELLE	1					L(21.7") L(21.7")
6	663–45376–00	GUIDE, SEAL DAMPER BUTEE, JOINT CAOUTCHOUC	1					
7	63D–45375–00	DAMPER, SEAL BOURRELET, CAOUTCHOUC	1					
8	664–45371–01	TAB-TRIM ANODE DERIVE	1					
9	97095–08025	BOLT BOULON	1					
10	92995–08600	WASHER RONDELLE	1					
11	93606–12019	PIN, DOWEL GOUPILLE	2					
12	97075–10040	BOLT BOULON	4					L(21.7") L(21.7")
13	92995–10100	WASHER RONDELLE	4					L(21.7") L(21.7")
14	92995–10600	WASHER RONDELLE	4					L(21.7") L(21.7")
15	67C–45251–00	ANODE ANODE	1					
16	97095–08035	BOLT BOULON	1					
17	92995–08600	WASHER RONDELLE	1					
18	663–44366–00	DAMPER, WATER SEAL 2 JOINT, TUBE D'EAU 2	1					
19	63D–44312–00	COVER, WATER PUMP HOUSING COUVERCLE	1					
20	663–45987–02	SPACER 1 ENTRETOISE 1	1					
21	66T–45997–00	SPACER 2 ENTRETOISE 2	1					
22	90389–22M01	BUSH DOUILLE	1					
23	90171–16011	NUT, CASTLE ECROU, CRENELE	1					
24	91490–30025	PIN. COTTER GOUPILLE	1					
25	69W–45943–00	PROPELLER (3X11"X15"-G) HELICE (3X11"X15"-G)	1					UR UR
	69W–45945–00	PROPELLER (3X11-1/8"X13"-G) HELICE (3X11-1/8"X13"-G)	1					UR UR
	69W–45947–00	PROPELLER (3X11-5/8"X11"-G) HELICE (3X11-5/8"X11"-G)	1					UR UR

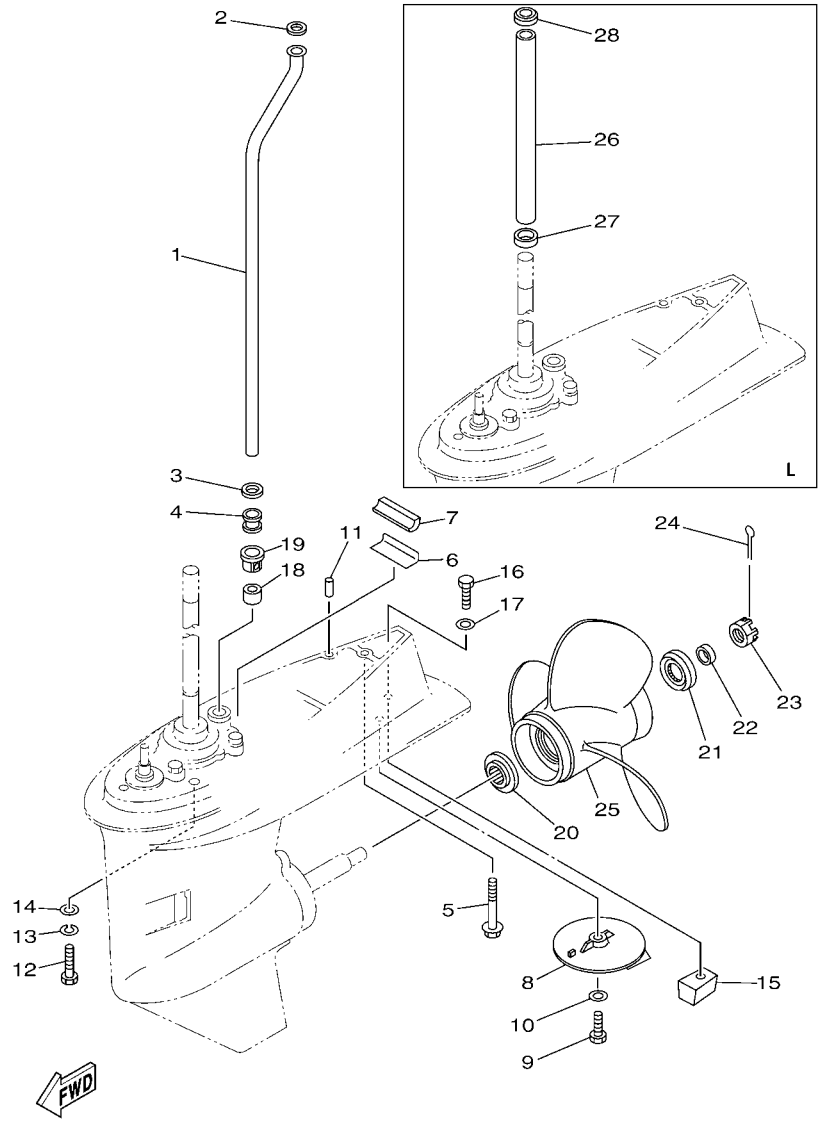

FIG. 19 LOWER CASING & DRIVE 2 BOITIER D'HELICE TRANSMISSION2

REF. NO.	PART NO. N° PIECES	DESCRIPTION DESCRIPTION	66TT					REMARKS REMARQUES
25	69W–45952–00	PROPELLER (3X11-3/8"X12"-G) HELICE (3X11-3/8"X12"-G)	1					UR UR
	69W–45958–00	PROPELLER (3X11-1/4"X14"-G) HELICE (3X11-1/4"X14"-G)	1					UR UR
	63D–45941–00	PROPELLER (3X12-1/4"X8"-G) HELICE (3X12-1/4"X8"-G)	1					UR UR
	663–45941–01	PROPELLER (3X10-3/4"X17"-G) HELICE (3X10-3/4"X17"-G)	1					UR UR
	663–45949–01	PROPELLER (3X10-3/4"X16"-G) HELICE (3X10-3/4"X16"-G)	1					UR UR
	663–45952–02	PROPELLER (3X11-3/8"X12"-G) HELICE (3X11-3/8"X12"-G)	1					UR UR
	663–45954–01	PROPELLER (3X11-3/4"X10"-G) HELICE (3X11-3/4"X10"-G)	1					UR UR
	663–45956–01	PROPELLER (3X12-1/4"X9"-G) HELICE (3X12-1/4"X9"-G)	1					UR UR
	663–45958–01	PROPELLER (3X11-1/4"X14"-G) HELICE (3X11-1/4"X14"-G)	1					UR UR
	663–45930–00	PROPELLER (3X10-1/4"X14"-G) HELICE (3X10-1/4"X14"-G)	1					UR UR
	663–45976–00	PROPELLER (3X10-1/4"X15"-G) HELICE (3X10-1/4"X15"-G)	1					UR UR
	663–45978–00	PROPELLER (3X10-1/4"X16"-G) HELICE (3X10-1/4"X16"-G)	1					UR UR
	663–45970–60	PROPELLER (3X11-3/4"X12"-G) HELICE (3X11-3/4"X12"-G)	1					UR UR
	663–45972–60	PROPELLER (3X12"X11"-G) HELICE (3X12"X11"-G)	1					UR UR
	663–45974–60	PROPELLER (3X11-1/2"X13"-G) HELICE (3X11-1/2"X13"-G)	1					UR UR
26	66T–44362–10	TUBE, WATER 2 TUBE D'EAU 2	1					L(21.7") L(21.7")
27	90480–25M70	GROMMET PASSE-FIL	1					L(21.7") L(21.7")
28	90480–30M71	GROMMET PASSE-FIL	1					L(21.7") L(21.7")

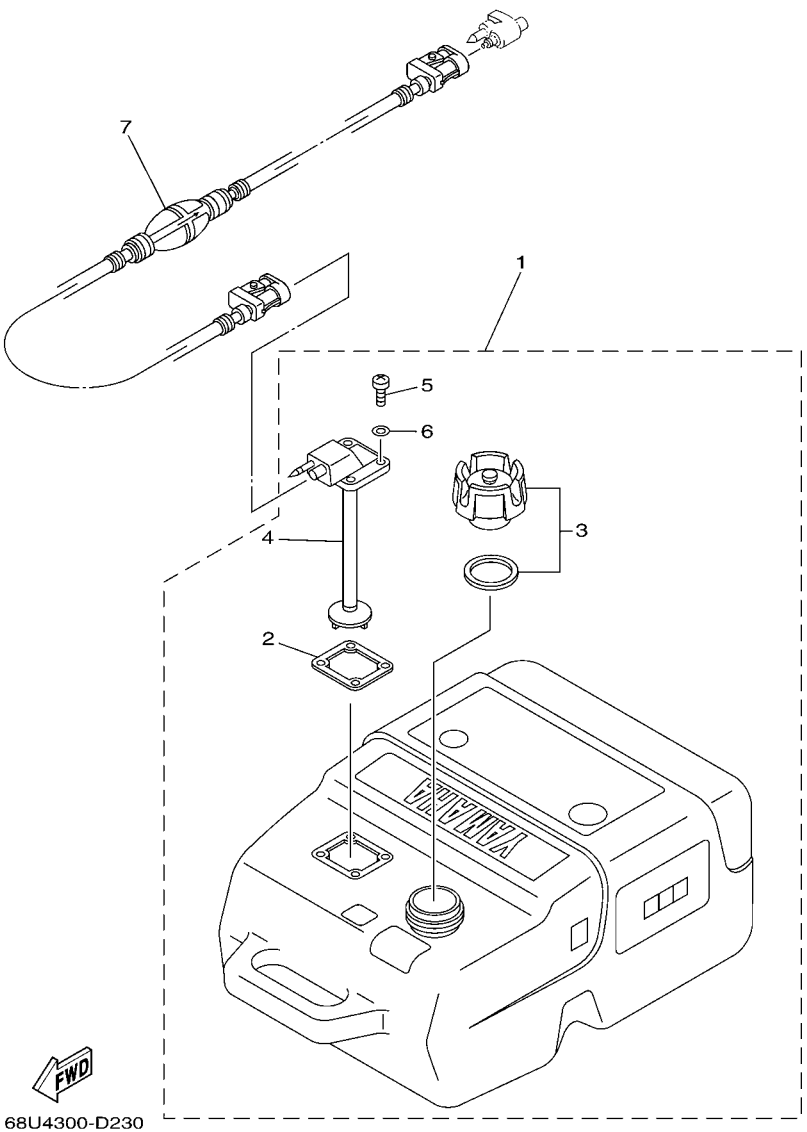

FIG. 20 FUEL TANK — RESERVOIR A CARBURANT

REF. NO.	PART NO. N° PIECES	DESCRIPTION DESCRIPTION	66TT					REMARKS REMARQUES
1	6YK–24201–03	FUEL TANK ASSY (25L) RESERVOIR A ESSENCE (ENS.) 25L	1					AP AP
2	6YL–24268–01	.GASKET, FUEL METER .JOINT, JAUGE A CARBURANT	1					
3	6YK–24610–01	.CAP ASSY .BOUCHON	1					
4	6YK–24260–01	.FUEL METER ASSY .INDICATEUR DE CARBURANT	1					
5	90157–05M16	.SCREW, PAN HEAD .VIS, TETE TRONCONIQUE	4					
6	6YL–24329–00	.SEAL .JOINT	4					
7	6YL–24306–54	FUEL PIPE COMP. 1 DURITE A ESSENCE 1	1					AP AP

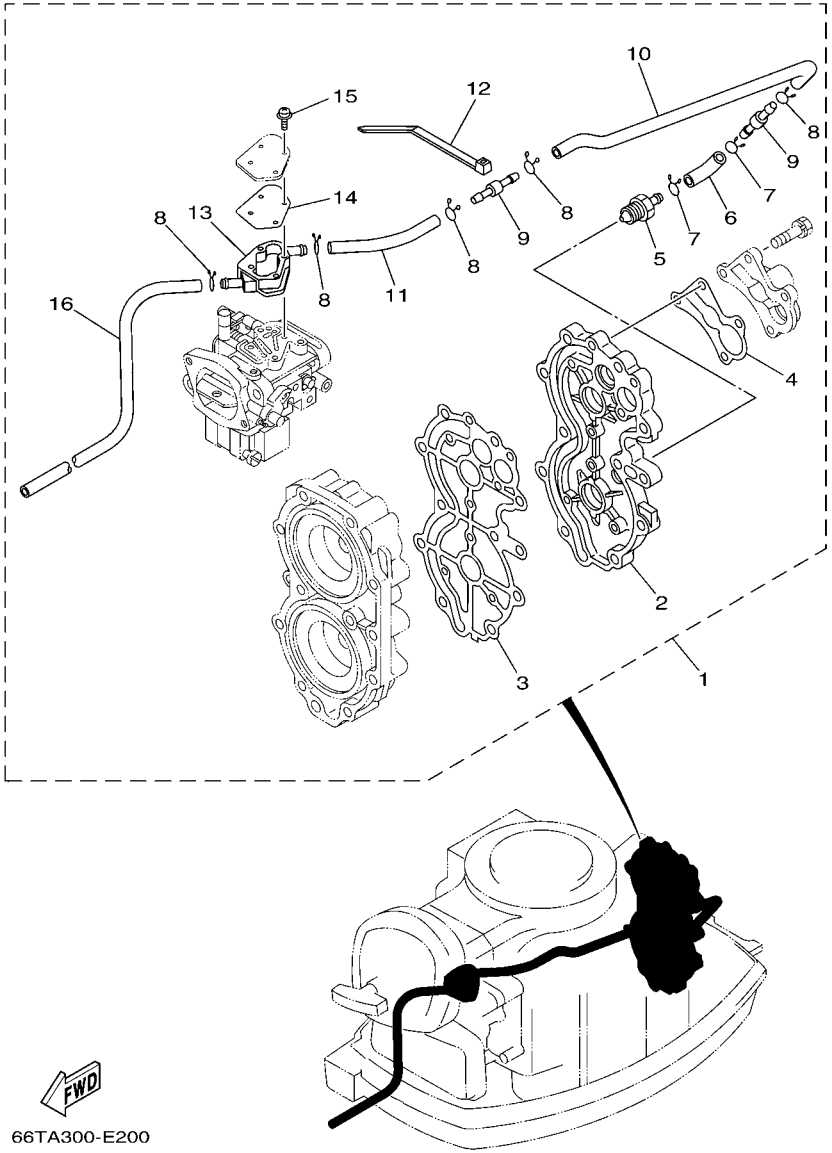

FIG. 21 OPTIONAL PARTS PIECES OPTIONNELLES

REF. NO.	PART NO. N° PIECES	DESCRIPTION DESCRIPTION	66TT					REMARKS REMARQUES
1	66T–12440–51	HEAT EXCHANGER ASSY ECHANGEUR DE CHALEUR	1					AP AP
2	66T–11191–50	.COVER, CYLINDER HEAD 1 .COUVERCLE, CULASSE 1	1					
3	66T–11193–A3	.GASKET, HEAD COVER 1 .JOINT, COUVERCLE DE CULASSE 1	1					
4	676–12414–A1	.GASKET, COVER .JOINT, COUVERCLE	1					
5	66T–12469–00	.JOINT 1 .RACCORD 1	1					
6	6E5–24315–00	.PIPE 5 .DURITE 5	1					
7	90467–11M08	.CLIP .JONC	2					
8	90467–10M04	.CLIP .JONC	5					
9	6E5–24379–00	.PIPE, JOINT 4 .DURITE RACCORDEMENT 4	2					
10	66T–12481–50	.PIPE 1 .DURITE 1	1					
11	66T–12482–50	.PIPE 2 .DURITE 2	1					
12	90465–13M36	.CLAMP .BRIDE	1					
13	66T–12466–00	.EXCHANGER, HEAT .ECHANGEUR DE CHALEUR	1					
14	66T–14536–00	.GASKET .JOINT	1					
15	97980–04125	.SCREW, WITH WASHER .VIS, AVEC RONDELLE	4					
16	90445–11M78	.HOSE (L1000) .DURITE (L1000)	1					

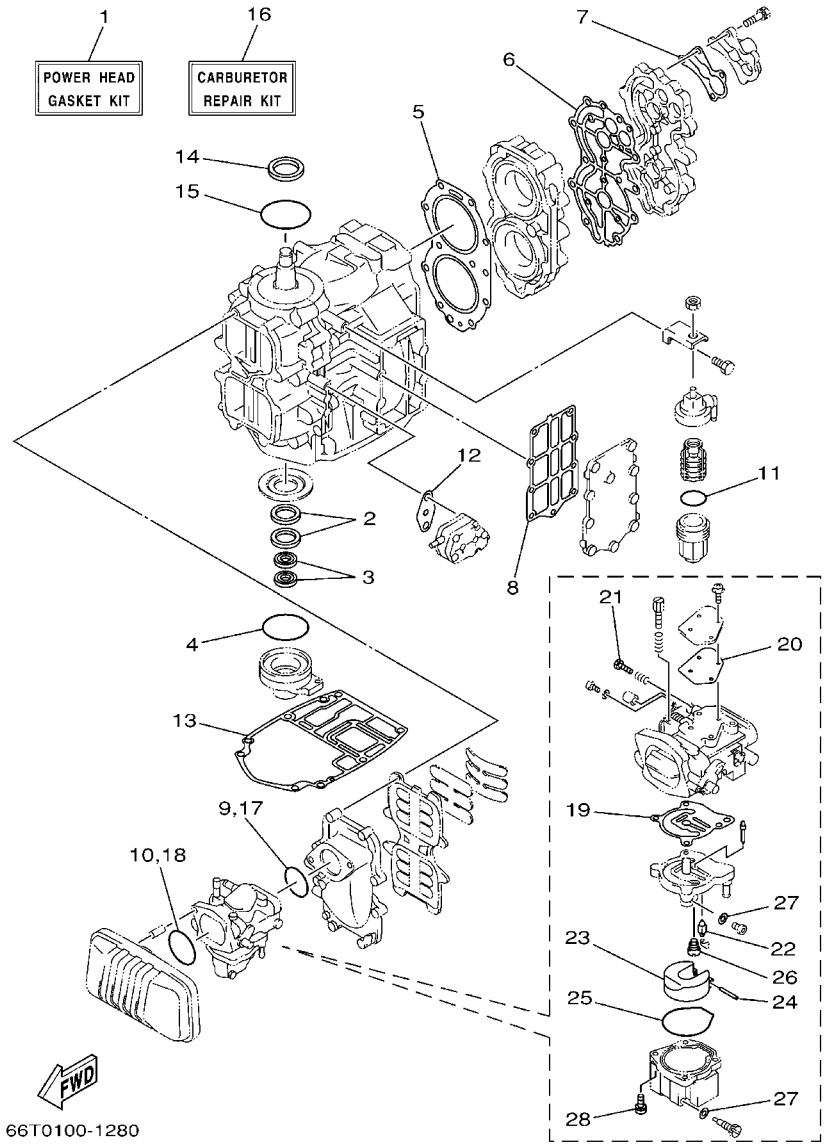

FIG. 22 REPAIR KIT 1 — KITS DE REPARATION 1

REF. NO.	PART NO. N° PIECES	DESCRIPTION DESCRIPTION	66TT					REMARKS REMARQUES
1	66T–W0001–01	POWER HEAD GASKET KIT POCHETTE DE JINTS TETE MOTRICE	1					
2	93102–30M56	.OIL SEAL .JOINT SPY	2					
3	93101–16001	.OIL SEAL .JOINT SPY	2					
4	93210–65M50	.O-RING .JOINT TORIQUE	1					
5	66T–11181–A3	.GASKET, CYLINDER HEAD 1 .JOINT, DE CULASSE 1	1					
6	66T–11193–A3	.GASKET, HEAD COVER 1 .JOINT, COUVERCLE DE CULASSE 1	1					
7	676–12414–A1	.GASKET, COVER .JOINT, COUVERCLE	1					
8	66T–41114–A0	.GASKET, EXHAUST OUTER COVER .JOINT, COUVERCLE D'ECHAPPEMENT	1					
9	93210–46M16	.O-RING .JOINT TORIQUE	1					
10	93210–54M54	.O-RING .JOINT TORIQUE	1					
11	93210–32738	.O-RING .JOINT TORIQUE	1					
12	650–24431–A0	.GASKET, FUEL PUMP 1 .JOINT 1 DE POMPE A ESSENCE	1					
13	66T–45113–A0	.GASKET, UPPER CASING .JOINT, TUBE D'ARBRE	1					
14	93102–35008	.OIL SEAL .JOINT SPY	1					
15	93210–75M51	.O-RING .JOINT TORIQUE	1					
16	66T–W0093–01	CARBURETOR REPAIR KIT KIT DE REPARATION CARBURATEUR	1					
17	93210–46M16	.O-RING .JOINT TORIQUE	1					
18	93210–54M54	.O-RING .JOINT TORIQUE	1					
19	66T–14384–01	.GASKET, FLOAT CHAMBER .JOINT, CUVE DE FLOTTEUR	1					
20	66T–14536–01	.GASKET .JOINT	1					
21	6E5–14323–03	.SCREW, AIR ADJUSTING .VIS DE DOSEUR D'AIR	1					
22	6E5–14546–00	.VALVE, NEEDLE .POINTEAU	1					
23	6E5–14385–02	.FLOAT .FLOTTEUR	1					
24	6E5–14386–02	.PIN, FLOAT .AXE, FLOTTEUR	1					
25	66T–14984–00	.GASKET, FLOAT CHAMBER .JOINT, CUVE DE FLOTTEUR	1					
26	66T–14992–00	.PLUG .BOUCHON	1					
27	66T–14959–00	.GASKET .JOINT	2					

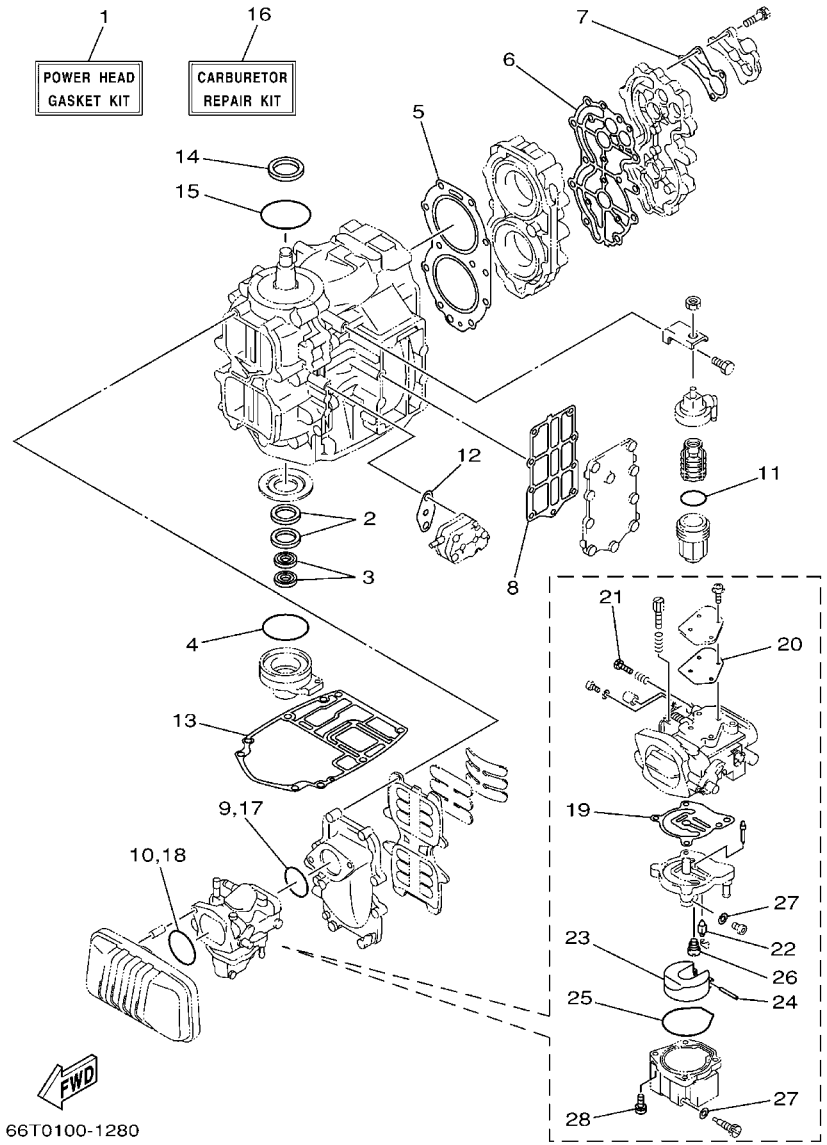

FIG. 22 REPAIR KIT 1 — KITS DE REPARATION 1

REF. NO.	PART NO. N° PIECES	DESCRIPTION DESCRIPTION	66TT					REMARKS REMARQUES
28	97980–05125	.SCREW, WITH WASHER .VIS, AVEC RONDELLE	4					

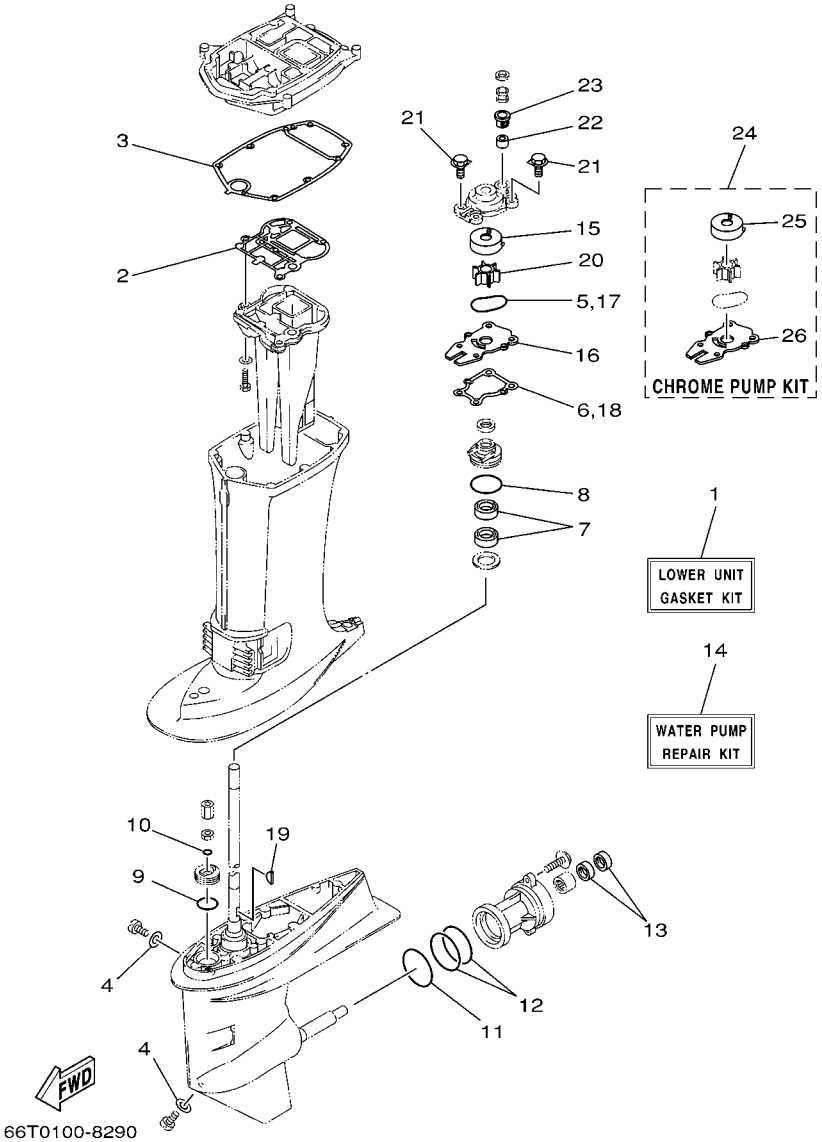

FIG. 23 REPAIR KIT 2 — KITS DE REPARATION 2

REF. NO.	PART NO. N° PIECES	DESCRIPTION DESCRIPTION	66TT					REMARKS REMARQUES
1	66T–W0001–21	LOWER UNIT GASKET KIT POCHETTE DE JOINTS EMBASE	1					
2	66T–41133–A0	.GASKET, EXHAUST MANIFOLD 1 .JOINT, PIPE D'ECHAPPEMENT	1					
3	66T–45114–A0	.GASKET, UPPER CASING .JOINT, TUBE D'ARBRE	1					
4	90430–08020	.GASKET .JOINT	2					
5	93210–59MG7	.O-RING .JOINT TORIQUE	1					
6	63D–44316–00	.GASKET, WATER PUMP .JOINT, POMPE A EAU	1					
7	93101–22M60	.OIL SEAL .JOINT SPY	2					
8	93210–48001	.O-RING .JOINT TORIQUE	1					
9	93210–33MG4	.O-RING .JOINT TORIQUE	1					
10	93210–06ME6	.O-RING .JOINT TORIQUE	1					
11	93210–69MG6	.O-RING .JOINT TORIQUE	1					
12	93210–74MG5	.O-RING .JOINT TORIQUE	2					
13	93101–22M00	.OIL SEAL .JOINT SPY	2					
14	66T–W0078–00	WATER PUMP REPAIR KIT KIT DE REPARATION DE LA POMPE	1					
15	63D–44322–00	.INSERT, CARTRIDGE .CUVETTE	1					
16	66T–44323–00	.OUTER PLATE, CARTRIDGE .PLAQUE EXTERIEURE	1					
17	93210–59MG7	.O-RING .JOINT TORIQUE	1					
18	63D–44316–00	.GASKET, WATER PUMP .JOINT, POMPE A EAU	1					
19	90280–03M03	.KEY, WOODRUFF .CLAVETTE, DEMI-LUNE	1					
20	6H4–44352–02	.IMPELLER .TURBINE	1					
21	90119–08M15	.BOLT, WITH WASHER .BOULON, AVEC RONDELLE	4					
22	663–44366–00	.DAMPER, WATER SEAL 2 .JOINT, TUBE D'EAU 2	1					
23	63D–44312–00	.COVER, WATER PUMP HOUSING .COUVERCLE	1					
24	66T–W0078–0A	CHROME PUMP KIT KIT DE POMPE A EAU CHROMEE	1					
25	63D–44322–40	.INSERT, CARTRIDGE .CUVETTE	1					
26	66T–44323–40	.OUTER PLATE, CARTRIDGE .PLAQUE EXTERIEURE	1					

FIG. 24 REPAIR KIT 3 KITS DE PEPARATION 3

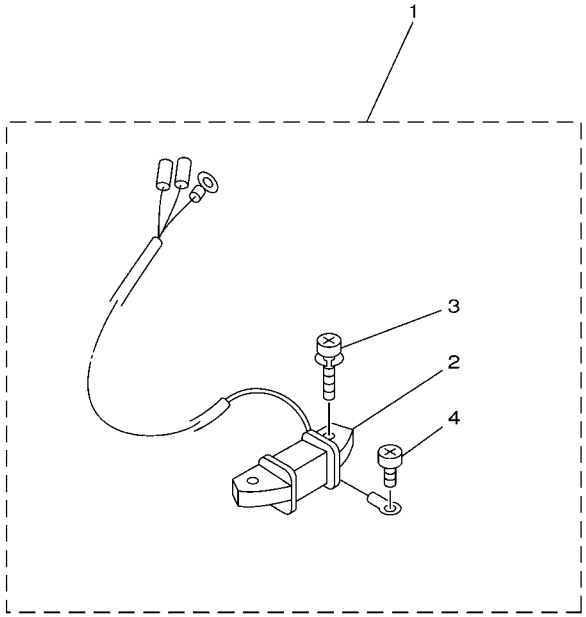

66T0010-9270

REF. NO.	PART NO. N° PIECES	DESCRIPTION DESCRIPTION	66TT					REMARKS REMARQUES
1	66T–81303–00	LIGHTING COIL ASSY BOBINE D'ECLAIRAGE	1					AP AP
2	66T–85533–00	.COIL, LIGHTING .BOBINE, ECLAIRAGE	1					
3	97902–06125	.SCREW, WITH WASHER .VIS, AVEC RONDELLE	2					
4	97802–04006	.SCREW, PAN HEAD .VIS	1					

NUMERICAL INDEX
INDEX NUMERIQUE

PART NO. N° PIECES	REF. NO.
66T–11111–01–1S	3 – 22
66T–11119–00	3 – 20
66T–11181–A3	3 – 23
	22 – 5
66T–11191–00–1S	3 – 25
66T–11191–50	21 – 2
66T–11193–A3	3 – 26
	21 – 3
	22 – 6
676–11325–00	1 – 2
	3 – 18
676–11372–00	3 – 34
650–11372–01	5 – 5
66T–11400–01	4 – 1
66T–11412–00	4 – 2
66T–11422–00	4 – 3
66T–11432–00	4 – 4
66T–11442–00	4 – 5
6F5–11515–00	4 – 9
66T–11565–00	3 – 14
66T–11603–00	4 – 16
66T–11604–00	4 – 16
66T–11605–00	4 – 16
66T–11631–01–93	4 – 15
6F5–11633–00	4 – 17
663–11634–00	4 – 18
66T–11635–01	4 – 15
66T–11636–01	4 – 15
6F5–11651–00	4 – 10
66T–11681–00	4 – 11
6E5–12411–02	1 – 3
	3 – 28
6E5–12412–00	3 – 29
676–12413–00–1S	3 – 30
676–12414–A1	1 – 4
	3 – 31
	21 – 4
	22 – 7
66T–12440–51	21 – 1
66T–12466–00	21 – 13
66T–12469–00	21 – 5
66T–12481–50	21 – 10
66T–12482–50	21 – 11
6E5–13552–01	3 – 3
	3 – 4
	5 – 4
66T–13610–00	5 – 1
66T–13641–02–1S	5 – 3

PART NO. N° PIECES	REF. NO.
6E5–14159–00	6 – 17
6E5–14223–00	6 – 13
66T–14301–03	6 – 1
6E5–14323–03	6 – 12
	22 – 21
6A0–14325–00	7 – 25
6J8–14334–00	6 – 11
66T–14384–01	6 – 6
	22 – 19
6E5–14385–02	6 – 18
	22 – 23
6E5–14386–02	6 – 19
	22 – 24
66T–14440–00	5 – 12
624–14485–00	3 – 5
66T–14497–10	13 – 10
66T–14523–00	6 – 10
66T–14527–00	6 – 8
66T–14536–00	21 – 14
66T–14536–01	6 – 7
	22 – 20
6E5–14546–00	6 – 16
	22 – 22
66T–14578–00	6 – 2
66T–14584–00	6 – 3
66T–14592–00	6 – 4
61A–1492E–85	6 – 15
66T–1492F–35	6 – 20
66T–14945–02	6 – 14
66T–14959–00	6 – 25
	22 – 27
66T–14981–00	6 – 23
66T–14984–00	6 – 21
	22 – 25
66T–14991–00	6 – 24
66T–14992–00	6 – 22
	22 – 26
66T–15100–02	3 – 2
66T–15396–01–CA	3 – 8
66T–15705–00	8 – 7
66T–15710–01	8 – 1
66T–15711–01	8 – 2
66T–15713–00	8 – 5
66T–15714–00	8 – 3
66T–15716–00	8 – 6
66T–15723–00	8 – 29
66T–15731–00	8 – 16
66T–15734–00	8 – 14

PART NO. N° PIECES	REF. NO.
63V–15741–00	8 – 4
63V–15744–00	8 – 10
6F5–15752–00	8 – 18
6F5–15753–00	8 – 19
689–15755–01	8 – 21
66T–15758–01	8 – 24
66T–15762–01	8 – 28
66T–15767–00	8 – 8
63V–15768–00	8 – 11
6F5–15768–00	8 – 20
66T–15770–00	8 – 15
66T–15771–00–94	8 – 36
66T–15772–00–94	8 – 39
6F5–15779–02	8 – 22
66T–15784–00	8 – 9
697–15789–00	8 – 23
6F5–15791–00	8 – 17
66T–15794–00	8 – 13
6YK–24201–03	20 – 1
6YK–24260–01	20 – 4
6YL–24268–01	20 – 2
6G1–24304–02	7 – 1
6YL–24306–54	20 – 7
6E5–24315–00	21 – 6
66T–24329–00	11 – 22
6YL–24329–00	20 – 6
6E5–24379–00	21 – 9
692–24410–00	7 – 15
663–24411–00	7 – 20
692–24411–00	7 – 17
6A0–24412–02	7 – 26
6A0–24413–00	7 – 16
6A0–24421–01	7 – 24
650–24431–A0	7 – 27
	22 – 12
648–24434–01	7 – 18
648–24435–02	7 – 21
61N–24521–00	7 – 8
61N–24560–00	7 – 6
61N–24563–00	1 – 6
	7 – 7
648–24566–02	7 – 10
6YK–24610–01	20 – 3
66T–26301–00	12 – 29
65W–26326–00	11 – 19
65W–26326–10	14 – 10
66T–28199–7B–D0	7 – 33
66T–28199–7B–E0	7 – 33

PART NO. N° PIECES	REF. NO.
66T–28199–7B–F0	7 – 33
66T–28199–7B–G0	7 – 33
66T–28199–7B–H0	7 – 33
66T–28199–7B–S0	7 – 33
66T–28199–8B–K0	7 – 34
66T–28199–8B–L0	7 – 34
66T–28199–8B–M0	7 – 34
66T–28199–8B–N0	7 – 34
66T–28199–8B–P0	7 – 34
66T–28199–8B–R0	7 – 34
66T–41113–00–1S	3 – 33
66T–41114–A0	3 – 35
	22 – 8
66T–41131–10–CA	17 – 4
66T–41133–A0	17 – 5
	23 – 2
66T–41137–00–CA	17 – 1
66T–41237–00	13 – 5
66T–41252–00	5 – 22
66T–41256–00	5 – 20
66T–41257–00	5 – 24
661–41262–02	5 – 21
6H4–41271–02	5 – 17
66T–41273–00	12 – 41
689–41273–00	5 – 18
6J8–41274–00	5 – 19
66T–41611–00	9 – 11
66T–41631–10	13 – 4
66T–41638–10	13 – 1
6F5–41662–00	13 – 17
65W–42101–01–4D	12 – 14
664–42119–00	12 – 22
65W–42121–01–4D	12 – 40
66T–42123–00	12 – 7
65W–42125–00	12 – 19
6G1–42126–00	12 – 18
65W–42131–01	12 – 37
6G1–42137–10	12 – 23
65W–42138–00	12 – 16
65W–42159–00	12 – 17
66T–42167–00	13 – 2
6G1–42177–00	12 – 21
65W–42511–11–4D	16 – 6
648–42528–00	16 – 1
66T–42610–00	2 – 1
66T–42613–01	2 – 2
66T–42615–02	2 – 8
6E0–42651–02	2 – 4

PART NO. N° PIECES	REF. NO.
6F5–42652–01	2 – 6
688–42675–40	2 – 11
688–42676–40	2 – 12
63D–42678–40	2 – 9
	2 – 10
63D–42681–40	2 – 13
	2 – 14
66T–42710–01–4D	11 – 1
66T–42716–00	11 – 5
66T–42725–00	11 – 8
6G1–42725–00	10 – 21
66T–42725–30	14 – 9
65W–42726–00	11 – 23
6H4–42726–00	11 – 21
65W–42726–10	14 – 11
676–42727–00	11 – 20
66T–42738–00–CA	11 – 6
66T–42741–00	11 – 26
6AH–42794–40	11 – 30
6AH–42794–50	11 – 31
66T–42815–01–4D	11 – 9
66T–42816–00	11 – 13
66T–43111–01–4D	15 – 1
66T–43112–01–4D	15 – 6
6J8–43113–01	15 – 20
648–43114–01	15 – 4
	15 – 9
663–43118–01–4D	15 – 3
	15 – 8
63D–43131–01	15 – 17
66T–43144–00	11 – 14
65W–43311–10–4D	15 – 15
682–43318–01	15 – 34
66T–43350–02	15 – 41
65W–43373–00	16 – 2
65W–43613–00	15 – 48
65W–43614–01	15 – 46
65W–43615–01	15 – 47
65W–43616–00	15 – 45
66T–43627–00	15 – 22
65W–43630–11	15 – 35
66T–43631–11	15 – 43
66T–44111–02	12 – 2
682–44116–01	13 – 19
66T–44121–00	13 – 14
66M–44122–00	13 – 15
66T–44124–00	12 – 10
66T–44125–01	13 – 23

PART NO. N° PIECES	REF. NO.
66T–44125–01	14 – 6
66T–44143–10	13 – 21
61N–44146–00	18 – 27
66T–44150–11	18 – 26
6E0–44191–11	12 – 13
688–44194–00	13 – 9
66T–44311–00	18 – 12
63D–44312–00	19 – 19
	23 – 23
63D–44316–00	18 – 16
	23 – 6
	23 – 18
63D–44322–00	18 – 13
	23 – 15
63D–44322–40	23 – 25
66T–44323–00	18 – 14
	23 – 16
66T–44323–40	23 – 26
6BG–44341–00	18 – 19
6H4–44352–02	18 – 18
	23 – 20
66T–44361–10	19 – 1
66T–44362–10	19 – 26
663–44366–00	19 – 18
	23 – 22
663–44367–00	19 – 4
6E5–44391–00	11 – 18
66T–44514–00–4D	16 – 15
66T–44526–00	16 – 16
65W–44551–00–4D	16 – 18
65W–44555–10	16 – 19
66T–44575–00	16 – 20
66T–45111–10–4D	17 – 7
66T–45113–A0	17 – 12
	22 – 13
66T–45114–A0	17 – 11
	23 – 3
63D–45155–00	17 – 8
63D–45214–00	18 – 7
63D–45215–00	18 – 8
676–45251–00	1 – 1
	3 – 15
67C–45251–00	1 – 10
	19 – 15
66T–45300–12–4D	18 – 1
66T–45311–01–4D	18 – 2
679–45318–00	17 – 15
66T–45321–00	18 – 29

PART NO. N° PIECES	REF. NO.
688–45341–10	18 – 6
66T–45344–01	18 – 21
63D–45361–02–4D	18 – 44
664–45371–01	1 – 9
	19 – 8
63D–45375–00	19 – 7
663–45376–00	19 – 6
66T–45501–11	18 – 33
6H4–45536–00	18 – 3
66T–45551–00	18 – 36
66T–45560–01	18 – 38
663–45567–01	18 – 40
663–45567–10	18 – 40
663–45567–20	18 – 40
663–45567–30	18 – 40
663–45567–40	18 – 40
663–45567–50	18 – 40
663–45567–60	18 – 40
66T–45571–00	18 – 41
63D–45577–00	18 – 43
63D–45577–10	18 – 43
63D–45577–20	18 – 43
63D–45577–30	18 – 43
63D–45577–40	18 – 43
63D–45577–50	18 – 43
63D–45577–60	18 – 43
663–45587–01	18 – 35
663–45587–10	18 – 35
663–45587–20	18 – 35
663–45587–30	18 – 35
663–45587–40	18 – 35
663–45587–50	18 – 35
663–45587–60	18 – 35
66T–45611–00	18 – 56
66T–45631–00	18 – 51
663–45633–00	18 – 54
66T–45635–00	18 – 55
663–45930–00	19 – 25
63D–45941–00	19 – 25
663–45941–01	19 – 25
69W–45943–00	19 – 25
69W–45945–00	19 – 25
69W–45947–00	19 – 25
663–45949–01	19 – 25
69W–45952–00	19 – 25
663–45952–02	19 – 25
663–45954–01	19 – 25
663–45956–01	19 – 25

PART NO. N° PIECES	REF. NO.
69W–45958–00	19 – 25
663–45958–01	19 – 25
663–45970–60	19 – 25
663–45972–60	19 – 25
663–45974–60	19 – 25
663–45976–00	19 – 25
663–45978–00	19 – 25
663–45987–02	19 – 20
66T–45997–00	19 – 21
663–48344–00	14 – 2
66T–48501–01	14 – 1
65W–48511–01	14 – 7
6H3–48538–00	14 – 4
66T–81303–00	24 – 1
66T–81328–00	9 – 13
66T–81916–01	10 – 8
6AH–81994–40	8 – 42
6AH–81994–50	8 – 43
6AH–81995–40	8 – 44
6AH–81995–50	8 – 45
66T–82127–00	16 – 26
66T–82127–10	16 – 24
6A0–82317–00	10 – 2
6E3–82370–21	10 – 16
66T–82519–00	10 – 20
682–82556–00	12 – 43
688–82560–10	10 – 19
66T–82575–01	12 – 42
689–8257Y–00	12 – 44
66T–85515–00	9 – 8
66T–85520–00	9 – 10
66T–85533–00	9 – 14
	24 – 2
66T–85540–01	10 – 5
66T–8554B–01–94	10 – 1
66T–85550–10	9 – 1
66T–85560–01	9 – 2
66T–85561–00	9 – 3
66T–85570–00	10 – 10
66T–85580–00	9 – 5
66T–85582–00	9 – 7
66T–85596–00	9 – 6
66T–W0001–01	22 – 1
66T–W0001–21	23 – 1
66T–W0004–00	5 – 2
66T–W0078–00	1 – 11
	23 – 14
66T–W0078–0A	23 – 24

PART NO. N° PIECES	REF. NO.
66T–W0084–02–4D	12 – 1
66T–W0090–02–1S	3 – 1
66T–W0093–01	22 – 16
676–W2810–01	7 – 32
90101–08002	3 – 21
90101–08M28	15 – 54
90101–08M76	15 – 12
90101–08M86	16 – 14
90101–10M58	15 – 57
90105–08M61	18 – 50
90105–08M76	16 – 3
90109–06M80	10 – 7
	11 – 29
	13 – 20
90109–06M81	10 – 6
	10 – 9
	10 – 13
	11 – 7
	13 – 18
90109–06M86	11 – 15
	12 – 15
90109–08M90	15 – 26
90116–10M28	16 – 5
90119–06M61	11 – 2
90119–06M65	10 – 4
90119–06M73	11 – 17
90119–06MA3	3 – 27
	3 – 36
90119–06MA5	3 – 32
90119–08M03	5 – 11
90119–08M10	8 – 32
90119–08M15	18 – 25
	23 – 21
90119–08M42	17 – 14
90119–08M51	8 – 33
90119–08M79	17 – 2
90119–08MA5	3 – 24
90119–10005	3 – 7
90119–10M04	16 – 22
90141–06M00	3 – 19
90149–14M12	15 – 2
	15 – 7
90152–05010	18 – 9
90152–05011	12 – 25
90157–05014	15 – 44
90157–05M16	20 – 5
90167–05017	2 – 3
90170–12138	18 – 37

PART NO. N° PIECES	REF. NO.
90170–20137	9 – 21
90171–16011	19 – 23
90179–10M33	16 – 23
90185–08045	16 – 12
90185–08057	15 – 28
	15 – 56
90185–10051	16 – 4
90185–22043	15 – 21
90201–08M07	15 – 27
90201–08M54	13 – 11
90201–10120	14 – 8
90201–10M02	12 – 26
90201–12426	15 – 59
90201–12M07	12 – 5
90201–20417	4 – 20
90201–21M18	9 – 22
90201–22429	18 – 42
90201–22M03	15 – 19
90201–27M00	18 – 23
90201–43M00	12 – 33
90202–12031	15 – 24
90202–12060	19 – 2
90202–43M57	12 – 35
90206–12052	11 – 12
	12 – 6
90206–12M00	15 – 25
90206–43M22	12 – 34
90209–27012	4 – 12
90209–52M00	16 – 7
90243–04007	15 – 5
	15 – 10
90249–07M32	15 – 49
90249–07M33	15 – 51
90249–10M31	15 – 38
90249–12M34	15 – 29
90249–12M39	15 – 31
90250–06023	18 – 53
90254–03M04	13 – 24
	14 – 5
90254–03M05	13 – 16
90266–04M01	2 – 7
90266–04M04	2 – 5
90269–02M09	12 – 24
90280–03M03	18 – 17
	23 – 19
90280–05015	9 – 20
90338–05M03	11 – 25
90340–08002	18 – 4

PART NO. N° PIECES	REF. NO.
90385–12M04	8 – 34
90386–07MA2	15 – 37
90386–08032	12 – 28
90386–10M99	15 – 36
90386–12M37	11 – 10
90386–12M98	15 – 23
90386–12MA0	15 – 32
90386–12MA2	11 – 11
90386–22M15	15 – 18
90386–40M99	12 – 36
90386–40MA0	12 – 32
90386–44M03	16 – 9
90386–44M99	16 – 11
90386–52M02	16 – 8
90387–06119	10 – 3
90387–06M41	11 – 4
90387–06M66	8 – 27
90387–06M80	5 – 16
90387–06M86	12 – 3
90387–07M05	15 – 39
90387–07M29	15 – 50
90387–08M05	8 – 35
90387–08M16	13 – 3
90387–08M29	15 – 11
90387–12M04	15 – 30
90389–22M01	19 – 22
90430–08020	1 – 8
	18 – 5
	23 – 4
90430–12072	19 – 3
90445–07M08	3 – 38
90445–07M24	5 – 7
90445–07MA4	5 – 8
90445–09086	7 – 13
	7 – 30
90445–09M08	7 – 4
90445–09M75	3 – 37
90445–11M78	21 – 16
90446–03MA3	10 – 12
90446–10M86	12 – 31
90446–10M87	12 – 30
90464–12M00	9 – 27
90465–13M36	21 – 12
90465–15M74	9 – 23
90465–25M57	11 – 24
90467–06016	5 – 9
90467–08004	7 – 5
	7 – 14

PART NO. N° PIECES	REF. NO.
90467–08004	7 – 31
90467–10M04	21 – 8
90467–11M08	21 – 7
90468–18008	12 – 12
	14 – 3
90480–09M21	11 – 3
90480–10M71	9 – 26
90480–25161	10 – 11
90480–25M70	19 – 27
90480–30M71	19 – 28
90501–10M84	13 – 6
90501–15M01	18 – 52
90501–23215	12 – 27
90502–10M06	15 – 55
90506–16M34	11 – 16
90506–20M37	15 – 42
90506–30M00	15 – 52
91490–16012	13 – 22
91490–20010	12 – 20
91490–20012	15 – 53
91490–30025	19 – 24
91690–40032	5 – 23
92903–06600	8 – 38
	8 – 41
92990–05100	7 – 23
92990–05600	6 – 5
92990–06200	12 – 11
92990–06600	18 – 32
92990–08100	15 – 14
92995–06200	12 – 9
92995–06600	3 – 13
	3 – 17
	5 – 15
	7 – 3
	7 – 29
	8 – 26
	8 – 31
	9 – 19
	9 – 25
	10 – 15
	10 – 18
	11 – 28
92995–08200	16 – 13
92995–08600	19 – 10
	19 – 17
92995–10100	19 – 13
92995–10600	15 – 58
	19 – 14

NUMERICAL INDEX
INDEX NUMERIQUE

PART NO. N° PIECES	REF. NO.
93101–16001	3 – 10
	22 – 3
93101–22M00	18 – 49
	23 – 13
93101–22M60	18 – 20
	23 – 7
93102–30M56	3 – 9
	22 – 2
93102–35008	9 – 4
	22 – 14
93210–06ME6	18 – 31
	23 – 10
93210–32738	1 – 7
	7 – 9
	22 – 11
93210–33MG4	18 – 30
	23 – 9
93210–43MJ0	16 – 10
93210–46M16	5 – 10
	22 – 9
	22 – 17
93210–48001	18 – 22
	23 – 8
93210–54M54	5 – 13
	22 – 10
	22 – 18
93210–59MG7	18 – 15
	23 – 5
	23 – 17
93210–65M50	3 – 11
	22 – 4
93210–69MG6	18 – 46
	23 – 11
93210–74MG5	18 – 47
	23 – 12
93210–75M51	9 – 17
	22 – 15
93306–001U1	18 – 45
93306–306V5	4 – 8
93306–307U0	4 – 6
93310–727U0	4 – 13
93315–32224	18 – 11
93317–22204	18 – 48
93332–00001	18 – 34
93332–00003	18 – 39
93332–000UE	4 – 7
93420–30042	17 – 16
93440–68M03	4 – 14

PART NO. N° PIECES	REF. NO.
93603–21111	4 – 19
93604–08062	18 – 24
93606–12019	17 – 3
	17 – 13
	19 – 11
93608–12063	3 – 6
93700–06M03	15 – 16
94702–00040	1 – 5
94702–00272	1 – 5
	3 – 39
95380–03600	7 – 19
95380–05600	18 – 10
95380–06700	13 – 8
	18 – 28
95380–08600	7 – 11
	15 – 13
95380–10600	15 – 60
95380–10700	12 – 38
95780–06300	12 – 8
95780–10300	12 – 39
97013–06014	7 – 12
97013–06030	8 – 37
	8 – 40
97075–10040	19 – 12
97095–06010	8 – 30
97095–06012	10 – 17
97095–06014	13 – 13
97095–06016	9 – 24
	11 – 27
97095–06020	3 – 12
	3 – 16
97095–06025	10 – 14
97095–06030	7 – 2
97095–06035	8 – 25
97095–06040	7 – 28
	9 – 18
97095–08025	19 – 9
97095–08035	19 – 16
97095–08045	13 – 12
97513–06535	5 – 6
97575–08530	16 – 17
	17 – 6
	17 – 10
97575–08545	17 – 9
97575–08565	19 – 5
97575–10570	16 – 21
97595–06550	12 – 4
97802–04006	9 – 16

PART NO. N° PIECES	REF. NO.
97802–04006	24 – 4
97880–06035	13 – 7
97885–06008	16 – 25
97885–06040	5 – 14
97902–04108	9 – 9
97902–06125	9 – 15
	24 – 3
97980–04110	6 – 9
97980–04125	21 – 15
97980–05125	6 – 26
	22 – 28
98503–05028	7 – 22
99080–08600	15 – 40
99080–10600	15 – 33
9E471–04305	9 – 12

PART NO. N° PIECES	REF. NO.

PART NO. N° PIECES	REF. NO.

PART NO. N° PIECES	REF. NO.