YAMAHA

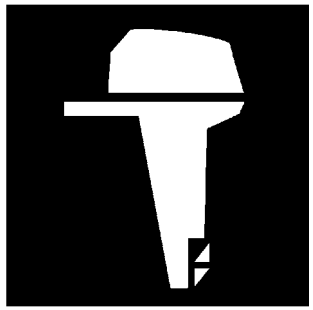

# PARTS CATALOGUE
# CATALOGUE DE PIECES DETACHEES

# F200GET'13 (6DV1)
# FL200GET'13 (6DW1)

1M6DV-300F1

( )

YAMAHA
GENUINE
Parts & Accessories

F200GET/FL200GET
PARTS CATALOGUE
©2013 by Yamaha Motor Co., Ltd.
1st edition, March 2013
All rights reserved.
Any reprinting or unauthorized use
without the written permission of
Yamaha Motor Co., Ltd.
is expressly prohibited.
Printed in Japan.

F200GET/FL200GET
CATALOGUE DE PIECES DETACHEES
©2013 par Yamaha Motor Co., Ltd.
1re édition, mars 2013
Tous droits réservés
Toute réimpression ou utilisation
non autorisée sans la permission écrite
de la Yamaha Motor Co., Ltd.
est formellement interdite.
Imprimé au Japon

# FOREWORD

This Parts Catalogue is related to the parts for the model(s) on the cover page. When you are ordering replacement parts, please refer to this Parts Catalogue and quote both part numbers and part names correctly.

1. Modifications or additions which have been made after the issue of the Parts Catalogue will be announced in the Parts News.
   It is advisable that you make the necessary corrections to the Parts Catalogue according to the Parts News.

2. Abbreviations
   The following abbreviations are used in this Parts Catalogue.

   "UR" Use specified parts number.
   "UN" Use as many as needed.
   "AP" Alternate Parts
   "LM" Locally Made (Parts need to be ordered locally)
   "F#" Frame No. (Applicable machine No.)
   "O/S" Over Size

3. The number of components for assembly
   - Parts, which are to be supplied in an assembly, are listed with a dot (.) in front of the part name as shown below.
   - The numeral appearing to the right of each component part indicates the quantity of parts for each assembly unit.

| PART NO. | DESCRIPTION | Q'TY | REMARKS |
|---|---|---|---|
| 2F5–83310–60 | FRONT FLASHER LIGHT ASSY | 2 | |
| 115–83311–60 | .BULB (6V–18W) | 1 | |

4. Applicable colours of graphics are represented in the "REMARKS" as shown below.

| PART NO. | DESCRIPTION | Q'TY | REMARKS |
|---|---|---|---|
| 2N4–24110–00–X5 | FUEL TANK COMP. | 2 | MXR |
| 3J1–24240–10 | .GRAPHIC, FUEL TANK | 1 | FOR MXR |

5. Note that the illustrations for reference in finding parts numbers are not to be used for assembling. When assembling, please use the applicable service manual.

6. The asterisk (*) before a reference number indicates modified items after the first edition.

7. Applicable Serial No.

   Engine Serial No.

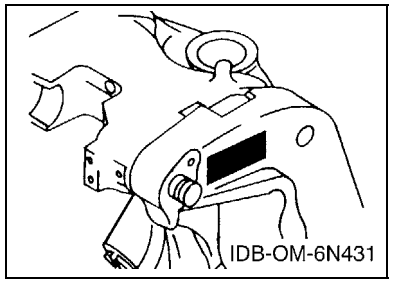


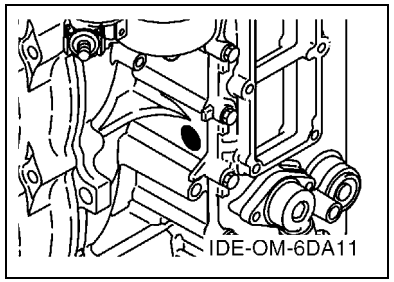


8. Applicable Engine Starting Serial No.

| Model | Serial No. | Model | Serial No. |
|---|---|---|---|
| F200G | 6DV-1000001 | FL200G | 6DW-1000001 |
| | | | |
| | | | |
| | | | |
| | | | |

9. Applicable Colour Code

| Abbreviation | Colour Name | Colour Code |
|---|---|---|
| DBN1 | DARK BLUISH GRAY 1 | 008D |

10. Quantity Column Information

| Column No. | Name Of Q'ty Column | Applicable Model |
|---|---|---|
| 1 | 6DV1 | F200GET |
| 2 | 6DW1 | FL200GET |
| | | |
| | | |
| | | |

# AVANT–PROPOS

Ce catalogue de pièces détachées concerne les pièces pour le(s) modèle(s) indiqué(s) sur la page de couverture. Lorsque vous commandez des pièces de rechange, veuillez vous référer à ce catalogue de pieces détachées et indiquer clairement les numéros et les noms des pièces détachées.

1. Les modifications ou ajouts ayant été effectués après la parution du catalogue de pièces détachées seront décrits dans les Bulletins d'information concernant les pièces détachées.
   Il est recommandé que vous apportiez les corrections nécessaires au catalogue des pièces détachées en vous référant aux Bulletins d'information.

2. Abréviations
   Dans ce catalogue, les abréviations suivantes sont utilisées:

   "UR" Utiliser le numéro de pièces spécifié.
   "UN" Utiliser autant que nécessaire.
   "AP" Pièces de substitution
   "LM" Fabrication locale (les pièces doivent être commandées localement.)
   "F#" N° de cadre (applicable au N° de série)
   "O/S" Surdimensionné

3. Nombre de pièces d'un assemblage
   - Les pièces fournies comme composants d'un assemblage sont précédées d'un point (.) de la manière indiquée ci–dessous.
   - Le chiffre apparaissant à la droite de chaque composant indique la quantité de pièces pour chaque unité d'assemblage.

| N° PIECES | DESCRIPTION | QTE | REMARQUES |
|---|---|---|---|
| 2F5–83310–60 | ENS. CLIGNOTANT AVANT | 2 | |
| 115–83311–60 | .AMPOULE (6V–18W) | 1 | |

4. Les couleurs concernant les graphiques sont indiquées dans la colonne "REMARQUES", comme indiqué ci–dessous.

| N° PIECES | DESCRIPTION | QTE | REMARQUES |
|---|---|---|---|
| 2N4–24110–00–X5 | RESERVOIR A ESSENCE. | 2 | MXR |
| 3J1–24240–10 | .GRAPHIQUE | 1 | POUR MXR |

5. Veuillez noter que les illustrations sont indiquées à titre de référence pour trouver les numéros de pièces, non pour être utilisées lors de l'assemblage. Lors de l'assemblage, veuillez utiliser le manuel d'entretien adéquat.

6. L'astérisque (*) placé devant un numéro de référence indique des éléments qui ont été modifiés après la première édition.

7. N° de série applicable

   N° de Série du moteur

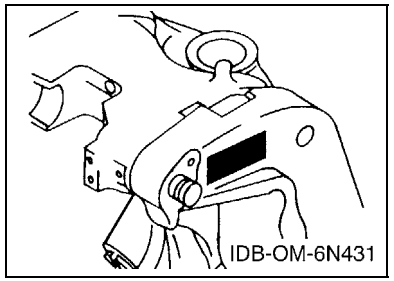


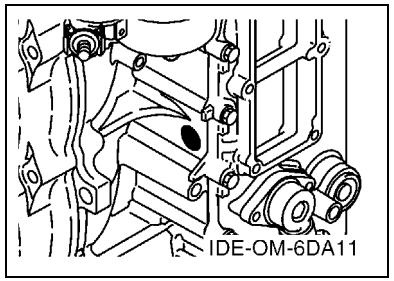


8. N° de série initial du moteur applicable

| Modèle | N° de série | Modèle | N° de série |
|---|---|---|---|
| F200G | 6DV-1000001 | FL200G | 6DW-1000001 |
| | | | |
| | | | |
| | | | |
| | | | |

9. Code couleur applicable

| Abréviation | Nom de la couleur | Code couleur |
|---|---|---|
| DBN1 | DARK BLUISH GRAY 1 | 008D |

10. Informations relatives à la colonne Quantité

| N° de la colonne | Nom de la colonne Qté | Modèle applicable |
|---|---|---|
| 1 | 6DV1 | F200GET |
| 2 | 6DW1 | FL200GET |
| | | |
| | | |
| | | |

# CONTENTS

SCHEDULED SERVICE PARTS ..... 1
TOP COWLING ..... 2
CYLINDER & CRANKCASE 1 ..... 3
CRANKSHAFT & PISTON ..... 5
CYLINDER & CRANKCASE 2 ..... 6
CYLINDER & CRANKCASE 3 ..... 7
CYLINDER & CRANKCASE 4 ..... 9
VALVE ..... 10
INTAKE 1 ..... 13
INTAKE 2 ..... 14
INTAKE 3 ..... 16
FUEL INJECTION PUMP 1 ..... 17
FUEL INJECTION PUMP 2 ..... 19
FUEL 1 ..... 20
FUEL 2 ..... 22
GENERATOR ..... 23
ELECTRICAL 1 ..... 25
ELECTRICAL 2 ..... 27
ELECTRICAL 3 ..... 28
ELECTRICAL 4 ..... 29
ELECTRICAL 5 ..... 30
STARTING MOTOR ..... 31
BOTTOM COWLING 1 ..... 32
BOTTOM COWLING 2 ..... 34
BOTTOM COWLING 3 ..... 35
CONTROL ..... 36
BRACKET 1 ..... 38
BRACKET 2 ..... 40
POWER TRIM & TILT ASSY 1 ..... 42
POWER TRIM & TILT ASSY 2 ..... 44
UPPER CASING ..... 46
OIL PAN ..... 48
LOWER CASING & DRIVE 1 ..... 49
LOWER CASING & DRIVE 2 ..... 53
LOWER CASING & DRIVE 3 ..... 54
LOWER CASING & DRIVE 4 ..... 58
STEERING GUIDE ..... 59
OPTIONAL PARTS 1 ..... 60
OPTIONAL PARTS 2 ..... 61
OPTIONAL PARTS 3 ..... 62
REPAIR KIT 1 ..... 63
REPAIR KIT 2 ..... 64

## INDEX

NUMERICAL INDEX ..... 66

# TABLE DES MATIERES

PIECES MAINTENANCE PERIODIQUE ..... 1
CAPOT SUPERIEUR ..... 2
CYLINDRE & CARTER 1 ..... 3
VILEBREQUIN & PISTON ..... 5
CYLINDRE & CARTER 2 ..... 6
CYLINDRE & CARTER 3 ..... 7
CYLINDRE & CARTER 4 ..... 9
SOUPAPE ..... 10
ADMISSION 1 ..... 13
ADMISSION 2 ..... 14
ADMISSION 3 ..... 16
POMPE A INJECTEUR 1 ..... 17
POMPE A INJECTEUR 2 ..... 19
CARBURANT 1 ..... 20
CARBURANT 2 ..... 22
GENERATRICE ..... 23
PARTIE ELECTRIQUE 1 ..... 25
PARTIE ELECTRIQUE 2 ..... 27
PARTIE ELECTRIQUE 3 ..... 28
PARTIE ELECTRIQUE 4 ..... 29
PARTIE ELECTRIQUE 5 ..... 30
DEMARREUR ELECTRIQUE ..... 31
CAPOT INFERIEUR 1 ..... 32
CAPOT INFERIEUR 2 ..... 34
CAPOT INFERIEUR 3 ..... 35
COMMANDE ..... 36
SUPPORT 1 ..... 38
SUPPORT 2 ..... 40
PUISSANCE PARER ET INCLINER 1 ..... 42
PUISSANCE PARER ET INCLINER 2 ..... 44
FOURREAU ..... 46
VENTILATEUR D'HUILE ..... 48
BOITIER D'HELICE TRANSMISSION1 ..... 49
BOITIER D HELICE TRANSMISSION2 ..... 53
BOITIER D'HELICE TRANSMISSION3 ..... 54
BOITIER D'HELICE TRANSMISSION4 ..... 58
FIXATION DE DIRECTION ..... 59
PIECES OPTIONNELLES 1 ..... 60
PIECES OPTIONNELLES 2 ..... 61
PIECES OPTIONNELLES 3 ..... 62
KITS DE REPARATION 1 ..... 63
KITS DE REPARATION 2 ..... 64

## INDEX

INDEX NUMERIQUE ..... 66

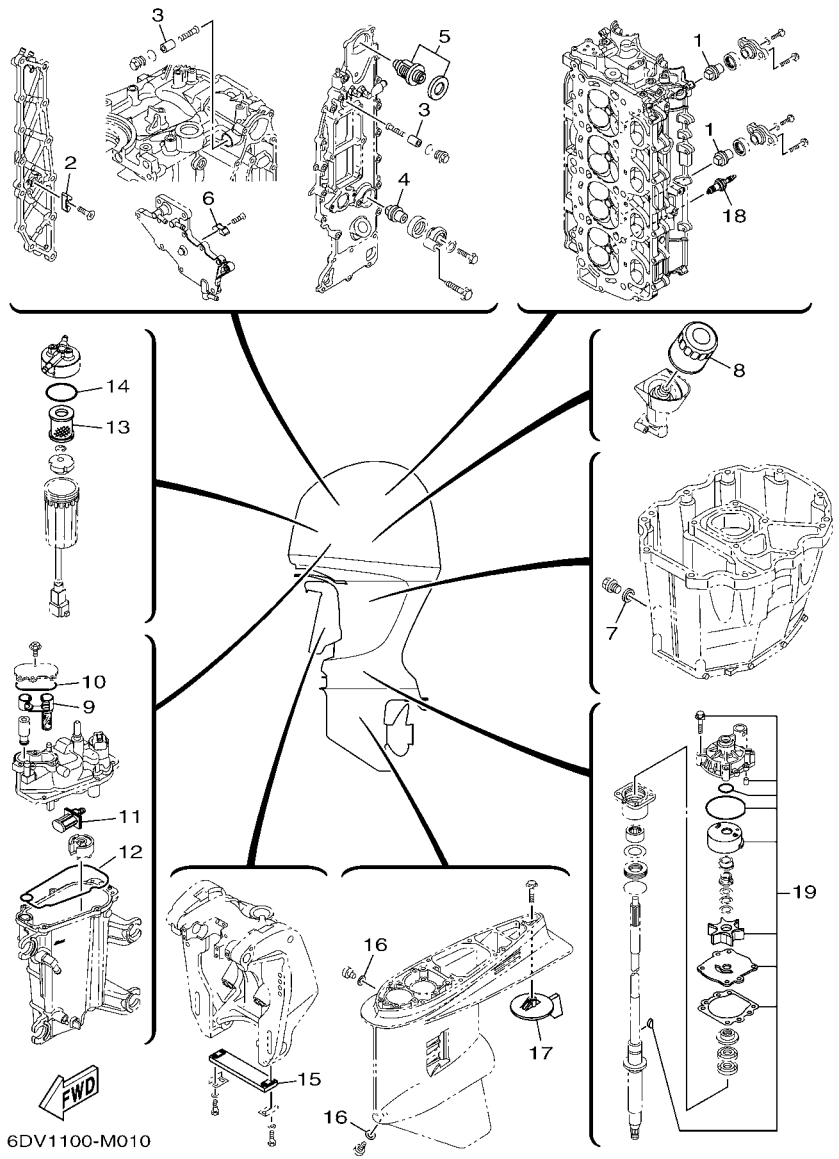


## FIG. 1 SCHEDULED SERVICE PARTS PIECES MAINTENANCE PERIODIQUE

| REF. NO. | PART NO. N° PIECES | DESCRIPTION DESCRIPTION | 6DV1 | 6DW1 | | | | REMARKS REMARQUES |
|---|---|---|---|---|---|---|---|---|
| 1 | 67F–11325–01 | ANODE<br>ANODE | 2 | 2 | | | | |
| 2 | 6E5–11325–00 | ANODE<br>ANODE | 1 | 1 | | | | |
| 3 | 68T–11325–00 | ANODE<br>ANODE | 2 | 2 | | | | |
| 4 | 67F–11325–01 | ANODE<br>ANODE | 1 | 1 | | | | |
| 5 | 6DA–12411–00 | THERMOSTAT<br>THERMOSTAT | 1 | 1 | | | | |
| 6 | 6E5–11325–00 | ANODE<br>ANODE | 1 | 1 | | | | |
| 7 | 90430–14M09 | GASKET<br>JOINT | 1 | 1 | | | | |
| 8 | 69J–13440–01 | ELEMENT ASSY, OIL CLEANER<br>ELEMENT, FILTRE A HUILE | 1 | 1 | | | | |
| 9 | 6CB–24501–01 | FILTER, FUEL<br>FILTRE | 1 | 1 | | | | |
| 10 | 6CB–13016–00 | O-RING<br>JOINT TORIQUE | 1 | 1 | | | | |
| 11 | 63P–13915–00 | FILTER<br>FILTRE | 1 | 1 | | | | |
| 12 | 6CB–14984–00 | GASKET, FLOAT CHAMBER<br>JOINT, CUVE DE FLOTTEUR | 1 | 1 | | | | |
| 13 | 6P3–24563–01 | ELEMENT, FILTER<br>ELEMENT, FILTRE | 1 | 1 | | | | |
| 14 | 6P3–24564–00 | GASKET<br>JOINT | 1 | 1 | | | | |
| 15 | 6AW–45251–00 | ANODE<br>ANODE | 1 | 1 | | | | |
| 16 | 90430–08020 | GASKET<br>JOINT | 2 | 2 | | | | |
| 17 | 6J9–45371–01 | TAB-TRIM<br>ANODE DERIVE | 1 | | | | | |
| | 6K1–45371–02 | TAB-TRIM<br>ANODE DERIVE | | 1 | | | | |
| 18 | 94702–00400 | PLUG, SPARK (NGK LFR6A-11)<br>BOUGIE D'ALLUMAGE(NGK LFR6A-11 | 4 | 4 | | | | |
| 19 | 61A–W0078–A3 | WATER PUMP REPAIR KIT<br>KIT DE REPARATION DE LA POMPE | 1 | 1 | | | | |

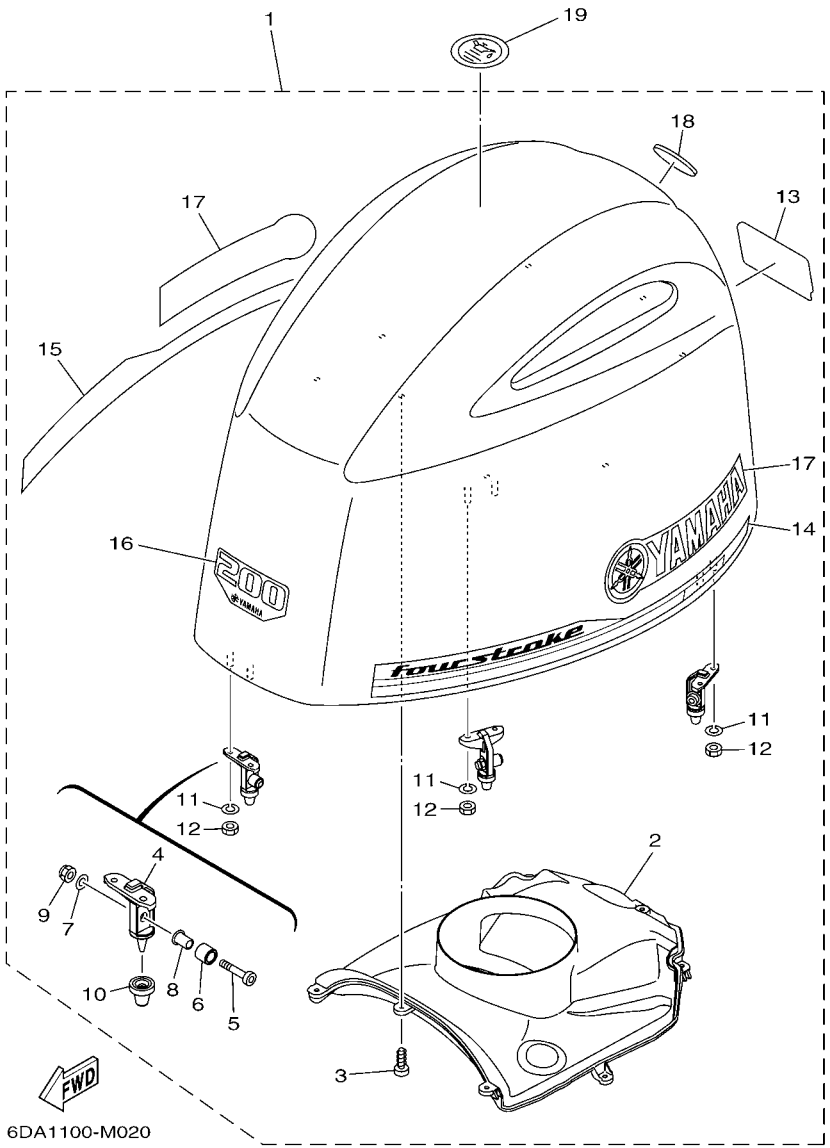


## FIG. 2 TOP COWLING — CAPOT SUPERIEUR

| REF. NO. | PART NO. N° PIECES | DESCRIPTION DESCRIPTION | 6DV1 | 6DW1 | | | | REMARKS REMARQUES |
|---|---|---|---|---|---|---|---|---|
| 1 | 6DA–42610–00 | TOP COWLING ASSY<br>CAPOT (ENS.) | 1 | 1 | | | | |
| 2 | 6DA–42613–00 | .MOLDING, AIR DUCT<br>.MANCHON A AIR | 1 | 1 | | | | |
| 3 | 90167–05017 | .SCREW, TAPPING<br>.VIS, TETE FRAISEE | 8 | 8 | | | | |
| 4 | 6CB–42647–00 | .HOLDER, CLAMP BAND<br>.SUPPORT, SANDOW DE SERRAGE | 3 | 3 | | | | |
| 5 | 90111–08078 | .BOLT,HEX. SOCKET BUTTON<br>.BOULON | 3 | 3 | | | | |
| 6 | 90387–10094 | .COLLAR<br>.COLLERETTE | 3 | 3 | | | | |
| 7 | 92990–08600 | .WASHER, PLATE<br>.RONDELLE, PLATE | 3 | 3 | | | | |
| 8 | 90387–08M45 | .COLLAR<br>.COLLERETTE | 3 | 3 | | | | |
| 9 | 95780–08300 | .NUT, FLANGE<br>.ECROU | 3 | 3 | | | | |
| 10 | 6AW–42663–00 | .DAMPER<br>.AMORTISSEUR | 3 | 3 | | | | |
| 11 | 92990–06100 | .WASHER, SPRING<br>.RONDELLE, GROWER | 6 | 6 | | | | |
| 12 | 95380–06600 | .NUT, HEXAGON<br>.ECROU | 6 | 6 | | | | |
| 13 | 6DA–42678–00 | .GRAPHIC, REAR<br>.ADHESIF, ARRIERE | 1 | 1 | | | | |
| 14 | 6DA–42675–00 | .GRAPHIC, SIDE 1<br>.EMBLEME | 1 | 1 | | | | |
| 15 | 6DA–42676–00 | .GRAPHIC, SIDE 2<br>.EMBLEME | 1 | 1 | | | | |
| 16 | 6DA–42677–00 | .GRAPHIC, FRONT<br>.ADHESIF, AVANT | 1 | 1 | | | | |
| 17 | 63P–42681–20 | .MARK, COWLING<br>.ADHESIF, CAPOT | 2 | 2 | | | | |
| 18 | 6DA–42697–00 | .TUNING FORK MARK<br>.MARQUE, YAMAHA | 1 | 1 | | | | |
| 19 | 67F–13434–20 | LABEL, CAUTION<br>ETIQUETTE, ATTENTION | 1 | 1 | | | | |

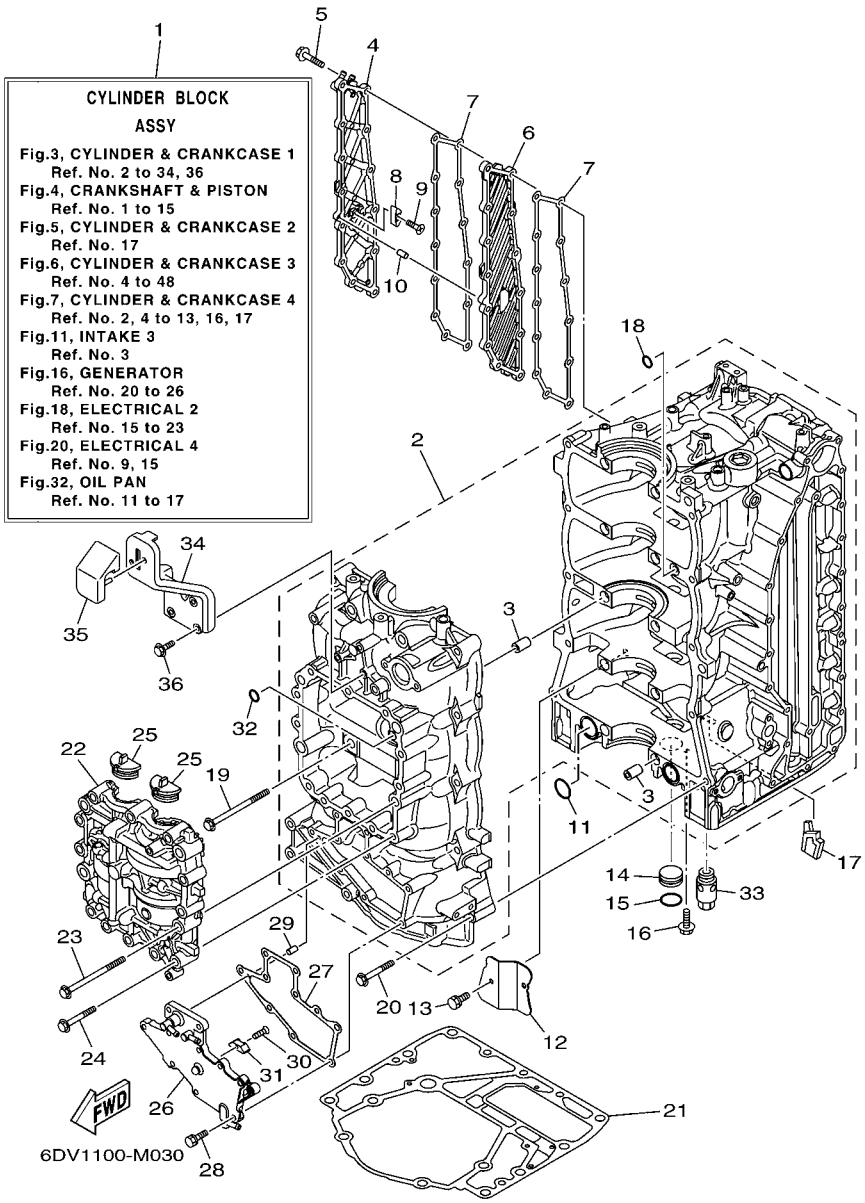


## FIG. 3 CYLINDER & CRANKCASE 1 CYLINDRE & CARTER 1

| REF. NO. | PART NO. N° PIECES | DESCRIPTION DESCRIPTION | 6DV1 | 6DW1 | | | | REMARKS REMARQUES |
|---|---|---|---|---|---|---|---|---|
| 1 | 6DA–W009B–00–9S | CYLINDER BLOCK ASSY<br>CYLINDRE GROUPE (ENS.) | 1 | 1 | | | | |
| 2 | 6DA–15109–00–9S | CRANKCASE ASSY<br>CARTER DE MOTEUR COMPLET | 1 | 1 | | | | |
| 3 | 91814–18002 | .PIN, DOWEL<br>.GOUJON, D'ASSEMBLAGE | 10 | 10 | | | | |
| 4 | 6DA–15414–00–9S | COVER, AIR CLEANER<br>COUVERCLE, FILTRE A AIR | 1 | 1 | | | | |
| 5 | 90105–06028 | BOLT, FLANGE<br>BOULON | 13 | 13 | | | | |
| 6 | 6DA–15423–00–9S | COVER 2<br>COUVERCLE 2 | 1 | 1 | | | | |
| 7 | 6DA–15353–00 | GASKET, DRAIN<br>JOINT, PLOT DE VIDANGE | 2 | 2 | | | | |
| 8 | 6E5–11325–00 | ANODE<br>ANODE | 1 | 1 | | | | |
| 9 | 98780–04016 | SCREW, FLAT HEAD<br>VIS A TETE FRAISEE | 1 | 1 | | | | |
| 10 | 91690–40010 | PIN, SPRING<br>AGRAFFE | 1 | 1 | | | | |
| 11 | 93210–25552 | O-RING<br>JOINT TORIQUE | 2 | 2 | | | | |
| 12 | 6DA–15412–00 | COVER, OIL PUMP<br>COUVERCLE DE POMPE A HUILE | 1 | 1 | | | | |
| 13 | 90119–06023 | BOLT, WITH WASHER<br>BOULON, AVEC RONDELLE | 2 | 2 | | | | |
| 14 | 90338–25004 | PLUG<br>PLOT | 1 | 1 | | | | |
| 15 | 93210–25647 | O-RING<br>JOINT TORIQUE | 1 | 1 | | | | |
| 16 | 90119–06M81 | BOLT, WITH WASHER<br>BOULON, AVEC RONDELLE | 1 | 1 | | | | |
| 17 | 6DA–14664–00 | GROMMET, WATER SHUT<br>PASSE-FIL | 1 | 1 | | | | |
| 18 | 93210–12648 | O-RING<br>JOINT TORIQUE | 1 | 1 | | | | |
| 19 | 90105–10406 | BOLT, FLANGE<br>BOULON | 10 | 10 | | | | |
| 20 | 90119–08M66 | BOLT, WITH WASHER<br>BOULON, AVEC RONDELLE | 10 | 10 | | | | |
| 21 | 63P–11351–01 | GASKET, CYLINDER<br>JOINT, D'EMBASE | 1 | 1 | | | | |
| 22 | 6DA–11500–00 | BALANCER ASSY<br>ARBRE D'EQUILIBRAGE COMPLET | 1 | 1 | | | | |
| 23 | 90105–10406 | BOLT, FLANGE<br>BOULON | 4 | 4 | | | | |
| 24 | 90105–08175 | BOLT, FLANGE<br>BOULON | 12 | 12 | | | | |
| 25 | 63P–11512–00 | SEAL, CRANK COVER<br>JOINT, COUV DE VILEBREQUIN | 2 | 2 | | | | |
| 26 | 6DA–15411–00–9S | COVER, CRANKCASE 1<br>COUVERCLE 1, CARTER MOTEUR | 1 | 1 | | | | |
| 27 | 6DA–15451–00 | GASKET, CRANKCASE COVER 1<br>JOINT, COUVERCLE DE CARTER 1 | 1 | 1 | | | | |

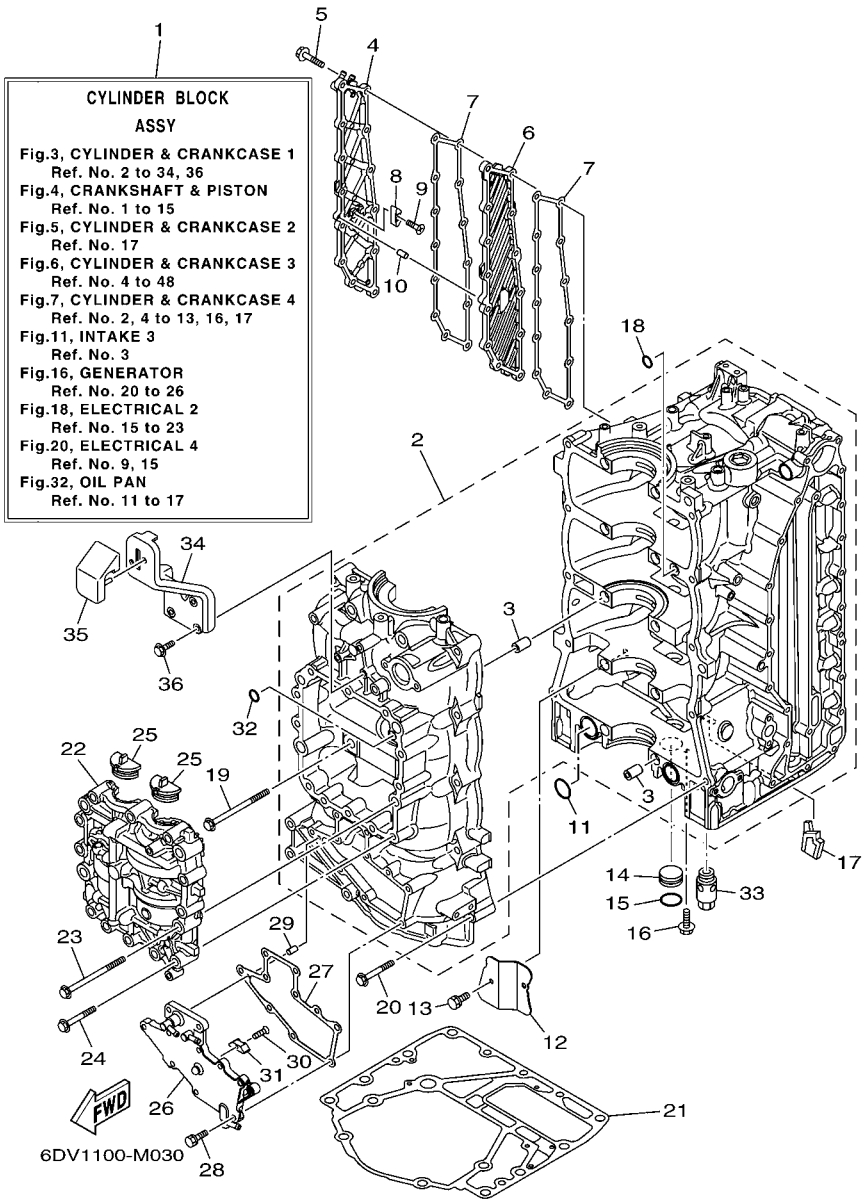


## FIG. 3 CYLINDER & CRANKCASE 1 CYLINDRE & CARTER 1

| REF. NO. | PART NO. N° PIECES | DESCRIPTION DESCRIPTION | 6DV1 | 6DW1 | | | | REMARKS REMARQUES |
|---|---|---|---|---|---|---|---|---|
| 28 | 90119–06MA3 | BOLT, WITH WASHER<br>BOULON, AVEC RONDELLE | 10 | 10 | | | | |
| 29 | 91690–40010 | PIN, SPRING<br>AGRAFFE | 1 | 1 | | | | |
| 30 | 98780–04016 | SCREW, FLAT HEAD<br>VIS A TETE FRAISEE | 1 | 1 | | | | |
| 31 | 6E5–11325–00 | ANODE<br>ANODE | 1 | 1 | | | | |
| 32 | 93210–08001 | O-RING<br>JOINT TORIQUE | 1 | 1 | | | | |
| 33 | 63P–13490–00 | RELIEF VALVE ASSY<br>SOUPAPE DE SECURITE COMPLET | 1 | 1 | | | | |
| 34 | 6DA–42744–00 | STAY<br>SUPPORT | 1 | 1 | | | | |
| 35 | 6DA–42662–00 | DAMPER<br>AMORTISSEUR | 1 | 1 | | | | |
| 36 | 90105–06196 | BOLT, FLANGE<br>BOULON | 3 | 3 | | | | |

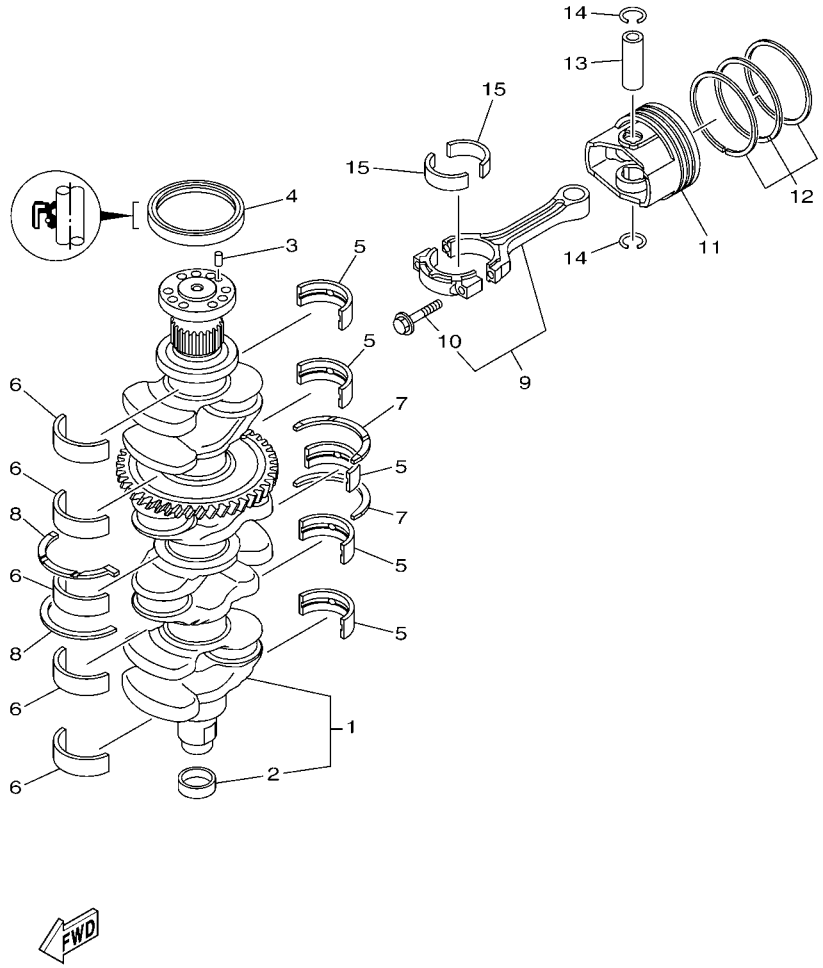


## FIG. 4 CRANKSHAFT & PISTON VILEBREQUIN & PISTON

| REF. NO. | PART NO. N° PIECES | DESCRIPTION DESCRIPTION | 6DV1 | 6DW1 | | | | REMARKS REMARQUES |
|---|---|---|---|---|---|---|---|---|
| 1 | 6DA–11410–00 | CRANKSHAFT<br>VILEBREQUIN COMPLET | 1 | 1 | | | | |
| 2 | 6CB–11478–00 | .COLLAR<br>.COLLERETTE | 1 | 1 | | | | |
| 3 | 93606–12019 | PIN, DOWEL<br>GOUPILLE | 1 | 1 | | | | |
| 4 | 93102–85008 | OIL SEAL<br>JOINT SPY | 1 | 1 | | | | |
| 5 | 6DA–11416–00 | PLANE BEARING, CRANKSHAFT 1<br>COUSSINET DE VILEBREQUIN 1 | 5 | 5 | | | | UR YELLOW<br>UR YELLOW |
| | 6DA–11416–10 | PLANE BEARING, CRANKSHAFT 1<br>COUSSINET DE VILEBREQUIN 1 | 5 | 5 | | | | UR GREEN<br>UR GREEN |
| | 6DA–11416–20 | PLANE BEARING, CRANKSHAFT 1<br>COUSSINET DE VILEBREQUIN 1 | 5 | 5 | | | | UR BLUE<br>UR BLUE |
| 6 | 6DA–11417–00 | PLANE BEARING, CRANKSHAFT 2<br>COUSSINET DE VILEBREQUIN 2 | 5 | 5 | | | | UR YELLOW<br>UR YELLOW |
| | 6DA–11417–10 | PLANE BEARING, CRANKSHAFT 2<br>COUSSINET DE VILEBREQUIN 2 | 5 | 5 | | | | UR GREEN<br>UR GREEN |
| | 6DA–11417–20 | PLANE BEARING, CRANKSHAFT 2<br>COUSSINET DE VILEBREQUIN 2 | 5 | 5 | | | | UR BLUE<br>UR BLUE |
| 7 | 6DA–11426–00 | BEARING, THRUST 1<br>ROULEMENT DE BUTEE 1 | 2 | 2 | | | | |
| 8 | 6DA–11427–00 | BEARING, THRUST 2<br>ROULEMENT DE BUTEE 2 | 2 | 2 | | | | |
| 9 | 6CB–W1165–00 | CONNECTING ROD ASSY<br>BIELLE COMPLETTE | 4 | 4 | | | | |
| 10 | 6CB–11654–00 | .BOLT, CONNECTING ROD<br>.BOULON, BIELLE | 2 | 2 | | | | |
| 11 | 6DA–11631–00–94 | PISTON (STD)<br>PISTON (STD) | 4 | 4 | | | | |
| 12 | 6CB–11603–00 | PISTON RING SET (STD)<br>JEU DE SEGMENTS (STD) | 4 | 4 | | | | |
| 13 | 6CB–11633–00 | PIN, PISTON<br>AXE, PISTON | 4 | 4 | | | | |
| 14 | K0F–A3233–00 | RING,HOLE SNAP<br>JONC | 8 | 8 | | | | |
| 15 | 6CB–11656–00 | PLANE BEARING, CONNECTING ROD<br>ROULEMENT DE BIELLE | 8 | 8 | | | | UR YELLOW<br>UR YELLOW |
| | 6CB–11656–10 | PLANE BEARING, CONNECTING ROD<br>ROULEMENT DE BIELLE | 8 | 8 | | | | UR GREEN<br>UR GREEN |
| | 6CB–11656–20 | PLANE BEARING, CONNECTING ROD<br>ROULEMENT DE BIELLE | 8 | 8 | | | | UR BLUE<br>UR BLUE |

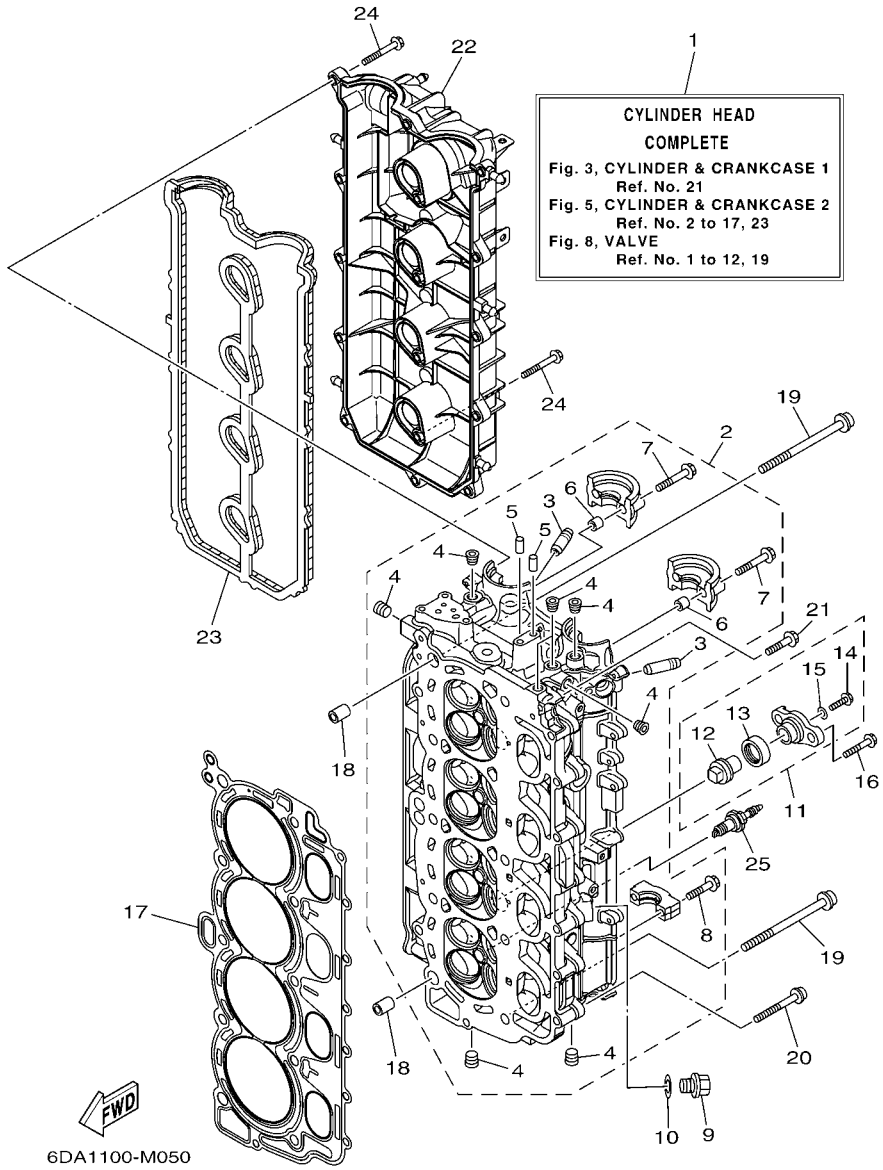


## FIG. 5 CYLINDER & CRANKCASE 2 CYLINDRE & CARTER 2

| REF. NO. | PART NO. N° PIECES | DESCRIPTION DESCRIPTION | 6DV1 | 6DW1 | | | | REMARKS REMARQUES |
|---|---|---|---|---|---|---|---|---|
| 1 | 6DA–W009A–00–9S | CYLINDER HEAD COMPLETE<br>CULASSE (ENS.) | 1 | 1 | | | | |
| 2 | 6DA–11110–00–9S | CYLINDER HEAD ASSY<br>JEU DE CULASSE | 1 | 1 | | | | |
| 3 | 6DA–11133–10 | .GUIDE, VALVE 1<br>.GUIDE, SOUPAPE 1 | 16 | 16 | | | | |
| 4 | 90344–51019 | .PLUG, TAPER SCREW<br>.PLOT, FILETE CONIQUE | 8 | 8 | | | | |
| 5 | 93606–12019 | .PIN, DOWEL<br>.GOUPILLE | 2 | 2 | | | | |
| 6 | 91809–08006 | .PIN, DOWEL<br>.GOUJON, D'ASSEMBLAGE | 4 | 4 | | | | |
| 7 | 90119–07001 | .BOLT, WITH WASHER<br>.BOULON, AVEC RONDELLE | 4 | 4 | | | | |
| 8 | 90119–07234 | .BOLT, WITH WASHER<br>.BOULON, AVEC RONDELLE | 16 | 16 | | | | |
| 9 | 90340–14M06 | PLUG, STRAIGHT SCREW<br>PLOT, FILETE DROIT | 1 | 1 | | | | |
| 10 | 90430–14115 | GASKET<br>JOINT | 1 | 1 | | | | |
| 11 | 67F–11301–00 | ANODE COVER ASSY<br>COUVERCLE ANODE (ENS.) | 2 | 2 | | | | |
| 12 | 67F–11325–01 | .ANODE<br>.ANODE | 1 | 1 | | | | |
| 13 | 67F–11328–00 | .GROMMET, ANODE<br>.PASSE-FIL | 1 | 1 | | | | |
| 14 | 90105–06M07 | .BOLT, FLANGE<br>.BOULON | 1 | 1 | | | | |
| 15 | 90430–06M03 | .GASKET<br>.JOINT | 1 | 1 | | | | |
| 16 | 95885–08025 | BOLT, FLANGE<br>BOULON, A COLLERETTE | 4 | 4 | | | | |
| 17 | 6DA–11181–00 | GASKET, CYLINDER HEAD 1<br>JOINT, DE CULASSE 1 | 1 | 1 | | | | |
| 18 | 90387–11005 | COLLAR<br>COLLERETTE | 2 | 2 | | | | |
| 19 | 90155–11002 | SCREW, FLAT FILLISTER<br>VIS, TETE OVALE PLATE | 10 | 10 | | | | |
| 20 | 90105–08175 | BOLT, FLANGE<br>BOULON | 8 | 8 | | | | |
| 21 | 90105–06151 | BOLT, FLANGE<br>BOULON | 1 | 1 | | | | |
| 22 | 6DA–11191–00 | COVER, CYLINDER HEAD 1<br>COUVERCLE, CULASSE 1 | 1 | 1 | | | | |
| 23 | 6DA–11193–00 | GASKET, HEAD COVER 1<br>JOINT, COUVERCLE DE CULASSE 1 | 1 | 1 | | | | |
| 24 | 95895–06030 | BOLT, FLANGE<br>BOULON | 16 | 16 | | | | |
| 25 | 94702–00400 | PLUG, SPARK (NGK LFR6A-11)<br>BOUGIE D'ALLUMAGE(NGK LFR6A-11 | 4 | 4 | | | | |

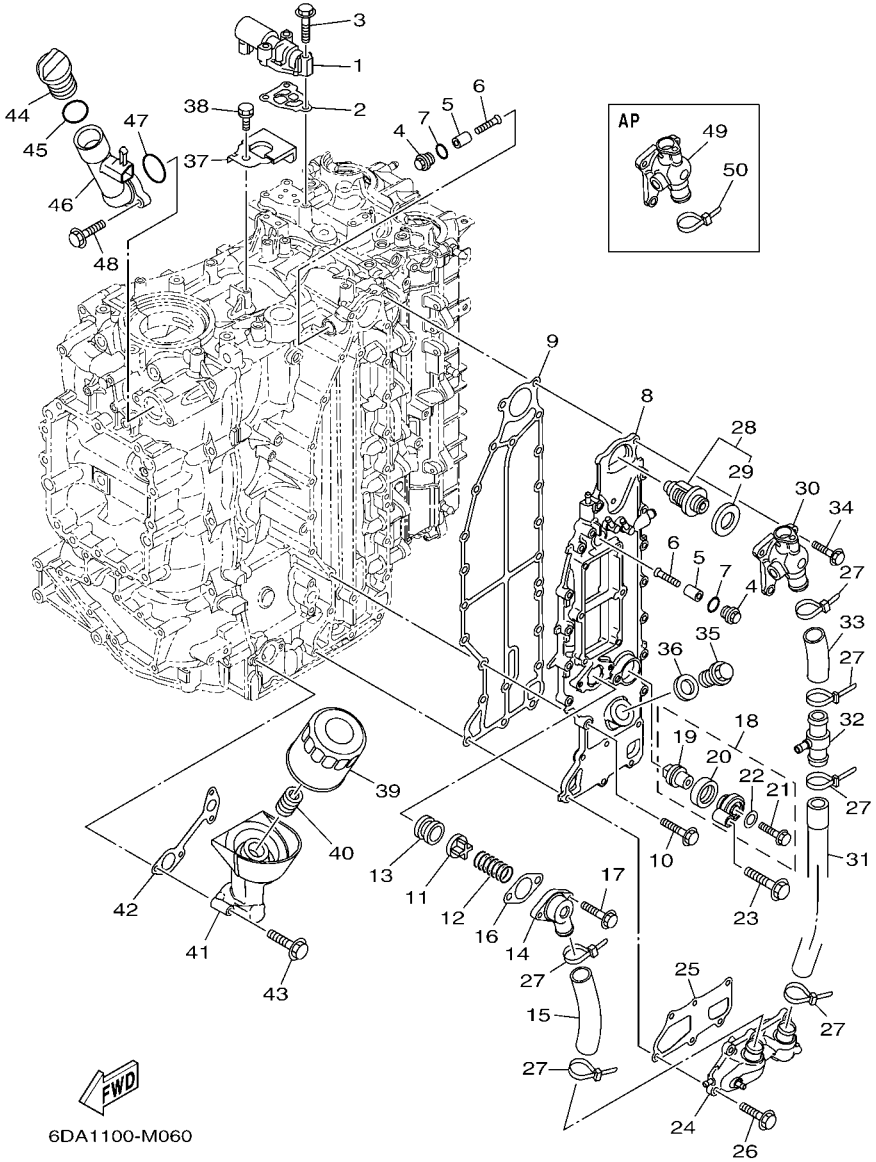


## FIG. 6 CYLINDER & CRANKCASE 3 CYLINDRE & CARTER 3

| REF. NO. | PART NO. N° PIECES | DESCRIPTION DESCRIPTION | 6DV1 | 6DW1 | | | | REMARKS REMARQUES |
|---|---|---|---|---|---|---|---|---|
| 1 | 6CB–86120–00 | SOLENOID VALVE ASSY<br>SOLENOIDE | 1 | 1 | | | | |
| 2 | 6CB–1242F–00 | GASKET, FILTER<br>JOINT, FILTRE | 1 | 1 | | | | |
| 3 | 90105–06035 | BOLT, FLANGE<br>BOULON | 3 | 3 | | | | |
| 4 | 6G8–11197–01 | PLUG, BLIND<br>PLOT, BORGNE | 2 | 2 | | | | |
| 5 | 68T–11325–00 | ANODE<br>ANODE | 2 | 2 | | | | |
| 6 | 90151–05M05 | SCREW, COUNTERSUNK<br>VIS, TETE NOYEE | 2 | 2 | | | | |
| 7 | 93210–13M63 | O-RING<br>JOINT TORIQUE | 2 | 2 | | | | |
| 8 | 6DA–41113–00–9S | OUTER COVER, EXHAUST<br>COUVERCLE, ECHAPPEMENT | 1 | 1 | | | | |
| 9 | 6DA–41114–00 | GASKET, EXHAUST OUTER COVER<br>JOINT, COUVERCLE D'ECHAPPEMENT | 1 | 1 | | | | |
| 10 | 90105–06028 | BOLT, FLANGE<br>BOULON | 14 | 14 | | | | |
| 11 | 60H–12416–00 | VALVE, PRESSURE CONTROL<br>SOUPAPE DE CONTROLEUR PRESS | 1 | 1 | | | | |
| 12 | 90501–16M11 | SPRING, COMPRESSION<br>RESSORT, COMPRESSION | 1 | 1 | | | | |
| 13 | 90480–20M05 | GROMMET<br>PASSE-FIL | 1 | 1 | | | | |
| 14 | 6G5–11372–00 | COVER, BYPASS 2<br>CONVERCLE | 1 | 1 | | | | |
| 15 | 6DA–1243A–00 | HOSE 1<br>DURITE 1 | 1 | 1 | | | | |
| 16 | 60V–11382–A0 | GASKET 2<br>JOINT 2 | 1 | 1 | | | | |
| 17 | 90119–06MA3 | BOLT, WITH WASHER<br>BOULON, AVEC RONDELLE | 2 | 2 | | | | |
| 18 | 69J–11301–00 | ANODE COVER ASSY<br>COUVERCLE ANODE (ENS.) | 1 | 1 | | | | |
| 19 | 67F–11325–01 | .ANODE<br>.ANODE | 1 | 1 | | | | |
| 20 | 67F–11328–00 | .GROMMET, ANODE<br>.PASSE-FIL | 1 | 1 | | | | |
| 21 | 90105–06M07 | .BOLT, FLANGE<br>.BOULON | 1 | 1 | | | | |
| 22 | 90430–06M03 | .GASKET<br>.JOINT | 1 | 1 | | | | |
| 23 | 97575–08540 | BOLT, WITH WASHER<br>VIS HEXAGONAL AVC RONDELLE | 1 | 1 | | | | |
| 24 | 6DA–12527–00–9S | COVER, WATER BY-PASS<br>CACHE, DERIVATHION D'EAU | 1 | 1 | | | | |
| 25 | 6DA–11381–00 | GASKET 1<br>JOINT 1 | 1 | 1 | | | | |
| 26 | 90105–06028 | BOLT, FLANGE<br>BOULON | 6 | 6 | | | | |
| 27 | 90465–11M59 | CLAMP<br>BRIDE | 6 | 6 | | | | |

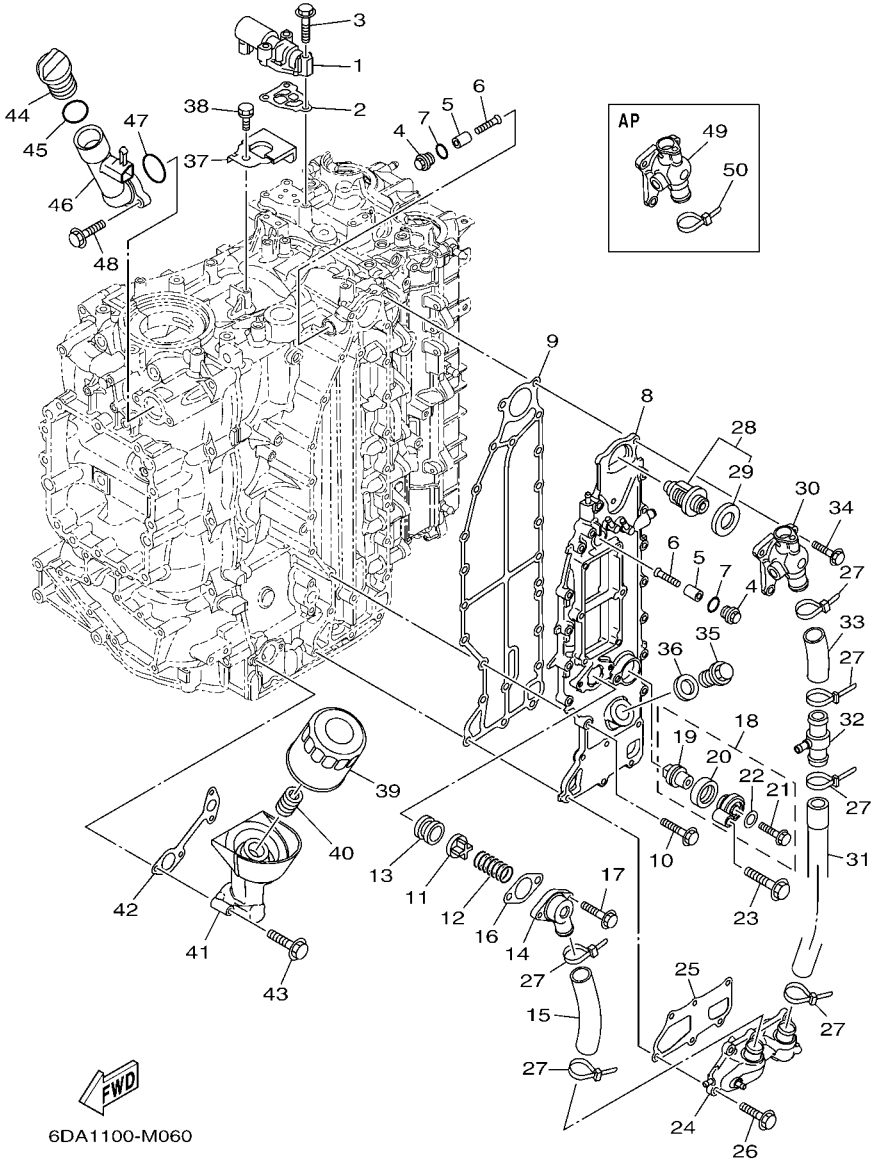


## FIG. 6 CYLINDER & CRANKCASE 3 CYLINDRE & CARTER 3

| REF. NO. | PART NO. N° PIECES | DESCRIPTION DESCRIPTION | 6DV1 | 6DW1 | | | | REMARKS REMARQUES |
|---|---|---|---|---|---|---|---|---|
| 28 | 6DA–12411–00 | THERMOSTAT<br>THERMOSTAT | 1 | 1 | | | | |
| 29 | 6AW–12412–00 | .SEAL, THERMOSTAT<br>.JOINT, THERMOSTAT | 1 | 1 | | | | |
| 30 | 6DA–12413–00–9S | COVER, THERMOSTAT<br>COUVERCLE, THERMOSTAT | 1 | 1 | | | | |
| 31 | 6DA–1243E–00 | HOSE 2<br>DURITE 2 | 1 | 1 | | | | |
| 32 | 6CE–24378–00 | PIPE, JOINT 3<br>DURITE RACCORDEMENT 3 | 1 | 1 | | | | |
| 33 | 6DA–1244H–00 | HOSE 5<br>DURITE 5 | 1 | 1 | | | | |
| 34 | 90105–06028 | BOLT, FLANGE<br>BOULON | 3 | 3 | | | | |
| 35 | 90340–18M09 | PLUG, STRAIGHT SCREW<br>PLOT, FILETE DROIT | 1 | 1 | | | | |
| 36 | 90430–18130 | GASKET<br>JOINT | 1 | 1 | | | | |
| 37 | 6P2–12491–00 | CLAMP 1<br>COLLIER 1 | 1 | 1 | | | | |
| 38 | 90119–06078 | BOLT, WITH WASHER<br>BOULON, AVEC RONDELLE | 1 | 1 | | | | |
| 39 | 69J–13440–01 | ELEMENT ASSY, OIL CLEANER<br>ELEMENT, FILTRE A HUILE | 1 | 1 | | | | |
| 40 | 6S5–12858–00 | BOLT, UNION<br>BOULON, RACCORD | 1 | 1 | | | | |
| 41 | 6DA–13446–00 | CONNECTOR<br>CONNECTEUR | 1 | 1 | | | | |
| 42 | 6DA–13475–00 | GASKET<br>JOINT | 1 | 1 | | | | |
| 43 | 90105–06151 | BOLT, FLANGE<br>BOULON | 4 | 4 | | | | |
| 44 | 6G8–15363–00 | PLUG, OIL<br>PLOT, HUILE | 1 | 1 | | | | |
| 45 | 93210–24M79 | O-RING<br>JOINT TORIQUE | 1 | 1 | | | | |
| 46 | 6DA–15319–00 | JOINT<br>JOINT | 1 | 1 | | | | |
| 47 | 93210–357A3 | O-RING<br>JOINT TORIQUE | 1 | 1 | | | | |
| 48 | 90105–06037 | BOLT, FLANGE<br>BOULON | 2 | 2 | | | | |
| 49 | 6DA–1241B–00–9S | COVER, THERMOSTAT 2<br>COUVERCLE, THERMOSTAT 2 | 1 | 1 | | | | AP<br>AP |
| 50 | 90465–11M59 | CLAMP<br>BRIDE | 1 | 1 | | | | AP<br>AP |

## FIG. 7 CYLINDER & CRANKCASE 4 CYLINDRE & CARTER 4

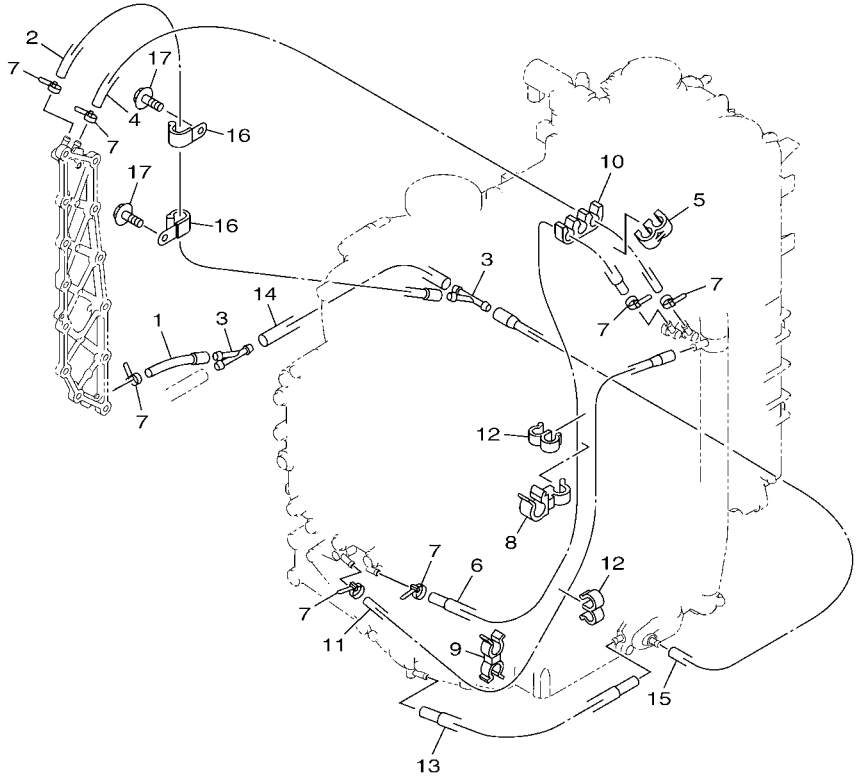


6DA1100-M070

| REF. NO. | PART NO. N° PIECES | DESCRIPTION DESCRIPTION | 6DV1 | 6DW1 | | | | REMARKS REMARQUES |
|---|---|---|---|---|---|---|---|---|
| 1 | 6DA–12576–00 | HOSE 1<br>TUYAU 1 | 1 | 1 | | | | |
| 2 | 6DA–12589–00 | HOSE 6<br>TUYAU 6 | 1 | 1 | | | | |
| 3 | 6CE–24377–00 | PIPE, JOINT 2<br>DURITE RACCORDEMENT 2 | 2 | 2 | | | | |
| 4 | 90445–09008 | HOSE (L470)<br>DURITE (L470) | 1 | 1 | | | | |
| 5 | 90464–09M21 | CLAMP<br>BRIDE | 1 | 1 | | | | |
| 6 | 6DA–12578–00 | HOSE 3<br>TUYAU 3 | 1 | 1 | | | | |
| 7 | 90465–11M10 | CLAMP<br>BRIDE | 7 | 7 | | | | |
| 8 | 90464–12010 | CLAMP<br>BRIDE | 1 | 1 | | | | |
| 9 | 90464–09142 | CLAMP<br>BRIDE | 1 | 1 | | | | |
| 10 | 90464–09020 | CLAMP<br>BRIDE | 1 | 1 | | | | |
| 11 | 6DA–12579–00 | HOSE 4<br>TUYAU 4 | 1 | 1 | | | | |
| 12 | 90464–09M31 | CLAMP<br>BRIDE | 2 | 2 | | | | |
| 13 | 6DA–12552–00 | HOSE 8<br>DURITE 8 | 1 | 1 | | | | |
| 14 | 90445–10057 | HOSE (L170)<br>DURITE (L170) | 1 | 1 | | | | |
| 15 | 6DA–12589–00 | HOSE 6<br>TUYAU 6 | 1 | 1 | | | | |
| 16 | 90465–08M83 | CLAMP<br>BRIDE | 2 | 2 | | | | |
| 17 | 95895–06012 | BOLT, FLANGE<br>BOULON | 2 | 2 | | | | |

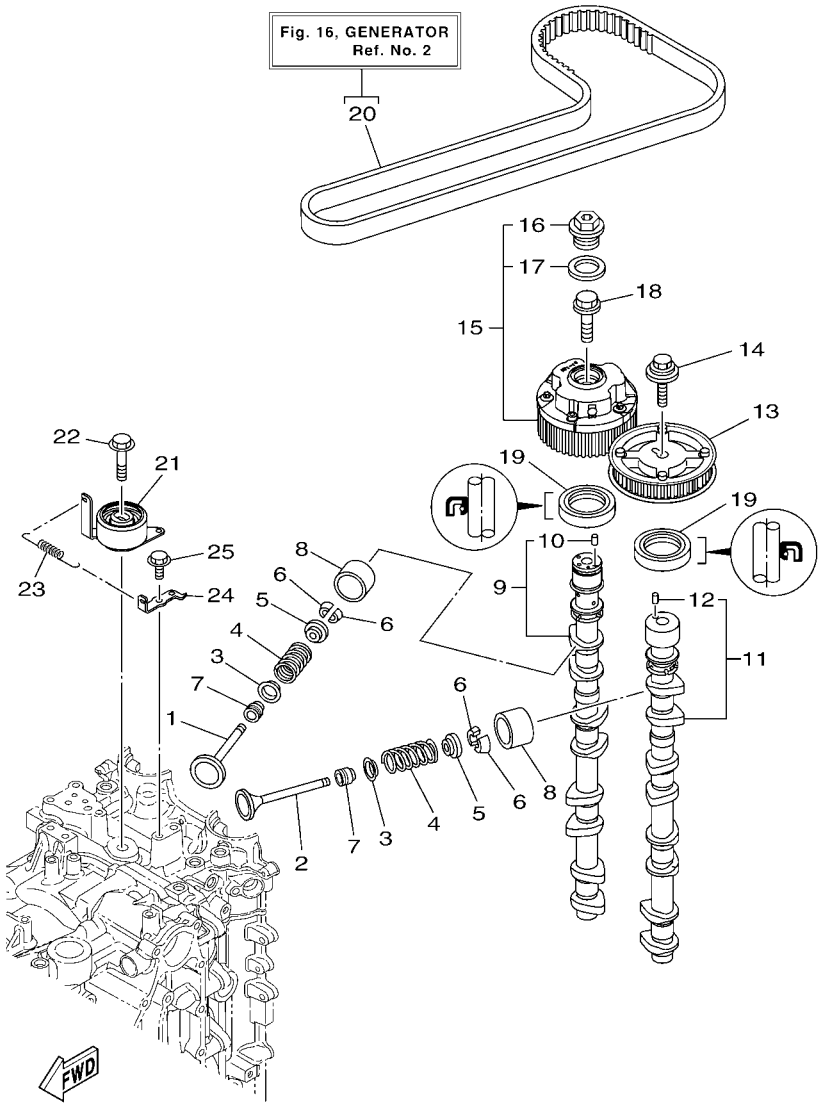


6DA1100-M080

## FIG. 8 VALVE SOUPAPE

| REF. NO. | PART NO. N° PIECES | DESCRIPTION DESCRIPTION | 6DV1 | 6DW1 | | | | REMARKS REMARQUES |
|---|---|---|---|---|---|---|---|---|
| 1 | 6CB–12111–00 | VALVE, INTAKE<br>SOUPAPE, ADMISSION | 8 | 8 | | | | |
| 2 | 6DA–12121–00 | VALVE, EXHAUST<br>SOUPAPE, ECHAPPEMENT | 8 | 8 | | | | |
| 3 | K0F–A3743–00 | SEAT, VALVE SPRING<br>SIEGE, RESSORT DE SOUPAPE | 16 | 16 | | | | |
| 4 | 6CB–12113–00 | SPRING, VALVE INNER<br>RESSORT DE SOUPAPE, INTERNE | 16 | 16 | | | | |
| 5 | K0F–A3741–00 | RETAINER, VALVE SPRING<br>BUTEE DE RESSORT DE SOUPAPA | 16 | 16 | | | | |
| 6 | K0F–A3742–00 | LOCK, VALVE SPRING RETAINER<br>FRAISE, SOUPAPE | 32 | 32 | | | | |
| 7 | 51Y–12119–00 | SEAL, VALVE STEM<br>JOINT, QUEUE DE SOUPAPE | 16 | 16 | | | | |
| 8 | K0F–A3751–00 | LIFTER, VALVE (3.000)<br>LEVE-SOUPAPE (3.000) | 16 | 16 | | | | UR<br>UR |
| | K0F–A3751–10 | LIFTER, VALVE (3.025)<br>LEVE-SOUPAPE (3.025) | 16 | 16 | | | | UR<br>UR |
| | K0F–A3751–20 | LIFTER, VALVE (3.050)<br>LEVE-SOUPAPE (3.050) | 16 | 16 | | | | UR<br>UR |
| | K0F–A3751–30 | LIFTER, VALVE (3.075)<br>LEVE-SOUPAPE (3.075) | 16 | 16 | | | | UR<br>UR |
| | K0F–A3751–40 | LIFTER, VALVE (3.100)<br>LEVE-SOUPAPE (3.100) | 16 | 16 | | | | UR<br>UR |
| | K0F–A3751–50 | LIFTER, VALVE (3.122)<br>LEVE-SOUPAPE (3.122) | 16 | 16 | | | | UR<br>UR |
| | K0F–A3751–60 | LIFTER, VALVE (3.142)<br>LEVE-SOUPAPE (3.142) | 16 | 16 | | | | UR<br>UR |
| | K0F–A3751–70 | LIFTER, VALVE (3.162)<br>LEVE-SOUPAPE (3.162) | 16 | 16 | | | | UR<br>UR |
| | K0F–A3751–80 | LIFTER, VALVE (3.182)<br>LEVE-SOUPAPE (3.182) | 16 | 16 | | | | UR<br>UR |
| | K0F–A3751–90 | LIFTER, VALVE (3.202)<br>LEVE-SOUPAPE (3.202) | 16 | 16 | | | | UR<br>UR |
| | K0F–A3751–A0 | LIFTER, VALVE (3.222)<br>LEVE-SOUPAPE (3.222) | 16 | 16 | | | | UR<br>UR |
| | K0F–A3751–B0 | LIFTER, VALVE (3.242)<br>LEVE-SOUPAPE (3.242) | 16 | 16 | | | | UR<br>UR |
| | K0F–A3751–C0 | LIFTER, VALVE (3.262)<br>LEVE-SOUPAPE (3.262) | 16 | 16 | | | | UR<br>UR |
| | K0F–A3751–D0 | LIFTER, VALVE (3.282)<br>LEVE-SOUPAPE (3.282) | 16 | 16 | | | | UR<br>UR |
| | K0F–A3751–E0 | LIFTER, VALVE (3.302)<br>LEVE-SOUPAPE (3.302) | 16 | 16 | | | | UR<br>UR |
| | K0F–A3751–F0 | LIFTER, VALVE (3.322)<br>LEVE-SOUPAPE (3.322) | 16 | 16 | | | | UR<br>UR |
| | K0F–A3751–G0 | LIFTER, VALVE (3.342)<br>LEVE-SOUPAPE (3.342) | 16 | 16 | | | | UR<br>UR |
| | K0F–A3751–H0 | LIFTER, VALVE (3.362)<br>LEVE-SOUPAPE (3.362) | 16 | 16 | | | | UR<br>UR |
| | K0F–A3751–J0 | LIFTER, VALVE ((3.382)<br>LEVE-SOUPAPE ((3.382) | 16 | 16 | | | | UR<br>UR |
| | K0F–A3751–K0 | LIFTER, VALVE (3.402)<br>LEVE-SOUPAPE (3.402) | 16 | 16 | | | | UR<br>UR |

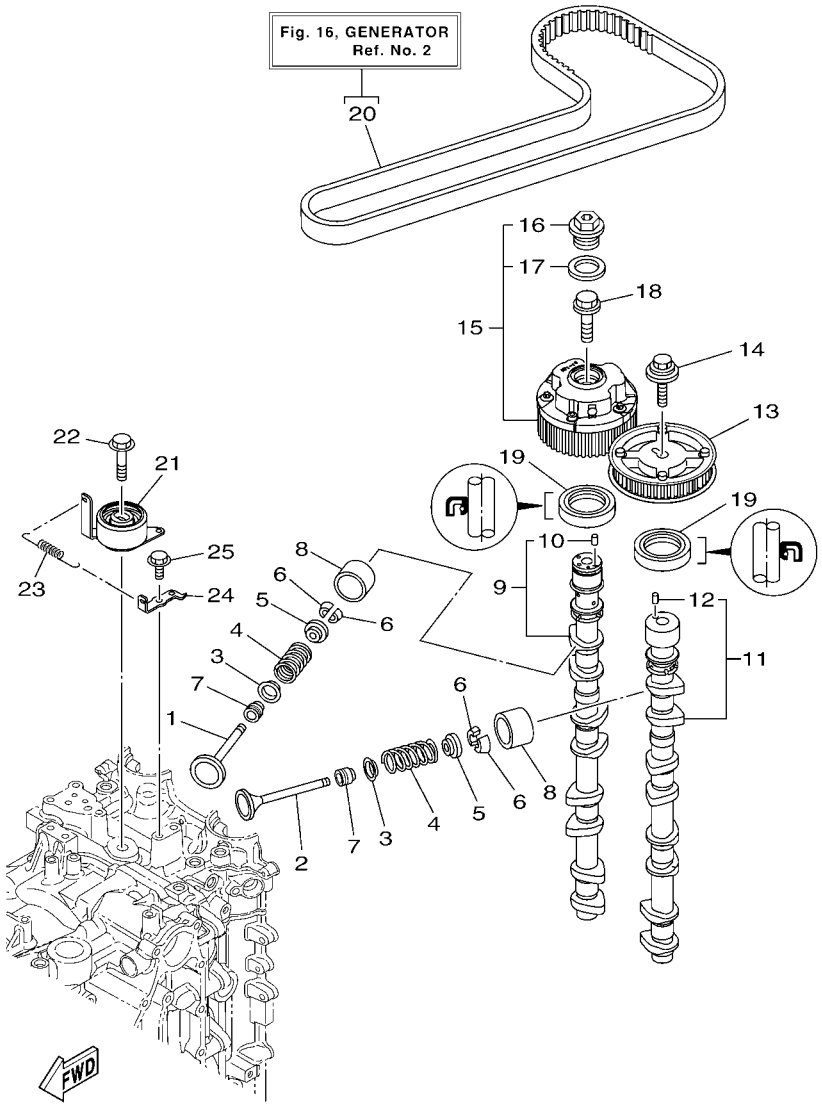


6DA1100-M080

## FIG. 8 VALVE — SOUPAPE

| REF. NO. | PART NO. N° PIECES | DESCRIPTION DESCRIPTION | 6DV1 | 6DW1 | | | | REMARKS REMARQUES |
|---|---|---|---|---|---|---|---|---|
| 8 | K0F–A3751–L0 | LIFTER, VALVE (3.422)<br>LEVE-SOUPAPE (3.422) | 16 | 16 | | | | UR<br>UR |
| | K0F–A3751–M0 | LIFTER, VALVE (3.442)<br>LEVE-SOUPAPE (3.442) | 16 | 16 | | | | UR<br>UR |
| | K0F–A3751–N0 | LIFTER, VALVE (3.462)<br>LEVE-SOUPAPE (3.462) | 16 | 16 | | | | UR<br>UR |
| | K0F–A3751–P0 | LIFTER, VALVE (3.482)<br>LEVE-SOUPAPE (3.482) | 16 | 16 | | | | UR<br>UR |
| | K0F–A3751–R0 | LIFTER, VALVE (3.502)<br>LEVE-SOUPAPE (3.502) | 16 | 16 | | | | UR<br>UR |
| | K0F–A3751–S0 | LIFTER, VALVE (3.522)<br>LEVE-SOUPAPE (3.522) | 16 | 16 | | | | UR<br>UR |
| | K0F–A3751–T0 | LIFTER, VALVE (3.542)<br>LEVE-SOUPAPE (3.542) | 16 | 16 | | | | UR<br>UR |
| | K0F–A3753–00 | LIFTER, VALVE (3.562)<br>LEVE-SOUPAPE (3.562) | 16 | 16 | | | | UR<br>UR |
| | K0F–A3753–10 | LIFTER, VALVE (3.582)<br>LEVE-SOUPAPE (3.582) | 16 | 16 | | | | UR<br>UR |
| | K0F–A3753–20 | LIFTER, VALVE (3.602)<br>LEVE-SOUPAPE (3.602) | 16 | 16 | | | | UR<br>UR |
| | K0F–A3753–30 | LIFTER, VALVE (3.625)<br>LEVE-SOUPAPE (3.625) | 16 | 16 | | | | UR<br>UR |
| | K0F–A3753–40 | LIFTER, VALVE (3.650)<br>LEVE-SOUPAPE (3.650) | 16 | 16 | | | | UR<br>UR |
| | K0F–A3753–50 | LIFTER, VALVE (3.675)<br>LEVE-SOUPAPE (3.675) | 16 | 16 | | | | UR<br>UR |
| | K0F–A3753–60 | LIFTER, VALVE (3.700)<br>LEVE-SOUPAPE (3.700) | 16 | 16 | | | | UR<br>UR |
| | K0F–A3753–70 | LIFTER, VALVE (3.725)<br>LEVE-SOUPAPE (3.725) | 16 | 16 | | | | UR<br>UR |
| 9 | 6DA–12171–00 | CAMSHAFT 1<br>ARBRE A CAMES 1 | 1 | 1 | | | | |
| 10 | 93605–10108 | .PIN, DOWEL<br>.AXE | 1 | 1 | | | | |
| 11 | 6DA–12181–00 | CAMSHAFT 2<br>ARBRE A CAMES 2 | 1 | 1 | | | | |
| 12 | 93605–10108 | .PIN, DOWEL<br>.AXE | 1 | 1 | | | | |
| 13 | 6DA–115A0–00 | DRIVEN GEAR ASSY<br>CLOCHE D'EMBRAYAGE | 1 | 1 | | | | |
| 14 | 90119–10050 | BOLT, WITH WASHER<br>BOULON, AVEC RONDELLE | 1 | 1 | | | | |
| 15 | 6P2–12645–20 | PULLEY ASSY 1<br>POULIE COMPLET 1 | 1 | 1 | | | | |
| 16 | 6P2–12623–00 | .BOLT<br>.BOULON | 1 | 1 | | | | |
| 17 | 6P2–12663–00 | .GASKET<br>.JOINT | 1 | 1 | | | | |
| 18 | 6P2–12615–00 | BOLT<br>BOULON | 1 | 1 | | | | |
| 19 | 93102–38008 | OIL SEAL<br>JOINT SPY | 2 | 2 | | | | |
| 20 | 6DA–W4624–00 | BELT (WITH ROTOR BOLTS)<br>COURROIE (AVEC BOULON) | 1 | 1 | | | | |

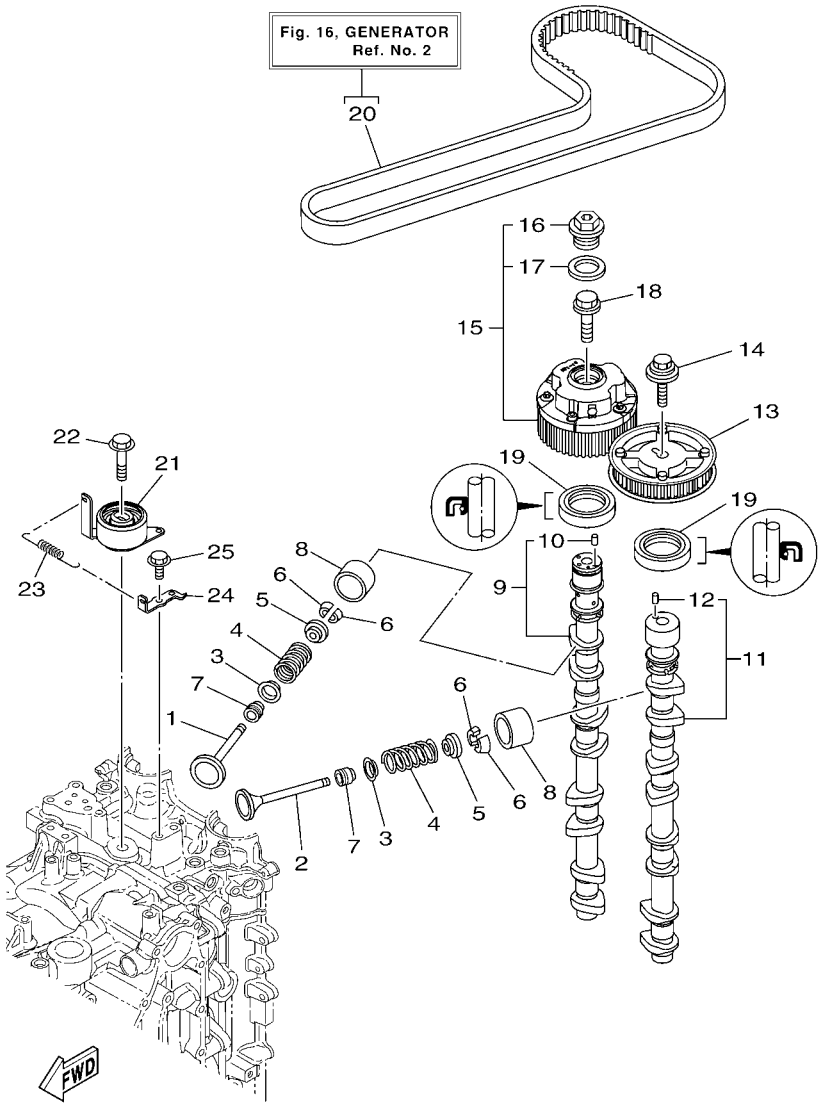


6DA1100-M080

## FIG. 8 VALVE — SOUPAPE

| REF. NO. | PART NO. N° PIECES | DESCRIPTION DESCRIPTION | 6DV1 | 6DW1 | | | | REMARKS REMARQUES |
|---|---|---|---|---|---|---|---|---|
| 21 | 6DA–11590–00 | TENSIONER ASSY<br>TENDEUR (ENS.) | 1 | 1 | | | | |
| 22 | 90119–10M07 | BOLT, WITH WASHER<br>BOULON, AVEC RONDELLE | 1 | 1 | | | | |
| 23 | 90506–18025 | SPRING, TENSION<br>RESSORT, TENSION | 1 | 1 | | | | |
| 24 | 6DA–11595–00 | PLATE,VALVE<br>PLAQUE DE SOUPAPE | 1 | 1 | | | | |
| 25 | 97575–06516 | BOLT, WITH WASHER<br>VIS HEXAGONAL AVC RONDELLE | 1 | 1 | | | | |

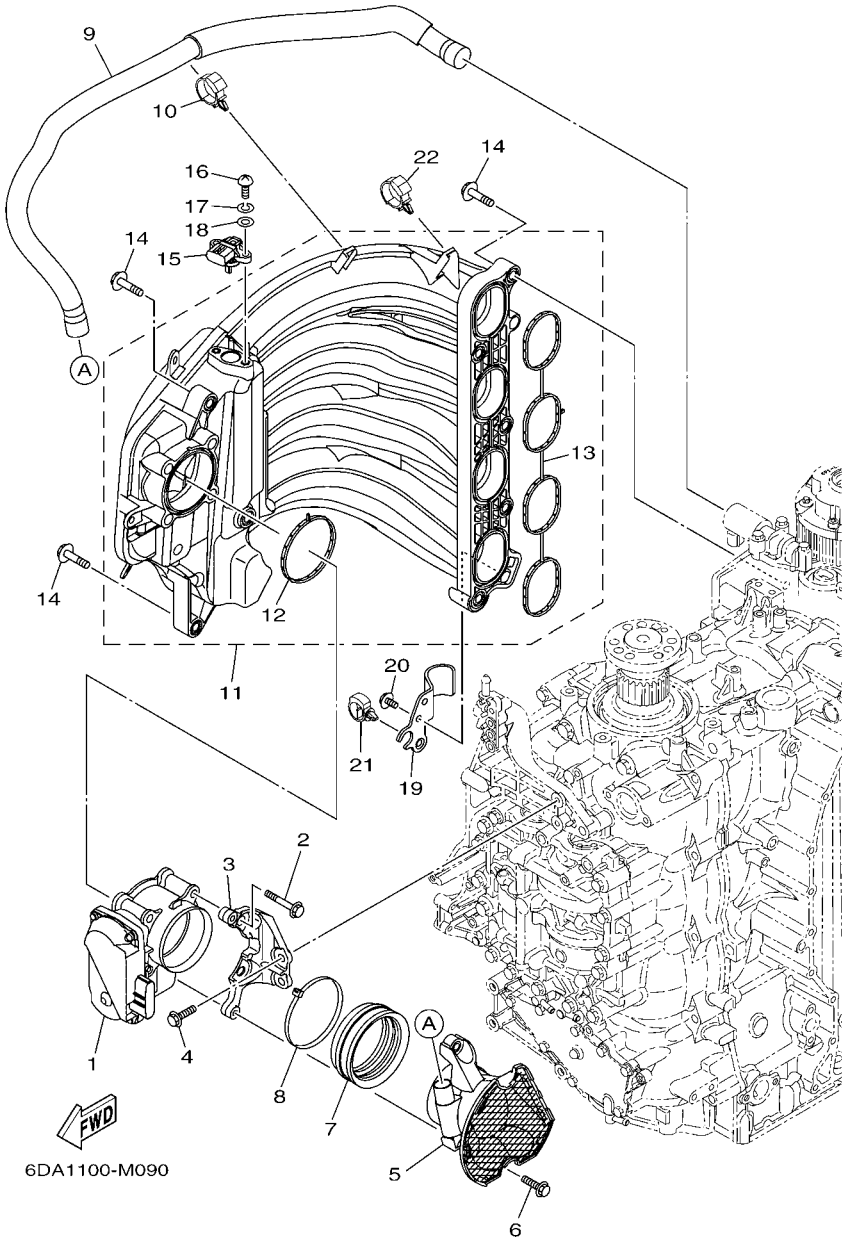


## FIG. 9 INTAKE 1 — ADMISSION 1

| REF. NO. | PART NO. N° PIECES | DESCRIPTION DESCRIPTION | 6DV1 | 6DW1 | | | | REMARKS REMARQUES |
|---|---|---|---|---|---|---|---|---|
| 1 | 6DA–13751–00 | BODY, THROTTLE 1<br>CARTER 1 | 1 | 1 | | | | |
| 2 | 97575–08560 | BOLT, WITH WASHER<br>VIS HEXAGONAL AVC RONDELLE | 4 | 4 | | | | |
| 3 | 6DA–13152–00 | STAY 2<br>SUPPORT2 | 1 | 1 | | | | |
| 4 | 95875–06025 | BOLT, FLANGE<br>BOULON, A COLLERETTE | 2 | 2 | | | | |
| 5 | 6DA–14440–00 | SILENCER ASSY, INTAKE<br>SIENCIEUX D'ADMISSION | 1 | 1 | | | | |
| 6 | 95875–06025 | BOLT, FLANGE<br>BOULON, A COLLERETTE | 2 | 2 | | | | |
| 7 | 6P2–1441J–00 | PIPE, SILENCER<br>DURITE, DE SILENCIEUX | 1 | 1 | | | | |
| 8 | 90464–99004 | CLAMP<br>BRIDE | 1 | 1 | | | | |
| 9 | 6DA–15373–00 | PIPE, BREATHER<br>DURITE DE RENIFLARD | 1 | 1 | | | | |
| 10 | 90464–12183 | CLAMP<br>BRIDE | 1 | 1 | | | | |
| 11 | 6DA–13641–00 | MANIFOLD, INTAKE 1<br>TUBULURE, ADMISSION 1 | 1 | 1 | | | | |
| 12 | 6DA–13646–00 | .GASKET, MANIFOLD 2<br>.JOINT, TUBULURE 2 | 1 | 1 | | | | |
| 13 | 6DA–13645–00 | .GASKET, MANIFOLD 1<br>.JOINT, TUBULURE 1 | 1 | 1 | | | | |
| 14 | 90119–08020 | BOLT, WITH WASHER<br>BOULON, AVEC RONDELLE | 9 | 9 | | | | |
| 15 | 68F–83688–10 | SENSOR ASSY<br>SONDE (ENS.) | 1 | 1 | | | | |
| 16 | 97885–05016 | SCREW, PAN HEAD<br>VIS, A ENCOCHE | 2 | 2 | | | | |
| 17 | 92995–05100 | WASHER<br>RONDELLE | 2 | 2 | | | | |
| 18 | 92995–05600 | WASHER<br>RONDELLE | 2 | 2 | | | | |
| 19 | 6DA–13881–00 | COVER 1<br>COUVERCLE 1 | 1 | 1 | | | | |
| 20 | 95895–06012 | BOLT, FLANGE<br>BOULON | 2 | 2 | | | | |
| 21 | 90464–20181 | CLAMP<br>BRIDE | 1 | 1 | | | | |
| 22 | 90464–12183 | CLAMP<br>BRIDE | 1 | 1 | | | | |

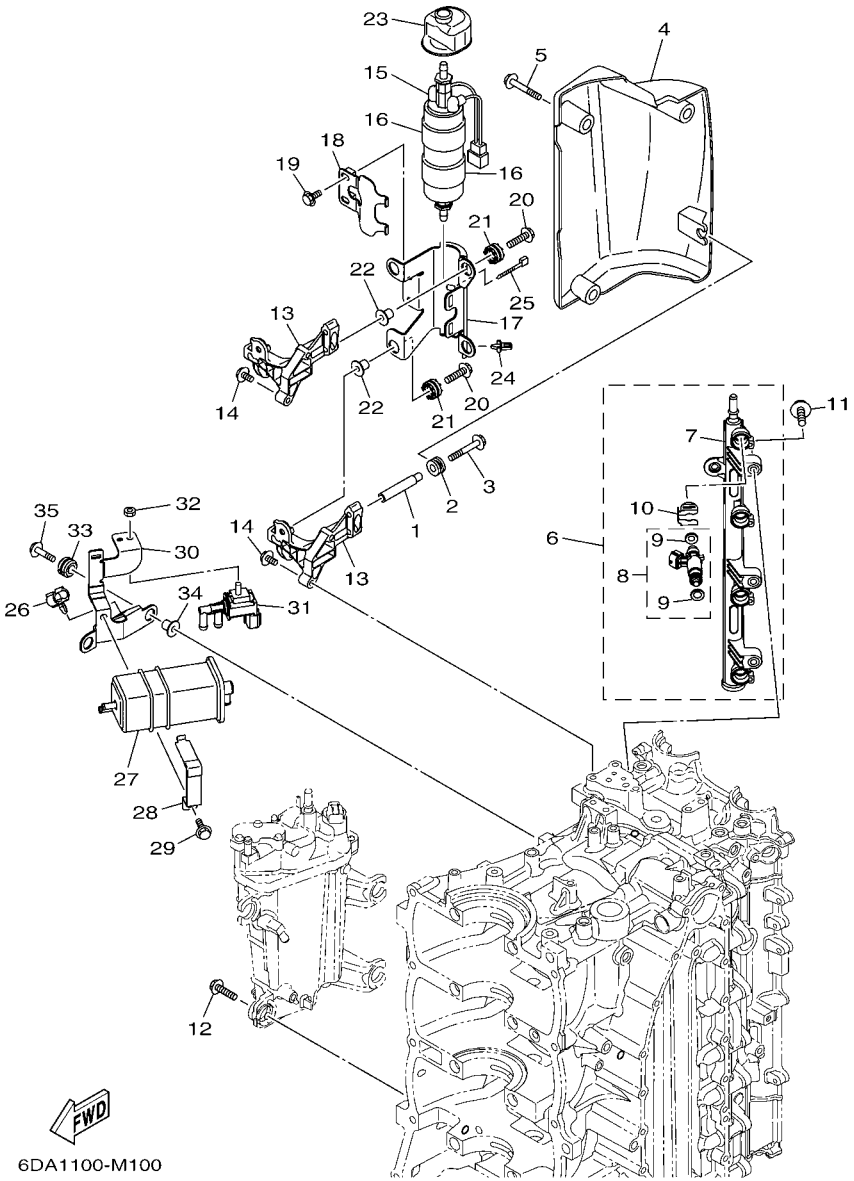


## FIG. 10 INTAKE 2 — ADMISSION 2

| REF. NO. | PART NO. N° PIECES | DESCRIPTION DESCRIPTION | 6DV1 | 6DW1 | | | | REMARKS REMARQUES |
|---|---|---|---|---|---|---|---|---|
| 1 | 90387–06283 | COLLAR<br>COLLERETTE | 1 | 1 | | | | |
| 2 | 90480–12314 | GROMMET<br>PASSE-FIL | 1 | 1 | | | | |
| 3 | 90105–06054 | BOLT, FLANGE<br>BOULON | 1 | 1 | | | | |
| 4 | 6DA–13564–00 | COVER, MANIFOLD<br>COUVERCLE, TUBULURE | 1 | 1 | | | | |
| 5 | 95875–06020 | BOLT, FLANGE<br>BOULON, A COLLERETTE | 3 | 3 | | | | |
| 6 | 6DA–13160–00 | DELIVERY PIPE ASSY 1<br>ENS. TUBE DE REFOULEMENT 1 | 1 | 1 | | | | |
| 7 | 6DA–13161–00 | .PIPE, DELIVERY 1<br>.DURITE REFOULEMENT 1 | 1 | 1 | | | | |
| 8 | 6DA–13761–00 | .INJECTOR<br>.INJECTEUR | 4 | 4 | | | | |
| 9 | 6AW–1410B–00 | ..PACKING KIT<br>..POCHETTE DE JOINTS | 1 | 1 | | | | |
| 10 | 6AW–13577–10 | .CLIP<br>.AGRAFE | 4 | 4 | | | | |
| 11 | 90105–06M08 | BOLT, FLANGE<br>BOULON | 3 | 3 | | | | |
| 12 | 90119–06M24 | BOLT, WITH WASHER<br>BOULON, AVEC RONDELLE | 4 | 4 | | | | |
| 13 | 6DA–24425–00 | BRACKET, FUEL PUMP 1<br>SUPPORT, POMPE A ESSENCE 1 | 2 | 2 | | | | |
| 14 | 90105–06M08 | BOLT, FLANGE<br>BOULON | 4 | 4 | | | | |
| 15 | 6CB–24410–00 | FUEL PUMP ASSY<br>POMPE A ESSENCE | 1 | 1 | | | | |
| 16 | 6DA–24492–00 | BUSH, FUEL PUMP<br>BAGUE | 2 | 2 | | | | |
| 17 | 6DA–24491–00 | BRACKET, FUEL PUMP<br>SUPPORT, POMPE A ESSENCE | 1 | 1 | | | | |
| 18 | 6DA–24426–00 | BRACKET, FUEL PUMP 2<br>SUPPORT, POMPE A ESSENCE 2 | 1 | 1 | | | | |
| 19 | 95895–06012 | BOLT, FLANGE<br>BOULON | 2 | 2 | | | | |
| 20 | 90119–06M17 | BOLT, WITH WASHER<br>BOULON, AVEC RONDELLE | 4 | 4 | | | | |
| 21 | 60V–85516–00 | SPACER<br>ENTRETOISE | 4 | 4 | | | | |
| 22 | 90387–06M60 | COLLAR<br>COLLERETTE | 4 | 4 | | | | |
| 23 | 6DA–24462–00 | CAP, BLIND<br>COUVERCLE, BORGNE | 1 | 1 | | | | |
| 24 | 90464–06001 | CLAMP<br>BRIDE | 1 | 1 | | | | |
| 25 | 90465–11M10 | CLAMP<br>BRIDE | 1 | 1 | | | | |
| 26 | 90464–09130 | CLAMP<br>BRIDE | 1 | 1 | | | | |
| 27 | 6P2–24170–00 | CANISTER ASSY<br>BANDE, RASERVOIR A ESSENCE | 1 | 1 | | | | |

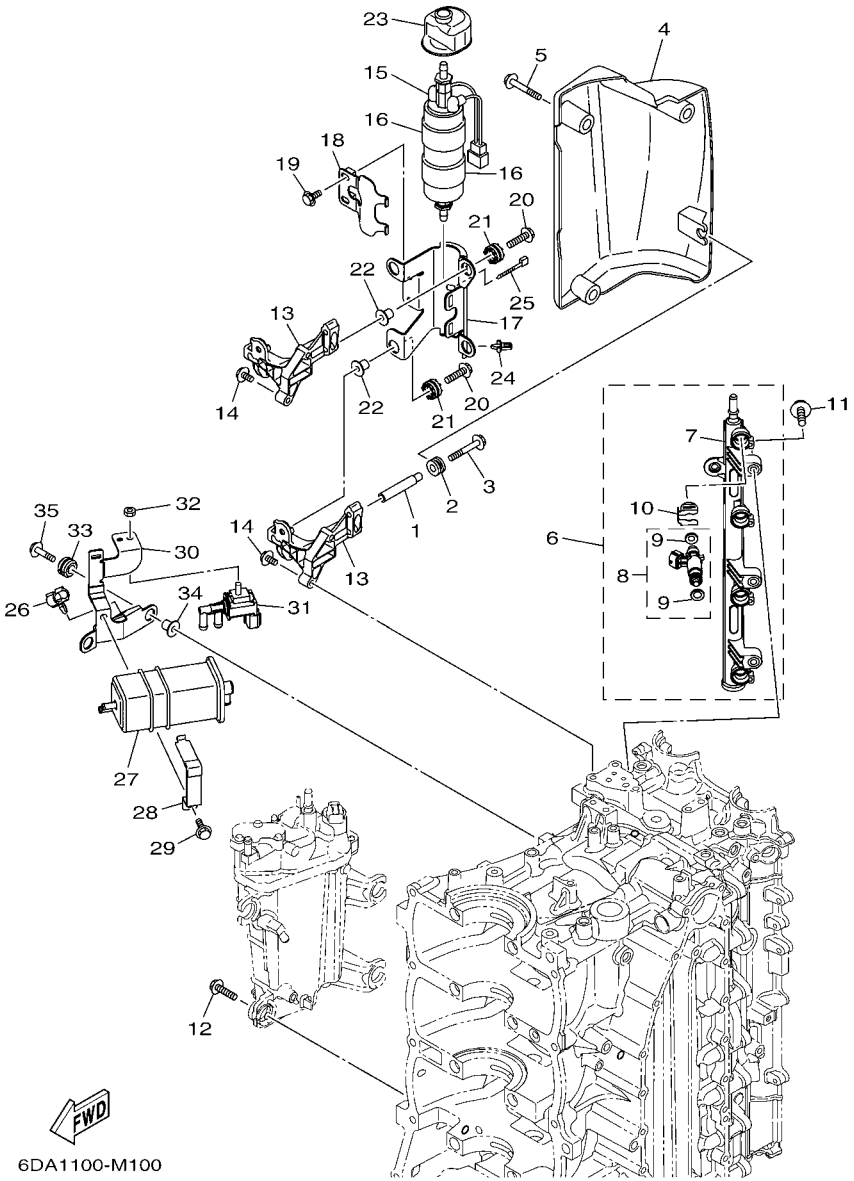


## FIG. 10 INTAKE 2 — ADMISSION 2

| REF. NO. | PART NO. N° PIECES | DESCRIPTION DESCRIPTION | 6DV1 | 6DW1 | | | | REMARKS REMARQUES |
|---|---|---|---|---|---|---|---|---|
| 28 | 63P–2419A–01 | HOLDER<br>SUPPORT | 1 | 1 | | | | |
| 29 | 95895–06016 | BOLT, FLANGE<br>BOULON | 1 | 1 | | | | |
| 30 | 6DA–2134X–00 | BRACKET, CANISTER<br>SUPPORT | 1 | 1 | | | | |
| 31 | 6C5–86120–00 | SOLENOID VALVE ASSY<br>SOLENOIDE | 1 | 1 | | | | |
| 32 | 95380–06600 | NUT, HEXAGON<br>ECROU | 1 | 1 | | | | |
| 33 | 90480–14031 | GROMMET<br>PASSE-FIL | 2 | 2 | | | | |
| 34 | 90387–06M60 | COLLAR<br>COLLERETTE | 2 | 2 | | | | |
| 35 | 90119–06M17 | BOLT, WITH WASHER<br>BOULON, AVEC RONDELLE | 2 | 2 | | | | |

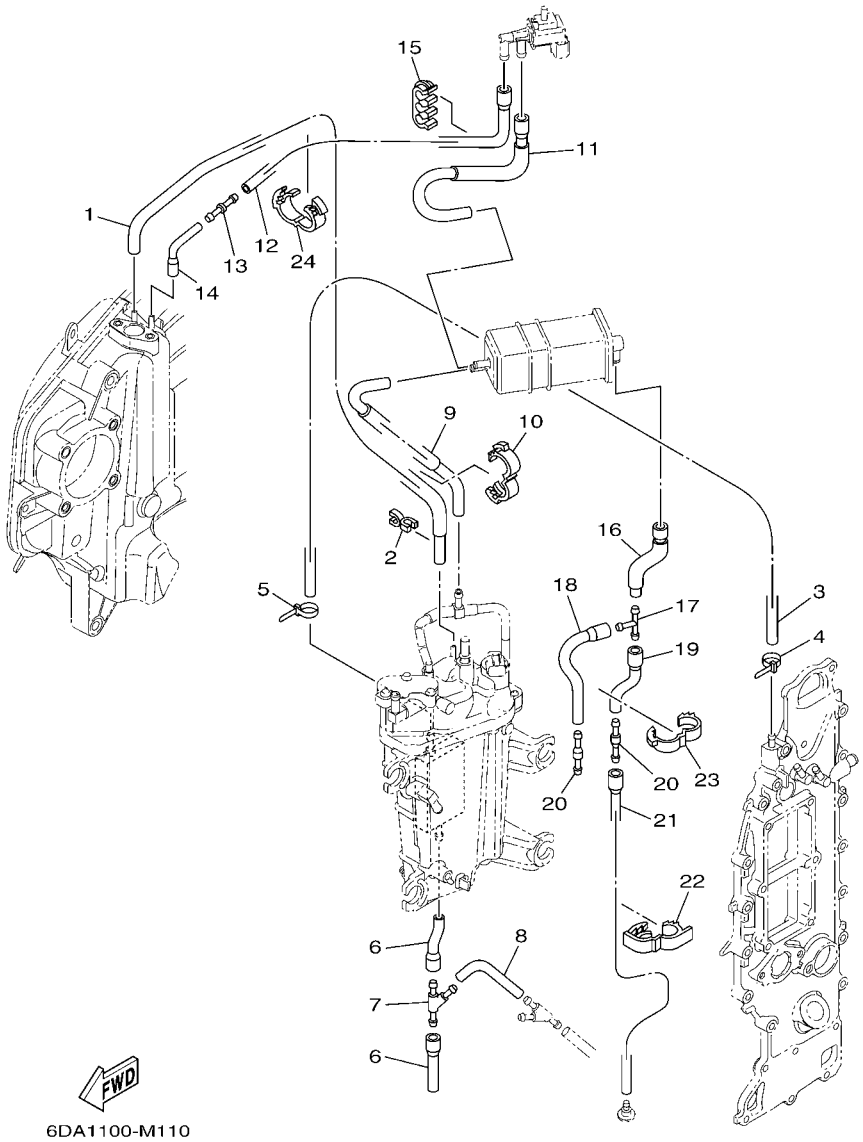


## FIG. 11 INTAKE 3 — ADMISSION 3

| REF. NO. | PART NO. N° PIECES | DESCRIPTION DESCRIPTION | 6DV1 | 6DW1 | | | | REMARKS REMARQUES |
|---|---|---|---|---|---|---|---|---|
| 1 | 6DA–13532–00 | HOSE, VACUUM SENSING 3<br>DURITE 3 | 1 | 1 | | | | |
| 2 | 90464–07M41 | CLAMP<br>BRIDE | 1 | 1 | | | | |
| 3 | 90445–09120 | HOSE (L600)<br>DURITE (L600) | 1 | 1 | | | | |
| 4 | 90465–11M10 | CLAMP<br>BRIDE | 1 | 1 | | | | |
| 5 | 90465–11M10 | CLAMP<br>BRIDE | 1 | 1 | | | | |
| 6 | 6DA–12576–00 | HOSE 1<br>TUYAU 1 | 2 | 2 | | | | |
| 7 | 6CE–24377–00 | PIPE, JOINT 2<br>DURITE RACCORDEMENT 2 | 1 | 1 | | | | |
| 8 | 90445–10056 | HOSE (L85)<br>DURITE (L85) | 1 | 1 | | | | |
| 9 | 6DA–1475A–00 | PIPE 1<br>DURITE 1 | 1 | 1 | | | | |
| 10 | 90464–16001 | CLAMP<br>BRIDE | 1 | 1 | | | | |
| 11 | 6DA–1475F–00 | PIPE 3<br>DURITE 3 | 1 | 1 | | | | |
| 12 | 6DA–2416A–00 | HOSE<br>DURITE | 1 | 1 | | | | |
| 13 | 6CB–14989–00 | ORIFICE, AIR VENT<br>OR1F1CE | 1 | 1 | | | | |
| 14 | 6DA–1475G–00 | PIPE 4<br>DURITE 4 | 1 | 1 | | | | |
| 15 | 90464–10011 | CLAMP<br>BRIDE | 1 | 1 | | | | |
| 16 | 6DA–13545–00 | HOSE 1<br>DURITE 1 | 1 | 1 | | | | |
| 17 | 688–24378–00 | PIPE, JOINT 3<br>DURITE RACCORDEMENT 3 | 1 | 1 | | | | |
| 18 | 68V–13546–10 | HOSE 2<br>DURITE 2 | 1 | 1 | | | | |
| 19 | 6DA–13548–00 | HOSE, AIR 4<br>DURITE, A AIR 4 | 1 | 1 | | | | |
| 20 | 6E5–21744–00 | BREATHER<br>RENIFLARD | 2 | 2 | | | | |
| 21 | 6DA–13547–00 | HOSE 3<br>DURITE 3 | 1 | 1 | | | | |
| 22 | 90464–18004 | CLAMP<br>BRIDE | 1 | 1 | | | | |
| 23 | 90464–16001 | CLAMP<br>BRIDE | 1 | 1 | | | | |
| 24 | 90464–16001 | CLAMP<br>BRIDE | 1 | 1 | | | | |

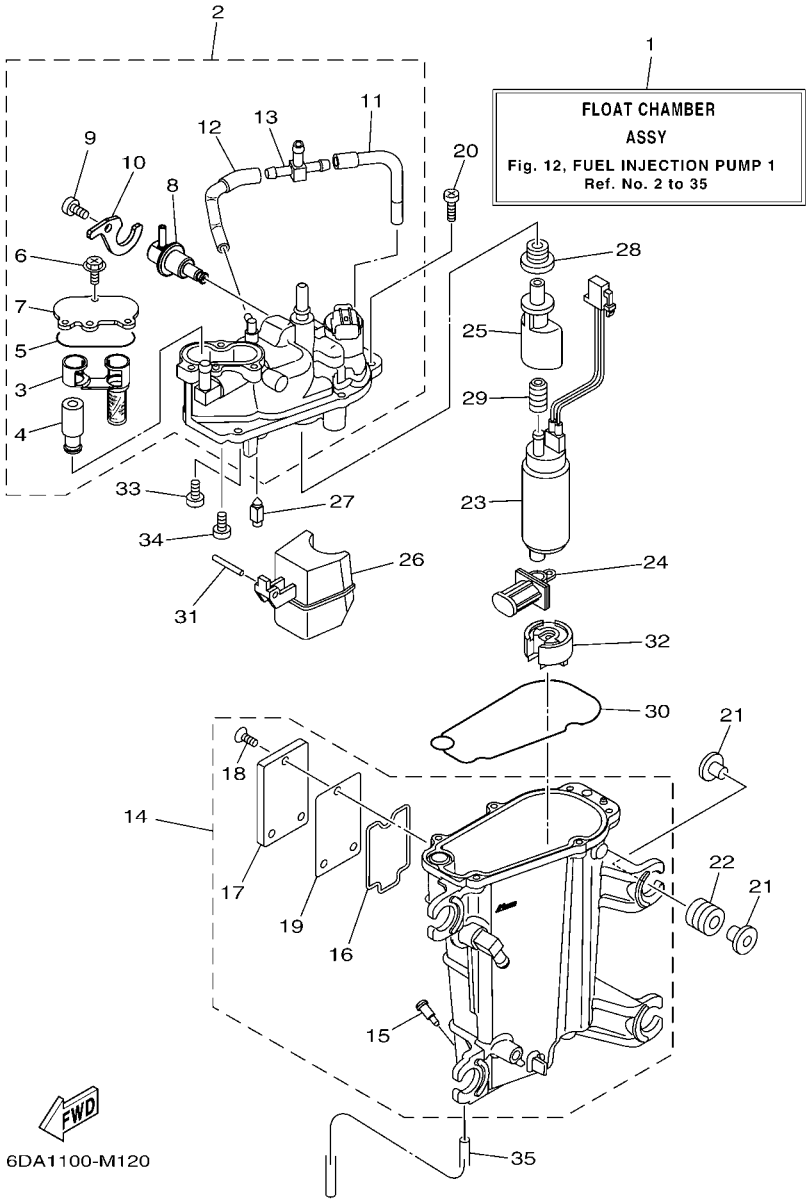


## FIG. 12 FUEL INJECTION PUMP 1 POMPE A INJECTEUR 1

| REF. NO. | PART NO. N° PIECES | DESCRIPTION DESCRIPTION | 6DV1 | 6DW1 | | | | REMARKS REMARQUES |
|---|---|---|---|---|---|---|---|---|
| 1 | 6DA–14180–00 | FLOAT CHAMBER ASSY<br>CUVE DE FLOTTEUR | 1 | 1 | | | | |
| 2 | 6DA–14182–00 | COVER, FLOAT CHAMBER<br>COUVERCLE, CUVE DE FLOTTEUR | 1 | 1 | | | | |
| 3 | 6CB–24501–01 | .FILTER, FUEL<br>.FILTRE | 1 | 1 | | | | |
| 4 | 6CB–24460–00 | .RELIEF VALVE ASSY<br>.SOUPAPE DE SECURITE COMPLET | 1 | 1 | | | | |
| 5 | 6CB–13016–00 | .O-RING<br>.JOINT TORIQUE | 1 | 1 | | | | |
| 6 | 6CB–14216–00 | .SCREW<br>.VIS | 3 | 3 | | | | |
| 7 | 6CB–24217–00 | .COVER<br>.COUVERCLE | 1 | 1 | | | | |
| 8 | 6CB–13906–01 | .REGULATOR, PRESSURE<br>.REGULATEUR DE PRESSION | 1 | 1 | | | | |
| 9 | 6CB–14564–00 | .SCREW<br>.VIS | 1 | 1 | | | | |
| 10 | 6DA–14146–00 | .PLATE<br>.PLAQUE | 1 | 1 | | | | |
| 11 | 6DA–13892–00 | .HOSE, AIR 2<br>.DURITE, A AIR 2 | 1 | 1 | | | | |
| 12 | 6DA–13893–00 | .HOSE, AIR 3<br>.DURITE, A AIR 3 | 1 | 1 | | | | |
| 13 | 69J–24379–00 | .PIPE, JOINT 4<br>.DURITE RACCORDEMENT 4 | 1 | 1 | | | | |
| 14 | 6DA–14181–00 | BODY, FLOAT CHAMBER 1<br>CORPS, CUVE DE FLOTTEUR 1 | 1 | 1 | | | | |
| 15 | 6P2–14191–00 | .PLUG, DRAIN<br>.PLOT, VIDANGE | 1 | 1 | | | | |
| 16 | 6CB–14239–00 | .SEAL<br>.JOINT | 1 | 1 | | | | |
| 17 | 6CB–24452–10 | .COVER<br>.COUVERCLE | 1 | 1 | | | | |
| 18 | 6CB–14429–01 | .SCREW<br>.VIS | 3 | 3 | | | | |
| 19 | 6CB–24482–00 | .GASKET 1<br>.JOINT 1 | 1 | 1 | | | | |
| 20 | 63P–14567–00 | SCREW<br>VIS | 6 | 6 | | | | |
| 21 | 69J–13716–00 | COLLAR<br>COLLERETTE | 8 | 8 | | | | |
| 22 | 6CB–13593–00 | DAMPER<br>AMORTISSEUR | 4 | 4 | | | | |
| 23 | 6P2–13907–20 | FUEL PUMP COMP.<br>POMPE A CARBURANT COMP. | 1 | 1 | | | | |
| 24 | 63P–13915–00 | FILTER<br>FILTRE | 1 | 1 | | | | |
| 25 | 6AW–13132–00 | JOINT<br>RACCORD | 1 | 1 | | | | |
| 26 | 6CB–14985–00 | FLOAT<br>FLOTTEUR | 1 | 1 | | | | |
| 27 | 6CB–14546–00 | VALVE, NEEDLE<br>POINTEAU | 1 | 1 | | | | |

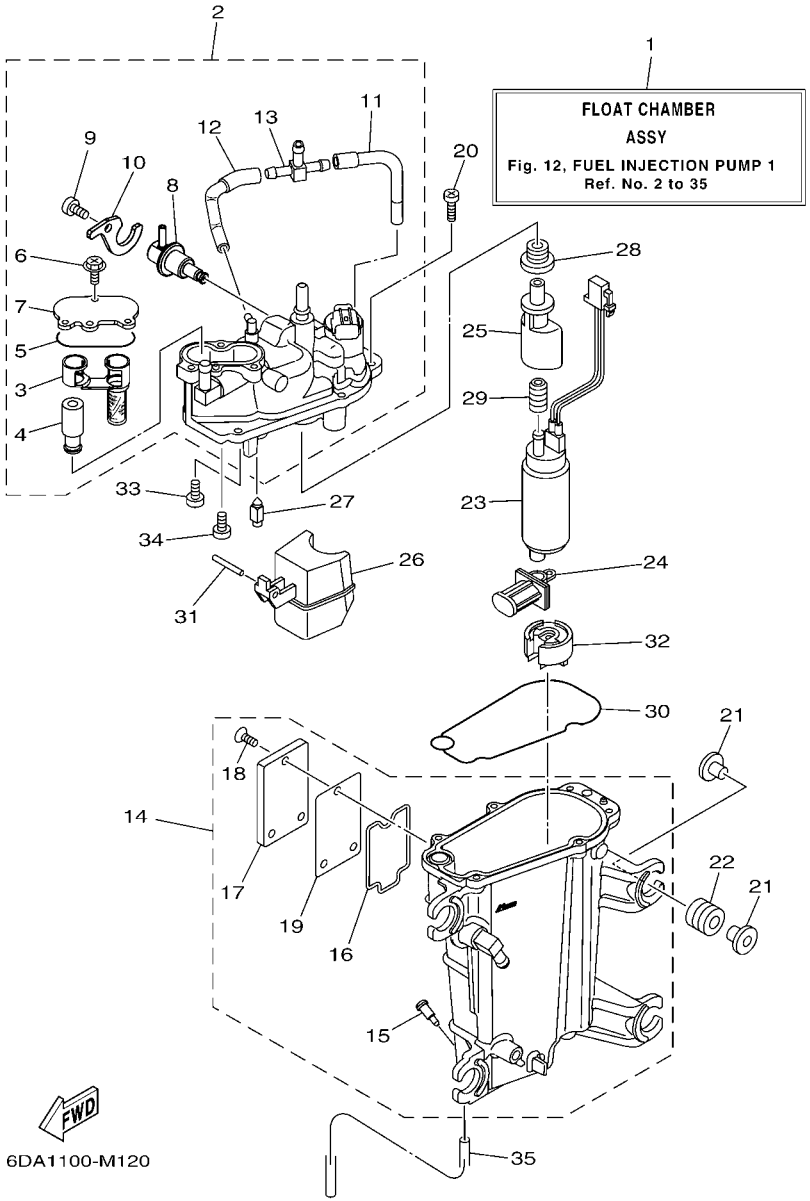


## FIG. 12 FUEL INJECTION PUMP 1 POMPE A INJECTEUR 1

| REF. NO. | PART NO. N° PIECES | DESCRIPTION DESCRIPTION | 6DV1 | 6DW1 | | | | REMARKS REMARQUES |
|---|---|---|---|---|---|---|---|---|
| 28 | 6CB–1447B–00 | BUSH 1<br>DOUILLE 1 | 1 | 1 | | | | |
| 29 | 6AW–13781–00 | DAMPER, PUMP<br>AMORTISSEUR, POMPE | 1 | 1 | | | | |
| 30 | 6CB–14984–00 | GASKET, FLOAT CHAMBER<br>JOINT, CUVE DE FLOTTEUR | 1 | 1 | | | | |
| 31 | 6P2–14386–00 | PIN, FLOAT<br>AXE, FLOTTEUR | 1 | 1 | | | | |
| 32 | 6AW–13784–00 | COVER, PUMP<br>COUVERCLE, POMPE | 1 | 1 | | | | |
| 33 | 4SV–24453–00 | SCREW<br>VIS | 1 | 1 | | | | |
| 34 | 98507–04008 | SCREW, PAN HEAD<br>VIS, TETE TRONCONIQUE | 1 | 1 | | | | |
| 35 | 6P2–14149–00 | PIPE<br>DURITE | 1 | 1 | | | | |

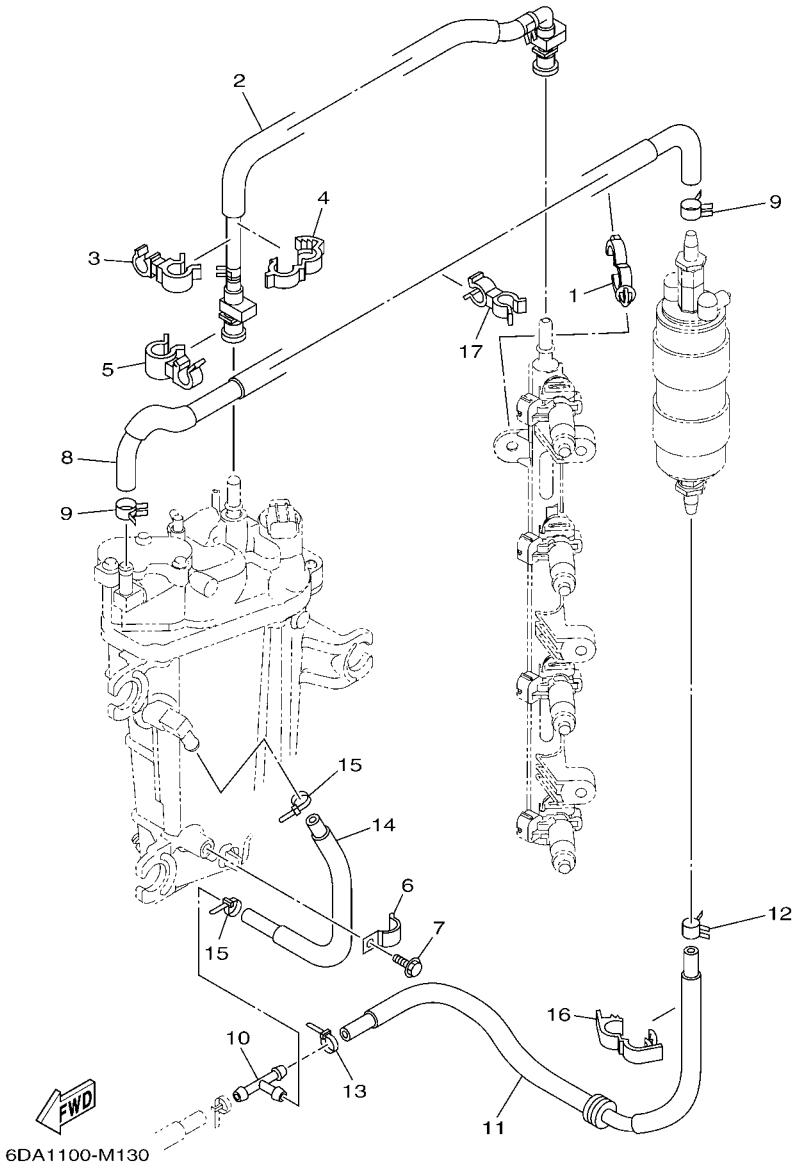


## FIG. 13 FUEL INJECTION PUMP 2 POMPE A INJECTEUR 2

| REF. NO. | PART NO. N° PIECES | DESCRIPTION DESCRIPTION | 6DV1 | 6DW1 | | | | REMARKS REMARQUES |
|---|---|---|---|---|---|---|---|---|
| 1 | 90464–20181 | CLAMP<br>BRIDE | 1 | 1 | | | | |
| 2 | 6DA–24310–00 | FUEL PIPE ASSY<br>DURITE A ESSENCE | 1 | 1 | | | | |
| 3 | 90464–12010 | CLAMP<br>BRIDE | 1 | 1 | | | | |
| 4 | 90464–16003 | CLAMP<br>BRIDE | 1 | 1 | | | | |
| 5 | 90464–15007 | CLAMP<br>BRIDE | 1 | 1 | | | | |
| 6 | 90465–08M63 | CLAMP<br>BRIDE | 1 | 1 | | | | |
| 7 | 95895–06010 | BOLT, FLANGE<br>BOULON | 1 | 1 | | | | |
| 8 | 6DA–24324–00 | PIPE 13<br>DURITE 13 | 1 | 1 | | | | |
| 9 | 90467–120A7 | CLIP<br>JONC | 2 | 2 | | | | |
| 10 | 6E5–24378–00 | PIPE, JOINT 3<br>DURITE, RACCORDEMENT 3 | 1 | 1 | | | | |
| 11 | 6DA–24317–10 | PIPE 7<br>DURITE 7 | 1 | 1 | | | | FOR F(L)200GET<br>FOR F(L)200GET |
| | 6DA–24317–00 | PIPE 7<br>DURITE 7 | 1 | 1 | | | | FOR F(L)200GET1<br>FOR F(L)200GET1 |
| 12 | 90467–120A7 | CLIP<br>JONC | 1 | 1 | | | | |
| 13 | 90465–11M10 | CLAMP<br>BRIDE | 1 | 1 | | | | |
| 14 | 6DA–24323–10 | PIPE 12<br>DURITE 12 | 1 | 1 | | | | FOR F(L)200GET<br>FOR F(L)200GET |
| | 6DA–24323–00 | PIPE 12<br>DURITE 12 | 1 | 1 | | | | FOR F(L)200GET1<br>FOR F(L)200GET1 |
| 15 | 90465–11M10 | CLAMP<br>BRIDE | 2 | 2 | | | | |
| 16 | 90464–18004 | CLAMP<br>BRIDE | 1 | 1 | | | | |
| 17 | 90464–13260 | CLAMP<br>BRIDE | 1 | 1 | | | | |

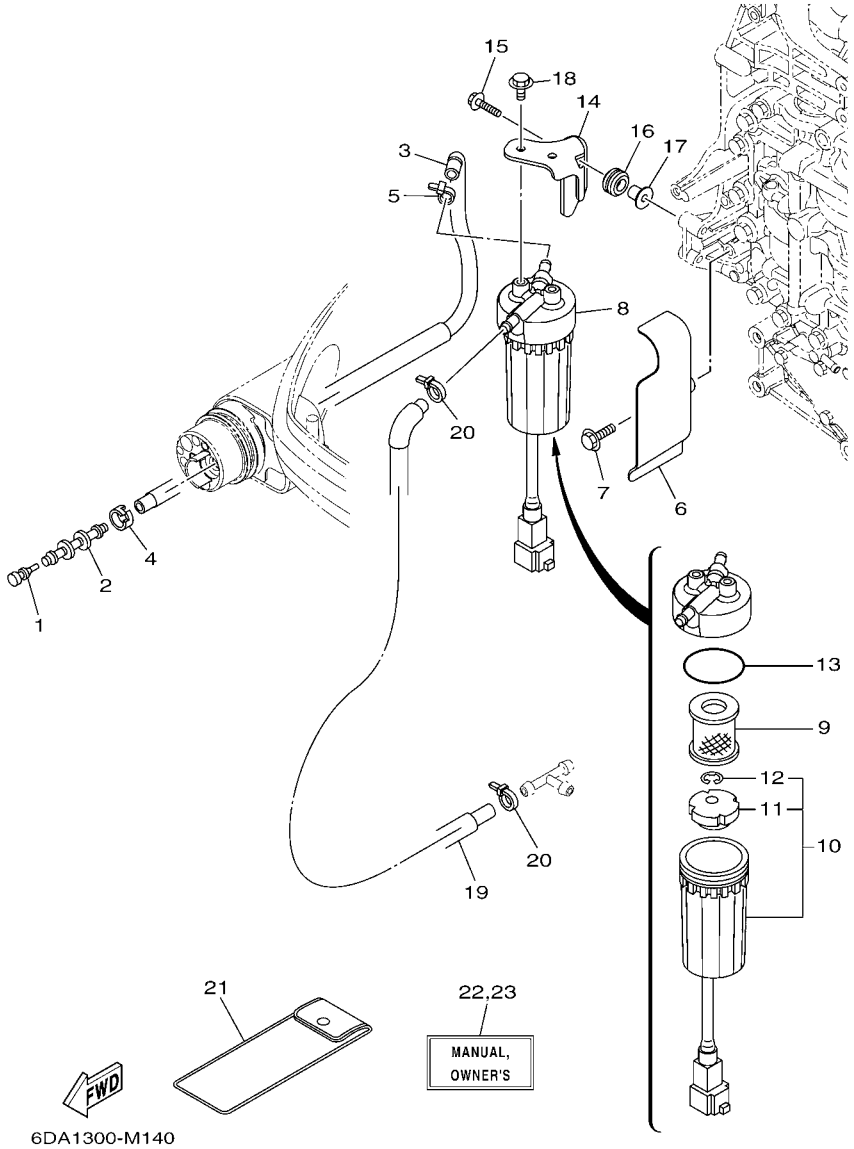


## FIG. 14 FUEL 1 — CARBURANT 1

| REF. NO. | PART NO. N° PIECES | DESCRIPTION DESCRIPTION | 6DV1 | 6DW1 | | | | REMARKS REMARQUES |
|---|---|---|---|---|---|---|---|---|
| 1 | 689–85547–00 | DAMPER<br>AMORTISSEUR | 1 | 1 | | | | |
| 2 | 6AW–24377–01 | PIPE, JOINT 2<br>DURITE RACCORDEMENT 2 | 1 | 1 | | | | |
| 3 | 6DA–24314–10 | PIPE 4<br>DURITE 4 | 1 | 1 | | | | FOR F(L)200GET<br>FOR F(L)200GET |
| | 6DA–24314–00 | PIPE 4<br>DURITE 4 | 1 | 1 | | | | FOR F(L)200GET1<br>FOR F(L)200GET1 |
| 4 | 6E5–24351–51 | BAND 1<br>COLLIER 1 | 1 | 1 | | | | |
| 5 | 90465–11M10 | CLAMP<br>BRIDE | 1 | 1 | | | | |
| 6 | 6DA–24596–00 | COVER<br>COUVERCLE | 1 | 1 | | | | |
| 7 | 95895–06025 | BOLT, FLANGE<br>BOULON | 2 | 2 | | | | |
| 8 | 6P3–24560–03 | FILTER ASSY<br>ENS FILTRE | 1 | 1 | | | | |
| 9 | 6P3–24563–01 | .ELEMENT, FILTER<br>.ELEMENT, FILTRE | 1 | 1 | | | | |
| 10 | 6P3–24562–03 | .CUP, FILTER<br>.CUVETTE, FILTRE | 1 | 1 | | | | |
| 11 | 6P3–24469–00 | ..FLOAT, WATER LEVEL<br>..FLOTTEUR | 1 | 1 | | | | |
| 12 | 6P3–24519–00 | ..CLIP<br>..JONC | 1 | 1 | | | | |
| 13 | 6P3–24564–00 | .GASKET<br>.JOINT | 1 | 1 | | | | |
| 14 | 6DA–24566–00 | BRACKET, FILTER<br>SUPPORT, FILTRE | 1 | 1 | | | | |
| 15 | 90119–06M17 | BOLT, WITH WASHER<br>BOULON, AVEC RONDELLE | 2 | 2 | | | | |
| 16 | 90480–15013 | GROMMET<br>PASSE-FIL | 2 | 2 | | | | |
| 17 | 90387–06M60 | COLLAR<br>COLLERETTE | 2 | 2 | | | | |
| 18 | 95895–06012 | BOLT, FLANGE<br>BOULON | 2 | 2 | | | | |
| 19 | 6DA–24313–10 | PIPE 3<br>DURITE 3 | 1 | 1 | | | | FOR F(L)200GET<br>FOR F(L)200GET |
| | 6DA–24313–00 | PIPE 3<br>DURITE 3 | 1 | 1 | | | | FOR F(L)200GET1<br>FOR F(L)200GET1 |
| 20 | 90465–11M10 | CLAMP<br>BRIDE | 2 | 2 | | | | |
| 21 | 69J–28100–01 | TOOL KIT<br>TROUSSE A OUTILS | 1 | 1 | | | | AP<br>AP |
| 22 | 6DV–28199–70–E0 | MANUAL,OWNER'S<br>MANUEL D'UTILISATION | 1 | 1 | | | | UR (E)<br>UR (E) |
| | 6DV–28199–70–F0 | MANUAL,OWNER'S<br>MANUEL D'UTILISATION | 1 | 1 | | | | UR (F)<br>UR (F) |
| | 6DV–28199–70–S0 | MANUAL,OWNER'S<br>MANUEL D'UTILISATION | 1 | 1 | | | | UR (ES)<br>UR (ES) |
| | 6DV–28199–70–G0 | MANUAL,OWNER'S<br>MANUEL D'UTILISATION | 1 | 1 | | | | UR (D)<br>UR (D) |

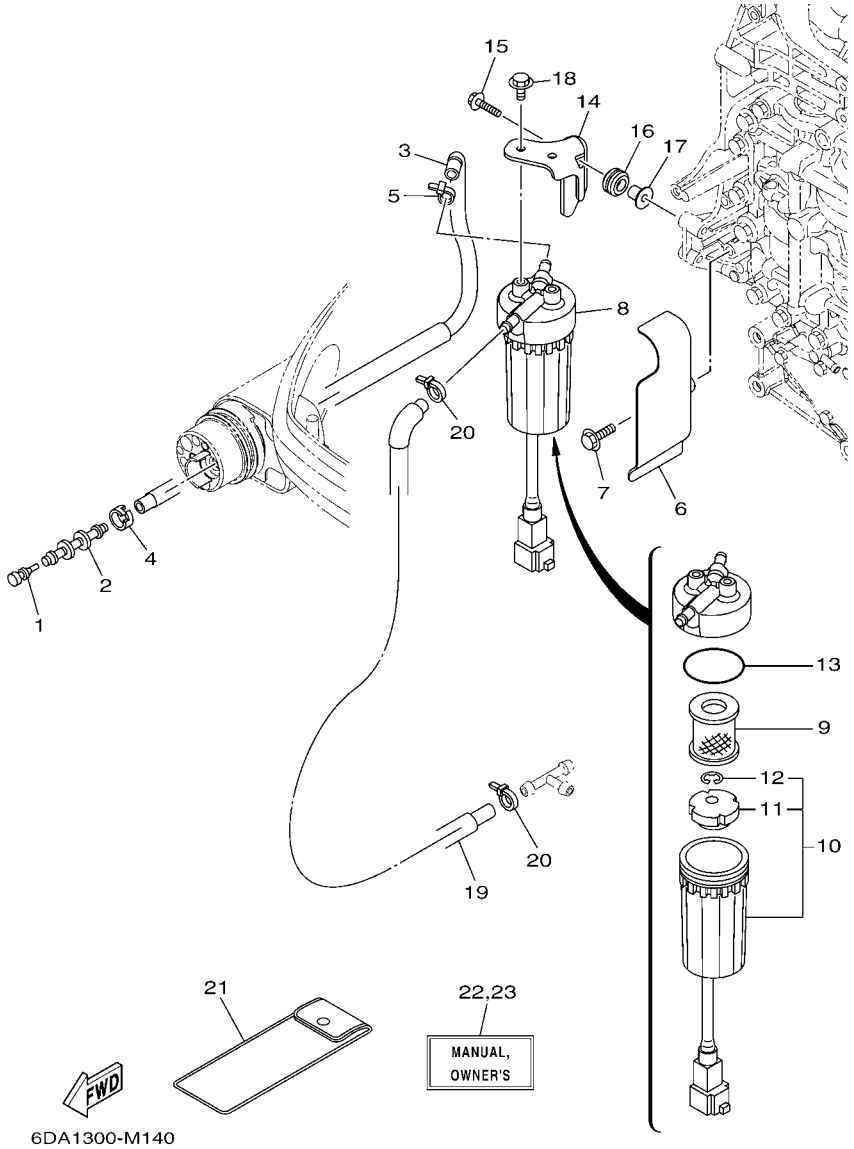


## FIG. 14 FUEL 1 — CARBURANT 1

| REF. NO. | PART NO. N° PIECES | DESCRIPTION DESCRIPTION | 6DV1 | 6DW1 | | | | REMARKS REMARQUES |
|---|---|---|---|---|---|---|---|---|
| 22 | 6DV–28199–70–D0 | MANUAL,OWNER'S<br>MANUEL D'UTILISATION | 1 | 1 | | | | UR (NL)<br>UR (NL) |
| | 6DV–28199–70–H0 | MANUAL,OWNER'S<br>MANUEL D'UTILISATION | 1 | 1 | | | | UR (I)<br>UR (I) |
| 23 | 6DV–28199–80–K0 | MANUAL,OWNER'S<br>MANUEL D'UTILISATION | 1 | 1 | | | | UR (DK)<br>UR (DK) |
| | 6DV–28199–80–R0 | MANUAL,OWNER'S<br>MANUEL D'UTILISATION | 1 | 1 | | | | UR (GR)<br>UR (GR) |
| | 6DV–28199–80–P0 | MANUAL,OWNER'S<br>MANUEL D'UTILISATION | 1 | 1 | | | | UR (P)<br>UR (P) |
| | 6DV–28199–80–N0 | MANUAL,OWNER'S<br>MANUEL D'UTILISATION | 1 | 1 | | | | UR (N)<br>UR (N) |
| | 6DV–28199–80–M0 | MANUAL,OWNER'S<br>MANUEL D'UTILISATION | 1 | 1 | | | | UR (S)<br>UR (S) |
| | 6DV–28199–80–L0 | MANUAL,OWNER'S<br>MANUEL D'UTILISATION | 1 | 1 | | | | UR (SF)<br>UR (SF) |

## FIG. 15 FUEL 2 — CARBURANT 2

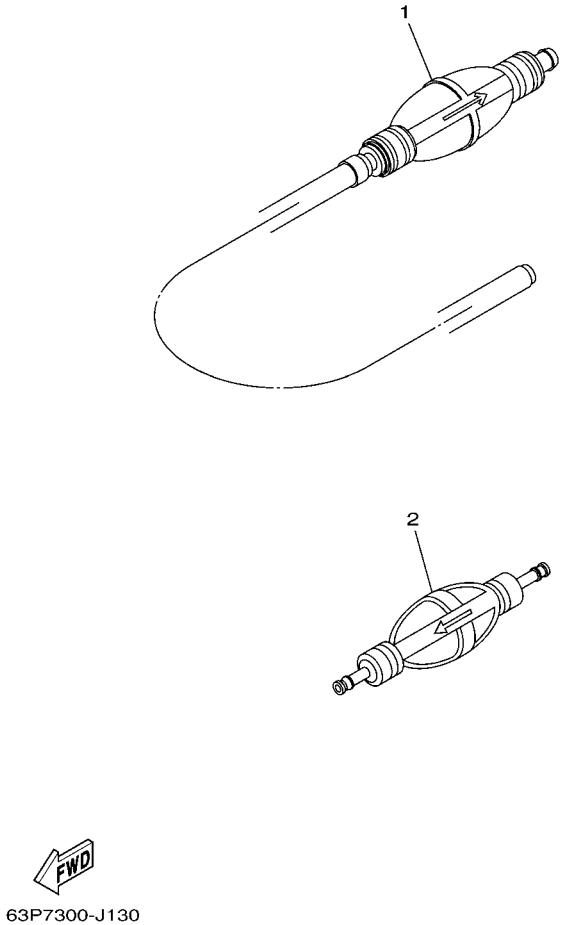


| REF. NO. | PART NO. N° PIECES | DESCRIPTION DESCRIPTION | 6DV1 | 6DW1 | | | | REMARKS REMARQUES |
|---|---|---|---|---|---|---|---|---|
| 1 | 6YK–24307–42 | FUEL PIPE COMP. 2<br>DURITE A ESSENCE 2 | 1 | 1 | | | | AP FOR F(L)200GET<br>AP FOR F(L)200GET |
| 2 | 6AW–24360–01 | PRIMER PUMP ASSY<br>POMPE D'AMORCAGE | 1 | 1 | | | | AP FOR F(L)200GET1<br>AP FOR F(L)200GET1 |

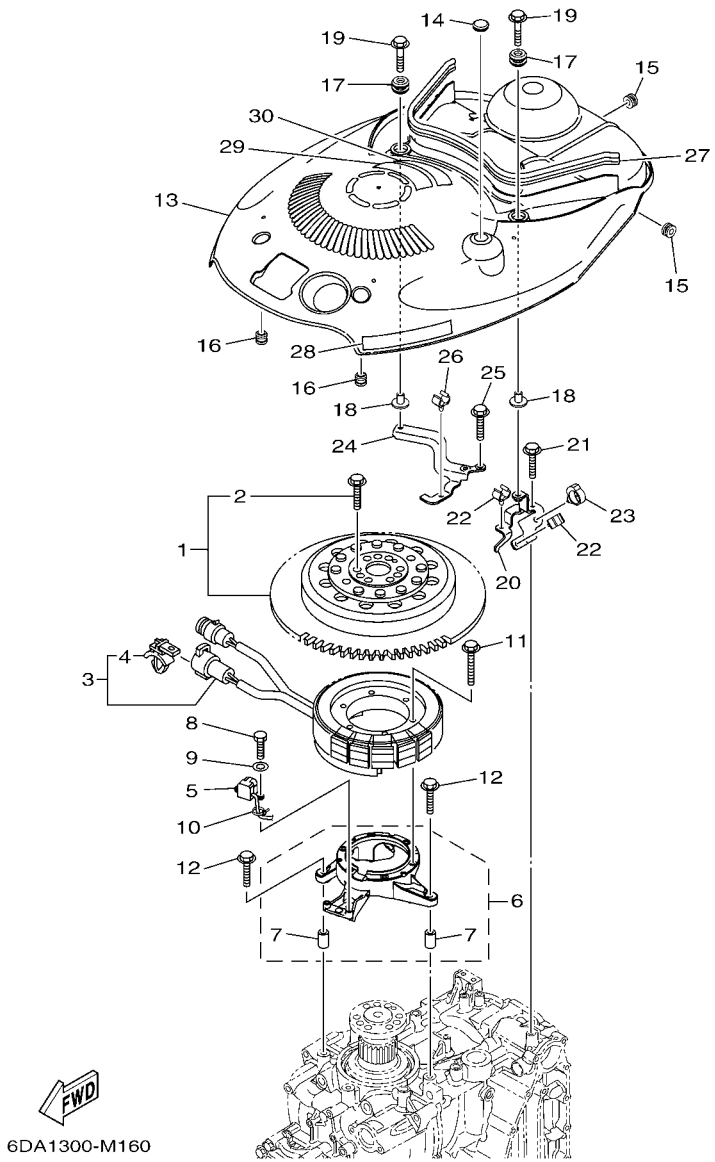


## FIG. 16 GENERATOR GENERATRICE

| REF. NO. | PART NO. N° PIECES | DESCRIPTION DESCRIPTION | 6DV1 | 6DW1 | | | | REMARKS REMARQUES |
|---|---|---|---|---|---|---|---|---|
| 1 | 6DA–W8145–00 | ROTOR ASSY WITH BOLTS<br>ROTOR COMPLET AVEC BOULON | 1 | 1 | | | | |
| 2 | 6AW–W9011–00 | .BOLT SET (FOR ROTOR ASSY)<br>.BOULON ENS. (POUR ROTOR COMPL) | 1 | 1 | | | | |
| 3 | 6DA–81410–00 | STATOR ASSY<br>STATOR COMPLET | 1 | 1 | | | | |
| 4 | 90464–12002 | .CLAMP<br>.BRIDE | 1 | 1 | | | | |
| 5 | 6CB–85580–00 | COIL, PULSER<br>BOBINE, PULSEUR | 1 | 1 | | | | |
| 6 | 6DA–85561–00 | BASE, MAGNETO<br>BASE, MAGNETO | 1 | 1 | | | | |
| 7 | 99590–08012 | .PIN, DOWEL<br>.GOUJON, D'ASSEMBLAGE | 2 | 2 | | | | |
| 8 | 97095–05020 | BOLT<br>BOULON | 2 | 2 | | | | |
| 9 | 92995–05600 | WASHER<br>RONDELLE | 2 | 2 | | | | |
| 10 | 90465–13M97 | CLAMP<br>BRIDE | 1 | 1 | | | | |
| 11 | 95022–06035 | BOLT, FLANGE<br>BOULON, A COLLERETTE | 6 | 6 | | | | |
| 12 | 95895–06030 | BOLT, FLANGE<br>BOULON | 4 | 4 | | | | |
| 13 | 6DA–81337–00 | COVER, FLYWHEEL<br>COUVERCLE, VOLANT | 1 | 1 | | | | |
| 14 | 90480–16025 | GROMMET<br>PASSE-FIL | 1 | 1 | | | | |
| 15 | 90480–12314 | GROMMET<br>PASSE-FIL | 2 | 2 | | | | |
| 16 | 6A0–82317–00 | DAMPER, IGNITION COIL<br>AMORTISSEUR, BOBINE D'ALLUM | 2 | 2 | | | | |
| 17 | 6BG–42748–00 | GROMMET<br>PASSE-FIL | 2 | 2 | | | | |
| 18 | 90387–06M69 | COLLAR<br>COLLERETTE | 2 | 2 | | | | |
| 19 | 90119–06M61 | BOLT, WITH WASHER<br>BOULON, AVEC RONDELLE | 2 | 2 | | | | |
| 20 | 6DA–8132G–00 | PLATE<br>PLAQUE | 1 | 1 | | | | |
| 21 | 95895–06016 | BOLT, FLANGE<br>BOULON | 1 | 1 | | | | |
| 22 | 90464–09130 | CLAMP<br>BRIDE | 2 | 2 | | | | |
| 23 | 90464–20181 | CLAMP<br>BRIDE | 1 | 1 | | | | |
| 24 | 6DA–82398–00 | PLATE 3<br>PLAQUETTE 3 | 1 | 1 | | | | |
| 25 | 95895–06016 | BOLT, FLANGE<br>BOULON | 2 | 2 | | | | |
| 26 | 90464–09130 | CLAMP<br>BRIDE | 1 | 1 | | | | |
| 27 | 6DA–42617–00 | DAMPER, FORM<br>BOURRELET, CAOUTCHOUC | 1 | 1 | | | | |

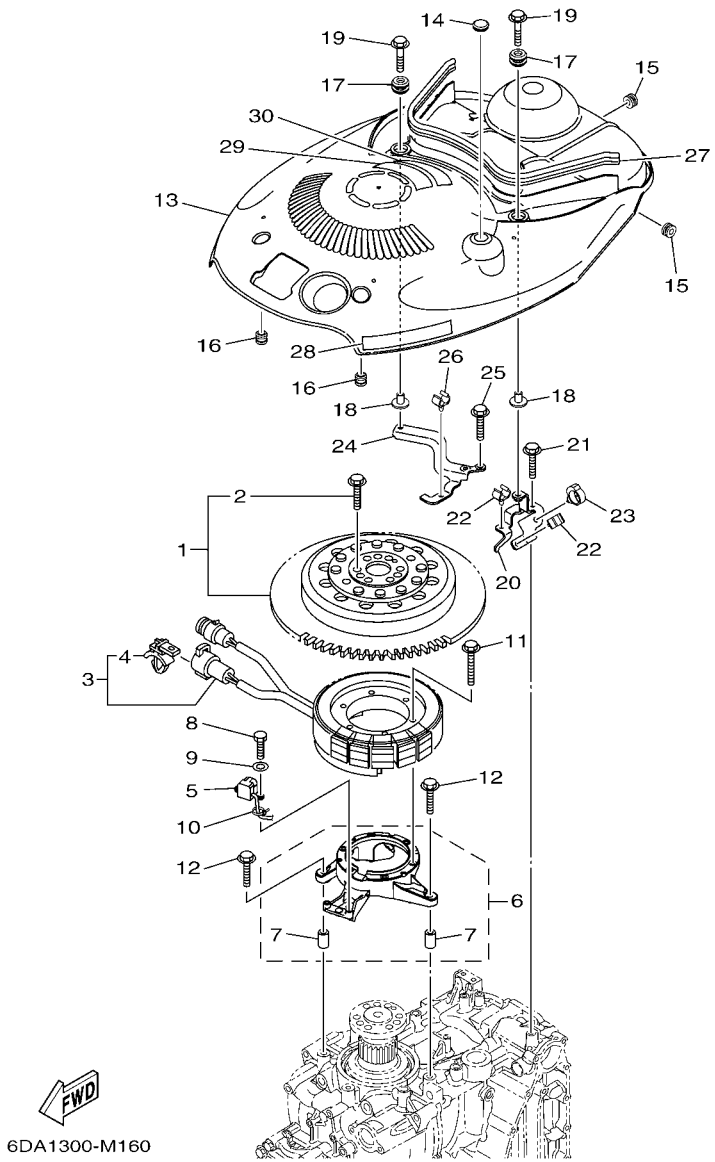


## FIG. 16 GENERATOR GENERATRICE

| REF. NO. | PART NO. N° PIECES | DESCRIPTION DESCRIPTION | 6DV1 | 6DW1 | | | | REMARKS REMARQUES |
|---|---|---|---|---|---|---|---|---|
| 28 | 63P–13437–62 | MARK, CAUTION<br>MAKER | 1 | 1 | | | | |
| 29 | 6AH–81994–40 | LABEL, SAFETY<br>ETIQUETTE, SECURITE | 1 | 1 | | | | |
| 30 | 6AH–81994–50 | LABEL, SAFETY<br>ETIQUETTE, SECURITE | 1 | 1 | | | | |

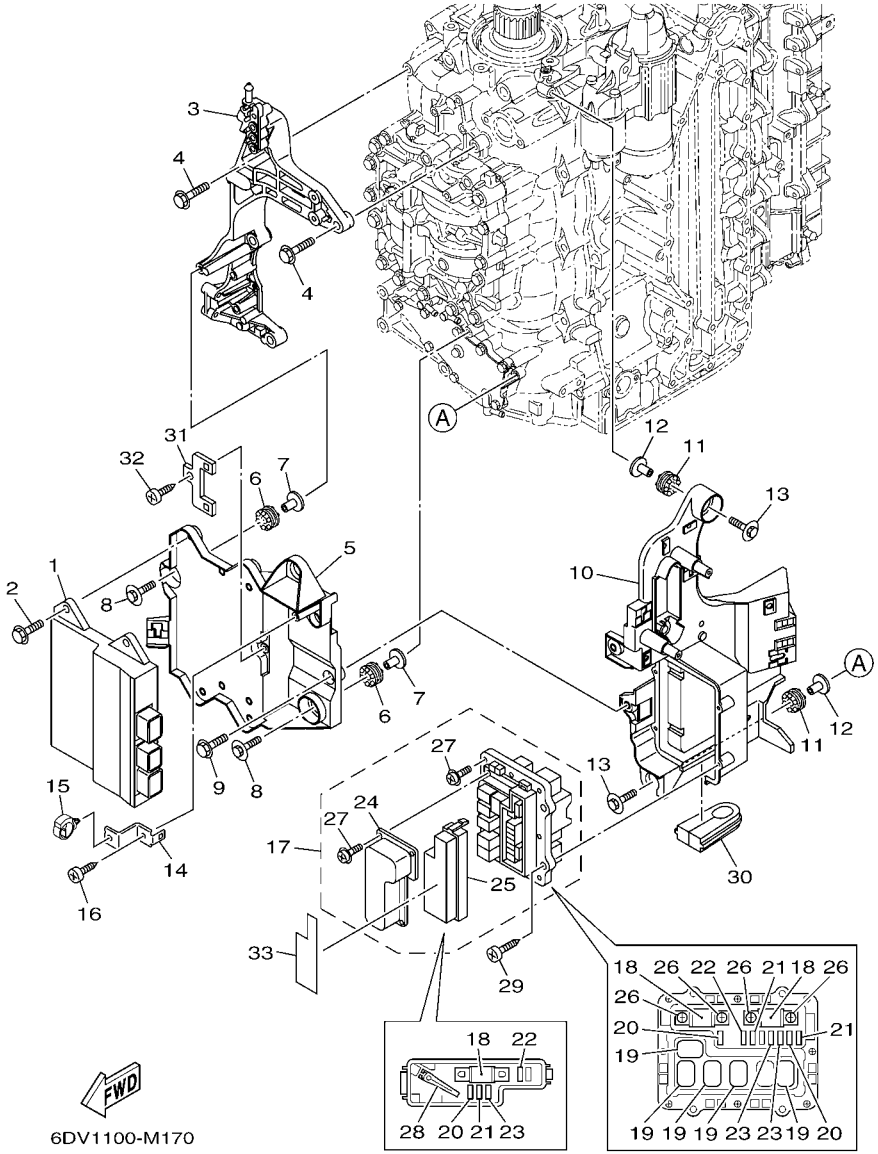


## FIG. 17 ELECTRICAL 1 PARTIE ELECTRIQUE 1

| REF. NO. | PART NO. N° PIECES | DESCRIPTION DESCRIPTION | 6DV1 | 6DW1 | | | | REMARKS REMARQUES |
|---|---|---|---|---|---|---|---|---|
| 1 | 6DV–8591A–00 | ENGINE CONTROL UNIT ASSY<br>BLOC DE CONTROL | 1 | 1 | | | | |
| 2 | 95895–06020 | BOLT, FLANGE<br>BOULON | 4 | 4 | | | | |
| 3 | 6DA–85991–00 | BRACKET, UNIT<br>SUPPORT COMPLET | 1 | 1 | | | | |
| 4 | 95875–08035 | BOLT, FLANGE<br>BOULON, A COLLERETTE | 4 | 4 | | | | |
| 5 | 6DA–81948–00 | BRACKET<br>SUPPORT | 1 | 1 | | | | |
| 6 | 68F–85516–01 | SPACER<br>ENTRETOISE | 3 | 3 | | | | |
| 7 | 90387–06176 | COLLAR<br>COLLERETTE | 3 | 3 | | | | |
| 8 | 68F–85119–00 | BOLT<br>BOULON | 3 | 3 | | | | |
| 9 | 95895–06016 | BOLT, FLANGE<br>BOULON | 2 | 2 | | | | |
| 10 | 6DA–81952–00 | HOLDER, RELAY<br>SUPPORT, RELAIS | 1 | 1 | | | | |
| 11 | 68F–85516–01 | SPACER<br>ENTRETOISE | 3 | 3 | | | | |
| 12 | 90387–06176 | COLLAR<br>COLLERETTE | 3 | 3 | | | | |
| 13 | 68F–85119–00 | BOLT<br>BOULON | 3 | 3 | | | | |
| 14 | 6DA–85548–00 | HOLDER<br>SUPPORT | 1 | 1 | | | | |
| 15 | 90464–20181 | CLAMP<br>BRIDE | 1 | 1 | | | | |
| 16 | 97780–60620 | SCREW, TAPPING<br>VIS, TETE BOMBEE | 1 | 1 | | | | |
| 17 | 6DV–82170–00 | FUSE BOX ASSY<br>BOITE A FUSIBLES | 1 | 1 | | | | |
| 18 | 6P2–82151–00 | .FUSE (60A)<br>.FUSIBLE (60A) | 3 | 3 | | | | |
| 19 | 68F–8195A–00 | .RELAY ASSY<br>.RELAIS COMPLET | 5 | 5 | | | | |
| 20 | 67F–82151–40 | .FUSE (10A)<br>.FUSIBLE (10A) | 3 | 3 | | | | |
| 21 | 67F–82151–50 | .FUSE (15A)<br>.FUSIBLE (15A) | 3 | 3 | | | | |
| 22 | 67F–82151–00 | .FUSE (20A)<br>.FUSIBLE (20A) | 2 | 2 | | | | |
| 23 | 67F–82151–10 | .FUSE (30A)<br>.FUSIBLE (30A) | 3 | 3 | | | | |
| 24 | 6CB–81639–00 | .COVER<br>.PLAQUE, FIXATION D'INDUIT | 1 | 1 | | | | |
| 25 | 6CB–85544–00 | .CASE<br>.BOITIER | 1 | 1 | | | | |
| 26 | 68F–82846–00 | .SCREW, PAN HEAD (M5)<br>.VIS, TETE TRONCONIQUE (M5) | 4 | 4 | | | | |
| 27 | 6P2–82113–00 | .SCREW<br>.VIS | 13 | 13 | | | | |

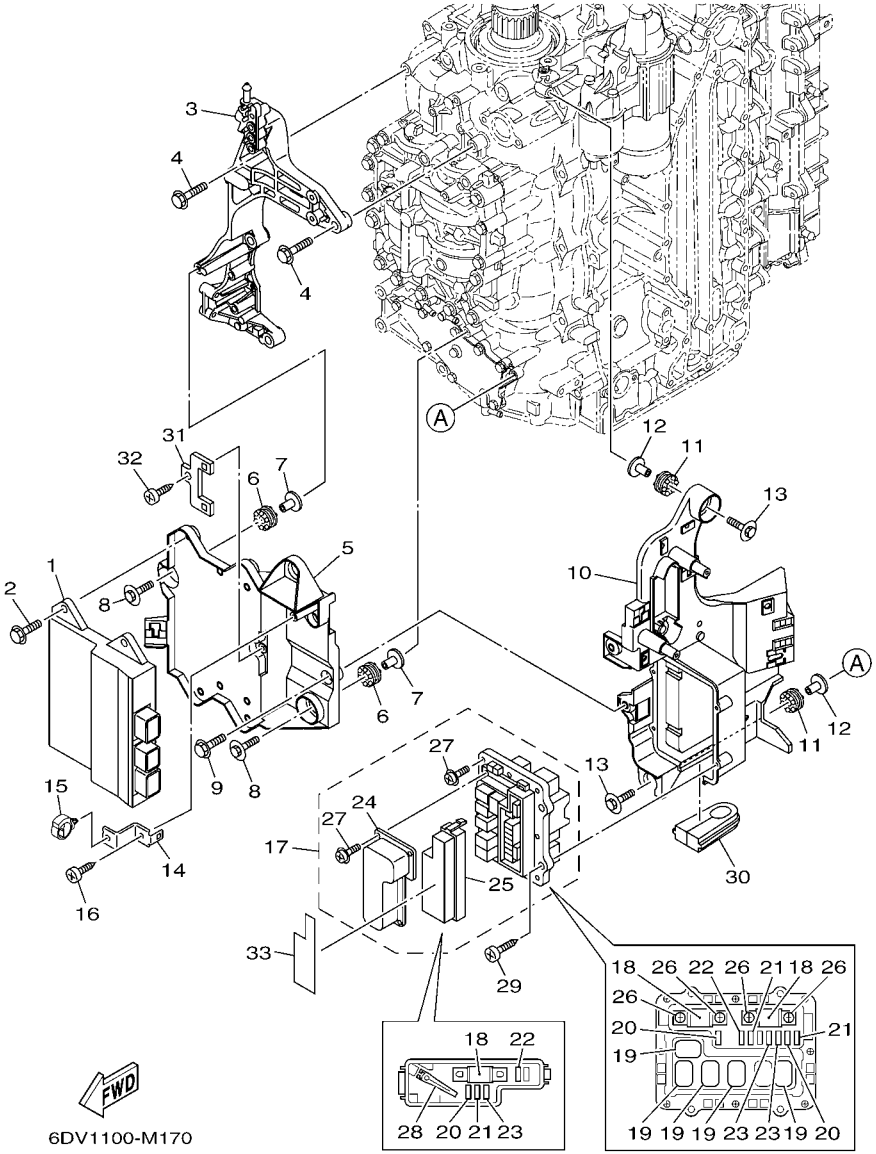


## FIG. 17 ELECTRICAL 1 — PARTIE ELECTRIQUE 1

| REF. NO. | PART NO. N° PIECES | DESCRIPTION DESCRIPTION | 6DV1 | 6DW1 | | | | REMARKS REMARQUES |
|---|---|---|---|---|---|---|---|---|
| 28 | 67F–2812A–00 | .PULLER, FUSE<br>.TENDEUR, FUSIBLE | 1 | 1 | | | | |
| 29 | 97780–50620 | SCREW, TAPPING<br>VIS, TETE BOMBEE | 4 | 4 | | | | |
| 30 | 6DA–81336–00 | GROMMET<br>OEILLET CAOUTCHOUC | 1 | 1 | | | | |
| 31 | 6C5–8257V–00 | PLATE, CONNECTOR<br>PLAQUE, CONNECTEUR | 1 | 1 | | | | |
| 32 | 97780–60620 | SCREW, TAPPING<br>VIS, TETE BOMBEE | 1 | 1 | | | | |
| 33 | 6DV–81919–00 | GRAPHIC, REGULATOR<br>ADHESIF, REGULATEUR | 1 | 1 | | | | |

## FIG. 18 ELECTRICAL 2 PARTIE ELECTRIQUE 2

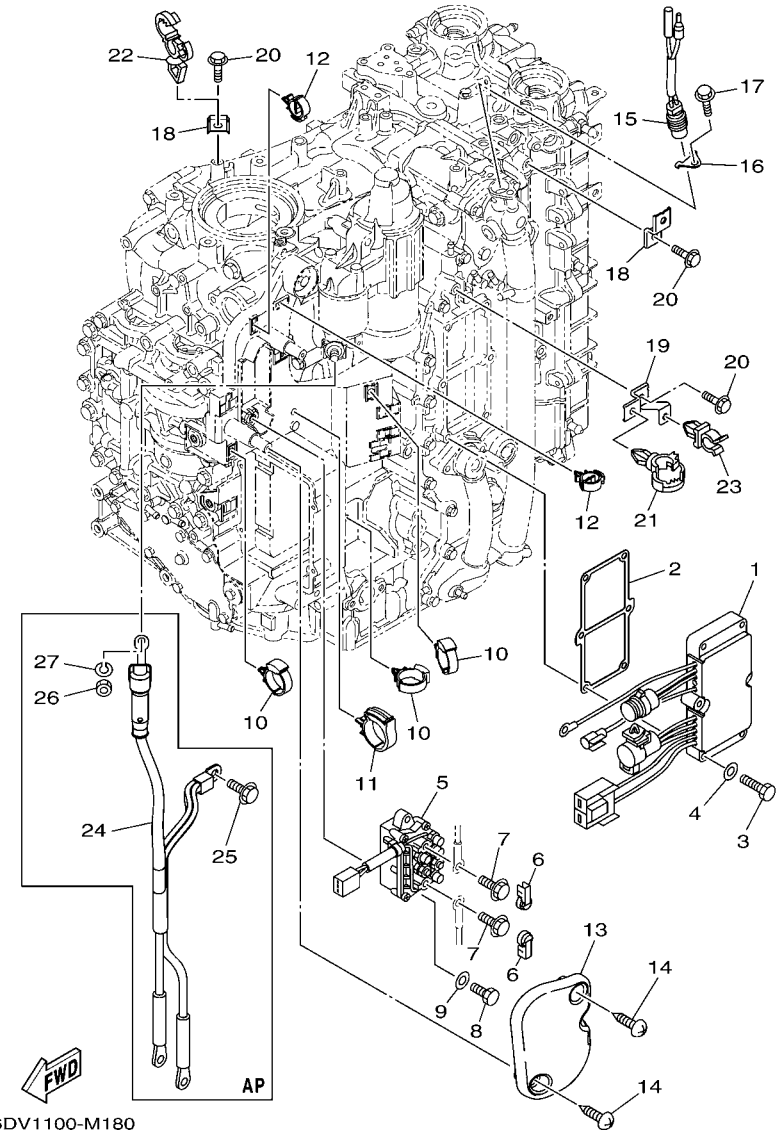


6DV1100-M180

| REF. NO. | PART NO. N° PIECES | DESCRIPTION DESCRIPTION | 6DV1 | 6DW1 | | | | REMARKS REMARQUES |
|---|---|---|---|---|---|---|---|---|
| 1 | 6DA–81960–00 | RECTIFIER & REGULATOR ASSY<br>REDRESSEUR REGULATEUR CPLT | 1 | 1 | | | | |
| 2 | 6DA–81975–00 | PLATE, RECTIFIER FITTING<br>PLAQUE, FIXATION DU REDRESSEUR | 1 | 1 | | | | |
| 3 | 97095–06035 | BOLT<br>BOULON | 6 | 6 | | | | |
| 4 | 92995–06600 | WASHER<br>RONDELLE | 6 | 6 | | | | |
| 5 | 6AW–81950–00 | RELAY ASSY<br>RELAIS COMPLET | 1 | 1 | | | | |
| 6 | 6P2–8183X–00 | CAP, TERMINAL<br>COUVERCLE, BORNE | 2 | 2 | | | | |
| 7 | 97595–06610 | BOLT, WITH WASHER<br>VIS HEXAGONAL AVC RONDELLE | 2 | 2 | | | | |
| 8 | 97095–06020 | BOLT<br>BOULON | 2 | 2 | | | | |
| 9 | 92995–06600 | WASHER<br>RONDELLE | 2 | 2 | | | | |
| 10 | 90464–12183 | CLAMP<br>BRIDE | 3 | 3 | | | | |
| 11 | 90464–32002 | CLAMP<br>BRIDE | 1 | 1 | | | | |
| 12 | 90464–18246 | CLAMP<br>BRIDE | 2 | 2 | | | | |
| 13 | 6DA–81942–00 | COVER<br>COUVERCLE | 1 | 1 | | | | |
| 14 | 90169–05M00 | SCREW, TRUSS HEAD TAPPING<br>VIS, TETE FRAISEE | 2 | 2 | | | | |
| 15 | 6P2–82560–01 | THERMO SWITCH ASSY<br>THERMO-CONTACT COMPLET | 1 | 1 | | | | |
| 16 | 6E9–82588–00 | PLATE<br>PLAQUE | 1 | 1 | | | | |
| 17 | 95895–06012 | BOLT, FLANGE<br>BOULON | 1 | 1 | | | | |
| 18 | 6DA–82388–00 | PLATE<br>PLAQUETTE | 2 | 2 | | | | |
| 19 | 6DA–82389–00 | PLATE 2<br>PLAQUETTE 2 | 1 | 1 | | | | |
| 20 | 95895–06016 | BOLT, FLANGE<br>BOULON | 3 | 3 | | | | |
| 21 | 90464–20181 | CLAMP<br>BRIDE | 1 | 1 | | | | |
| 22 | 90464–13249 | CLAMP<br>BRIDE | 1 | 1 | | | | |
| 23 | 90464–09008 | CLAMP<br>BRIDE | 1 | 1 | | | | |
| 24 | 6DA–82105–00 | BATTERY CABLE<br>CABLE DE BATTERIE | 1 | 1 | | | | AP<br>AP |
| 25 | 95895–08016 | BOLT, FLANGE<br>BOULON | 1 | 1 | | | | AP<br>AP |
| 26 | 95333–08600 | NUT<br>ECROU | 1 | 1 | | | | AP<br>AP |
| 27 | 92903–08100 | WASHER, SPRING<br>RONDELLE, GROWER | 1 | 1 | | | | AP<br>AP |

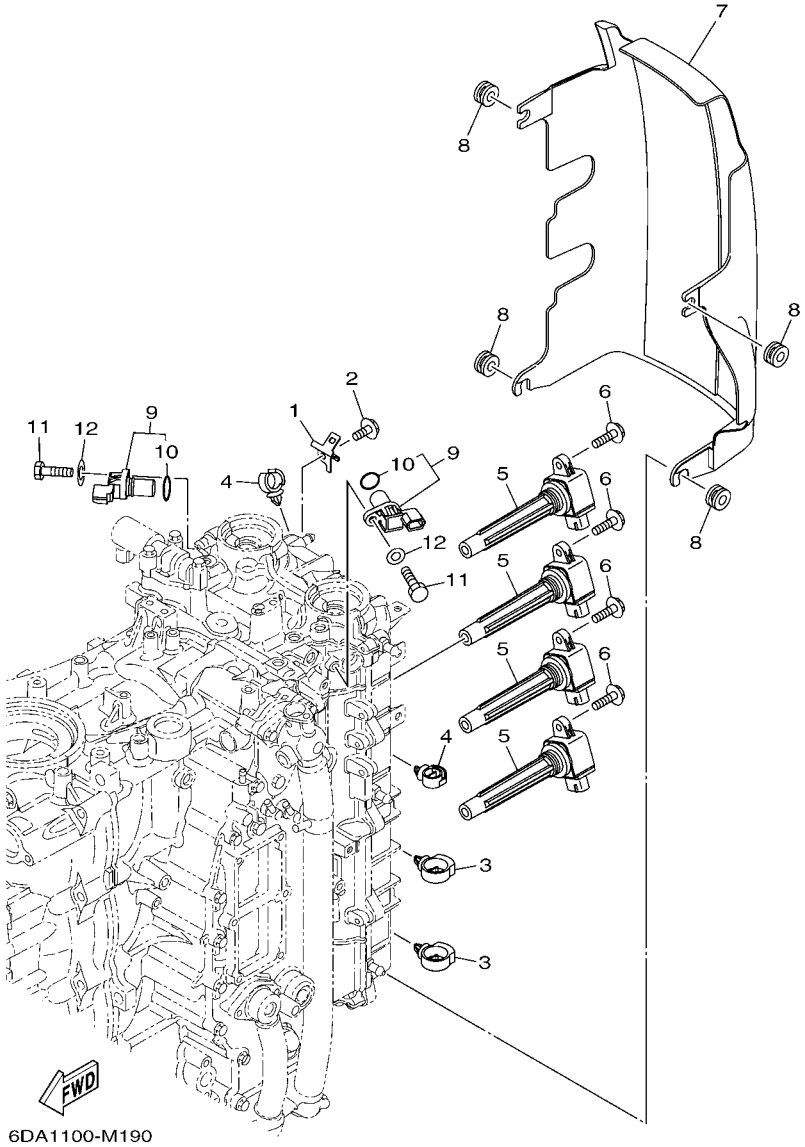


## FIG. 19 ELECTRICAL 3 — PARTIE ELECTRIQUE 3

| REF. NO. | PART NO. N° PIECES | DESCRIPTION DESCRIPTION | 6DV1 | 6DW1 | | | | REMARKS REMARQUES |
|---|---|---|---|---|---|---|---|---|
| 1 | 6D8–82389–01 | PLATE 2<br>PLAQUETTE 2 | 1 | 1 | | | | |
| 2 | 95895–06012 | BOLT, FLANGE<br>BOULON | 1 | 1 | | | | |
| 3 | 90464–20181 | CLAMP<br>BRIDE | 2 | 2 | | | | |
| 4 | 90464–13249 | CLAMP<br>BRIDE | 2 | 2 | | | | |
| 5 | 6CB–82310–00 | IGNITION COIL ASSY<br>BOBINE D'ALLUMAGE | 4 | 4 | | | | |
| 6 | 95895–06025 | BOLT, FLANGE<br>BOULON | 4 | 4 | | | | |
| 7 | 6DA–82314–00 | COVER, IGNITION COIL<br>COUVERCLE, BOBINE D'ALLUMAGE | 1 | 1 | | | | |
| 8 | 90480–12314 | GROMMET<br>PASSE-FIL | 4 | 4 | | | | |
| 9 | 6P2–85896–00 | SENSOR, CAM POSITION<br>SONDE DE CAME | 2 | 2 | | | | |
| 10 | 6P2–85075–00 | .O-RING<br>.JOINT TORIQUE | 1 | 1 | | | | |
| 11 | 97095–06020 | BOLT<br>BOULON | 2 | 2 | | | | |
| 12 | 92995–06600 | WASHER<br>RONDELLE | 2 | 2 | | | | |

## FIG. 20 ELECTRICAL 4 PARTIE ELECTRIQUE 4

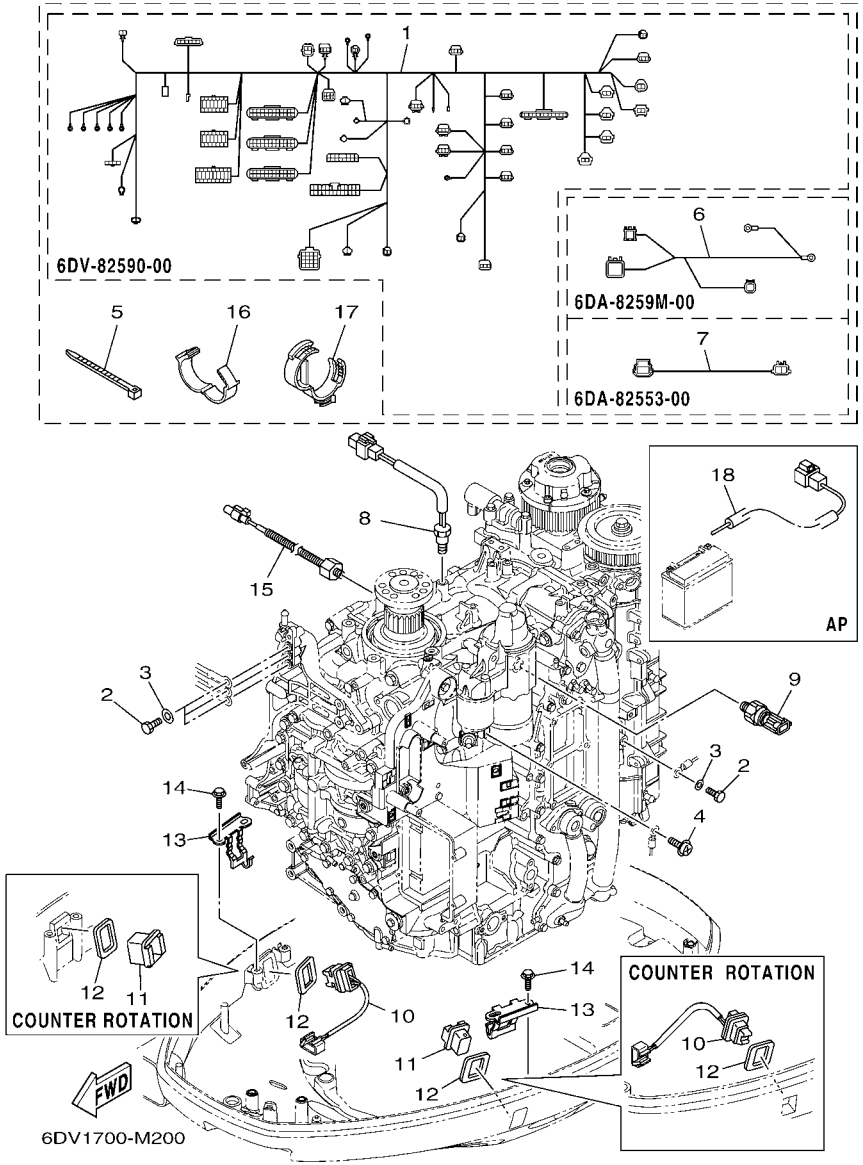


| REF. NO. | PART NO. N° PIECES | DESCRIPTION DESCRIPTION | 6DV1 | 6DW1 | | | | REMARKS REMARQUES |
|---|---|---|---|---|---|---|---|---|
| 1 | 6DV–82590–00 | WIRE HARNESS ASSY<br>FAISCEAU DE FILS COMPLET | 1 | 1 | | | | |
| 2 | 97095–06016 | BOLT<br>BOULON | 4 | 4 | | | | |
| 3 | 92995–06600 | WASHER<br>RONDELLE | 4 | 4 | | | | |
| 4 | 97985–04308 | SCREW, WITH WASHER<br>VIS, AVEC RONDELLE | 1 | 1 | | | | |
| 5 | 90465–11M59 | CLAMP<br>BRIDE | 1 | 1 | | | | |
| 6 | 6DA–8259M–00 | WIRE HARNESS ASSY 2<br>FAISCEAU DE FILS | 1 | 1 | | | | |
| 7 | 6DA–82553–00 | EXTENSION, WIRE LEAD<br>EXTENSION, FAISCEAU | 1 | 1 | | | | |
| 8 | 6CB–85790–00 | THERMOSENSOR ASSY<br>SENSITOMETRE | 1 | 1 | | | | |
| 9 | 6AW–83651–00 | SENDER, OIL PRESSURE<br>RACCORD, PRESSION D'HUILE | 1 | 1 | | | | |
| 10 | 6BR–82563–00 | TRIM & TILT SWITCH ASSY<br>INCLINER ET PARER COMMUTATEUR | 1 | 1 | | | | |
| 11 | 69J–42723–01 | COVER, BOTTOM<br>COUVERCLE | 1 | 1 | | | | |
| 12 | 69J–82587–00 | GASKET<br>JOINT | 2 | 2 | | | | |
| 13 | 63P–83614–01 | BRACKET<br>SUPPORT | 2 | 2 | | | | |
| 14 | 95895–06012 | BOLT, FLANGE<br>BOULON | 4 | 4 | | | | |
| 15 | 6CJ–85780–00 | SENSOR, KNOCK<br>SONDE DE COGNEMENT | 1 | 1 | | | | |
| 16 | 90464–26001 | CLAMP<br>BRIDE | 5 | 5 | | | | |
| 17 | 90464–30003 | CLAMP<br>BRIDE | 2 | 2 | | | | |
| 18 | 69J–81949–02 | WIRE, LEAD (ISOLATOR, 3.8M )<br>FIL (ISOLATOR, 3.8M) | 1 | 1 | | | | AP<br>AP |

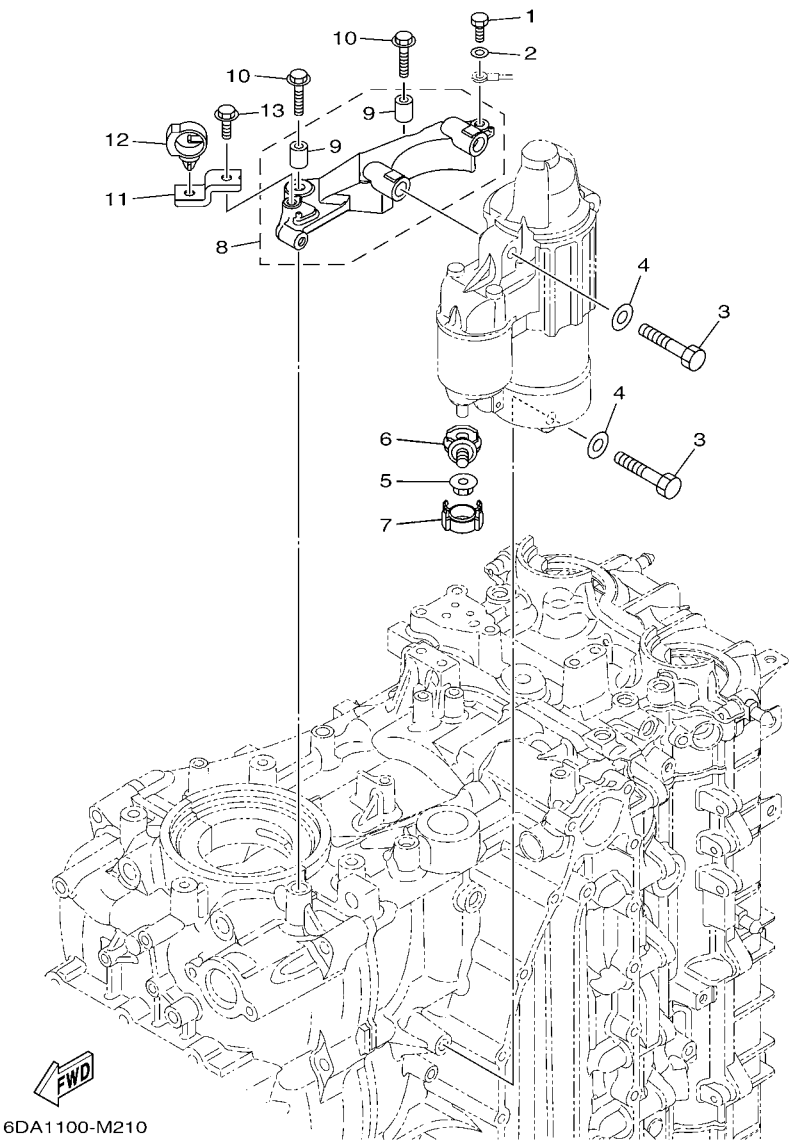


## FIG. 21 ELECTRICAL 5 PARTIE ELECTRIQUE 5

| REF. NO. | PART NO. N° PIECES | DESCRIPTION DESCRIPTION | 6DV1 | 6DW1 | | | | REMARKS REMARQUES |
|---|---|---|---|---|---|---|---|---|
| 1 | 97095–06016 | BOLT<br>BOULON | 1 | 1 | | | | |
| 2 | 92995–06600 | WASHER<br>RONDELLE | 1 | 1 | | | | |
| 3 | 97013–08045 | BOLT<br>BOULON | 3 | 3 | | | | |
| 4 | 92903–08600 | WASHER, PLATE<br>RONDELLE, PLATE | 3 | 3 | | | | |
| 5 | 90179–08003 | NUT<br>ECROU | 1 | 1 | | | | |
| 6 | 60V–81925–00 | TERMINAL<br>BORNE | 1 | 1 | | | | |
| 7 | 68F–82582–00 | COVER, WIRE HARNESS<br>COUVERCLE, FAISCEAU DE FILS | 1 | 1 | | | | |
| 8 | 6DA–81822–00 | BRACKET, STARTING MOTOR<br>SUPPORT, DEMARREUR ELECTRIQUE | 1 | 1 | | | | |
| 9 | 99590–10114 | .PIN, DOWEL<br>.GOUJON, D'ASSEMBLAGE | 2 | 2 | | | | |
| 10 | 90105–08M87 | BOLT, FLANGE<br>BOULON | 2 | 2 | | | | |
| 11 | 6DA–82388–00 | PLATE<br>PLAQUETTE | 1 | 1 | | | | |
| 12 | 90464–20181 | CLAMP<br>BRIDE | 1 | 1 | | | | |
| 13 | 95895–06016 | BOLT, FLANGE<br>BOULON | 1 | 1 | | | | |

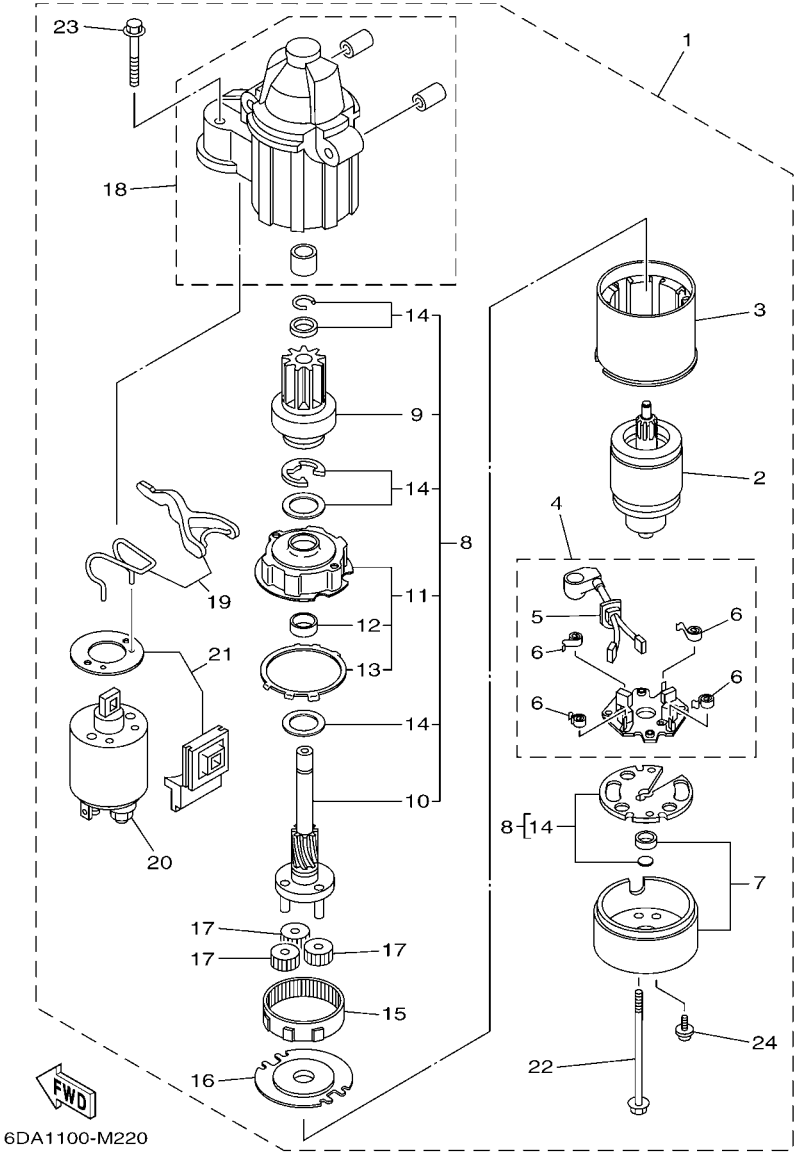


## FIG. 22 STARTING MOTOR DEMARREUR ELECTRIQUE

| REF. NO. | PART NO. N° PIECES | DESCRIPTION DESCRIPTION | 6DV1 | 6DW1 | | | | REMARKS REMARQUES |
|---|---|---|---|---|---|---|---|---|
| 1 | 6CB–81800–00 | STARTING MOTOR ASSY<br>DEMARREUR ELECTRIQUE COMPLET | 1 | 1 | | | | |
| 2 | 67F–81850–00 | .ARMATURE ASSY<br>.INDUIT | 1 | 1 | | | | |
| 3 | 67F–81810–00 | .STATOR ASSY<br>.STATOR COMPLET | 1 | 1 | | | | |
| 4 | 69J–81840–00 | .BRUSH HOLDER ASSY<br>.SUPPORT DE CHARBON | 1 | 1 | | | | |
| 5 | 69J–81801–00 | ..BRUSH SET<br>..CHARBON | 1 | 1 | | | | |
| 6 | 67F–81813–00 | ..SPRING, BRUSH<br>..RESSORT, DE CHARBON | 4 | 4 | | | | |
| 7 | 6CB–81820–00 | .REAR BRACKET ASSY<br>.SUPPORT ARRIERE COMPLET | 1 | 1 | | | | |
| 8 | 6CB–81807–00 | .GEAR ASSY, STARTING MOTOR<br>.PIGNON, DEMARREUR ELECTRIQUE | 1 | 1 | | | | |
| 9 | 6CB–81832–00 | ..CLUTCH, OVER RUN<br>..EMBRAYAGE, ROUE LIBRE | 1 | 1 | | | | |
| 10 | 6CB–81836–00 | ..SHAFT, PINION<br>..AXE, PIGNON | 1 | 1 | | | | |
| 11 | 67F–81821–00 | ..BRACKET, CENTER 1<br>..SUPPORT, CENTRE 1 | 1 | 1 | | | | |
| 12 | 67F–81841–00 | ...BEARING<br>...ROULEMENT | 1 | 1 | | | | |
| 13 | 67F–8183R–00 | ...GASKET<br>...JOINT | 1 | 1 | | | | |
| 14 | 6CB–81809–00 | ..WASHER KIT<br>..JEU DE RONDELLES | 1 | 1 | | | | |
| 15 | 67F–81891–00 | .GEAR, RING<br>.ROUE DENTEE | 1 | 1 | | | | WITH 67F-8183R-00<br>WITH 67F-8183R-00 |
| 16 | 67F–81830–00 | .BRACKET, CENTER 2<br>.SUPPORT, CENTRE 2 | 1 | 1 | | | | |
| 17 | 60V–8183T–00 | .GEAR, IDLER<br>.PIGNON, INTERMEDIAIRE | 3 | 3 | | | | |
| 18 | 6CB–81842–00 | .COVER<br>.COUVERCLE | 1 | 1 | | | | |
| 19 | 6C5–81839–00 | .LEVER ASSY<br>.LEVIER COMPLET | 1 | 1 | | | | |
| 20 | 6C5–81941–00 | .STARTER RELAY ASSY<br>.LANCEUR RELAIS (ENS.) | 1 | 1 | | | | |
| 21 | 6C5–81869–00 | .COVER, DUST<br>.COUVERCLE, POUSSIERE | 1 | 1 | | | | |
| 22 | 6CB–81826–00 | .BOLT<br>.BOULON | 2 | 2 | | | | |
| 23 | 69J–81828–00 | .SCREW 2<br>.VIS 2 | 2 | 2 | | | | |
| 24 | 67F–81846–00 | .SCREW<br>.VIS | 2 | 2 | | | | |

## FIG. 23 BOTTOM COWLING 1 CAPOT INFERIEUR 1

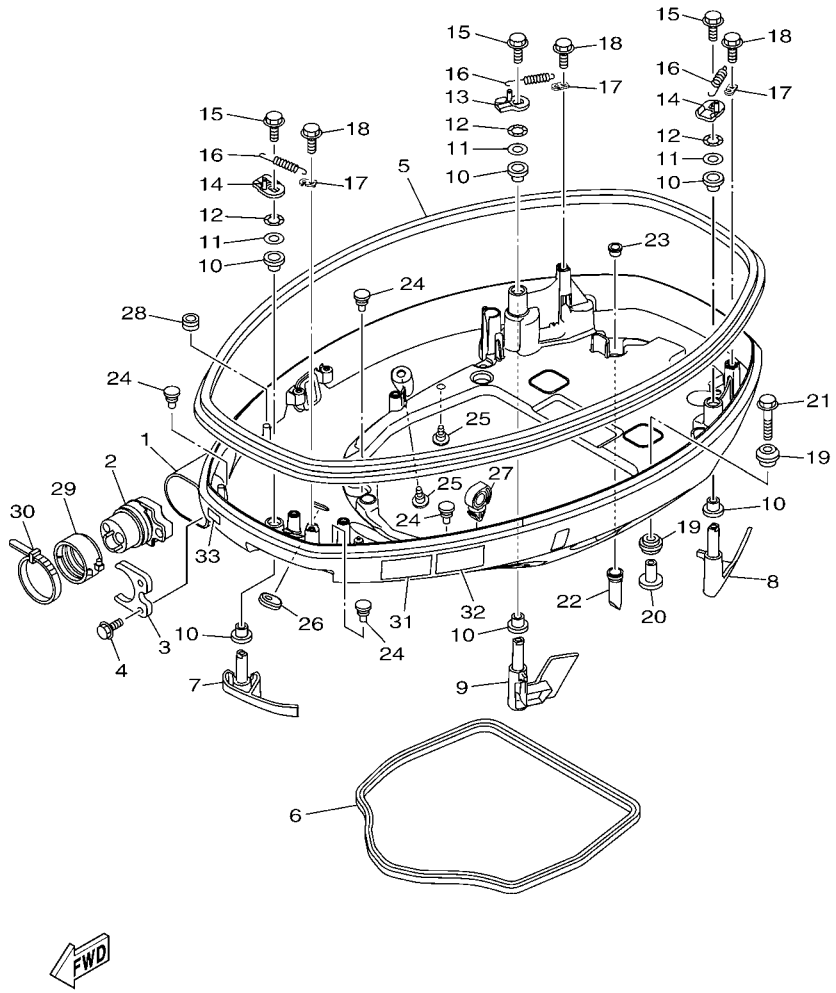


| REF. NO. | PART NO. N° PIECES | DESCRIPTION DESCRIPTION | 6DV1 | 6DW1 | | | | REMARKS REMARQUES |
|---|---|---|---|---|---|---|---|---|
| 1 | 6DA–42710–00–8D | BOTTOM COWLING ASSY<br>ENS. EMBASE | 1 | 1 | | | | |
| 2 | 6CE–42725–02 | GROMMET<br>PASSE-FIL | 1 | 1 | | | | |
| 3 | 6CB–42761–00 | STOPPER<br>PLAQUETTE | 1 | 1 | | | | |
| 4 | 95895–06014 | BOLT, FLANGE<br>BOULON | 2 | 2 | | | | |
| 5 | 6DA–42615–00 | SEAL<br>JOINT | 1 | 1 | | | | |
| 6 | 63P–42716–00 | RUBBER, SEAL 1<br>JOINT EN CAOUTCHOUC 1 | 1 | 1 | | | | |
| 7 | 6DA–42815–00–8D | LEVER, CLAMP<br>LEVIER, PRESSE | 1 | 1 | | | | |
| 8 | 6DA–42816–00–8D | LEVER, CLAMP<br>LEVIER, PRESSE | 1 | 1 | | | | |
| 9 | 6DA–42817–00–8D | LEVER, CLAMP<br>LEVIER, PRESSE | 1 | 1 | | | | |
| 10 | 90386–15M73 | BUSH<br>DOUILLE | 6 | 6 | | | | |
| 11 | 90201–156J2 | WASHER, PLATE<br>RONDELLE, PLATE | 3 | 3 | | | | |
| 12 | 90206–15M18 | WASHER, WAVE<br>RONDELLE, ONDULEE | 3 | 3 | | | | |
| 13 | 6CB–42818–00 | LEVER, CLAMP<br>LEVIER, PRESSE | 1 | 1 | | | | |
| 14 | 6CB–42819–00 | LEVER, CLAMP<br>LEVIER, PRESSE | 2 | 2 | | | | |
| 15 | 95880–08012 | BOLT, FLANGE<br>BOULON, A COLLERETTE | 3 | 3 | | | | |
| 16 | 90506–22001 | SPRING, TENSION<br>RESSORT, TENSION | 3 | 3 | | | | |
| 17 | 66T–43144–00 | HOOK, SPRING<br>CROCHET | 3 | 3 | | | | |
| 18 | 95895–06012 | BOLT, FLANGE<br>BOULON | 3 | 3 | | | | |
| 19 | 90480–22M81 | GROMMET<br>PASSE-FIL | 8 | 8 | | | | |
| 20 | 90387–08M37 | COLLAR<br>COLLERETTE | 4 | 4 | | | | |
| 21 | 90119–08M22 | BOLT, WITH WASHER<br>BOULON, AVEC RONDELLE | 4 | 4 | | | | |
| 22 | 6DA–42717–00 | RUBBER, SEAL 2<br>JOINT EN CAOUTCHOUC 2 | 4 | 4 | | | | |
| 23 | 6DA–42384–00 | SEAL, CAP<br>JOINT, CAPUCHON | 4 | 4 | | | | |
| 24 | 6H4–42748–00 | GROMMET<br>PASSE-FIL | 4 | 4 | | | | |
| 25 | 6P2–44391–00 | NIPPLE, HOSE<br>RACCORD D'ESSENCE | 2 | 2 | | | | |
| 26 | 61A–42727–00 | GROMMET<br>PASSE-FIL | 1 | 1 | | | | |
| 27 | 90464–13249 | CLAMP<br>BRIDE | 1 | 1 | | | | |

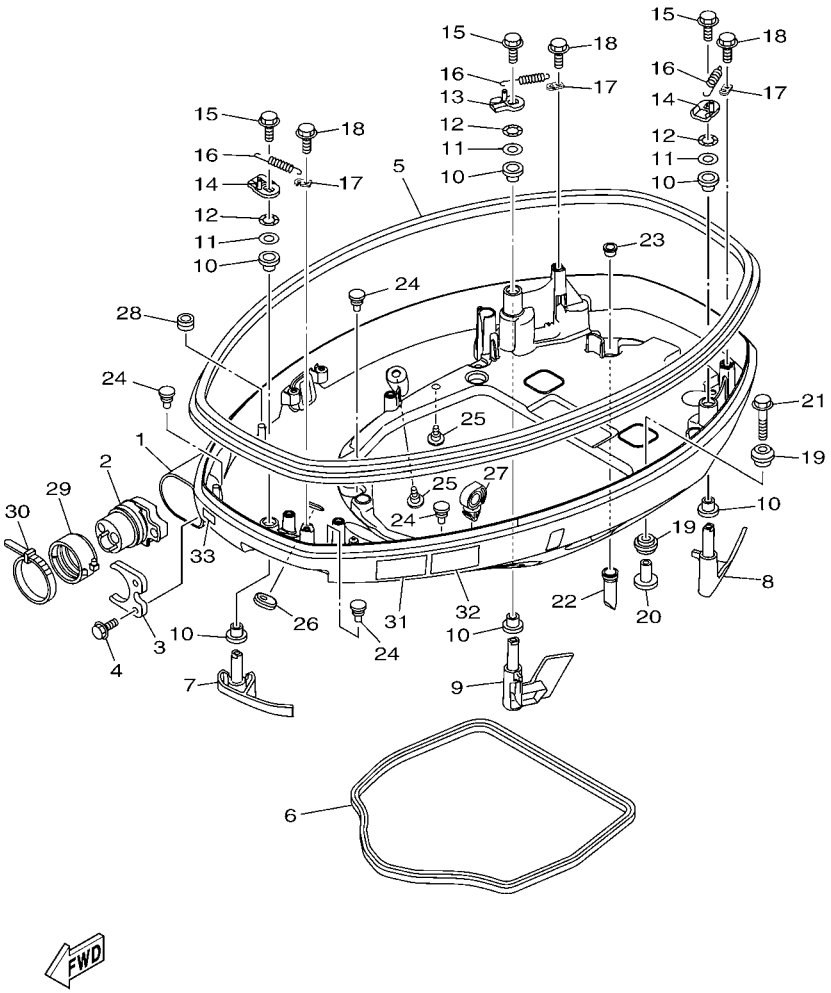


## FIG. 23 BOTTOM COWLING 1 CAPOT INFERIEUR 1

| REF. NO. | PART NO. N° PIECES | DESCRIPTION DESCRIPTION | 6DV1 | 6DW1 | | | | REMARKS REMARQUES |
|---|---|---|---|---|---|---|---|---|
| 28 | 90480–13163 | GROMMET<br>PASSE-FIL | 1 | 1 | | | | |
| 29 | 68F–42753–00 | FASTNER<br>ATTACHE | 1 | 1 | | | | AP<br>AP |
| 30 | 90464–20258 | CLAMP<br>BRIDE | 1 | 1 | | | | AP<br>AP |
| 31 | 6AH–42794–40 | LABEL, WARNING (GENERAL)<br>ETIQUETTE, AVERTISSEMENT | 1 | 1 | | | | |
| 32 | 6AH–42794–50 | LABEL, WARNING (GENERAL)<br>ETIQUETTE, AVERTISSEMENT | 1 | 1 | | | | |
| 33 | 6AH–81996–00 | MARK<br>MARQUE | 1 | 1 | | | | |

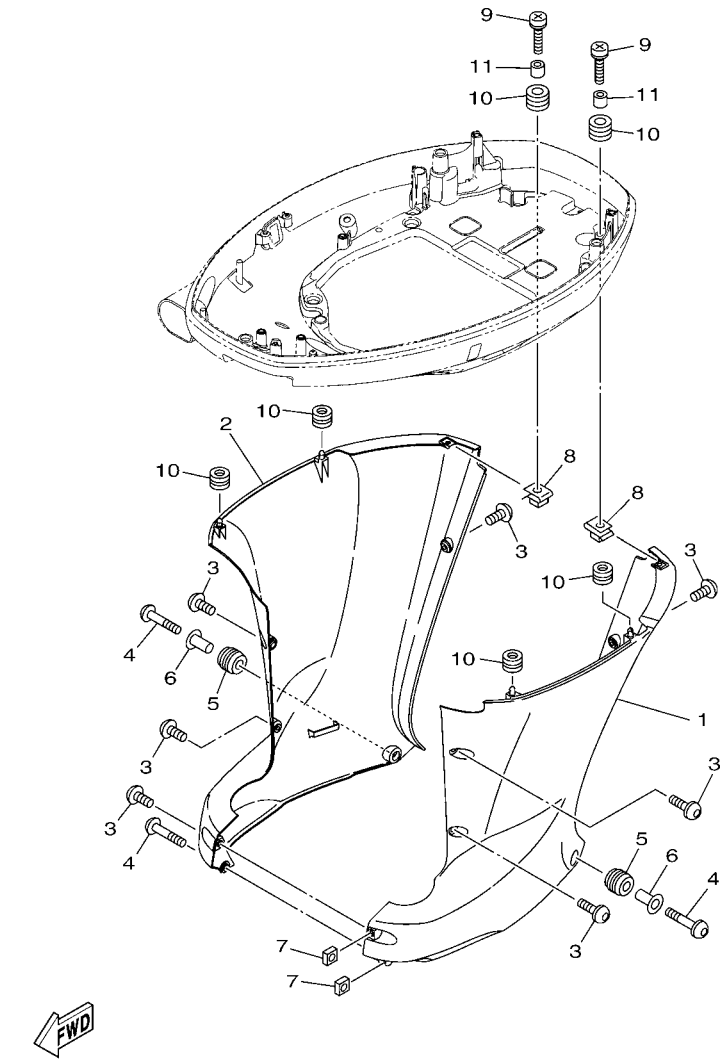


## FIG. 24 BOTTOM COWLING 2 CAPOT INFERIEUR 2

| REF. NO. | PART NO. N° PIECES | DESCRIPTION DESCRIPTION | 6DV1 | 6DW1 | | | | REMARKS REMARQUES |
|---|---|---|---|---|---|---|---|---|
| 1 | 6DA–42740–00 | APRON COMPLETE 1<br>CAPOT LATERAL COMPLETE 1 | 1 | 1 | | | | X(25.3")<br>X(25.3") |
| 2 | 6DA–42770–00 | APRON COMPLETE 2<br>CAPOT LATERAL COMPLETE 2 | 1 | 1 | | | | X(25.3")<br>X(25.3") |
| 3 | 90111–06144 | BOLT,HEX. SOCKET BUTTON<br>BOULON | 7 | 7 | | | | X(25.3")<br>X(25.3") |
| 4 | 90111–06142 | BOLT,HEX. SOCKET BUTTON<br>BOULON | 3 | 3 | | | | X(25.3")<br>X(25.3") |
| 5 | 90480–16009 | GROMMET<br>PASSE-FIL | 2 | 2 | | | | X(25.3")<br>X(25.3") |
| 6 | 90387–07028 | COLLAR<br>COLLERETTE | 2 | 2 | | | | X(25.3")<br>X(25.3") |
| 7 | 90173–06001 | NUT, SQUARE<br>ECROU, CARRE | 2 | 2 | | | | X(25.3")<br>X(25.3") |
| 8 | 90183–061A6 | NUT, SPRING<br>ECROU, RESSORT | 2 | 2 | | | | |
| 9 | 90159–06053 | SCREW, WITH WASHER<br>VIS, AVEC RONDELLE | 2 | 2 | | | | |
| 10 | 90480–13M24 | GROMMET<br>PASSE-FIL | 6 | 6 | | | | |
| 11 | 90387–06M43 | COLLAR<br>COLLERETTE | 2 | 2 | | | | |

## FIG. 25 BOTTOM COWLING 3 CAPOT INFERIEUR 3

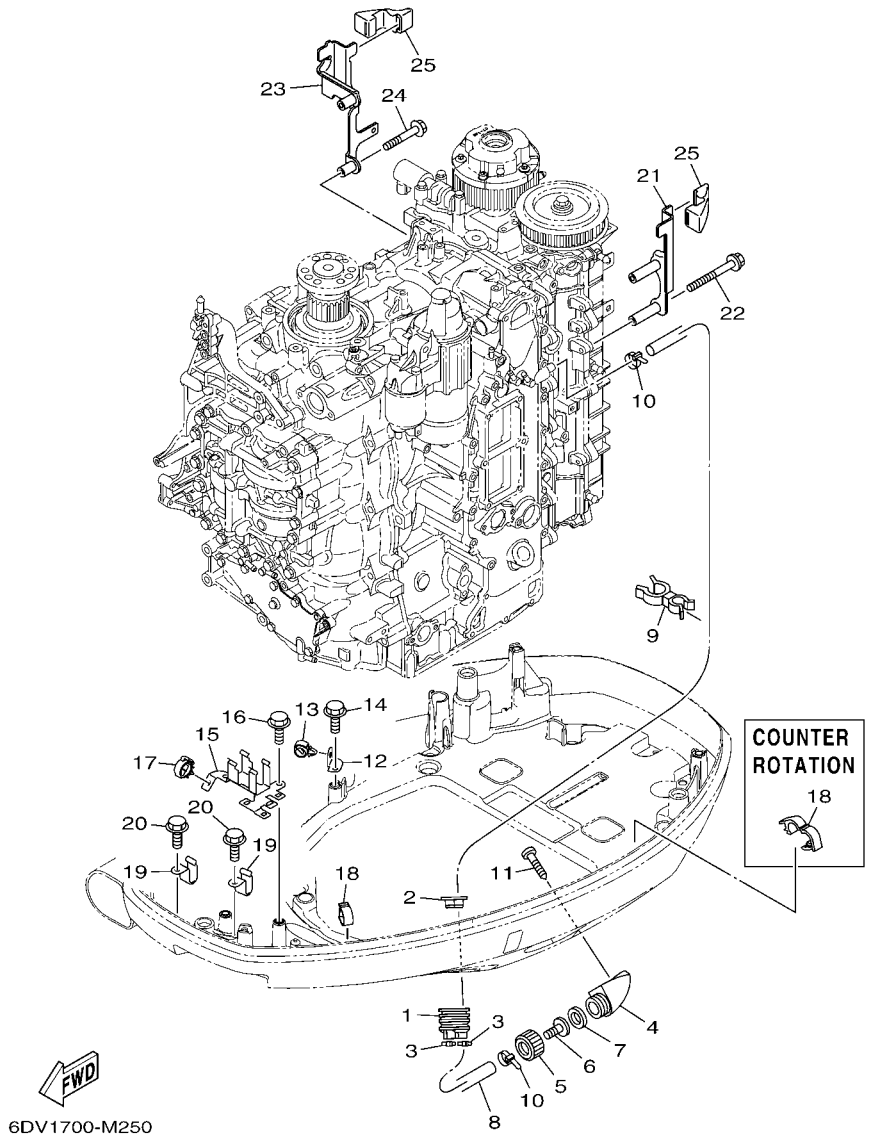


| REF. NO. | PART NO. N° PIECES | DESCRIPTION DESCRIPTION | 6DV1 | 6DW1 | | | | REMARKS REMARQUES |
|---|---|---|---|---|---|---|---|---|
| 1 | 6H1–42726–21 | GROMMET<br>PASSE-FIL | 1 | 1 | | | | |
| 2 | 6BG–42384–00 | SEAL, CAP<br>JOINT, CAPUCHON | 1 | 1 | | | | |
| 3 | 90465–11M10 | CLAMP<br>BRIDE | 2 | 2 | | | | |
| 4 | 6AW–12572–00 | ADAPTER<br>ADAPTATEUR | 1 | 1 | | | | |
| 5 | 6R3–12581–00 | JOINT, HOSE 1<br>JOINT DE TUYAU | 1 | 1 | | | | |
| 6 | 6AW–12582–00 | JOINT, HOSE 2<br>RACCORD DE TUYAU 1 | 1 | 1 | | | | |
| 7 | 6R3–12583–00 | GASKET, HOSE JOINT<br>JOINT | 1 | 1 | | | | |
| 8 | 6DA–42541–00 | PIPE 1<br>TUYAU 1 | 1 | 1 | | | | |
| 9 | 90464–21256 | CLAMP<br>BRIDE | 1 | 1 | | | | |
| 10 | 90465–11M10 | CLAMP<br>BRIDE | 2 | 2 | | | | |
| 11 | 97780–60520 | SCREW, TAPPING<br>VIS, TETE BOMBEE | 2 | 2 | | | | |
| 12 | 63P–42756–00 | STAY, CLAMP<br>SUPPORT, COLLIER | 1 | | | | | |
| 13 | 90464–13249 | CLAMP<br>BRIDE | 1 | | | | | |
| 14 | 95895–06012 | BOLT, FLANGE<br>BOULON | 1 | | | | | |
| 15 | 6DV–8366G–00 | BRACKET 3<br>SUPPORT 3 | 1 | 1 | | | | |
| 16 | 95895–06012 | BOLT, FLANGE<br>BOULON | 2 | 2 | | | | |
| 17 | 90464–18246 | CLAMP<br>BRIDE | 1 | 1 | | | | |
| 18 | 90464–18004 | CLAMP<br>BRIDE | 1 | | | | | |
| | 90464–18004 | CLAMP<br>BRIDE | | 2 | | | | |
| 19 | 90462–12013 | CLAMP<br>BRIDE | 2 | 2 | | | | |
| 20 | 95895–06012 | BOLT, FLANGE<br>BOULON | 2 | 2 | | | | |
| 21 | 6DA–11998–00 | BRACKET 1<br>SUPPORT 1 | 1 | 1 | | | | |
| 22 | 95895–06065 | BOLT, FLANGE<br>BOULON | 2 | 2 | | | | |
| 23 | 6DA–11999–00 | BRACKET 2<br>SUPPORT 2 | 1 | 1 | | | | |
| 24 | 95895–06040 | BOLT, FLANGE<br>BOULON | 2 | 2 | | | | |
| 25 | 6CB–42662–00 | DAMPER<br>AMORTISSEUR | 2 | 2 | | | | |

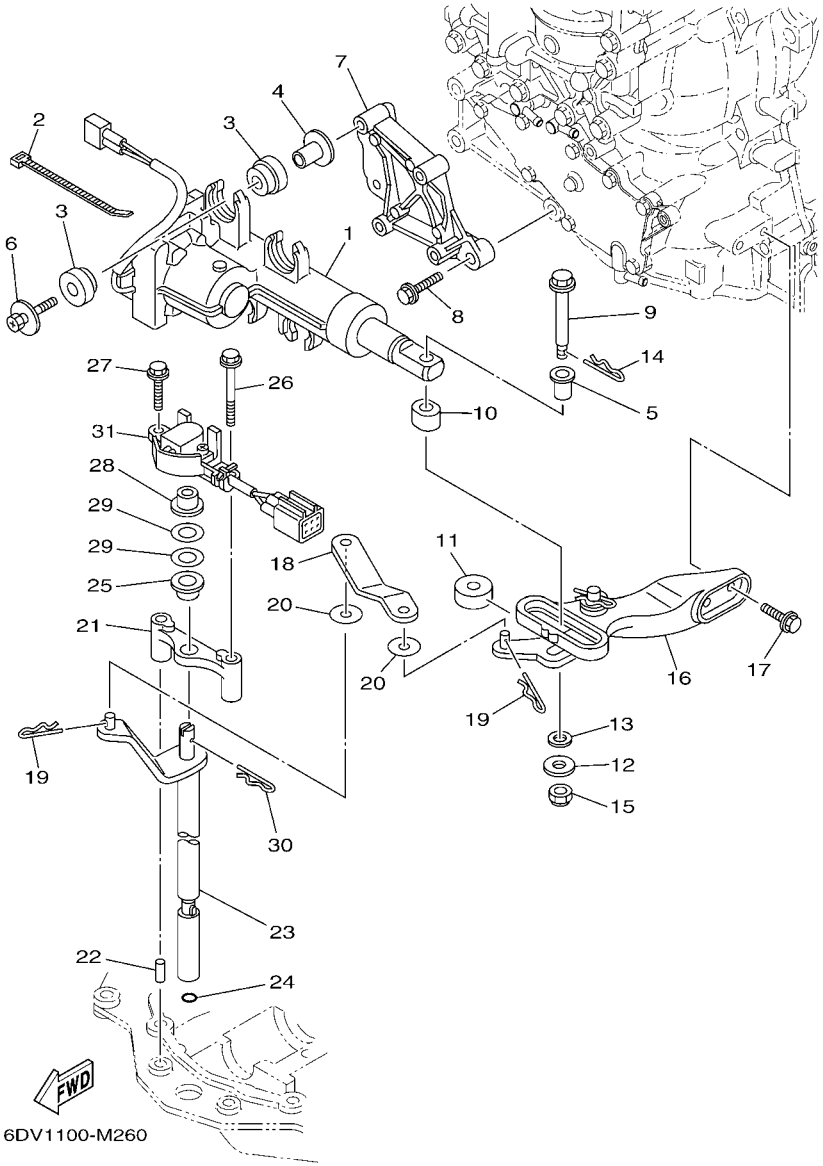


## FIG. 26 CONTROL COMMANDE

| REF. NO. | PART NO. N° PIECES | DESCRIPTION DESCRIPTION | 6DV1 | 6DW1 | | | | REMARKS REMARQUES |
|---|---|---|---|---|---|---|---|---|
| 1 | 6DV–4820A–00 | ACTUATOR UNIT<br>ACTUATOR UNIT | 1 | 1 | | | | |
| 2 | 90465–11M10 | CLAMP<br>BRIDE | 1 | 1 | | | | |
| 3 | 6DV–85564–00 | GROMMET<br>RONDELLE CAOUTCHOUC | 8 | 8 | | | | |
| 4 | 90387–06176 | COLLAR<br>COLLERETTE | 4 | 4 | | | | |
| 5 | 90386–08008 | BUSH<br>DOUILLE | 1 | 1 | | | | |
| 6 | 68F–85119–00 | BOLT<br>BOULON | 4 | 4 | | | | |
| 7 | 6DV–44142–00 | JOINT<br>AXE | 1 | 1 | | | | |
| 8 | 95875–08030 | BOLT, FLANGE<br>BOULON, A COLLERETTE | 3 | 3 | | | | |
| 9 | 6DV–42195–00 | PIN, JOINT 1<br>GOUPILLE | 1 | 1 | | | | |
| 10 | 6DV–44122–00 | BUSHING, SHIFT ROD LEVER<br>DOUILLE, LEVIER D'EMBRAYAGE | 1 | 1 | | | | |
| 11 | 6DV–44132–00 | BUSHING<br>COUSSINET | 1 | 1 | | | | |
| 12 | 90201–06068 | WASHER, PLATE<br>RONDELLE, PLATE | 1 | 1 | | | | |
| 13 | 90202–08M41 | WASHER, PLATE<br>RONDELLE, PLATE | 1 | 1 | | | | |
| 14 | 90468–18008 | CLIP<br>JONC | 1 | 1 | | | | |
| 15 | 90185–06M07 | NUT, SELF-LOCKING<br>ECROU,AUTO-BLOQUANT | 1 | 1 | | | | |
| 16 | 6DV–44100–00 | SHIFT LINK ASSY<br>MAILLON DE SELECTEUR | 1 | 1 | | | | |
| 17 | 97575–06520 | BOLT, WITH WASHER<br>VIS HEXAGONAL AVC RONDELLE | 2 | 2 | | | | |
| 18 | 6DV–44121–00 | LEVER, SHIFT ROD<br>LEVIER, TIGE D'INVERSION | 1 | 1 | | | | |
| 19 | 90468–18008 | CLIP<br>JONC | 2 | 2 | | | | |
| 20 | 90202–06015 | WASHER, PLATE<br>RONDELLE, PLATE | 2 | 2 | | | | |
| 21 | 6DV–44118–00 | BRACKET<br>SUPPORT | 1 | 1 | | | | |
| 22 | 93604–09066 | PIN, DOWEL<br>CLAVETTE | 1 | 1 | | | | |
| 23 | 6DV–44120–00 | HANDLE GEAR SHIFT ASSY<br>LEVIER D'EMBRAYAGE | 1 | 1 | | | | |
| 24 | 93210–09165 | O-RING<br>JOINT TORIQUE | 1 | 1 | | | | |
| 25 | 90386–10001 | BUSH<br>DOUILLE | 1 | 1 | | | | |
| 26 | 97595–06550 | BOLT, WITH WASHER<br>VIS HEXAGONAL AVC RONDELLE | 1 | 1 | | | | |
| 27 | 97575–06520 | BOLT, WITH WASHER<br>VIS HEXAGONAL AVC RONDELLE | 1 | 1 | | | | |

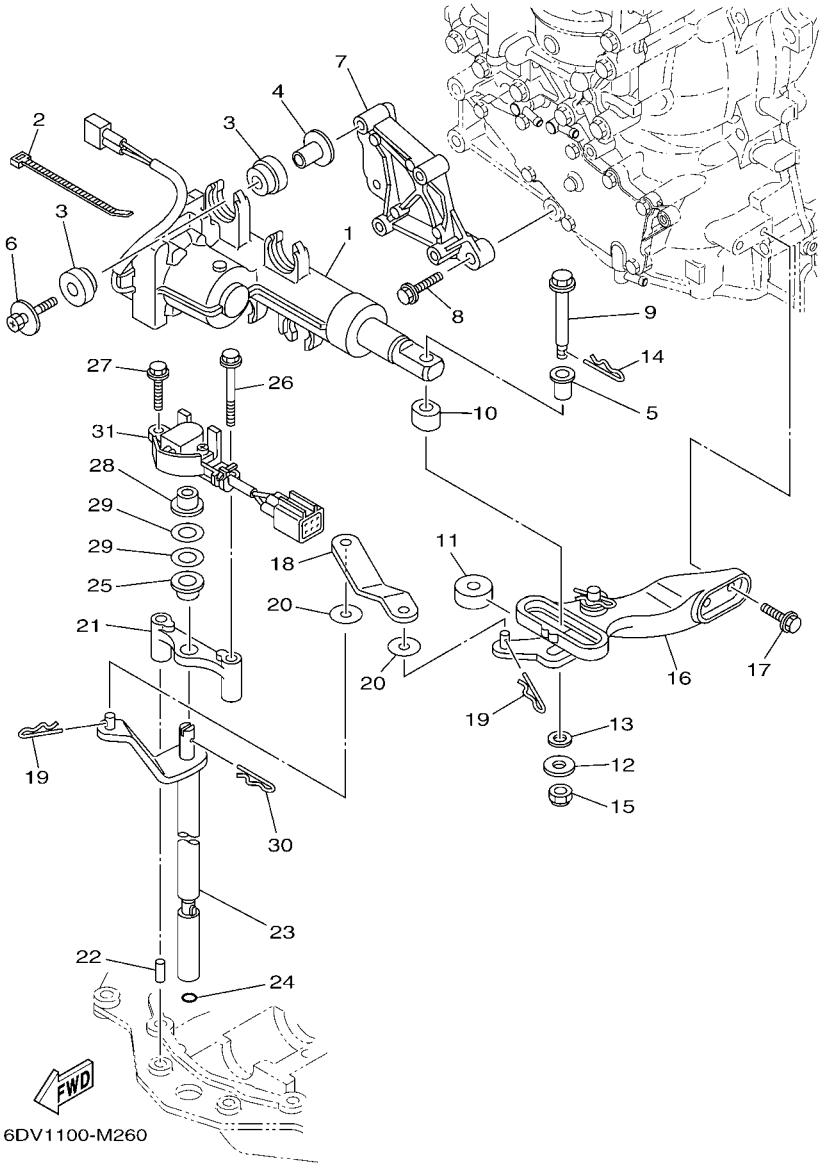


## FIG. 26 CONTROL COMMANDE

| REF. NO. | PART NO. N° PIECES | DESCRIPTION DESCRIPTION | 6DV1 | 6DW1 | | | | REMARKS REMARQUES |
|---|---|---|---|---|---|---|---|---|
| 28 | 90386–10001 | BUSH<br>DOUILLE | 1 | 1 | | | | |
| 29 | 90201–11008 | WASHER, PLATE<br>RONDELLE, PLATE | 2 | 2 | | | | |
| 30 | 90468–180A0 | CLIP<br>JONC | 1 | 1 | | | | |
| 31 | 6DV–68303–00 | SENSOR ASSY<br>SONDE (ENS.) | 1 | 1 | | | | |

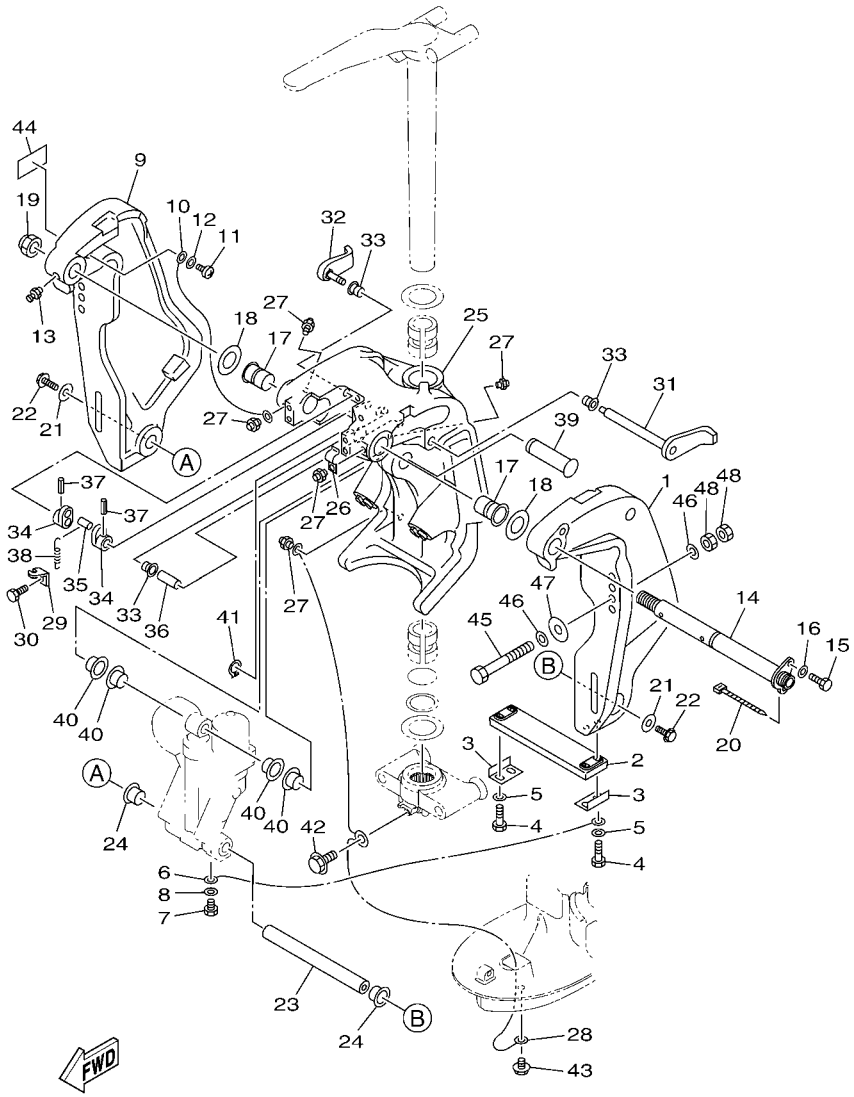


6DB1100-M270

## FIG. 27 BRACKET 1 SUPPORT 1

| REF. NO. | PART NO. N° PIECES | DESCRIPTION DESCRIPTION | 6DV1 | 6DW1 | | | | REMARKS REMARQUES |
|---|---|---|---|---|---|---|---|---|
| 1 | 64E–43111–02–8D | BRACKET, CLAMP 1<br>PRESSE 1 | 1 | 1 | | | | |
| 2 | 6AW–45251–00 | ANODE<br>ANODE | 1 | 1 | | | | |
| 3 | 6G5–44526–00 | PLATE<br>PLAQUE | 2 | 2 | | | | |
| 4 | 97095–06030 | BOLT<br>BOULON | 4 | 4 | | | | |
| 5 | 92995–06600 | WASHER<br>RONDELLE | 4 | 4 | | | | |
| 6 | 6E5–82148–00 | WIRE, LEAD 4<br>FIL 4 | 1 | 1 | | | | |
| 7 | 97095–06010 | BOLT<br>BOULON | 1 | 1 | | | | |
| 8 | 92995–06600 | WASHER<br>RONDELLE | 1 | 1 | | | | |
| 9 | 64E–43112–02–8D | BRACKET, CLAMP 2<br>PRESSE 2 | 1 | 1 | | | | |
| 10 | 6E5–82148–00 | WIRE, LEAD 4<br>FIL 4 | 1 | 1 | | | | |
| 11 | 97885–06012 | SCREW, PAN HEAD<br>VIS, A ENCOCHE | 1 | 1 | | | | |
| 12 | 92995–06600 | WASHER<br>RONDELLE | 1 | 1 | | | | |
| 13 | 93700–06M03 | NIPPLE, GREASE<br>PION | 1 | 1 | | | | |
| 14 | 64E–43131–30 | BOLT, CLAMP BRACKET<br>BOULON, PRESSE | 1 | 1 | | | | |
| 15 | 97095–08020 | BOLT<br>BOULON | 1 | 1 | | | | |
| 16 | 92995–08600 | WASHER<br>RONDELLE | 1 | 1 | | | | |
| 17 | 90386–25M31 | BUSH<br>DOUILLE | 2 | 2 | | | | |
| 18 | 90201–26M59 | WASHER, PLATE<br>RONDELLE, PLATE | 2 | 2 | | | | |
| 19 | 90185–22M11 | NUT, SELF-LOCKING<br>ECROU,AUTO-BLOQUANT | 1 | 1 | | | | |
| 20 | 90465–11M10 | CLAMP<br>BRIDE | 1 | 1 | | | | |
| 21 | 90201–10060 | WASHER, PLATE<br>RONDELLE, PLATE | 2 | 2 | | | | |
| 22 | 97575–10530 | BOLT, WITH WASHER<br>VIS HEXAGONAL AVC RONDELLE | 2 | 2 | | | | |
| 23 | 6BC–43818–00 | PIN, LOWER SHOCK MOUNT<br>AXE, INFERIEUR AMORTISSEUR | 1 | 1 | | | | |
| 24 | 90386–22M98 | BUSH<br>DOUILLE | 2 | 2 | | | | |
| 25 | 64E–43311–20–8D | BRACKET, SWIVEL 1<br>SUPPORT, PIVOT 1 | 1 | 1 | | | | X(25.3")<br>X(25.3") |
| 26 | 90465–08M63 | CLAMP<br>BRIDE | 1 | 1 | | | | |
| 27 | 93700–06M03 | NIPPLE, GREASE<br>PION | 5 | 5 | | | | |

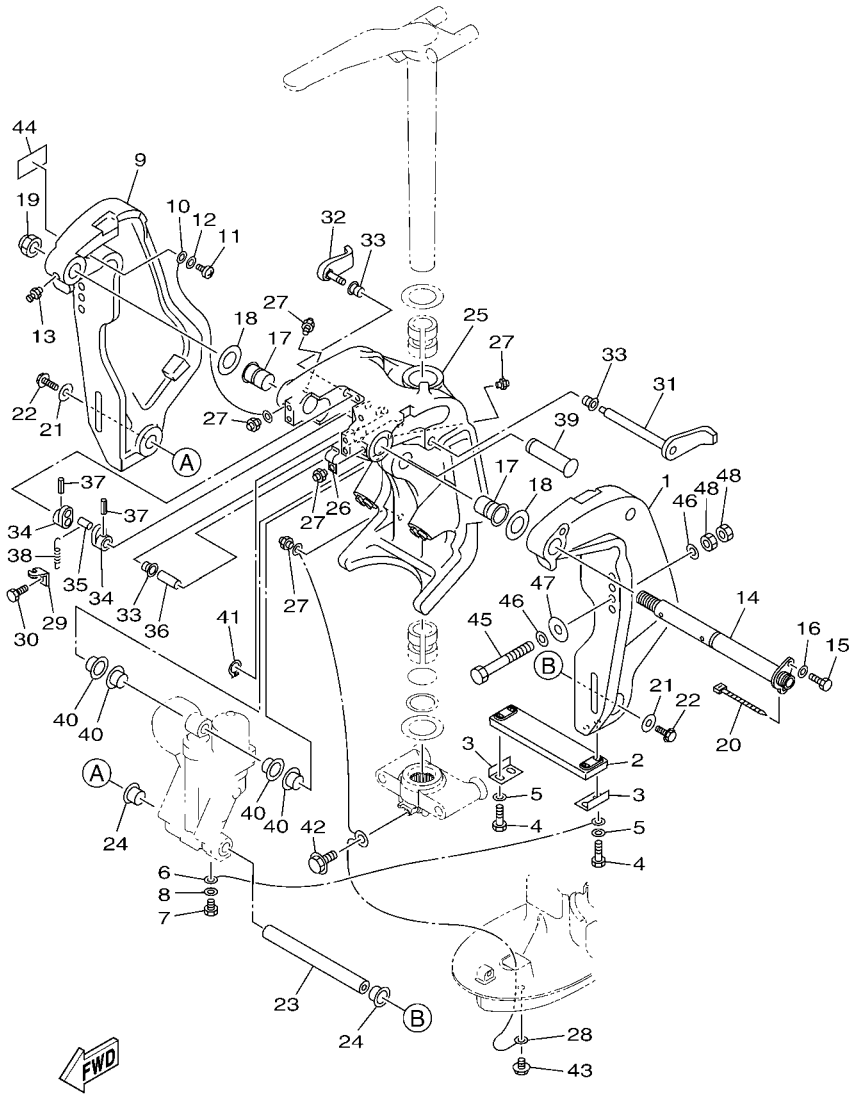


6DB1100-M270

## FIG. 27 BRACKET 1 — SUPPORT 1

| REF. NO. | PART NO. N° PIECES | DESCRIPTION DESCRIPTION | 6DV1 | 6DW1 | | | | REMARKS REMARQUES |
|---|---|---|---|---|---|---|---|---|
| 28 | 6DA–82149–00 | WIRE, LEAD 3<br>FIL 3 | 1 | 1 | | | | X(25.3")<br>X(25.3") |
| 29 | 6G5–43144–00 | HOOK, SPRING<br>CROCHET | 1 | 1 | | | | |
| 30 | 97095–06010 | BOLT<br>BOULON | 1 | 1 | | | | |
| 31 | 6G5–43181–02 | LEVER, TILT STOP 1<br>LEVIER VERROUILLAGE RELEVAGE 1 | 1 | 1 | | | | |
| 32 | 6G5–43185–02 | LEVER, TILT STOP 2<br>LEVIER VERROUILLAGE RELEVAGE 2 | 1 | 1 | | | | |
| 33 | 90386–10M16 | BUSH<br>DOUILLE | 3 | 3 | | | | |
| 34 | 6G5–43148–00 | COLLAR, DISTANCE<br>ENTRETOISE | 2 | 2 | | | | |
| 35 | 90249–06M19 | PIN<br>GOUPILLE | 1 | 1 | | | | |
| 36 | 90387–10M05 | COLLAR<br>COLLERETTE | 1 | 1 | | | | |
| 37 | 91690–30020 | PIN, SPRING<br>AGRAFFE | 2 | 2 | | | | |
| 38 | 90506–16003 | SPRING, TENSION<br>RESSORT, TENSION | 1 | 1 | | | | |
| 39 | 64E–43126–00 | PIN, UPPER SHOCK MOUNT<br>AXE, SUPERIEUR AMORTISSEUR | 1 | 1 | | | | |
| 40 | 90386–22M98 | BUSH<br>DOUILLE | 4 | 4 | | | | |
| 41 | 93410–22M11 | CIRCLIP<br>CLIPS | 1 | 1 | | | | |
| 42 | 95895–06010 | BOLT, FLANGE<br>BOULON | 1 | 1 | | | | X(25.3")<br>X(25.3") |
| 43 | 95895–06010 | BOLT, FLANGE<br>BOULON | 1 | 1 | | | | |
| 44 | 63V–82377–50 | LABEL (SPARK,IGNITION)<br>ETIQUETTE | 1 | 1 | | | | FOR F(L)200GET1<br>FOR F(L)200GET1 |
| 45 | 90101–12M05 | BOLT (L:130MM)<br>BOULON (L:130MM) | 4 | 4 | | | | UR F(L)200GET<br>UR F(L)200GET |
| | 90101–12M05 | BOLT (L:130MM)<br>BOULON (L:130MM) | 2 | 2 | | | | UR F(L)200GET1<br>UR F(L)200GET1 |
| | 90101–12047 | BOLT (L:150MM)<br>BOULON (L:150MM) | 2 | 2 | | | | UR F(L)200GET1<br>UR F(L)200GET1 |
| 46 | 90201–13M01 | WASHER, PLATE<br>RONDELLE, PLATE | 8 | 8 | | | | |
| 47 | 90201–12426 | WASHER, PLATE<br>RONDELLE, PLATE | 4 | 4 | | | | |
| 48 | 95380–12600 | NUT<br>ECROU | 8 | 8 | | | | |

## FIG. 28 BRACKET 2 SUPPORT 2

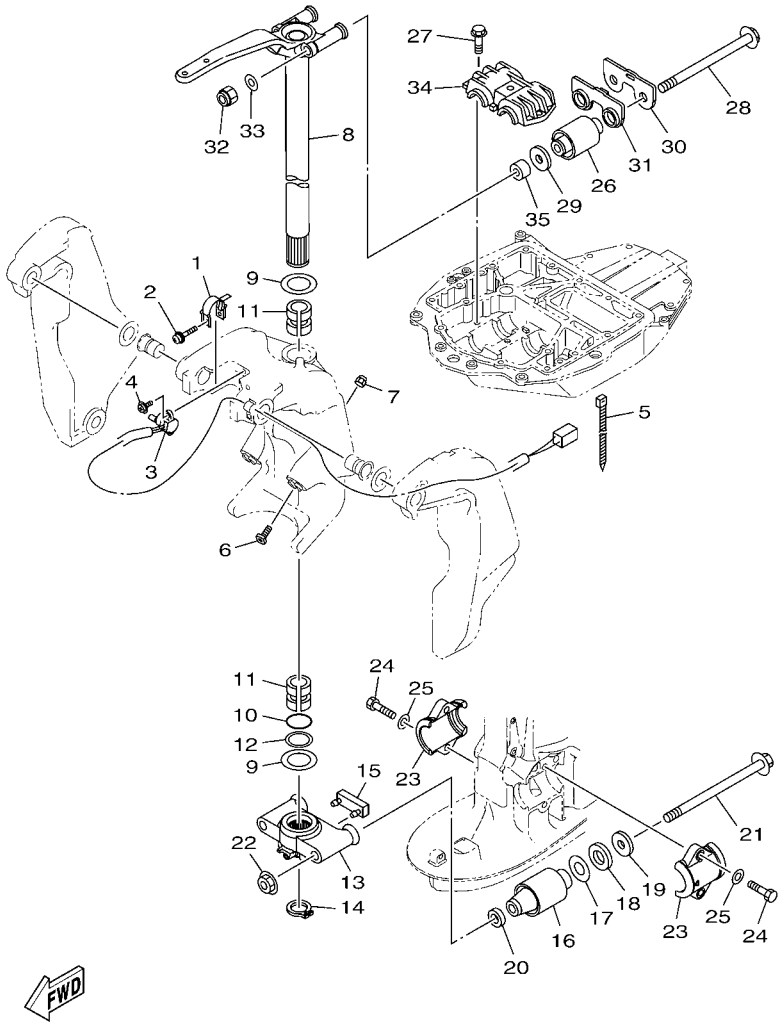


6DB1100-M280

| REF. NO. | PART NO. N° PIECES | DESCRIPTION DESCRIPTION | 6DV1 | 6DW1 | | | | REMARKS REMARQUES |
|---|---|---|---|---|---|---|---|---|
| 1 | 64E–43139–10 | CAM, TRIM SENDER<br>VILEBREQUIN TRUM | 1 | 1 | | | | |
| 2 | 90159–05059 | SCREW, WITH WASHER<br>VIS, AVEC RONDELLE | 1 | 1 | | | | |
| 3 | 67H–83672–01 | TRIM SENDER<br>INCLINER RACCORD | 1 | 1 | | | | |
| 4 | 97985–06216 | SCREW, WITH WASHER<br>VIS, AVEC RONDELLE | 2 | 2 | | | | |
| 5 | 90465–11M10 | CLAMP<br>BRIDE | 3 | 3 | | | | |
| 6 | 61A–43376–00 | BOLT, THRUST RECEIVER<br>BOULON | 2 | 2 | | | | |
| 7 | 95780–10300 | NUT, FLANGE<br>ECROU | 2 | 2 | | | | |
| 8 | 6DA–42510–00–8D | STEERING BRACKET ASSY<br>DIRECTION SUPPORT (ENS.) | 1 | 1 | | | | X(25.3")<br>X(25.3") |
| 9 | 90201–38M60 | WASHER, PLATE<br>RONDELLE, PLATE | 2 | 2 | | | | |
| 10 | 93210–37MH7 | O-RING<br>JOINT TORIQUE | 1 | 1 | | | | |
| 11 | 90386–38M32 | BUSH<br>DOUILLE | 2 | 2 | | | | |
| 12 | 90202–40M47 | WASHER, PLATE<br>RONDELLE, PLATE | 1 | 1 | | | | |
| 13 | 6DA–44551–00–CA | HOUSING, LOWER MOUNT RUBBER 1<br>BOITIER, SILENT-BLOC INFERIEUR | 1 | 1 | | | | X(25.3")<br>X(25.3") |
| 14 | 93410–37M04 | CIRCLIP<br>CLIPS | 1 | 1 | | | | |
| 15 | 6DA–44575–00 | DAMPER, LOWER MOUNT RUBBER<br>SILENT-BLOC, INFERIEUR | 1 | 1 | | | | X(25.3")<br>X(25.3") |
| 16 | 63P–44555–00 | MOUNT DAMPER, LOWER SIDE<br>SILENT-BLOC, INFERIEUR LATERAL | 2 | 2 | | | | X(25.3")<br>X(25.3") |
| 17 | 90201–35008 | WASHER, PLATE<br>RONDELLE, PLATE | 2 | 2 | | | | |
| 18 | 90202–32M19 | WASHER, PLATE<br>RONDELLE, PLATE | 2 | 2 | | | | |
| 19 | 90201–16M55 | WASHER, PLATE<br>RONDELLE, PLATE | 2 | 2 | | | | |
| 20 | 90201–15M58 | WASHER, PLATE<br>RONDELLE, PLATE | 2 | 2 | | | | |
| 21 | 90105–14012 | BOLT, FLANGE<br>BOULON | 2 | 2 | | | | X(25.3")<br>X(25.3") |
| 22 | 95604–14200 | NUT, SELF-LOCKING<br>ECROU, AUTO-BLOCANT | 2 | 2 | | | | X(25.3")<br>X(25.3") |
| 23 | 6DA–44552–00–CA | HOUSING, LOWER MOUNT RUBBER 2<br>BOITIER, SILENT-BLOC INFERIEUR | 2 | 2 | | | | X(25.3")<br>X(25.3") |
| 24 | 97075–10040 | BOLT<br>BOULON | 4 | 4 | | | | |
| 25 | 92995–10600 | WASHER<br>RONDELLE | 4 | 4 | | | | |
| 26 | 6DA–44514–00 | MOUNT DAMPER, UPPER SIDE<br>SILENT-BLOC, SUPERIEUR LATERAL | 2 | 2 | | | | |
| 27 | 90119–10024 | BOLT, WITH WASHER<br>BOULON, AVEC RONDELLE | 3 | 3 | | | | |

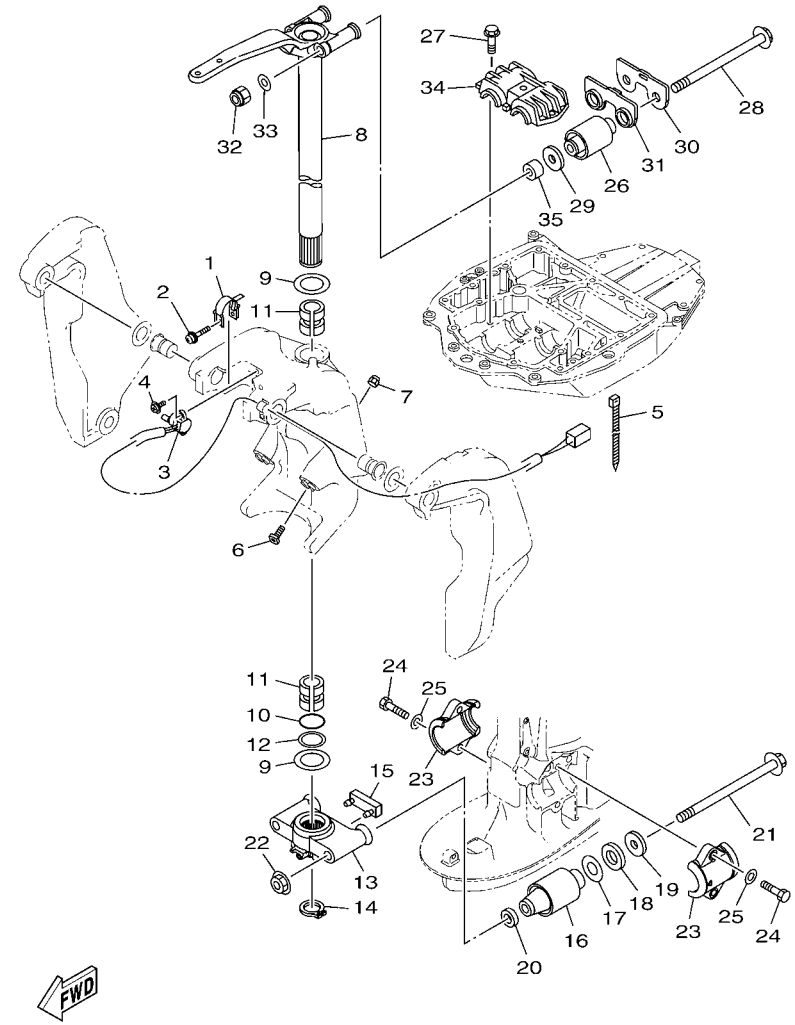


6DB1100-M280

## FIG. 28 BRACKET 2 SUPPORT 2

| REF. NO. | PART NO. N° PIECES | DESCRIPTION DESCRIPTION | 6DV1 | 6DW1 | | | | REMARKS REMARQUES |
|---|---|---|---|---|---|---|---|---|
| 28 | 90105–14009 | BOLT, FLANGE<br>BOULON | 2 | 2 | | | | |
| 29 | 90201–16M01 | WASHER, PLATE<br>RONDELLE, PLATE | 2 | 2 | | | | |
| 30 | 6DA–44526–00 | PLATE<br>PLAQUE | 1 | 1 | | | | |
| 31 | 6DA–44532–00 | STOPPER, UPPER MOUNT<br>PLAQUETTE | 1 | 1 | | | | |
| 32 | 90185–14M00 | NUT, SELF-LOCKING<br>ECROU,AUTO-BLOQUANT | 2 | 2 | | | | |
| 33 | 92995–14600 | WASHER<br>RONDELLE | 2 | 2 | | | | |
| 34 | 63P–44511–00 | COVER, UPPER MOUNT<br>COUVERCLE, SUSPENSION SUPERIEU | 1 | 1 | | | | |
| 35 | 90387–14004 | COLLAR<br>COLLERETTE | 2 | 2 | | | | |

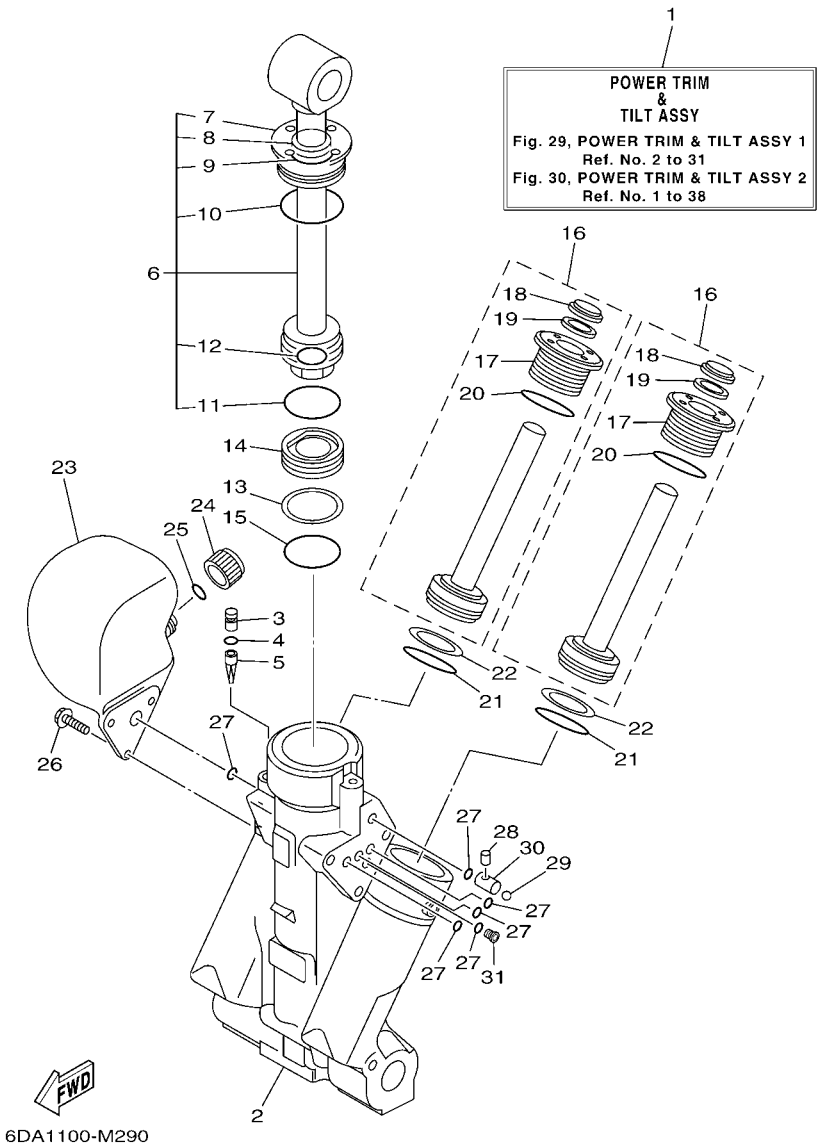


## FIG. 29 POWER TRIM & TILT ASSY 1 PUISSANCE PARER ET INCLINER 1

| REF. NO. | PART NO. N° PIECES | DESCRIPTION DESCRIPTION | 6DV1 | 6DW1 | | | | REMARKS REMARQUES |
|---|---|---|---|---|---|---|---|---|
| 1 | 63P–43800–06 | POWER TRIM & TILT ASSY<br>PUISSANCE PARER ET INCLINER (E | 1 | 1 | | | | |
| 2 | 64E–43825–03 | HOUSING, TRIM & TILT<br>CARTER | 1 | 1 | | | | |
| 3 | 6AW–4388J–00 | PLUG 2<br>BOUCHON 2 | 1 | 1 | | | | |
| 4 | 93210–10M74 | O-RING<br>JOINT TORIQUE | 1 | 1 | | | | |
| 5 | 64E–43817–00 | FILTER 2<br>FILTRE 2 | 1 | 1 | | | | |
| 6 | 63P–43810–02 | TILT PISTON SUB ASSY<br>INCLINER PISTON AUXILIAIRE(ENS | 1 | 1 | | | | |
| 7 | 64E–43811–02 | .SCREW, CYLINDER END<br>.VIS, CYLINDRE RACCORD | 1 | 1 | | | | |
| 8 | 64E–43898–00 | .SEAL, DUST 2<br>.JOINT ANTI-PUSSIERE | 1 | 1 | | | | |
| 9 | 64E–43867–00 | .O-RING<br>.JOINT TORIQUE | 1 | 1 | | | | |
| 10 | 64E–43866–00 | .O-RING<br>.JOINT TORIQUE | 1 | 1 | | | | |
| 11 | 6E5–43862–00 | .O-RING<br>.JOINT TORIQUE | 1 | 1 | | | | |
| 12 | 64E–43883–00 | .O-RING<br>.JOINT TORIQUE | 1 | 1 | | | | |
| 13 | 6E5–43872–00 | RING, BACK UP<br>RESSORT | 1 | 1 | | | | |
| 14 | 6E5–43814–02 | PISTON, FREE<br>PISTON | 1 | 1 | | | | |
| 15 | 6E5–43862–00 | O-RING<br>JOINT TORIQUE | 1 | 1 | | | | |
| 16 | 64E–43820–03 | TRIM PISTON SUB ASSY<br>PARER PISTON AUXILIAIRE (ENS.) | 2 | 2 | | | | |
| 17 | 64E–43821–03 | .SCREW, TRIM CYLINDER END<br>.VIS | 1 | 1 | | | | |
| 18 | 64E–43822–00 | .SEAL, TRIM DUST<br>.JOINT | 1 | 1 | | | | |
| 19 | 64E–4384J–00 | .SEAL, TRIM DOWN<br>.JOINT | 1 | 1 | | | | |
| 20 | 6G5–43864–00 | .O-RING<br>.JOINT TORIQUE | 1 | 1 | | | | |
| 21 | 6E5–43864–00 | O-RING<br>JOINT TORIQUE | 2 | 2 | | | | |
| 22 | 6E5–43874–01 | RING, BACK UP<br>RESSORT | 2 | 2 | | | | |
| 23 | 64E–43828–01 | BODY, RESERVOIR<br>CORPS | 1 | 1 | | | | |
| 24 | 64E–43829–01 | PLUG, RESERVOIR<br>BOUCHON | 1 | 1 | | | | |
| 25 | 64E–43897–00 | O-RING<br>JOINT TORIQUE | 1 | 1 | | | | |
| 26 | 64E–4388E–01 | BOLT ,SCREW (L:14MM)<br>VIS (L:14MM) | 3 | 3 | | | | |
| 27 | 64E–43869–00 | O-RING<br>JOINT TORIQUE | 6 | 6 | | | | |

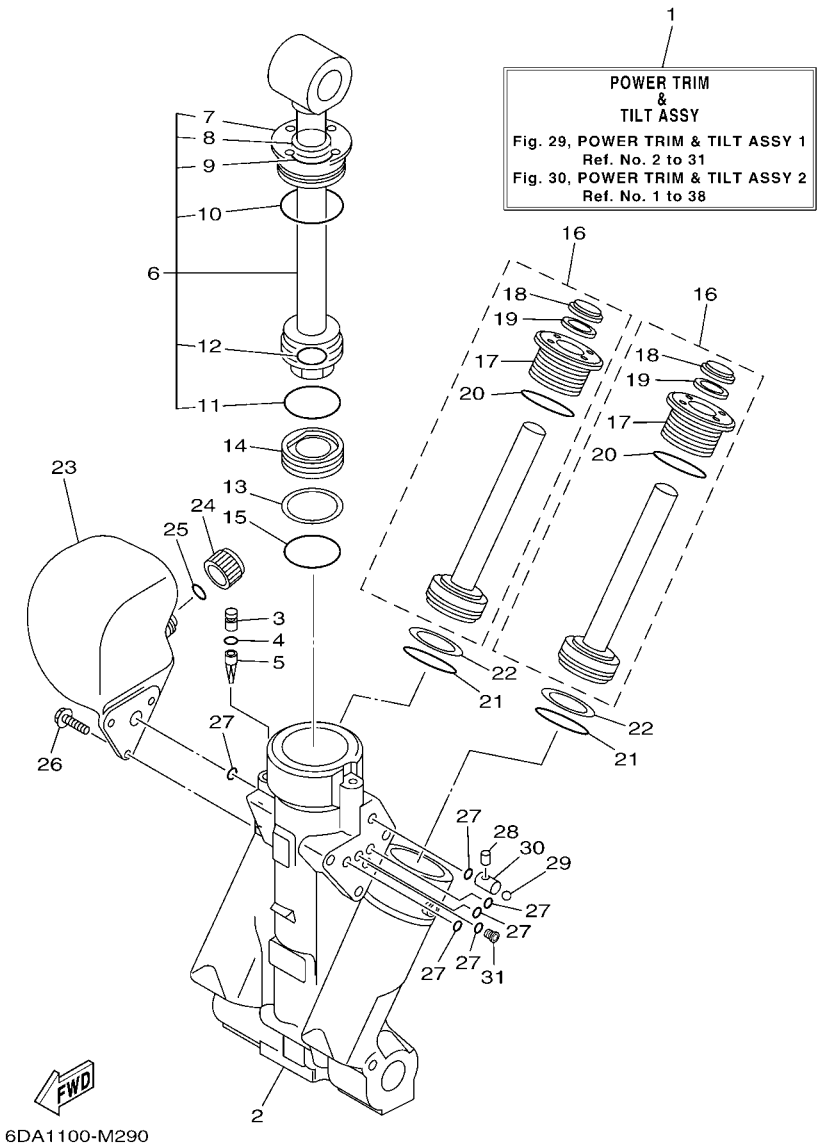


## FIG. 29 POWER TRIM & TILT ASSY 1 PUISSANCE PARER ET INCLINER 1

| REF. NO. | PART NO. N° PIECES | DESCRIPTION DESCRIPTION | 6DV1 | 6DW1 | | | | REMARKS REMARQUES |
|---|---|---|---|---|---|---|---|---|
| 28 | 64E–4381G–00 | PIN<br>COUPILL | 1 | 1 | | | | |
| 29 | 6E5–43858–00 | BALL<br>BILLE | 1 | 1 | | | | |
| 30 | 64E–4382G–00 | VALVE, SEAT<br>JEU DE POINTEAUX | 1 | 1 | | | | |
| 31 | 64E–4384N–00 | PLUG, ORIFICE<br>PLOT, ORIFICE | 1 | 1 | | | | |

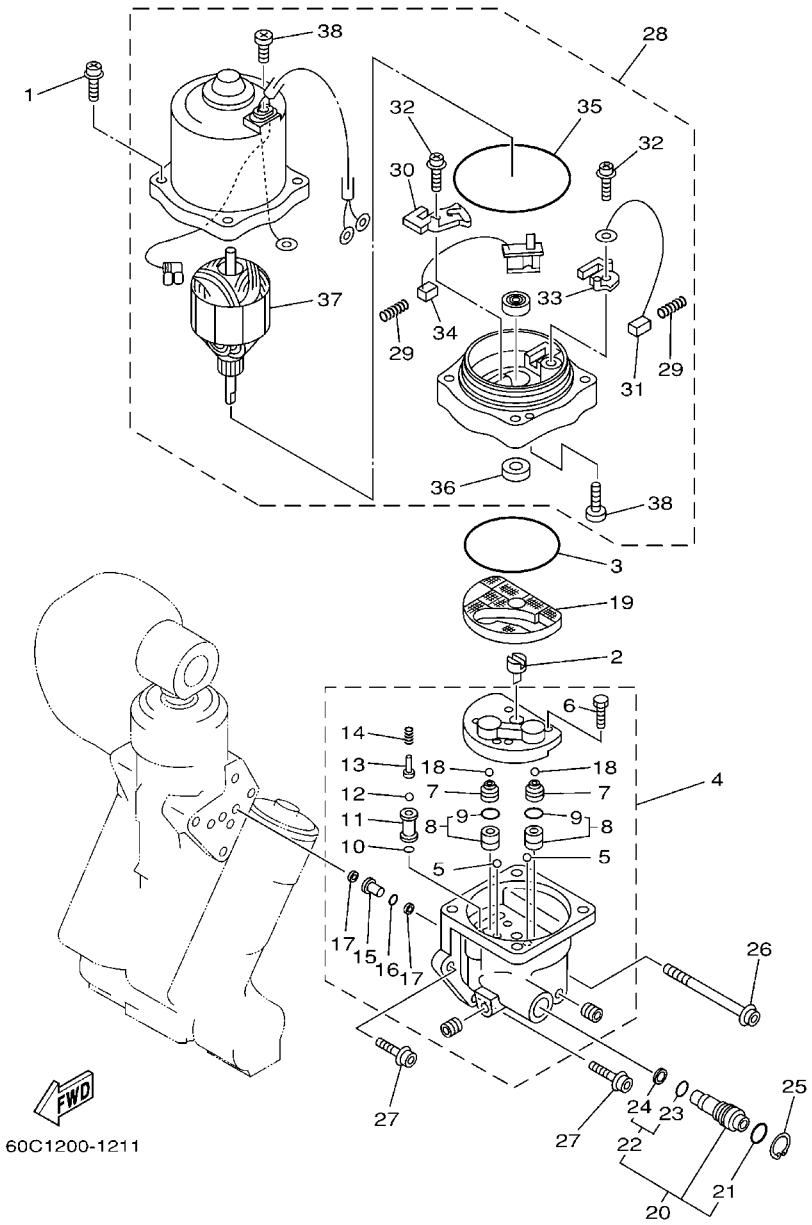


## FIG. 30 POWER TRIM & TILT ASSY 2 PUISSANCE PARER ET INCLINER 2

| REF. NO. | PART NO. N° PIECES | DESCRIPTION DESCRIPTION | 6DV1 | 6DW1 | | | | REMARKS REMARQUES |
|---|---|---|---|---|---|---|---|---|
| 1 | 64E–4388E–11 | BOLT ,SCREW (L:34.7MM)<br>VIS (L:34.7MM) | 4 | 4 | | | | |
| 2 | 64E–43831–00 | CONNECTOR, SHAFT<br>RACCORD | 1 | 1 | | | | |
| 3 | 64E–43868–00 | O-RING<br>JOINT TORIQUE | 1 | 1 | | | | |
| 4 | 64E–43830–01 | GEAR PUMP ASSY<br>POMPE A PIGNON (ENS.) | 1 | 1 | | | | |
| 5 | 72X–43858–00 | .BALL<br>.BILLE | 2 | 2 | | | | |
| 6 | 64E–43843–00 | .SCREW, VALVE LOCK<br>.VIS | 4 | 4 | | | | |
| 7 | 6AW–43841–00 | .PISTON, SHUTTLE<br>.PISTON | 2 | 2 | | | | |
| 8 | 64E–43802–00 | .VALVE SUB ASSY<br>.CLAPET AUXILIAIRE (ENS.) | 2 | 2 | | | | |
| 9 | 6E5–43896–00 | ..O-RING<br>..JOINT TORIQUE | 1 | 1 | | | | |
| 10 | 6G5–43863–00 | .O-RING<br>.JOINT TORIQUE | 1 | 1 | | | | |
| 11 | 64E–43851–00 | .SEAT, RELIEF VALVE<br>.SIEGE | 1 | 1 | | | | |
| 12 | 64E–43858–00 | .BALL<br>.BILLE | 1 | 1 | | | | |
| 13 | 64E–43859–00 | .PIN, VALVE SUPPORT<br>.GOUPILLE | 1 | 1 | | | | |
| 14 | 64E–43855–00 | .SPRING, UP RELIEF<br>.RESSORT | 1 | 1 | | | | |
| 15 | 64E–43850–00 | .VALVE SUB ASSY<br>.CLAPET AUXILIAIRE (ENS.) | 1 | 1 | | | | |
| 16 | 64E–43865–00 | .O-RING<br>.JOINT TORIQUE | 1 | 1 | | | | |
| 17 | 64E–43816–00 | .FILTER 1<br>.FILTRE 1 | 2 | 2 | | | | |
| 18 | 6AW–43858–00 | .BALL<br>.BILLE | 2 | 2 | | | | |
| 19 | 64E–43817–11 | FILTER 2<br>FILTRE 2 | 1 | 1 | | | | |
| 20 | 64E–43860–01 | MANUAL VALVE SUB-ASSY<br>SOUPAPE, MANUEL (ENS.) | 1 | 1 | | | | |
| 21 | 72X–85075–L0 | .O-RING<br>.JOINT TORIQUE | 1 | 1 | | | | |
| 22 | 64E–43827–00 | .RING SET<br>.BILLE | 1 | 1 | | | | |
| 23 | 64E–4387A–00 | ..O-RING<br>..JOINT TORIQUE | 1 | 1 | | | | |
| 24 | 64E–43873–00 | ..RING, BACK UP<br>..RESSORT | 1 | 1 | | | | |
| 25 | 6AW–43875–00 | RING, SNAP<br>RESSORT | 1 | 1 | | | | |
| 26 | 64E–43879–11 | SCREW, WITH WASHER<br>VIS, AVEC RONDELLE | 1 | 1 | | | | |
| 27 | 64E–43879–01 | SCREW, WITH WASHER<br>VIS, AVEC RONDELLE | 2 | 2 | | | | |

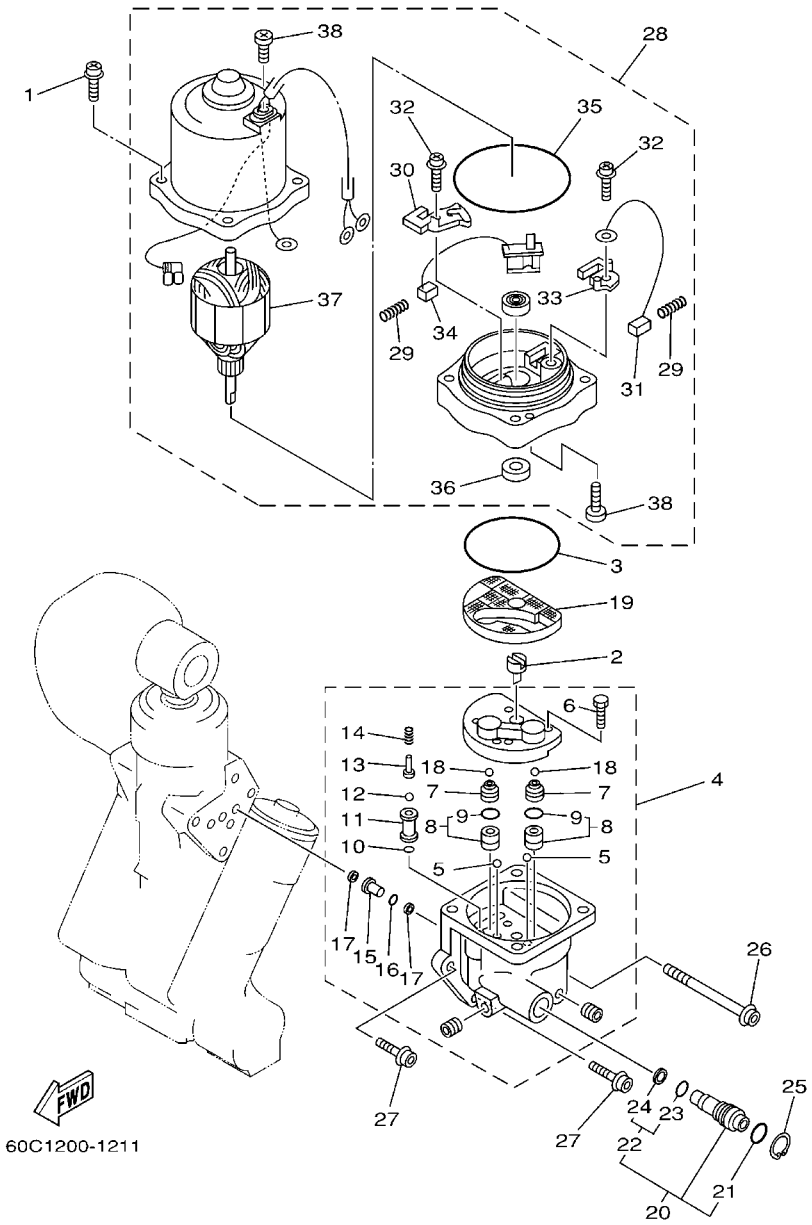


## FIG. 30 POWER TRIM & TILT ASSY 2 PUISSANCE PARER ET INCLINER 2

| REF. NO. | PART NO. N° PIECES | DESCRIPTION DESCRIPTION | 6DV1 | 6DW1 | | | | REMARKS REMARQUES |
|---|---|---|---|---|---|---|---|---|
| 28 | 67H–43880–04 | MOTOR ASSY<br>MOTEUR (ENS.) | 1 | 1 | | | | |
| 29 | 6H1–4386K–10 | .SPRING, BRUSH<br>.RESSORT, BALAI | 2 | 2 | | | | |
| 30 | 64E–4380J–00 | .HOLDER, BRUSH<br>.PORTE-BALAI | 1 | 1 | | | | |
| 31 | 64E–43891–00 | .BRUSH 1<br>.BALAI 1 | 1 | 1 | | | | |
| 32 | 97607–04310 | .SCREW,WITH WASHER<br>.VIS HEXAGONAL | 2 | 2 | | | | |
| 33 | 64E–4380F–00 | .HOLDER, BRUSH 2<br>.PORTE-BALAI 2 | 1 | 1 | | | | |
| 34 | 64E–43892–00 | .BREAKER COMP. (BRUSH 2)<br>.RUPTEUR COMP. (BALAI 2) | 1 | 1 | | | | |
| 35 | 6G5–43865–01 | .O-RING<br>.JOINT TORIQUE | 1 | 1 | | | | |
| 36 | 93102–08M43 | .OIL SEAL<br>.JOINT SPY | 1 | 1 | | | | |
| 37 | 64E–43805–01 | .ARMATURE ASSY<br>.INDUIT (ENS.) | 1 | 1 | | | | |
| 38 | 64E–43843–10 | .SCREW, VALVE LOCK<br>.VIS | 3 | 3 | | | | |

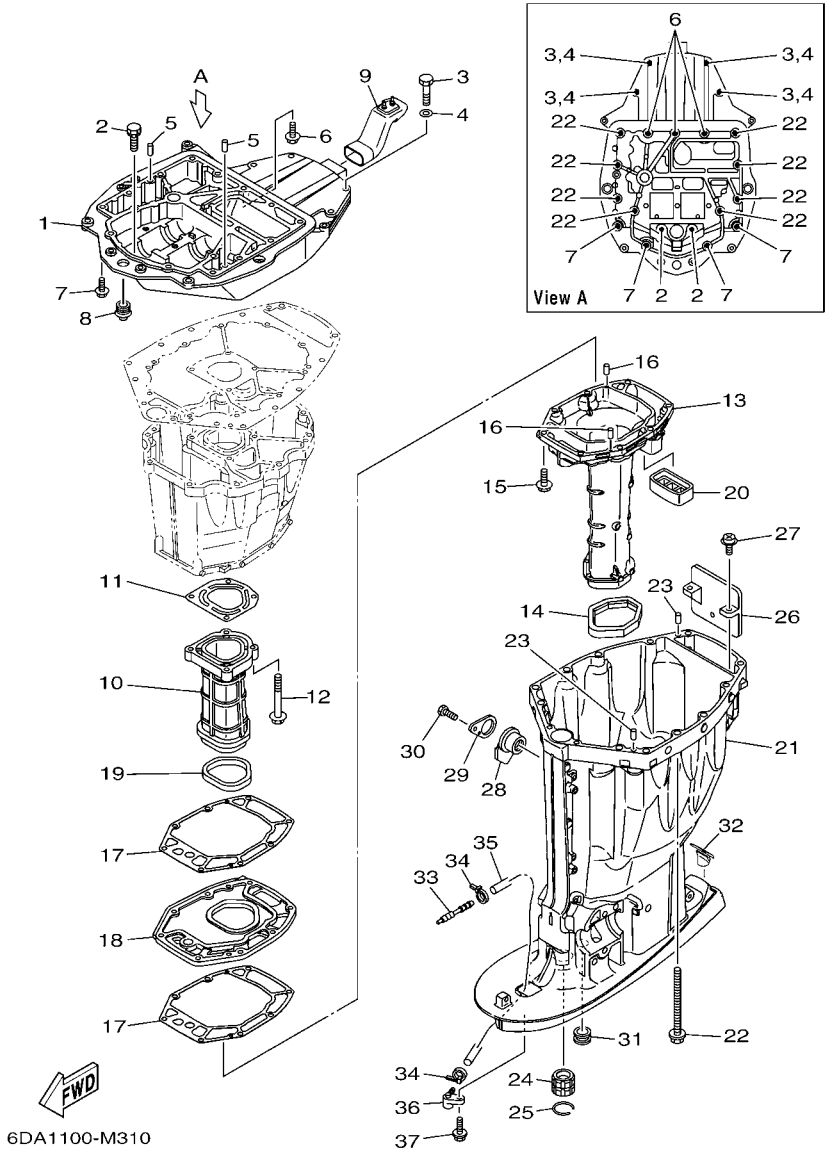


## FIG. 31 UPPER CASING FOURREAU

| REF. NO. | PART NO. N° PIECES | DESCRIPTION DESCRIPTION | 6DV1 | 6DW1 | | | | REMARKS REMARQUES |
|---|---|---|---|---|---|---|---|---|
| 1 | 63P–41137–04–CA | GUIDE, EXHAUST<br>COLLECTEUR D'ECHAPPEMENT | 1 | 1 | | | | |
| 2 | 90119–08102 | BOLT, WITH WASHER<br>BOULON, AVEC RONDELLE | 2 | 2 | | | | |
| 3 | 97075–10045 | BOLT<br>BOULON | 4 | 4 | | | | |
| 4 | 92995–10600 | WASHER<br>RONDELLE | 4 | 4 | | | | |
| 5 | 93608–16M16 | PIN, DOWEL<br>AXE | 2 | 2 | | | | |
| 6 | 90119–08M58 | BOLT, WITH WASHER<br>BOULON, AVEC RONDELLE | 3 | 3 | | | | |
| 7 | 97575–10535 | BOLT, WITH WASHER<br>VIS HEXAGONAL AVC RONDELLE | 4 | 4 | | | | |
| 8 | 6E5–42724–00 | GROMMET<br>PASSE-FIL | 1 | 1 | | | | |
| 9 | 6DA–42769–00 | SEAL, RUBBER<br>BOURRELET, CAOUTCHOUC | 1 | 1 | | | | |
| 10 | 63P–41131–01–9S | MANIFOLD, EXT. 1<br>PIPE D'ECHAPPEMENT | 1 | 1 | | | | |
| 11 | 63P–41133–A0 | GASKET, EXHAUST MANIFOLD 1<br>JOINT, PIPE D'ECHAPPEMENT | 1 | 1 | | | | |
| 12 | 97575–08560 | BOLT, WITH WASHER<br>VIS HEXAGONAL AVC RONDELLE | 4 | 4 | | | | |
| 13 | 6DA–14711–00–9S | MUFFLER 1<br>POT D'ECHAPPEMENT 1 | 1 | 1 | | | | X(25.3")<br>X(25.3") |
| 14 | 69J–45123–00 | GASKET, MUFFLER<br>JOINT, POT DE DETENTE | 1 | 1 | | | | |
| 15 | 97575–08535 | BOLT, WITH WASHER<br>VIS HEXAGONAL AVC RONDELLE | 8 | 8 | | | | |
| 16 | 93606–19M23 | PIN, DOWEL<br>GOUPILLE | 2 | 2 | | | | |
| 17 | 63P–41134–A1 | GASKET, EXHAUST MANIFOLD<br>JOINT, PIPE D'ECHAPPEMENT | 2 | 2 | | | | |
| 18 | 63P–45181–01–9S | PLATE<br>PLAQUETTE | 1 | 1 | | | | |
| 19 | 63P–41138–00 | SEAL, EXT. 1<br>JOINT DE GROUPE 1 | 1 | 1 | | | | |
| 20 | 69J–45127–00 | SEAL<br>JOINT | 1 | 1 | | | | |
| 21 | 6DA–45111–00–8D | CASING, UPPER<br>FOURREAU | 1 | 1 | | | | X(25.3")<br>X(25.3") |
| 22 | 90119–10007 | BOLT, WITH WASHER<br>BOULON, AVEC RONDELLE | 8 | 8 | | | | |
| 23 | 93608–16M16 | PIN, DOWEL<br>AXE | 2 | 2 | | | | |
| 24 | 6E5–45318–00 | BUSHING, DRIVE SHAFT<br>DOUILLE, ARBRE MOTEUR | 1 | 1 | | | | |
| 25 | 93420–36M01 | CIRCLIP<br>CIRCLIP, TYPE S | 1 | 1 | | | | |
| 26 | 69J–14624–01 | COVER, EXHAUST<br>CACHE D'ECHAPPEMENT | 1 | 1 | | | | |
| 27 | 97980–06216 | SCREW, WITH WASHER<br>VIS, AVEC RONDELLE | 2 | 2 | | | | |

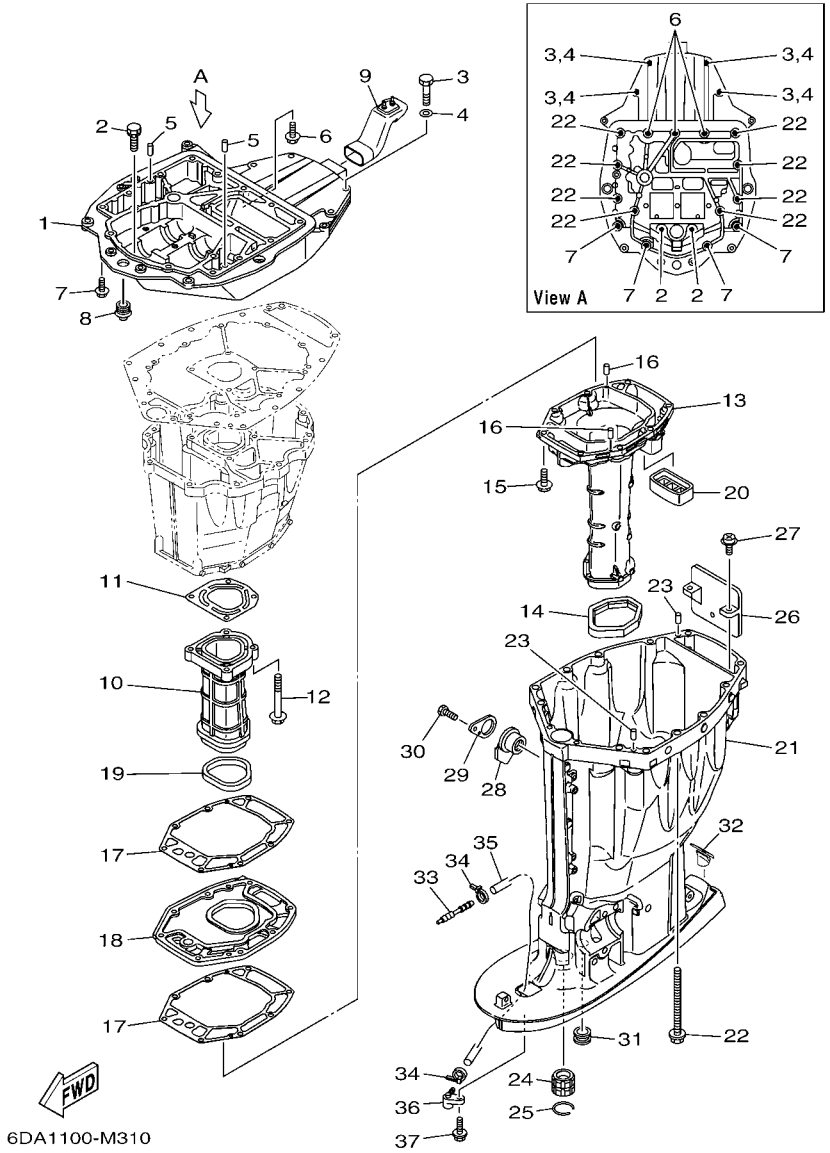


## FIG. 31 UPPER CASING FOURREAU

| REF. NO. | PART NO. N° PIECES | DESCRIPTION DESCRIPTION | 6DV1 | 6DW1 | | | | REMARKS REMARQUES |
|---|---|---|---|---|---|---|---|---|
| 28 | 6BB–15316–00 | DAMPER 1<br>AMORTISSEUR 1 | 1 | 1 | | | | X(25.3")<br>X(25.3") |
| 29 | 6BB–45152–01 | COVER, UPPER CASING 2<br>CAPUCHON FOURREAU | 1 | 1 | | | | X(25.3")<br>X(25.3") |
| 30 | 97095–06012 | BOLT<br>BOULON | 1 | 1 | | | | X(25.3")<br>X(25.3") |
| 31 | 6E5–44366–00 | DAMPER, WATER SEAL 2<br>JOINT, TUBE D'EAU 2 | 1 | 1 | | | | |
| 32 | 6DA–45155–00 | CAP<br>CAPUCHON | 1 | 1 | | | | X(25.3")<br>X(25.3") |
| 33 | 6E5–83558–00 | END, NIPPLE<br>RACCORD DE NIPPLE | | 1 | | | | |
| 34 | 90465–11M10 | CLAMP<br>BRIDE | 1 | | | | | FOR LAN SPEED<br>FOR LAN SPEED |
| | 90465–11M10 | CLAMP<br>BRIDE | | 2 | | | | |
| 35 | 90445–07044 | HOSE (L1800)<br>DURITE (L1800) | 1 | | | | | FOR LAN SPEED<br>FOR LAN SPEED |
| | 90445–07018 | HOSE (L1400)<br>DURITE (L1400) | | 1 | | | | |
| 36 | 63P–45379–00 | NIPPLE, HOSE<br>RACCORD D'ESSENCE | 1 | 1 | | | | |
| 37 | 90119–06M18 | BOLT, WITH WASHER<br>BOULON, AVEC RONDELLE | 1 | 1 | | | | |

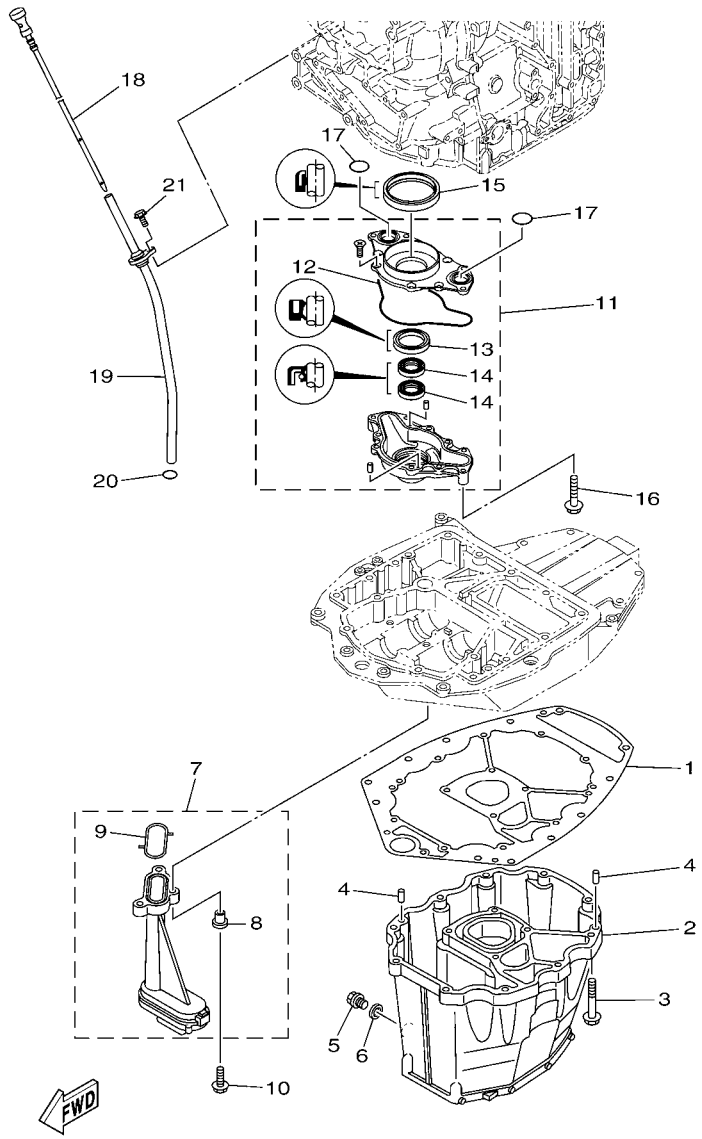


## FIG. 32 OIL PAN — VENTILATEUR D'HUILE

| REF. NO. | PART NO. N° PIECES | DESCRIPTION DESCRIPTION | 6DV1 | 6DW1 | | | | REMARKS REMARQUES |
|---|---|---|---|---|---|---|---|---|
| 1 | 63P–15312–01 | GASKET, OIL PAN<br>JOINT DE VENTILATEUR D'HUILE | 1 | 1 | | | | |
| 2 | 6DA–15311–00–CA | OIL PAN<br>VENTILATEUR D'HUILE | 1 | 1 | | | | X(25.3")<br>X(25.3") |
| 3 | 97575–08535 | BOLT, WITH WASHER<br>VIS HEXAGONAL AVC RONDELLE | 10 | 10 | | | | |
| 4 | 93608–16M16 | PIN, DOWEL<br>AXE | 2 | 2 | | | | |
| 5 | 90340–14M06 | PLUG, STRAIGHT SCREW<br>PLOT, FILETE DROIT | 1 | 1 | | | | |
| 6 | 90430–14M09 | GASKET<br>JOINT | 1 | 1 | | | | |
| 7 | 63P–13411–00 | STRAINER, OIL<br>FILTRE, HUILE | 1 | 1 | | | | |
| 8 | 90387–06263 | .COLLAR<br>.COLLERETTE | 3 | 3 | | | | |
| 9 | 63P–13415–00 | .SEAL, OIL STRAINER<br>.JOINT, FILTRE A HUILE | 1 | 1 | | | | |
| 10 | 95812–06025 | BOLT, FLANGE<br>BOULON | 3 | 3 | | | | |
| 11 | 6DA–13300–00 | OIL PUMP ASSY<br>POMPE A HUILE COMPLETE | 1 | 1 | | | | |
| 12 | 6DA–13329–00 | .GASKET, PUMP COVER<br>.JOINT, COUVERCLE DE POMPE | 1 | 1 | | | | |
| 13 | 6AW–13119–00 | .OIL SEAL<br>.JOINT SPY | 1 | 1 | | | | |
| 14 | 69J–13631–00 | .OIL SEAL<br>.JOINT SPY | 2 | 2 | | | | |
| 15 | 6CB–11355–00 | SEAL, CYLINDER 1<br>JOINT, SPY CYLINDRE | 1 | 1 | | | | |
| 16 | 97575–06540 | BOLT, WITH WASHER<br>VIS HEXAGONAL AVC RONDELLE | 4 | 4 | | | | |
| 17 | 93210–25552 | O-RING<br>JOINT TORIQUE | 2 | 2 | | | | |
| 18 | 6DA–15362–00 | PLUG, OIL LEVEL<br>PLOT, NIVEAU D'HUILE | 1 | 1 | | | | |
| 19 | 6DA–15377–00 | GUIDE, INLET<br>GUIDE D'ADMISSION | 1 | 1 | | | | |
| 20 | 93210–19MJ3 | O-RING<br>JOINT TORIQUE | 1 | 1 | | | | |
| 21 | 95895–06016 | BOLT, FLANGE<br>BOULON | 1 | 1 | | | | |

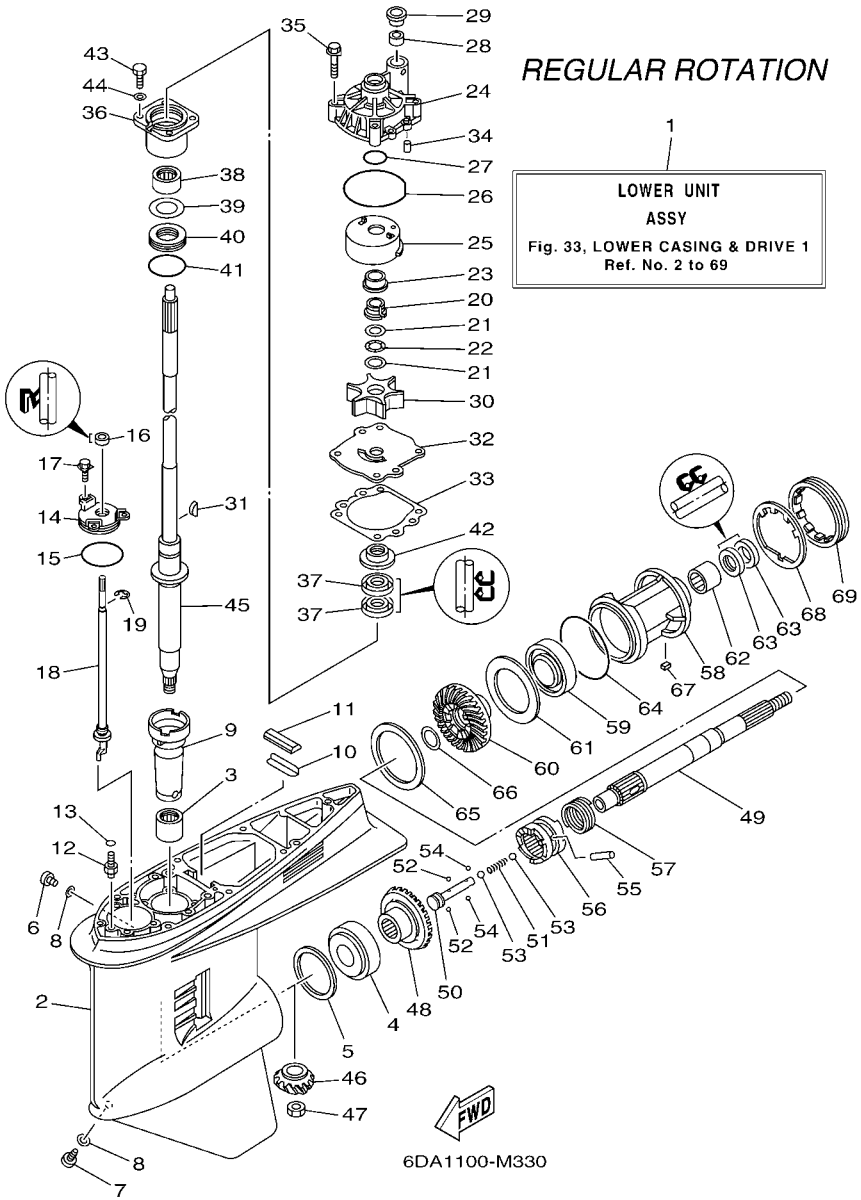


## FIG. 33 LOWER CASING & DRIVE 1 BOITIER D'HELICE TRANSMISSION1

| REF. NO. | PART NO. N° PIECES | DESCRIPTION DESCRIPTION | 6DV1 | 6DW1 | | | | REMARKS REMARQUES |
|---|---|---|---|---|---|---|---|---|
| 1 | 6DA–45300–10–8D | LOWER UNIT ASSY<br>UNITE INFERIEURE (ENS.) | 1 | | | | | X(25.3"),RH<br>X(25.3"),RH |
| 2 | 6J9–45301–07–8D | CASING, LOWER<br>BEQUILLE | 1 | | | | | |
| 3 | 93311–928U5 | BEARING<br>ROULEMENT | 1 | | | | | |
| 4 | 93332–000V3 | BEARING<br>ROULEMENT | 1 | | | | | |
| 5 | 6G5–45567–01 | SHIM (T:0.10MM)<br>CALE (T:0.10MM) | 1 | | | | | UR<br>UR |
| | 6G5–45567–10 | SHIM (T:0.12MM)<br>CALE (T:0.12MM) | 1 | | | | | UR<br>UR |
| | 6G5–45567–20 | SHIM (T:0.15MM)<br>CALE (T:0.15MM) | 1 | | | | | UR<br>UR |
| | 6G5–45567–30 | SHIM (T:0.18MM)<br>CALE (T:0.18MM) | 1 | | | | | UR<br>UR |
| | 6G5–45567–40 | SHIM (T:0.30MM)<br>CALE (T:0.30MM) | 1 | | | | | UR<br>UR |
| | 6G5–45567–50 | SHIM (T:0.40MM)<br>CALE (T:0.40MM) | 1 | | | | | UR<br>UR |
| | 6G5–45567–60 | SHIM (T:0.50MM)<br>CALE (T:0.50MM) | 1 | | | | | UR<br>UR |
| 6 | 90340–08002 | PLUG, STRAIGHT SCREW<br>PLOT, FILETE DROIT | 1 | | | | | |
| 7 | 688–45341–10 | PLUG, DRAIN<br>BOUCHON DE VIDANGE | 1 | | | | | |
| 8 | 90430–08020 | GASKET<br>JOINT | 2 | | | | | |
| 9 | 6G5–45536–01 | SLEEVE, DRIVE SHAFT<br>MANCHON, ARBRE MOTEUR | 1 | | | | | |
| 10 | 663–45376–00 | GUIDE, SEAL DAMPER<br>BUTEE, JOINT CAOUTCHOUC | 1 | | | | | |
| 11 | 688–45375–00 | DAMPER, SEAL<br>BOURRELET, CAOUTCHOUC | 1 | | | | | |
| 12 | 63P–45378–00 | NIPPLE, HOSE<br>RACCORD, TUYAU | 1 | | | | | |
| 13 | 93210–07003 | O-RING<br>JOINT TORIQUE | 1 | | | | | |
| 14 | 6E5–45321–00 | PLATE<br>PLAQUETTE | 1 | | | | | |
| 15 | 93210–58144 | O-RING<br>JOINT TORIQUE | 1 | | | | | |
| 16 | 93106–09014 | OIL SEAL<br>JOINT SPY | 1 | | | | | |
| 17 | 90119–06M10 | BOLT, WITH WASHER<br>BOULON, AVEC RONDELLE | 3 | | | | | |
| 18 | 63P–44150–01 | SHIFT CAM ASSY<br>CAME D'INVERSION | 1 | | | | | |
| 19 | 99001–08600 | CIRCLIP<br>CIRCLIP | 1 | | | | | |
| 20 | 61A–45538–00 | SPACER 1<br>ENTRETOISE | 1 | | | | | |
| 21 | 90201–22M01 | WASHER, PLATE<br>RONDELLE, PLATE | 2 | | | | | |

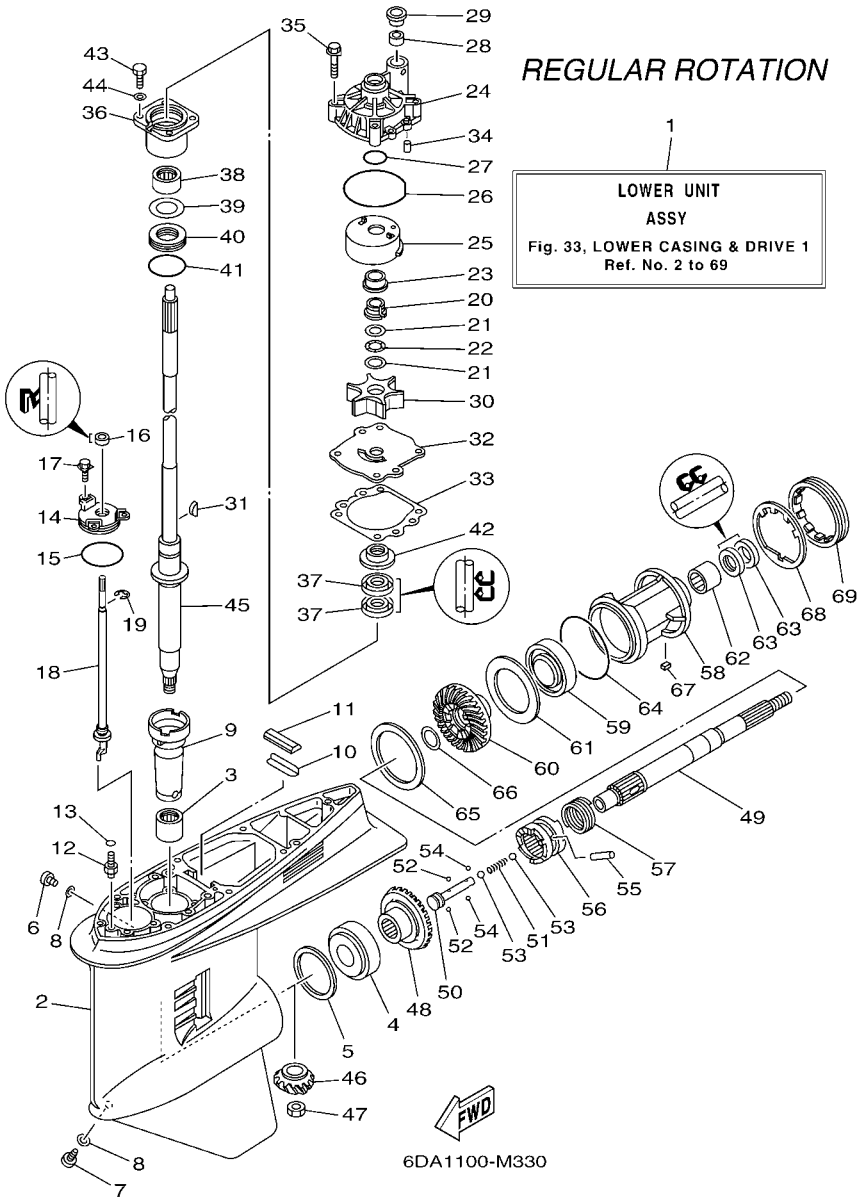


## FIG. 33 LOWER CASING & DRIVE 1 BOITIER D'HELICE TRANSMISSION1

| REF. NO. | PART NO. N° PIECES | DESCRIPTION DESCRIPTION | 6DV1 | 6DW1 | | | | REMARKS REMARQUES |
|---|---|---|---|---|---|---|---|---|
| 22 | 90206–22M19 | WASHER, WAVE<br>RONDELLE, ONDULEE | 1 | | | | | |
| 23 | 61A–45527–00 | COLLAR, DRIVE SHAFT<br>ENTRETOISE | 1 | | | | | |
| 24 | 61A–44311–01 | HOUSING, WATER PUMP<br>CORPS, POMPE A EAU | 1 | | | | | |
| 25 | 61A–44322–02 | INSERT, CARTRIDGE<br>CUVETTE | 1 | | | | | |
| 26 | 93210–86M38 | O-RING<br>JOINT TORIQUE | 1 | | | | | |
| 27 | 93210–37160 | O-RING<br>JOINT TORIQUE | 1 | | | | | |
| 28 | 6E5–44365–00 | DAMPER, WATER SEAL 1<br>JOINT, TUBE D'EAU 1 | 1 | | | | | |
| 29 | 6E5–44312–00 | COVER, WATER PUMP HOUSING<br>COUVERCLE | 1 | | | | | |
| 30 | 6E5–44352–01 | IMPELLER<br>TURBINE | 1 | | | | | |
| 31 | 90280–04M05 | KEY, WOODRUFF<br>CLAVETTE, DEMI-LUNE | 1 | | | | | |
| 32 | 6G5–44323–01 | OUTER PLATE, CARTRIDGE<br>PLAQUE EXTERIEURE | 1 | | | | | |
| 33 | 6E5–44315–A0 | GASKET, WATER PUMP<br>JOINT, POMPE A EAU | 1 | | | | | |
| 34 | 93606–12019 | PIN, DOWEL<br>GOUPILLE | 2 | | | | | |
| 35 | 90119–08M14 | BOLT, WITH WASHER<br>BOULON, AVEC RONDELLE | 4 | | | | | |
| 36 | 6E5–45331–00–9S | HOUSING, BEARING<br>FLASQUE, ROULEMENT | 1 | | | | | |
| 37 | 93101–28M16 | OIL SEAL<br>JOINT SPY | 2 | | | | | |
| 38 | 93317–330U2 | BEARING<br>ROULEMENT | 1 | | | | | |
| 39 | 6E5–45587–01 | SHIM (T:0.10MM)<br>CALE (T:0.10MM) | 1 | | | | | UR<br>UR |
| | 6E5–45587–10 | SHIM (T:0.12MM)<br>CALE (T:0.12MM) | 1 | | | | | UR<br>UR |
| | 6E5–45587–20 | SHIM (T:0.15MM)<br>CALE (T:0.15MM) | 1 | | | | | UR<br>UR |
| | 6E5–45587–30 | SHIM (T:0.18MM)<br>CALE (T:0.18MM) | 1 | | | | | UR<br>UR |
| | 6E5–45587–40 | SHIM (T:0.30MM)<br>CALE (T:0.30MM) | 1 | | | | | UR<br>UR |
| | 6E5–45587–50 | SHIM (T:0.40MM)<br>CALE (T:0.40MM) | 1 | | | | | UR<br>UR |
| | 6E5–45587–60 | SHIM (T:0.50MM)<br>CALE (T:0.50MM) | 1 | | | | | UR<br>UR |
| 40 | 93341–930V2 | BEARING<br>CERVEAUX DE DIRECTION | 1 | | | | | |
| 41 | 93210–55M14 | O-RING<br>JOINT TORIQUE | 1 | | | | | |
| 42 | 6E5–45344–00 | COVER, OIL SEAL<br>FLASQE, JOINT D'HUILE | 1 | | | | | |

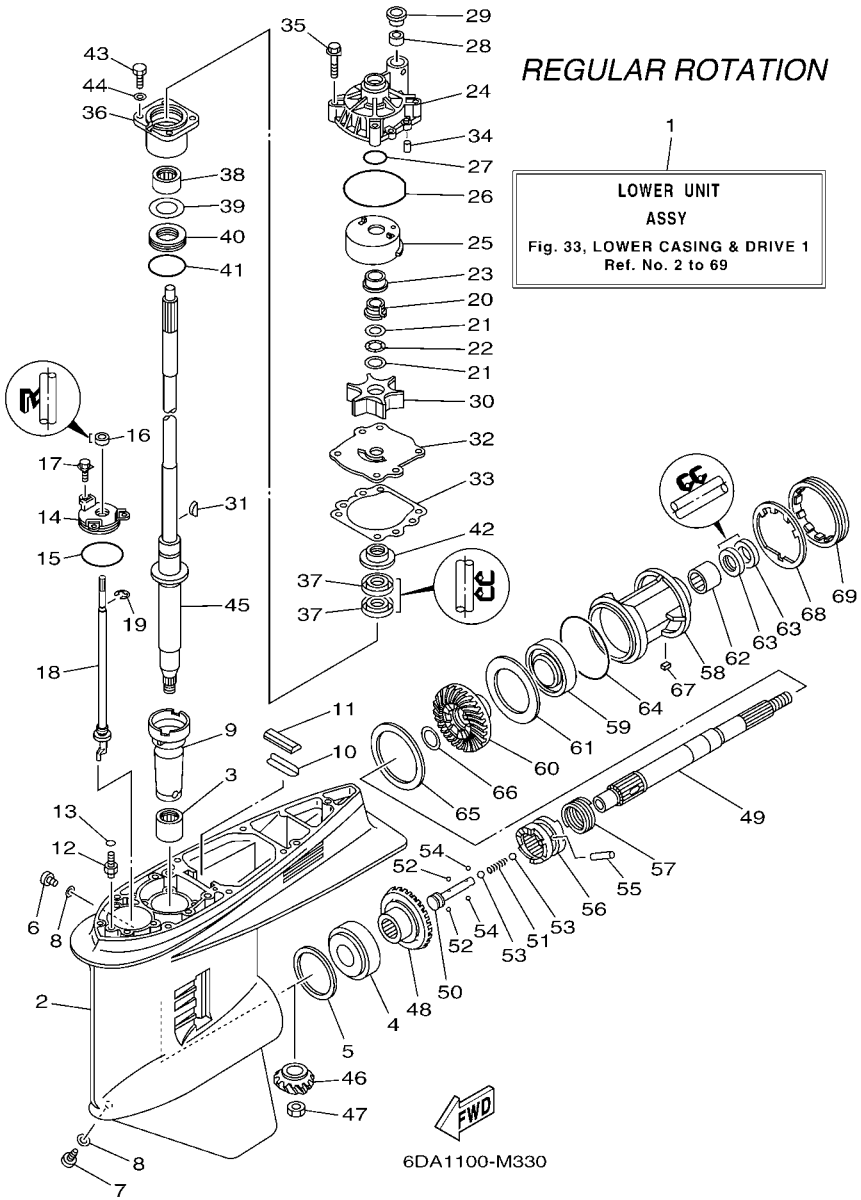


## FIG. 33 LOWER CASING & DRIVE 1 BOITIER D'HELICE TRANSMISSION1

| REF. NO. | PART NO. N° PIECES | DESCRIPTION DESCRIPTION | 6DV1 | 6DW1 | | | | REMARKS REMARQUES |
|---|---|---|---|---|---|---|---|---|
| 43 | 97095–08025 | BOLT<br>BOULON | 4 | | | | | |
| 44 | 92995–08600 | WASHER<br>RONDELLE | 4 | | | | | |
| 45 | 63P–45501–11 | DRIVE SHAFT COMP.<br>ARBRE MOTEUR COMP. | 1 | | | | | X(25.3")<br>X(25.3") |
| 46 | 6DA–45551–00 | PINION (14T)<br>PIGNON D'ATTAQUE (14D) | 1 | | | | | |
| 47 | 90170–16M01 | NUT<br>ECROU | 1 | | | | | |
| 48 | 6DA–45560–00 | GEAR 1 (26T)<br>PIGNON 1 (26T) | 1 | | | | | |
| 49 | 6J9–45611–01 | SHAFT, PROPELLER<br>ARBRE, HELICE | 1 | | | | | |
| 50 | 6E5–45634–02 | SLIDE, SHIFT<br>CONTRE-POUSSOIR | 1 | | | | | |
| 51 | 90501–16M37 | SPRING, COMPRESSION<br>RESSORT, COMPRESSION | 1 | | | | | |
| 52 | 93507–32009 | BALL<br>BILLE | 2 | | | | | |
| 53 | 93511–32017 | BALL<br>BILLES | 2 | | | | | |
| 54 | 93503–16003 | BALL<br>BILLES | 2 | | | | | |
| 55 | 90250–08M07 | PIN, STRAIGHT<br>GOUPILLE, DROITE | 1 | | | | | |
| 56 | 6DA–45631–00 | CLUTCH, DOG<br>CRABOT | 1 | | | | | |
| 57 | 6E5–45633–01 | RING, CROSS PIN<br>JONC, GOUPILLE CRABOT | 1 | | | | | |
| 58 | 6J9–45332–00–CA | HOUSING, BEARING<br>FLASQUE, ROULEMENT | 1 | | | | | |
| 59 | 93306–209U0 | BEARING<br>ROULEMENT | 1 | | | | | |
| 60 | 6DA–45571–00 | GEAR 2 (26T)<br>PIGNON 2 (26T) | 1 | | | | | |
| 61 | 6G5–45576–10 | WASHER, THRUST 2<br>RONDELLE DE CALAGE 2 | 1 | | | | | |
| 62 | 93315–43061 | BEARING<br>ROULEMENT | 1 | | | | | |
| 63 | 93101–30M17 | OIL SEAL<br>JOINT SPY | 2 | | | | | |
| 64 | 93210–97M55 | O-RING<br>JOINT TORIQUE | 1 | | | | | |
| 65 | 6G5–45577–02 | SHIM (T:0.10MM)<br>CALE (T:0.10MM) | 1 | | | | | UR<br>UR |
| | 6G5–45577–10 | SHIM (T:0.12MM)<br>CALE (T:0.12MM) | 1 | | | | | UR<br>UR |
| | 6G5–45577–20 | SHIM (T:0.15MM)<br>CALE (T:0.15MM) | 1 | | | | | UR<br>UR |
| | 6G5–45577–30 | SHIM (T:0.18MM)<br>CALE (T:0.18MM) | 1 | | | | | UR<br>UR |
| | 6G5–45577–40 | SHIM (T:0.30MM)<br>CALE (T:0.30MM) | 1 | | | | | UR<br>UR |

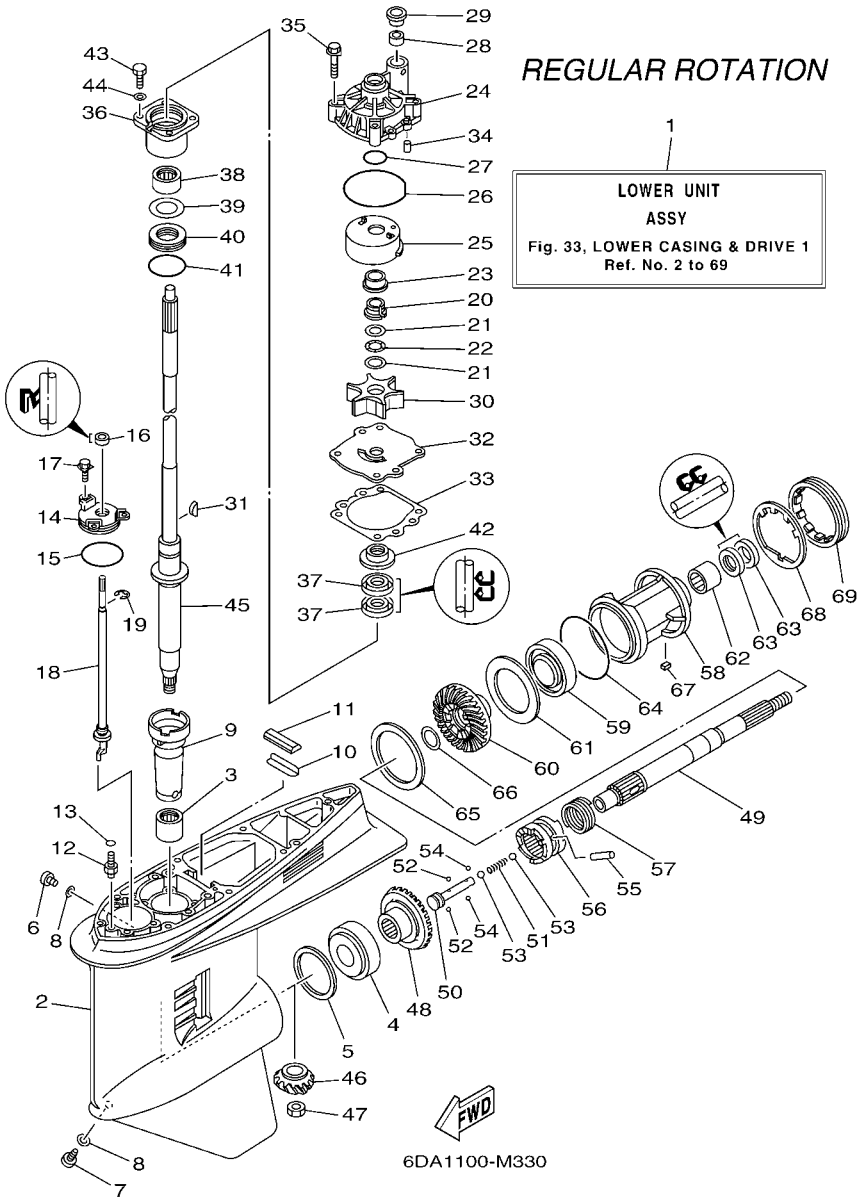


## FIG. 33 LOWER CASING & DRIVE 1 BOITIER D'HELICE TRANSMISSION1

| REF. NO. | PART NO. N° PIECES | DESCRIPTION DESCRIPTION | 6DV1 | 6DW1 | | | | REMARKS REMARQUES |
|---|---|---|---|---|---|---|---|---|
| 65 | 6G5–45577–50 | SHIM (T:0.40MM)<br>CALE (T:0.40MM) | 1 | | | | | UR<br>UR |
| | 6G5–45577–60 | SHIM (T:0.50MM)<br>CALE (T:0.50MM) | 1 | | | | | UR<br>UR |
| 66 | 90201–30M92 | WASHER, PLATE<br>RONDELLE, PLATE | 1 | | | | | |
| 67 | 90282–04M00 | KEY, STRAIGHT<br>CLAVETTE, DROITE | 1 | | | | | |
| 68 | 6G5–45383–01 | WASHER, CLAW<br>FREIN D'ECROU | 1 | | | | | |
| 69 | 6G5–45384–02 | NUT<br>ECROU | 1 | | | | | |

## FIG. 34 LOWER CASING & DRIVE 2 BOITIER D HELICE TRANSMISSION2

*REGULAR ROTATION*

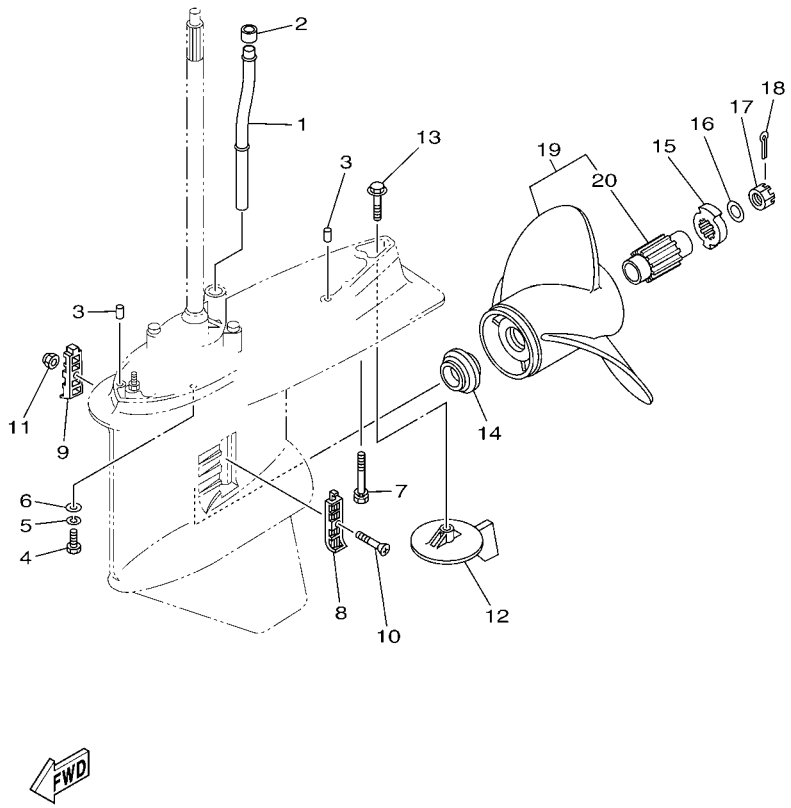


| REF. NO. | PART NO. N° PIECES | DESCRIPTION DESCRIPTION | 6DV1 | 6DW1 | | | | REMARKS REMARQUES |
|---|---|---|---|---|---|---|---|---|
| 1 | 6DA–44361–00 | TUBE, WATER 1<br>TUBE D'EAU 1 | 1 | | | | | X(25.3")<br>X(25.3") |
| 2 | 6E5–44365–00 | DAMPER, WATER SEAL 1<br>JOINT, TUBE D'EAU 1 | 1 | | | | | |
| 3 | 93608–16M16 | PIN, DOWEL<br>AXE | 2 | | | | | |
| 4 | 97095–10045 | BOLT<br>BOULON | 6 | | | | | |
| 5 | 92995–10100 | WASHER<br>RONDELLE | 6 | | | | | |
| 6 | 92995–10600 | WASHER<br>RONDELLE | 6 | | | | | |
| 7 | 90119–10MA2 | BOLT, WITH WASHER<br>BOULON, AVEC RONDELLE | 1 | | | | | |
| 8 | 6J9–45214–00 | COVER, WATER INLET 1<br>GRILLE, ENTREE D'EAU 1 | 1 | | | | | |
| 9 | 6J9–45215–00 | COVER, WATER INLET 2<br>GRILLE, ENTREE D'EAU 2 | 1 | | | | | |
| 10 | 90152–05M08 | SCREW, COUNTERSUNK<br>VIS, TETE NOYEE | 1 | | | | | |
| 11 | 90185–05002 | NUT, NYLON<br>ECROU,AUTO-BLOQUANT | 1 | | | | | |
| 12 | 6J9–45371–01 | TAB-TRIM<br>ANODE DERIVE | 1 | | | | | |
| 13 | 90105–10M00 | BOLT, FLANGE<br>BOULON | 1 | | | | | |
| 14 | 63P–45987–00 | SPACER 1<br>ENTRETOISE 1 | 1 | | | | | |
| 15 | 6CE–45997–00 | SPACER 2<br>ENTRETOISE 2 | 1 | | | | | |
| 16 | 92990–18200 | WASHER<br>RONDELLE, PLATE | 1 | | | | | |
| 17 | 90171–18M04 | NUT, CASTLE<br>ECROU, CRENELE | 1 | | | | | |
| 18 | 91490–40030 | PIN. COTTER<br>GOUPILLE | 1 | | | | | |
| 19 | 68F–45970–10 | PROPELLER (3X14-1/2"X15"-M)<br>HELICE (3X14-1/2"X15"-M) | 1 | | | | | UR SDS PROP.<br>UR SDS PROP. |
| | 68F–45972–10 | PROPELLER (3X14-1/4"X17"-M)<br>HELICE (3X14-1/4"X17"-M) | 1 | | | | | UR SDS PROP.<br>UR SDS PROP. |
| | 68F–45974–10 | PROPELLER (3X13-3/4"X19"-M)<br>HELICE (3X13-3/4"X19"-M) | 1 | | | | | UR SDS PROP.<br>UR SDS PROP. |
| | 68F–45976–10 | PROPELLER (3X13-3/4"X21"-M)<br>HELICE (3X13-3/4"X21"-M) | 1 | | | | | UR SDS PROP.<br>UR SDS PROP. |
| | 68F–45978–10 | PROPELLER (3X14-1/4"X18"-M)<br>HELICE (3X14-1/4"X18"-M) | 1 | | | | | UR SDS PROP.<br>UR SDS PROP. |
| 20 | 6CE–45C81–00 | .DAMPER RUBBER, PROPELLER 1<br>.AMORTISSEUR HELICE 1 | 1 | | | | | |

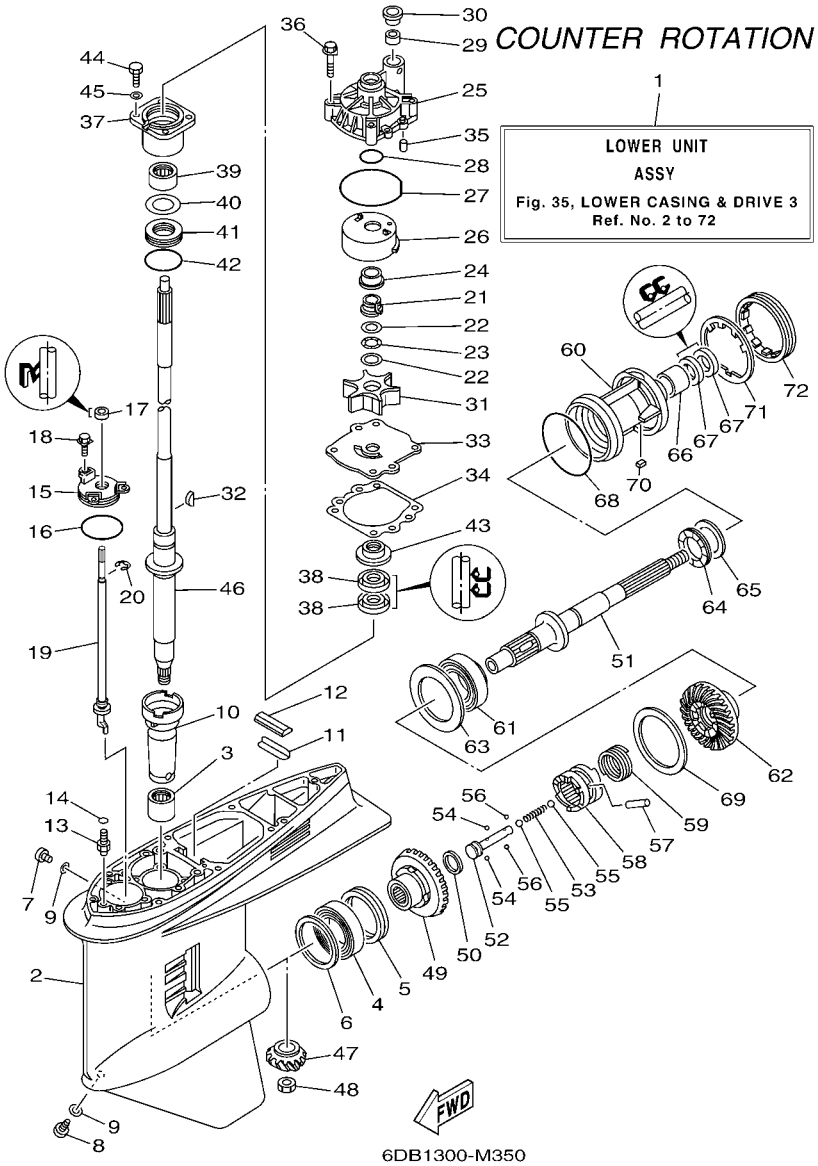


## FIG. 35 LOWER CASING & DRIVE 3 BOITIER D'HELICE TRANSMISSION3

| REF. NO. | PART NO. N° PIECES | DESCRIPTION DESCRIPTION | 6DV1 | 6DW1 | | | | REMARKS REMARQUES |
|---|---|---|---|---|---|---|---|---|
| 1 | 6DB–45300–10–8D | LOWER UNIT ASSY<br>UNITE INFERIEURE (ENS.) | | 1 | | | | X(25.3"),LH<br>X(25.3"),LH |
| 2 | 6J9–45301–07–8D | CASING, LOWER<br>BEQUILLE | | 1 | | | | |
| 3 | 93311–928U5 | BEARING<br>ROULEMENT | | 1 | | | | |
| 4 | 93390–000U2 | BEARING<br>ROULEMENT | | 1 | | | | |
| 5 | 93341–465U4 | BEARING<br>CERVEAUX DE DIRECTION | | 1 | | | | |
| 6 | 6G5–45567–01 | SHIM (T:0.10MM)<br>CALE (T:0.10MM) | | 1 | | | | UR<br>UR |
| | 6G5–45567–10 | SHIM (T:0.12MM)<br>CALE (T:0.12MM) | | 1 | | | | UR<br>UR |
| | 6G5–45567–20 | SHIM (T:0.15MM)<br>CALE (T:0.15MM) | | 1 | | | | UR<br>UR |
| | 6G5–45567–30 | SHIM (T:0.18MM)<br>CALE (T:0.18MM) | | 1 | | | | UR<br>UR |
| | 6G5–45567–40 | SHIM (T:0.30MM)<br>CALE (T:0.30MM) | | 1 | | | | UR<br>UR |
| | 6G5–45567–50 | SHIM (T:0.40MM)<br>CALE (T:0.40MM) | | 1 | | | | UR<br>UR |
| | 6G5–45567–60 | SHIM (T:0.50MM)<br>CALE (T:0.50MM) | | 1 | | | | UR<br>UR |
| 7 | 90340–08002 | PLUG, STRAIGHT SCREW<br>PLOT, FILETE DROIT | | 1 | | | | |
| 8 | 688–45341–10 | PLUG, DRAIN<br>BOUCHON DE VIDANGE | | 1 | | | | |
| 9 | 90430–08020 | GASKET<br>JOINT | | 2 | | | | |
| 10 | 6G5–45536–01 | SLEEVE, DRIVE SHAFT<br>MANCHON, ARBRE MOTEUR | | 1 | | | | |
| 11 | 663–45376–00 | GUIDE, SEAL DAMPER<br>BUTEE, JOINT CAOUTCHOUC | | 1 | | | | |
| 12 | 688–45375–00 | DAMPER, SEAL<br>BOURRELET, CAOUTCHOUC | | 1 | | | | |
| 13 | 63P–45378–00 | NIPPLE, HOSE<br>RACCORD, TUYAU | | 1 | | | | |
| 14 | 93210–07003 | O-RING<br>JOINT TORIQUE | | 1 | | | | |
| 15 | 6E5–45321–00 | PLATE<br>PLAQUETTE | | 1 | | | | |
| 16 | 93210–58144 | O-RING<br>JOINT TORIQUE | | 1 | | | | |
| 17 | 93106–09014 | OIL SEAL<br>JOINT SPY | | 1 | | | | |
| 18 | 90119–06M10 | BOLT, WITH WASHER<br>BOULON, AVEC RONDELLE | | 3 | | | | |
| 19 | 64P–44150–01 | SHIFT CAM ASSY<br>CAME D'INVERSION | | 1 | | | | |
| 20 | 99001–08600 | CIRCLIP<br>CIRCLIP | | 1 | | | | |
| 21 | 61A–45538–00 | SPACER 1<br>ENTRETOISE | | 1 | | | | |

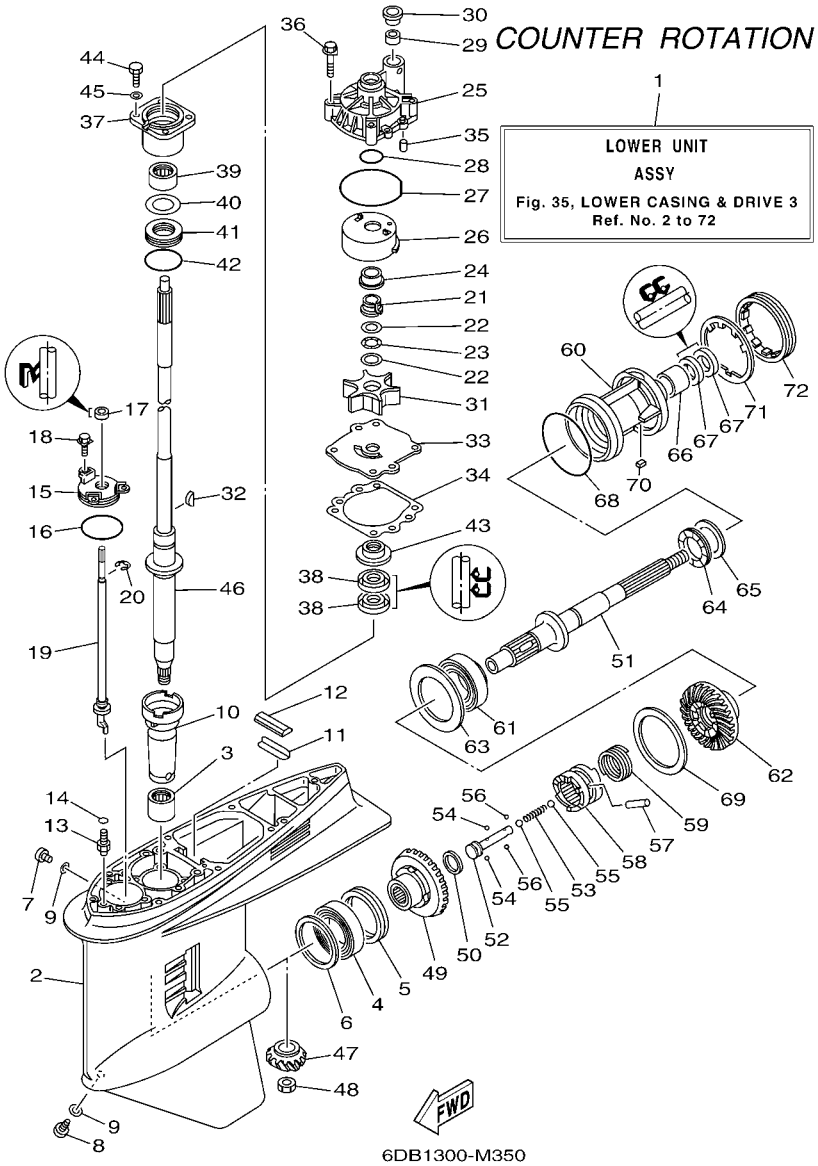


## FIG. 35 LOWER CASING & DRIVE 3 BOITIER D'HELICE TRANSMISSION3

| REF. NO. | PART NO. N° PIECES | DESCRIPTION DESCRIPTION | 6DV1 | 6DW1 | | | | REMARKS REMARQUES |
|---|---|---|---|---|---|---|---|---|
| 22 | 90201–22M01 | WASHER, PLATE<br>RONDELLE, PLATE | | 2 | | | | |
| 23 | 90206–22M19 | WASHER, WAVE<br>RONDELLE, ONDULEE | | 1 | | | | |
| 24 | 61A–45527–00 | COLLAR, DRIVE SHAFT<br>ENTRETOISE | | 1 | | | | |
| 25 | 61A–44311–01 | HOUSING, WATER PUMP<br>CORPS, POMPE A EAU | | 1 | | | | |
| 26 | 61A–44322–02 | INSERT, CARTRIDGE<br>CUVETTE | | 1 | | | | |
| 27 | 93210–86M38 | O-RING<br>JOINT TORIQUE | | 1 | | | | |
| 28 | 93210–37160 | O-RING<br>JOINT TORIQUE | | 1 | | | | |
| 29 | 6E5–44365–00 | DAMPER, WATER SEAL 1<br>JOINT, TUBE D'EAU 1 | | 1 | | | | |
| 30 | 6E5–44312–00 | COVER, WATER PUMP HOUSING<br>COUVERCLE | | 1 | | | | |
| 31 | 6E5–44352–01 | IMPELLER<br>TURBINE | | 1 | | | | |
| 32 | 90280–04M05 | KEY, WOODRUFF<br>CLAVETTE, DEMI-LUNE | | 1 | | | | |
| 33 | 6G5–44323–01 | OUTER PLATE, CARTRIDGE<br>PLAQUE EXTERIEURE | | 1 | | | | |
| 34 | 6E5–44315–A0 | GASKET, WATER PUMP<br>JOINT, POMPE A EAU | | 1 | | | | |
| 35 | 93606–12019 | PIN, DOWEL<br>GOUPILLE | | 2 | | | | |
| 36 | 90119–08M14 | BOLT, WITH WASHER<br>BOULON, AVEC RONDELLE | | 4 | | | | |
| 37 | 6E5–45331–00–9S | HOUSING, BEARING<br>FLASQUE, ROULEMENT | | 1 | | | | |
| 38 | 93101–28M16 | OIL SEAL<br>JOINT SPY | | 2 | | | | |
| 39 | 93317–330U2 | BEARING<br>ROULEMENT | | 1 | | | | |
| 40 | 6E5–45587–01 | SHIM (T:0.10MM)<br>CALE (T:0.10MM) | | 1 | | | | UR<br>UR |
| | 6E5–45587–10 | SHIM (T:0.12MM)<br>CALE (T:0.12MM) | | 1 | | | | UR<br>UR |
| | 6E5–45587–20 | SHIM (T:0.15MM)<br>CALE (T:0.15MM) | | 1 | | | | UR<br>UR |
| | 6E5–45587–30 | SHIM (T:0.18MM)<br>CALE (T:0.18MM) | | 1 | | | | UR<br>UR |
| | 6E5–45587–40 | SHIM (T:0.30MM)<br>CALE (T:0.30MM) | | 1 | | | | UR<br>UR |
| | 6E5–45587–50 | SHIM (T:0.40MM)<br>CALE (T:0.40MM) | | 1 | | | | UR<br>UR |
| | 6E5–45587–60 | SHIM (T:0.50MM)<br>CALE (T:0.50MM) | | 1 | | | | UR<br>UR |
| 41 | 93341–930V2 | BEARING<br>CERVEAUX DE DIRECTION | | 1 | | | | |
| 42 | 93210–55M14 | O-RING<br>JOINT TORIQUE | | 1 | | | | |

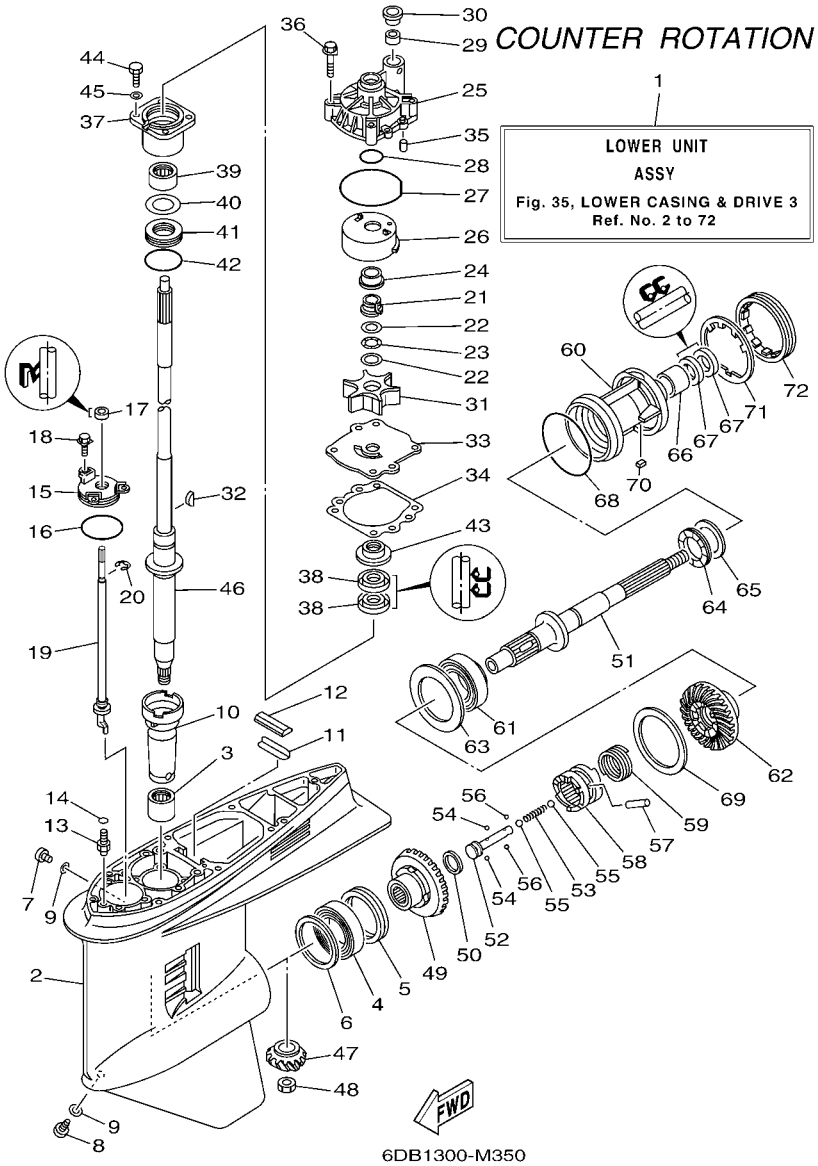


## FIG. 35 LOWER CASING & DRIVE 3 BOITIER D'HELICE TRANSMISSION3

| REF. NO. | PART NO. N° PIECES | DESCRIPTION DESCRIPTION | 6DV1 | 6DW1 | | | | REMARKS REMARQUES |
|---|---|---|---|---|---|---|---|---|
| 43 | 6E5–45344–00 | COVER, OIL SEAL<br>FLASQE, JOINT D'HUILE | | 1 | | | | |
| 44 | 97095–08025 | BOLT<br>BOULON | | 4 | | | | |
| 45 | 92995–08600 | WASHER<br>RONDELLE | | 4 | | | | |
| 46 | 63P–45501–11 | DRIVE SHAFT COMP.<br>ARBRE MOTEUR COMP. | | 1 | | | | X(25.3")<br>X(25.3") |
| 47 | 6DA–45551–00 | PINION (14T)<br>PIGNON D'ATTAQUE (14D) | | 1 | | | | |
| 48 | 90170–16M01 | NUT<br>ECROU | | 1 | | | | |
| 49 | 6DB–45560–00 | GEAR 1 (26T)<br>PIGNON 1 (26T) | | 1 | | | | |
| 50 | 90201–26015 | WASHER, PLATE<br>RONDELLE, PLATE | | 1 | | | | |
| 51 | 6K1–45611–10 | SHAFT, PROPELLER<br>ARBRE, HELICE | | 1 | | | | |
| 52 | 6E5–45634–02 | SLIDE, SHIFT<br>CONTRE-POUSSOIR | | 1 | | | | |
| 53 | 90501–16M37 | SPRING, COMPRESSION<br>RESSORT, COMPRESSION | | 1 | | | | |
| 54 | 93507–32009 | BALL<br>BILLE | | 2 | | | | |
| 55 | 93511–32017 | BALL<br>BILLES | | 2 | | | | |
| 56 | 93503–16003 | BALL<br>BILLES | | 2 | | | | |
| 57 | 90250–08M07 | PIN, STRAIGHT<br>GOUPILLE, DROITE | | 1 | | | | |
| 58 | 6DA–45631–00 | CLUTCH, DOG<br>CRABOT | | 1 | | | | |
| 59 | 6E5–45633–01 | RING, CROSS PIN<br>JONC, GOUPILLE CRABOT | | 1 | | | | |
| 60 | 6K1–45332–01–CA | HOUSING, BEARING<br>FLASQUE, ROULEMENT | | 1 | | | | |
| 61 | 93332–00048 | BEARING<br>ROULEMENT | | 1 | | | | |
| 62 | 6DB–45570–00 | GEAR 2 (26T)<br>PIGNON 2 (26T) | | 1 | | | | |
| 63 | 6K1–45576–00 | WASHER, THRUST 2<br>RONDELLE DE CALAGE 2 | | 1 | | | | |
| 64 | 93341–440U5 | BEARING<br>CERVEAUX DE DIRECTION | | 1 | | | | |
| 65 | 6K1–45578–01 | SHIM (T:0.10MM)<br>CALE (T:0.10MM) | | 1 | | | | UR<br>UR |
| | 6K1–45578–10 | SHIM (T:0.12MM)<br>CALE (T:0.12MM) | | 1 | | | | UR<br>UR |
| | 6K1–45578–20 | SHIM (T:0.15MM)<br>CALE (T:0.15MM) | | 1 | | | | UR<br>UR |
| | 6K1–45578–30 | SHIM (T:0.18MM)<br>CALE (T:0.18MM) | | 1 | | | | UR<br>UR |
| | 6K1–45578–40 | SHIM (T:0.30MM)<br>CALE (T:0.30MM) | | 1 | | | | UR<br>UR |

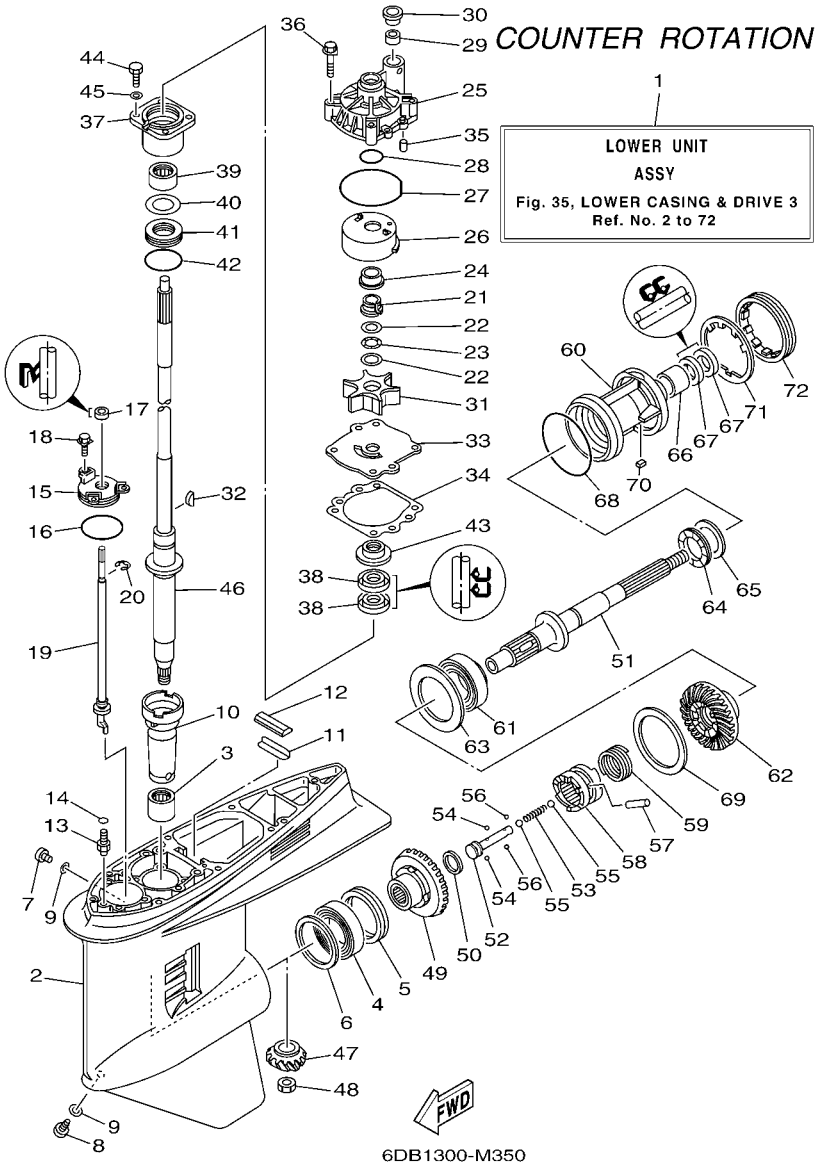


## FIG. 35 LOWER CASING & DRIVE 3 BOITIER D'HELICE TRANSMISSION3

| REF. NO. | PART NO. N° PIECES | DESCRIPTION DESCRIPTION | 6DV1 | 6DW1 | | | | REMARKS REMARQUES |
|---|---|---|---|---|---|---|---|---|
| 65 | 6K1–45578–50 | SHIM (T:0.40MM)<br>CALE (T:0.40MM) | | 1 | | | | UR<br>UR |
| | 6K1–45578–60 | SHIM (T:0.50MM)<br>CALE (T:0.50MM) | | 1 | | | | UR<br>UR |
| 66 | 93315–43061 | BEARING<br>ROULEMENT | | 1 | | | | |
| 67 | 93101–30M17 | OIL SEAL<br>JOINT SPY | | 2 | | | | |
| 68 | 93210–97M55 | O-RING<br>JOINT TORIQUE | | 1 | | | | |
| 69 | 6G5–45577–02 | SHIM (T:0.10MM)<br>CALE (T:0.10MM) | | 1 | | | | UR<br>UR |
| | 6G5–45577–10 | SHIM (T:0.12MM)<br>CALE (T:0.12MM) | | 1 | | | | UR<br>UR |
| | 6G5–45577–20 | SHIM (T:0.15MM)<br>CALE (T:0.15MM) | | 1 | | | | UR<br>UR |
| | 6G5–45577–30 | SHIM (T:0.18MM)<br>CALE (T:0.18MM) | | 1 | | | | UR<br>UR |
| | 6G5–45577–40 | SHIM (T:0.30MM)<br>CALE (T:0.30MM) | | 1 | | | | UR<br>UR |
| | 6G5–45577–50 | SHIM (T:0.40MM)<br>CALE (T:0.40MM) | | 1 | | | | UR<br>UR |
| | 6G5–45577–60 | SHIM (T:0.50MM)<br>CALE (T:0.50MM) | | 1 | | | | UR<br>UR |
| 70 | 90282–04M00 | KEY, STRAIGHT<br>CLAVETTE, DROITE | | 1 | | | | |
| 71 | 6G5–45383–01 | WASHER, CLAW<br>FREIN D'ECROU | | 1 | | | | |
| 72 | 6G5–45384–02 | NUT<br>ECROU | | 1 | | | | |

## FIG. 36 LOWER CASING & DRIVE 4 BOITIER D'HELICE TRANSMISSION4

*COUNTER ROTATION*

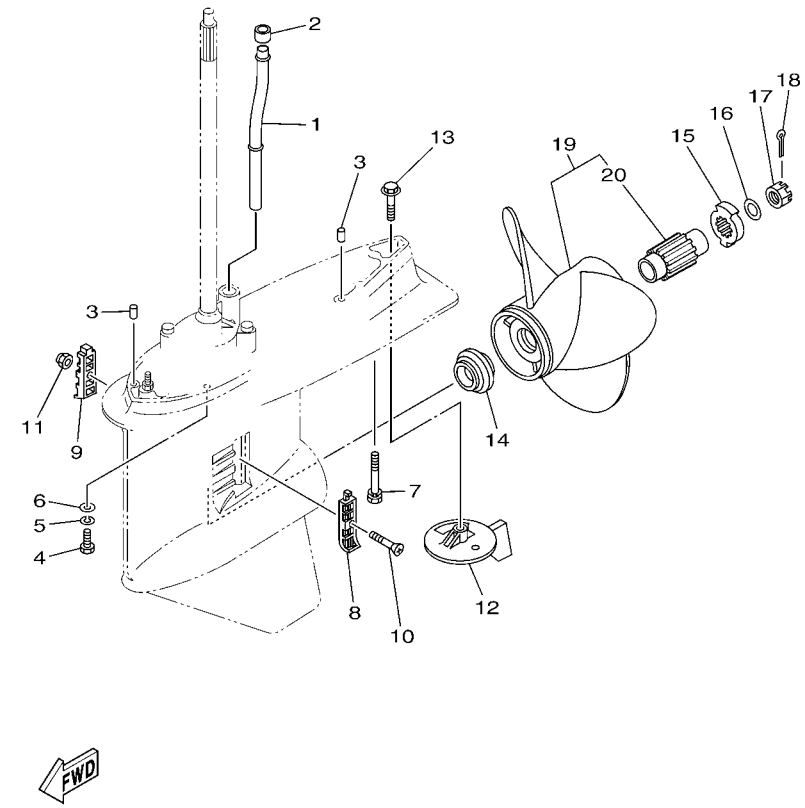


| REF. NO. | PART NO. N° PIECES | DESCRIPTION DESCRIPTION | 6DV1 | 6DW1 | | | | REMARKS REMARQUES |
|---|---|---|---|---|---|---|---|---|
| 1 | 6DA–44361–00 | TUBE, WATER 1<br>TUBE D'EAU 1 | | 1 | | | | X(25.3")<br>X(25.3") |
| 2 | 6E5–44365–00 | DAMPER, WATER SEAL 1<br>JOINT, TUBE D'EAU 1 | | 1 | | | | |
| 3 | 93608–16M16 | PIN, DOWEL<br>AXE | | 2 | | | | |
| 4 | 97095–10045 | BOLT<br>BOULON | | 6 | | | | |
| 5 | 92995–10100 | WASHER<br>RONDELLE | | 6 | | | | |
| 6 | 92995–10600 | WASHER<br>RONDELLE | | 6 | | | | |
| 7 | 90119–10MA2 | BOLT, WITH WASHER<br>BOULON, AVEC RONDELLE | | 1 | | | | |
| 8 | 6J9–45214–00 | COVER, WATER INLET 1<br>GRILLE, ENTREE D'EAU 1 | | 1 | | | | |
| 9 | 6J9–45215–00 | COVER, WATER INLET 2<br>GRILLE, ENTREE D'EAU 2 | | 1 | | | | |
| 10 | 90152–05M08 | SCREW, COUNTERSUNK<br>VIS, TETE NOYEE | | 1 | | | | |
| 11 | 90185–05002 | NUT, NYLON<br>ECROU,AUTO-BLOQUANT | | 1 | | | | |
| 12 | 6K1–45371–02 | TAB-TRIM<br>ANODE DERIVE | | 1 | | | | |
| 13 | 90105–10M00 | BOLT, FLANGE<br>BOULON | | 1 | | | | |
| 14 | 63P–45987–00 | SPACER 1<br>ENTRETOISE 1 | | 1 | | | | |
| 15 | 6CE–45997–00 | SPACER 2<br>ENTRETOISE 2 | | 1 | | | | |
| 16 | 92990–18200 | WASHER<br>RONDELLE, PLATE | | 1 | | | | |
| 17 | 90171–18M04 | NUT, CASTLE<br>ECROU, CRENELE | | 1 | | | | |
| 18 | 91490–40030 | PIN. COTTER<br>GOUPILLE | | 1 | | | | |
| 19 | 68G–45970–10 | PROPELLER (3X14-1/2X15-ML)<br>HELICE (3X14-1/2X15-ML) | | 1 | | | | UR SDS PROP.<br>UR SDS PROP. |
| | 68G–45972–10 | PROPELLER (3X14-1/4"X17"-ML)<br>HELICE (3X14-1/4"X17"-ML) | | 1 | | | | UR SDS PROP.<br>UR SDS PROP. |
| | 68G–45974–10 | PROPELLER (3X13-3/4"X19"-ML)<br>HELICE (3X13-3/4"X19"-ML) | | 1 | | | | UR SDS PROP.<br>UR SDS PROP. |
| | 68G–45976–10 | PROPELLER (3X13-3/4"X21"-ML)<br>HELICE (3X13-3/4"X21"-ML) | | 1 | | | | UR SDS PROP.<br>UR SDS PROP. |
| | 68G–45978–10 | PROPELLER (3X14-1/4"X18"-ML)<br>HELICE (3X14-1/4"X18"-ML) | | 1 | | | | UR SDS PROP.<br>UR SDS PROP. |
| 20 | 6CE–45C81–00 | .DAMPER RUBBER, PROPELLER 1<br>.AMORTISSEUR HELICE 1 | | 1 | | | | |

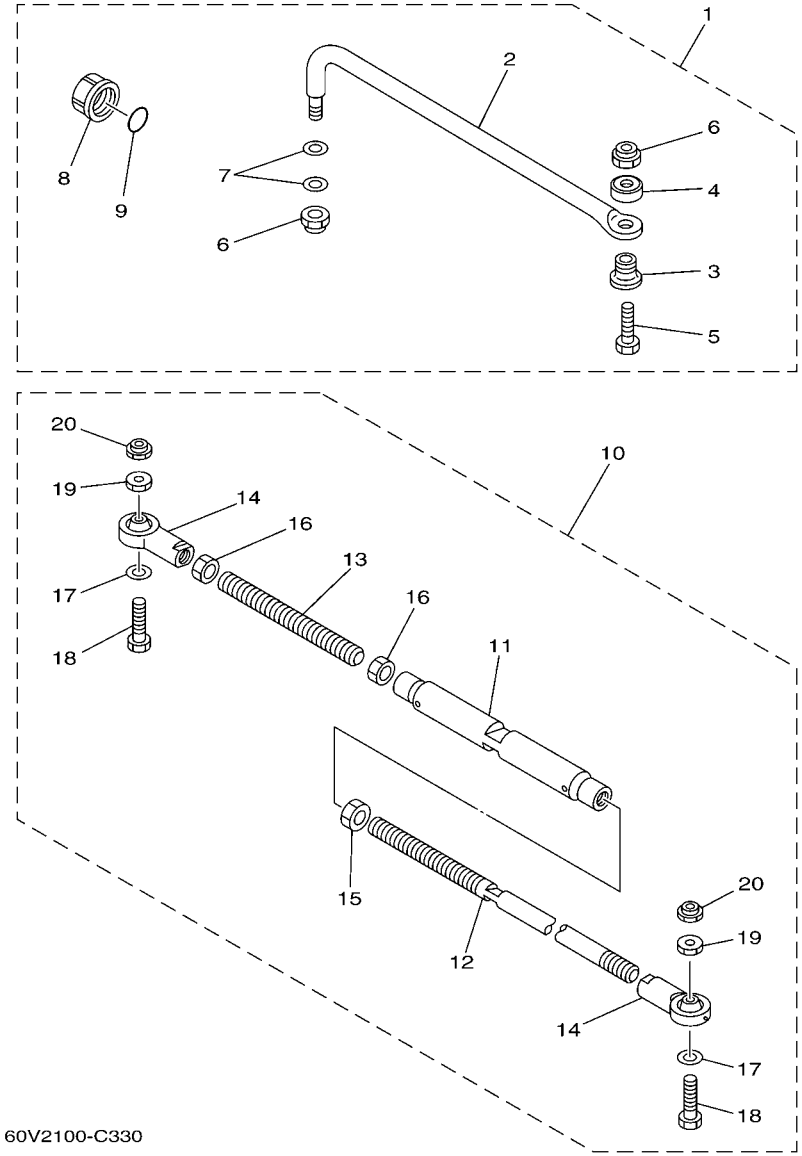


## FIG. 37 STEERING GUIDE FIXATION DE DIRECTION

| REF. NO. | PART NO. N° PIECES | DESCRIPTION DESCRIPTION | 6DV1 | 6DW1 | | | | REMARKS REMARQUES |
|---|---|---|---|---|---|---|---|---|
| 1 | 6E5–61350–02 | STEERING GUIDE ATTACHMENT KIT<br>FIXATIONS DE DIRECTION | 1 | | | | | AP<br>AP |
| 2 | 6E5–61351–01 | .ROD, STEERING LINK<br>.RENVOI DE DIRECTION | 1 | | | | | |
| 3 | 90387–10M61 | .COLLAR<br>.COLLERETTE | 1 | | | | | |
| 4 | 90560–12M01 | .SPACER<br>.ENTRETOISE | 1 | | | | | |
| 5 | 6E5–61355–00 | .BOLT<br>.BOULON | 1 | | | | | |
| 6 | 90185–09M01 | .NUT, SELF-LOCKING<br>.ECROU,AUTO-BLOQUANT | 2 | | | | | |
| 7 | 90201–10M20 | .WASHER, PLATE<br>.RONDELLE, PLATE | 2 | | | | | |
| 8 | 6E5–43145–01 | .CAP, CLAMP BRACKET<br>.CAPUCHON, PRESSE | 1 | | | | | |
| 9 | 93210–16275 | .O-RING<br>.JOINT TORIQUE | 1 | | | | | |
| 10 | 6E5–61301–01 | TWIN KIT (L:600-800MM)<br>JUMELE KIT (L:600-800MM) | | 1 | | | | AP<br>AP |
| 11 | 6E5–61313–00 | .ADJUSTER<br>.TENDEUR | | 1 | | | | |
| 12 | 6E5–61311–11 | .TIE BAR<br>.BARRE D'ACCOUPLEMENT | | 1 | | | | |
| 13 | 6E5–61315–00 | .TIE BAR<br>.BARRE D'ACCOUPLEMENT | | 1 | | | | |
| 14 | 6E5–61303–00 | .STEERING AXLE COMP.<br>.AXLE COMP. | | 2 | | | | |
| 15 | 90170–14M06 | .NUT<br>.ECROU | | 1 | | | | |
| 16 | 95380–14700 | .NUT<br>.ECROU | | 2 | | | | |
| 17 | 90201–10M76 | .WASHER, PLATE<br>.RONDELLE, PLATE | | 2 | | | | |
| 18 | 90101–09M70 | .BOLT<br>.BOULON | | 2 | | | | |
| 19 | 90170–09M05 | .NUT<br>.ECROU | | 2 | | | | |
| 20 | 90185–09M01 | .NUT, SELF-LOCKING<br>.ECROU,AUTO-BLOQUANT | | 2 | | | | |

## FIG. 38 OPTIONAL PARTS 1 PIECES OPTIONNELLES 1

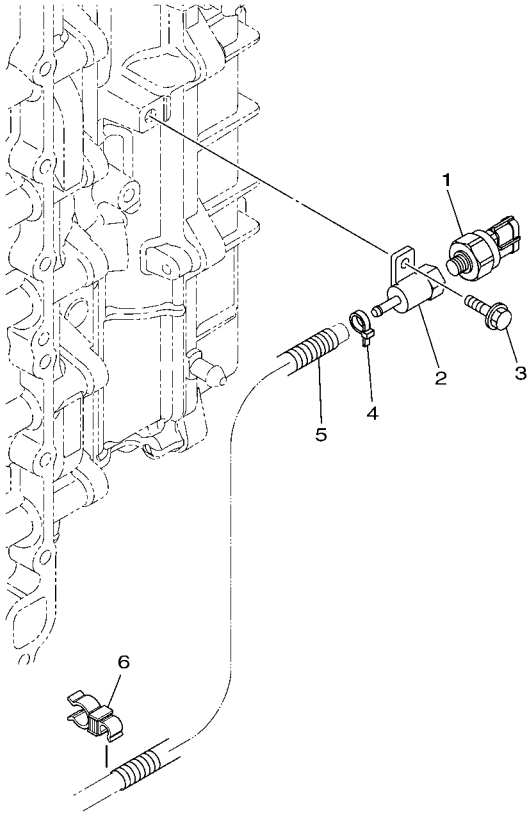


6DV1100-M360

| REF. NO. | PART NO. N° PIECES | DESCRIPTION DESCRIPTION | 6DV1 | 6DW1 | | | | REMARKS REMARQUES |
|---|---|---|---|---|---|---|---|---|
| 1 | 6AW–8366B–00 | SENSOR, WATER PRESSURE<br>SONDE DE PRESSION D'EAU | 1 | | | | | FOR LAN SPEED<br>FOR LAN SPEED |
| 2 | 60V–8366D–00 | ADAPTOR, INPUT<br>CONNECTEUR 3 | 1 | | | | | FOR LAN SPEED<br>FOR LAN SPEED |
| 3 | 95895–06016 | BOLT, FLANGE<br>BOULON | 1 | | | | | FOR LAN SPEED<br>FOR LAN SPEED |
| 4 | 90465–11M10 | CLAMP<br>BRIDE | 1 | | | | | FOR LAN SPEED<br>FOR LAN SPEED |
| 5 | 90447–07008 | HOSE, WITH SPRING (L200)<br>DURITE | 1 | | | | | FOR LAN SPEED<br>FOR LAN SPEED |
| 6 | 90464–13013 | CLAMP<br>BRIDE | 1 | | | | | FOR LAN SPEED<br>FOR LAN SPEED |

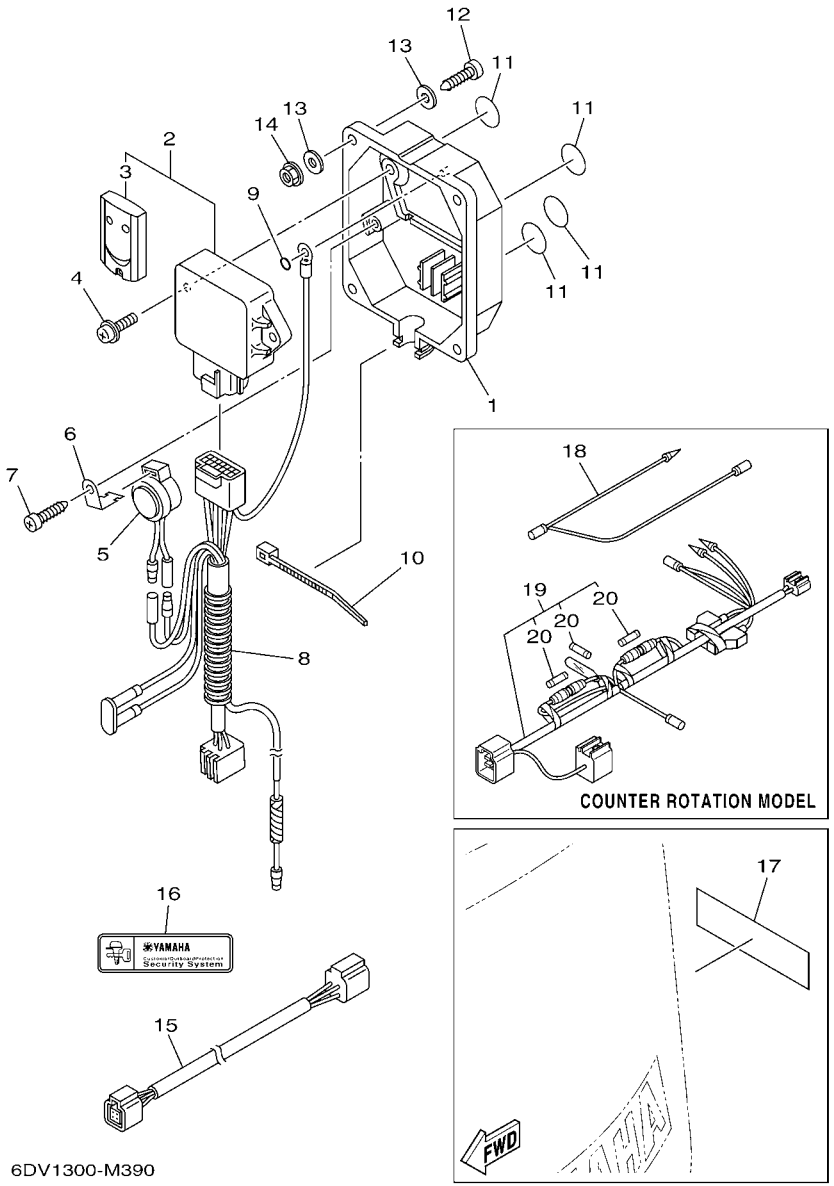


## FIG. 39 OPTIONAL PARTS 2 PIECES OPTIONNELLES 2

| REF. NO. | PART NO. N° PIECES | DESCRIPTION DESCRIPTION | 6DV1 | 6DW1 | | | | REMARKS REMARQUES |
|---|---|---|---|---|---|---|---|---|
| 1 | 6Y8–86267–00 | CASE COMPLETE 1<br>CARTER (ENS.) 1 | 1 | | | | | |
| 2 | 6Y8–86260–02 | REMOTE CONTROL UNIT ASSY<br>UNITE DE TELECOMMANDE (ENS.) | 1 | | | | | UR FOR EUR<br>UR FOR EUR |
| | 6Y8–86260–12 | REMOTE CONTROL UNIT ASSY<br>UNITE DE TELECOMMANDE (ENS.) | 1 | | | | | AP FOR USA/CAN<br>AP FOR USA/CAN |
| 3 | 6AA–86261–00 | .TRANSMITTER COMP<br>.TRANSMETTEUR | 2 | | | | | FOR 6Y8-86260-02<br>FOR 6Y8-86260-02 |
| | 6AA–86261–22 | .TRANSMITTER COMP<br>.TRANSMETTEUR | 2 | | | | | FOR 6Y8-86260-12<br>FOR 6Y8-86260-12 |
| 4 | 97980–06216 | SCREW, WITH WASHER<br>VIS, AVEC RONDELLE | 2 | | | | | |
| 5 | 6X4–83383–00 | BUZZER<br>RONFLEUR | 1 | | | | | |
| 6 | 6X4–83386–00 | STAY, BUZZER<br>SUPPOR, RONFLEUR | 1 | | | | | |
| 7 | 97780–60620 | SCREW, TAPPING<br>VIS, TETE BOMBEE | 1 | | | | | |
| 8 | 6Y8–82509–10 | WIRE, SUB LEAD<br>FIL, SECONDAIRE | 1 | | | | | |
| 9 | 93210–04279 | O-RING<br>JOINT TORIQUE | 1 | | | | | |
| 10 | 90465–11M10 | CLAMP<br>BRIDE | 1 | | | | | |
| 11 | 6Y8–8454G–00 | PATCH 1<br>TAMPON 1 | 4 | | | | | |
| 12 | 90167–06M00 | SCREW, TAPPING<br>VIS, TETE FRAISEE | 4 | | | | | UR<br>UR |
| | 97880–06035 | SCREW, PAN HEAD<br>VIS, TETE TRONCONIQUE | 4 | | | | | UR<br>UR |
| 13 | 90201–06M30 | WASHER, PLATE<br>RONDELLE, PLATE | 8 | | | | | |
| 14 | 95780–06300 | NUT, FLANGE<br>ECROU | 4 | | | | | |
| 15 | 6Y8–82521–11 | 2FT PIGTAIL BUS<br>FAISCEAU (L: 2FT.) | 1 | | | | | |
| 16 | 6Y8–48277–00 | STICKER 1<br>ETIQUETTE 1 | 1 | | | | | UR FOR EUR<br>UR FOR EUR |
| | 6Y8–48277–00 | STICKER 1<br>ETIQUETTE 1 | 4 | | | | | UR FOR USA/CAN<br>UR FOR USA/CAN |
| 17 | 6Y8–48277–00 | STICKER 1<br>ETIQUETTE 1 | 1 | 1 | | | | |
| 18 | 6H5–81315–00 | LEAD WIRE ASSY<br>FIL | | 1 | | | | |
| 19 | 6Y8–81315–00 | LEAD WIRE ASSY<br>FIL | | 1 | | | | |
| 20 | 6TA–82151–00 | .FUSE(5A)<br>.FUSIBLE (5A) | | 3 | | | | |

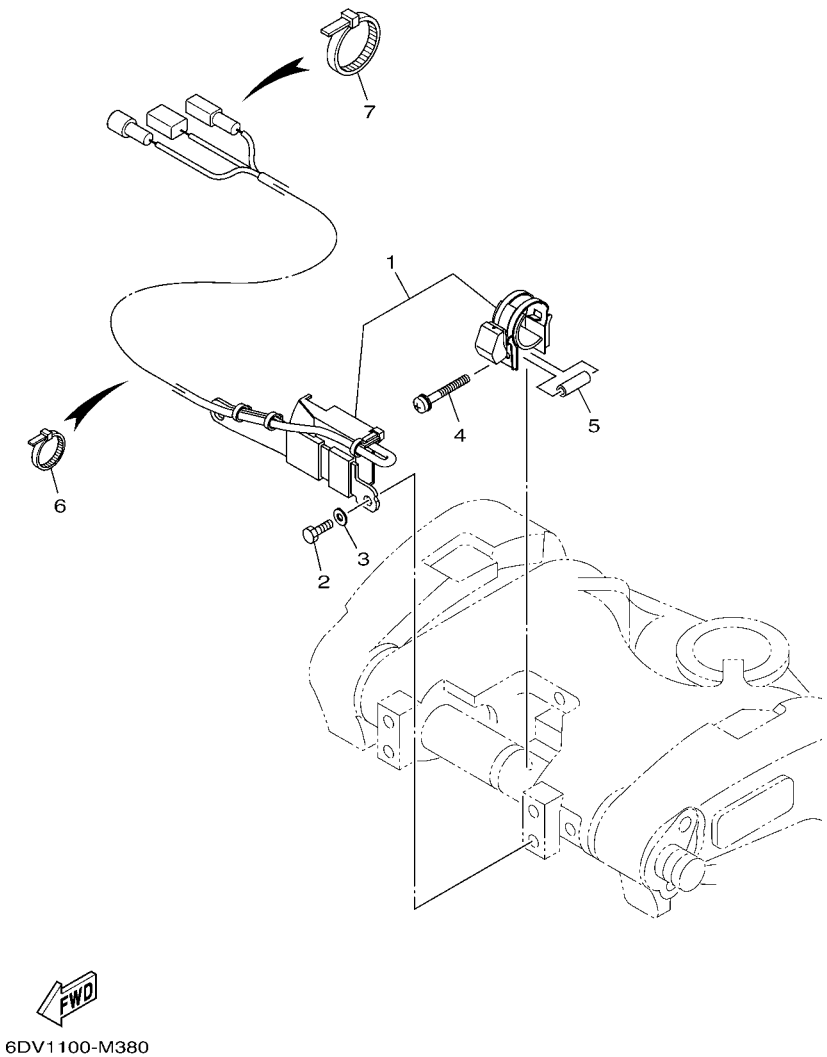


## FIG. 40 OPTIONAL PARTS 3 PIECES OPTIONNELLES 3

| REF. NO. | PART NO. N° PIECES | DESCRIPTION DESCRIPTION | 6DV1 | 6DW1 | | | | REMARKS REMARQUES |
|---|---|---|---|---|---|---|---|---|
| 1 | 6CE–825E0–00 | TILT LIMIT SWITCH ASSY<br>COMMUTATEUR, LIMIT INCLINAISON | 1 | 1 | | | | |
| 2 | 97095–06016 | BOLT<br>BOULON | 2 | 2 | | | | |
| 3 | 92995–06600 | WASHER<br>RONDELLE | 2 | 2 | | | | |
| 4 | 90159–05059 | SCREW, WITH WASHER<br>VIS, AVEC RONDELLE | 1 | 1 | | | | |
| 5 | 90387–05004 | COLLAR<br>COLLERETTE | 1 | 1 | | | | |
| 6 | 90465–11M10 | CLAMP<br>BRIDE | 8 | 8 | | | | |
| 7 | 90465–13M18 | CLAMP<br>BRIDE | 1 | 1 | | | | |

## FIG. 41 REPAIR KIT 1 — KITS DE REPARATION 1

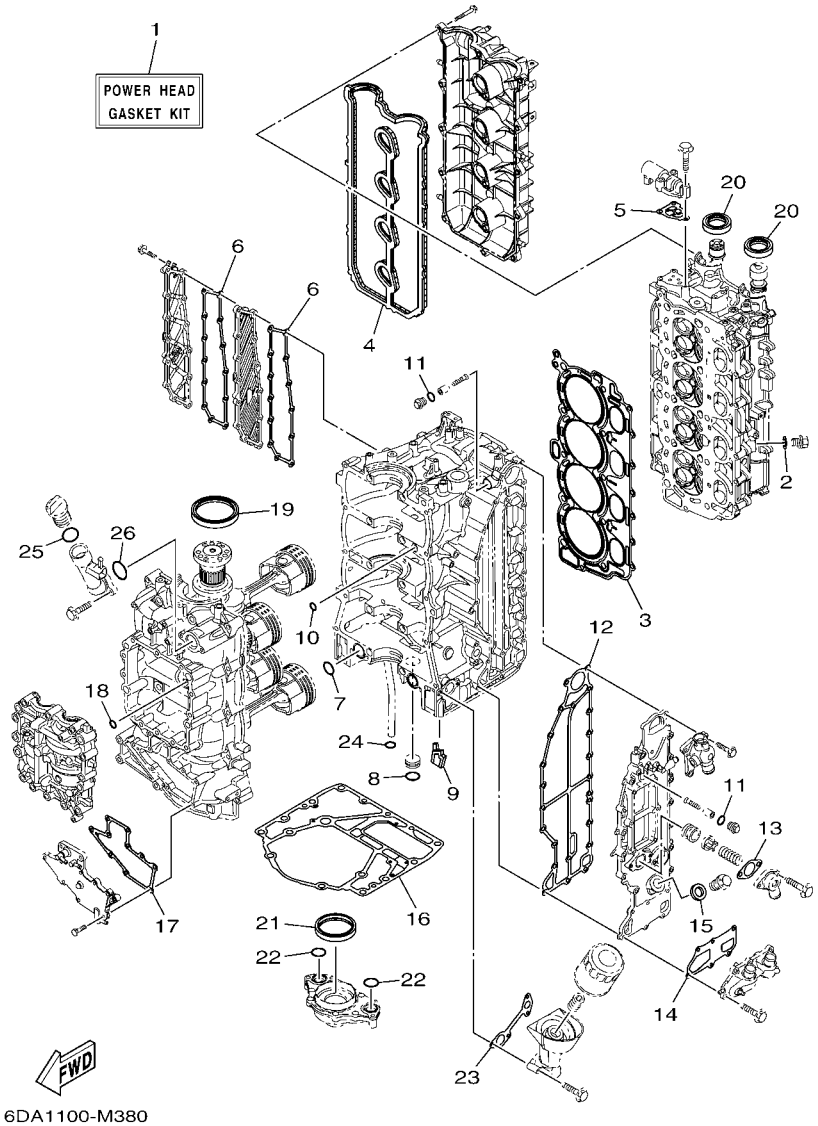


| REF. NO. | PART NO. N° PIECES | DESCRIPTION DESCRIPTION | 6DV1 | 6DW1 | | | | REMARKS REMARQUES |
|---|---|---|---|---|---|---|---|---|
| 1 | 6DA–W0001–00 | POWER HEAD GASKET KIT<br>POCHETTE DE JINTS TETE MOTRICE | 1 | 1 | | | | |
| 2 | 90430–14115 | .GASKET<br>.JOINT | 1 | 1 | | | | |
| 3 | 6DA–11181–00 | .GASKET, CYLINDER HEAD 1<br>.JOINT, DE CULASSE 1 | 1 | 1 | | | | |
| 4 | 6DA–11193–00 | .GASKET, HEAD COVER 1<br>.JOINT, COUVERCLE DE CULASSE 1 | 1 | 1 | | | | |
| 5 | 6CB–1242F–00 | .GASKET, FILTER<br>.JOINT, FILTRE | 1 | 1 | | | | |
| 6 | 6DA–15353–00 | .GASKET, DRAIN<br>.JOINT, PLOT DE VIDANGE | 2 | 2 | | | | |
| 7 | 93210–25552 | .O-RING<br>.JOINT TORIQUE | 2 | 2 | | | | |
| 8 | 93210–25647 | .O-RING<br>.JOINT TORIQUE | 1 | 1 | | | | |
| 9 | 6DA–14664–00 | .GROMMET, WATER SHUT<br>.PASSE-FIL | 1 | 1 | | | | |
| 10 | 93210–12648 | .O-RING<br>.JOINT TORIQUE | 1 | 1 | | | | |
| 11 | 93210–13M63 | .O-RING<br>.JOINT TORIQUE | 2 | 2 | | | | |
| 12 | 6DA–41114–00 | .GASKET, EXHAUST OUTER COVER<br>.JOINT, COUVERCLE D'ECHAPPEMENT | 1 | 1 | | | | |
| 13 | 60V–11382–A0 | .GASKET 2<br>.JOINT 2 | 1 | 1 | | | | |
| 14 | 6DA–11381–00 | .GASKET 1<br>.JOINT 1 | 1 | 1 | | | | |
| 15 | 90430–18130 | .GASKET<br>.JOINT | 1 | 1 | | | | |
| 16 | 63P–11351–01 | .GASKET, CYLINDER<br>.JOINT, D'EMBASE | 1 | 1 | | | | |
| 17 | 6DA–15451–00 | .GASKET, CRANKCASE COVER 1<br>.JOINT, COUVERCLE DE CARTER 1 | 1 | 1 | | | | |
| 18 | 93210–08001 | .O-RING<br>.JOINT TORIQUE | 1 | 1 | | | | |
| 19 | 93102–85008 | .OIL SEAL<br>.JOINT SPY | 1 | 1 | | | | |
| 20 | 93102–38008 | .OIL SEAL<br>.JOINT SPY | 2 | 2 | | | | |
| 21 | 6CB–11355–00 | .SEAL, CYLINDER 1<br>.JOINT, SPY CYLINDRE | 1 | 1 | | | | |
| 22 | 93210–25552 | .O-RING<br>.JOINT TORIQUE | 2 | 2 | | | | |
| 23 | 6DA–13475–00 | .GASKET<br>.JOINT | 1 | 1 | | | | |
| 24 | 93210–19MJ3 | .O-RING<br>.JOINT TORIQUE | 1 | 1 | | | | |
| 25 | 93210–24M79 | .O-RING<br>.JOINT TORIQUE | 1 | 1 | | | | |
| 26 | 93210–357A3 | .O-RING<br>.JOINT TORIQUE | 1 | 1 | | | | |

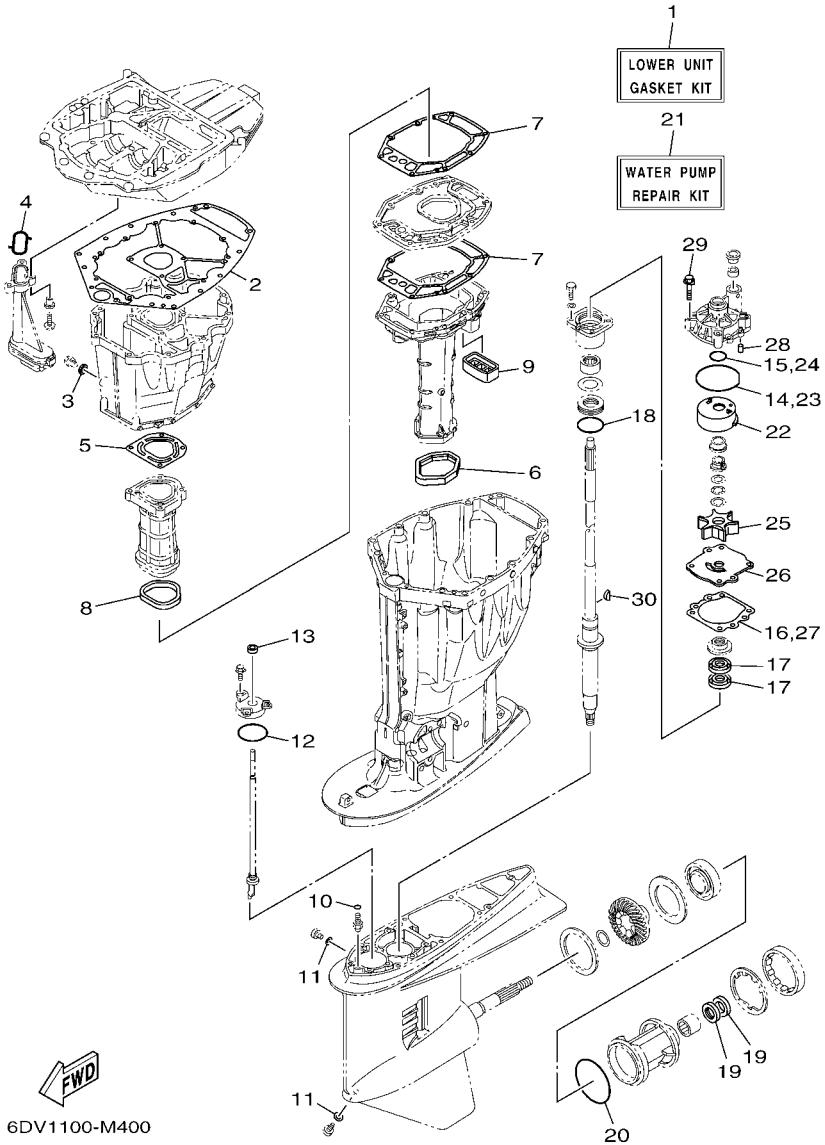


## FIG. 42 REPAIR KIT 2 — KITS DE REPARATION 2

| REF. NO. | PART NO. N° PIECES | DESCRIPTION DESCRIPTION | 6DV1 | 6DW1 | | | | REMARKS REMARQUES |
|---|---|---|---|---|---|---|---|---|
| 1 | 63P–W0001–21 | LOWER UNIT GASKET KIT<br>POCHETTE DE JOINTS EMBASE | 1 | 1 | | | | |
| 2 | 63P–15312–01 | .GASKET, OIL PAN<br>.JOINT DE VENTILATEUR D'HUILE | 1 | 1 | | | | |
| 3 | 90430–14M09 | .GASKET<br>.JOINT | 1 | 1 | | | | |
| 4 | 63P–13415–00 | .SEAL, OIL STRAINER<br>.JOINT, FILTRE A HUILE | 1 | 1 | | | | |
| 5 | 63P–41133–A0 | .GASKET, EXHAUST MANIFOLD 1<br>.JOINT, PIPE D'ECHAPPEMENT | 1 | 1 | | | | |
| 6 | 69J–45123–00 | .GASKET, MUFFLER<br>.JOINT, POT DE DETENTE | 1 | 1 | | | | |
| 7 | 63P–41134–A1 | .GASKET, EXHAUST MANIFOLD<br>.JOINT, PIPE D'ECHAPPEMENT | 2 | 2 | | | | |
| 8 | 63P–41138–00 | .SEAL, EXT. 1<br>.JOINT DE GROUPE 1 | 1 | 1 | | | | |
| 9 | 69J–45127–00 | .SEAL<br>.JOINT | 1 | 1 | | | | |
| 10 | 93210–07003 | .O-RING<br>.JOINT TORIQUE | 2 | 2 | | | | |
| 11 | 90430–08020 | .GASKET<br>.JOINT | 2 | 2 | | | | |
| 12 | 93210–58144 | .O-RING<br>.JOINT TORIQUE | 1 | 1 | | | | |
| 13 | 93106–09014 | .OIL SEAL<br>.JOINT SPY | 1 | 1 | | | | |
| 14 | 93210–86M38 | .O-RING<br>.JOINT TORIQUE | 1 | 1 | | | | |
| 15 | 93210–37160 | .O-RING<br>.JOINT TORIQUE | 1 | 1 | | | | |
| 16 | 6E5–44315–A0 | .GASKET, WATER PUMP<br>.JOINT, POMPE A EAU | 1 | 1 | | | | |
| 17 | 93101–28M16 | .OIL SEAL<br>.JOINT SPY | 2 | 2 | | | | |
| 18 | 93210–55M14 | .O-RING<br>.JOINT TORIQUE | 1 | 1 | | | | |
| 19 | 93101–30M17 | .OIL SEAL<br>.JOINT SPY | 2 | 2 | | | | |
| 20 | 93210–97M55 | .O-RING<br>.JOINT TORIQUE | 1 | 1 | | | | |
| 21 | 61A–W0078–A3 | WATER PUMP REPAIR KIT<br>KIT DE REPARATION DE LA POMPE | 1 | 1 | | | | |
| 22 | 61A–44322–02 | .INSERT, CARTRIDGE<br>.CUVETTE | 1 | 1 | | | | |
| 23 | 93210–86M38 | .O-RING<br>.JOINT TORIQUE | 1 | 1 | | | | |
| 24 | 93210–37160 | .O-RING<br>.JOINT TORIQUE | 1 | 1 | | | | |
| 25 | 6E5–44352–01 | .IMPELLER<br>.TURBINE | 1 | 1 | | | | |
| 26 | 6G5–44323–01 | .OUTER PLATE, CARTRIDGE<br>.PLAQUE EXTERIEURE | 1 | 1 | | | | |
| 27 | 6E5–44315–A0 | .GASKET, WATER PUMP<br>.JOINT, POMPE A EAU | 1 | 1 | | | | |

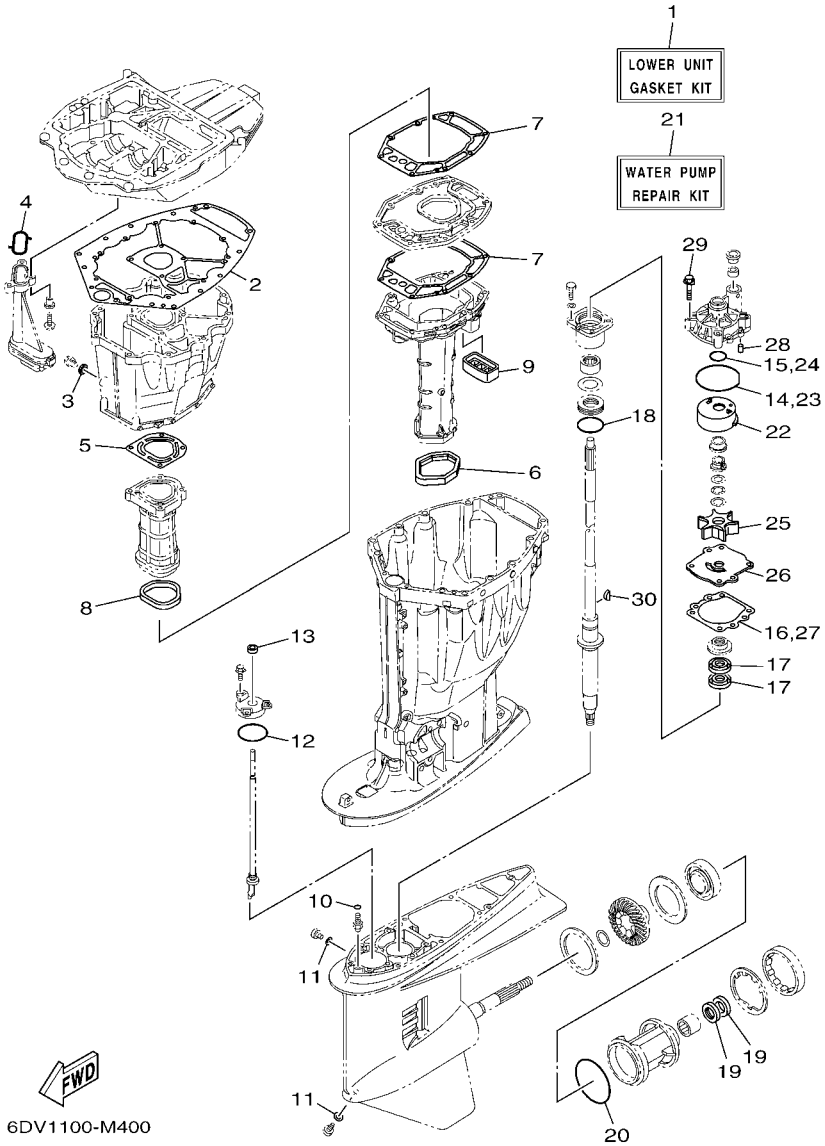


## FIG. 42 REPAIR KIT 2 — KITS DE REPARATION 2

| REF. NO. | PART NO. N° PIECES | DESCRIPTION DESCRIPTION | 6DV1 | 6DW1 | | | | REMARKS REMARQUES |
|---|---|---|---|---|---|---|---|---|
| 28 | 93606–12019 | .PIN, DOWEL<br>.GOUPILLE | 2 | 2 | | | | |
| 29 | 90119–08M14 | .BOLT, WITH WASHER<br>.BOULON, AVEC RONDELLE | 4 | 4 | | | | |
| 30 | 90280–04M05 | .KEY, WOODRUFF<br>.CLAVETTE, DEMI-LUNE | 1 | 1 | | | | |

NUMERICAL INDEX
INDEX NUMERIQUE


| PART NO. N° PIECES | REF. NO. |
|---|---|
| 6DA–11110–00–9S | 5 – 2 |
| 6DA–11133–10 | 5 – 3 |
| 6DA–11181–00 | 5 – 17 |
| | 41 – 3 |
| 6DA–11191–00 | 5 – 22 |
| 6DA–11193–00 | 5 – 23 |
| | 41 – 4 |
| 6G8–11197–01 | 6 – 4 |
| 67F–11301–00 | 5 – 11 |
| 69J–11301–00 | 6 – 18 |
| 68T–11325–00 | 1 – 3 |
| | 6 – 5 |
| 6E5–11325–00 | 1 – 2 |
| | 1 – 6 |
| | 3 – 8 |
| | 3 – 31 |
| 67F–11325–01 | 1 – 1 |
| | 1 – 4 |
| | 5 – 12 |
| | 6 – 19 |
| 67F–11328–00 | 5 – 13 |
| | 6 – 20 |
| 63P–11351–01 | 3 – 21 |
| | 41 – 16 |
| 6CB–11355–00 | 32 – 15 |
| | 41 – 21 |
| 6G5–11372–00 | 6 – 14 |
| 6DA–11381–00 | 6 – 25 |
| | 41 – 14 |
| 60V–11382–A0 | 6 – 16 |
| | 41 – 13 |
| 6DA–11410–00 | 4 – 1 |
| 6DA–11416–00 | 4 – 5 |
| 6DA–11416–10 | 4 – 5 |
| 6DA–11416–20 | 4 – 5 |
| 6DA–11417–00 | 4 – 6 |
| 6DA–11417–10 | 4 – 6 |
| 6DA–11417–20 | 4 – 6 |
| 6DA–11426–00 | 4 – 7 |
| 6DA–11427–00 | 4 – 8 |
| 6CB–11478–00 | 4 – 2 |
| 6DA–11500–00 | 3 – 22 |
| 63P–11512–00 | 3 – 25 |
| 6DA–11590–00 | 8 – 21 |
| 6DA–11595–00 | 8 – 24 |
| 6DA–115A0–00 | 8 – 13 |
| 6CB–11603–00 | 4 – 12 |
| 6DA–11631–00–94 | 4 – 11 |

| PART NO. N° PIECES | REF. NO. |
|---|---|
| 6CB–11633–00 | 4 – 13 |
| 6CB–11654–00 | 4 – 10 |
| 6CB–11656–00 | 4 – 15 |
| 6CB–11656–10 | 4 – 15 |
| 6CB–11656–20 | 4 – 15 |
| 6DA–11998–00 | 25 – 21 |
| 6DA–11999–00 | 25 – 23 |
| 6CB–12111–00 | 8 – 1 |
| 6CB–12113–00 | 8 – 4 |
| 51Y–12119–00 | 8 – 7 |
| 6DA–12121–00 | 8 – 2 |
| 6DA–12171–00 | 8 – 9 |
| 6DA–12181–00 | 8 – 11 |
| 6DA–12411–00 | 1 – 5 |
| | 6 – 28 |
| 6AW–12412–00 | 6 – 29 |
| 6DA–12413–00–9S | 6 – 30 |
| 60H–12416–00 | 6 – 11 |
| 6DA–1241B–00–9S | 6 – 49 |
| 6CB–1242F–00 | 6 – 2 |
| | 41 – 5 |
| 6DA–1243A–00 | 6 – 15 |
| 6DA–1243E–00 | 6 – 31 |
| 6DA–1244H–00 | 6 – 33 |
| 6P2–12491–00 | 6 – 37 |
| 6DA–12527–00–9S | 6 – 24 |
| 6DA–12552–00 | 7 – 13 |
| 6AW–12572–00 | 25 – 4 |
| 6DA–12576–00 | 7 – 1 |
| | 11 – 6 |
| 6DA–12578–00 | 7 – 6 |
| 6DA–12579–00 | 7 – 11 |
| 6R3–12581–00 | 25 – 5 |
| 6AW–12582–00 | 25 – 6 |
| 6R3–12583–00 | 25 – 7 |
| 6DA–12589–00 | 7 – 2 |
| | 7 – 15 |
| 6P2–12615–00 | 8 – 18 |
| 6P2–12623–00 | 8 – 16 |
| 6P2–12645–20 | 8 – 15 |
| 6P2–12663–00 | 8 – 17 |
| 6S5–12858–00 | 6 – 40 |
| 6CB–13016–00 | 1 – 10 |
| | 12 – 5 |
| 6AW–13119–00 | 32 – 13 |
| 6AW–13132–00 | 12 – 25 |
| 6DA–13152–00 | 9 – 3 |
| 6DA–13160–00 | 10 – 6 |

| PART NO. N° PIECES | REF. NO. |
|---|---|
| 6DA–13161–00 | 10 – 7 |
| 6DA–13300–00 | 32 – 11 |
| 6DA–13329–00 | 32 – 12 |
| 63P–13411–00 | 32 – 7 |
| 63P–13415–00 | 32 – 9 |
| | 42 – 4 |
| 67F–13434–20 | 2 – 19 |
| 63P–13437–62 | 16 – 28 |
| 69J–13440–01 | 1 – 8 |
| | 6 – 39 |
| 6DA–13446–00 | 6 – 41 |
| 6DA–13475–00 | 6 – 42 |
| | 41 – 23 |
| 63P–13490–00 | 3 – 33 |
| 6DA–13532–00 | 11 – 1 |
| 6DA–13545–00 | 11 – 16 |
| 68V–13546–10 | 11 – 18 |
| 6DA–13547–00 | 11 – 21 |
| 6DA–13548–00 | 11 – 19 |
| 6DA–13564–00 | 10 – 4 |
| 6AW–13577–10 | 10 – 10 |
| 6CB–13593–00 | 12 – 22 |
| 69J–13631–00 | 32 – 14 |
| 6DA–13641–00 | 9 – 11 |
| 6DA–13645–00 | 9 – 13 |
| 6DA–13646–00 | 9 – 12 |
| 69J–13716–00 | 12 – 21 |
| 6DA–13751–00 | 9 – 1 |
| 6DA–13761–00 | 10 – 8 |
| 6AW–13781–00 | 12 – 29 |
| 6AW–13784–00 | 12 – 32 |
| 6DA–13881–00 | 9 – 19 |
| 6DA–13892–00 | 12 – 11 |
| 6DA–13893–00 | 12 – 12 |
| 6CB–13906–01 | 12 – 8 |
| 6P2–13907–20 | 12 – 23 |
| 63P–13915–00 | 1 – 11 |
| | 12 – 24 |
| 6AW–1410B–00 | 10 – 9 |
| 6DA–14146–00 | 12 – 10 |
| 6P2–14149–00 | 12 – 35 |
| 6DA–14180–00 | 12 – 1 |
| 6DA–14181–00 | 12 – 14 |
| 6DA–14182–00 | 12 – 2 |
| 6P2–14191–00 | 12 – 15 |
| 6CB–14216–00 | 12 – 6 |
| 6CB–14239–00 | 12 – 16 |
| 6P2–14386–00 | 12 – 31 |

| PART NO. N° PIECES | REF. NO. |
|---|---|
| 6P2–1441J–00 | 9 – 7 |
| 6CB–14429–01 | 12 – 18 |
| 6DA–14440–00 | 9 – 5 |
| 6CB–1447B–00 | 12 – 28 |
| 6CB–14546–00 | 12 – 27 |
| 6CB–14564–00 | 12 – 9 |
| 63P–14567–00 | 12 – 20 |
| 69J–14624–01 | 31 – 26 |
| 6DA–14664–00 | 3 – 17 |
| | 41 – 9 |
| 6DA–14711–00–9S | 31 – 13 |
| 6DA–1475A–00 | 11 – 9 |
| 6DA–1475F–00 | 11 – 11 |
| 6DA–1475G–00 | 11 – 14 |
| 6CB–14984–00 | 1 – 12 |
| | 12 – 30 |
| 6CB–14985–00 | 12 – 26 |
| 6CB–14989–00 | 11 – 13 |
| 6DA–15109–00–9S | 3 – 2 |
| 6DA–15311–00–CA | 32 – 2 |
| 63P–15312–01 | 32 – 1 |
| | 42 – 2 |
| 6BB–15316–00 | 31 – 28 |
| 6DA–15319–00 | 6 – 46 |
| 6DA–15353–00 | 3 – 7 |
| | 41 – 6 |
| 6DA–15362–00 | 32 – 18 |
| 6G8–15363–00 | 6 – 44 |
| 6DA–15373–00 | 9 – 9 |
| 6DA–15377–00 | 32 – 19 |
| 6DA–15411–00–9S | 3 – 26 |
| 6DA–15412–00 | 3 – 12 |
| 6DA–15414–00–9S | 3 – 4 |
| 6DA–15423–00–9S | 3 – 6 |
| 6DA–15451–00 | 3 – 27 |
| | 41 – 17 |
| 6DA–2134X–00 | 10 – 30 |
| 6E5–21744–00 | 11 – 20 |
| 6DA–2416A–00 | 11 – 12 |
| 6P2–24170–00 | 10 – 27 |
| 63P–2419A–01 | 10 – 28 |
| 6CB–24217–00 | 12 – 7 |
| 6YK–24307–42 | 15 – 1 |
| 6DA–24310–00 | 13 – 2 |
| 6DA–24313–00 | 14 – 19 |
| 6DA–24313–10 | 14 – 19 |
| 6DA–24314–00 | 14 – 3 |
| 6DA–24314–10 | 14 – 3 |

| PART NO. N° PIECES | REF. NO. |
|---|---|
| 6DA–24317–00 | 13 – 11 |
| 6DA–24317–10 | 13 – 11 |
| 6DA–24323–00 | 13 – 14 |
| 6DA–24323–10 | 13 – 14 |
| 6DA–24324–00 | 13 – 8 |
| 6E5–24351–51 | 14 – 4 |
| 6AW–24360–01 | 15 – 2 |
| 6CE–24377–00 | 7 – 3 |
| | 11 – 7 |
| 6AW–24377–01 | 14 – 2 |
| 688–24378–00 | 11 – 17 |
| 6CE–24378–00 | 6 – 32 |
| 6E5–24378–00 | 13 – 10 |
| 69J–24379–00 | 12 – 13 |
| 6CB–24410–00 | 10 – 15 |
| 6DA–24425–00 | 10 – 13 |
| 6DA–24426–00 | 10 – 18 |
| 6CB–24452–10 | 12 – 17 |
| 4SV–24453–00 | 12 – 33 |
| 6CB–24460–00 | 12 – 4 |
| 6DA–24462–00 | 10 – 23 |
| 6P3–24469–00 | 14 – 11 |
| 6CB–24482–00 | 12 – 19 |
| 6DA–24491–00 | 10 – 17 |
| 6DA–24492–00 | 10 – 16 |
| 6CB–24501–01 | 1 – 9 |
| | 12 – 3 |
| 6P3–24519–00 | 14 – 12 |
| 6P3–24560–03 | 14 – 8 |
| 6P3–24562–03 | 14 – 10 |
| 6P3–24563–01 | 1 – 13 |
| | 14 – 9 |
| 6P3–24564–00 | 1 – 14 |
| | 14 – 13 |
| 6DA–24566–00 | 14 – 14 |
| 6DA–24596–00 | 14 – 6 |
| 69J–28100–01 | 14 – 21 |
| 67F–2812A–00 | 17 – 28 |
| 6DV–28199–70–D0 | 14 – 22 |
| 6DV–28199–70–E0 | 14 – 22 |
| 6DV–28199–70–F0 | 14 – 22 |
| 6DV–28199–70–G0 | 14 – 22 |
| 6DV–28199–70–H0 | 14 – 22 |
| 6DV–28199–70–S0 | 14 – 22 |
| 6DV–28199–80–K0 | 14 – 23 |
| 6DV–28199–80–L0 | 14 – 23 |
| 6DV–28199–80–M0 | 14 – 23 |
| 6DV–28199–80–N0 | 14 – 23 |

| PART NO. N° PIECES | REF. NO. |
|---|---|
| 6DV–28199–80–P0 | 14 – 23 |
| 6DV–28199–80–R0 | 14 – 23 |
| 6DA–41113–00–9S | 6 – 8 |
| 6DA–41114–00 | 6 – 9 |
| | 41 – 12 |
| 63P–41131–01–9S | 31 – 10 |
| 63P–41133–A0 | 31 – 11 |
| | 42 – 5 |
| 63P–41134–A1 | 31 – 17 |
| | 42 – 7 |
| 63P–41137–04–CA | 31 – 1 |
| 63P–41138–00 | 31 – 19 |
| | 42 – 8 |
| 6DV–42195–00 | 26 – 9 |
| 6BG–42384–00 | 25 – 2 |
| 6DA–42384–00 | 23 – 23 |
| 6DA–42510–00–8D | 28 – 8 |
| 6DA–42541–00 | 25 – 8 |
| 6DA–42610–00 | 2 – 1 |
| 6DA–42613–00 | 2 – 2 |
| 6DA–42615–00 | 23 – 5 |
| 6DA–42617–00 | 16 – 27 |
| 6CB–42647–00 | 2 – 4 |
| 6CB–42662–00 | 25 – 25 |
| 6DA–42662–00 | 3 – 35 |
| 6AW–42663–00 | 2 – 10 |
| 6DA–42675–00 | 2 – 14 |
| 6DA–42676–00 | 2 – 15 |
| 6DA–42677–00 | 2 – 16 |
| 6DA–42678–00 | 2 – 13 |
| 63P–42681–20 | 2 – 17 |
| 6DA–42697–00 | 2 – 18 |
| 6DA–42710–00–8D | 23 – 1 |
| 63P–42716–00 | 23 – 6 |
| 6DA–42717–00 | 23 – 22 |
| 69J–42723–01 | 20 – 11 |
| 6E5–42724–00 | 31 – 8 |
| 6CE–42725–02 | 23 – 2 |
| 6H1–42726–21 | 25 – 1 |
| 61A–42727–00 | 23 – 26 |
| 6DA–42740–00 | 24 – 1 |
| 6DA–42744–00 | 3 – 34 |
| 6BG–42748–00 | 16 – 17 |
| 6H4–42748–00 | 23 – 24 |
| 68F–42753–00 | 23 – 29 |
| 63P–42756–00 | 25 – 12 |
| 6CB–42761–00 | 23 – 3 |
| 6DA–42769–00 | 31 – 9 |

NUMERICAL INDEX
INDEX NUMERIQUE


| PART NO. N° PIECES | REF. NO. |
|---|---|
| 6DA–42770–00 | 24 – 2 |
| 6AH–42794–40 | 23 – 31 |
| 6AH–42794–50 | 23 – 32 |
| 6DA–42815–00–8D | 23 – 7 |
| 6DA–42816–00–8D | 23 – 8 |
| 6DA–42817–00–8D | 23 – 9 |
| 6CB–42818–00 | 23 – 13 |
| 6CB–42819–00 | 23 – 14 |
| 64E–43111–02–8D | 27 – 1 |
| 64E–43112–02–8D | 27 – 9 |
| 64E–43126–00 | 27 – 39 |
| 64E–43131–30 | 27 – 14 |
| 64E–43139–10 | 28 – 1 |
| 66T–43144–00 | 23 – 17 |
| 6G5–43144–00 | 27 – 29 |
| 6E5–43145–01 | 37 – 8 |
| 6G5–43148–00 | 27 – 34 |
| 6G5–43181–02 | 27 – 31 |
| 6G5–43185–02 | 27 – 32 |
| 64E–43311–20–8D | 27 – 25 |
| 61A–43376–00 | 28 – 6 |
| 63P–43800–06 | 29 – 1 |
| 64E–43802–00 | 30 – 8 |
| 64E–43805–01 | 30 – 37 |
| 64E–4380F–00 | 30 – 33 |
| 64E–4380J–00 | 30 – 30 |
| 63P–43810–02 | 29 – 6 |
| 64E–43811–02 | 29 – 7 |
| 6E5–43814–02 | 29 – 14 |
| 64E–43816–00 | 30 – 17 |
| 64E–43817–00 | 29 – 5 |
| 64E–43817–11 | 30 – 19 |
| 6BC–43818–00 | 27 – 23 |
| 64E–4381G–00 | 29 – 28 |
| 64E–43820–03 | 29 – 16 |
| 64E–43821–03 | 29 – 17 |
| 64E–43822–00 | 29 – 18 |
| 64E–43825–03 | 29 – 2 |
| 64E–43827–00 | 30 – 22 |
| 64E–43828–01 | 29 – 23 |
| 64E–43829–01 | 29 – 24 |
| 64E–4382G–00 | 29 – 30 |
| 64E–43830–01 | 30 – 4 |
| 64E–43831–00 | 30 – 2 |
| 6AW–43841–00 | 30 – 7 |
| 64E–43843–00 | 30 – 6 |
| 64E–43843–10 | 30 – 38 |
| 64E–4384J–00 | 29 – 19 |

| PART NO. N° PIECES | REF. NO. |
|---|---|
| 64E–4384N–00 | 29 – 31 |
| 64E–43850–00 | 30 – 15 |
| 64E–43851–00 | 30 – 11 |
| 64E–43855–00 | 30 – 14 |
| 64E–43858–00 | 30 – 12 |
| 6AW–43858–00 | 30 – 18 |
| 6E5–43858–00 | 29 – 29 |
| 72X–43858–00 | 30 – 5 |
| 64E–43859–00 | 30 – 13 |
| 64E–43860–01 | 30 – 20 |
| 6E5–43862–00 | 29 – 11 |
| | 29 – 15 |
| 6G5–43863–00 | 30 – 10 |
| 6E5–43864–00 | 29 – 21 |
| 6G5–43864–00 | 29 – 20 |
| 64E–43865–00 | 30 – 16 |
| 6G5–43865–01 | 30 – 35 |
| 64E–43866–00 | 29 – 10 |
| 64E–43867–00 | 29 – 9 |
| 64E–43868–00 | 30 – 3 |
| 64E–43869–00 | 29 – 27 |
| 6H1–4386K–10 | 30 – 29 |
| 6E5–43872–00 | 29 – 13 |
| 64E–43873–00 | 30 – 24 |
| 6E5–43874–01 | 29 – 22 |
| 6AW–43875–00 | 30 – 25 |
| 64E–43879–01 | 30 – 27 |
| 64E–43879–11 | 30 – 26 |
| 64E–4387A–00 | 30 – 23 |
| 67H–43880–04 | 30 – 28 |
| 64E–43883–00 | 29 – 12 |
| 64E–4388E–01 | 29 – 26 |
| 64E–4388E–11 | 30 – 1 |
| 6AW–4388J–00 | 29 – 3 |
| 64E–43891–00 | 30 – 31 |
| 64E–43892–00 | 30 – 34 |
| 6E5–43896–00 | 30 – 9 |
| 64E–43897–00 | 29 – 25 |
| 64E–43898–00 | 29 – 8 |
| 6DV–44100–00 | 26 – 16 |
| 6DV–44118–00 | 26 – 21 |
| 6DV–44120–00 | 26 – 23 |
| 6DV–44121–00 | 26 – 18 |
| 6DV–44122–00 | 26 – 10 |
| 6DV–44132–00 | 26 – 11 |
| 6DV–44142–00 | 26 – 7 |
| 63P–44150–01 | 33 – 18 |
| 64P–44150–01 | 35 – 19 |

| PART NO. N° PIECES | REF. NO. |
|---|---|
| 61A–44311–01 | 33 – 24 |
| | 35 – 25 |
| 6E5–44312–00 | 33 – 29 |
| | 35 – 30 |
| 6E5–44315–A0 | 33 – 33 |
| | 35 – 34 |
| | 42 – 16 |
| | 42 – 27 |
| 61A–44322–02 | 33 – 25 |
| | 35 – 26 |
| | 42 – 22 |
| 6G5–44323–01 | 33 – 32 |
| | 35 – 33 |
| | 42 – 26 |
| 6E5–44352–01 | 33 – 30 |
| | 35 – 31 |
| | 42 – 25 |
| 6DA–44361–00 | 34 – 1 |
| | 36 – 1 |
| 6E5–44365–00 | 33 – 28 |
| | 34 – 2 |
| | 35 – 29 |
| | 36 – 2 |
| 6E5–44366–00 | 31 – 31 |
| 6P2–44391–00 | 23 – 25 |
| 63P–44511–00 | 28 – 34 |
| 6DA–44514–00 | 28 – 26 |
| 6DA–44526–00 | 28 – 30 |
| 6G5–44526–00 | 27 – 3 |
| 6DA–44532–00 | 28 – 31 |
| 6DA–44551–00–CA | 28 – 13 |
| 6DA–44552–00–CA | 28 – 23 |
| 63P–44555–00 | 28 – 16 |
| 6DA–44575–00 | 28 – 15 |
| 6DA–45111–00–8D | 31 – 21 |
| 69J–45123–00 | 31 – 14 |
| | 42 – 6 |
| 69J–45127–00 | 31 – 20 |
| | 42 – 9 |
| 6BB–45152–01 | 31 – 29 |
| 6DA–45155–00 | 31 – 32 |
| 63P–45181–01–9S | 31 – 18 |
| 6J9–45214–00 | 34 – 8 |
| | 36 – 8 |
| 6J9–45215–00 | 34 – 9 |
| | 36 – 9 |
| 6AW–45251–00 | 1 – 15 |
| | 27 – 2 |

| PART NO. N° PIECES | REF. NO. |
|---|---|
| 6DA–45300–10–8D | 33 – 1 |
| 6DB–45300–10–8D | 35 – 1 |
| 6J9–45301–07–8D | 33 – 2 |
| | 35 – 2 |
| 6E5–45318–00 | 31 – 24 |
| 6E5–45321–00 | 33 – 14 |
| | 35 – 15 |
| 6E5–45331–00–9S | 33 – 36 |
| | 35 – 37 |
| 6J9–45332–00–CA | 33 – 58 |
| 6K1–45332–01–CA | 35 – 60 |
| 688–45341–10 | 33 – 7 |
| | 35 – 8 |
| 6E5–45344–00 | 33 – 42 |
| | 35 – 43 |
| 6J9–45371–01 | 1 – 17 |
| | 34 – 12 |
| 6K1–45371–02 | 1 – 17 |
| | 36 – 12 |
| 688–45375–00 | 33 – 11 |
| | 35 – 12 |
| 663–45376–00 | 33 – 10 |
| | 35 – 11 |
| 63P–45378–00 | 33 – 12 |
| | 35 – 13 |
| 63P–45379–00 | 31 – 36 |
| 6G5–45383–01 | 33 – 68 |
| | 35 – 71 |
| 6G5–45384–02 | 33 – 69 |
| | 35 – 72 |
| 63P–45501–11 | 33 – 45 |
| | 35 – 46 |
| 61A–45527–00 | 33 – 23 |
| | 35 – 24 |
| 6G5–45536–01 | 33 – 9 |
| | 35 – 10 |
| 61A–45538–00 | 33 – 20 |
| | 35 – 21 |
| 6DA–45551–00 | 33 – 46 |
| | 35 – 47 |
| 6DA–45560–00 | 33 – 48 |
| 6DB–45560–00 | 35 – 49 |
| 6G5–45567–01 | 33 – 5 |
| | 35 – 6 |
| 6G5–45567–10 | 33 – 5 |
| | 35 – 6 |
| 6G5–45567–20 | 33 – 5 |
| | 35 – 6 |

| PART NO. N° PIECES | REF. NO. |
|---|---|
| 6G5–45567–30 | 33 – 5 |
| | 35 – 6 |
| 6G5–45567–40 | 33 – 5 |
| | 35 – 6 |
| 6G5–45567–50 | 33 – 5 |
| | 35 – 6 |
| 6G5–45567–60 | 33 – 5 |
| | 35 – 6 |
| 6DB–45570–00 | 35 – 62 |
| 6DA–45571–00 | 33 – 60 |
| 6K1–45576–00 | 35 – 63 |
| 6G5–45576–10 | 33 – 61 |
| 6G5–45577–02 | 33 – 65 |
| | 35 – 69 |
| 6G5–45577–10 | 33 – 65 |
| | 35 – 69 |
| 6G5–45577–20 | 33 – 65 |
| | 35 – 69 |
| 6G5–45577–30 | 33 – 65 |
| | 35 – 69 |
| 6G5–45577–40 | 33 – 65 |
| | 35 – 69 |
| 6G5–45577–50 | 33 – 65 |
| | 35 – 69 |
| 6G5–45577–60 | 33 – 65 |
| | 35 – 69 |
| 6K1–45578–01 | 35 – 65 |
| 6K1–45578–10 | 35 – 65 |
| 6K1–45578–20 | 35 – 65 |
| 6K1–45578–30 | 35 – 65 |
| 6K1–45578–40 | 35 – 65 |
| 6K1–45578–50 | 35 – 65 |
| 6K1–45578–60 | 35 – 65 |
| 6E5–45587–01 | 33 – 39 |
| | 35 – 40 |
| 6E5–45587–10 | 33 – 39 |
| | 35 – 40 |
| 6E5–45587–20 | 33 – 39 |
| | 35 – 40 |
| 6E5–45587–30 | 33 – 39 |
| | 35 – 40 |
| 6E5–45587–40 | 33 – 39 |
| | 35 – 40 |
| 6E5–45587–50 | 33 – 39 |
| | 35 – 40 |
| 6E5–45587–60 | 33 – 39 |
| | 35 – 40 |
| 6J9–45611–01 | 33 – 49 |

| PART NO. N° PIECES | REF. NO. |
|---|---|
| 6K1–45611–10 | 35 – 51 |
| 6DA–45631–00 | 33 – 56 |
| | 35 – 58 |
| 6E5–45633–01 | 33 – 57 |
| | 35 – 59 |
| 6E5–45634–02 | 33 – 50 |
| | 35 – 52 |
| 68F–45970–10 | 34 – 19 |
| 68G–45970–10 | 36 – 19 |
| 68F–45972–10 | 34 – 19 |
| 68G–45972–10 | 36 – 19 |
| 68F–45974–10 | 34 – 19 |
| 68G–45974–10 | 36 – 19 |
| 68F–45976–10 | 34 – 19 |
| 68G–45976–10 | 36 – 19 |
| 68F–45978–10 | 34 – 19 |
| 68G–45978–10 | 36 – 19 |
| 63P–45987–00 | 34 – 14 |
| | 36 – 14 |
| 6CE–45997–00 | 34 – 15 |
| | 36 – 15 |
| 6CE–45C81–00 | 34 – 20 |
| | 36 – 20 |
| 6DV–4820A–00 | 26 – 1 |
| 6Y8–48277–00 | 39 – 16 |
| | 39 – 16 |
| | 39 – 17 |
| 6E5–61301–01 | 37 – 10 |
| 6E5–61303–00 | 37 – 14 |
| 6E5–61311–11 | 37 – 12 |
| 6E5–61313–00 | 37 – 11 |
| 6E5–61315–00 | 37 – 13 |
| 6E5–61350–02 | 37 – 1 |
| 6E5–61351–01 | 37 – 2 |
| 6E5–61355–00 | 37 – 5 |
| 6DV–68303–00 | 26 – 31 |
| 6H5–81315–00 | 39 – 18 |
| 6Y8–81315–00 | 39 – 19 |
| 6DA–8132G–00 | 16 – 20 |
| 6DA–81336–00 | 17 – 30 |
| 6DA–81337–00 | 16 – 13 |
| 6DA–81410–00 | 16 – 3 |
| 6CB–81639–00 | 17 – 24 |
| 6CB–81800–00 | 22 – 1 |
| 69J–81801–00 | 22 – 5 |
| 6CB–81807–00 | 22 – 8 |
| 6CB–81809–00 | 22 – 14 |
| 67F–81810–00 | 22 – 3 |

NUMERICAL INDEX
INDEX NUMERIQUE


| PART NO. N° PIECES | REF. NO. |
|---|---|
| 67F–81813–00 | 22 – 6 |
| 6CB–81820–00 | 22 – 7 |
| 67F–81821–00 | 22 – 11 |
| 6DA–81822–00 | 21 – 8 |
| 6CB–81826–00 | 22 – 22 |
| 69J–81828–00 | 22 – 23 |
| 67F–81830–00 | 22 – 16 |
| 6CB–81832–00 | 22 – 9 |
| 6CB–81836–00 | 22 – 10 |
| 6C5–81839–00 | 22 – 19 |
| 67F–8183R–00 | 22 – 13 |
| 60V–8183T–00 | 22 – 17 |
| 6P2–8183X–00 | 18 – 6 |
| 69J–81840–00 | 22 – 4 |
| 67F–81841–00 | 22 – 12 |
| 6CB–81842–00 | 22 – 18 |
| 67F–81846–00 | 22 – 24 |
| 67F–81850–00 | 22 – 2 |
| 6C5–81869–00 | 22 – 21 |
| 67F–81891–00 | 22 – 15 |
| 6DV–81919–00 | 17 – 33 |
| 60V–81925–00 | 21 – 6 |
| 6C5–81941–00 | 22 – 20 |
| 6DA–81942–00 | 18 – 13 |
| 6DA–81948–00 | 17 – 5 |
| 69J–81949–02 | 20 – 18 |
| 6AW–81950–00 | 18 – 5 |
| 6DA–81952–00 | 17 – 10 |
| 68F–8195A–00 | 17 – 19 |
| 6DA–81960–00 | 18 – 1 |
| 6DA–81975–00 | 18 – 2 |
| 6AH–81994–40 | 16 – 29 |
| 6AH–81994–50 | 16 – 30 |
| 6AH–81996–00 | 23 – 33 |
| 6DA–82105–00 | 18 – 24 |
| 6P2–82113–00 | 17 – 27 |
| 6E5–82148–00 | 27 – 6 |
| | 27 – 10 |
| 6DA–82149–00 | 27 – 28 |
| 67F–82151–00 | 17 – 22 |
| 6P2–82151–00 | 17 – 18 |
| 6TA–82151–00 | 39 – 20 |
| 67F–82151–10 | 17 – 23 |
| 67F–82151–40 | 17 – 20 |
| 67F–82151–50 | 17 – 21 |
| 6DV–82170–00 | 17 – 17 |
| 6CB–82310–00 | 19 – 5 |
| 6DA–82314–00 | 19 – 7 |

| PART NO. N° PIECES | REF. NO. |
|---|---|
| 6A0–82317–00 | 16 – 16 |
| 63V–82377–50 | 27 – 44 |
| 6DA–82388–00 | 18 – 18 |
| | 21 – 11 |
| 6DA–82389–00 | 18 – 19 |
| 6D8–82389–01 | 19 – 1 |
| 6DA–82398–00 | 16 – 24 |
| 6Y8–82509–10 | 39 – 8 |
| 6Y8–82521–11 | 39 – 15 |
| 6DA–82553–00 | 20 – 7 |
| 6P2–82560–01 | 18 – 15 |
| 6BR–82563–00 | 20 – 10 |
| 6C5–8257V–00 | 17 – 31 |
| 68F–82582–00 | 21 – 7 |
| 69J–82587–00 | 20 – 12 |
| 6E9–82588–00 | 18 – 16 |
| 6DV–82590–00 | 20 – 1 |
| 6DA–8259M–00 | 20 – 6 |
| 6CE–825E0–00 | 40 – 1 |
| 68F–82846–00 | 17 – 26 |
| 6X4–83383–00 | 39 – 5 |
| 6X4–83386–00 | 39 – 6 |
| 6E5–83558–00 | 31 – 33 |
| 63P–83614–01 | 20 – 13 |
| 6AW–83651–00 | 20 – 9 |
| 6AW–8366B–00 | 38 – 1 |
| 60V–8366D–00 | 38 – 2 |
| 6DV–8366G–00 | 25 – 15 |
| 67H–83672–01 | 28 – 3 |
| 68F–83688–10 | 9 – 15 |
| 6Y8–8454G–00 | 39 – 11 |
| 6P2–85075–00 | 19 – 10 |
| 72X–85075–L0 | 30 – 21 |
| 68F–85119–00 | 17 – 8 |
| | 17 – 13 |
| | 26 – 6 |
| 60V–85516–00 | 10 – 21 |
| 68F–85516–01 | 17 – 6 |
| | 17 – 11 |
| 6CB–85544–00 | 17 – 25 |
| 689–85547–00 | 14 – 1 |
| 6DA–85548–00 | 17 – 14 |
| 6DA–85561–00 | 16 – 6 |
| 6DV–85564–00 | 26 – 3 |
| 6CB–85580–00 | 16 – 5 |
| 6CJ–85780–00 | 20 – 15 |
| 6CB–85790–00 | 20 – 8 |
| 6P2–85896–00 | 19 – 9 |

| PART NO. N° PIECES | REF. NO. |
|---|---|
| 6DV–8591A–00 | 17 – 1 |
| 6DA–85991–00 | 17 – 3 |
| 6C5–86120–00 | 10 – 31 |
| 6CB–86120–00 | 6 – 1 |
| 6Y8–86260–02 | 39 – 2 |
| 6Y8–86260–12 | 39 – 2 |
| 6AA–86261–00 | 39 – 3 |
| 6AA–86261–22 | 39 – 3 |
| 6Y8–86267–00 | 39 – 1 |
| K0F–A3233–00 | 4 – 14 |
| K0F–A3741–00 | 8 – 5 |
| K0F–A3742–00 | 8 – 6 |
| K0F–A3743–00 | 8 – 3 |
| K0F–A3751–00 | 8 – 8 |
| K0F–A3751–10 | 8 – 8 |
| K0F–A3751–20 | 8 – 8 |
| K0F–A3751–30 | 8 – 8 |
| K0F–A3751–40 | 8 – 8 |
| K0F–A3751–50 | 8 – 8 |
| K0F–A3751–60 | 8 – 8 |
| K0F–A3751–70 | 8 – 8 |
| K0F–A3751–80 | 8 – 8 |
| K0F–A3751–90 | 8 – 8 |
| K0F–A3751–A0 | 8 – 8 |
| K0F–A3751–B0 | 8 – 8 |
| K0F–A3751–C0 | 8 – 8 |
| K0F–A3751–D0 | 8 – 8 |
| K0F–A3751–E0 | 8 – 8 |
| K0F–A3751–F0 | 8 – 8 |
| K0F–A3751–G0 | 8 – 8 |
| K0F–A3751–H0 | 8 – 8 |
| K0F–A3751–J0 | 8 – 8 |
| K0F–A3751–K0 | 8 – 8 |
| K0F–A3751–L0 | 8 – 8 |
| K0F–A3751–M0 | 8 – 8 |
| K0F–A3751–N0 | 8 – 8 |
| K0F–A3751–P0 | 8 – 8 |
| K0F–A3751–R0 | 8 – 8 |
| K0F–A3751–S0 | 8 – 8 |
| K0F–A3751–T0 | 8 – 8 |
| K0F–A3753–00 | 8 – 8 |
| K0F–A3753–10 | 8 – 8 |
| K0F–A3753–20 | 8 – 8 |
| K0F–A3753–30 | 8 – 8 |
| K0F–A3753–40 | 8 – 8 |
| K0F–A3753–50 | 8 – 8 |
| K0F–A3753–60 | 8 – 8 |
| K0F–A3753–70 | 8 – 8 |

| PART NO. N° PIECES | REF. NO. |
|---|---|
| 6DA–W0001–00 | 41 – 1 |
| 63P–W0001–21 | 42 – 1 |
| 61A–W0078–A3 | 1 – 19 |
| | 42 – 21 |
| 6DA–W009A–00–9S | 5 – 1 |
| 6DA–W009B–00–9S | 3 – 1 |
| 6CB–W1165–00 | 4 – 9 |
| 6DA–W4624–00 | 8 – 20 |
| 6DA–W8145–00 | 16 – 1 |
| 6AW–W9011–00 | 16 – 2 |
| 90101–09M70 | 37 – 18 |
| 90101–12047 | 27 – 45 |
| 90101–12M05 | 27 – 45 |
| | 27 – 45 |
| 90105–06028 | 3 – 5 |
| | 6 – 10 |
| | 6 – 26 |
| | 6 – 34 |
| 90105–06035 | 6 – 3 |
| 90105–06037 | 6 – 48 |
| 90105–06054 | 10 – 3 |
| 90105–06151 | 5 – 21 |
| | 6 – 43 |
| 90105–06196 | 3 – 36 |
| 90105–06M07 | 5 – 14 |
| | 6 – 21 |
| 90105–06M08 | 10 – 11 |
| | 10 – 14 |
| 90105–08175 | 3 – 24 |
| | 5 – 20 |
| 90105–08M87 | 21 – 10 |
| 90105–10406 | 3 – 19 |
| | 3 – 23 |
| 90105–10M00 | 34 – 13 |
| | 36 – 13 |
| 90105–14009 | 28 – 28 |
| 90105–14012 | 28 – 21 |
| 90111–06142 | 24 – 4 |
| 90111–06144 | 24 – 3 |
| 90111–08078 | 2 – 5 |
| 90119–06023 | 3 – 13 |
| 90119–06078 | 6 – 38 |
| 90119–06M10 | 33 – 17 |
| | 35 – 18 |
| 90119–06M17 | 10 – 20 |
| | 10 – 35 |
| | 14 – 15 |
| 90119–06M18 | 31 – 37 |

| PART NO. N° PIECES | REF. NO. |
|---|---|
| 90119–06M24 | 10 – 12 |
| 90119–06M61 | 16 – 19 |
| 90119–06M81 | 3 – 16 |
| 90119–06MA3 | 3 – 28 |
| | 6 – 17 |
| 90119–07001 | 5 – 7 |
| 90119–07234 | 5 – 8 |
| 90119–08020 | 9 – 14 |
| 90119–08102 | 31 – 2 |
| 90119–08M14 | 33 – 35 |
| | 35 – 36 |
| | 42 – 29 |
| 90119–08M22 | 23 – 21 |
| 90119–08M58 | 31 – 6 |
| 90119–08M66 | 3 – 20 |
| 90119–10007 | 31 – 22 |
| 90119–10024 | 28 – 27 |
| 90119–10050 | 8 – 14 |
| 90119–10M07 | 8 – 22 |
| 90119–10MA2 | 34 – 7 |
| | 36 – 7 |
| 90151–05M05 | 6 – 6 |
| 90152–05M08 | 34 – 10 |
| | 36 – 10 |
| 90155–11002 | 5 – 19 |
| 90159–05059 | 28 – 2 |
| | 40 – 4 |
| 90159–06053 | 24 – 9 |
| 90167–05017 | 2 – 3 |
| 90167–06M00 | 39 – 12 |
| 90169–05M00 | 18 – 14 |
| 90170–09M05 | 37 – 19 |
| 90170–14M06 | 37 – 15 |
| 90170–16M01 | 33 – 47 |
| | 35 – 48 |
| 90171–18M04 | 34 – 17 |
| | 36 – 17 |
| 90173–06001 | 24 – 7 |
| 90179–08003 | 21 – 5 |
| 90183–061A6 | 24 – 8 |
| 90185–05002 | 34 – 11 |
| | 36 – 11 |
| 90185–06M07 | 26 – 15 |
| 90185–09M01 | 37 – 6 |
| | 37 – 20 |
| 90185–14M00 | 28 – 32 |
| 90185–22M11 | 27 – 19 |
| 90201–06068 | 26 – 12 |

| PART NO. N° PIECES | REF. NO. |
|---|---|
| 90201–06M30 | 39 – 13 |
| 90201–10060 | 27 – 21 |
| 90201–10M20 | 37 – 7 |
| 90201–10M76 | 37 – 17 |
| 90201–11008 | 26 – 29 |
| 90201–12426 | 27 – 47 |
| 90201–13M01 | 27 – 46 |
| 90201–156J2 | 23 – 11 |
| 90201–15M58 | 28 – 20 |
| 90201–16M01 | 28 – 29 |
| 90201–16M55 | 28 – 19 |
| 90201–22M01 | 33 – 21 |
| | 35 – 22 |
| 90201–26015 | 35 – 50 |
| 90201–26M59 | 27 – 18 |
| 90201–30M92 | 33 – 66 |
| 90201–35008 | 28 – 17 |
| 90201–38M60 | 28 – 9 |
| 90202–06015 | 26 – 20 |
| 90202–08M41 | 26 – 13 |
| 90202–32M19 | 28 – 18 |
| 90202–40M47 | 28 – 12 |
| 90206–15M18 | 23 – 12 |
| 90206–22M19 | 33 – 22 |
| | 35 – 23 |
| 90249–06M19 | 27 – 35 |
| 90250–08M07 | 33 – 55 |
| | 35 – 57 |
| 90280–04M05 | 33 – 31 |
| | 35 – 32 |
| | 42 – 30 |
| 90282–04M00 | 33 – 67 |
| | 35 – 70 |
| 90338–25004 | 3 – 14 |
| 90340–08002 | 33 – 6 |
| | 35 – 7 |
| 90340–14M06 | 5 – 9 |
| | 32 – 5 |
| 90340–18M09 | 6 – 35 |
| 90344–51019 | 5 – 4 |
| 90386–08008 | 26 – 5 |
| 90386–10001 | 26 – 25 |
| | 26 – 28 |
| 90386–10M16 | 27 – 33 |
| 90386–15M73 | 23 – 10 |
| 90386–22M98 | 27 – 24 |
| | 27 – 40 |
| 90386–25M31 | 27 – 17 |

NUMERICAL INDEX
INDEX NUMERIQUE


| PART NO. N° PIECES | REF. NO. |
|---|---|
| 90386–38M32 | 28 – 11 |
| 90387–05004 | 40 – 5 |
| 90387–06176 | 17 – 7 |
| | 17 – 12 |
| | 26 – 4 |
| 90387–06263 | 32 – 8 |
| 90387–06283 | 10 – 1 |
| 90387–06M43 | 24 – 11 |
| 90387–06M60 | 10 – 22 |
| | 10 – 34 |
| | 14 – 17 |
| 90387–06M69 | 16 – 18 |
| 90387–07028 | 24 – 6 |
| 90387–08M37 | 23 – 20 |
| 90387–08M45 | 2 – 8 |
| 90387–10094 | 2 – 6 |
| 90387–10M05 | 27 – 36 |
| 90387–10M61 | 37 – 3 |
| 90387–11005 | 5 – 18 |
| 90387–14004 | 28 – 35 |
| 90430–06M03 | 5 – 15 |
| | 6 – 22 |
| 90430–08020 | 1 – 16 |
| | 33 – 8 |
| | 35 – 9 |
| | 42 – 11 |
| 90430–14115 | 5 – 10 |
| | 41 – 2 |
| 90430–14M09 | 1 – 7 |
| | 32 – 6 |
| | 42 – 3 |
| 90430–18130 | 6 – 36 |
| | 41 – 15 |
| 90445–07018 | 31 – 35 |
| 90445–07044 | 31 – 35 |
| 90445–09008 | 7 – 4 |
| 90445–09120 | 11 – 3 |
| 90445–10056 | 11 – 8 |
| 90445–10057 | 7 – 14 |
| 90447–07008 | 38 – 5 |
| 90462–12013 | 25 – 19 |
| 90464–06001 | 10 – 24 |
| 90464–07M41 | 11 – 2 |
| 90464–09008 | 18 – 23 |
| 90464–09020 | 7 – 10 |
| 90464–09130 | 10 – 26 |
| | 16 – 22 |
| | 16 – 26 |

| PART NO. N° PIECES | REF. NO. |
|---|---|
| 90464–09142 | 7 – 9 |
| 90464–09M21 | 7 – 5 |
| 90464–09M31 | 7 – 12 |
| 90464–10011 | 11 – 15 |
| 90464–12002 | 16 – 4 |
| 90464–12010 | 7 – 8 |
| | 13 – 3 |
| 90464–12183 | 9 – 10 |
| | 9 – 22 |
| | 18 – 10 |
| 90464–13013 | 38 – 6 |
| 90464–13249 | 18 – 22 |
| | 19 – 4 |
| | 23 – 27 |
| | 25 – 13 |
| 90464–13260 | 13 – 17 |
| 90464–15007 | 13 – 5 |
| 90464–16001 | 11 – 10 |
| | 11 – 23 |
| | 11 – 24 |
| 90464–16003 | 13 – 4 |
| 90464–18004 | 11 – 22 |
| | 13 – 16 |
| | 25 – 18 |
| | 25 – 18 |
| 90464–18246 | 18 – 12 |
| | 25 – 17 |
| 90464–20181 | 9 – 21 |
| | 13 – 1 |
| | 16 – 23 |
| | 17 – 15 |
| | 18 – 21 |
| | 19 – 3 |
| | 21 – 12 |
| 90464–20258 | 23 – 30 |
| 90464–21256 | 25 – 9 |
| 90464–26001 | 20 – 16 |
| 90464–30003 | 20 – 17 |
| 90464–32002 | 18 – 11 |
| 90464–99004 | 9 – 8 |
| 90465–08M63 | 13 – 6 |
| | 27 – 26 |
| 90465–08M83 | 7 – 16 |
| 90465–11M10 | 7 – 7 |
| | 10 – 25 |
| | 11 – 4 |
| | 11 – 5 |
| | 13 – 13 |

| PART NO. N° PIECES | REF. NO. |
|---|---|
| 90465–11M10 | 13 – 15 |
| | 14 – 5 |
| | 14 – 20 |
| | 25 – 3 |
| | 25 – 10 |
| | 26 – 2 |
| | 27 – 20 |
| | 28 – 5 |
| | 31 – 34 |
| | 31 – 34 |
| | 38 – 4 |
| | 39 – 10 |
| | 40 – 6 |
| 90465–11M59 | 6 – 27 |
| | 6 – 50 |
| | 20 – 5 |
| 90465–13M18 | 40 – 7 |
| 90465–13M97 | 16 – 10 |
| 90467–120A7 | 13 – 9 |
| | 13 – 12 |
| 90468–18008 | 26 – 14 |
| | 26 – 19 |
| 90468–180A0 | 26 – 30 |
| 90480–12314 | 10 – 2 |
| | 16 – 15 |
| | 19 – 8 |
| 90480–13163 | 23 – 28 |
| 90480–13M24 | 24 – 10 |
| 90480–14031 | 10 – 33 |
| 90480–15013 | 14 – 16 |
| 90480–16009 | 24 – 5 |
| 90480–16025 | 16 – 14 |
| 90480–20M05 | 6 – 13 |
| 90480–22M81 | 23 – 19 |
| 90501–16M11 | 6 – 12 |
| 90501–16M37 | 33 – 51 |
| | 35 – 53 |
| 90506–16003 | 27 – 38 |
| 90506–18025 | 8 – 23 |
| 90506–22001 | 23 – 16 |
| 90560–12M01 | 37 – 4 |
| 91490–40030 | 34 – 18 |
| | 36 – 18 |
| 91690–30020 | 27 – 37 |
| 91690–40010 | 3 – 10 |
| | 3 – 29 |
| 91809–08006 | 5 – 6 |
| 91814–18002 | 3 – 3 |

| PART NO. N° PIECES | REF. NO. |
|---|---|
| 92903–08100 | 18 – 27 |
| 92903–08600 | 21 – 4 |
| 92990–06100 | 2 – 11 |
| 92990–08600 | 2 – 7 |
| 92990–18200 | 34 – 16 |
| | 36 – 16 |
| 92995–05100 | 9 – 17 |
| 92995–05600 | 9 – 18 |
| | 16 – 9 |
| 92995–06600 | 18 – 4 |
| | 18 – 9 |
| | 19 – 12 |
| | 20 – 3 |
| | 21 – 2 |
| | 27 – 5 |
| | 27 – 8 |
| | 27 – 12 |
| | 40 – 3 |
| 92995–08600 | 27 – 16 |
| | 33 – 44 |
| | 35 – 45 |
| 92995–10100 | 34 – 5 |
| | 36 – 5 |
| 92995–10600 | 28 – 25 |
| | 31 – 4 |
| | 34 – 6 |
| | 36 – 6 |
| 92995–14600 | 28 – 33 |
| 93101–28M16 | 33 – 37 |
| | 35 – 38 |
| | 42 – 17 |
| 93101–30M17 | 33 – 63 |
| | 35 – 67 |
| | 42 – 19 |
| 93102–08M43 | 30 – 36 |
| 93102–38008 | 8 – 19 |
| | 41 – 20 |
| 93102–85008 | 4 – 4 |
| | 41 – 19 |
| 93106–09014 | 33 – 16 |
| | 35 – 17 |
| | 42 – 13 |
| 93210–04279 | 39 – 9 |
| 93210–07003 | 33 – 13 |
| | 35 – 14 |
| | 42 – 10 |
| 93210–08001 | 3 – 32 |
| | 41 – 18 |

| PART NO. N° PIECES | REF. NO. |
|---|---|
| 93210–09165 | 26 – 24 |
| 93210–10M74 | 29 – 4 |
| 93210–12648 | 3 – 18 |
| | 41 – 10 |
| 93210–13M63 | 6 – 7 |
| | 41 – 11 |
| 93210–16275 | 37 – 9 |
| 93210–19MJ3 | 32 – 20 |
| | 41 – 24 |
| 93210–24M79 | 6 – 45 |
| | 41 – 25 |
| 93210–25552 | 3 – 11 |
| | 32 – 17 |
| | 41 – 7 |
| | 41 – 22 |
| 93210–25647 | 3 – 15 |
| | 41 – 8 |
| 93210–357A3 | 6 – 47 |
| | 41 – 26 |
| 93210–37160 | 33 – 27 |
| | 35 – 28 |
| | 42 – 15 |
| | 42 – 24 |
| 93210–37MH7 | 28 – 10 |
| 93210–55M14 | 33 – 41 |
| | 35 – 42 |
| | 42 – 18 |
| 93210–58144 | 33 – 15 |
| | 35 – 16 |
| | 42 – 12 |
| 93210–86M38 | 33 – 26 |
| | 35 – 27 |
| | 42 – 14 |
| | 42 – 23 |
| 93210–97M55 | 33 – 64 |
| | 35 – 68 |
| | 42 – 20 |
| 93306–209U0 | 33 – 59 |
| 93311–928U5 | 33 – 3 |
| | 35 – 3 |
| 93315–43061 | 33 – 62 |
| | 35 – 66 |
| 93317–330U2 | 33 – 38 |
| | 35 – 39 |
| 93332–00048 | 35 – 61 |
| 93332–000V3 | 33 – 4 |
| 93341–440U5 | 35 – 64 |
| 93341–465U4 | 35 – 5 |

| PART NO. N° PIECES | REF. NO. |
|---|---|
| 93341–930V2 | 33 – 40 |
| | 35 – 41 |
| 93390–000U2 | 35 – 4 |
| 93410–22M11 | 27 – 41 |
| 93410–37M04 | 28 – 14 |
| 93420–36M01 | 31 – 25 |
| 93503–16003 | 33 – 54 |
| | 35 – 56 |
| 93507–32009 | 33 – 52 |
| | 35 – 54 |
| 93511–32017 | 33 – 53 |
| | 35 – 55 |
| 93604–09066 | 26 – 22 |
| 93605–10108 | 8 – 10 |
| | 8 – 12 |
| 93606–12019 | 4 – 3 |
| | 5 – 5 |
| | 33 – 34 |
| | 35 – 35 |
| | 42 – 28 |
| 93606–19M23 | 31 – 16 |
| 93608–16M16 | 31 – 5 |
| | 31 – 23 |
| | 32 – 4 |
| | 34 – 3 |
| | 36 – 3 |
| 93700–06M03 | 27 – 13 |
| | 27 – 27 |
| 94702–00400 | 1 – 18 |
| | 5 – 25 |
| 95022–06035 | 16 – 11 |
| 95333–08600 | 18 – 26 |
| 95380–06600 | 2 – 12 |
| | 10 – 32 |
| 95380–12600 | 27 – 48 |
| 95380–14700 | 37 – 16 |
| 95604–14200 | 28 – 22 |
| 95780–06300 | 39 – 14 |
| 95780–08300 | 2 – 9 |
| 95780–10300 | 28 – 7 |
| 95812–06025 | 32 – 10 |
| 95875–06020 | 10 – 5 |
| 95875–06025 | 9 – 4 |
| | 9 – 6 |
| 95875–08030 | 26 – 8 |
| 95875–08035 | 17 – 4 |
| 95880–08012 | 23 – 15 |
| 95885–08025 | 5 – 16 |

| PART NO. N° PIECES | REF. NO. |
|---|---|
| 95895–06010 | 13 – 7 |
| | 27 – 42 |
| | 27 – 43 |
| 95895–06012 | 7 – 17 |
| | 9 – 20 |
| | 10 – 19 |
| | 14 – 18 |
| | 18 – 17 |
| | 19 – 2 |
| | 20 – 14 |
| | 23 – 18 |
| | 25 – 14 |
| | 25 – 16 |
| | 25 – 20 |
| 95895–06014 | 23 – 4 |
| 95895–06016 | 10 – 29 |
| | 16 – 21 |
| | 16 – 25 |
| | 17 – 9 |
| | 18 – 20 |
| | 21 – 13 |
| | 32 – 21 |
| | 38 – 3 |
| 95895–06020 | 17 – 2 |
| 95895–06025 | 14 – 7 |
| | 19 – 6 |
| 95895–06030 | 5 – 24 |
| | 16 – 12 |
| 95895–06040 | 25 – 24 |
| 95895–06065 | 25 – 22 |
| 95895–08016 | 18 – 25 |
| 97013–08045 | 21 – 3 |
| 97075–10040 | 28 – 24 |
| 97075–10045 | 31 – 3 |
| 97095–05020 | 16 – 8 |
| 97095–06010 | 27 – 7 |
| | 27 – 30 |
| 97095–06012 | 31 – 30 |
| 97095–06016 | 20 – 2 |
| | 21 – 1 |
| | 40 – 2 |
| 97095–06020 | 18 – 8 |
| | 19 – 11 |
| 97095–06030 | 27 – 4 |
| 97095–06035 | 18 – 3 |
| 97095–08020 | 27 – 15 |
| 97095–08025 | 33 – 43 |
| | 35 – 44 |
| 97095–10045 | 34 – 4 |
| | 36 – 4 |
| 97575–06516 | 8 – 25 |
| 97575–06520 | 26 – 17 |
| | 26 – 27 |
| 97575–06540 | 32 – 16 |
| 97575–08535 | 31 – 15 |
| | 32 – 3 |
| 97575–08540 | 6 – 23 |
| 97575–08560 | 9 – 2 |
| | 31 – 12 |
| 97575–10530 | 27 – 22 |
| 97575–10535 | 31 – 7 |
| 97595–06550 | 26 – 26 |
| 97595–06610 | 18 – 7 |
| 97607–04310 | 30 – 32 |
| 97780–50620 | 17 – 29 |
| 97780–60520 | 25 – 11 |
| 97780–60620 | 17 – 16 |
| | 17 – 32 |
| | 39 – 7 |
| 97880–06035 | 39 – 12 |
| 97885–05016 | 9 – 16 |
| 97885–06012 | 27 – 11 |
| 97980–06216 | 31 – 27 |
| | 39 – 4 |
| 97985–04308 | 20 – 4 |
| 97985–06216 | 28 – 4 |
| 98507–04008 | 12 – 34 |
| 98780–04016 | 3 – 9 |
| | 3 – 30 |
| 99001–08600 | 33 – 19 |
| | 35 – 20 |
| 99590–08012 | 16 – 7 |
| 99590–10114 | 21 – 9 |