YAMAHA

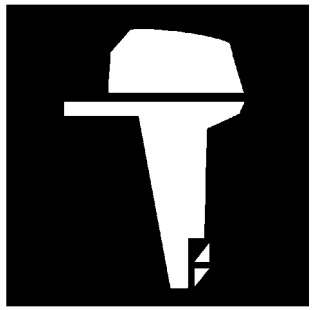

PARTS CATALOGUE
CATALOGUE DE PIECES DETACHEES

75CETO'14 (67PD)
90AETO'14 (6H1H)

1N6H1-300F1

( )

YAMAHA
GENUINE
Parts & Accessories

75CETO/90AETO
PARTS CATALOGUE
©2014 by Yamaha Motor Co., Ltd.
1st edition, June 2014
All rights reserved.
Any reprinting or unauthorized use
without the written permission of
Yamaha Motor Co., Ltd.
is expressly prohibited.
Printed in Japan.

75CETO/90AETO
CATALOGUE DE PIECES DETACHEES
©2014 par Yamaha Motor Co., Ltd.
1re édition, juin 2014
Tous droits réservés
Toute réimpression ou utilisation
non autorisée sans la permission écrite
de la Yamaha Motor Co., Ltd.
est formellement interdite.
Imprimé au Japon

FOREWORD

This Parts Catalogue is related to the parts for the model(s) on the cover page. When you are ordering replacement parts, please refer to this Parts Catalogue and quote both part numbers and part names correctly.

1. Modifications or additions which have been made after the issue of the Parts Catalogue will be announced in the Parts News.
   It is advisable that you make the necessary corrections to the Parts Catalogue according to the Parts News.

2. Abbreviations
   The following abbreviations are used in this Parts Catalogue.

   "UR" Use specified parts number.
   "UN" Use as many as needed.
   "AP" Alternate Parts
   "LM" Locally Made (Parts need to be ordered locally)
   "F#" Frame No. (Applicable machine No.)
   "O/S" Over Size

3. The number of components for assembly
   - Parts, which are to be supplied in an assembly, are listed with a dot (.) in front of the part name as shown below.
   - The numeral appearing to the right of each component part indicates the quantity of parts for each assembly unit.

PART NO.	DESCRIPTION	Q'TY	REMARKS
2F5–83310–60	FRONT FLASHER LIGHT ASSY	2	
115–83311–60	.BULB (6V–18W)	1	

4. Applicable colours of graphics are represented in the "REMARKS" as shown below.

PART NO.	DESCRIPTION	Q'TY	REMARKS
2N4–24110–00–X5	FUEL TANK COMP.	2	MXR
3J1–24240–10	.GRAPHIC, FUEL TANK	1	FOR MXR

5. Note that the illustrations for reference in finding parts numbers are not to be used for assembling. When assembling, please use the applicable service manual.

6. The asterisk (*) before a reference number indicates modified items after the first edition.

7. Applicable Serial No.

   Engine Serial No.

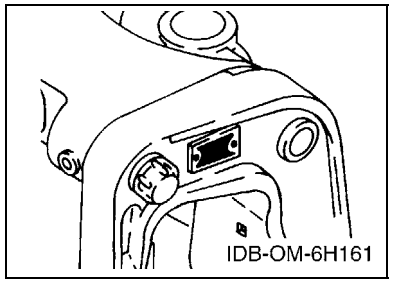

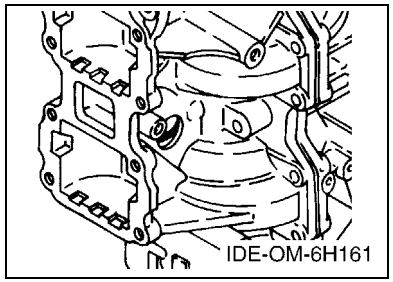

8. Applicable Engine Starting Serial No.

Model	Serial No.	Model	Serial No.
75C	692-1074242	90A	6H1-1048689

9. Applicable Colour Code

Abbreviation	Colour Name	Colour Code
DBN1	DARK BLUISH GRAY 1	008D

10. Quantity Column Information

Column No.	Name Of Q'ty Column	Applicable Model
1	67PD	75CETO
2	6H1H	90AETO

AVANT–PROPOS

Ce catalogue de pièces détachées concerne les pièces pour le(s) modèle(s) indiqué(s) sur la page de couverture. Lorsque vous commandez des pièces de rechange, veuillez vous référer à ce catalogue de pieces détachées et indiquer clairement les numéros et les noms des pièces détachées.

1. Les modifications ou ajouts ayant été effectués après la parution du catalogue de pièces détachées seront décrits dans les Bulletins d'information concernant les pièces détachées.
   Il est recommandé que vous apportiez les corrections nécessaires au catalogue des pièces détachées en vous référant aux Bulletins d'information.

2. Abréviations
   Dans ce catalogue, les abréviations suivantes sont utilisées:

   "UR" Utiliser le numéro de pièces spécifié.
   "UN" Utiliser autant que nécessaire.
   "AP" Pièces de substitution
   "LM" Fabrication locale (les pièces doivent être commandées localement.)
   "F#" N° de cadre (applicable au N° de série)
   "O/S" Surdimensionné

3. Nombre de pièces d'un assemblage
   - Les pièces fournies comme composants d'un assemblage sont précédées d'un point (.) de la manière indiquée ci–dessous.
   - Le chiffre apparaissant à la droite de chaque composant indique la quantité de pièces pour chaque unité d'assemblage.

N° PIECES	DESCRIPTION	QTE	REMARQUES
2F5–83310–60	ENS. CLIGNOTANT AVANT	2	
115–83311–60	.AMPOULE (6V–18W)	1	

4. Les couleurs concernant les graphiques sont indiquées dans la colonne "REMARQUES", comme indiqué ci–dessous.

N° PIECES	DESCRIPTION	QTE	REMARQUES
2N4–24110–00–X5	RESERVOIR A ESSENCE.	2	MXR
3J1–24240–10	.GRAPHIQUE	1	POUR MXR

5. Veuillez noter que les illustrations sont indiquées à titre de référence pour trouver les numéros de pièces, non pour être utilisées lors de l'assemblage. Lors de l'assemblage, veuillez utiliser le manuel d'entretien adéquat.

6. L'astérisque (*) placé devant un numéro de référence indique des éléments qui ont été modifiés après la première édition.

7. N° de série applicable

   N° de Série du moteur

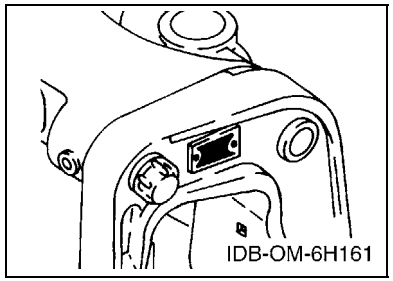

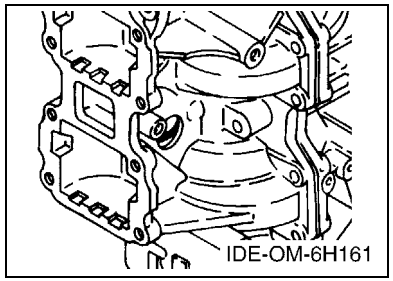

8. N° de série initial du moteur applicable

Modèle	N° de série	Modèle	N° de série
75C	692-1074242	90A	6H1-1048689

9. Code couleur applicable

Abréviation	Nom de la couleur	Code couleur
DBN1	DARK BLUISH GRAY 1	008D

10. Informations relatives à la colonne Quantité

N° de la colonne	Nom de la colonne Qté	Modèle applicable
1	67PD	75CETO
2	6H1H	90AETO

CONTENTS

SCHEDULED SERVICE PARTS 1
TOP COWLING 2
CYLINDER & CRANKCASE 4
CRANKSHAFT & PISTON 7
INTAKE 9
CARBURETOR 10
OIL PUMP 12
FUEL 14
GENERATOR 16
ELECTRICAL 17
STARTING MOTOR 19
BOTTOM COWLING 20
CONTROL 22
BRACKET 1 24
BRACKET 2 26
POWER TRIM & TILT ASSY 28
UPPER CASING 31
LOWER CASING & DRIVE 1 32
LOWER CASING & DRIVE 2 36
FUEL TANK 38
STEERING GUIDE 39
REMOTE CONTROL BOX 40
REMOTE CONTROL ASSY 41
METER 44
OPTIONAL PARTS 45
REPAIR KIT 1 46
REPAIR KIT 2 48

INDEX

NUMERICAL INDEX 50

TABLE DES MATIERES

PIECES MAINTENANCE PERIODIQUE 1
CAPOT SUPERIEUR 2
CYLINDRE & CARTER 4
VILEBREQUIN & PISTON 7
ADMISSION 9
CARBURATEUR 10
POMPE A HUILE 12
CARBURANT 14
GENERATRICE 16
ELECTRIQUE 17
DEMARREUR ELECTRIQUE 19
CAPOT INFERIEUR 20
COMMANDE 22
SUPPORT 1 24
SUPPORT 2 26
PUISSANCE PARER ET INCLINER 28
FOURREAU 31
BOITIER D'HELICE TRANSMISSION1 32
BOITIER D'HELICE TRANSMISSION2 36
RESERVOIR A CARBURANT 38
FIXATION DE DIRECTION 39
BOITIER DE COMMANDE A DISTANCE 40
BOITIER DE COMMANDE A DISTANCE 41
COMPTEUR 44
PIECES OPTIONNELLES 45
KITS DE REPARATION 1 46
KITS DE REPARATION 2 48

INDEX

INDEX NUMERIQUE 50

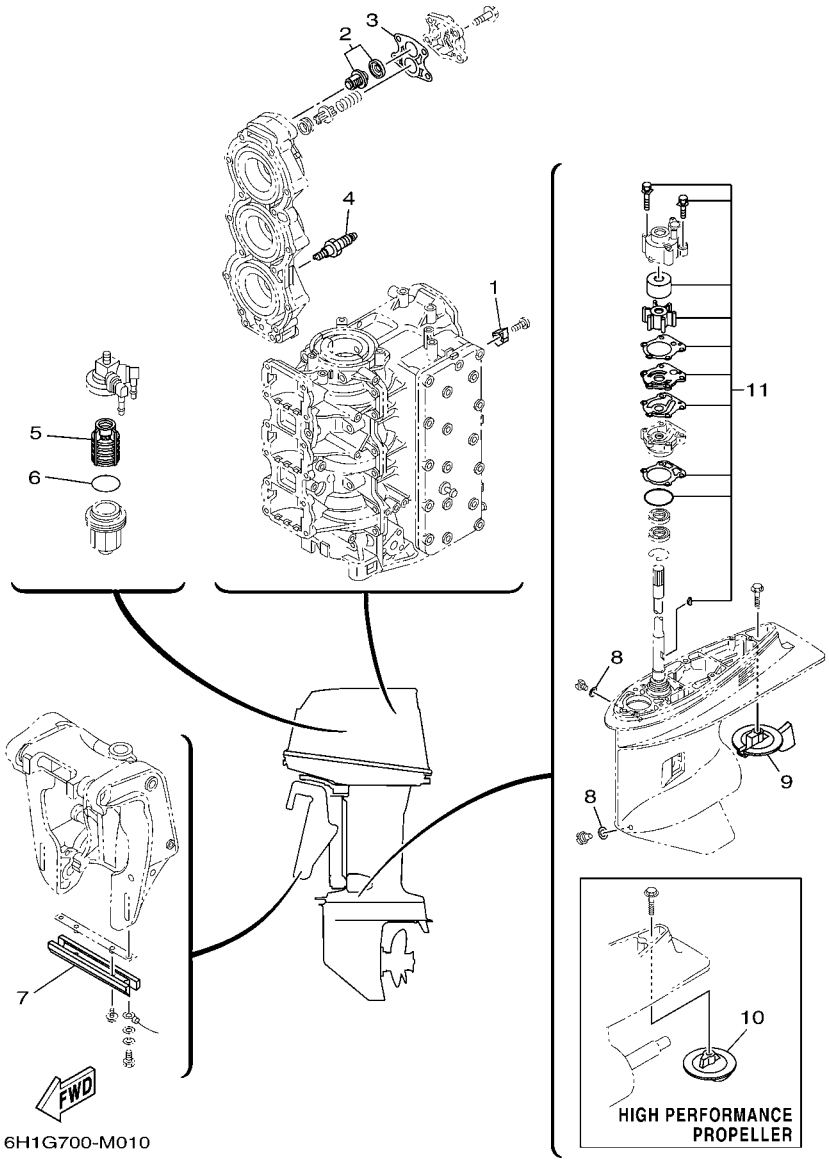

FIG. 1 SCHEDULED SERVICE PARTS PIECES MAINTENANCE PERIODIQUE

REF. NO.	PART NO. N° PIECES	DESCRIPTION DESCRIPTION	67PD	6H1H				REMARKS REMARQUES
1	688–11325–00	ANODE ANODE	2	2				
2	688–12411–11	THERMOSTAT THERMOSTAT	1	1				
3	688–12414–A1	GASKET, COVER JOINT, COUVERCLE	1	1				
4	94702–00160	PLUG, SPARK (NGK B8HS-10) BOUGIE D'ALLUMAGE(NGK B8HS-10)	3	3				UR UR
	94702–00247	PLUG, SPARK (NGK BR8HS-10) BOUGIE D'ALLUMAGE(NGK BR8HS-10	3	3				UR UR
5	61N–24563–00	ELEMENT, FILTER ELEMENT, FILTRE	1	1				
6	93210–32738	O-RING JOINT TORIQUE	1	1				
7	6H1–45251–03	ANODE ANODE	1	1				
8	90430–08020	GASKET JOINT	2	2				
9	67F–45371–00	TAB-TRIM ANODE DERIVE	1	1				
10	6E5–45371–10	TAB-TRIM ANODE DERIVE	1	1				
11	692–W0078–02	WATER PUMP REPAIR KIT KIT DE REPARATION DE LA POMPE	1	1				

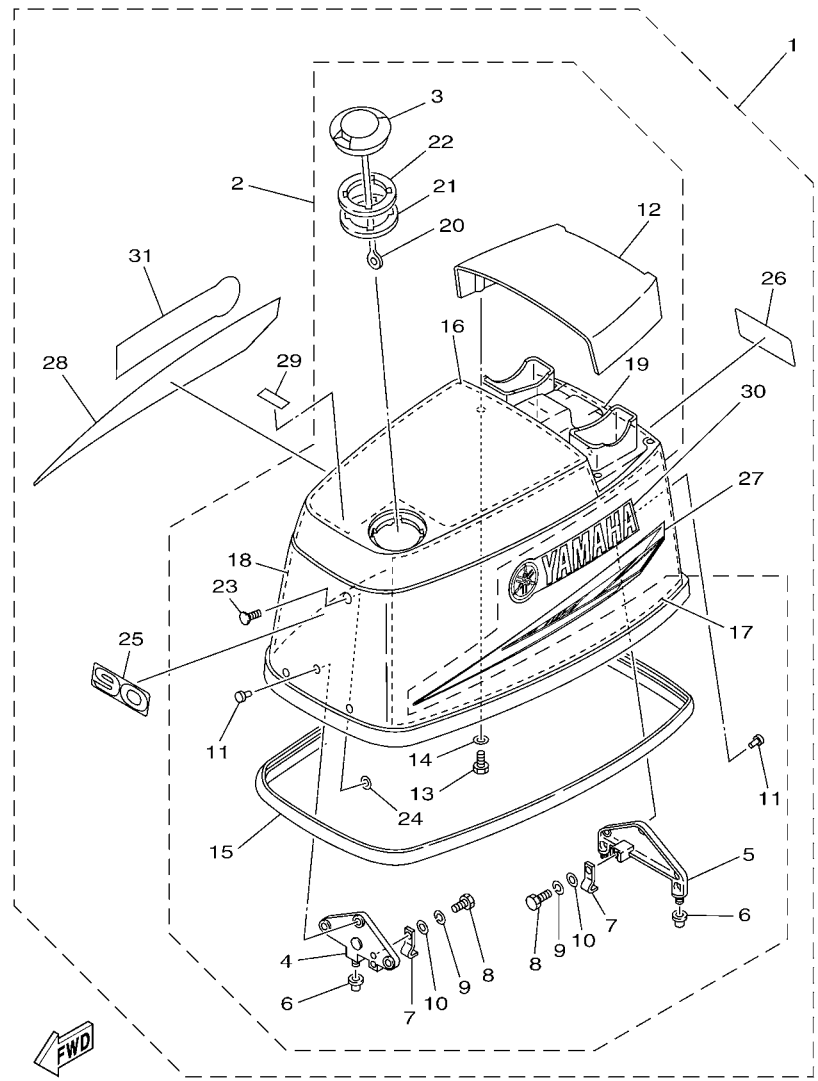

6H1H300-N020

FIG. 2 TOP COWLING — CAPOT SUPERIEUR

REF. NO.	PART NO. N° PIECES	DESCRIPTION DESCRIPTION	67PD	6H1H				REMARKS REMARQUES
1	6H0–42610–00	TOP COWLING ASSY CAPOT (ENS.)	1					
	6H1–42610–00	TOP COWLING ASSY CAPOT (ENS.)		1				
2	6H1–4261A–10	.TOP COWLING W/O GRAPHICS .CAPOT SUPERIEUR SANS GRAPHIQUE	1	1				
3	63D–2177H–00	..DISK CAP 2 ..BOUCHON DE DISQUE 2	1	1				
4	6H1–42647–00	..HOLDER, CLAMP BAND ..SUPPORT, SANDOW DE SERRAGE	1	1				
5	6H1–42649–00	..HOLDER, CLAMP BAND ..SUPPORT, SANDOW DE SERRAGE	1	1				
6	663–42662–00	..DAMPER ..AMORTISSEUR	3	3				
7	688–42652–10	..HOOK ..CROCHET	2	2				
8	97095–06016	..BOLT ..BOULON	2	2				
9	92995–06100	..WASHER, SPRING ..RONDELLE, GROWER	2	2				
10	92995–06600	..WASHER ..RONDELLE	2	2				
11	90266–06009	..RIVET ..RIVET	6	6				
12	6H1–42613–01–8D	..MOLDING, AIR DUCT ..MANCHON A AIR	1	1				
13	97095–06016	..BOLT ..BOULON	4	4				
14	92995–06600	..WASHER ..RONDELLE	4	4				
15	688–42615–00	..SEAL ..JOINT	1	1				
16	6H1–42617–10	..DAMPER, FORM ..BOURRELET, CAOUTCHOUC	1	1				
17	6H1–42619–00	..DAMPER, FORM ..BOURRELET, CAOUTCHOUC	1	1				
18	6H1–42627–00	..DAMPER, FORM ..BOURRELET, CAOUTCHOUC	1	1				
19	6H1–42637–00	..DAMPER, FORM ..BOURRELET, CAOUTCHOUC	1	1				
20	6H1–42694–00	..BAND ..COLLIER	1	1				
21	6H3–21732–00	..SEAL 1 ..JOINT 1	1	1				
22	6H3–21735–00	..SEAL 2 ..JOINT 2	1	1				
23	90338–05M12	..PLUG ..PLOT	1	1				
24	90183–05M06	..NUT, SPRING ..ECROU, RESSORT	1	1				
25	692–42678–40	.GRAPHIC, REAR .ADHESIF, ARRIERE	1					
	6H1–42678–10	.GRAPHIC, REAR .ADHESIF, ARRIERE		1				

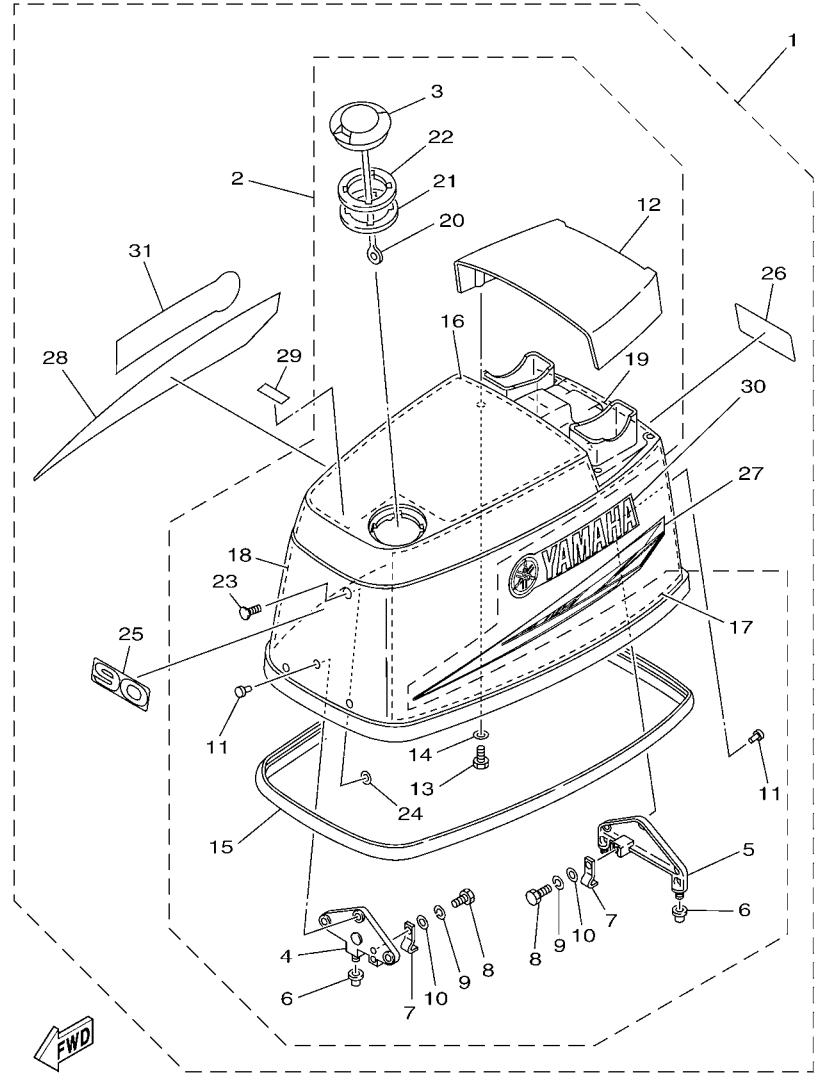

6H1H300-N020

FIG. 2 TOP COWLING — CAPOT SUPERIEUR

REF. NO.	PART NO. N° PIECES	DESCRIPTION DESCRIPTION	67PD	6H1H				REMARKS REMARQUES
26	692–42678–40	.GRAPHIC, REAR .ADHESIF, ARRIERE	1					
	6H1–42678–10	.GRAPHIC, REAR .ADHESIF, ARRIERE		1				
27	688–42675–40	.GRAPHIC, SIDE 1 .EMBLEME	1	1				
28	688–42676–40	.GRAPHIC, SIDE 2 .EMBLEME	1	1				
29	6H1–13436–00	.MARK .ADHESIF		1				
30	688–42681–40	.MARK, COWLING .ADHESIF, CAPOT	1	1				
31	688–42681–40	.MARK, COWLING .ADHESIF, CAPOT	1	1				

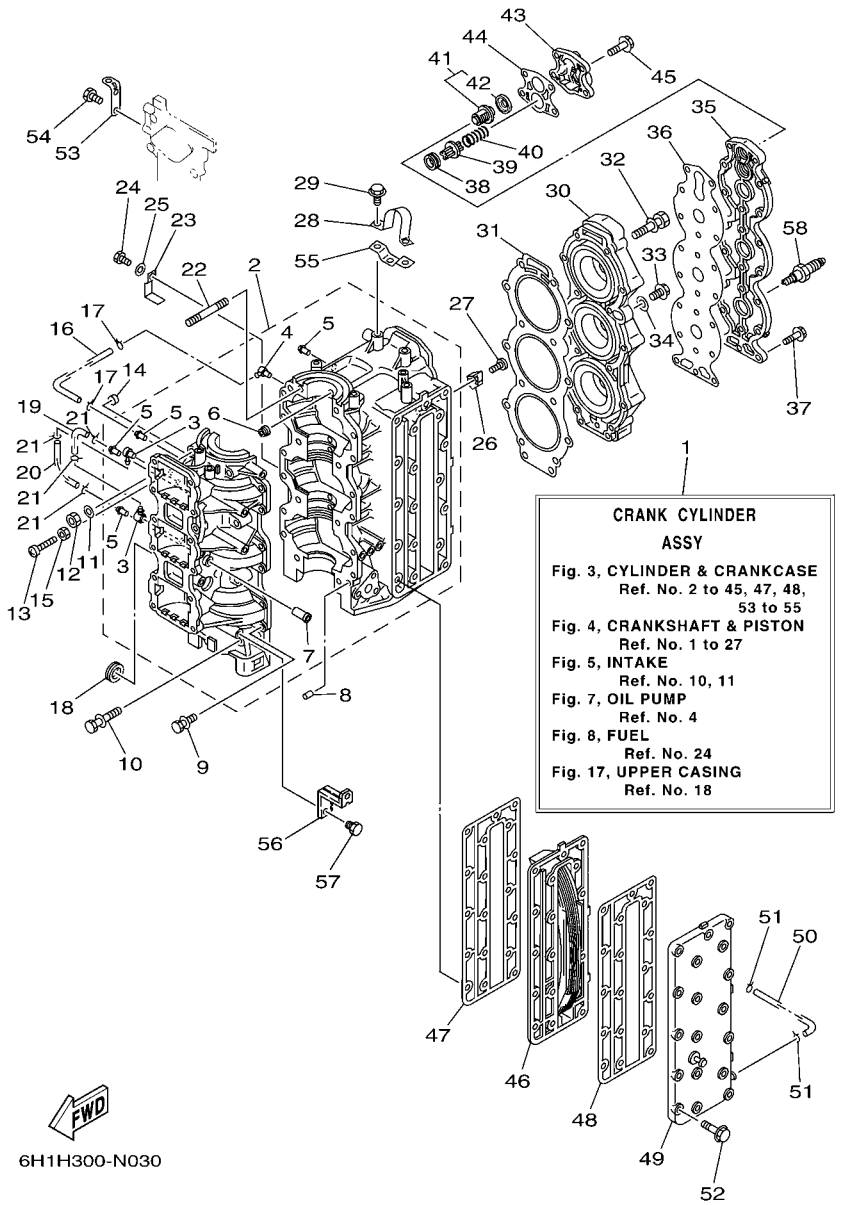

FIG. 3 CYLINDER & CRANKCASE CYLINDRE & CARTER

REF. NO.	PART NO. N° PIECES	DESCRIPTION DESCRIPTION	67PD	6H1H				REMARKS REMARQUES
1	6H1–W0090–45–1S	CRANK CYLINDER ASSY (O/I) EMBIELLAGE CYLINDRE(ENS.)(O/I)	1	1				
2	6H1–15100–05	CRANKCASE ASSY (O/I, PRIME ST) CARTER DE MOTEUR COMPLET (O/I)	1	1				
3	688–11370–01	.CHECK VALVE ASSY .CLAPET (ENS.)	2	2				
4	650–11370–01	.CHECK VALVE ASSY .CLAPET (ENS.)	1	1				
5	624–14485–00	.PIPE, JOINT .DURITE	4	4				
6	663–11518–01	.LOCK, BEARING .CENTREUR, ROULEMENT	3	3				
7	650–24378–00	.PIPE, JOINT 4 .DURITE RACCORDEMENT 3	1	1				
8	99530–08012	PIN, DOWEL GOUJON, D'ASSEMBLAGE	2	2				
9	90119–06M12	BOLT, WITH WASHER BOULON, AVEC RONDELLE	12	12				
10	90119–10005	BOLT, WITH WASHER BOULON, AVEC RONDELLE	6	6				
11	90201–10008	WASHER, PLATE RONDELLE, PLATE	2	2				
12	95313–10600	NUT ECROU, HEXAGONAL	2	2				
13	90157–06014	SCREW, PAN HEAD VIS, TETE TRONCONIQUE	1	1				
14	688–44194–00	CAP CAPUCHON	1	1				
15	95303–06700	NUT ECROU	1	1				
16	90445–07260	HOSE (L276) DURITE (L276)	1	1				
17	90467–06016	CLIP JONC	2	2				
18	90480–24M04	GROMMET PASSE-FIL	1	1				
19	90445–07M00	HOSE (L100) DURITE (L100)	1	1				
20	90445–07M23	HOSE (L408) DURITE (L408)	1	1				
21	90467–06016	CLIP JONC	4	4				
22	90116–10M06	BOLT, STUD GOUJON	2	2				
23	90465–12M03	CLAMP BRIDE	1	1				
24	97095–06014	BOLT BOULON	1	1				
25	92995–06600	WASHER RONDELLE	1	1				
26	688–11325–00	ANODE ANODE	2	2				
27	98780–04015	SCREW, FLAT HEAD VIS A TETE FRAISEE	2	2				

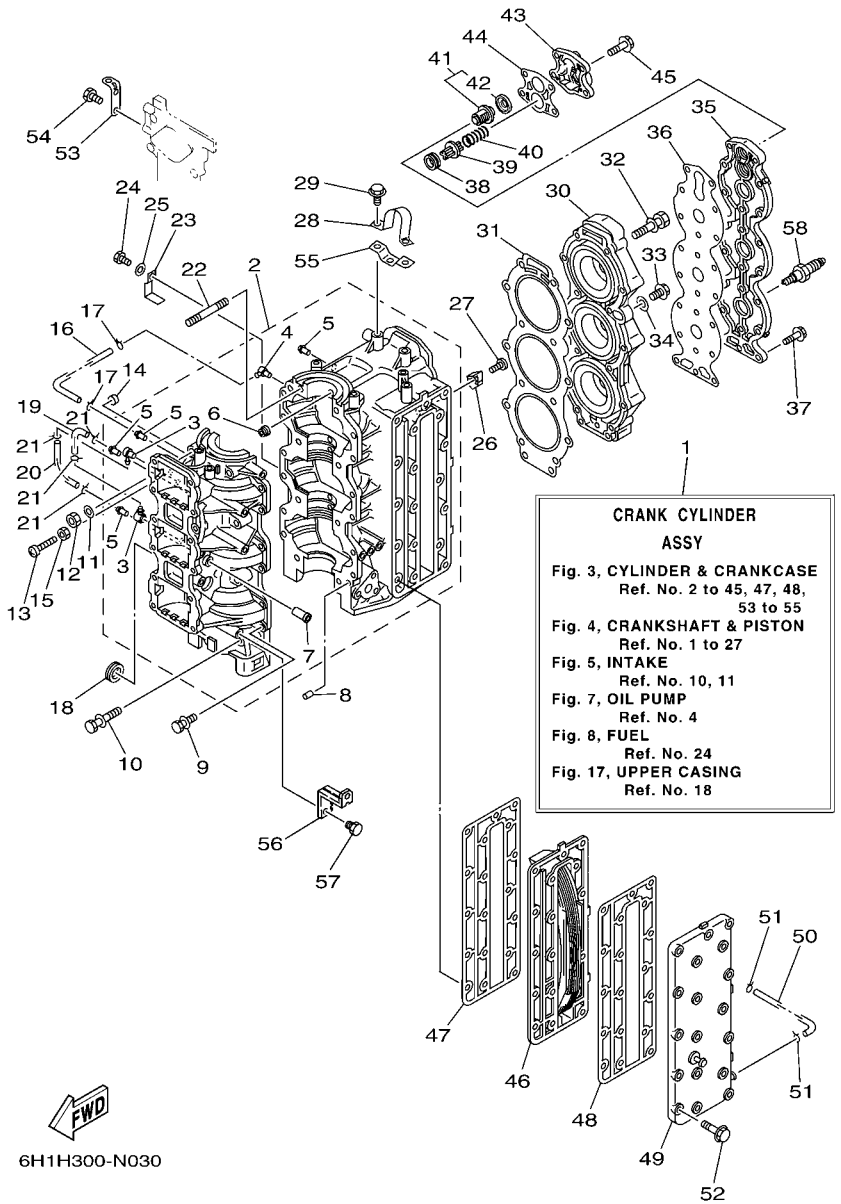

FIG. 3 CYLINDER & CRANKCASE CYLINDRE & CARTER

REF. NO.	PART NO. N° PIECES	DESCRIPTION DESCRIPTION	67PD	6H1H				REMARKS REMARQUES
28	688–11119–01	HANGER, ENGINE ANNEAU, LEVAGE	1	1				
29	90119–08MA3	BOLT, WITH WASHER BOULON, AVEC RONDELLE	2	2				
30	6H1–11111–01–1S	HEAD, CYLINDER 1 CULASSE	1	1				
31	688–11181–A2	GASKET, CYLINDER HEAD 1 JOINT, DE CULASSE 1	1	1				
32	90119–08MA8	BOLT, WITH WASHER BOULON, AVEC RONDELLE	14	14				
33	90340–14M06	PLUG, STRAIGHT SCREW PLOT, FILETE DROIT	1	1				
34	90430–14115	GASKET JOINT	1	1				
35	688–11191–00–1S	COVER, CYLINDER HEAD 1 COUVERCLE, CULASSE 1	1	1				
36	688–11193–A1	GASKET, HEAD COVER 1 JOINT, COUVERCLE DE CULASSE 1	1	1				
37	90119–06MA3	BOLT, WITH WASHER BOULON, AVEC RONDELLE	18	18				
38	90480–20M05	GROMMET PASSE-FIL	1	1				
39	688–12416–00	VALVE, PRESSURE CONTROL SOUPAPE DE CONTROLEUR PRESS	1	1				
40	90501–16M11	SPRING, COMPRESSION RESSORT, COMPRESSION	1	1				
41	688–12411–11	THERMOSTAT THERMOSTAT	1	1				
42	688–12412–00	.SEAL, THERMOSTAT .JOINT, THERMOSTAT	1	1				
43	688–12413–00–1S	COVER, THERMOSTAT COUVERCLE, THERMOSTAT	1	1				
44	688–12414–A1	GASKET, COVER JOINT, COUVERCLE	1	1				
45	90119–06MA5	BOLT, WITH WASHER BOULON, AVEC RONDELLE	4	4				
46	688–41111–00–1S	INNER COVER, EXHAUST PLAQUE, ECHAPPEMENT	1	1				
47	688–41112–A0	GASKET, EXHAUST INNER COVER JOINT, PLAQUE D'ECHAPPEMENT	1	1				
48	688–41114–A0	GASKET, EXHAUST OUTER COVER JOINT, COUVERCLE D'ECHAPPEMENT	1	1				
49	6H1–41113–00–1S	OUTER COVER, EXHAUST COUVERCLE, ECHAPPEMENT	1	1				FLUSHING KIT FLUSHING KIT
50	663–24312–01	PIPE 2 DURITE 2	1	1				
51	90467–08004	CLIP JONC	2	2				
52	90119–08020	BOLT, WITH WASHER BOULON, AVEC RONDELLE	18	18				
53	6H1–15772–00	STAY 2 SUPPORT 2	1	1				
54	97095–06012	BOLT BOULON	2	2				

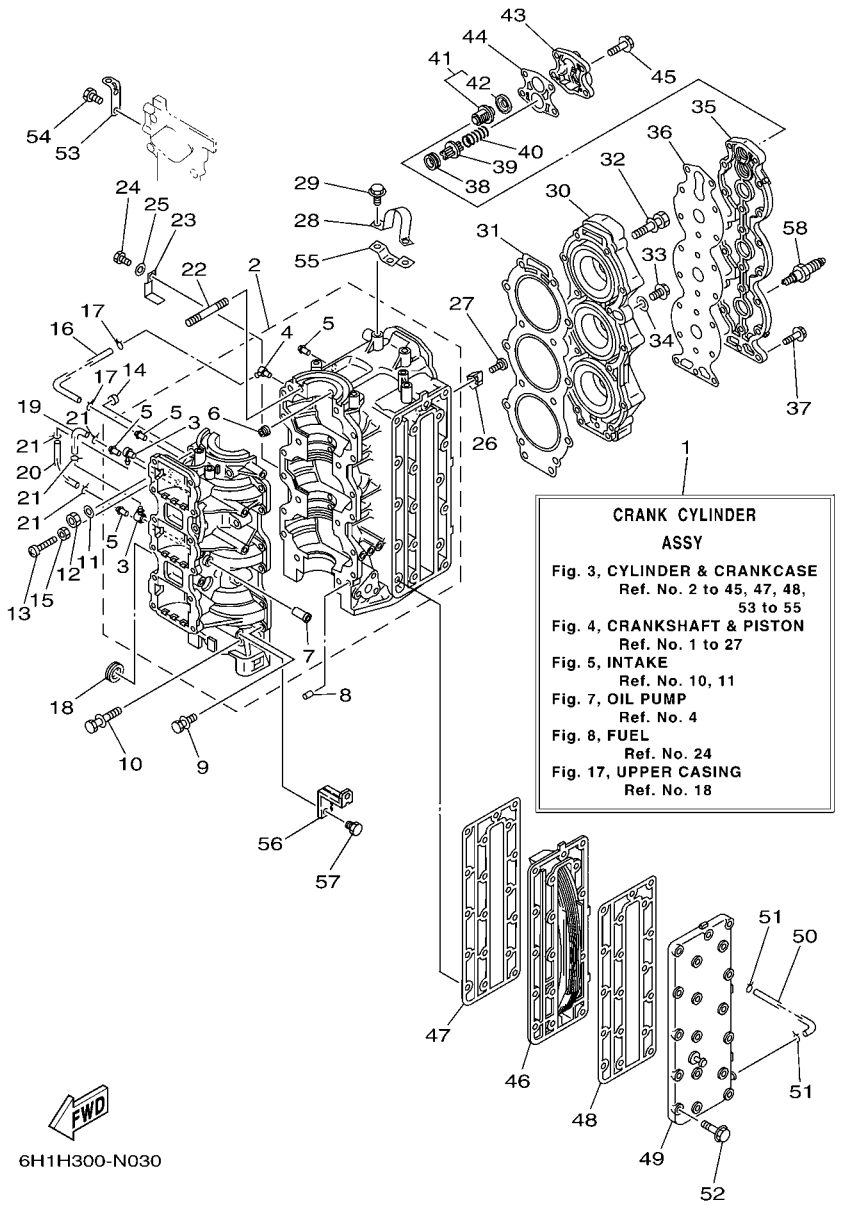

FIG. 3 CYLINDER & CRANKCASE CYLINDRE & CARTER

REF. NO.	PART NO. N° PIECES	DESCRIPTION DESCRIPTION	67PD	6H1H				REMARKS REMARQUES
55	6H1–15773–01	STAY 3 SUPPORT 3	1	1				
56	6H1–21796–00	HINGE CHARNIERE	1	1				
57	97095–08012	BOLT BOULON	1	1				
58	94702–00247	PLUG, SPARK (NGK BR8HS-10) BOUGIE D'ALLUMAGE(NGK BR8HS-10	3	3				

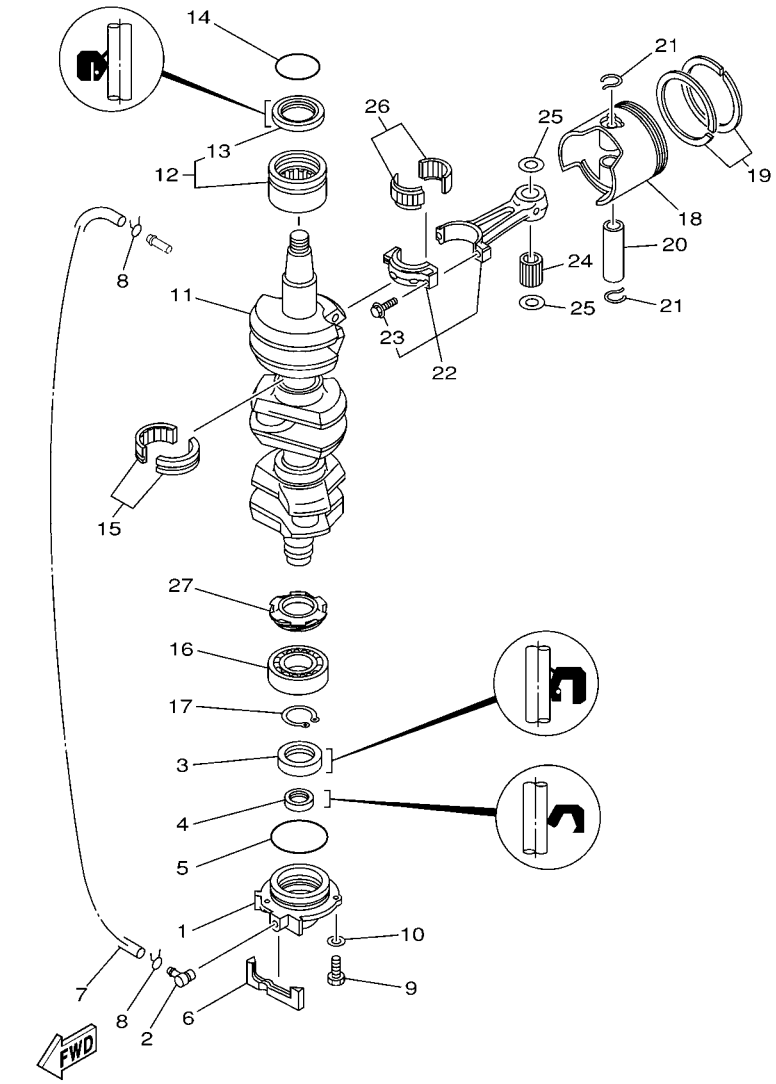

6H10010-0031

FIG. 4 CRANKSHAFT & PISTON — VILEBREQUIN & PISTON

REF. NO.	PART NO. N° PIECES	DESCRIPTION DESCRIPTION	67PD	6H1H				REMARKS REMARQUES
1	6H1–15359–01–94	HOUSING, OIL SEAL LOGEMENT, BAGUE D'ETANCHEITE	1	1				
2	688–11370–01	CHECK VALVE ASSY CLAPET (ENS.)	1	1				
3	93102–30M05	OIL SEAL JOINT SPY	1	1				
4	93104–20M02	OIL SEAL JOINT SPY	1	1				
5	93210–62269	O-RING JOINT TORIQUE	1	1				
6	688–15379–00	SEAL, CRANKCASE JOINT SPY DE CARTER DE MOTEUR	1	1				
7	90445–07M86	HOSE (L460) DURITE (L460)	1	1				
8	90467–06016	CLIP JONC	2	2				
9	97095–06020	BOLT BOULON	3	3				
10	92995–06600	WASHER RONDELLE	3	3				
11	688–11411–01	CRANKSHAFT VILEBREQUIN COMPLET	1	1				
12	93310–636U4	BEARING ROULEMENT	1	1				
13	93102–36M02	.OIL SEAL .JOINT SPY	1	1				
14	93210–46M16	O-RING JOINT TORIQUE	1	1				
15	93310–835U8	BEARING ROULEMENT	2	2				
16	93306–206U5	BEARING ROULEMENT	1	1				
17	93410–32M00	CIRCLIP CLIPS	1	1				
18	6H1–11631–03–95	PISTON (STD) PISTON (STD)	3	3				
	6H1–11635–03	PISTON (0.25MM O/S) PISTON (0.25MM O/S)	3	3				AP AP
	6H1–11636–03	PISTON (0.50MM O/S) PISTON (0.50MM O/S)	3	3				AP AP
19	688–11603–A0	PISTON RING SET (STD) JEU DE SEGMENTS (STD)	3	3				
	688–11604–A0	PISTON RING SET (0.25MM O/S) JEU DE SEGMENTS (0.25MM O/S)	3	3				AP AP
	688–11605–A0	PISTON RING SET (0.50MM O/S) JEU DE SEGMENTS (0.50MM O/S)	3	3				AP AP
20	663–11633–00	PIN, PISTON AXE, PISTON	3	3				
21	688–11634–10	CLIP, PISTON PIN AGRAFE, AXE DE PISTON	6	6				
22	688–11650–03	CONNECTING ROD ASSY BIELLE COMPLETTE	3	3				
23	90109–08022	.BOLT .BOULON	2	2				

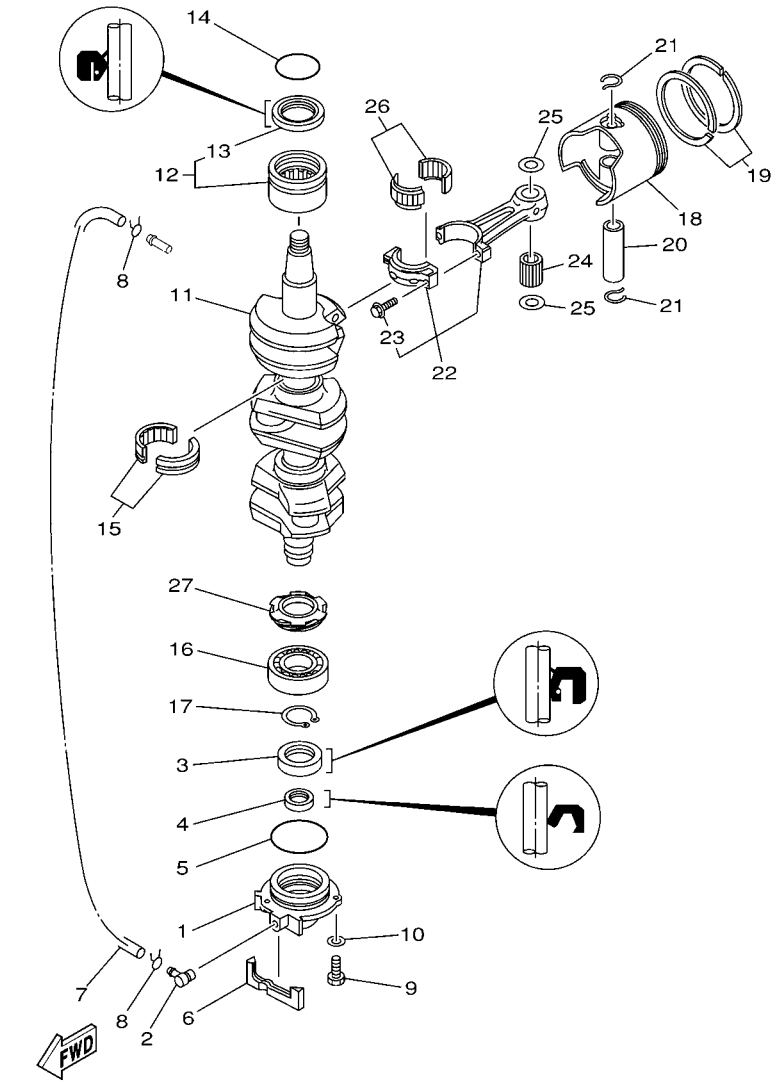

6H10010-0031

FIG. 4 CRANKSHAFT & PISTON — VILEBREQUIN & PISTON

REF. NO.	PART NO. N° PIECES	DESCRIPTION DESCRIPTION	67PD	6H1H				REMARKS REMARQUES
24	93603–21111	PIN, DOWEL CLAVETTE	84	84				
25	90201–20417	WASHER, PLATE RONDELLE, PLATE	6	6				
26	93310–730V8	BEARING ROULEMENT	3	3				
27	6H1–11536–00	GEAR, DRIVE ENGRENAGE, MENANT	1	1				

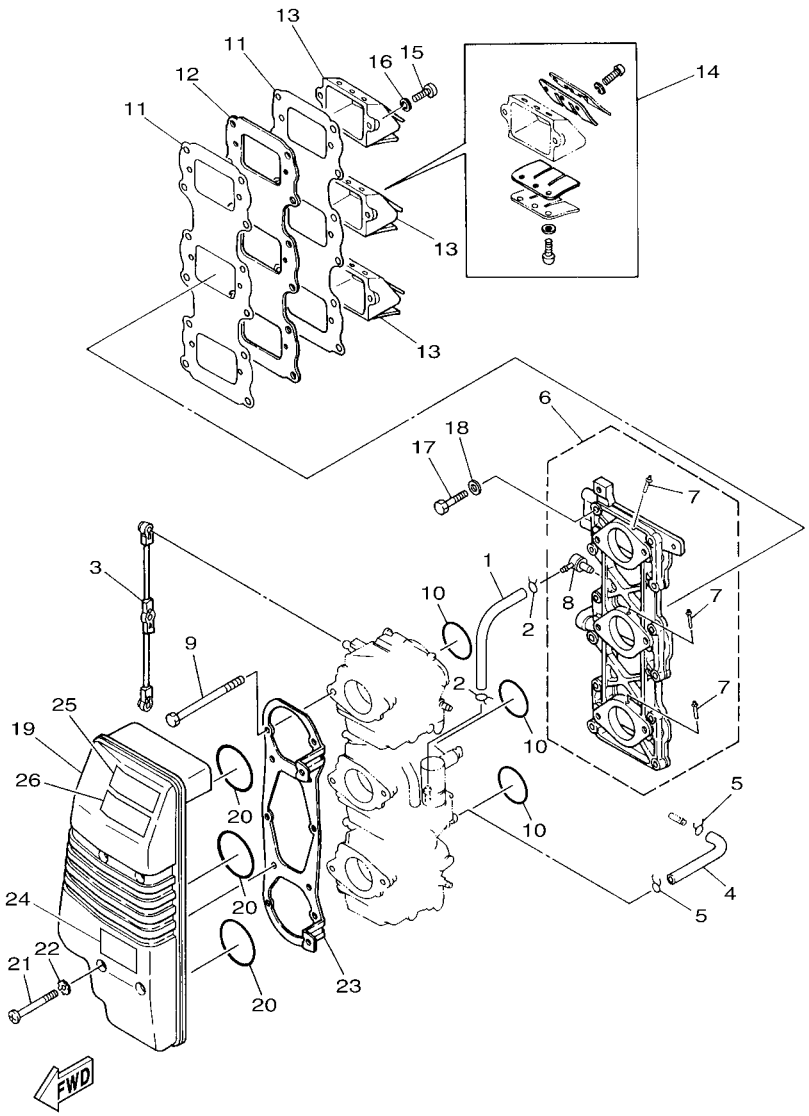

6H1G300-M050

FIG. 5 INTAKE — ADMISSION

REF. NO.	PART NO. N° PIECES	DESCRIPTION DESCRIPTION	67PD	6H1H				REMARKS REMARQUES
1	90445–07MA5	HOSE (L150) DURITE (L150)	1	1				
2	90467–06016	CLIP JONC	2	2				
3	688–41217–01	ROD, ACCEL. LEVER TIGE, LEVIER ACCELERATION	1	1				
4	6H3–14349–00	PIPE DURITE	1	1				
5	90467–08004	CLIP JONC	2	2				
6	6H1–13641–03	MANIFOLD, INTAKE 1 TUBULURE, ADMISSION 1	1	1				
7	6H1–14485–00	.PIPE, JOINT .DURITE	3	3				
8	650–14485–03	.PIPE, JOINT .DURITE	1	1				
9	97095–06095	BOLT BOULON	6	6				
10	93210–39ME4	O-RING JOINT TORIQUE	3	3				
11	688–13621–A1	GASKET, VALVE SEAT JOINT, SIEGE DE CLAPET	2	2				
12	688–13624–00	PLATE,REED VALVE PLAQUE DE CLAPET	1	1				
13	688–13610–00	REED VALVE ASSY CLAPET COMPLET	3	3				
14	688–W0004–00	.REED SET .JEU DE CLAPETS	1	1				
15	97880–05020	SCREW, PAN HEAD VIS, TETE TRONCONIQUE	6	6				
16	92990–05100	WASHER, SPRING RONDELLE, GROWER	6	6				
17	97013–06030	BOLT BOULON	12	12				
18	92903–06600	WASHER, PLATE RONDELLE, PLATE	12	12				
19	6H1–14440–02	SILENCER ASSY, INTAKE SIENCIEUX D'ADMISSION	1	1				
20	93210–46044	O-RING JOINT TORIQUE	3	3				
21	97885–06050	SCREW, PAN HEAD VIS, A ENCOCHE	4	4				
22	90209–06M05	WASHER RONDELLE	4	4				
23	6H1–14413–02	STAY SUPPORT	1	1				
24	6H1–85711–60	MARK, CAUTION MAKER	1	1				
25	6AH–81994–40	LABEL, SAFETY ETIQUETTE, SECURITE	1	1				
26	6AH–81994–50	LABEL, SAFETY ETIQUETTE, SECURITE	1	1				

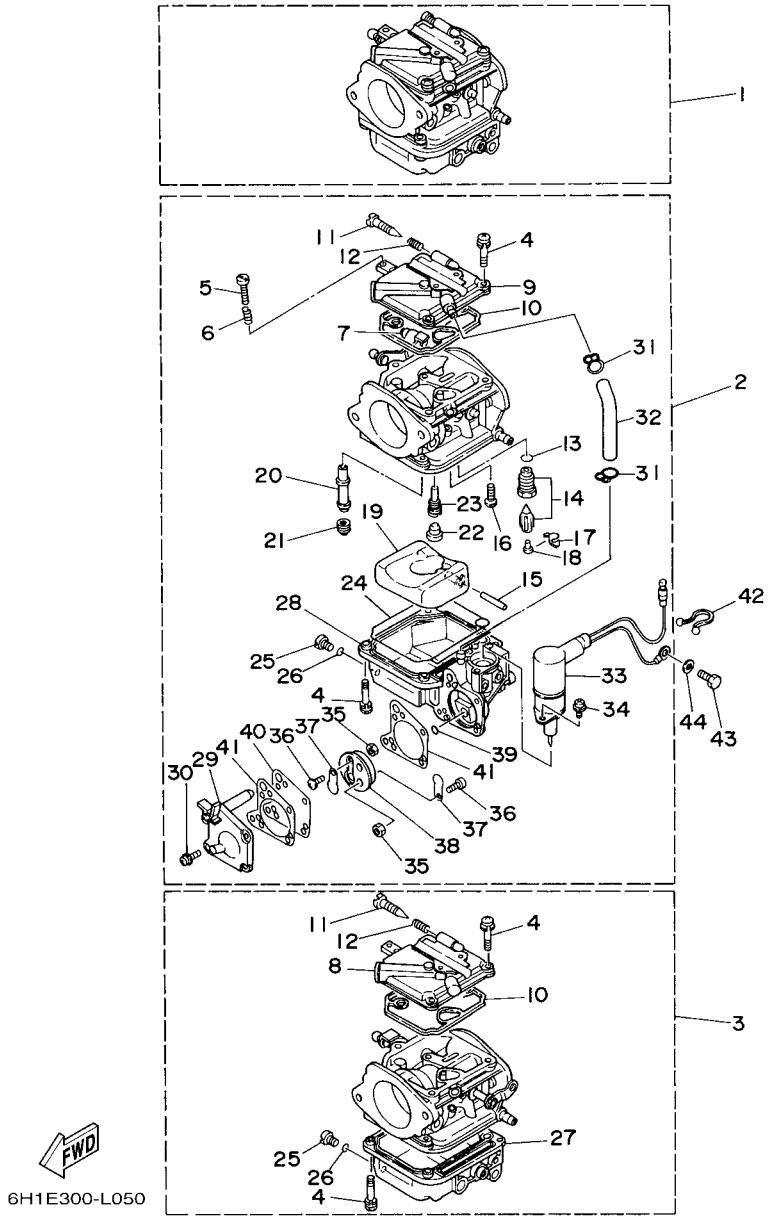

FIG. 6 CARBURETOR CARBURATEUR

REF. NO.	PART NO. N° PIECES	DESCRIPTION DESCRIPTION	67PD	6H1H				REMARKS REMARQUES
1	6H0–14301–08	CARBURETOR ASSY 1 CARBURATEUR COMPLET 1	1					
	6H1–14301–08	CARBURETOR ASSY 1 CARBURATEUR COMPLET 1		1				
2	6H0–14302–08	CARBURETOR ASSY 2 CARBURATEUR COMPLET 2	1					
	6H1–14302–08	CARBURETOR ASSY 2 CARBURATEUR COMPLET 2		1				
3	6H0–14303–08	CARBURETOR ASSY 3 CARBURATEUR COMPLET 3	1					
	6H1–14303–08	CARBURETOR ASSY 3 CARBURATEUR COMPLET 3		1				
4	97980–04114	.SCREW, WITH WASHER .VIS, AVEC RONDELLE	21	21				
5	63V–14523–00	.SCREW, STOP .VIS, BUTEE	1	1				#2 #2
6	90501–10326	.SPRING, COMPRESSION .RESSORT, COMPRESSION	1	1				#2 #2
7	6H2–14578–00	.COLLAR .COLLERETTE	1	1				#2 #2
8	6H4–14146–00	.PLATE .PLAQUE	2	2				#1,3 #1,3
9	6H3–14146–10	.PLATE .PLAQUE	1	1				#2 #2
10	6H4–14147–00	.O-RING .JOINT TORIQUE	3	3				
11	692–14923–00	.SCREW, PILOT .VIS, RALENTI	3	3				
12	697–14555–00	.SPRING .RESSORT	4	4				
13	93210–04228	.O-RING .JOINT TORIQUE	3	3				
14	692–14590–01	.NEEDLE VALVE ASSY .POINTEAU	3	3				
15	6H4–14548–00	.PIN, FLOAT ARM .AXE, BRAS DE FLOTTEUR	3	3				
16	98580–04008	.SCREW, PAN HEAD .VIS	3	3				
17	663–14159–00	.CLIP .JONC	3	3				
18	676–14186–00	.PIN, FLOAT .AXE, FLOTTEUR	3	3				
19	6H4–14985–01	.FLOAT .FLOTTEUR	3	3				
20	6H1–14947–75	.JET, NEEDLE .GICLEUR DE STARTER	3	3				
21	6H1–14943–39	.JET, MAIN (#160) .GICLEUR, PRINCIPAL (#160)	3	3				
22	676–14966–00	.CAP .CAPUCHON	3	3				
23	6H1–14948–18	.JET (#78) .GICLEUR (#78)	3	3				
24	6H4–14984–00	.GASKET, FLOAT CHAMBER .JOINT, CUVE DE FLOTTEUR	3	3				

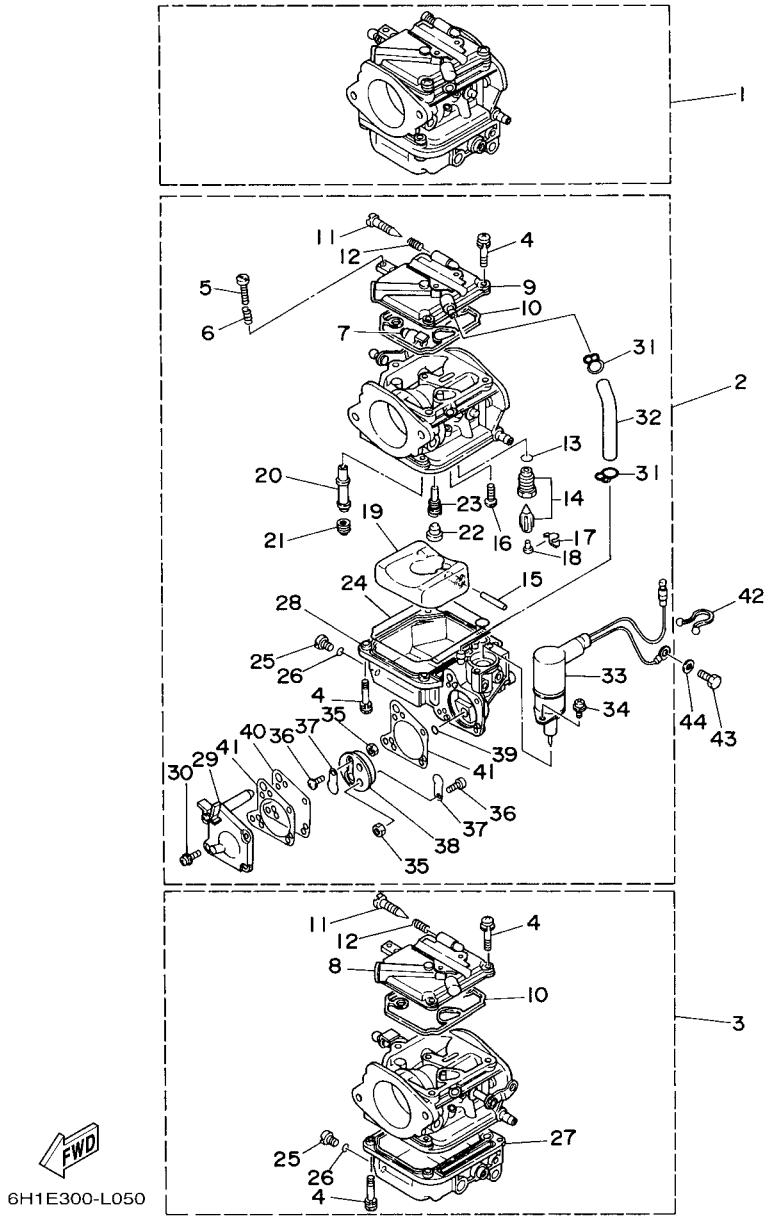

FIG. 6 CARBURETOR CARBURATEUR

REF. NO.	PART NO. N° PIECES	DESCRIPTION DESCRIPTION	67PD	6H1H				REMARKS REMARQUES
25	6H3–14992–00	.SCREW, DRAIN .BOUCHON, PURGE	3	3				
26	93210–04230	.O-RING .JOINT TORIQUE	3	3				
27	6H4–14980–00	.BODY, FLOAT CHAMBER .CORPS, CUVE DE FLOTTEUR	2	2				#1,3 #1,3
28	6H3–14980–10	.BODY, FLOAT CHAMBER .CORPS, CUVE DE FLOTTEUR	1	1				#2 #2
29	6H3–24452–10	.COVER .COUVERCLE	1	1				#2 #2
30	6H4–14567–00	.SCREW .VIS	4	4				#2 #2
31	6H3–14137–00	.CLIP .JONC	2	2				#2 #2
32	6H3–14349–00	.PIPE .DURITE	1	1				#2 #2
33	6H3–14380–00	.STARTER ASSY .DEMARREUR COMPLET	1	1				#2 #2
34	97803–04010	.SCREW, PAN HEAD .VIS, CRUCIFORME	2	2				#2 #2
35	95380–03600	.NUT .ECROU	2	2				#2 #2
36	98980–03006	.SCREW, BIND .VIS, DE PRESSION	2	2				#2 #2
37	6L5–24421–00	.VALVE, CHECK .SOUPAPE, RETENUE	2	2				#2 #2
38	6H4–24413–00	.BODY 2 .CORPS 2	1	1				#2 #2
39	6H4–24486–00	.O-RING .JOINT TORIQUE	1	1				#2 #2
40	6H3–24411–10	.DIAPHRAGM .DIAPHRAGME	1	1				#2 #2
41	6H3–24434–10	.GASKET, BODY .JOINT, CORPS	2	2				#2 #2
42	90465–18147	CLAMP BRIDE	1	1				
43	97013–06012	BOLT BOULON	1	1				
44	92903–06600	WASHER, PLATE RONDELLE, PLATE	1	1				

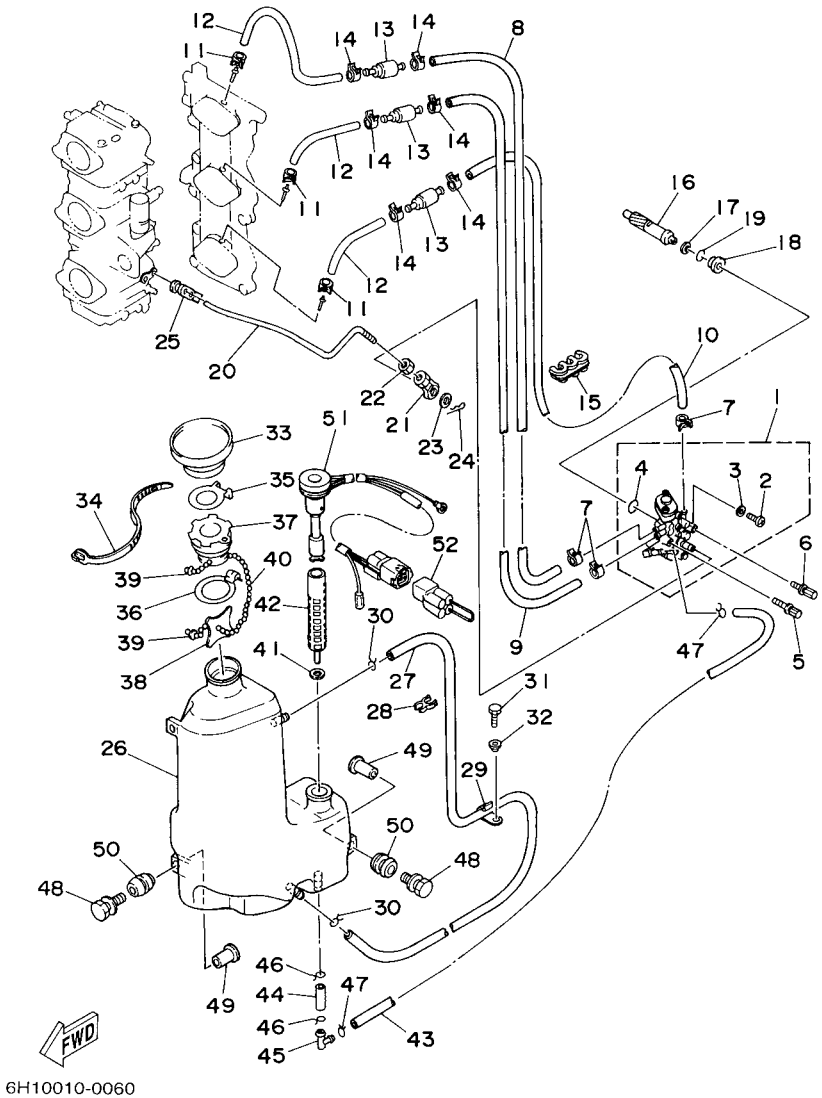

FIG. 7 OIL PUMP — POMPE A HUILE

REF. NO.	PART NO. N° PIECES	DESCRIPTION DESCRIPTION	67PD	6H1H				REMARKS REMARQUES
1	6H1–13200–02	OIL INJECTION PUMP ASSY POMPE A HUILE COMPLET	1	1				
2	6R3–13471–00	.PLUG, DRAIN .PLOT, VIDANGE	1	1				
3	6L2–13475–00	.GASKET .JOINT	1	1				
4	93210–19MA7	.O-RING .JOINT TORIQUE	1	1				
5	90109–06M39	BOLT BOULON	1	1				
6	90109–06M40	BOLT BOULON	1	1				
7	90468–07M02	CLIP JONC	3	3				
8	90445–07M90	HOSE (L390) DURITE (L390)	1	1				
9	90445–07240	HOSE (L330) DURITE (L330)	1	1				
10	90445–07M44	HOSE (L250) DURITE (L250)	1	1				
11	90468–07M02	CLIP JONC	3	3				
12	90445–07M87	HOSE (L110) DURITE (L110)	3	3				
13	6E9–13183–70	VALVE, CHECK CLAPET ANTI RETOUR	3	3				
14	90468–07M02	CLIP JONC	6	6				
15	90464–07M05	CLAMP BRIDE	1	1				
16	6H1–11537–01	GEAR, DRIVEN PIGNON SECONDAIRE	1	1				
17	90201–08M93	WASHER, PLATE RONDELLE, PLATE	1	1				
18	6H1–13117–01	COLLAR, DISTANCE ENTRETOISE	1	1				
19	93210–13M04	O-RING JOINT TORIQUE	1	1				
20	6H1–41241–02	ROD, LINK BIELLETTE	1	1				
21	6H1–41237–00	JOINT, LINK RACCORD	1	1				
22	95380–05600	NUT ECROU	1	1				
23	90202–05088	WASHER, PLATE RONDELLE, PLATE	1	1				
24	90468–05M03	CLIP JONC	1	1				
25	6E9–41237–00	JOINT, LINK RACCORD	1	1				
26	6H1–21707–07	OIL TANK COMP. RESERVOIR A PETROLE COMP.	1	1				
27	90445–11M09	HOSE (L600) DURITE (L600)	1	1				

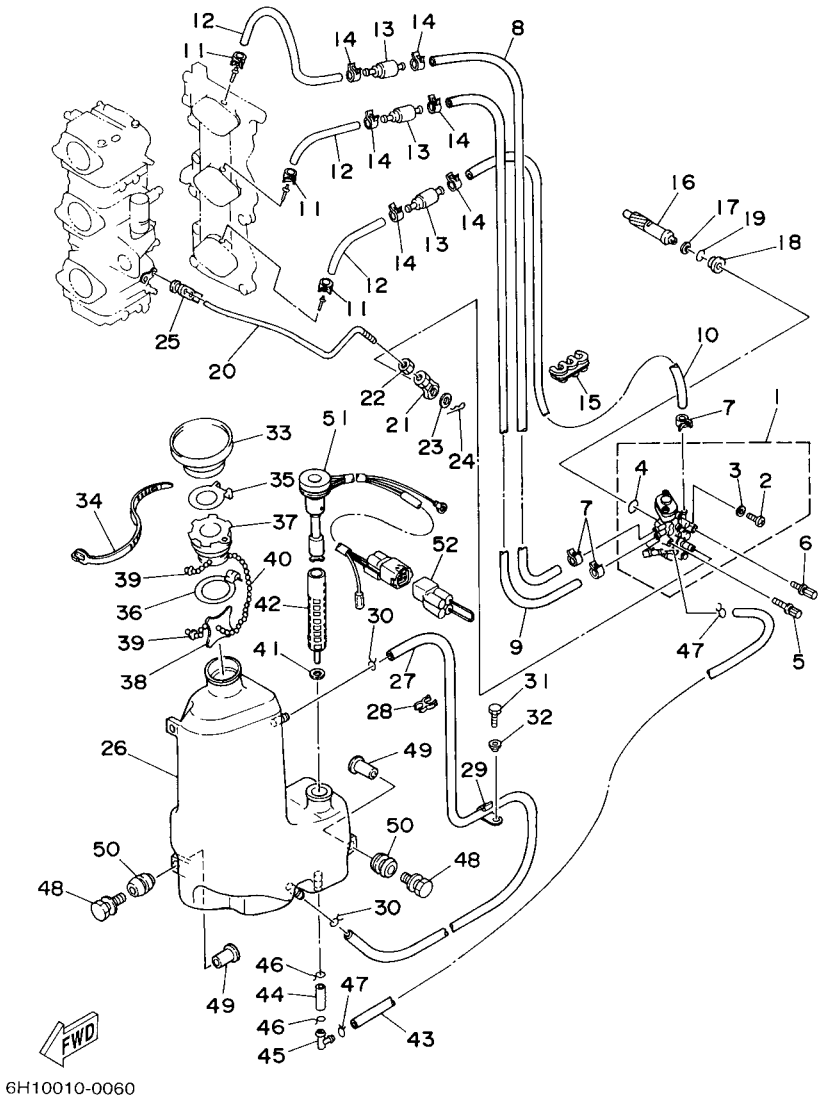

FIG. 7 OIL PUMP — POMPE A HUILE

REF. NO.	PART NO. N° PIECES	DESCRIPTION DESCRIPTION	67PD	6H1H				REMARKS REMARQUES
28	90464–11M24	CLAMP BRIDE	1	1				
29	90465–11M27	CLAMP BRIDE	1	1				
30	90467–11M08	CLIP JONC	2	2				
31	97095–06016	BOLT BOULON	1	1				
32	90387–06M31	COLLAR COLLERETTE	1	1				
33	6H1–21752–00	TUBE, FILLER 1 DURITE	1	1				
34	90465–13M30	CLAMP BRIDE	1	1				
35	63D–2176M–00	HOOK CROCHET	1	1				
36	63D–2175R–00	HOOK, BAND CROCHET, BANDE	1	1				
37	6H4–21770–00	OIL TANK CAP ASSY CABOCHON DE RESERVOIR A HUILE	1	1				
38	6J8–21758–00	WASHER, SPECIAL 2 RONDELLE, SPECIALE 2	1	1				
39	6H1–21757–00	WASHER, SPECIAL 1 RONDELLE, SPECIALE 1	2	2				
40	6H1–24633–00	CHAIN, BALL CHANE DE BALLE	1	1				
41	6J8–13414–00	GASKET, STRAINER COVER JOINT, COUVERCLE DE FILTRE	1	1				
42	6H1–13411–00	STRAINER, OIL FILTRE, HUILE	1	1				
43	6H1–21766–01	PIPE, OIL DURITE A HUILE	1	1				
44	90445–08M01	HOSE (L30) DURITE (L30)	1	1				
45	6H1–13435–00	NIPPLE RACCORD	1	1				
46	90467–12M11	CLIP JONC	2	2				
47	90467–08004	CLIP JONC	2	2				
48	90119–06M88	BOLT, WITH WASHER BOULON, AVEC RONDELLE	3	3				
49	90387–06119	COLLAR COLLERETTE	3	3				
50	6A0–82317–00	DAMPER, IGNITION COIL AMORTISSEUR, BOBINE D'ALLUM	3	3				
51	6H1–85720–16	OIL LEVEL GAUGE ASSY JAUGE A HUILE CPLT	1	1				
52	6R5–82582–B0	COVER, WIRE HARNESS COUVERCLE, FAISCEAU DE FILS	1	1				AP AP

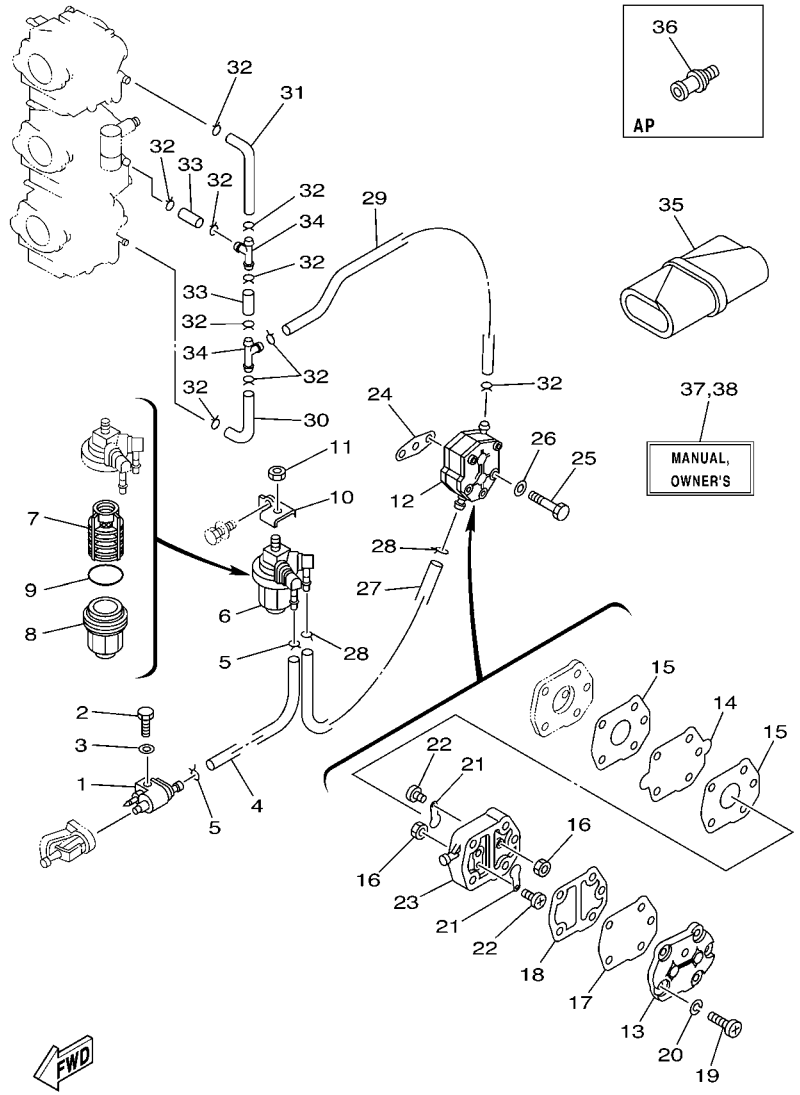

FIG. 8 FUEL CARBURANT

REF. NO.	PART NO. N° PIECES	DESCRIPTION DESCRIPTION	67PD	6H1H				REMARKS REMARQUES
1	6G1–24304–02	FUEL PIPE JOINT COMP. 1 DURITE RACCORDEMT. A ESSENCE	1	1				
2	97095–06020	BOLT BOULON	1	1				
3	92995–06600	WASHER RONDELLE	1	1				
4	90445–09104	HOSE (L300) DURITE (L300)	1	1				
5	90467–08004	CLIP JONC	2	2				
6	61N–24560–00	FILTER ASSY ENS FILTRE	1	1				
7	61N–24563–00	.ELEMENT, FILTER .ELEMENT, FILTRE	1	1				
8	61N–24521–00	.CUP, FILTER .CUVETTE, FILTRE	1	1				
9	93210–32738	.O-RING .JOINT TORIQUE	1	1				
10	6H1–24566–01	BRACKET, FILTER SUPPORT, FILTRE	1	1				
11	95380–08600	NUT ECROU	1	1				
12	692–24410–00	FUEL PUMP ASSY POMPE A ESSENCE	1	1				
13	6A0–24413–00	.BODY 2 .CORPS 2	1	1				
14	692–24411–00	.DIAPHRAGM .DIAPHRAGME	1	1				
15	648–24434–01	.GASKET, BODY .JOINT, CORPS	2	2				
16	95380–03600	.NUT .ECROU	2	2				
17	663–24411–00	.DIAPHRAGM .DIAPHRAGME	1	1				
18	648–24435–02	.GASKET, BODY 2 .JOINT, CORPS 2	1	1				
19	98503–05028	.SCREW, PAN HEAD .VIS	3	3				
20	92990–05100	.WASHER, SPRING .RONDELLE, GROWER	3	3				
21	6A0–24421–01	.VALVE, CHECK .SOUPAPE, RETENUE	2	2				
22	6A0–14325–00	.SCREW, PAN HEAD .VIS TETE CONIQUE	2	2				
23	6A0–24412–02	.BODY 1 .CORPS 1	1	1				
24	650–24431–A0	GASKET, FUEL PUMP 1 JOINT 1 DE POMPE A ESSENCE	1	1				
25	97095–06040	BOLT BOULON	2	2				
26	92995–06600	WASHER RONDELLE	2	2				
27	6H1–24314–00	PIPE 4 DURITE 4	1	1				

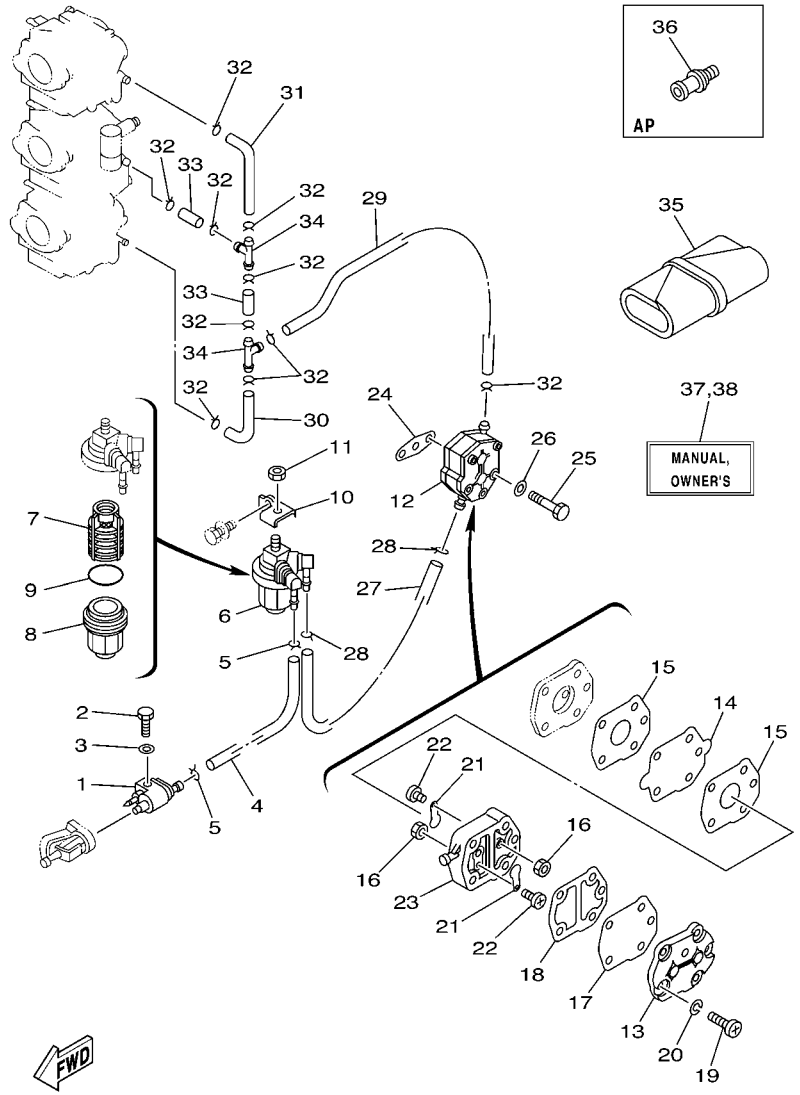

FIG. 8 FUEL CARBURANT

REF. NO.	PART NO. N° PIECES	DESCRIPTION DESCRIPTION	67PD	6H1H				REMARKS REMARQUES
28	90467–08004	CLIP JONC	2	2				
29	90445–09097	HOSE (L250) DURITE (L250)	1	1				
30	688–24313–00	PIPE 3 DURITE 3	1	1				
31	688–24314–00	PIPE 4 DURITE 4	1	1				
32	90467–08004	CLIP JONC	10	10				
33	90445–09220	HOSE (L30) DURITE (L30)	2	2				
34	688–24378–00	PIPE, JOINT 3 DURITE RACCORDEMENT 3	2	2				
35	656–W2810–02	TOOL KIT TROUSSE A OUTILS	1	1				AP AP
36	6E0–28193–00–94	PLUG, WATER CHECK BOUCHON, CONTROLE D'EAU	1	1				AP D:12.5MM AP D:12.5MM
37	67P–28199–77–E0	MANUAL,OWNER'S MANUEL D'UTILISATION	1	1				UR (E) UR (E)
	67P–28199–77–F0	MANUAL,OWNER'S MANUEL D'UTILISATION	1	1				UR (F) UR (F)
	67P–28199–77–S0	MANUAL,OWNER'S MANUEL D'UTILISATION	1	1				UR (ES) UR (ES)
	67P–28199–77–G0	MANUAL,OWNER'S MANUEL D'UTILISATION	1	1				UR (D) UR (D)
	67P–28199–77–D0	MANUAL,OWNER'S MANUEL D'UTILISATION	1	1				UR (NL) UR (NL)
	67P–28199–77–H0	MANUAL,OWNER'S MANUEL D'UTILISATION	1	1				UR (I) UR (I)
38	67P–28199–87–K0	MANUAL,OWNER'S MANUEL D'UTILISATION	1	1				UR (DK) UR (DK)
	67P–28199–87–R0	MANUAL,OWNER'S MANUEL D'UTILISATION	1	1				UR (GR) UR (GR)
	67P–28199–87–P0	MANUAL,OWNER'S MANUEL D'UTILISATION	1	1				UR (P) UR (P)
	67P–28199–87–N0	MANUAL,OWNER'S MANUEL D'UTILISATION	1	1				UR (N) UR (N)
	67P–28199–87–M0	MANUAL,OWNER'S MANUEL D'UTILISATION	1	1				UR (S) UR (S)
	67P–28199–87–L0	MANUAL,OWNER'S MANUEL D'UTILISATION	1	1				UR (SF) UR (SF)

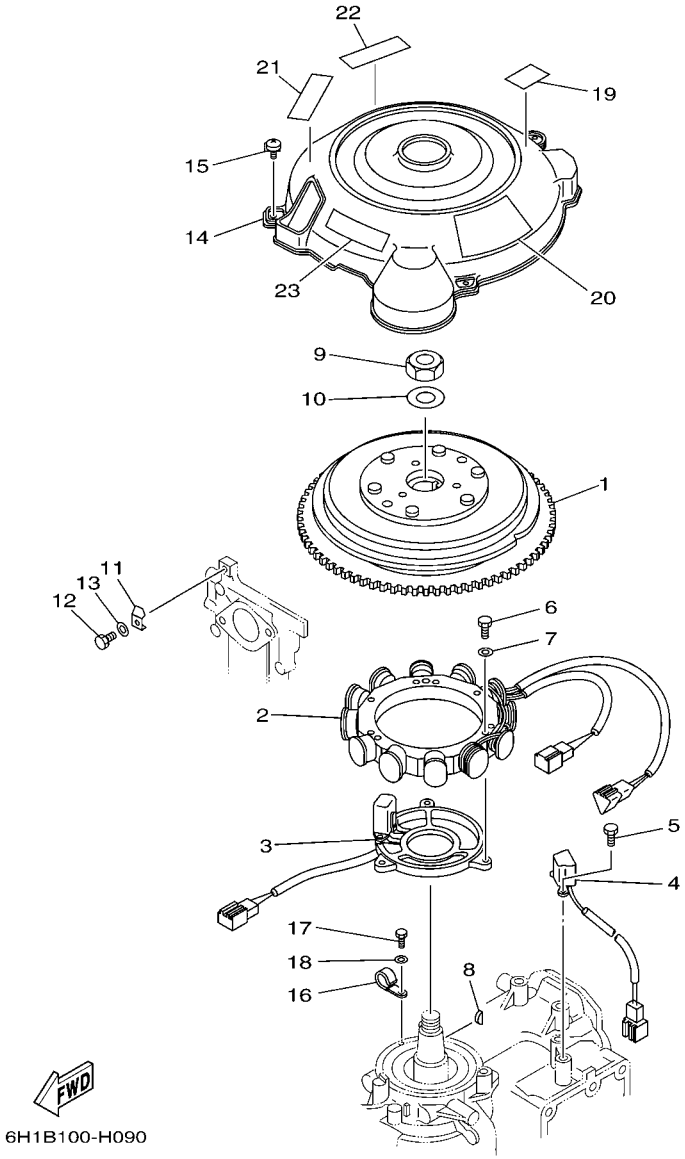

FIG. 9 GENERATOR GENERATRICE

REF. NO.	PART NO. N° PIECES	DESCRIPTION DESCRIPTION	67PD	6H1H				REMARKS REMARQUES
1	6H0–85550–00	ROTOR ASSY ROTOR CPLT	1	1				
2	6H0–85510–03	STATOR ASSY STATOR CPLT	1	1				
3	6H0–85580–01	COIL, PULSER BOBINE, PULSEUR	1	1				
4	6H2–85895–01	CRANK POSITION SENDER SONDE, REGLAGE DE VILEBREQUIN	1	1				
5	97095–05012	BOLT BOULON	2	2				
6	97095–06040	BOLT BOULON	3	3				
7	92995–06600	WASHER RONDELLE	3	3				
8	90280–05015	KEY, WOODRUFF CLAVETTE, DEMI-LUNE	1	1				
9	90170–20137	NUT ECROU	1	1				
10	90201–21M18	WASHER, PLATE RONDELLE, PLATE	1	1				
11	688–81332–01	PLATE, TIMING PLATEAU, ALLUMAGE	1	1				
12	97095–06010	BOLT BOULON	1	1				
13	92995–06600	WASHER RONDELLE	1	1				
14	6H1–81337–01	COVER, FLYWHEEL COUVERCLE, VOLANT	1	1				
15	90159–06M20	SCREW, WITH WASHER VIS, AVEC RONDELLE	3	3				
16	90465–06M90	CLAMP BRIDE	1	1				
17	97095–06012	BOLT BOULON	1	1				
18	92995–06600	WASHER RONDELLE	1	1				
19	6H1–14488–00	LABEL, CAUTION ETIQUETTE, RECOMMANDATION	1	1				
20	6H1–13437–21	MARK, CAUTION MAKER	1	1				
21	6AH–81995–40	LABEL, WARNING ETIQUETTE, AVERTISSEMENT	1	1				
22	6AH–81995–50	LABEL, WARNING ETIQUETTE, AVERTISSEMENT	1	1				
23	6AG–81996–00	MARK MARQUE	1	1				

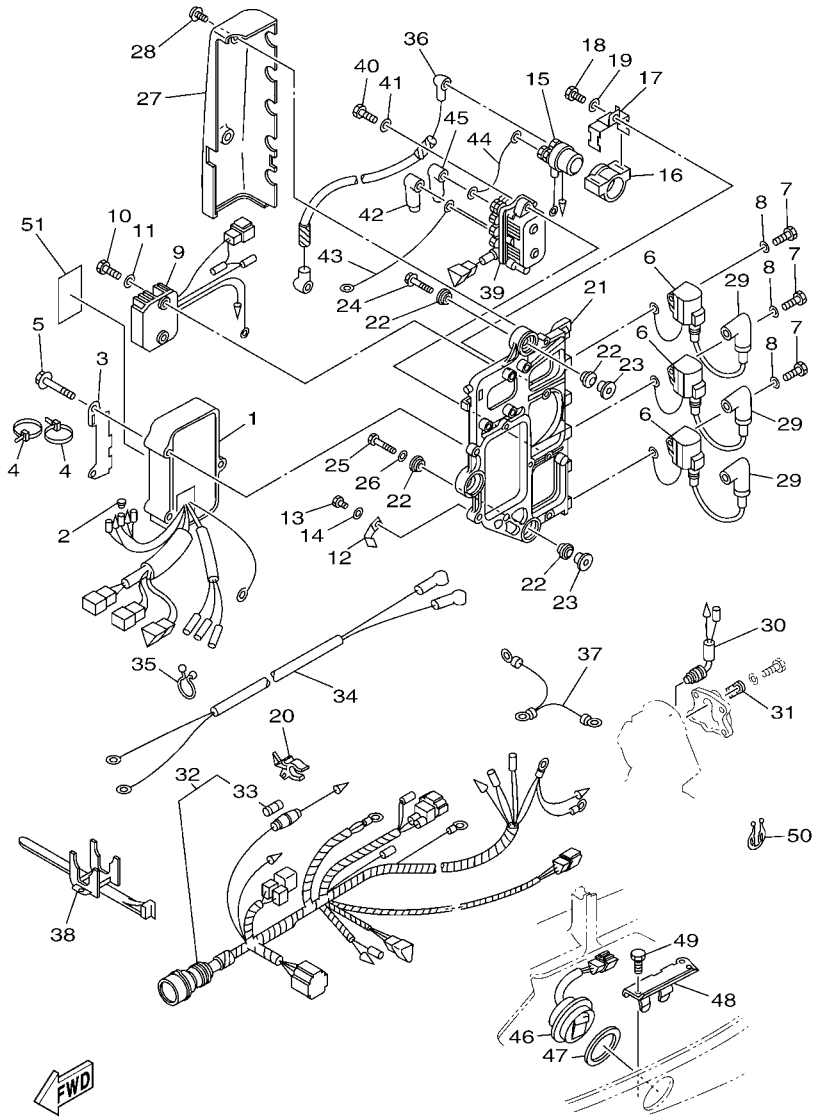

FIG. 10 ELECTRICAL ELECTRIQUE

REF. NO.	PART NO. N° PIECES	DESCRIPTION DESCRIPTION	67PD	6H1H				REMARKS REMARQUES
1	6H0–85540–07	C.D.I. UNIT ASSY BLOC C.D.I.	1	1				
2	703–82119–00	COVER, LEAD WIRE GARNITURE, FIL	1	1				
3	6H1–85542–10	BRACKET SUPPORT	1	1				
4	90465–13M11	CLAMP BRIDE	2	2				
5	97595–06550	BOLT, WITH WASHER VIS HEXAGONAL AVC RONDELLE	3	3				
6	697–85570–00	IGNITION COIL ASSY BOBINE D'ALLUMAGE (ENS.)	3	3				
7	97013–06020	BOLT BOULON	3	3				
8	92903–06600	WASHER, PLATE RONDELLE, PLATE	3	3				
9	6H0–81960–10	RECTIFIER & REGULATOR ASSY REDRESSEUR REGULATEUR CPLT	1	1				
10	97095–06020	BOLT BOULON	2	2				
11	92995–06600	WASHER RONDELLE	2	2				
12	90465–08M23	CLAMP BRIDE	1	1				
13	97095–06012	BOLT BOULON	1	1				
14	92995–06600	WASHER RONDELLE	1	1				
15	6G1–81941–10	STARTER RELAY ASSY LANCEUR RELAIS (ENS.)	1	1				
16	6G1–81952–00	HOLDER, RELAY SUPPORT, RELAIS	1	1				
17	6E9–81945–70	PLATE, SWITCH FITTING PLAQUE, FIXATION DU RELAIS	1	1				
18	97013–06016	BOLT BOULON	1	1				
19	92903–06600	WASHER, PLATE RONDELLE, PLATE	1	1				
20	6G5–82152–00	HOLDER, FUSE SUPPORT, FUSIBLE	1	1				
21	6H1–85542–00	BRACKET SUPPORT	1	1				
22	90480–09M25	GROMMET PASSE-FIL	6	6				
23	90387–06M03	COLLAR COLLERETTE	3	3				
24	90119–06M75	BOLT, WITH WASHER BOULON, AVEC RONDELLE	2	2				
25	90109–06M39	BOLT BOULON	1	1				
26	90201–06M31	WASHER, PLATE RONDELLE, PLATE	1	1				
27	6H1–81916–00	COVER, TERMINAL COUVERCLE, BORNE	1	1				

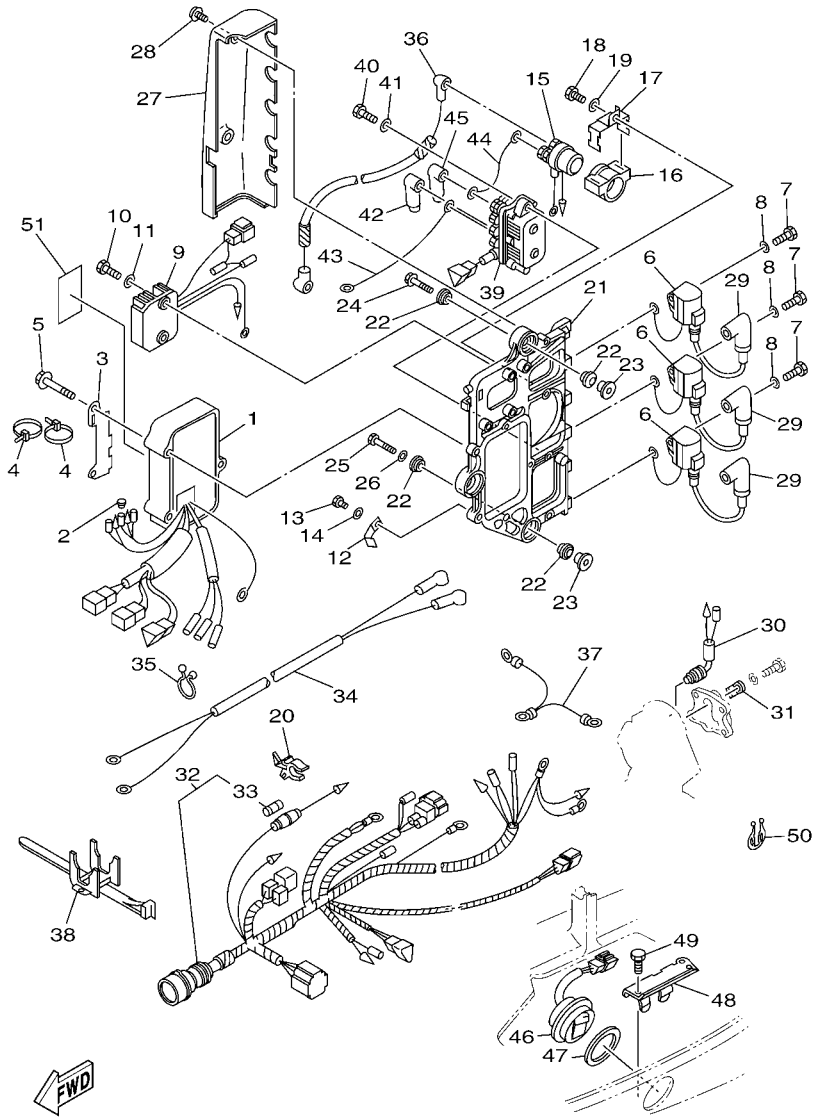

FIG. 10 ELECTRICAL ELECTRIQUE

REF. NO.	PART NO. N° PIECES	DESCRIPTION DESCRIPTION	67PD	6H1H				REMARKS REMARQUES
28	90159–06M11	SCREW, WITH WASHER VIS, AVEC RONDELLE	2	2				
29	6E3–82370–21	PLUG CAP ASSY ANTIPARASITE	3	3				
30	688–82560–10	THERMO SWITCH ASSY THERMO-CONTACT COMPLET	1	1				
31	688–82588–01	PLATE PLAQUE	1	1				
32	6H0–82590–80	WIRE HARNESS ASSY (10P) FAISCEAU DE FILS COMPLET (10P)	1	1				
33	663–82151–00	.FUSE (12V-20A) .FUSIBLE (12V-20A)	1	1				
34	6H0–82105–03	BATTERY CABLE CABLE DE BATTERIE	1	1				
35	90464–23M22	CLAMP BRIDE	1	1				
36	6H0–82117–00	WIRE, LEAD FIL	1	1				
37	697–82519–00	WIRE, EARTH LEAD FIL, MASSE	1	1				
38	688–82594–00	CLAMP BRIDE	1	1				
39	61A–81950–00	RELAY ASSY RELAIS COMPLET	1	1				
40	97095–06025	BOLT BOULON	2	2				
41	92995–06600	WASHER RONDELLE	2	2				
42	682–82119–01	COVER, LEAD WIRE GARNITURE, FIL	2	2				
43	6H0–81949–10	WIRE, LEAD FIL	1	1				
44	6H0–81949–01	WIRE, LEAD FIL	1	1				
45	682–82119–01	COVER, LEAD WIRE GARNITURE, FIL	1	1				
46	6H1–82563–10	TRIM & TILT SWITCH ASSY INCLINER ET PARER COMMUTATEUR	1	1				
47	6E5–82587–00	GASKET JOINT	1	1				
48	6H1–83614–00	BRACKET SUPPORT	1	1				
49	97095–06016	BOLT BOULON	1	1				
50	90464–18M14	CLAMP BRIDE	1	1				
51	6R5–85711–60	MARK, CAUTION MAKER	1	1				

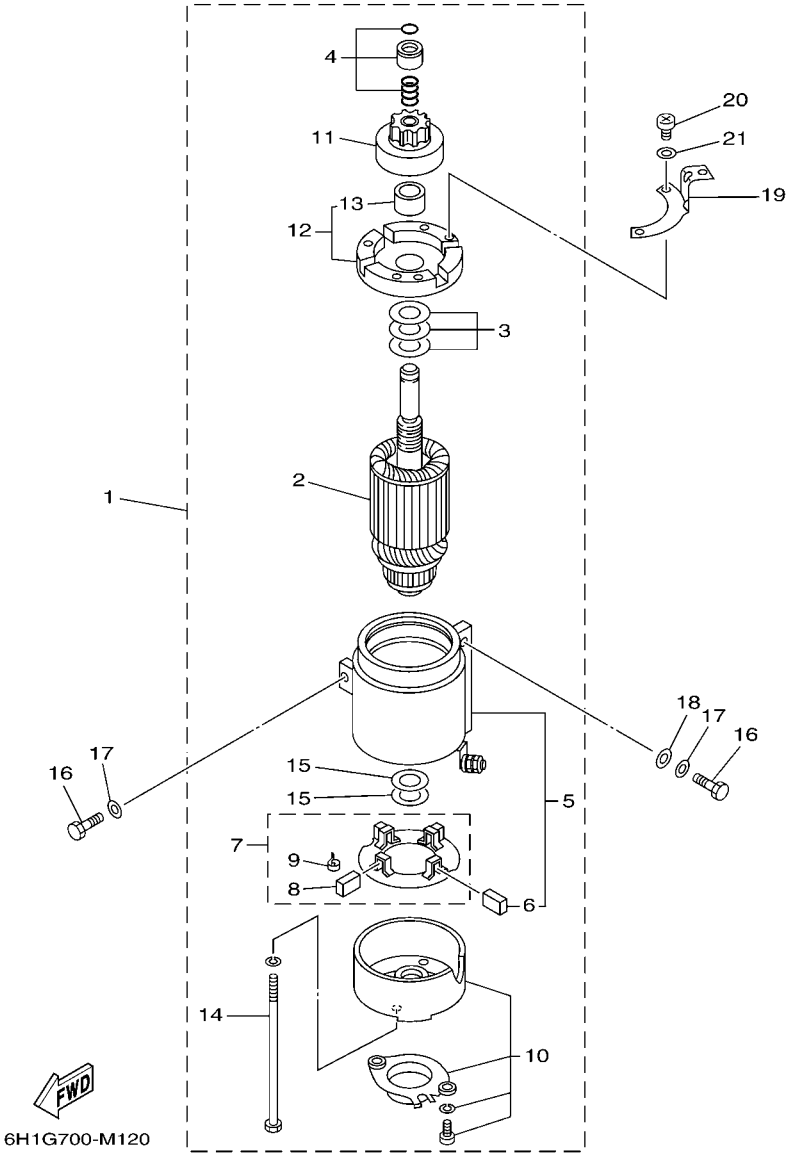

FIG. 11 STARTING MOTOR DEMARREUR ELECTRIQUE

REF. NO.	PART NO. N° PIECES	DESCRIPTION DESCRIPTION	67PD	6H1H				REMARKS REMARQUES
1	688–81800–12	STARTING MOTOR ASSY DEMARREUR ELECTRIQUE COMPLET	1	1				
2	676–81850–11	.ARMATURE ASSY .INDUIT	1	1				
3	676–81809–10	.WASHER KIT .JEU DE RONDELLES	1	1				
4	676–81857–10	.PINION STOPPER SET .BUTEE PIGNON	1	1				
5	688–81810–11	.STATOR ASSY .STATOR COMPLET	1	1				
6	663–81811–11	..BRUSH 1 ..CHARBON 1	2	2				
7	663–81840–11	.BRUSH HOLDER ASSY .SUPPORT DE CHARBON	1	1				
8	663–81812–11	..BRUSH 2 ..CHARBON 2	2	2				
9	663–81813–10	..SPRING, BRUSH ..RESSORT, DE CHARBON	4	4				
10	663–81820–12	.REAR BRACKET ASSY .SUPPORT ARRIERE COMPLET	1	1				
11	663–81832–11	.PINION ASSY .PIGNON D'ATTAQUE (ENS.)	1	1				
12	688–81830–11	.FRONT BRACKET ASSY .SUPPORT AVANT	1	1				
13	688–81831–00	..METAL, FRONT ..METAL, AVANT	1	1				
14	663–81826–10	.BOLT .BOULON	2	2				
15	688–81824–10	.WASHER 2 .RONDELLE 2	2	2				
16	97013–08030	BOLT BOULON	3	3				
17	92903–08600	WASHER, PLATE RONDELLE, PLATE	3	3				
18	92990–08600	WASHER, PLATE RONDELLE, PLATE	2	2				
19	6H1–15771–00	STAY 1 SUPPORT 1	1	1				
20	97885–04010	SCREW, PAN HEAD VIS, A ENCOCHE	3	3				
21	92995–04600	WASHER RONDELLE	3	3				

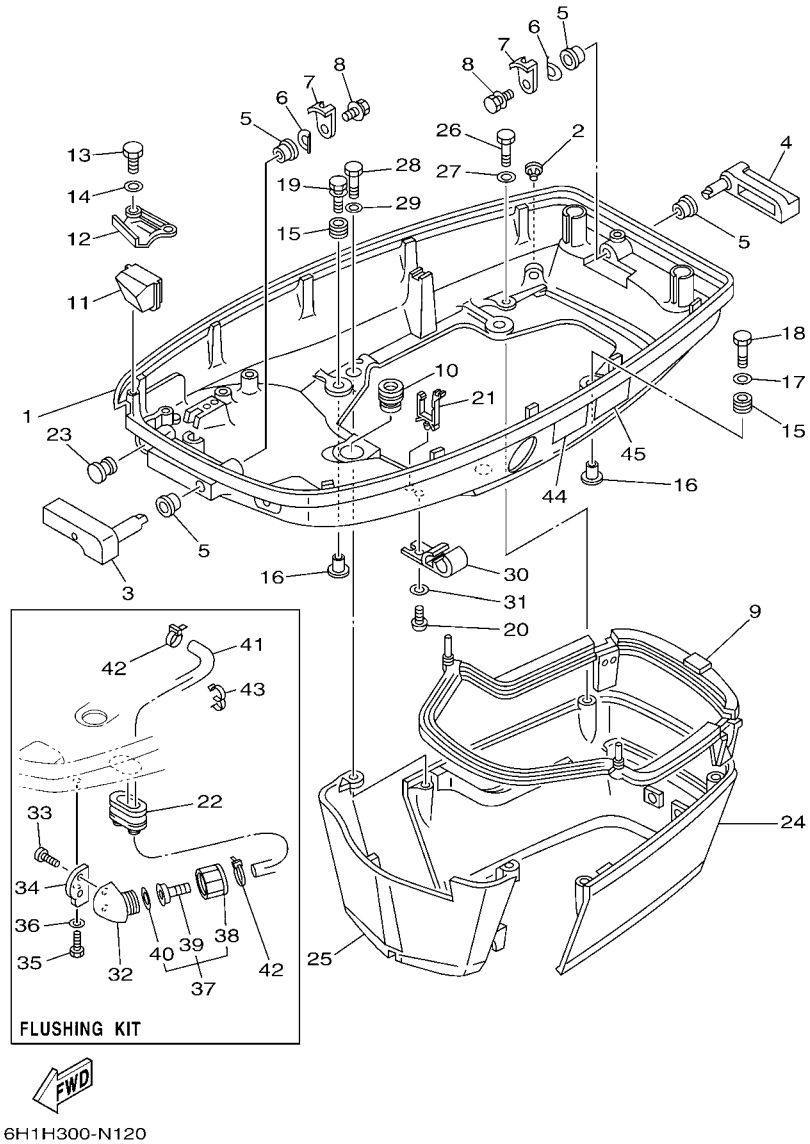

FIG. 12 BOTTOM COWLING CAPOT INFERIEUR

REF. NO.	PART NO. N° PIECES	DESCRIPTION DESCRIPTION	67PD	6H1H				REMARKS REMARQUES
1	6H1–42711–10–8D	COWLING, BOTTOM 1 CUVETTE 1	1	1				FLUSHING KIT FLUSHING KIT
2	6BL–44391–00	NIPPLE, HOSE RACCORD D'ESSENCE	1	1				
3	688–42815–01–8D	LEVER, CLAMP LEVIER, PRESSE	1	1				
4	688–42817–01–8D	LEVER, CLAMP LEVIER, PRESSE	1	1				
5	90386–13M38	BUSH DOUILLE	4	4				
6	90206–13019	WASHER, WAVE RONDELLE, ONDULEE	2	2				
7	688–42816–00	LEVER, CLAMP LEVIER, PRESSE	2	2				
8	90119–06M09	BOLT, WITH WASHER BOULON, AVEC RONDELLE	2	2				
9	688–42716–02	RUBBER, SEAL 1 JOINT EN CAOUTCHOUC 1	1	1				
10	663–42724–00	GROMMET PASSE-FIL	1	1				
11	688–42725–20	GROMMET PASSE-FIL	1	1				
12	688–42738–01–8D	PLATE, FITTING ETRIER	1	1				
13	97095–06016	BOLT BOULON	2	2				
14	92995–06600	WASHER RONDELLE	2	2				
15	6BG–42748–00	GROMMET PASSE-FIL	4	4				
16	90387–06M69	COLLAR COLLERETTE	4	4				
17	90201–06416	WASHER, PLATE RONDELLE, PLATE	1	1				
18	97095–06030	BOLT BOULON	1	1				
19	90119–06M61	BOLT, WITH WASHER BOULON, AVEC RONDELLE	3	3				
20	90157–06M01	SCREW, PAN HEAD VIS, TETE TRONCONIQUE	1	1				
21	90464–15M08	CLAMP BRIDE	1	1				
22	6H1–42726–21	GROMMET PASSE-FIL	1	1				FLUSHING KIT FLUSHING KIT
23	6G1–42748–00	GROMMET PASSE-FIL	1	1				
24	688–42741–01–8D	APRON CAPOT LATERAL	1	1				
25	688–42771–01–8D	APRON CAPOT LATERAL	1	1				
26	97095–06020	BOLT BOULON	2	2				
27	92995–06600	WASHER RONDELLE	2	2				

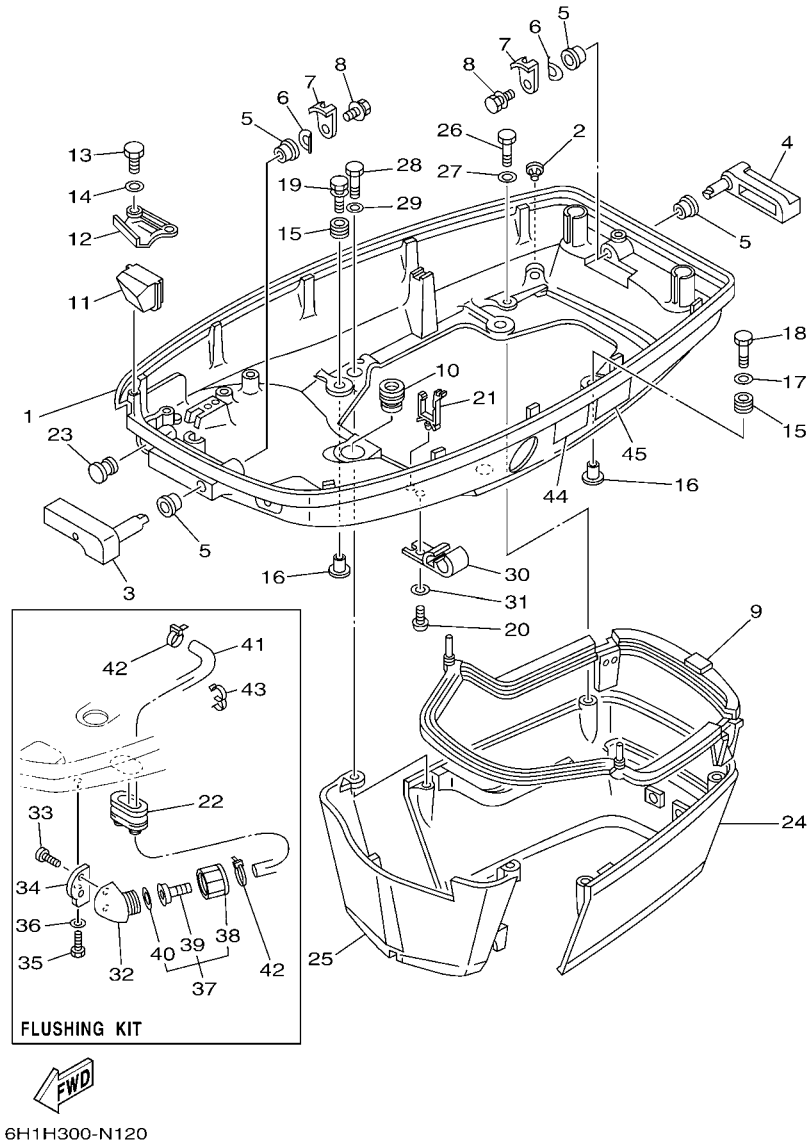

FIG. 12 BOTTOM COWLING CAPOT INFERIEUR

REF. NO.	PART NO. N° PIECES	DESCRIPTION DESCRIPTION	67PD	6H1H				REMARKS REMARQUES
28	97095–06030	BOLT BOULON	2	2				
29	92995–06600	WASHER RONDELLE	2	2				
30	6E5–24367–01	CLAMP, FUEL PIPE 2 COLLIER DE DURITE A ESSENCE	1	1				
31	92990–06600	WASHER, PLATE RONDELLE, PLATE	1	1				
32	68T–12572–00	ADAPTER ADAPTATEUR	1	1				FLUSHING KIT FLUSHING KIT
33	90167–06002	SCREW, TAPPING VIS, TETE FRAISEE	2	2				FLUSHING KIT FLUSHING KIT
34	6H1–12535–00	PLATE PLAQUE	1	1				FLUSHING KIT FLUSHING KIT
35	97095–06020	BOLT BOULON	1	1				FLUSHING KIT FLUSHING KIT
36	92995–06600	WASHER RONDELLE	1	1				FLUSHING KIT FLUSHING KIT
37	6R3–12580–00	JOINT ASSY ARTICULER (ENS.)	1	1				FLUSHING KIT FLUSHING KIT
38	6R3–12581–00	.JOINT, HOSE 1 .JOINT DE TUYAU	1	1				
39	6R3–12582–00	.JOINT, HOSE 2 .RACCORD DE TUYAU 1	1	1				
40	6R3–12583–00	.GASKET, HOSE JOINT .JOINT	1	1				
41	6H1–24312–01	PIPE 2 DURITE 2	1	1				FLUSHING KIT FLUSHING KIT
42	90465–11M10	CLAMP BRIDE	2	2				FLUSHING KIT FLUSHING KIT
43	90464–09M31	CLAMP BRIDE	1	1				FLUSHING KIT FLUSHING KIT
44	6AH–42794–40	LABEL, WARNING (GENERAL) ETIQUETTE, AVERTISSEMENT	1	1				
45	6AH–42794–50	LABEL, WARNING (GENERAL) ETIQUETTE, AVERTISSEMENT	1	1				

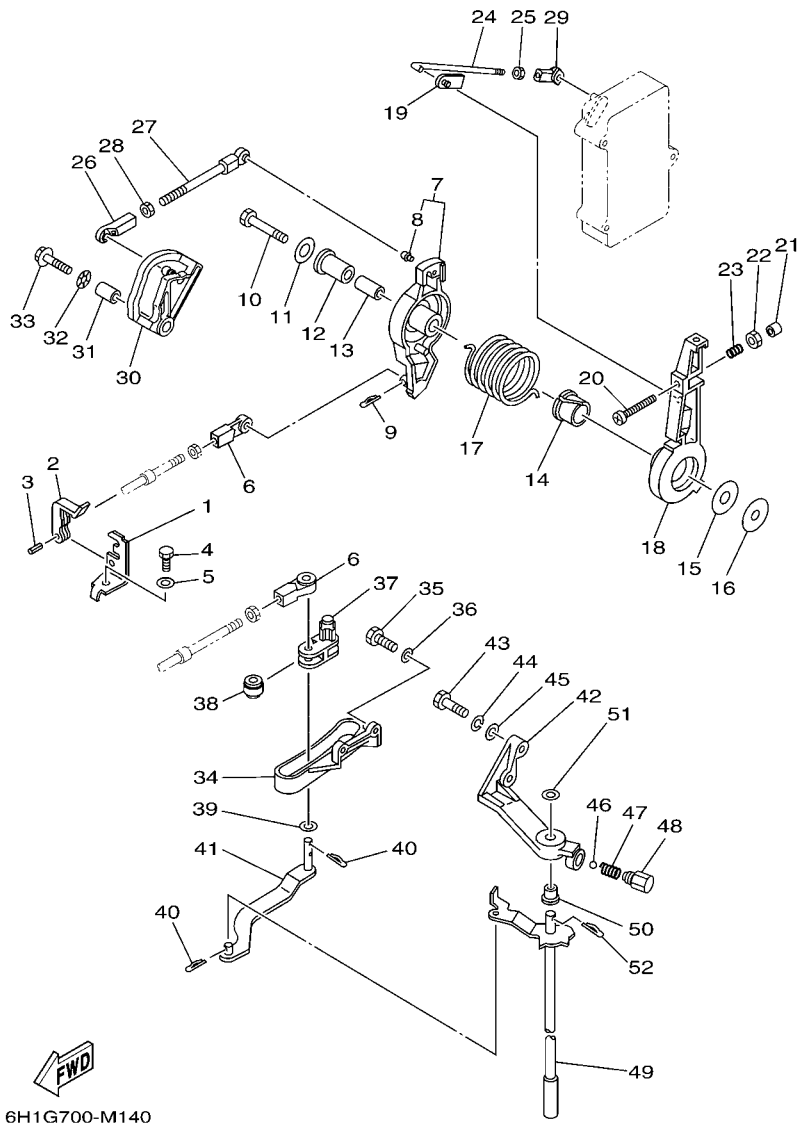

FIG. 13 CONTROL COMMANDE

REF. NO.	PART NO. N° PIECES	DESCRIPTION DESCRIPTION	67PD	6H1H				REMARKS REMARQUES
1	663–48531–00	BRACKET, REMOTE CONTROL ETRIER 1, COMMANDE A DISTANCE	1	1				
2	663–48538–00	CLAMP, CABLE 1 COLLIER	1	1				
3	91690–30012	PIN, SPRING AGRAFFE	1	1				
4	97095–08016	BOLT BOULON	1	1				
5	92995–08600	WASHER RONDELLE	1	1				
6	663–48344–00	CABLE END, REMOTE CONTROL CHAPE CABLE	2	2				
7	688–41632–01–1S	LEVER, MAGNETO CONTROL LEVIER, COMMANDE D'AVANCE	1	1				
8	662–41214–01	.JOINT 1 .RACCORD 1	1	1				
9	90468–18008	CLIP JONC	1	1				
10	97095–08045	BOLT BOULON	1	1				
11	90201–08M23	WASHER, PLATE RONDELLE, PLATE	1	1				
12	90386–12089	BUSH DOUILLE	1	1				
13	90387–08M16	COLLAR COLLERETTE	1	1				
14	90386–22M13	BUSH DOUILLE	1	1				
15	90202–12092	WASHER, PLATE RONDELLE, PLATE	1	1				
16	90201–08M13	WASHER, PLATE RONDELLE, PLATE	1	1				
17	90508–29M05	SPRING, TORSION RESSORT, TORSION	1	1				
18	688–41631–01–1S	LEVER, MAGNETO CONTROL LEVIER, COMMANDE D'AVANCE	1	1				
19	6F5–41237–00	JOINT, LINK RACCORD	1	1				
20	90157–06013	SCREW, PAN HEAD VIS, TETE TRONCONIQUE	1	1				
21	688–44194–00	CAP CAPUCHON	1	1				
22	95303–06600	NUT ECROU	1	1				
23	90501–16M12	SPRING, COMPRESSION RESSORT, COMPRESSION	1	1				
24	6H1–41636–00	ROD, MAGNETO CONTROL BIELLETTE, COMMANDE D'AVANCE	1	1				
25	95380–05600	NUT ECROU	1	1				
26	662–41237–01	JOINT, LINK RACCORD	1	1				
27	688–41211–01	LINK, ACCEL. BIELLETTE, ACCELERATION	1	1				

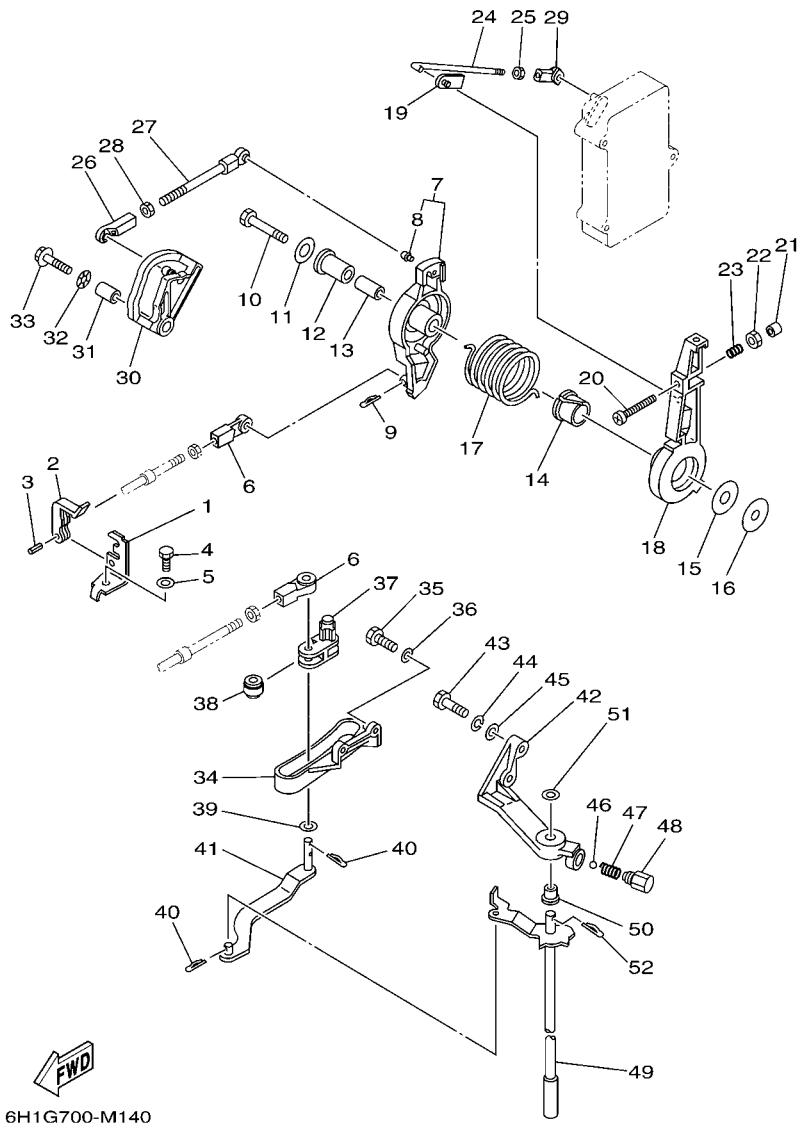

FIG. 13 CONTROL COMMANDE

REF. NO.	PART NO. N° PIECES	DESCRIPTION DESCRIPTION	67PD	6H1H				REMARKS REMARQUES
28	95380–05600	NUT ECROU	1	1				
29	682–41237–00	JOINT, LINK RACCORD	1	1				
30	6H1–41213–01	CAM, ACCEL. CAME, ACCELERATION	1	1				
31	90387–06M17	COLLAR COLLERETTE	1	1				
32	90206–10M04	WASHER, WAVE RONDELLE, ONDULEE	1	1				
33	90119–06M24	BOLT, WITH WASHER BOULON, AVEC RONDELLE	1	1				
34	688–44117–00–94	BRACKET SUPPORT	1	1				
35	97013–06020	BOLT BOULON	2	2				
36	92903–06600	WASHER, PLATE RONDELLE, PLATE	2	2				
37	688–44124–00	LINK, SHIFT ROD BIELLETTE	1	1				
38	688–44122–00	BUSHING, SHIFT ROD LEVER DOUILLE, LEVIER D'EMBRAYAGE	1	1				
39	90202–07M07	WASHER, PLATE RONDELLE, PLATE	1	1				
40	90468–18008	CLIP JONC	3	3				
41	6H1–44121–00	LEVER, SHIFT ROD LEVIER, TIGE D'INVERSION	1	1				
42	688–44118–01–94	BRACKET SUPPORT	1	1				
43	97013–08030	BOLT BOULON	2	2				
44	92903–08100	WASHER, SPRING RONDELLE, GROWER	2	2				
45	92903–08600	WASHER, PLATE RONDELLE, PLATE	2	2				
46	93501–04M02	BALL BILLE	1	1				
47	90501–12082	SPRING, COMPRESSION RESSORT, COMPRESSION	1	1				
48	648–42715–00	BUSHING COUSSINET	1	1				
49	6H1–44120–13	HANDLE GEAR SHIFT ASSY LEVIER D'EMBRAYAGE	1	1				L(20.3") L(20.3")
50	90386–07M58	BUSH DOUILLE	1	1				
51	92990–08200	WASHER, PLAIN RONDELLE, PLATE	1	1				
52	90468–18008	CLIP JONC	1	1				

FIG. 14 BRACKET 1 SUPPORT 1

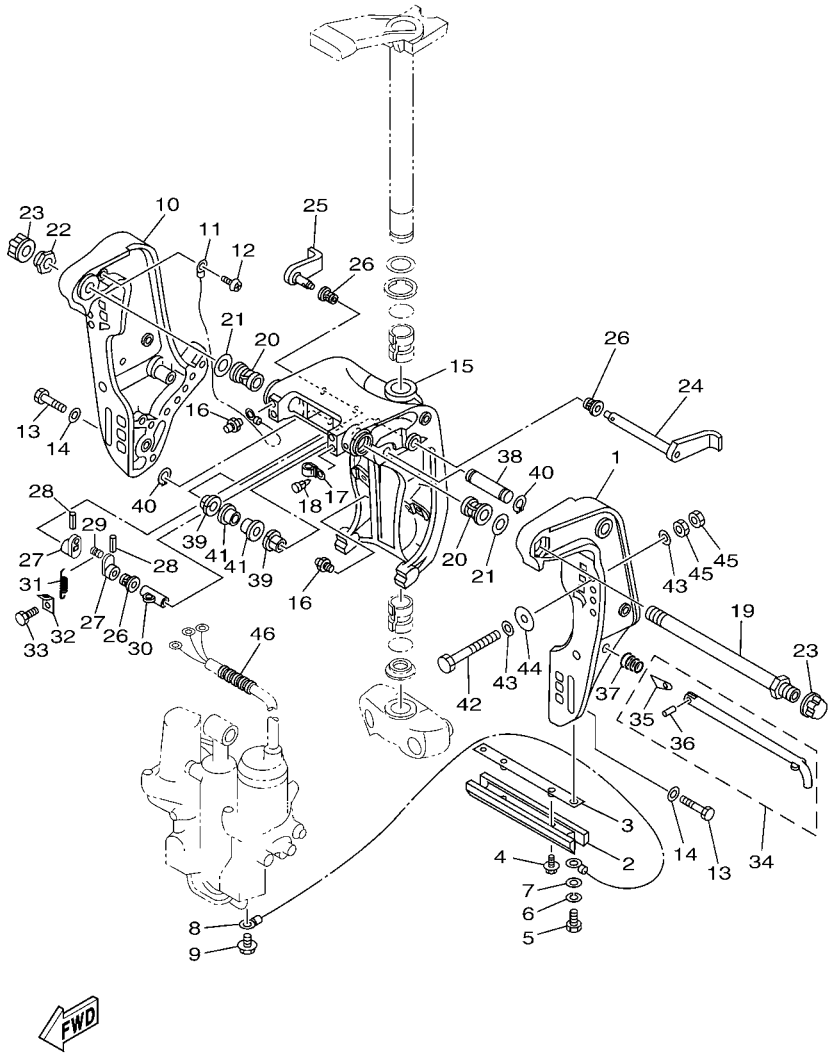

REF. NO.	PART NO. N° PIECES	DESCRIPTION DESCRIPTION	67PD	6H1H				REMARKS REMARQUES
1	6H1–43111–01–8D	BRACKET, CLAMP 1 PRESSE 1	1	1				
2	6H1–45251–03	ANODE ANODE	1	1				
3	6H1–44526–00	PLATE PLAQUE	1	1				
4	90119–06M29	BOLT, WITH WASHER BOULON, AVEC RONDELLE	2	2				
5	97095–06016	BOLT BOULON	2	2				
6	92995–06100	WASHER, SPRING RONDELLE, GROWER	2	2				
7	92995–06600	WASHER RONDELLE	2	2				
8	6H1–82148–00	WIRE, LEAD 4 FIL 4	1	1				
9	97595–06510	BOLT, WITH WASHER VIS HEXAGONAL AVC RONDELLE	1	1				
10	6H1–43112–00–8D	BRACKET, CLAMP 2 PRESSE 2	1	1				
11	6E5–82148–00	WIRE, LEAD 4 FIL 4	1	1				
12	97880–06012	SCREW, PAN HEAD VIS, TETE TRONCONIQUE	1	1				
13	97095–10045	BOLT BOULON	6	6				
14	92995–10600	WASHER RONDELLE	6	6				
15	6H1–43311–02–8D	BRACKET, SWIVEL 1 SUPPORT, PIVOT 1	1	1				
16	93700–06M03	NIPPLE, GREASE PION	3	3				
17	90464–11M18	CLAMP BRIDE	1	1				
18	90338–05M03	PLUG PLOT	1	1				
19	688–43131–03	BOLT, CLAMP BRACKET BOULON, PRESSE	1	1				
20	90386–22M15	BUSH DOUILLE	2	2				
21	90201–22M67	WASHER, PLATE RONDELLE, PLATE	2	2				
22	90185–22M11	NUT, SELF-LOCKING ECROU,AUTO-BLOQUANT	1	1				
23	6G5–43145–01	CAP, CLAMP BRACKET CAPUCHON, PRESSE	2	2				
24	6H1–43181–01	LEVER, TILT STOP 1 LEVIER VERROUILLAGE RELEVAGE 1	1	1				
25	6H1–43185–01	LEVER, TILT STOP 2 LEVIER VERROUILLAGE RELEVAGE 2	1	1				
26	90386–10M16	BUSH DOUILLE	3	3				
27	6G5–43148–00	COLLAR, DISTANCE ENTRETOISE	2	2				

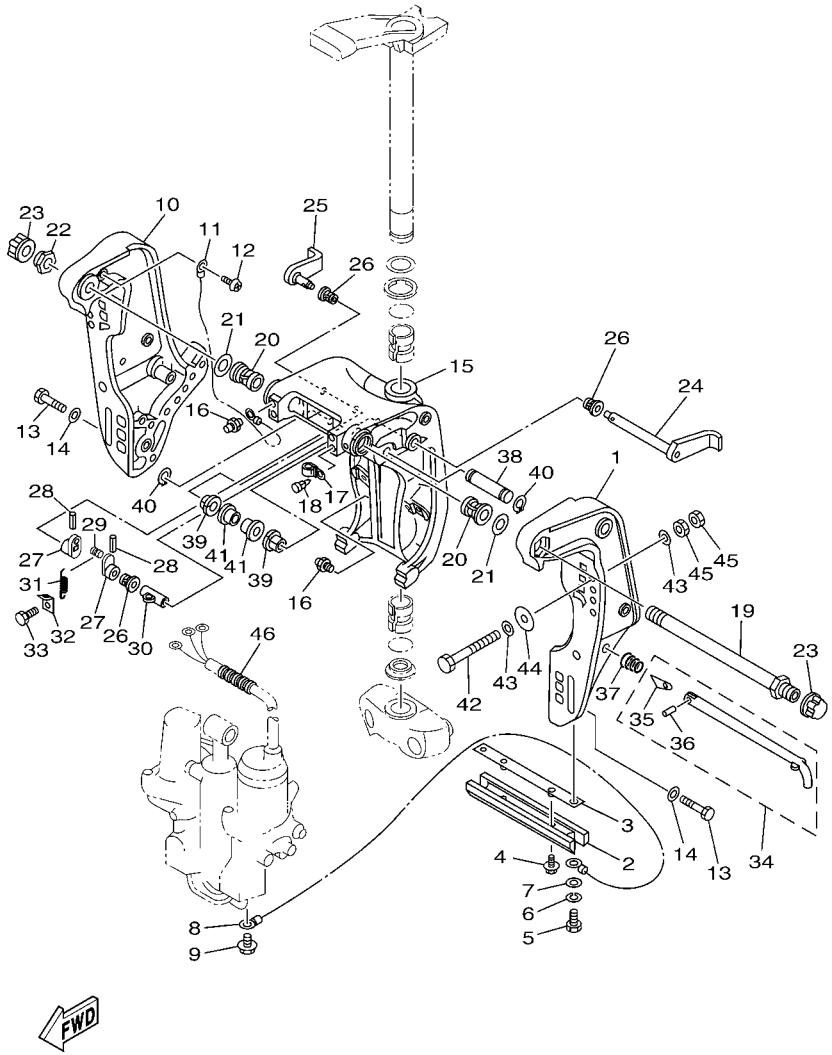

FIG. 14 BRACKET 1 SUPPORT 1

REF. NO.	PART NO. N° PIECES	DESCRIPTION DESCRIPTION	67PD	6H1H				REMARKS REMARQUES
28	91690–30020	PIN, SPRING AGRAFFE	2	2				
29	90249–06M19	PIN GOUPILLE	1	1				
30	90387–10M02	COLLAR COLLERETTE	1	1				
31	90506–14M24	SPRING, TENSION RESSORT, TENSION	1	1				
32	6G5–43144–00	HOOK, SPRING CROCHET	1	1				
33	97095–06010	BOLT BOULON	1	1				
34	688–43160–01	TILT ROD ASSY BROCHE D'INCLINAISON (ENS.)	1	1				
35	688–43165–00	.PLATE, TILT LOCK .TAQUET, BROCHE INCLINAISON	1	1				
36	91690–30012	.PIN, SPRING .AGRAFFE	1	1				
37	90502–16M02	SPRING, CONICAL RESSORT, CONIQUE	1	1				
38	6E5–43126–10	PIN, UPPER SHOCK MOUNT AXE, SUPERIEUR AMORTISSEUR	1	1				
39	90386–18M35	BUSH DOUILLE	2	2				
40	93410–18M05	CIRCLIP CLIPS	2	2				
41	90386–18M63	BUSH DOUILLE	2	2				
42	90101–12M65	BOLT BOULON	4	4				
43	90201–12062	WASHER, PLATE RONDELLE, PLATE	8	8				
44	90201–12426	WASHER, PLATE RONDELLE, PLATE	4	4				
45	95380–12600	NUT ECROU	8	8				
46	90440–14M00	PIPE DURITE	1	1				

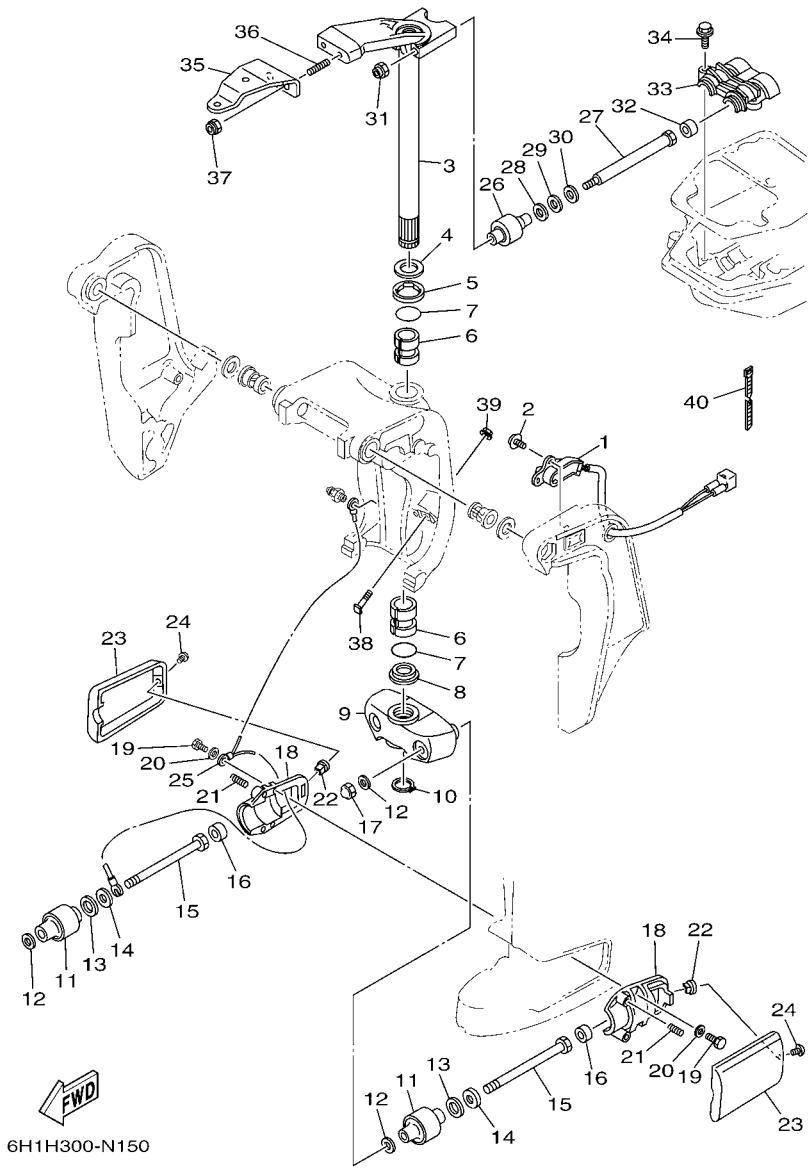

FIG. 15 BRACKET 2 SUPPORT 2

REF. NO.	PART NO. N° PIECES	DESCRIPTION DESCRIPTION	67PD	6H1H				REMARKS REMARQUES
1	6H1–83672–21	TRIM SENDER INCLINER RACCORD	1	1				
2	97985–06216	SCREW, WITH WASHER VIS, AVEC RONDELLE	2	2				
3	688–42510–03–8D	STEERING BRACKET ASSY DIRECTION SUPPORT (ENS.)	1	1				
4	90201–30M00	WASHER, PLATE RONDELLE, PLATE	1	1				
5	90386–30M78	BUSH DOUILLE	1	1				
6	90386–30M77	BUSH DOUILLE	2	2				
7	93210–29M94	O-RING JOINT TORIQUE	2	2				
8	90386–30M60	BUSH DOUILLE	1	1				
9	663–44551–02–8D	HOUSING, LOWER MOUNT RUBBER 1 BOITIER, SILENT-BLOC INFERIEUR	1	1				
10	93410–28M06	CIRCLIP CLIPS	1	1				
11	687–44555–00	MOUNT DAMPER, LOWER SIDE SILENT-BLOC, INFERIEUR LATERAL	2	2				
12	90201–12M16	WASHER, PLATE RONDELLE, PLATE	4	4				
13	90202–25M04	WASHER, PLATE RONDELLE, PLATE	2	2				
14	90201–13M19	WASHER, PLATE RONDELLE, PLATE	2	2				
15	90109–12261	BOLT BOULON	2	2				
16	663–44575–00	DAMPER, LOWER MOUNT RUBBER SILENT-BLOC, INFERIEUR	2	2				
17	95380–12800	NUT, CROWN ECROU, BORGNE	2	2				
18	687–44552–02	HOUSING, LOWER MOUNT RUBBER 2 BOITIER, SILENT-BLOC INFERIEUR	2	2				
19	97075–08025	BOLT BOULON	4	4				
20	92995–08600	WASHER RONDELLE	4	4				
21	90501–14M08	SPRING, COMPRESSION RESSORT, COMPRESSION	4	4				
22	90179–06066	NUT ECROU	2	2				
23	663–44553–01–8D	COVER, LOWER MOUNT COUVERCLE, SUSPENSION INFERIEU	2	2				
24	97885–06016	SCREW, PAN HEAD VIS, A ENCOCHE	2	2				
25	688–82127–02	WIRE, LEAD 2 FIL 2	1	1				
26	688–44514–00	MOUNT DAMPER, UPPER SIDE SILENT-BLOC, SUPERIEUR LATERAL	2	2				
27	90101–10041	BOLT BOULON	2	2				

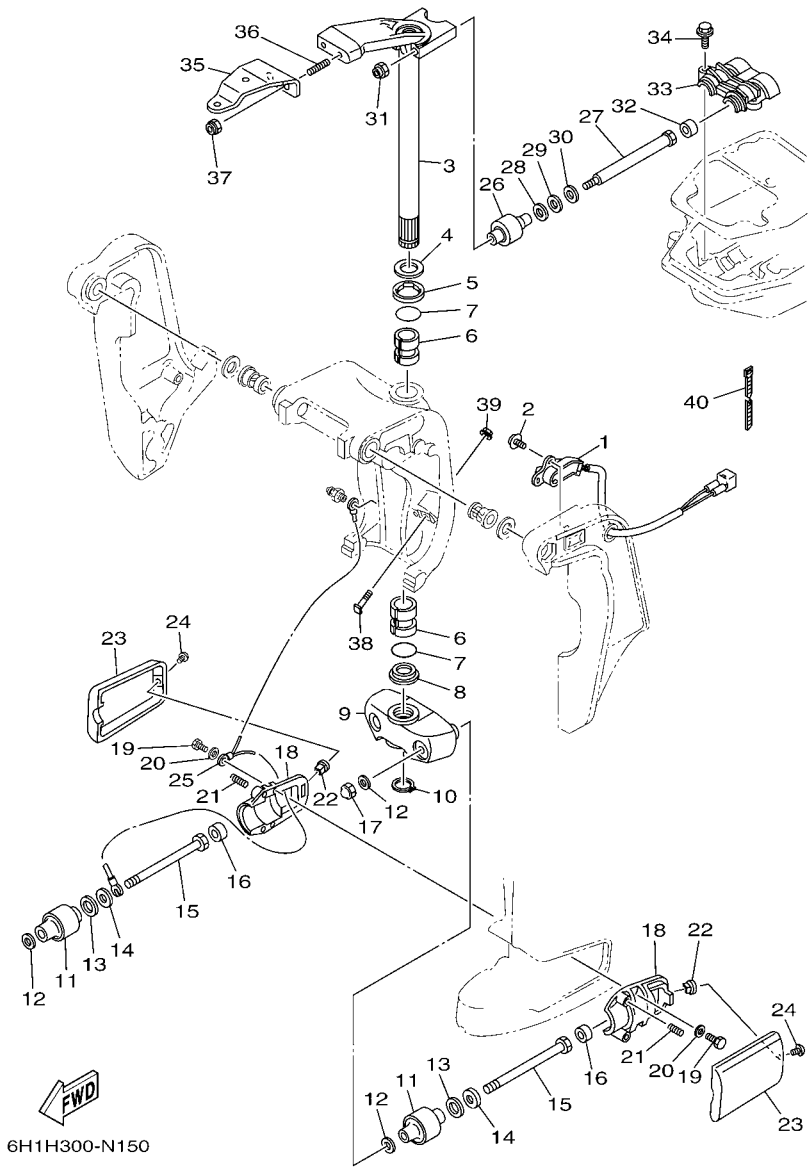

FIG. 15 BRACKET 2 SUPPORT 2

REF. NO.	PART NO. N° PIECES	DESCRIPTION DESCRIPTION	67PD	6H1H				REMARKS REMARQUES
28	90201–20M21	WASHER, PLATE RONDELLE, PLATE	2	2				
29	90202–20M06	WASHER, PLATE RONDELLE, PLATE	2	2				
30	90201–11M22	WASHER, PLATE RONDELLE, PLATE	2	2				
31	90185–10027	NUT, SELF-LOCKING ECROU,AUTO-BLOQUANT	2	2				
32	663–44575–00	DAMPER, LOWER MOUNT RUBBER SILENT-BLOC, INFERIEUR	2	2				
33	688–44511–00	COVER, UPPER MOUNT COUVERCLE, SUSPENSION SUPERIEU	1	1				
34	97575–08535	BOLT, WITH WASHER VIS HEXAGONAL AVC RONDELLE	3	3				
35	688–48511–12	HOOK, STEERING ATTACHE, DIRECTION	1	1				STEERING GUIDE STEERING GUIDE
36	90116–10062	BOLT, STUD GOUJON	2	2				
37	90185–10027	NUT, SELF-LOCKING ECROU,AUTO-BLOQUANT	2	2				
38	6H1–43376–00	BOLT, THRUST RECEIVER BOULON		2				
39	90185–08057	NUT, SELF-LOCKING ECROU,AUTO-BLOQUANT		2				
40	90465–11M10	CLAMP BRIDE	3	3				

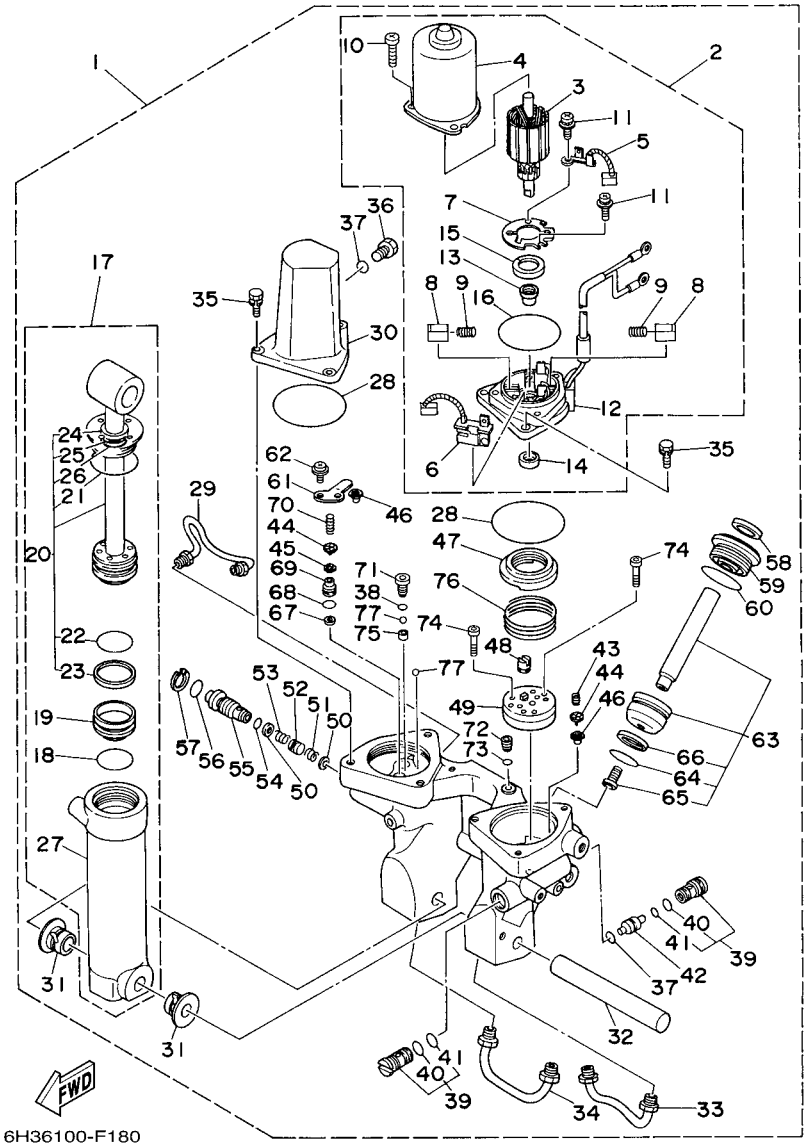

FIG. 16 POWER TRIM & TILT ASSY PUISSANCE PARER ET INCLINER

REF. NO.	PART NO. N° PIECES	DESCRIPTION DESCRIPTION	67PD	6H1H				REMARKS REMARQUES
1	6H1–43800–17–8D	POWER TRIM & TILT ASSY PUISSANCE PARER ET INCLINER (E	1	1				
2	6H1–43880–02	.MOTOR ASSY .MOTEUR (ENS.)	1	1				
3	6H1–43805–10	..ARMATURE ASSY ..INDUIT (ENS.)	1	1				
4	6H1–43804–10	..STATOR ASSY ..STATOR (ENS.)	1	1				
5	6H1–43891–10	..BRUSH 1 ..BALAI 1	1	1				
6	6H1–43892–10	..BREAKER COMP. (BRUSH 2) ..RUPTEUR COMP. (BALAI 2)	1	1				
7	6H1–4380F–10	..PLATE, BRUSH HOLDER ..PLAQUE	1	1				
8	6H1–4380J–10	..HOLDER, BRUSH ..PORTE-BALAI	2	2				
9	6H1–4386K–10	..SPRING, BRUSH ..RESSORT, BALAI	2	2				
10	97885–05016	..SCREW, PAN HEAD ..VIS, A ENCOCHE	3	3				
11	97607–04310	..SCREW, WITH WASHER ..VIS HEXAGONAL	2	2				
12	6H1–43881–10	..FRAME, END ..BATI	1	1				
13	6H1–4380H–10	..METAL ..METAL	1	1				
14	93102–08M43	..OIL SEAL ..JOINT SPY	1	1				
15	6H1–4380G–10	..PLATE ..PLAQUE	1	1				
16	6H1–43865–10	..O-RING ..JOINT TORIQUE	1	1				
17	6H1–43840–11	.POWER TILT ASSY .PUISSANCE INCLINER (ENS.)	1	1				
18	6H1–43861–10	..O-RING ..JOINT TORIQUE	1	1				
19	6H1–43814–11	..PISTON, FREE ..PISTON	1	1				
20	6H1–43810–11	..TILT PISTON SUB ASSY ..INCLINER PISTON AUXILIAIRE(ENS	1	1				
21	6H1–43861–00	...O-RING ...JOINT TORIQUE	1	1				
22	6H1–43861–10	...O-RING ...JOINT TORIQUE	1	1				
23	6H1–43871–10	...RING, BACK UP ...SEGMENT	1	1				
24	6H1–43812–00	...SEAL, DUST ...JOINT	1	1				
25	6H1–43872–10	...RING, BACK UP ...RESSORT	1	1				
26	6D8–43863–00	...O-RING ...JOINT TORIQUE	1	1				
27	6H1–43813–10	..CYLINDER, TILT ..CYLINDRE	1	1				

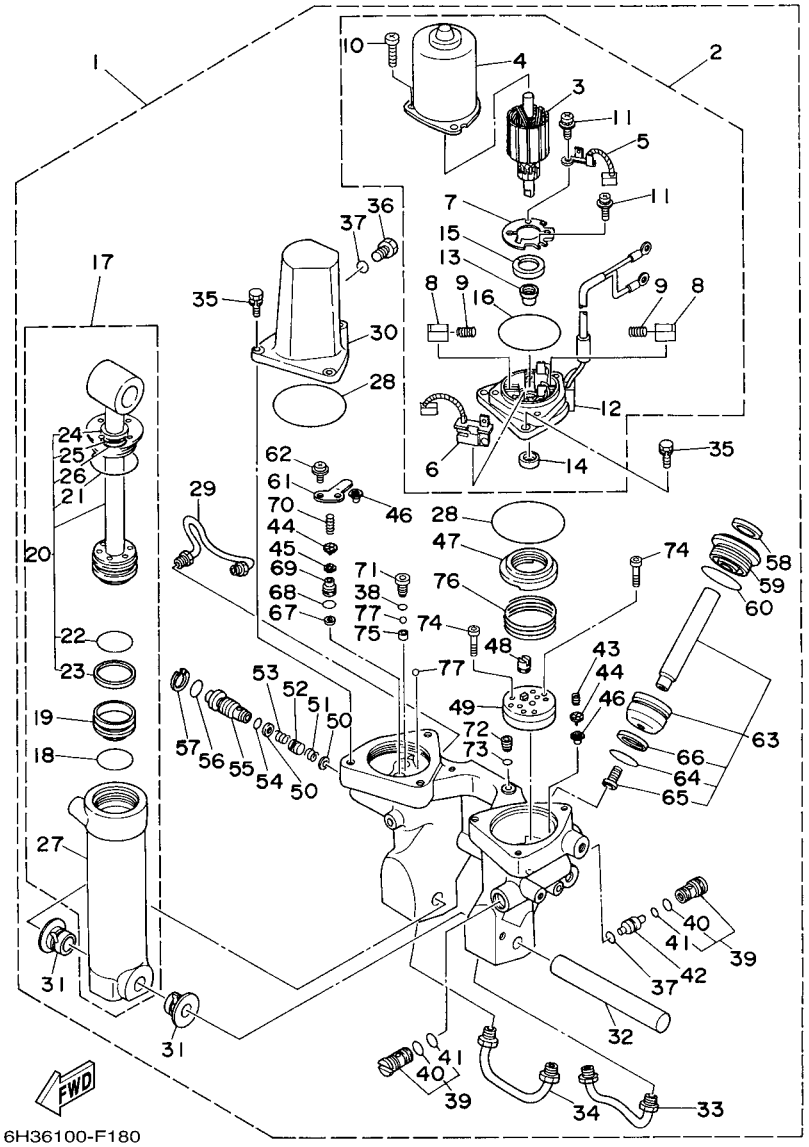

FIG. 16 POWER TRIM & TILT ASSY PUISSANCE PARER ET INCLINER

REF. NO.	PART NO. N° PIECES	DESCRIPTION DESCRIPTION	67PD	6H1H				REMARKS REMARQUES
28	93210–68N50	.O-RING .JOINT TORIQUE	2	2				
29	6H1–43835–10	.PIPE .TUYAU	1	1				
30	6H1–43828–10	.BODY, RESERVOIR .CORPS	1	1				
31	90386–18M14	.BUSH .DOUILLE	2	2				
32	6E5–43818–00	.PIN, LOWER SHOCK MOUNT .AXE, INFERIEUR AMORTISSEUR	1	1				
33	6H1–43833–10	.PIPE .TUYAU	1	1				
34	6H1–43834–00	.PIPE .TUYAU	1	1				
35	97595–06420	.BOLT, WITH WASHER .VIS HEXAGONAL AVC RONDELLE	6	6				
36	6H1–43829–00	.PLUG, RESERVOIR .BOUCHON	1	1				
37	93210–09165	.O-RING .JOINT TORIQUE	2	2				
38	93210–064A5	.O-RING .JOINT TORIQUE	1	1				
39	67F–43802–00	.VALVE SUB ASSY .CLAPET AUXILIAIRE (ENS.)	2	2				
40	6H1–43866–01	..O-RING ..JOINT TORIQUE	1	1				
41	6H1–43867–00	..O-RING ..JOINT TORIQUE	1	1				
42	6H1–43841–11	.PISTON, SHUTTLE .PISTON	1	1				
43	6H1–43856–10	.SPRING, DOWN RELIEF .RESSORT	1	1				
44	6H1–43844–10	.PIN, VALVE SUPPORT .GOUPILLE	2	2				
45	6H1–4384G–11	.SEAL, RELIEF VALVE .JOINT	1	1				
46	6H1–4384F–10	.SEAL, MAIN VALVE .JOINT	2	2				
47	6H1–43817–01	.FILTER 2 .FILTRE 2	1	1				
48	6H1–43831–10	.CONNECTOR, SHAFT .RACCORD	1	1				
49	6H1–43830–11	.GEAR PUMP ASSY .POMPE A PIGNON (ENS.)	1	1				
50	6H1–43847–00	.SEAT, MANUAL VALVE .SIEGE	2	2				
51	6H1–43899–00	.SPRING, MANUAL RELEASE .RESSORT	1	1				
52	6H1–4382A–10	.ADAPTOR 1 .ADAPTEUR 1	1	1				
53	6H1–43854–00	.SPRING, MANUAL RELEASE .RESSORT	1	1				
54	93210–10M74	.O-RING .JOINT TORIQUE	1	1				

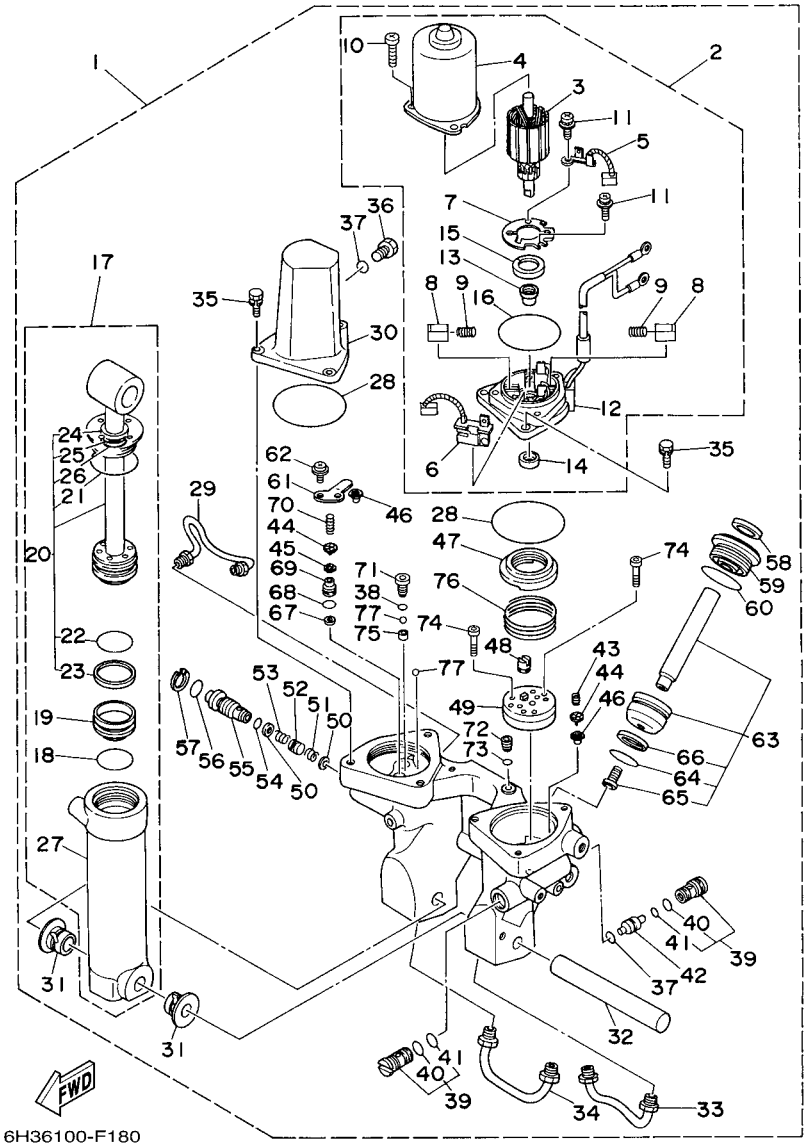

FIG. 16 POWER TRIM & TILT ASSY PUISSANCE PARER ET INCLINER

REF. NO.	PART NO. N° PIECES	DESCRIPTION DESCRIPTION	67PD	6H1H				REMARKS REMARQUES
55	6H1–43845–00	.SCREW, MANUAL RELEASE .VIS	1	1				
56	6D8–43863–00	.O-RING .JOINT TORIQUE	1	1				
57	6H1–43875–00	.RING, SNAP .RESSORT	1	1				
58	6H1–43822–10	.SEAL, TRIM DUST .JOINT	2	2				
59	6H1–43821–11	.SCREW, TRIM CYLINDER END .VIS	2	2				
60	6H1–43861–10	.O-RING .JOINT TORIQUE	2	2				
61	6H1–4384E–20	.SPRING, TRIM .RESSORT	1	1				
62	97602–05210	.SCREW, PAN HEAD WITH WASHER .VIS	2	2				
63	6H1–43820–11	.TRIM PISTON SUB ASSY .PARER PISTON AUXILIAIRE (ENS.)	2	2				
64	6H1–43864–00	..O-RING ..JOINT TORIQUE	1	1				
65	91318–08016	..BOLT, SOCKET HEAD ..BOULON	1	1				
66	6H1–43874–00	..RING, BACK UP ..RESSORT	1	1				
67	6H1–43816–00	.FILTER 1 .FILTRE 1	1	1				
68	93210–11368	.O-RING .JOINT TORIQUE	1	1				
69	6H1–43895–12	.SEAT, RELIEF VALVE .SIEGE	1	1				
70	6H1–43855–11	.SPRING, UP RELIEF .RESSORT	1	1				
71	6H1–43843–11	.SCREW, VALVE LOCK .VIS	1	1				
72	6H1–4388E–11	.PLUG, TAPER SCREW .BOUCHON	1	1				
73	6H1–43868–00	.O-RING .JOINT TORIQUE	1	1				
74	91318–04025	.BOLT .BOULON	4	4				
75	6H1–4387J–00	.WASHER, SPECIAL 2 .RONDELLE	1	1				
76	6H1–4385H–00	.SPRING, SEAL .RESSORT	1	1				
77	93505–32038	.BALL .BILLE	2	2				

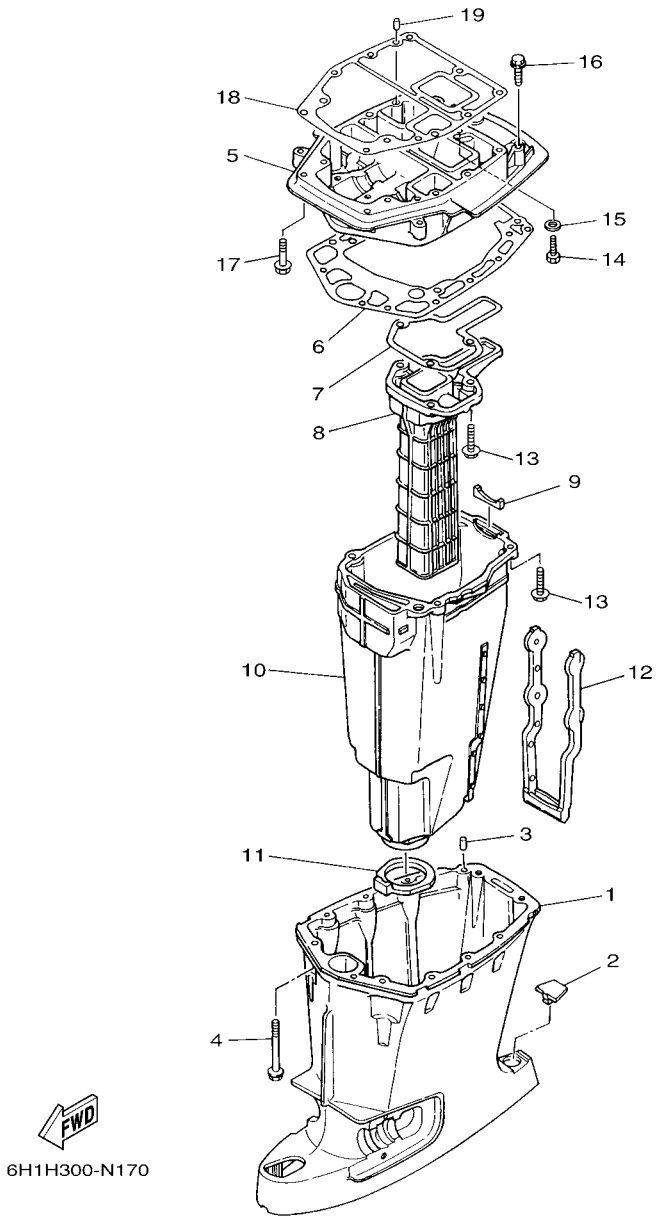

FIG. 17 UPPER CASING FOURREAU

REF. NO.	PART NO. N° PIECES	DESCRIPTION DESCRIPTION	67PD	6H1H				REMARKS REMARQUES
1	688–45111–04–8D	CASING, UPPER FOURREAU	1	1				
2	663–45155–10	CAP CAPUCHON	1	1				
3	93606–12019	PIN, DOWEL GOUPILLE	2	2				
4	90119–08M80	BOLT, WITH WASHER BOULON, AVEC RONDELLE	8	8				
5	688–41137–03–CA	GUIDE, EXHAUST COLLECTEUR D'ECHAPPEMENT	1	1				
6	688–45114–A1	GASKET, UPPER CASING JOINT, TUBE D'ARBRE	1	1				
7	688–41134–A0	GASKET, EXHAUST MANIFOLD JOINT, PIPE D'ECHAPPEMENT	1	1				
8	692–41131–00–CA	MANIFOLD, EXT. 1 PIPE D'ECHAPPEMENT	1					
	688–41131–00–CA	MANIFOLD, EXT. 1 PIPE D'ECHAPPEMENT		1				
9	688–41133–00	GASKET, EXHAUST MANIFOLD 1 JOINT, PIPE D'ECHAPPEMENT	1	1				
10	688–14711–01–CA	MUFFLER 1 POT D'ECHAPPEMENT 1	1	1				
11	688–45123–00	GASKET, MUFFLER JOINT, POT DE DETENTE	1	1				
12	663–14737–10	DAMPER, MUFFLER AMORTISSEUR DE POT D'ECHAPPT	1	1				
13	97575–08530	BOLT, WITH WASHER VIS HEXAGONAL AVC RONDELLE	7	7				
14	97075–08025	BOLT BOULON	1	1				
15	92995–08600	WASHER RONDELLE	1	1				
16	90119–08102	BOLT, WITH WASHER BOULON, AVEC RONDELLE	2	2				
17	97575–08535	BOLT, WITH WASHER VIS HEXAGONAL AVC RONDELLE	2	2				
18	688–45113–A0	GASKET, UPPER CASING JOINT, TUBE D'ARBRE	1	1				
19	93606–12019	PIN, DOWEL GOUPILLE	2	2				

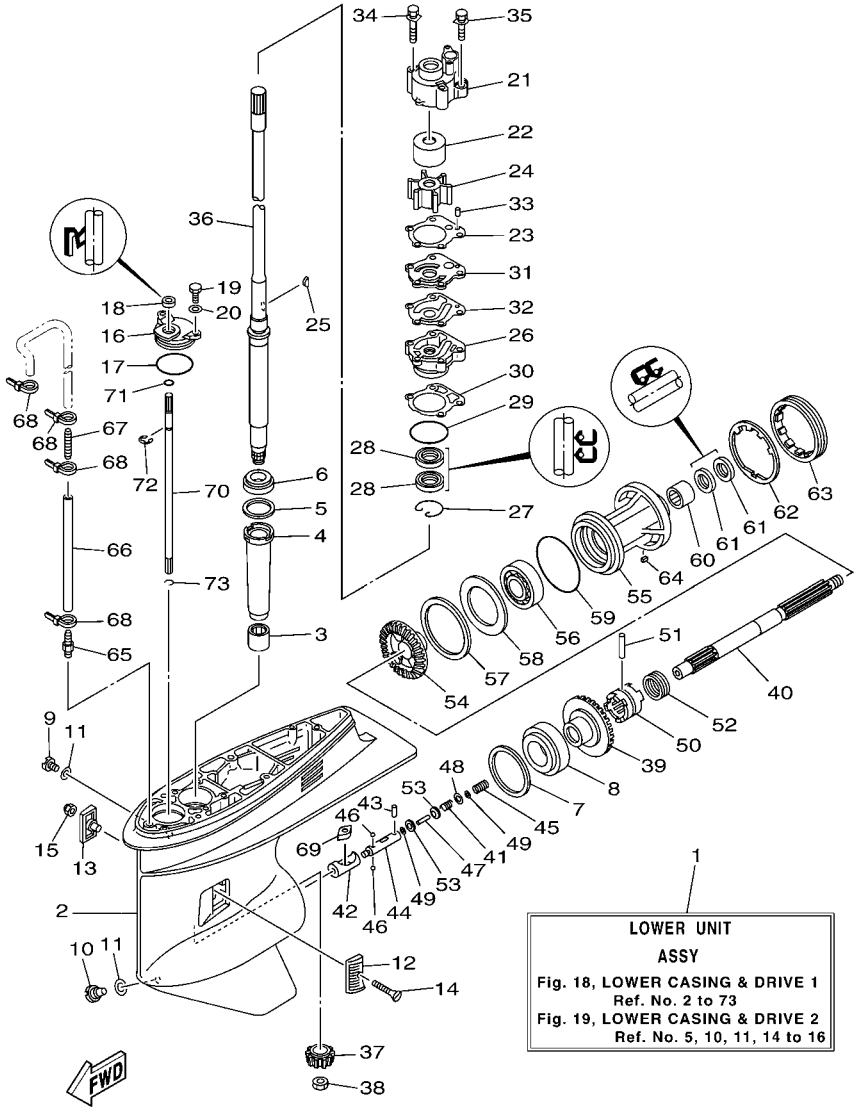

FIG. 18 LOWER CASING & DRIVE 1 BOITIER D'HELICE TRANSMISSION1

REF. NO.	PART NO. N° PIECES	DESCRIPTION DESCRIPTION	67PD	6H1H				REMARKS REMARQUES
1	6H1–45300–16–8D	LOWER UNIT ASSY UNITE INFERIEURE (ENS.)	1	1				L(20.3") L(20.3")
2	6H1–45301–03–8D	CASING, LOWER BEQUILLE	1	1				
3	93315–325V1	BEARING ROULEMENT	1	1				
4	688–45536–01	SLEEVE, DRIVE SHAFT MANCHON, ARBRE MOTEUR	1	1				
5	688–45587–01	SHIM (T:0.10MM) CALE (T:0.10MM)	1	1				UR UR
	688–45587–10	SHIM (T:0.12MM) CALE (T:0.12MM)	1	1				UR UR
	688–45587–20	SHIM (T:0.15MM) CALE (T:0.15MM)	1	1				UR UR
	688–45587–30	SHIM (T:0.18MM) CALE (T:0.18MM)	1	1				UR UR
	688–45587–40	SHIM (T:0.30MM) CALE (T:0.30MM)	1	1				UR UR
	688–45587–50	SHIM (T:0.40MM) CALE (T:0.40MM)	1	1				UR UR
	688–45587–60	SHIM (T:0.50MM) CALE (T:0.50MM)	1	1				UR UR
6	93332–000U3	BEARING ROULEMENT	1	1				
7	688–45567–01	SHIM (T:0.10MM) CALE (T:0.10MM)	1	1				UR UR
	688–45567–10	SHIM (T:0.12MM) CALE (T:0.12MM)	1	1				UR UR
	688–45567–20	SHIM (T:0.15MM) CALE (T:0.15MM)	1	1				UR UR
	688–45567–30	SHIM (T:0.18MM) CALE (T:0.18MM)	1	1				UR UR
	688–45567–40	SHIM (T:0.30MM) CALE (T:0.30MM)	1	1				UR UR
	688–45567–50	SHIM (T:0.40MM) CALE (T:0.40MM)	1	1				UR UR
	688–45567–60	SHIM (T:0.50MM) CALE (T:0.50MM)	1	1				UR UR
8	93332–000W7	BEARING ROULEMENT	1	1				
9	90340–08002	PLUG, STRAIGHT SCREW PLOT, FILETE DROIT	1	1				
10	688–45341–10	PLUG, DRAIN BOUCHON DE VIDANGE	1	1				
11	90430–08020	GASKET JOINT	2	2				
12	6H1–45214–00	COVER, WATER INLET 1 GRILLE, ENTREE D'EAU 1	1	1				
13	6H1–45215–00	COVER, WATER INLET 2 GRILLE, ENTREE D'EAU 2	1	1				
14	90151–05M00	SCREW, COUNTERSUNK VIS, TETE NOYEE	1	1				
15	90185–05002	NUT, NYLON ECROU,AUTO-BLOQUANT	1	1				

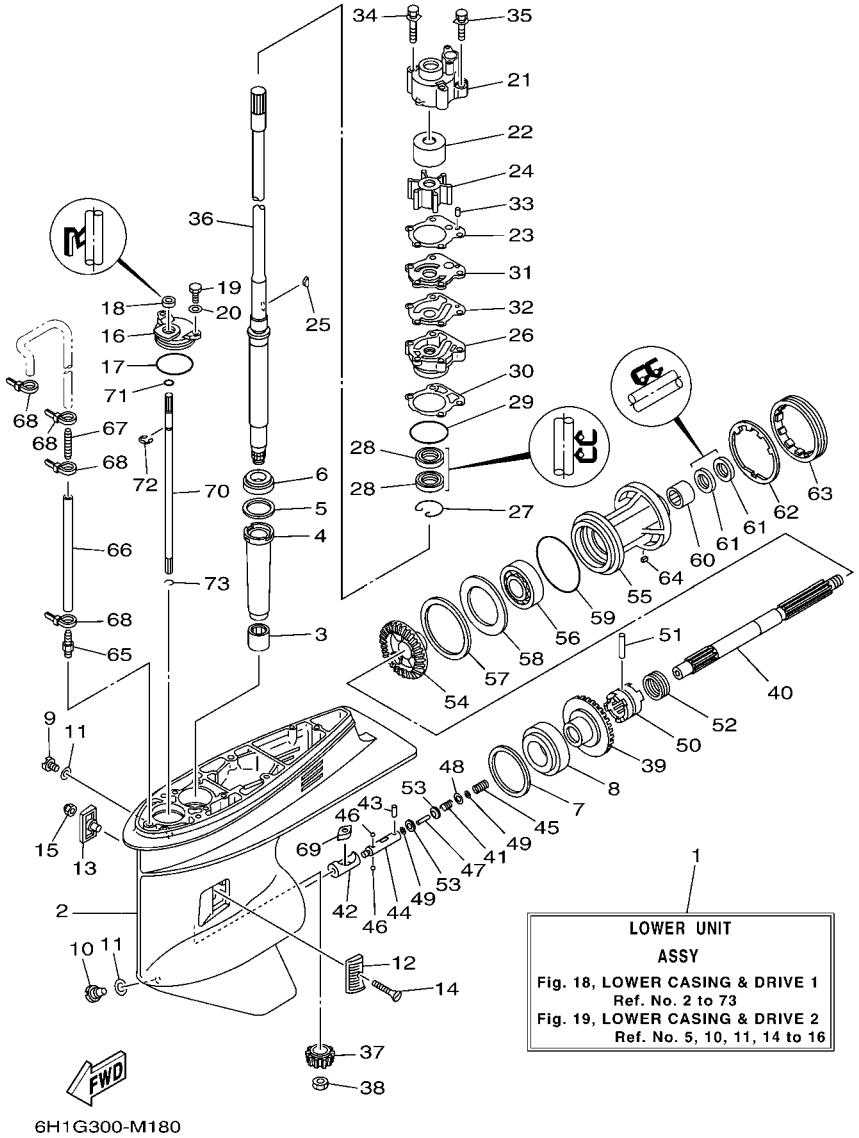

FIG. 18 LOWER CASING & DRIVE 1 BOITIER D'HELICE TRANSMISSION1

REF. NO.	PART NO. N° PIECES	DESCRIPTION DESCRIPTION	67PD	6H1H				REMARKS REMARQUES
16	688–45321–00	PLATE PLAQUETTE	1	1				
17	93210–49046	O-RING JOINT TORIQUE	1	1				
18	93106–09014	OIL SEAL JOINT SPY	1	1				
19	97095–06016	BOLT BOULON	2	2				
20	92995–06600	WASHER RONDELLE	2	2				
21	688–44311–01	HOUSING, WATER PUMP CORPS, POMPE A EAU	1	1				
22	688–44322–00	INSERT, CARTRIDGE CUVETTE	1	1				
23	688–44315–A0	GASKET, WATER PUMP JOINT, POMPE A EAU	1	1				
24	688–44352–03	IMPELLER TURBINE	1	1				
25	90280–04M04	KEY, WOODRUFF CLAVETTE, DEMI-LUNE	1	1				
26	6D8–44341–01–CA	HOUSING, WATER PUMP CORPS, POMPE A EAU	1	1				
27	93450–44166	CIRCLIP CIRCLIP, TYPE S	1	1				
28	93101–25M03	OIL SEAL JOINT SPY	2	2				
29	93210–46044	O-RING JOINT TORIQUE	1	1				
30	688–44316–A0	GASKET, WATER PUMP JOINT, POMPE A EAU	1	1				
31	688–44323–00	OUTER PLATE, CARTRIDGE PLAQUE EXTERIEURE	1	1				
32	688–44324–A0	GASKET, CARTRIDGE JOINT	1	1				
33	93604–10M03	PIN, DOWEL CLAVETTE	2	2				
34	90119–08M16	BOLT, WITH WASHER BOULON, AVEC RONDELLE	2	2				
35	90119–08M13	BOLT, WITH WASHER BOULON, AVEC RONDELLE	2	2				
36	6H1–45501–11	DRIVE SHAFT COMP. ARBRE MOTEUR COMP.	1	1				L(20.3") L(20.3")
37	688–45551–01	PINION (13T) PIGNON D'ATTAQUE (13D)	1	1				
38	90170–16M01	NUT ECROU	1	1				
39	688–45560–00	GEAR 1 (26T) PIGNON 1 (26T)	1	1				
40	6H1–45611–01	SHAFT, PROPELLER ARBRE, HELICE	1	1				
41	90501–12M48	SPRING, COMPRESSION RESSORT, COMPRESSION	1	1				
42	6H1–45641–01	SHIFTER EMBRAYAGE	1	1				

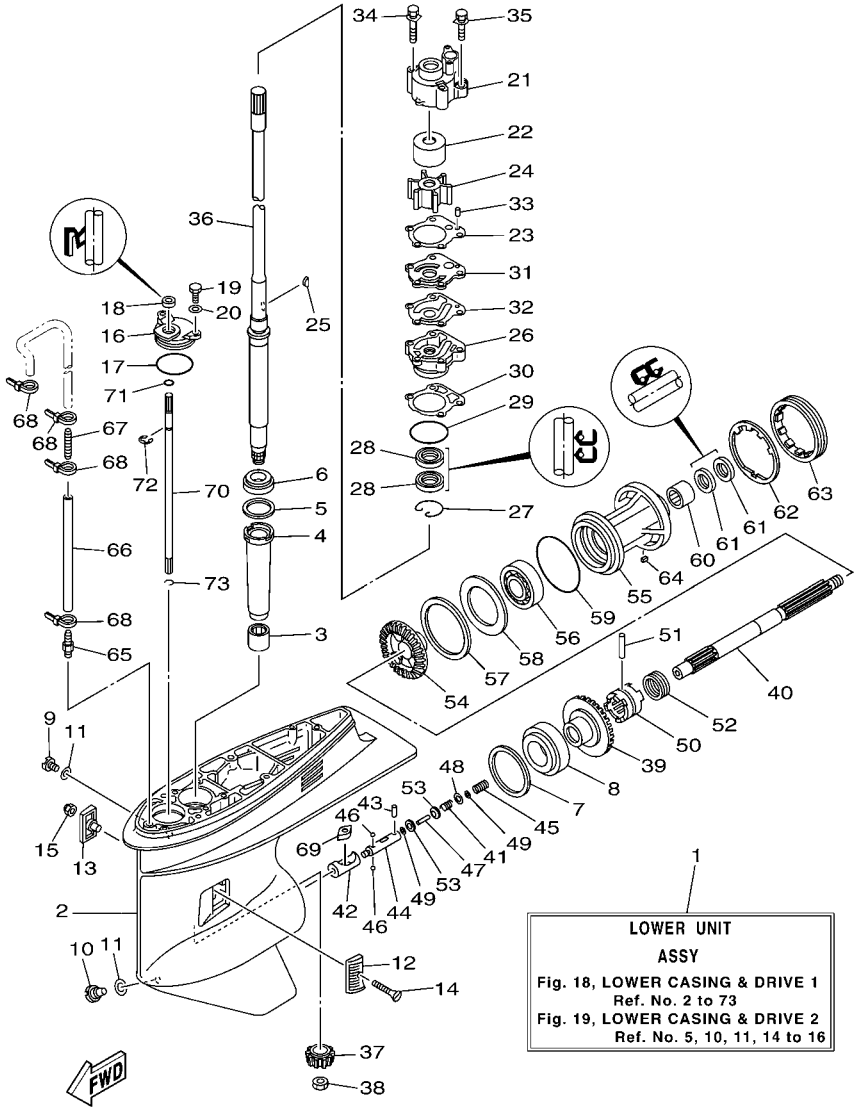

FIG. 18 LOWER CASING & DRIVE 1 BOITIER D'HELICE TRANSMISSION1

REF. NO.	PART NO. N° PIECES	DESCRIPTION DESCRIPTION	67PD	6H1H				REMARKS REMARQUES
43	93603–12M11	PIN, DOWEL CLAVETTE	1	1				
44	6H1–45634–02	SLIDE, SHIFT CONTRE-POUSSOIR	1	1				
45	90501–16M65	SPRING, COMPRESSION RESSORT, COMPRESSION	1	1				
46	93503–16003	BALL BILLES	2	2				
47	6H1–45668–00	SHAFT, FREE 1 AXE 1	1	1				
48	90201–03313	WASHER, PLATE RONDELLE, PLATE	1	1				
49	90183–02M03	NUT, SPRING ECROU, RESSORT	2	2				
50	6H1–45631–01	CLUTCH, DOG CRABOT	1	1				
51	90250–07M02	PIN, STRAIGHT GOUPILLE, DROITE	1	1				
52	688–45633–00	RING, CROSS PIN JONC, GOUPILLE CRABOT	1	1				
53	6H1–45635–00	PLUNGER, SHIFT POUSSOIR D'EMBRAYAGE	2	2				
54	6H1–45571–00	GEAR 2 (26T) PIGNON 2 (26T)	1	1				
55	688–45331–00–CA	HOUSING, BEARING FLASQUE, ROULEMENT	1	1				
56	93306–207U0	BEARING ROULEMENT	1	1				
57	688–45577–01	SHIM (T:0.10MM) CALE (T:0.10MM)	1	1				UR UR
	688–45577–10	SHIM (T:0.12MM) CALE (T:0.12MM)	1	1				UR UR
	688–45577–20	SHIM (T:0.15MM) CALE (T:0.15MM)	1	1				UR UR
	688–45577–30	SHIM (T:0.18MM) CALE (T:0.18MM)	1	1				UR UR
	688–45577–40	SHIM (T:0.30MM) CALE (T:0.30MM)	1	1				UR UR
	688–45577–50	SHIM (T:0.40MM) CALE (T:0.40MM)	1	1				UR UR
	688–45577–60	SHIM (T:0.50MM) CALE (T:0.50MM)	1	1				UR UR
58	688–45576–00	WASHER, THRUST 2 RONDELLE DE CALAGE 2	1	1				
59	93210–85M97	O-RING JOINT TORIQUE	1	1				
60	93317–325U0	BEARING ROULEMENT	1	1				
61	93101–25M03	OIL SEAL JOINT SPY	2	2				
62	688–45383–02	WASHER, CLAW FREIN D'ECROU	1	1				
63	688–45384–02	NUT ECROU	1	1				

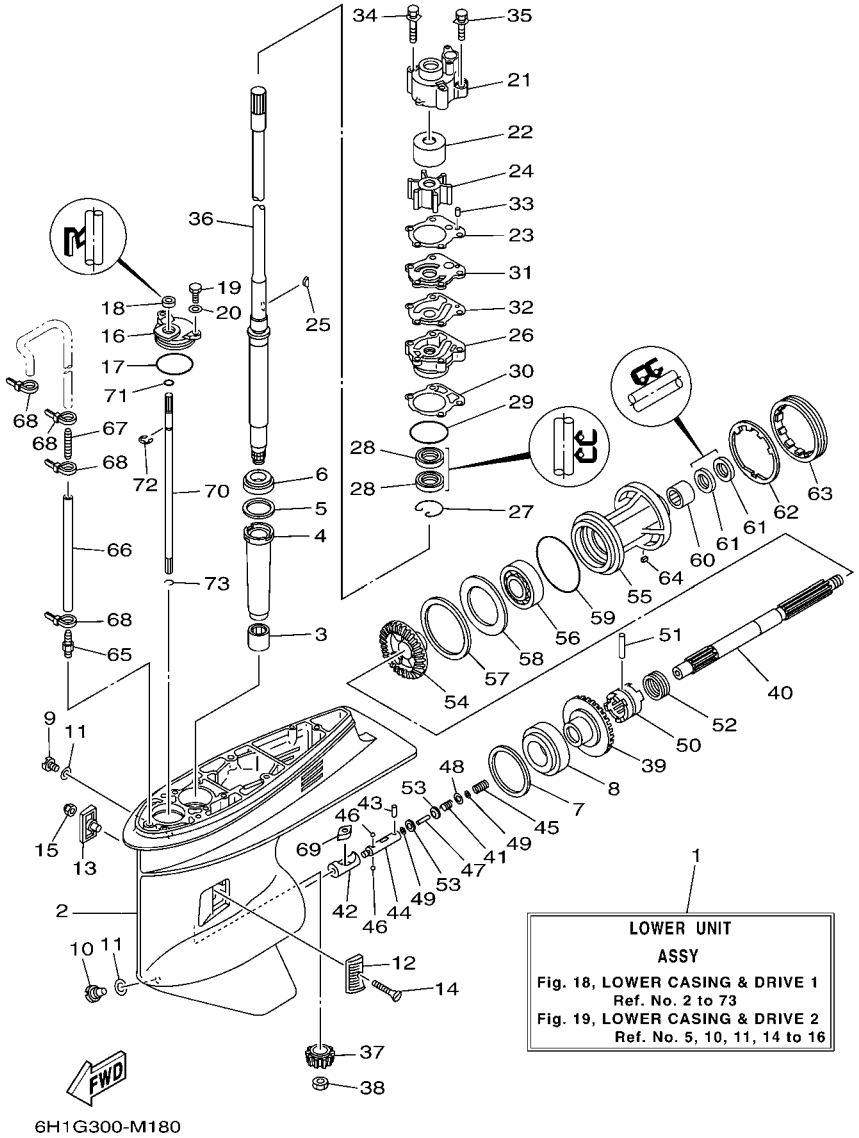

FIG. 18 LOWER CASING & DRIVE 1 BOITIER D'HELICE TRANSMISSION1

REF. NO.	PART NO. N° PIECES	DESCRIPTION DESCRIPTION	67PD	6H1H				REMARKS REMARQUES
64	90282–04010	KEY, STRAIGHT CLAVETTE, DROITE	1	1				
65	6E5–45378–00	NIPPLE, HOSE RACCORD, TUYAU	1	1				
66	90445–07ME9	HOSE (L120) DURITE (L120)	1	1				L(20.3") L(20.3")
67	6E5–83558–10	END, NIPPLE RACCORD DE NIPPLE	1	1				
68	90465–11M10	CLAMP BRIDE	4	4				
69	6H1–44151–00	CAM, SHIFT CAME, INVERSION	1	1				
70	6H1–44144–00	ROD, SHIFT TIGE D'EMBRAYAGE	1	1				
71	93210–07003	O-RING JOINT TORIQUE	1	1				
72	99001–08600	CIRCLIP CIRCLIP	1	1				
73	93450–07M00	CIRCLIP CIRCLIP, TYPE S	1	1				

FIG. 19 LOWER CASING & DRIVE 2 BOITIER D'HELICE TRANSMISSION2

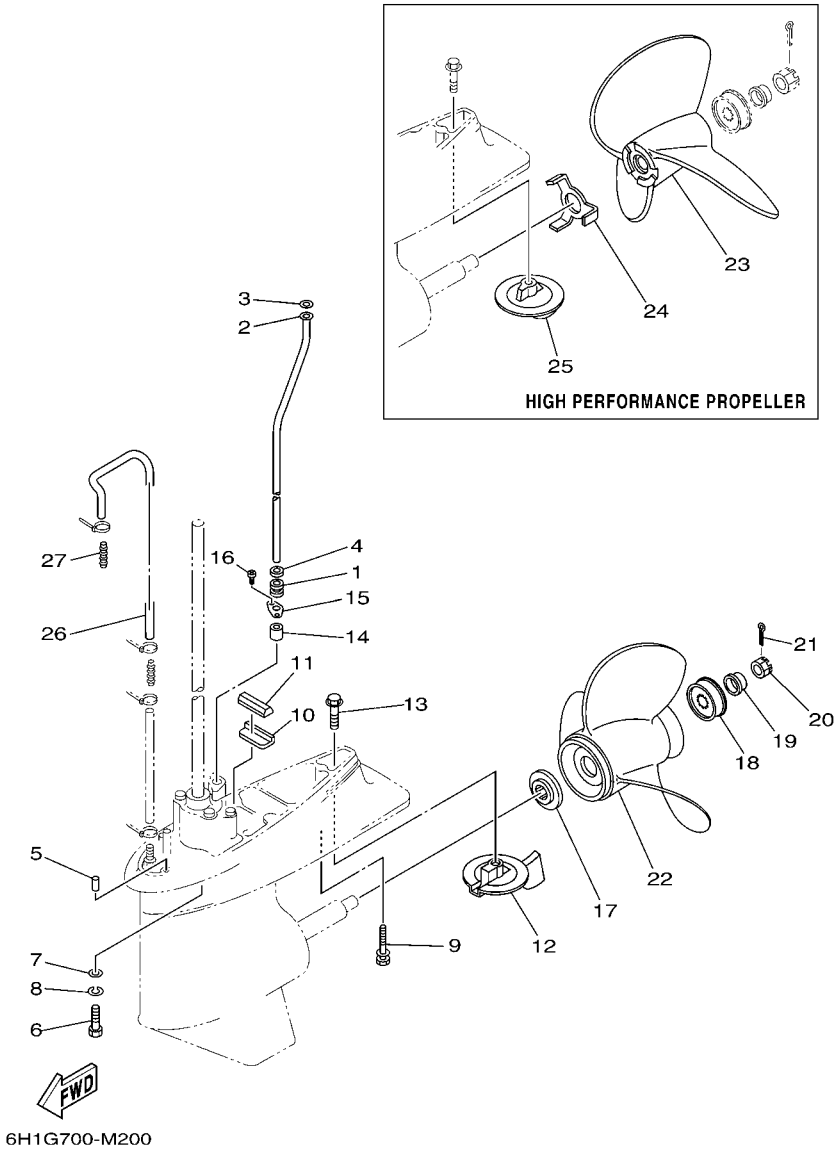

REF. NO.	PART NO. N° PIECES	DESCRIPTION DESCRIPTION	67PD	6H1H				REMARKS REMARQUES
1	663–44367–00	DAMPER, WATER SEAL 3 JOINT TUBE D'EAU 3	1	1				
2	688–44361–10	TUBE, WATER 1 TUBE D'EAU 1	1	1				L(20.3") L(20.3")
3	90202–12060	WASHER, PLATE RONDELLE, PLATE	1	1				
4	90430–12072	GASKET JOINT	1	1				
5	93606–12019	PIN, DOWEL GOUPILLE	2	2				L(20.3") L(20.3")
6	97075–10040	BOLT BOULON	4	4				L(20.3") L(20.3")
7	92995–10600	WASHER RONDELLE	4	4				
8	92990–10100	WASHER, SPRING RONDELLE, GROWER	4	4				
9	90119–08M84	BOLT, WITH WASHER BOULON, AVEC RONDELLE	1	1				L(20.3") L(20.3")
10	663–45376–00	GUIDE, SEAL DAMPER BUTEE, JOINT CAOUTCHOUC	1	1				
11	688–45375–00	DAMPER, SEAL BOURRELET, CAOUTCHOUC	1	1				
12	67F–45371–00	TAB-TRIM ANODE DERIVE	1	1				
13	90105–10M67	BOLT, FLANGE BOULON	1	1				
14	663–44366–00	DAMPER, WATER SEAL 2 JOINT, TUBE D'EAU 2	1	1				
15	90480–19M06	GROMMET PASSE-FIL	1	1				
16	90160–04006	SCREW, ROUND TAPPING VIS, TETE RONDE FRAISEE	2	2				
17	688–45987–01	SPACER 1 ENTRETOISE 1	1	1				
18	67F–45997–00	SPACER 2 ENTRETOISE 2	1	1				
19	90389–25M00	BUSH DOUILLE	1	1				
20	90171–16011	NUT, CASTLE ECROU, CRENELE	1	1				
21	91490–30025	PIN. COTTER GOUPILLE	1	1				
22	6E5–45941–00	PROPELLER (3X13"X19"-K) HELICE (3X13"X19"-K)	1	1				UR UR
	6E5–45943–00	PROPELLER (3X12-5/8"X21"-K) HELICE (3X12-5/8"X21"-K)	1	1				UR UR
	6E5–45945–01	PROPELLER (3X13-1/4"X17"-K) HELICE (3X13-1/4"X17"-K)	1	1				UR UR
	6E5–45947–00	PROPELLER (3X13-1/2"X15"-K) HELICE (3X13-1/2"X15"-K)	1	1				UR UR
	6E5–45949–00	PROPELLER (3X13-5/8"X13"-K) HELICE (3X13-5/8"X13"-K)	1	1				UR UR
	6E5–45952–00	PROPELLER (3X13"X23"-K) HELICE (3X13"X23"-K)	1	1				UR UR

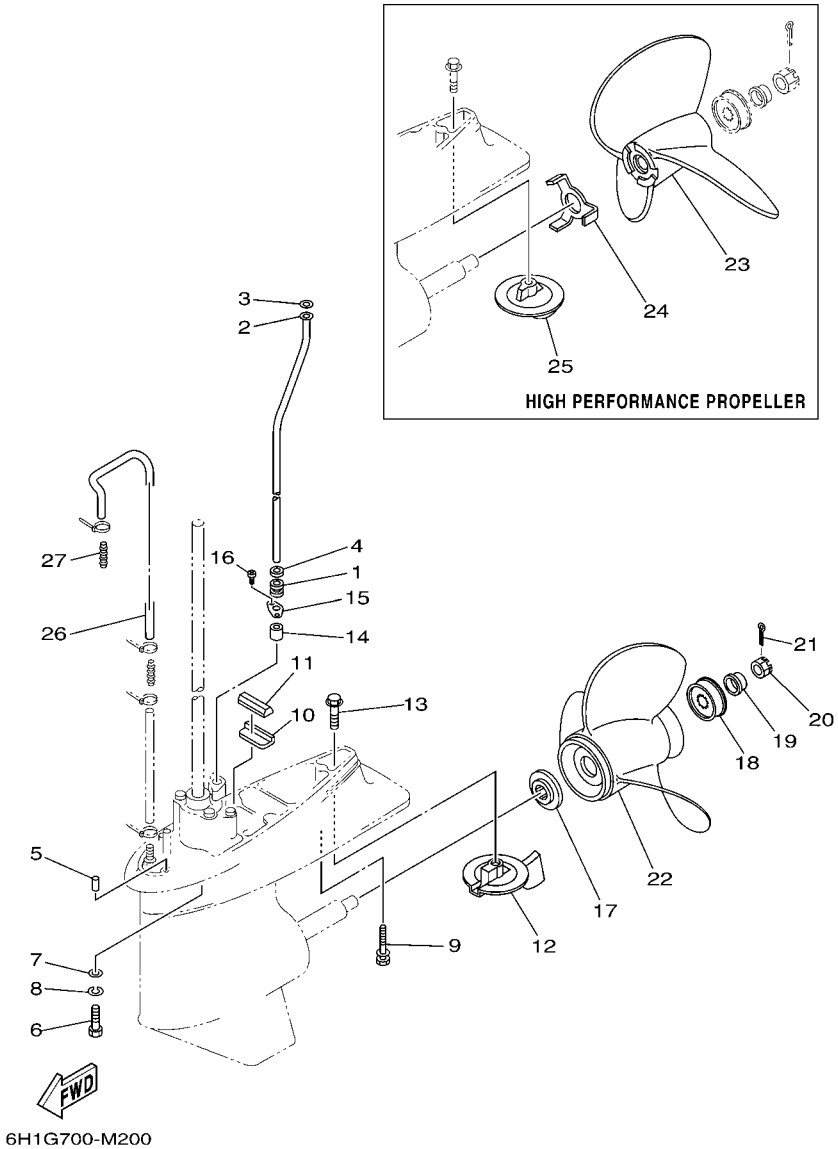

FIG. 19 LOWER CASING & DRIVE 2 BOITIER D'HELICE TRANSMISSION2

REF. NO.	PART NO. N° PIECES	DESCRIPTION DESCRIPTION	67PD	6H1H				REMARKS REMARQUES
22	6E5–45954–00	PROPELLER (3X14"X11"-K) HELICE (3X14"X11"-K)	1	1				UR UR
	6E5–45956–00	PROPELLER (3X13"X25"-K) HELICE (3X13"X25"-K)	1	1				UR UR
	688–45930–02	PROPELLER (3X13"X17"-K2) HELICE (3X13"X17"-K2)	1	1				UR UR
	688–45970–03	PROPELLER (3X13"X19"-K) HELICE (3X13"X19"-K)	1	1				UR UR
	688–45972–02	PROPELLER (3X13"X21"-K) HELICE (3X13"X21"-K)	1	1				UR UR
	688–45974–02	PROPELLER (3X13"X23"-K) HELICE (3X13"X23"-K)	1	1				UR UR
	688–45976–01	PROPELLER (3X13"X25"-K) HELICE (3X13"X25"-K)	1	1				UR UR
	688–45932–60	PROPELLER (3X13-1/2"X14"-K) HELICE (3X13-1/2"X14"-K)	1	1				UR UR
	688–45978–60	PROPELLER (3X13-1/2"X16"-K) HELICE (3X13-1/2"X16"-K)	1	1				UR UR
23	6E5–45970–10	PROPELLER (3X14"X20"-P) HELICE (3X14"X20"-P)	1	1				UR UR
	6E5–45972–10	PROPELLER (3X14"X24"-P) HELICE (3X14"X24"-P)	1	1				UR UR
	6E5–45974–10	PROPELLER (3X14"X28"-P) HELICE (3X14"X28"-P)	1	1				UR UR
	6E5–45976–10	PROPELLER (3X14"X22"-P) HELICE (3X14"X22"-P)	1	1				UR UR
	6E5–45978–10	PROPELLER (3X14"X26"-P) HELICE (3X14"X26"-P)	1	1				UR UR
24	6E5–45994–10	PLATE, TOOTH PLAQUETTE	1	1				
25	6E5–45371–10	TAB-TRIM ANODE DERIVE	1	1				
26	90445–07MF1	HOSE (L570) DURITE (L570)	1	1				
27	6E5–83558–00	END, NIPPLE RACCORD DE NIPPLE	1	1				

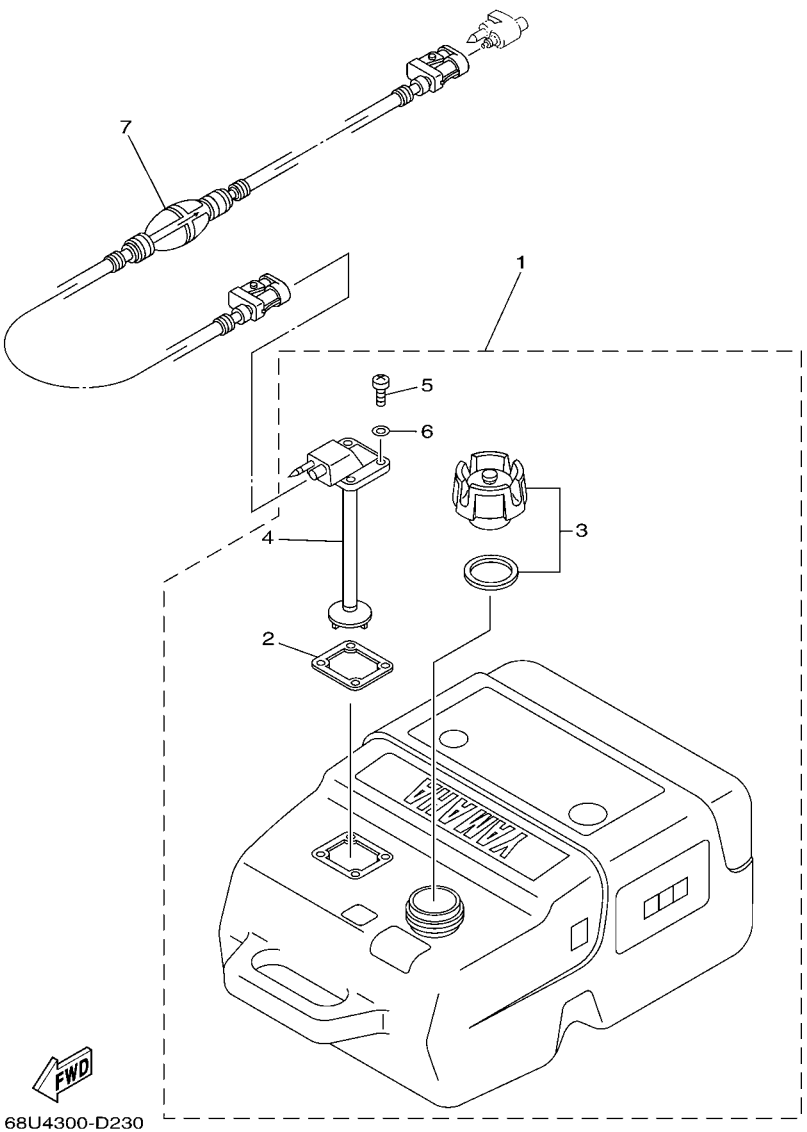

FIG. 20 FUEL TANK — RESERVOIR A CARBURANT

REF. NO.	PART NO. N° PIECES	DESCRIPTION DESCRIPTION	67PD	6H1H				REMARKS REMARQUES
1	6YK–24201–03	FUEL TANK ASSY (25L) RESERVOIR A ESSENCE (ENS.) 25L	1	1				AP AP
2	6YL–24268–01	.GASKET, FUEL METER .JOINT, JAUGE A CARBURANT	1	1				
3	6YK–24610–01	.CAP ASSY .BOUCHON	1	1				
4	6YK–24260–01	.FUEL METER ASSY .INDICATEUR DE CARBURANT	1	1				
5	90157–05M16	.SCREW, PAN HEAD .VIS, TETE TRONCONIQUE	4	4				
6	6YL–24329–00	.SEAL .JOINT	4	4				
7	6YL–24306–54	FUEL PIPE COMP. 1 DURITE A ESSENCE 1	1	1				AP AP

FIG. 21 STEERING GUIDE FIXATION DE DIRECTION

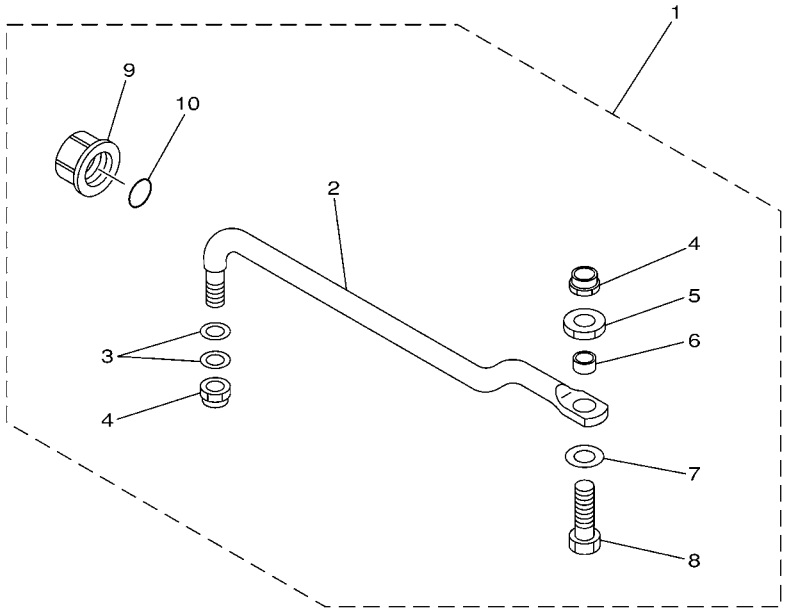

6880700-9190

REF. NO.	PART NO. N° PIECES	DESCRIPTION DESCRIPTION	67PD	6H1H				REMARKS REMARQUES
1	688–61350–10	STEERING GUIDE ATTACHMENT KIT FIXATIONS DE DIRECTION	1	1				AP AP
2	688–61351–10	.ROD, STEERING LINK .RENVOI DE DIRECTION	1	1				
3	90201–10M20	.WASHER, PLATE .RONDELLE, PLATE	2	2				
4	90185–09M01	.NUT, SELF-LOCKING .ECROU,AUTO-BLOQUANT	2	2				
5	90170–09M03	.NUT .ECROU	1	1				
6	90387–10M42	.COLLAR .COLLERETTE	1	1				
7	90201–10M63	.WASHER, PLATE .RONDELLE, PLATE	1	1				
8	6E5–61355–00	.BOLT .BOULON	1	1				
9	6E5–43145–01	.CAP, CLAMP BRACKET .CAPUCHON, PRESSE	1	1				
10	93210–16275	.O-RING .JOINT TORIQUE	1	1				

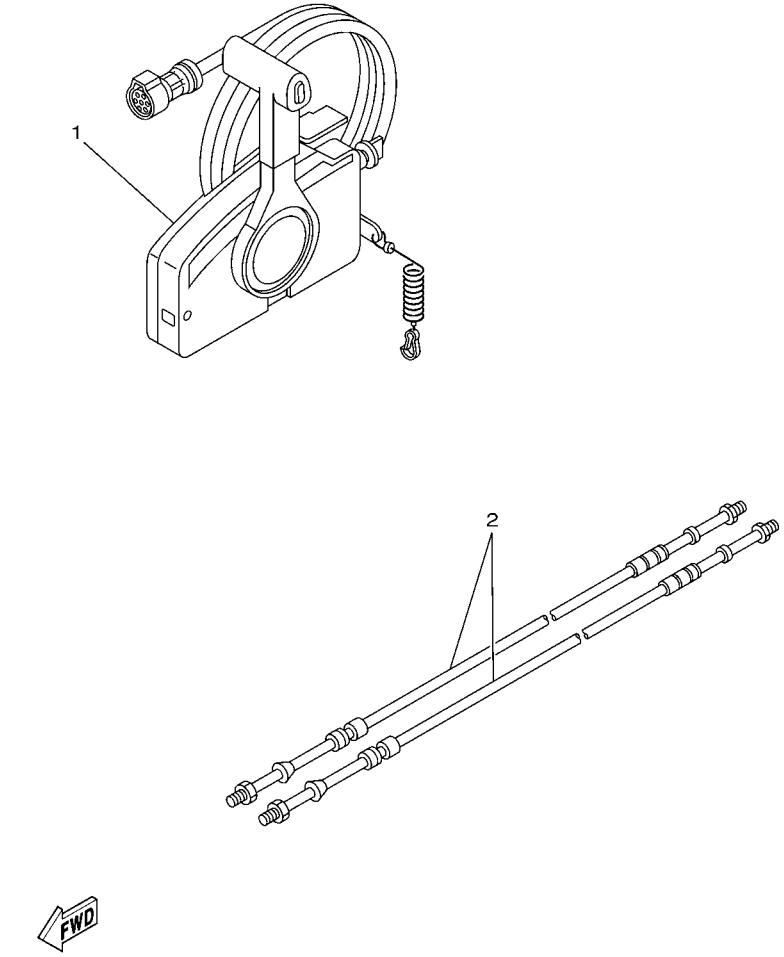

FIG. 22 REMOTE CONTROL BOX BOITIER DE COMMANDE A DISTANCE

REF. NO.	PART NO. N° PIECES	DESCRIPTION DESCRIPTION	67PD	6H1H				REMARKS REMARQUES
1	703–48207–1B	REMOTE CONTROL ASSY (10P) BOITIER DE COMMANDE A DISTANCE	1	1				AP WITH PT/T SW. AP WITH PT/T SW.
2	701–48320–00	CABLE, REMOTE CONTROL L=12F CABLE, COMMANDE A DISTANCE:12F	2	2				UR UR
	701–48320–20	CABLE, REMOTE CONTROL L=13F CABLE, COMMANDE A DISTANCE:13F	2	2				UR UR
	701–48320–30	CABLE, REMOTE CONTROL L=14F CABLE, COMMANDE A DISTANCE:14F	2	2				UR UR
	701–48320–50	CABLE, REMOTE CONTROL L=15F CABLE, COMMANDE A DISTANCE:15F	2	2				UR UR
	701–48320–60	CABLE, REMOTE CONTROL L=16F CABLE, COMMANDE A DISTANCE:16F	2	2				UR UR
	701–48320–80	CABLE, REMOTE CONTROL L=17F CABLE, COMMANDE A DISTANCE:17F	2	2				UR UR

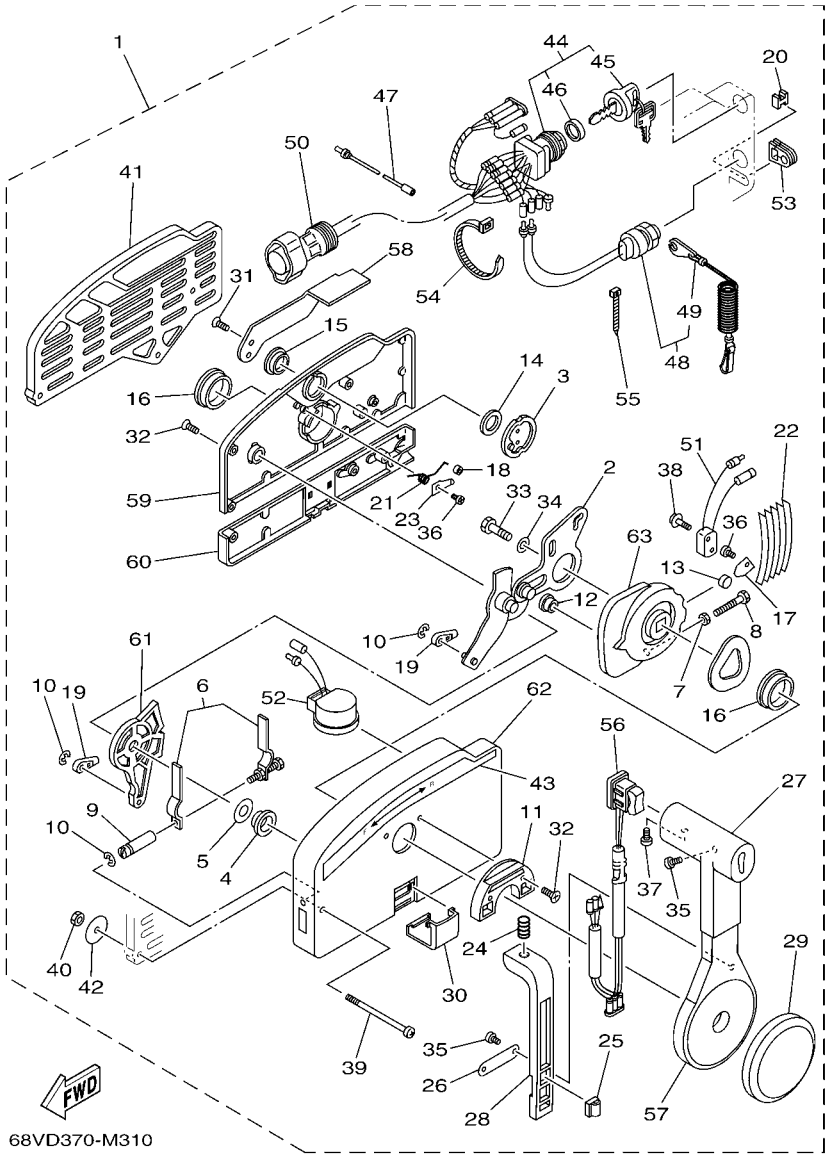

FIG. 23 REMOTE CONTROL ASSY BOITIER DE COMMANDE A DISTANCE

REF. NO.	PART NO. N° PIECES	DESCRIPTION DESCRIPTION	67PD	6H1H				REMARKS REMARQUES
1	703–48207–1B	REMOTE CONTROL ASSY (10P) BOITIER DE COMMANDE A DISTANCE	1	1				AP WITH PT/T SW. AP WITH PT/T SW.
2	703–48261–01	.ARM, THROTTLE .BRAS, ACCELERATION	1	1				
3	703–48153–00	.SHAFT, FREE ACCEL. .AXE	1	1				
4	703–48235–00	.BUSHING .COUSSINET	1	1				
5	703–48268–00	.SPACER .ENTRETOISE	1	1				
6	703–48264–00	.FRICTION, THROTTLE .FRICTION, ACCELERATION	1	1				
7	95380–05600	.NUT .ECROU	1	1				
8	97380–05025	.BOLT .BOULON, HEXAGONAL	1	1				
9	703–48265–00	.SHAFT, FRICTION .AXE, COPILOTE	1	1				
10	93430–06024	.CIRCLIP .CLIPS	3	3				
11	703–48245–00	.PLATE, LOCK .PLAQUE, VERROU	1	1				
12	703–48252–00	.ROLLER, CAM .POULIE	1	1				
13	701–48248–00	.ROLLER, FREE ACCEL. .POULIE	1	1				
14	703–48198–00	.WASHER, WAVE .RONDELLE, ELASTIQUE ONDULEE	1	1				
15	703–48243–00	.BUSHING .COUSSINET	1	1				
16	703–48236–00	.BUSHING 1 .POULIE	2	2				
17	703–48189–00	.RETAINER .FLASQUE	1	1				
18	703–48234–00	.ROLLER, DETENT .POULIE	1	1				
19	703–48345–01	.CABLE END, REMOTE CONTROL 2 .CHAPE CABLE	2	2				
20	703–48358–00	.ANCHOR, CABLE .COLLIER	1	1				
21	703–48244–00	.SPRING, FREE ACCEL. .RESSORT	1	1				
22	703–48238–00	.SPRING, DETENT .RESSORT	5	5				
23	703–48246–00	.SPACER .ENTRETOISE	1	1				
24	703–48227–00	.SPRING, NEUTRAL LOCK .RESSORT	1	1				
25	703–82594–00	.CLAMP .BRIDE	1	1				WITH PT/T SW. WITH PT/T SW.
26	703–48226–00	.PLATE, STOPPER .PLAQUETTE	1	1				
27	703–48222–00	.GRIP, CONTROL LEVER .POIGNEE, COMMANDE LEVIER	1	1				SINGLE SINGLE

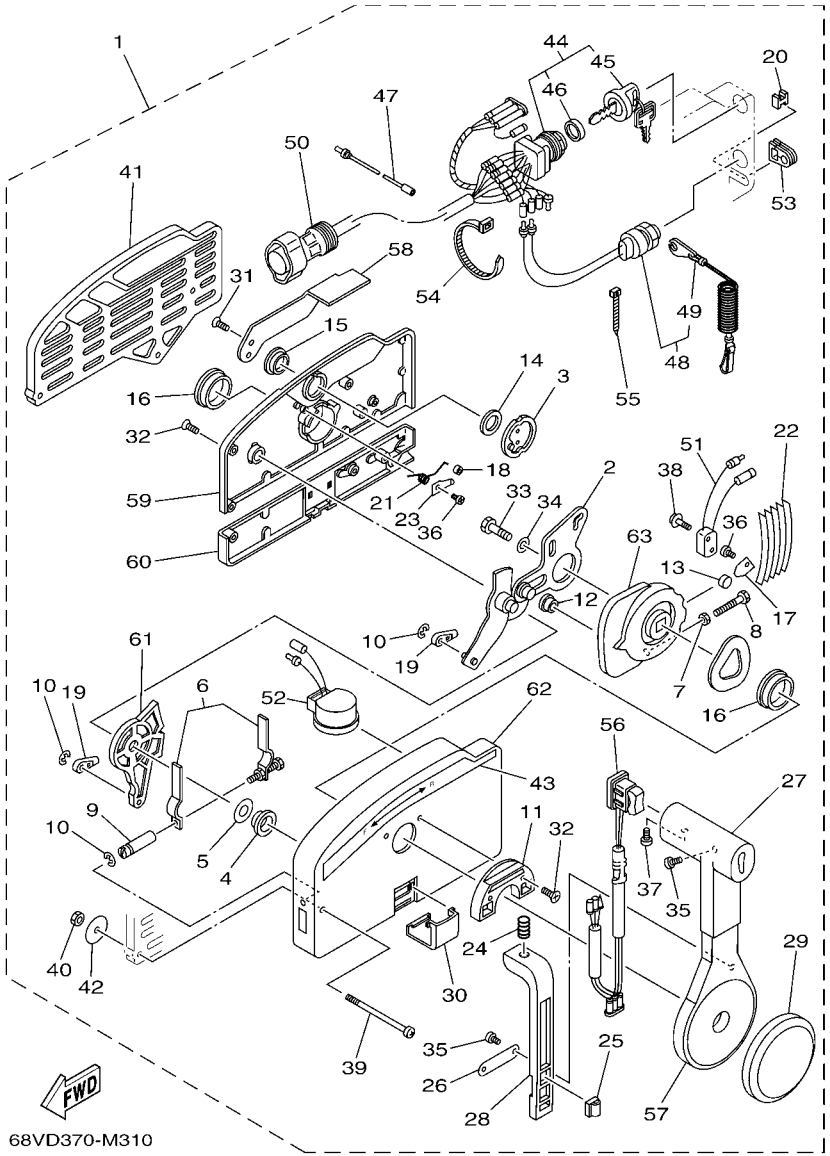

FIG. 23 REMOTE CONTROL ASSY BOITIER DE COMMANDE A DISTANCE

REF. NO.	PART NO. N° PIECES	DESCRIPTION DESCRIPTION	67PD	6H1H				REMARKS REMARQUES
28	703–48223–00	.LOCK, NEUTRAL .VERROU, NEUTRAL	1	1				
29	703–48225–00	.COVER .COUVERCLE	1	1				
30	703–48219–00	.COVER, LEAD .COUVERCLE	1	1				
31	703–48281–00	.SCREW .VIS	2	2				
32	703–44189–00	.SCREW .VIS	7	7				
33	97380–08030	.BOLT .BOULON, HEXAGONAL	1	1				
34	92990–08600	.WASHER, PLATE .RONDELLE, PLATE	1	1				
35	98580–04010	.SCREW, PAN HEAD .VIS	3	3				
36	98580–04006	.SCREW, PAN HEAD .VIS	2	2				
37	98580–05010	.SCREW, PAN HEAD .VIS	1	1				
38	703–48129–00	.SCREW 3 .VIS 3	2	2				
39	703–44189–10	.SCREW .VIS	3	3				
40	95380–06600	.NUT, HEXAGON .ECROU	3	3				
41	703–48293–10	.SPACER, REMOTE CONTROL .ENTRETOISE	1	1				SINGLE SINGLE
42	701–48287–00	.WASHER .RONDELLE	3	3				
43	703–48215–00	.GRAPHIC .ADHESIF	1	1				
44	703–82510–44	.MAIN SWITCH ASSY .CONTACTEUR A CLEF COMPLET	1	1				
45	703–82577–00	..CAP, KEY ..CABOCHON	1	1				
46	6K1–82532–00	..CAP ..COUVERCLE	1	1				
47	703–82531–00	.WIRE, LEAD (L70) .FIL (L70)	1	1				
48	688–82575–01	.ENGINE STOP SWITCH ASSY .COUPE CIRCUIT CPLT	1	1				
49	682–82556–00	..LANYARD, STOP SWITCH ..CORDON DU COUPE CIRCUIT	1	1				
50	688–8258A–20	.EXTENSION, WIRE HARNESS (4.9M) .EXTENSION, FAISCEAU DE FILS (4	1	1				(10P) (10P)
51	703–82540–00	.NEUTRAL SWITCH ASSY .CONTACTEUR DE POINT-MORT	1	1				
52	703–83383–11	.BUZZER .RONFLEUR	1	1				
53	703–48284–10	.GROMMET .PASSE-FIL	1	1				
54	703–82591–00	.BAND .COLLIER	3	3				

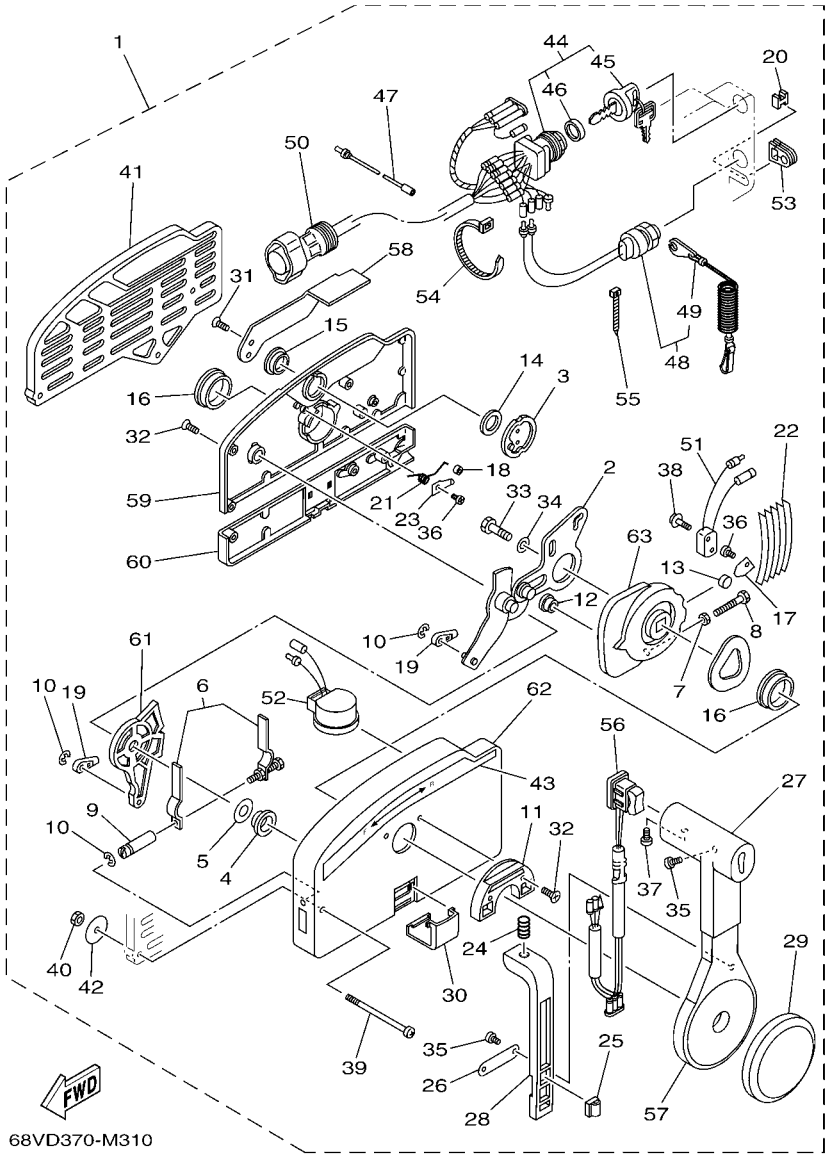

FIG. 23 REMOTE CONTROL ASSY BOITIER DE COMMANDE A DISTANCE

REF. NO.	PART NO. N° PIECES	DESCRIPTION DESCRIPTION	67PD	6H1H				REMARKS REMARQUES
55	703–82592–00	.BAND .COLLIER	1	1				
56	703–82563–12	.TRIM & TILT SWITCH ASSY .INCLINER ET PARER COMMUTATEUR	1	1				WITH PT/T SW. WITH PT/T SW.
57	703–48221–00	.LEVER, CONTROL .LEVIER, COMMANDE	1	1				
58	703–48152–00	.KNOB, FREE ACCEL. .BOUTON	1	1				
59	703–48212–00	.BACK PLATE 1 .PLAQUETTE 1	1	1				
60	703–48213–00	.BACK PLATE 2 .PLAQUETTE 2	1	1				
61	703–48271–00	.ARM, SHIFT .BRAS	1	1				
62	703–48211–02	.HOUSING,1 .CORPS	1	1				
63	703–48232–00	.GEAR .PIGNON	1	1				

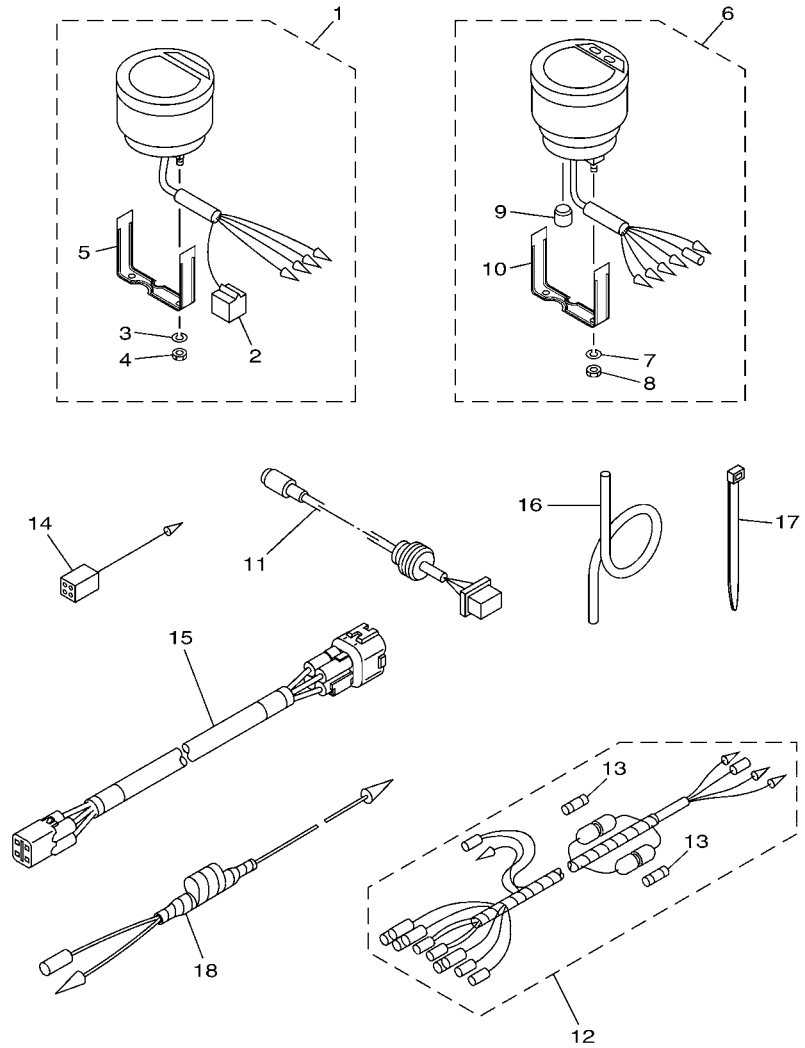

62XE100-G310

FIG. 24 METER COMPTEUR

REF. NO.	PART NO. N° PIECES	DESCRIPTION DESCRIPTION	67PD	6H1H				REMARKS REMARQUES
1	6Y5–8350T–91	DIGITAL TACHOMETER ASSY COMPTE-TOURS NUMERIQUE CPLT	1	1				AP AP
2	9E450–04533	.CONNECTOR .CONNECTEUR	1	1				F-4-W F-4-W
3	92990–04100	.WASHER, SPRING .RONDELLE, GROWER	2	2				
4	95380–04600	.NUT .ECROU	2	2				
5	6Y5–8355X–T1	.BRACKET, METER 1 .CROCHET, COMPTEUR	1	1				
6	6Y5–83570–S6	SPEEDOMETER ASSY COMPTEUR DE VITESSE CPLT		1				AP AP
7	92990–04100	.WASHER, SPRING .RONDELLE, GROWER		2				
8	95380–04600	.NUT .ECROU		2				
9	6Y5–83533–T2	.GROMMET .RONDELLE CAOUTCHOUC		1				
10	6Y5–8355X–T1	.BRACKET, METER 1 .CROCHET, COMPTEUR		1				
11	6Y5–87122–S0	CORD ASSY 1 CORDON COMPLET 1		1				AP AP
12	6Y5–83553–00	WIRE, LEAD (L=2.5M) FIL (L=2.5M)	1					AP AP
	6Y5–83553–M0	WIRE, LEAD (L=2.5M) FIL (L=2.5M)		1				AP AP
13	1E6–82151–00	.FUSE (10A) .FUSIBLE (10A)	1					FOR 6Y5-83553-00 FOR 6Y5-83553-00
	1E6–82151–00	.FUSE (10A) .FUSIBLE (10A)		2				FOR 6Y5-83553-M0 FOR 6Y5-83553-M0
14	6Y5–82117–00	WIRE, LEAD (BLACK) (L300) FIL (NOIR) (L300)		1				AP AP
15	6Y5–83653–20	WIRE, LEAD (L=7.0M) FIL (L=7.0M)	1					AP 4P,7M AP 4P,7M
	6Y5–83653–30	WIRE, LEAD (L=8.0M) FIL (L=8.0M)		1				AP 4P,8M AP 4P,8M
16	6Y5–83557–10	TUBE (8M) TUBE (8M)		1				AP AP
17	90465–11M10	CLAMP BRIDE		2				AP AP
18	6H4–81315–11	LEAD WIRE ASSY FIL	1	1				AP AP

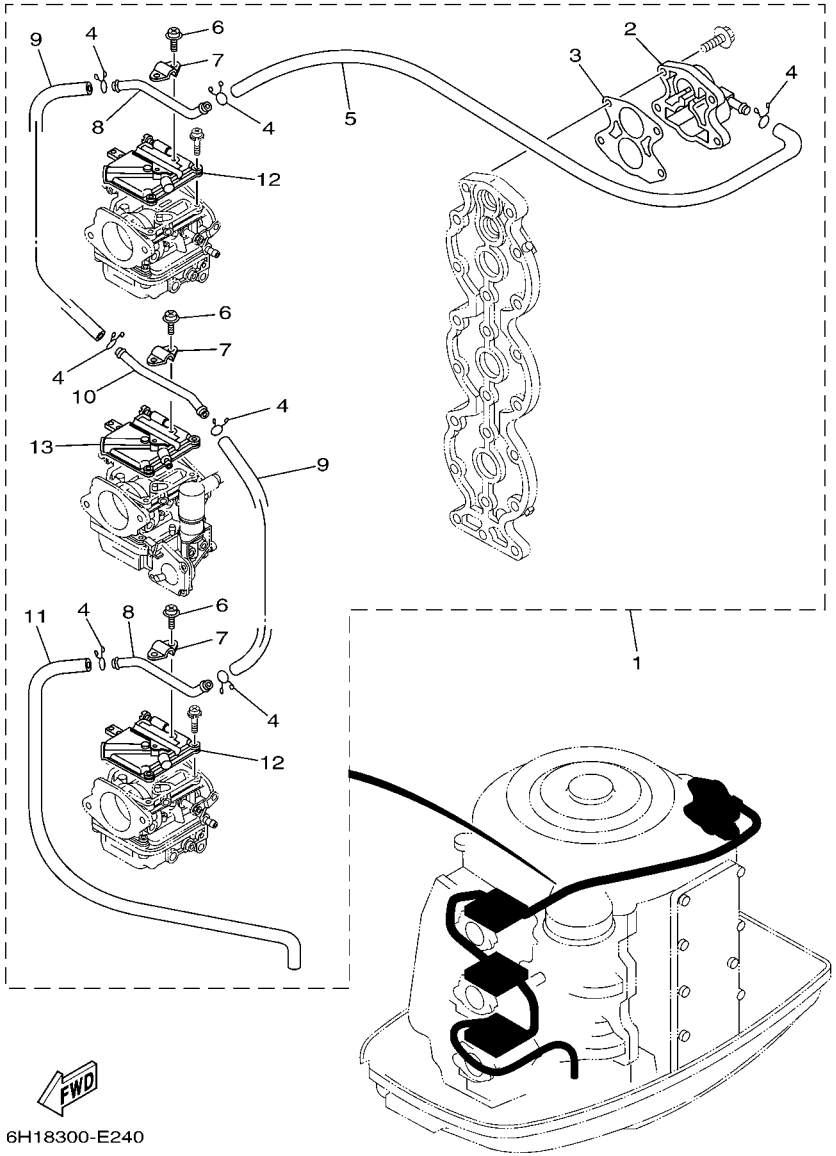

FIG. 25 OPTIONAL PARTS PIECES OPTIONNELLES

REF. NO.	PART NO. N° PIECES	DESCRIPTION DESCRIPTION	67PD	6H1H				REMARKS REMARQUES
1	6H1–12440–52	HEAT EXCHANGER ASSY ECHANGEUR DE CHALEUR	1	1				AP AP
2	6H1–12413–50	.COVER, THERMOSTAT .COUVERCLE, THERMOSTAT	1	1				
3	6H1–12414–50	.GASKET, COVER .JOINT, COUVERCLE	1	1				
4	90467–10M04	.CLIP .JONC	7	7				
5	6H1–14348–51	.PIPE 1 .DURITE	1	1				
6	97880–04006	.SCREW, PAN HEAD .VIS, TETE TRONCONIQUE	6	6				
7	6H1–12443–50	.STAY .SUPPORT	3	3				
8	6H1–12466–A0	.EXCHANGER, HEAT .ECHANGEUR DE CHALEUR	2	2				
9	6H1–14349–50	.PIPE .DURITE	2	2				
10	6H1–12466–B0	.EXCHANGER, HEAT .ECHANGEUR DE CHALEUR	1	1				
11	6E5–12481–00	.PIPE 1 .DURITE 1	1	1				
12	6H4–14146–50	.PLATE .PLAQUE	2	2				
13	6H3–14146–50	.PLATE .PLAQUE	1	1				

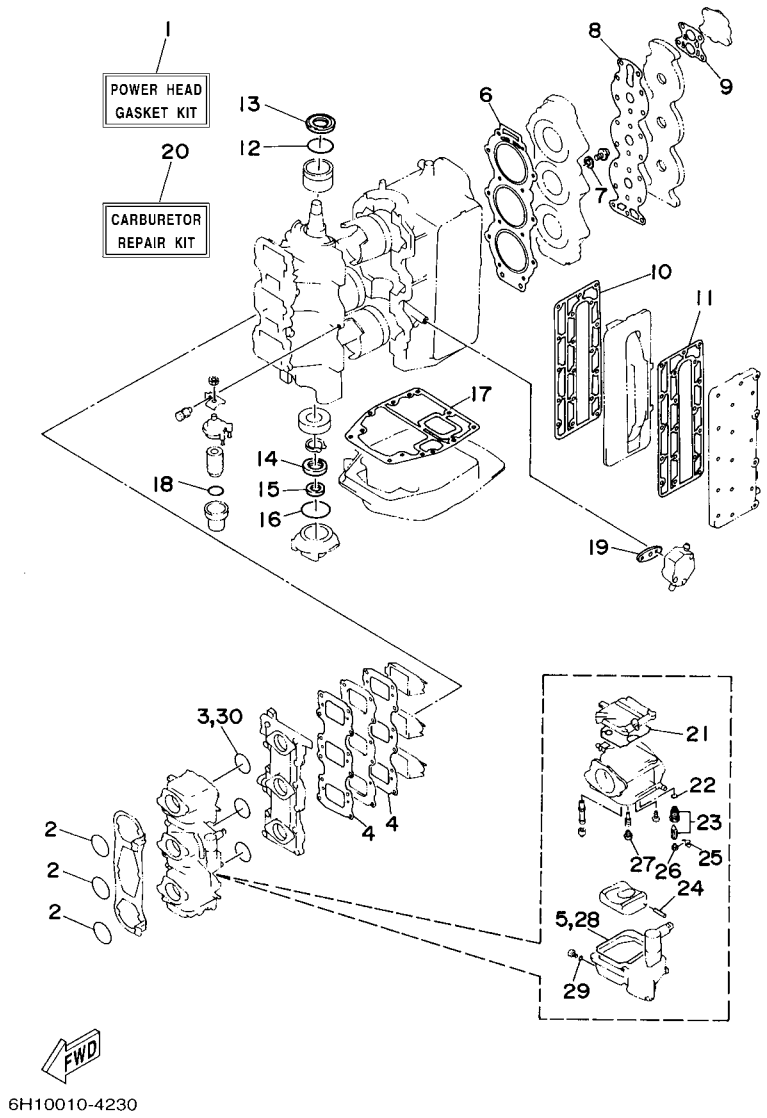

FIG. 26 REPAIR KIT 1 — KITS DE REPARATION 1

REF. NO.	PART NO. N° PIECES	DESCRIPTION DESCRIPTION	67PD	6H1H				REMARKS REMARQUES
1	6H1–W0001–02	POWER HEAD GASKET KIT POCHETTE DE JINTS TETE MOTRICE	1	1				
2	93210–46044	.O-RING .JOINT TORIQUE	3	3				
3	93210–39ME4	.O-RING .JOINT TORIQUE	3	3				
4	688–13621–A1	.GASKET, VALVE SEAT .JOINT, SIEGE DE CLAPET	2	2				
5	6H4–14984–00	.GASKET, FLOAT CHAMBER .JOINT, CUVE DE FLOTTEUR	3	3				
6	688–11181–A2	.GASKET, CYLINDER HEAD 1 .JOINT, DE CULASSE 1	1	1				
7	90430–14115	.GASKET .JOINT	1	1				
8	688–11193–A1	.GASKET, HEAD COVER 1 .JOINT, COUVERCLE DE CULASSE 1	1	1				
9	688–12414–A1	.GASKET, COVER .JOINT, COUVERCLE	1	1				
10	688–41112–A0	.GASKET, EXHAUST INNER COVER .JOINT, PLAQUE D'ECHAPPEMENT	1	1				
11	688–41114–A0	.GASKET, EXHAUST OUTER COVER .JOINT, COUVERCLE D'ECHAPPEMENT	1	1				
12	93210–46M16	.O-RING .JOINT TORIQUE	1	1				
13	93102–36M02	.OIL SEAL .JOINT SPY	1	1				
14	93102–30M05	.OIL SEAL .JOINT SPY	1	1				
15	93104–20M02	.OIL SEAL .JOINT SPY	1	1				
16	93210–62269	.O-RING .JOINT TORIQUE	1	1				
17	688–45113–A0	.GASKET, UPPER CASING .JOINT, TUBE D'ARBRE	1	1				
18	93210–32738	.O-RING .JOINT TORIQUE	1	1				
19	650–24431–A0	.GASKET, FUEL PUMP 1 .JOINT 1 DE POMPE A ESSENCE	1	1				
20	6H1–W0093–10	CARBURETOR REPAIR KIT KIT DE REPARATION CARBURATEUR	1	1				
21	6H4–14147–00	.O-RING .JOINT TORIQUE	1	1				
22	93210–04228	.O-RING .JOINT TORIQUE	1	1				
23	692–14590–01	.NEEDLE VALVE ASSY .POINTEAU	1	1				
24	6H4–14548–00	.PIN, FLOAT ARM .AXE, BRAS DE FLOTTEUR	1	1				
25	663–14159–00	.CLIP .JONC	1	1				
26	676–14186–00	.PIN, FLOAT .AXE, FLOTTEUR	1	1				
27	676–14966–00	.CAP .CAPUCHON	1	1				

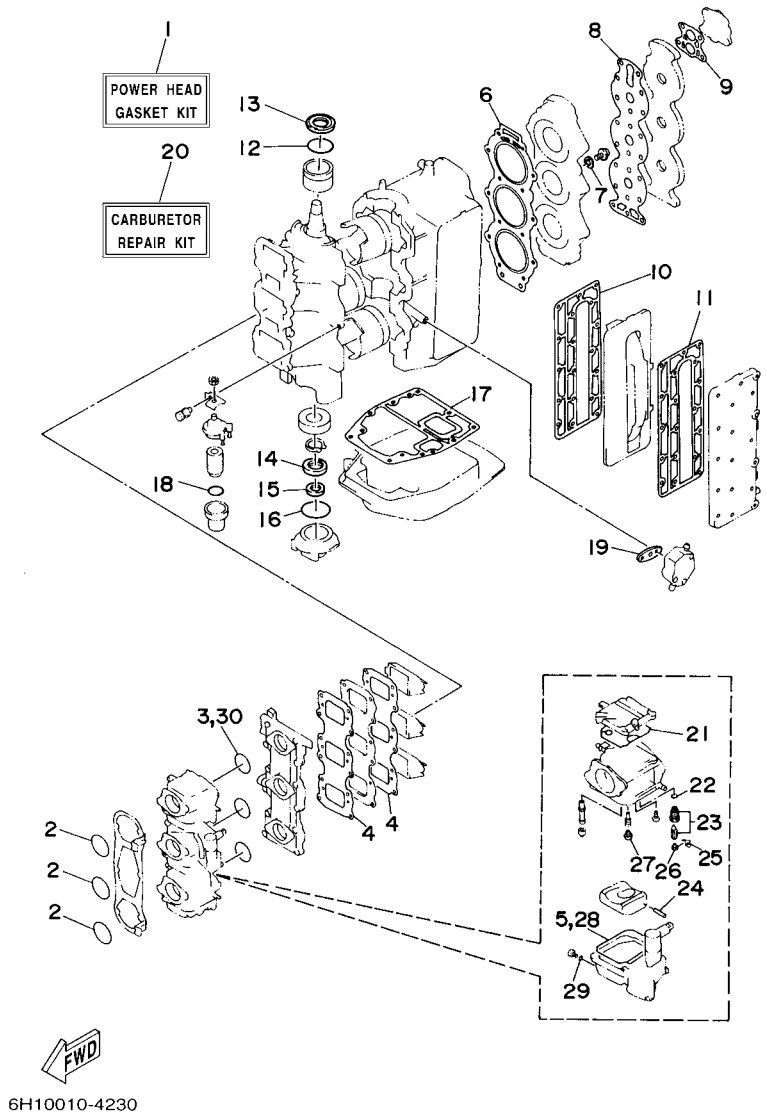

FIG. 26 REPAIR KIT 1 — KITS DE REPARATION 1

REF. NO.	PART NO. N° PIECES	DESCRIPTION DESCRIPTION	67PD	6H1H				REMARKS REMARQUES
28	6H4–14984–00	.GASKET, FLOAT CHAMBER .JOINT, CUVE DE FLOTTEUR	1	1				
29	93210–04230	.O-RING .JOINT TORIQUE	1	1				
30	93210–39ME4	.O-RING .JOINT TORIQUE	1	1				

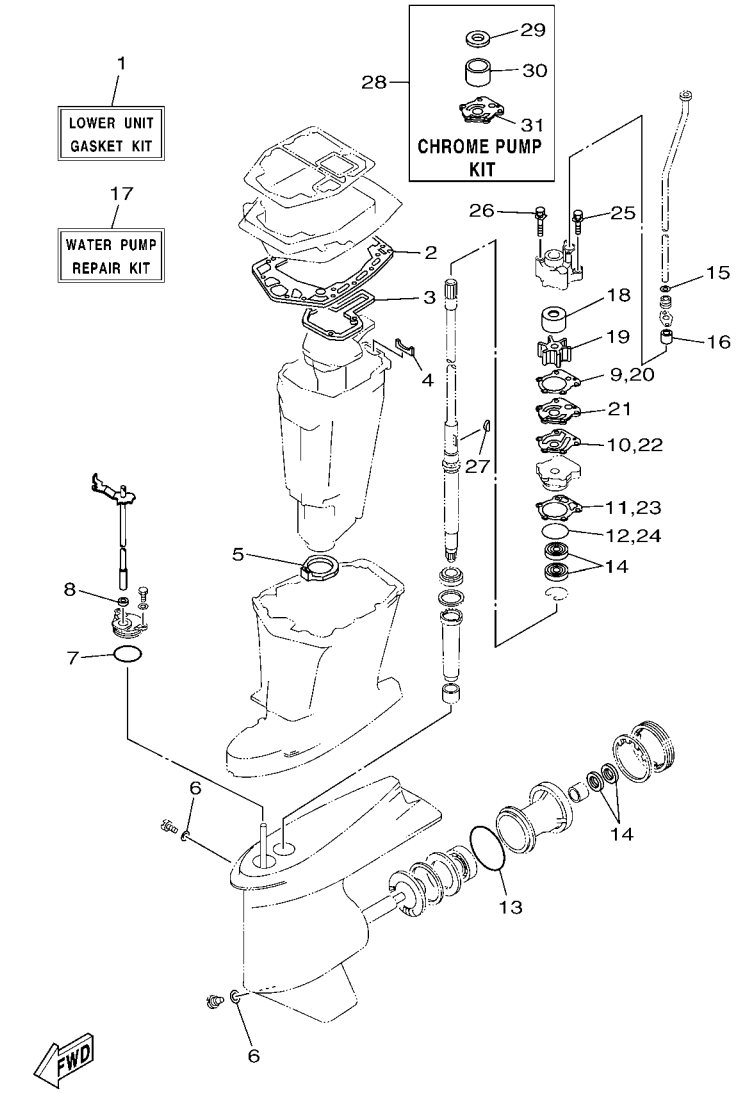

FIG. 27 REPAIR KIT 2 — KITS DE REPARATION 2

REF. NO.	PART NO. N° PIECES	DESCRIPTION DESCRIPTION	67PD	6H1H				REMARKS REMARQUES
1	688–W0001–22	LOWER UNIT GASKET KIT POCHETTE DE JOINTS EMBASE	1	1				
2	688–45114–A1	.GASKET, UPPER CASING .JOINT, TUBE D'ARBRE	1	1				
3	688–41134–A0	.GASKET, EXHAUST MANIFOLD .JOINT, PIPE D'ECHAPPEMENT	1	1				
4	688–41133–00	.GASKET, EXHAUST MANIFOLD 1 .JOINT, PIPE D'ECHAPPEMENT	1	1				
5	688–45123–00	.GASKET, MUFFLER .JOINT, POT DE DETENTE	1	1				
6	90430–08020	.GASKET .JOINT	2	2				
7	93210–49046	.O-RING .JOINT TORIQUE	1	1				
8	93106–09014	.OIL SEAL .JOINT SPY	1	1				
9	688–44315–A0	.GASKET, WATER PUMP .JOINT, POMPE A EAU	1	1				
10	688–44324–A0	.GASKET, CARTRIDGE .JOINT	1	1				
11	688–44316–A0	.GASKET, WATER PUMP .JOINT, POMPE A EAU	1	1				
12	93210–46044	.O-RING .JOINT TORIQUE	1	1				
13	93210–85M97	.O-RING .JOINT TORIQUE	1	1				
14	93101–25M03	.OIL SEAL .JOINT SPY	4	4				
15	90430–12072	.GASKET .JOINT	1	1				
16	663–44366–00	.DAMPER, WATER SEAL 2 .JOINT, TUBE D'EAU 2	1	1				
17	692–W0078–02	WATER PUMP REPAIR KIT KIT DE REPARATION DE LA POMPE	1	1				
18	688–44322–00	.INSERT, CARTRIDGE .CUVETTE	1	1				
19	688–44352–03	.IMPELLER .TURBINE	1	1				
20	688–44315–A0	.GASKET, WATER PUMP .JOINT, POMPE A EAU	1	1				
21	688–44323–00	.OUTER PLATE, CARTRIDGE .PLAQUE EXTERIEURE	1	1				
22	688–44324–A0	.GASKET, CARTRIDGE .JOINT	1	1				
23	688–44316–A0	.GASKET, WATER PUMP .JOINT, POMPE A EAU	1	1				
24	93210–46044	.O-RING .JOINT TORIQUE	1	1				
25	90119–08M13	.BOLT, WITH WASHER .BOULON, AVEC RONDELLE	2	2				
26	90119–08M16	.BOLT, WITH WASHER .BOULON, AVEC RONDELLE	2	2				
27	90280–04M04	.KEY, WOODRUFF .CLAVETTE, DEMI-LUNE	1	1				

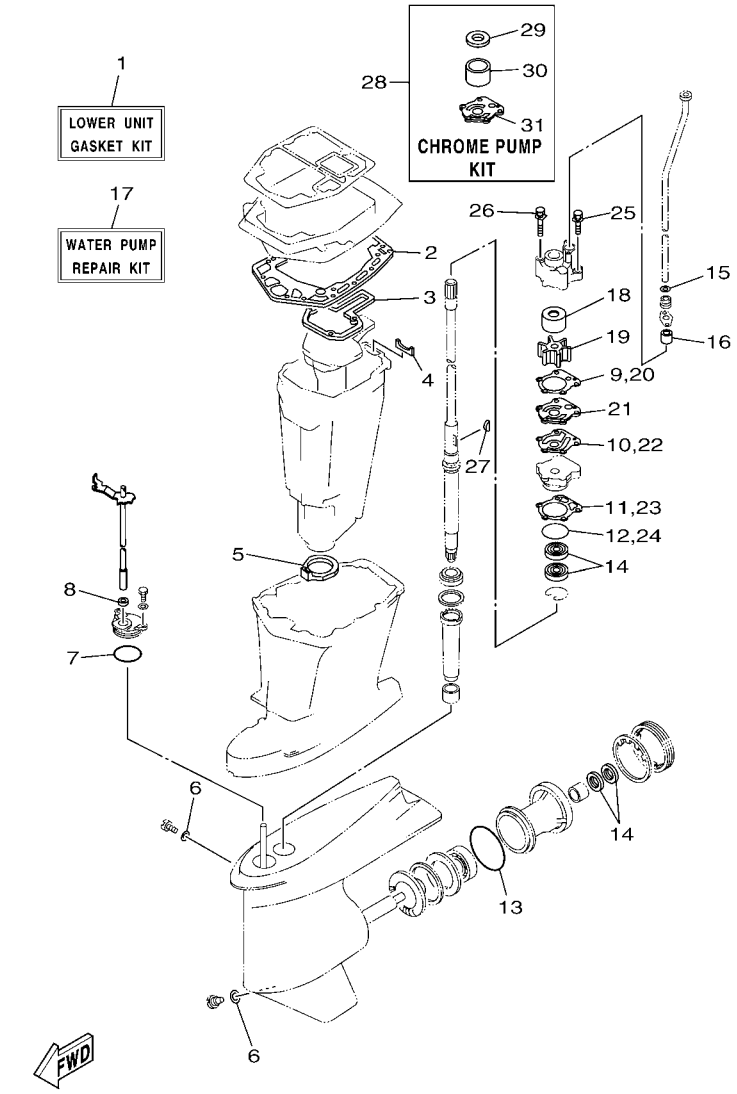

FIG. 27 REPAIR KIT 2 — KITS DE REPARATION 2

REF. NO.	PART NO. N° PIECES	DESCRIPTION DESCRIPTION	67PD	6H1H				REMARKS REMARQUES
28	688–W0078–1A	CHROME PUMP KIT KIT DE POMPE A EAU CHROMEE	1	1				
29	688–44321–41	.INNER PLATE, CARTRIDGE .CUVETTE	1	1				
30	688–44322–41	.INSERT, CARTRIDGE .CUVETTE	1	1				
31	688–44323–40	.OUTER PLATE, CARTRIDGE .PLAQUE EXTERIEURE	1	1				

NUMERICAL INDEX
INDEX NUMERIQUE

PART NO. N° PIECES	REF. NO.
6H1–11111–01–1S	3 – 30
688–11119–01	3 – 28
688–11181–A2	3 – 31
	26 – 6
688–11191–00–1S	3 – 35
688–11193–A1	3 – 36
	26 – 8
688–11325–00	1 – 1
	3 – 26
650–11370–01	3 – 4
688–11370–01	3 – 3
	4 – 2
688–11411–01	4 – 11
663–11518–01	3 – 6
6H1–11536–00	4 – 27
6H1–11537–01	7 – 16
688–11603–A0	4 – 19
688–11604–A0	4 – 19
688–11605–A0	4 – 19
6H1–11631–03–95	4 – 18
663–11633–00	4 – 20
688–11634–10	4 – 21
6H1–11635–03	4 – 18
6H1–11636–03	4 – 18
688–11650–03	4 – 22
688–12411–11	1 – 2
	3 – 41
688–12412–00	3 – 42
688–12413–00–1S	3 – 43
6H1–12413–50	25 – 2
6H1–12414–50	25 – 3
688–12414–A1	1 – 3
	3 – 44
	26 – 9
688–12416–00	3 – 39
6H1–12440–52	25 – 1
6H1–12443–50	25 – 7
6H1–12466–A0	25 – 8
6H1–12466–B0	25 – 10
6E5–12481–00	25 – 11
6H1–12535–00	12 – 34
68T–12572–00	12 – 32
6R3–12580–00	12 – 37
6R3–12581–00	12 – 38
6R3–12582–00	12 – 39
6R3–12583–00	12 – 40
6H1–13117–01	7 – 18
6E9–13183–70	7 – 13

PART NO. N° PIECES	REF. NO.
6H1–13200–02	7 – 1
6H1–13411–00	7 – 42
6J8–13414–00	7 – 41
6H1–13435–00	7 – 45
6H1–13436–00	2 – 29
6H1–13437–21	9 – 20
6R3–13471–00	7 – 2
6L2–13475–00	7 – 3
688–13610–00	5 – 13
688–13621–A1	5 – 11
	26 – 4
688–13624–00	5 – 12
6H1–13641–03	5 – 6
6H3–14137–00	6 – 31
6H4–14146–00	6 – 8
6H3–14146–10	6 – 9
6H3–14146–50	25 – 13
6H4–14146–50	25 – 12
6H4–14147–00	6 – 10
	26 – 21
663–14159–00	6 – 17
	26 – 25
676–14186–00	6 – 18
	26 – 26
6H0–14301–08	6 – 1
6H1–14301–08	6 – 1
6H0–14302–08	6 – 2
6H1–14302–08	6 – 2
6H0–14303–08	6 – 3
6H1–14303–08	6 – 3
6A0–14325–00	8 – 22
6H1–14348–51	25 – 5
6H3–14349–00	5 – 4
	6 – 32
6H1–14349–50	25 – 9
6H3–14380–00	6 – 33
6H1–14413–02	5 – 23
6H1–14440–02	5 – 19
624–14485–00	3 – 5
6H1–14485–00	5 – 7
650–14485–03	5 – 8
6H1–14488–00	9 – 19
63V–14523–00	6 – 5
6H4–14548–00	6 – 15
	26 – 24
697–14555–00	6 – 12
6H4–14567–00	6 – 30
6H2–14578–00	6 – 7

PART NO. N° PIECES	REF. NO.
692–14590–01	6 – 14
	26 – 23
688–14711–01–CA	17 – 10
663–14737–10	17 – 12
692–14923–00	6 – 11
6H1–14943–39	6 – 21
6H1–14947–75	6 – 20
6H1–14948–18	6 – 23
676–14966–00	6 – 22
	26 – 27
6H4–14980–00	6 – 27
6H3–14980–10	6 – 28
6H4–14984–00	6 – 24
	26 – 5
	26 – 28
6H4–14985–01	6 – 19
6H3–14992–00	6 – 25
6H1–15100–05	3 – 2
6H1–15359–01–94	4 – 1
688–15379–00	4 – 6
6H1–15771–00	11 – 19
6H1–15772–00	3 – 53
6H1–15773–01	3 – 55
6H1–21707–07	7 – 26
6H3–21732–00	2 – 21
6H3–21735–00	2 – 22
6H1–21752–00	7 – 33
6H1–21757–00	7 – 39
6J8–21758–00	7 – 38
63D–2175R–00	7 – 36
6H1–21766–01	7 – 43
63D–2176M–00	7 – 35
6H4–21770–00	7 – 37
63D–2177H–00	2 – 3
6H1–21796–00	3 – 56
6YK–24201–03	20 – 1
6YK–24260–01	20 – 4
6YL–24268–01	20 – 2
6G1–24304–02	8 – 1
6YL–24306–54	20 – 7
663–24312–01	3 – 50
6H1–24312–01	12 – 41
688–24313–00	8 – 30
688–24314–00	8 – 31
6H1–24314–00	8 – 27
6YL–24329–00	20 – 6
6E5–24367–01	12 – 30
650–24378–00	3 – 7

PART NO. N° PIECES	REF. NO.
688–24378–00	8 – 34
692–24410–00	8 – 12
663–24411–00	8 – 17
692–24411–00	8 – 14
6H3–24411–10	6 – 40
6A0–24412–02	8 – 23
6A0–24413–00	8 – 13
6H4–24413–00	6 – 38
6L5–24421–00	6 – 37
6A0–24421–01	8 – 21
650–24431–A0	8 – 24
	26 – 19
648–24434–01	8 – 15
6H3–24434–10	6 – 41
648–24435–02	8 – 18
6H3–24452–10	6 – 29
6H4–24486–00	6 – 39
61N–24521–00	8 – 8
61N–24560–00	8 – 6
61N–24563–00	1 – 5
	8 – 7
6H1–24566–01	8 – 10
6YK–24610–01	20 – 3
6H1–24633–00	7 – 40
6E0–28193–00–94	8 – 36
67P–28199–77–D0	8 – 37
67P–28199–77–E0	8 – 37
67P–28199–77–F0	8 – 37
67P–28199–77–G0	8 – 37
67P–28199–77–H0	8 – 37
67P–28199–77–S0	8 – 37
67P–28199–87–K0	8 – 38
67P–28199–87–L0	8 – 38
67P–28199–87–M0	8 – 38
67P–28199–87–N0	8 – 38
67P–28199–87–P0	8 – 38
67P–28199–87–R0	8 – 38
688–41111–00–1S	3 – 46
688–41112–A0	3 – 47
	26 – 10
6H1–41113–00–1S	3 – 49
688–41114–A0	3 – 48
	26 – 11
688–41131–00–CA	17 – 8
692–41131–00–CA	17 – 8
688–41133–00	17 – 9
	27 – 4
688–41134–A0	17 – 7

PART NO. N° PIECES	REF. NO.
688–41134–A0	27 – 3
688–41137–03–CA	17 – 5
688–41211–01	13 – 27
6H1–41213–01	13 – 30
662–41214–01	13 – 8
688–41217–01	5 – 3
682–41237–00	13 – 29
6E9–41237–00	7 – 25
6F5–41237–00	13 – 19
6H1–41237–00	7 – 21
662–41237–01	13 – 26
6H1–41241–02	7 – 20
688–41631–01–1S	13 – 18
688–41632–01–1S	13 – 7
6H1–41636–00	13 – 24
688–42510–03–8D	15 – 3
6H0–42610–00	2 – 1
6H1–42610–00	2 – 1
6H1–42613–01–8D	2 – 12
688–42615–00	2 – 15
6H1–42617–10	2 – 16
6H1–42619–00	2 – 17
6H1–4261A–10	2 – 2
6H1–42627–00	2 – 18
6H1–42637–00	2 – 19
6H1–42647–00	2 – 4
6H1–42649–00	2 – 5
688–42652–10	2 – 7
663–42662–00	2 – 6
688–42675–40	2 – 27
688–42676–40	2 – 28
6H1–42678–10	2 – 25
	2 – 26
692–42678–40	2 – 25
	2 – 26
688–42681–40	2 – 30
	2 – 31
6H1–42694–00	2 – 20
6H1–42711–10–8D	12 – 1
648–42715–00	13 – 48
688–42716–02	12 – 9
663–42724–00	12 – 10
688–42725–20	12 – 11
6H1–42726–21	12 – 22
688–42738–01–8D	12 – 12
688–42741–01–8D	12 – 24
6BG–42748–00	12 – 15
6G1–42748–00	12 – 23

PART NO. N° PIECES	REF. NO.
688–42771–01–8D	12 – 25
6AH–42794–40	12 – 44
6AH–42794–50	12 – 45
688–42815–01–8D	12 – 3
688–42816–00	12 – 7
688–42817–01–8D	12 – 4
6H1–43111–01–8D	14 – 1
6H1–43112–00–8D	14 – 10
6E5–43126–10	14 – 38
688–43131–03	14 – 19
6G5–43144–00	14 – 32
6E5–43145–01	21 – 9
6G5–43145–01	14 – 23
6G5–43148–00	14 – 27
688–43160–01	14 – 34
688–43165–00	14 – 35
6H1–43181–01	14 – 24
6H1–43185–01	14 – 25
6H1–43311–02–8D	14 – 15
6H1–43376–00	15 – 38
6H1–43800–17–8D	16 – 1
67F–43802–00	16 – 39
6H1–43804–10	16 – 4
6H1–43805–10	16 – 3
6H1–4380F–10	16 – 7
6H1–4380G–10	16 – 15
6H1–4380H–10	16 – 13
6H1–4380J–10	16 – 8
6H1–43810–11	16 – 20
6H1–43812–00	16 – 24
6H1–43813–10	16 – 27
6H1–43814–11	16 – 19
6H1–43816–00	16 – 67
6H1–43817–01	16 – 47
6E5–43818–00	16 – 32
6H1–43820–11	16 – 63
6H1–43821–11	16 – 59
6H1–43822–10	16 – 58
6H1–43828–10	16 – 30
6H1–43829–00	16 – 36
6H1–4382A–10	16 – 52
6H1–43830–11	16 – 49
6H1–43831–10	16 – 48
6H1–43833–10	16 – 33
6H1–43834–00	16 – 34
6H1–43835–10	16 – 29
6H1–43840–11	16 – 17
6H1–43841–11	16 – 42

PART NO. N° PIECES	REF. NO.
6H1–43843–11	16 – 71
6H1–43844–10	16 – 44
6H1–43845–00	16 – 55
6H1–43847–00	16 – 50
6H1–4384E–20	16 – 61
6H1–4384F–10	16 – 46
6H1–4384G–11	16 – 45
6H1–43854–00	16 – 53
6H1–43855–11	16 – 70
6H1–43856–10	16 – 43
6H1–4385H–00	16 – 76
6H1–43861–00	16 – 21
6H1–43861–10	16 – 18
	16 – 22
	16 – 60
6D8–43863–00	16 – 26
	16 – 56
6H1–43864–00	16 – 64
6H1–43865–10	16 – 16
6H1–43866–01	16 – 40
6H1–43867–00	16 – 41
6H1–43868–00	16 – 73
6H1–4386K–10	16 – 9
6H1–43871–10	16 – 23
6H1–43872–10	16 – 25
6H1–43874–00	16 – 66
6H1–43875–00	16 – 57
6H1–4387J–00	16 – 75
6H1–43880–02	16 – 2
6H1–43881–10	16 – 12
6H1–4388E–11	16 – 72
6H1–43891–10	16 – 5
6H1–43892–10	16 – 6
6H1–43895–12	16 – 69
6H1–43899–00	16 – 51
688–44117–00–94	13 – 34
688–44118–01–94	13 – 42
6H1–44120–13	13 – 49
6H1–44121–00	13 – 41
688–44122–00	13 – 38
688–44124–00	13 – 37
6H1–44144–00	18 – 70
6H1–44151–00	18 – 69
703–44189–00	23 – 32
703–44189–10	23 – 39
688–44194–00	3 – 14
	13 – 21
688–44311–01	18 – 21

PART NO. N° PIECES	REF. NO.
688–44315–A0	18 – 23
	27 – 9
	27 – 20
688–44316–A0	18 – 30
	27 – 11
	27 – 23
688–44321–41	27 – 29
688–44322–00	18 – 22
	27 – 18
688–44322–41	27 – 30
688–44323–00	18 – 31
	27 – 21
688–44323–40	27 – 31
688–44324–A0	18 – 32
	27 – 10
	27 – 22
6D8–44341–01–CA	18 – 26
688–44352–03	18 – 24
	27 – 19
688–44361–10	19 – 2
663–44366–00	19 – 14
	27 – 16
663–44367–00	19 – 1
6BL–44391–00	12 – 2
688–44511–00	15 – 33
688–44514–00	15 – 26
6H1–44526–00	14 – 3
663–44551–02–8D	15 – 9
687–44552–02	15 – 18
663–44553–01–8D	15 – 23
687–44555–00	15 – 11
663–44575–00	15 – 16
	15 – 32
688–45111–04–8D	17 – 1
688–45113–A0	17 – 18
	26 – 17
688–45114–A1	17 – 6
	27 – 2
688–45123–00	17 – 11
	27 – 5
663–45155–10	17 – 2
6H1–45214–00	18 – 12
6H1–45215–00	18 – 13
6H1–45251–03	1 – 7
	14 – 2
6H1–45300–16–8D	18 – 1
6H1–45301–03–8D	18 – 2
688–45321–00	18 – 16

PART NO. N° PIECES	REF. NO.
688–45331–00–CA	18 – 55
688–45341–10	18 – 10
67F–45371–00	1 – 9
	19 – 12
6E5–45371–10	1 – 10
	19 – 25
688–45375–00	19 – 11
663–45376–00	19 – 10
6E5–45378–00	18 – 65
688–45383–02	18 – 62
688–45384–02	18 – 63
6H1–45501–11	18 – 36
688–45536–01	18 – 4
688–45551–01	18 – 37
688–45560–00	18 – 39
688–45567–01	18 – 7
688–45567–10	18 – 7
688–45567–20	18 – 7
688–45567–30	18 – 7
688–45567–40	18 – 7
688–45567–50	18 – 7
688–45567–60	18 – 7
6H1–45571–00	18 – 54
688–45576–00	18 – 58
688–45577–01	18 – 57
688–45577–10	18 – 57
688–45577–20	18 – 57
688–45577–30	18 – 57
688–45577–40	18 – 57
688–45577–50	18 – 57
688–45577–60	18 – 57
688–45587–01	18 – 5
688–45587–10	18 – 5
688–45587–20	18 – 5
688–45587–30	18 – 5
688–45587–40	18 – 5
688–45587–50	18 – 5
688–45587–60	18 – 5
6H1–45611–01	18 – 40
6H1–45631–01	18 – 50
688–45633–00	18 – 52
6H1–45634–02	18 – 44
6H1–45635–00	18 – 53
6H1–45641–01	18 – 42
6H1–45668–00	18 – 47
688–45930–02	19 – 22
688–45932–60	19 – 22
6E5–45941–00	19 – 22

PART NO. N° PIECES	REF. NO.
6E5–45943–00	19 – 22
6E5–45945–01	19 – 22
6E5–45947–00	19 – 22
6E5–45949–00	19 – 22
6E5–45952–00	19 – 22
6E5–45954–00	19 – 22
6E5–45956–00	19 – 22
688–45970–03	19 – 22
6E5–45970–10	19 – 23
688–45972–02	19 – 22
6E5–45972–10	19 – 23
688–45974–02	19 – 22
6E5–45974–10	19 – 23
688–45976–01	19 – 22
6E5–45976–10	19 – 23
6E5–45978–10	19 – 23
688–45978–60	19 – 22
688–45987–01	19 – 17
6E5–45994–10	19 – 24
67F–45997–00	19 – 18
703–48129–00	23 – 38
703–48152–00	23 – 58
703–48153–00	23 – 3
703–48189–00	23 – 17
703–48198–00	23 – 14
703–48207–1B	22 – 1
	23 – 1
703–48211–02	23 – 62
703–48212–00	23 – 59
703–48213–00	23 – 60
703–48215–00	23 – 43
703–48219–00	23 – 30
703–48221–00	23 – 57
703–48222–00	23 – 27
703–48223–00	23 – 28
703–48225–00	23 – 29
703–48226–00	23 – 26
703–48227–00	23 – 24
703–48232–00	23 – 63
703–48234–00	23 – 18
703–48235–00	23 – 4
703–48236–00	23 – 16
703–48238–00	23 – 22
703–48243–00	23 – 15
703–48244–00	23 – 21
703–48245–00	23 – 11
703–48246–00	23 – 23
701–48248–00	23 – 13

PART NO. N° PIECES	REF. NO.
703–48252–00	23 – 12
703–48261–01	23 – 2
703–48264–00	23 – 6
703–48265–00	23 – 9
703–48268–00	23 – 5
703–48271–00	23 – 61
703–48281–00	23 – 31
703–48284–10	23 – 53
701–48287–00	23 – 42
703–48293–10	23 – 41
701–48320–00	22 – 2
701–48320–20	22 – 2
701–48320–30	22 – 2
701–48320–50	22 – 2
701–48320–60	22 – 2
701–48320–80	22 – 2
663–48344–00	13 – 6
703–48345–01	23 – 19
703–48358–00	23 – 20
688–48511–12	15 – 35
663–48531–00	13 – 1
663–48538–00	13 – 2
688–61350–10	21 – 1
688–61351–10	21 – 2
6E5–61355–00	21 – 8
6H4–81315–11	24 – 18
688–81332–01	9 – 11
6H1–81337–01	9 – 14
688–81800–12	11 – 1
676–81809–10	11 – 3
688–81810–11	11 – 5
663–81811–11	11 – 6
663–81812–11	11 – 8
663–81813–10	11 – 9
663–81820–12	11 – 10
688–81824–10	11 – 15
663–81826–10	11 – 14
688–81830–11	11 – 12
688–81831–00	11 – 13
663–81832–11	11 – 11
663–81840–11	11 – 7
676–81850–11	11 – 2
676–81857–10	11 – 4
6H1–81916–00	10 – 27
6G1–81941–10	10 – 15
6E9–81945–70	10 – 17
6H0–81949–01	10 – 44
6H0–81949–10	10 – 43

PART NO. N° PIECES	REF. NO.
61A–81950–00	10 – 39
6G1–81952–00	10 – 16
6H0–81960–10	10 – 9
6AH–81994–40	5 – 25
6AH–81994–50	5 – 26
6AH–81995–40	9 – 21
6AH–81995–50	9 – 22
6AG–81996–00	9 – 23
6H0–82105–03	10 – 34
6H0–82117–00	10 – 36
6Y5–82117–00	24 – 14
703–82119–00	10 – 2
682–82119–01	10 – 42
	10 – 45
688–82127–02	15 – 25
6E5–82148–00	14 – 11
6H1–82148–00	14 – 8
1E6–82151–00	24 – 13
	24 – 13
663–82151–00	10 – 33
6G5–82152–00	10 – 20
6A0–82317–00	7 – 50
6E3–82370–21	10 – 29
703–82510–44	23 – 44
697–82519–00	10 – 37
703–82531–00	23 – 47
6K1–82532–00	23 – 46
703–82540–00	23 – 51
682–82556–00	23 – 49
688–82560–10	10 – 30
6H1–82563–10	10 – 46
703–82563–12	23 – 56
688–82575–01	23 – 48
703–82577–00	23 – 45
6R5–82582–B0	7 – 52
6E5–82587–00	10 – 47
688–82588–01	10 – 31
688–8258A–20	23 – 50
6H0–82590–80	10 – 32
703–82591–00	23 – 54
703–82592–00	23 – 55
688–82594–00	10 – 38
703–82594–00	23 – 25
703–83383–11	23 – 52
6Y5–8350T–91	24 – 1
6Y5–83533–T2	24 – 9
6Y5–83553–00	24 – 12
6Y5–83553–M0	24 – 12

NUMERICAL INDEX
INDEX NUMERIQUE

PART NO. N° PIECES	REF. NO.
6Y5–83557–10	24 – 16
6E5–83558–00	19 – 27
6E5–83558–10	18 – 67
6Y5–8355X–T1	24 – 5
	24 – 10
6Y5–83570–S6	24 – 6
6H1–83614–00	10 – 48
6Y5–83653–20	24 – 15
6Y5–83653–30	24 – 15
6H1–83672–21	15 – 1
6H0–85510–03	9 – 2
6H0–85540–07	10 – 1
6H1–85542–00	10 – 21
6H1–85542–10	10 – 3
6H0–85550–00	9 – 1
697–85570–00	10 – 6
6H0–85580–01	9 – 3
6H1–85711–60	5 – 24
6R5–85711–60	10 – 51
6H1–85720–16	7 – 51
6H2–85895–01	9 – 4
6Y5–87122–S0	24 – 11
6H1–W0001–02	26 – 1
688–W0001–22	27 – 1
688–W0004–00	5 – 14
692–W0078–02	1 – 11
	27 – 17
688–W0078–1A	27 – 28
6H1–W0090–45–1S	3 – 1
6H1–W0093–10	26 – 20
656–W2810–02	8 – 35
90101–10041	15 – 27
90101–12M65	14 – 42
90105–10M67	19 – 13
90109–06M39	7 – 5
	10 – 25
90109–06M40	7 – 6
90109–08022	4 – 23
90109–12261	15 – 15
90116–10062	15 – 36
90116–10M06	3 – 22
90119–06M09	12 – 8
90119–06M12	3 – 9
90119–06M24	13 – 33
90119–06M29	14 – 4
90119–06M61	12 – 19
90119–06M75	10 – 24
90119–06M88	7 – 48

PART NO. N° PIECES	REF. NO.
90119–06MA3	3 – 37
90119–06MA5	3 – 45
90119–08020	3 – 52
90119–08102	17 – 16
90119–08M13	18 – 35
	27 – 25
90119–08M16	18 – 34
	27 – 26
90119–08M80	17 – 4
90119–08M84	19 – 9
90119–08MA3	3 – 29
90119–08MA8	3 – 32
90119–10005	3 – 10
90151–05M00	18 – 14
90157–05M16	20 – 5
90157–06013	13 – 20
90157–06014	3 – 13
90157–06M01	12 – 20
90159–06M11	10 – 28
90159–06M20	9 – 15
90160–04006	19 – 16
90167–06002	12 – 33
90170–09M03	21 – 5
90170–16M01	18 – 38
90170–20137	9 – 9
90171–16011	19 – 20
90179–06066	15 – 22
90183–02M03	18 – 49
90183–05M06	2 – 24
90185–05002	18 – 15
90185–08057	15 – 39
90185–09M01	21 – 4
90185–10027	15 – 31
	15 – 37
90185–22M11	14 – 22
90201–03313	18 – 48
90201–06416	12 – 17
90201–06M31	10 – 26
90201–08M13	13 – 16
90201–08M23	13 – 11
90201–08M93	7 – 17
90201–10008	3 – 11
90201–10M20	21 – 3
90201–10M63	21 – 7
90201–11M22	15 – 30
90201–12062	14 – 43
90201–12426	14 – 44
90201–12M16	15 – 12

PART NO. N° PIECES	REF. NO.
90201–13M19	15 – 14
90201–20417	4 – 25
90201–20M21	15 – 28
90201–21M18	9 – 10
90201–22M67	14 – 21
90201–30M00	15 – 4
90202–05088	7 – 23
90202–07M07	13 – 39
90202–12060	19 – 3
90202–12092	13 – 15
90202–20M06	15 – 29
90202–25M04	15 – 13
90206–10M04	13 – 32
90206–13019	12 – 6
90209–06M05	5 – 22
90249–06M19	14 – 29
90250–07M02	18 – 51
90266–06009	2 – 11
90280–04M04	18 – 25
	27 – 27
90280–05015	9 – 8
90282–04010	18 – 64
90338–05M03	14 – 18
90338–05M12	2 – 23
90340–08002	18 – 9
90340–14M06	3 – 33
90386–07M58	13 – 50
90386–10M16	14 – 26
90386–12089	13 – 12
90386–13M38	12 – 5
90386–18M14	16 – 31
90386–18M35	14 – 39
90386–18M63	14 – 41
90386–22M13	13 – 14
90386–22M15	14 – 20
90386–30M60	15 – 8
90386–30M77	15 – 6
90386–30M78	15 – 5
90387–06119	7 – 49
90387–06M03	10 – 23
90387–06M17	13 – 31
90387–06M31	7 – 32
90387–06M69	12 – 16
90387–08M16	13 – 13
90387–10M02	14 – 30
90387–10M42	21 – 6
90389–25M00	19 – 19
90430–08020	1 – 8

PART NO. N° PIECES	REF. NO.
90430–08020	18 – 11
	27 – 6
90430–12072	19 – 4
	27 – 15
90430–14115	3 – 34
	26 – 7
90440–14M00	14 – 46
90445–07240	7 – 9
90445–07260	3 – 16
90445–07M00	3 – 19
90445–07M23	3 – 20
90445–07M44	7 – 10
90445–07M86	4 – 7
90445–07M87	7 – 12
90445–07M90	7 – 8
90445–07MA5	5 – 1
90445–07ME9	18 – 66
90445–07MF1	19 – 26
90445–08M01	7 – 44
90445–09097	8 – 29
90445–09104	8 – 4
90445–09220	8 – 33
90445–11M09	7 – 27
90464–07M05	7 – 15
90464–09M31	12 – 43
90464–11M18	14 – 17
90464–11M24	7 – 28
90464–15M08	12 – 21
90464–18M14	10 – 50
90464–23M22	10 – 35
90465–06M90	9 – 16
90465–08M23	10 – 12
90465–11M10	12 – 42
	15 – 40
	18 – 68
	24 – 17
90465–11M27	7 – 29
90465–12M03	3 – 23
90465–13M11	10 – 4
90465–13M30	7 – 34
90465–18147	6 – 42
90467–06016	3 – 17
	3 – 21
	4 – 8
	5 – 2
90467–08004	3 – 51
	5 – 5
	7 – 47

PART NO. N° PIECES	REF. NO.
90467–08004	8 – 5
	8 – 28
	8 – 32
90467–10M04	25 – 4
90467–11M08	7 – 30
90467–12M11	7 – 46
90468–05M03	7 – 24
90468–07M02	7 – 7
	7 – 11
	7 – 14
90468–18008	13 – 9
	13 – 40
	13 – 52
90480–09M25	10 – 22
90480–19M06	19 – 15
90480–20M05	3 – 38
90480–24M04	3 – 18
90501–10326	6 – 6
90501–12082	13 – 47
90501–12M48	18 – 41
90501–14M08	15 – 21
90501–16M11	3 – 40
90501–16M12	13 – 23
90501–16M65	18 – 45
90502–16M02	14 – 37
90506–14M24	14 – 31
90508–29M05	13 – 17
91318–04025	16 – 74
91318–08016	16 – 65
91490–30025	19 – 21
91690–30012	13 – 3
	14 – 36
91690–30020	14 – 28
92903–06600	5 – 18
	6 – 44
	10 – 8
	10 – 19
	13 – 36
92903–08100	13 – 44
92903–08600	11 – 17
	13 – 45
92990–04100	24 – 3
	24 – 7
92990–05100	5 – 16
	8 – 20
92990–06600	12 – 31
92990–08200	13 – 51
92990–08600	11 – 18

PART NO. N° PIECES	REF. NO.
92990–08600	23 – 34
92990–10100	19 – 8
92995–04600	11 – 21
92995–06100	2 – 9
	14 – 6
92995–06600	2 – 10
	2 – 14
	3 – 25
	4 – 10
	8 – 3
	8 – 26
	9 – 7
	9 – 13
	9 – 18
	10 – 11
	10 – 14
	10 – 41
	12 – 14
	12 – 27
	12 – 29
	12 – 36
	14 – 7
	18 – 20
92995–08600	13 – 5
	15 – 20
	17 – 15
92995–10600	14 – 14
	19 – 7
93101–25M03	18 – 28
	18 – 61
	27 – 14
93102–08M43	16 – 14
93102–30M05	4 – 3
	26 – 14
93102–36M02	4 – 13
	26 – 13
93104–20M02	4 – 4
	26 – 15
93106–09014	18 – 18
	27 – 8
93210–04228	6 – 13
	26 – 22
93210–04230	6 – 26
	26 – 29
93210–064A5	16 – 38
93210–07003	18 – 71
93210–09165	16 – 37
93210–10M74	16 – 54

NUMERICAL INDEX
INDEX NUMERIQUE

PART NO. N° PIECES	REF. NO.
93210–11368	16 – 68
93210–13M04	7 – 19
93210–16275	21 – 10
93210–19MA7	7 – 4
93210–29M94	15 – 7
93210–32738	1 – 6
	8 – 9
	26 – 18
93210–39ME4	5 – 10
	26 – 3
	26 – 30
93210–46044	5 – 20
	18 – 29
	26 – 2
	27 – 12
	27 – 24
93210–46M16	4 – 14
	26 – 12
93210–49046	18 – 17
	27 – 7
93210–62269	4 – 5
	26 – 16
93210–68N50	16 – 28
93210–85M97	18 – 59
	27 – 13
93306–206U5	4 – 16
93306–207U0	18 – 56
93310–636U4	4 – 12
93310–730V8	4 – 26
93310–835U8	4 – 15
93315–325V1	18 – 3
93317–325U0	18 – 60
93332–000U3	18 – 6
93332–000W7	18 – 8
93410–18M05	14 – 40
93410–28M06	15 – 10
93410–32M00	4 – 17
93430–06024	23 – 10
93450–07M00	18 – 73
93450–44166	18 – 27
93501–04M02	13 – 46
93503–16003	18 – 46
93505–32038	16 – 77
93603–12M11	18 – 43
93603–21111	4 – 24
93604–10M03	18 – 33
93606–12019	17 – 3
	17 – 19

PART NO. N° PIECES	REF. NO.
93606–12019	19 – 5
93700–06M03	14 – 16
94702–00160	1 – 4
94702–00247	1 – 4
	3 – 58
95303–06600	13 – 22
95303–06700	3 – 15
95313–10600	3 – 12
95380–03600	6 – 35
	8 – 16
95380–04600	24 – 4
	24 – 8
95380–05600	7 – 22
	13 – 25
	13 – 28
	23 – 7
95380–06600	23 – 40
95380–08600	8 – 11
95380–12600	14 – 45
95380–12800	15 – 17
97013–06012	6 – 43
97013–06016	10 – 18
97013–06020	10 – 7
	13 – 35
97013–06030	5 – 17
97013–08030	11 – 16
	13 – 43
97075–08025	15 – 19
	17 – 14
97075–10040	19 – 6
97095–05012	9 – 5
97095–06010	9 – 12
	14 – 33
97095–06012	3 – 54
	9 – 17
	10 – 13
97095–06014	3 – 24
97095–06016	2 – 8
	2 – 13
	7 – 31
	10 – 49
	12 – 13
	14 – 5
	18 – 19
97095–06020	4 – 9
	8 – 2
	10 – 10
	12 – 26

PART NO. N° PIECES	REF. NO.
97095–06020	12 – 35
97095–06025	10 – 40
97095–06030	12 – 18
	12 – 28
97095–06040	8 – 25
	9 – 6
97095–06095	5 – 9
97095–08012	3 – 57
97095–08016	13 – 4
97095–08045	13 – 10
97095–10045	14 – 13
97380–05025	23 – 8
97380–08030	23 – 33
97575–08530	17 – 13
97575–08535	15 – 34
	17 – 17
97595–06420	16 – 35
97595–06510	14 – 9
97595–06550	10 – 5
97602–05210	16 – 62
97607–04310	16 – 11
97803–04010	6 – 34
97880–04006	25 – 6
97880–05020	5 – 15
97880–06012	14 – 12
97885–04010	11 – 20
97885–05016	16 – 10
97885–06016	15 – 24
97885–06050	5 – 21
97980–04114	6 – 4
97985–06216	15 – 2
98503–05028	8 – 19
98580–04006	23 – 36
98580–04008	6 – 16
98580–04010	23 – 35
98580–05010	23 – 37
98780–04015	3 – 27
98980–03006	6 – 36
99001–08600	18 – 72
99530–08012	3 – 8
9E450–04533	24 – 2

PART NO. N° PIECES	REF. NO.

PART NO. N° PIECES	REF. NO.

PART NO. N° PIECES	REF. NO.