YAMAHA

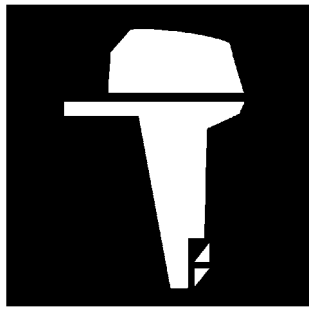

PARTS CATALOGUE
CATALOGUE DE PIECES DETACHEES

F115AET'14 (68VE)
FL115AET'14 (68WE)

1N68V-300F1

( )

YAMAHA GENUINE Parts & Accessories

2016/4/18

NEWS NO.	DATE	COMMENT
PE0-OM-160009	Apr.,11,2016	MOD:F(L)115A FUEL (1) LIST/ILLUSTRATION REVISION

F115AET/FL115AET
PARTS CATALOGUE
©2014 by Yamaha Motor Co., Ltd.
1st edition, May 2014
All rights reserved.
Any reprinting or unauthorized use
without the written permission of
Yamaha Motor Co., Ltd.
is expressly prohibited.
Printed in Japan.

F115AET/FL115AET
CATALOGUE DE PIECES DETACHEES
©2014 par Yamaha Motor Co., Ltd.
1re édition, mai 2014
Tous droits réservés
Toute réimpression ou utilisation
non autorisée sans la permission écrite
de la Yamaha Motor Co., Ltd.
est formellement interdite.
Imprimé au Japon

FOREWORD

This Parts Catalogue is related to the parts for the model(s) on the cover page. When you are ordering replacement parts, please refer to this Parts Catalogue and quote both part numbers and part names correctly.

1. Modifications or additions which have been made after the issue of the Parts Catalogue will be announced in the Parts News.
   It is advisable that you make the necessary corrections to the Parts Catalogue according to the Parts News.

2. Abbreviations
   The following abbreviations are used in this Parts Catalogue.

   "UR" Use specified parts number.
   "UN" Use as many as needed.
   "AP" Alternate Parts
   "LM" Locally Made (Parts need to be ordered locally)
   "F#" Frame No. (Applicable machine No.)
   "O/S" Over Size

3. The number of components for assembly
   - Parts, which are to be supplied in an assembly, are listed with a dot (.) in front of the part name as shown below.
   - The numeral appearing to the right of each component part indicates the quantity of parts for each assembly unit.

PART NO.	DESCRIPTION	Q'TY	REMARKS
2F5–83310–60	FRONT FLASHER LIGHT ASSY	2	
115–83311–60	.BULB (6V–18W)	1	

4. Applicable colours of graphics are represented in the "REMARKS" as shown below.

PART NO.	DESCRIPTION	Q'TY	REMARKS
2N4–24110–00–X5	FUEL TANK COMP.	2	MXR
3J1–24240–10	.GRAPHIC, FUEL TANK	1	FOR MXR

5. Note that the illustrations for reference in finding parts numbers are not to be used for assembling. When assembling, please use the applicable service manual.

6. The asterisk (*) before a reference number indicates modified items after the first edition.

7. Applicable Serial No.

   Engine Serial No.

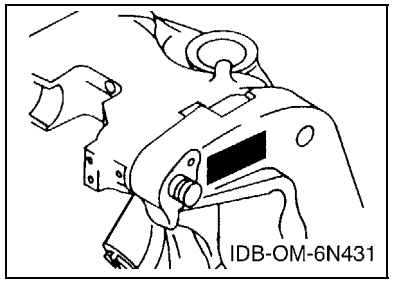

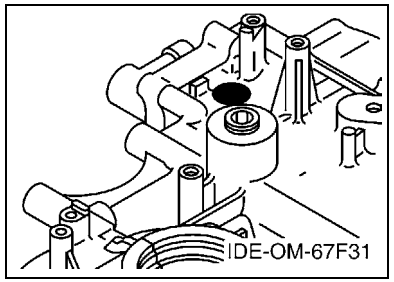

8. Applicable Engine Starting Serial No.

Model	Serial No.	Model	Serial No.
F115A	68V-1163115	FL115A	68W-1005922

9. Applicable Colour Code

Abbreviation	Colour Name	Colour Code
DBN1	DARK BLUISH GRAY 1	008D

10. Quantity Column Information

Column No.	Name Of Q'ty Column	Applicable Model
1	68VE	F115AET
2	68WE	FL115AET

AVANT–PROPOS

Ce catalogue de pièces détachées concerne les pièces pour le(s) modèle(s) indiqué(s) sur la page de couverture. Lorsque vous commandez des pièces de rechange, veuillez vous référer à ce catalogue de pieces détachées et indiquer clairement les numéros et les noms des pièces détachées.

1. Les modifications ou ajouts ayant été effectués après la parution du catalogue de pièces détachées seront décrits dans les Bulletins d'information concernant les pièces détachées.
   Il est recommandé que vous apportiez les corrections nécessaires au catalogue des pièces détachées en vous référant aux Bulletins d'information.

2. Abréviations
   Dans ce catalogue, les abréviations suivantes sont utilisées:

   "UR" Utiliser le numéro de pièces spécifié.
   "UN" Utiliser autant que nécessaire.
   "AP" Pièces de substitution
   "LM" Fabrication locale (les pièces doivent être commandées localement.)
   "F#" N° de cadre (applicable au N° de série)
   "O/S" Surdimensionné

3. Nombre de pièces d'un assemblage
   - Les pièces fournies comme composants d'un assemblage sont précédées d'un point (.) de la manière indiquée ci–dessous.
   - Le chiffre apparaissant à la droite de chaque composant indique la quantité de pièces pour chaque unité d'assemblage.

N° PIECES	DESCRIPTION	QTE	REMARQUES
2F5–83310–60	ENS. CLIGNOTANT AVANT	2	
115–83311–60	.AMPOULE (6V–18W)	1	

4. Les couleurs concernant les graphiques sont indiquées dans la colonne "REMARQUES", comme indiqué ci–dessous.

N° PIECES	DESCRIPTION	QTE	REMARQUES
2N4–24110–00–X5	RESERVOIR A ESSENCE.	2	MXR
3J1–24240–10	.GRAPHIQUE	1	POUR MXR

5. Veuillez noter que les illustrations sont indiquées à titre de référence pour trouver les numéros de pièces, non pour être utilisées lors de l'assemblage. Lors de l'assemblage, veuillez utiliser le manuel d'entretien adéquat.

6. L'astérisque (*) placé devant un numéro de référence indique des éléments qui ont été modifiés après la première édition.

7. N° de série applicable

   N° de Série du moteur

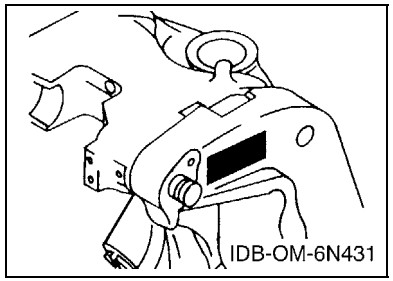

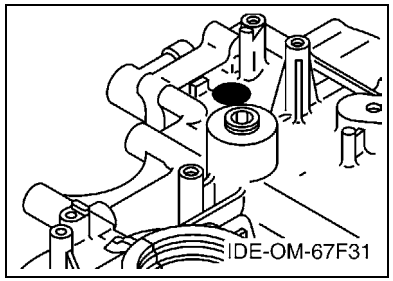

8. N° de série initial du moteur applicable

Modèle	N° de série	Modèle	N° de série
F115A	68V-1163115	FL115A	68W-1005922

9. Code couleur applicable

Abréviation	Nom de la couleur	Code couleur
DBN1	DARK BLUISH GRAY 1	008D

10. Informations relatives à la colonne Quantité

N° de la colonne	Nom de la colonne Qté	Modèle applicable
1	68VE	F115AET
2	68WE	FL115AET

CONTENTS

SCHEDULED SERVICE PARTS 1
TOP COWLING 2
CYLINDER & CRANKCASE 1 3
CRANKSHAFT & PISTON 5
CYLINDER & CRANKCASE 2 6
VALVE 8
INTAKE 1 10
INTAKE 2 12
INTAKE 3 14
FUEL INJECTION PUMP 1 16
FUEL INJECTION PUMP 2 18
FUEL 1 19
FUEL 2 21
GENERATOR 22
ELECTRICAL 1 23
ELECTRICAL 2 24
ELECTRICAL 3 26
STARTING MOTOR 27
BOTTOM COWLING 29
CONTROL 32
BRACKET 1 34
BRACKET 2 36
POWER TRIM & TILT ASSY 1 38
POWER TRIM & TILT ASSY 2 40
UPPER CASING 42
OIL PAN 44
LOWER CASING & DRIVE 1 45
LOWER CASING & DRIVE 2 49
LOWER CASING & DRIVE 3 51
LOWER CASING & DRIVE 4 55
STEERING GUIDE 57
OPTIONAL PARTS 1 58
OPTIONAL PARTS 2 59
OPTIONAL PARTS 3 60
REPAIR KIT 1 61
REPAIR KIT 2 62

INDEX

NUMERICAL INDEX 64

TABLE DES MATIERES

PIECES MAINTENANCE PERIODIQUE 1
CAPOT SUPERIEUR 2
CYLINDRE & CARTER 1 3
VILEBREQUIN & PISTON 5
CYLINDRE & CARTER 2 6
SOUPAPE 8
ADMISSION 1 10
ADMISSION 2 12
ADMISSION 3 14
POMPE A INJECTEUR 1 16
POMPE A INJECTEUR 2 18
CARBURANT 1 19
CARBURANT 2 21
GENERATRICE 22
PARTIE ELECTRIQUE 1 23
PARTIE ELECTRIQUE 2 24
PARTIE ELECTRIQUE 3 26
DEMARREUR ELECTRIQUE 27
CAPOT INFERIEUR 29
COMMANDE 32
SUPPORT 1 34
SUPPORT 2 36
PUISSANCE PARER ET INCLINER 1 38
PUISSANCE PARER ET INCLINER 2 40
FOURREAU 42
VENTILATEUR D'HUILE 44
BOITIER D'HELICE TRANSMISSION1 45
BOITIER D'HELICE TRANSMISSION2 49
BOITIER D'HELICE TRANSMISSION3 51
BOITIER D'HELICE TRANSMISSION4 55
FIXATION DE DIRECTION 57
PIECES OPTIONNELLES 1 58
PIECES OPTIONNELLES 2 59
PIECES OPTIONNELLES 3 60
KITS DE REPARATION 1 61
KITS DE REPARATION 2 62

INDEX

INDEX NUMERIQUE 64

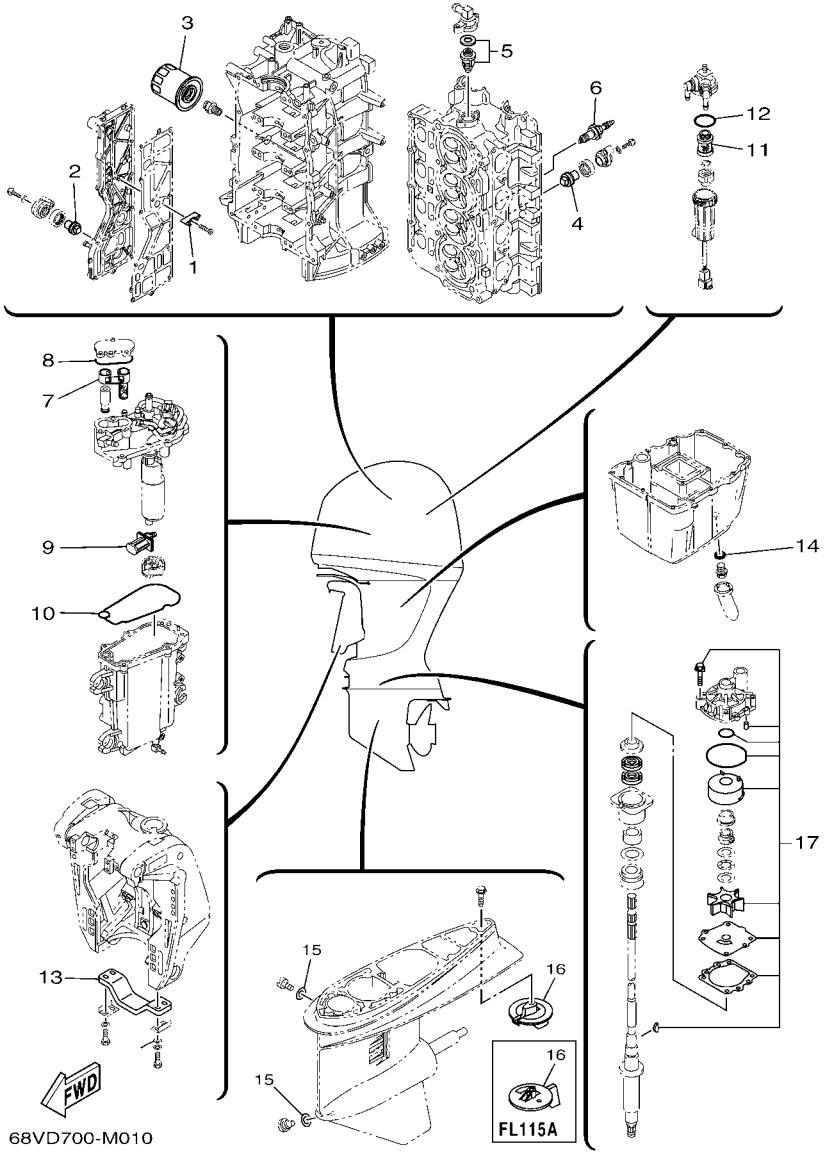

FIG. 1 SCHEDULED SERVICE PARTS PIECES MAINTENANCE PERIODIQUE

REF. NO.	PART NO. N° PIECES	DESCRIPTION DESCRIPTION	68VE	68WE				REMARKS REMARQUES
1	6E5–11325–00	ANODE ANODE	3	3				
2	67F–11325–01	ANODE ANODE	1	1				
3	5GH–13440–30	ELEMENT ASSY, OIL CLEANER ELEMENT, FILTRE A HUILE	1	1				
4	67F–11325–01	ANODE ANODE	2	2				
5	60V–12411–00	THERMOSTAT THERMOSTAT	1	1				
6	94702–00400	PLUG, SPARK (NGK LFR6A-11) BOUGIE D'ALLUMAGE(NGK LFR6A-11	4	4				
7	6CB–24501–01	FILTER, FUEL FILTRE	1	1				
8	6CB–13016–00	O-RING JOINT TORIQUE	1	1				
9	63P–13915–00	FILTER FILTRE	1	1				
10	6CB–14984–00	GASKET, FLOAT CHAMBER JOINT, CUVE DE FLOTTEUR	1	1				
11	6D8–24563–00	ELEMENT, FILTER ELEMENT, FILTRE	1	1				
12	6D8–24564–00	GASKET JOINT	1	1				
13	6G5–45251–02	ANODE ANODE	1	1				
14	90430–14M09	GASKET JOINT	1	1				
15	90430–08020	GASKET JOINT	2	2				
16	6E5–45371–01	TAB-TRIM ANODE DERIVE	1					
	6L6–45371–00	TAB-TRIM ANODE DERIVE		1				
17	68V–W0078–00	WATER PUMP REPAIR KIT KIT DE REPARATION DE LA POMPE	1	1				

FIG. 2 TOP COWLING CAPOT SUPERIEUR

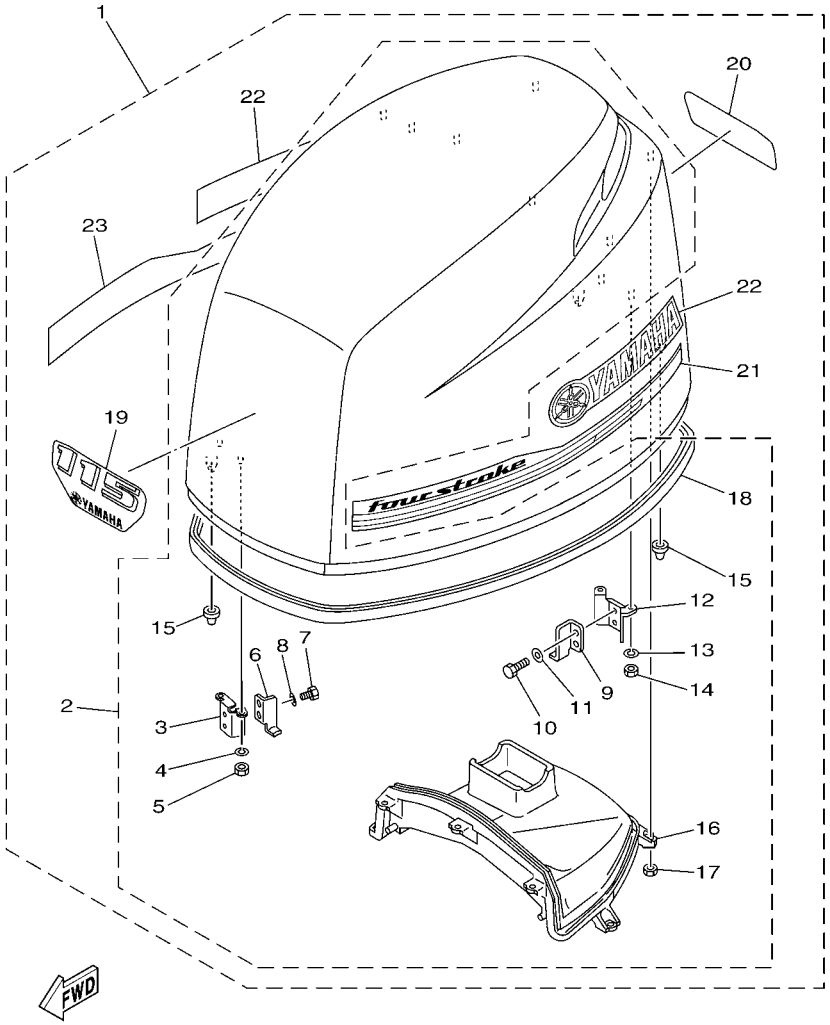

68VE100-N020

REF. NO.	PART NO. N° PIECES	DESCRIPTION DESCRIPTION	68VE	68WE				REMARKS REMARQUES
1	68V–42610–51	TOP COWLING ASSY CAPOT (ENS.)	1	1				
2	68V–4261A–10	.TOP COWLING W/O GRAPHICS .CAPOT SUPERIEUR SANS GRAPHIQUE	1	1				
3	68V–42647–10	..HOLDER, CLAMP BAND ..SUPPORT, SANDOW DE SERRAGE	1	1				
4	92990–06100	..WASHER, SPRING ..RONDELLE, GROWER	2	2				
5	95380–06600	..NUT, HEXAGON ..ECROU	2	2				
6	68V–42652–00	..HOOK ..CROCHET	1	1				
7	97095–06012	..BOLT ..BOULON	2	2				
8	92995–06600	..WASHER ..RONDELLE	2	2				
9	68V–42652–00	..HOOK ..CROCHET	1	1				
10	97095–06012	..BOLT ..BOULON	2	2				
11	92995–06600	..WASHER ..RONDELLE	2	2				
12	67F–42649–00	..HOLDER, CLAMP BAND ..SUPPORT, SANDOW DE SERRAGE	1	1				
13	92990–06100	..WASHER, SPRING ..RONDELLE, GROWER	2	2				
14	95380–06600	..NUT, HEXAGON ..ECROU	2	2				
15	67F–42662–00	..DAMPER ..AMORTISSEUR	3	3				
16	68V–42613–10	..MOLDING, AIR DUCT ..MANCHON A AIR	1	1				
17	95380–06600	..NUT, HEXAGON ..ECROU	7	7				
18	68V–42615–00	..SEAL ..JOINT	1	1				
19	68V–42677–30	.GRAPHIC, FRONT .ADHESIF, AVANT	1	1				
20	68V–42678–41	.GRAPHIC, REAR .ADHESIF, ARRIERE	1	1				
21	6D6–42675–00	.GRAPHIC, SIDE 1 .EMBLEME	1	1				
22	6D6–42681–00	.MARK, COWLING .ADHESIF, CAPOT	2	2				
23	6D6–42676–00	.GRAPHIC, SIDE 2 .EMBLEME	1	1				

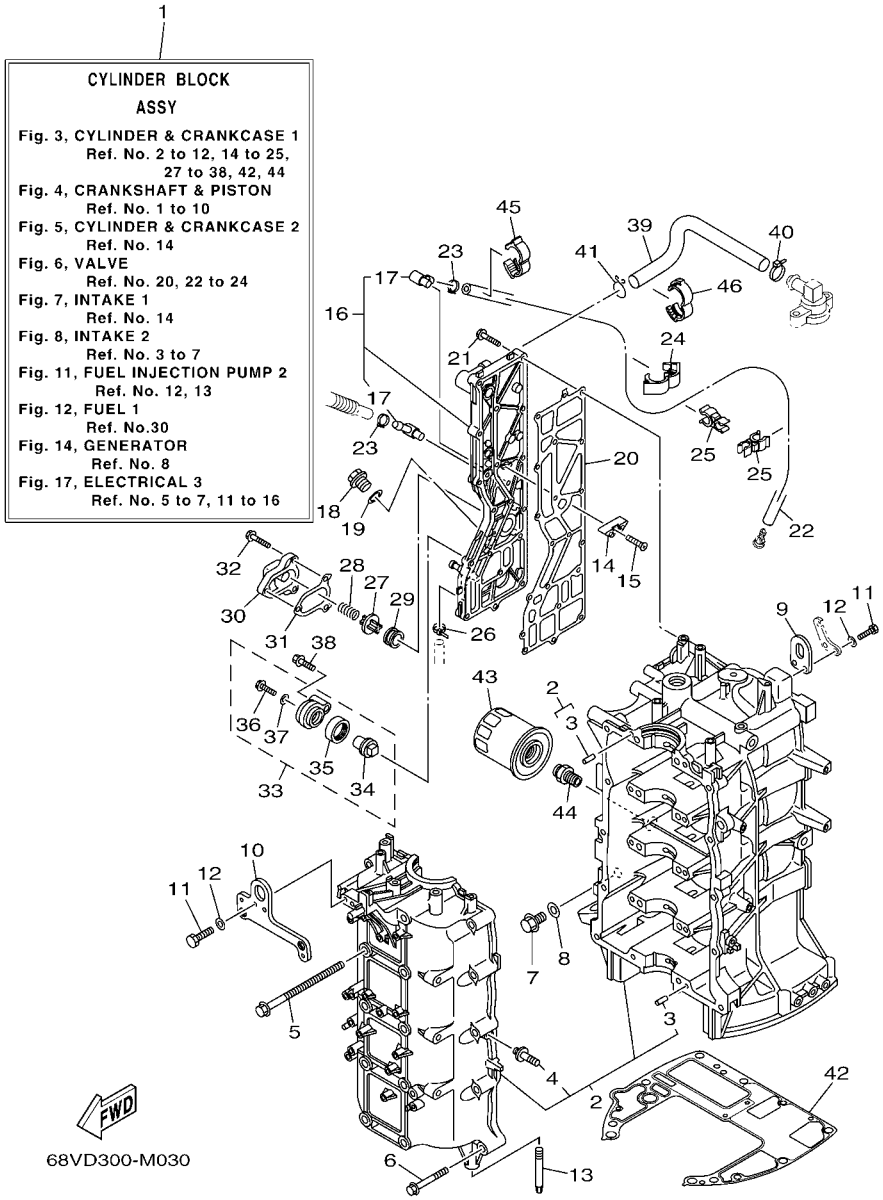

FIG. 3 CYLINDER & CRANKCASE 1 CYLINDRE & CARTER 1

REF. NO.	PART NO. N° PIECES	DESCRIPTION DESCRIPTION	68VE	68WE				REMARKS REMARQUES
1	68V–W009B–13–9S	CYLINDER BLOCK ASSY CYLINDRE GROUPE (ENS.)	1	1				
2	68V–15100–11	CRANKCASE ASSY CARTER DE MOTEUR COMPLET	1	1				
3	93606–12019	.PIN, DOWEL .GOUPILLE	10	10				
4	68V–44581–01	.BOLT .BOULON	1	1				
5	90119–10M88	BOLT, WITH WASHER BOULON, AVEC RONDELLE	10	10				
6	90119–08M66	BOLT, WITH WASHER BOULON, AVEC RONDELLE	10	10				
7	90340–14M06	PLUG, STRAIGHT SCREW PLOT, FILETE DROIT	1	1				
8	90430–14115	GASKET JOINT	1	1				
9	62Y–11119–00	HANGER, ENGINE ANNEAU, LEVAGE	1	1				
10	68V–11119–00	HANGER, ENGINE ANNEAU, LEVAGE	1	1				
11	97095–06020	BOLT BOULON	4	4				
12	92995–06600	WASHER RONDELLE	4	4				
13	67F–15142–00	GUIDE 1 GUIDE 1	2	2				
14	6E5–11325–00	ANODE ANODE	3	3				
15	98780–04016	SCREW, FLAT HEAD VIS A TETE FRAISEE	3	3				
16	68V–41113–20–9S	OUTER COVER, EXHAUST COUVERCLE, ECHAPPEMENT	1	1				
17	676–11372–00	.NIPPLE, HOSE .RACCORD, TUYAU	2	2				
18	90340–18M09	PLUG, STRAIGHT SCREW PLOT, FILETE DROIT	1	1				
19	90430–18130	GASKET JOINT	1	1				
20	67F–41114–A2	GASKET, EXHAUST OUTER COVER JOINT, COUVERCLE D'ECHAPPEMENT	1	1				
21	90119–06MA4	BOLT, WITH WASHER BOULON, AVEC RONDELLE	18	18				
22	68V–42541–20	PIPE 1 TUYAU 1	1	1				
23	90465–11M10	CLAMP BRIDE	2	2				
24	90464–18004	CLAMP BRIDE	1	1				
25	90464–10010	CLAMP BRIDE	2	2				
26	90465–11M10	CLAMP BRIDE	1	1				
27	6G5–12416–00	VALVE, PRESSURE CONTROL SOUPAPE DE CONTROLEUR PRESS	1	1				

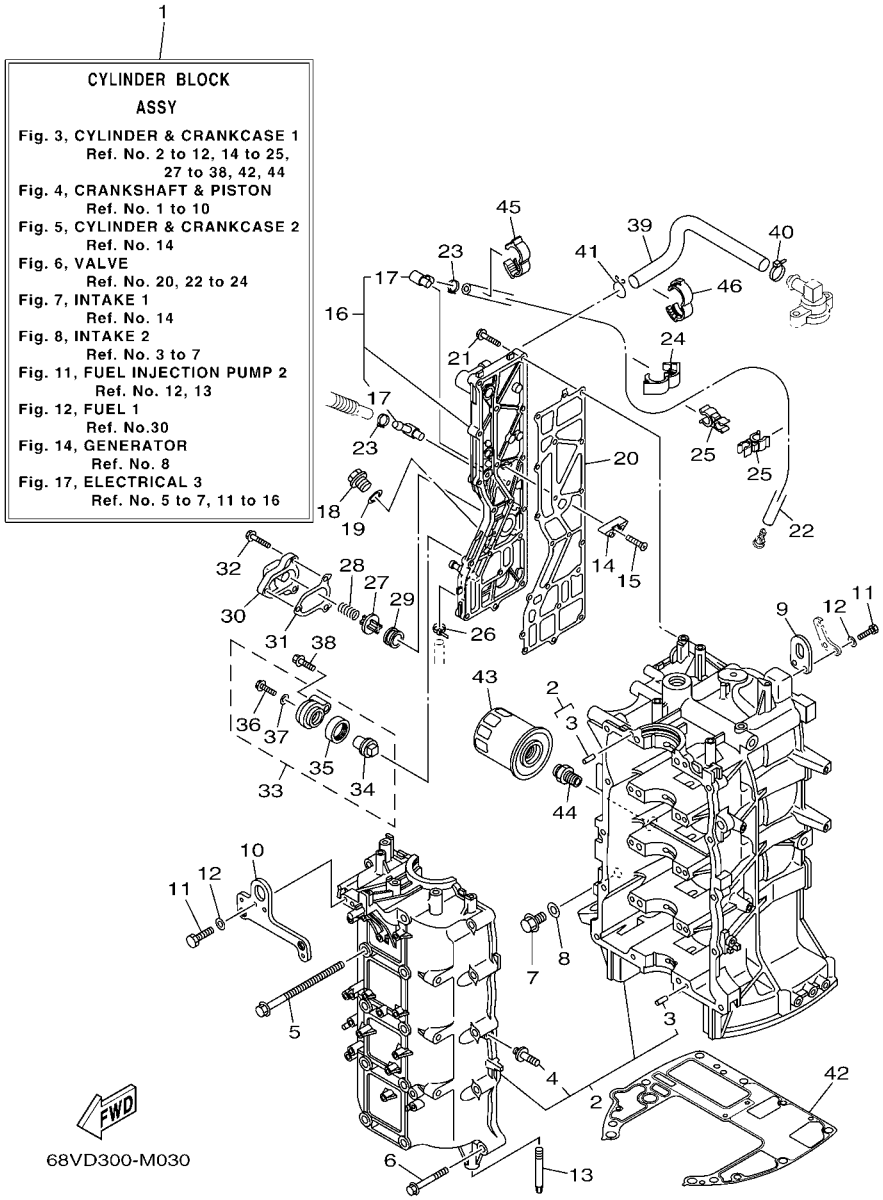

FIG. 3 CYLINDER & CRANKCASE 1 CYLINDRE & CARTER 1

REF. NO.	PART NO. N° PIECES	DESCRIPTION DESCRIPTION	68VE	68WE				REMARKS REMARQUES
28	90501–16M11	SPRING, COMPRESSION RESSORT, COMPRESSION	1	1				
29	90480–20M05	GROMMET PASSE-FIL	1	1				
30	67F–1246A–01–9S	COVER 1 COUVERCLE 1	1	1				
31	67F–12435–A0	GASKET JOINT	1	1				
32	90119–06MA2	BOLT, WITH WASHER BOULON, AVEC RONDELLE	3	3				
33	69J–11301–00	ANODE COVER ASSY COUVERCLE ANODE (ENS.)	1	1				
34	67F–11325–01	.ANODE .ANODE	1	1				
35	67F–11328–00	.GROMMET, ANODE .PASSE-FIL	1	1				
36	90105–06M07	.BOLT, FLANGE .BOULON	1	1				
37	90430–06M03	.GASKET .JOINT	1	1				
38	97575–08540	BOLT, WITH WASHER VIS HEXAGONAL AVC RONDELLE	1	1				
39	67F–1243A–00	HOSE 1 DURITE 1	1	1				
40	90465–11M59	CLAMP BRIDE	1	1				
41	90467–20M15	CLIP JONC	1	1				
42	68V–11351–00	GASKET, CYLINDER JOINT, D'EMBASE	1	1				
43	5GH–13440–30	ELEMENT ASSY, OIL CLEANER ELEMENT, FILTRE A HUILE	1	1				
44	90401–20007	BOLT, UNION BOULON, RACCORD	1	1				
45	90464–18004	CLAMP BRIDE	1	1				
46	90464–16001	CLAMP BRIDE	1	1				

FIG. 4 CRANKSHAFT & PISTON VILEBREQUIN & PISTON

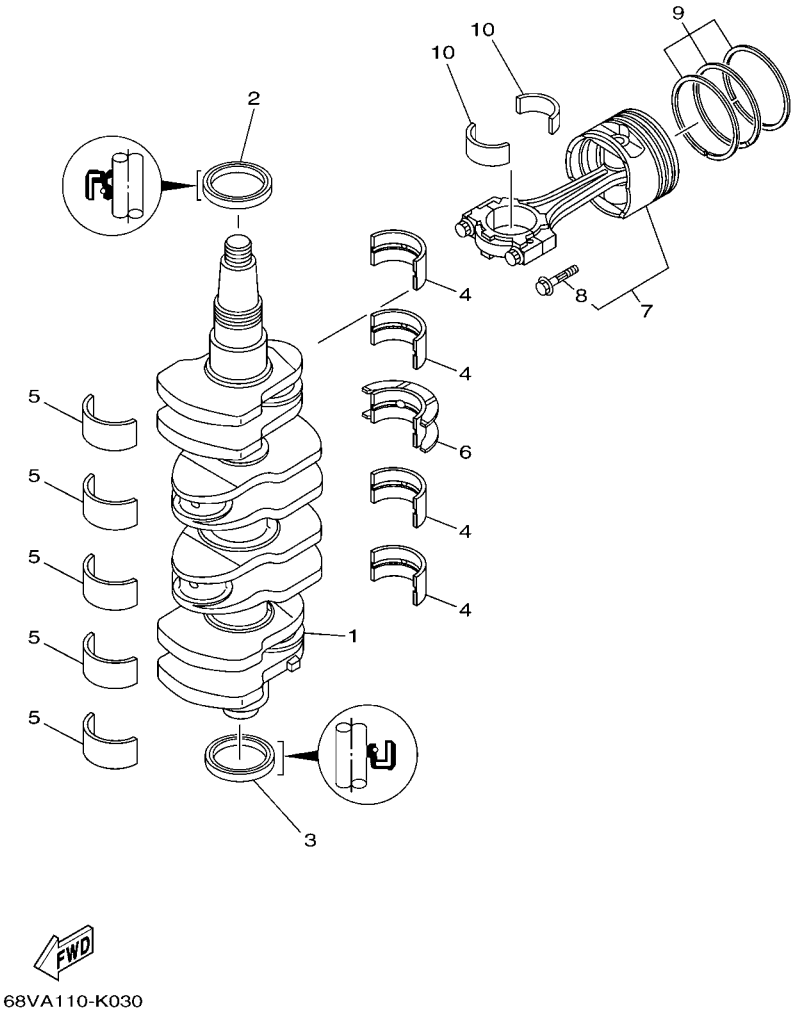

REF. NO.	PART NO. N° PIECES	DESCRIPTION DESCRIPTION	68VE	68WE				REMARKS REMARQUES
1	68V–11411–01	CRANKSHAFT VILEBREQUIN COMPLET	1	1				
2	93102–48017	OIL SEAL JOINT SPY	1	1				
3	93101–48002	OIL SEAL JOINT SPY	1	1				
4	6D8–11416–00	PLANE BEARING, CRANKSHAFT 1 COUSSINET DE VILEBREQUIN 1	4	4				UR GREEN UR GREEN
	6D8–11416–10	PLANE BEARING, CRANKSHAFT 1 COUSSINET DE VILEBREQUIN 1	4	4				UR BLUE UR BLUE
	6D8–11416–20	PLANE BEARING, CRANKSHAFT 1 COUSSINET DE VILEBREQUIN 1	4	4				UR RED UR RED
5	6D8–11417–00	PLANE BEARING, CRANKSHAFT 2 COUSSINET DE VILEBREQUIN 2	5	5				UR YELLOW UR YELLOW
	6D8–11417–10	PLANE BEARING, CRANKSHAFT 2 COUSSINET DE VILEBREQUIN 2	5	5				UR GREEN UR GREEN
	6D8–11417–20	PLANE BEARING, CRANKSHAFT 2 COUSSINET DE VILEBREQUIN 2	5	5				UR BLUE UR BLUE
	6D8–11417–30	PLANE BEARING, CRANKSHAFT 2 COUSSINET DE VILEBREQUIN 2	5	5				UR RED UR RED
6	6D8–11418–00	PLANE BEARING, CRANKSHAFT 3 COUSSINET DE VILEBREQUIN 3	1	1				UR GREEN UR GREEN
	6D8–11418–10	PLANE BEARING, CRANKSHAFT 3 COUSSINET DE VILEBREQUIN 3	1	1				UR BLUE UR BLUE
	6D8–11418–20	PLANE BEARING, CRANKSHAFT 3 COUSSINET DE VILEBREQUIN 3	1	1				UR RED UR RED
7	68V–W1164–02	PISTON/CON-ROD ASSY STD PISTON/BIELLE COMPLETTE (STD)	4	4				
	68V–W1164–12	PISTON/CON-ROD ASSY(0.25MM OS) PISTON/BIELLE COMPLETTE:0.25MM	4	4				AP AP
8	K1C–A3275–00	.BOLT, CONNECTING ROD .BOULON, BIELLE	2	2				
9	6D8–11603–10	PISTON RING SET (STD) JEU DE SEGMENTS (STD)	4	4				
	6D8–11604–10	PISTON RING SET (0.25MM O/S) JEU DE SEGMENTS (0.25MM O/S)	4	4				AP AP
10	68V–11656–00	PLANE BEARING, CONNECTING ROD ROULEMENT DE BIELLE	8	8				UR YELLOW UR YELLOW
	68V–11656–10	PLANE BEARING, CONNECTING ROD ROULEMENT DE BIELLE	8	8				UR GREEN UR GREEN
	68V–11656–20	PLANE BEARING, CONNECTING ROD ROULEMENT DE BIELLE	8	8				UR BLUE UR BLUE
	68V–11656–30	PLANE BEARING, CONNECTING ROD ROULEMENT DE BIELLE	8	8				UR RED UR RED

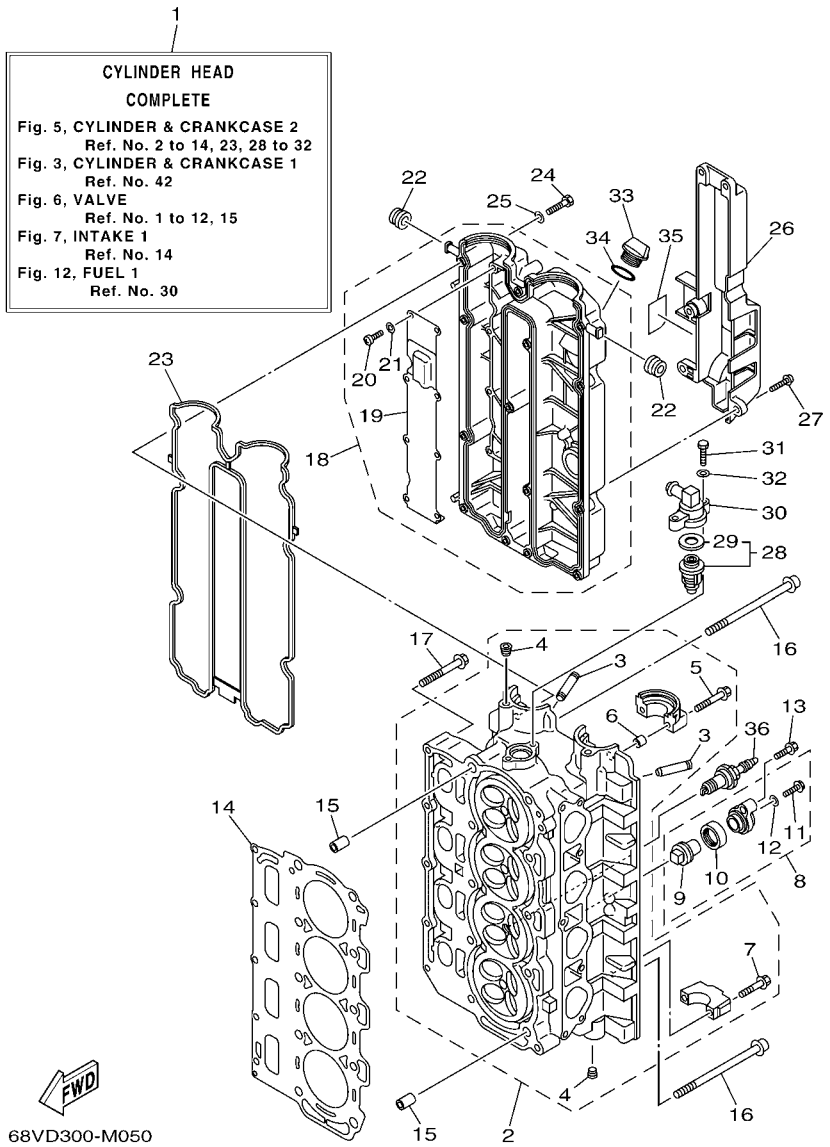

FIG. 5 CYLINDER & CRANKCASE 2 CYLINDRE & CARTER 2

REF. NO.	PART NO. N° PIECES	DESCRIPTION DESCRIPTION	68VE	68WE				REMARKS REMARQUES
1	68V–W009A–08–9S	CYLINDER HEAD COMPLETE CULASSE (ENS.)	1	1				
2	68V–11110–30–9S	CYLINDER HEAD ASSY JEU DE CULASSE	1	1				
3	67F–11133–10	.GUIDE, VALVE 1 .GUIDE, SOUPAPE 1	16	16				
4	90344–51019	.PLUG, TAPER SCREW .PLOT, FILETE CONIQUE	4	4				
5	90119–07235	.BOLT/WASHER-CAM CAPS .BOULON, AVEC RONDELLE	4	4				
6	91809–08006	.PIN, DOWEL .GOUJON, D'ASSEMBLAGE	4	4				
7	90119–07234	.BOLT, WITH WASHER .BOULON, AVEC RONDELLE	16	16				
8	69J–11301–00	ANODE COVER ASSY COUVERCLE ANODE (ENS.)	2	2				
9	67F–11325–01	.ANODE .ANODE	1	1				
10	67F–11328–00	.GROMMET, ANODE .PASSE-FIL	1	1				
11	90105–06M07	.BOLT, FLANGE .BOULON	1	1				
12	90430–06M03	.GASKET .JOINT	1	1				
13	97575–08540	BOLT, WITH WASHER VIS HEXAGONAL AVC RONDELLE	2	2				
14	67F–11181–03	GASKET, CYLINDER HEAD 1 JOINT, DE CULASSE 1	1	1				
15	99530–14016	PIN, DOWEL GOUJON, D'ASSEMBLAGE	2	2				
16	90155–10005	SCREW, FLAT FILLISTER VIS, TETE OVALE PLATE	10	10				
17	90119–08M91	BOLT, WITH WASHER BOULON, AVEC RONDELLE	5	5				
18	6D8–11191–01–9S	COVER, CYLINDER HEAD 1 COUVERCLE, CULASSE 1	1	1				
19	67F–11168–00	.COVER, BREATHER .COUVERCLE, RENIFLARD	1	1				
20	98507–04008	.SCREW, PAN HEAD .VIS, TETE TRONCONIQUE	8	8				
21	92907–04600	.WASHER .RONDELLE	8	8				
22	90480–12072	GROMMET PASSE-FIL	2	2				
23	6D8–11356–01	SEAL, CYLINDER 2 JOINT, SPY CYLINDRE	1	1				
24	97095–06030	BOLT BOULON	14	14				
25	92995–06600	WASHER RONDELLE	14	14				
26	67F–11192–01	COVER, CYLINDER HEAD 2 COUVERCLE, CULASSE 2	1	1				
27	90119–06M79	BOLT, WITH WASHER BOULON, AVEC RONDELLE	5	5				

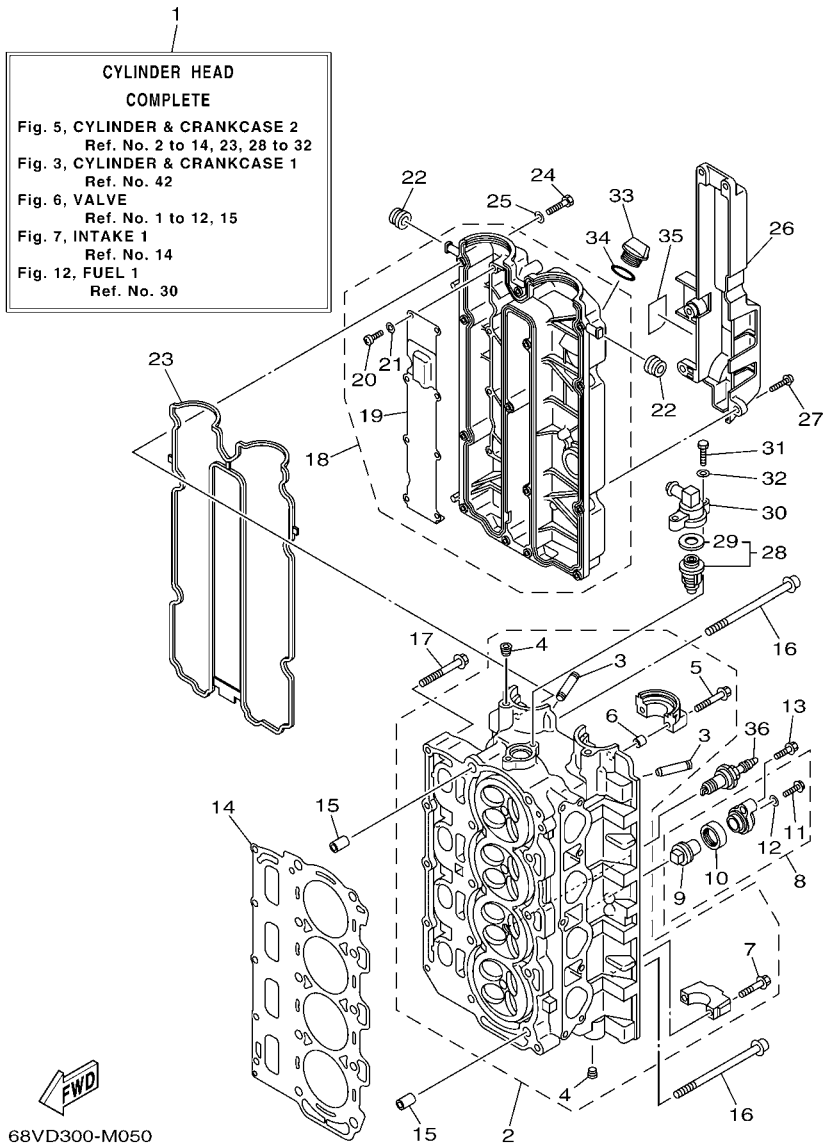

FIG. 5 CYLINDER & CRANKCASE 2 CYLINDRE & CARTER 2

REF. NO.	PART NO. N° PIECES	DESCRIPTION DESCRIPTION	68VE	68WE				REMARKS REMARQUES
28	60V–12411–00	THERMOSTAT THERMOSTAT	1	1				
29	67F–12412–00	.SEAL, THERMOSTAT .JOINT, THERMOSTAT	1	1				
30	68V–12413–00–9S	COVER, THERMOSTAT COUVERCLE, THERMOSTAT	1	1				
31	97095–06025	BOLT BOULON	2	2				
32	92995–06600	WASHER RONDELLE	2	2				
33	6G8–15363–00	PLUG, OIL PLOT, HUILE	1	1				
34	93210–24M79	O-RING JOINT TORIQUE	1	1				
35	68V–83626–00	MARK 6 MARK 6	1	1				
36	94702–00400	PLUG, SPARK (NGK LFR6A-11) BOUGIE D'ALLUMAGE(NGK LFR6A-11	4	4				

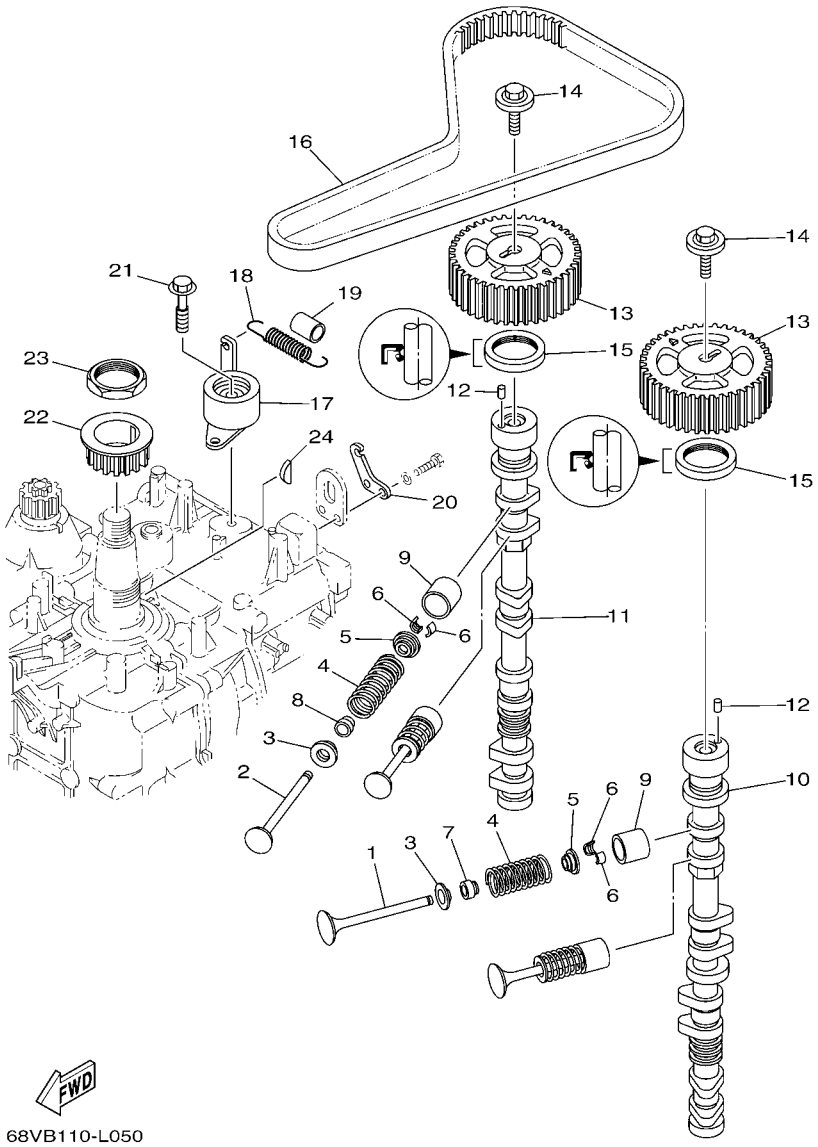

68VB110-L050

FIG. 6 VALVE SOUPAPE

REF. NO.	PART NO. N° PIECES	DESCRIPTION DESCRIPTION	68VE	68WE				REMARKS REMARQUES
1	6D8–12111–00	VALVE, INTAKE SOUPAPE, ADMISSION	8	8				
2	6D8–12121–10	VALVE, EXHAUST SOUPAPE, ECHAPPEMENT	8	8				
3	6D8–12116–00	SEAT, VALVE SPRING SIEGE, RESSORT DE SOUPAPE	16	16				
4	6D8–12113–00	SPRING, VALVE INNER RESSORT DE SOUPAPE, INTERNE	16	16				
5	26H–12117–00	RETAINER, VALVE SPRING BUTEE DE RESSORT DE SOUPAPE	16	16				
6	4G0–12118–00	COTTER, VALVE FRAISE, SOUPAPE	32	32				
7	K0A–A3721–00	SEAL, VALVE STEM JOINT, QUEUE DE SOUPAPE	8	8				
8	K0A–A3722–00	SEAL, VALVE STEM 2 JOINT, QUEUE DE SOUPAPE 2	8	8				
9	6D8–12153–00	LIFTER, VALVE (12) LEVE-SOUPAPE (12)	16	16				UR UR
	6D8–12153–10	LIFTER, VALVE (14) LEVE-SOUPAPE (14)	16	16				UR UR
	6D8–12153–20	LIFTER, VALVE (16) LEVE-SOUPAPE (16)	16	16				UR UR
	6D8–12153–30	LIFTER, VALVE (18) LEVE-SOUPAPE (18)	16	16				UR UR
	6D8–12153–40	LIFTER, VALVE (20) LEVE-SOUPAPE (20)	16	16				UR UR
	6D8–12153–50	LIFTER, VALVE (22) LEVE-SOUPAPE (22)	16	16				UR UR
	6D8–12153–60	LIFTER, VALVE (24) LEVE-SOUPAPE (24)	16	16				UR UR
	6D8–12153–70	LIFTER, VALVE (26) LEVE-SOUPAPE (26)	16	16				UR UR
	6D8–12153–80	LIFTER, VALVE (28) LEVE-SOUPAPE (28)	16	16				UR UR
	6D8–12153–90	LIFTER, VALVE (30) LEVE-SOUPAPE (30)	16	16				UR UR
	6D8–12153–A0	LIFTER, VALVE (32) LEVE-SOUPAPE (32)	16	16				UR UR
	6D8–12153–B0	LIFTER, VALVE (34) LEVE-SOUPAPE (34)	16	16				UR UR
	6D8–12153–C0	LIFTER, VALVE (36) LEVE-SOUPAPE (36)	16	16				UR UR
	6D8–12153–D0	LIFTER, VALVE (38) LEVE-SOUPAPE (38)	16	16				UR UR
	6D8–12153–E0	LIFTER, VALVE (40) LEVE-SOUPAPE (40)	16	16				UR UR
	6D8–12153–F0	LIFTER, VALVE (42) LEVE-SOUPAPE (42)	16	16				UR UR
	6D8–12153–G0	LIFTER, VALVE (44) LEVE-SOUPAPE (44)	16	16				UR UR
	6D8–12153–H0	LIFTER, VALVE (46) LEVE-SOUPAPE (46)	16	16				UR UR
	6D8–12153–J0	LIFTER, VALVE (48) LEVE-SOUPAPE (48)	16	16				UR UR

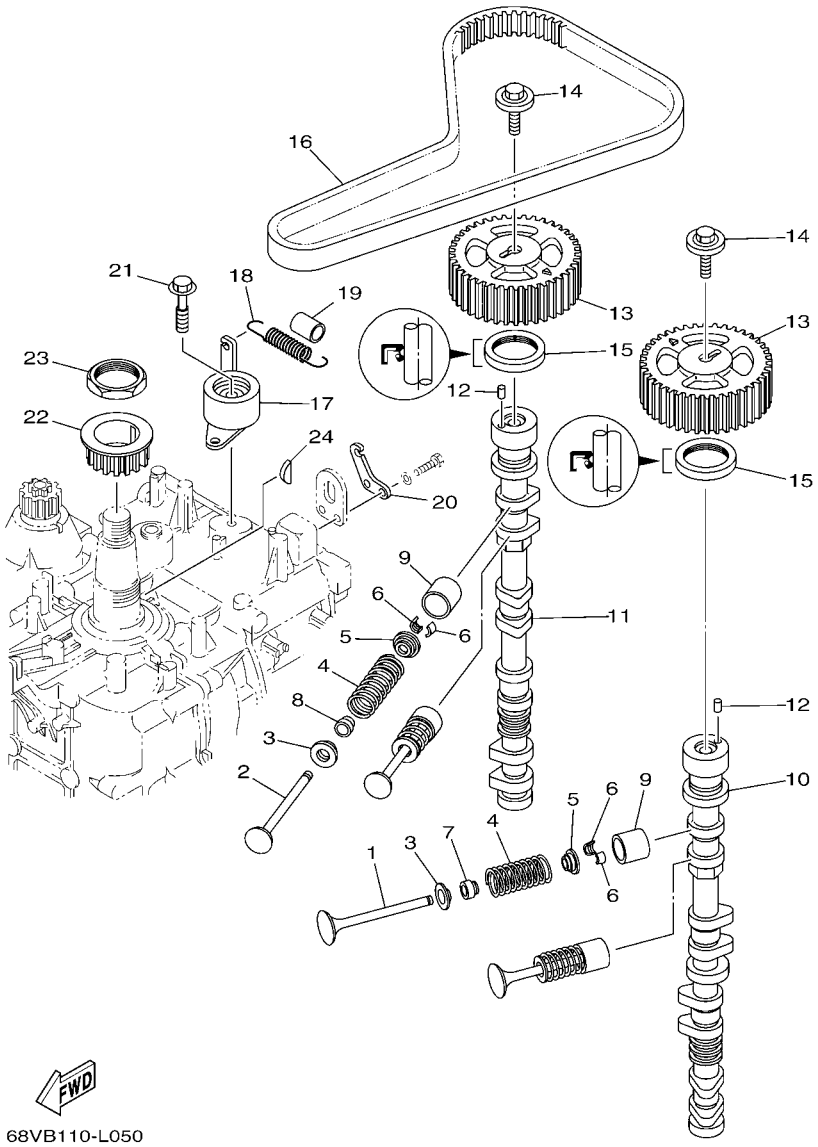

68VB110-L050

FIG. 6 VALVE SOUPAPE

REF. NO.	PART NO. N° PIECES	DESCRIPTION DESCRIPTION	68VE	68WE				REMARKS REMARQUES
9	6D8–12153–K0	LIFTER, VALVE (50) LEVE-SOUPAPE (50)	16	16				UR UR
	6D8–12153–L0	LIFTER, VALVE (52) LEVE-SOUPAPE (52)	16	16				UR UR
	6D8–12153–M0	LIFTER, VALVE (54) LEVE-SOUPAPE (54)	16	16				UR UR
	6D8–12153–N0	LIFTER, VALVE (56) LEVE-SOUPAPE (56)	16	16				UR UR
	6D8–12153–P0	LIFTER, VALVE (58) LEVE-SOUPAPE (58)	16	16				UR UR
	6D8–12153–R0	LIFTER, VALVE (60) LEVE-SOUPAPE (60)	16	16				UR UR
	6D8–12153–S0	LIFTER, VALVE (62) LEVE-SOUPAPE (62)	16	16				UR UR
	6D8–12153–T0	LIFTER, VALVE (64) LEVE-SOUPAPE (64)	16	16				UR UR
	6D8–12153–U0	LIFTER, VALVE (66) LEVE-SOUPAPE (66)	16	16				UR UR
	6D8–12153–V0	LIFTER, VALVE (68) LEVE-SOUPAPE (68)	16	16				UR UR
10	6D9–12171–00	CAMSHAFT 1 ARBRE A CAMES 1	1	1				
11	68V–12181–00	CAMSHAFT 2 ARBRE A CAMES 2	1	1				
12	93605–10108	PIN, DOWEL AXE	2	2				
13	67F–11537–00	GEAR, DRIVEN PIGNON SECONDAIRE	2	2				
14	90119–10050	BOLT, WITH WASHER BOULON, AVEC RONDELLE	2	2				
15	93102–38008	OIL SEAL JOINT SPY	2	2				
16	67F–46241–00	BELT COURROIE TRAPEZOIDALE	1	1				
17	67F–11590–00	TENSIONER ASSY TENDEUR (ENS.)	1	1				
18	90506–16M39	SPRING, TENSION RESSORT, TENSION	1	1				
19	90445–15M03	HOSE (L23) DURITE (L23)	1	1				
20	67F–11595–00	PLATE,VALVE PLAQUE DE SOUPAPE	1	1				
21	90119–10M72	BOLT, WITH WASHER BOULON, AVEC RONDELLE	1	1				
22	6D8–11536–01	GEAR, DRIVE ENGRENAGE, MENANT	1	1				
23	90170–40008	NUT ECROU	1	1				
24	90280–04008	KEY, WOODRUFF CLAVETTE, DEMI-LUNE	1	1				

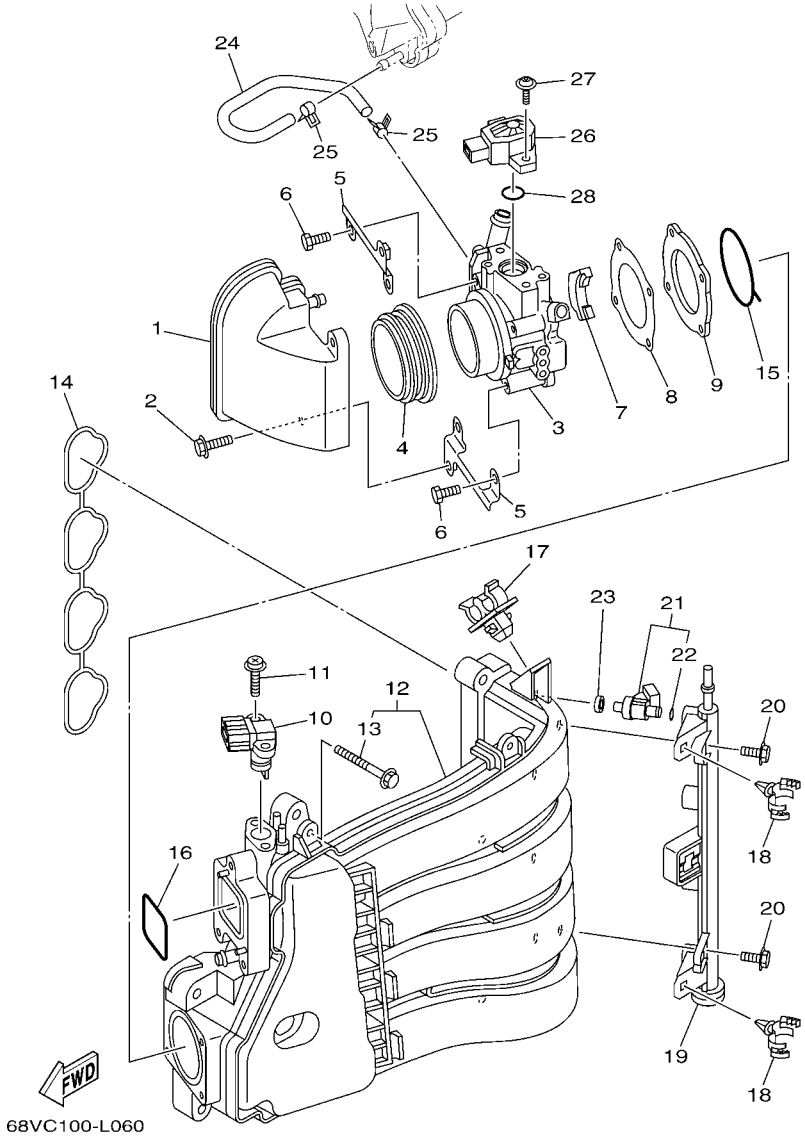

FIG. 7 INTAKE 1 — ADMISSION 1

REF. NO.	PART NO. N° PIECES	DESCRIPTION DESCRIPTION	68VE	68WE				REMARKS REMARQUES
1	68V–14440–10	SILENCER ASSY, INTAKE SIENCIEUX D'ADMISSION	1	1				
2	95875–06020	BOLT, FLANGE BOULON, A COLLERETTE	2	2				
3	68V–13751–20	BODY, THROTTLE 1 CARTER 1	1	1				
4	68V–1441J–10	PIPE, SILENCER DURITE, DE SILENCIEUX	1	1				
5	68V–13898–00	HOLDER SUPPORT	2	2				
6	68V–14496–10	BOLT BOULON	4	4				
7	68V–14271–00	INSULATOR ISOLATEUR	1	1				
8	68V–13556–00	GASKET, MANIFOLD JOINT, TUBULURE	1	1				
9	68V–13635–00	JOINT, INTAKE 1 JOINT D'ADMISSION 1	1	1				
10	68F–83688–10	SENSOR ASSY SONDE (ENS.)	1	1				
11	68V–81147–00	SCREW 3 VIS 3	2	2				
12	68V–W1364–10	MANIFOLD, INTAKE 1 TUBULURE, ADMISSION 1	1	1				
13	90119–06266	.BOLT, WITH WASHER .BOULON, AVEC RONDELLE	3	3				
14	68V–13645–10	GASKET, MANIFOLD 1 JOINT, TUBULURE 1	1	1				
15	68V–13646–00	GASKET, MANIFOLD 2 JOINT, TUBULURE 2	1	1				
16	68V–13647–00	GASKET, MANIFOLD 3 JOINT, TUBULURE 3	1	1				
17	90464–11012	CLAMP BRIDE	1	1				
18	90464–20181	CLAMP BRIDE	2	2				
19	68V–13161–10	PIPE, DELIVERY 1 DURITE REFOULEMENT 1	1	1				
20	6P2–14446–00	BOLT BOULON	2	2				
21	68V–13761–10	INJECTOR INJECTEUR	4	4				
22	68V–1416A–00	.O-RING .JOINT TORIQUE	1	1				
23	68V–13766–10	RUBBER, INJECTOR RONDELLE CAOUTCHOUC	4	4				
24	68V–13584–00	PIPE, INTAKE MANIFOLD DURITE DE TUBULURE	1	1				
25	68V–13577–10	CLIP AGRAFE	2	2				
26	68V–85885–10	THROTTLE SENSOR ASSY SENSITOMETRE (ENS.)	1	1				
27	68V–81145–01	SCREW 1 VIS 1	2	2				

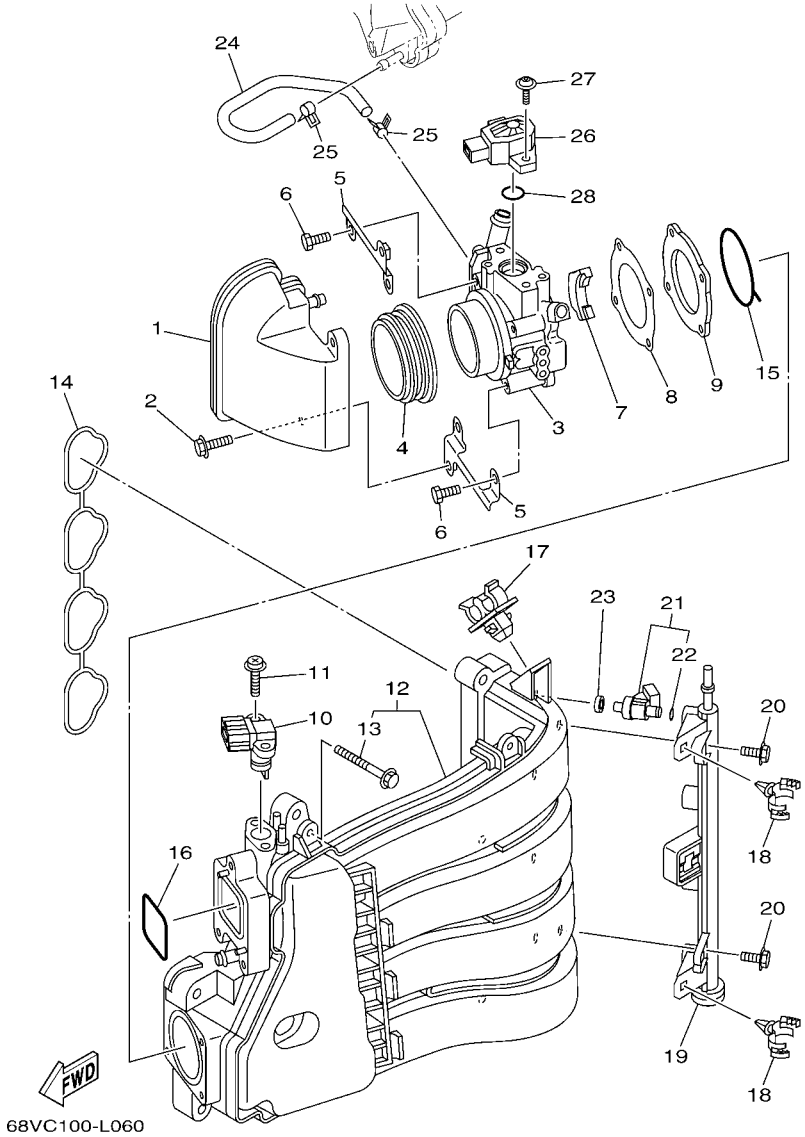

FIG. 7 INTAKE 1 — ADMISSION 1

REF. NO.	PART NO. N° PIECES	DESCRIPTION DESCRIPTION	68VE	68WE				REMARKS REMARQUES
28	68V–8182L–00	O-RING 1 JOINT TORIQUE 1	1	1				

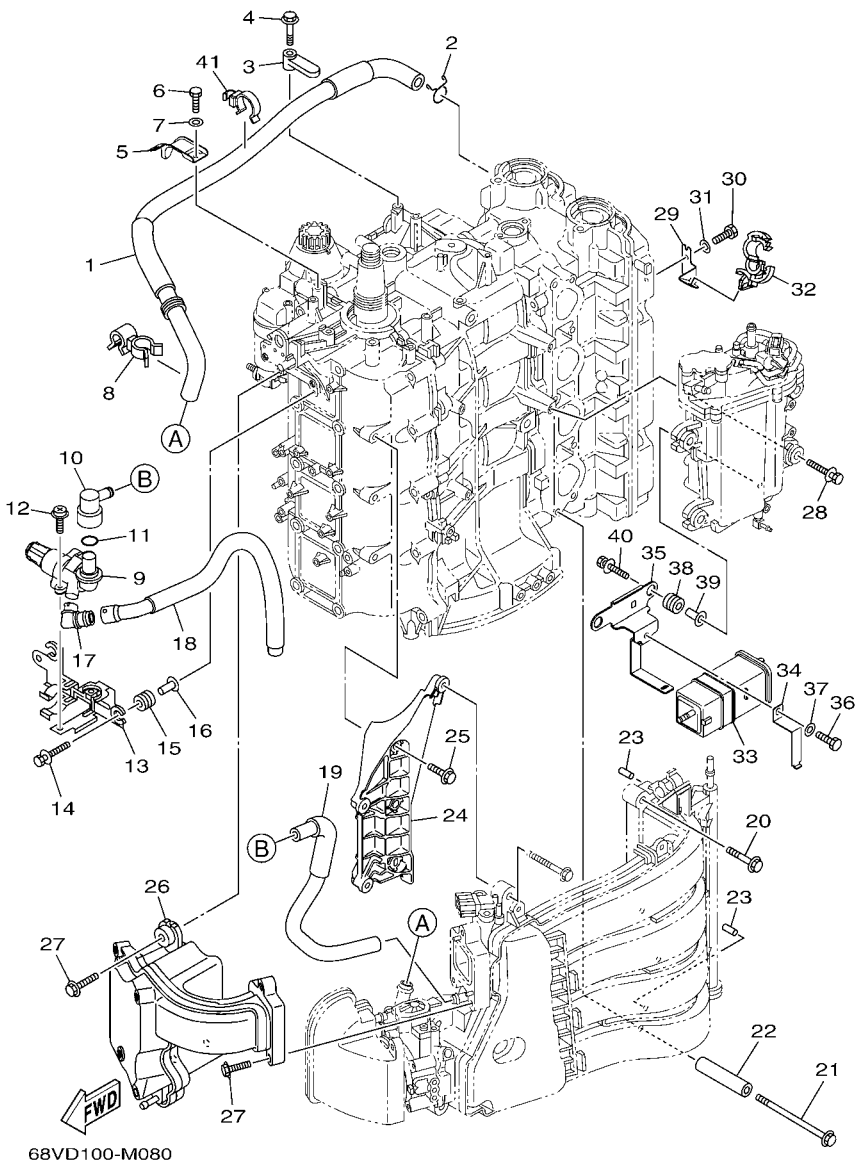

FIG. 8 INTAKE 2 — ADMISSION 2

REF. NO.	PART NO. N° PIECES	DESCRIPTION DESCRIPTION	68VE	68WE				REMARKS REMARQUES
1	68V–15373–00	PIPE, BREATHER DURITE DE RENIFLARD	1	1				
2	90467–20M15	CLIP JONC	1	1				
3	6D8–82544–00	CLAMP COLLIER	1	1				
4	95875–06025	BOLT, FLANGE BOULON, A COLLERETTE	1	1				
5	68V–82389–00	PLATE 2 PLAQUETTE 2	1	1				
6	97095–06012	BOLT BOULON	1	1				
7	92995–06600	WASHER RONDELLE	1	1				
8	90464–20011	CLAMP BRIDE	1	1				
9	6C5–13713–00	VALVE, IDLE SPEED CONTROL SOUPAPE, AJUSTEMENT DE VITESSE	1	1				
10	6CJ–11372–00	NIPPLE, HOSE RACCORD, TUYAU	1	1				
11	93210–33003	O-RING JOINT TORIQUE	1	1				
12	97980–05214	SCREW, WITH WASHER VIS, AVEC RONDELLE	2	2				
13	68V–13152–00	STAY 2 SUPPORT2	1	1				
14	90119–06M17	BOLT, WITH WASHER BOULON, AVEC RONDELLE	2	2				
15	90480–10M23	GROMMET PASSE-FIL	2	2				
16	90387–06289	COLLAR COLLERETTE	2	2				
17	68V–13897–00	PIPE, AIR DURITE, A AIR	1	1				
18	68V–13892–00	HOSE, AIR 2 DURITE, A AIR 2	1	1				
19	68V–13543–10	HOSE, AIR DURITE, A AIR	1	1				
20	90105–08M87	BOLT, FLANGE BOULON	4	4				
21	90105–08242	BOLT, FLANGE BOULON	1	1				
22	90387–09017	COLLAR COLLERETTE	1	1				
23	91690–50014	PIN, SPRING AGRAFFE	2	2				
24	68V–14291–10	BRACKET 1 SUPPORT 1	1	1				
25	95895–08020	BOLT, FLANGE BOULON	3	3				
26	68V–13642–00	MANIFOLD 2 TUBULURE 2	1	1				
27	95895–06030	BOLT, FLANGE BOULON	6	6				

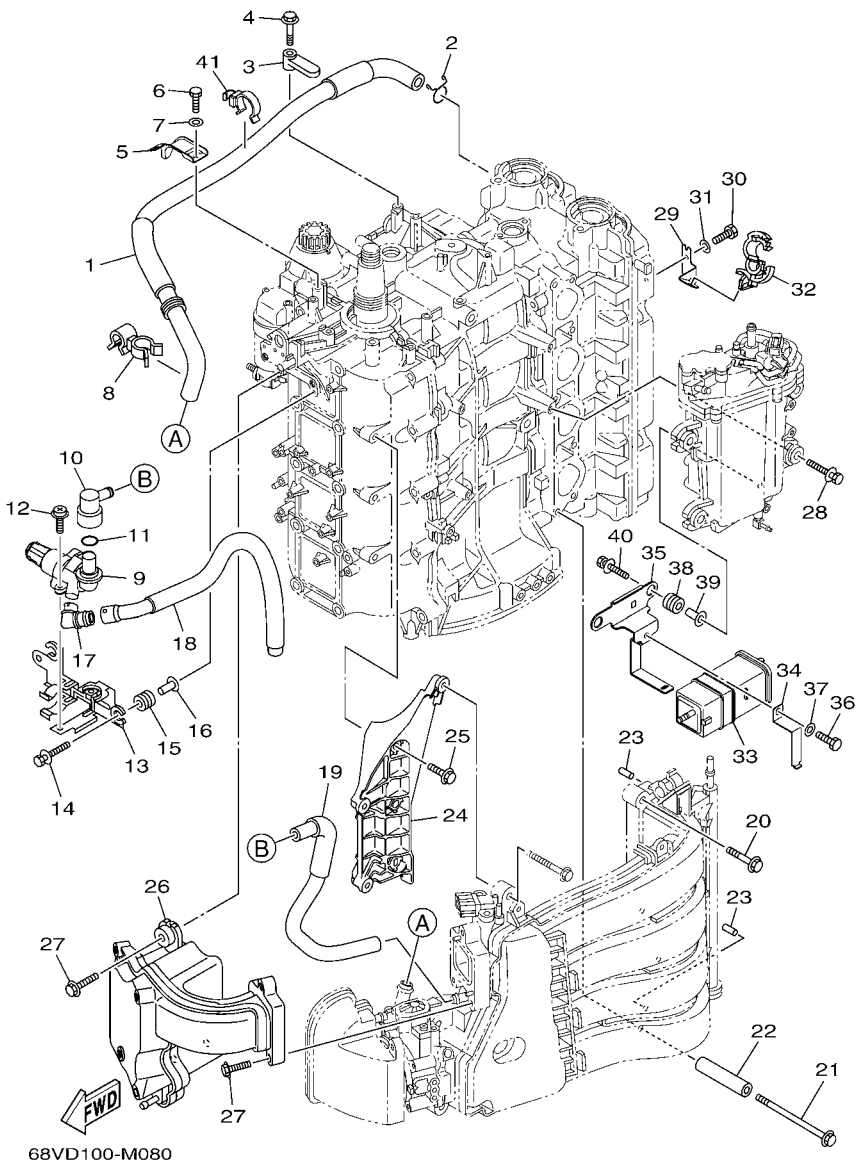

FIG. 8 INTAKE 2 — ADMISSION 2

REF. NO.	PART NO. N° PIECES	DESCRIPTION DESCRIPTION	68VE	68WE				REMARKS REMARQUES
28	90119–06M24	BOLT, WITH WASHER BOULON, AVEC RONDELLE	4	4				
29	68V–21457–00	PLATE, PIPE GUIDE PLAQUE DE GUIDAGE	1	1				
30	97095–06012	BOLT BOULON	1	1				
31	92995–06600	WASHER RONDELLE	1	1				
32	90464–18246	CLAMP BRIDE	1	1				
33	6P2–24170–00	CANISTER ASSY BANDE, RASERVOIR A ESSENCE	1	1				
34	68V–2419A–00	HOLDER SUPPORT	1	1				
35	68V–2134X–00	BRACKET, CANISTER SUPPORT	1	1				
36	97095–06016	BOLT BOULON	1	1				
37	92995–06600	WASHER RONDELLE	1	1				
38	90480–10M23	GROMMET PASSE-FIL	2	2				
39	90387–06289	COLLAR COLLERETTE	2	2				
40	90119–06M17	BOLT, WITH WASHER BOULON, AVEC RONDELLE	2	2				
41	90464–26002	CLAMP BRIDE	1	1				

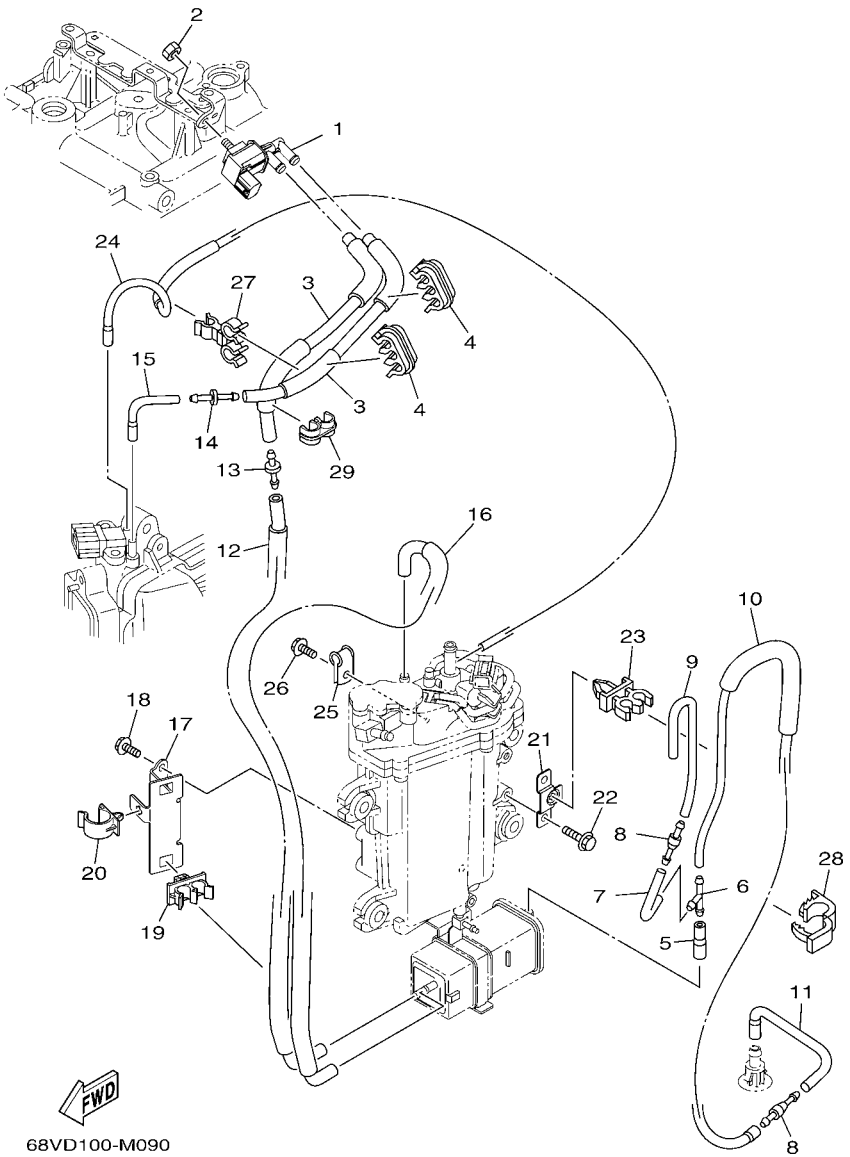

FIG. 9 INTAKE 3 — ADMISSION 3

REF. NO.	PART NO. N° PIECES	DESCRIPTION DESCRIPTION	68VE	68WE				REMARKS REMARQUES
1	6C5–86120–00	SOLENOID VALVE ASSY SOLENOIDE	1	1				
2	95380–06600	NUT, HEXAGON ECROU	1	1				
3	68V–2416A–00	HOSE DURITE	2	2				
4	90464–10011	CLAMP BRIDE	2	2				
5	6AW–13545–10	HOSE 1 DURITE 1	1	1				
6	688–24378–00	PIPE, JOINT 3 DURITE RACCORDEMENT 3	1	1				
7	68V–13546–10	HOSE 2 DURITE 2	1	1				
8	6E5–21744–00	BREATHER RENIFLARD	2	2				
9	6CB–13547–00	HOSE 3 DURITE 3	1	1				
10	68V–13548–00	HOSE, AIR 4 DURITE, A AIR 4	1	1				
11	68V–12483–00	PIPE 3 DURITE 3	1	1				
12	68V–1475F–00	PIPE 3 DURITE 3	1	1				
13	6G8–24376–00	PIPE, JOINT 1 DURITE 1, RACCORDEMENT	1	1				
14	6CB–14989–00	ORIFICE, AIR VENT OR1F1CE	1	1				
15	68V–1475G–01	PIPE 4 DURITE 4	1	1				
16	68V–1475A–00	PIPE 1 DURITE 1	1	1				
17	68V–2475H–00	BRACKET, SEAT LEVER 1 SUPPORT, LEVIER DE SELLE 1	1	1				
18	95895–06010	BOLT, FLANGE BOULON	2	2				
19	90464–11012	CLAMP BRIDE	2	2				
20	90464–20006	CLAMP BRIDE	1	1				
21	68V–2475J–00	BRACKET, SEAT LEVER 2 SUPPORT, LEVIER DE SELLE 2	1	1				
22	95895–06010	BOLT, FLANGE BOULON	2	2				
23	90464–07009	CLAMP BRIDE	1	1				
24	68V–13532–11	HOSE, VACUUM SENSING 3 DURITE 3	1	1				
25	90461–04011	CLAMP BRIDE	1	1				
26	95895–06010	BOLT, FLANGE BOULON	1	1				
27	90464–10006	CLAMP BRIDE	1	1				

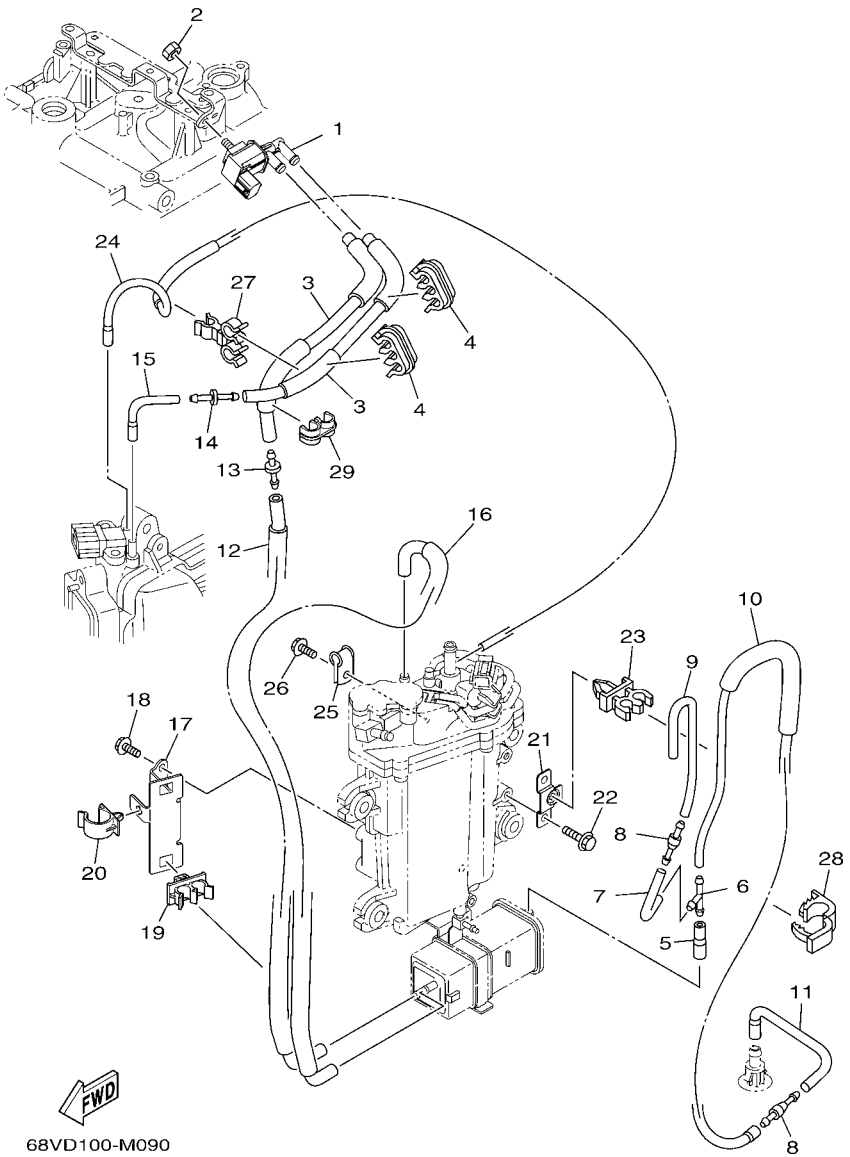

FIG. 9 INTAKE 3 — ADMISSION 3

REF. NO.	PART NO. N° PIECES	DESCRIPTION DESCRIPTION	68VE	68WE				REMARKS REMARQUES
28	90464–18004	CLAMP BRIDE	1	1				
29	90464–12224	CLAMP BRIDE	1	1				

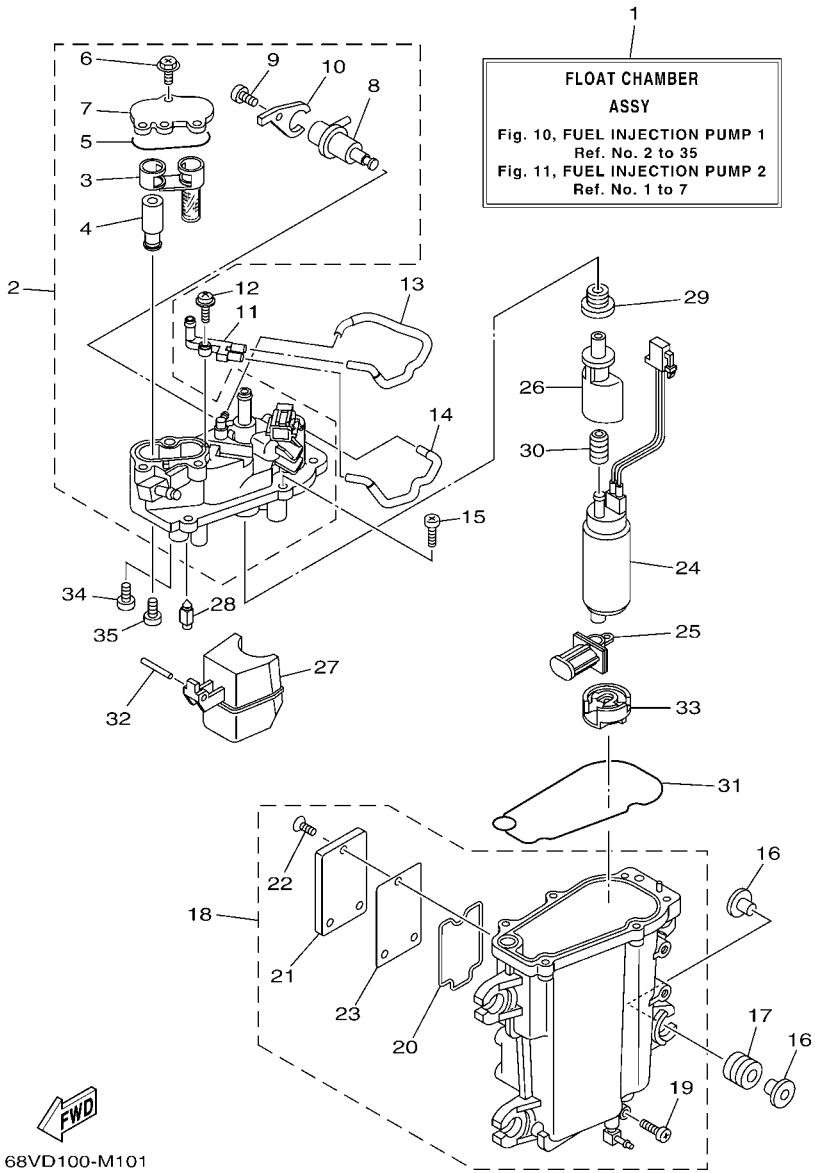

FIG. 10 FUEL INJECTION PUMP 1 POMPE A INJECTEUR 1

REF. NO.	PART NO. N° PIECES	DESCRIPTION DESCRIPTION	68VE	68WE				REMARKS REMARQUES
1	68V–14180–22	FLOAT CHAMBER ASSY CUVE DE FLOTTEUR	1	1				FOR F(L)115AET FOR F(L)115AET
	68V–14180–42	FLOAT CHAMBER ASSY CUVE DE FLOTTEUR	1	1				FOR F(L)115AET1 FOR F(L)115AET1
2	68V–14182–21	COVER, FLOAT CHAMBER COUVERCLE, CUVE DE FLOTTEUR	1	1				
3	6CB–24501–01	.FILTER, FUEL .FILTRE	1	1				
4	68V–24481–00	.PLUG .COUVERCLE	1	1				
5	6CB–13016–00	.O-RING .JOINT TORIQUE	1	1				
6	6CB–14216–00	.SCREW .VIS	3	3				
7	6CB–24217–00	.COVER .COUVERCLE	1	1				
8	6CB–13906–01	.REGULATOR, PRESSURE .REGULATEUR DE PRESSION	1	1				
9	6CB–14564–00	.SCREW .VIS	1	1				
10	6CB–14146–00	.PLATE .PLAQUE	1	1				
11	68V–24379–10	PIPE, JOINT 4 DURITE RACCORDEMENT 4	1	1				
12	68V–14216–00	SCREW VIS	1	1				
13	68V–1475H–00	PIPE 5 DURITE 5	1	1				
14	68V–1475J–00	PIPE 6 DURITE 6	1	1				
15	63P–14567–00	SCREW VIS	6	6				
16	69J–13716–00	COLLAR COLLERETTE	8	8				
17	6CB–13593–00	DAMPER AMORTISSEUR	4	4				
18	68V–14181–21	BODY, FLOAT CHAMBER 1 CORPS, CUVE DE FLOTTEUR 1	1	1				
19	6P2–14191–00	.PLUG, DRAIN .PLOT, VIDANGE	1	1				
20	6CB–14239–00	.SEAL .JOINT	1	1				
21	6CB–24452–10	.COVER .COUVERCLE	1	1				
22	6CB–14429–01	.SCREW .VIS	3	3				
23	6CB–24482–00	.GASKET 1 .JOINT 1	1	1				
24	68V–13907–20	FUEL PUMP COMP. POMPE A CARBURANT COMP.	1	1				
25	63P–13915–00	FILTER FILTRE	1	1				
26	6AW–13132–00	JOINT RACCORD	1	1				

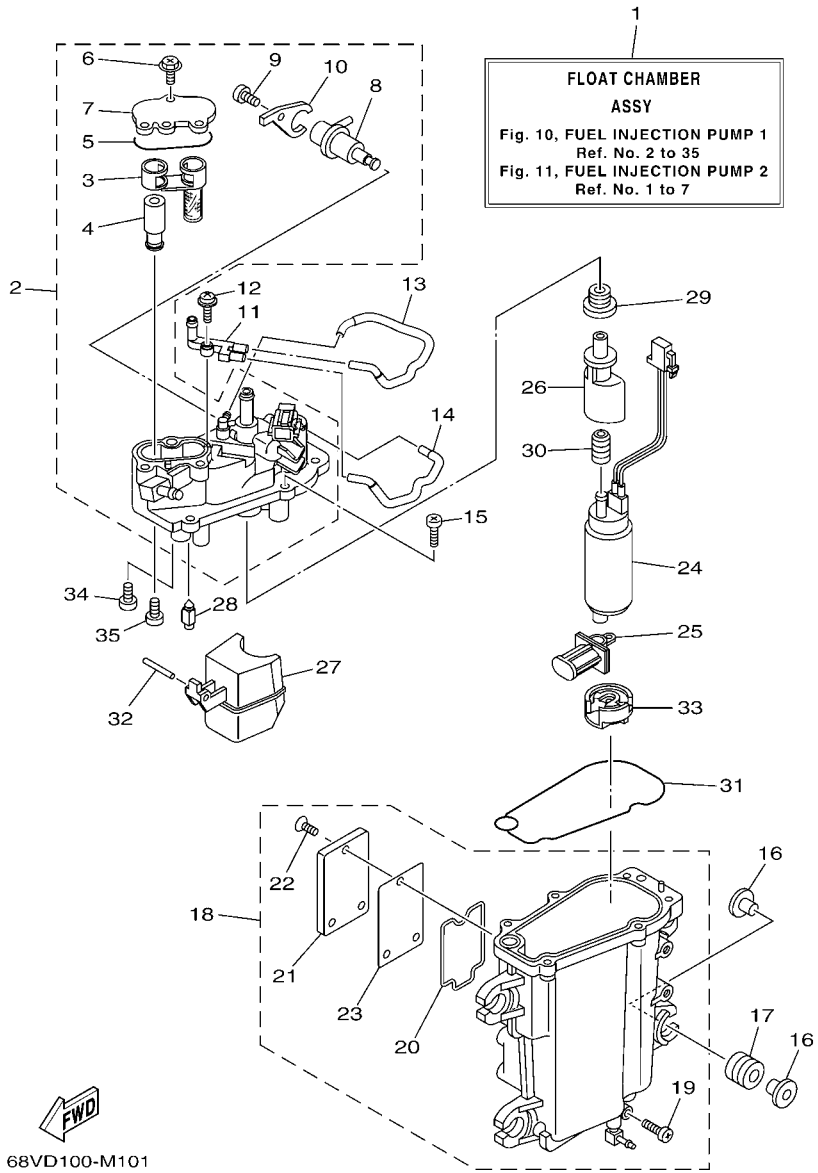

FIG. 10 FUEL INJECTION PUMP 1 POMPE A INJECTEUR 1

REF. NO.	PART NO. N° PIECES	DESCRIPTION DESCRIPTION	68VE	68WE				REMARKS REMARQUES
27	6CB–14985–00	FLOAT FLOTTEUR	1	1				
28	6CB–14546–00	VALVE, NEEDLE POINTEAU	1	1				
29	6CB–1447B–00	BUSH 1 DOUILLE 1	1	1				
30	6AW–13781–00	DAMPER, PUMP AMORTISSEUR, POMPE	1	1				
31	6CB–14984–00	GASKET, FLOAT CHAMBER JOINT, CUVE DE FLOTTEUR	1	1				
32	6P2–14386–00	PIN, FLOAT AXE, FLOTTEUR	1	1				
33	6AW–13784–00	COVER, PUMP COUVERCLE, POMPE	1	1				
34	4SV–24453–00	SCREW VIS	1	1				
35	98507–04008	SCREW, PAN HEAD VIS, TETE TRONCONIQUE	1	1				

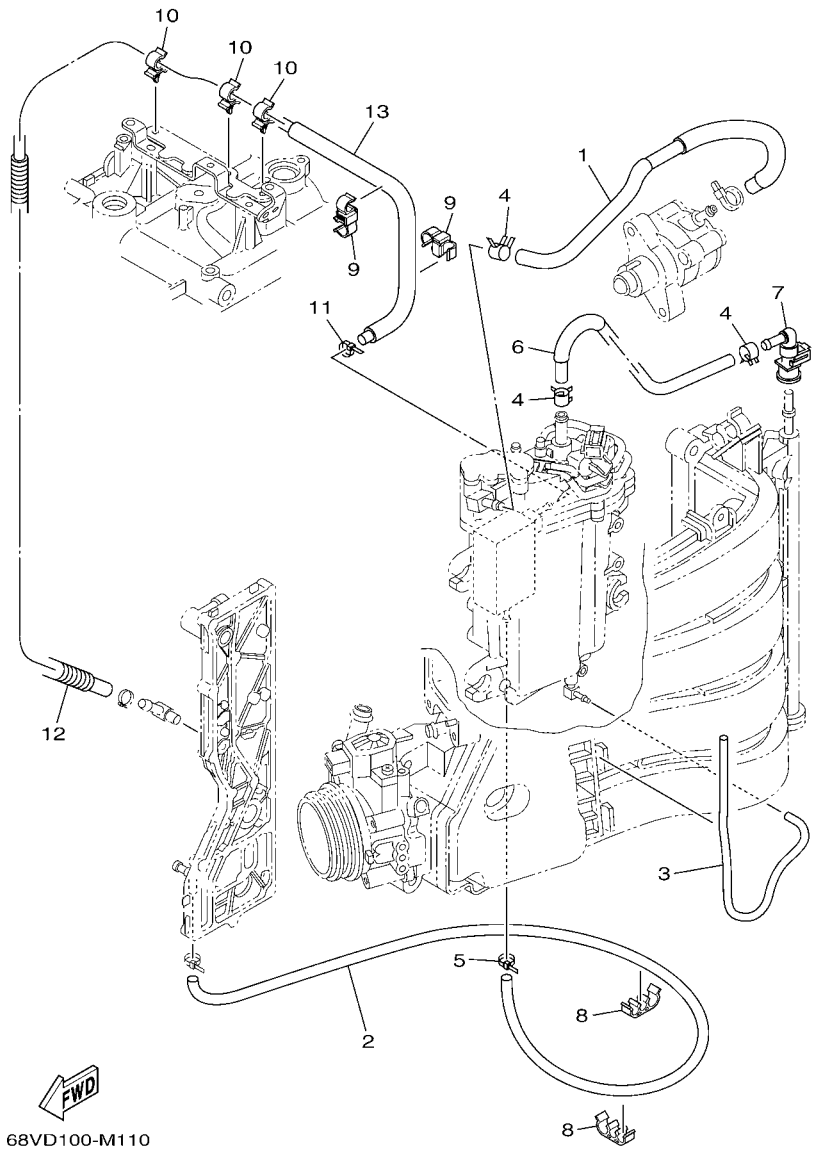

FIG. 11 FUEL INJECTION PUMP 2 POMPE A INJECTEUR 2

REF. NO.	PART NO. N° PIECES	DESCRIPTION DESCRIPTION	68VE	68WE				REMARKS REMARQUES
1	68V–24324–00	PIPE 13 DURITE 13	1	1				FOR F(L)115AET FOR F(L)115AET
	68V–24324–10	PIPE 13 DURITE 13	1	1				FOR F(L)115AET1 FOR F(L)115AET1
2	68V–12482–00	PIPE 2 DURITE 2	1	1				
3	6AW–14197–00	PIPE DURITE	1	1				
4	68V–13577–00	CLIP AGRAFE	3	3				
5	90465–11M10	CLAMP BRIDE	1	1				
6	68V–13971–30	PIPE, FUEL 1 TUBE 1, CARBURANT	1	1				
7	6AW–24300–00	FUEL PIPE JOINT DURITE RACCORDEMT. A ESSENCE	1	1				
8	90464–11008	CLAMP BRIDE	2	2				
9	90464–12010	CLAMP BRIDE	2	2				
10	90464–09129	CLAMP BRIDE	3	3				
11	90465–11M10	CLAMP BRIDE	1	1				
12	68V–24864–10	TUBE DURITE	1	1				
13	68V–12484–21	PIPE 4 DURITE 4	1	1				

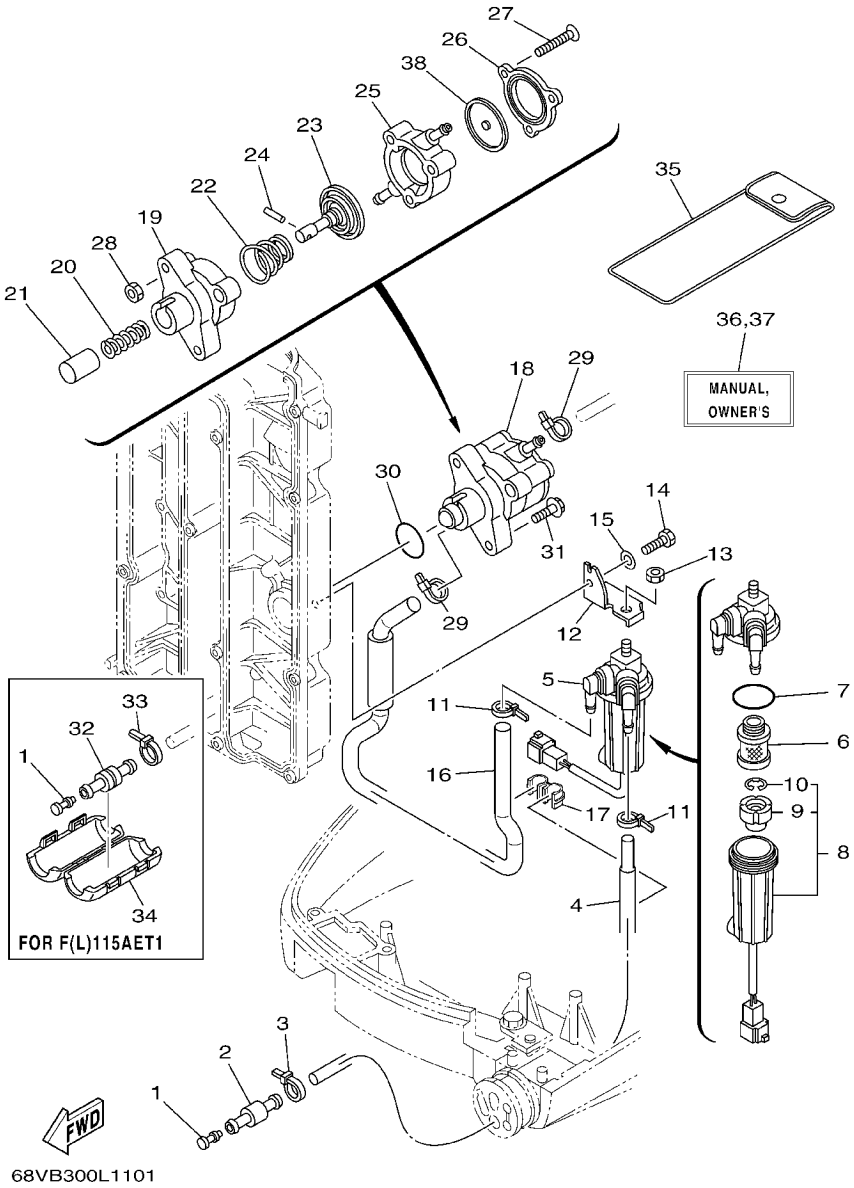

FIG. 12 FUEL 1 — CARBURANT 1

REF. NO.	PART NO. N° PIECES	DESCRIPTION DESCRIPTION	68VE	68WE				REMARKS REMARQUES
1	689–85547–00	DAMPER AMORTISSEUR	1	1				
2	6R3–24377–00	PIPE, JOINT 2 DURITE RACCORDEMENT 2	1	1				FOR F(L)115AET FOR F(L)115AET
3	90465–11M10	CLAMP BRIDE	1	1				FOR F(L)115AET FOR F(L)115AET
4	68V–24314–10	PIPE 4 DURITE 4	1	1				FOR F(L)115AET FOR F(L)115AET
	68V–24314–31	PIPE 4 DURITE 4	1	1				FOR F(L)115AET1 FOR F(L)115AET1
5	6D8–24560–01	FILTER ASSY ENS FILTRE	1	1				
6	6D8–24563–00	.ELEMENT, FILTER .ELEMENT, FILTRE	1	1				
7	6D8–24564–00	.GASKET .JOINT	1	1				
8	6D8–24562–00	.CUP, FILTER .CUVETTE, FILTRE	1	1				
9	6D8–24469–00	..FLOAT, WATER LEVEL ..FLOTTEUR	1	1				
10	6D8–24519–00	..CLIP ..JONC	1	1				
11	90465–11M10	CLAMP BRIDE	2	2				
12	60C–24566–00	BRACKET, FILTER SUPPORT, FILTRE	1	1				
13	95380–08600	NUT ECROU	1	1				
14	97095–06016	BOLT BOULON	1	1				
15	92995–06600	WASHER RONDELLE	1	1				
16	68V–24311–10	PIPE, FUEL 1 DURITE A ESSENCE	1	1				FOR F(L)115AET FOR F(L)115AET
	68V–24311–20	PIPE, FUEL 1 DURITE A ESSENCE	1	1				FOR F(L)115AET1 FOR F(L)115AET1
17	90464–12224	CLAMP BRIDE	1	1				
18	6D8–24410–10	FUEL PUMP ASSY POMPE A ESSENCE	1	1				
19	68V–24412–00	.BODY 1 .CORPS 1	1	1				
20	68V–24454–00	.SPRING .RESSORT	1	1				
21	63P–13131–00	.PLUNGER .PLONGEUR	1	1				
22	68V–24423–00	.SPRING, DIAPHRAGM .RESSORT, DIAPHRAGME	1	1				
23	68V–24411–00	.DIAPHRAGM .DIAPHRAGME	1	1				
24	68V–24374–00	.PIN .GOUPILLE	1	1				
25	68V–24413–10	.BODY 2 .CORPS 2	1	1				

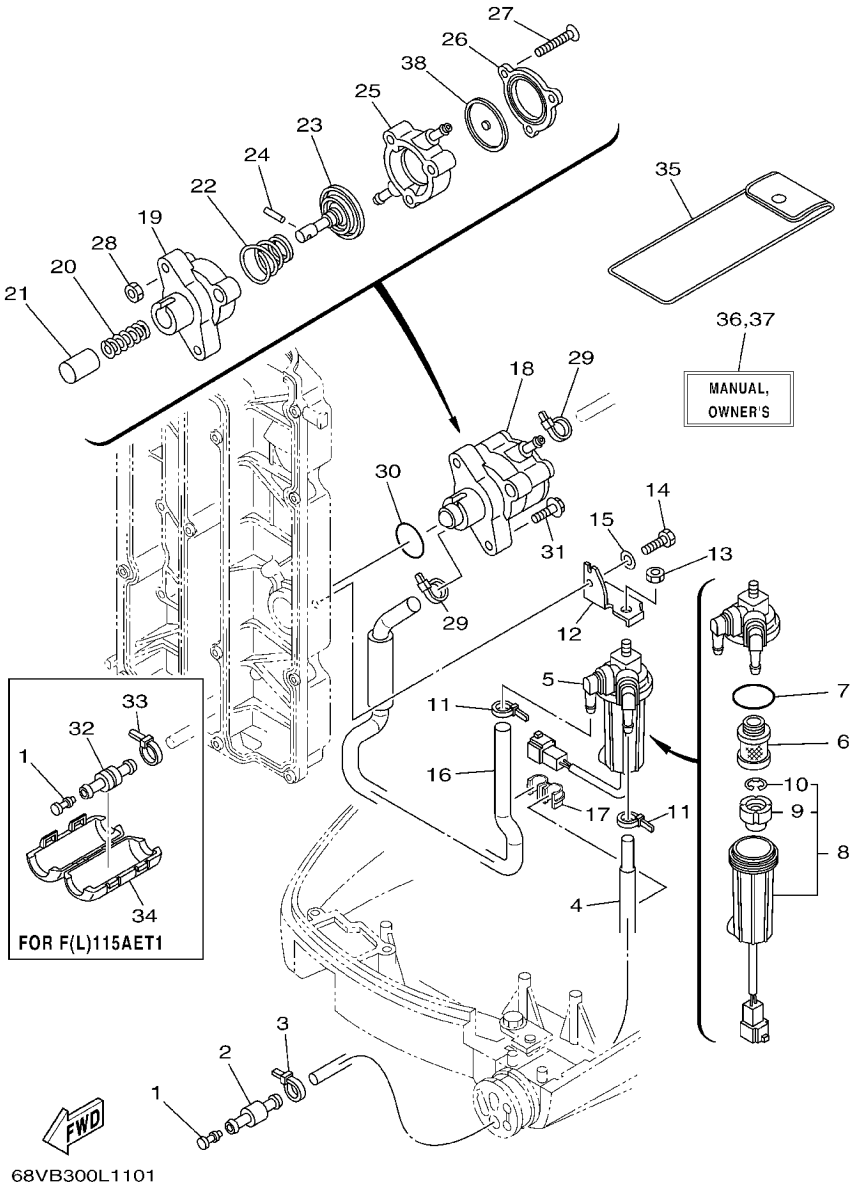

FIG. 12 FUEL 1 — CARBURANT 1

REF. NO.	PART NO. N° PIECES	DESCRIPTION DESCRIPTION	68VE	68WE				REMARKS REMARQUES
26	6D8–24414–00	.BODY 3 .CORPS 3	1	1				
27	68V–24444–00	.SCREW .VIS	3	3				
28	68V–24149–00	.NUT .ECROU	3	3				
29	90465–11M10	CLAMP BRIDE	2	2				
30	93210–30682	O-RING JOINT TORIQUE	1	1				
31	90119–06M83	BOLT, WITH WASHER BOULON, AVEC RONDELLE	2	2				
32	6R3–24377–10	PIPE, JOINT 2 DURITE RACCORDEMENT 2	1	1				FOR F(L)115AET1 FOR F(L)115AET1
33	90465–11M10	CLAMP BRIDE	1	1				FOR F(L)115AET1 FOR F(L)115AET1
34	68V–24452–00	COVER COUVERCLE	1	1				FOR F(L)115AET1 FOR F(L)115AET1
35	67F–28100–01	TOOL KIT TROUSSE A OUTILS	1	1				AP AP
36	63P–28199–7E–E0	MANUAL,OWNER'S MANUEL D'UTILISATION	1	1				UR (E) UR (E)
	63P–28199–7E–F0	MANUAL,OWNER'S MANUEL D'UTILISATION	1	1				UR (F) UR (F)
	63P–28199–7E–S0	MANUAL,OWNER'S MANUEL D'UTILISATION	1	1				UR (ES) UR (ES)
	63P–28199–7E–G0	MANUAL,OWNER'S MANUEL D'UTILISATION	1	1				UR (D) UR (D)
	63P–28199–7E–D0	MANUAL,OWNER'S MANUEL D'UTILISATION	1	1				UR (NL) UR (NL)
	63P–28199–7E–H0	MANUAL,OWNER'S MANUEL D'UTILISATION	1	1				UR (I) UR (I)
37	63P–28199–8E–K0	MANUAL,OWNER'S MANUEL D'UTILISATION	1	1				UR (DK) UR (DK)
	63P–28199–8E–R0	MANUAL,OWNER'S MANUEL D'UTILISATION	1	1				UR (GR) UR (GR)
	63P–28199–8E–P0	MANUAL,OWNER'S MANUEL D'UTILISATION	1	1				UR (P) UR (P)
	63P–28199–8E–N0	MANUAL,OWNER'S MANUEL D'UTILISATION	1	1				UR (N) UR (N)
	63P–28199–8E–M0	MANUAL,OWNER'S MANUEL D'UTILISATION	1	1				UR (S) UR (S)
	63P–28199–8E–L0	MANUAL,OWNER'S MANUEL D'UTILISATION	1	1				UR (SF) UR (SF)
38	68V–24471–10	.DIAPHRAGM .DIAPHRAGME	1	1				

FIG. 13 FUEL 2 CARBURANT 2

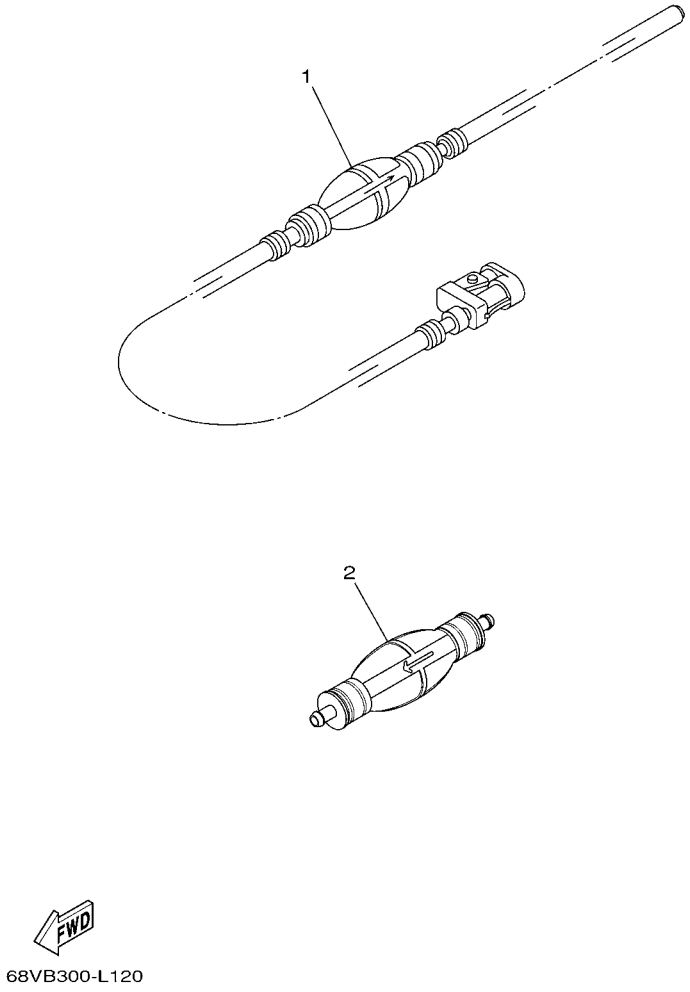

REF. NO.	PART NO. N° PIECES	DESCRIPTION DESCRIPTION	68VE	68WE				REMARKS REMARQUES
1	6YK–24306–44	FUEL PIPE COMP. 1 DURITE A ESSENCE 1	1	1				AP F(L)115AET AP F(L)115AET
2	6YK–24360–73	PRIMER PUMP ASSY POMPE D'AMORCAGE	1	1				AP F(L)115AET1 AP F(L)115AET1

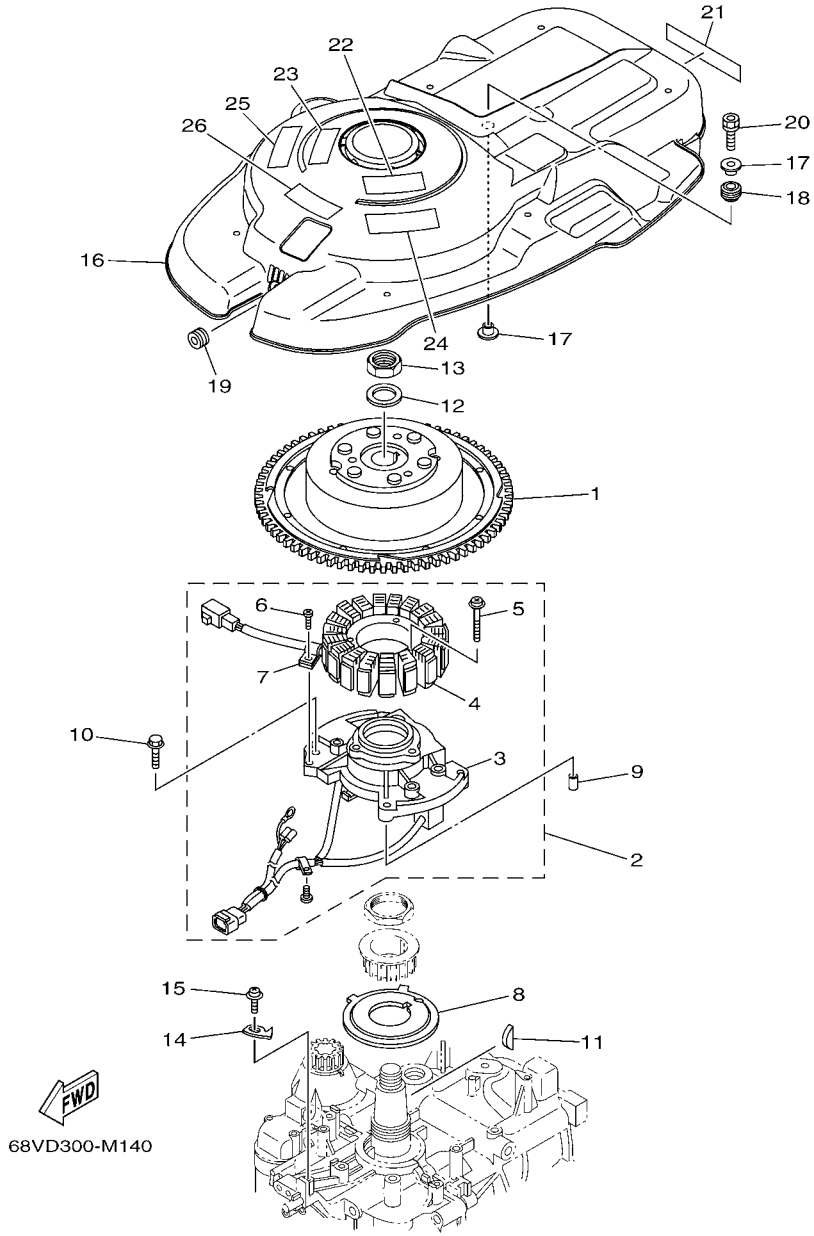

FIG. 14 GENERATOR GENERATRICE

REF. NO.	PART NO. N° PIECES	DESCRIPTION DESCRIPTION	68VE	68WE				REMARKS REMARQUES
1	68V–81450–00	ROTOR ASSY ROTOR COMPLET	1	1				
2	68V–81460–00	BASE ASSY ENS. FLASQUE	1	1				
3	68V–85580–00	.COIL, PULSER .BOBINE, PULSEUR	1	1				
4	68V–81410–00	.STATOR ASSY .STATOR COMPLET	1	1				
5	63D–81345–20	.SCREW, WITH WASHER (M6X30) .VIS, AVEC RONDELLE (M6X30)	3	3				
6	97607–04110	.SCREW, WITH WASHER .VIS HEXAGONAL	1	1				
7	445–81328–20	.CLAMP .COLLIER	1	1				
8	68V–81673–10	ROTOR ROTOR	1	1				
9	99530–08012	PIN, DOWEL GOUJON, D'ASSEMBLAGE	2	2				
10	97595–06630	BOLT, WITH WASHER VIS HEXAGONAL AVC RONDELLE	4	4				
11	90280–04M08	KEY, WOODRUFF CLAVETTE, DEMI-LUNE	1	1				
12	90201–24014	WASHER, PLATE RONDELLE, PLATE	1	1				
13	90179–24002	NUT ECROU	1	1				
14	6D8–81332–00	PLATE, TIMING PLATEAU, ALLUMAGE	1	1				
15	97985–06210	SCREW, WITH WASHER VIS, AVEC RONDELLE	1	1				
16	68V–81337–00	COVER, FLYWHEEL COUVERCLE, VOLANT	1	1				
17	90387–06M71	COLLAR COLLERETTE	2	2				
18	90480–15M31	GROMMET PASSE-FIL	1	1				
19	90480–12314	GROMMET PASSE-FIL	1	1				
20	90119–06M92	BOLT, WITH WASHER BOULON, AVEC RONDELLE	1	1				
21	68V–13437–62	MARK, CAUTION MAKER	1	1				
22	6AH–81995–40	LABEL, WARNING ETIQUETTE, AVERTISSEMENT	1	1				
23	6AH–81995–50	LABEL, WARNING ETIQUETTE, AVERTISSEMENT	1	1				
24	6AH–81994–40	LABEL, SAFETY ETIQUETTE, SECURITE	1	1				
25	6AH–81994–50	LABEL, SAFETY ETIQUETTE, SECURITE	1	1				
26	6AG–81996–00	MARK MARQUE	1	1				

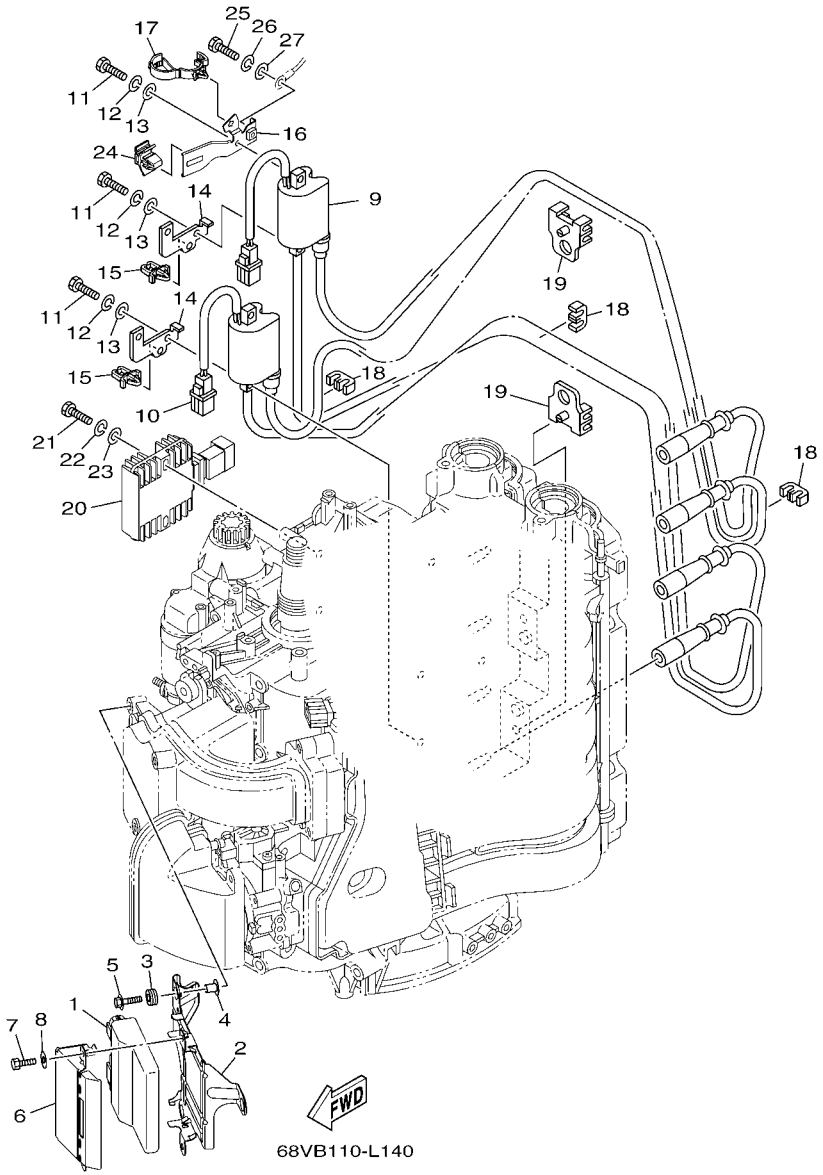

FIG. 15 ELECTRICAL 1 — PARTIE ELECTRIQUE 1

REF. NO.	PART NO. N° PIECES	DESCRIPTION DESCRIPTION	68VE	68WE				REMARKS REMARQUES
1	68V–8591A–82	ENGINE CONTROL UNIT ASSY BLOC DE CONTROL	1	1				
2	68V–8253B–00	PLATE, LOCK PLAQUE BUTEE	1	1				
3	60V–85516–00	SPACER ENTRETOISE	3	3				
4	90387–06289	COLLAR COLLERETTE	3	3				
5	90119–06071	BOLT, WITH WASHER BOULON, AVEC RONDELLE	3	3				
6	68V–8253C–00	SPRING, PLATE LOCK RESSORT, PLAQUE BUTEE	1	1				
7	97095–06012	BOLT BOULON	2	2				
8	92995–06600	WASHER RONDELLE	2	2				
9	68V–82310–00	IGNITION COIL ASSY BOBINE D'ALLUMAGE	1	1				
10	68V–82310–10	IGNITION COIL ASSY BOBINE D'ALLUMAGE	1	1				
11	97095–06025	BOLT BOULON	4	4				
12	92995–06100	WASHER, SPRING RONDELLE, GROWER	4	4				
13	92995–06600	WASHER RONDELLE	4	4				
14	68V–82388–00	PLATE PLAQUETTE	2	2				
15	90464–06001	CLAMP BRIDE	2	2				
16	68V–82388–10	PLATE PLAQUETTE	1	1				
17	90464–12183	CLAMP BRIDE	1	1				
18	67F–82361–00	CLAMP, CORD COLLIER, CORDON	3	3				
19	67F–82362–00	CLAMP, CORD 2 COLLIER, CABLE 2	2	2				
20	68V–81960–10	RECTIFIER & REGULATOR ASSY REDRESSEUR REGULATEUR CPLT	1	1				
21	97095–06025	BOLT BOULON	2	2				
22	92995–06100	WASHER, SPRING RONDELLE, GROWER	2	2				
23	92995–06600	WASHER RONDELLE	2	2				
24	90464–09M47	CLAMP BRIDE	1	1				
25	97095–06016	BOLT BOULON	1	1				
26	92995–06100	WASHER, SPRING RONDELLE, GROWER	1	1				
27	92995–06600	WASHER RONDELLE	1	1				

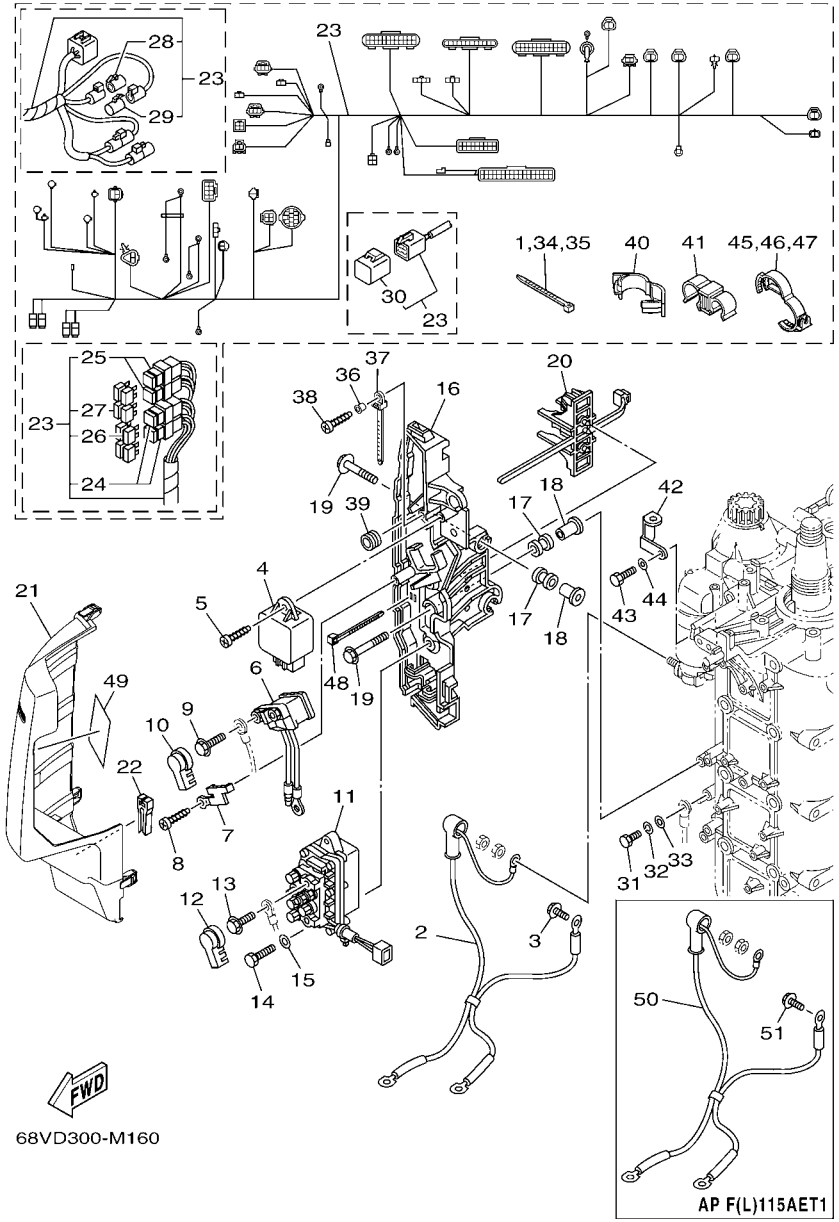

FIG. 16 ELECTRICAL 2 — PARTIE ELECTRIQUE 2

REF. NO.	PART NO. N° PIECES	DESCRIPTION DESCRIPTION	68VE	68WE				REMARKS REMARQUES
1	90465–13M18	CLAMP BRIDE	1	1				
2	68V–82105–01	BATTERY CABLE CABLE DE BATTERIE	1	1				FOR F(L)115AET FOR F(L)115AET
3	90105–06M14	BOLT FLANGE BOULON	1	1				FOR F(L)115AET FOR F(L)115AET
4	60E–81950–00	RELAY ASSY RELAIS COMPLET	1	1				
5	97780–60625	SCREW, TAPPING VIS, TETE BOMBEE	1	1				
6	68V–8194A–00	RELAY RELAIS	1	1				
7	68F–81953–00	STAY, RELAY SUPPORT, RELAIS	1	1				
8	97780–60620	SCREW, TAPPING VIS, TETE BOMBEE	1	1				
9	97595–06610	BOLT, WITH WASHER VIS HEXAGONAL AVC RONDELLE	2	2				
10	6P2–8183X–00	CAP, TERMINAL COUVERCLE, BORNE	2	2				
11	63P–81950–00	RELAY ASSY RELAIS COMPLET	1	1				
12	6P2–8183X–00	CAP, TERMINAL COUVERCLE, BORNE	2	2				
13	97595–06610	BOLT, WITH WASHER VIS HEXAGONAL AVC RONDELLE	2	2				
14	97095–06020	BOLT BOULON	2	2				
15	92995–06600	WASHER RONDELLE	2	2				
16	68V–81948–02	BRACKET SUPPORT	1	1				
17	6A0–82317–00	DAMPER, IGNITION COIL AMORTISSEUR, BOBINE D'ALLUM	5	5				
18	90387–06119	COLLAR COLLERETTE	5	5				
19	90119–06M59	BOLT, WITH WASHER BOULON, AVEC RONDELLE	5	5				
20	68V–82594–00	CLAMP BRIDE	1	1				
21	68V–81942–11	COVER COUVERCLE	1	1				
22	67F–2812A–00	PULLER, FUSE TENDEUR, FUSIBLE	1	1				
23	68V–82590–71	WIRE HARNESS ASSY FAISCEAU DE FILS COMPLET	1	1				FOR TILT LIMIT FOR TILT LIMIT
24	67F–8215B–10	.CAP (YELLOW) .BOUCHON (YELLOW)	2	2				
25	67F–8215B–20	.CAP (GREEN) .BOUCHON (GREEN)	2	2				
26	67F–82151–00	.FUSE (20A) .FUSIBLE (20A)	4	4				
27	67F–82151–10	.FUSE (30A) .FUSIBLE (30A)	4	4				

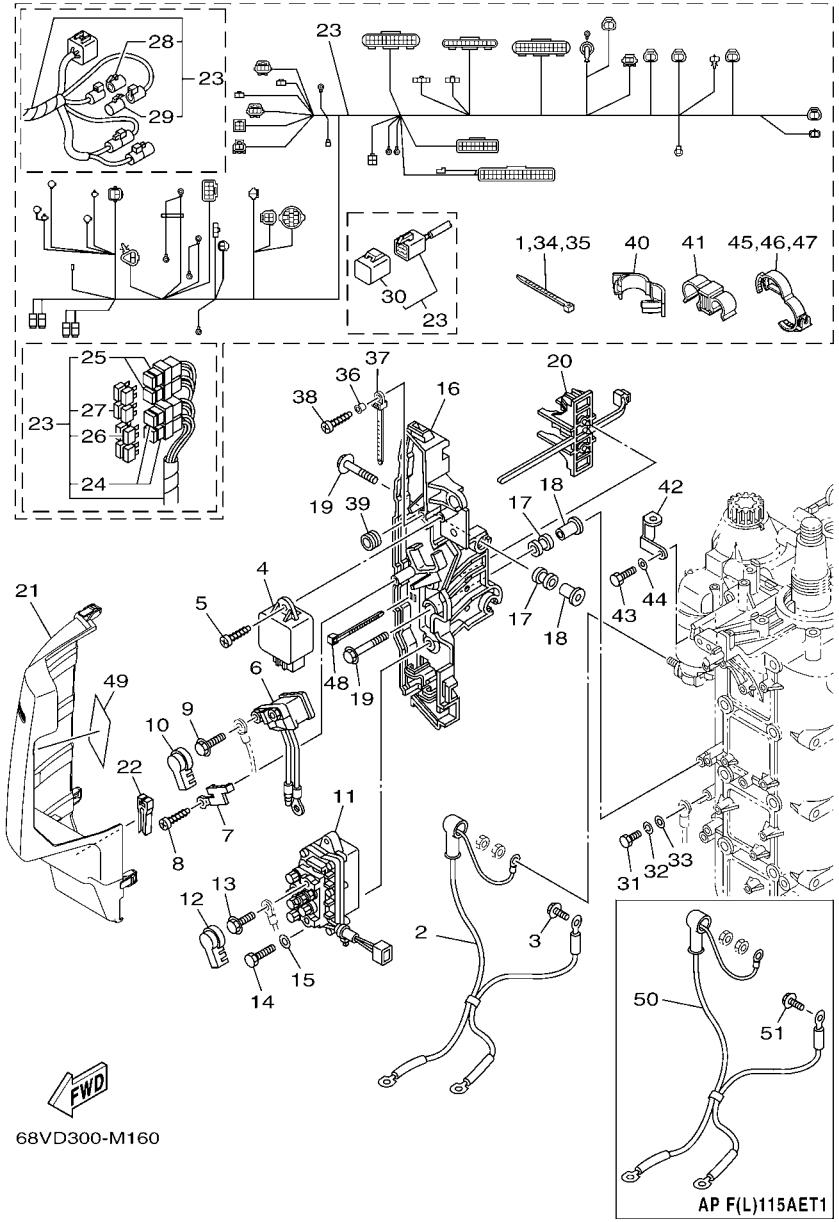

FIG. 16 ELECTRICAL 2 — PARTIE ELECTRIQUE 2

REF. NO.	PART NO. N° PIECES	DESCRIPTION DESCRIPTION	68VE	68WE				REMARKS REMARQUES
28	6DA–82582–00	.CAP 1 (FEMALE) .BOUCHON 1 (FEMME)	1	1				
29	6DA–82582–10	.CAP 1 (MALE) .BOUCHON 1 (MALE)	1	1				
30	6Y8–82582–11	.CAP 1 (4PIN) .COUVERCLE, FAISCEAU DE FILS	1	1				
31	97095–06016	BOLT BOULON	1	1				
32	92995–06100	WASHER, SPRING RONDELLE, GROWER	1	1				
33	92995–06600	WASHER RONDELLE	1	1				
34	90465–13M18	CLAMP BRIDE	1	1				
35	90465–13M18	CLAMP BRIDE	1	1				
36	90387–06M05	COLLAR COLLERETTE	1	1				
37	90465–12M53	CLAMP BRIDE	1	1				
38	97780–60625	SCREW, TAPPING VIS, TETE BOMBEE	1	1				
39	6A0–82317–00	DAMPER, IGNITION COIL AMORTISSEUR, BOBINE D'ALLUM	1	1				
40	90464–18004	CLAMP BRIDE	1	1				
41	90464–12010	CLAMP BRIDE	1	1				
42	6D8–82581–01	STAY, CORD CLAMP SUPPORT, COLLIER DE CORDON	1	1				
43	97095–06014	BOLT BOULON	1	1				
44	92995–06600	WASHER RONDELLE	1	1				
45	90464–30003	CLAMP BRIDE	2	2				
46	90464–30003	CLAMP BRIDE	1	1				
47	90464–30003	CLAMP BRIDE	1	1				
48	90465–13M11	CLAMP BRIDE	2	2				
49	68V–81919–10	GRAPHIC, REGULATOR ADHESIF, REGULATEUR	1	1				
50	68V–82105–01	BATTERY CABLE CABLE DE BATTERIE	1	1				AP F(L)115AET1 AP F(L)115AET1
51	90105–06M14	BOLT FLANGE BOULON	1	1				AP F(L)115AET1 AP F(L)115AET1

FIG. 17 ELECTRICAL 3 PARTIE ELECTRIQUE 3

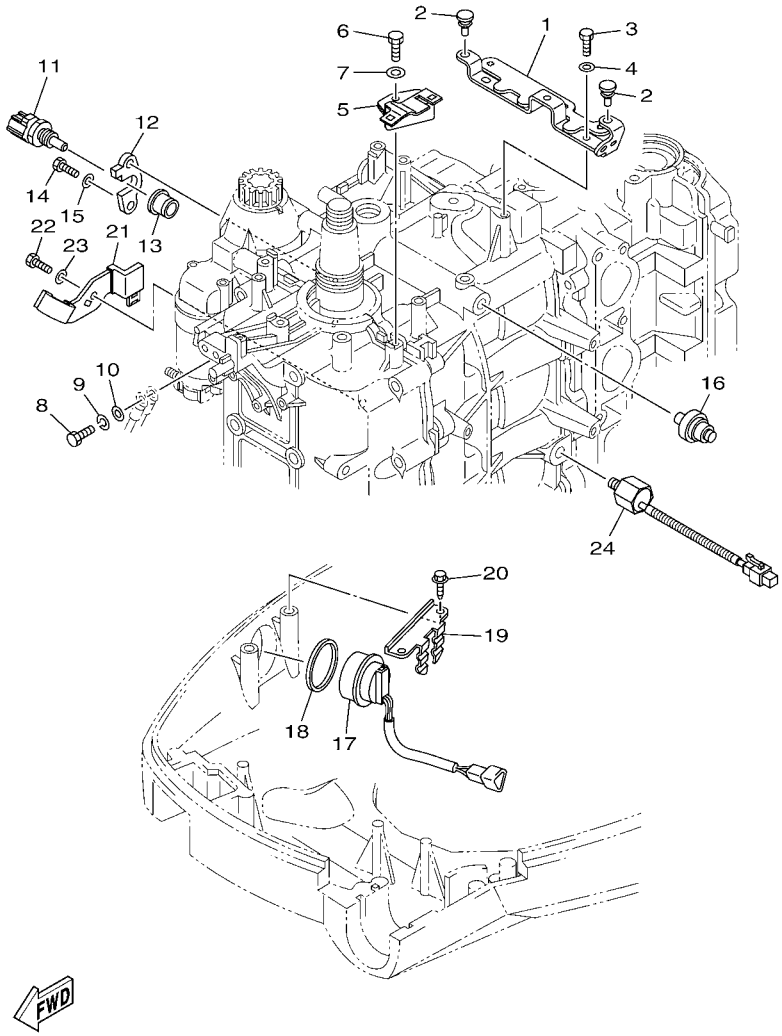

REF. NO.	PART NO. N° PIECES	DESCRIPTION DESCRIPTION	68VE	68WE				REMARKS REMARQUES
1	68V–8132G–00	PLATE PLAQUE	1	1				
2	90480–06M19	GROMMET PASSE-FIL	2	2				
3	97095–06016	BOLT BOULON	2	2				
4	92995–06600	WASHER RONDELLE	2	2				
5	68V–82588–20	PLATE PLAQUE	1	1				
6	97095–06012	BOLT BOULON	1	1				
7	92995–06600	WASHER RONDELLE	1	1				
8	97095–06016	BOLT BOULON	1	1				
9	92995–06100	WASHER, SPRING RONDELLE, GROWER	1	1				
10	92995–06600	WASHER RONDELLE	1	1				
11	67F–85790–00	THERMOSENSOR ASSY SENSITOMETRE	1	1				
12	67F–85757–00	RETAINER ARRETOIR	1	1				
13	68V–85753–00	GASKET, SENDER UNIT JOINT, DE PERCEPTION	1	1				
14	97095–06016	BOLT BOULON	2	2				
15	92995–06600	WASHER RONDELLE	2	2				
16	68V–82504–00	OIL PRESSURE SWITCH ASSY CONTACTEUR DE PRESSION D'HUILE	1	1				
17	63D–82563–10	TRIM & TILT SWITCH ASSY INCLINER ET PARER COMMUTATEUR	1	1				
18	6E5–82587–00	GASKET JOINT	1	1				
19	67F–83614–00	BRACKET SUPPORT	1	1				
20	90109–06M86	BOLT BOULON	2	2				
21	6D8–8252H–01	PLATE, HOLDER PLAQUE, SUPPORT	1	1				
22	97095–06012	BOLT BOULON	1	1				
23	92995–06600	WASHER RONDELLE	1	1				
24	6CJ–85780–00	SENSOR, KNOCK SONDE DE COGNEMENT	1	1				

FIG. 18 STARTING MOTOR DEMARREUR ELECTRIQUE

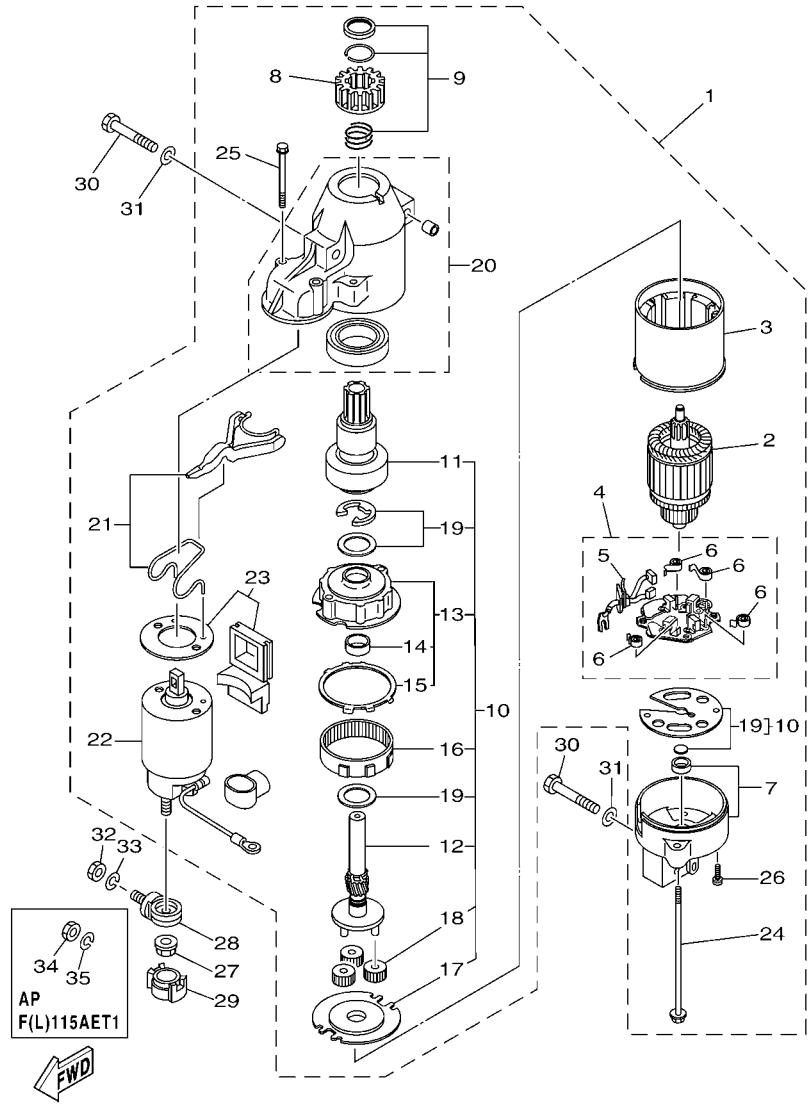

68VC300-L170

REF. NO.	PART NO. N° PIECES	DESCRIPTION DESCRIPTION	68VE	68WE				REMARKS REMARQUES
1	68V–81800–02	STARTING MOTOR ASSY DEMARREUR ELECTRIQUE COMPLET	1	1				
2	67F–81850–00	.ARMATURE ASSY .INDUIT	1	1				
3	67F–81810–00	.STATOR ASSY .STATOR COMPLET	1	1				
4	69J–81840–00	.BRUSH HOLDER ASSY .SUPPORT DE CHARBON	1	1				
5	69J–81801–00	..BRUSH SET ..CHARBON	1	1				
6	67F–81813–00	..SPRING, BRUSH ..RESSORT, DE CHARBON	4	4				
7	68F–81820–00	.REAR BRACKET ASSY .SUPPORT ARRIERE COMPLET	1	1				
8	67F–81808–00	.PINION ASSY .PIGNON	1	1				
9	67F–81857–00	.PINION STOPPER SET .BUTEE PIGNON	1	1				
10	67F–81807–00	.GEAR ASSY, STARTING MOTOR .PIGNON, DEMARREUR ELECTRIQUE	1	1				
11	67F–81832–00	..CLUTCH, OVER RUN ..EMBRAYAGE, ROUE LIBRE	1	1				
12	67F–81836–00	..SHAFT, PINION ..AXE, PIGNON	1	1				
13	67F–81821–00	..BRACKET, CENTER 1 ..SUPPORT, CENTRE 1	1	1				
14	67F–81841–00	...BEARING ...ROULEMENT	1	1				
15	67F–8183R–00	...GASKET ...JOINT	1	1				
16	67F–81891–00	..GEAR, RING ..ROUE DENTEE	1	1				WITH 67F-8183R-00 WITH 67F-8183R-00
17	67F–81830–00	..BRACKET, CENTER 2 ..SUPPORT, CENTRE 2	1	1				
18	60V–8183T–00	..GEAR, IDLER ..PIGNON, INTERMEDIAIRE	3	3				
19	67F–81809–00	..WASHER KIT ..JEU DE RONDELLES	1	1				
20	60X–81842–00	.COVER .COUVERCLE	1	1				
21	6C5–81839–00	.LEVER ASSY .LEVIER COMPLET	1	1				
22	68V–81941–02	.STARTER RELAY ASSY .LANCEUR RELAIS (ENS.)	1	1				
23	6C5–81869–00	.COVER, DUST .COUVERCLE, POUSSIERE	1	1				
24	6K7–81826–11	.BOLT .BOULON	2	2				
25	69J–81828–00	.SCREW 2 .VIS 2	2	2				
26	67F–81846–00	.SCREW .VIS	2	2				
27	90179–08003	NUT ECROU	1	1				

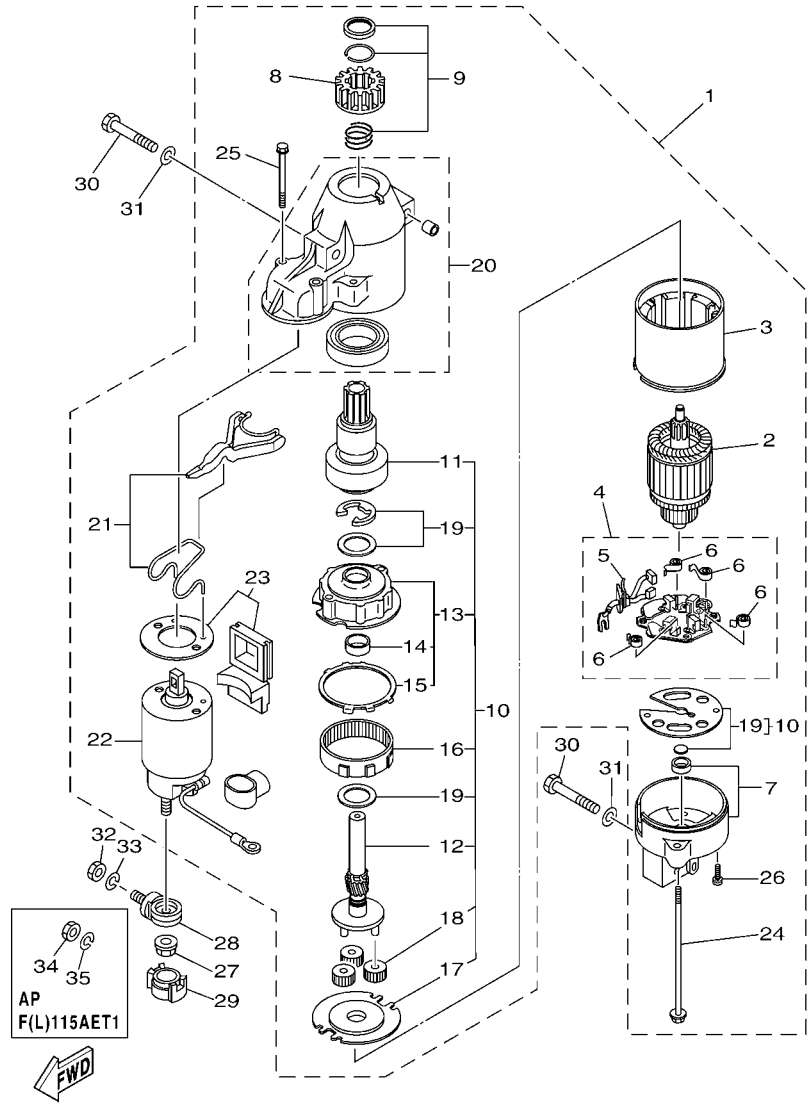

FIG. 18 STARTING MOTOR DEMARREUR ELECTRIQUE

REF. NO.	PART NO. N° PIECES	DESCRIPTION DESCRIPTION	68VE	68WE				REMARKS REMARQUES
28	60V–81925–00	TERMINAL BORNE	1	1				
29	68F–82582–00	COVER, WIRE HARNESS COUVERCLE, FAISCEAU DE FILS	1	1				
30	97013–08045	BOLT BOULON	3	3				
31	92903–08600	WASHER, PLATE RONDELLE, PLATE	3	3				
32	95333–08600	NUT ECROU	1	1				FOR F(L)115AET FOR F(L)115AET
33	92903–08100	WASHER, SPRING RONDELLE, GROWER	1	1				FOR F(L)115AET FOR F(L)115AET
34	95333–08600	NUT ECROU	1	1				AP F(L)115AET1 AP F(L)115AET1
35	92903–08100	WASHER, SPRING RONDELLE, GROWER	1	1				AP F(L)115AET1 AP F(L)115AET1

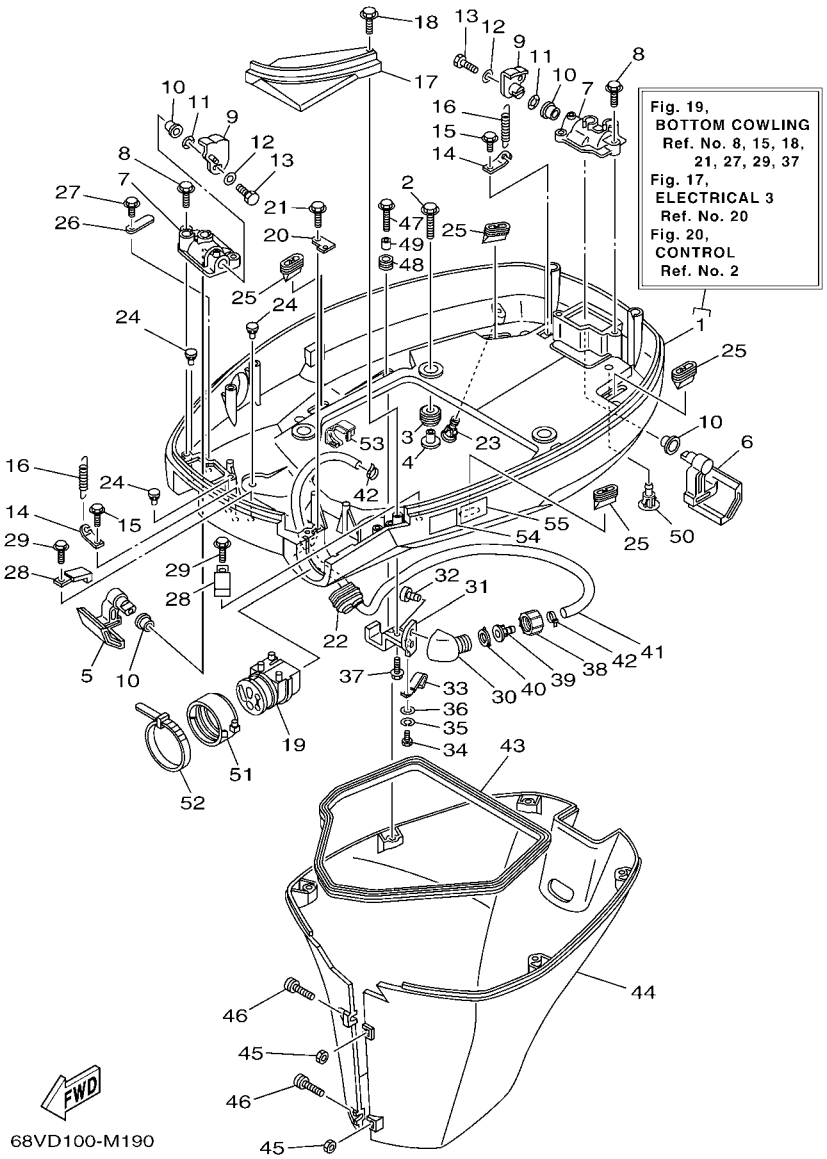

FIG. 19 BOTTOM COWLING CAPOT INFERIEUR

REF. NO.	PART NO. N° PIECES	DESCRIPTION DESCRIPTION	68VE	68WE				REMARKS REMARQUES
1	68V–42710–02–8D	BOTTOM COWLING ASSY ENS. EMBASE	1	1				
2	90119–08M22	BOLT, WITH WASHER BOULON, AVEC RONDELLE	4	4				
3	90480–22M15	GROMMET PASSE-FIL	4	4				
4	90387–08M37	COLLAR COLLERETTE	4	4				
5	67F–42815–00–8D	LEVER, CLAMP LEVIER, PRESSE	1	1				
6	67F–42816–00–8D	LEVER, CLAMP LEVIER, PRESSE	1	1				
7	67F–42828–00–9S	PLATE, CLAMP PLAQUE, PRESSE	2	2				
8	90109–06M82	BOLT BOULON	4	4				
9	68V–42818–01	LEVER, CLAMP LEVIER, PRESSE	2	2				
10	90386–15M73	BUSH DOUILLE	4	4				
11	90206–15M18	WASHER, WAVE RONDELLE, ONDULEE	2	2				
12	90201–06068	WASHER, PLATE RONDELLE, PLATE	2	2				
13	97095–06016	BOLT BOULON	2	2				
14	64D–43144–00	HOOK, SPRING CROCHET	2	2				
15	90109–06M80	BOLT BOULON	2	2				
16	90506–16M34	SPRING, TENSION RESSORT, TENSION	2	2				
17	68V–42738–00–8D	PLATE, FITTING ETRIER	1	1				
18	90109–06M82	BOLT BOULON	2	2				
19	68V–42725–00	GROMMET PASSE-FIL	1	1				
20	67F–42756–01	STAY, CLAMP SUPPORT, COLLIER	1	1				
21	90109–06M86	BOLT BOULON	1	1				
22	6H1–42726–21	GROMMET PASSE-FIL	1	1				FLUSHING KIT FLUSHING KIT
23	6BL–44391–00	NIPPLE, HOSE RACCORD D'ESSENCE	1	1				
24	6H4–42748–00	GROMMET PASSE-FIL	3	3				
25	67F–42717–00	RUBBER, SEAL 2 JOINT EN CAOUTCHOUC 2	4	4				
26	6E5–82588–00	PLATE PLAQUE	1	1				
27	90109–06M81	BOLT BOULON	1	1				

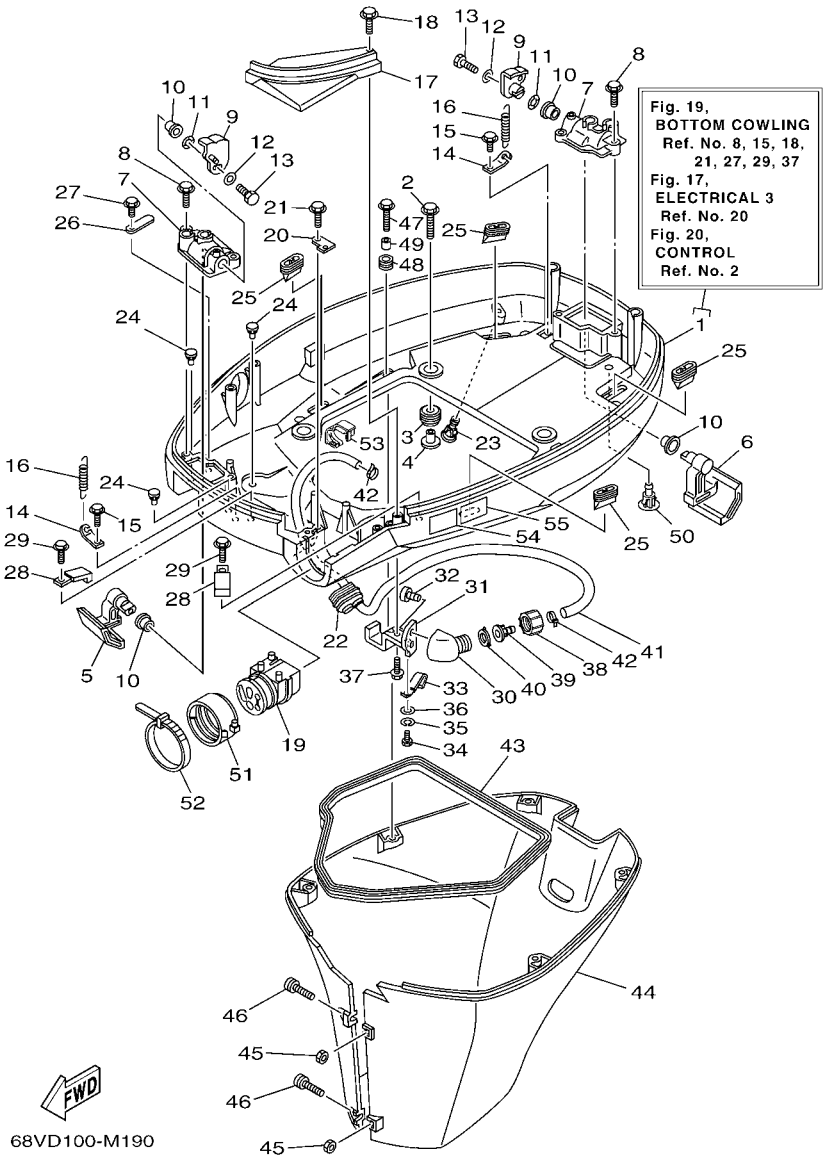

FIG. 19 BOTTOM COWLING CAPOT INFERIEUR

REF. NO.	PART NO. N° PIECES	DESCRIPTION DESCRIPTION	68VE	68WE				REMARKS REMARQUES
28	90465–08M23	CLAMP BRIDE	2	2				
29	90109–06M80	BOLT BOULON	2	2				
30	68T–12572–00	ADAPTER ADAPTATEUR	1	1				FLUSHING KIT FLUSHING KIT
31	67F–12535–01	PLATE PLAQUE	1	1				FLUSHING KIT FLUSHING KIT
32	90167–06002	SCREW, TAPPING VIS, TETE FRAISEE	2	2				FLUSHING KIT FLUSHING KIT
33	90462–06018	CLAMP BRIDE	1	1				FLUSHING KIT FLUSHING KIT
34	97095–06008	BOLT BOULON	1	1				FLUSHING KIT FLUSHING KIT
35	92995–06100	WASHER, SPRING RONDELLE, GROWER	1	1				FLUSHING KIT FLUSHING KIT
36	92995–06200	WASHER RONDELLE	1	1				FLUSHING KIT FLUSHING KIT
37	90109–06M86	BOLT BOULON	1	1				FLUSHING KIT FLUSHING KIT
38	6R3–12581–00	JOINT, HOSE 1 JOINT DE TUYAU	1	1				FLUSHING KIT FLUSHING KIT
39	6R3–12582–00	JOINT, HOSE 2 RACCORD DE TUYAU 1	1	1				FLUSHING KIT FLUSHING KIT
40	6R3–12583–00	GASKET, HOSE JOINT JOINT	1	1				FLUSHING KIT FLUSHING KIT
41	68V–24312–00	PIPE 2 DURITE 2	1	1				FLUSHING KIT FLUSHING KIT
42	90465–11M10	CLAMP BRIDE	2	2				FLUSHING KIT FLUSHING KIT
43	61A–42716–00	RUBBER, SEAL 1 JOINT EN CAOUTCHOUC 1	1	1				
44	67F–42741–01–8D	APRON CAPOT LATERAL	1	1				
45	95380–06600	NUT, HEXAGON ECROU	2	2				
46	90159–06M28	SCREW, WITH WASHER VIS, AVEC RONDELLE	2	2				
47	90109–06M80	BOLT BOULON	5	5				
48	90480–13M24	GROMMET PASSE-FIL	5	5				
49	90387–06M43	COLLAR COLLERETTE	5	5				
50	6P2–44391–00	NIPPLE, HOSE RACCORD D'ESSENCE	1	1				
51	68F–42753–00	FASTNER ATTACHE	1	1				AP AP
52	90464–20258	CLAMP BRIDE	1	1				AP AP
53	90464–18004	CLAMP BRIDE	1	1				
54	6AH–42794–40	LABEL, WARNING (GENERAL) ETIQUETTE, AVERTISSEMENT	1	1				

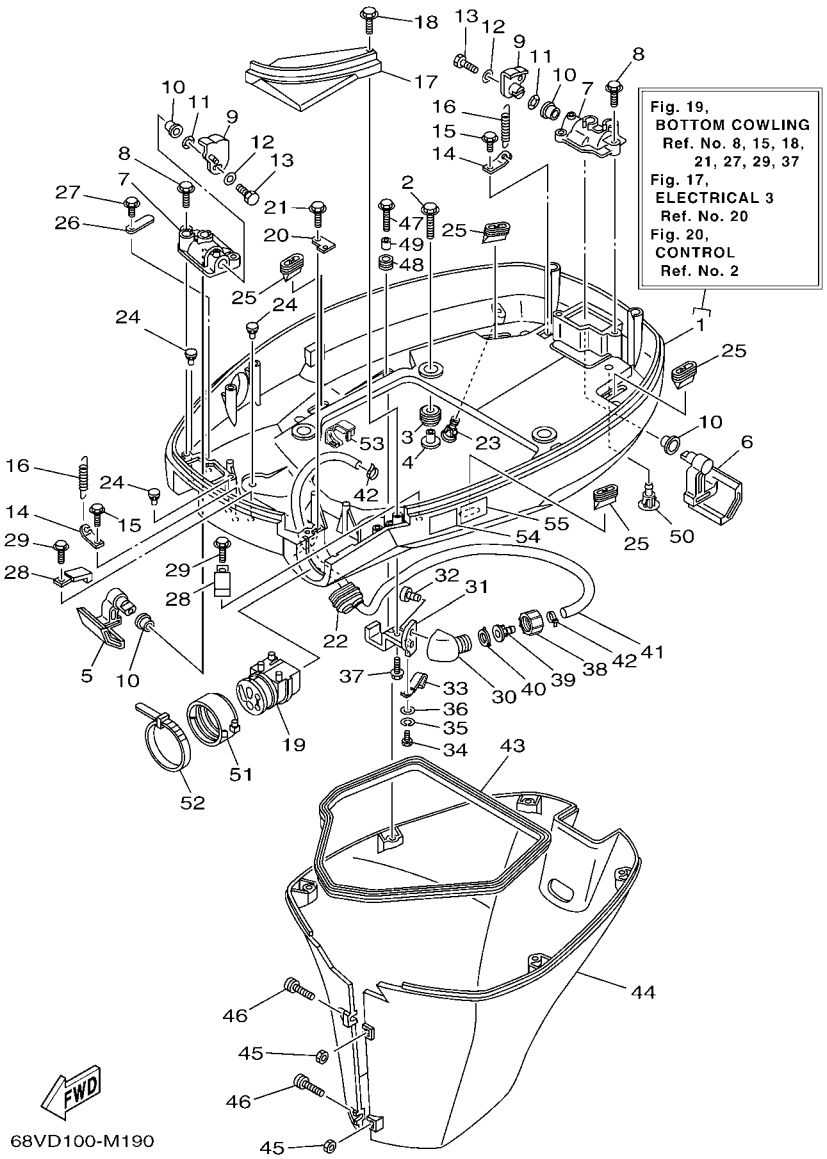

FIG. 19 BOTTOM COWLING CAPOT INFERIEUR

REF. NO.	PART NO. N° PIECES	DESCRIPTION DESCRIPTION	68VE	68WE				REMARKS REMARQUES
55	6AH–42794–50	LABEL, WARNING (GENERAL) ETIQUETTE, AVERTISSEMENT	1	1				

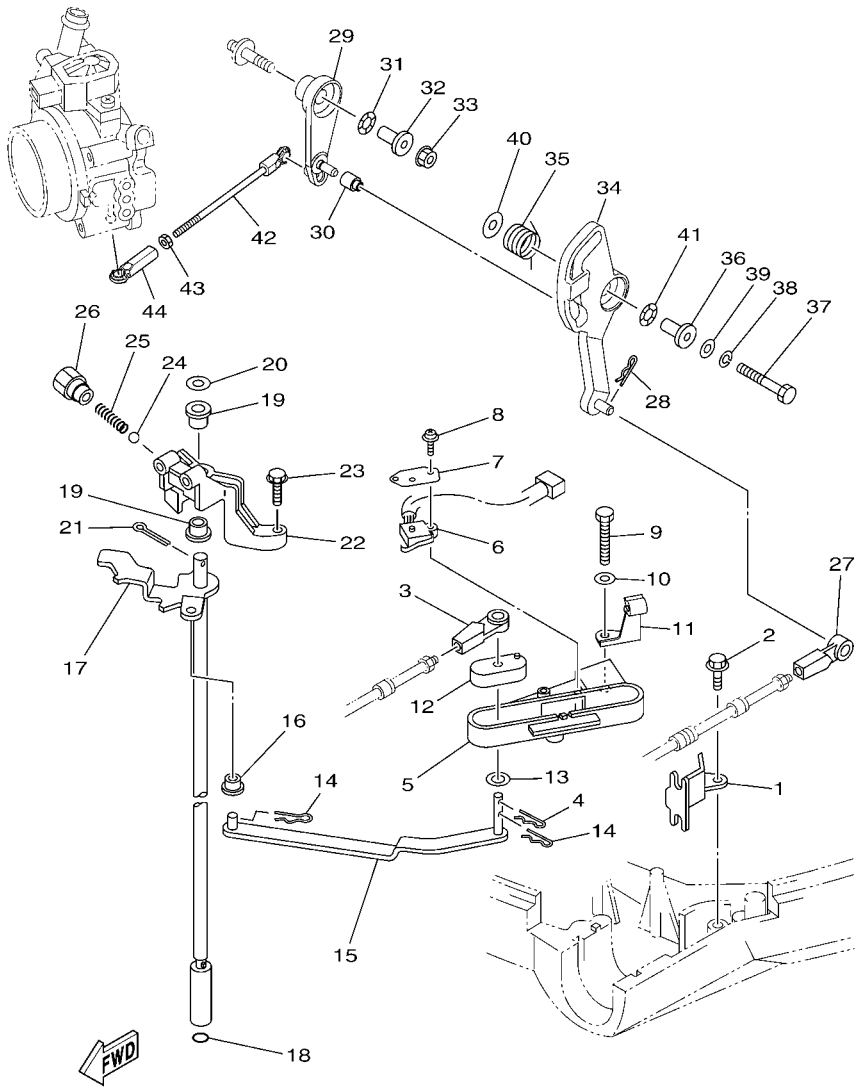

68VB110-L190

FIG. 20 CONTROL COMMANDE

REF. NO.	PART NO. N° PIECES	DESCRIPTION DESCRIPTION	68VE	68WE				REMARKS REMARQUES
1	67F–48538–00	CLAMP, CABLE 1 COLLIER	1	1				
2	90109–06M86	BOLT BOULON	1	1				
3	663–48344–00	CABLE END, REMOTE CONTROL CHAPE CABLE	1	1				
4	90468–18008	CLIP JONC	1	1				
5	68V–44117–02	BRACKET SUPPORT	1	1				
6	60V–8259F–00	SWITCH ASSY COMMUTATEUR	1	1				
7	61A–82588–01	PLATE PLAQUE	1	1				
8	97985–04116	SCREW, WITH WASHER VIS, AVEC RONDELLE	2	2				
9	97095–06040	BOLT BOULON	2	2				
10	92995–06600	WASHER RONDELLE	2	2				
11	90462–10027	CLAMP BRIDE	1	1				
12	68V–44122–01	BUSHING, SHIFT ROD LEVER DOUILLE, LEVIER D'EMBRAYAGE	1	1				
13	90202–07M07	WASHER, PLATE RONDELLE, PLATE	1	1				
14	90468–18008	CLIP JONC	2	2				
15	68V–44121–00	LEVER, SHIFT ROD LEVIER, TIGE D'INVERSION	1	1				
16	90386–06M12	BUSH DOUILLE	1	1				
17	68V–44120–11	HANDLE GEAR SHIFT ASSY LEVIER D'EMBRAYAGE	1					L(20.3") L(20.3")
	68V–44120–31	HANDLE GEAR SHIFT ASSY LEVIER D'EMBRAYAGE	1	1				X(25.3") X(25.3")
18	93210–09165	O-RING JOINT TORIQUE	1	1				
19	90386–90M90	BUSH DOUILLE	2	2				
20	90201–09M02	WASHER, PLATE RONDELLE, PLATE	1	1				
21	91490–20015	PIN. COTTER GOUPILLE	1	1				
22	68V–44118–00	BRACKET SUPPORT	1	1				
23	97575–06525	BOLT, WITH WASHER VIS HEXAGONAL AVC RONDELLE	2	2				
24	93501–04M02	BALL BILLE	1	1				
25	90501–12082	SPRING, COMPRESSION RESSORT, COMPRESSION	1	1				
26	648–42715–00	BUSHING COUSSINET	1	1				

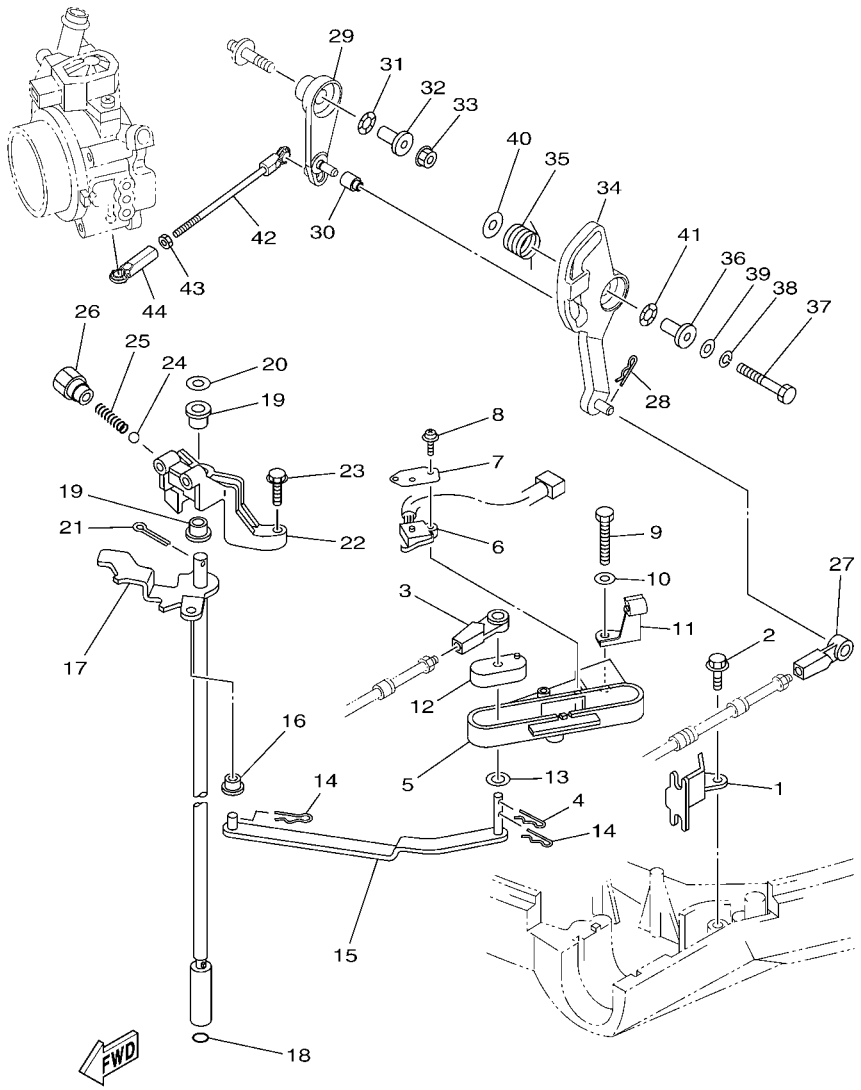

FIG. 20 CONTROL COMMANDE

REF. NO.	PART NO. N° PIECES	DESCRIPTION DESCRIPTION	68VE	68WE				REMARKS REMARQUES
27	663–48344–00	CABLE END, REMOTE CONTROL CHAPE CABLE	1	1				
28	90468–18008	CLIP JONC	1	1				
29	68V–42154–10	LEVER, THROTTLE CONTROL LEVIER DE COMMANDE D'AVANCE	1	1				
30	68V–42171–00	BUSHING COUSSINET	1	1				
31	90206–10M04	WASHER, WAVE RONDELLE, ONDULEE	1	1				
32	90387–06M21	COLLAR COLLERETTE	1	1				
33	90179–06M28	NUT ECROU	1	1				
34	68V–41213–00	CAM, ACCEL. CAME, ACCELERATION	1	1				
35	67F–44135–00	SPRING RESSORT	1	1				
36	90387–06M21	COLLAR COLLERETTE	1	1				
37	97095–06035	BOLT BOULON	1	1				
38	92995–06100	WASHER, SPRING RONDELLE, GROWER	1	1				
39	92995–06600	WASHER RONDELLE	1	1				
40	90201–06M62	WASHER, PLATE RONDELLE, PLATE	1	1				
41	90206–10M04	WASHER, WAVE RONDELLE, ONDULEE	1	1				
42	688–41211–01	LINK, ACCEL. BIELLETTE, ACCELERATION	1	1				
43	95380–05600	NUT ECROU	1	1				
44	682–41237–00	JOINT, LINK RACCORD	1	1				

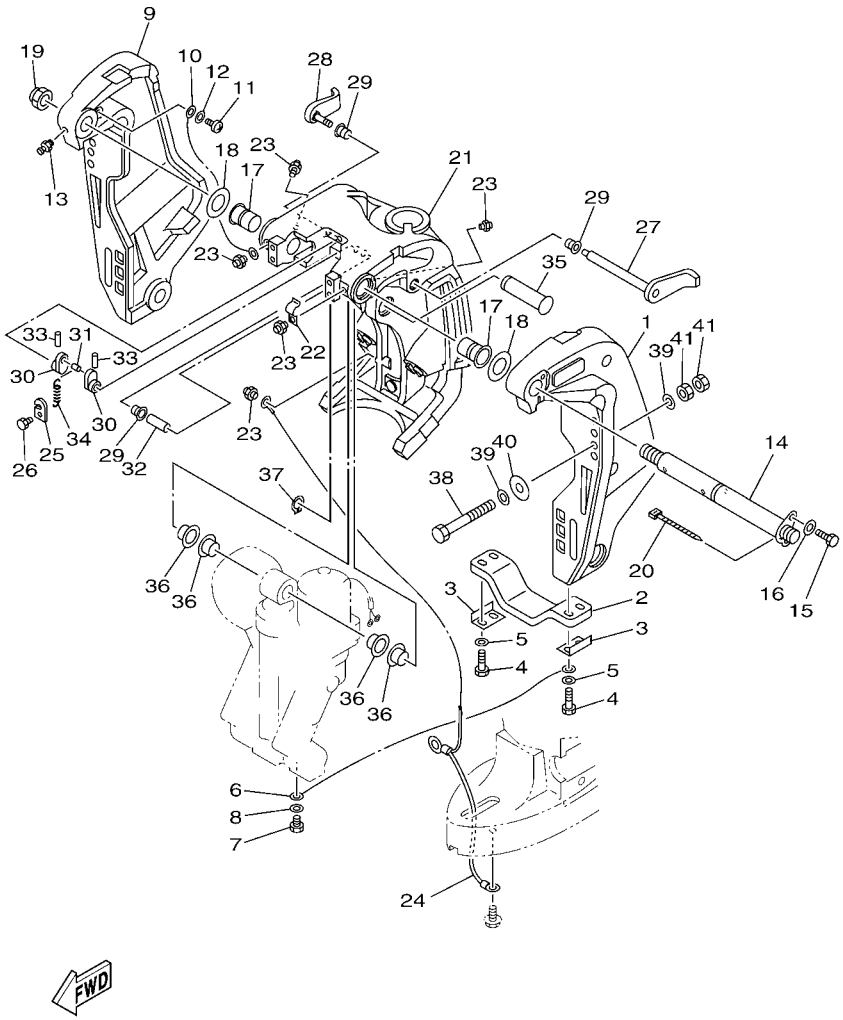

68VD700-M210

FIG. 21 BRACKET 1 SUPPORT 1

REF. NO.	PART NO. N° PIECES	DESCRIPTION DESCRIPTION	68VE	68WE				REMARKS REMARQUES
1	68V–43111–01–8D	BRACKET, CLAMP 1 PRESSE 1	1	1				
2	6G5–45251–02	ANODE ANODE	1	1				
3	6G5–44526–00	PLATE PLAQUE	2	2				
4	97095–06030	BOLT BOULON	4	4				
5	92995–06600	WASHER RONDELLE	4	4				
6	6E5–82148–00	WIRE, LEAD 4 FIL 4	1	1				
7	97095–06010	BOLT BOULON	1	1				
8	92995–06600	WASHER RONDELLE	1	1				
9	68V–43112–01–8D	BRACKET, CLAMP 2 PRESSE 2	1	1				
10	6E5–82148–00	WIRE, LEAD 4 FIL 4	1	1				
11	97885–06012	SCREW, PAN HEAD VIS, A ENCOCHE	1	1				
12	92995–06600	WASHER RONDELLE	1	1				
13	93700–06M03	NIPPLE, GREASE PION	1	1				
14	64E–43131–30	BOLT, CLAMP BRACKET BOULON, PRESSE	1	1				FOR TILT LIMIT FOR TILT LIMIT
15	97095–08020	BOLT BOULON	1	1				
16	92995–08600	WASHER RONDELLE	1	1				
17	90386–25M31	BUSH DOUILLE	2	2				
18	90201–26M59	WASHER, PLATE RONDELLE, PLATE	2	2				
19	90185–22M11	NUT, SELF-LOCKING ECROU,AUTO-BLOQUANT	1	1				
20	90465–11M10	CLAMP BRIDE	1	1				
21	64E–43311–10–8D	BRACKET, SWIVEL 1 SUPPORT, PIVOT 1	1					L(20.3") L(20.3")
	64E–43311–20–8D	BRACKET, SWIVEL 1 SUPPORT, PIVOT 1	1	1				X(25.3") X(25.3")
22	90465–08M63	CLAMP BRIDE	1	1				
23	93700–06M03	NIPPLE, GREASE PION	5	5				
24	66K–82149–00	WIRE, LEAD 3 FIL 3	1					L(20.3") L(20.3")
	68V–82149–30	WIRE, LEAD 3 FIL 3	1	1				X(25.3") X(25.3")
25	66T–43144–00	HOOK, SPRING CROCHET	1	1				

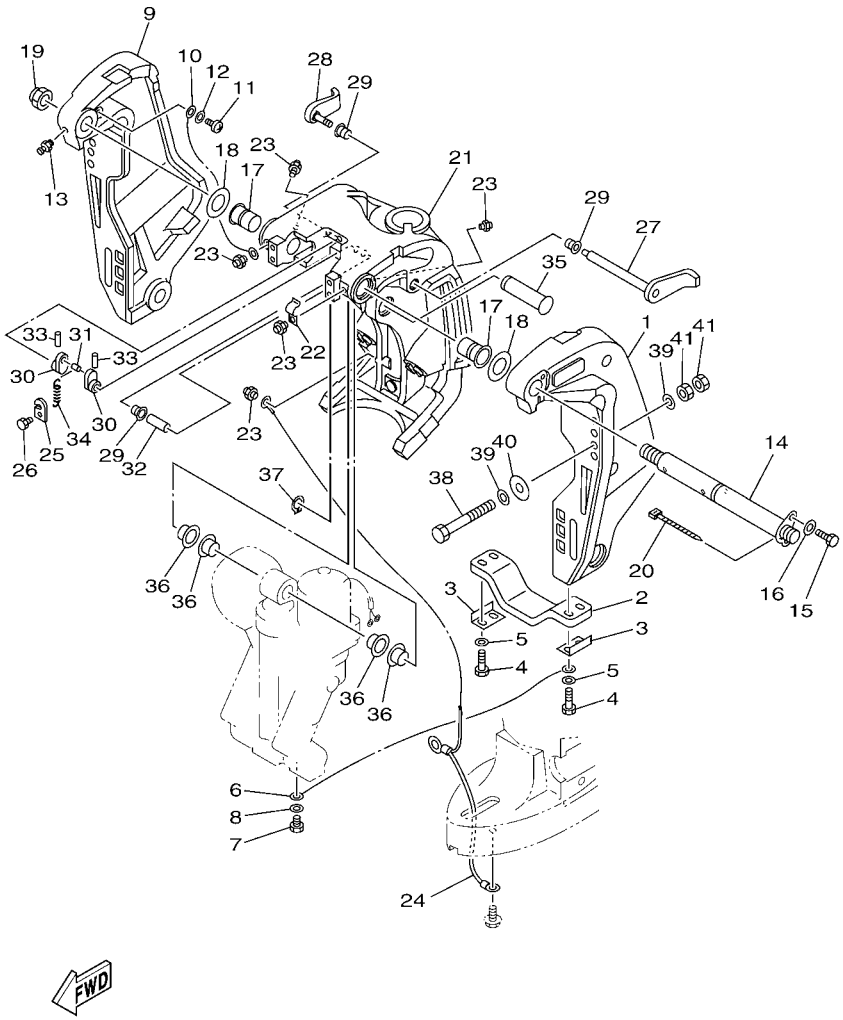

FIG. 21 BRACKET 1 SUPPORT 1

REF. NO.	PART NO. N° PIECES	DESCRIPTION DESCRIPTION	68VE	68WE				REMARKS REMARQUES
26	97095–06010	BOLT BOULON	1	1				
27	6G5–43181–02	LEVER, TILT STOP 1 LEVIER VERROUILLAGE RELEVAGE 1	1	1				
28	6G5–43185–02	LEVER, TILT STOP 2 LEVIER VERROUILLAGE RELEVAGE 2	1	1				
29	90386–10M16	BUSH DOUILLE	3	3				
30	6G5–43148–00	COLLAR, DISTANCE ENTRETOISE	2	2				
31	90249–06M19	PIN GOUPILLE	1	1				
32	90387–10M05	COLLAR COLLERETTE	1	1				
33	91690–30020	PIN, SPRING AGRAFFE	2	2				
34	90506–14M24	SPRING, TENSION RESSORT, TENSION	1	1				
35	64E–43126–00	PIN, UPPER SHOCK MOUNT AXE, SUPERIEUR AMORTISSEUR	1	1				
36	90386–22M98	BUSH DOUILLE	4	4				
37	93410–22M11	CIRCLIP CLIPS	1	1				
38	90101–12M05	BOLT (L:130MM) BOULON (L:130MM)	4	4				UR F(L)115AET UR F(L)115AET
	90101–12M05	BOLT (L:130MM) BOULON (L:130MM)	2	2				UR F(L)115AET1 UR F(L)115AET1
	90101–12047	BOLT (L:150MM) BOULON (L:150MM)	2	2				UR F(L)115AET1 UR F(L)115AET1
39	90201–13M01	WASHER, PLATE RONDELLE, PLATE	8	8				
40	90201–12426	WASHER, PLATE RONDELLE, PLATE	4	4				
41	95380–12600	NUT ECROU	8	8				

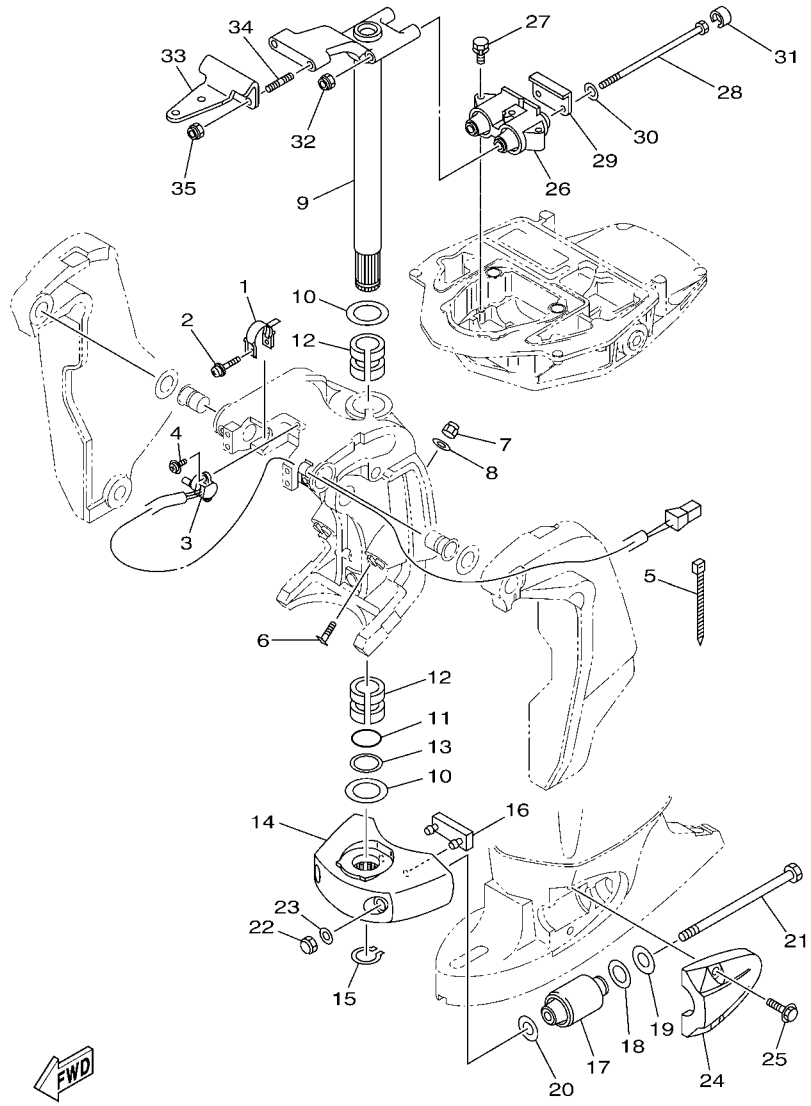

68VC100-L210

FIG. 22 BRACKET 2 SUPPORT 2

REF. NO.	PART NO. N° PIECES	DESCRIPTION DESCRIPTION	68VE	68WE				REMARKS REMARQUES
1	64E–43139–10	CAM, TRIM SENDER VILEBREQUIN TRUM	1	1				
2	90159–05059	SCREW, WITH WASHER VIS, AVEC RONDELLE	1	1				
3	67H–83672–01	TRIM SENDER INCLINER RACCORD	1	1				
4	97985–06216	SCREW, WITH WASHER VIS, AVEC RONDELLE	2	2				
5	90465–11M10	CLAMP BRIDE	3	3				
6	63P–43376–00	BOLT, THRUST RECEIVER BOULON	2	2				
7	95780–10300	NUT, FLANGE ECROU	2	2				
8	92995–10600	WASHER RONDELLE	2	2				
9	68V–42510–11–8D	STEERING BRACKET ASSY DIRECTION SUPPORT (ENS.)	1					L(20.3") L(20.3")
	68V–42510–31–8D	STEERING BRACKET ASSY DIRECTION SUPPORT (ENS.)	1	1				X(25.3") X(25.3")
10	90201–38M60	WASHER, PLATE RONDELLE, PLATE	2	2				
11	93210–37MH7	O-RING JOINT TORIQUE	1	1				
12	90386–38M32	BUSH DOUILLE	2	2				
13	90202–40M47	WASHER, PLATE RONDELLE, PLATE	1	1				
14	68V–44551–00–8D	HOUSING, LOWER MOUNT RUBBER 1 BOITIER, SILENT-BLOC INFERIEUR	1	1				
15	93410–37M04	CIRCLIP CLIPS	1	1				
16	61A–44575–00	DAMPER, LOWER MOUNT RUBBER SILENT-BLOC, INFERIEUR	1	1				
17	61A–44555–01–94	MOUNT DAMPER, LOWER SIDE SILENT-BLOC, INFERIEUR LATERAL	2	2				
18	90202–32M19	WASHER, PLATE RONDELLE, PLATE	2	2				
19	90201–16M55	WASHER, PLATE RONDELLE, PLATE	2	2				
20	90201–15M58	WASHER, PLATE RONDELLE, PLATE	2	2				
21	90109–14007	BOLT BOULON	2	2				
22	95380–14600	NUT ECROU	2	2				
23	92995–14600	WASHER RONDELLE	2	2				
24	68V–44553–00–8D	COVER, LOWER MOUNT COUVERCLE, SUSPENSION INFERIEU	2	2				
25	97575–10540	BOLT, WITH WASHER VIS HEXAGONAL AVC RONDELLE	4	4				
26	67F–44514–01	MOUNT DAMPER, UPPER SIDE SILENT-BLOC, SUPERIEUR LATERAL	1	1				

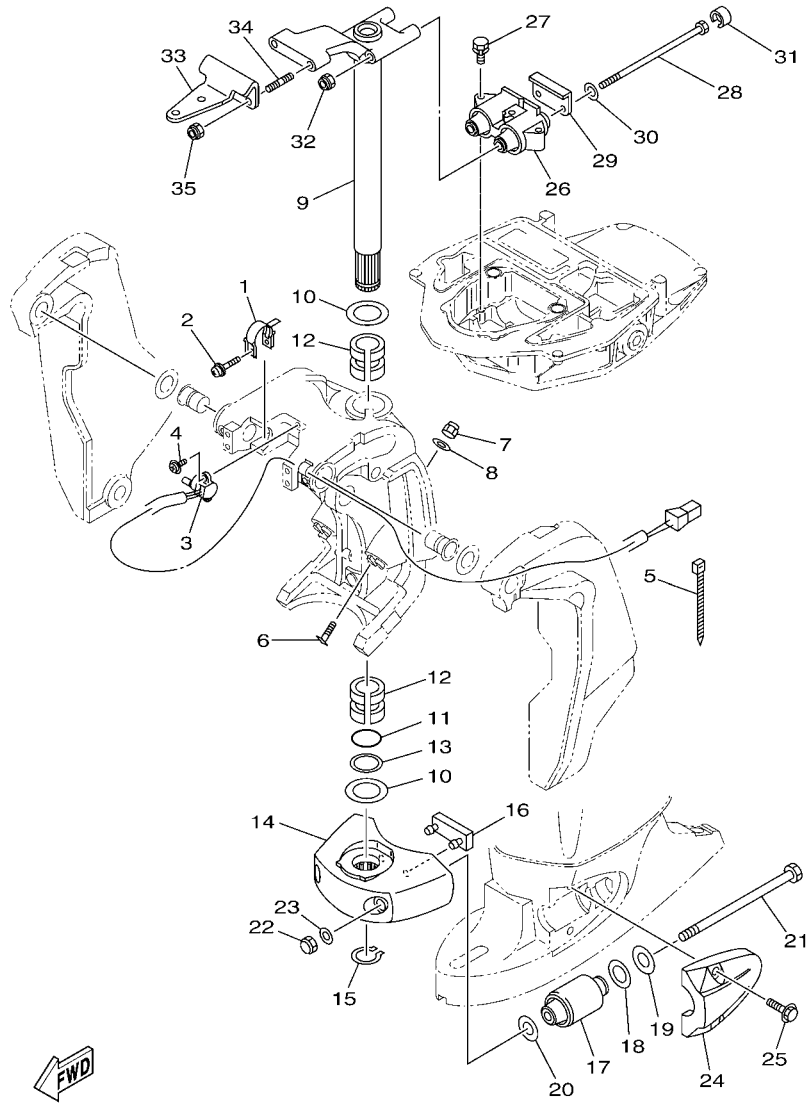

68VC100-L210

FIG. 22 BRACKET 2 SUPPORT 2

REF. NO.	PART NO. N° PIECES	DESCRIPTION DESCRIPTION	68VE	68WE				REMARKS REMARQUES
27	90119–08091	BOLT, WITH WASHER BOULON, AVEC RONDELLE	3	3				
28	90109–12007	BOLT BOULON	2	2				
29	67F–44526–00	PLATE PLAQUE	1	1				
30	90201–12M09	WASHER, PLATE RONDELLE, PLATE	2	2				
31	67F–44533–00	DAMPER, UPPER MOUNT RUBBER COUVERCLE, SUSPENSION INFERIEU	2	2				
32	90185–12M12	NUT, SELF-LOCKING ECROU,AUTO-BLOQUANT	2	2				
33	68V–48511–01	HOOK, STEERING ATTACHE, DIRECTION	1	1				
34	90116–10062	BOLT, STUD GOUJON	2	2				
35	90185–10027	NUT, SELF-LOCKING ECROU,AUTO-BLOQUANT	2	2				

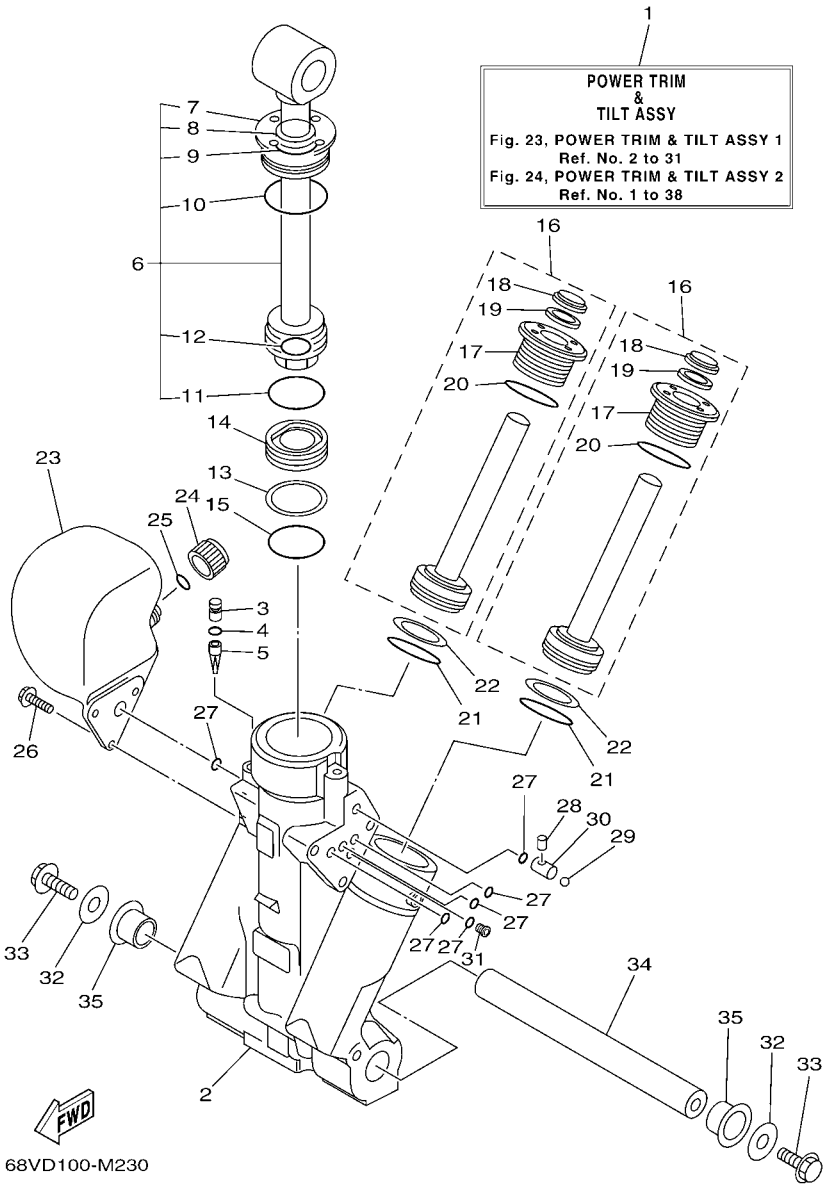

FIG. 23 POWER TRIM & TILT ASSY 1 PUISSANCE PARER ET INCLINER 1

REF. NO.	PART NO. N° PIECES	DESCRIPTION DESCRIPTION	68VE	68WE				REMARKS REMARQUES
1	68V–43800–07	POWER TRIM & TILT ASSY PUISSANCE PARER ET INCLINER (E	1	1				
2	64E–43825–03	HOUSING, TRIM & TILT CARTER	1	1				
3	6AW–4388J–00	PLUG 2 BOUCHON 2	1	1				
4	93210–10M74	O-RING JOINT TORIQUE	1	1				
5	64E–43817–00	FILTER 2 FILTRE 2	1	1				
6	64E–43810–02	TILT PISTON SUB ASSY INCLINER PISTON AUXILIAIRE(ENS	1	1				
7	64E–43811–02	.SCREW, CYLINDER END .VIS, CYLINDRE RACCORD	1	1				
8	64E–43898–00	.SEAL, DUST 2 .JOINT ANTI-PUSSIERE	1	1				
9	64E–43867–00	.O-RING .JOINT TORIQUE	1	1				
10	64E–43866–00	.O-RING .JOINT TORIQUE	1	1				
11	6E5–43862–00	.O-RING .JOINT TORIQUE	1	1				
12	64E–43883–00	.O-RING .JOINT TORIQUE	1	1				
13	6E5–43872–00	RING, BACK UP RESSORT	1	1				
14	6E5–43814–02	PISTON, FREE PISTON	1	1				
15	6E5–43862–00	O-RING JOINT TORIQUE	1	1				
16	64E–43820–03	TRIM PISTON SUB ASSY PARER PISTON AUXILIAIRE (ENS.)	2	2				
17	64E–43821–03	.SCREW, TRIM CYLINDER END .VIS	1	1				
18	64E–43822–00	.SEAL, TRIM DUST .JOINT	1	1				
19	64E–4384J–00	.SEAL, TRIM DOWN .JOINT	1	1				
20	6G5–43864–00	.O-RING .JOINT TORIQUE	1	1				
21	6E5–43864–00	O-RING JOINT TORIQUE	2	2				
22	6E5–43874–01	RING, BACK UP RESSORT	2	2				
23	64E–43828–01	BODY, RESERVOIR CORPS	1	1				
24	64E–43829–01	PLUG, RESERVOIR BOUCHON	1	1				
25	64E–43897–00	O-RING JOINT TORIQUE	1	1				
26	64E–4388E–01	BOLT ,SCREW (L:14MM) VIS (L:14MM)	3	3				
27	64E–43869–00	O-RING JOINT TORIQUE	6	6				

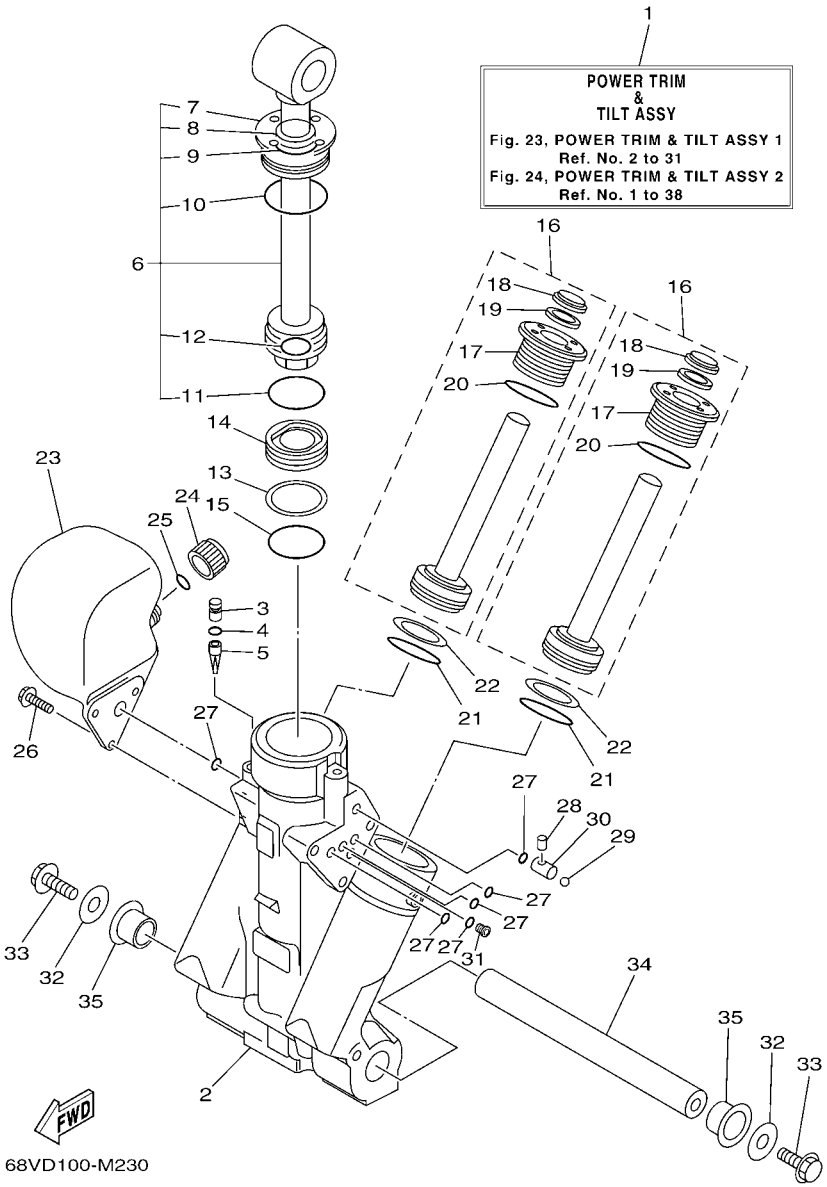

FIG. 23 POWER TRIM & TILT ASSY 1 PUISSANCE PARER ET INCLINER 1

REF. NO.	PART NO. N° PIECES	DESCRIPTION DESCRIPTION	68VE	68WE				REMARKS REMARQUES
28	64E–4381G–00	PIN COUPILL	1	1				
29	6E5–43858–00	BALL BILLE	1	1				
30	64E–4382G–00	VALVE, SEAT JEU DE POINTEAUX	1	1				
31	64E–4384N–00	PLUG, ORIFICE PLOT, ORIFICE	1	1				
32	90201–10060	WASHER, PLATE RONDELLE, PLATE	2	2				
33	97575–10530	BOLT, WITH WASHER VIS HEXAGONAL AVC RONDELLE	2	2				
34	6BC–43818–00	PIN, LOWER SHOCK MOUNT AXE, INFERIEUR AMORTISSEUR	1	1				
35	90386–22M98	BUSH DOUILLE	2	2				

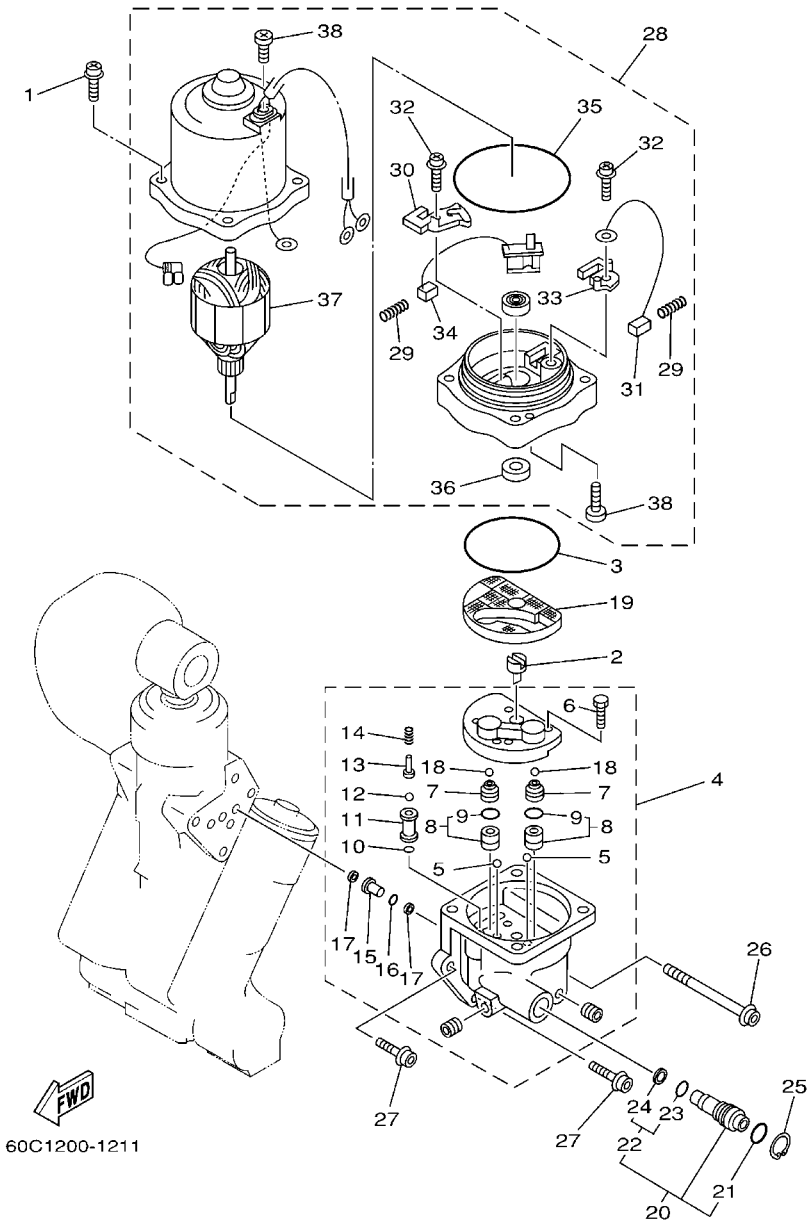

FIG. 24 POWER TRIM & TILT ASSY 2 PUISSANCE PARER ET INCLINER 2

REF. NO.	PART NO. N° PIECES	DESCRIPTION DESCRIPTION	68VE	68WE				REMARKS REMARQUES
1	64E–4388E–11	BOLT ,SCREW (L:34.7MM) VIS (L:34.7MM)	4	4				
2	64E–43831–00	CONNECTOR, SHAFT RACCORD	1	1				
3	64E–43868–00	O-RING JOINT TORIQUE	1	1				
4	68V–43830–01	GEAR PUMP ASSY POMPE A PIGNON (ENS.)	1	1				
5	72X–43858–00	.BALL .BILLE	2	2				
6	64E–43843–00	.SCREW, VALVE LOCK .VIS	4	4				
7	6AW–43841–00	.PISTON, SHUTTLE .PISTON	2	2				
8	64E–43802–00	.VALVE SUB ASSY .CLAPET AUXILIAIRE (ENS.)	2	2				
9	6E5–43896–00	..O-RING ..JOINT TORIQUE	1	1				
10	6G5–43863–00	.O-RING .JOINT TORIQUE	1	1				
11	66Y–43851–00	.SEAT, RELIEF VALVE .SIEGE	1	1				
12	64E–43858–00	.BALL .BILLE	1	1				
13	64E–43859–00	.PIN, VALVE SUPPORT .GOUPILLE	1	1				
14	68V–43855–00	.SPRING, UP RELIEF .RESSORT	1	1				
15	64E–43850–00	.VALVE SUB ASSY .CLAPET AUXILIAIRE (ENS.)	1	1				
16	64E–43865–00	.O-RING .JOINT TORIQUE	1	1				
17	64E–43816–00	.FILTER 1 .FILTRE 1	2	2				
18	6AW–43858–00	.BALL .BILLE	2	2				
19	64E–43817–11	FILTER 2 FILTRE 2	1	1				
20	64E–43860–01	MANUAL VALVE SUB-ASSY SOUPAPE, MANUEL (ENS.)	1	1				
21	72X–85075–L0	.O-RING .JOINT TORIQUE	1	1				
22	64E–43827–00	.RING SET .BILLE	1	1				
23	64E–4387A–00	..O-RING ..JOINT TORIQUE	1	1				
24	64E–43873–00	..RING, BACK UP ..RESSORT	1	1				
25	6AW–43875–00	RING, SNAP RESSORT	1	1				
26	64E–43879–11	SCREW, WITH WASHER VIS, AVEC RONDELLE	1	1				
27	64E–43879–01	SCREW, WITH WASHER VIS, AVEC RONDELLE	2	2				

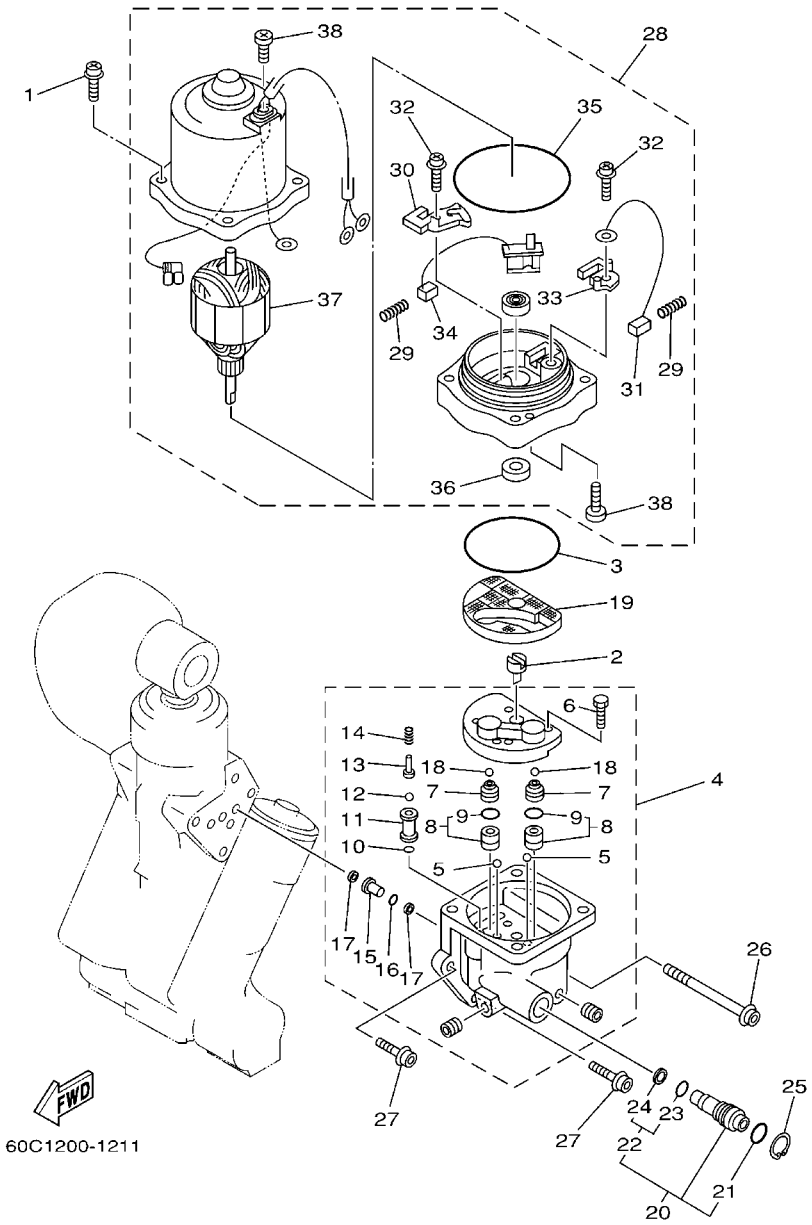

FIG. 24 POWER TRIM & TILT ASSY 2 PUISSANCE PARER ET INCLINER 2

REF. NO.	PART NO. N° PIECES	DESCRIPTION DESCRIPTION	68VE	68WE				REMARKS REMARQUES
28	68V–43880–04	MOTOR ASSY MOTEUR (ENS.)	1	1				
29	6H1–4386K–10	.SPRING, BRUSH .RESSORT, BALAI	2	2				
30	64E–4380J–00	.HOLDER, BRUSH .PORTE-BALAI	1	1				
31	64E–43891–00	.BRUSH 1 .BALAI 1	1	1				
32	97607–04310	.SCREW, WITH WASHER .VIS HEXAGONAL	2	2				
33	64E–4380F–00	.HOLDER, BRUSH 2 .PORTE-BALAI 2	1	1				
34	64E–43892–00	.BREAKER COMP. (BRUSH 2) .RUPTEUR COMP. (BALAI 2)	1	1				
35	6G5–43865–01	.O-RING .JOINT TORIQUE	1	1				
36	93102–08M43	.OIL SEAL .JOINT SPY	1	1				
37	64E–43805–01	.ARMATURE ASSY .INDUIT (ENS.)	1	1				
38	64E–43843–10	.SCREW, VALVE LOCK .VIS	3	3				

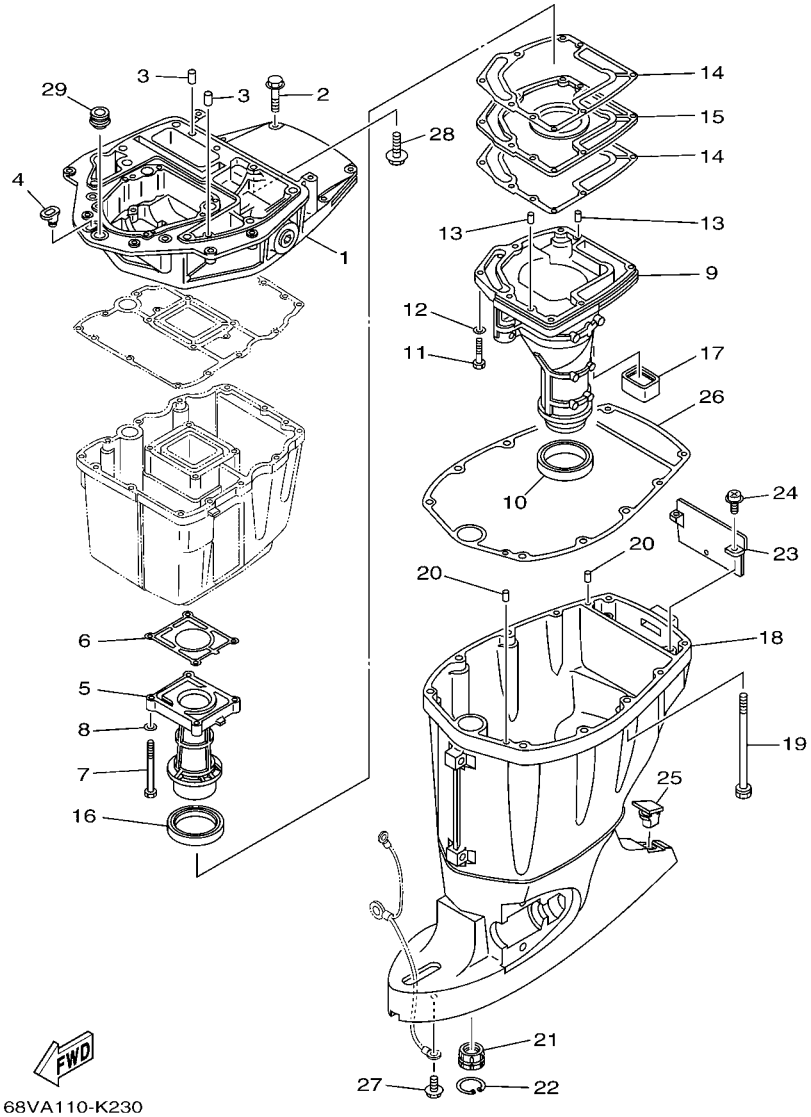

FIG. 25 UPPER CASING FOURREAU

REF. NO.	PART NO. N° PIECES	DESCRIPTION DESCRIPTION	68VE	68WE				REMARKS REMARQUES
1	67F–41137–02–CA	GUIDE, EXHAUST COLLECTEUR D'ECHAPPEMENT	1	1				
2	97575–08540	BOLT, WITH WASHER VIS HEXAGONAL AVC RONDELLE	4	4				
3	93608–16M16	PIN, DOWEL AXE	2	2				
4	6G1–42727–00	GROMMET PASSE-FIL	1	1				
5	67F–41131–01–CA	MANIFOLD, EXT. 1 PIPE D'ECHAPPEMENT	1	1				
6	67F–41133–A1	GASKET, EXHAUST MANIFOLD 1 JOINT, PIPE D'ECHAPPEMENT	1	1				
7	97075–06070	BOLT BOULON	4	4				
8	92995–06600	WASHER RONDELLE	4	4				
9	68V–14711–10–CA	MUFFLER 1 POT D'ECHAPPEMENT 1	1					L(20.3") L(20.3")
	68V–14711–30–CA	MUFFLER 1 POT D'ECHAPPEMENT 1	1	1				X(25.3") X(25.3")
10	68V–45123–00	GASKET, MUFFLER JOINT, POT DE DETENTE	1	1				
11	97075–06030	BOLT BOULON	7	7				
12	92995–06600	WASHER RONDELLE	7	7				
13	93606–19M23	PIN, DOWEL GOUPILLE	2	2				
14	67F–41134–A0	GASKET, EXHAUST MANIFOLD JOINT, PIPE D'ECHAPPEMENT	2	2				
15	67F–45181–00–CA	PLATE PLAQUETTE	1	1				
16	67F–41138–00	SEAL, EXT. 1 JOINT DE GROUPE 1	1	1				
17	67F–45127–00	SEAL JOINT	1	1				
18	68V–45111–11–8D	CASING, UPPER FOURREAU	1					L(20.3") L(20.3")
	68V–45111–31–8D	CASING, UPPER FOURREAU	1	1				X(25.3") X(25.3")
19	90119–10M08	BOLT, WITH WASHER BOULON, AVEC RONDELLE	6	6				
20	93608–16M16	PIN, DOWEL AXE	2	2				
21	6E5–45318–00	BUSHING, DRIVE SHAFT DOUILLE, ARBRE MOTEUR	1	1				
22	93420–36M01	CIRCLIP CIRCLIP, TYPE S	1	1				
23	67F–45151–00	COVER, UPPER CASING CAPUCHON, FOURREAU	1	1				
24	97980–06216	SCREW, WITH WASHER VIS, AVEC RONDELLE	2	2				
25	6C5–45155–00	CAP CAPUCHON	1	1				

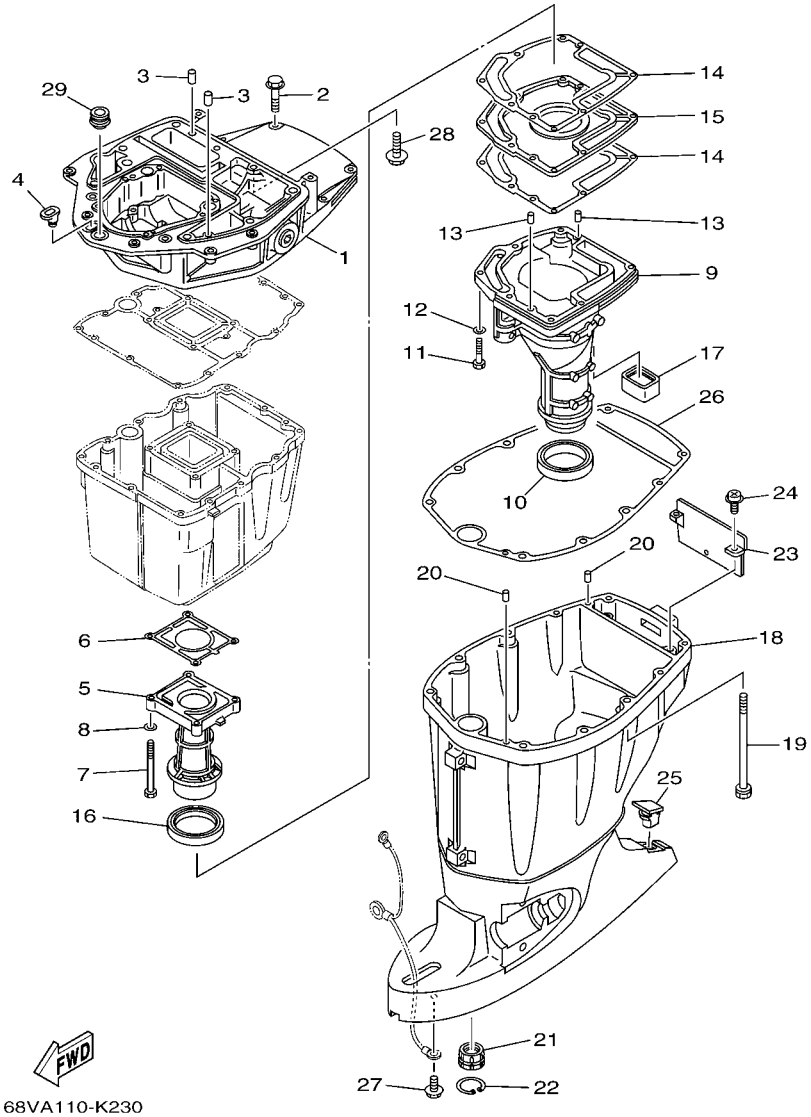

FIG. 25 UPPER CASING FOURREAU

REF. NO.	PART NO. N° PIECES	DESCRIPTION DESCRIPTION	68VE	68WE				REMARKS REMARQUES
26	67F–45113–00	GASKET, UPPER CASING JOINT, TUBE D'ARBRE	1	1				
27	95895–06010	BOLT, FLANGE BOULON	1	1				
28	90119–08M58	BOLT, WITH WASHER BOULON, AVEC RONDELLE	2	2				
29	67F–42724–00	GROMMET PASSE-FIL	1	1				

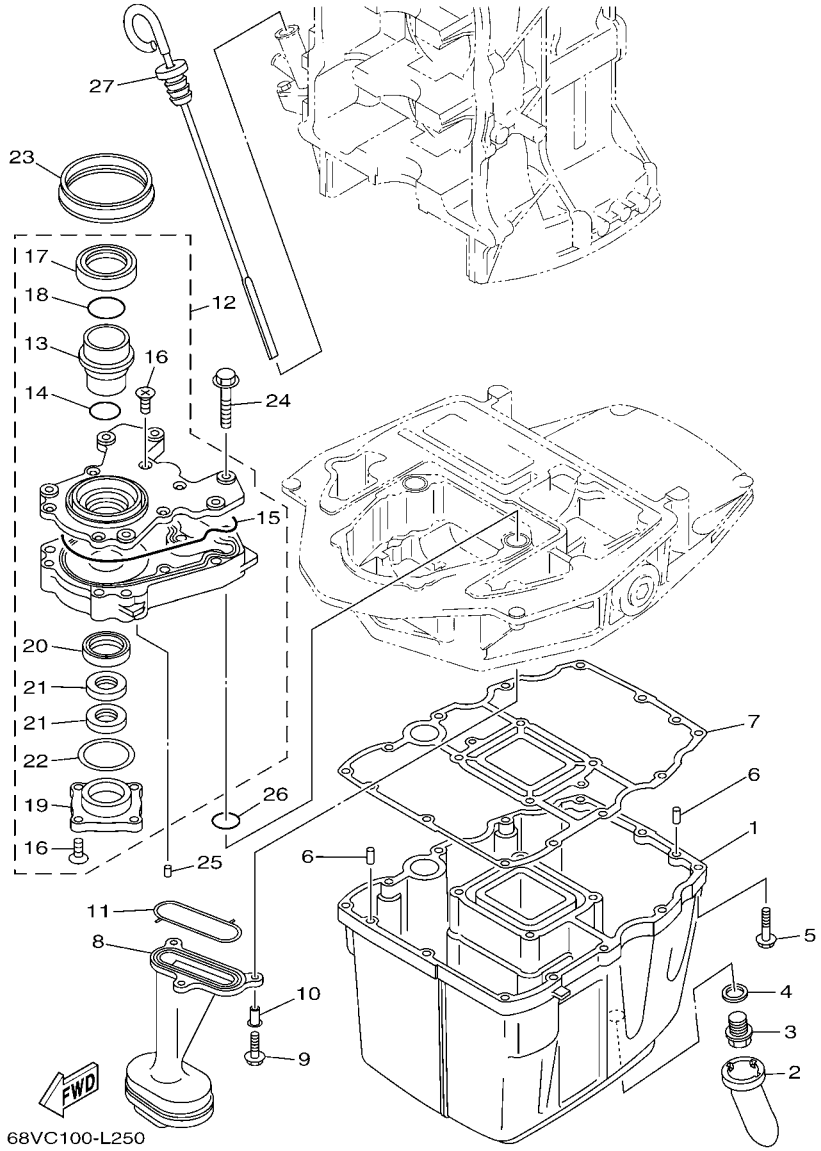

FIG. 26 OIL PAN — VENTILATEUR D'HUILE

REF. NO.	PART NO. N° PIECES	DESCRIPTION DESCRIPTION	68VE	68WE				REMARKS REMARQUES
1	68V–15311–00–CA	OIL PAN VENTILATEUR D'HUILE	1	1				
2	63P–15316–00	DAMPER 1 AMORTISSEUR 1	1	1				
3	90340–14M06	PLUG, STRAIGHT SCREW PLOT, FILETE DROIT	1	1				
4	90430–14M09	GASKET JOINT	1	1				
5	97575–06525	BOLT, WITH WASHER VIS HEXAGONAL AVC RONDELLE	12	12				
6	93606–12019	PIN, DOWEL GOUPILLE	2	2				
7	68V–15312–00	GASKET, OIL PAN JOINT DE VENTILATEUR D'HUILE	1	1				
8	67F–13411–00	STRAINER, OIL FILTRE, HUILE	1	1				
9	95812–06025	BOLT, FLANGE BOULON	3	3				
10	90387–06263	COLLAR COLLERETTE	3	3				
11	67F–13415–00	SEAL, OIL STRAINER JOINT, FILTRE A HUILE	1	1				
12	67F–13300–10	OIL PUMP ASSY POMPE A HUILE COMPLETE	1	1				
13	67F–13314–02	.SHAFT, PUMP .AXE DE POMPE	1	1				
14	67F–13473–01	.O-RING .JOINT TORIQUE	1	1				
15	67F–13329–00	.GASKET, PUMP COVER .JOINT, COUVERCLE DE POMPE	1	1				
16	67F–13495–00	.SCREW .VIS	10	10				
17	67F–13119–01	.OIL SEAL .JOINT SPY	1	1				
18	67F–13769–00	.O-RING .JOINT TORIQUE	1	1				
19	67F–13914–00	.HOUSING, PUMP .CORPS, POMPE	1	1				
20	67F–13631–03	.OIL SEAL .JOINT SPY	1	1				
21	67F–13149–00	.OIL SEAL .JOINT SPY	2	2				
22	67F–13339–00	.GASKET, PUMP COVER .BAINT, COUVERCLE DE POME	1	1				
23	67F–13338–00	SEAL JOINT	1	1				
24	97595–06545	BOLT, WITH WASHER VIS HEXAGONAL AVC RONDELLE	6	6				
25	93604–12M07	PIN, DOWEL CLAVETTE	2	2				
26	93210–19MJ1	O-RING JOINT TORIQUE	2	2				
27	6D8–15362–00	PLUG, OIL LEVEL PLOT, NIVEAU D'HUILE	1	1				

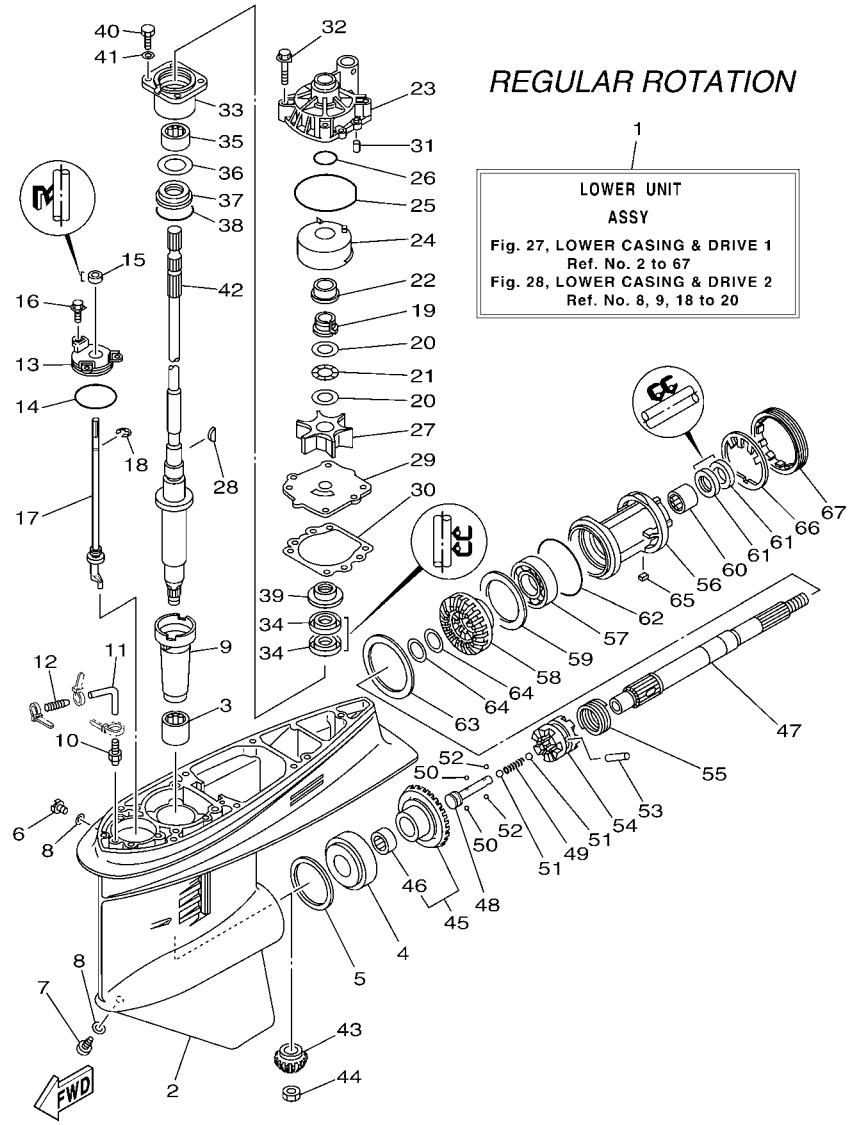

FIG. 27 LOWER CASING & DRIVE 1 BOITIER D'HELICE TRANSMISSION1

REF. NO.	PART NO. N° PIECES	DESCRIPTION DESCRIPTION	68VE	68WE				REMARKS REMARQUES
1	68V–45300–13–8D	LOWER UNIT ASSY UNITE INFERIEURE (ENS.)	1					L(20.3"),RH L(20.3"),RH
	68V–45300–33–8D	LOWER UNIT ASSY UNITE INFERIEURE (ENS.)	1					X(25.3"),RH X(25.3"),RH
2	6E5–45301–07–8D	CASING, LOWER BEQUILLE	1					
3	93315–628U9	BEARING ROULEMENT	1					
4	93332–000U7	BEARING ROULEMENT	1					
5	6E5–45567–01	SHIM (T:0.10MM) CALE (T:0.10MM)	1					UR UR
	6E5–45567–10	SHIM (T:0.12MM) CALE (T:0.12MM)	1					UR UR
	6E5–45567–20	SHIM (T:0.15MM) CALE (T:0.15MM)	1					UR UR
	6E5–45567–30	SHIM (T:0.18MM) CALE (T:0.18MM)	1					UR UR
	6E5–45567–40	SHIM (T:0.30MM) CALE (T:0.30MM)	1					UR UR
	6E5–45567–50	SHIM (T:0.40MM) CALE (T:0.40MM)	1					UR UR
	6E5–45567–60	SHIM (T:0.50MM) CALE (T:0.50MM)	1					UR UR
6	90340–08002	PLUG, STRAIGHT SCREW PLOT, FILETE DROIT	1					
7	688–45341–10	PLUG, DRAIN BOUCHON DE VIDANGE	1					
8	90430–08020	GASKET JOINT	2					
9	6E5–45536–00	SLEEVE, DRIVE SHAFT MANCHON, ARBRE MOTEUR	1					
10	6E5–45378–00	NIPPLE, HOSE RACCORD, TUYAU	1					
11	90445–07ME8	HOSE (L80) DURITE (L80)	1					L(20.3") L(20.3")
	90445–07ME9	HOSE (L120) DURITE (L120)	1					X(25.3") X(25.3")
12	6E5–83558–10	END, NIPPLE RACCORD DE NIPPLE	1					
13	6E5–45321–00	PLATE PLAQUETTE	1					
14	93210–58144	O-RING JOINT TORIQUE	1					
15	93106–09014	OIL SEAL JOINT SPY	1					
16	90119–06M10	BOLT, WITH WASHER BOULON, AVEC RONDELLE	3					
17	6L6–44150–02	SHIFT CAM ASSY CAME D'INVERSION	1					
18	99001–08600	CIRCLIP CIRCLIP	1					
19	61A–45538–00	SPACER 1 ENTRETOISE	1					

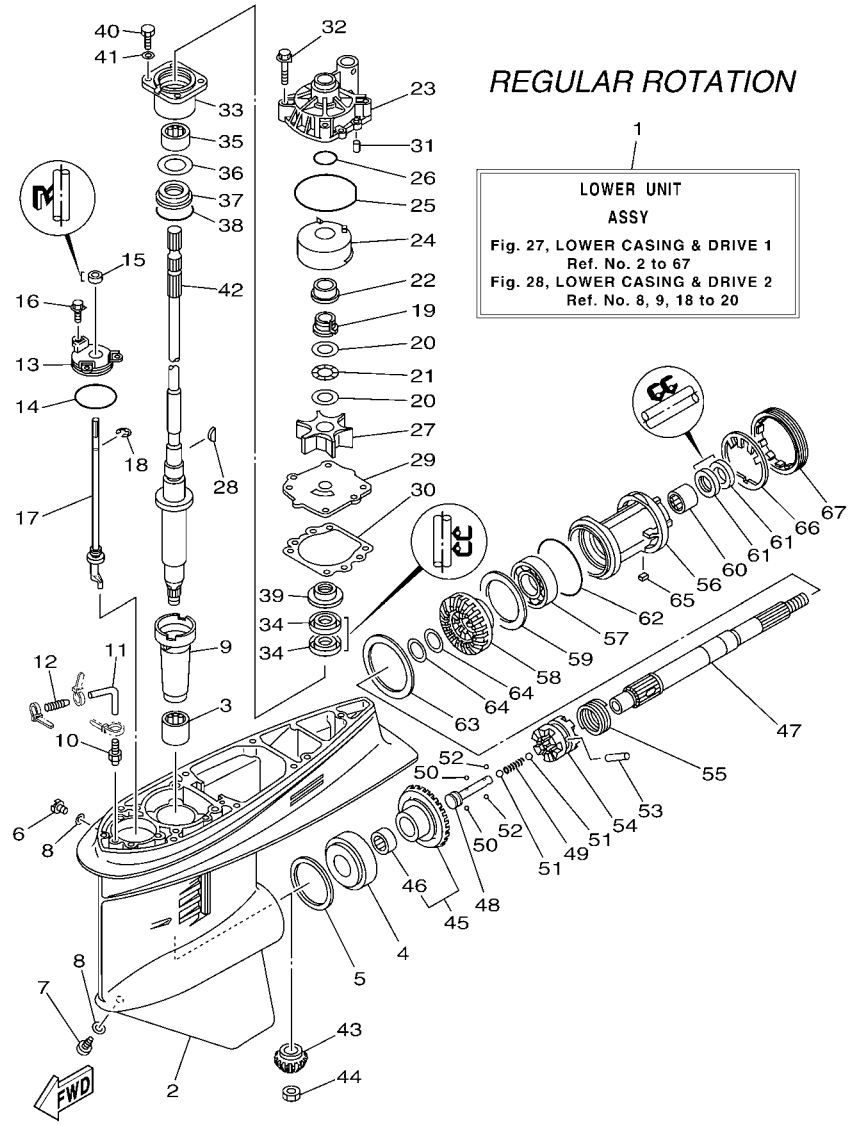

FIG. 27 LOWER CASING & DRIVE 1 BOITIER D'HELICE TRANSMISSION1

REF. NO.	PART NO. N° PIECES	DESCRIPTION DESCRIPTION	68VE	68WE				REMARKS REMARQUES
20	90201–22M01	WASHER, PLATE RONDELLE, PLATE	2					
21	90206–22M19	WASHER, WAVE RONDELLE, ONDULEE	1					
22	61A–45527–00	COLLAR, DRIVE SHAFT ENTRETOISE	1					
23	61A–44311–01	HOUSING, WATER PUMP CORPS, POMPE A EAU	1					
24	61A–44322–02	INSERT, CARTRIDGE CUVETTE	1					
25	93210–86M38	O-RING JOINT TORIQUE	1					
26	93210–37160	O-RING JOINT TORIQUE	1					
27	6E5–44352–01	IMPELLER TURBINE	1					
28	90280–04M05	KEY, WOODRUFF CLAVETTE, DEMI-LUNE	1					
29	6EK–44323–00	OUTER PLATE, CARTRIDGE PLAQUE EXTERIEURE	1					
30	6E5–44315–A0	GASKET, WATER PUMP JOINT, POMPE A EAU	1					
31	93606–12019	PIN, DOWEL GOUPILLE	2					
32	90119–08M14	BOLT, WITH WASHER BOULON, AVEC RONDELLE	4					
33	6E5–45331–00–9S	HOUSING, BEARING FLASQUE, ROULEMENT	1					
34	93101–28M16	OIL SEAL JOINT SPY	2					
35	93317–330U2	BEARING ROULEMENT	1					
36	6E5–45587–01	SHIM (T:0.10MM) CALE (T:0.10MM)	1					UR UR
	6E5–45587–10	SHIM (T:0.12MM) CALE (T:0.12MM)	1					UR UR
	6E5–45587–20	SHIM (T:0.15MM) CALE (T:0.15MM)	1					UR UR
	6E5–45587–30	SHIM (T:0.18MM) CALE (T:0.18MM)	1					UR UR
	6E5–45587–40	SHIM (T:0.30MM) CALE (T:0.30MM)	1					UR UR
	6E5–45587–50	SHIM (T:0.40MM) CALE (T:0.40MM)	1					UR UR
	6E5–45587–60	SHIM (T:0.50MM) CALE (T:0.50MM)	1					UR UR
37	93341–930V2	BEARING CERVEAUX DE DIRECTION	1					
38	93210–55M14	O-RING JOINT TORIQUE	1					
39	6E5–45344–00	COVER, OIL SEAL FLASQE, JOINT D'HUILE	1					
40	97095–08025	BOLT BOULON	4					

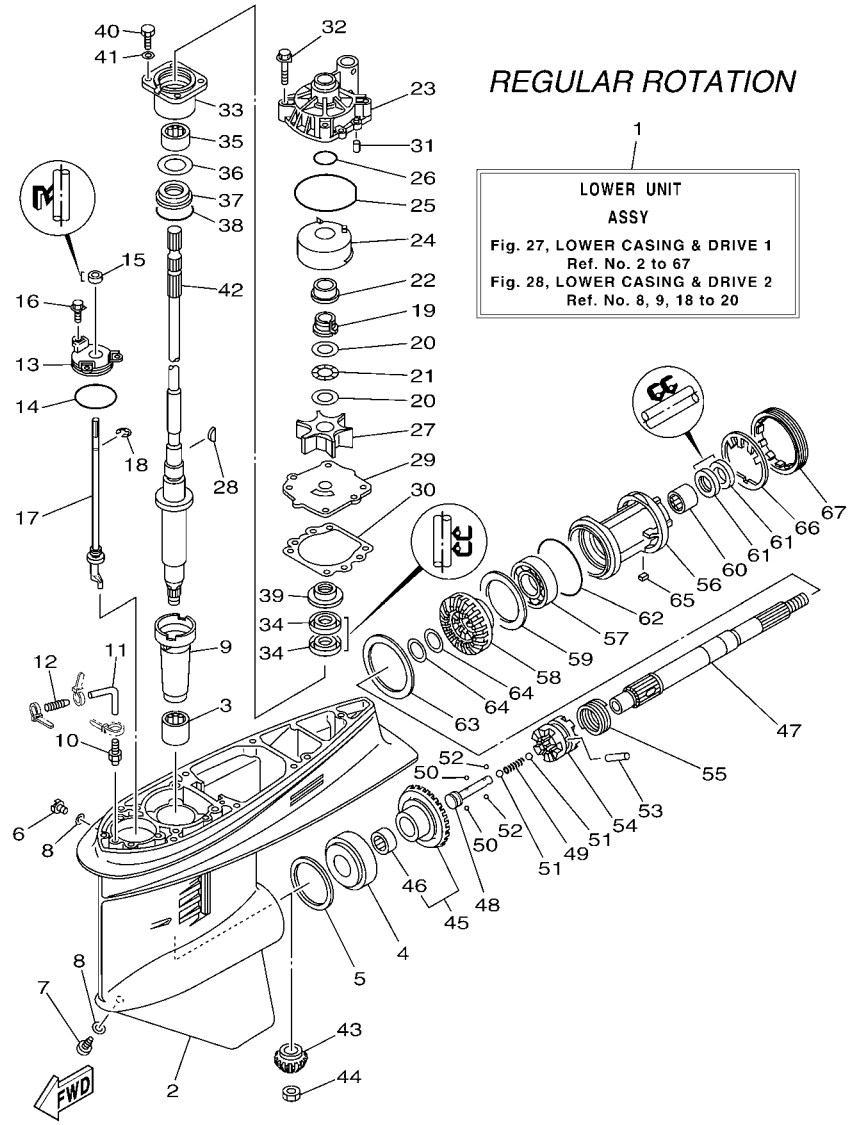

FIG. 27 LOWER CASING & DRIVE 1 BOITIER D'HELICE TRANSMISSION1

REF. NO.	PART NO. N° PIECES	DESCRIPTION DESCRIPTION	68VE	68WE				REMARKS REMARQUES
41	92995–08600	WASHER RONDELLE	4					
42	68V–45501–10	DRIVE SHAFT COMP. ARBRE MOTEUR COMP.	1					L(20.3") L(20.3")
	68V–45501–30	DRIVE SHAFT COMP. ARBRE MOTEUR COMP.	1					X(25.3") X(25.3")
43	68V–45551–00	PINION (13T) PIGNON D'ATTAQUE (13D)	1					
44	90170–16M01	NUT ECROU	1					
45	68V–45560–00	GEAR 1 (28T) PIGNON 1 (28T)	1					
46	93315–425U7	.BEARING .ROULEMENT	1					
47	6E5–45611–01	SHAFT, PROPELLER ARBRE, HELICE	1					
48	6E5–45634–02	SLIDE, SHIFT CONTRE-POUSSOIR	1					
49	90501–16M37	SPRING, COMPRESSION RESSORT, COMPRESSION	1					
50	93507–32009	BALL BILLE	2					
51	93511–32017	BALL BILLES	2					
52	93503–16003	BALL BILLES	2					
53	90250–08M07	PIN, STRAIGHT GOUPILLE, DROITE	1					
54	68V–45631–01	CLUTCH, DOG CRABOT	1					
55	6E5–45633–01	RING, CROSS PIN JONC, GOUPILLE CRABOT	1					
56	6E5–45332–00–CA	HOUSING, BEARING FLASQUE, ROULEMENT	1					
57	93306–208U0	BEARING ROULEMENT	1					
58	68V–45571–00	GEAR 2 (28T) PIGNON 2 (28T)	1					
59	6E5–45576–00	WASHER, THRUST 2 RONDELLE DE CALAGE 2	1					
60	93315–430U8	BEARING ROULEMENT	1					
61	93101–30M17	OIL SEAL JOINT SPY	2					
62	93210–86M39	O-RING JOINT TORIQUE	1					
63	6L6–45577–00	SHIM (T:0.10MM) CALE (T:0.10MM)	1					UR UR
	6L6–45577–10	SHIM (T:0.12MM) CALE (T:0.12MM)	1					UR UR
	6L6–45577–20	SHIM (T:0.15MM) CALE (T:0.15MM)	1					UR UR
	6L6–45577–30	SHIM (T:0.18MM) CALE (T:0.18MM)	1					UR UR

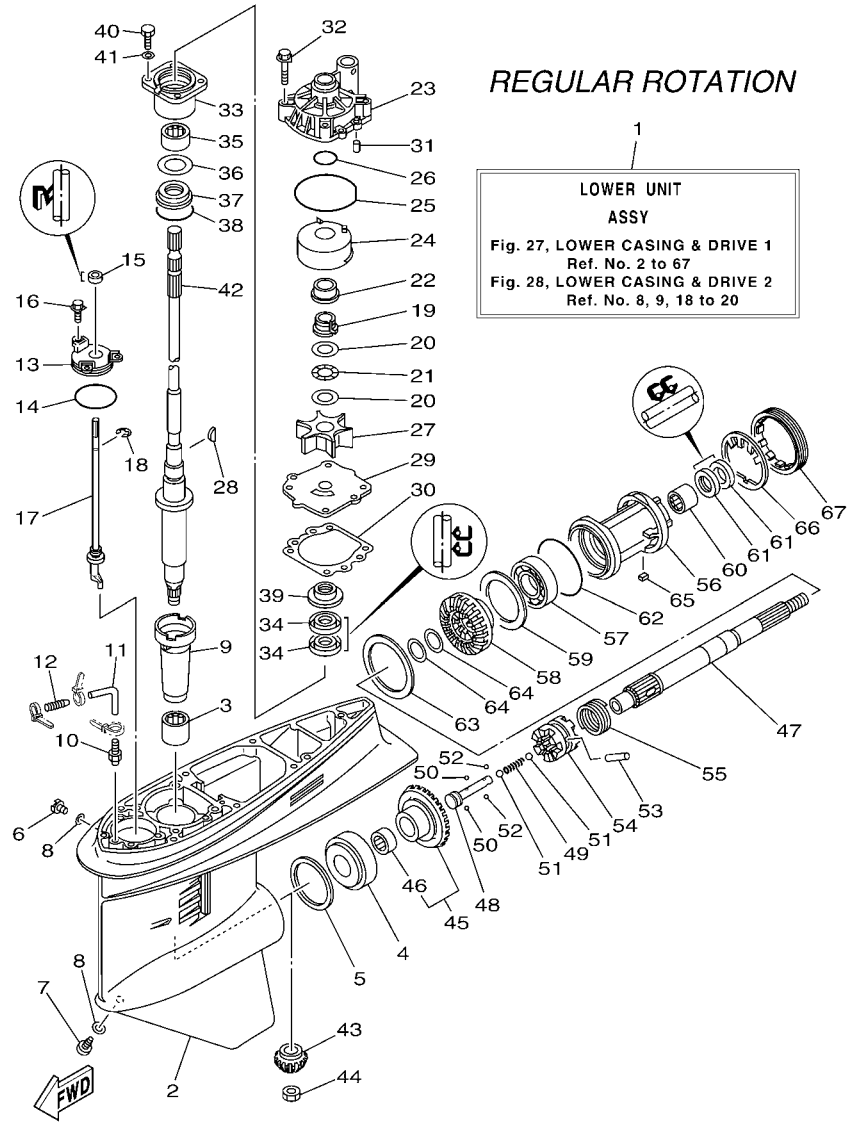

FIG. 27 LOWER CASING & DRIVE 1 BOITIER D'HELICE TRANSMISSION1

REF. NO.	PART NO. N° PIECES	DESCRIPTION DESCRIPTION	68VE	68WE				REMARKS REMARQUES
63	6L6–45577–40	SHIM (T:0.30MM) CALE (T:0.30MM)	1					UR UR
	6L6–45577–50	SHIM (T:0.40MM) CALE (T:0.40MM)	1					UR UR
	6L6–45577–60	SHIM (T:0.50MM) CALE (T:0.50MM)	1					UR UR
64	90201–30M92	WASHER, PLATE RONDELLE, PLATE	2					
65	90282–04010	KEY, STRAIGHT CLAVETTE, DROITE	1					
66	688–45383–02	WASHER, CLAW FREIN D'ECROU	1					
67	688–45384–02	NUT ECROU	1					

FIG. 28 LOWER CASING & DRIVE 2 BOITIER D'HELICE TRANSMISSION2

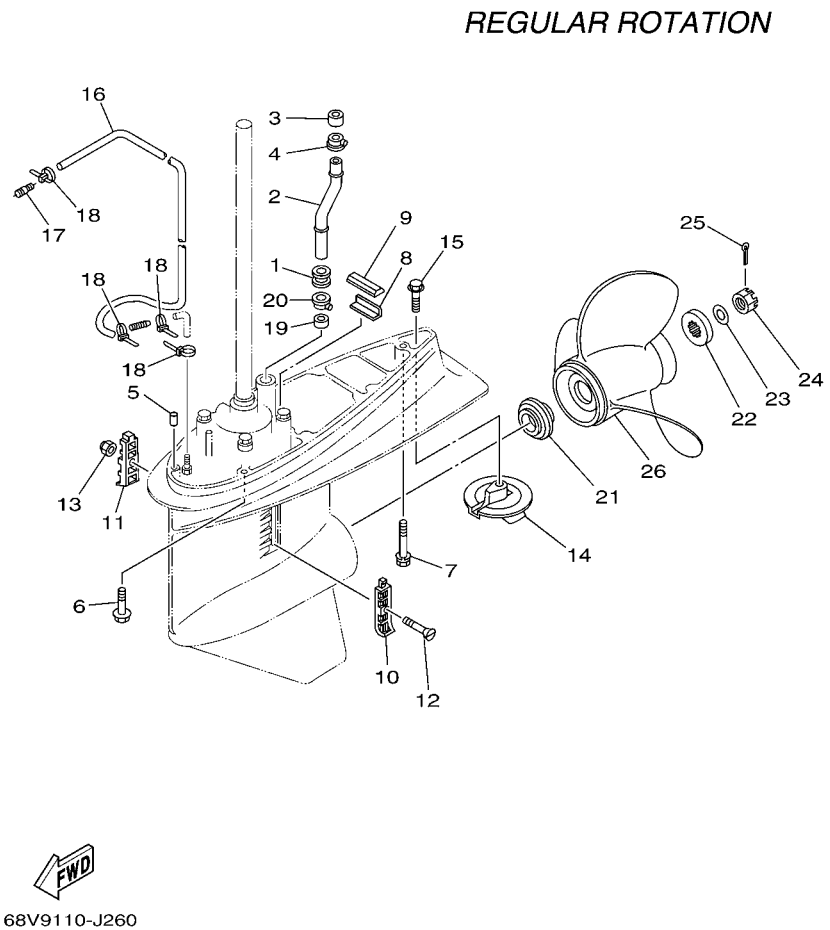

REF. NO.	PART NO. N° PIECES	DESCRIPTION DESCRIPTION	68VE	68WE				REMARKS REMARQUES
1	6E5–44366–00	DAMPER, WATER SEAL 2 JOINT, TUBE D'EAU 2	1					
2	68V–44361–11	TUBE, WATER 1 TUBE D'EAU 1	1					L(20.3") L(20.3")
	68V–44361–30	TUBE, WATER 1 TUBE D'EAU 1	1					X(25.3") X(25.3")
3	6E5–44365–00	DAMPER, WATER SEAL 1 JOINT, TUBE D'EAU 1	1					
4	6E5–44312–00	COVER, WATER PUMP HOUSING COUVERCLE	1					
5	93608–12M05	PIN, DOWEL AXE	2					
6	97575–10545	BOLT, WITH WASHER VIS HEXAGONAL AVC RONDELLE	6					
7	90119–10M89	BOLT, WITH WASHER BOULON, AVEC RONDELLE	1					
8	663–45376–00	GUIDE, SEAL DAMPER BUTEE, JOINT CAOUTCHOUC	1					
9	688–45375–00	DAMPER, SEAL BOURRELET, CAOUTCHOUC	1					
10	688–45214–02	COVER, WATER INLET 1 GRILLE, ENTREE D'EAU 1	1					
11	688–45215–02	COVER, WATER INLET 2 GRILLE, ENTREE D'EAU 2	1					
12	90152–05M07	SCREW, COUNTERSUNK VIS, TETE NOYEE	1					
13	90185–05002	NUT, NYLON ECROU,AUTO-BLOQUANT	1					
14	6E5–45371–01	TAB-TRIM ANODE DERIVE	1					
15	90105–10M00	BOLT, FLANGE BOULON	1					
16	90445–076K2	HOSE (L1550) DURITE (L1550)	1					
17	6E5–83558–00	END, NIPPLE RACCORD DE NIPPLE	1					
18	90465–11M10	CLAMP BRIDE	4					
19	6E5–44365–00	DAMPER, WATER SEAL 1 JOINT, TUBE D'EAU 1	1					
20	6E5–44312–00	COVER, WATER PUMP HOUSING COUVERCLE	1					
21	63P–45987–00	SPACER 1 ENTRETOISE 1	1					
22	688–45997–01	SPACER 2 ENTRETOISE 2	1					
23	92990–18200	WASHER RONDELLE, PLATE	1					
24	90171–18M04	NUT, CASTLE ECROU, CRENELE	1					
25	91490–40030	PIN. COTTER GOUPILLE	1					
26	6E5–45941–00	PROPELLER (3X13"X19"-K) HELICE (3X13"X19"-K)	1					UR UR

FIG. 28 LOWER CASING & DRIVE 2 BOITIER D'HELICE TRANSMISSION2

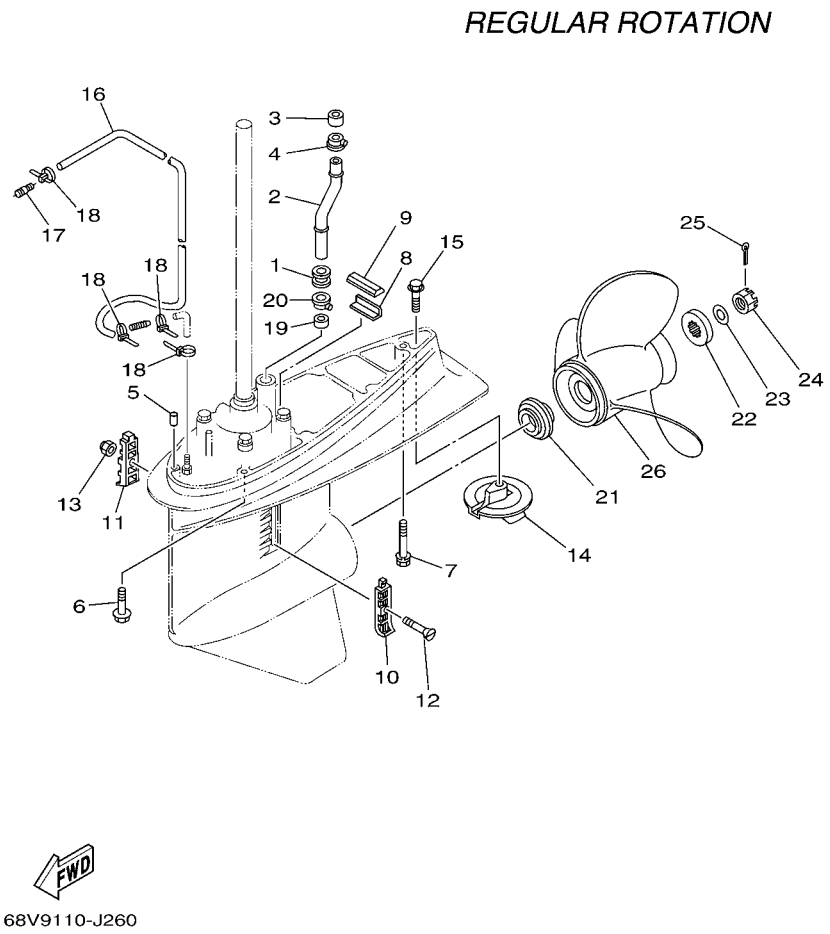

REF. NO.	PART NO. N° PIECES	DESCRIPTION DESCRIPTION	68VE	68WE				REMARKS REMARQUES
26	6E5–45943–00	PROPELLER (3X12-5/8"X21"-K) HELICE (3X12-5/8"X21"-K)	1					UR UR
	6E5–45945–01	PROPELLER (3X13-1/4"X17"-K) HELICE (3X13-1/4"X17"-K)	1					UR UR
	6E5–45947–00	PROPELLER (3X13-1/2"X15"-K) HELICE (3X13-1/2"X15"-K)	1					UR UR
	6E5–45949–00	PROPELLER (3X13-5/8"X13"-K) HELICE (3X13-5/8"X13"-K)	1					UR UR
	6E5–45952–00	PROPELLER (3X13"X23"-K) HELICE (3X13"X23"-K)	1					UR UR
	6E5–45954–00	PROPELLER (3X14"X11"-K) HELICE (3X14"X11"-K)	1					UR UR
	6E5–45956–00	PROPELLER (3X13"X25"-K) HELICE (3X13"X25"-K)	1					UR UR
	6E5–45958–00	PROPELLER (3X13-5/8"X14"-K) HELICE (3X13-5/8"X14"-K)	1					UR UR
	688–45930–02	PROPELLER (3X13"X17"-K2) HELICE (3X13"X17"-K2)	1					UR UR
	688–45932–60	PROPELLER (3X13-1/2"X14"-K) HELICE (3X13-1/2"X14"-K)	1					UR UR
	688–45970–03	PROPELLER (3X13"X19"-K) HELICE (3X13"X19"-K)	1					UR UR
	688–45972–02	PROPELLER (3X13"X21"-K) HELICE (3X13"X21"-K)	1					UR UR
	688–45974–02	PROPELLER (3X13"X23"-K) HELICE (3X13"X23"-K)	1					UR UR
	688–45976–01	PROPELLER (3X13"X25"-K) HELICE (3X13"X25"-K)	1					UR UR
	688–45978–60	PROPELLER (3X13-1/2"X16"-K) HELICE (3X13-1/2"X16"-K)	1					UR UR
	68V–45941–00	PROPELLER (3X13-1/2"X17"-K) HELICE (3X13-1/2"X17"-K)	1					UR UR
	68V–45943–00	PROPELLER (3X13-1/2"X19"-K) HELICE (3X13-1/2"X19"-K)	1					UR UR
	62A–45970–10	PROPELLER (3X13-1/2"X21"-K) HELICE (3X13-1/2"X21"-K)	1					UR UR
	62A–45972–10	PROPELLER (3X13-1/2"X23"-K) HELICE (3X13-1/2"X23"-K)	1					UR UR
	62A–45974–10	PROPELLER (3X13-1/2"X19"-K) HELICE (3X13-1/2"X19"-K)	1					UR UR
	62A–45976–00	PROPELLER (3X13-1/2"X17"-K) HELICE (3X13-1/2"X17"-K)	1					UR UR

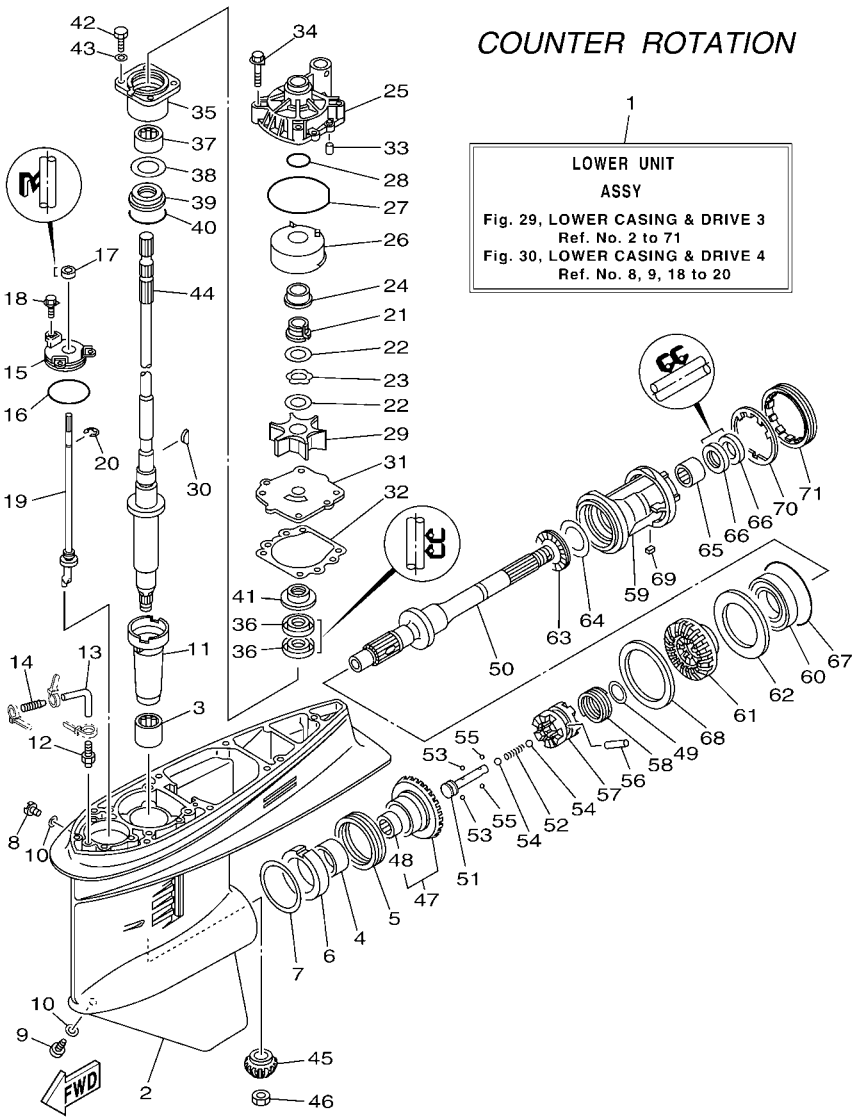

FIG. 29 LOWER CASING & DRIVE 3 BOITIER D'HELICE TRANSMISSION3

REF. NO.	PART NO. N° PIECES	DESCRIPTION DESCRIPTION	68VE	68WE				REMARKS REMARQUES
1	68W–45300–33–8D	LOWER UNIT ASSY UNITE INFERIEURE (ENS.)		1				X(25.3"),LH X(25.3"),LH
2	6E5–45301–07–8D	CASING, LOWER BEQUILLE		1				
3	93315–628U9	BEARING ROULEMENT		1				
4	93315–345W0	BEARING ROULEMENT		1				
5	93341–360U8	BEARING CERVEAUX DE DIRECTION		1				
6	6L6–45538–00	SPACER 1 ENTRETOISE		1				
7	6E5–45567–01	SHIM (T:0.10MM) CALE (T:0.10MM)		1				UR UR
	6E5–45567–10	SHIM (T:0.12MM) CALE (T:0.12MM)		1				UR UR
	6E5–45567–20	SHIM (T:0.15MM) CALE (T:0.15MM)		1				UR UR
	6E5–45567–30	SHIM (T:0.18MM) CALE (T:0.18MM)		1				UR UR
	6E5–45567–40	SHIM (T:0.30MM) CALE (T:0.30MM)		1				UR UR
	6E5–45567–50	SHIM (T:0.40MM) CALE (T:0.40MM)		1				UR UR
	6E5–45567–60	SHIM (T:0.50MM) CALE (T:0.50MM)		1				UR UR
8	90340–08002	PLUG, STRAIGHT SCREW PLOT, FILETE DROIT		1				
9	688–45341–10	PLUG, DRAIN BOUCHON DE VIDANGE		1				
10	90430–08020	GASKET JOINT		2				
11	6E5–45536–00	SLEEVE, DRIVE SHAFT MANCHON, ARBRE MOTEUR		1				
12	6E5–45378–00	NIPPLE, HOSE RACCORD, TUYAU		1				
13	90445–07ME9	HOSE (L120) DURITE (L120)		1				X(25.3") X(25.3")
14	6E5–83558–10	END, NIPPLE RACCORD DE NIPPLE		1				
15	6E5–45321–00	PLATE PLAQUETTE		1				
16	93210–58144	O-RING JOINT TORIQUE		1				
17	93106–09014	OIL SEAL JOINT SPY		1				
18	90119–06M10	BOLT, WITH WASHER BOULON, AVEC RONDELLE		3				
19	6E5–44150–03	SHIFT CAM ASSY CAME D'INVERSION		1				
20	99001–08600	CIRCLIP CIRCLIP		1				
21	61A–45538–00	SPACER 1 ENTRETOISE		1				

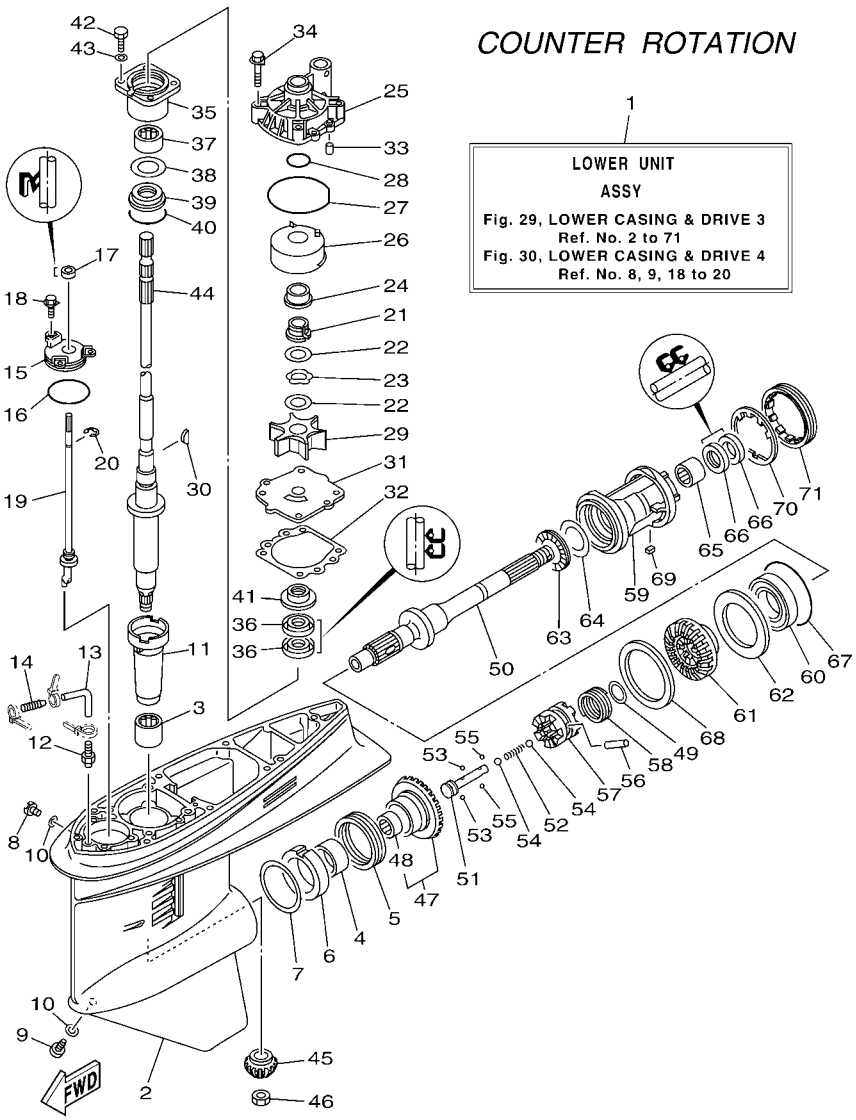

FIG. 29 LOWER CASING & DRIVE 3 BOITIER D'HELICE TRANSMISSION3

REF. NO.	PART NO. N° PIECES	DESCRIPTION DESCRIPTION	68VE	68WE				REMARKS REMARQUES
22	90201–22M01	WASHER, PLATE RONDELLE, PLATE		2				
23	90206–22M19	WASHER, WAVE RONDELLE, ONDULEE		1				
24	61A–45527–00	COLLAR, DRIVE SHAFT ENTRETOISE		1				
25	61A–44311–01	HOUSING, WATER PUMP CORPS, POMPE A EAU		1				
26	61A–44322–02	INSERT, CARTRIDGE CUVETTE		1				
27	93210–86M38	O-RING JOINT TORIQUE		1				
28	93210–37160	O-RING JOINT TORIQUE		1				
29	6E5–44352–01	IMPELLER TURBINE		1				
30	90280–04M05	KEY, WOODRUFF CLAVETTE, DEMI-LUNE		1				
31	6EK–44323–00	OUTER PLATE, CARTRIDGE PLAQUE EXTERIEURE		1				
32	6E5–44315–A0	GASKET, WATER PUMP JOINT, POMPE A EAU		1				
33	93606–12019	PIN, DOWEL GOUPILLE		2				
34	90119–08M14	BOLT, WITH WASHER BOULON, AVEC RONDELLE		4				
35	6E5–45331–00–9S	HOUSING, BEARING FLASQUE, ROULEMENT		1				
36	93101–28M16	OIL SEAL JOINT SPY		2				
37	93317–330U2	BEARING ROULEMENT		1				
38	6E5–45587–01	SHIM (T:0.10MM) CALE (T:0.10MM)		1				UR UR
	6E5–45587–10	SHIM (T:0.12MM) CALE (T:0.12MM)		1				UR UR
	6E5–45587–20	SHIM (T:0.15MM) CALE (T:0.15MM)		1				UR UR
	6E5–45587–30	SHIM (T:0.18MM) CALE (T:0.18MM)		1				UR UR
	6E5–45587–40	SHIM (T:0.30MM) CALE (T:0.30MM)		1				UR UR
	6E5–45587–50	SHIM (T:0.40MM) CALE (T:0.40MM)		1				UR UR
	6E5–45587–60	SHIM (T:0.50MM) CALE (T:0.50MM)		1				UR UR
39	93341–930V2	BEARING CERVEAUX DE DIRECTION		1				
40	93210–55M14	O-RING JOINT TORIQUE		1				
41	6E5–45344–00	COVER, OIL SEAL FLASQE, JOINT D'HUILE		1				
42	97095–08025	BOLT BOULON		4				

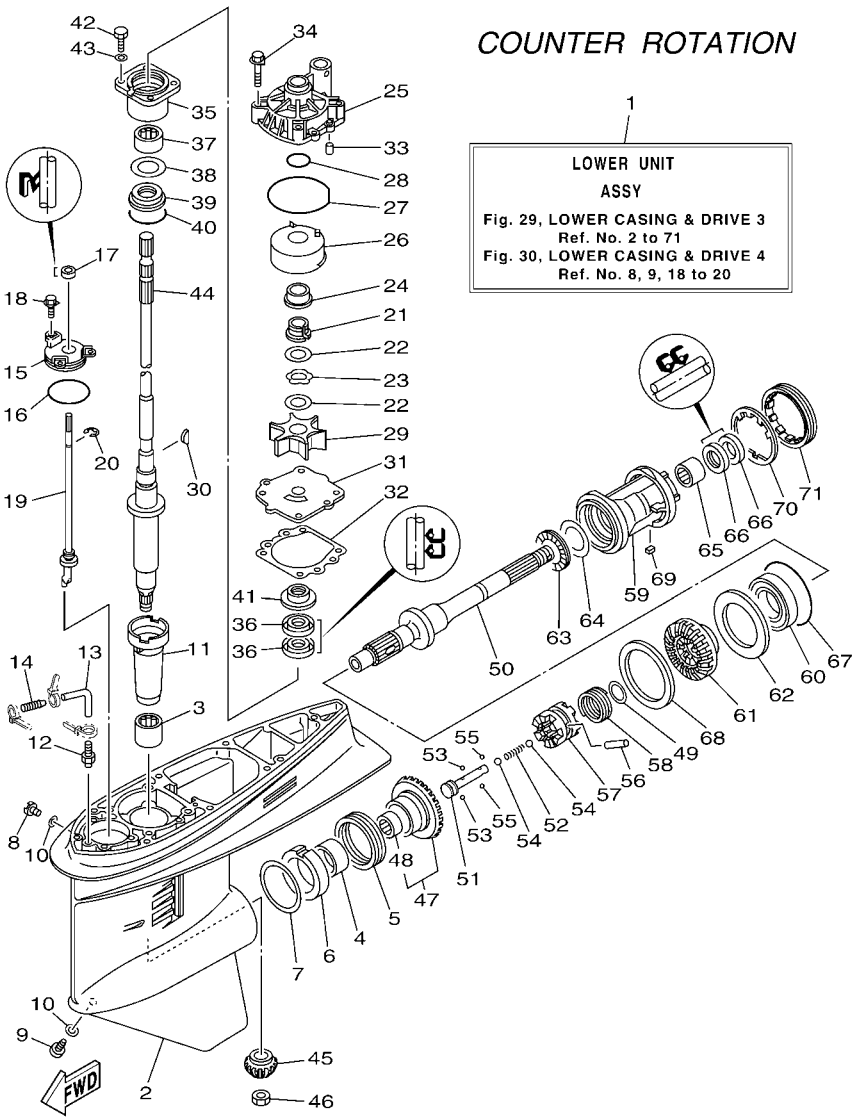

FIG. 29 LOWER CASING & DRIVE 3 BOITIER D'HELICE TRANSMISSION3

REF. NO.	PART NO. N° PIECES	DESCRIPTION DESCRIPTION	68VE	68WE				REMARKS REMARQUES
43	92995–08600	WASHER RONDELLE		4				
44	68V–45501–30	DRIVE SHAFT COMP. ARBRE MOTEUR COMP.		1				X(25.3") X(25.3")
45	68V–45551–00	PINION (13T) PIGNON D'ATTAQUE (13D)		1				
46	90170–16M01	NUT ECROU		1				
47	68W–45560–00	GEAR 1 (28T) PIGNON 1 (28T)		1				
48	93315–425U7	.BEARING .ROULEMENT		1				
49	90201–26M00	WASHER, PLATE RONDELLE, PLATE		1				
50	68W–45611–00	SHAFT, PROPELLER ARBRE, HELICE		1				
51	6E5–45634–02	SLIDE, SHIFT CONTRE-POUSSOIR		1				
52	90501–16M37	SPRING, COMPRESSION RESSORT, COMPRESSION		1				
53	93507–32009	BALL BILLE		2				
54	93511–32017	BALL BILLES		2				
55	93503–16003	BALL BILLES		2				
56	90250–08M07	PIN, STRAIGHT GOUPILLE, DROITE		1				
57	68V–45631–01	CLUTCH, DOG CRABOT		1				
58	6E5–45633–01	RING, CROSS PIN JONC, GOUPILLE CRABOT		1				
59	6L6–45332–00–CA	HOUSING, BEARING FLASQUE, ROULEMENT		1				
60	93332–000V7	BEARING ROULEMENT		1				
61	68W–45570–10	GEAR 2 (28T) PIGNON 2 (28T)		1				
62	6L6–45576–00	WASHER, THRUST 2 RONDELLE DE CALAGE 2		1				
63	93341–440U5	BEARING CERVEAUX DE DIRECTION		1				
64	6K1–45578–01	SHIM (T:0.10MM) CALE (T:0.10MM)		1				UR UR
	6K1–45578–10	SHIM (T:0.12MM) CALE (T:0.12MM)		1				UR UR
	6K1–45578–20	SHIM (T:0.15MM) CALE (T:0.15MM)		1				UR UR
	6K1–45578–30	SHIM (T:0.18MM) CALE (T:0.18MM)		1				UR UR
	6K1–45578–40	SHIM (T:0.30MM) CALE (T:0.30MM)		1				UR UR
	6K1–45578–50	SHIM (T:0.40MM) CALE (T:0.40MM)		1				UR UR

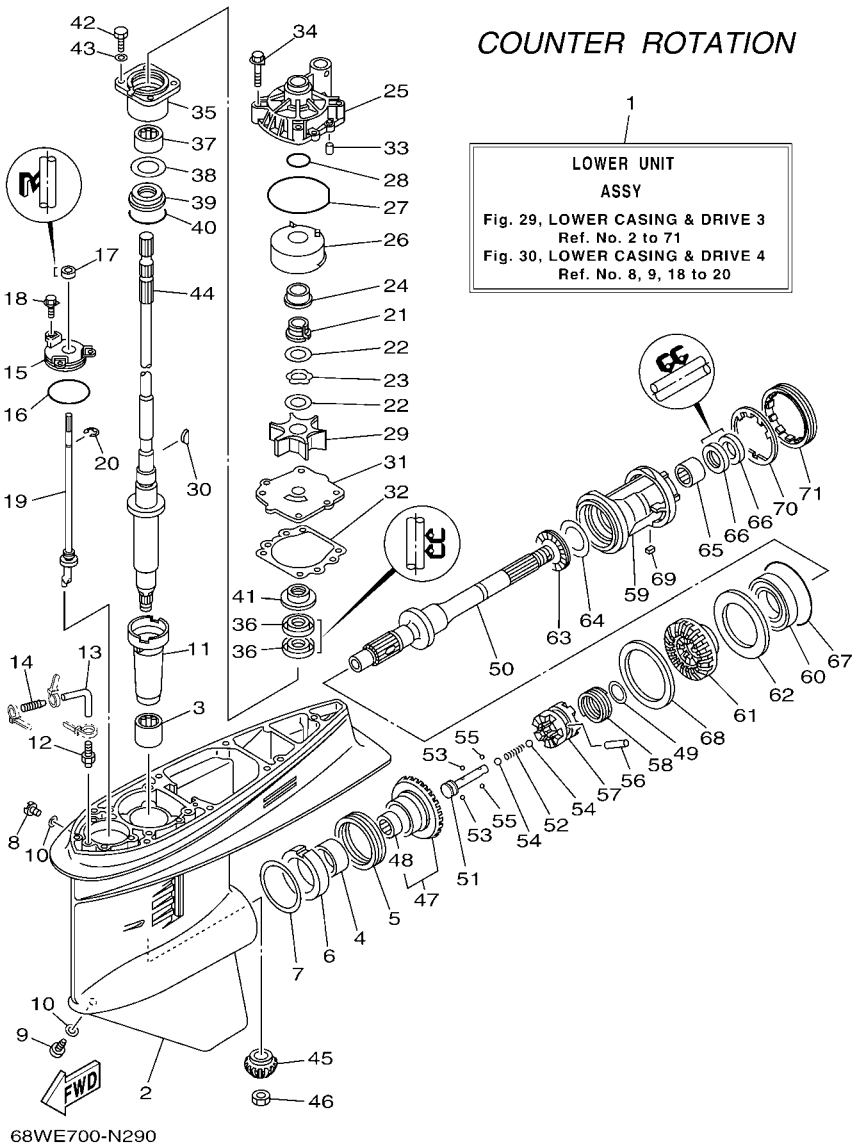

FIG. 29 LOWER CASING & DRIVE 3 BOITIER D'HELICE TRANSMISSION3

REF. NO.	PART NO. N° PIECES	DESCRIPTION DESCRIPTION	68VE	68WE				REMARKS REMARQUES
64	6K1–45578–60	SHIM (T:0.50MM) CALE (T:0.50MM)		1				UR UR
65	93315–43061	BEARING ROULEMENT		1				
66	93101–30M17	OIL SEAL JOINT SPY		2				
67	93210–86M39	O-RING JOINT TORIQUE		1				
68	6L6–45577–00	SHIM (T:0.10MM) CALE (T:0.10MM)		1				UR UR
	6L6–45577–10	SHIM (T:0.12MM) CALE (T:0.12MM)		1				UR UR
	6L6–45577–20	SHIM (T:0.15MM) CALE (T:0.15MM)		1				UR UR
	6L6–45577–30	SHIM (T:0.18MM) CALE (T:0.18MM)		1				UR UR
	6L6–45577–40	SHIM (T:0.30MM) CALE (T:0.30MM)		1				UR UR
	6L6–45577–50	SHIM (T:0.40MM) CALE (T:0.40MM)		1				UR UR
	6L6–45577–60	SHIM (T:0.50MM) CALE (T:0.50MM)		1				UR UR
69	90282–04010	KEY, STRAIGHT CLAVETTE, DROITE		1				
70	688–45383–02	WASHER, CLAW FREIN D'ECROU		1				
71	688–45384–02	NUT ECROU		1				

FIG. 30 LOWER CASING & DRIVE 4 BOITIER D'HELICE TRANSMISSION4

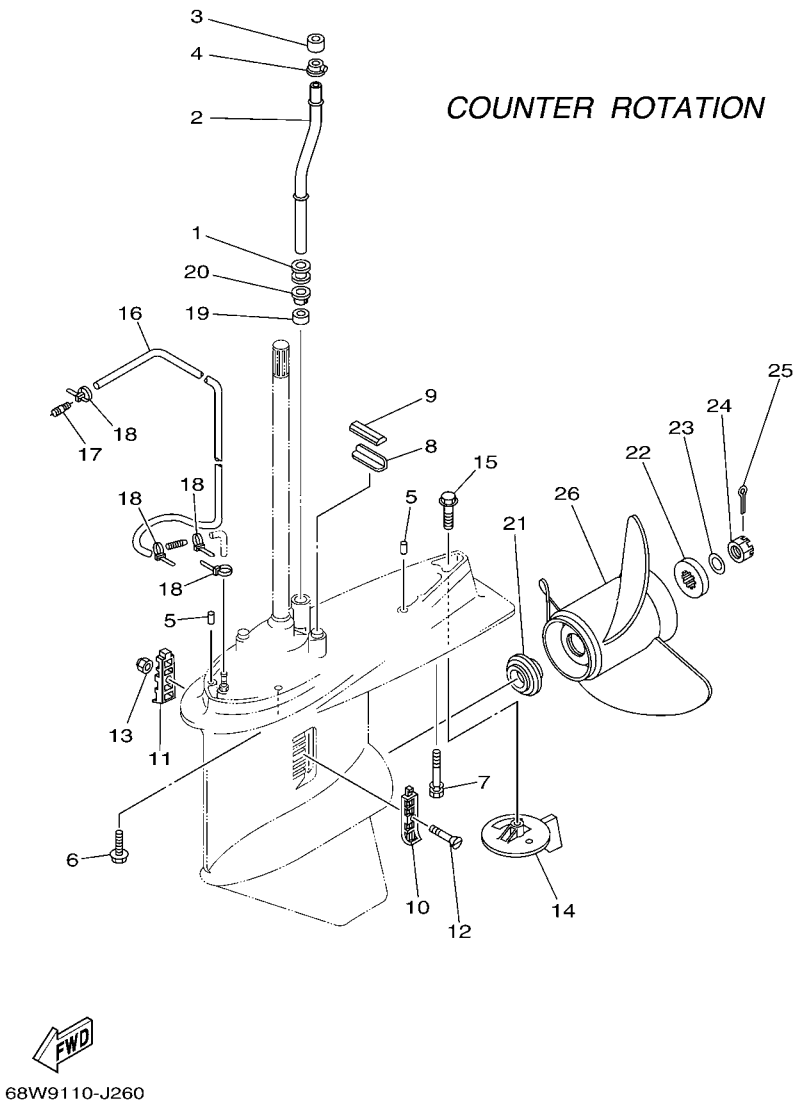

REF. NO.	PART NO. N° PIECES	DESCRIPTION DESCRIPTION	68VE	68WE				REMARKS REMARQUES
1	6E5–44366–00	DAMPER, WATER SEAL 2 JOINT, TUBE D'EAU 2		1				
2	68V–44361–30	TUBE, WATER 1 TUBE D'EAU 1		1				X(25.3") X(25.3")
3	6E5–44365–00	DAMPER, WATER SEAL 1 JOINT, TUBE D'EAU 1		1				
4	6E5–44312–00	COVER, WATER PUMP HOUSING COUVERCLE		1				
5	93608–12M05	PIN, DOWEL AXE		2				
6	97575–10545	BOLT, WITH WASHER VIS HEXAGONAL AVC RONDELLE		6				
7	90119–10M89	BOLT, WITH WASHER BOULON, AVEC RONDELLE		1				
8	663–45376–00	GUIDE, SEAL DAMPER BUTEE, JOINT CAOUTCHOUC		1				
9	688–45375–00	DAMPER, SEAL BOURRELET, CAOUTCHOUC		1				
10	688–45214–02	COVER, WATER INLET 1 GRILLE, ENTREE D'EAU 1		1				
11	688–45215–02	COVER, WATER INLET 2 GRILLE, ENTREE D'EAU 2		1				
12	90152–05M07	SCREW, COUNTERSUNK VIS, TETE NOYEE		1				
13	90185–05002	NUT, NYLON ECROU,AUTO-BLOQUANT		1				
14	6L6–45371–00	TAB-TRIM ANODE DERIVE		1				
15	90105–10M00	BOLT, FLANGE BOULON		1				
16	90445–076K2	HOSE (L1550) DURITE (L1550)		1				
17	6E5–83558–00	END, NIPPLE RACCORD DE NIPPLE		1				
18	90465–11M10	CLAMP BRIDE		4				
19	6E5–44365–00	DAMPER, WATER SEAL 1 JOINT, TUBE D'EAU 1		1				
20	6E5–44312–00	COVER, WATER PUMP HOUSING COUVERCLE		1				
21	63P–45987–00	SPACER 1 ENTRETOISE 1		1				
22	688–45997–01	SPACER 2 ENTRETOISE 2		1				
23	92990–18200	WASHER RONDELLE, PLATE		1				
24	90171–18M04	NUT, CASTLE ECROU, CRENELE		1				
25	91490–40030	PIN. COTTER GOUPILLE		1				
26	6L6–45930–01	PROPELLER (3X13"X17"-KL) HELICE (3X13"X17"-KL)		1				UR UR
	6L6–45970–00	PROPELLER (3X13"X19"-KL) HELICE (3X13"X19"-KL)		1				UR UR

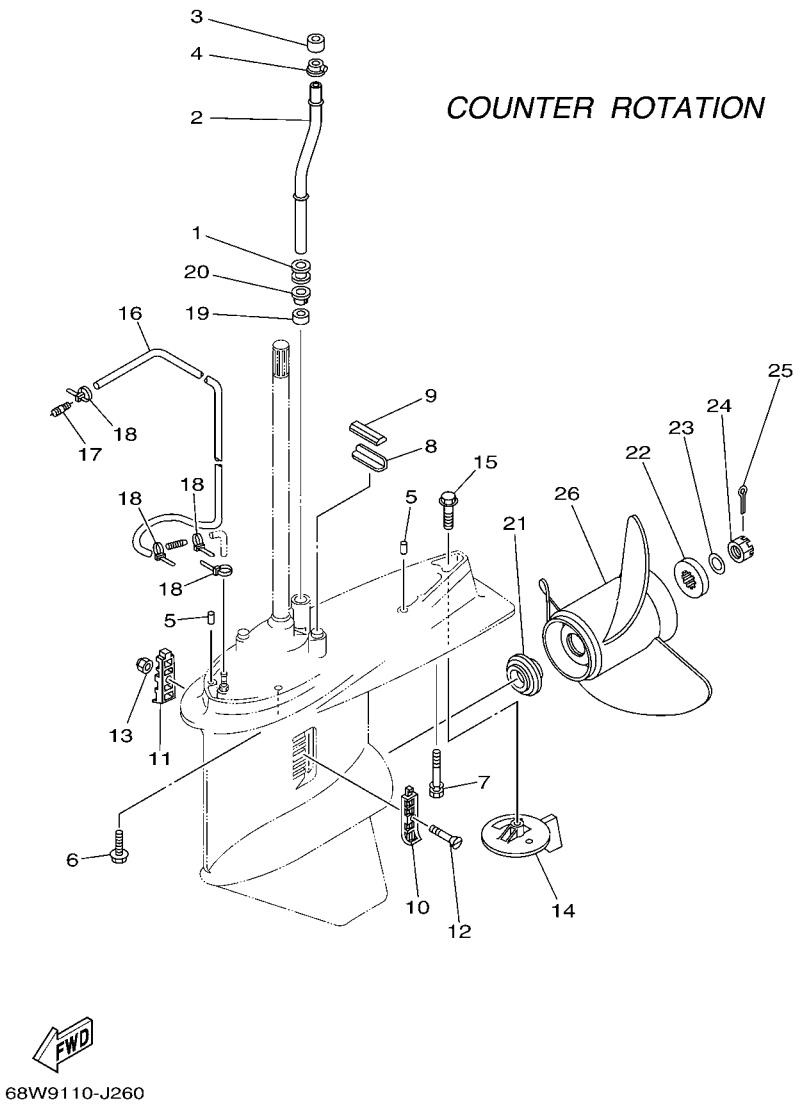

FIG. 30 LOWER CASING & DRIVE 4 BOITIER D'HELICE TRANSMISSION4

REF. NO.	PART NO. N° PIECES	DESCRIPTION DESCRIPTION	68VE	68WE				REMARKS REMARQUES
26	6L6–45972–00	PROPELLER (3X13"X21"-KL) HELICE (3X13"X21"-KL)		1				UR UR

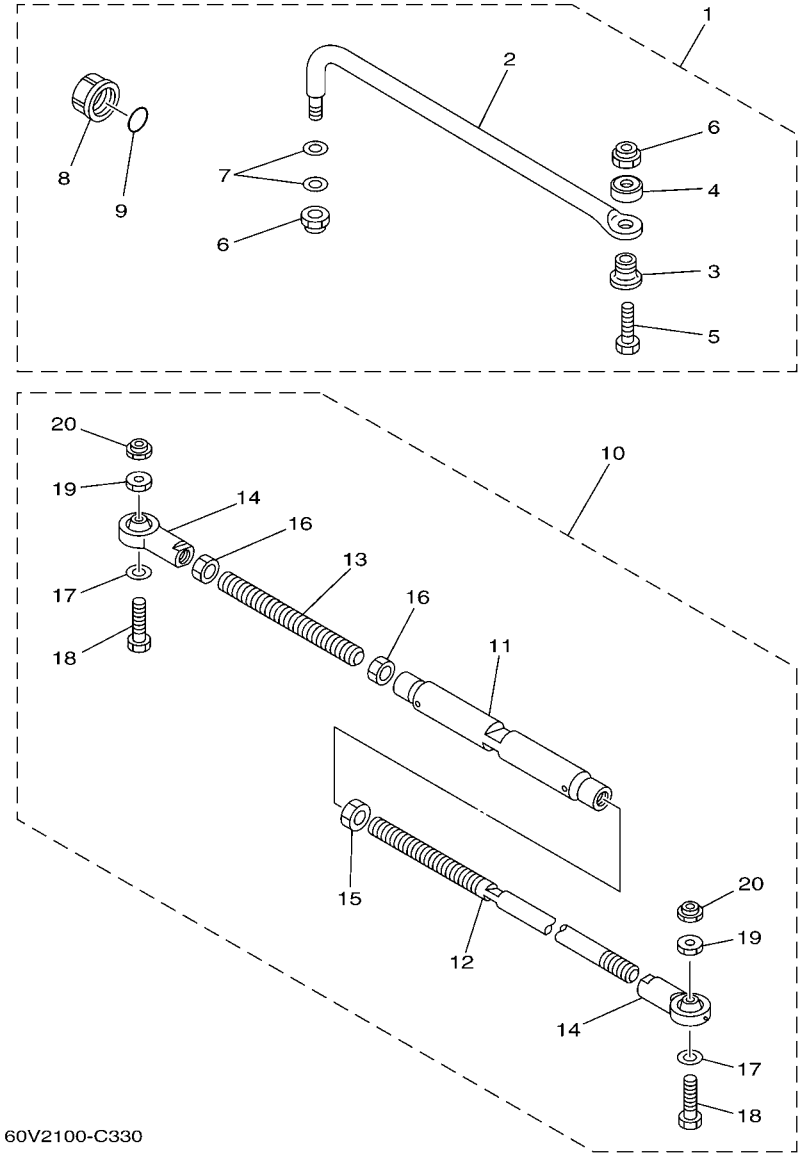

FIG. 31 STEERING GUIDE FIXATION DE DIRECTION

REF. NO.	PART NO. N° PIECES	DESCRIPTION DESCRIPTION	68VE	68WE				REMARKS REMARQUES
1	6E5–61350–02	STEERING GUIDE ATTACHMENT KIT FIXATIONS DE DIRECTION	1					AP AP
2	6E5–61351–01	.ROD, STEERING LINK .RENVOI DE DIRECTION	1					
3	90387–10M61	.COLLAR .COLLERETTE	1					
4	90560–12M01	.SPACER .ENTRETOISE	1					
5	6E5–61355–00	.BOLT .BOULON	1					
6	90185–09M01	.NUT, SELF-LOCKING .ECROU,AUTO-BLOQUANT	2					
7	90201–10M20	.WASHER, PLATE .RONDELLE, PLATE	2					
8	6E5–43145–01	.CAP, CLAMP BRACKET .CAPUCHON, PRESSE	1					
9	93210–16275	.O-RING .JOINT TORIQUE	1					
10	6E5–61301–01	TWIN KIT (L:600-800MM) JUMELE KIT (L:600-800MM)		1				AP AP
11	6E5–61313–00	.ADJUSTER .TENDEUR		1				
12	6E5–61311–11	.TIE BAR .BARRE D'ACCOUPLEMENT		1				
13	6E5–61315–00	.TIE BAR .BARRE D'ACCOUPLEMENT		1				
14	6E5–61303–00	.STEERING AXLE COMP. .AXLE COMP.		2				
15	90170–14M06	.NUT .ECROU		1				
16	95380–14700	.NUT .ECROU		2				
17	90201–10M76	.WASHER, PLATE .RONDELLE, PLATE		2				
18	90101–09M70	.BOLT .BOULON		2				
19	90170–09M05	.NUT .ECROU		2				
20	90185–09M01	.NUT, SELF-LOCKING .ECROU,AUTO-BLOQUANT		2				

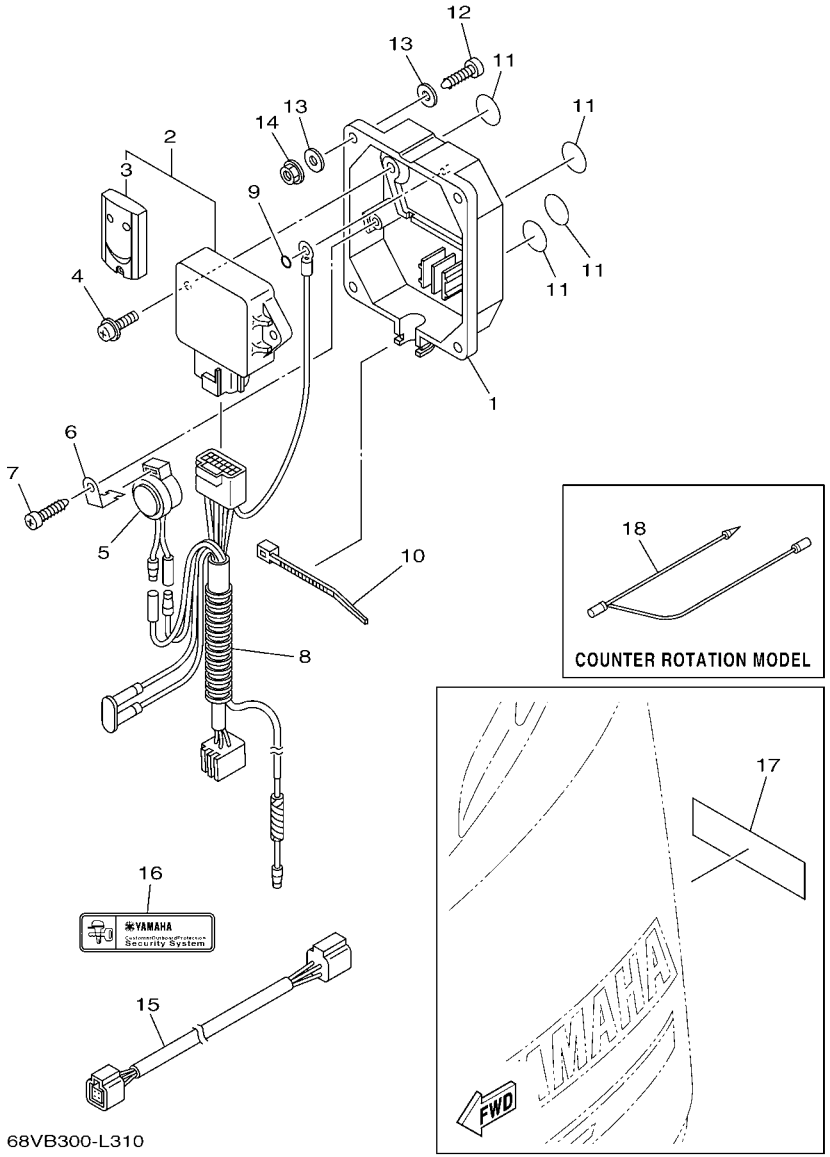

FIG. 32 OPTIONAL PARTS 1 PIECES OPTIONNELLES 1

REF. NO.	PART NO. N° PIECES	DESCRIPTION DESCRIPTION	68VE	68WE				REMARKS REMARQUES
1	6Y8–86267–00	CASE COMPLETE 1 CARTER (ENS.) 1	1					
2	6Y8–86260–02	REMOTE CONTROL UNIT ASSY UNITE DE TELECOMMANDE (ENS.)	1					UR FOR EUR UR FOR EUR
	6Y8–86260–12	REMOTE CONTROL UNIT ASSY UNITE DE TELECOMMANDE (ENS.)	1					AP FOR USA/CAN AP FOR USA/CAN
3	6AA–86261–00	.TRANSMITTER COMP .TRANSMETTEUR	2					FOR 6Y8-86260-02 FOR 6Y8-86260-02
	6AA–86261–22	.TRANSMITTER COMP .TRANSMETTEUR	2					FOR 6Y8-86260-12 FOR 6Y8-86260-12
4	97980–06216	SCREW, WITH WASHER VIS, AVEC RONDELLE	2					
5	6X4–83383–00	BUZZER RONFLEUR	1					
6	6X4–83386–00	STAY, BUZZER SUPPOR, RONFLEUR	1					
7	97780–60620	SCREW, TAPPING VIS, TETE BOMBEE	1					
8	6Y8–82509–10	WIRE, SUB LEAD FIL, SECONDAIRE	1					
9	93210–04279	O-RING JOINT TORIQUE	1					
10	90465–11M10	CLAMP BRIDE	1					
11	6Y8–8454G–00	PATCH 1 TAMPON 1	4					
12	90167–06M00	SCREW, TAPPING VIS, TETE FRAISEE	4					UR UR
	97880–06035	SCREW, PAN HEAD VIS, TETE TRONCONIQUE	4					UR UR
13	90201–06M30	WASHER, PLATE RONDELLE, PLATE	8					
14	95780–06300	NUT, FLANGE ECROU	4					
15	6Y8–82521–11	2FT PIGTAIL BUS FAISCEAU (L: 2FT.)	1					
16	6Y8–48277–00	STICKER 1 ETIQUETTE 1	1					UR FOR EUR UR FOR EUR
	6Y8–48277–00	STICKER 1 ETIQUETTE 1	4					AP FOR USA/CAN AP FOR USA/CAN
17	6Y8–48277–00	STICKER 1 ETIQUETTE 1	1	1				
18	6H5–81315–00	LEAD WIRE ASSY FIL		1				

FIG. 33 OPTIONAL PARTS 2 PIECES OPTIONNELLES 2

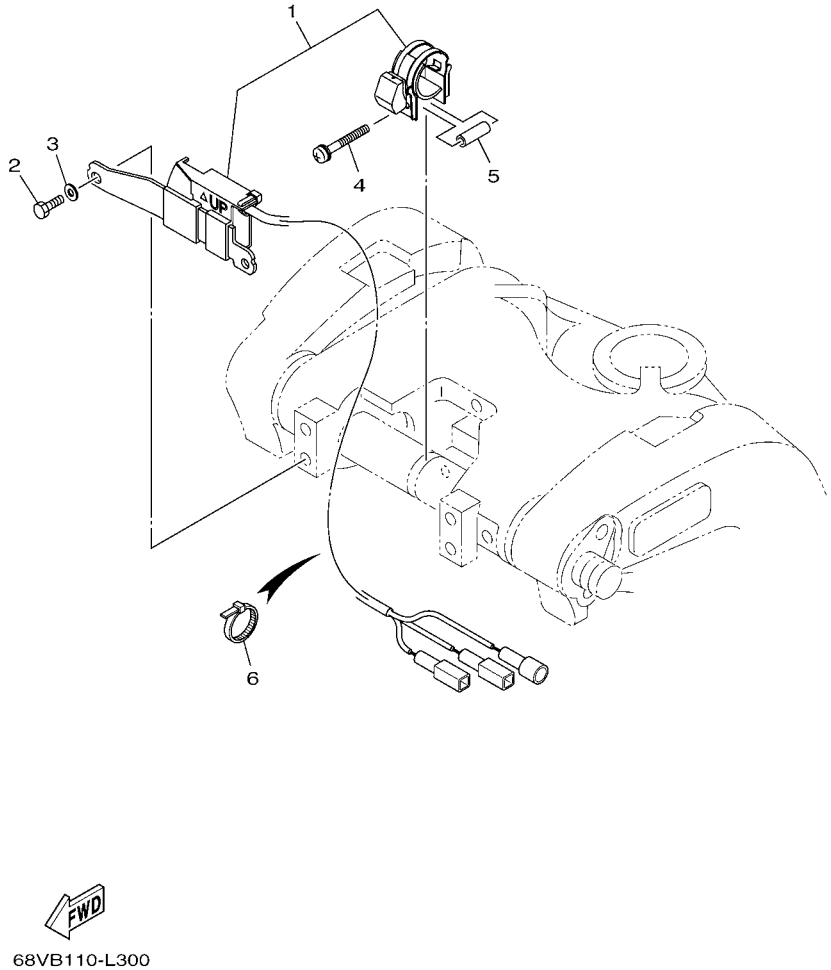

REF. NO.	PART NO. N° PIECES	DESCRIPTION DESCRIPTION	68VE	68WE				REMARKS REMARQUES
1	63P–825E0–01	TILT LIMIT SWITCH ASSY COMMUTATEUR, LIMIT INCLINAISON	1	1				
2	97095–06016	BOLT BOULON	2	2				
3	92995–06600	WASHER RONDELLE	2	2				
4	90159–05059	SCREW, WITH WASHER VIS, AVEC RONDELLE	1	1				
5	90387–05004	COLLAR COLLERETTE	1	1				
6	90465–11M10	CLAMP BRIDE	5	5				

FIG. 34 OPTIONAL PARTS 3 PIECES OPTIONNELLES 3

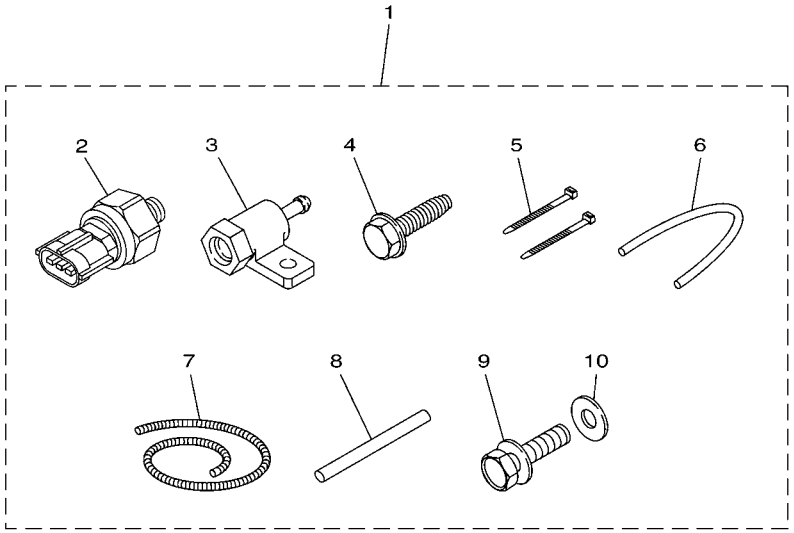

6C1A300-M350

REF. NO.	PART NO. N° PIECES	DESCRIPTION DESCRIPTION	68VE	68WE				REMARKS REMARQUES
1	60V–8A4L1–12	SENSOR, MODULE 1 SENSOR (ENS.) 1	1					FOR F115AET FOR F115AET
2	6AW–8366B–01	.SENSOR, WATER PRESSURE .SONDE DE PRESSION D'EAU	1					
3	60V–8366D–00	.ADAPTOR, INPUT .CONNECTEUR 3	1					
4	90109–06M81	.BOLT .BOULON	1					
5	90465–11M10	.CLAMP .BRIDE	2					
6	90445–07017	.HOSE (L: 550MM) .DURITE (L: 550MM)	1					
7	90447–07013	.HOSE, COVER (L: 700MM) .DURITE, COUVERCLE (L: 700MM)	1					
8	60V–42629–00	.SEAL .JOINT	1					
9	97095–06016	.BOLT .BOULON	1					
10	92995–06600	.WASHER .RONDELLE	1					

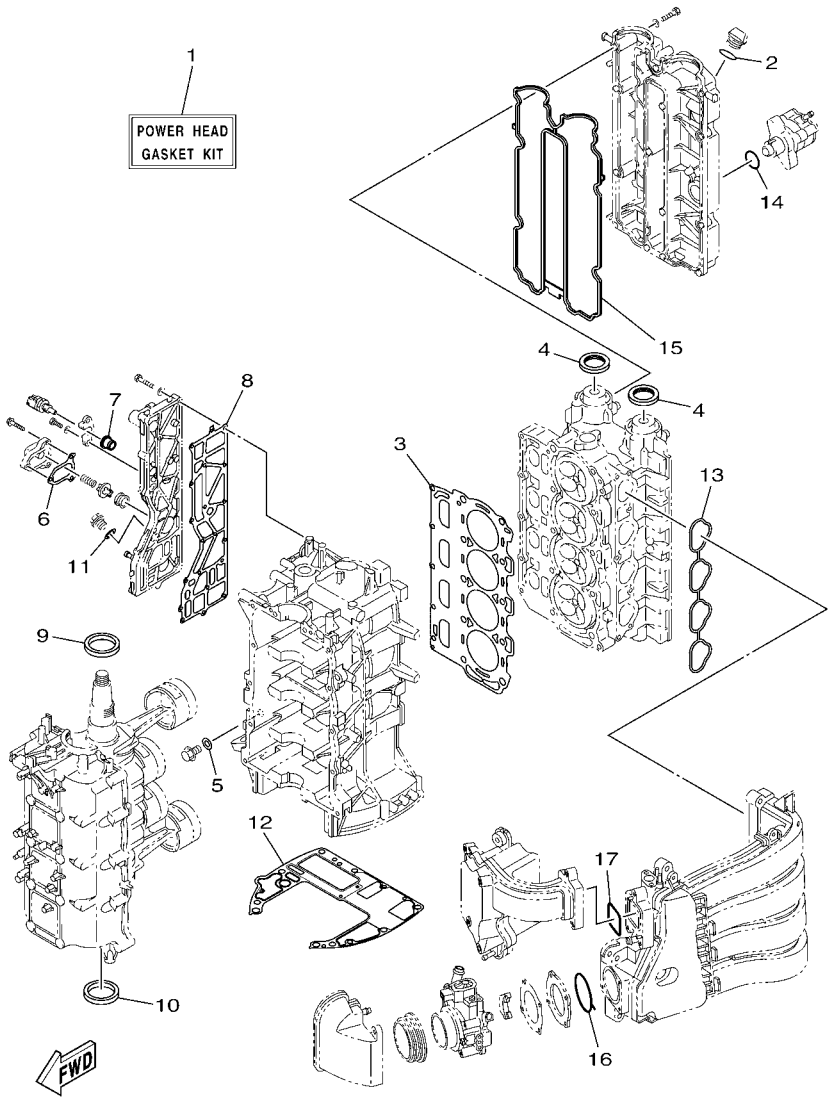

FIG. 35 REPAIR KIT 1 — KITS DE REPARATION 1

REF. NO.	PART NO. N° PIECES	DESCRIPTION DESCRIPTION	68VE	68WE				REMARKS REMARQUES
1	68V–W0001–06	POWER HEAD GASKET KIT POCHETTE DE JINTS TETE MOTRICE	1	1				
2	93210–24M79	.O-RING .JOINT TORIQUE	1	1				
3	67F–11181–03	.GASKET, CYLINDER HEAD 1 .JOINT, DE CULASSE 1	1	1				
4	93102–38008	.OIL SEAL .JOINT SPY	2	2				
5	90430–14115	.GASKET .JOINT	1	1				
6	67F–12435–A0	.GASKET .JOINT	1	1				
7	68V–85753–00	.GASKET, SENDER UNIT .JOINT, DE PERCEPTION	1	1				
8	67F–41114–A2	.GASKET, EXHAUST OUTER COVER .JOINT, COUVERCLE D'ECHAPPEMENT	1	1				
9	93102–48017	.OIL SEAL .JOINT SPY	1	1				
10	93101–48002	.OIL SEAL .JOINT SPY	1	1				
11	90430–18130	.GASKET .JOINT	1	1				
12	68V–11351–00	.GASKET, CYLINDER .JOINT, D'EMBASE	1	1				
13	68V–13645–10	.GASKET, MANIFOLD 1 .JOINT, TUBULURE 1	1	1				
14	93210–30682	.O-RING .JOINT TORIQUE	1	1				
15	6D8–11356–01	.SEAL, CYLINDER 2 .JOINT, SPY CYLINDRE	1	1				
16	68V–13646–00	.GASKET, MANIFOLD 2 .JOINT, TUBULURE 2	1	1				
17	68V–13647–00	.GASKET, MANIFOLD 3 .JOINT, TUBULURE 3	1	1				

FIG. 36 REPAIR KIT 2 KITS DE REPARATION 2

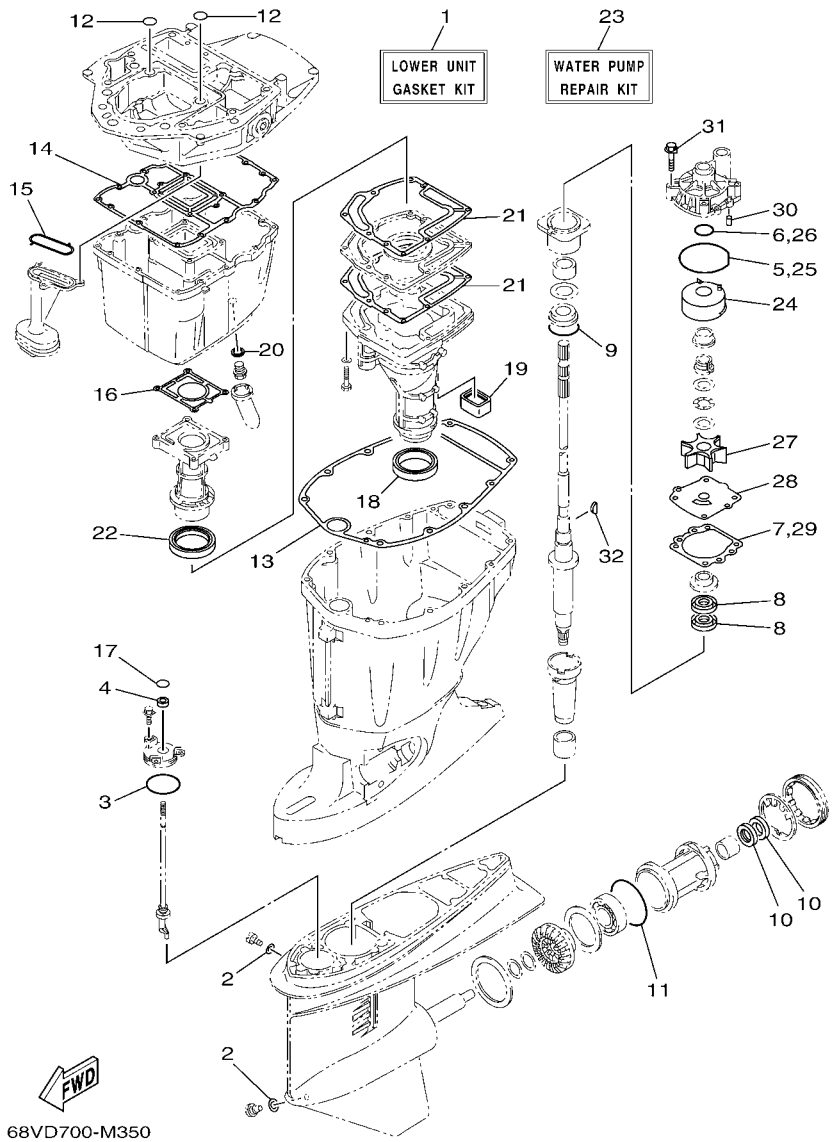

REF. NO.	PART NO. N° PIECES	DESCRIPTION DESCRIPTION	68VE	68WE				REMARKS REMARQUES
1	68V–W0001–21	LOWER UNIT GASKET KIT POCHETTE DE JOINTS EMBASE	1	1				
2	90430–08020	.GASKET .JOINT	2	2				
3	93210–58144	.O-RING .JOINT TORIQUE	1	1				
4	93106–09014	.OIL SEAL .JOINT SPY	1	1				
5	93210–86M38	.O-RING .JOINT TORIQUE	1	1				
6	93210–37160	.O-RING .JOINT TORIQUE	1	1				
7	6E5–44315–A0	.GASKET, WATER PUMP .JOINT, POMPE A EAU	1	1				
8	93101–28M16	.OIL SEAL .JOINT SPY	2	2				
9	93210–55M14	.O-RING .JOINT TORIQUE	1	1				
10	93101–30M17	.OIL SEAL .JOINT SPY	2	2				
11	93210–86M39	.O-RING .JOINT TORIQUE	1	1				
12	93210–19MJ1	.O-RING .JOINT TORIQUE	2	2				
13	67F–45113–00	.GASKET, UPPER CASING .JOINT, TUBE D'ARBRE	1	1				
14	68V–15312–00	.GASKET, OIL PAN .JOINT DE VENTILATEUR D'HUILE	1	1				
15	67F–13415–00	.SEAL, OIL STRAINER .JOINT, FILTRE A HUILE	1	1				
16	67F–41133–A1	.GASKET, EXHAUST MANIFOLD 1 .JOINT, PIPE D'ECHAPPEMENT	1	1				
17	93210–09165	.O-RING .JOINT TORIQUE	1	1				
18	68V–45123–00	.GASKET, MUFFLER .JOINT, POT DE DETENTE	1	1				
19	67F–45127–00	.SEAL .JOINT	1	1				
20	90430–14M09	.GASKET .JOINT	1	1				
21	67F–41134–A0	.GASKET, EXHAUST MANIFOLD .JOINT, PIPE D'ECHAPPEMENT	2	2				
22	67F–41138–00	.SEAL, EXT. 1 .JOINT DE GROUPE 1	1	1				
23	68V–W0078–00	WATER PUMP REPAIR KIT KIT DE REPARATION DE LA POMPE	1	1				
24	61A–44322–02	.INSERT, CARTRIDGE .CUVETTE	1	1				
25	93210–86M38	.O-RING .JOINT TORIQUE	1	1				
26	93210–37160	.O-RING .JOINT TORIQUE	1	1				
27	6E5–44352–01	.IMPELLER .TURBINE	1	1				

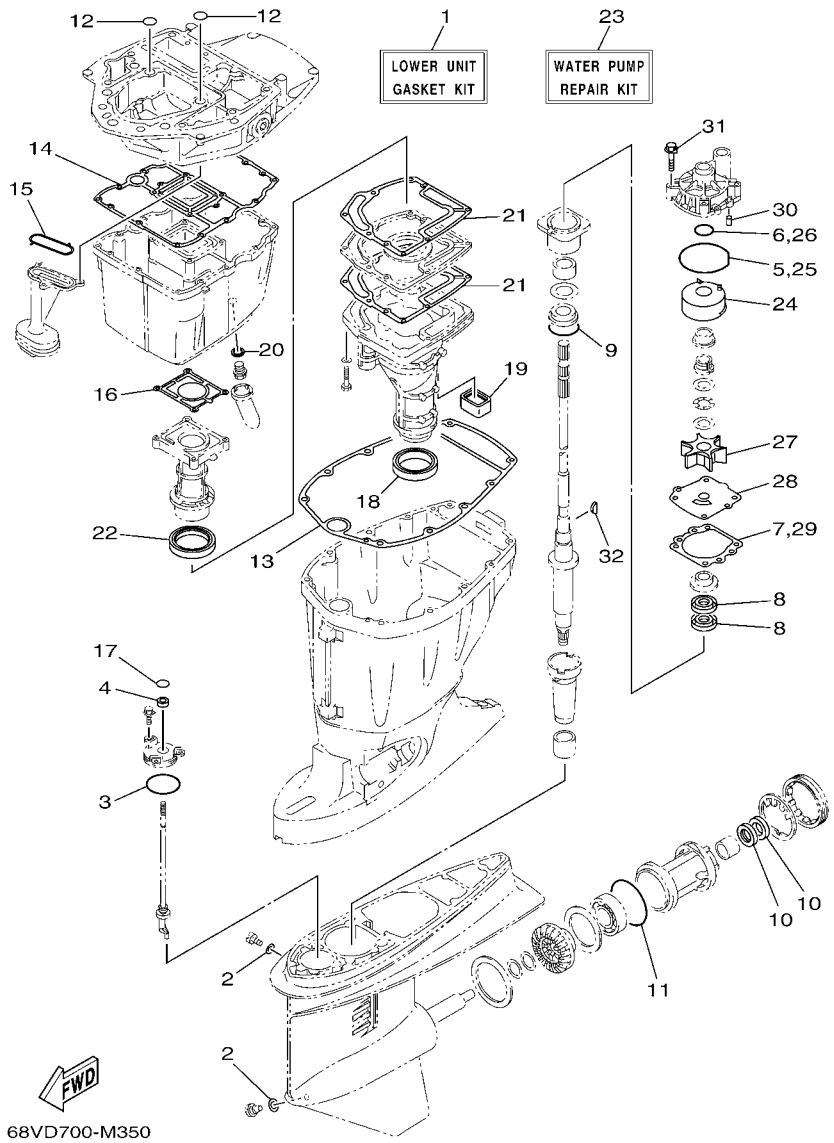

FIG. 36 REPAIR KIT 2 — KITS DE REPARATION 2

REF. NO.	PART NO. N° PIECES	DESCRIPTION DESCRIPTION	68VE	68WE				REMARKS REMARQUES
28	6EK–44323–00	.OUTER PLATE, CARTRIDGE .PLAQUE EXTERIEURE	1	1				
29	6E5–44315–A0	.GASKET, WATER PUMP .JOINT, POMPE A EAU	1	1				
30	93606–12019	.PIN, DOWEL .GOUPILLE	2	2				
31	90119–08M14	.BOLT, WITH WASHER .BOULON, AVEC RONDELLE	4	4				
32	90280–04M05	.KEY, WOODRUFF .CLAVETTE, DEMI-LUNE	1	1				

NUMERICAL INDEX
INDEX NUMERIQUE

PART NO. N° PIECES	REF. NO.
68V–11110–30–9S	5 – 2
62Y–11119–00	3 – 9
68V–11119–00	3 – 10
67F–11133–10	5 – 3
67F–11168–00	5 – 19
67F–11181–03	5 – 14
	35 – 3
6D8–11191–01–9S	5 – 18
67F–11192–01	5 – 26
69J–11301–00	3 – 33
	5 – 8
6E5–11325–00	1 – 1
	3 – 14
67F–11325–01	1 – 2
	1 – 4
	3 – 34
	5 – 9
67F–11328–00	3 – 35
	5 – 10
68V–11351–00	3 – 42
	35 – 12
6D8–11356–01	5 – 23
	35 – 15
676–11372–00	3 – 17
6CJ–11372–00	8 – 10
68V–11411–01	4 – 1
6D8–11416–00	4 – 4
6D8–11416–10	4 – 4
6D8–11416–20	4 – 4
6D8–11417–00	4 – 5
6D8–11417–10	4 – 5
6D8–11417–20	4 – 5
6D8–11417–30	4 – 5
6D8–11418–00	4 – 6
6D8–11418–10	4 – 6
6D8–11418–20	4 – 6
6D8–11536–01	6 – 22
67F–11537–00	6 – 13
67F–11590–00	6 – 17
67F–11595–00	6 – 20
6D8–11603–10	4 – 9
6D8–11604–10	4 – 9
68V–11656–00	4 – 10
68V–11656–10	4 – 10
68V–11656–20	4 – 10
68V–11656–30	4 – 10
6D8–12111–00	6 – 1
6D8–12113–00	6 – 4

PART NO. N° PIECES	REF. NO.
6D8–12116–00	6 – 3
26H–12117–00	6 – 5
4G0–12118–00	6 – 6
6D8–12121–10	6 – 2
6D8–12153–00	6 – 9
6D8–12153–10	6 – 9
6D8–12153–20	6 – 9
6D8–12153–30	6 – 9
6D8–12153–40	6 – 9
6D8–12153–50	6 – 9
6D8–12153–60	6 – 9
6D8–12153–70	6 – 9
6D8–12153–80	6 – 9
6D8–12153–90	6 – 9
6D8–12153–A0	6 – 9
6D8–12153–B0	6 – 9
6D8–12153–C0	6 – 9
6D8–12153–D0	6 – 9
6D8–12153–E0	6 – 9
6D8–12153–F0	6 – 9
6D8–12153–G0	6 – 9
6D8–12153–H0	6 – 9
6D8–12153–J0	6 – 9
6D8–12153–K0	6 – 9
6D8–12153–L0	6 – 9
6D8–12153–M0	6 – 9
6D8–12153–N0	6 – 9
6D8–12153–P0	6 – 9
6D8–12153–R0	6 – 9
6D8–12153–S0	6 – 9
6D8–12153–T0	6 – 9
6D8–12153–U0	6 – 9
6D8–12153–V0	6 – 9
6D9–12171–00	6 – 10
68V–12181–00	6 – 11
60V–12411–00	1 – 5
	5 – 28
67F–12412–00	5 – 29
68V–12413–00–9S	5 – 30
6G5–12416–00	3 – 27
67F–12435–A0	3 – 31
	35 – 6
67F–1243A–00	3 – 39
67F–1246A–01–9S	3 – 30
68V–12482–00	11 – 2
68V–12483–00	9 – 11
68V–12484–21	11 – 13
67F–12535–01	19 – 31

PART NO. N° PIECES	REF. NO.
68T–12572–00	19 – 30
6R3–12581–00	19 – 38
6R3–12582–00	19 – 39
6R3–12583–00	19 – 40
6CB–13016–00	1 – 8
	10 – 5
67F–13119–01	26 – 17
63P–13131–00	12 – 21
6AW–13132–00	10 – 26
67F–13149–00	26 – 21
68V–13152–00	8 – 13
68V–13161–10	7 – 19
67F–13300–10	26 – 12
67F–13314–02	26 – 13
67F–13329–00	26 – 15
67F–13338–00	26 – 23
67F–13339–00	26 – 22
67F–13411–00	26 – 8
67F–13415–00	26 – 11
	36 – 15
68V–13437–62	14 – 21
5GH–13440–30	1 – 3
	3 – 43
67F–13473–01	26 – 14
67F–13495–00	26 – 16
68V–13532–11	9 – 24
68V–13543–10	8 – 19
6AW–13545–10	9 – 5
68V–13546–10	9 – 7
6CB–13547–00	9 – 9
68V–13548–00	9 – 10
68V–13556–00	7 – 8
68V–13577–00	11 – 4
68V–13577–10	7 – 25
68V–13584–00	7 – 24
6CB–13593–00	10 – 17
67F–13631–03	26 – 20
68V–13635–00	7 – 9
68V–13642–00	8 – 26
68V–13645–10	7 – 14
	35 – 13
68V–13646–00	7 – 15
	35 – 16
68V–13647–00	7 – 16
	35 – 17
6C5–13713–00	8 – 9
69J–13716–00	10 – 16
68V–13751–20	7 – 3

PART NO. N° PIECES	REF. NO.
68V–13761–10	7 – 21
68V–13766–10	7 – 23
67F–13769–00	26 – 18
6AW–13781–00	10 – 30
6AW–13784–00	10 – 33
68V–13892–00	8 – 18
68V–13897–00	8 – 17
68V–13898–00	7 – 5
6CB–13906–01	10 – 8
68V–13907–20	10 – 24
67F–13914–00	26 – 19
63P–13915–00	1 – 9
	10 – 25
68V–13971–30	11 – 6
6CB–14146–00	10 – 10
68V–1416A–00	7 – 22
68V–14180–22	10 – 1
68V–14180–42	10 – 1
68V–14181–21	10 – 18
68V–14182–21	10 – 2
6P2–14191–00	10 – 19
6AW–14197–00	11 – 3
68V–14216–00	10 – 12
6CB–14216–00	10 – 6
6CB–14239–00	10 – 20
68V–14271–00	7 – 7
68V–14291–10	8 – 24
6P2–14386–00	10 – 32
68V–1441J–10	7 – 4
6CB–14429–01	10 – 22
68V–14440–10	7 – 1
6P2–14446–00	7 – 20
6CB–1447B–00	10 – 29
68V–14496–10	7 – 6
6CB–14546–00	10 – 28
6CB–14564–00	10 – 9
63P–14567–00	10 – 15
68V–14711–10–CA	25 – 9
68V–14711–30–CA	25 – 9
68V–1475A–00	9 – 16
68V–1475F–00	9 – 12
68V–1475G–01	9 – 15
68V–1475H–00	10 – 13
68V–1475J–00	10 – 14
6CB–14984–00	1 – 10
	10 – 31
6CB–14985–00	10 – 27
6CB–14989–00	9 – 14

PART NO. N° PIECES	REF. NO.
68V–15100–11	3 – 2
67F–15142–00	3 – 13
68V–15311–00–CA	26 – 1
68V–15312–00	26 – 7
	36 – 14
63P–15316–00	26 – 2
6D8–15362–00	26 – 27
6G8–15363–00	5 – 33
68V–15373–00	8 – 1
68V–2134X–00	8 – 35
68V–21457–00	8 – 29
6E5–21744–00	9 – 8
68V–24149–00	12 – 28
68V–2416A–00	9 – 3
6P2–24170–00	8 – 33
68V–2419A–00	8 – 34
6CB–24217–00	10 – 7
6AW–24300–00	11 – 7
6YK–24306–44	13 – 1
68V–24311–10	12 – 16
68V–24311–20	12 – 16
68V–24312–00	19 – 41
68V–24314–10	12 – 4
68V–24314–31	12 – 4
68V–24324–00	11 – 1
68V–24324–10	11 – 1
6YK–24360–73	13 – 2
68V–24374–00	12 – 24
6G8–24376–00	9 – 13
6R3–24377–00	12 – 2
6R3–24377–10	12 – 32
688–24378–00	9 – 6
68V–24379–10	10 – 11
6D8–24410–10	12 – 18
68V–24411–00	12 – 23
68V–24412–00	12 – 19
68V–24413–10	12 – 25
6D8–24414–00	12 – 26
68V–24423–00	12 – 22
68V–24444–00	12 – 27
68V–24452–00	12 – 34
6CB–24452–10	10 – 21
4SV–24453–00	10 – 34
68V–24454–00	12 – 20
6D8–24469–00	12 – 9
68V–24481–00	10 – 4
6CB–24482–00	10 – 23
6CB–24501–01	1 – 7

PART NO. N° PIECES	REF. NO.
6CB–24501–01	10 – 3
6D8–24519–00	12 – 10
6D8–24560–01	12 – 5
6D8–24562–00	12 – 8
6D8–24563–00	1 – 11
	12 – 6
6D8–24564–00	1 – 12
	12 – 7
60C–24566–00	12 – 12
68V–2475H–00	9 – 17
68V–2475J–00	9 – 21
68V–24864–10	11 – 12
67F–28100–01	12 – 35
67F–2812A–00	16 – 22
63P–28199–7E–D0	12 – 36
63P–28199–7E–E0	12 – 36
63P–28199–7E–F0	12 – 36
63P–28199–7E–G0	12 – 36
63P–28199–7E–H0	12 – 36
63P–28199–7E–S0	12 – 36
63P–28199–8E–K0	12 – 37
63P–28199–8E–L0	12 – 37
63P–28199–8E–M0	12 – 37
63P–28199–8E–N0	12 – 37
63P–28199–8E–P0	12 – 37
63P–28199–8E–R0	12 – 37
68V–41113–20–9S	3 – 16
67F–41114–A2	3 – 20
	35 – 8
67F–41131–01–CA	25 – 5
67F–41133–A1	25 – 6
	36 – 16
67F–41134–A0	25 – 14
	36 – 21
67F–41137–02–CA	25 – 1
67F–41138–00	25 – 16
	36 – 22
688–41211–01	20 – 42
68V–41213–00	20 – 34
682–41237–00	20 – 44
68V–42154–10	20 – 29
68V–42171–00	20 – 30
68V–42510–11–8D	22 – 9
68V–42510–31–8D	22 – 9
68V–42541–20	3 – 22
68V–42610–51	2 – 1
68V–42613–10	2 – 16
68V–42615–00	2 – 18

NUMERICAL INDEX
INDEX NUMERIQUE

PART NO. N° PIECES	REF. NO.
68V–4261A–10	2 – 2
60V–42629–00	34 – 8
68V–42647–10	2 – 3
67F–42649–00	2 – 12
68V–42652–00	2 – 6
	2 – 9
67F–42662–00	2 – 15
6D6–42675–00	2 – 21
6D6–42676–00	2 – 23
68V–42677–30	2 – 19
68V–42678–41	2 – 20
6D6–42681–00	2 – 22
68V–42710–02–8D	19 – 1
648–42715–00	20 – 26
61A–42716–00	19 – 43
67F–42717–00	19 – 25
67F–42724–00	25 – 29
68V–42725–00	19 – 19
6H1–42726–21	19 – 22
6G1–42727–00	25 – 4
68V–42738–00–8D	19 – 17
67F–42741–01–8D	19 – 44
6H4–42748–00	19 – 24
68F–42753–00	19 – 51
67F–42756–01	19 – 20
6AH–42794–40	19 – 54
6AH–42794–50	19 – 55
67F–42815–00–8D	19 – 5
67F–42816–00–8D	19 – 6
68V–42818–01	19 – 9
67F–42828–00–9S	19 – 7
68V–43111–01–8D	21 – 1
68V–43112–01–8D	21 – 9
64E–43126–00	21 – 35
64E–43131–30	21 – 14
64E–43139–10	22 – 1
64D–43144–00	19 – 14
66T–43144–00	21 – 25
6E5–43145–01	31 – 8
6G5–43148–00	21 – 30
6G5–43181–02	21 – 27
6G5–43185–02	21 – 28
64E–43311–10–8D	21 – 21
64E–43311–20–8D	21 – 21
63P–43376–00	22 – 6
68V–43800–07	23 – 1
64E–43802–00	24 – 8
64E–43805–01	24 – 37

PART NO. N° PIECES	REF. NO.
64E–4380F–00	24 – 33
64E–4380J–00	24 – 30
64E–43810–02	23 – 6
64E–43811–02	23 – 7
6E5–43814–02	23 – 14
64E–43816–00	24 – 17
64E–43817–00	23 – 5
64E–43817–11	24 – 19
6BC–43818–00	23 – 34
64E–4381G–00	23 – 28
64E–43820–03	23 – 16
64E–43821–03	23 – 17
64E–43822–00	23 – 18
64E–43825–03	23 – 2
64E–43827–00	24 – 22
64E–43828–01	23 – 23
64E–43829–01	23 – 24
64E–4382G–00	23 – 30
68V–43830–01	24 – 4
64E–43831–00	24 – 2
6AW–43841–00	24 – 7
64E–43843–00	24 – 6
64E–43843–10	24 – 38
64E–4384J–00	23 – 19
64E–4384N–00	23 – 31
64E–43850–00	24 – 15
66Y–43851–00	24 – 11
68V–43855–00	24 – 14
64E–43858–00	24 – 12
6AW–43858–00	24 – 18
6E5–43858–00	23 – 29
72X–43858–00	24 – 5
64E–43859–00	24 – 13
64E–43860–01	24 – 20
6E5–43862–00	23 – 11
	23 – 15
6G5–43863–00	24 – 10
6E5–43864–00	23 – 21
6G5–43864–00	23 – 20
64E–43865–00	24 – 16
6G5–43865–01	24 – 35
64E–43866–00	23 – 10
64E–43867–00	23 – 9
64E–43868–00	24 – 3
64E–43869–00	23 – 27
6H1–4386K–10	24 – 29
6E5–43872–00	23 – 13
64E–43873–00	24 – 24

PART NO. N° PIECES	REF. NO.
6E5–43874–01	23 – 22
6AW–43875–00	24 – 25
64E–43879–01	24 – 27
64E–43879–11	24 – 26
64E–4387A–00	24 – 23
68V–43880–04	24 – 28
64E–43883–00	23 – 12
64E–4388E–01	23 – 26
64E–4388E–11	24 – 1
6AW–4388J–00	23 – 3
64E–43891–00	24 – 31
64E–43892–00	24 – 34
6E5–43896–00	24 – 9
64E–43897–00	23 – 25
64E–43898–00	23 – 8
68V–44117–02	20 – 5
68V–44118–00	20 – 22
68V–44120–11	20 – 17
68V–44120–31	20 – 17
68V–44121–00	20 – 15
68V–44122–01	20 – 12
67F–44135–00	20 – 35
6L6–44150–02	27 – 17
6E5–44150–03	29 – 19
61A–44311–01	27 – 23
	29 – 25
6E5–44312–00	28 – 4
	28 – 20
	30 – 4
	30 – 20
6E5–44315–A0	27 – 30
	29 – 32
	36 – 7
	36 – 29
61A–44322–02	27 – 24
	29 – 26
	36 – 24
6EK–44323–00	27 – 29
	29 – 31
	36 – 28
6E5–44352–01	27 – 27
	29 – 29
	36 – 27
68V–44361–11	28 – 2
68V–44361–30	28 – 2
	30 – 2
6E5–44365–00	28 – 3
	28 – 19

PART NO. N° PIECES	REF. NO.
6E5–44365–00	30 – 3
	30 – 19
6E5–44366–00	28 – 1
	30 – 1
6BL–44391–00	19 – 23
6P2–44391–00	19 – 50
67F–44514–01	22 – 26
67F–44526–00	22 – 29
6G5–44526–00	21 – 3
67F–44533–00	22 – 31
68V–44551–00–8D	22 – 14
68V–44553–00–8D	22 – 24
61A–44555–01–94	22 – 17
61A–44575–00	22 – 16
68V–44581–01	3 – 4
68V–45111–11–8D	25 – 18
68V–45111–31–8D	25 – 18
67F–45113–00	25 – 26
	36 – 13
68V–45123–00	25 – 10
	36 – 18
67F–45127–00	25 – 17
	36 – 19
67F–45151–00	25 – 23
6C5–45155–00	25 – 25
67F–45181–00–CA	25 – 15
688–45214–02	28 – 10
	30 – 10
688–45215–02	28 – 11
	30 – 11
6G5–45251–02	1 – 13
	21 – 2
68V–45300–13–8D	27 – 1
68V–45300–33–8D	27 – 1
68W–45300–33–8D	29 – 1
6E5–45301–07–8D	27 – 2
	29 – 2
6E5–45318–00	25 – 21
6E5–45321–00	27 – 13
	29 – 15
6E5–45331–00–9S	27 – 33
	29 – 35
6E5–45332–00–CA	27 – 56
6L6–45332–00–CA	29 – 59
688–45341–10	27 – 7
	29 – 9
6E5–45344–00	27 – 39
	29 – 41

PART NO. N° PIECES	REF. NO.
6L6–45371–00	1 – 16
	30 – 14
6E5–45371–01	1 – 16
	28 – 14
688–45375–00	28 – 9
	30 – 9
663–45376–00	28 – 8
	30 – 8
6E5–45378–00	27 – 10
	29 – 12
688–45383–02	27 – 66
	29 – 70
688–45384–02	27 – 67
	29 – 71
68V–45501–10	27 – 42
68V–45501–30	27 – 42
	29 – 44
61A–45527–00	27 – 22
	29 – 24
6E5–45536–00	27 – 9
	29 – 11
61A–45538–00	27 – 19
	29 – 21
6L6–45538–00	29 – 6
68V–45551–00	27 – 43
	29 – 45
68V–45560–00	27 – 45
68W–45560–00	29 – 47
6E5–45567–01	27 – 5
	29 – 7
6E5–45567–10	27 – 5
	29 – 7
6E5–45567–20	27 – 5
	29 – 7
6E5–45567–30	27 – 5
	29 – 7
6E5–45567–40	27 – 5
	29 – 7
6E5–45567–50	27 – 5
	29 – 7
6E5–45567–60	27 – 5
	29 – 7
68W–45570–10	29 – 61
68V–45571–00	27 – 58
6E5–45576–00	27 – 59
6L6–45576–00	29 – 62
6L6–45577–00	27 – 63
	29 – 68

PART NO. N° PIECES	REF. NO.
6L6–45577–10	27 – 63
	29 – 68
6L6–45577–20	27 – 63
	29 – 68
6L6–45577–30	27 – 63
	29 – 68
6L6–45577–40	27 – 63
	29 – 68
6L6–45577–50	27 – 63
	29 – 68
6L6–45577–60	27 – 63
	29 – 68
6K1–45578–01	29 – 64
6K1–45578–10	29 – 64
6K1–45578–20	29 – 64
6K1–45578–30	29 – 64
6K1–45578–40	29 – 64
6K1–45578–50	29 – 64
6K1–45578–60	29 – 64
6E5–45587–01	27 – 36
	29 – 38
6E5–45587–10	27 – 36
	29 – 38
6E5–45587–20	27 – 36
	29 – 38
6E5–45587–30	27 – 36
	29 – 38
6E5–45587–40	27 – 36
	29 – 38
6E5–45587–50	27 – 36
	29 – 38
6E5–45587–60	27 – 36
	29 – 38
68W–45611–00	29 – 50
6E5–45611–01	27 – 47
68V–45631–01	27 – 54
	29 – 57
6E5–45633–01	27 – 55
	29 – 58
6E5–45634–02	27 – 48
	29 – 51
6L6–45930–01	30 – 26
688–45930–02	28 – 26
688–45932–60	28 – 26
68V–45941–00	28 – 26
6E5–45941–00	28 – 26
68V–45943–00	28 – 26
6E5–45943–00	28 – 26

NUMERICAL INDEX
INDEX NUMERIQUE

PART NO. N° PIECES	REF. NO.
6E5–45945–01	28 – 26
6E5–45947–00	28 – 26
6E5–45949–00	28 – 26
6E5–45952–00	28 – 26
6E5–45954–00	28 – 26
6E5–45956–00	28 – 26
6E5–45958–00	28 – 26
6L6–45970–00	30 – 26
688–45970–03	28 – 26
62A–45970–10	28 – 26
6L6–45972–00	30 – 26
688–45972–02	28 – 26
62A–45972–10	28 – 26
688–45974–02	28 – 26
62A–45974–10	28 – 26
62A–45976–00	28 – 26
688–45976–01	28 – 26
688–45978–60	28 – 26
63P–45987–00	28 – 21
	30 – 21
688–45997–01	28 – 22
	30 – 22
67F–46241–00	6 – 16
6Y8–48277–00	32 – 16
	32 – 16
	32 – 17
663–48344–00	20 – 3
	20 – 27
68V–48511–01	22 – 33
67F–48538–00	20 – 1
6E5–61301–01	31 – 10
6E5–61303–00	31 – 14
6E5–61311–11	31 – 12
6E5–61313–00	31 – 11
6E5–61315–00	31 – 13
6E5–61350–02	31 – 1
6E5–61351–01	31 – 2
6E5–61355–00	31 – 5
68V–81145–01	7 – 27
68V–81147–00	7 – 11
6H5–81315–00	32 – 18
445–81328–20	14 – 7
68V–8132G–00	17 – 1
6D8–81332–00	14 – 14
68V–81337–00	14 – 16
63D–81345–20	14 – 5
68V–81410–00	14 – 4
68V–81450–00	14 – 1
68V–81460–00	14 – 2
68V–81673–10	14 – 8
68V–81800–02	18 – 1
69J–81801–00	18 – 5
67F–81807–00	18 – 10
67F–81808–00	18 – 8
67F–81809–00	18 – 19
67F–81810–00	18 – 3
67F–81813–00	18 – 6
68F–81820–00	18 – 7
67F–81821–00	18 – 13
6K7–81826–11	18 – 24
69J–81828–00	18 – 25
68V–8182L–00	7 – 28
67F–81830–00	18 – 17
67F–81832–00	18 – 11
67F–81836–00	18 – 12
6C5–81839–00	18 – 21
67F–8183R–00	18 – 15
60V–8183T–00	18 – 18
6P2–8183X–00	16 – 10
	16 – 12
69J–81840–00	18 – 4
67F–81841–00	18 – 14
60X–81842–00	18 – 20
67F–81846–00	18 – 26
67F–81850–00	18 – 2
67F–81857–00	18 – 9
6C5–81869–00	18 – 23
67F–81891–00	18 – 16
68V–81919–10	16 – 49
60V–81925–00	18 – 28
68V–81941–02	18 – 22
68V–81942–11	16 – 21
68V–81948–02	16 – 16
68V–8194A–00	16 – 6
60E–81950–00	16 – 4
63P–81950–00	16 – 11
68F–81953–00	16 – 7
68V–81960–10	15 – 20
6AH–81994–40	14 – 24
6AH–81994–50	14 – 25
6AH–81995–40	14 – 22
6AH–81995–50	14 – 23
6AG–81996–00	14 – 26
68V–82105–01	16 – 2
	16 – 50
6E5–82148–00	21 – 6
6E5–82148–00	21 – 10
66K–82149–00	21 – 24
68V–82149–30	21 – 24
67F–82151–00	16 – 26
67F–82151–10	16 – 27
67F–8215B–10	16 – 24
67F–8215B–20	16 – 25
68V–82310–00	15 – 9
68V–82310–10	15 – 10
6A0–82317–00	16 – 17
	16 – 39
67F–82361–00	15 – 18
67F–82362–00	15 – 19
68V–82388–00	15 – 14
68V–82388–10	15 – 16
68V–82389–00	8 – 5
68V–82504–00	17 – 16
6Y8–82509–10	32 – 8
6Y8–82521–11	32 – 15
6D8–8252H–01	17 – 21
68V–8253B–00	15 – 2
68V–8253C–00	15 – 6
6D8–82544–00	8 – 3
63D–82563–10	17 – 17
6D8–82581–01	16 – 42
68F–82582–00	18 – 29
6DA–82582–00	16 – 28
6DA–82582–10	16 – 29
6Y8–82582–11	16 – 30
6E5–82587–00	17 – 18
6E5–82588–00	19 – 26
61A–82588–01	20 – 7
68V–82588–20	17 – 5
68V–82590–71	16 – 23
68V–82594–00	16 – 20
60V–8259F–00	20 – 6
63P–825E0–01	33 – 1
6X4–83383–00	32 – 5
6X4–83386–00	32 – 6
6E5–83558–00	28 – 17
	30 – 17
6E5–83558–10	27 – 12
	29 – 14
67F–83614–00	17 – 19
68V–83626–00	5 – 35
6AW–8366B–01	34 – 2
60V–8366D–00	34 – 3
67H–83672–01	22 – 3
68F–83688–10	7 – 10
6Y8–8454G–00	32 – 11
72X–85075–L0	24 – 21
60V–85516–00	15 – 3
689–85547–00	12 – 1
68V–85580–00	14 – 3
68V–85753–00	17 – 13
	35 – 7
67F–85757–00	17 – 12
6CJ–85780–00	17 – 24
67F–85790–00	17 – 11
68V–85885–10	7 – 26
68V–8591A–82	15 – 1
6C5–86120–00	9 – 1
6Y8–86260–02	32 – 2
6Y8–86260–12	32 – 2
6AA–86261–00	32 – 3
6AA–86261–22	32 – 3
6Y8–86267–00	32 – 1
60V–8A4L1–12	34 – 1
K1C–A3275–00	4 – 8
K0A–A3721–00	6 – 7
K0A–A3722–00	6 – 8
68V–W0001–06	35 – 1
68V–W0001–21	36 – 1
68V–W0078–00	1 – 17
	36 – 23
68V–W009A–08–9S	5 – 1
68V–W009B–13–9S	3 – 1
68V–W1164–02	4 – 7
68V–W1164–12	4 – 7
68V–W1364–10	7 – 12
90101–09M70	31 – 18
90101–12047	21 – 38
90101–12M05	21 – 38
	21 – 38
90105–06M07	3 – 36
	5 – 11
90105–06M14	16 – 3
	16 – 51
90105–08242	8 – 21
90105–08M87	8 – 20
90105–10M00	28 – 15
	30 – 15
90109–06M80	19 – 15
	19 – 29
	19 – 47
90109–06M81	19 – 27
90109–06M81	34 – 4
90109–06M82	19 – 8
	19 – 18
90109–06M86	17 – 20
	19 – 21
	19 – 37
	20 – 2
90109–12007	22 – 28
90109–14007	22 – 21
90116–10062	22 – 34
90119–06071	15 – 5
90119–06266	7 – 13
90119–06M10	27 – 16
	29 – 18
90119–06M17	8 – 14
	8 – 40
90119–06M24	8 – 28
90119–06M59	16 – 19
90119–06M79	5 – 27
90119–06M83	12 – 31
90119–06M92	14 – 20
90119–06MA2	3 – 32
90119–06MA4	3 – 21
90119–07234	5 – 7
90119–07235	5 – 5
90119–08091	22 – 27
90119–08M14	27 – 32
	29 – 34
	36 – 31
90119–08M22	19 – 2
90119–08M58	25 – 28
90119–08M66	3 – 6
90119–08M91	5 – 17
90119–10050	6 – 14
90119–10M08	25 – 19
90119–10M72	6 – 21
90119–10M88	3 – 5
90119–10M89	28 – 7
	30 – 7
90152–05M07	28 – 12
	30 – 12
90155–10005	5 – 16
90159–05059	22 – 2
	33 – 4
90159–06M28	19 – 46
90167–06002	19 – 32
90167–06M00	32 – 12
90170–09M05	31 – 19
90170–14M06	31 – 15
90170–16M01	27 – 44
	29 – 46
90170–40008	6 – 23
90171–18M04	28 – 24
	30 – 24
90179–06M28	20 – 33
90179–08003	18 – 27
90179–24002	14 – 13
90185–05002	28 – 13
	30 – 13
90185–09M01	31 – 6
	31 – 20
90185–10027	22 – 35
90185–12M12	22 – 32
90185–22M11	21 – 19
90201–06068	19 – 12
90201–06M30	32 – 13
90201–06M62	20 – 40
90201–09M02	20 – 20
90201–10060	23 – 32
90201–10M20	31 – 7
90201–10M76	31 – 17
90201–12426	21 – 40
90201–12M09	22 – 30
90201–13M01	21 – 39
90201–15M58	22 – 20
90201–16M55	22 – 19
90201–22M01	27 – 20
	29 – 22
90201–24014	14 – 12
90201–26M00	29 – 49
90201–26M59	21 – 18
90201–30M92	27 – 64
90201–38M60	22 – 10
90202–07M07	20 – 13
90202–32M19	22 – 18
90202–40M47	22 – 13
90206–10M04	20 – 31
	20 – 41
90206–15M18	19 – 11
90206–22M19	27 – 21
	29 – 23
90249–06M19	21 – 31
90250–08M07	27 – 53
	29 – 56
90280–04008	6 – 24
90280–04M05	27 – 28

NUMERICAL INDEX
INDEX NUMERIQUE

PART NO. N° PIECES	REF. NO.
90280–04M05	29 – 30
	36 – 32
90280–04M08	14 – 11
90282–04010	27 – 65
	29 – 69
90340–08002	27 – 6
	29 – 8
90340–14M06	3 – 7
	26 – 3
90340–18M09	3 – 18
90344–51019	5 – 4
90386–06M12	20 – 16
90386–10M16	21 – 29
90386–15M73	19 – 10
90386–22M98	21 – 36
	23 – 35
90386–25M31	21 – 17
90386–38M32	22 – 12
90386–90M90	20 – 19
90387–05004	33 – 5
90387–06119	16 – 18
90387–06263	26 – 10
90387–06289	8 – 16
	8 – 39
	15 – 4
90387–06M05	16 – 36
90387–06M21	20 – 32
	20 – 36
90387–06M43	19 – 49
90387–06M71	14 – 17
90387–08M37	19 – 4
90387–09017	8 – 22
90387–10M05	21 – 32
90387–10M61	31 – 3
90401–20007	3 – 44
90430–06M03	3 – 37
	5 – 12
90430–08020	1 – 15
	27 – 8
	29 – 10
	36 – 2
90430–14115	3 – 8
	35 – 5
90430–14M09	1 – 14
	26 – 4
	36 – 20
90430–18130	3 – 19
	35 – 11

PART NO. N° PIECES	REF. NO.
90445–07017	34 – 6
90445–076K2	28 – 16
	30 – 16
90445–07ME8	27 – 11
90445–07ME9	27 – 11
	29 – 13
90445–15M03	6 – 19
90447–07013	34 – 7
90461–04011	9 – 25
90462–06018	19 – 33
90462–10027	20 – 11
90464–06001	15 – 15
90464–07009	9 – 23
90464–09129	11 – 10
90464–09M47	15 – 24
90464–10006	9 – 27
90464–10010	3 – 25
90464–10011	9 – 4
90464–11008	11 – 8
90464–11012	7 – 17
	9 – 19
90464–12010	11 – 9
	16 – 41
90464–12183	15 – 17
90464–12224	9 – 29
	12 – 17
90464–16001	3 – 46
90464–18004	3 – 24
	3 – 45
	9 – 28
	16 – 40
	19 – 53
90464–18246	8 – 32
90464–20006	9 – 20
90464–20011	8 – 8
90464–20181	7 – 18
90464–20258	19 – 52
90464–26002	8 – 41
90464–30003	16 – 45
	16 – 46
	16 – 47
90465–08M23	19 – 28
90465–08M63	21 – 22
90465–11M10	3 – 23
	3 – 26
	11 – 5
	11 – 11
	12 – 3

PART NO. N° PIECES	REF. NO.
90465–11M10	12 – 11
	12 – 29
	12 – 33
	19 – 42
	21 – 20
	22 – 5
	28 – 18
	30 – 18
	32 – 10
	33 – 6
	34 – 5
90465–11M59	3 – 40
90465–12M53	16 – 37
90465–13M11	16 – 48
90465–13M18	16 – 1
	16 – 34
	16 – 35
90467–20M15	3 – 41
	8 – 2
90468–18008	20 – 4
	20 – 14
	20 – 28
90480–06M19	17 – 2
90480–10M23	8 – 15
	8 – 38
90480–12072	5 – 22
90480–12314	14 – 19
90480–13M24	19 – 48
90480–15M31	14 – 18
90480–20M05	3 – 29
90480–22M15	19 – 3
90501–12082	20 – 25
90501–16M11	3 – 28
90501–16M37	27 – 49
	29 – 52
90506–14M24	21 – 34
90506–16M34	19 – 16
90506–16M39	6 – 18
90560–12M01	31 – 4
91490–20015	20 – 21
91490–40030	28 – 25
	30 – 25
91690–30020	21 – 33
91690–50014	8 – 23
91809–08006	5 – 6
92903–08100	18 – 33
	18 – 35
92903–08600	18 – 31

PART NO. N° PIECES	REF. NO.
92907–04600	5 – 21
92990–06100	2 – 4
	2 – 13
92990–18200	28 – 23
	30 – 23
92995–06100	15 – 12
	15 – 22
	15 – 26
	16 – 32
	17 – 9
	19 – 35
	20 – 38
92995–06200	19 – 36
92995–06600	2 – 8
	2 – 11
	3 – 12
	5 – 25
	5 – 32
	8 – 7
	8 – 31
	8 – 37
	12 – 15
	15 – 8
	15 – 13
	15 – 23
	15 – 27
	16 – 15
	16 – 33
	16 – 44
	17 – 4
	17 – 7
	17 – 10
	17 – 15
	17 – 23
	20 – 10
	20 – 39
	21 – 5
	21 – 8
	21 – 12
	25 – 8
	25 – 12
	33 – 3
	34 – 10
92995–08600	21 – 16
	27 – 41
	29 – 43
92995–10600	22 – 8
92995–14600	22 – 23

PART NO. N° PIECES	REF. NO.
93101–28M16	27 – 34
	29 – 36
	36 – 8
93101–30M17	27 – 61
	29 – 66
	36 – 10
93101–48002	4 – 3
	35 – 10
93102–08M43	24 – 36
93102–38008	6 – 15
	35 – 4
93102–48017	4 – 2
	35 – 9
93106–09014	27 – 15
	29 – 17
	36 – 4
93210–04279	32 – 9
93210–09165	20 – 18
	36 – 17
93210–10M74	23 – 4
93210–16275	31 – 9
93210–19MJ1	26 – 26
	36 – 12
93210–24M79	5 – 34
	35 – 2
93210–30682	12 – 30
	35 – 14
93210–33003	8 – 11
93210–37160	27 – 26
	29 – 28
	36 – 6
	36 – 26
93210–37MH7	22 – 11
93210–55M14	27 – 38
	29 – 40
	36 – 9
93210–58144	27 – 14
	29 – 16
	36 – 3
93210–86M38	27 – 25
	29 – 27
	36 – 5
	36 – 25
93210–86M39	27 – 62
	29 – 67
	36 – 11
93306–208U0	27 – 57
93315–345W0	29 – 4

PART NO. N° PIECES	REF. NO.
93315–425U7	27 – 46
	29 – 48
93315–43061	29 – 65
93315–430U8	27 – 60
93315–628U9	27 – 3
	29 – 3
93317–330U2	27 – 35
	29 – 37
93332–000U7	27 – 4
93332–000V7	29 – 60
93341–360U8	29 – 5
93341–440U5	29 – 63
93341–930V2	27 – 37
	29 – 39
93410–22M11	21 – 37
93410–37M04	22 – 15
93420–36M01	25 – 22
93501–04M02	20 – 24
93503–16003	27 – 52
	29 – 55
93507–32009	27 – 50
	29 – 53
93511–32017	27 – 51
	29 – 54
93604–12M07	26 – 25
93605–10108	6 – 12
93606–12019	3 – 3
	26 – 6
	27 – 31
	29 – 33
	36 – 30
93606–19M23	25 – 13
93608–12M05	28 – 5
	30 – 5
93608–16M16	25 – 3
	25 – 20
93700–06M03	21 – 13
	21 – 23
94702–00400	1 – 6
	5 – 36
95333–08600	18 – 32
	18 – 34
95380–05600	20 – 43
95380–06600	2 – 5
	2 – 14
	2 – 17
	9 – 2
	19 – 45

PART NO. N° PIECES	REF. NO.
95380–08600	12 – 13
95380–12600	21 – 41
95380–14600	22 – 22
95380–14700	31 – 16
95780–06300	32 – 14
95780–10300	22 – 7
95812–06025	26 – 9
95875–06020	7 – 2
95875–06025	8 – 4
95895–06010	9 – 18
	9 – 22
	9 – 26
	25 – 27
95895–06030	8 – 27
95895–08020	8 – 25
97013–08045	18 – 30
97075–06030	25 – 11
97075–06070	25 – 7
97095–06008	19 – 34
97095–06010	21 – 7
	21 – 26
97095–06012	2 – 7
	2 – 10
	8 – 6
	8 – 30
	15 – 7
	17 – 6
	17 – 22
97095–06014	16 – 43
97095–06016	8 – 36
	12 – 14
	15 – 25
	16 – 31
	17 – 3
	17 – 8
	17 – 14
	19 – 13
	33 – 2
	34 – 9
97095–06020	3 – 11
	16 – 14
97095–06025	5 – 31
	15 – 11
	15 – 21
97095–06030	5 – 24
	21 – 4
97095–06035	20 – 37
97095–06040	20 – 9

PART NO. N° PIECES	REF. NO.
97095–08020	21 – 15
97095–08025	27 – 40
	29 – 42
97575–06525	20 – 23
	26 – 5
97575–08540	3 – 38
	5 – 13
	25 – 2
97575–10530	23 – 33
97575–10540	22 – 25
97575–10545	28 – 6
	30 – 6
97595–06545	26 – 24
97595–06610	16 – 9
	16 – 13
97595–06630	14 – 10
97607–04110	14 – 6
97607–04310	24 – 32
97780–60620	16 – 8
	32 – 7
97780–60625	16 – 5
	16 – 38
97880–06035	32 – 12
97885–06012	21 – 11
97980–05214	8 – 12
97980–06216	25 – 24
	32 – 4
97985–04116	20 – 8
97985–06210	14 – 15
97985–06216	22 – 4
98507–04008	5 – 20
	10 – 35
98780–04016	3 – 15
99001–08600	27 – 18
	29 – 20
99530–08012	14 – 9
99530–14016	5 – 15