YAMAHA

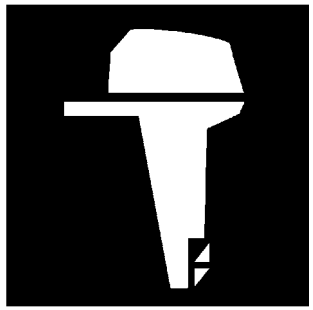

PARTS CATALOGUE
CATALOGUE DE PIECES DETACHEES

F200GET'14 (6DV2)
FL200GET'14 (6DW2)

1N6DV-300F1

( )

YAMAHA GENUINE Parts & Accessories

2014/12/11

NEWS NO.	DATE	COMMENT
PE0-OM-140011	Aug.,18,2014	MOD:LOW ER CASING & DRIVE 2,4 LIST/ILLUSTRATION REVISION
PE0-OM-140046	Dec.,2,2014	MOD:F(L)200G ELECTRICAL 1, 4 LIST REVISION

F200GET/FL200GET
PARTS CATALOGUE
©2014 by Yamaha Motor Co., Ltd.
1st edition, May 2014
All rights reserved.
Any reprinting or unauthorized use
without the written permission of
Yamaha Motor Co., Ltd.
is expressly prohibited.
Printed in Japan.

F200GET/FL200GET
CATALOGUE DE PIECES DETACHEES
©2014 par Yamaha Motor Co., Ltd.
1re édition, mai 2014
Tous droits réservés
Toute réimpression ou utilisation
non autorisée sans la permission écrite
de la Yamaha Motor Co., Ltd.
est formellement interdite.
Imprimé au Japon

FOREWORD

This Parts Catalogue is related to the parts for the model(s) on the cover page. When you are ordering replacement parts, please refer to this Parts Catalogue and quote both part numbers and part names correctly.

1. Modifications or additions which have been made after the issue of the Parts Catalogue will be announced in the Parts News.
   It is advisable that you make the necessary corrections to the Parts Catalogue according to the Parts News.

2. Abbreviations
   The following abbreviations are used in this Parts Catalogue.

   "UR" Use specified parts number.
   "UN" Use as many as needed.
   "AP" Alternate Parts
   "LM" Locally Made (Parts need to be ordered locally)
   "F#" Frame No. (Applicable machine No.)
   "O/S" Over Size

3. The number of components for assembly
   - Parts, which are to be supplied in an assembly, are listed with a dot (.) in front of the part name as shown below.
   - The numeral appearing to the right of each component part indicates the quantity of parts for each assembly unit.

PART NO.	DESCRIPTION	Q'TY	REMARKS
2F5–83310–60	FRONT FLASHER LIGHT ASSY	2	
115–83311–60	.BULB (6V–18W)	1	

4. Applicable colours of graphics are represented in the "REMARKS" as shown below.

PART NO.	DESCRIPTION	Q'TY	REMARKS
2N4–24110–00–X5	FUEL TANK COMP.	2	MXR
3J1–24240–10	.GRAPHIC, FUEL TANK	1	FOR MXR

5. Note that the illustrations for reference in finding parts numbers are not to be used for assembling. When assembling, please use the applicable service manual.

6. The asterisk (*) before a reference number indicates modified items after the first edition.

7. Applicable Serial No.

   Engine Serial No.

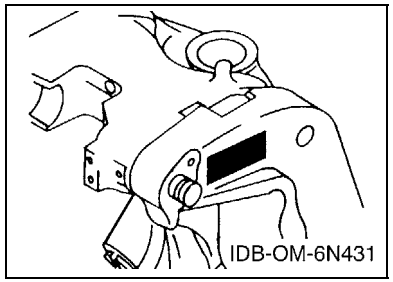

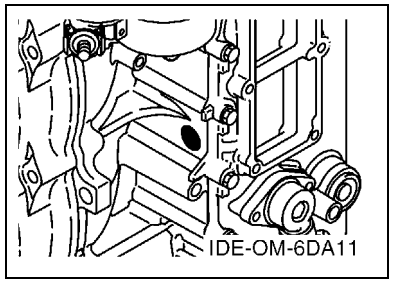

8. Applicable Engine Starting Serial No.

Model	Serial No.	Model	Serial No.
F200G	6DV-1001141	FL200G	6DW-1000557

9. Applicable Colour Code

Abbreviation	Colour Name	Colour Code
DBN1	DARK BLUISH GRAY 1	008D

10. Quantity Column Information

Column No.	Name Of Q'ty Column	Applicable Model
1	6DV2	F200GET
2	6DW2	FL200GET

AVANT–PROPOS

Ce catalogue de pièces détachées concerne les pièces pour le(s) modèle(s) indiqué(s) sur la page de couverture. Lorsque vous commandez des pièces de rechange, veuillez vous référer à ce catalogue de pieces détachées et indiquer clairement les numéros et les noms des pièces détachées.

1. Les modifications ou ajouts ayant été effectués après la parution du catalogue de pièces détachées seront décrits dans les Bulletins d'information concernant les pièces détachées.
   Il est recommandé que vous apportiez les corrections nécessaires au catalogue des pièces détachées en vous référant aux Bulletins d'information.

2. Abréviations
   Dans ce catalogue, les abréviations suivantes sont utilisées:

   "UR" Utiliser le numéro de pièces spécifié.
   "UN" Utiliser autant que nécessaire.
   "AP" Pièces de substitution
   "LM" Fabrication locale (les pièces doivent être commandées localement.)
   "F#" N° de cadre (applicable au N° de série)
   "O/S" Surdimensionné

3. Nombre de pièces d'un assemblage
   - Les pièces fournies comme composants d'un assemblage sont précédées d'un point (.) de la manière indiquée ci–dessous.
   - Le chiffre apparaissant à la droite de chaque composant indique la quantité de pièces pour chaque unité d'assemblage.

N° PIECES	DESCRIPTION	QTE	REMARQUES
2F5–83310–60	ENS. CLIGNOTANT AVANT	2	
115–83311–60	.AMPOULE (6V–18W)	1	

4. Les couleurs concernant les graphiques sont indiquées dans la colonne "REMARQUES", comme indiqué ci–dessous.

N° PIECES	DESCRIPTION	QTE	REMARQUES
2N4–24110–00–X5	RESERVOIR A ESSENCE.	2	MXR
3J1–24240–10	.GRAPHIQUE	1	POUR MXR

5. Veuillez noter que les illustrations sont indiquées à titre de référence pour trouver les numéros de pièces, non pour être utilisées lors de l'assemblage. Lors de l'assemblage, veuillez utiliser le manuel d'entretien adéquat.

6. L'astérisque (*) placé devant un numéro de référence indique des éléments qui ont été modifiés après la première édition.

7. N° de série applicable

   N° de Série du moteur

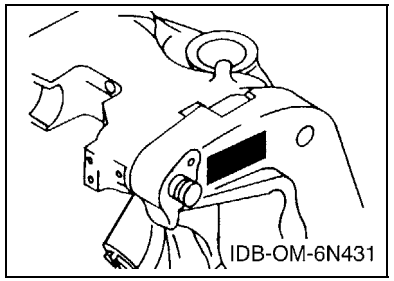

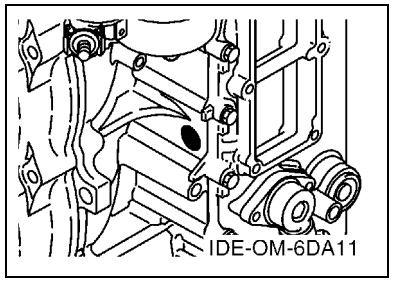

8. N° de série initial du moteur applicable

Modèle	N° de série	Modèle	N° de série
F200G	6DV-1001141	FL200G	6DW-1000557

9. Code couleur applicable

Abréviation	Nom de la couleur	Code couleur
DBN1	DARK BLUISH GRAY 1	008D

10. Informations relatives à la colonne Quantité

N° de la colonne	Nom de la colonne Qté	Modèle applicable
1	6DV2	F200GET
2	6DW2	FL200GET

CONTENTS

SCHEDULED SERVICE PARTS 1
TOP COWLING 2
CYLINDER & CRANKCASE 1 3
CRANKSHAFT & PISTON 5
CYLINDER & CRANKCASE 2 6
CYLINDER & CRANKCASE 3 7
CYLINDER & CRANKCASE 4 9
VALVE 10
INTAKE 1 13
INTAKE 2 14
INTAKE 3 16
FUEL INJECTION PUMP 1 17
FUEL INJECTION PUMP 2 19
FUEL 1 20
FUEL 2 22
GENERATOR 23
ELECTRICAL 1 25
ELECTRICAL 2 27
ELECTRICAL 3 28
ELECTRICAL 4 29
ELECTRICAL 5 30
ELECTRICAL 6 31
STARTING MOTOR 32
BOTTOM COWLING 1 33
BOTTOM COWLING 2 35
BOTTOM COWLING 3 36
CONTROL 37
BRACKET 1 39
BRACKET 2 41
POWER TRIM & TILT ASSY 1 43
POWER TRIM & TILT ASSY 2 45
UPPER CASING 47
OIL PAN 49
LOWER CASING & DRIVE 1 50
LOWER CASING & DRIVE 2 54
LOWER CASING & DRIVE 3 55
LOWER CASING & DRIVE 4 59
STEERING GUIDE 60
OPTIONAL PARTS 1 61
OPTIONAL PARTS 2 62
REPAIR KIT 1 63
REPAIR KIT 2 64

INDEX

NUMERICAL INDEX 66

TABLE DES MATIERES

PIECES MAINTENANCE PERIODIQUE 1
CAPOT SUPERIEUR 2
CYLINDRE & CARTER 1 3
VILEBREQUIN & PISTON 5
CYLINDRE & CARTER 2 6
CYLINDRE & CARTER 3 7
CYLINDRE & CARTER 4 9
SOUPAPE 10
ADMISSION 1 13
ADMISSION 2 14
ADMISSION 3 16
POMPE A INJECTEUR 1 17
POMPE A INJECTEUR 2 19
CARBURANT 1 20
CARBURANT 2 22
GENERATRICE 23
PARTIE ELECTRIQUE 1 25
PARTIE ELECTRIQUE 2 27
PARTIE ELECTRIQUE 3 28
PARTIE ELECTRIQUE 4 29
PARTIE ELECTRIQUE 5 30
PARTIE ELECTRIQUE 6 31
DEMARREUR ELECTRIQUE 32
CAPOT INFERIEUR 1 33
CAPOT INFERIEUR 2 35
CAPOT INFERIEUR 3 36
COMMANDE 37
SUPPORT 1 39
SUPPORT 2 41
PUISSANCE PARER ET INCLINER 1 43
PUISSANCE PARER ET INCLINER 2 45
FOURREAU 47
VENTILATEUR D'HUILE 49
BOITIER D'HELICE TRANSMISSION1 50
BOITIER D HELICE TRANSMISSION2 54
BOITIER D'HELICE TRANSMISSION3 55
BOITIER D'HELICE TRANSMISSION4 59
FIXATION DE DIRECTION 60
PIECES OPTIONNELLES 1 61
PIECES OPTIONNELLES 2 62
KITS DE REPARATION 1 63
KITS DE REPARATION 2 64

INDEX

INDEX NUMERIQUE 66

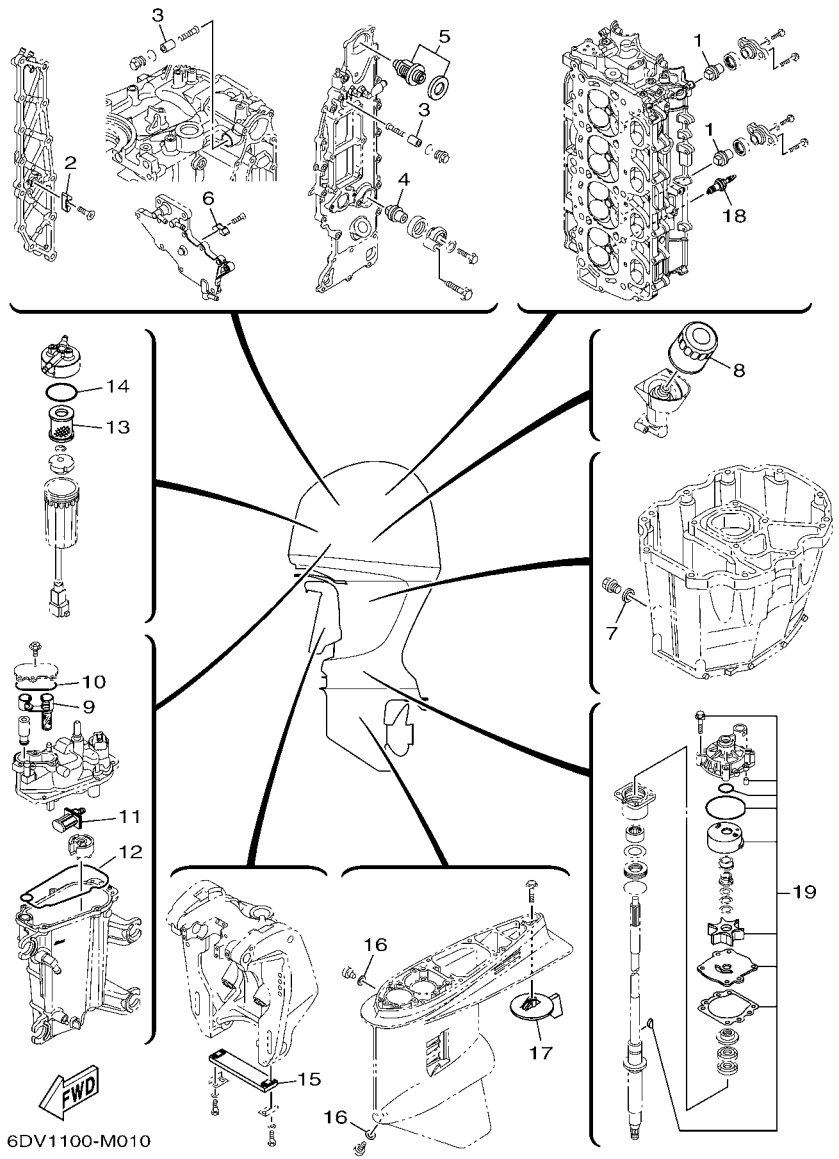

FIG. 1 SCHEDULED SERVICE PARTS PIECES MAINTENANCE PERIODIQUE

REF. NO.	PART NO. N° PIECES	DESCRIPTION DESCRIPTION	6DV2	6DW2				REMARKS REMARQUES
1	67F–11325–01	ANODE ANODE	2	2				
2	6E5–11325–00	ANODE ANODE	1	1				
3	68T–11325–00	ANODE ANODE	2	2				
4	67F–11325–01	ANODE ANODE	1	1				
5	6DA–12411–00	THERMOSTAT THERMOSTAT	1	1				
6	6E5–11325–00	ANODE ANODE	1	1				
7	90430–14M09	GASKET JOINT	1	1				
8	69J–13440–03	ELEMENT ASSY, OIL CLEANER ELEMENT, FILTRE A HUILE	1	1				
9	6CB–24501–01	FILTER, FUEL FILTRE	1	1				
10	6CB–13016–00	O-RING JOINT TORIQUE	1	1				
11	63P–13915–00	FILTER FILTRE	1	1				
12	6CB–14984–00	GASKET, FLOAT CHAMBER JOINT, CUVE DE FLOTTEUR	1	1				
13	6P3–24563–01	ELEMENT, FILTER ELEMENT, FILTRE	1	1				
14	6P3–24564–00	GASKET JOINT	1	1				
15	6AW–45251–00	ANODE ANODE	1	1				
16	90430–08020	GASKET JOINT	2	2				
17	6J9–45371–01	TAB-TRIM ANODE DERIVE	1					
	6K1–45371–02	TAB-TRIM ANODE DERIVE		1				
18	94702–00400	PLUG, SPARK (NGK LFR6A-11) BOUGIE D'ALLUMAGE(NGK LFR6A-11	4	4				
19	61A–W0078–A3	WATER PUMP REPAIR KIT KIT DE REPARATION DE LA POMPE	1	1				

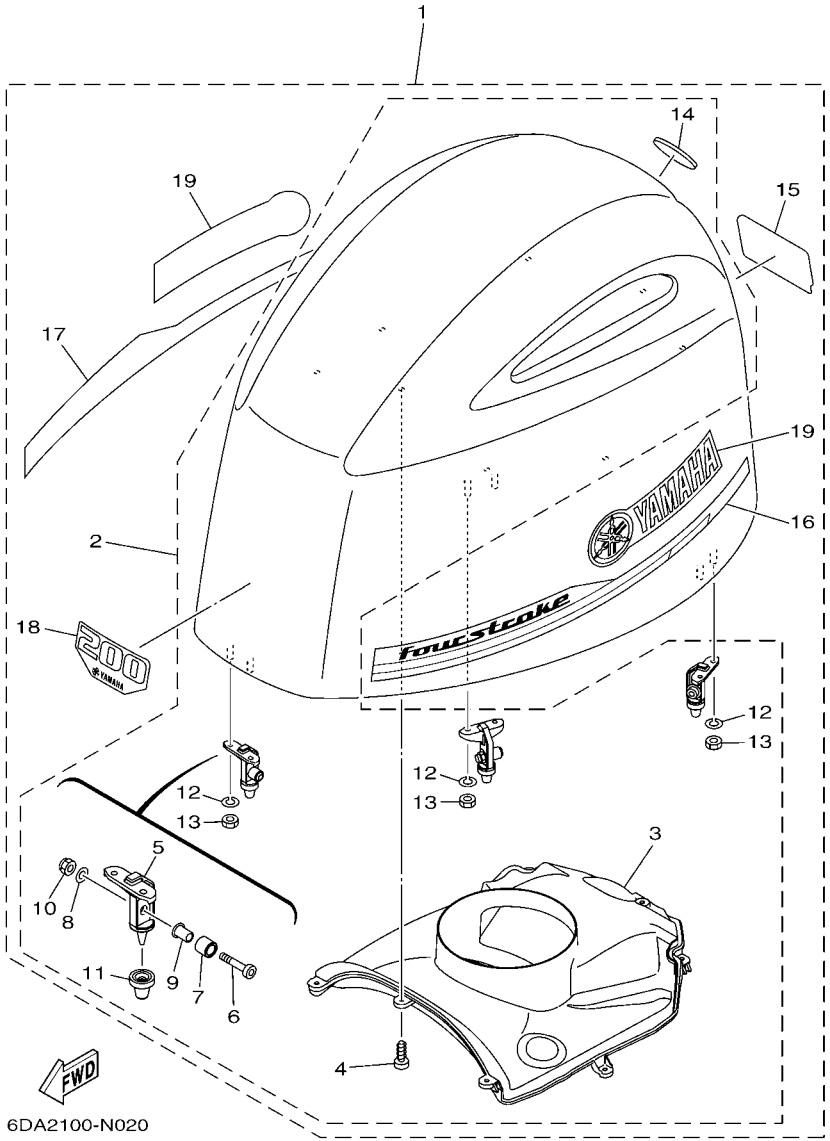

FIG. 2 TOP COWLING CAPOT SUPERIEUR

REF. NO.	PART NO. N° PIECES	DESCRIPTION DESCRIPTION	6DV2	6DW2				REMARKS REMARQUES
1	6DA–42610–00	TOP COWLING ASSY CAPOT (ENS.)	1	1				
2	6DA–4261A–00	.TOP COWLING W/O GRAPHICS .CAPOT SUPERIEUR SANS GRAPHIQUE	1	1				
3	6DA–42613–00	..MOLDING, AIR DUCT ..MANCHON A AIR	1	1				
4	90167–05017	..SCREW, TAPPING ..VIS, TETE FRAISEE	8	8				
5	6CB–42647–00	..HOLDER, CLAMP BAND ..SUPPORT, SANDOW DE SERRAGE	3	3				
6	90111–08078	..BOLT,HEX. SOCKET BUTTON ..BOULON	3	3				
7	90387–10094	..COLLAR ..COLLERETTE	3	3				
8	92990–08600	..WASHER, PLATE ..RONDELLE, PLATE	3	3				
9	90387–08M45	..COLLAR ..COLLERETTE	3	3				
10	95780–08300	..NUT, FLANGE ..ECROU	3	3				
11	6AW–42663–00	..DAMPER ..AMORTISSEUR	3	3				
12	92990–06100	..WASHER, SPRING ..RONDELLE, GROWER	6	6				
13	95380–06600	..NUT, HEXAGON ..ECROU	6	6				
14	6DA–42697–00	..TUNING FORK MARK ..MARQUE, YAMAHA	1	1				
15	6DA–42678–00	.GRAPHIC, REAR .ADHESIF, ARRIERE	1	1				
16	6DA–42675–00	.GRAPHIC, SIDE 1 .EMBLEME	1	1				
17	6DA–42676–00	.GRAPHIC, SIDE 2 .EMBLEME	1	1				
18	6DA–42677–00	.GRAPHIC, FRONT .ADHESIF, AVANT	1	1				
19	63P–42681–20	.MARK, COWLING .ADHESIF, CAPOT	2	2				

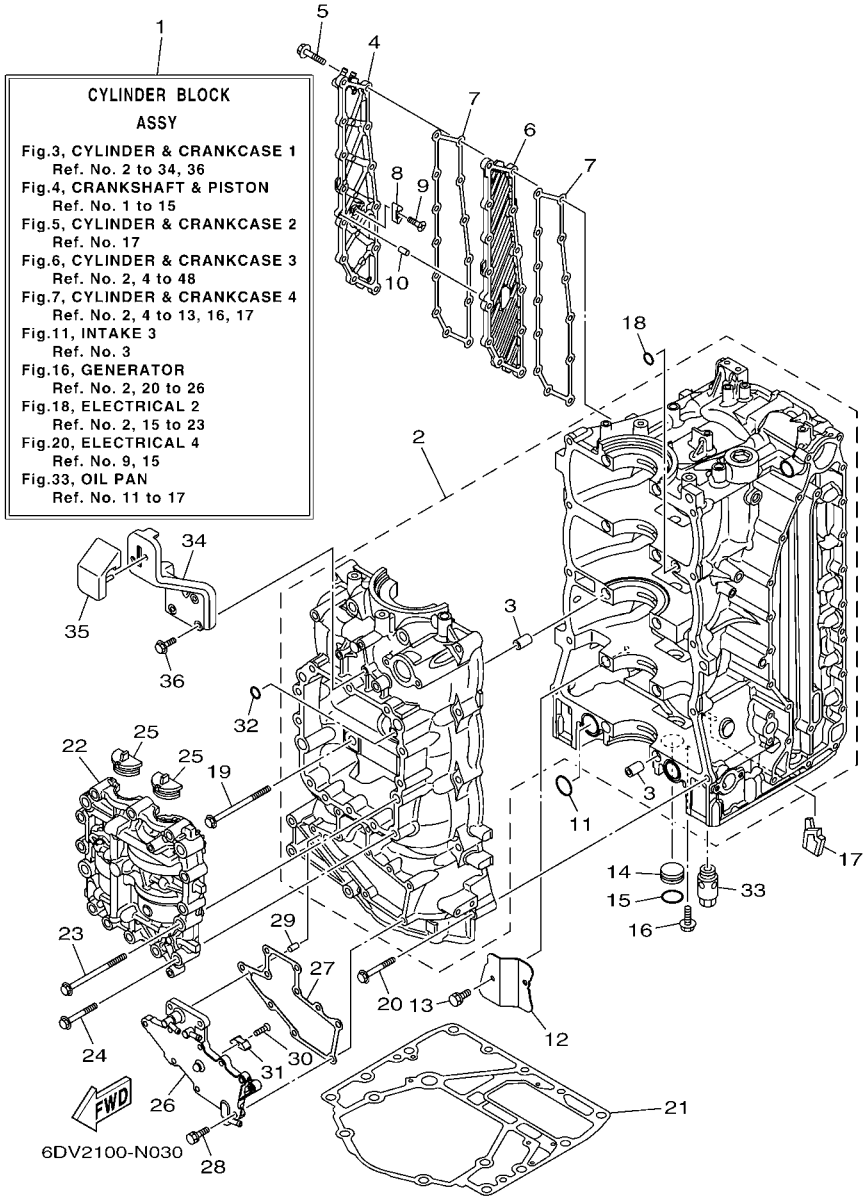

FIG. 3 CYLINDER & CRANKCASE 1 CYLINDRE & CARTER 1

REF. NO.	PART NO. N° PIECES	DESCRIPTION DESCRIPTION	6DV2	6DW2				REMARKS REMARQUES
1	6DA–W009B–01–9S	CYLINDER BLOCK ASSY CYLINDRE GROUPE (ENS.)	1	1				
2	6DA–15109–00–9S	CRANKCASE ASSY CARTER DE MOTEUR COMPLET	1	1				
3	91814–18002	.PIN, DOWEL .GOUJON, D'ASSEMBLAGE	10	10				
4	6DA–15414–00–9S	COVER, AIR CLEANER COUVERCLE, FILTRE A AIR	1	1				
5	90105–06028	BOLT, FLANGE BOULON	13	13				
6	6DA–15423–00–9S	COVER 2 COUVERCLE 2	1	1				
7	6DA–15353–00	GASKET, DRAIN JOINT, PLOT DE VIDANGE	2	2				
8	6E5–11325–00	ANODE ANODE	1	1				
9	98780–04016	SCREW, FLAT HEAD VIS A TETE FRAISEE	1	1				
10	91690–40010	PIN, SPRING AGRAFFE	1	1				
11	93210–25552	O-RING JOINT TORIQUE	2	2				
12	6DA–15412–00	COVER, OIL PUMP COUVERCLE DE POMPE A HUILE	1	1				
13	90119–06023	BOLT, WITH WASHER BOULON, AVEC RONDELLE	2	2				
14	90338–25004	PLUG PLOT	1	1				
15	93210–25647	O-RING JOINT TORIQUE	1	1				
16	90119–06M81	BOLT, WITH WASHER BOULON, AVEC RONDELLE	1	1				
17	6DA–14664–00	GROMMET, WATER SHUT PASSE-FIL	1	1				
18	93210–12648	O-RING JOINT TORIQUE	1	1				
19	90105–10406	BOLT, FLANGE BOULON	10	10				
20	90119–08M66	BOLT, WITH WASHER BOULON, AVEC RONDELLE	10	10				
21	63P–11351–01	GASKET, CYLINDER JOINT, D'EMBASE	1	1				
22	6DA–11500–00	BALANCER ASSY ARBRE D'EQUILIBRAGE COMPLET	1	1				
23	90105–10406	BOLT, FLANGE BOULON	4	4				
24	90105–08175	BOLT, FLANGE BOULON	12	12				
25	63P–11512–00	SEAL, CRANK COVER JOINT, COUV DE VILEBREQUIN	2	2				
26	6DA–15411–00–9S	COVER, CRANKCASE 1 COUVERCLE 1, CARTER MOTEUR	1	1				
27	6DA–15451–00	GASKET, CRANKCASE COVER 1 JOINT, COUVERCLE DE CARTER 1	1	1				

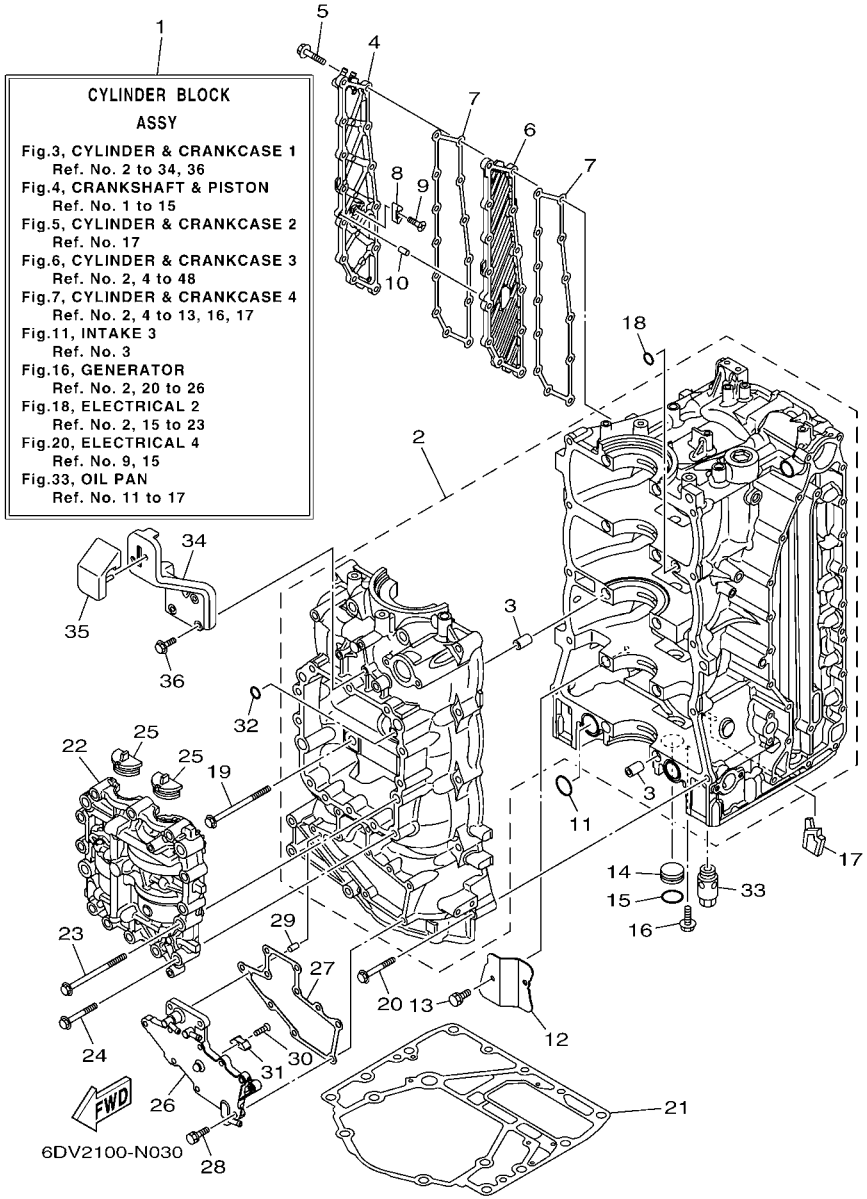

FIG. 3 CYLINDER & CRANKCASE 1 CYLINDRE & CARTER 1

REF. NO.	PART NO. N° PIECES	DESCRIPTION DESCRIPTION	6DV2	6DW2				REMARKS REMARQUES
28	90119–06MA3	BOLT, WITH WASHER BOULON, AVEC RONDELLE	10	10				
29	91690–40010	PIN, SPRING AGRAFFE	1	1				
30	98780–04016	SCREW, FLAT HEAD VIS A TETE FRAISEE	1	1				
31	6E5–11325–00	ANODE ANODE	1	1				
32	93210–08001	O-RING JOINT TORIQUE	1	1				
33	63P–13490–00	RELIEF VALVE ASSY SOUPAPE DE SECURITE COMPLET	1	1				
34	6DA–42744–00	STAY SUPPORT	1	1				
35	6DA–42662–00	DAMPER AMORTISSEUR	1	1				
36	90105–06196	BOLT, FLANGE BOULON	3	3				

FIG. 4 CRANKSHAFT & PISTON VILEBREQUIN & PISTON

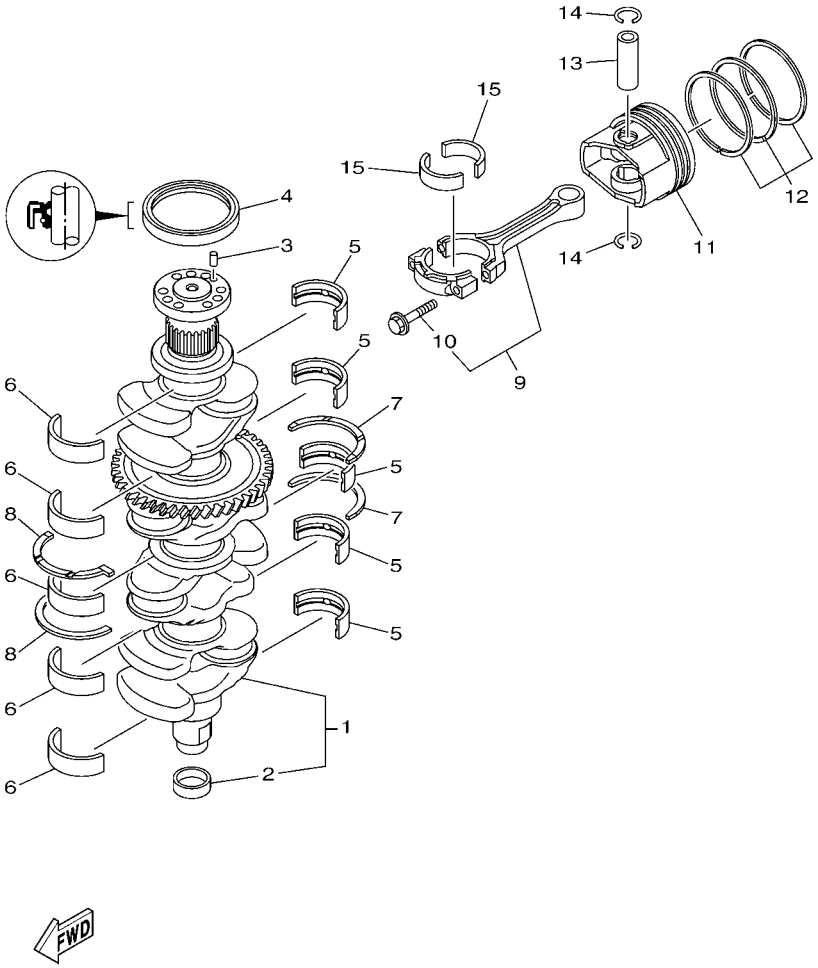

REF. NO.	PART NO. N° PIECES	DESCRIPTION DESCRIPTION	6DV2	6DW2				REMARKS REMARQUES
1	6DA–11410–00	CRANKSHAFT VILEBREQUIN COMPLET	1	1				
2	6CB–11478–00	.COLLAR .COLLERETTE	1	1				
3	93606–12019	PIN, DOWEL GOUPILLE	1	1				
4	93102–85008	OIL SEAL JOINT SPY	1	1				
5	6DA–11416–00	PLANE BEARING, CRANKSHAFT 1 COUSSINET DE VILEBREQUIN 1	5	5				UR YELLOW UR YELLOW
	6DA–11416–10	PLANE BEARING, CRANKSHAFT 1 COUSSINET DE VILEBREQUIN 1	5	5				UR GREEN UR GREEN
	6DA–11416–20	PLANE BEARING, CRANKSHAFT 1 COUSSINET DE VILEBREQUIN 1	5	5				UR BLUE UR BLUE
6	6DA–11417–00	PLANE BEARING, CRANKSHAFT 2 COUSSINET DE VILEBREQUIN 2	5	5				UR YELLOW UR YELLOW
	6DA–11417–10	PLANE BEARING, CRANKSHAFT 2 COUSSINET DE VILEBREQUIN 2	5	5				UR GREEN UR GREEN
	6DA–11417–20	PLANE BEARING, CRANKSHAFT 2 COUSSINET DE VILEBREQUIN 2	5	5				UR BLUE UR BLUE
7	6DA–11426–00	BEARING, THRUST 1 ROULEMENT DE BUTEE 1	2	2				
8	6DA–11427–00	BEARING, THRUST 2 ROULEMENT DE BUTEE 2	2	2				
9	6CB–W1165–00	CONNECTING ROD ASSY BIELLE COMPLETTE	4	4				
10	6CB–11654–00	.BOLT, CONNECTING ROD .BOULON, BIELLE	2	2				
11	6DA–11631–00–94	PISTON (STD) PISTON (STD)	4	4				
12	6CB–11603–00	PISTON RING SET (STD) JEU DE SEGMENTS (STD)	4	4				
13	6CB–11633–00	PIN, PISTON AXE, PISTON	4	4				
14	K0F–A3233–00	RING,HOLE SNAP JONC	8	8				
15	6CB–11656–00	PLANE BEARING, CONNECTING ROD ROULEMENT DE BIELLE	8	8				UR YELLOW UR YELLOW
	6CB–11656–10	PLANE BEARING, CONNECTING ROD ROULEMENT DE BIELLE	8	8				UR GREEN UR GREEN
	6CB–11656–20	PLANE BEARING, CONNECTING ROD ROULEMENT DE BIELLE	8	8				UR BLUE UR BLUE

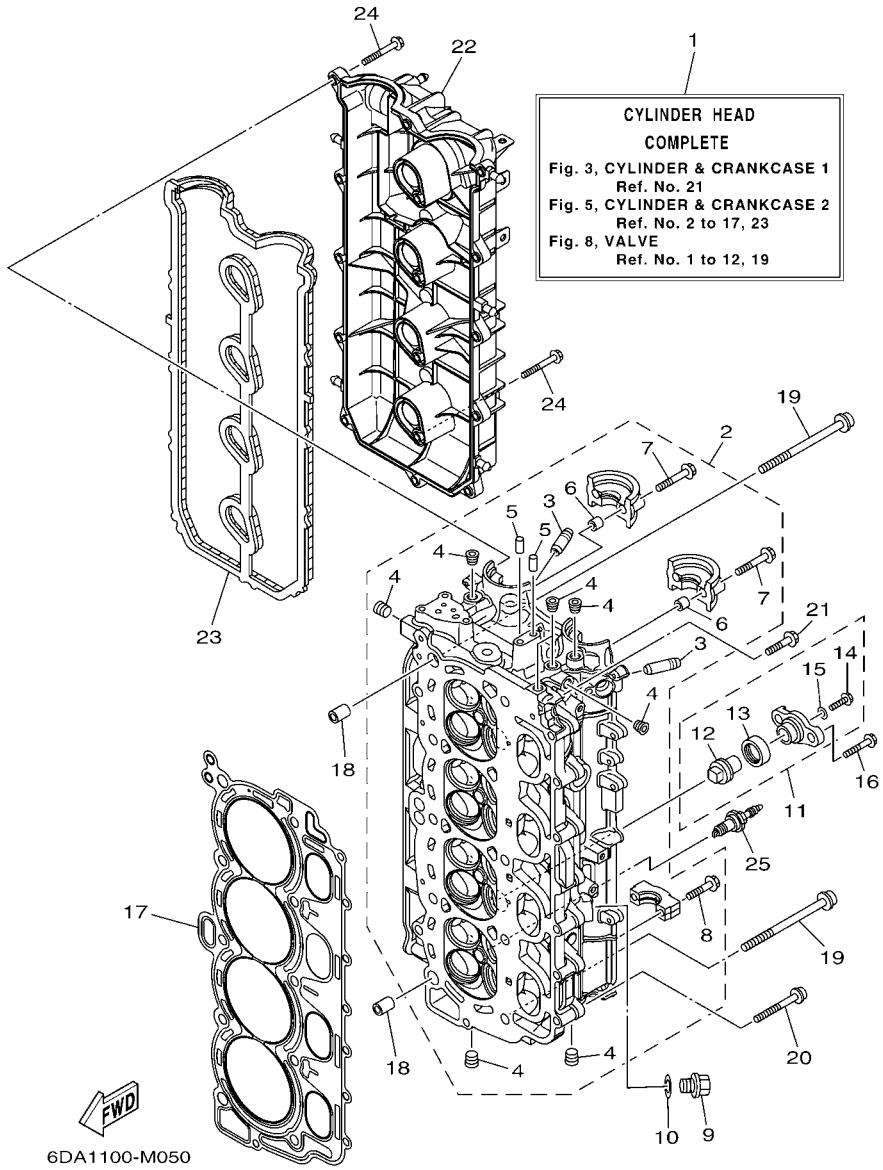

FIG. 5 CYLINDER & CRANKCASE 2 CYLINDRE & CARTER 2

REF. NO.	PART NO. N° PIECES	DESCRIPTION DESCRIPTION	6DV2	6DW2				REMARKS REMARQUES
1	6DA–W009A–00–9S	CYLINDER HEAD COMPLETE CULASSE (ENS.)	1	1				
2	6DA–11110–00–9S	CYLINDER HEAD ASSY JEU DE CULASSE	1	1				
3	6DA–11133–10	.GUIDE, VALVE 1 .GUIDE, SOUPAPE 1	16	16				
4	90344–51019	.PLUG, TAPER SCREW .PLOT, FILETE CONIQUE	8	8				
5	93606–12019	.PIN, DOWEL .GOUPILLE	2	2				
6	91809–08006	.PIN, DOWEL .GOUJON, D'ASSEMBLAGE	4	4				
7	90119–07001	.BOLT, WITH WASHER .BOULON, AVEC RONDELLE	4	4				
8	90119–07234	.BOLT, WITH WASHER .BOULON, AVEC RONDELLE	16	16				
9	90340–14M06	PLUG, STRAIGHT SCREW PLOT, FILETE DROIT	1	1				
10	90430–14115	GASKET JOINT	1	1				
11	67F–11301–00	ANODE COVER ASSY COUVERCLE ANODE (ENS.)	2	2				
12	67F–11325–01	.ANODE .ANODE	1	1				
13	67F–11328–00	.GROMMET, ANODE .PASSE-FIL	1	1				
14	90105–06M07	.BOLT, FLANGE .BOULON	1	1				
15	90430–06M03	.GASKET .JOINT	1	1				
16	95885–08025	BOLT, FLANGE BOULON, A COLLERETTE	4	4				
17	6DA–11181–00	GASKET, CYLINDER HEAD 1 JOINT, DE CULASSE 1	1	1				
18	90387–11005	COLLAR COLLERETTE	2	2				
19	90155–11002	SCREW, FLAT FILLISTER VIS, TETE OVALE PLATE	10	10				
20	90105–08175	BOLT, FLANGE BOULON	8	8				
21	90105–06151	BOLT, FLANGE BOULON	1	1				
22	6DA–11191–00	COVER, CYLINDER HEAD 1 COUVERCLE, CULASSE 1	1	1				
23	6DA–11193–00	GASKET, HEAD COVER 1 JOINT, COUVERCLE DE CULASSE 1	1	1				
24	95895–06030	BOLT, FLANGE BOULON	16	16				
25	94702–00400	PLUG, SPARK (NGK LFR6A-11) BOUGIE D'ALLUMAGE(NGK LFR6A-11	4	4				

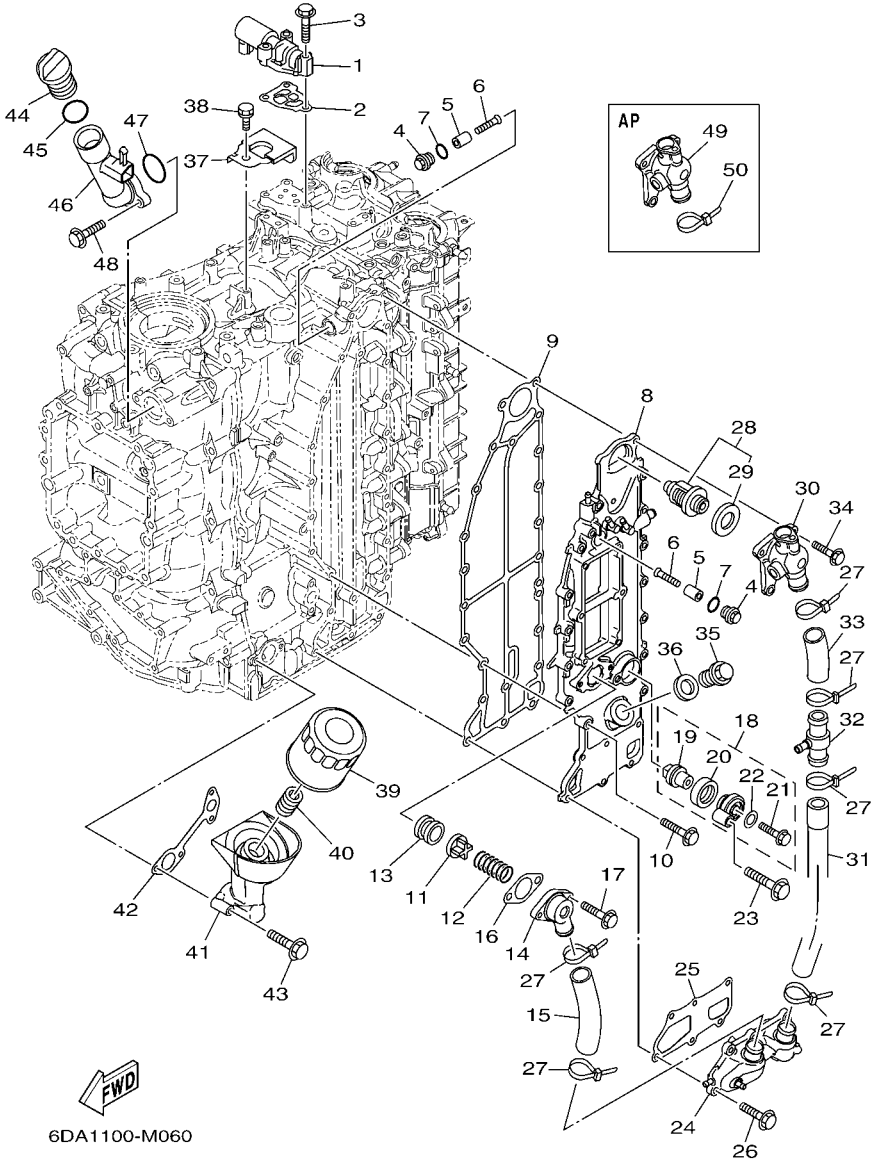

FIG. 6 CYLINDER & CRANKCASE 3 CYLINDRE & CARTER 3

REF. NO.	PART NO. N° PIECES	DESCRIPTION DESCRIPTION	6DV2	6DW2				REMARKS REMARQUES
1	6CB–86120–00	SOLENOID VALVE ASSY SOLENOIDE	1	1				
2	6CB–1242F–00	GASKET, FILTER JOINT, FILTRE	1	1				
3	90105–06035	BOLT, FLANGE BOULON	3	3				
4	6G8–11197–01	PLUG, BLIND PLOT, BORGNE	2	2				
5	68T–11325–00	ANODE ANODE	2	2				
6	90151–05M05	SCREW, COUNTERSUNK VIS, TETE NOYEE	2	2				
7	93210–13M63	O-RING JOINT TORIQUE	2	2				
8	6DA–41113–00–9S	OUTER COVER, EXHAUST COUVERCLE, ECHAPPEMENT	1	1				
9	6DA–41114–00	GASKET, EXHAUST OUTER COVER JOINT, COUVERCLE D'ECHAPPEMENT	1	1				
10	90105–06028	BOLT, FLANGE BOULON	14	14				
11	60H–12416–00	VALVE, PRESSURE CONTROL SOUPAPE DE CONTROLEUR PRESS	1	1				
12	90501–16M11	SPRING, COMPRESSION RESSORT, COMPRESSION	1	1				
13	90480–20M05	GROMMET PASSE-FIL	1	1				
14	6G5–11372–00	COVER, BYPASS 2 CONVERCLE	1	1				
15	6DA–1243A–00	HOSE 1 DURITE 1	1	1				
16	60V–11382–A0	GASKET 2 JOINT 2	1	1				
17	90119–06MA3	BOLT, WITH WASHER BOULON, AVEC RONDELLE	2	2				
18	69J–11301–00	ANODE COVER ASSY COUVERCLE ANODE (ENS.)	1	1				
19	67F–11325–01	.ANODE .ANODE	1	1				
20	67F–11328–00	.GROMMET, ANODE .PASSE-FIL	1	1				
21	90105–06M07	.BOLT, FLANGE .BOULON	1	1				
22	90430–06M03	.GASKET .JOINT	1	1				
23	97575–08540	BOLT, WITH WASHER VIS HEXAGONAL AVC RONDELLE	1	1				
24	6DA–12527–00–9S	COVER, WATER BY-PASS CACHE, DERIVATHION D'EAU	1	1				
25	6DA–11381–00	GASKET 1 JOINT 1	1	1				
26	90105–06028	BOLT, FLANGE BOULON	6	6				
27	90465–11M59	CLAMP BRIDE	6	6				

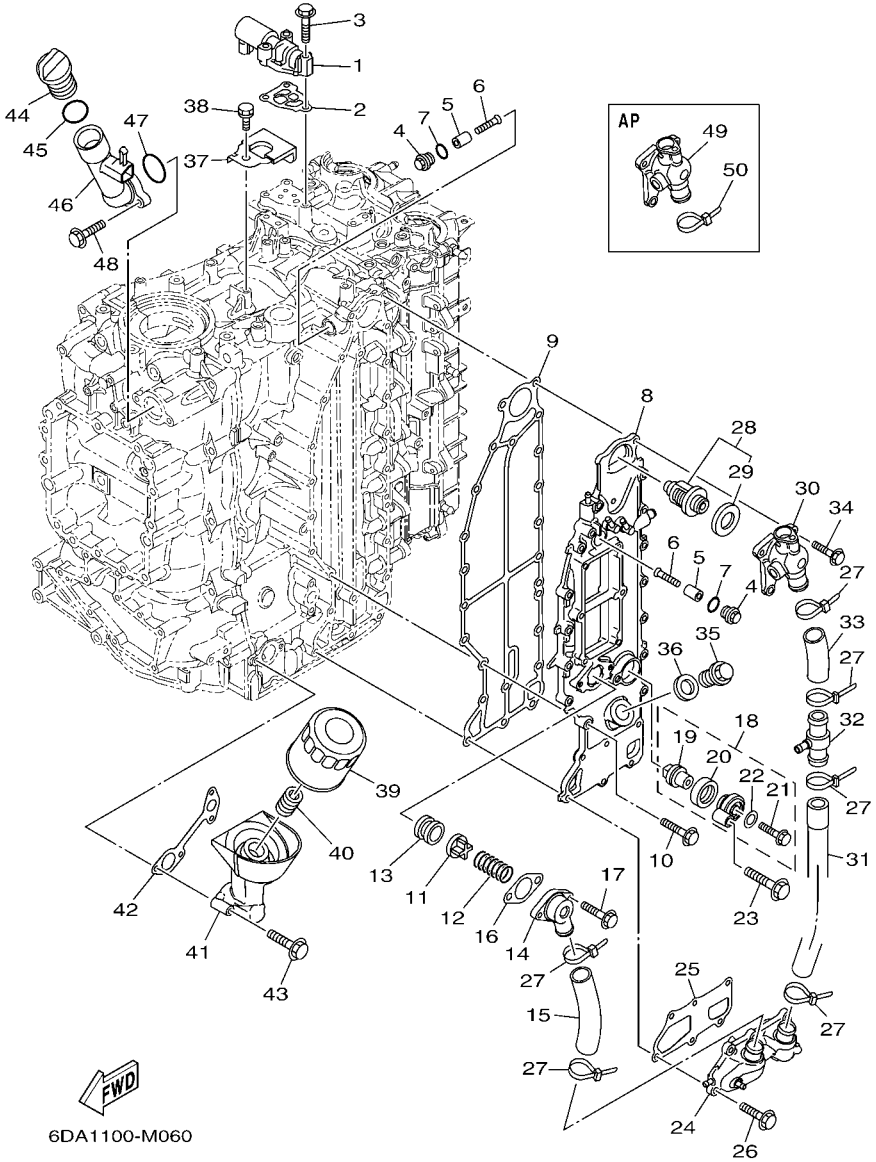

FIG. 6 CYLINDER & CRANKCASE 3 CYLINDRE & CARTER 3

REF. NO.	PART NO. N° PIECES	DESCRIPTION DESCRIPTION	6DV2	6DW2				REMARKS REMARQUES
28	6DA–12411–00	THERMOSTAT THERMOSTAT	1	1				
29	6AW–12412–00	.SEAL, THERMOSTAT .JOINT, THERMOSTAT	1	1				
30	6DA–12413–00–9S	COVER, THERMOSTAT COUVERCLE, THERMOSTAT	1	1				
31	6DA–1243E–00	HOSE 2 DURITE 2	1	1				
32	6CE–24378–00	PIPE, JOINT 3 DURITE RACCORDEMENT 3	1	1				
33	6DA–1244H–00	HOSE 5 DURITE 5	1	1				
34	90105–06028	BOLT, FLANGE BOULON	3	3				
35	90340–18M09	PLUG, STRAIGHT SCREW PLOT, FILETE DROIT	1	1				
36	90430–18130	GASKET JOINT	1	1				
37	6P2–12491–00	CLAMP 1 COLLIER 1	1	1				
38	90119–06078	BOLT, WITH WASHER BOULON, AVEC RONDELLE	1	1				
39	69J–13440–03	ELEMENT ASSY, OIL CLEANER ELEMENT, FILTRE A HUILE	1	1				
40	6S5–12858–00	BOLT, UNION BOULON, RACCORD	1	1				
41	6DA–13446–00	CONNECTOR CONNECTEUR	1	1				
42	6DA–13475–00	GASKET JOINT	1	1				
43	90105–06151	BOLT, FLANGE BOULON	4	4				
44	6G8–15363–00	PLUG, OIL PLOT, HUILE	1	1				
45	93210–24M79	O-RING JOINT TORIQUE	1	1				
46	6DA–15319–00	JOINT JOINT	1	1				
47	93210–357A3	O-RING JOINT TORIQUE	1	1				
48	90105–06037	BOLT, FLANGE BOULON	2	2				
49	6DA–1241B–00–9S	COVER, THERMOSTAT 2 COUVERCLE, THERMOSTAT 2	1	1				AP WATER TEMP SENSOR AP WATER TEMP SENSOR
50	90465–11M59	CLAMP BRIDE	1	1				AP WATER TEMP SENSOR AP WATER TEMP SENSOR

FIG. 7 CYLINDER & CRANKCASE 4 CYLINDRE & CARTER 4

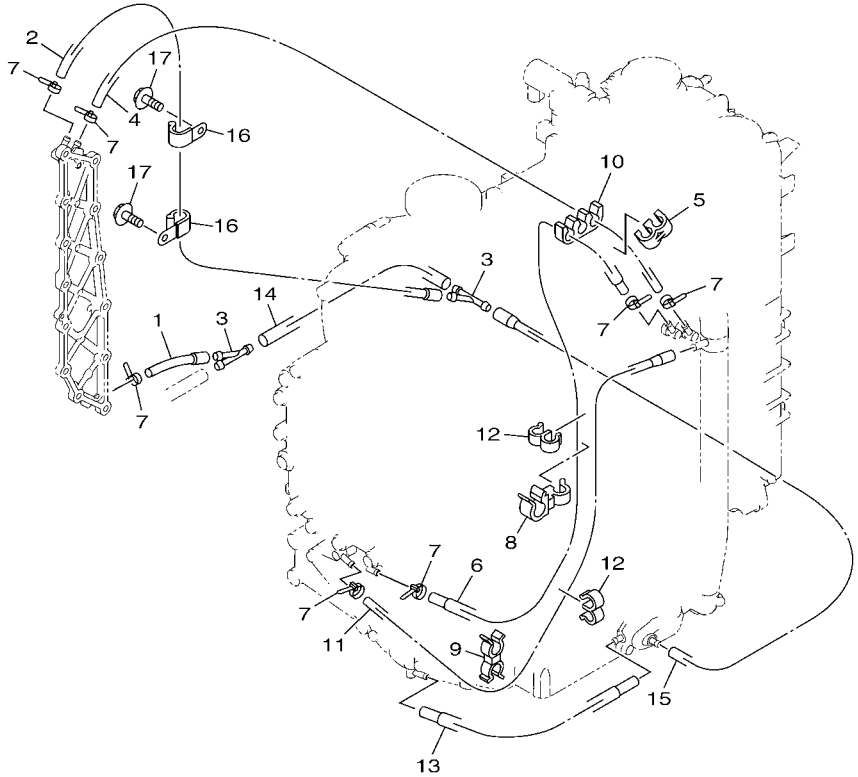

6DA1100-M070

REF. NO.	PART NO. N° PIECES	DESCRIPTION DESCRIPTION	6DV2	6DW2				REMARKS REMARQUES
1	6DA–12576–00	HOSE 1 TUYAU 1	1	1				
2	6DA–12589–00	HOSE 6 TUYAU 6	1	1				
3	6CE–24377–00	PIPE, JOINT 2 DURITE RACCORDEMENT 2	2	2				
4	90445–09008	HOSE (L470) DURITE (L470)	1	1				
5	90464–09M21	CLAMP BRIDE	1	1				
6	6DA–12578–00	HOSE 3 TUYAU 3	1	1				
7	90465–11M10	CLAMP BRIDE	7	7				
8	90464–12010	CLAMP BRIDE	1	1				
9	90464–09142	CLAMP BRIDE	1	1				
10	90464–09020	CLAMP BRIDE	1	1				
11	6DA–12579–00	HOSE 4 TUYAU 4	1	1				
12	90464–09M31	CLAMP BRIDE	2	2				
13	6DA–12552–00	HOSE 8 DURITE 8	1	1				
14	90445–10057	HOSE (L170) DURITE (L170)	1	1				
15	6DA–12589–00	HOSE 6 TUYAU 6	1	1				
16	90465–08M83	CLAMP BRIDE	2	2				
17	95895–06012	BOLT, FLANGE BOULON	2	2				

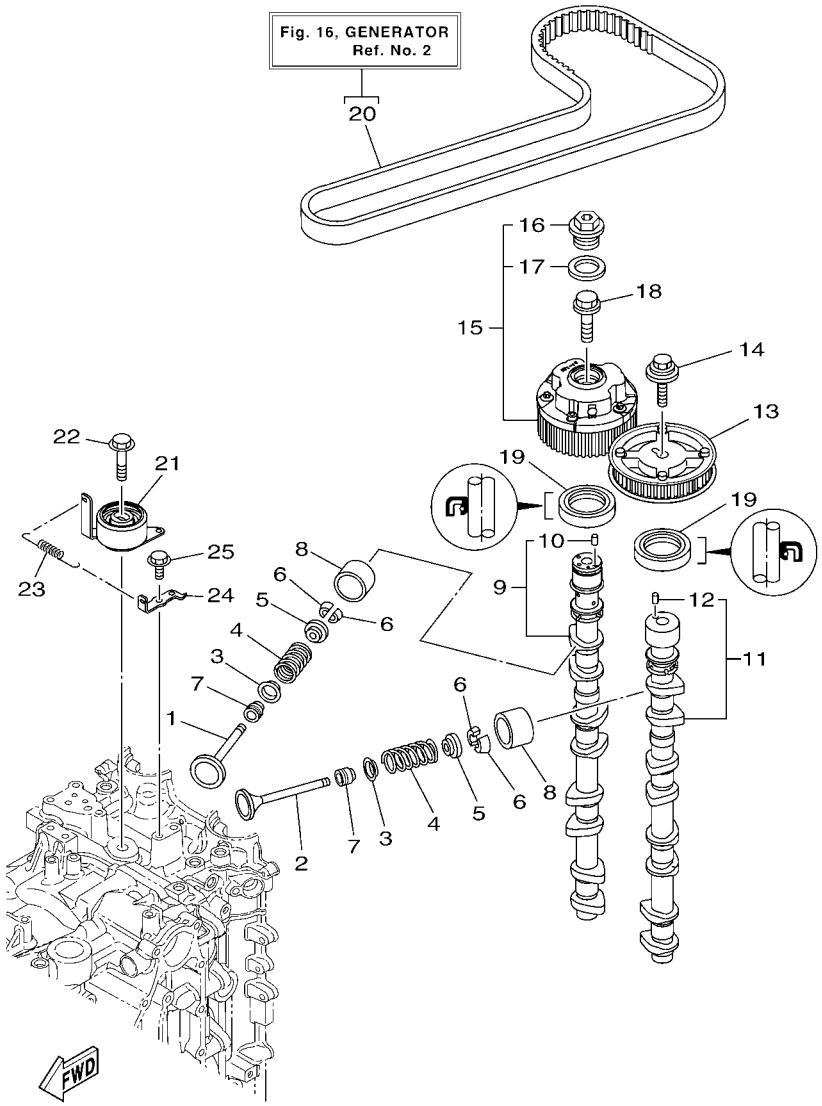

6DA1100-M080

FIG. 8 VALVE — SOUPAPE

REF. NO.	PART NO. N° PIECES	DESCRIPTION DESCRIPTION	6DV2	6DW2				REMARKS REMARQUES
1	6CB–12111–00	VALVE, INTAKE SOUPAPE, ADMISSION	8	8				
2	6DA–12121–00	VALVE, EXHAUST SOUPAPE, ECHAPPEMENT	8	8				
3	K0F–A3743–00	SEAT, VALVE SPRING SIEGE, RESSORT DE SOUPAPE	16	16				
4	6CB–12113–00	SPRING, VALVE INNER RESSORT DE SOUPAPE, INTERNE	16	16				
5	K0F–A3741–00	RETAINER, VALVE SPRING BUTEE DE RESSORT DE SOUPAPA	16	16				
6	K0F–A3742–00	LOCK, VALVE SPRING RETAINER FRAISE, SOUPAPE	32	32				
7	51Y–12119–00	SEAL, VALVE STEM JOINT, QUEUE DE SOUPAPE	16	16				
8	K0F–A3751–00	LIFTER, VALVE (3.000) LEVE-SOUPAPE (3.000)	16	16				UR UR
	K0F–A3751–10	LIFTER, VALVE (3.025) LEVE-SOUPAPE (3.025)	16	16				UR UR
	K0F–A3751–20	LIFTER, VALVE (3.050) LEVE-SOUPAPE (3.050)	16	16				UR UR
	K0F–A3751–30	LIFTER, VALVE (3.075) LEVE-SOUPAPE (3.075)	16	16				UR UR
	K0F–A3751–40	LIFTER, VALVE (3.100) LEVE-SOUPAPE (3.100)	16	16				UR UR
	K0F–A3751–50	LIFTER, VALVE (3.122) LEVE-SOUPAPE (3.122)	16	16				UR UR
	K0F–A3751–60	LIFTER, VALVE (3.142) LEVE-SOUPAPE (3.142)	16	16				UR UR
	K0F–A3751–70	LIFTER, VALVE (3.162) LEVE-SOUPAPE (3.162)	16	16				UR UR
	K0F–A3751–80	LIFTER, VALVE (3.182) LEVE-SOUPAPE (3.182)	16	16				UR UR
	K0F–A3751–90	LIFTER, VALVE (3.202) LEVE-SOUPAPE (3.202)	16	16				UR UR
	K0F–A3751–A0	LIFTER, VALVE (3.222) LEVE-SOUPAPE (3.222)	16	16				UR UR
	K0F–A3751–B0	LIFTER, VALVE (3.242) LEVE-SOUPAPE (3.242)	16	16				UR UR
	K0F–A3751–C0	LIFTER, VALVE (3.262) LEVE-SOUPAPE (3.262)	16	16				UR UR
	K0F–A3751–D0	LIFTER, VALVE (3.282) LEVE-SOUPAPE (3.282)	16	16				UR UR
	K0F–A3751–E0	LIFTER, VALVE (3.302) LEVE-SOUPAPE (3.302)	16	16				UR UR
	K0F–A3751–F0	LIFTER, VALVE (3.322) LEVE-SOUPAPE (3.322)	16	16				UR UR
	K0F–A3751–G0	LIFTER, VALVE (3.342) LEVE-SOUPAPE (3.342)	16	16				UR UR
	K0F–A3751–H0	LIFTER, VALVE (3.362) LEVE-SOUPAPE (3.362)	16	16				UR UR
	K0F–A3751–J0	LIFTER, VALVE (3.382) LEVE-SOUPAPE (3.382)	16	16				UR UR
	K0F–A3751–K0	LIFTER, VALVE (3.402) LEVE-SOUPAPE (3.402)	16	16				UR UR

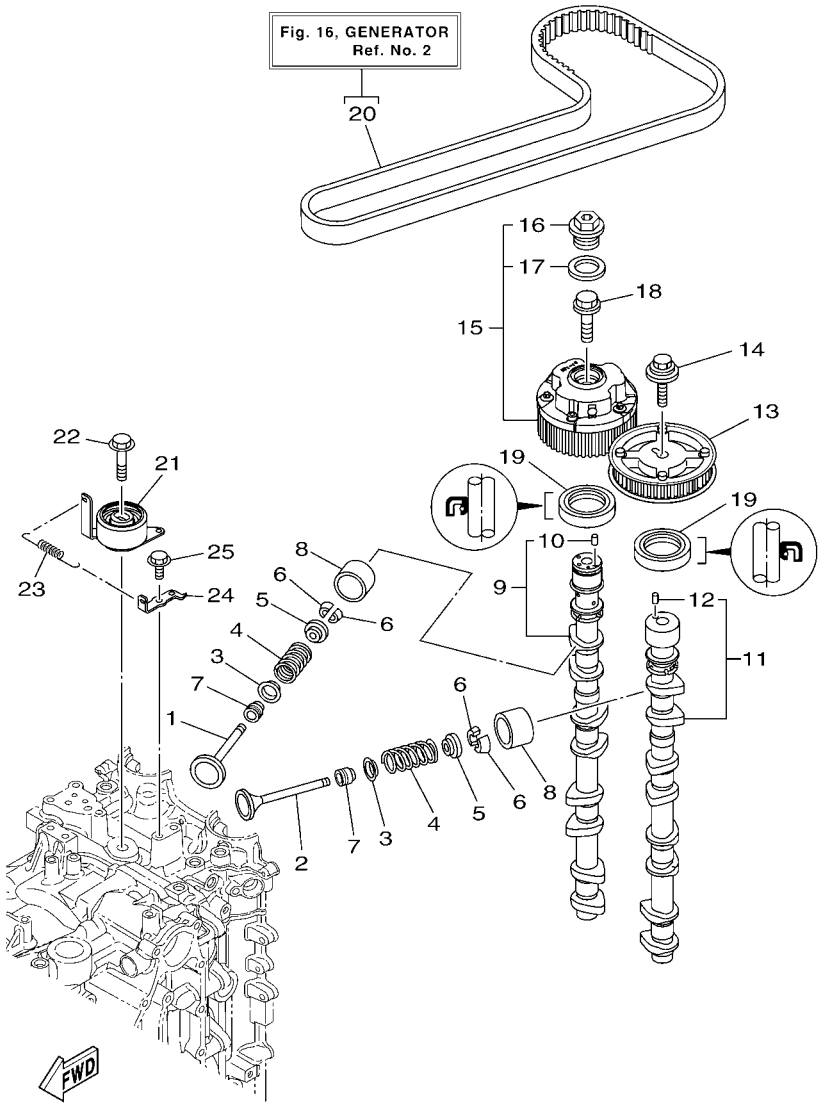

6DA1100-M080

FIG. 8 VALVE — SOUPAPE

REF. NO.	PART NO. N° PIECES	DESCRIPTION DESCRIPTION	6DV2	6DW2				REMARKS REMARQUES
8	K0F–A3751–L0	LIFTER, VALVE (3.422) LEVE-SOUPAPE (3.422)	16	16				UR UR
	K0F–A3751–M0	LIFTER, VALVE (3.442) LEVE-SOUPAPE (3.442)	16	16				UR UR
	K0F–A3751–N0	LIFTER, VALVE (3.462) LEVE-SOUPAPE (3.462)	16	16				UR UR
	K0F–A3751–P0	LIFTER, VALVE (3.482) LEVE-SOUPAPE (3.482)	16	16				UR UR
	K0F–A3751–R0	LIFTER, VALVE (3.502) LEVE-SOUPAPE (3.502)	16	16				UR UR
	K0F–A3751–S0	LIFTER, VALVE (3.522) LEVE-SOUPAPE (3.522)	16	16				UR UR
	K0F–A3751–T0	LIFTER, VALVE (3.542) LEVE-SOUPAPE (3.542)	16	16				UR UR
	K0F–A3753–00	LIFTER, VALVE (3.562) LEVE-SOUPAPE (3.562)	16	16				UR UR
	K0F–A3753–10	LIFTER, VALVE (3.582) LEVE-SOUPAPE (3.582)	16	16				UR UR
	K0F–A3753–20	LIFTER, VALVE (3.602) LEVE-SOUPAPE (3.602)	16	16				UR UR
	K0F–A3753–30	LIFTER, VALVE (3.625) LEVE-SOUPAPE (3.625)	16	16				UR UR
	K0F–A3753–40	LIFTER, VALVE (3.650) LEVE-SOUPAPE (3.650)	16	16				UR UR
	K0F–A3753–50	LIFTER, VALVE (3.675) LEVE-SOUPAPE (3.675)	16	16				UR UR
	K0F–A3753–60	LIFTER, VALVE (3.700) LEVE-SOUPAPE (3.700)	16	16				UR UR
	K0F–A3753–70	LIFTER, VALVE (3.725) LEVE-SOUPAPE (3.725)	16	16				UR UR
9	6DA–12171–00	CAMSHAFT 1 ARBRE A CAMES 1	1	1				
10	93605–10108	.PIN, DOWEL .AXE	1	1				
11	6DA–12181–00	CAMSHAFT 2 ARBRE A CAMES 2	1	1				
12	93605–10108	.PIN, DOWEL .AXE	1	1				
13	6DA–115A0–00	DRIVEN GEAR ASSY CLOCHE D'EMBRAYAGE	1	1				
14	90119–10050	BOLT, WITH WASHER BOULON, AVEC RONDELLE	1	1				
15	6P2–12645–20	PULLEY ASSY 1 POULIE COMPLET 1	1	1				
16	6P2–12623–00	.BOLT .BOULON	1	1				
17	6P2–12663–00	.GASKET .JOINT	1	1				
18	6P2–12615–00	BOLT BOULON	1	1				
19	93102–38008	OIL SEAL JOINT SPY	2	2				
20	6DA–W4624–00	BELT (WITH ROTOR BOLTS) COURROIE (AVEC BOULON)	1	1				

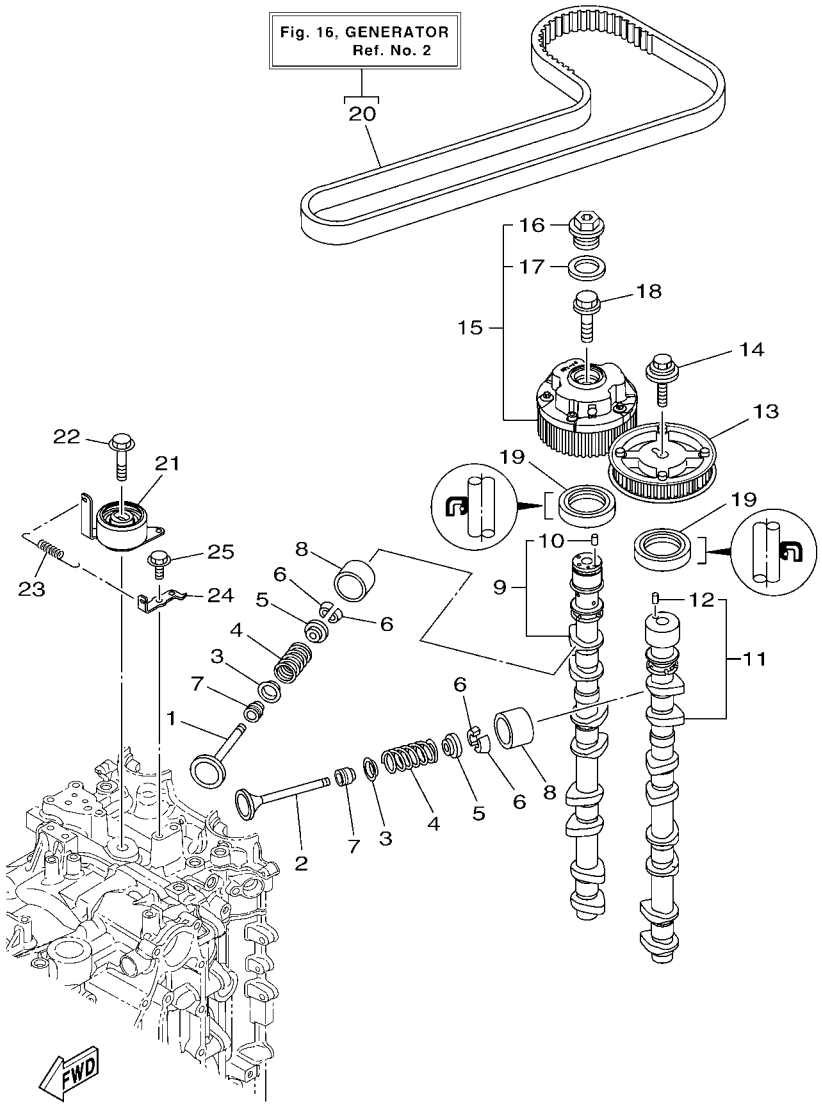

6DA1100-M080

FIG. 8 VALVE — SOUPAPE

REF. NO.	PART NO. N° PIECES	DESCRIPTION DESCRIPTION	6DV2	6DW2				REMARKS REMARQUES
21	6DA–11590–00	TENSIONER ASSY TENDEUR (ENS.)	1	1				
22	90119–10M07	BOLT, WITH WASHER BOULON, AVEC RONDELLE	1	1				
23	90506–18025	SPRING, TENSION RESSORT, TENSION	1	1				
24	6DA–11595–00	PLATE,VALVE PLAQUE DE SOUPAPE	1	1				
25	97575–06516	BOLT, WITH WASHER VIS HEXAGONAL AVC RONDELLE	1	1				

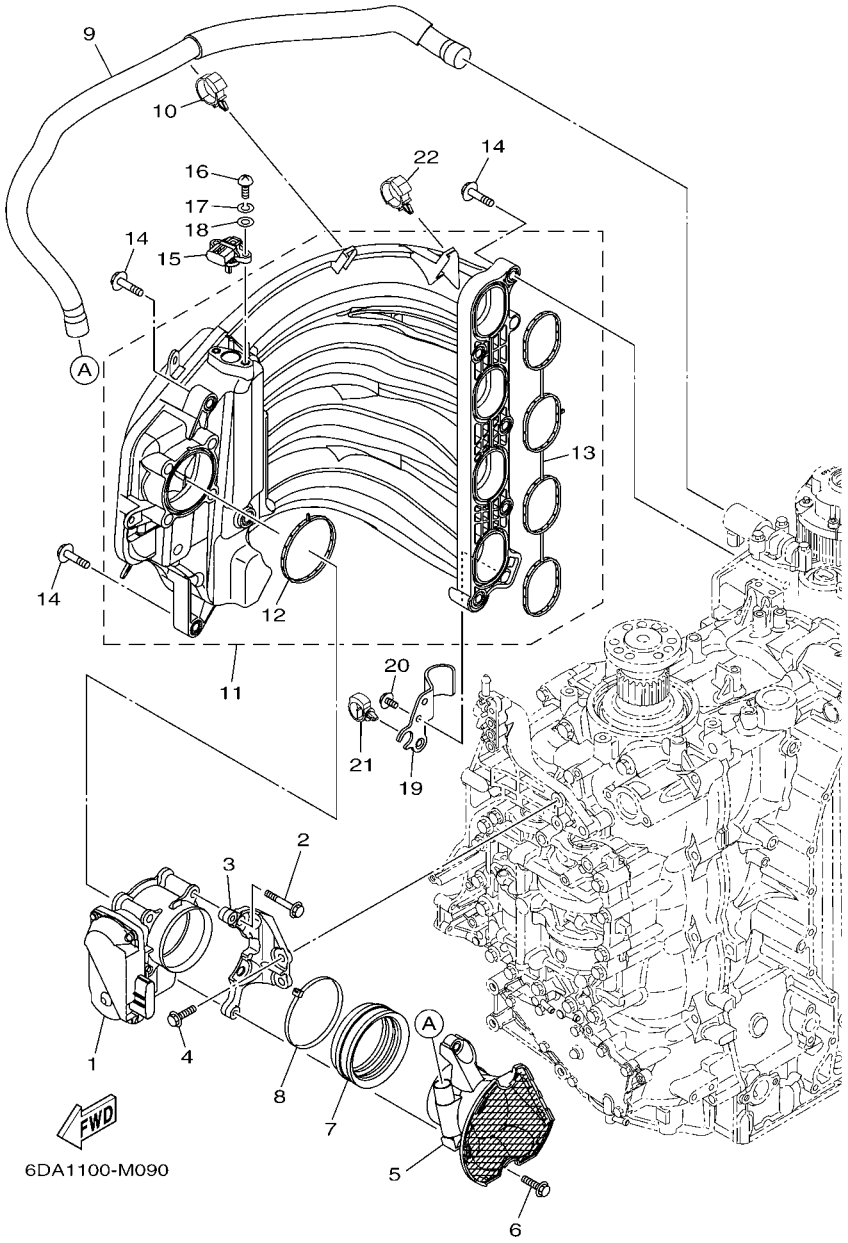

FIG. 9 INTAKE 1 — ADMISSION 1

REF. NO.	PART NO. N° PIECES	DESCRIPTION DESCRIPTION	6DV2	6DW2				REMARKS REMARQUES
1	6DA–13751–00	BODY, THROTTLE 1 CARTER 1	1	1				
2	97575–08560	BOLT, WITH WASHER VIS HEXAGONAL AVC RONDELLE	4	4				
3	6DA–13152–00	STAY 2 SUPPORT2	1	1				
4	95875–06025	BOLT, FLANGE BOULON, A COLLERETTE	2	2				
5	6DA–14440–00	SILENCER ASSY, INTAKE SIENCIEUX D'ADMISSION	1	1				
6	95875–06025	BOLT, FLANGE BOULON, A COLLERETTE	2	2				
7	6P2–1441J–00	PIPE, SILENCER DURITE, DE SILENCIEUX	1	1				
8	90464–99004	CLAMP BRIDE	1	1				
9	6DA–15373–00	PIPE, BREATHER DURITE DE RENIFLARD	1	1				
10	90464–12183	CLAMP BRIDE	1	1				
11	6DA–13641–00	MANIFOLD, INTAKE 1 TUBULURE, ADMISSION 1	1	1				
12	6DA–13646–00	.GASKET, MANIFOLD 2 .JOINT, TUBULURE 2	1	1				
13	6DA–13645–00	.GASKET, MANIFOLD 1 .JOINT, TUBULURE 1	1	1				
14	90119–08020	BOLT, WITH WASHER BOULON, AVEC RONDELLE	9	9				
15	68F–83688–10	SENSOR ASSY SONDE (ENS.)	1	1				
16	97885–05016	SCREW, PAN HEAD VIS, A ENCOCHE	2	2				
17	92995–05100	WASHER RONDELLE	2	2				
18	92995–05600	WASHER RONDELLE	2	2				
19	6DA–13881–00	COVER 1 COUVERCLE 1	1	1				
20	95895–06012	BOLT, FLANGE BOULON	2	2				
21	90464–20181	CLAMP BRIDE	1	1				
22	90464–12183	CLAMP BRIDE	1	1				

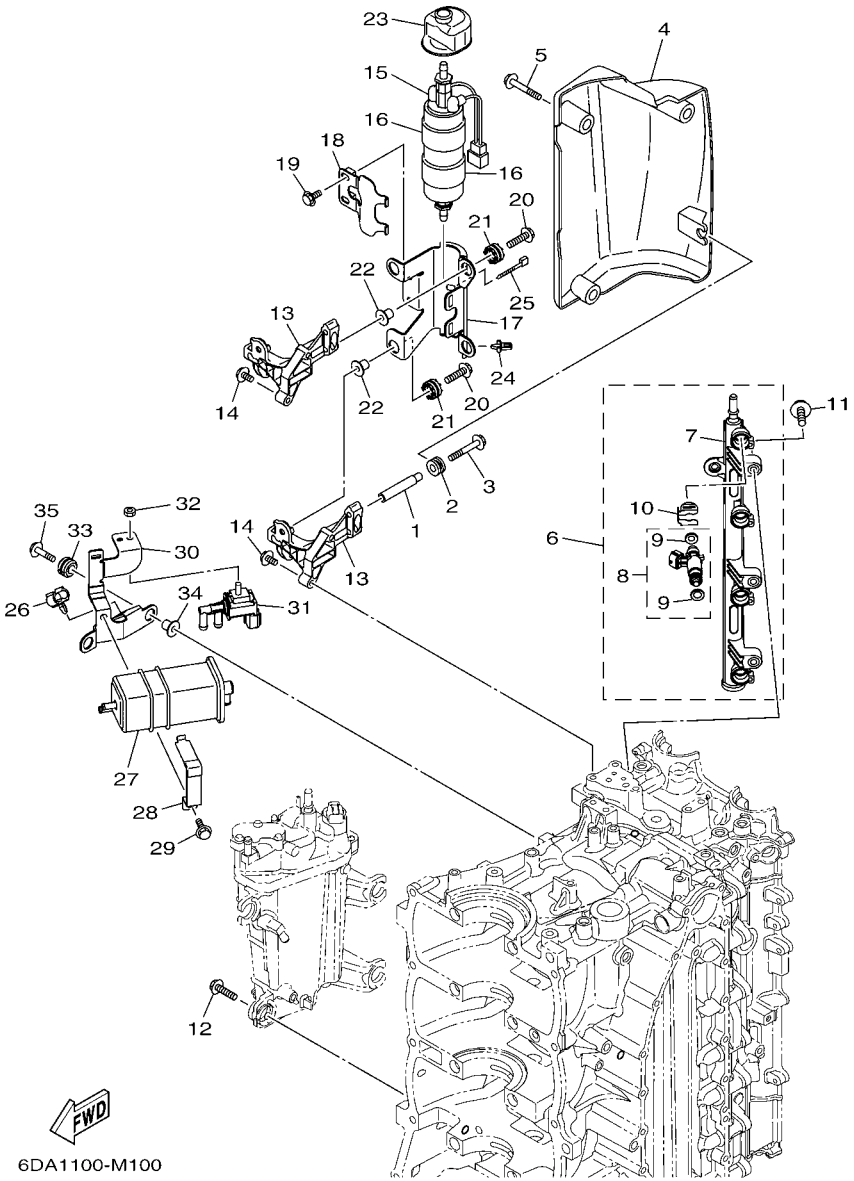

FIG. 10 INTAKE 2 — ADMISSION 2

REF. NO.	PART NO. N° PIECES	DESCRIPTION DESCRIPTION	6DV2	6DW2				REMARKS REMARQUES
1	90387–06283	COLLAR COLLERETTE	1	1				
2	90480–12314	GROMMET PASSE-FIL	1	1				
3	90105–06054	BOLT, FLANGE BOULON	1	1				
4	6DA–13564–00	COVER, MANIFOLD COUVERCLE, TUBULURE	1	1				
5	95875–06020	BOLT, FLANGE BOULON, A COLLERETTE	3	3				
6	6DA–13160–00	DELIVERY PIPE ASSY 1 ENS. TUBE DE REFOULEMENT 1	1	1				
7	6DA–13161–00	.PIPE, DELIVERY 1 .DURITE REFOULEMENT 1	1	1				
8	6DA–13761–00	.INJECTOR .INJECTEUR	4	4				
9	6AW–1410B–00	..PACKING KIT ..POCHETTE DE JOINTS	1	1				
10	6AW–13577–10	.CLIP .AGRAFE	4	4				
11	90105–06M08	BOLT, FLANGE BOULON	3	3				
12	90119–06M24	BOLT, WITH WASHER BOULON, AVEC RONDELLE	4	4				
13	6DA–24425–00	BRACKET, FUEL PUMP 1 SUPPORT, POMPE A ESSENCE 1	2	2				
14	90105–06M08	BOLT, FLANGE BOULON	4	4				
15	6CB–24410–00	FUEL PUMP ASSY POMPE A ESSENCE	1	1				
16	6DA–24492–00	BUSH, FUEL PUMP BAGUE	2	2				
17	6DA–24491–00	BRACKET, FUEL PUMP SUPPORT, POMPE A ESSENCE	1	1				
18	6DA–24426–00	BRACKET, FUEL PUMP 2 SUPPORT, POMPE A ESSENCE 2	1	1				
19	95895–06012	BOLT, FLANGE BOULON	2	2				
20	90119–06M17	BOLT, WITH WASHER BOULON, AVEC RONDELLE	4	4				
21	60V–85516–00	SPACER ENTRETOISE	4	4				
22	90387–06289	COLLAR COLLERETTE	4	4				
23	6DA–24462–00	CAP, BLIND COUVERCLE, BORGNE	1	1				
24	90464–06001	CLAMP BRIDE	1	1				
25	90465–11M10	CLAMP BRIDE	1	1				
26	90464–09130	CLAMP BRIDE	1	1				
27	6P2–24170–00	CANISTER ASSY BANDE, RASERVOIR A ESSENCE	1	1				

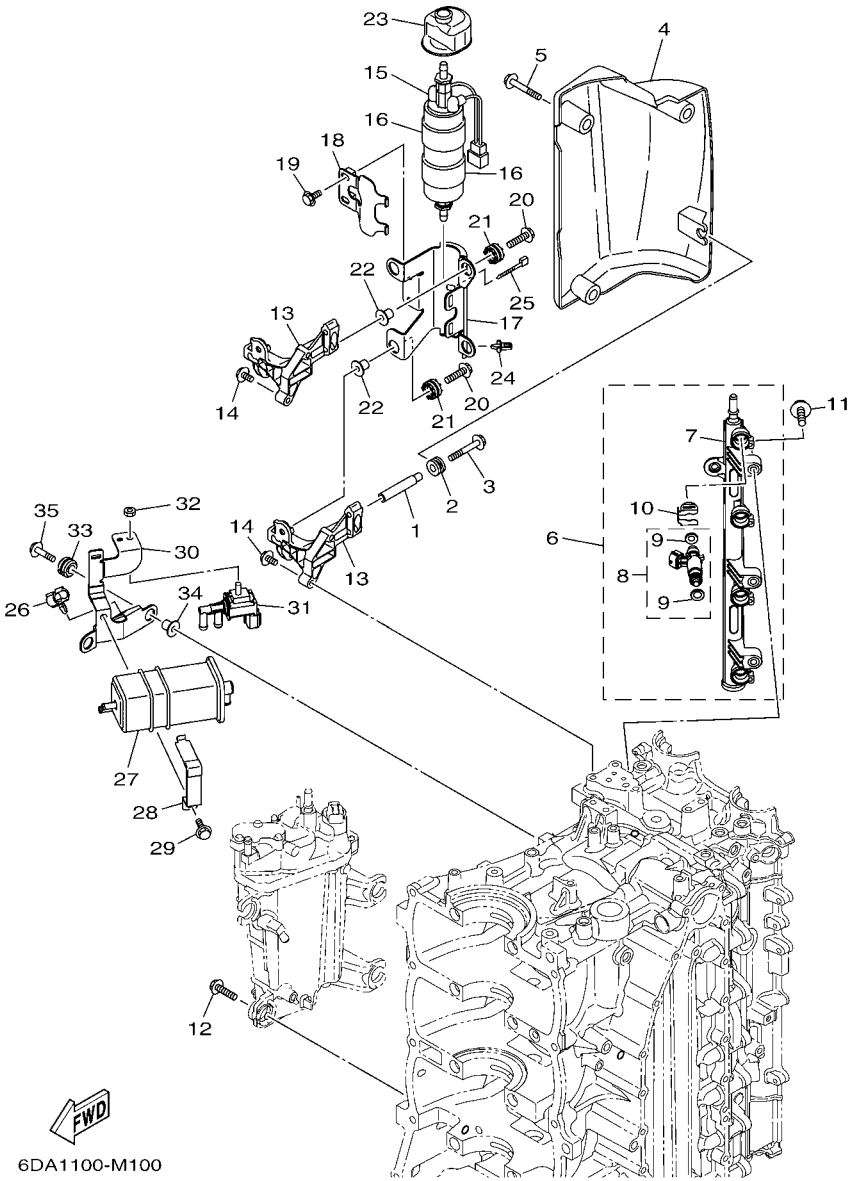

FIG. 10 INTAKE 2 — ADMISSION 2

REF. NO.	PART NO. N° PIECES	DESCRIPTION DESCRIPTION	6DV2	6DW2				REMARKS REMARQUES
28	63P–2419A–01	HOLDER SUPPORT	1	1				
29	95895–06016	BOLT, FLANGE BOULON	1	1				
30	6DA–2134X–00	BRACKET, CANISTER SUPPORT	1	1				
31	6C5–86120–00	SOLENOID VALVE ASSY SOLENOIDE	1	1				
32	95380–06600	NUT, HEXAGON ECROU	1	1				
33	90480–14031	GROMMET PASSE-FIL	2	2				
34	90387–06289	COLLAR COLLERETTE	2	2				
35	90119–06M17	BOLT, WITH WASHER BOULON, AVEC RONDELLE	2	2				

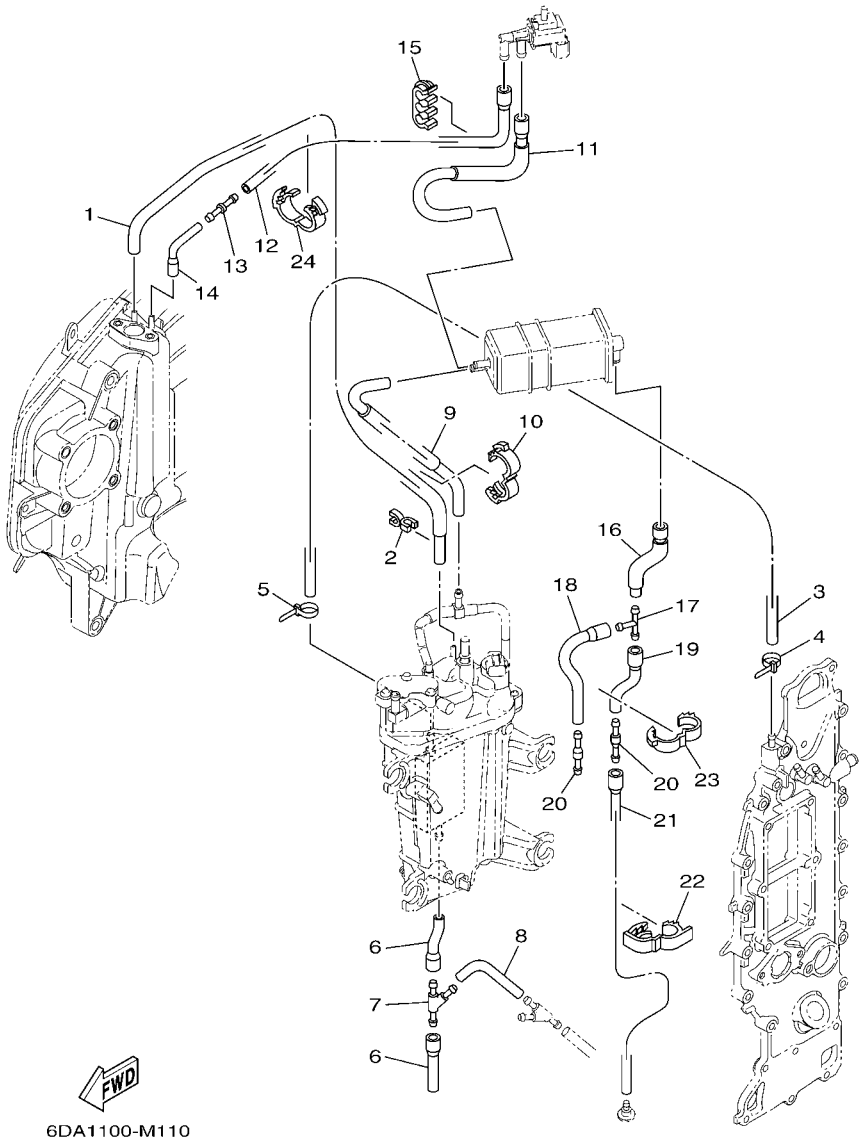

FIG. 11 INTAKE 3 — ADMISSION 3

REF. NO.	PART NO. N° PIECES	DESCRIPTION DESCRIPTION	6DV2	6DW2				REMARKS REMARQUES
1	6DA–13532–00	HOSE, VACUUM SENSING 3 DURITE 3	1	1				
2	90464–07M41	CLAMP BRIDE	1	1				
3	90445–09120	HOSE (L600) DURITE (L600)	1	1				
4	90465–11M10	CLAMP BRIDE	1	1				
5	90465–11M10	CLAMP BRIDE	1	1				
6	6DA–12576–00	HOSE 1 TUYAU 1	2	2				
7	6CE–24377–00	PIPE, JOINT 2 DURITE RACCORDEMENT 2	1	1				
8	90445–10056	HOSE (L85) DURITE (L85)	1	1				
9	6DA–1475A–00	PIPE 1 DURITE 1	1	1				
10	90464–16001	CLAMP BRIDE	1	1				
11	6DA–1475F–00	PIPE 3 DURITE 3	1	1				
12	6DA–2416A–00	HOSE DURITE	1	1				
13	6CB–14989–00	ORIFICE, AIR VENT OR1F1CE	1	1				
14	6DA–1475G–00	PIPE 4 DURITE 4	1	1				
15	90464–10011	CLAMP BRIDE	1	1				
16	6DA–13545–00	HOSE 1 DURITE 1	1	1				
17	688–24378–00	PIPE, JOINT 3 DURITE RACCORDEMENT 3	1	1				
18	68V–13546–10	HOSE 2 DURITE 2	1	1				
19	6DA–13548–00	HOSE, AIR 4 DURITE, A AIR 4	1	1				
20	6E5–21744–00	BREATHER RENIFLARD	2	2				
21	6DA–13547–00	HOSE 3 DURITE 3	1	1				
22	90464–18004	CLAMP BRIDE	1	1				
23	90464–16001	CLAMP BRIDE	1	1				
24	90464–16001	CLAMP BRIDE	1	1				

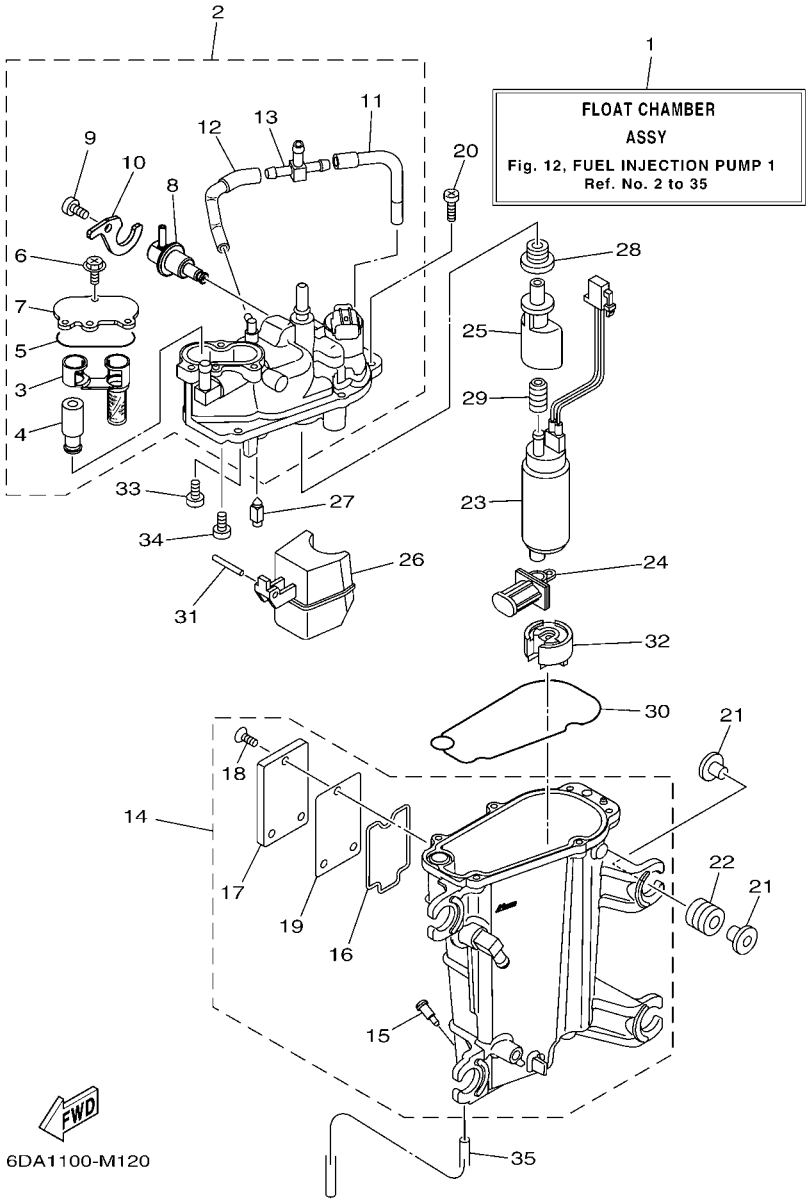

FIG. 12 FUEL INJECTION PUMP 1 POMPE A INJECTEUR 1

REF. NO.	PART NO. N° PIECES	DESCRIPTION DESCRIPTION	6DV2	6DW2				REMARKS REMARQUES
1	6DA–14180–00	FLOAT CHAMBER ASSY CUVE DE FLOTTEUR	1	1				
2	6DA–14182–00	COVER, FLOAT CHAMBER COUVERCLE, CUVE DE FLOTTEUR	1	1				
3	6CB–24501–01	.FILTER, FUEL .FILTRE	1	1				
4	6CB–24460–00	.RELIEF VALVE ASSY .SOUPAPE DE SECURITE COMPLET	1	1				
5	6CB–13016–00	.O-RING .JOINT TORIQUE	1	1				
6	6CB–14216–00	.SCREW .VIS	3	3				
7	6CB–24217–00	.COVER .COUVERCLE	1	1				
8	6CB–13906–01	.REGULATOR, PRESSURE .REGULATEUR DE PRESSION	1	1				
9	6CB–14564–00	.SCREW .VIS	1	1				
10	6DA–14146–00	.PLATE .PLAQUE	1	1				
11	6DA–13892–00	.HOSE, AIR 2 .DURITE, A AIR 2	1	1				
12	6DA–13893–00	.HOSE, AIR 3 .DURITE, A AIR 3	1	1				
13	69J–24379–00	.PIPE, JOINT 4 .DURITE RACCORDEMENT 4	1	1				
14	6DA–14181–00	BODY, FLOAT CHAMBER 1 CORPS, CUVE DE FLOTTEUR 1	1	1				
15	6P2–14191–00	.PLUG, DRAIN .PLOT, VIDANGE	1	1				
16	6CB–14239–00	.SEAL .JOINT	1	1				
17	6CB–24452–10	.COVER .COUVERCLE	1	1				
18	6CB–14429–01	.SCREW .VIS	3	3				
19	6CB–24482–00	.GASKET 1 .JOINT 1	1	1				
20	63P–14567–00	SCREW VIS	6	6				
21	69J–13716–00	COLLAR COLLERETTE	8	8				
22	6CB–13593–00	DAMPER AMORTISSEUR	4	4				
23	6P2–13907–20	FUEL PUMP COMP. POMPE A CARBURANT COMP.	1	1				
24	63P–13915–00	FILTER FILTRE	1	1				
25	6AW–13132–00	JOINT RACCORD	1	1				
26	6CB–14985–00	FLOAT FLOTTEUR	1	1				
27	6CB–14546–00	VALVE, NEEDLE POINTEAU	1	1				

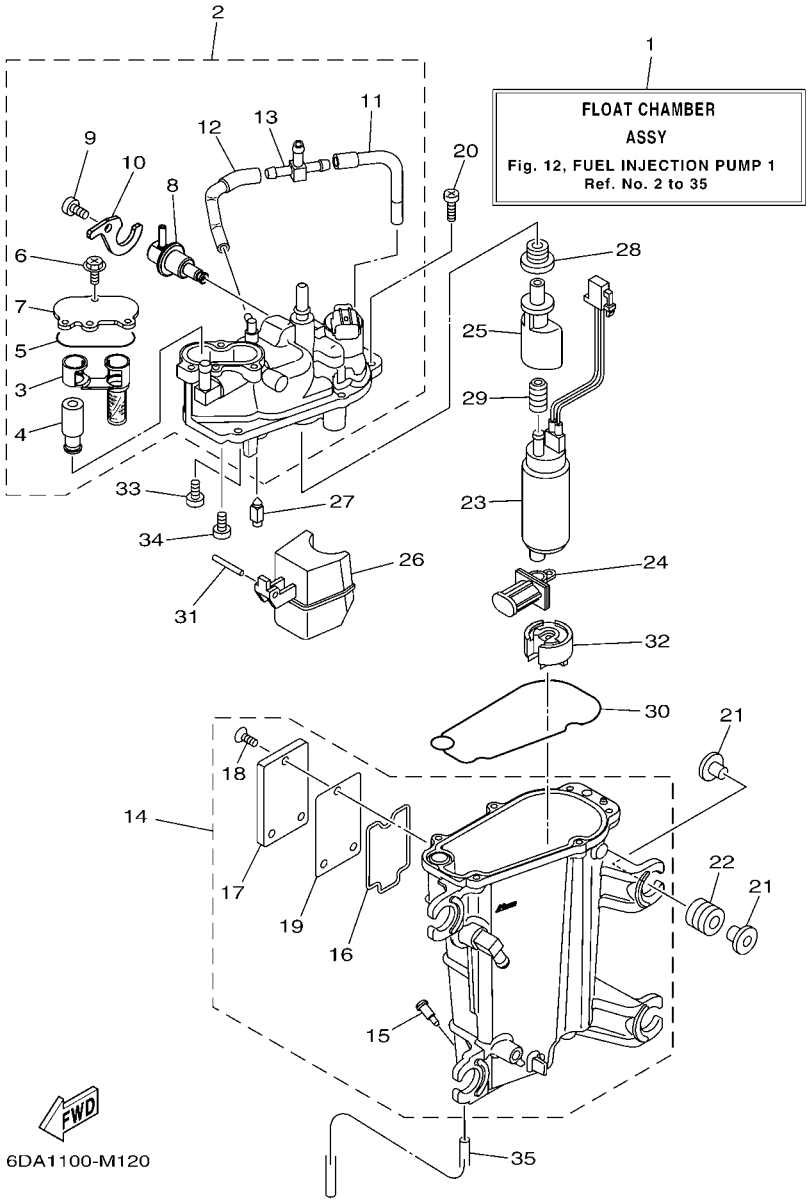

FIG. 12 FUEL INJECTION PUMP 1 POMPE A INJECTEUR 1

REF. NO.	PART NO. N° PIECES	DESCRIPTION DESCRIPTION	6DV2	6DW2				REMARKS REMARQUES
28	6CB–1447B–00	BUSH 1 DOUILLE 1	1	1				
29	6AW–13781–00	DAMPER, PUMP AMORTISSEUR, POMPE	1	1				
30	6CB–14984–00	GASKET, FLOAT CHAMBER JOINT, CUVE DE FLOTTEUR	1	1				
31	6P2–14386–00	PIN, FLOAT AXE, FLOTTEUR	1	1				
32	6AW–13784–00	COVER, PUMP COUVERCLE, POMPE	1	1				
33	4SV–24453–00	SCREW VIS	1	1				
34	98507–04008	SCREW, PAN HEAD VIS, TETE TRONCONIQUE	1	1				
35	6P2–14149–00	PIPE DURITE	1	1				

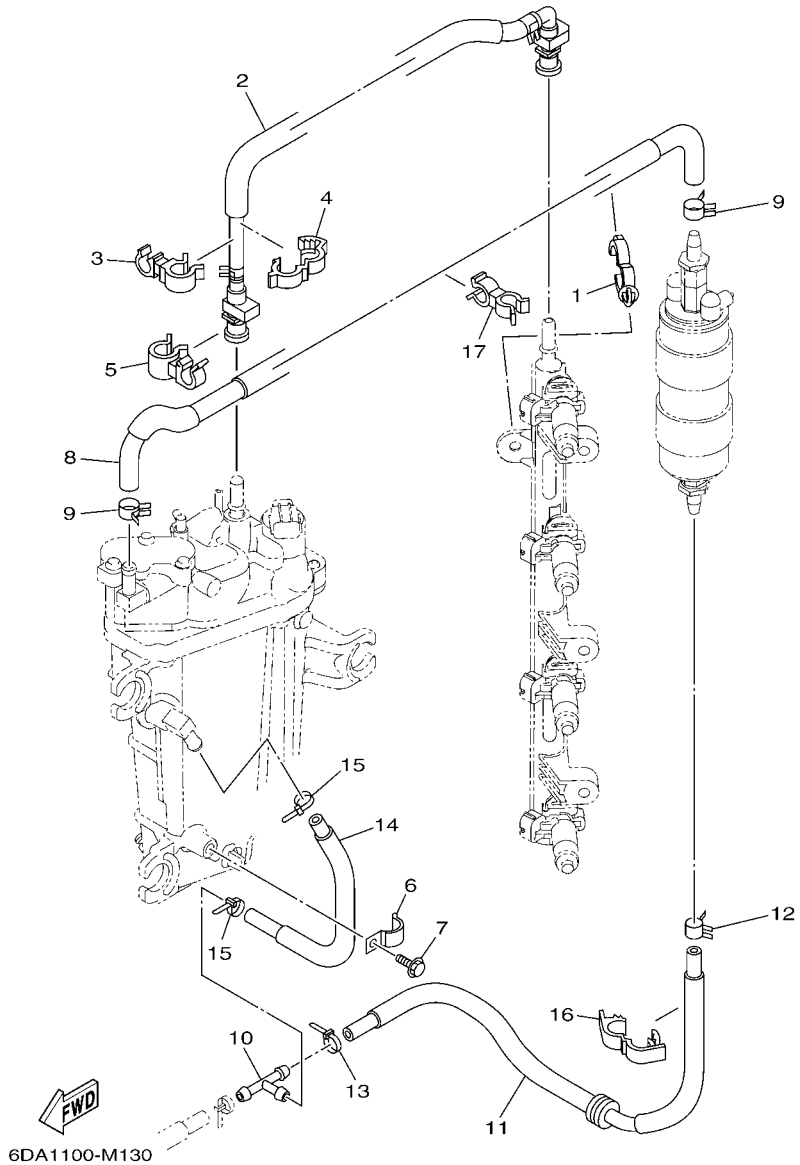

FIG. 13 FUEL INJECTION PUMP 2 POMPE A INJECTEUR 2

REF. NO.	PART NO. N° PIECES	DESCRIPTION DESCRIPTION	6DV2	6DW2				REMARKS REMARQUES
1	90464–20181	CLAMP BRIDE	1	1				
2	6DA–24310–00	FUEL PIPE ASSY DURITE A ESSENCE	1	1				
3	90464–12010	CLAMP BRIDE	1	1				
4	90464–16003	CLAMP BRIDE	1	1				
5	90464–15007	CLAMP BRIDE	1	1				
6	90465–08M63	CLAMP BRIDE	1	1				
7	95895–06010	BOLT, FLANGE BOULON	1	1				
8	6DA–24324–00	PIPE 13 DURITE 13	1	1				
9	90467–120A7	CLIP JONC	2	2				
10	6E5–24378–00	PIPE, JOINT 3 DURITE, RACCORDEMENT 3	1	1				
11	6DA–24317–10	PIPE 7 DURITE 7	1	1				FOR F(L)200GET FOR F(L)200GET
	6DA–24317–00	PIPE 7 DURITE 7	1	1				FOR F(L)200GET1 FOR F(L)200GET1
12	90467–120A7	CLIP JONC	1	1				
13	90465–11M10	CLAMP BRIDE	1	1				
14	6DA–24323–10	PIPE 12 DURITE 12	1	1				FOR F(L)200GET FOR F(L)200GET
	6DA–24323–00	PIPE 12 DURITE 12	1	1				FOR F(L)200GET1 FOR F(L)200GET1
15	90465–11M10	CLAMP BRIDE	2	2				
16	90464–18004	CLAMP BRIDE	1	1				
17	90464–13260	CLAMP BRIDE	1	1				

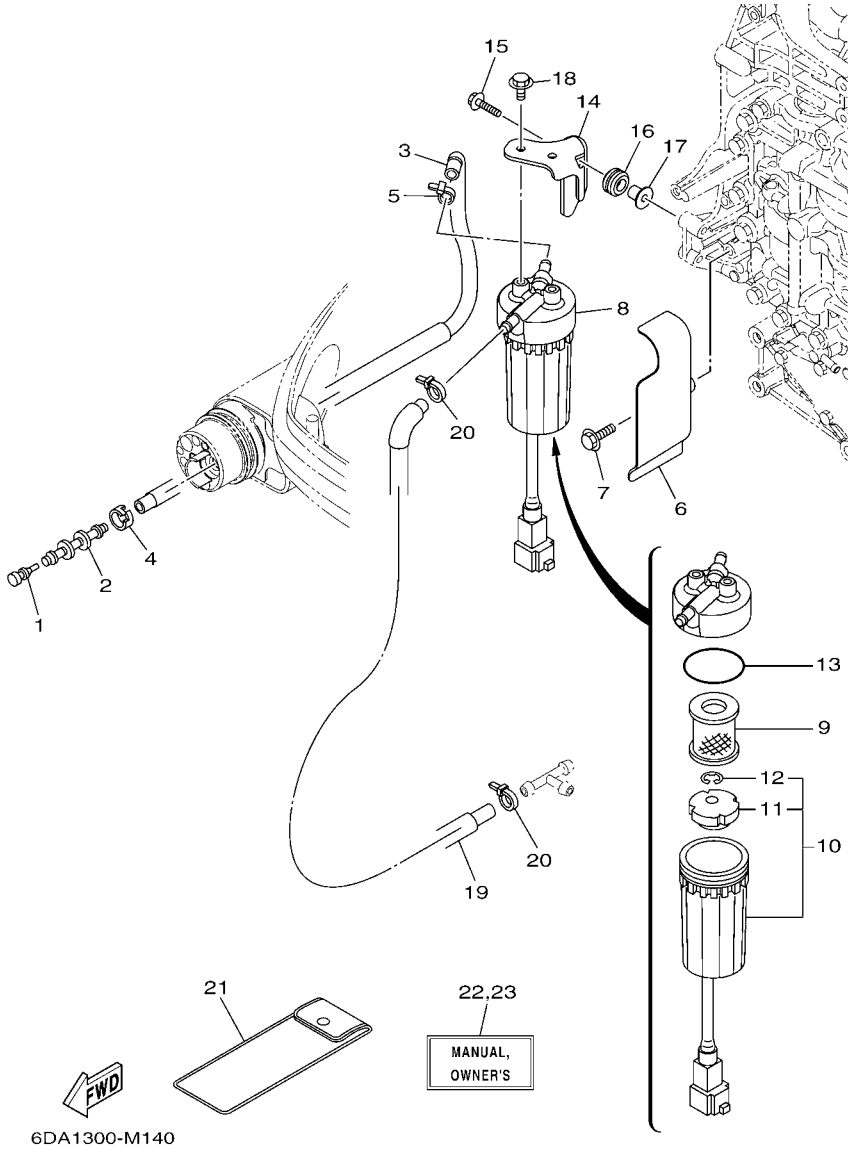

FIG. 14 FUEL 1 — CARBURANT 1

REF. NO.	PART NO. N° PIECES	DESCRIPTION DESCRIPTION	6DV2	6DW2				REMARKS REMARQUES
1	689–85547–00	DAMPER AMORTISSEUR	1	1				
2	6AW–24377–01	PIPE, JOINT 2 DURITE RACCORDEMENT 2	1	1				
3	6DA–24314–10	PIPE 4 DURITE 4	1	1				FOR F(L)200GET FOR F(L)200GET
	6DA–24314–00	PIPE 4 DURITE 4	1	1				FOR F(L)200GET1 FOR F(L)200GET1
4	6E5–24351–51	BAND 1 COLLIER 1	1	1				
5	90465–11M10	CLAMP BRIDE	1	1				
6	6DA–24596–00	COVER COUVERCLE	1	1				
7	95895–06025	BOLT, FLANGE BOULON	2	2				
8	6P3–24560–03	FILTER ASSY ENS FILTRE	1	1				
9	6P3–24563–01	.ELEMENT, FILTER .ELEMENT, FILTRE	1	1				
10	6P3–24562–03	.CUP, FILTER .CUVETTE, FILTRE	1	1				
11	6P3–24469–00	..FLOAT, WATER LEVEL ..FLOTTEUR	1	1				
12	6P3–24519–00	..CLIP ..JONC	1	1				
13	6P3–24564–00	.GASKET .JOINT	1	1				
14	6DA–24566–00	BRACKET, FILTER SUPPORT, FILTRE	1	1				
15	90119–06M17	BOLT, WITH WASHER BOULON, AVEC RONDELLE	2	2				
16	90480–15013	GROMMET PASSE-FIL	2	2				
17	90387–06289	COLLAR COLLERETTE	2	2				
18	95895–06012	BOLT, FLANGE BOULON	2	2				
19	6DA–24313–10	PIPE 3 DURITE 3	1	1				FOR F(L)200GET FOR F(L)200GET
	6DA–24313–00	PIPE 3 DURITE 3	1	1				FOR F(L)200GET1 FOR F(L)200GET1
20	90465–11M10	CLAMP BRIDE	2	2				
21	69J–28100–01	TOOL KIT TROUSSE A OUTILS	1	1				AP AP
22	6DV–28199–71–E0	MANUAL,OWNER'S MANUEL D'UTILISATION	1	1				UR (E) UR (E)
	6DV–28199–71–F0	MANUAL,OWNER'S MANUEL D'UTILISATION	1	1				UR (F) UR (F)
	6DV–28199–71–S0	MANUAL,OWNER'S MANUEL D'UTILISATION	1	1				UR (ES) UR (ES)
	6DV–28199–71–G0	MANUAL,OWNER'S MANUEL D'UTILISATION	1	1				UR (D) UR (D)

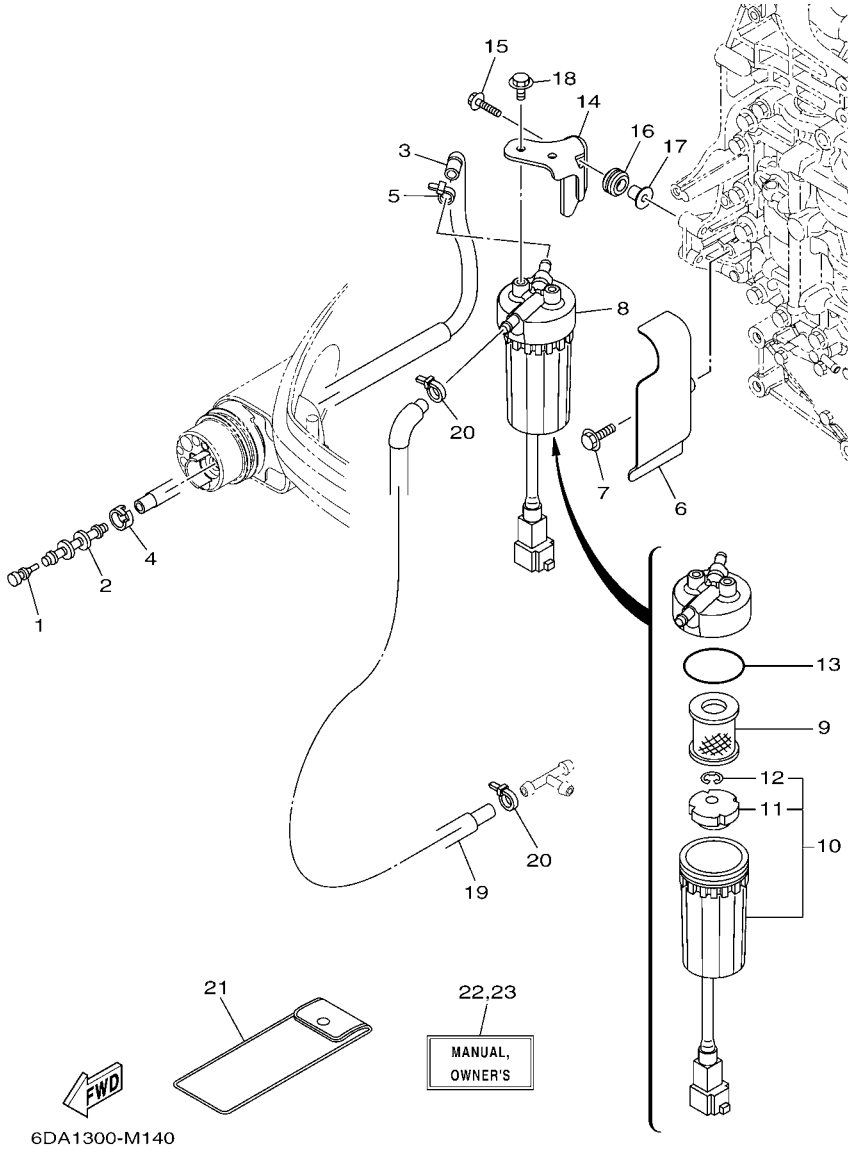

FIG. 14 FUEL 1 — CARBURANT 1

REF. NO.	PART NO. N° PIECES	DESCRIPTION DESCRIPTION	6DV2	6DW2				REMARKS REMARQUES
22	6DV–28199–71–D0	MANUAL,OWNER'S MANUEL D'UTILISATION	1	1				UR (NL) UR (NL)
	6DV–28199–71–H0	MANUAL,OWNER'S MANUEL D'UTILISATION	1	1				UR (I) UR (I)
23	6DV–28199–81–K0	MANUAL,OWNER'S MANUEL D'UTILISATION	1	1				UR (DK) UR (DK)
	6DV–28199–81–R0	MANUAL,OWNER'S MANUEL D'UTILISATION	1	1				UR (GR) UR (GR)
	6DV–28199–81–P0	MANUAL,OWNER'S MANUEL D'UTILISATION	1	1				UR (P) UR (P)
	6DV–28199–81–N0	MANUAL,OWNER'S MANUEL D'UTILISATION	1	1				UR (N) UR (N)
	6DV–28199–81–M0	MANUAL,OWNER'S MANUEL D'UTILISATION	1	1				UR (S) UR (S)
	6DV–28199–81–L0	MANUAL,OWNER'S MANUEL D'UTILISATION	1	1				UR (SF) UR (SF)

FIG. 15 FUEL 2 CARBURANT 2

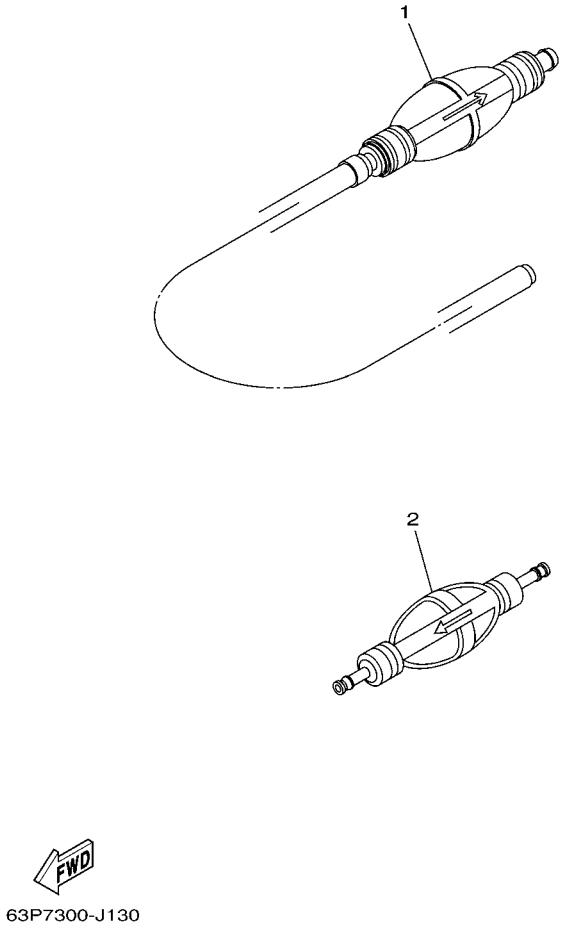

REF. NO.	PART NO. N° PIECES	DESCRIPTION DESCRIPTION	6DV2	6DW2				REMARKS REMARQUES
1	6YK–24307–42	FUEL PIPE COMP. 2 DURITE A ESSENCE 2	1	1				AP F(L)200GET AP F(L)200GET
2	6AW–24360–01	PRIMER PUMP ASSY POMPE D'AMORCAGE	1	1				AP F(L)200GET1 AP F(L)200GET1

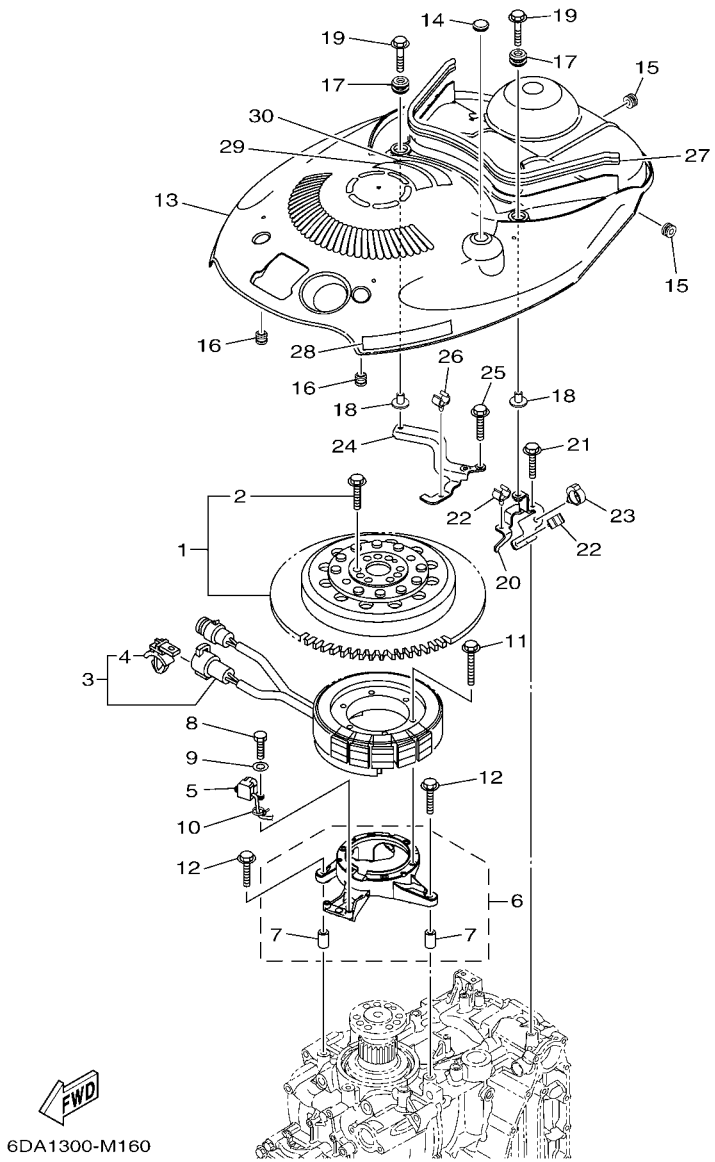

FIG. 16 GENERATOR GENERATRICE

REF. NO.	PART NO. N° PIECES	DESCRIPTION DESCRIPTION	6DV2	6DW2				REMARKS REMARQUES
1	6DA–W8145–00	ROTOR ASSY WITH BOLTS ROTOR COMPLET AVEC BOULON	1	1				
2	6AW–W9011–00	.BOLT SET (FOR ROTOR ASSY) .BOULON ENS. (POUR ROTOR COMPL)	1	1				
3	6DA–81410–00	STATOR ASSY STATOR COMPLET	1	1				
4	90464–12002	.CLAMP .BRIDE	1	1				
5	6CB–85580–00	COIL, PULSER BOBINE, PULSEUR	1	1				
6	6DA–85561–00	BASE, MAGNETO BASE, MAGNETO	1	1				
7	99590–08012	.PIN, DOWEL .GOUJON, D'ASSEMBLAGE	2	2				
8	97095–05020	BOLT BOULON	2	2				
9	92995–05600	WASHER RONDELLE	2	2				
10	90465–13M97	CLAMP BRIDE	1	1				
11	95022–06035	BOLT, FLANGE BOULON, A COLLERETTE	6	6				
12	95895–06030	BOLT, FLANGE BOULON	4	4				
13	6DA–81337–00	COVER, FLYWHEEL COUVERCLE, VOLANT	1	1				
14	90480–16025	GROMMET PASSE-FIL	1	1				
15	90480–12314	GROMMET PASSE-FIL	2	2				
16	6A0–82317–00	DAMPER, IGNITION COIL AMORTISSEUR, BOBINE D'ALLUM	2	2				
17	6BG–42748–00	GROMMET PASSE-FIL	2	2				
18	90387–06M69	COLLAR COLLERETTE	2	2				
19	90119–06M61	BOLT, WITH WASHER BOULON, AVEC RONDELLE	2	2				
20	6DA–8132G–00	PLATE PLAQUE	1	1				
21	95895–06016	BOLT, FLANGE BOULON	1	1				
22	90464–09130	CLAMP BRIDE	2	2				
23	90464–20181	CLAMP BRIDE	1	1				
24	6DA–82398–00	PLATE 3 PLAQUETTE 3	1	1				
25	95895–06016	BOLT, FLANGE BOULON	2	2				
26	90464–09130	CLAMP BRIDE	1	1				
27	6DA–42617–00	DAMPER, FORM BOURRELET, CAOUTCHOUC	1	1				

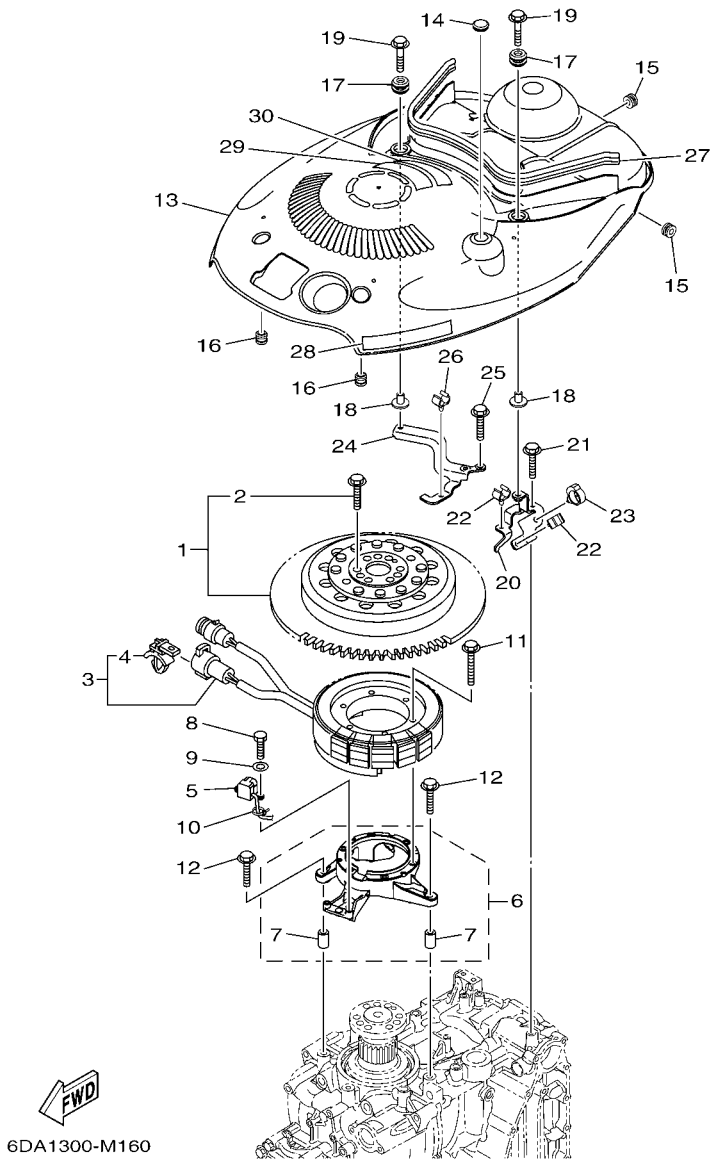

FIG. 16 GENERATOR GENERATRICE

REF. NO.	PART NO. N° PIECES	DESCRIPTION DESCRIPTION	6DV2	6DW2				REMARKS REMARQUES
28	63P–13437–62	MARK, CAUTION MAKER	1	1				
29	6AH–81994–40	LABEL, SAFETY ETIQUETTE, SECURITE	1	1				
30	6AH–81994–50	LABEL, SAFETY ETIQUETTE, SECURITE	1	1				

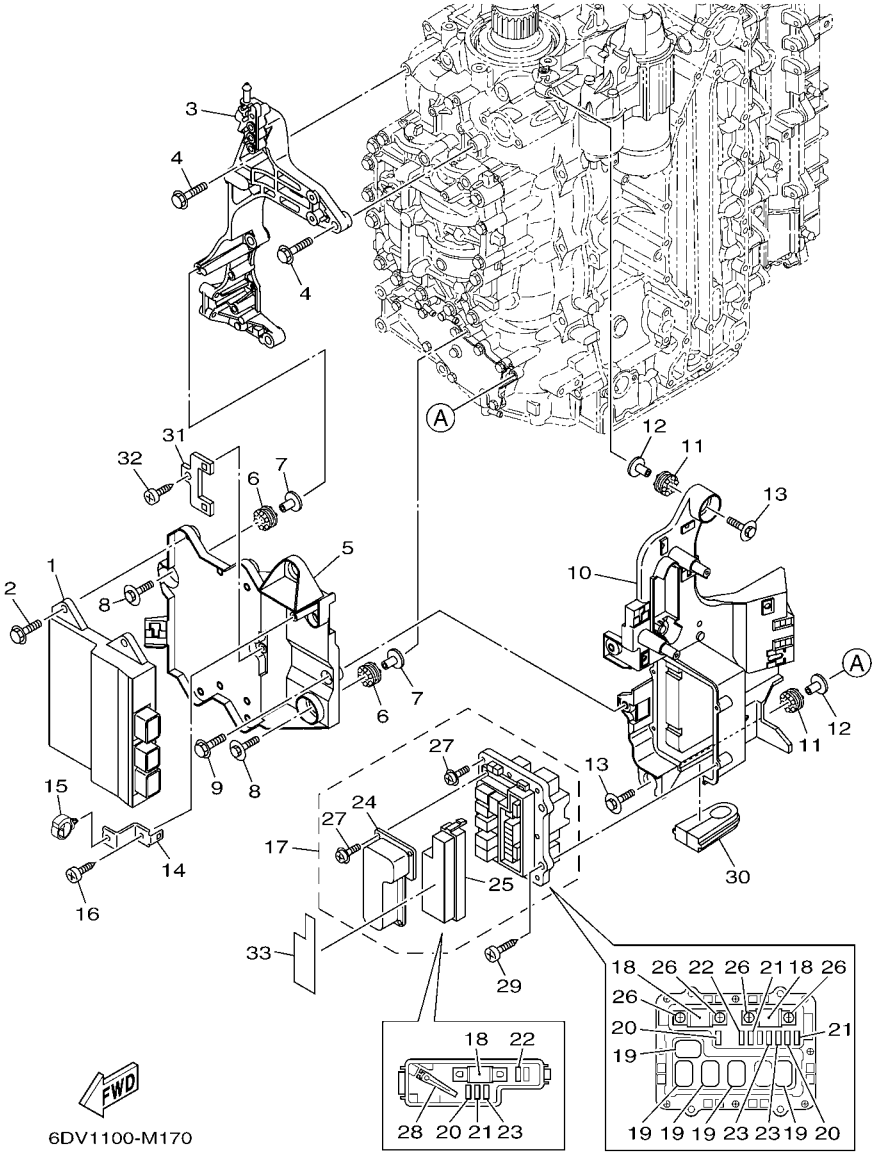

FIG. 17 ELECTRICAL 1 PARTIE ELECTRIQUE 1

REF. NO.	PART NO. N° PIECES	DESCRIPTION DESCRIPTION	6DV2	6DW2				REMARKS REMARQUES
1	6DV–8591A–01	ENGINE CONTROL UNIT ASSY BLOC DE CONTROL	1	1				
2	95895–06020	BOLT, FLANGE BOULON	4	4				
3	6DA–85991–00	BRACKET, UNIT SUPPORT COMPLET	1	1				
4	95875–08035	BOLT, FLANGE BOULON, A COLLERETTE	4	4				
5	6DA–81948–00	BRACKET SUPPORT	1	1				
6	68F–85516–01	SPACER ENTRETOISE	3	3				
7	90387–06176	COLLAR COLLERETTE	3	3				
8	68F–85119–00	BOLT BOULON	3	3				
9	95895–06016	BOLT, FLANGE BOULON	2	2				
10	6DA–81952–00	HOLDER, RELAY SUPPORT, RELAIS	1	1				
11	68F–85516–01	SPACER ENTRETOISE	3	3				
12	90387–06176	COLLAR COLLERETTE	3	3				
13	68F–85119–00	BOLT BOULON	3	3				
14	6DA–85548–00	HOLDER SUPPORT	1	1				
15	90464–20181	CLAMP BRIDE	1	1				
16	97780–60620	SCREW, TAPPING VIS, TETE BOMBEE	1	1				
17	6DV–82170–00	FUSE BOX ASSY BOITE A FUSIBLES	1	1				Go to P/N : PE0-OM-140046
18	6P2–82151–00	.FUSE (60A) .FUSIBLE (60A)	3	3				
19	68F–8195A–00	.RELAY ASSY .RELAIS COMPLET	5	5				Go to P/N : PE0-OM-140046
20	67F–82151–40	.FUSE (10A) .FUSIBLE (10A)	3	3				
21	67F–82151–50	.FUSE (15A) .FUSIBLE (15A)	3	3				
22	67F–82151–00	.FUSE (20A) .FUSIBLE (20A)	2	2				
23	67F–82151–10	.FUSE (30A) .FUSIBLE (30A)	3	3				
24	6CB–81639–00	.COVER .PLAQUE, FIXATION D'INDUIT	1	1				Go to P/N : PE0-OM-140046
25	6CB–85544–00	.CASE .BOITIER	1	1				
26	68F–82846–00	.SCREW, PAN HEAD (M5) .VIS, TETE TRONCONIQUE (M5)	4	4				
27	6P2–82113–00	.SCREW .VIS	13	13				

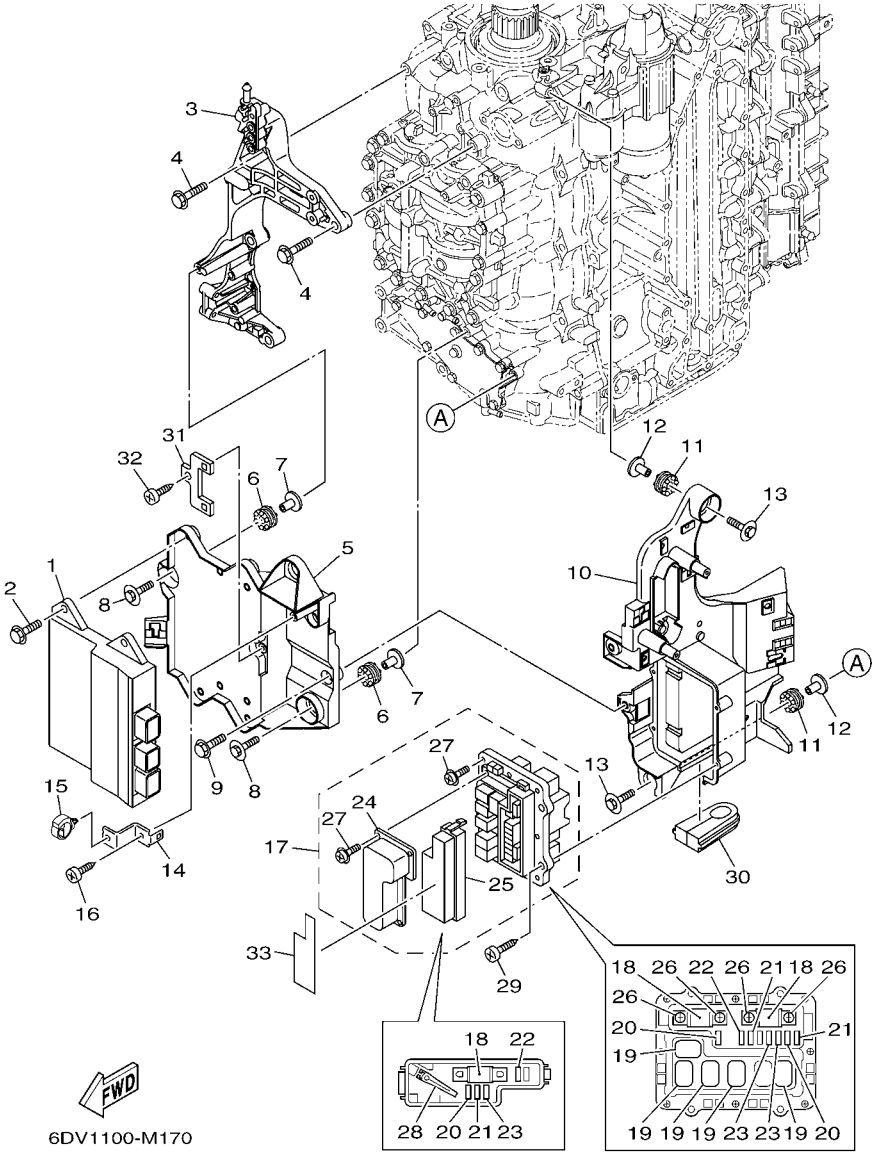

FIG. 17 ELECTRICAL 1 — PARTIE ELECTRIQUE 1

REF. NO.	PART NO. N° PIECES	DESCRIPTION DESCRIPTION	6DV2	6DW2				REMARKS REMARQUES
28	67F–2812A–00	.PULLER, FUSE .TENDEUR, FUSIBLE	1	1				
29	97780–50620	SCREW, TAPPING VIS, TETE BOMBEE	4	4				
30	6DA–81336–00	GROMMET OEILLET CAOUTCHOUC	1	1				
31	6C5–8257V–00	PLATE, CONNECTOR PLAQUE, CONNECTEUR	1	1				
32	97780–60620	SCREW, TAPPING VIS, TETE BOMBEE	1	1				
33	6DV–81919–00	GRAPHIC, REGULATOR ADHESIF, REGULATEUR	1	1				

PARTS NEWS

YAMAHA
YAMAHA MOTOR CO., LTD.
2500 SHINGAI IWATA SHIZUOKA JAPAN

News No.PE0-OM-140046 Revise

Date:2014/12/2

1 ***Change PARTS CATALOGUE NO. (Revise : Dec.,10,2014)**

Signature:S.Ishibashi

Cause : ☑ Revision Notice ☐ Correction ☐ Sales Unit Change ☐ Others

Model	F200CA, F200G(6DV2) / LF200CA, FL200G(6DW2)
Subject	⚠1 PARTS CATALOGUE CORRECTIONS
CATALOGUE NO.	1N6DV-100E1 / 1N6DW-100E1 / 1N6DV-200S1 / 1N6DV-300F1

Time of YPEC Revision Text, Illustration --> Dec./26/2014 PDF Replace --> Dec./26/2014

(YPEC = Yamaha Parts Electrical Catalogue = Website parts catalogue)

Applicable Engine Serial No.

MODEL NAME	MODEL CODE	Applicable Engine Serial No.
F200CA, F200G	6DV2	6DV:1001439-
LF200CA,FL200G	6DW2	6DW:1000693-

*1: Interchangeability

A	Old Parts → New Parts	Old Parts → New Parts
B	Old Parts → New Parts	Old Parts → New Parts
C	Old Parts → New Parts	Old Parts → New Parts
○	These parts are interchangeable with a set	

LIST CORRECTION

FIG.17 ELECTRICAL 1

Fig. No.	Ref. No.	OLD P/No.	NEW P/No.	DESCRIPTION	Q'TY	*Interchangeability	REMARKS
17	17	6DV-82170-00	**6DV-82170-10**	FUSE BOX ASSY	1	○	***Part number revision**
	19	68F-8195A-00	**6AW-8195A-00**	. RELAY ASSY	5		
	24	6CB-81639-00	**6CB-81639-10**	. COVER	1		

FIG.20 ELECTRICAL 4

20	1	6DV-82590-00	**6DV-82590-01**	WIRE HARNESS ASSY	1	○	***Part number revision**

Thank you very much for your cooperation.

Parts Manager Check	Service Manager Check	Parts Manager File

YAMAHA MOTOR CO.,LTD
2500 Shingai Iwata Shizuoka 438-8501.Japan
Technical Publication Dept.

YAMAHA GENUINE Parts & Accessories

FIG. 18 ELECTRICAL 2 PARTIE ELECTRIQUE 2

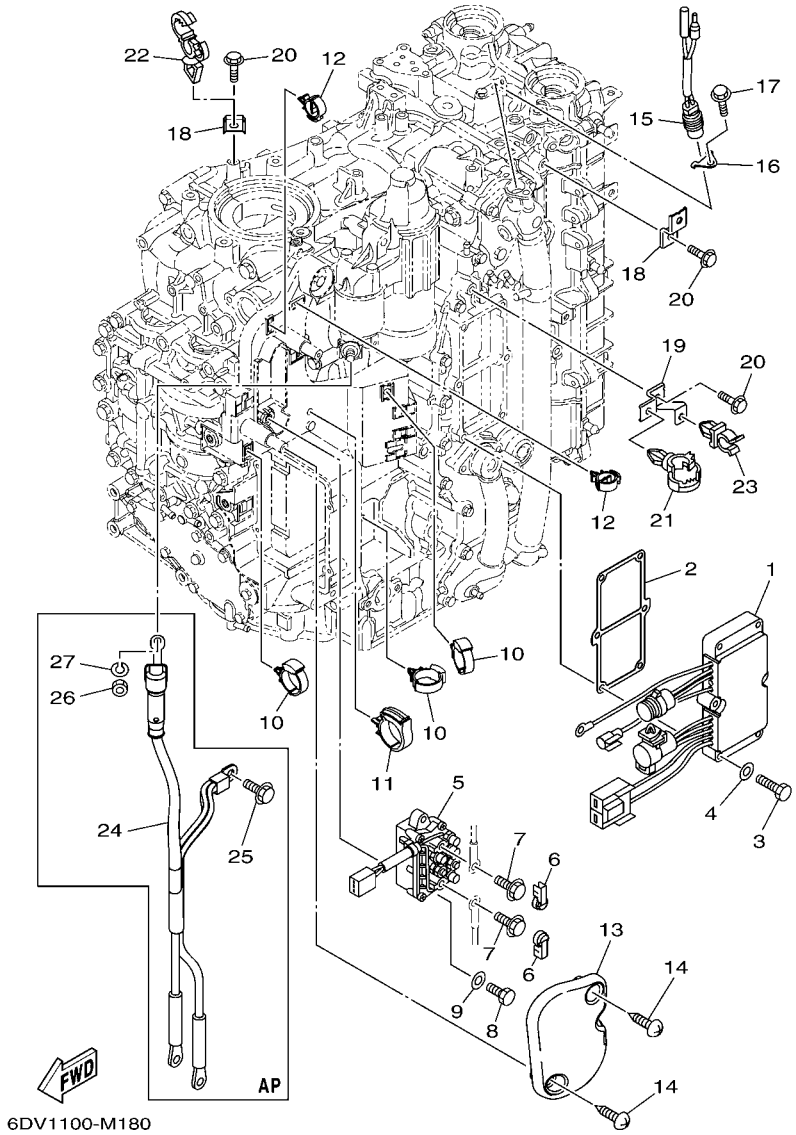

6DV1100-M180

REF. NO.	PART NO. N° PIECES	DESCRIPTION DESCRIPTION	6DV2	6DW2				REMARKS REMARQUES
1	6DA–81960–00	RECTIFIER & REGULATOR ASSY REDRESSEUR REGULATEUR CPLT	1	1				
2	6DA–81975–00	PLATE, RECTIFIER FITTING PLAQUE, FIXATION DU REDRESSEUR	1	1				
3	97095–06035	BOLT BOULON	6	6				
4	92995–06600	WASHER RONDELLE	6	6				
5	6AW–81950–00	RELAY ASSY RELAIS COMPLET	1	1				
6	6P2–8183X–00	CAP, TERMINAL COUVERCLE, BORNE	2	2				
7	97595–06610	BOLT, WITH WASHER VIS HEXAGONAL AVC RONDELLE	2	2				
8	97095–06020	BOLT BOULON	2	2				
9	92995–06600	WASHER RONDELLE	2	2				
10	90464–12183	CLAMP BRIDE	3	3				
11	90464–32002	CLAMP BRIDE	1	1				
12	90464–18246	CLAMP BRIDE	2	2				
13	6DA–81942–00	COVER COUVERCLE	1	1				
14	90169–05M00	SCREW, TRUSS HEAD TAPPING VIS, TETE FRAISEE	2	2				
15	6P2–82560–01	THERMO SWITCH ASSY THERMO-CONTACT COMPLET	1	1				
16	6E9–82588–00	PLATE PLAQUE	1	1				
17	95895–06012	BOLT, FLANGE BOULON	1	1				
18	6DA–82388–00	PLATE PLAQUETTE	2	2				
19	6DA–82389–00	PLATE 2 PLAQUETTE 2	1	1				
20	95895–06016	BOLT, FLANGE BOULON	3	3				
21	90464–20181	CLAMP BRIDE	1	1				
22	90464–13249	CLAMP BRIDE	1	1				
23	90464–09008	CLAMP BRIDE	1	1				
24	6DA–82105–01	BATTERY CABLE CABLE DE BATTERIE	1	1				AP AP
25	95895–08016	BOLT, FLANGE BOULON	1	1				AP AP
26	95333–08600	NUT ECROU	1	1				AP AP
27	92903–08100	WASHER, SPRING RONDELLE, GROWER	1	1				AP AP

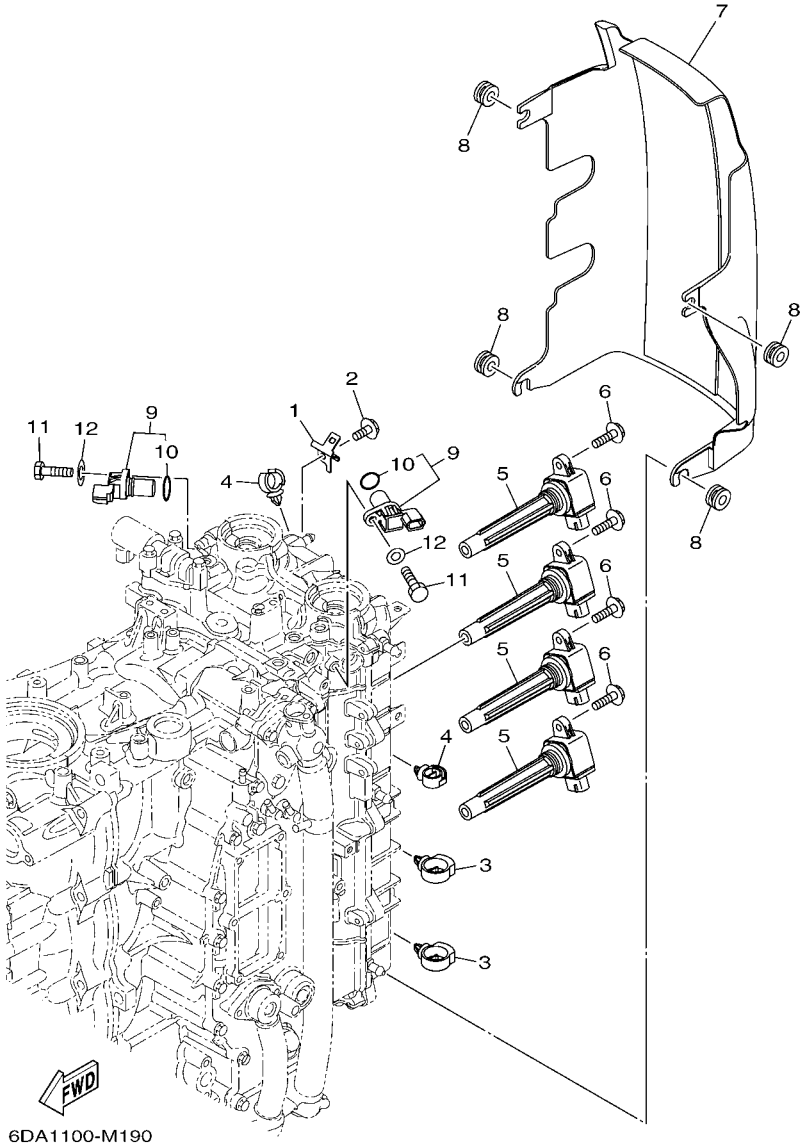

FIG. 19 ELECTRICAL 3 — PARTIE ELECTRIQUE 3

REF. NO.	PART NO. N° PIECES	DESCRIPTION DESCRIPTION	6DV2	6DW2				REMARKS REMARQUES
1	6D8–82389–01	PLATE 2 PLAQUETTE 2	1	1				
2	95895–06012	BOLT, FLANGE BOULON	1	1				
3	90464–20181	CLAMP BRIDE	2	2				
4	90464–13249	CLAMP BRIDE	2	2				
5	6CB–82310–00	IGNITION COIL ASSY BOBINE D'ALLUMAGE	4	4				
6	95895–06025	BOLT, FLANGE BOULON	4	4				
7	6DA–82314–00	COVER, IGNITION COIL COUVERCLE, BOBINE D'ALLUMAGE	1	1				
8	90480–12314	GROMMET PASSE-FIL	4	4				
9	6P2–85896–00	SENSOR, CAM POSITION SONDE DE CAME	2	2				
10	6P2–85075–00	.O-RING .JOINT TORIQUE	1	1				
11	97095–06020	BOLT BOULON	2	2				
12	92995–06600	WASHER RONDELLE	2	2				

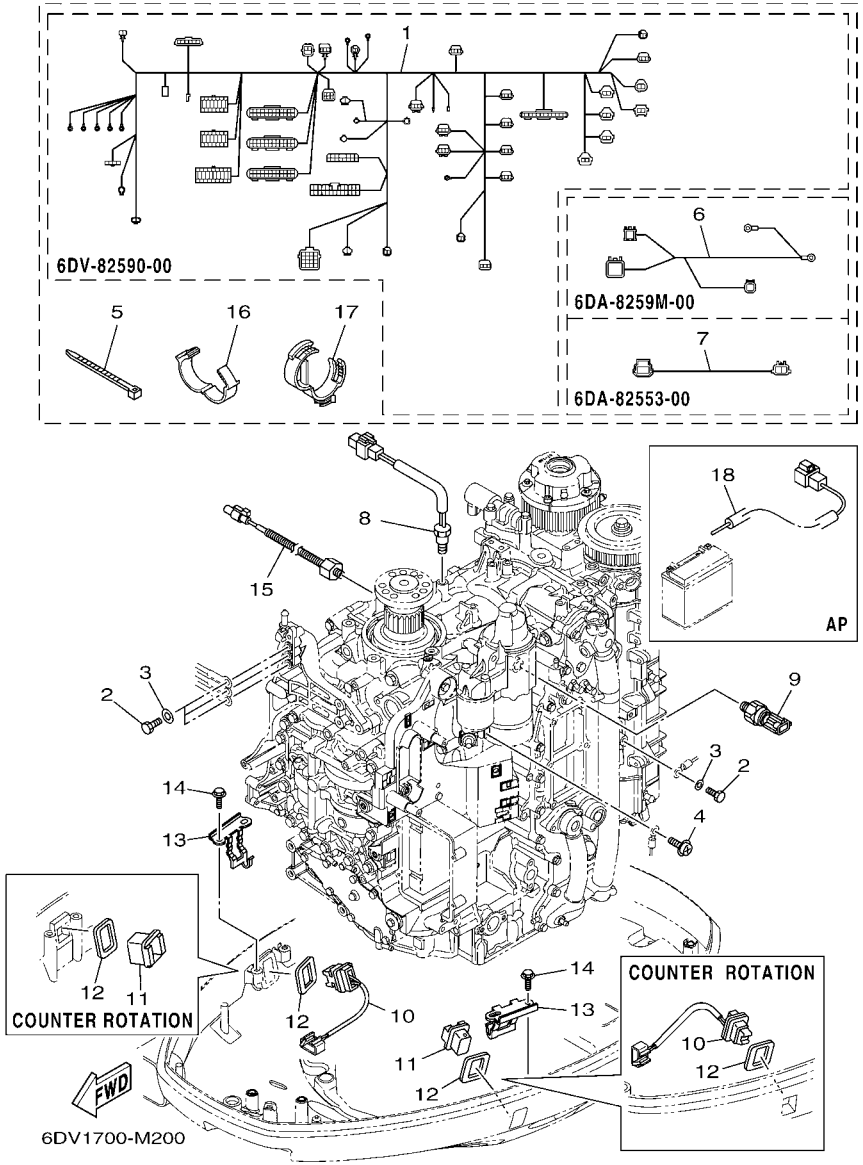

FIG. 20 ELECTRICAL 4 PARTIE ELECTRIQUE 4

REF. NO.	PART NO. N° PIECES	DESCRIPTION DESCRIPTION	6DV2	6DW2				REMARKS REMARQUES
1	6DV–82590–00	WIRE HARNESS ASSY FAISCEAU DE FILS COMPLET	1	1				Go to P/N : PE0-OM-140046
2	97095–06016	BOLT BOULON	4	4				
3	92995–06600	WASHER RONDELLE	4	4				
4	97985–04308	SCREW, WITH WASHER VIS, AVEC RONDELLE	1	1				
5	90465–11M59	CLAMP BRIDE	1	1				
6	6DA–8259M–00	WIRE HARNESS ASSY 2 FAISCEAU DE FILS	1	1				
7	6DA–82553–00	EXTENSION, WIRE LEAD EXTENSION, FAISCEAU	1	1				
8	6CB–85790–00	THERMOSENSOR ASSY SENSITOMETRE	1	1				
9	6AW–83651–00	SENDER, OIL PRESSURE RACCORD, PRESSION D'HUILE	1	1				
10	6BR–82563–00	TRIM & TILT SWITCH ASSY INCLINER ET PARER COMMUTATEUR	1	1				
11	69J–42723–01	COVER, BOTTOM COUVERCLE	1	1				
12	69J–82587–00	GASKET JOINT	2	2				
13	63P–83614–01	BRACKET SUPPORT	2	2				
14	95895–06012	BOLT, FLANGE BOULON	4	4				
15	6CJ–85780–00	SENSOR, KNOCK SONDE DE COGNEMENT	1	1				
16	90464–26001	CLAMP BRIDE	5	5				
17	90464–30003	CLAMP BRIDE	2	2				
18	69J–81949–02	WIRE, LEAD (ISOLATOR, 3.8M) FIL (ISOLATOR, 3.8M)	1	1				AP AP

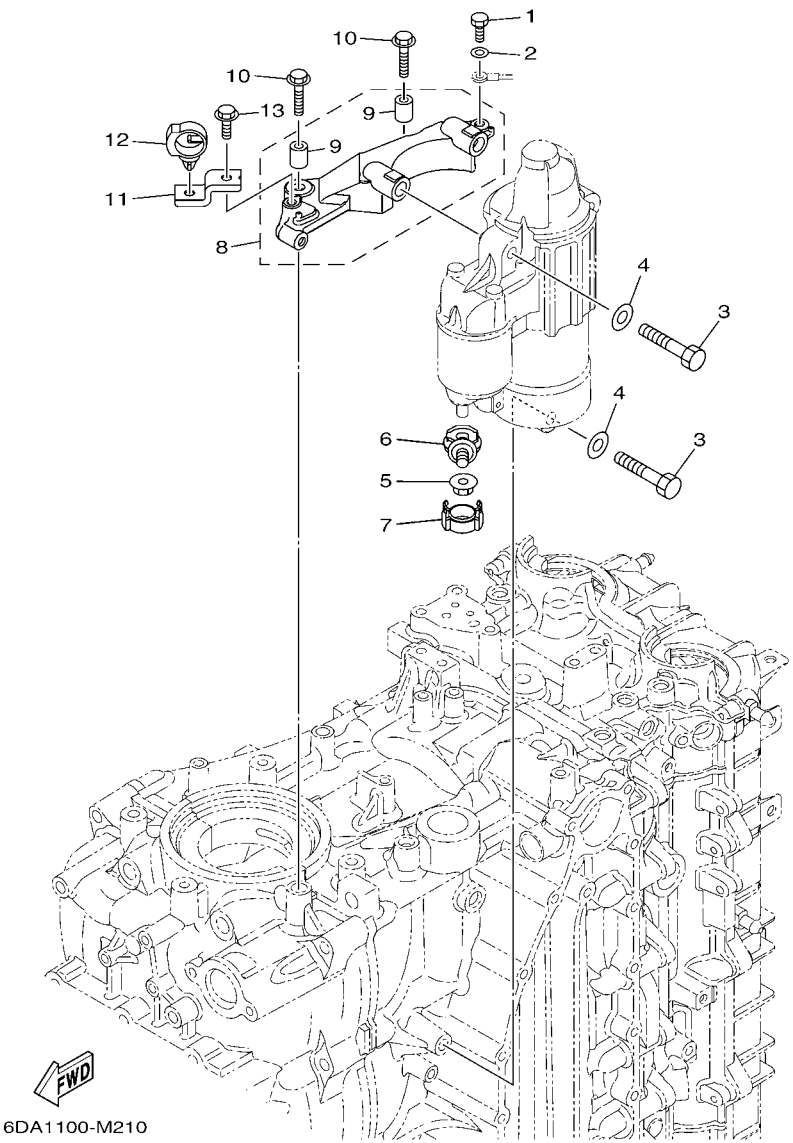

FIG. 21 ELECTRICAL 5 PARTIE ELECTRIQUE 5

REF. NO.	PART NO. N° PIECES	DESCRIPTION DESCRIPTION	6DV2	6DW2				REMARKS REMARQUES
1	97095–06016	BOLT BOULON	1	1				
2	92995–06600	WASHER RONDELLE	1	1				
3	97013–08045	BOLT BOULON	3	3				
4	92903–08600	WASHER, PLATE RONDELLE, PLATE	3	3				
5	90179–08003	NUT ECROU	1	1				
6	60V–81925–00	TERMINAL BORNE	1	1				
7	68F–82582–00	COVER, WIRE HARNESS COUVERCLE, FAISCEAU DE FILS	1	1				
8	6DA–81822–00	BRACKET, STARTING MOTOR SUPPORT, DEMARREUR ELECTRIQUE	1	1				
9	99590–10114	.PIN, DOWEL .GOUJON, D'ASSEMBLAGE	2	2				
10	90105–08M87	BOLT, FLANGE BOULON	2	2				
11	6DA–82388–00	PLATE PLAQUETTE	1	1				
12	90464–20181	CLAMP BRIDE	1	1				
13	95895–06016	BOLT, FLANGE BOULON	1	1				

FIG. 22 ELECTRICAL 6 PARTIE ELECTRIQUE 6

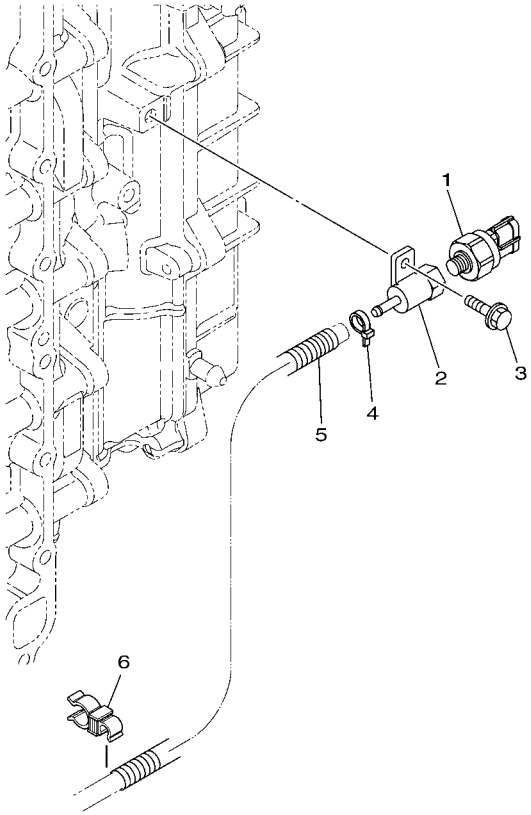

6DV1100-M360

REF. NO.	PART NO. N° PIECES	DESCRIPTION DESCRIPTION	6DV2	6DW2				REMARKS REMARQUES
1	6AW–8366B–01	SENSOR, WATER PRESSURE SONDE DE PRESSION D'EAU	1					FOR LAN SPEED FOR LAN SPEED
2	60V–8366D–00	ADAPTOR, INPUT CONNECTEUR 3	1					FOR LAN SPEED FOR LAN SPEED
3	95895–06016	BOLT, FLANGE BOULON	1					FOR LAN SPEED FOR LAN SPEED
4	90465–11M10	CLAMP BRIDE	1					FOR LAN SPEED FOR LAN SPEED
5	90447–07008	HOSE, WITH SPRING (L200) DURITE	1					FOR LAN SPEED FOR LAN SPEED
6	90464–13013	CLAMP BRIDE	1					FOR LAN SPEED FOR LAN SPEED

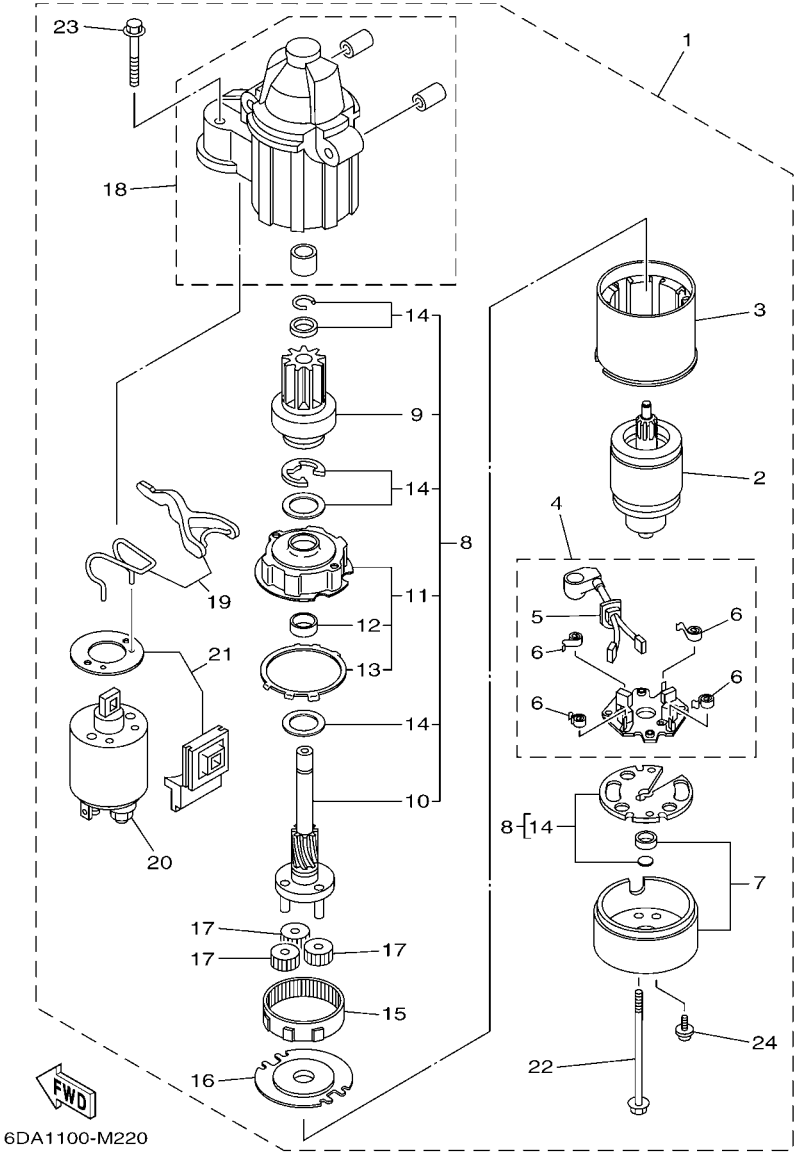

FIG. 23 STARTING MOTOR DEMARREUR ELECTRIQUE

REF. NO.	PART NO. N° PIECES	DESCRIPTION DESCRIPTION	6DV2	6DW2				REMARKS REMARQUES
1	6CB–81800–00	STARTING MOTOR ASSY DEMARREUR ELECTRIQUE COMPLET	1	1				
2	67F–81850–00	.ARMATURE ASSY .INDUIT	1	1				
3	67F–81810–00	.STATOR ASSY .STATOR COMPLET	1	1				
4	69J–81840–00	.BRUSH HOLDER ASSY .SUPPORT DE CHARBON	1	1				
5	69J–81801–00	..BRUSH SET ..CHARBON	1	1				
6	67F–81813–00	..SPRING, BRUSH ..RESSORT, DE CHARBON	4	4				
7	6CB–81820–00	.REAR BRACKET ASSY .SUPPORT ARRIERE COMPLET	1	1				
8	6CB–81807–00	.GEAR ASSY, STARTING MOTOR .PIGNON, DEMARREUR ELECTRIQUE	1	1				
9	6CB–81832–00	..CLUTCH, OVER RUN ..EMBRAYAGE, ROUE LIBRE	1	1				
10	6CB–81836–00	..SHAFT, PINION ..AXE, PIGNON	1	1				
11	67F–81821–00	..BRACKET, CENTER 1 ..SUPPORT, CENTRE 1	1	1				
12	67F–81841–00	...BEARING ...ROULEMENT	1	1				
13	67F–8183R–00	...GASKET ...JOINT	1	1				
14	6CB–81809–00	..WASHER KIT ..JEU DE RONDELLES	1	1				
15	67F–81891–00	.GEAR, RING .ROUE DENTEE	1	1				WITH 67F-8183R-00 WITH 67F-8183R-00
16	67F–81830–00	.BRACKET, CENTER 2 .SUPPORT, CENTRE 2	1	1				
17	60V–8183T–00	.GEAR, IDLER .PIGNON, INTERMEDIAIRE	3	3				
18	6CB–81842–00	.COVER .COUVERCLE	1	1				
19	6C5–81839–00	.LEVER ASSY .LEVIER COMPLET	1	1				
20	6C5–81941–00	.STARTER RELAY ASSY .LANCEUR RELAIS (ENS.)	1	1				
21	6C5–81869–00	.COVER, DUST .COUVERCLE, POUSSIERE	1	1				
22	6CB–81826–00	.BOLT .BOULON	2	2				
23	69J–81828–00	.SCREW 2 .VIS 2	2	2				
24	67F–81846–00	.SCREW .VIS	2	2				

FIG. 24 BOTTOM COWLING 1 CAPOT INFERIEUR 1

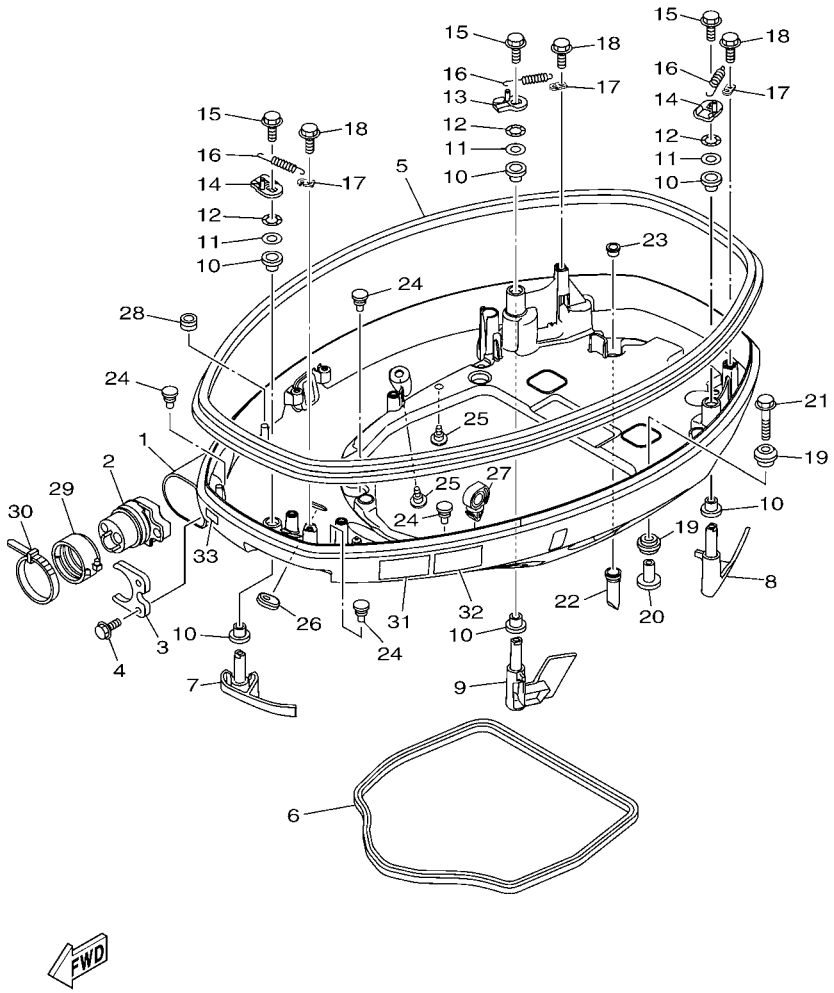

REF. NO.	PART NO. N° PIECES	DESCRIPTION DESCRIPTION	6DV2	6DW2				REMARKS REMARQUES
1	6DA–42710–00–8D	BOTTOM COWLING ASSY ENS. EMBASE	1	1				
2	6CE–42725–02	GROMMET PASSE-FIL	1	1				
3	6CB–42761–00	STOPPER PLAQUETTE	1	1				
4	95895–06014	BOLT, FLANGE BOULON	2	2				
5	6DA–42615–00	SEAL JOINT	1	1				
6	63P–42716–00	RUBBER, SEAL 1 JOINT EN CAOUTCHOUC 1	1	1				
7	6DA–42815–00–8D	LEVER, CLAMP LEVIER, PRESSE	1	1				
8	6DA–42816–00–8D	LEVER, CLAMP LEVIER, PRESSE	1	1				
9	6DA–42817–00–8D	LEVER, CLAMP LEVIER, PRESSE	1	1				
10	90386–15M73	BUSH DOUILLE	6	6				
11	90201–156J2	WASHER, PLATE RONDELLE, PLATE	3	3				
12	90206–15M18	WASHER, WAVE RONDELLE, ONDULEE	3	3				
13	6CB–42818–00	LEVER, CLAMP LEVIER, PRESSE	1	1				
14	6CB–42819–00	LEVER, CLAMP LEVIER, PRESSE	2	2				
15	95880–08012	BOLT, FLANGE BOULON, A COLLERETTE	3	3				
16	90506–22001	SPRING, TENSION RESSORT, TENSION	3	3				
17	66T–43144–00	HOOK, SPRING CROCHET	3	3				
18	95895–06012	BOLT, FLANGE BOULON	3	3				
19	90480–22M81	GROMMET PASSE-FIL	8	8				
20	90387–08M37	COLLAR COLLERETTE	4	4				
21	90119–08M22	BOLT, WITH WASHER BOULON, AVEC RONDELLE	4	4				
22	6DA–42717–00	RUBBER, SEAL 2 JOINT EN CAOUTCHOUC 2	4	4				
23	6DA–42384–00	SEAL, CAP JOINT, CAPUCHON	4	4				
24	6H4–42748–00	GROMMET PASSE-FIL	4	4				
25	6P2–44391–00	NIPPLE, HOSE RACCORD D'ESSENCE	2	2				
26	61A–42727–00	GROMMET PASSE-FIL	1	1				
27	90464–13249	CLAMP BRIDE	1	1				

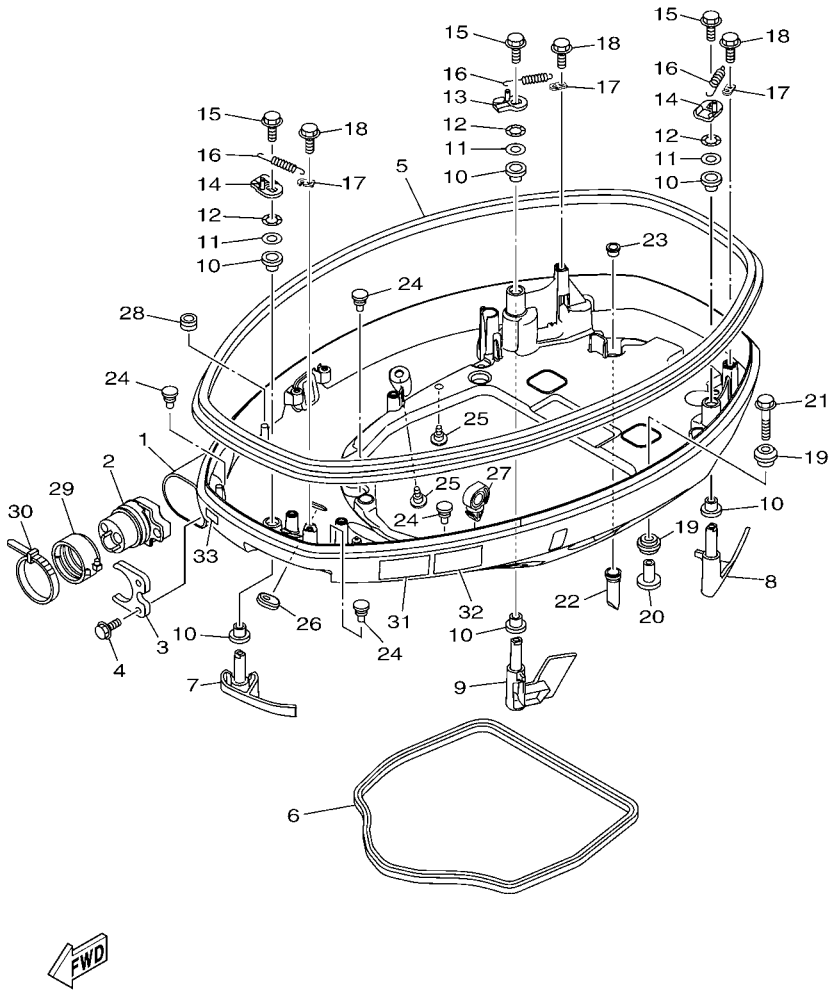

FIG. 24 BOTTOM COWLING 1 CAPOT INFERIEUR 1

REF. NO.	PART NO. N° PIECES	DESCRIPTION DESCRIPTION	6DV2	6DW2				REMARKS REMARQUES
28	90480–13163	GROMMET PASSE-FIL	1	1				
29	68F–42753–00	FASTNER ATTACHE	1	1				AP AP
30	90464–20258	CLAMP BRIDE	1	1				AP AP
31	6AH–42794–40	LABEL, WARNING (GENERAL) ETIQUETTE, AVERTISSEMENT	1	1				
32	6AH–42794–50	LABEL, WARNING (GENERAL) ETIQUETTE, AVERTISSEMENT	1	1				
33	6AH–81996–00	MARK MARQUE	1	1				

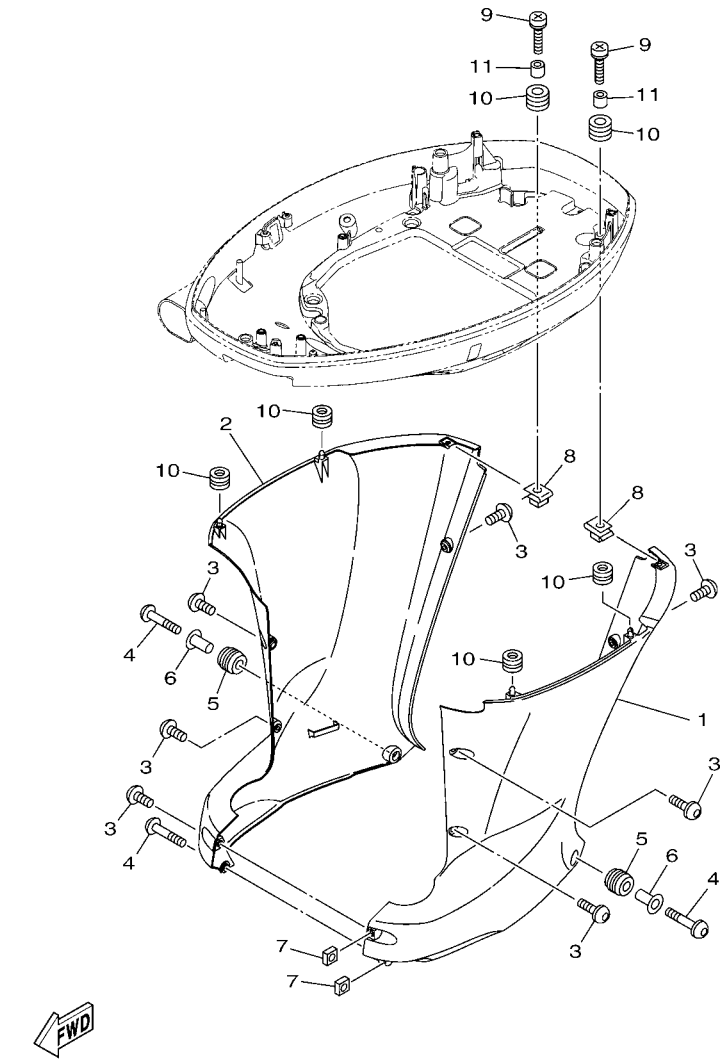

6DB1100-M240

FIG. 25 BOTTOM COWLING 2 CAPOT INFERIEUR 2

REF. NO.	PART NO. N° PIECES	DESCRIPTION DESCRIPTION	6DV2	6DW2				REMARKS REMARQUES
1	6DA–42740–00	APRON COMPLETE 1 CAPOT LATERAL COMPLETE 1	1	1				X(25.3") X(25.3")
2	6DA–42770–00	APRON COMPLETE 2 CAPOT LATERAL COMPLETE 2	1	1				X(25.3") X(25.3")
3	90111–06144	BOLT,HEX. SOCKET BUTTON BOULON	7	7				X(25.3") X(25.3")
4	90111–06142	BOLT,HEX. SOCKET BUTTON BOULON	3	3				X(25.3") X(25.3")
5	90480–16009	GROMMET PASSE-FIL	2	2				X(25.3") X(25.3")
6	90387–07028	COLLAR COLLERETTE	2	2				X(25.3") X(25.3")
7	90173–06001	NUT, SQUARE ECROU, CARRE	2	2				X(25.3") X(25.3")
8	90183–061A6	NUT, SPRING ECROU, RESSORT	2	2				
9	90159–06053	SCREW, WITH WASHER VIS, AVEC RONDELLE	2	2				
10	90480–13M24	GROMMET PASSE-FIL	6	6				
11	90387–06M43	COLLAR COLLERETTE	2	2				

FIG. 26 BOTTOM COWLING 3 CAPOT INFERIEUR 3

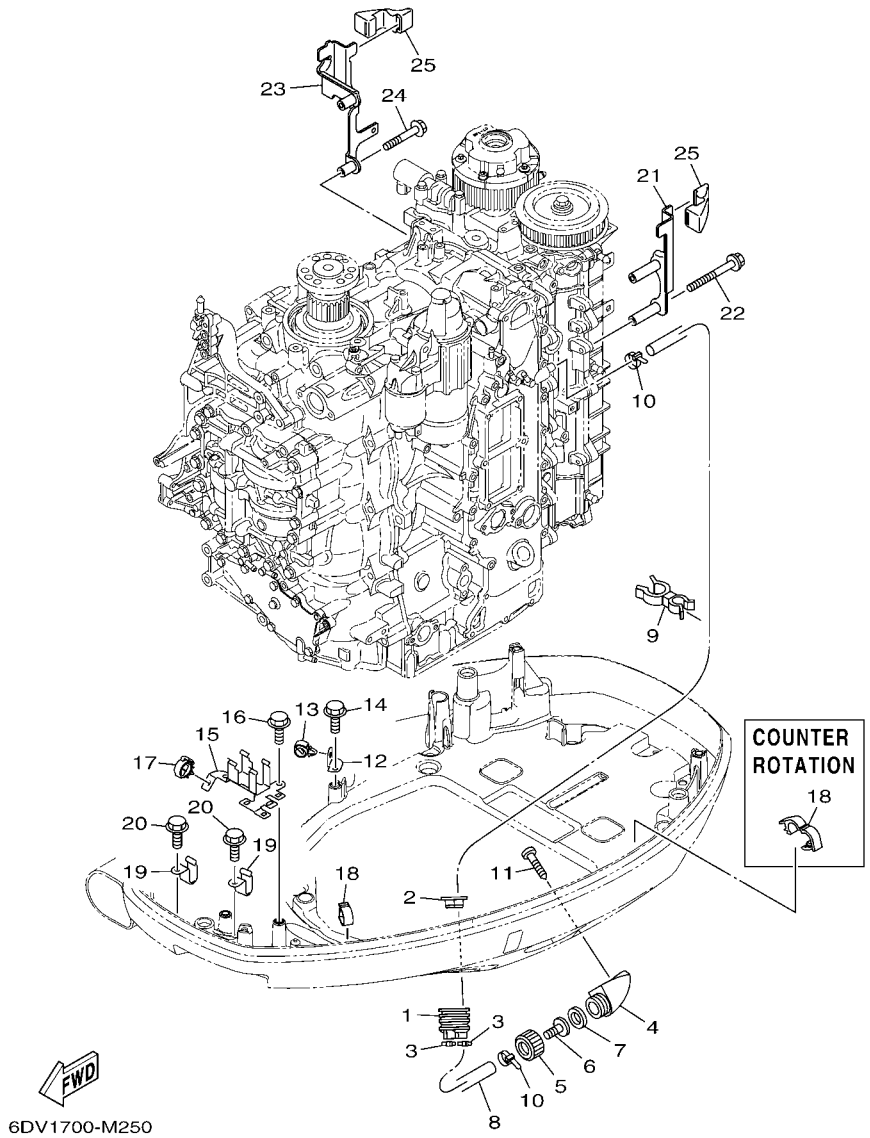

REF. NO.	PART NO. N° PIECES	DESCRIPTION DESCRIPTION	6DV2	6DW2				REMARKS REMARQUES
1	6H1–42726–21	GROMMET PASSE-FIL	1	1				
2	6BG–42384–00	SEAL, CAP JOINT, CAPUCHON	1	1				
3	90465–11M10	CLAMP BRIDE	2	2				
4	6AW–12572–00	ADAPTER ADAPTATEUR	1	1				
5	6R3–12581–00	JOINT, HOSE 1 JOINT DE TUYAU	1	1				
6	6AW–12582–00	JOINT, HOSE 2 RACCORD DE TUYAU 1	1	1				
7	6R3–12583–00	GASKET, HOSE JOINT JOINT	1	1				
8	6DA–42541–00	PIPE 1 TUYAU 1	1	1				
9	90464–21256	CLAMP BRIDE	1	1				
10	90465–11M10	CLAMP BRIDE	2	2				
11	97780–60520	SCREW, TAPPING VIS, TETE BOMBEE	2	2				
12	63P–42756–00	STAY, CLAMP SUPPORT, COLLIER	1					
13	90464–13249	CLAMP BRIDE	1					
14	95895–06012	BOLT, FLANGE BOULON	1					
15	6DV–8366G–00	BRACKET 3 SUPPORT 3	1	1				
16	95895–06012	BOLT, FLANGE BOULON	2	2				
17	90464–18246	CLAMP BRIDE	1	1				
18	90464–18004	CLAMP BRIDE	1					
	90464–18004	CLAMP BRIDE		2				
19	90462–12013	CLAMP BRIDE	2	2				
20	95895–06012	BOLT, FLANGE BOULON	2	2				
21	6DA–11998–00	BRACKET 1 SUPPORT 1	1	1				
22	95895–06065	BOLT, FLANGE BOULON	2	2				
23	6DA–11999–00	BRACKET 2 SUPPORT 2	1	1				
24	95895–06040	BOLT, FLANGE BOULON	2	2				
25	6CB–42662–00	DAMPER AMORTISSEUR	2	2				

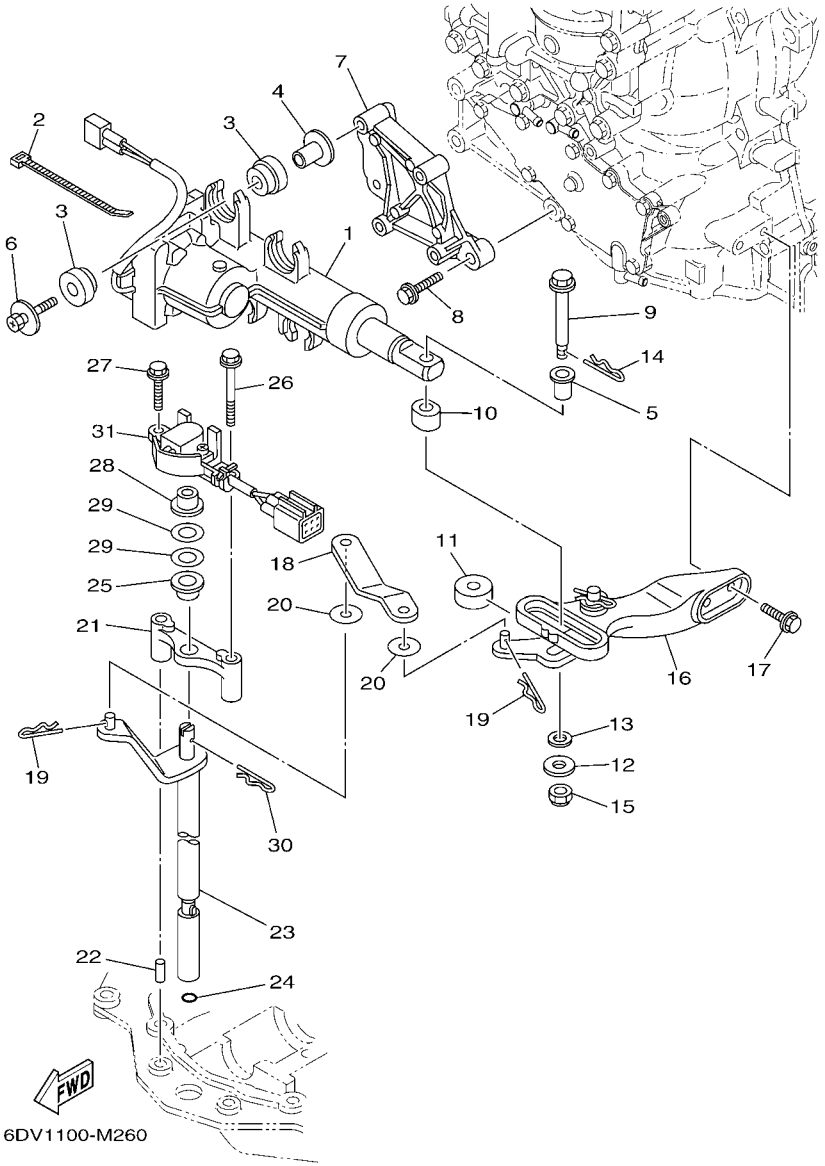

FIG. 27 CONTROL COMMANDE

REF. NO.	PART NO. N° PIECES	DESCRIPTION DESCRIPTION	6DV2	6DW2				REMARKS REMARQUES
1	6DV–4820A–00	ACTUATOR UNIT ACTUATOR UNIT	1	1				
2	90465–11M10	CLAMP BRIDE	1	1				
3	6DV–85564–00	GROMMET RONDELLE CAOUTCHOUC	8	8				
4	90387–06176	COLLAR COLLERETTE	4	4				
5	90386–08008	BUSH DOUILLE	1	1				
6	68F–85119–00	BOLT BOULON	4	4				
7	6DV–44142–00	JOINT AXE	1	1				
8	95875–08030	BOLT, FLANGE BOULON, A COLLERETTE	3	3				
9	6DV–42195–00	PIN, JOINT 1 GOUPILLE	1	1				
10	6DV–44122–00	BUSHING, SHIFT ROD LEVER DOUILLE, LEVIER D'EMBRAYAGE	1	1				
11	6DV–44132–00	BUSHING COUSSINET	1	1				
12	90201–06068	WASHER, PLATE RONDELLE, PLATE	1	1				
13	90202–08M41	WASHER, PLATE RONDELLE, PLATE	1	1				
14	90468–18008	CLIP JONC	1	1				
15	90185–06M07	NUT, SELF-LOCKING ECROU,AUTO-BLOQUANT	1	1				
16	6DV–44100–00	SHIFT LINK ASSY MAILLON DE SELECTEUR	1	1				
17	97575–06520	BOLT, WITH WASHER VIS HEXAGONAL AVC RONDELLE	2	2				
18	6DV–44121–00	LEVER, SHIFT ROD LEVIER, TIGE D'INVERSION	1	1				
19	90468–18008	CLIP JONC	2	2				
20	90202–06015	WASHER, PLATE RONDELLE, PLATE	2	2				
21	6DV–44118–00	BRACKET SUPPORT	1	1				
22	93604–09066	PIN, DOWEL CLAVETTE	1	1				
23	6DV–44120–01	HANDLE GEAR SHIFT ASSY LEVIER D'EMBRAYAGE	1	1				
24	93210–09165	O-RING JOINT TORIQUE	1	1				
25	90386–10001	BUSH DOUILLE	1	1				
26	97595–06550	BOLT, WITH WASHER VIS HEXAGONAL AVC RONDELLE	1	1				
27	97575–06520	BOLT, WITH WASHER VIS HEXAGONAL AVC RONDELLE	1	1				

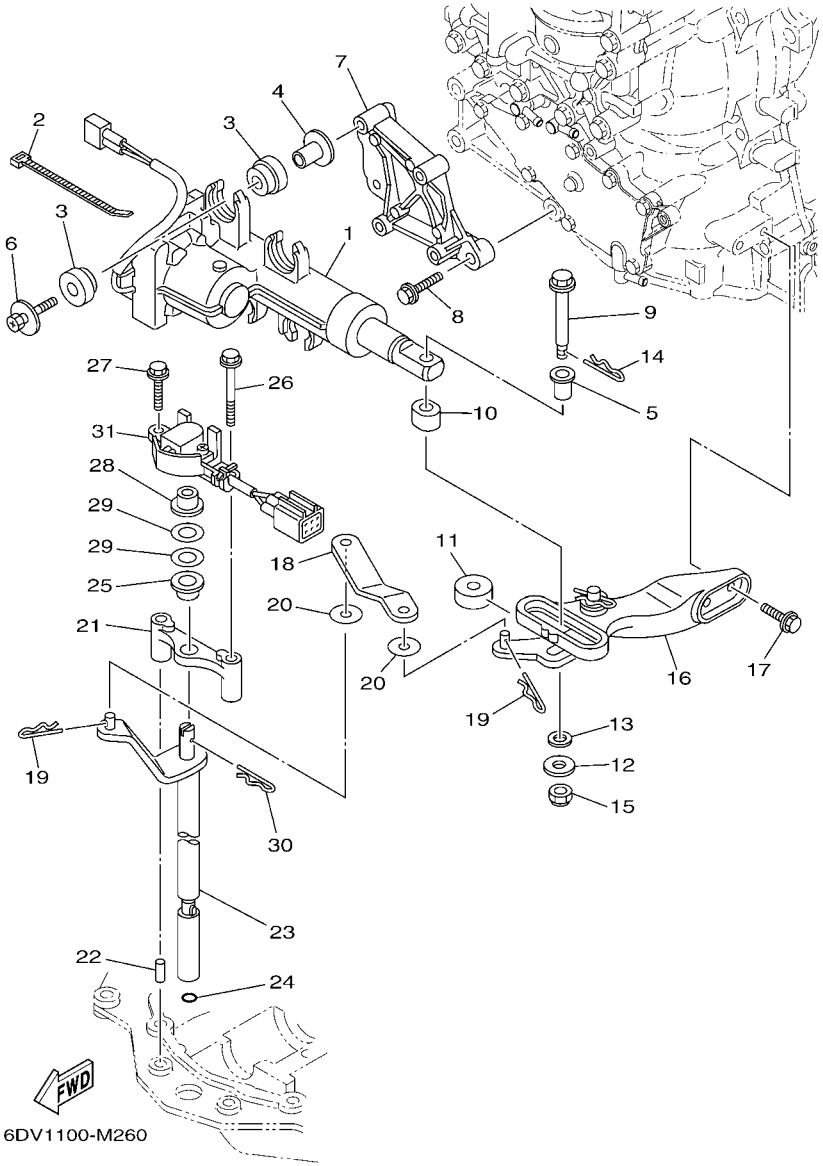

FIG. 27 CONTROL COMMANDE

REF. NO.	PART NO. N° PIECES	DESCRIPTION DESCRIPTION	6DV2	6DW2				REMARKS REMARQUES
28	90386–10001	BUSH DOUILLE	1	1				
29	90201–11008	WASHER, PLATE RONDELLE, PLATE	2	2				
30	90468–180A0	CLIP JONC	1	1				
31	6DV–68303–00	SENSOR ASSY SONDE (ENS.)	1	1				

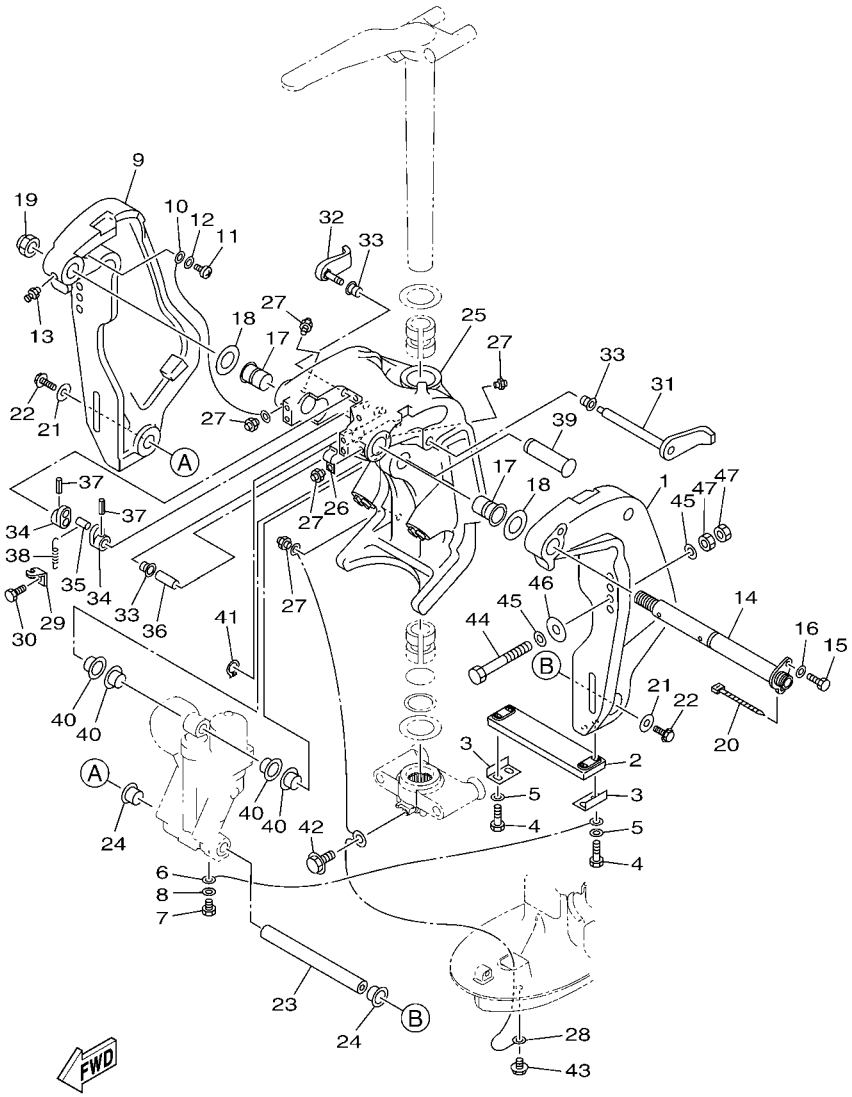

FIG. 28 BRACKET 1 SUPPORT 1

REF. NO.	PART NO. N° PIECES	DESCRIPTION DESCRIPTION	6DV2	6DW2				REMARKS REMARQUES
1	64E–43111–02–8D	BRACKET, CLAMP 1 PRESSE 1	1	1				
2	6AW–45251–00	ANODE ANODE	1	1				
3	6G5–44526–00	PLATE PLAQUE	2	2				
4	97095–06030	BOLT BOULON	4	4				
5	92995–06600	WASHER RONDELLE	4	4				
6	6E5–82148–00	WIRE, LEAD 4 FIL 4	1	1				
7	97095–06010	BOLT BOULON	1	1				
8	92995–06600	WASHER RONDELLE	1	1				
9	64E–43112–02–8D	BRACKET, CLAMP 2 PRESSE 2	1	1				
10	6E5–82148–00	WIRE, LEAD 4 FIL 4	1	1				
11	97885–06012	SCREW, PAN HEAD VIS, A ENCOCHE	1	1				
12	92995–06600	WASHER RONDELLE	1	1				
13	93700–06M03	NIPPLE, GREASE PION	1	1				
14	64E–43131–30	BOLT, CLAMP BRACKET BOULON, PRESSE	1	1				
15	97095–08020	BOLT BOULON	1	1				
16	92995–08600	WASHER RONDELLE	1	1				
17	90386–25M31	BUSH DOUILLE	2	2				
18	90201–26M59	WASHER, PLATE RONDELLE, PLATE	2	2				
19	90185–22M11	NUT, SELF-LOCKING ECROU,AUTO-BLOQUANT	1	1				
20	90465–11M10	CLAMP BRIDE	1	1				
21	90201–10060	WASHER, PLATE RONDELLE, PLATE	2	2				
22	97575–10530	BOLT, WITH WASHER VIS HEXAGONAL AVC RONDELLE	2	2				
23	6BC–43818–00	PIN, LOWER SHOCK MOUNT AXE, INFERIEUR AMORTISSEUR	1	1				
24	90386–22M98	BUSH DOUILLE	2	2				
25	64E–43311–20–8D	BRACKET, SWIVEL 1 SUPPORT, PIVOT 1	1	1				X(25.3") X(25.3")
26	90465–08M63	CLAMP BRIDE	1	1				
27	93700–06M03	NIPPLE, GREASE PION	5	5				

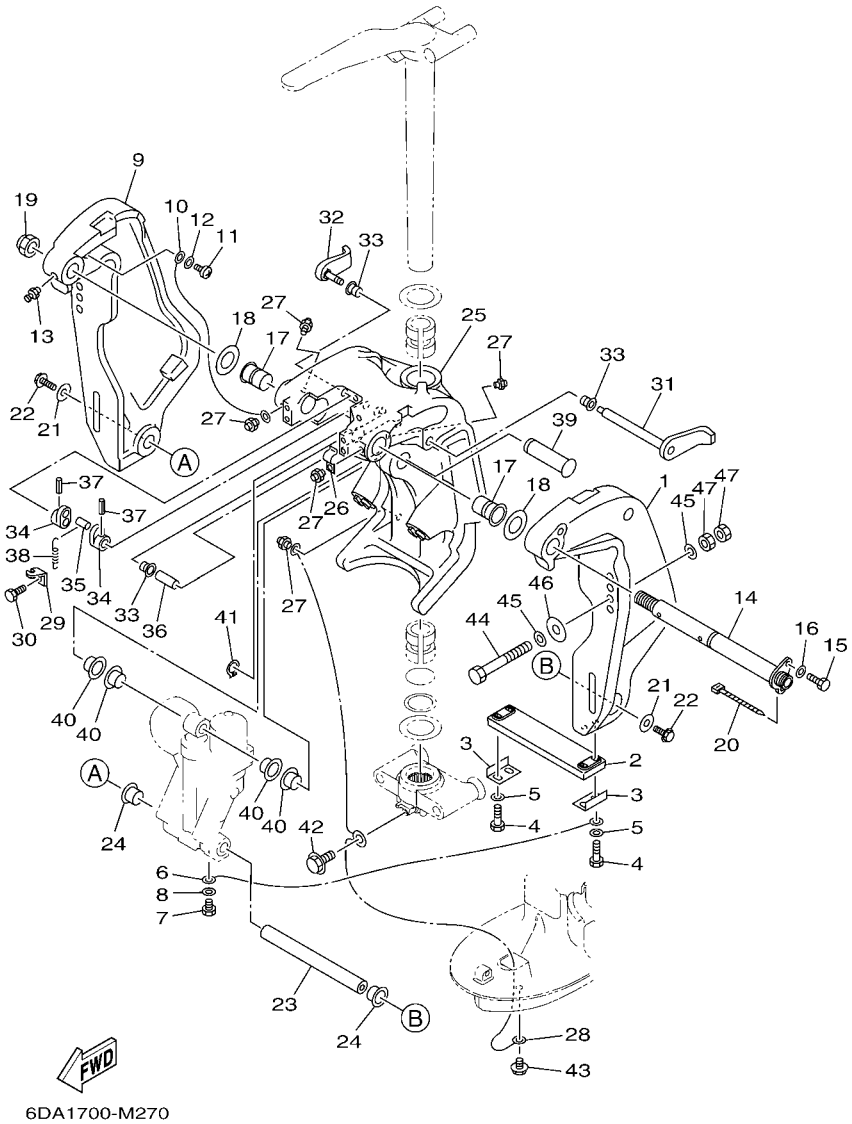

FIG. 28 BRACKET 1 SUPPORT 1

REF. NO.	PART NO. N° PIECES	DESCRIPTION DESCRIPTION	6DV2	6DW2				REMARKS REMARQUES
28	6DA–82149–00	WIRE, LEAD 3 FIL 3	1	1				X(25.3") X(25.3")
29	6G5–43144–00	HOOK, SPRING CROCHET	1	1				
30	97095–06010	BOLT BOULON	1	1				
31	6G5–43181–02	LEVER, TILT STOP 1 LEVIER VERROUILLAGE RELEVAGE 1	1	1				
32	6G5–43185–02	LEVER, TILT STOP 2 LEVIER VERROUILLAGE RELEVAGE 2	1	1				
33	90386–10M16	BUSH DOUILLE	3	3				
34	6G5–43148–00	COLLAR, DISTANCE ENTRETOISE	2	2				
35	90249–06M19	PIN GOUPILLE	1	1				
36	90387–10M05	COLLAR COLLERETTE	1	1				
37	91690–30020	PIN, SPRING AGRAFFE	2	2				
38	90506–16003	SPRING, TENSION RESSORT, TENSION	1	1				
39	64E–43126–00	PIN, UPPER SHOCK MOUNT AXE, SUPERIEUR AMORTISSEUR	1	1				
40	90386–22M98	BUSH DOUILLE	4	4				
41	93410–22M11	CIRCLIP CLIPS	1	1				
42	95895–06010	BOLT, FLANGE BOULON	1	1				X(25.3") X(25.3")
43	95895–06010	BOLT, FLANGE BOULON	1	1				
44	90101–12M05	BOLT (L:130MM) BOULON (L:130MM)	4	4				UR F(L)200GET UR F(L)200GET
	90101–12M05	BOLT (L:130MM) BOULON (L:130MM)	2	2				UR F(L)200GET1 UR F(L)200GET1
	90101–12047	BOLT (L:150MM) BOULON (L:150MM)	2	2				UR F(L)200GET1 UR F(L)200GET1
45	90201–13M01	WASHER, PLATE RONDELLE, PLATE	8	8				
46	90201–12426	WASHER, PLATE RONDELLE, PLATE	4	4				
47	95380–12600	NUT ECROU	8	8				

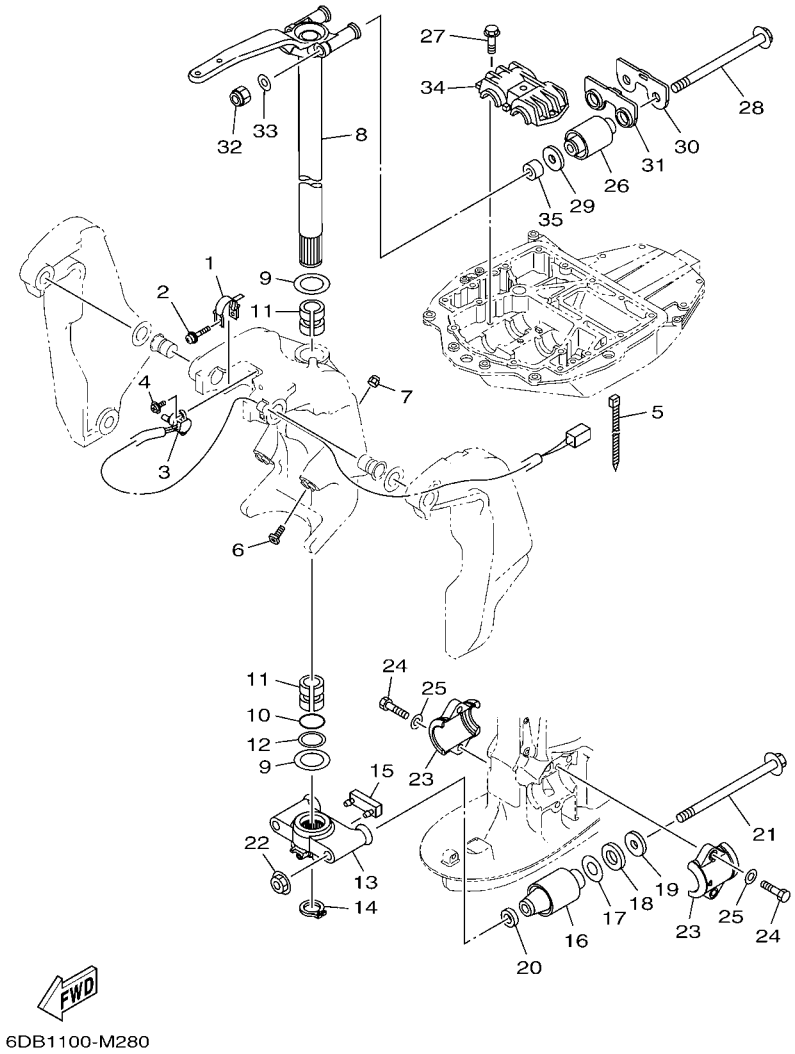

FIG. 29 BRACKET 2 SUPPORT 2

REF. NO.	PART NO. N° PIECES	DESCRIPTION DESCRIPTION	6DV2	6DW2				REMARKS REMARQUES
1	64E–43139–10	CAM, TRIM SENDER VILEBREQUIN TRUM	1	1				
2	90159–05059	SCREW, WITH WASHER VIS, AVEC RONDELLE	1	1				
3	67H–83672–01	TRIM SENDER INCLINER RACCORD	1	1				
4	97985–06216	SCREW, WITH WASHER VIS, AVEC RONDELLE	2	2				
5	90465–11M10	CLAMP BRIDE	3	3				
6	61A–43376–00	BOLT, THRUST RECEIVER BOULON	2	2				
7	95780–10300	NUT, FLANGE ECROU	2	2				
8	6DA–42510–00–8D	STEERING BRACKET ASSY DIRECTION SUPPORT (ENS.)	1	1				X(25.3") X(25.3")
9	90201–38M60	WASHER, PLATE RONDELLE, PLATE	2	2				
10	93210–37MH7	O-RING JOINT TORIQUE	1	1				
11	90386–38M32	BUSH DOUILLE	2	2				
12	90202–40M47	WASHER, PLATE RONDELLE, PLATE	1	1				
13	6DA–44551–00–CA	HOUSING, LOWER MOUNT RUBBER 1 BOITIER, SILENT-BLOC INFERIEUR	1	1				X(25.3") X(25.3")
14	93410–37M04	CIRCLIP CLIPS	1	1				
15	6DA–44575–00	DAMPER, LOWER MOUNT RUBBER SILENT-BLOC, INFERIEUR	1	1				X(25.3") X(25.3")
16	63P–44555–00	MOUNT DAMPER, LOWER SIDE SILENT-BLOC, INFERIEUR LATERAL	2	2				X(25.3") X(25.3")
17	90201–35008	WASHER, PLATE RONDELLE, PLATE	2	2				
18	90202–32M19	WASHER, PLATE RONDELLE, PLATE	2	2				
19	90201–16M55	WASHER, PLATE RONDELLE, PLATE	2	2				
20	90201–15M58	WASHER, PLATE RONDELLE, PLATE	2	2				
21	90105–14012	BOLT, FLANGE BOULON	2	2				X(25.3") X(25.3")
22	95604–14200	NUT, SELF-LOCKING ECROU, AUTO-BLOCANT	2	2				X(25.3") X(25.3")
23	6DA–44552–00–CA	HOUSING, LOWER MOUNT RUBBER 2 BOITIER, SILENT-BLOC INFERIEUR	2	2				X(25.3") X(25.3")
24	97075–10040	BOLT BOULON	4	4				
25	92995–10600	WASHER RONDELLE	4	4				
26	6DA–44514–00	MOUNT DAMPER, UPPER SIDE SILENT-BLOC, SUPERIEUR LATERAL	2	2				
27	90119–10024	BOLT, WITH WASHER BOULON, AVEC RONDELLE	3	3				

FIG. 29 BRACKET 2 SUPPORT 2

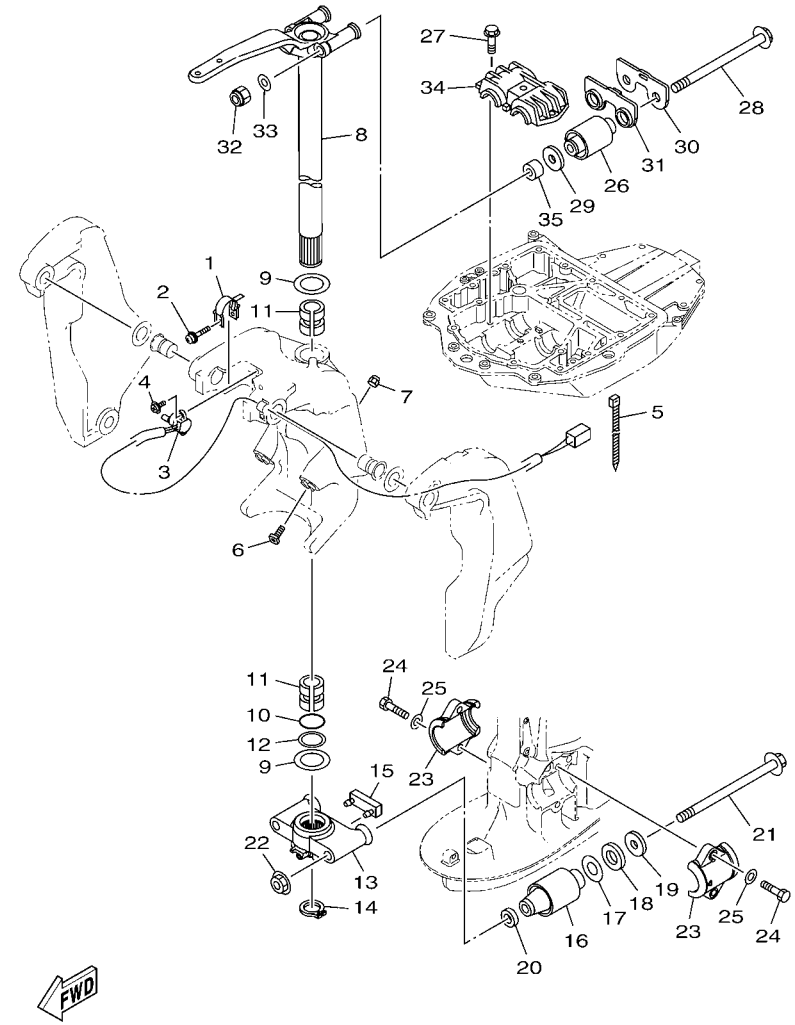

6DB1100-M280

REF. NO.	PART NO. N° PIECES	DESCRIPTION DESCRIPTION	6DV2	6DW2				REMARKS REMARQUES
28	90105–14009	BOLT, FLANGE BOULON	2	2				
29	90201–16M01	WASHER, PLATE RONDELLE, PLATE	2	2				
30	6DA–44526–00	PLATE PLAQUE	1	1				
31	6DA–44532–00	STOPPER, UPPER MOUNT PLAQUETTE	1	1				
32	90185–14M00	NUT, SELF-LOCKING ECROU,AUTO-BLOQUANT	2	2				
33	92995–14600	WASHER RONDELLE	2	2				
34	63P–44511–00	COVER, UPPER MOUNT COUVERCLE, SUSPENSION SUPERIEU	1	1				
35	90387–14004	COLLAR COLLERETTE	2	2				

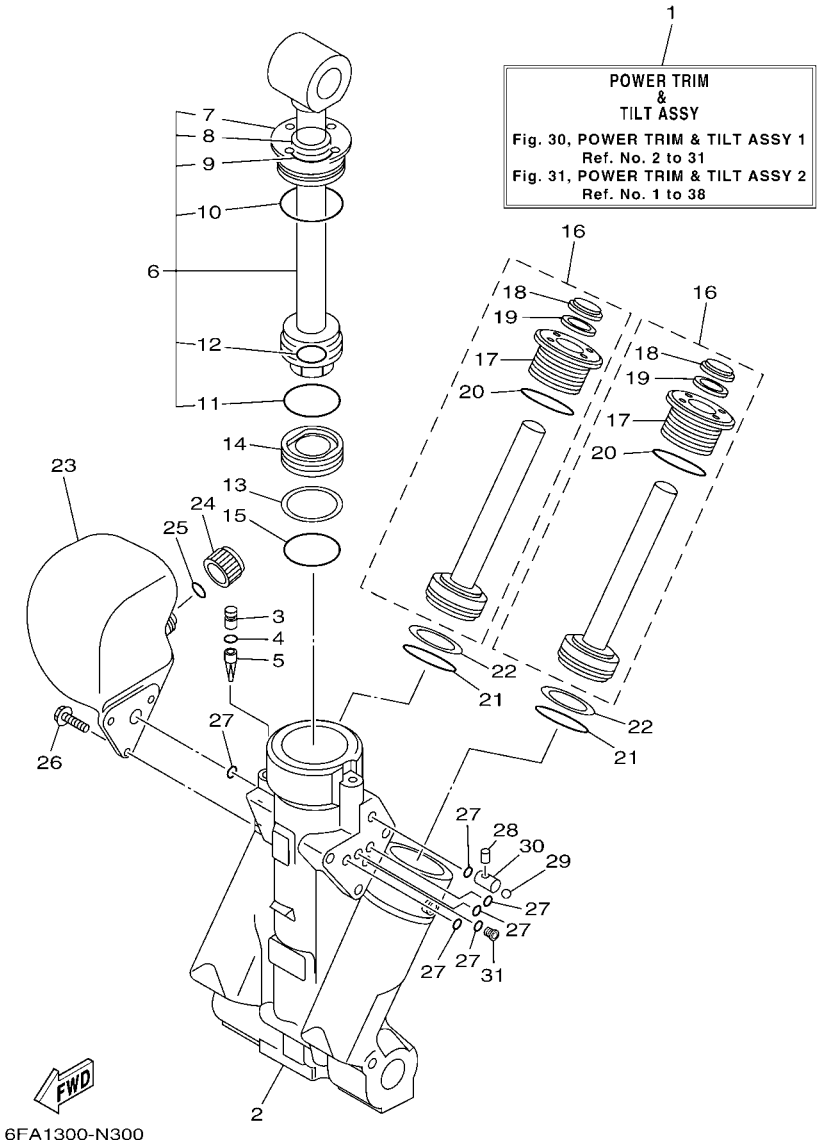

FIG. 30 POWER TRIM & TILT ASSY 1 PUISSANCE PARER ET INCLINER 1

REF. NO.	PART NO. N° PIECES	DESCRIPTION DESCRIPTION	6DV2	6DW2				REMARKS REMARQUES
1	63P–43800–06	POWER TRIM & TILT ASSY PUISSANCE PARER ET INCLINER (E	1	1				
2	64E–43825–03	HOUSING, TRIM & TILT CARTER	1	1				
3	6AW–4388J–00	PLUG 2 BOUCHON 2	1	1				
4	93210–10M74	O-RING JOINT TORIQUE	1	1				
5	64E–43817–00	FILTER 2 FILTRE 2	1	1				
6	63P–43810–02	TILT PISTON SUB ASSY INCLINER PISTON AUXILIAIRE(ENS	1	1				
7	64E–43811–02	.SCREW, CYLINDER END .VIS, CYLINDRE RACCORD	1	1				
8	64E–43898–00	.SEAL, DUST 2 .JOINT ANTI-PUSSIERE	1	1				
9	64E–43867–00	.O-RING .JOINT TORIQUE	1	1				
10	64E–43866–00	.O-RING .JOINT TORIQUE	1	1				
11	6E5–43862–00	.O-RING .JOINT TORIQUE	1	1				
12	64E–43883–00	.O-RING .JOINT TORIQUE	1	1				
13	6E5–43872–00	RING, BACK UP RESSORT	1	1				
14	6E5–43814–02	PISTON, FREE PISTON	1	1				
15	6E5–43862–00	O-RING JOINT TORIQUE	1	1				
16	64E–43820–03	TRIM PISTON SUB ASSY PARER PISTON AUXILIAIRE (ENS.)	2	2				
17	64E–43821–03	.SCREW, TRIM CYLINDER END .VIS	1	1				
18	64E–43822–00	.SEAL, TRIM DUST .JOINT	1	1				
19	64E–4384J–00	.SEAL, TRIM DOWN .JOINT	1	1				
20	6G5–43864–00	.O-RING .JOINT TORIQUE	1	1				
21	6E5–43864–00	O-RING JOINT TORIQUE	2	2				
22	6E5–43874–01	RING, BACK UP RESSORT	2	2				
23	64E–43828–01	BODY, RESERVOIR CORPS	1	1				
24	64E–43829–01	PLUG, RESERVOIR BOUCHON	1	1				
25	64E–43897–00	O-RING JOINT TORIQUE	1	1				
26	64E–4388E–01	BOLT ,SCREW (L:14MM) VIS (L:14MM)	3	3				
27	64E–43869–00	O-RING JOINT TORIQUE	6	6				

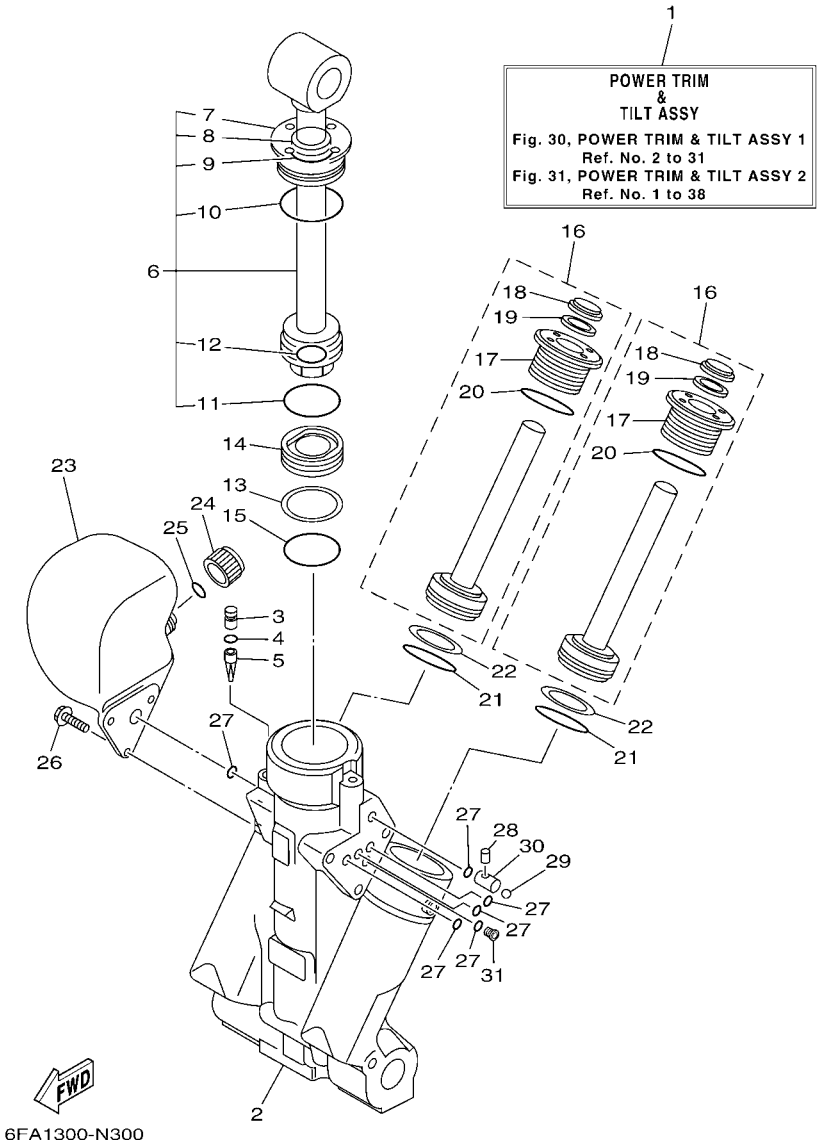

FIG. 30 POWER TRIM & TILT ASSY 1 PUISSANCE PARER ET INCLINER 1

REF. NO.	PART NO. N° PIECES	DESCRIPTION DESCRIPTION	6DV2	6DW2				REMARKS REMARQUES
28	64E–4381G–00	PIN COUPILL	1	1				
29	6E5–43858–00	BALL BILLE	1	1				
30	64E–4382G–00	VALVE, SEAT JEU DE POINTEAUX	1	1				
31	64E–4384N–00	PLUG, ORIFICE PLOT, ORIFICE	1	1				

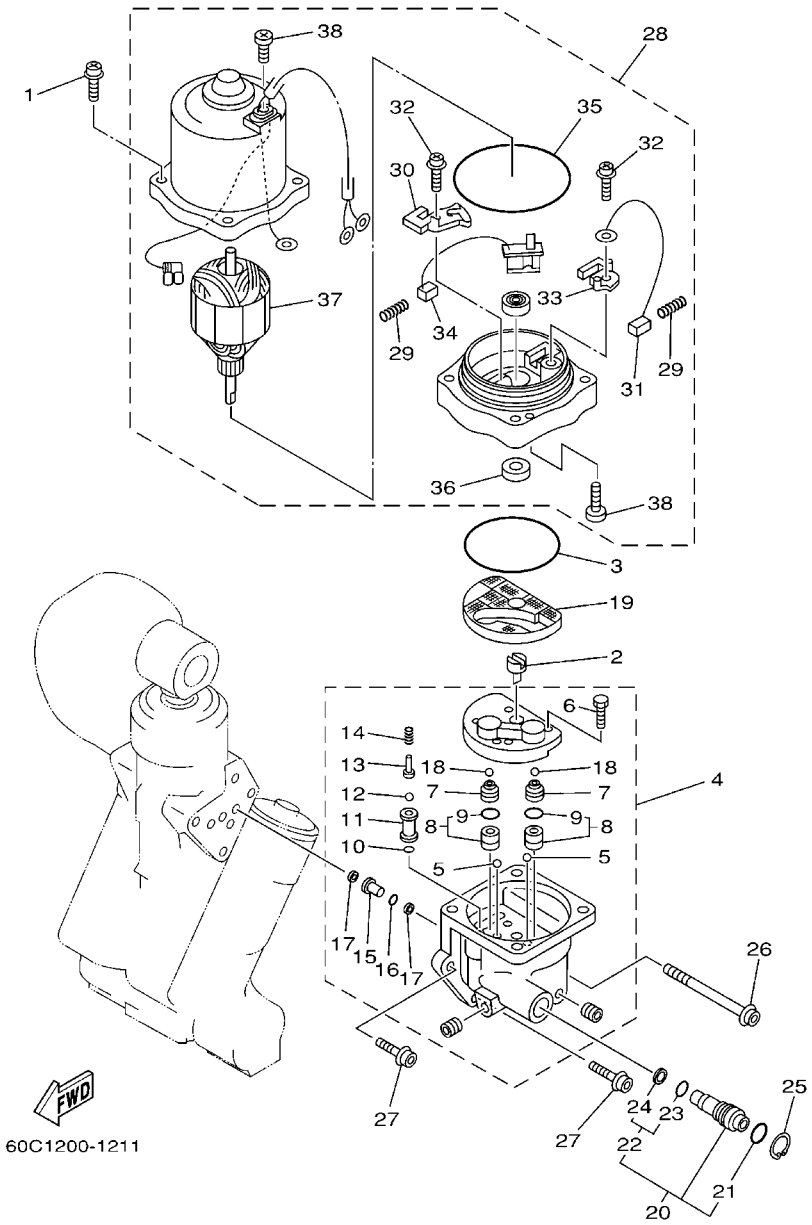

FIG. 31 POWER TRIM & TILT ASSY 2 PUISSANCE PARER ET INCLINER 2

REF. NO.	PART NO. N° PIECES	DESCRIPTION DESCRIPTION	6DV2	6DW2				REMARKS REMARQUES
1	64E–4388E–11	BOLT ,SCREW (L:34.7MM) VIS (L:34.7MM)	4	4				
2	64E–43831–00	CONNECTOR, SHAFT RACCORD	1	1				
3	64E–43868–00	O-RING JOINT TORIQUE	1	1				
4	64E–43830–01	GEAR PUMP ASSY POMPE A PIGNON (ENS.)	1	1				
5	72X–43858–00	.BALL .BILLE	2	2				
6	64E–43843–00	.SCREW, VALVE LOCK .VIS	4	4				
7	6AW–43841–00	.PISTON, SHUTTLE .PISTON	2	2				
8	64E–43802–00	.VALVE SUB ASSY .CLAPET AUXILIAIRE (ENS.)	2	2				
9	6E5–43896–00	..O-RING ..JOINT TORIQUE	1	1				
10	6G5–43863–00	.O-RING .JOINT TORIQUE	1	1				
11	64E–43851–00	.SEAT, RELIEF VALVE .SIEGE	1	1				
12	64E–43858–00	.BALL .BILLE	1	1				
13	64E–43859–00	.PIN, VALVE SUPPORT .GOUPILLE	1	1				
14	64E–43855–00	.SPRING, UP RELIEF .RESSORT	1	1				
15	64E–43850–00	.VALVE SUB ASSY .CLAPET AUXILIAIRE (ENS.)	1	1				
16	64E–43865–00	.O-RING .JOINT TORIQUE	1	1				
17	64E–43816–00	.FILTER 1 .FILTRE 1	2	2				
18	6AW–43858–00	.BALL .BILLE	2	2				
19	64E–43817–11	FILTER 2 FILTRE 2	1	1				
20	64E–43860–01	MANUAL VALVE SUB-ASSY SOUPAPE, MANUEL (ENS.)	1	1				
21	72X–85075–L0	.O-RING .JOINT TORIQUE	1	1				
22	64E–43827–00	.RING SET .BILLE	1	1				
23	64E–4387A–00	..O-RING ..JOINT TORIQUE	1	1				
24	64E–43873–00	..RING, BACK UP ..RESSORT	1	1				
25	6AW–43875–00	RING, SNAP RESSORT	1	1				
26	64E–43879–11	SCREW, WITH WASHER VIS, AVEC RONDELLE	1	1				
27	64E–43879–01	SCREW, WITH WASHER VIS, AVEC RONDELLE	2	2				

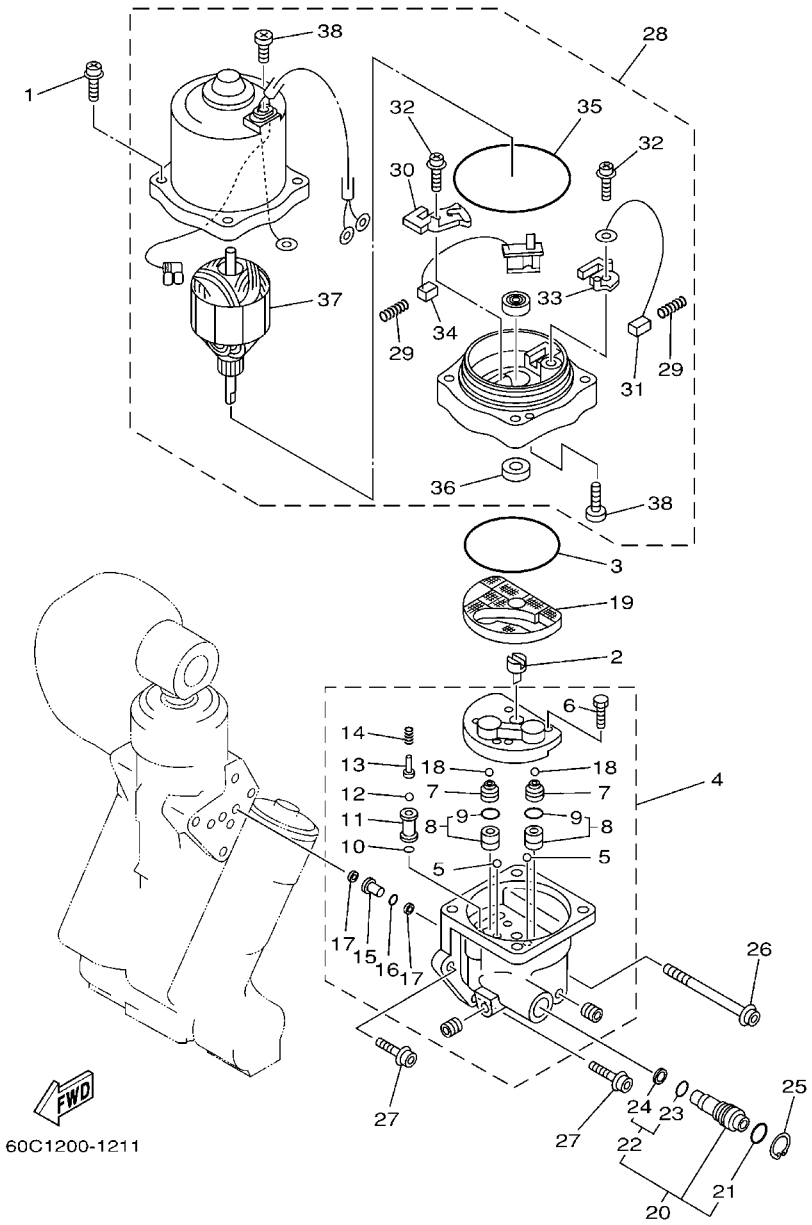

FIG. 31 POWER TRIM & TILT ASSY 2 PUISSANCE PARER ET INCLINER 2

REF. NO.	PART NO. N° PIECES	DESCRIPTION DESCRIPTION	6DV2	6DW2				REMARKS REMARQUES
28	67H–43880–04	MOTOR ASSY MOTEUR (ENS.)	1	1				
29	6H1–4386K–10	.SPRING, BRUSH .RESSORT, BALAI	2	2				
30	64E–4380J–00	.HOLDER, BRUSH .PORTE-BALAI	1	1				
31	64E–43891–00	.BRUSH 1 .BALAI 1	1	1				
32	97607–04310	.SCREW, WITH WASHER .VIS HEXAGONAL	2	2				
33	64E–4380F–00	.HOLDER, BRUSH 2 .PORTE-BALAI 2	1	1				
34	64E–43892–00	.BREAKER COMP. (BRUSH 2) .RUPTEUR COMP. (BALAI 2)	1	1				
35	6G5–43865–01	.O-RING .JOINT TORIQUE	1	1				
36	93102–08M43	.OIL SEAL .JOINT SPY	1	1				
37	64E–43805–01	.ARMATURE ASSY .INDUIT (ENS.)	1	1				
38	64E–43843–10	.SCREW, VALVE LOCK .VIS	3	3				

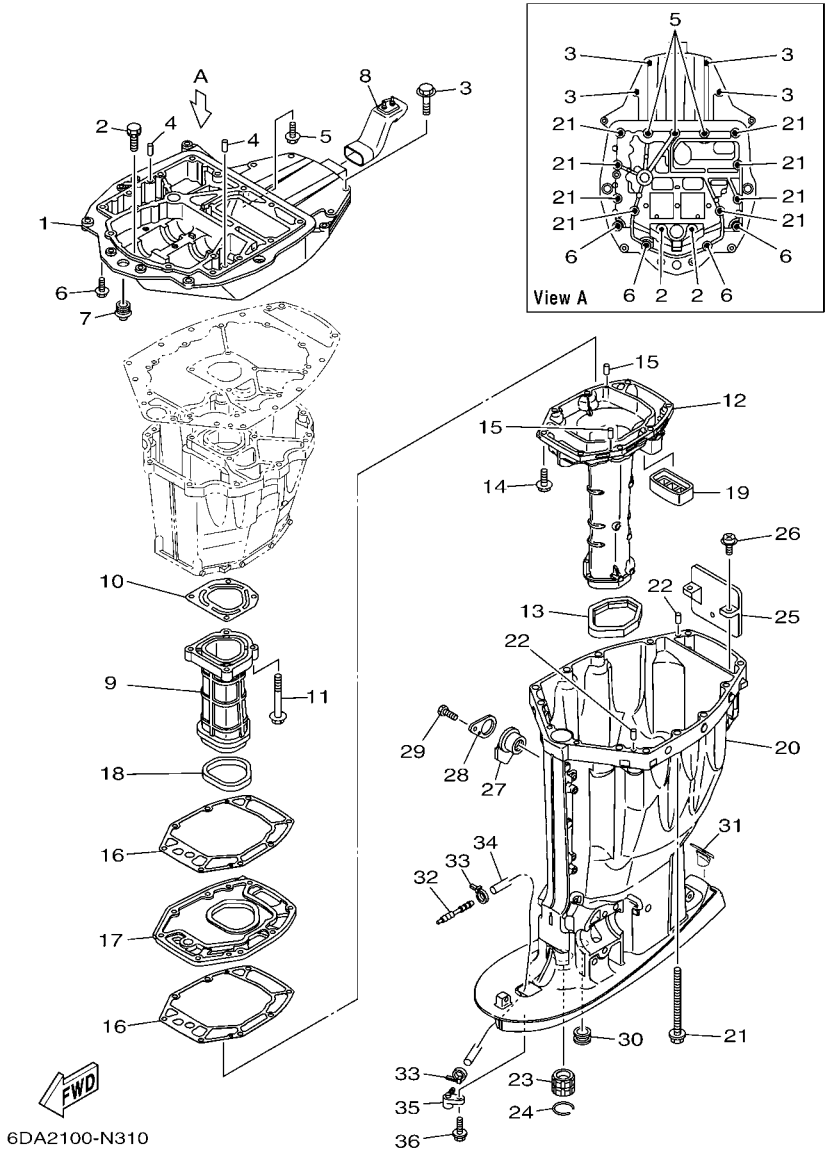

FIG. 32 UPPER CASING FOURREAU

REF. NO.	PART NO. N° PIECES	DESCRIPTION DESCRIPTION	6DV2	6DW2				REMARKS REMARQUES
1	63P–41137–04–CA	GUIDE, EXHAUST COLLECTEUR D'ECHAPPEMENT	1	1				
2	90119–08102	BOLT, WITH WASHER BOULON, AVEC RONDELLE	2	2				
3	97575–10545	BOLT, WITH WASHER VIS HEXAGONAL AVC RONDELLE	4	4				
4	93608–16M16	PIN, DOWEL AXE	2	2				
5	90119–08M58	BOLT, WITH WASHER BOULON, AVEC RONDELLE	3	3				
6	97575–10535	BOLT, WITH WASHER VIS HEXAGONAL AVC RONDELLE	4	4				
7	6E5–42724–00	GROMMET PASSE-FIL	1	1				
8	6DA–42769–00	SEAL, RUBBER BOURRELET, CAOUTCHOUC	1	1				
9	63P–41131–01–9S	MANIFOLD, EXT. 1 PIPE D'ECHAPPEMENT	1	1				
10	63P–41133–A0	GASKET, EXHAUST MANIFOLD 1 JOINT, PIPE D'ECHAPPEMENT	1	1				
11	97575–08560	BOLT, WITH WASHER VIS HEXAGONAL AVC RONDELLE	4	4				
12	6DA–14711–00–9S	MUFFLER 1 POT D'ECHAPPEMENT 1	1	1				X(25.3") X(25.3")
13	69J–45123–00	GASKET, MUFFLER JOINT, POT DE DETENTE	1	1				
14	97575–08535	BOLT, WITH WASHER VIS HEXAGONAL AVC RONDELLE	8	8				
15	93606–19M23	PIN, DOWEL GOUPILLE	2	2				
16	63P–41134–A1	GASKET, EXHAUST MANIFOLD JOINT, PIPE D'ECHAPPEMENT	2	2				
17	63P–45181–01–9S	PLATE PLAQUETTE	1	1				
18	63P–41138–00	SEAL, EXT. 1 JOINT DE GROUPE 1	1	1				
19	69J–45127–00	SEAL JOINT	1	1				
20	6DA–45111–00–8D	CASING, UPPER FOURREAU	1	1				X(25.3") X(25.3")
21	90119–10007	BOLT, WITH WASHER BOULON, AVEC RONDELLE	8	8				
22	93608–16M16	PIN, DOWEL AXE	2	2				
23	6E5–45318–00	BUSHING, DRIVE SHAFT DOUILLE, ARBRE MOTEUR	1	1				
24	93420–36M01	CIRCLIP CIRCLIP, TYPE S	1	1				
25	69J–14624–01	COVER, EXHAUST CACHE D'ECHAPPEMENT	1	1				
26	97980–06216	SCREW, WITH WASHER VIS, AVEC RONDELLE	2	2				
27	6BB–15316–00	DAMPER 1 AMORTISSEUR 1	1	1				X(25.3") X(25.3")

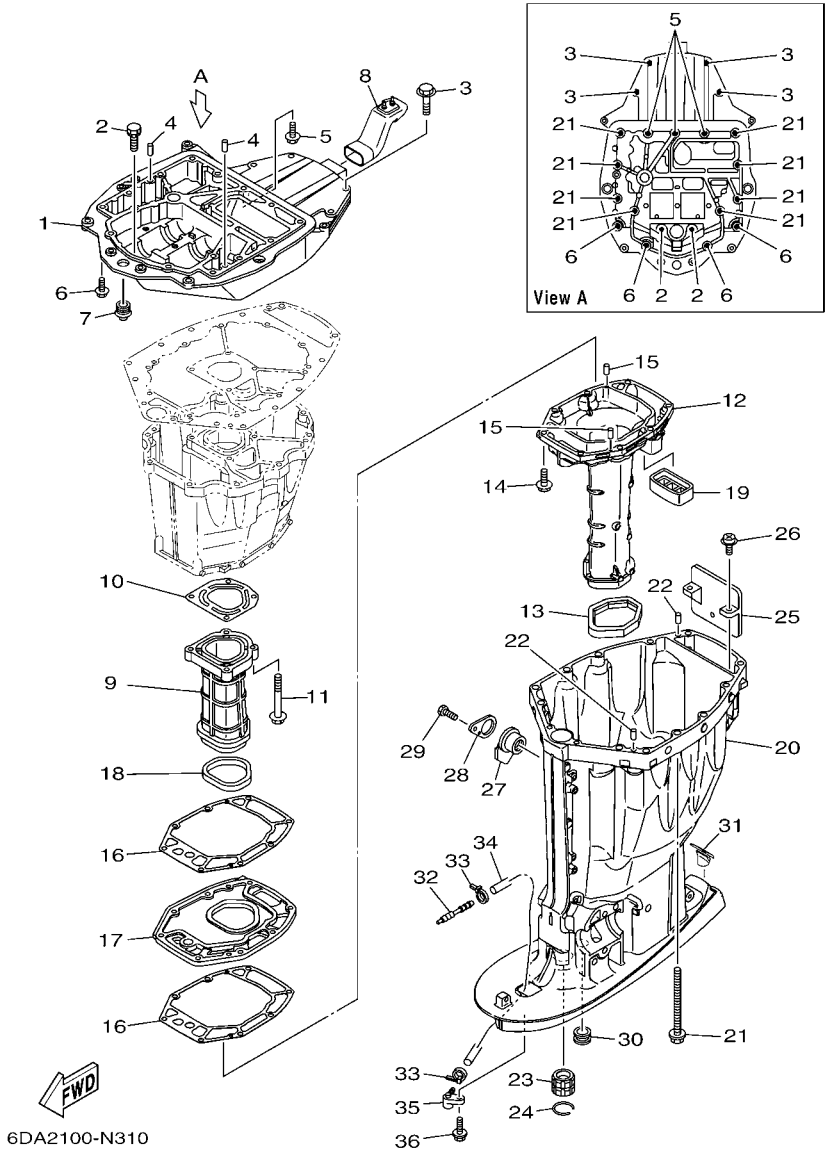

FIG. 32 UPPER CASING FOURREAU

REF. NO.	PART NO. N° PIECES	DESCRIPTION DESCRIPTION	6DV2	6DW2				REMARKS REMARQUES
28	6BB–45152–01	COVER, UPPER CASING 2 CAPUCHON FOURREAU	1	1				X(25.3") X(25.3")
29	97095–06012	BOLT BOULON	1	1				X(25.3") X(25.3")
30	6E5–44366–00	DAMPER, WATER SEAL 2 JOINT, TUBE D'EAU 2	1	1				
31	6DA–45155–00	CAP CAPUCHON	1	1				X(25.3") X(25.3")
32	6E5–83558–00	END, NIPPLE RACCORD DE NIPPLE		1				
33	90465–11M10	CLAMP BRIDE	1					FOR LAN SPEED FOR LAN SPEED
	90465–11M10	CLAMP BRIDE		2				
34	90445–07044	HOSE (L1800) DURITE (L1800)	1					FOR LAN SPEED FOR LAN SPEED
	90445–07018	HOSE (L1400) DURITE (L1400)		1				
35	63P–45379–00	NIPPLE, HOSE RACCORD D'ESSENCE	1	1				
36	90119–06M18	BOLT, WITH WASHER BOULON, AVEC RONDELLE	1	1				

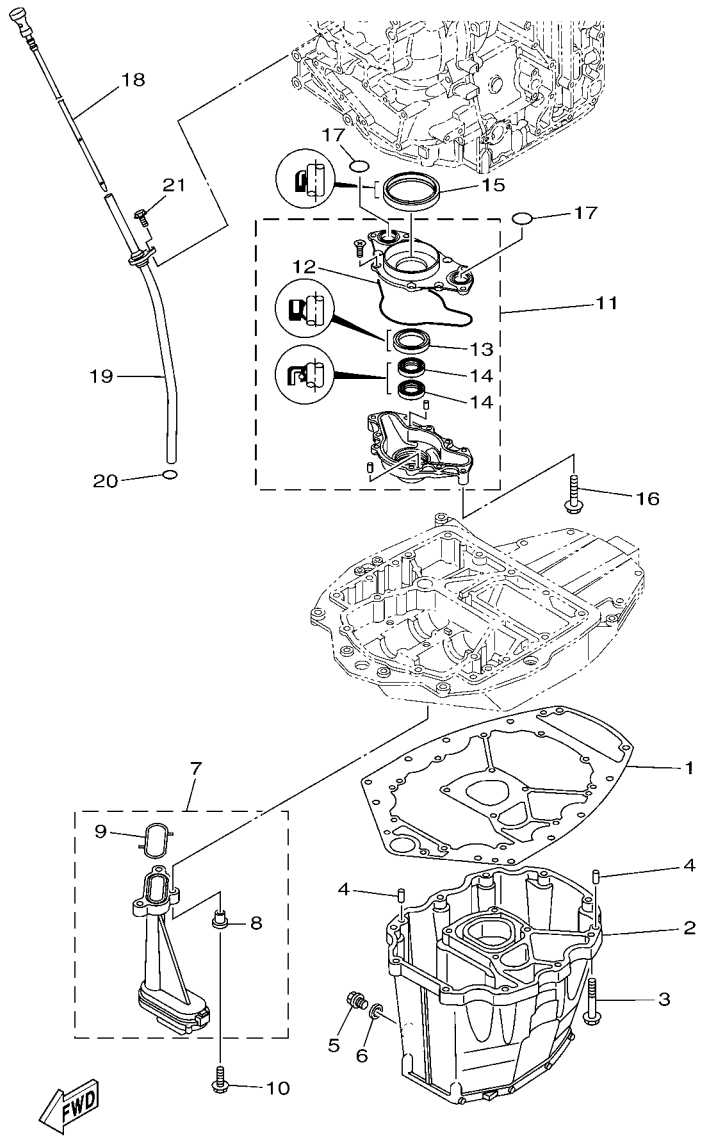

FIG. 33 OIL PAN — VENTILATEUR D'HUILE

REF. NO.	PART NO. N° PIECES	DESCRIPTION DESCRIPTION	6DV2	6DW2				REMARKS REMARQUES
1	63P–15312–01	GASKET, OIL PAN JOINT DE VENTILATEUR D'HUILE	1	1				
2	6DA–15311–00–CA	OIL PAN VENTILATEUR D'HUILE	1	1				X(25.3") X(25.3")
3	97575–08535	BOLT, WITH WASHER VIS HEXAGONAL AVC RONDELLE	10	10				
4	93608–16M16	PIN, DOWEL AXE	2	2				
5	90340–14M06	PLUG, STRAIGHT SCREW PLOT, FILETE DROIT	1	1				
6	90430–14M09	GASKET JOINT	1	1				
7	63P–13411–00	STRAINER, OIL FILTRE, HUILE	1	1				
8	90387–06263	.COLLAR .COLLERETTE	3	3				
9	63P–13415–00	.SEAL, OIL STRAINER .JOINT, FILTRE A HUILE	1	1				
10	95812–06025	BOLT, FLANGE BOULON	3	3				
11	6DA–13300–00	OIL PUMP ASSY POMPE A HUILE COMPLETE	1	1				
12	6DA–13329–00	.GASKET, PUMP COVER .JOINT, COUVERCLE DE POMPE	1	1				
13	6AW–13119–00	.OIL SEAL .JOINT SPY	1	1				
14	69J–13631–00	.OIL SEAL .JOINT SPY	2	2				
15	6CB–11355–00	SEAL, CYLINDER 1 JOINT, SPY CYLINDRE	1	1				
16	97575–06540	BOLT, WITH WASHER VIS HEXAGONAL AVC RONDELLE	4	4				
17	93210–25552	O-RING JOINT TORIQUE	2	2				
18	6DA–15362–00	PLUG, OIL LEVEL PLOT, NIVEAU D'HUILE	1	1				
19	6DA–15377–00	GUIDE, INLET GUIDE D'ADMISSION	1	1				
20	93210–19MJ3	O-RING JOINT TORIQUE	1	1				
21	95895–06016	BOLT, FLANGE BOULON	1	1				

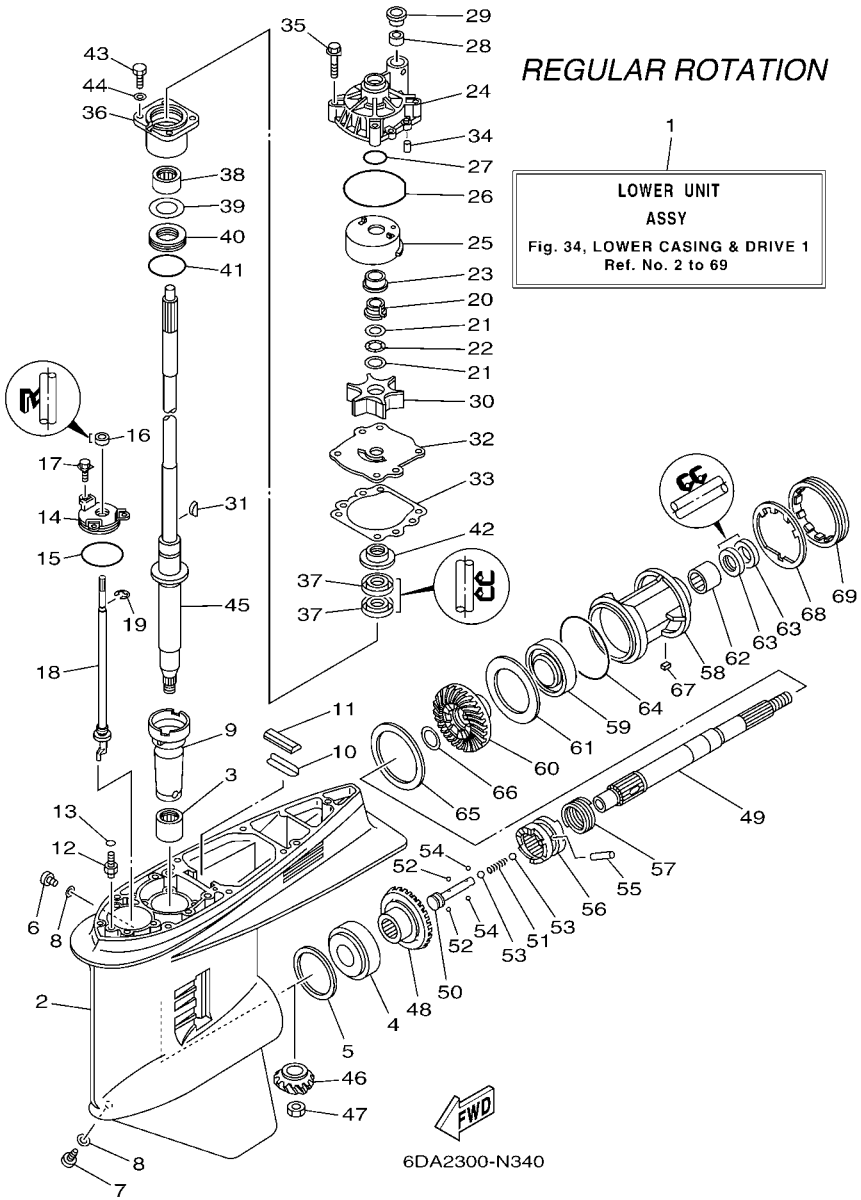

FIG. 34 LOWER CASING & DRIVE 1 BOITIER D'HELICE TRANSMISSION1

REF. NO.	PART NO. N° PIECES	DESCRIPTION DESCRIPTION	6DV2	6DW2				REMARKS REMARQUES
1	6DA–45300–10–8D	LOWER UNIT ASSY UNITE INFERIEURE (ENS.)	1					X(25.3"),RH X(25.3"),RH
2	6J9–45301–07–8D	CASING, LOWER BEQUILLE	1					
3	93311–928U5	BEARING ROULEMENT	1					
4	93332–000V3	BEARING ROULEMENT	1					
5	6G5–45567–01	SHIM (T:0.10MM) CALE (T:0.10MM)	1					UR UR
	6G5–45567–10	SHIM (T:0.12MM) CALE (T:0.12MM)	1					UR UR
	6G5–45567–20	SHIM (T:0.15MM) CALE (T:0.15MM)	1					UR UR
	6G5–45567–30	SHIM (T:0.18MM) CALE (T:0.18MM)	1					UR UR
	6G5–45567–40	SHIM (T:0.30MM) CALE (T:0.30MM)	1					UR UR
	6G5–45567–50	SHIM (T:0.40MM) CALE (T:0.40MM)	1					UR UR
	6G5–45567–60	SHIM (T:0.50MM) CALE (T:0.50MM)	1					UR UR
6	90340–08002	PLUG, STRAIGHT SCREW PLOT, FILETE DROIT	1					
7	688–45341–10	PLUG, DRAIN BOUCHON DE VIDANGE	1					
8	90430–08020	GASKET JOINT	2					
9	6G5–45536–01	SLEEVE, DRIVE SHAFT MANCHON, ARBRE MOTEUR	1					
10	663–45376–00	GUIDE, SEAL DAMPER BUTEE, JOINT CAOUTCHOUC	1					
11	688–45375–00	DAMPER, SEAL BOURRELET, CAOUTCHOUC	1					
12	63P–45378–00	NIPPLE, HOSE RACCORD, TUYAU	1					
13	93210–07003	O-RING JOINT TORIQUE	1					
14	6E5–45321–00	PLATE PLAQUETTE	1					
15	93210–58144	O-RING JOINT TORIQUE	1					
16	93106–09014	OIL SEAL JOINT SPY	1					
17	90119–06M10	BOLT, WITH WASHER BOULON, AVEC RONDELLE	3					
18	63P–44150–01	SHIFT CAM ASSY CAME D'INVERSION	1					
19	99001–08600	CIRCLIP CIRCLIP	1					
20	61A–45538–00	SPACER 1 ENTRETOISE	1					
21	90201–22M01	WASHER, PLATE RONDELLE, PLATE	2					

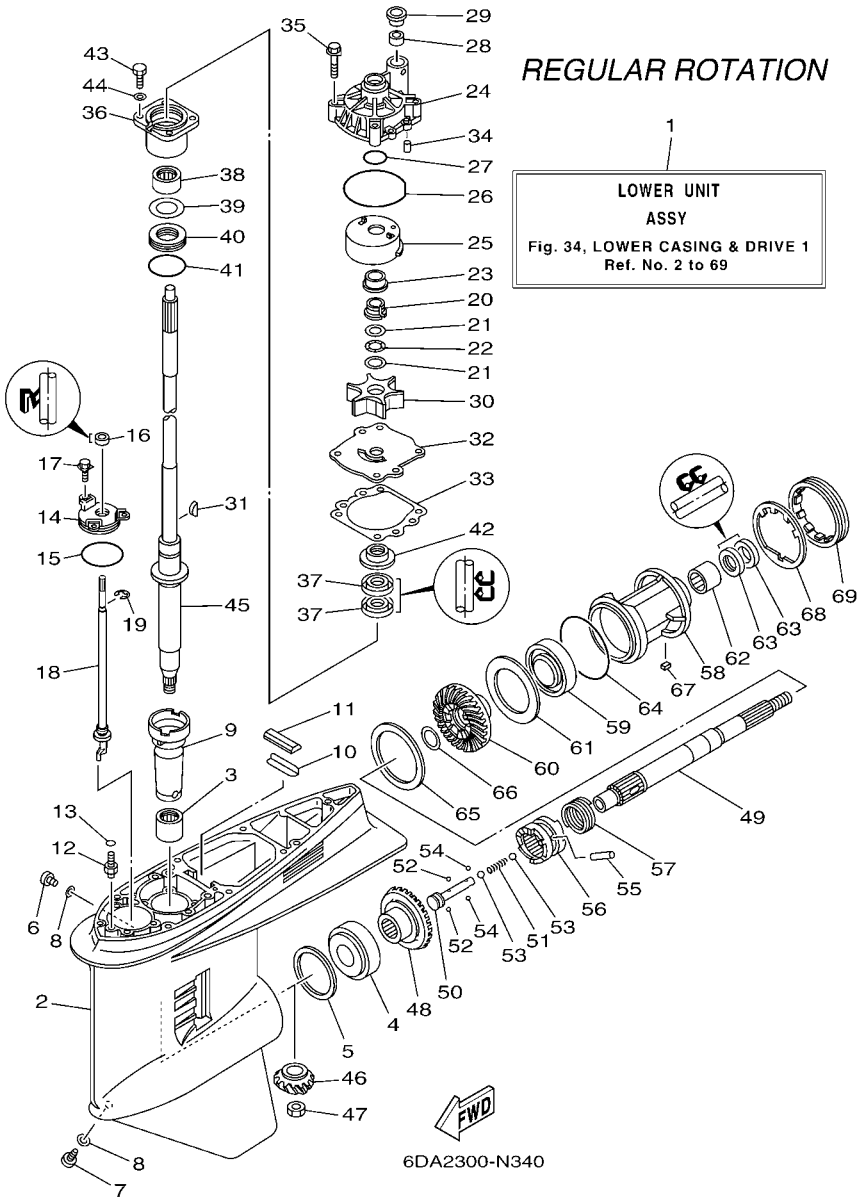

FIG. 34 LOWER CASING & DRIVE 1 BOITIER D'HELICE TRANSMISSION1

REF. NO.	PART NO. N° PIECES	DESCRIPTION DESCRIPTION	6DV2	6DW2				REMARKS REMARQUES
22	90206–22M19	WASHER, WAVE RONDELLE, ONDULEE	1					
23	61A–45527–00	COLLAR, DRIVE SHAFT ENTRETOISE	1					
24	61A–44311–01	HOUSING, WATER PUMP CORPS, POMPE A EAU	1					
25	61A–44322–02	INSERT, CARTRIDGE CUVETTE	1					
26	93210–86M38	O-RING JOINT TORIQUE	1					
27	93210–37160	O-RING JOINT TORIQUE	1					
28	6E5–44365–00	DAMPER, WATER SEAL 1 JOINT, TUBE D'EAU 1	1					
29	6E5–44312–00	COVER, WATER PUMP HOUSING COUVERCLE	1					
30	6E5–44352–01	IMPELLER TURBINE	1					
31	90280–04M05	KEY, WOODRUFF CLAVETTE, DEMI-LUNE	1					
32	6G5–44323–01	OUTER PLATE, CARTRIDGE PLAQUE EXTERIEURE	1					
33	6E5–44315–A0	GASKET, WATER PUMP JOINT, POMPE A EAU	1					
34	93606–12019	PIN, DOWEL GOUPILLE	2					
35	90119–08M14	BOLT, WITH WASHER BOULON, AVEC RONDELLE	4					
36	6E5–45331–00–9S	HOUSING, BEARING FLASQUE, ROULEMENT	1					
37	93101–28M16	OIL SEAL JOINT SPY	2					
38	93317–330U2	BEARING ROULEMENT	1					
39	6E5–45587–01	SHIM (T:0.10MM) CALE (T:0.10MM)	1					UR UR
	6E5–45587–10	SHIM (T:0.12MM) CALE (T:0.12MM)	1					UR UR
	6E5–45587–20	SHIM (T:0.15MM) CALE (T:0.15MM)	1					UR UR
	6E5–45587–30	SHIM (T:0.18MM) CALE (T:0.18MM)	1					UR UR
	6E5–45587–40	SHIM (T:0.30MM) CALE (T:0.30MM)	1					UR UR
	6E5–45587–50	SHIM (T:0.40MM) CALE (T:0.40MM)	1					UR UR
	6E5–45587–60	SHIM (T:0.50MM) CALE (T:0.50MM)	1					UR UR
40	93341–930V2	BEARING CERVEAUX DE DIRECTION	1					
41	93210–55M14	O-RING JOINT TORIQUE	1					
42	6E5–45344–00	COVER, OIL SEAL FLASQE, JOINT D'HUILE	1					

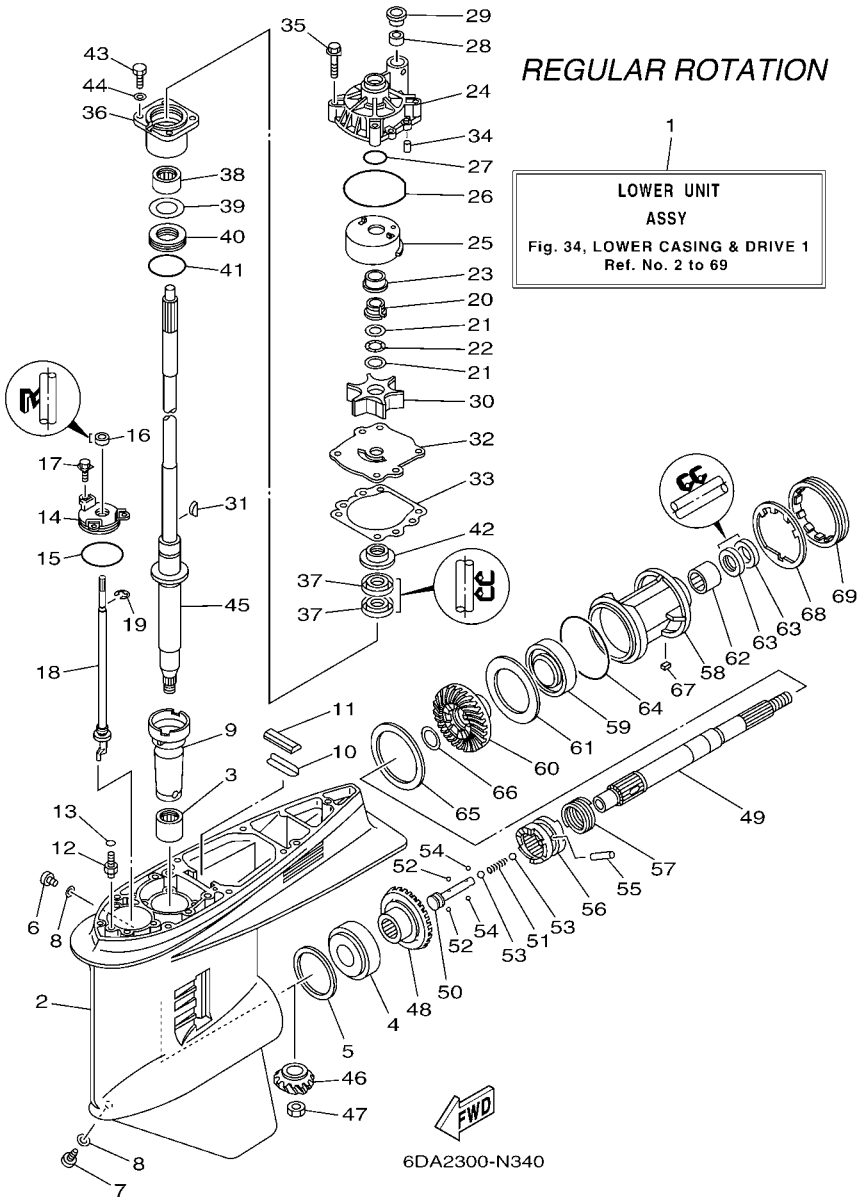

FIG. 34 LOWER CASING & DRIVE 1 BOITIER D'HELICE TRANSMISSION1

REF. NO.	PART NO. N° PIECES	DESCRIPTION DESCRIPTION	6DV2	6DW2				REMARKS REMARQUES
43	97095–08025	BOLT BOULON	4					
44	92995–08600	WASHER RONDELLE	4					
45	63P–45501–11	DRIVE SHAFT COMP. ARBRE MOTEUR COMP.	1					X(25.3") X(25.3")
46	6DA–45551–00	PINION (14T) PIGNON D'ATTAQUE (14D)	1					
47	90170–16M01	NUT ECROU	1					
48	6DA–45560–00	GEAR 1 (26T) PIGNON 1 (26T)	1					
49	6J9–45611–01	SHAFT, PROPELLER ARBRE, HELICE	1					
50	6E5–45634–02	SLIDE, SHIFT CONTRE-POUSSOIR	1					
51	90501–16M37	SPRING, COMPRESSION RESSORT, COMPRESSION	1					
52	93507–32009	BALL BILLE	2					
53	93511–32017	BALL BILLES	2					
54	93503–16003	BALL BILLES	2					
55	90250–08M07	PIN, STRAIGHT GOUPILLE, DROITE	1					
56	6DA–45631–00	CLUTCH, DOG CRABOT	1					
57	6E5–45633–01	RING, CROSS PIN JONC, GOUPILLE CRABOT	1					
58	6J9–45332–00–CA	HOUSING, BEARING FLASQUE, ROULEMENT	1					
59	93306–209U0	BEARING ROULEMENT	1					
60	6DA–45571–00	GEAR 2 (26T) PIGNON 2 (26T)	1					
61	6G5–45576–10	WASHER, THRUST 2 RONDELLE DE CALAGE 2	1					
62	93315–43061	BEARING ROULEMENT	1					
63	93101–30M17	OIL SEAL JOINT SPY	2					
64	93210–97M55	O-RING JOINT TORIQUE	1					
65	6G5–45577–02	SHIM (T:0.10MM) CALE (T:0.10MM)	1					UR UR
	6G5–45577–10	SHIM (T:0.12MM) CALE (T:0.12MM)	1					UR UR
	6G5–45577–20	SHIM (T:0.15MM) CALE (T:0.15MM)	1					UR UR
	6G5–45577–30	SHIM (T:0.18MM) CALE (T:0.18MM)	1					UR UR
	6G5–45577–40	SHIM (T:0.30MM) CALE (T:0.30MM)	1					UR UR

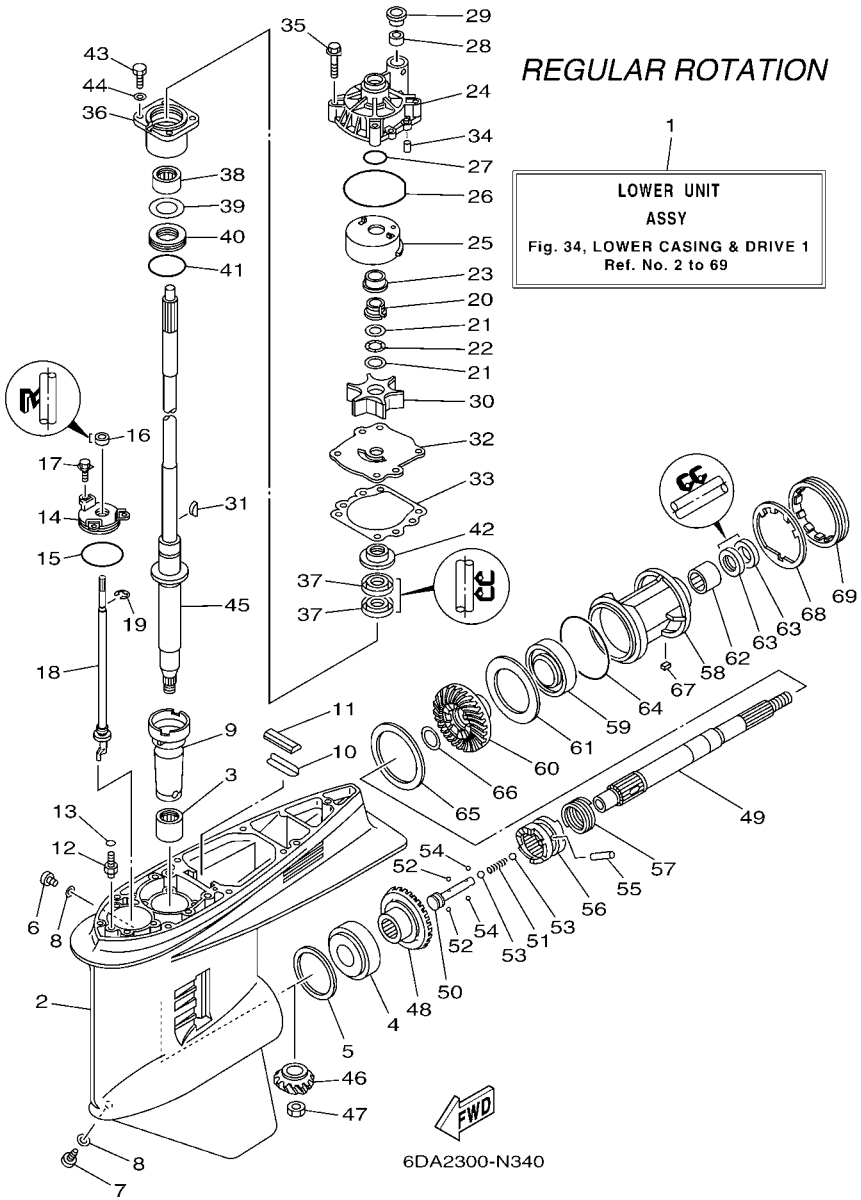

FIG. 34 LOWER CASING & DRIVE 1 BOITIER D'HELICE TRANSMISSION1

REF. NO.	PART NO. N° PIECES	DESCRIPTION DESCRIPTION	6DV2	6DW2				REMARKS REMARQUES
65	6G5–45577–50	SHIM (T:0.40MM) CALE (T:0.40MM)	1					UR UR
	6G5–45577–60	SHIM (T:0.50MM) CALE (T:0.50MM)	1					UR UR
66	90201–30M92	WASHER, PLATE RONDELLE, PLATE	1					
67	90282–04M00	KEY, STRAIGHT CLAVETTE, DROITE	1					
68	6G5–45383–01	WASHER, CLAW FREIN D'ECROU	1					
69	6G5–45384–02	NUT ECROU	1					

FIG. 35 LOWER CASING & DRIVE 2 BOITIER D HELICE TRANSMISSION2

REGULAR ROTATION

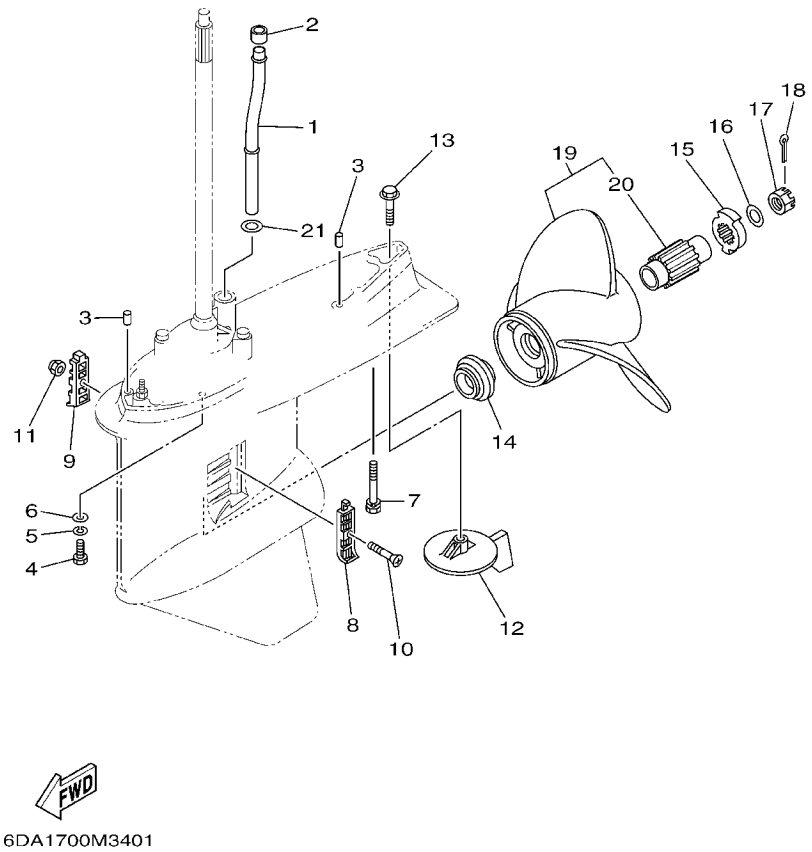

REF. NO.	PART NO. N° PIECES	DESCRIPTION DESCRIPTION	6DV2	6DW2				REMARKS REMARQUES
1	6DA–44361–00	TUBE, WATER 1 TUBE D'EAU 1	1					X(25.3") X(25.3")
2	6E5–44365–00	DAMPER, WATER SEAL 1 JOINT, TUBE D'EAU 1	1					
3	93608–16M16	PIN, DOWEL AXE	2					
4	97095–10045	BOLT BOULON	6					
5	92995–10100	WASHER RONDELLE	6					
6	92995–10600	WASHER RONDELLE	6					
7	90119–10MA2	BOLT, WITH WASHER BOULON, AVEC RONDELLE	1					
8	6J9–45214–00	COVER, WATER INLET 1 GRILLE, ENTREE D'EAU 1	1					
9	6J9–45215–00	COVER, WATER INLET 2 GRILLE, ENTREE D'EAU 2	1					
10	90152–05M08	SCREW, COUNTERSUNK VIS, TETE NOYEE	1					
11	90185–05002	NUT, NYLON ECROU,AUTO-BLOQUANT	1					
12	6J9–45371–01	TAB-TRIM ANODE DERIVE	1					
13	90105–10M00	BOLT, FLANGE BOULON	1					
14	63P–45987–00	SPACER 1 ENTRETOISE 1	1					
15	6CE–45997–00	SPACER 2 ENTRETOISE 2	1					
16	92990–18200	WASHER RONDELLE, PLATE	1					
17	90171–18M04	NUT, CASTLE ECROU, CRENELE	1					
18	91490–40030	PIN. COTTER GOUPILLE	1					
19	68F–45970–10	PROPELLER (3X14-1/2"X15"-M) HELICE (3X14-1/2"X15"-M)	1					UR SDS PROP. UR SDS PROP.
	68F–45972–10	PROPELLER (3X14-1/4"X17"-M) HELICE (3X14-1/4"X17"-M)	1					UR SDS PROP. UR SDS PROP.
	68F–45974–10	PROPELLER (3X13-3/4"X19"-M) HELICE (3X13-3/4"X19"-M)	1					UR SDS PROP. UR SDS PROP.
	68F–45976–10	PROPELLER (3X13-3/4"X21"-M) HELICE (3X13-3/4"X21"-M)	1					UR SDS PROP. UR SDS PROP.
	68F–45978–10	PROPELLER (3X14-1/4"X18"-M) HELICE (3X14-1/4"X18"-M)	1					UR SDS PROP. UR SDS PROP.
20	6CE–45C81–00	.DAMPER RUBBER, PROPELLER 1 .AMORTISSEUR HELICE 1	1					
21	90202–16061	WASHER, PLATE ARANDELA DE PLANA	1					Go to P/N : PE0-OM-140011

PARTS NEWS

YAMAHA MOTOR CO., LTD.
2500 SHINGAI IWATA SHIZUOKA JAPAN

News No.PE0-OM-140011(1/2)

Date:2014/8/18

Signature:S.Ishibashi

Cause : ☑ Revision Notice ☐ Correction ☐ Sales Unit Change ☐ Others

Model	F200CA, F200G / LF200CA, FL200G
Subject	PARTS CATALOGUE CORRECTIONS
CATALOGUE NO.	See the"List of Models and CATALOGUE No's below."
Time of YPEC Revision	Text, Illustration -->Sep./18/2014 PDF Replace -->Sep./18/2014
(YPEC = Yamaha Parts Electrical Catalogue = Website parts catalogue)	

Applicable Engine Serial No.

MODEL NAME	MODEL CODE	Applicable Engine Serial No.
F200CA, F200G	6DV2	6DV:1001439-
LF200CA, FL200G	6DW2	6DW:1000693-

*1: Interchangeability

A	Old Parts → Old Parts New Parts → New Parts	
B	Old Parts → New Parts New Parts → New Parts	
C	Old Parts → Old Parts New Parts → New Parts	
D	Old Parts → Old Parts New Parts → New Parts	
○	These parts are interchangeable with a set	

1. LIST CORRECTION

LOWER CASING & DRIVE 2(4)

Fig. No.	Ref. No.	PART No.	DESCRIPTION	Q'TY	*Interchangeability	REMARKS
*1	**21**	**90202-16061**	**WASHER, PLATE**	**1**	**B**	***Added Parts**

2. ILLUSTRATION CORRECTION

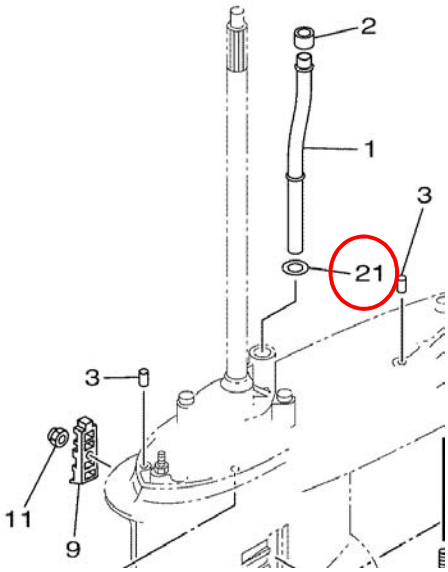

Parts Manager Check	Service Manager Check	Parts Manager File

YAMAHA MOTOR CO.,LTD
2500 Shingai Iwata Shizuoka 438-8501.Japan
Technical Publication Dept.

YAMAHA GENUINE Parts & Accessories

PARTS NEWS

YAMAHA MOTOR CO., LTD.
2500 SHINGAI IWATA SHIZUOKA JAPAN

News No.PE0-OM-140011(2/2)

Date:2014/8/18

Signature:S.Ishibashi

Cause : ☑ Revision Notice ☐ Correction ☐ Sales Unit Change ☐ Others

Model	F200CA, F200G / LF200CA, FL200G
Subject	PARTS CATALOGUE CORRECTIONS
CATALOGUE NO.	See the"List of Models and CATALOGUE No's below."

Time of YPEC Revision Text, Illustration -->Sep./18/2014 PDF Replace -->Sep./18/2014
(YPEC = Yamaha Parts Electrical Catalogue = Website parts catalogue)

3. LIST of Models and CATALOGUE No's.

The applicable MODELS, MODEL CODES, and CATALOGUE No's are as follows.

MODEL NAME	MODEL CODE	MODEL YEAR	CATALOGUE NO.	Fig.No. *1
F200CA	6DV2	2014	1N6DV-100E1	35
F200G FL200G	6DV2 6DW2	2014	1N6DV-200S1	36, 38
F200G FL200G	6DV2 6DW2	2014	1N6DV-300F1	35, 37
LF200CA	6DW2	2014	1N6DW-100E1	34

Thank you very much for your cooperation.

Parts Manager Check	Service Manager Check	Parts Manager File

YAMAHA MOTOR CO.,LTD
2500 Shingai Iwata Shizuoka 438-8501.Japan
Technical Publication Dept.

YAMAHA GENUINE Parts & Accessories

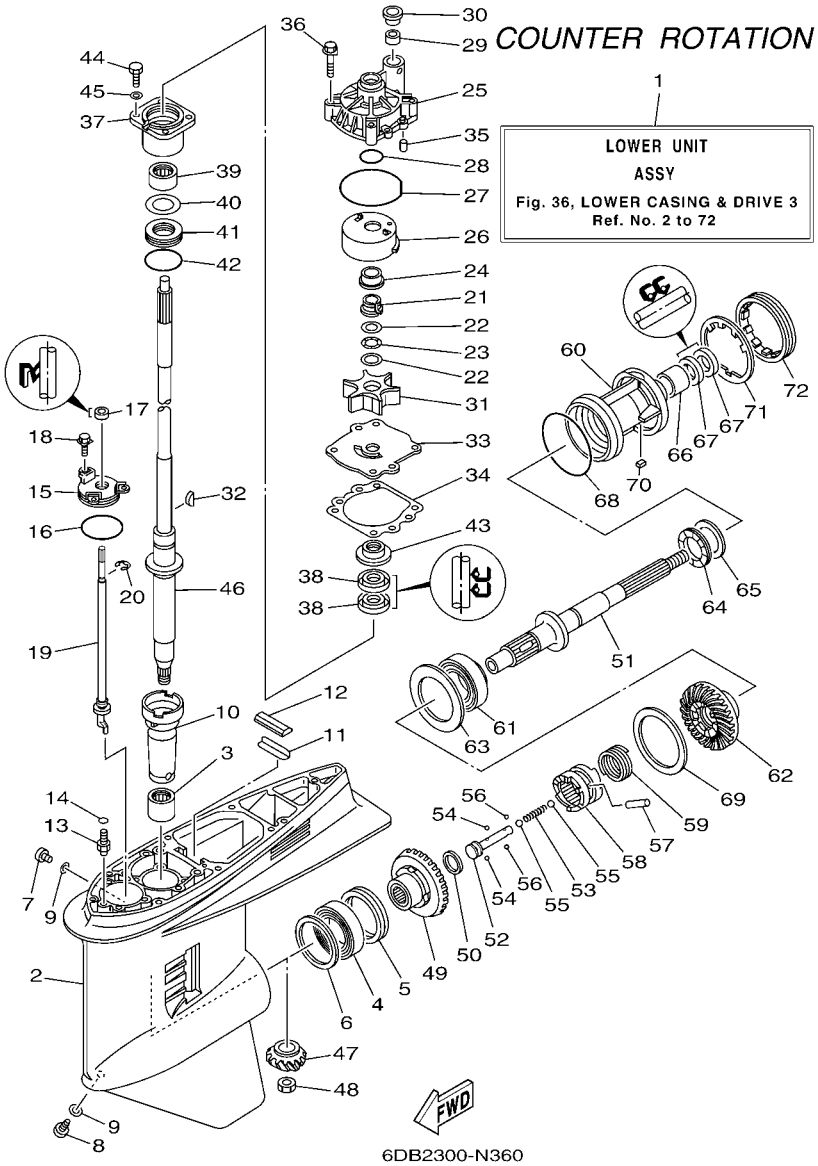

FIG. 36 LOWER CASING & DRIVE 3 BOITIER D'HELICE TRANSMISSION3

REF. NO.	PART NO. N° PIECES	DESCRIPTION DESCRIPTION	6DV2	6DW2				REMARKS REMARQUES
1	6DB–45300–10–8D	LOWER UNIT ASSY UNITE INFERIEURE (ENS.)		1				X(25.3"),LH X(25.3"),LH
2	6J9–45301–07–8D	CASING, LOWER BEQUILLE		1				
3	93311–928U5	BEARING ROULEMENT		1				
4	93390–000U2	BEARING ROULEMENT		1				
5	93341–465U4	BEARING CERVEAUX DE DIRECTION		1				
6	6G5–45567–01	SHIM (T:0.10MM) CALE (T:0.10MM)		1				UR UR
	6G5–45567–10	SHIM (T:0.12MM) CALE (T:0.12MM)		1				UR UR
	6G5–45567–20	SHIM (T:0.15MM) CALE (T:0.15MM)		1				UR UR
	6G5–45567–30	SHIM (T:0.18MM) CALE (T:0.18MM)		1				UR UR
	6G5–45567–40	SHIM (T:0.30MM) CALE (T:0.30MM)		1				UR UR
	6G5–45567–50	SHIM (T:0.40MM) CALE (T:0.40MM)		1				UR UR
	6G5–45567–60	SHIM (T:0.50MM) CALE (T:0.50MM)		1				UR UR
7	90340–08002	PLUG, STRAIGHT SCREW PLOT, FILETE DROIT		1				
8	688–45341–10	PLUG, DRAIN BOUCHON DE VIDANGE		1				
9	90430–08020	GASKET JOINT		2				
10	6G5–45536–01	SLEEVE, DRIVE SHAFT MANCHON, ARBRE MOTEUR		1				
11	663–45376–00	GUIDE, SEAL DAMPER BUTEE, JOINT CAOUTCHOUC		1				
12	688–45375–00	DAMPER, SEAL BOURRELET, CAOUTCHOUC		1				
13	63P–45378–00	NIPPLE, HOSE RACCORD, TUYAU		1				
14	93210–07003	O-RING JOINT TORIQUE		1				
15	6E5–45321–00	PLATE PLAQUETTE		1				
16	93210–58144	O-RING JOINT TORIQUE		1				
17	93106–09014	OIL SEAL JOINT SPY		1				
18	90119–06M10	BOLT, WITH WASHER BOULON, AVEC RONDELLE		3				
19	64P–44150–01	SHIFT CAM ASSY CAME D'INVERSION		1				
20	99001–08600	CIRCLIP CIRCLIP		1				
21	61A–45538–00	SPACER 1 ENTRETOISE		1				

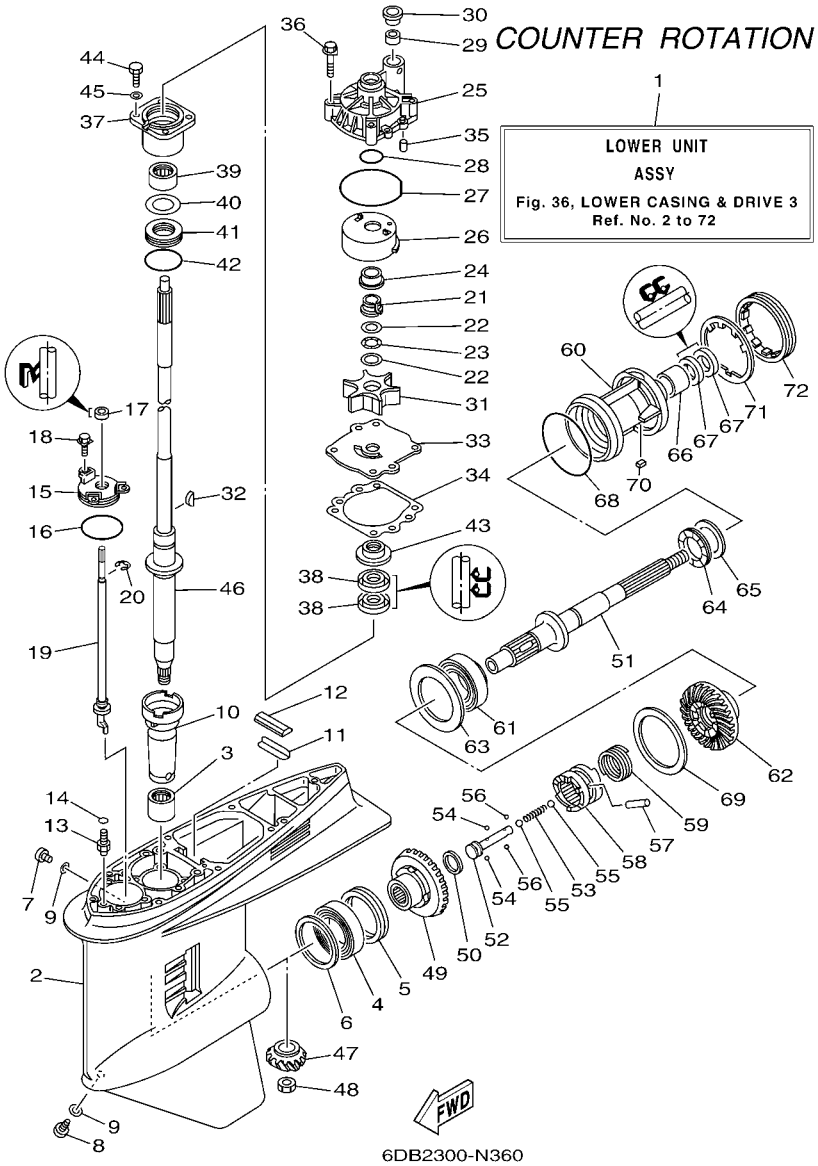

FIG. 36 LOWER CASING & DRIVE 3 BOITIER D'HELICE TRANSMISSION3

REF. NO.	PART NO. N° PIECES	DESCRIPTION DESCRIPTION	6DV2	6DW2				REMARKS REMARQUES
22	90201–22M01	WASHER, PLATE RONDELLE, PLATE		2				
23	90206–22M19	WASHER, WAVE RONDELLE, ONDULEE		1				
24	61A–45527–00	COLLAR, DRIVE SHAFT ENTRETOISE		1				
25	61A–44311–01	HOUSING, WATER PUMP CORPS, POMPE A EAU		1				
26	61A–44322–02	INSERT, CARTRIDGE CUVETTE		1				
27	93210–86M38	O-RING JOINT TORIQUE		1				
28	93210–37160	O-RING JOINT TORIQUE		1				
29	6E5–44365–00	DAMPER, WATER SEAL 1 JOINT, TUBE D'EAU 1		1				
30	6E5–44312–00	COVER, WATER PUMP HOUSING COUVERCLE		1				
31	6E5–44352–01	IMPELLER TURBINE		1				
32	90280–04M05	KEY, WOODRUFF CLAVETTE, DEMI-LUNE		1				
33	6G5–44323–01	OUTER PLATE, CARTRIDGE PLAQUE EXTERIEURE		1				
34	6E5–44315–A0	GASKET, WATER PUMP JOINT, POMPE A EAU		1				
35	93606–12019	PIN, DOWEL GOUPILLE		2				
36	90119–08M14	BOLT, WITH WASHER BOULON, AVEC RONDELLE		4				
37	6E5–45331–00–9S	HOUSING, BEARING FLASQUE, ROULEMENT		1				
38	93101–28M16	OIL SEAL JOINT SPY		2				
39	93317–330U2	BEARING ROULEMENT		1				
40	6E5–45587–01	SHIM (T:0.10MM) CALE (T:0.10MM)		1				UR UR
	6E5–45587–10	SHIM (T:0.12MM) CALE (T:0.12MM)		1				UR UR
	6E5–45587–20	SHIM (T:0.15MM) CALE (T:0.15MM)		1				UR UR
	6E5–45587–30	SHIM (T:0.18MM) CALE (T:0.18MM)		1				UR UR
	6E5–45587–40	SHIM (T:0.30MM) CALE (T:0.30MM)		1				UR UR
	6E5–45587–50	SHIM (T:0.40MM) CALE (T:0.40MM)		1				UR UR
	6E5–45587–60	SHIM (T:0.50MM) CALE (T:0.50MM)		1				UR UR
41	93341–930V2	BEARING CERVEAUX DE DIRECTION		1				
42	93210–55M14	O-RING JOINT TORIQUE		1				

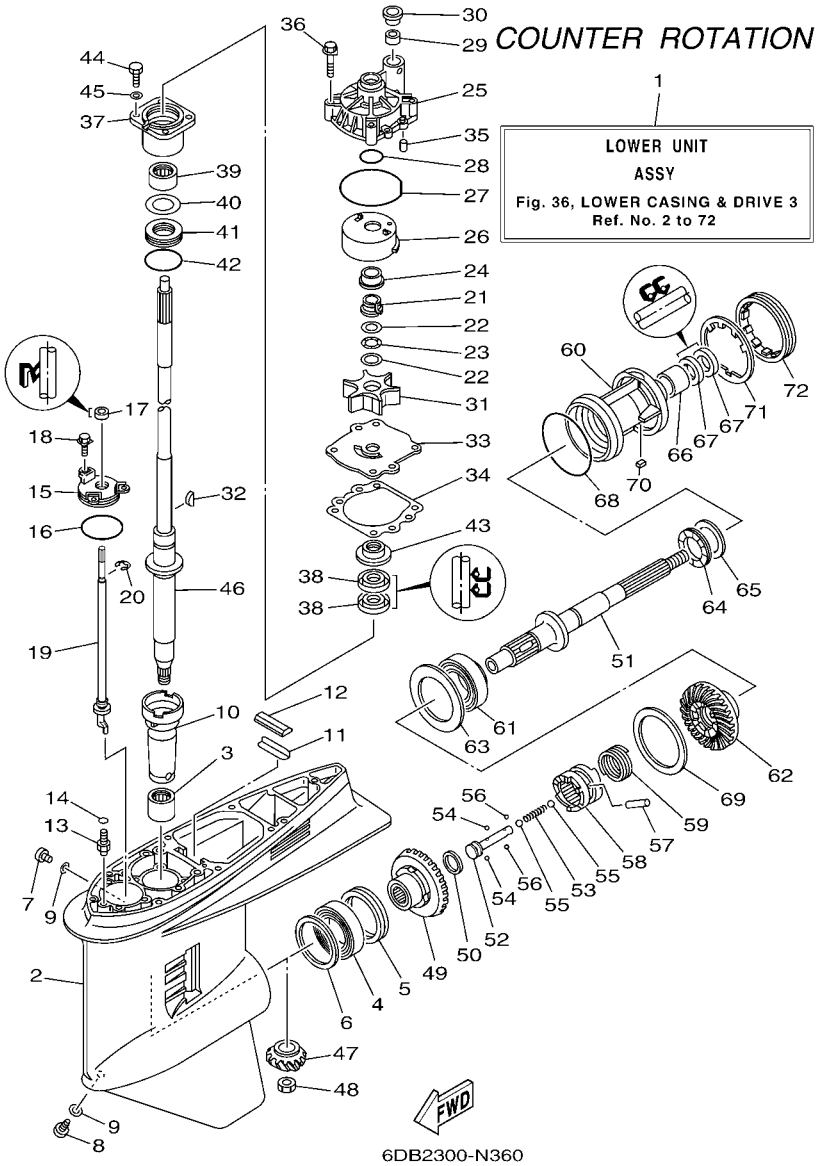

FIG. 36 LOWER CASING & DRIVE 3 BOITIER D'HELICE TRANSMISSION3

REF. NO.	PART NO. N° PIECES	DESCRIPTION DESCRIPTION	6DV2	6DW2				REMARKS REMARQUES
43	6E5–45344–00	COVER, OIL SEAL FLASQE, JOINT D'HUILE		1				
44	97095–08025	BOLT BOULON		4				
45	92995–08600	WASHER RONDELLE		4				
46	63P–45501–11	DRIVE SHAFT COMP. ARBRE MOTEUR COMP.		1				X(25.3") X(25.3")
47	6DA–45551–00	PINION (14T) PIGNON D'ATTAQUE (14D)		1				
48	90170–16M01	NUT ECROU		1				
49	6DB–45560–00	GEAR 1 (26T) PIGNON 1 (26T)		1				
50	90201–26015	WASHER, PLATE RONDELLE, PLATE		1				
51	6K1–45611–10	SHAFT, PROPELLER ARBRE, HELICE		1				
52	6E5–45634–02	SLIDE, SHIFT CONTRE-POUSSOIR		1				
53	90501–16M37	SPRING, COMPRESSION RESSORT, COMPRESSION		1				
54	93507–32009	BALL BILLE		2				
55	93511–32017	BALL BILLES		2				
56	93503–16003	BALL BILLES		2				
57	90250–08M07	PIN, STRAIGHT GOUPILLE, DROITE		1				
58	6DA–45631–00	CLUTCH, DOG CRABOT		1				
59	6E5–45633–01	RING, CROSS PIN JONC, GOUPILLE CRABOT		1				
60	6K1–45332–01–CA	HOUSING, BEARING FLASQUE, ROULEMENT		1				
61	93332–00048	BEARING ROULEMENT		1				
62	6DB–45570–00	GEAR 2 (26T) PIGNON 2 (26T)		1				
63	6K1–45576–00	WASHER, THRUST 2 RONDELLE DE CALAGE 2		1				
64	93341–440U5	BEARING CERVEAUX DE DIRECTION		1				
65	6K1–45578–01	SHIM (T:0.10MM) CALE (T:0.10MM)		1				UR UR
	6K1–45578–10	SHIM (T:0.12MM) CALE (T:0.12MM)		1				UR UR
	6K1–45578–20	SHIM (T:0.15MM) CALE (T:0.15MM)		1				UR UR
	6K1–45578–30	SHIM (T:0.18MM) CALE (T:0.18MM)		1				UR UR
	6K1–45578–40	SHIM (T:0.30MM) CALE (T:0.30MM)		1				UR UR

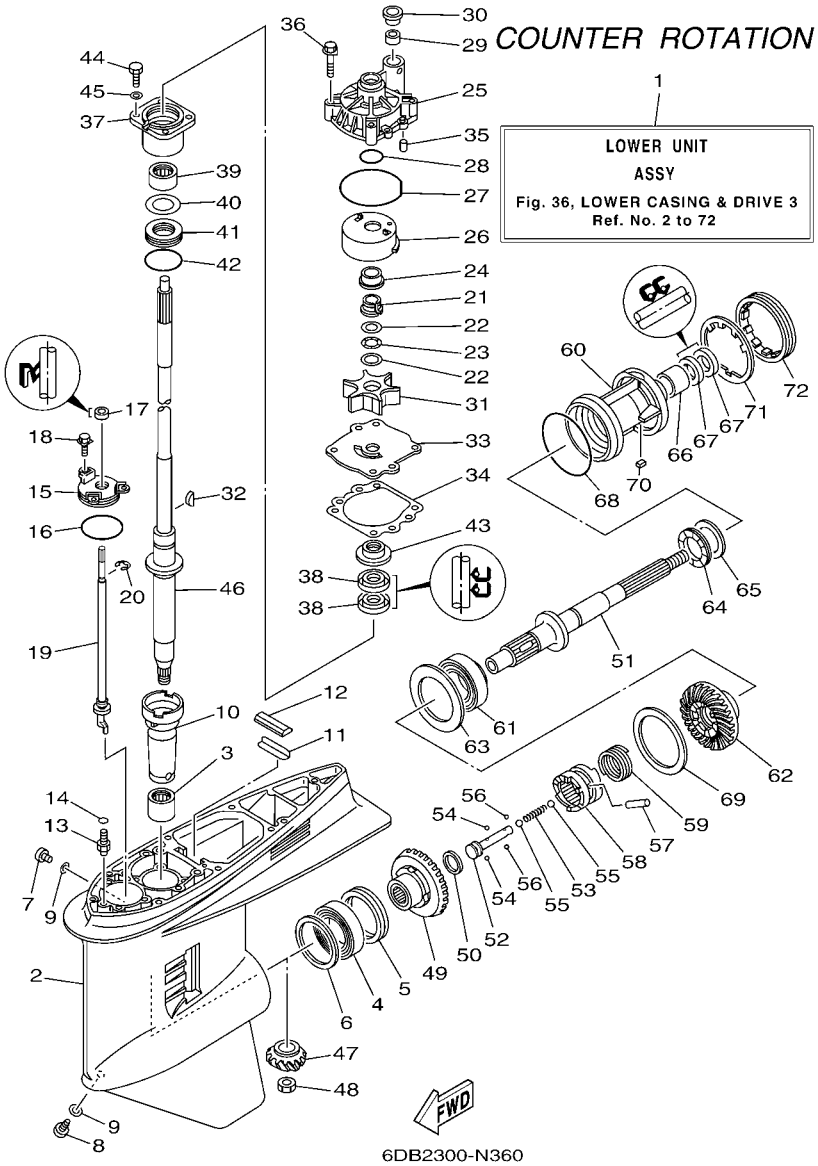

FIG. 36 LOWER CASING & DRIVE 3 BOITIER D'HELICE TRANSMISSION3

REF. NO.	PART NO. N° PIECES	DESCRIPTION DESCRIPTION	6DV2	6DW2				REMARKS REMARQUES
65	6K1–45578–50	SHIM (T:0.40MM) CALE (T:0.40MM)		1				UR UR
	6K1–45578–60	SHIM (T:0.50MM) CALE (T:0.50MM)		1				UR UR
66	93315–43061	BEARING ROULEMENT		1				
67	93101–30M17	OIL SEAL JOINT SPY		2				
68	93210–97M55	O-RING JOINT TORIQUE		1				
69	6G5–45577–02	SHIM (T:0.10MM) CALE (T:0.10MM)		1				UR UR
	6G5–45577–10	SHIM (T:0.12MM) CALE (T:0.12MM)		1				UR UR
	6G5–45577–20	SHIM (T:0.15MM) CALE (T:0.15MM)		1				UR UR
	6G5–45577–30	SHIM (T:0.18MM) CALE (T:0.18MM)		1				UR UR
	6G5–45577–40	SHIM (T:0.30MM) CALE (T:0.30MM)		1				UR UR
	6G5–45577–50	SHIM (T:0.40MM) CALE (T:0.40MM)		1				UR UR
	6G5–45577–60	SHIM (T:0.50MM) CALE (T:0.50MM)		1				UR UR
70	90282–04M00	KEY, STRAIGHT CLAVETTE, DROITE		1				
71	6G5–45383–01	WASHER, CLAW FREIN D'ECROU		1				
72	6G5–45384–02	NUT ECROU		1				

FIG. 37 LOWER CASING & DRIVE 4 BOITIER D'HELICE TRANSMISSION4

COUNTER ROTATION

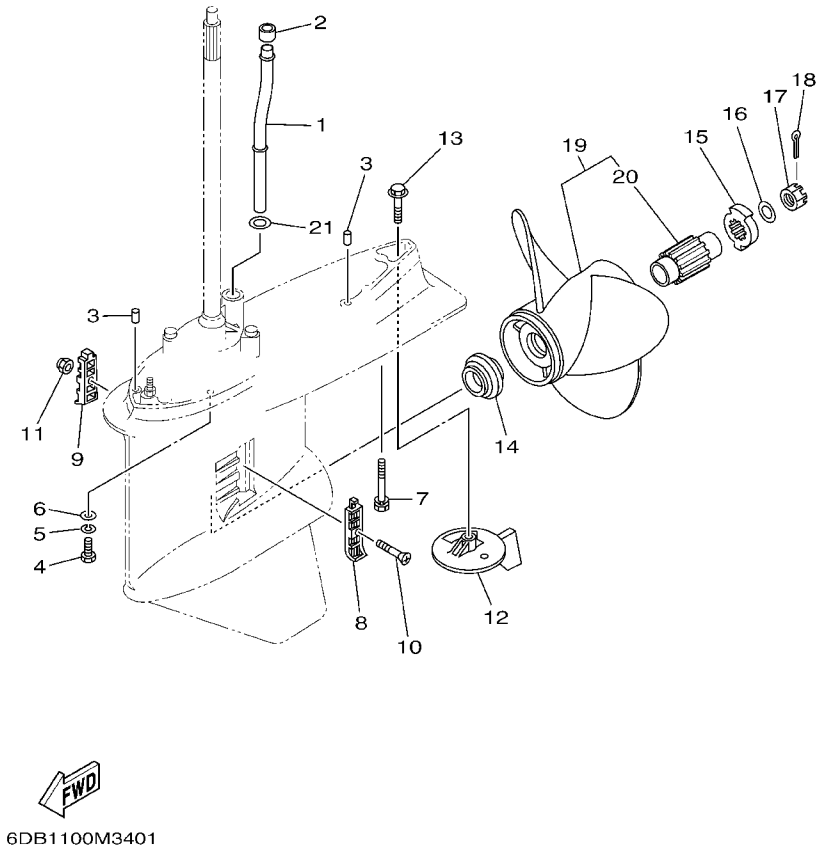

6DB1100M3401

REF. NO.	PART NO. N° PIECES	DESCRIPTION DESCRIPTION	6DV2	6DW2				REMARKS REMARQUES
1	6DA–44361–00	TUBE, WATER 1 TUBE D'EAU 1		1				X(25.3") X(25.3")
2	6E5–44365–00	DAMPER, WATER SEAL 1 JOINT, TUBE D'EAU 1		1				
3	93608–16M16	PIN, DOWEL AXE		2				
4	97095–10045	BOLT BOULON		6				
5	92995–10100	WASHER RONDELLE		6				
6	92995–10600	WASHER RONDELLE		6				
7	90119–10MA2	BOLT, WITH WASHER BOULON, AVEC RONDELLE		1				
8	6J9–45214–00	COVER, WATER INLET 1 GRILLE, ENTREE D'EAU 1		1				
9	6J9–45215–00	COVER, WATER INLET 2 GRILLE, ENTREE D'EAU 2		1				
10	90152–05M08	SCREW, COUNTERSUNK VIS, TETE NOYEE		1				
11	90185–05002	NUT, NYLON ECROU,AUTO-BLOQUANT		1				
12	6K1–45371–02	TAB-TRIM ANODE DERIVE		1				
13	90105–10M00	BOLT, FLANGE BOULON		1				
14	63P–45987–00	SPACER 1 ENTRETOISE 1		1				
15	6CE–45997–00	SPACER 2 ENTRETOISE 2		1				
16	92990–18200	WASHER RONDELLE, PLATE		1				
17	90171–18M04	NUT, CASTLE ECROU, CRENELE		1				
18	91490–40030	PIN. COTTER GOUPILLE		1				
19	68G–45970–10	PROPELLER (3X14-1/2X15-ML) HELICE (3X14-1/2X15-ML)		1				UR SDS PROP. UR SDS PROP.
	68G–45972–10	PROPELLER (3X14-1/4"X17"-ML) HELICE (3X14-1/4"X17"-ML)		1				UR SDS PROP. UR SDS PROP.
	68G–45974–10	PROPELLER (3X13-3/4"X19"-ML) HELICE (3X13-3/4"X19"-ML)		1				UR SDS PROP. UR SDS PROP.
	68G–45976–10	PROPELLER (3X13-3/4"X21"-ML) HELICE (3X13-3/4"X21"-ML)		1				UR SDS PROP. UR SDS PROP.
	68G–45978–10	PROPELLER (3X14-1/4"X18"-ML) HELICE (3X14-1/4"X18"-ML)		1				UR SDS PROP. UR SDS PROP.
20	6CE–45C81–00	.DAMPER RUBBER, PROPELLER 1 .AMORTISSEUR HELICE 1		1				
21	90202–16061	WASHER, PLATE ARANDELA DE PLANA		1				Go to P/N : PE0-OM-140011

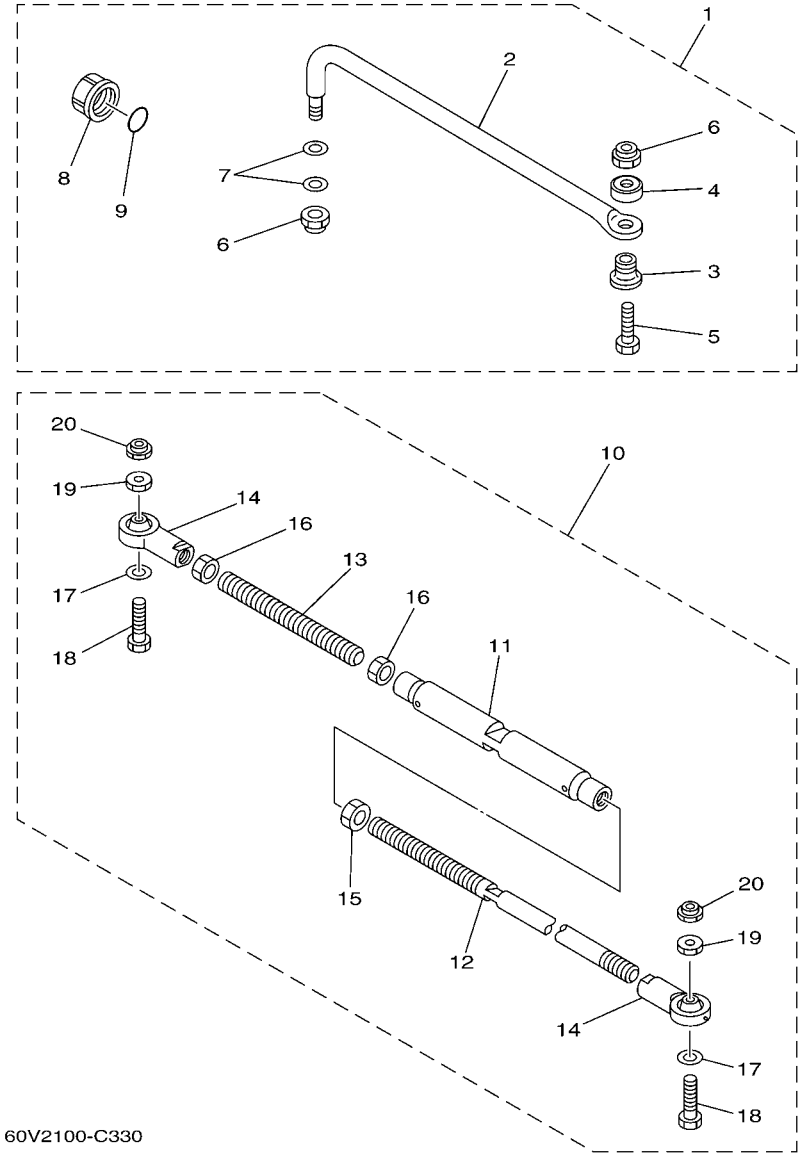

FIG. 38 STEERING GUIDE FIXATION DE DIRECTION

REF. NO.	PART NO. N° PIECES	DESCRIPTION DESCRIPTION	6DV2	6DW2				REMARKS REMARQUES
1	6E5–61350–02	STEERING GUIDE ATTACHMENT KIT FIXATIONS DE DIRECTION	1					AP AP
2	6E5–61351–01	.ROD, STEERING LINK .RENVOI DE DIRECTION	1					
3	90387–10M61	.COLLAR .COLLERETTE	1					
4	90560–12M01	.SPACER .ENTRETOISE	1					
5	6E5–61355–00	.BOLT .BOULON	1					
6	90185–09M01	.NUT, SELF-LOCKING .ECROU,AUTO-BLOQUANT	2					
7	90201–10M20	.WASHER, PLATE .RONDELLE, PLATE	2					
8	6E5–43145–01	.CAP, CLAMP BRACKET .CAPUCHON, PRESSE	1					
9	93210–16275	.O-RING .JOINT TORIQUE	1					
10	6E5–61301–01	TWIN KIT (L:600-800MM) JUMELE KIT (L:600-800MM)		1				AP AP
11	6E5–61313–00	.ADJUSTER .TENDEUR		1				
12	6E5–61311–11	.TIE BAR .BARRE D'ACCOUPLEMENT		1				
13	6E5–61315–00	.TIE BAR .BARRE D'ACCOUPLEMENT		1				
14	6E5–61303–00	.STEERING AXLE COMP. .AXLE COMP.		2				
15	90170–14M06	.NUT .ECROU		1				
16	95380–14700	.NUT .ECROU		2				
17	90201–10M76	.WASHER, PLATE .RONDELLE, PLATE		2				
18	90101–09M70	.BOLT .BOULON		2				
19	90170–09M05	.NUT .ECROU		2				
20	90185–09M01	.NUT, SELF-LOCKING .ECROU,AUTO-BLOQUANT		2				

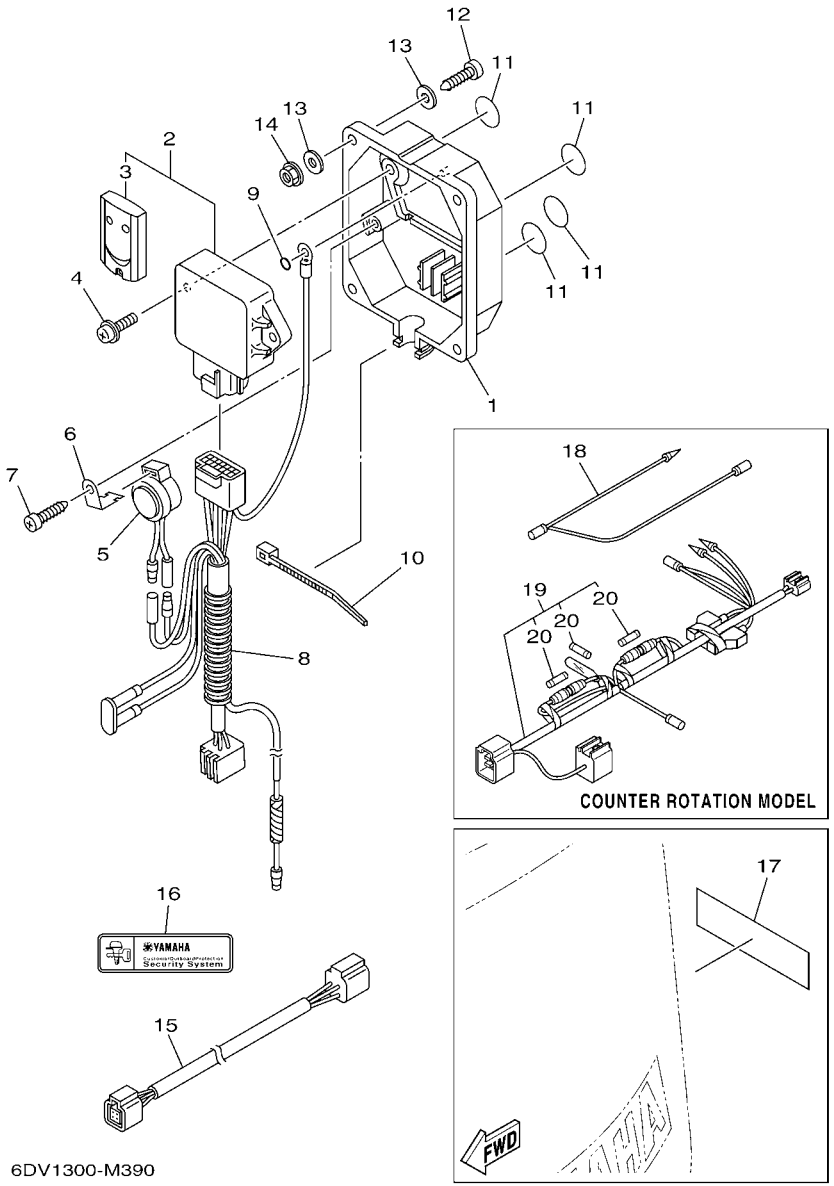

FIG. 39 OPTIONAL PARTS 1 PIECES OPTIONNELLES 1

REF. NO.	PART NO. N° PIECES	DESCRIPTION DESCRIPTION	6DV2	6DW2				REMARKS REMARQUES
1	6Y8–86267–00	CASE COMPLETE 1 CARTER (ENS.) 1	1					
2	6Y8–86260–02	REMOTE CONTROL UNIT ASSY UNITE DE TELECOMMANDE (ENS.)	1					UR FOR EUR UR FOR EUR
	6Y8–86260–12	REMOTE CONTROL UNIT ASSY UNITE DE TELECOMMANDE (ENS.)	1					AP FOR USA/CAN AP FOR USA/CAN
3	6AA–86261–00	.TRANSMITTER COMP .TRANSMETTEUR	2					FOR 6Y8-86260-02 FOR 6Y8-86260-02
	6AA–86261–22	.TRANSMITTER COMP .TRANSMETTEUR	2					FOR 6Y8-86260-12 FOR 6Y8-86260-12
4	97980–06216	SCREW, WITH WASHER VIS, AVEC RONDELLE	2					
5	6X4–83383–00	BUZZER RONFLEUR	1					
6	6X4–83386–00	STAY, BUZZER SUPPOR, RONFLEUR	1					
7	97780–60620	SCREW, TAPPING VIS, TETE BOMBEE	1					
8	6Y8–82509–10	WIRE, SUB LEAD FIL, SECONDAIRE	1					
9	93210–04279	O-RING JOINT TORIQUE	1					
10	90465–11M10	CLAMP BRIDE	1					
11	6Y8–8454G–00	PATCH 1 TAMPON 1	4					
12	90167–06M00	SCREW, TAPPING VIS, TETE FRAISEE	4					UR UR
	97880–06035	SCREW, PAN HEAD VIS, TETE TRONCONIQUE	4					UR UR
13	90201–06M30	WASHER, PLATE RONDELLE, PLATE	8					
14	95780–06300	NUT, FLANGE ECROU	4					
15	6Y8–82521–11	2FT PIGTAIL BUS FAISCEAU (L: 2FT.)	1					
16	6Y8–48277–00	STICKER 1 ETIQUETTE 1	1					UR FOR EUR UR FOR EUR
	6Y8–48277–00	STICKER 1 ETIQUETTE 1	4					AP FOR USA/CAN AP FOR USA/CAN
17	6Y8–48277–00	STICKER 1 ETIQUETTE 1	1	1				
18	6H5–81315–00	LEAD WIRE ASSY FIL		1				
19	6Y8–81315–00	LEAD WIRE ASSY FIL		1				
20	6TA–82151–00	.FUSE(5A) .FUSIBLE (5A)		3				

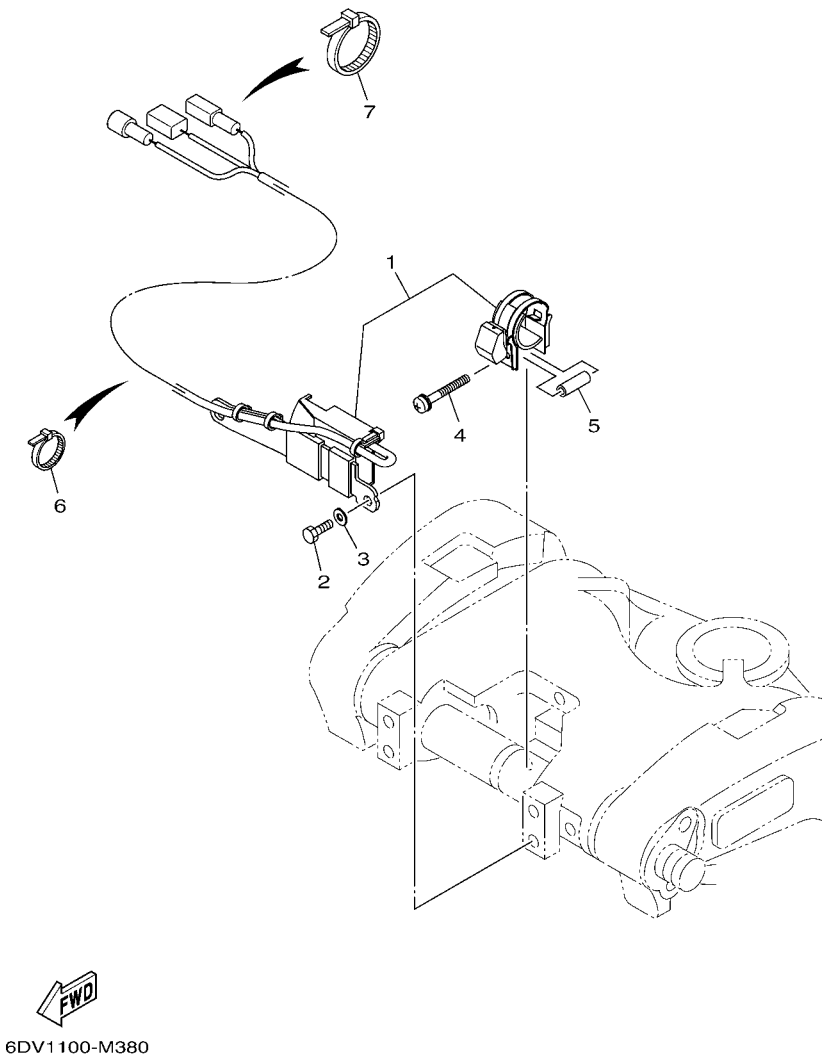

FIG. 40 OPTIONAL PARTS 2 PIECES OPTIONNELLES 2

REF. NO.	PART NO. N° PIECES	DESCRIPTION DESCRIPTION	6DV2	6DW2				REMARKS REMARQUES
1	6CE–825E0–00	TILT LIMIT SWITCH ASSY COMMUTATEUR, LIMIT INCLINAISON	1	1				
2	97095–06016	BOLT BOULON	2	2				
3	92995–06600	WASHER RONDELLE	2	2				
4	90159–05059	SCREW, WITH WASHER VIS, AVEC RONDELLE	1	1				
5	90387–05004	COLLAR COLLERETTE	1	1				
6	90465–11M10	CLAMP BRIDE	8	8				
7	90465–13M18	CLAMP BRIDE	1	1				

FIG. 41 REPAIR KIT 1 KITS DE REPARATION 1

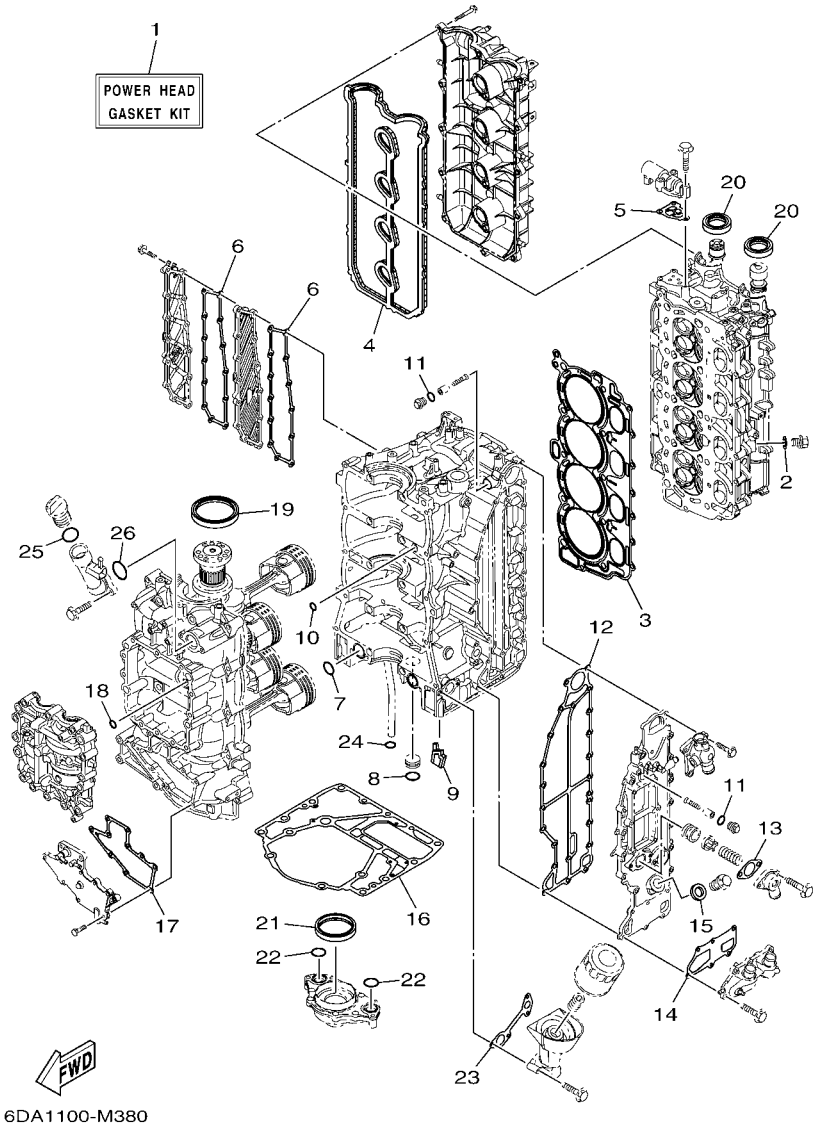

REF. NO.	PART NO. N° PIECES	DESCRIPTION DESCRIPTION	6DV2	6DW2				REMARKS REMARQUES
1	6DA–W0001–00	POWER HEAD GASKET KIT POCHETTE DE JINTS TETE MOTRICE	1	1				
2	90430–14115	.GASKET .JOINT	1	1				
3	6DA–11181–00	.GASKET, CYLINDER HEAD 1 .JOINT, DE CULASSE 1	1	1				
4	6DA–11193–00	.GASKET, HEAD COVER 1 .JOINT, COUVERCLE DE CULASSE 1	1	1				
5	6CB–1242F–00	.GASKET, FILTER .JOINT, FILTRE	1	1				
6	6DA–15353–00	.GASKET, DRAIN .JOINT, PLOT DE VIDANGE	2	2				
7	93210–25552	.O-RING .JOINT TORIQUE	2	2				
8	93210–25647	.O-RING .JOINT TORIQUE	1	1				
9	6DA–14664–00	.GROMMET, WATER SHUT .PASSE-FIL	1	1				
10	93210–12648	.O-RING .JOINT TORIQUE	1	1				
11	93210–13M63	.O-RING .JOINT TORIQUE	2	2				
12	6DA–41114–00	.GASKET, EXHAUST OUTER COVER .JOINT, COUVERCLE D'ECHAPPEMENT	1	1				
13	60V–11382–A0	.GASKET 2 .JOINT 2	1	1				
14	6DA–11381–00	.GASKET 1 .JOINT 1	1	1				
15	90430–18130	.GASKET .JOINT	1	1				
16	63P–11351–01	.GASKET, CYLINDER .JOINT, D'EMBASE	1	1				
17	6DA–15451–00	.GASKET, CRANKCASE COVER 1 .JOINT, COUVERCLE DE CARTER 1	1	1				
18	93210–08001	.O-RING .JOINT TORIQUE	1	1				
19	93102–85008	.OIL SEAL .JOINT SPY	1	1				
20	93102–38008	.OIL SEAL .JOINT SPY	2	2				
21	6CB–11355–00	.SEAL, CYLINDER 1 .JOINT, SPY CYLINDRE	1	1				
22	93210–25552	.O-RING .JOINT TORIQUE	2	2				
23	6DA–13475–00	.GASKET .JOINT	1	1				
24	93210–19MJ3	.O-RING .JOINT TORIQUE	1	1				
25	93210–24M79	.O-RING .JOINT TORIQUE	1	1				
26	93210–357A3	.O-RING .JOINT TORIQUE	1	1				

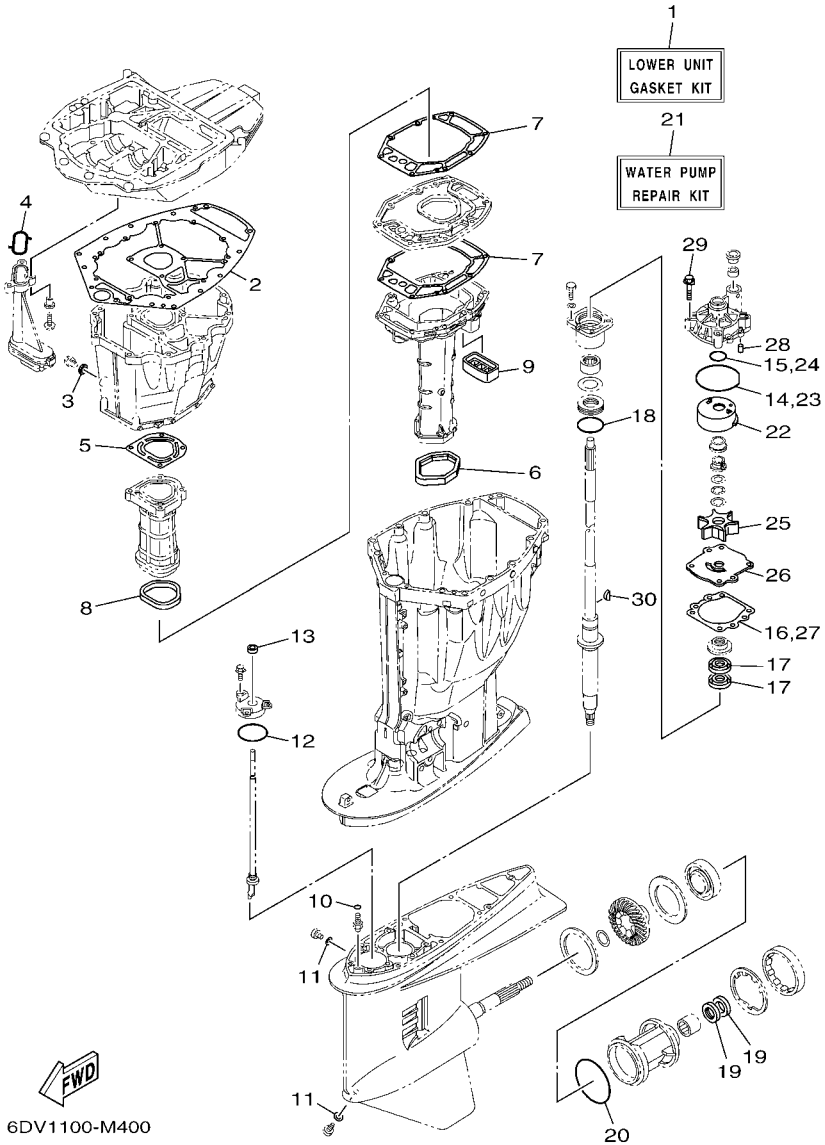

FIG. 42 REPAIR KIT 2 — KITS DE REPARATION 2

REF. NO.	PART NO. N° PIECES	DESCRIPTION DESCRIPTION	6DV2	6DW2				REMARKS REMARQUES
1	63P–W0001–21	LOWER UNIT GASKET KIT POCHETTE DE JOINTS EMBASE	1	1				
2	63P–15312–01	.GASKET, OIL PAN .JOINT DE VENTILATEUR D'HUILE	1	1				
3	90430–14M09	.GASKET .JOINT	1	1				
4	63P–13415–00	.SEAL, OIL STRAINER .JOINT, FILTRE A HUILE	1	1				
5	63P–41133–A0	.GASKET, EXHAUST MANIFOLD 1 .JOINT, PIPE D'ECHAPPEMENT	1	1				
6	69J–45123–00	.GASKET, MUFFLER .JOINT, POT DE DETENTE	1	1				
7	63P–41134–A1	.GASKET, EXHAUST MANIFOLD .JOINT, PIPE D'ECHAPPEMENT	2	2				
8	63P–41138–00	.SEAL, EXT. 1 .JOINT DE GROUPE 1	1	1				
9	69J–45127–00	.SEAL .JOINT	1	1				
10	93210–07003	.O-RING .JOINT TORIQUE	2	2				
11	90430–08020	.GASKET .JOINT	2	2				
12	93210–58144	.O-RING .JOINT TORIQUE	1	1				
13	93106–09014	.OIL SEAL .JOINT SPY	1	1				
14	93210–86M38	.O-RING .JOINT TORIQUE	1	1				
15	93210–37160	.O-RING .JOINT TORIQUE	1	1				
16	6E5–44315–A0	.GASKET, WATER PUMP .JOINT, POMPE A EAU	1	1				
17	93101–28M16	.OIL SEAL .JOINT SPY	2	2				
18	93210–55M14	.O-RING .JOINT TORIQUE	1	1				
19	93101–30M17	.OIL SEAL .JOINT SPY	2	2				
20	93210–97M55	.O-RING .JOINT TORIQUE	1	1				
21	61A–W0078–A3	WATER PUMP REPAIR KIT KIT DE REPARATION DE LA POMPE	1	1				
22	61A–44322–02	.INSERT, CARTRIDGE .CUVETTE	1	1				
23	93210–86M38	.O-RING .JOINT TORIQUE	1	1				
24	93210–37160	.O-RING .JOINT TORIQUE	1	1				
25	6E5–44352–01	.IMPELLER .TURBINE	1	1				
26	6G5–44323–01	.OUTER PLATE, CARTRIDGE .PLAQUE EXTERIEURE	1	1				
27	6E5–44315–A0	.GASKET, WATER PUMP .JOINT, POMPE A EAU	1	1				

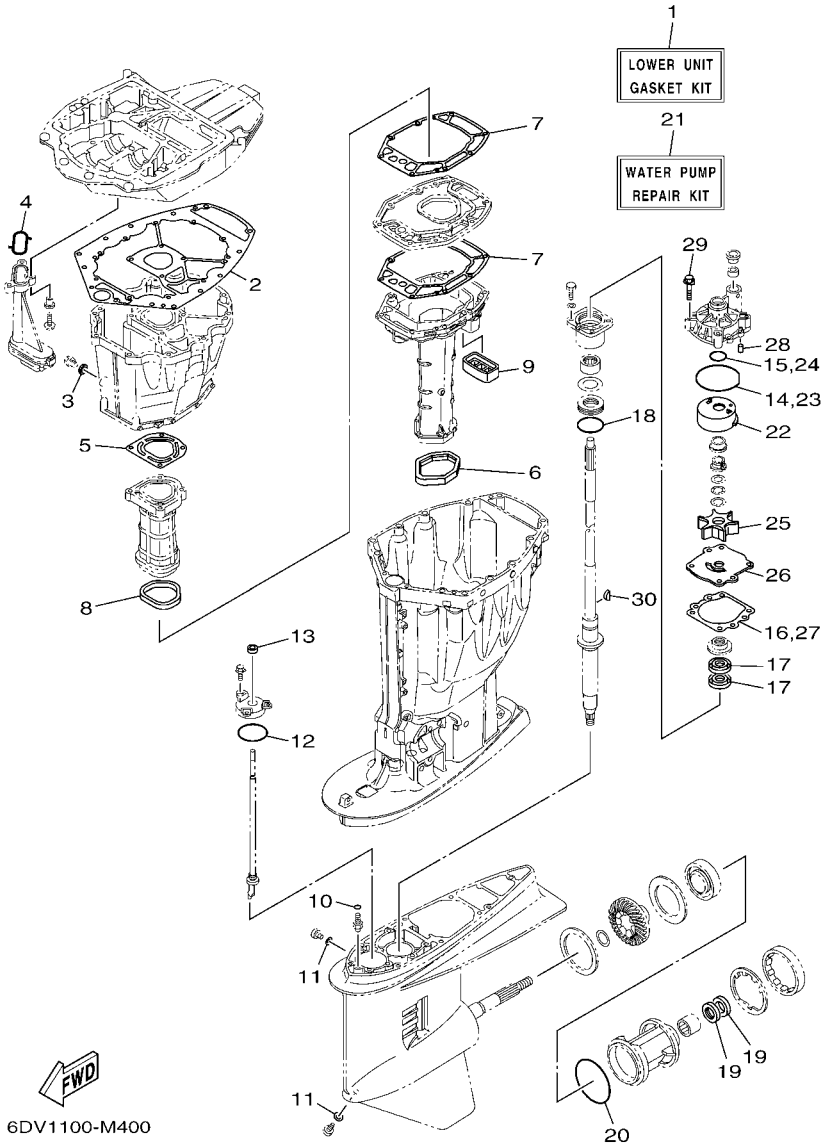

FIG. 42 REPAIR KIT 2 — KITS DE REPARATION 2

REF. NO.	PART NO. N° PIECES	DESCRIPTION DESCRIPTION	6DV2	6DW2				REMARKS REMARQUES
28	93606–12019	.PIN, DOWEL .GOUPILLE	2	2				
29	90119–08M14	.BOLT, WITH WASHER .BOULON, AVEC RONDELLE	4	4				
30	90280–04M05	.KEY, WOODRUFF .CLAVETTE, DEMI-LUNE	1	1				

NUMERICAL INDEX
INDEX NUMERIQUE

PART NO. N° PIECES	REF. NO.
6DA–11110–00–9S	5 – 2
6DA–11133–10	5 – 3
6DA–11181–00	5 – 17
	41 – 3
6DA–11191–00	5 – 22
6DA–11193–00	5 – 23
	41 – 4
6G8–11197–01	6 – 4
67F–11301–00	5 – 11
69J–11301–00	6 – 18
68T–11325–00	1 – 3
	6 – 5
6E5–11325–00	1 – 2
	1 – 6
	3 – 8
	3 – 31
67F–11325–01	1 – 1
	1 – 4
	5 – 12
	6 – 19
67F–11328–00	5 – 13
	6 – 20
63P–11351–01	3 – 21
	41 – 16
6CB–11355–00	33 – 15
	41 – 21
6G5–11372–00	6 – 14
6DA–11381–00	6 – 25
	41 – 14
60V–11382–A0	6 – 16
	41 – 13
6DA–11410–00	4 – 1
6DA–11416–00	4 – 5
6DA–11416–10	4 – 5
6DA–11416–20	4 – 5
6DA–11417–00	4 – 6
6DA–11417–10	4 – 6
6DA–11417–20	4 – 6
6DA–11426–00	4 – 7
6DA–11427–00	4 – 8
6CB–11478–00	4 – 2
6DA–11500–00	3 – 22
63P–11512–00	3 – 25
6DA–11590–00	8 – 21
6DA–11595–00	8 – 24
6DA–115A0–00	8 – 13
6CB–11603–00	4 – 12
6DA–11631–00–94	4 – 11

PART NO. N° PIECES	REF. NO.
6CB–11633–00	4 – 13
6CB–11654–00	4 – 10
6CB–11656–00	4 – 15
6CB–11656–10	4 – 15
6CB–11656–20	4 – 15
6DA–11998–00	26 – 21
6DA–11999–00	26 – 23
6CB–12111–00	8 – 1
6CB–12113–00	8 – 4
51Y–12119–00	8 – 7
6DA–12121–00	8 – 2
6DA–12171–00	8 – 9
6DA–12181–00	8 – 11
6DA–12411–00	1 – 5
	6 – 28
6AW–12412–00	6 – 29
6DA–12413–00–9S	6 – 30
60H–12416–00	6 – 11
6DA–1241B–00–9S	6 – 49
6CB–1242F–00	6 – 2
	41 – 5
6DA–1243A–00	6 – 15
6DA–1243E–00	6 – 31
6DA–1244H–00	6 – 33
6P2–12491–00	6 – 37
6DA–12527–00–9S	6 – 24
6DA–12552–00	7 – 13
6AW–12572–00	26 – 4
6DA–12576–00	7 – 1
	11 – 6
6DA–12578–00	7 – 6
6DA–12579–00	7 – 11
6R3–12581–00	26 – 5
6AW–12582–00	26 – 6
6R3–12583–00	26 – 7
6DA–12589–00	7 – 2
	7 – 15
6P2–12615–00	8 – 18
6P2–12623–00	8 – 16
6P2–12645–20	8 – 15
6P2–12663–00	8 – 17
6S5–12858–00	6 – 40
6CB–13016–00	1 – 10
	12 – 5
6AW–13119–00	33 – 13
6AW–13132–00	12 – 25
6DA–13152–00	9 – 3
6DA–13160–00	10 – 6

PART NO. N° PIECES	REF. NO.
6DA–13161–00	10 – 7
6DA–13300–00	33 – 11
6DA–13329–00	33 – 12
63P–13411–00	33 – 7
63P–13415–00	33 – 9
	42 – 4
63P–13437–62	16 – 28
69J–13440–03	1 – 8
	6 – 39
6DA–13446–00	6 – 41
6DA–13475–00	6 – 42
	41 – 23
63P–13490–00	3 – 33
6DA–13532–00	11 – 1
6DA–13545–00	11 – 16
68V–13546–10	11 – 18
6DA–13547–00	11 – 21
6DA–13548–00	11 – 19
6DA–13564–00	10 – 4
6AW–13577–10	10 – 10
6CB–13593–00	12 – 22
69J–13631–00	33 – 14
6DA–13641–00	9 – 11
6DA–13645–00	9 – 13
6DA–13646–00	9 – 12
69J–13716–00	12 – 21
6DA–13751–00	9 – 1
6DA–13761–00	10 – 8
6AW–13781–00	12 – 29
6AW–13784–00	12 – 32
6DA–13881–00	9 – 19
6DA–13892–00	12 – 11
6DA–13893–00	12 – 12
6CB–13906–01	12 – 8
6P2–13907–20	12 – 23
63P–13915–00	1 – 11
	12 – 24
6AW–1410B–00	10 – 9
6DA–14146–00	12 – 10
6P2–14149–00	12 – 35
6DA–14180–00	12 – 1
6DA–14181–00	12 – 14
6DA–14182–00	12 – 2
6P2–14191–00	12 – 15
6CB–14216–00	12 – 6
6CB–14239–00	12 – 16
6P2–14386–00	12 – 31
6P2–1441J–00	9 – 7

PART NO. N° PIECES	REF. NO.
6CB–14429–01	12 – 18
6DA–14440–00	9 – 5
6CB–1447B–00	12 – 28
6CB–14546–00	12 – 27
6CB–14564–00	12 – 9
63P–14567–00	12 – 20
69J–14624–01	32 – 25
6DA–14664–00	3 – 17
	41 – 9
6DA–14711–00–9S	32 – 12
6DA–1475A–00	11 – 9
6DA–1475F–00	11 – 11
6DA–1475G–00	11 – 14
6CB–14984–00	1 – 12
	12 – 30
6CB–14985–00	12 – 26
6CB–14989–00	11 – 13
6DA–15109–00–9S	3 – 2
6DA–15311–00–CA	33 – 2
63P–15312–01	33 – 1
	42 – 2
6BB–15316–00	32 – 27
6DA–15319–00	6 – 46
6DA–15353–00	3 – 7
	41 – 6
6DA–15362–00	33 – 18
6G8–15363–00	6 – 44
6DA–15373–00	9 – 9
6DA–15377–00	33 – 19
6DA–15411–00–9S	3 – 26
6DA–15412–00	3 – 12
6DA–15414–00–9S	3 – 4
6DA–15423–00–9S	3 – 6
6DA–15451–00	3 – 27
	41 – 17
6DA–2134X–00	10 – 30
6E5–21744–00	11 – 20
6DA–2416A–00	11 – 12
6P2–24170–00	10 – 27
63P–2419A–01	10 – 28
6CB–24217–00	12 – 7
6YK–24307–42	15 – 1
6DA–24310–00	13 – 2
6DA–24313–00	14 – 19
6DA–24313–10	14 – 19
6DA–24314–00	14 – 3
6DA–24314–10	14 – 3
6DA–24317–00	13 – 11

PART NO. N° PIECES	REF. NO.
6DA–24317–10	13 – 11
6DA–24323–00	13 – 14
6DA–24323–10	13 – 14
6DA–24324–00	13 – 8
6E5–24351–51	14 – 4
6AW–24360–01	15 – 2
6CE–24377–00	7 – 3
	11 – 7
6AW–24377–01	14 – 2
688–24378–00	11 – 17
6CE–24378–00	6 – 32
6E5–24378–00	13 – 10
69J–24379–00	12 – 13
6CB–24410–00	10 – 15
6DA–24425–00	10 – 13
6DA–24426–00	10 – 18
6CB–24452–10	12 – 17
4SV–24453–00	12 – 33
6CB–24460–00	12 – 4
6DA–24462–00	10 – 23
6P3–24469–00	14 – 11
6CB–24482–00	12 – 19
6DA–24491–00	10 – 17
6DA–24492–00	10 – 16
6CB–24501–01	1 – 9
	12 – 3
6P3–24519–00	14 – 12
6P3–24560–03	14 – 8
6P3–24562–03	14 – 10
6P3–24563–01	1 – 13
	14 – 9
6P3–24564–00	1 – 14
	14 – 13
6DA–24566–00	14 – 14
6DA–24596–00	14 – 6
69J–28100–01	14 – 21
67F–2812A–00	17 – 28
6DV–28199–71–D0	14 – 22
6DV–28199–71–E0	14 – 22
6DV–28199–71–F0	14 – 22
6DV–28199–71–G0	14 – 22
6DV–28199–71–H0	14 – 22
6DV–28199–71–S0	14 – 22
6DV–28199–81–K0	14 – 23
6DV–28199–81–L0	14 – 23
6DV–28199–81–M0	14 – 23
6DV–28199–81–N0	14 – 23
6DV–28199–81–P0	14 – 23

PART NO. N° PIECES	REF. NO.
6DV–28199–81–R0	14 – 23
6DA–41113–00–9S	6 – 8
6DA–41114–00	6 – 9
	41 – 12
63P–41131–01–9S	32 – 9
63P–41133–A0	32 – 10
	42 – 5
63P–41134–A1	32 – 16
	42 – 7
63P–41137–04–CA	32 – 1
63P–41138–00	32 – 18
	42 – 8
6DV–42195–00	27 – 9
6BG–42384–00	26 – 2
6DA–42384–00	24 – 23
6DA–42510–00–8D	29 – 8
6DA–42541–00	26 – 8
6DA–42610–00	2 – 1
6DA–42613–00	2 – 3
6DA–42615–00	24 – 5
6DA–42617–00	16 – 27
6DA–4261A–00	2 – 2
6CB–42647–00	2 – 5
6CB–42662–00	26 – 25
6DA–42662–00	3 – 35
6AW–42663–00	2 – 11
6DA–42675–00	2 – 16
6DA–42676–00	2 – 17
6DA–42677–00	2 – 18
6DA–42678–00	2 – 15
63P–42681–20	2 – 19
6DA–42697–00	2 – 14
6DA–42710–00–8D	24 – 1
63P–42716–00	24 – 6
6DA–42717–00	24 – 22
69J–42723–01	20 – 11
6E5–42724–00	32 – 7
6CE–42725–02	24 – 2
6H1–42726–21	26 – 1
61A–42727–00	24 – 26
6DA–42740–00	25 – 1
6DA–42744–00	3 – 34
6BG–42748–00	16 – 17
6H4–42748–00	24 – 24
68F–42753–00	24 – 29
63P–42756–00	26 – 12
6CB–42761–00	24 – 3
6DA–42769–00	32 – 8

NUMERICAL INDEX
INDEX NUMERIQUE

PART NO. N° PIECES	REF. NO.
6DA–42770–00	25 – 2
6AH–42794–40	24 – 31
6AH–42794–50	24 – 32
6DA–42815–00–8D	24 – 7
6DA–42816–00–8D	24 – 8
6DA–42817–00–8D	24 – 9
6CB–42818–00	24 – 13
6CB–42819–00	24 – 14
64E–43111–02–8D	28 – 1
64E–43112–02–8D	28 – 9
64E–43126–00	28 – 39
64E–43131–30	28 – 14
64E–43139–10	29 – 1
66T–43144–00	24 – 17
6G5–43144–00	28 – 29
6E5–43145–01	38 – 8
6G5–43148–00	28 – 34
6G5–43181–02	28 – 31
6G5–43185–02	28 – 32
64E–43311–20–8D	28 – 25
61A–43376–00	29 – 6
63P–43800–06	30 – 1
64E–43802–00	31 – 8
64E–43805–01	31 – 37
64E–4380F–00	31 – 33
64E–4380J–00	31 – 30
63P–43810–02	30 – 6
64E–43811–02	30 – 7
6E5–43814–02	30 – 14
64E–43816–00	31 – 17
64E–43817–00	30 – 5
64E–43817–11	31 – 19
6BC–43818–00	28 – 23
64E–4381G–00	30 – 28
64E–43820–03	30 – 16
64E–43821–03	30 – 17
64E–43822–00	30 – 18
64E–43825–03	30 – 2
64E–43827–00	31 – 22
64E–43828–01	30 – 23
64E–43829–01	30 – 24
64E–4382G–00	30 – 30
64E–43830–01	31 – 4
64E–43831–00	31 – 2
6AW–43841–00	31 – 7
64E–43843–00	31 – 6
64E–43843–10	31 – 38
64E–4384J–00	30 – 19

PART NO. N° PIECES	REF. NO.
64E–4384N–00	30 – 31
64E–43850–00	31 – 15
64E–43851–00	31 – 11
64E–43855–00	31 – 14
64E–43858–00	31 – 12
6AW–43858–00	31 – 18
6E5–43858–00	30 – 29
72X–43858–00	31 – 5
64E–43859–00	31 – 13
64E–43860–01	31 – 20
6E5–43862–00	30 – 11
	30 – 15
6G5–43863–00	31 – 10
6E5–43864–00	30 – 21
6G5–43864–00	30 – 20
64E–43865–00	31 – 16
6G5–43865–01	31 – 35
64E–43866–00	30 – 10
64E–43867–00	30 – 9
64E–43868–00	31 – 3
64E–43869–00	30 – 27
6H1–4386K–10	31 – 29
6E5–43872–00	30 – 13
64E–43873–00	31 – 24
6E5–43874–01	30 – 22
6AW–43875–00	31 – 25
64E–43879–01	31 – 27
64E–43879–11	31 – 26
64E–4387A–00	31 – 23
67H–43880–04	31 – 28
64E–43883–00	30 – 12
64E–4388E–01	30 – 26
64E–4388E–11	31 – 1
6AW–4388J–00	30 – 3
64E–43891–00	31 – 31
64E–43892–00	31 – 34
6E5–43896–00	31 – 9
64E–43897–00	30 – 25
64E–43898–00	30 – 8
6DV–44100–00	27 – 16
6DV–44118–00	27 – 21
6DV–44120–01	27 – 23
6DV–44121–00	27 – 18
6DV–44122–00	27 – 10
6DV–44132–00	27 – 11
6DV–44142–00	27 – 7
63P–44150–01	34 – 18
64P–44150–01	36 – 19

PART NO. N° PIECES	REF. NO.
61A–44311–01	34 – 24
	36 – 25
6E5–44312–00	34 – 29
	36 – 30
6E5–44315–A0	34 – 33
	36 – 34
	42 – 16
	42 – 27
61A–44322–02	34 – 25
	36 – 26
	42 – 22
6G5–44323–01	34 – 32
	36 – 33
	42 – 26
6E5–44352–01	34 – 30
	36 – 31
	42 – 25
6DA–44361–00	35 – 1
	37 – 1
6E5–44365–00	34 – 28
	35 – 2
	36 – 29
	37 – 2
6E5–44366–00	32 – 30
6P2–44391–00	24 – 25
63P–44511–00	29 – 34
6DA–44514–00	29 – 26
6DA–44526–00	29 – 30
6G5–44526–00	28 – 3
6DA–44532–00	29 – 31
6DA–44551–00–CA	29 – 13
6DA–44552–00–CA	29 – 23
63P–44555–00	29 – 16
6DA–44575–00	29 – 15
6DA–45111–00–8D	32 – 20
69J–45123–00	32 – 13
	42 – 6
69J–45127–00	32 – 19
	42 – 9
6BB–45152–01	32 – 28
6DA–45155–00	32 – 31
63P–45181–01–9S	32 – 17
6J9–45214–00	35 – 8
	37 – 8
6J9–45215–00	35 – 9
	37 – 9
6AW–45251–00	1 – 15
	28 – 2

PART NO. N° PIECES	REF. NO.
6DA–45300–10–8D	34 – 1
6DB–45300–10–8D	36 – 1
6J9–45301–07–8D	34 – 2
	36 – 2
6E5–45318–00	32 – 23
6E5–45321–00	34 – 14
	36 – 15
6E5–45331–00–9S	34 – 36
	36 – 37
6J9–45332–00–CA	34 – 58
6K1–45332–01–CA	36 – 60
688–45341–10	34 – 7
	36 – 8
6E5–45344–00	34 – 42
	36 – 43
6J9–45371–01	1 – 17
	35 – 12
6K1–45371–02	1 – 17
	37 – 12
688–45375–00	34 – 11
	36 – 12
663–45376–00	34 – 10
	36 – 11
63P–45378–00	34 – 12
	36 – 13
63P–45379–00	32 – 35
6G5–45383–01	34 – 68
	36 – 71
6G5–45384–02	34 – 69
	36 – 72
63P–45501–11	34 – 45
	36 – 46
61A–45527–00	34 – 23
	36 – 24
6G5–45536–01	34 – 9
	36 – 10
61A–45538–00	34 – 20
	36 – 21
6DA–45551–00	34 – 46
	36 – 47
6DA–45560–00	34 – 48
6DB–45560–00	36 – 49
6G5–45567–01	34 – 5
	36 – 6
6G5–45567–10	34 – 5
	36 – 6
6G5–45567–20	34 – 5
	36 – 6

PART NO. N° PIECES	REF. NO.
6G5–45567–30	34 – 5
	36 – 6
6G5–45567–40	34 – 5
	36 – 6
6G5–45567–50	34 – 5
	36 – 6
6G5–45567–60	34 – 5
	36 – 6
6DB–45570–00	36 – 62
6DA–45571–00	34 – 60
6K1–45576–00	36 – 63
6G5–45576–10	34 – 61
6G5–45577–02	34 – 65
	36 – 69
6G5–45577–10	34 – 65
	36 – 69
6G5–45577–20	34 – 65
	36 – 69
6G5–45577–30	34 – 65
	36 – 69
6G5–45577–40	34 – 65
	36 – 69
6G5–45577–50	34 – 65
	36 – 69
6G5–45577–60	34 – 65
	36 – 69
6K1–45578–01	36 – 65
6K1–45578–10	36 – 65
6K1–45578–20	36 – 65
6K1–45578–30	36 – 65
6K1–45578–40	36 – 65
6K1–45578–50	36 – 65
6K1–45578–60	36 – 65
6E5–45587–01	34 – 39
	36 – 40
6E5–45587–10	34 – 39
	36 – 40
6E5–45587–20	34 – 39
	36 – 40
6E5–45587–30	34 – 39
	36 – 40
6E5–45587–40	34 – 39
	36 – 40
6E5–45587–50	34 – 39
	36 – 40
6E5–45587–60	34 – 39
	36 – 40
6J9–45611–01	34 – 49

PART NO. N° PIECES	REF. NO.
6K1–45611–10	36 – 51
6DA–45631–00	34 – 56
	36 – 58
6E5–45633–01	34 – 57
	36 – 59
6E5–45634–02	34 – 50
	36 – 52
68F–45970–10	35 – 19
68G–45970–10	37 – 19
68F–45972–10	35 – 19
68G–45972–10	37 – 19
68F–45974–10	35 – 19
68G–45974–10	37 – 19
68F–45976–10	35 – 19
68G–45976–10	37 – 19
68F–45978–10	35 – 19
68G–45978–10	37 – 19
63P–45987–00	35 – 14
	37 – 14
6CE–45997–00	35 – 15
	37 – 15
6CE–45C81–00	35 – 20
	37 – 20
6DV–4820A–00	27 – 1
6Y8–48277–00	39 – 16
	39 – 16
	39 – 17
6E5–61301–01	38 – 10
6E5–61303–00	38 – 14
6E5–61311–11	38 – 12
6E5–61313–00	38 – 11
6E5–61315–00	38 – 13
6E5–61350–02	38 – 1
6E5–61351–01	38 – 2
6E5–61355–00	38 – 5
6DV–68303–00	27 – 31
6H5–81315–00	39 – 18
6Y8–81315–00	39 – 19
6DA–8132G–00	16 – 20
6DA–81336–00	17 – 30
6DA–81337–00	16 – 13
6DA–81410–00	16 – 3
6CB–81639–00	17 – 24
6CB–81800–00	23 – 1
69J–81801–00	23 – 5
6CB–81807–00	23 – 8
6CB–81809–00	23 – 14
67F–81810–00	23 – 3

NUMERICAL INDEX
INDEX NUMERIQUE

PART NO. N° PIECES	REF. NO.
67F–81813–00	23 – 6
6CB–81820–00	23 – 7
67F–81821–00	23 – 11
6DA–81822–00	21 – 8
6CB–81826–00	23 – 22
69J–81828–00	23 – 23
67F–81830–00	23 – 16
6CB–81832–00	23 – 9
6CB–81836–00	23 – 10
6C5–81839–00	23 – 19
67F–8183R–00	23 – 13
60V–8183T–00	23 – 17
6P2–8183X–00	18 – 6
69J–81840–00	23 – 4
67F–81841–00	23 – 12
6CB–81842–00	23 – 18
67F–81846–00	23 – 24
67F–81850–00	23 – 2
6C5–81869–00	23 – 21
67F–81891–00	23 – 15
6DV–81919–00	17 – 33
60V–81925–00	21 – 6
6C5–81941–00	23 – 20
6DA–81942–00	18 – 13
6DA–81948–00	17 – 5
69J–81949–02	20 – 18
6AW–81950–00	18 – 5
6DA–81952–00	17 – 10
68F–8195A–00	17 – 19
6DA–81960–00	18 – 1
6DA–81975–00	18 – 2
6AH–81994–40	16 – 29
6AH–81994–50	16 – 30
6AH–81996–00	24 – 33
6DA–82105–01	18 – 24
6P2–82113–00	17 – 27
6E5–82148–00	28 – 6
	28 – 10
6DA–82149–00	28 – 28
67F–82151–00	17 – 22
6P2–82151–00	17 – 18
6TA–82151–00	39 – 20
67F–82151–10	17 – 23
67F–82151–40	17 – 20
67F–82151–50	17 – 21
6DV–82170–00	17 – 17
6CB–82310–00	19 – 5
6DA–82314–00	19 – 7

PART NO. N° PIECES	REF. NO.
6A0–82317–00	16 – 16
6DA–82388–00	18 – 18
	21 – 11
6DA–82389–00	18 – 19
6D8–82389–01	19 – 1
6DA–82398–00	16 – 24
6Y8–82509–10	39 – 8
6Y8–82521–11	39 – 15
6DA–82553–00	20 – 7
6P2–82560–01	18 – 15
6BR–82563–00	20 – 10
6C5–8257V–00	17 – 31
68F–82582–00	21 – 7
69J–82587–00	20 – 12
6E9–82588–00	18 – 16
6DV–82590–00	20 – 1
6DA–8259M–00	20 – 6
6CE–825E0–00	40 – 1
68F–82846–00	17 – 26
6X4–83383–00	39 – 5
6X4–83386–00	39 – 6
6E5–83558–00	32 – 32
63P–83614–01	20 – 13
6AW–83651–00	20 – 9
6AW–8366B–01	22 – 1
60V–8366D–00	22 – 2
6DV–8366G–00	26 – 15
67H–83672–01	29 – 3
68F–83688–10	9 – 15
6Y8–8454G–00	39 – 11
6P2–85075–00	19 – 10
72X–85075–L0	31 – 21
68F–85119–00	17 – 8
	17 – 13
	27 – 6
60V–85516–00	10 – 21
68F–85516–01	17 – 6
	17 – 11
6CB–85544–00	17 – 25
689–85547–00	14 – 1
6DA–85548–00	17 – 14
6DA–85561–00	16 – 6
6DV–85564–00	27 – 3
6CB–85580–00	16 – 5
6CJ–85780–00	20 – 15
6CB–85790–00	20 – 8
6P2–85896–00	19 – 9
6DV–8591A–01	17 – 1

PART NO. N° PIECES	REF. NO.
6DA–85991–00	17 – 3
6C5–86120–00	10 – 31
6CB–86120–00	6 – 1
6Y8–86260–02	39 – 2
6Y8–86260–12	39 – 2
6AA–86261–00	39 – 3
6AA–86261–22	39 – 3
6Y8–86267–00	39 – 1
K0F–A3233–00	4 – 14
K0F–A3741–00	8 – 5
K0F–A3742–00	8 – 6
K0F–A3743–00	8 – 3
K0F–A3751–00	8 – 8
K0F–A3751–10	8 – 8
K0F–A3751–20	8 – 8
K0F–A3751–30	8 – 8
K0F–A3751–40	8 – 8
K0F–A3751–50	8 – 8
K0F–A3751–60	8 – 8
K0F–A3751–70	8 – 8
K0F–A3751–80	8 – 8
K0F–A3751–90	8 – 8
K0F–A3751–A0	8 – 8
K0F–A3751–B0	8 – 8
K0F–A3751–C0	8 – 8
K0F–A3751–D0	8 – 8
K0F–A3751–E0	8 – 8
K0F–A3751–F0	8 – 8
K0F–A3751–G0	8 – 8
K0F–A3751–H0	8 – 8
K0F–A3751–J0	8 – 8
K0F–A3751–K0	8 – 8
K0F–A3751–L0	8 – 8
K0F–A3751–M0	8 – 8
K0F–A3751–N0	8 – 8
K0F–A3751–P0	8 – 8
K0F–A3751–R0	8 – 8
K0F–A3751–S0	8 – 8
K0F–A3751–T0	8 – 8
K0F–A3753–00	8 – 8
K0F–A3753–10	8 – 8
K0F–A3753–20	8 – 8
K0F–A3753–30	8 – 8
K0F–A3753–40	8 – 8
K0F–A3753–50	8 – 8
K0F–A3753–60	8 – 8
K0F–A3753–70	8 – 8
6DA–W0001–00	41 – 1

PART NO. N° PIECES	REF. NO.
63P–W0001–21	42 – 1
61A–W0078–A3	1 – 19
	42 – 21
6DA–W009A–00–9S	5 – 1
6DA–W009B–01–9S	3 – 1
6CB–W1165–00	4 – 9
6DA–W4624–00	8 – 20
6DA–W8145–00	16 – 1
6AW–W9011–00	16 – 2
90101–09M70	38 – 18
90101–12047	28 – 44
90101–12M05	28 – 44
	28 – 44
90105–06028	3 – 5
	6 – 10
	6 – 26
	6 – 34
90105–06035	6 – 3
90105–06037	6 – 48
90105–06054	10 – 3
90105–06151	5 – 21
	6 – 43
90105–06196	3 – 36
90105–06M07	5 – 14
	6 – 21
90105–06M08	10 – 11
	10 – 14
90105–08175	3 – 24
	5 – 20
90105–08M87	21 – 10
90105–10406	3 – 19
	3 – 23
90105–10M00	35 – 13
	37 – 13
90105–14009	29 – 28
90105–14012	29 – 21
90111–06142	25 – 4
90111–06144	25 – 3
90111–08078	2 – 6
90119–06023	3 – 13
90119–06078	6 – 38
90119–06M10	34 – 17
	36 – 18
90119–06M17	10 – 20
	10 – 35
	14 – 15
90119–06M18	32 – 36
90119–06M24	10 – 12

PART NO. N° PIECES	REF. NO.
90119–06M61	16 – 19
90119–06M81	3 – 16
90119–06MA3	3 – 28
	6 – 17
90119–07001	5 – 7
90119–07234	5 – 8
90119–08020	9 – 14
90119–08102	32 – 2
90119–08M14	34 – 35
	36 – 36
	42 – 29
90119–08M22	24 – 21
90119–08M58	32 – 5
90119–08M66	3 – 20
90119–10007	32 – 21
90119–10024	29 – 27
90119–10050	8 – 14
90119–10M07	8 – 22
90119–10MA2	35 – 7
	37 – 7
90151–05M05	6 – 6
90152–05M08	35 – 10
	37 – 10
90155–11002	5 – 19
90159–05059	29 – 2
	40 – 4
90159–06053	25 – 9
90167–05017	2 – 4
90167–06M00	39 – 12
90169–05M00	18 – 14
90170–09M05	38 – 19
90170–14M06	38 – 15
90170–16M01	34 – 47
	36 – 48
90171–18M04	35 – 17
	37 – 17
90173–06001	25 – 7
90179–08003	21 – 5
90183–061A6	25 – 8
90185–05002	35 – 11
	37 – 11
90185–06M07	27 – 15
90185–09M01	38 – 6
	38 – 20
90185–14M00	29 – 32
90185–22M11	28 – 19
90201–06068	27 – 12
90201–06M30	39 – 13

PART NO. N° PIECES	REF. NO.
90201–10060	28 – 21
90201–10M20	38 – 7
90201–10M76	38 – 17
90201–11008	27 – 29
90201–12426	28 – 46
90201–13M01	28 – 45
90201–156J2	24 – 11
90201–15M58	29 – 20
90201–16M01	29 – 29
90201–16M55	29 – 19
90201–22M01	34 – 21
	36 – 22
90201–26015	36 – 50
90201–26M59	28 – 18
90201–30M92	34 – 66
90201–35008	29 – 17
90201–38M60	29 – 9
90202–06015	27 – 20
90202–08M41	27 – 13
90202–32M19	29 – 18
90202–40M47	29 – 12
90206–15M18	24 – 12
90206–22M19	34 – 22
	36 – 23
90249–06M19	28 – 35
90250–08M07	34 – 55
	36 – 57
90280–04M05	34 – 31
	36 – 32
	42 – 30
90282–04M00	34 – 67
	36 – 70
90338–25004	3 – 14
90340–08002	34 – 6
	36 – 7
90340–14M06	5 – 9
	33 – 5
90340–18M09	6 – 35
90344–51019	5 – 4
90386–08008	27 – 5
90386–10001	27 – 25
	27 – 28
90386–10M16	28 – 33
90386–15M73	24 – 10
90386–22M98	28 – 24
	28 – 40
90386–25M31	28 – 17
90386–38M32	29 – 11

NUMERICAL INDEX
INDEX NUMERIQUE

PART NO. N° PIECES	REF. NO.
90387–05004	40 – 5
90387–06176	17 – 7
	17 – 12
	27 – 4
90387–06263	33 – 8
90387–06283	10 – 1
90387–06289	10 – 22
	10 – 34
	14 – 17
90387–06M43	25 – 11
90387–06M69	16 – 18
90387–07028	25 – 6
90387–08M37	24 – 20
90387–08M45	2 – 9
90387–10094	2 – 7
90387–10M05	28 – 36
90387–10M61	38 – 3
90387–11005	5 – 18
90387–14004	29 – 35
90430–06M03	5 – 15
	6 – 22
90430–08020	1 – 16
	34 – 8
	36 – 9
	42 – 11
90430–14115	5 – 10
	41 – 2
90430–14M09	1 – 7
	33 – 6
	42 – 3
90430–18130	6 – 36
	41 – 15
90445–07018	32 – 34
90445–07044	32 – 34
90445–09008	7 – 4
90445–09120	11 – 3
90445–10056	11 – 8
90445–10057	7 – 14
90447–07008	22 – 5
90462–12013	26 – 19
90464–06001	10 – 24
90464–07M41	11 – 2
90464–09008	18 – 23
90464–09020	7 – 10
90464–09130	10 – 26
	16 – 22
	16 – 26
90464–09142	7 – 9

PART NO. N° PIECES	REF. NO.
90464–09M21	7 – 5
90464–09M31	7 – 12
90464–10011	11 – 15
90464–12002	16 – 4
90464–12010	7 – 8
	13 – 3
90464–12183	9 – 10
	9 – 22
	18 – 10
90464–13013	22 – 6
90464–13249	18 – 22
	19 – 4
	24 – 27
	26 – 13
90464–13260	13 – 17
90464–15007	13 – 5
90464–16001	11 – 10
	11 – 23
	11 – 24
90464–16003	13 – 4
90464–18004	11 – 22
	13 – 16
	26 – 18
	26 – 18
90464–18246	18 – 12
	26 – 17
90464–20181	9 – 21
	13 – 1
	16 – 23
	17 – 15
	18 – 21
	19 – 3
	21 – 12
90464–20258	24 – 30
90464–21256	26 – 9
90464–26001	20 – 16
90464–30003	20 – 17
90464–32002	18 – 11
90464–99004	9 – 8
90465–08M63	13 – 6
	28 – 26
90465–08M83	7 – 16
90465–11M10	7 – 7
	10 – 25
	11 – 4
	11 – 5
	13 – 13
	13 – 15

PART NO. N° PIECES	REF. NO.
90465–11M10	14 – 5
	14 – 20
	22 – 4
	26 – 3
	26 – 10
	27 – 2
	28 – 20
	29 – 5
	32 – 33
	32 – 33
	39 – 10
	40 – 6
90465–11M59	6 – 27
	6 – 50
	20 – 5
90465–13M18	40 – 7
90465–13M97	16 – 10
90467–120A7	13 – 9
	13 – 12
90468–18008	27 – 14
	27 – 19
90468–180A0	27 – 30
90480–12314	10 – 2
	16 – 15
	19 – 8
90480–13163	24 – 28
90480–13M24	25 – 10
90480–14031	10 – 33
90480–15013	14 – 16
90480–16009	25 – 5
90480–16025	16 – 14
90480–20M05	6 – 13
90480–22M81	24 – 19
90501–16M11	6 – 12
90501–16M37	34 – 51
	36 – 53
90506–16003	28 – 38
90506–18025	8 – 23
90506–22001	24 – 16
90560–12M01	38 – 4
91490–40030	35 – 18
	37 – 18
91690–30020	28 – 37
91690–40010	3 – 10
	3 – 29
91809–08006	5 – 6
91814–18002	3 – 3
92903–08100	18 – 27

PART NO. N° PIECES	REF. NO.
92903–08600	21 – 4
92990–06100	2 – 12
92990–08600	2 – 8
92990–18200	35 – 16
	37 – 16
92995–05100	9 – 17
92995–05600	9 – 18
	16 – 9
92995–06600	18 – 4
	18 – 9
	19 – 12
	20 – 3
	21 – 2
	28 – 5
	28 – 8
	28 – 12
	40 – 3
92995–08600	28 – 16
	34 – 44
	36 – 45
92995–10100	35 – 5
	37 – 5
92995–10600	29 – 25
	35 – 6
	37 – 6
92995–14600	29 – 33
93101–28M16	34 – 37
	36 – 38
	42 – 17
93101–30M17	34 – 63
	36 – 67
	42 – 19
93102–08M43	31 – 36
93102–38008	8 – 19
	41 – 20
93102–85008	4 – 4
	41 – 19
93106–09014	34 – 16
	36 – 17
	42 – 13
93210–04279	39 – 9
93210–07003	34 – 13
	36 – 14
	42 – 10
93210–08001	3 – 32
	41 – 18
93210–09165	27 – 24
93210–10M74	30 – 4

PART NO. N° PIECES	REF. NO.
93210–12648	3 – 18
	41 – 10
93210–13M63	6 – 7
	41 – 11
93210–16275	38 – 9
93210–19MJ3	33 – 20
	41 – 24
93210–24M79	6 – 45
	41 – 25
93210–25552	3 – 11
	33 – 17
	41 – 7
	41 – 22
93210–25647	3 – 15
	41 – 8
93210–357A3	6 – 47
	41 – 26
93210–37160	34 – 27
	36 – 28
	42 – 15
	42 – 24
93210–37MH7	29 – 10
93210–55M14	34 – 41
	36 – 42
	42 – 18
93210–58144	34 – 15
	36 – 16
	42 – 12
93210–86M38	34 – 26
	36 – 27
	42 – 14
	42 – 23
93210–97M55	34 – 64
	36 – 68
	42 – 20
93306–209U0	34 – 59
93311–928U5	34 – 3
	36 – 3
93315–43061	34 – 62
	36 – 66
93317–330U2	34 – 38
	36 – 39
93332–00048	36 – 61
93332–000V3	34 – 4
93341–440U5	36 – 64
93341–465U4	36 – 5
93341–930V2	34 – 40
	36 – 41

PART NO. N° PIECES	REF. NO.
93390–000U2	36 – 4
93410–22M11	28 – 41
93410–37M04	29 – 14
93420–36M01	32 – 24
93503–16003	34 – 54
	36 – 56
93507–32009	34 – 52
	36 – 54
93511–32017	34 – 53
	36 – 55
93604–09066	27 – 22
93605–10108	8 – 10
	8 – 12
93606–12019	4 – 3
	5 – 5
	34 – 34
	36 – 35
	42 – 28
93606–19M23	32 – 15
93608–16M16	32 – 4
	32 – 22
	33 – 4
	35 – 3
	37 – 3
93700–06M03	28 – 13
	28 – 27
94702–00400	1 – 18
	5 – 25
95022–06035	16 – 11
95333–08600	18 – 26
95380–06600	2 – 13
	10 – 32
95380–12600	28 – 47
95380–14700	38 – 16
95604–14200	29 – 22
95780–06300	39 – 14
95780–08300	2 – 10
95780–10300	29 – 7
95812–06025	33 – 10
95875–06020	10 – 5
95875–06025	9 – 4
	9 – 6
95875–08030	27 – 8
95875–08035	17 – 4
95880–08012	24 – 15
95885–08025	5 – 16
95895–06010	13 – 7
	28 – 42

PART NO. N° PIECES	REF. NO.
95895–06010	28 – 43
95895–06012	7 – 17
	9 – 20
	10 – 19
	14 – 18
	18 – 17
	19 – 2
	20 – 14
	24 – 18
	26 – 14
	26 – 16
	26 – 20
95895–06014	24 – 4
95895–06016	10 – 29
	16 – 21
	16 – 25
	17 – 9
	18 – 20
	21 – 13
	22 – 3
	33 – 21
95895–06020	17 – 2
95895–06025	14 – 7
	19 – 6
95895–06030	5 – 24
	16 – 12
95895–06040	26 – 24
95895–06065	26 – 22
95895–08016	18 – 25
97013–08045	21 – 3
97075–10040	29 – 24
97095–05020	16 – 8
97095–06010	28 – 7
	28 – 30
97095–06012	32 – 29
97095–06016	20 – 2
	21 – 1
	40 – 2
97095–06020	18 – 8
	19 – 11
97095–06030	28 – 4
97095–06035	18 – 3
97095–08020	28 – 15
97095–08025	34 – 43
	36 – 44
97095–10045	35 – 4
	37 – 4
97575–06516	8 – 25

PART NO. N° PIECES	REF. NO.
97575–06520	27 – 17
	27 – 27
97575–06540	33 – 16
97575–08535	32 – 14
	33 – 3
97575–08540	6 – 23
97575–08560	9 – 2
	32 – 11
97575–10530	28 – 22
97575–10535	32 – 6
97575–10545	32 – 3
97595–06550	27 – 26
97595–06610	18 – 7
97607–04310	31 – 32
97780–50620	17 – 29
97780–60520	26 – 11
97780–60620	17 – 16
	17 – 32
	39 – 7
97880–06035	39 – 12
97885–05016	9 – 16
97885–06012	28 – 11
97980–06216	32 – 26
	39 – 4
97985–04308	20 – 4
97985–06216	29 – 4
98507–04008	12 – 34
98780–04016	3 – 9
	3 – 30
99001–08600	34 – 19
	36 – 20
99590–08012	16 – 7
99590–10114	21 – 9

PART NO. N° PIECES	REF. NO.

PART NO. N° PIECES	REF. NO.

PART NO. N° PIECES	REF. NO.

PART NO. N° PIECES	REF. NO.