YAMAHA

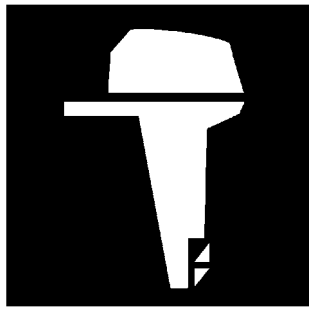

# PARTS CATALOGUE
# CATALOGUE DE PIECES DETACHEES

# 25NMHO'15 (6L2F)

1P6L2-300F1

( )

YAMAHA
GENUINE
Parts & Accessories

25NMHO
PARTS CATALOGUE
©2015 by Yamaha Motor Co., Ltd.
1st edition, April 2015
All rights reserved.
Any reprinting or unauthorized use
without the written permission of
Yamaha Motor Co., Ltd.
is expressly prohibited.
Printed in Japan.

25NMHO
CATALOGUE DE PIECES DETACHEES
©2015 par Yamaha Motor Co., Ltd.
1re édition, avril 2015
Tous droits réservés
Toute réimpression ou utilisation
non autorisée sans la permission écrite
de la Yamaha Motor Co., Ltd.
est formellement interdite.
Imprimé au Japon

# FOREWORD

This Parts Catalogue is related to the parts for the model(s) on the cover page. When you are ordering replacement parts, please refer to this Parts Catalogue and quote both part numbers and part names correctly.

1. Modifications or additions which have been made after the issue of the Parts Catalogue will be announced in the Parts News.
   It is advisable that you make the necessary corrections to the Parts Catalogue according to the Parts News.

2. Abbreviations
   The following abbreviations are used in this Parts Catalogue.

   "UR" Use specified parts number.
   "UN" Use as many as needed.
   "AP" Alternate Parts
   "LM" Locally Made (Parts need to be ordered locally)
   "F#" Frame No. (Applicable machine No.)
   "O/S" Over Size

3. The number of components for assembly
   - Parts, which are to be supplied in an assembly, are listed with a dot (.) in front of the part name as shown below.
   - The numeral appearing to the right of each component part indicates the quantity of parts for each assembly unit.

| PART NO. | DESCRIPTION | Q'TY | REMARKS |
|---|---|---|---|
| 2F5–83310–60 | FRONT FLASHER LIGHT ASSY | 2 | |
| 115–83311–60 | .BULB (6V–18W) | 1 | |

4. Applicable colours of graphics are represented in the "REMARKS" as shown below.

| PART NO. | DESCRIPTION | Q'TY | REMARKS |
|---|---|---|---|
| 2N4–24110–00–X5 | FUEL TANK COMP. | 2 | MXR |
| 3J1–24240–10 | .GRAPHIC, FUEL TANK | 1 | FOR MXR |

5. Note that the illustrations for reference in finding parts numbers are not to be used for assembling. When assembling, please use the applicable service manual.

6. The asterisk (*) before a reference number indicates modified items after the first edition.

7. Applicable Serial No.

   Engine Serial No.

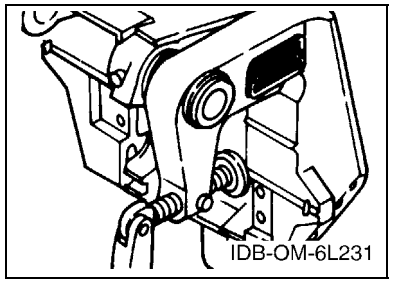


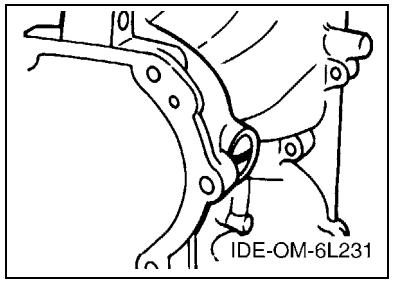


8. Applicable Engine Starting Serial No.

| Model | Serial No. | Model | Serial No. |
|---|---|---|---|
| 25N | 6L2K-1054523 | | |
| | | | |
| | | | |
| | | | |
| | | | |

9. Applicable Colour Code

| Abbreviation | Colour Name | Colour Code |
|---|---|---|
| DBNM2 | DARK BLUISH GRAY METALLIC 2 | 004D |

10. Quantity Column Information

| Column No. | Name Of Q'ty Column | Applicable Model |
|---|---|---|
| 1 | 6L2F | 25NMHO |
| | | |
| | | |
| | | |
| | | |

# AVANT–PROPOS

Ce catalogue de pièces détachées concerne les pièces pour le(s) modèle(s) indiqué(s) sur la page de couverture. Lorsque vous commandez des pièces de rechange, veuillez vous référer à ce catalogue de pieces détachées et indiquer clairement les numéros et les noms des pièces détachées.

1. Les modifications ou ajouts ayant été effectués après la parution du catalogue de pièces détachées seront décrits dans les Bulletins d'information concernant les pièces détachées.
   Il est recommandé que vous apportiez les corrections nécessaires au catalogue des pièces détachées en vous référant aux Bulletins d'information.

2. Abréviations
   Dans ce catalogue, les abréviations suivantes sont utilisées:

   "UR" Utiliser le numéro de pièces spécifié.
   "UN" Utiliser autant que nécessaire.
   "AP" Pièces de substitution
   "LM" Fabrication locale (les pièces doivent être commandées localement.)
   "F#" N° de cadre (applicable au N° de série)
   "O/S" Surdimensionné

3. Nombre de pièces d'un assemblage
   - Les pièces fournies comme composants d'un assemblage sont précédées d'un point (.) de la manière indiquée ci–dessous.
   - Le chiffre apparaissant à la droite de chaque composant indique la quantité de pièces pour chaque unité d'assemblage.

| N° PIECES | DESCRIPTION | QTE | REMARQUES |
|---|---|---|---|
| 2F5–83310–60 | ENS. CLIGNOTANT AVANT | 2 | |
| 115–83311–60 | .AMPOULE (6V–18W) | 1 | |

4. Les couleurs concernant les graphiques sont indiquées dans la colonne "REMARQUES", comme indiqué ci–dessous.

| N° PIECES | DESCRIPTION | QTE | REMARQUES |
|---|---|---|---|
| 2N4–24110–00–X5 | RESERVOIR A ESSENCE. | 2 | MXR |
| 3J1–24240–10 | .GRAPHIQUE | 1 | POUR MXR |

5. Veuillez noter que les illustrations sont indiquées à titre de référence pour trouver les numéros de pièces, non pour être utilisées lors de l'assemblage. Lors de l'assemblage, veuillez utiliser le manuel d'entretien adéquat.

6. L'astérisque (*) placé devant un numéro de référence indique des éléments qui ont été modifiés après la première édition.

7. N° de série applicable

   N° de Série du moteur

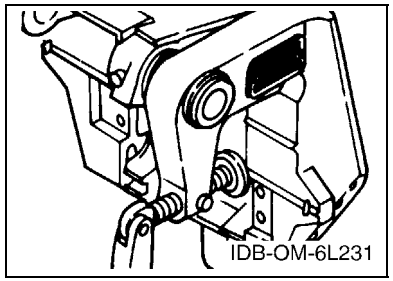


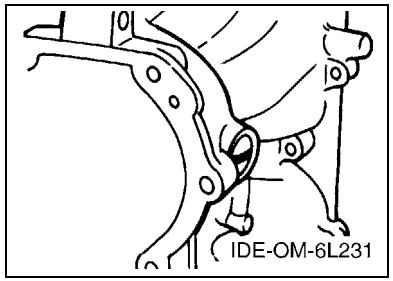


8. N° de série initial du moteur applicable

| Modèle | N° de série | Modèle | N° de série |
|---|---|---|---|
| 25N | 6L2K-1054523 | | |
| | | | |
| | | | |
| | | | |
| | | | |

9. Code couleur applicable

| Abréviation | Nom de la couleur | Code couleur |
|---|---|---|
| DBNM2 | DARK BLUISH GRAY METALLIC 2 | 004D |

10. Informations relatives à la colonne Quantité

| N° de la colonne | Nom de la colonne Qté | Modèle applicable |
|---|---|---|
| 1 | 6L2F | 25NMHO |
| | | |
| | | |
| | | |
| | | |

# CONTENTS

SCHEDULED SERVICE PARTS ..... 1
TOP COWLING ..... 2
CYLINDER & CRANKCASE ..... 3
CRANKSHAFT & PISTON ..... 5
INTAKE ..... 7
CARBURETOR ..... 8
OIL PUMP ..... 10
FUEL ..... 12
STARTER ..... 13
GENERATOR ..... 15
ELECTRICAL ..... 16
BOTTOM COWLING ..... 17
STEERING ..... 19
CONTROL ..... 21
BRACKET 1 ..... 23
BRACKET 2 ..... 25
UPPER CASING ..... 27
LOWER CASING & DRIVE 1 ..... 28
LOWER CASING & DRIVE 2 ..... 31
FUEL TANK 1 ..... 33
FUEL TANK 2 ..... 34
REPAIR KIT 1 ..... 35
REPAIR KIT 2 ..... 36

## INDEX

NUMERICAL INDEX ..... 37

# TABLE DES MATIERES

PIECES MAINTENANCE PERIODIQUE ..... 1
CAPOT SUPERIEUR ..... 2
CYLINDRE & CARTER ..... 3
VILEBREQUIN & PISTON ..... 5
ADMISSION ..... 7
CARBURATEUR ..... 8
POMPE A HUILE ..... 10
CARBURANT ..... 12
DEMARREUR ..... 13
GENERATRICE ..... 15
ELECTRIQUE ..... 16
CAPOT INFERIEUR ..... 17
DIRECTION ..... 19
COMMANDE ..... 21
SUPPORT 1 ..... 23
SUPPORT 2 ..... 25
FOURREAU ..... 27
BOITIER D'HELICE TRANSMISSION1 ..... 28
BOITIER D'HELICE TRANSMISSION2 ..... 31
RESERVOIR A CARBURANT 1 ..... 33
RESERVOIR A CARBURANT 2 ..... 34
KITS DE REPARATION 1 ..... 35
KITS DE REPARATION 2 ..... 36

## INDEX

INDEX NUMERIQUE ..... 37

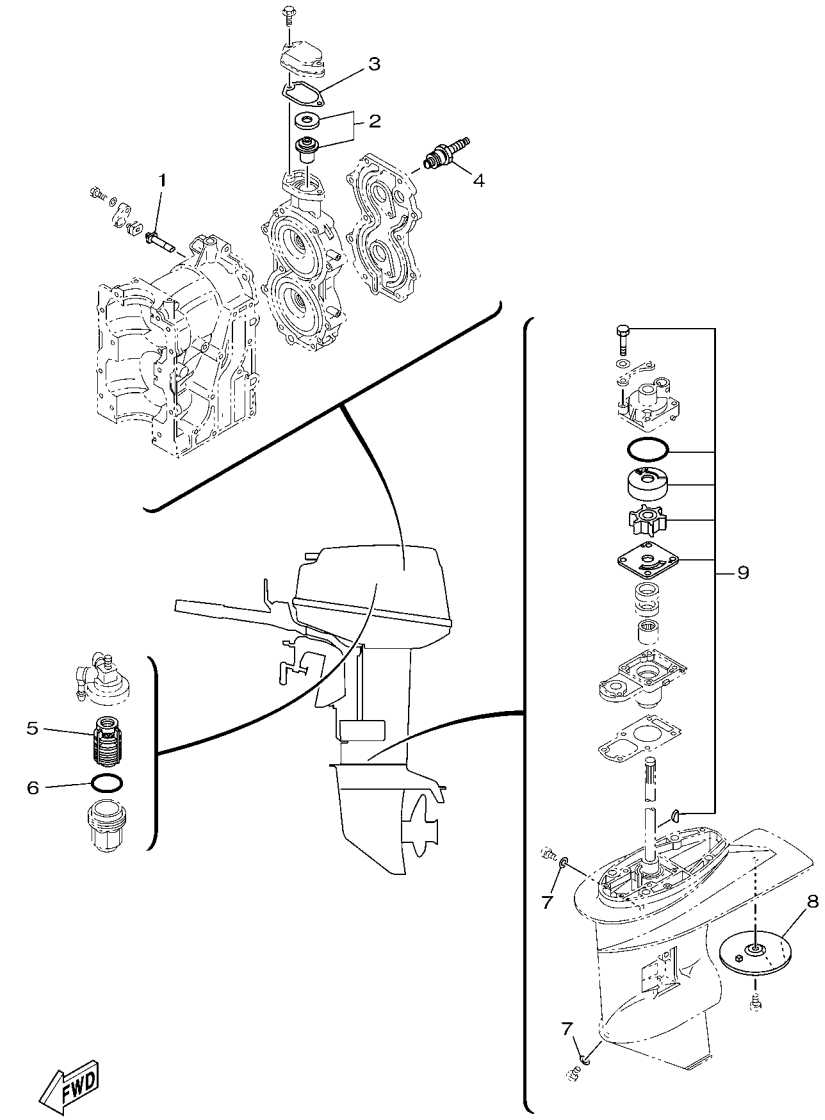


6L2D700-M010

## FIG. 1 SCHEDULED SERVICE PARTS PIECES MAINTENANCE PERIODIQUE

| REF. NO. | PART NO. N° PIECES | DESCRIPTION DESCRIPTION | 6L2F | | | | | REMARKS REMARQUES |
|---|---|---|---|---|---|---|---|---|
| 1 | 6J8–11325–00 | ANODE<br>ANODE | 1 | | | | | |
| 2 | 6E5–12411–30 | THERMOSTAT<br>THERMOSTAT | 1 | | | | | |
| 3 | 6J8–12414–A0 | GASKET, COVER<br>JOINT, COUVERCLE | 1 | | | | | |
| 4 | 94702–00271 | PLUG, SPARK (NGK BR7HS-10)<br>BOUGIE D'ALLUMAGE(NGK BR7HS-10 | 2 | | | | | |
| 5 | 61N–24563–00 | ELEMENT, FILTER<br>ELEMENT, FILTRE | 1 | | | | | |
| 6 | 93210–32738 | O-RING<br>JOINT TORIQUE | 1 | | | | | |
| 7 | 90430–08020 | GASKET<br>JOINT | 2 | | | | | |
| 8 | 664–45371–01 | TAB-TRIM<br>ANODE DERIVE | 1 | | | | | |
| 9 | 6L2–W0078–00 | WATER PUMP REPAIR KIT<br>KIT DE REPARATION DE LA POMPE | 1 | | | | | |

## FIG. 2 TOP COWLING CAPOT SUPERIEUR

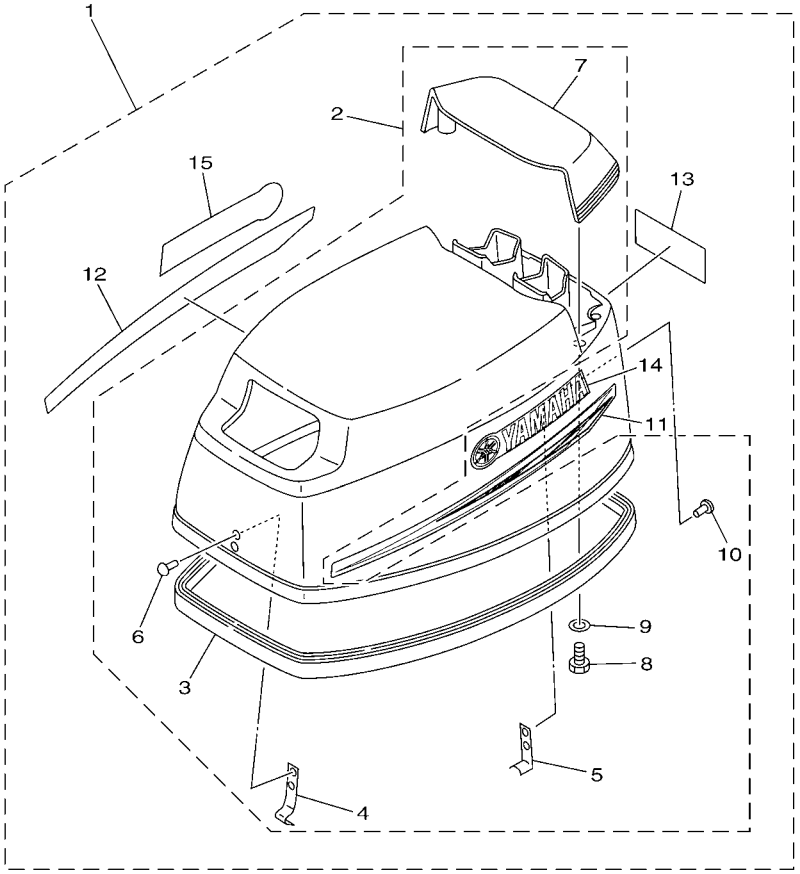

6L2E700-N020

| REF. NO. | PART NO. N° PIECES | DESCRIPTION DESCRIPTION | 6L2F | | | | | REMARKS REMARQUES |
|---|---|---|---|---|---|---|---|---|
| 1 | 6L2–42610–01 | TOP COWLING ASSY<br>CAPOT (ENS.) | 1 | | | | | |
| 2 | 6L2–4261A–00 | .TOP COWLING W/O GRAPHICS<br>.CAPOT SUPERIEUR SANS GRAPHIQUE | 1 | | | | | |
| 3 | 6L2–42615–00 | ..SEAL<br>..JOINT | 1 | | | | | |
| 4 | 6G1–42651–71 | ..HOOK<br>..CROCHET | 1 | | | | | |
| 5 | 6L2–42647–00 | ..HOLDER, CLAMP BAND<br>..SUPPORT, SANDOW DE SERRAGE | 1 | | | | | |
| 6 | 90266–04M00 | ..RIVET<br>..RIVET | 2 | | | | | |
| 7 | 6L2–42613–01–4D | ..MOLDING, AIR DUCT<br>..MANCHON A AIR | 1 | | | | | |
| 8 | 97095–06016 | ..BOLT<br>..BOULON | 4 | | | | | |
| 9 | 92995–06600 | ..WASHER<br>..RONDELLE | 4 | | | | | |
| 10 | 90266–04M04 | ..RIVET<br>..RIVET | 2 | | | | | |
| 11 | 63V–42675–40 | .GRAPHIC, SIDE 1<br>.EMBLEME | 1 | | | | | |
| 12 | 63V–42676–40 | .GRAPHIC, SIDE 2<br>.EMBLEME | 1 | | | | | |
| 13 | 6L2–42678–40 | .GRAPHIC, REAR<br>.ADHESIF, ARRIERE | 1 | | | | | |
| 14 | 6E0–42681–40 | .MARK, COWLING<br>.ADHESIF, CAPOT | 1 | | | | | |
| 15 | 6E0–42681–40 | .MARK, COWLING<br>.ADHESIF, CAPOT | 1 | | | | | |

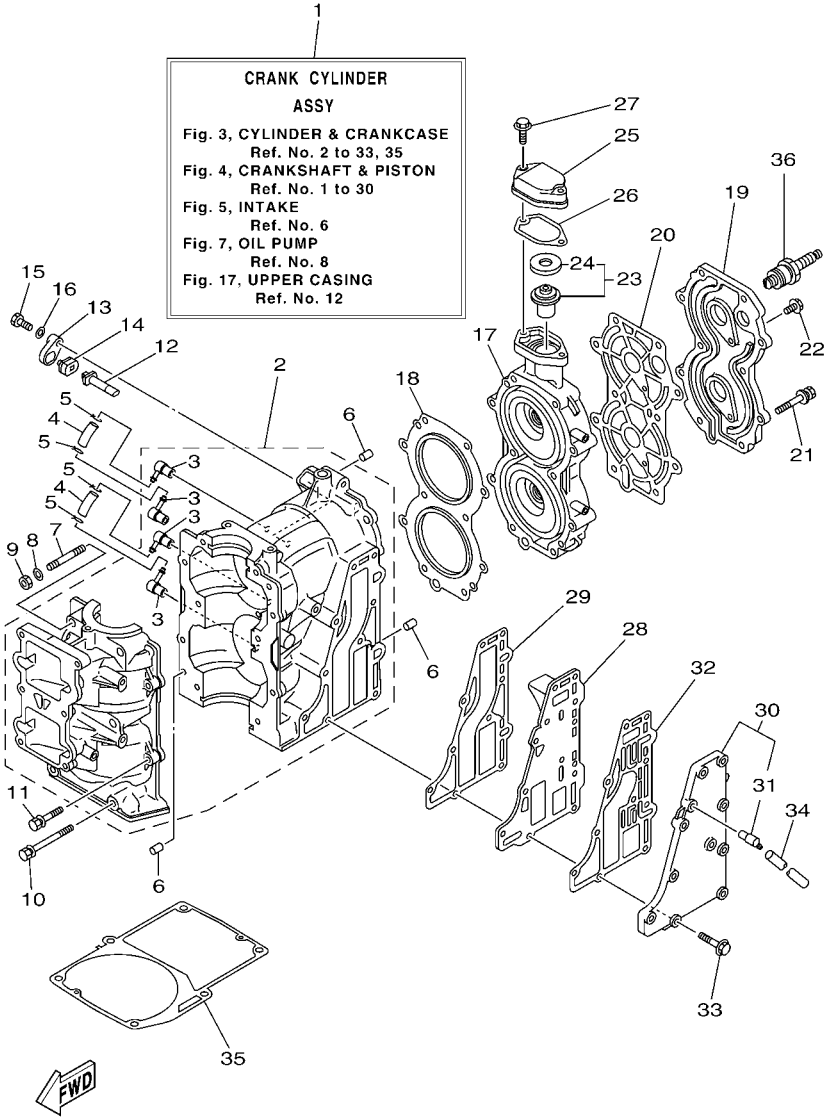


6L2D300-M030

## FIG. 3 CYLINDER & CRANKCASE CYLINDRE & CARTER

| REF. NO. | PART NO. N° PIECES | DESCRIPTION DESCRIPTION | 6L2F | | | | | REMARKS REMARQUES |
|---|---|---|---|---|---|---|---|---|
| 1 | 6L2–W0090–12–1S | CRANK CYLINDER ASSY<br>EMBIELLAGE CYLINDRE (ENS.) | 1 | | | | | O/I<br>O/I |
| 2 | 6L2–15100–10 | CRANKCASE ASSY<br>CARTER DE MOTEUR COMPLET | 1 | | | | | O/I<br>O/I |
| 3 | 6E5–11372–01 | .NIPPLE, HOSE<br>.RACCORD, TUYAU | 4 | | | | | |
| 4 | 90445–07M15 | HOSE (L40)<br>DURITE (L40) | 2 | | | | | |
| 5 | 90467–06016 | CLIP<br>JONC | 4 | | | | | |
| 6 | 93604–12M07 | PIN, DOWEL<br>CLAVETTE | 4 | | | | | |
| 7 | 95617–08645 | BOLT, STUD<br>GOUJON | 2 | | | | | |
| 8 | 90201–08086 | WASHER, PLATE<br>RONDELLE, PLATE | 2 | | | | | |
| 9 | 95333–08600 | NUT<br>ECROU | 2 | | | | | |
| 10 | 90119–08M65 | BOLT, WITH WASHER<br>BOULON, AVEC RONDELLE | 4 | | | | | |
| 11 | 90119–06M14 | BOLT, WITH WASHER<br>BOULON, AVEC RONDELLE | 4 | | | | | |
| 12 | 6J8–11325–00 | ANODE<br>ANODE | 1 | | | | | |
| 13 | 6H3–11327–00–94 | COVER, ANODE<br>COUVERCLE ANODE | 1 | | | | | |
| 14 | 6H3–11328–00 | GROMMET, ANODE<br>PASSE-FIL | 1 | | | | | |
| 15 | 97013–06016 | BOLT<br>BOULON | 1 | | | | | |
| 16 | 92903–06600 | WASHER, PLATE<br>RONDELLE, PLATE | 1 | | | | | |
| 17 | 6L2–11111–01–1S | HEAD, CYLINDER 1<br>CULASSE | 1 | | | | | |
| 18 | 6L2–11181–A3 | GASKET, CYLINDER HEAD 1<br>JOINT, DE CULASSE 1 | 1 | | | | | |
| 19 | 6L2–11191–00–1S | COVER, CYLINDER HEAD 1<br>COUVERCLE, CULASSE 1 | 1 | | | | | |
| 20 | 6L2–11193–A1 | GASKET, HEAD COVER 1<br>JOINT, COUVERCLE DE CULASSE 1 | 1 | | | | | |
| 21 | 90119–08M91 | BOLT, WITH WASHER<br>BOULON, AVEC RONDELLE | 10 | | | | | |
| 22 | 90119–06023 | BOLT, WITH WASHER<br>BOULON, AVEC RONDELLE | 2 | | | | | |
| 23 | 6E5–12411–30 | THERMOSTAT<br>THERMOSTAT | 1 | | | | | |
| 24 | 688–12412–00 | .SEAL, THERMOSTAT<br>.JOINT, THERMOSTAT | 1 | | | | | |
| 25 | 6H4–12413–00–1S | COVER, THERMOSTAT<br>COUVERCLE, THERMOSTAT | 1 | | | | | |
| 26 | 6J8–12414–A0 | GASKET, COVER<br>JOINT, COUVERCLE | 1 | | | | | |
| 27 | 90119–06MA3 | BOLT, WITH WASHER<br>BOULON, AVEC RONDELLE | 2 | | | | | |

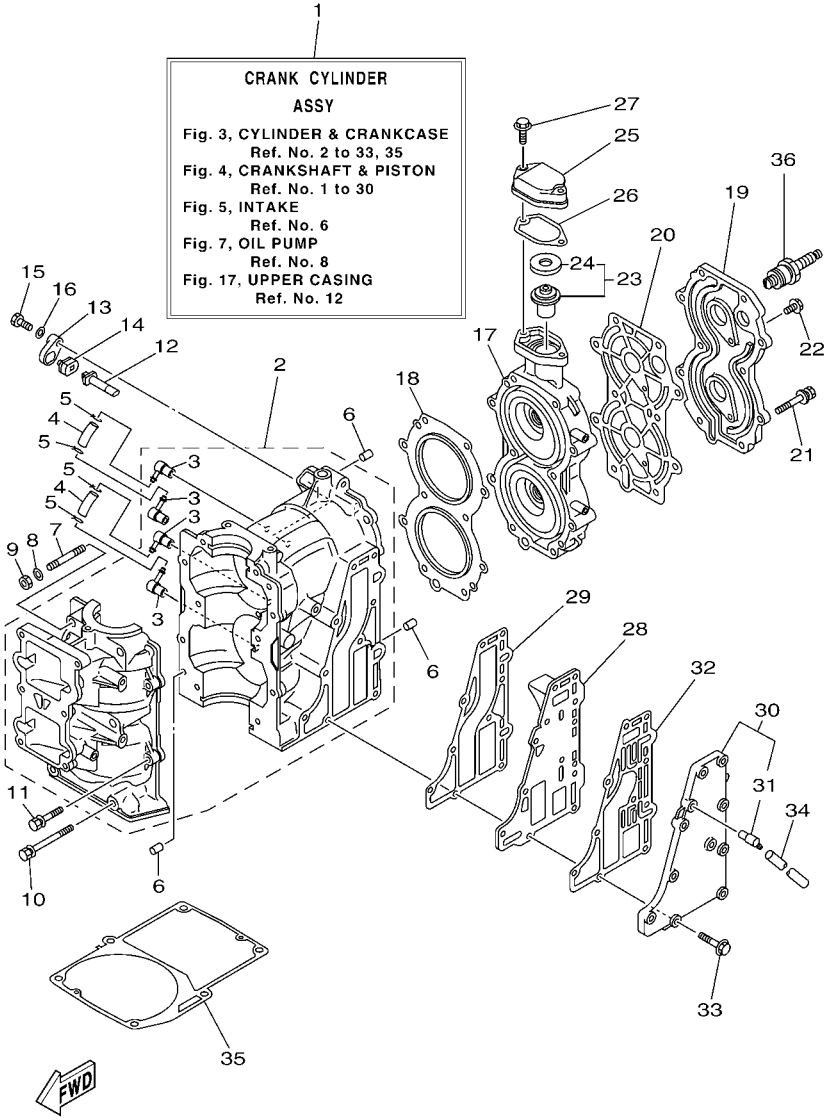


6L2D300-M030

## FIG. 3 CYLINDER & CRANKCASE CYLINDRE & CARTER

| REF. NO. | PART NO. N° PIECES | DESCRIPTION DESCRIPTION | 6L2F | | | | | REMARKS REMARQUES |
|---|---|---|---|---|---|---|---|---|
| 28 | 6L2–41111–00–1S | INNER COVER, EXHAUST<br>PLAQUE, ECHAPPEMENT | 1 | | | | | |
| 29 | 6L2–41112–A3 | GASKET, EXHAUST INNER COVER<br>JOINT, PLAQUE D'ECHAPPEMENT | 1 | | | | | |
| 30 | 6L2–41113–00–1S | OUTER COVER, EXHAUST<br>COUVERCLE, ECHAPPEMENT | 1 | | | | | |
| 31 | 676–11372–00 | .NIPPLE, HOSE<br>.RACCORD, TUYAU | 1 | | | | | |
| 32 | 6L2–41114–A1 | GASKET, EXHAUST OUTER COVER<br>JOINT, COUVERCLE D'ECHAPPEMENT | 1 | | | | | |
| 33 | 90119–06MA4 | BOLT, WITH WASHER<br>BOULON, AVEC RONDELLE | 10 | | | | | |
| 34 | 90445–10M40 | HOSE (L330)<br>DURITE (L330) | 1 | | | | | |
| 35 | 6L2–45113–A2 | GASKET, UPPER CASING<br>JOINT, TUBE D'ARBRE | 1 | | | | | |
| 36 | 94702–00271 | PLUG, SPARK (NGK BR7HS-10)<br>BOUGIE D'ALLUMAGE(NGK BR7HS-10 | 2 | | | | | |

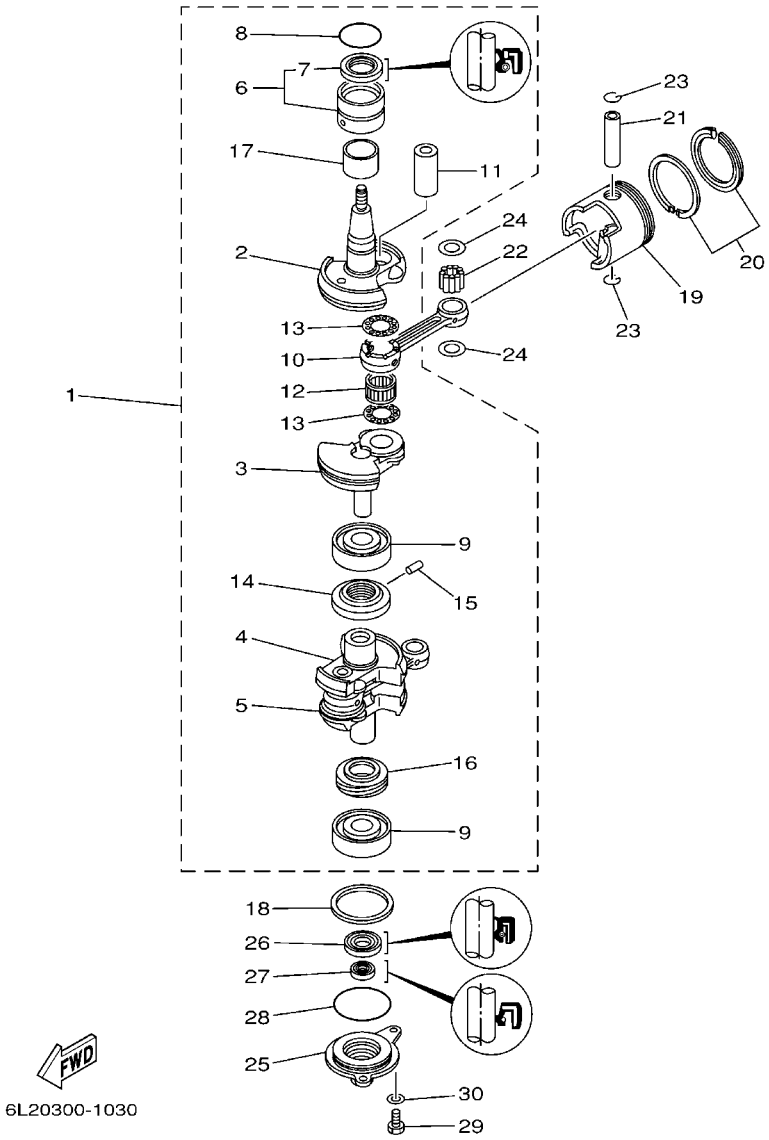


## FIG. 4 CRANKSHAFT & PISTON VILEBREQUIN & PISTON

| REF. NO. | PART NO. N° PIECES | DESCRIPTION DESCRIPTION | 6L2F | | | | | REMARKS REMARQUES |
|---|---|---|---|---|---|---|---|---|
| 1 | 6L2–11400–10 | CRANKSHAFT ASSY<br>VILEBREQUIN COMPLET | 1 | | | | | O/I<br>O/I |
| 2 | 6L2–11412–00 | .CRANK 1<br>.MASSOLOTTE DE VILEBREQUIN 1 | 1 | | | | | |
| 3 | 6L2–11422–00 | .CRANK 2<br>.MASSOLOTTE DE VILEBREQUIN 2 | 1 | | | | | |
| 4 | 6L2–11432–00 | .CRANK 3<br>.MASSOLOTTE DE VILEBREQUIN 3 | 1 | | | | | |
| 5 | 6L2–11442–00 | .CRANK 4<br>.MASSOLOTTE DE VILEBREQUIN 4 | 1 | | | | | |
| 6 | 93311–632U7 | .BEARING<br>.ROULEMENT | 1 | | | | | |
| 7 | 93102–26M27 | ..OIL SEAL<br>..JOINT SPY | 1 | | | | | |
| 8 | 93210–42159 | .O-RING<br>.JOINT TORIQUE | 1 | | | | | |
| 9 | 93306–305U3 | .BEARING<br>.ROULEMENT | 2 | | | | | |
| 10 | 6L2–11651–00 | .ROD, CONNECTING<br>.BIELLE NUE | 2 | | | | | |
| 11 | 6L2–11681–00 | .PIN, CRANK 1<br>.MANETON, VILEBREQUIN 1 | 2 | | | | | |
| 12 | 93310–424W9 | .BEARING<br>.ROULEMENT | 2 | | | | | |
| 13 | 90209–24M15 | .WASHER<br>.RONDELLE | 4 | | | | | |
| 14 | 6L2–11515–00 | .SEAL, LABYRINTH 1<br>.JOINT, LABYRINTHE 1 | 1 | | | | | |
| 15 | 91690–30010 | .PIN, SPRING<br>.AGRAFFE | 1 | | | | | |
| 16 | 6J8–11536–00 | .GEAR, DRIVE<br>.ENGRENAGE, MENANT | 1 | | | | | O/I<br>O/I |
| 17 | 90387–28M00 | .COLLAR<br>.COLLERETTE | 1 | | | | | |
| 18 | 90201–50306 | WASHER, PLATE<br>RONDELLE, PLATE | 1 | | | | | |
| 19 | 6L2–11631–00–97 | PISTON (STD)<br>PISTON (STD) | 2 | | | | | |
| | 6L2–11635–00 | PISTON (0.25MM O/S)<br>PISTON (0.25MM O/S) | 2 | | | | | AP<br>AP |
| | 6L2–11636–00 | PISTON (0.50MM O/S)<br>PISTON (0.50MM O/S) | 2 | | | | | AP<br>AP |
| 20 | 6L2–11610–00 | PISTON RING SET (STD)<br>JEU DE SEGMENTS (STD) | 2 | | | | | |
| | 6L2–11610–10 | PISTON RING SET (0.25MM O/S)<br>JEU DE SEGMENTS (0.25MM O/S) | 2 | | | | | AP<br>AP |
| | 6L2–11610–20 | PISTON RING SET (0.50MM O/S)<br>JEU DE SEGMENTS (0.50MM O/S) | 2 | | | | | AP<br>AP |
| 21 | 648–11633–00 | PIN, PISTON<br>AXE, PISTON | 2 | | | | | |
| 22 | 93602–18M12 | PIN, DOWEL<br>GOUJON | 62 | | | | | |
| 23 | 93450–20026 | CIRCLIP<br>CIRCLIP, TYPE S | 4 | | | | | |

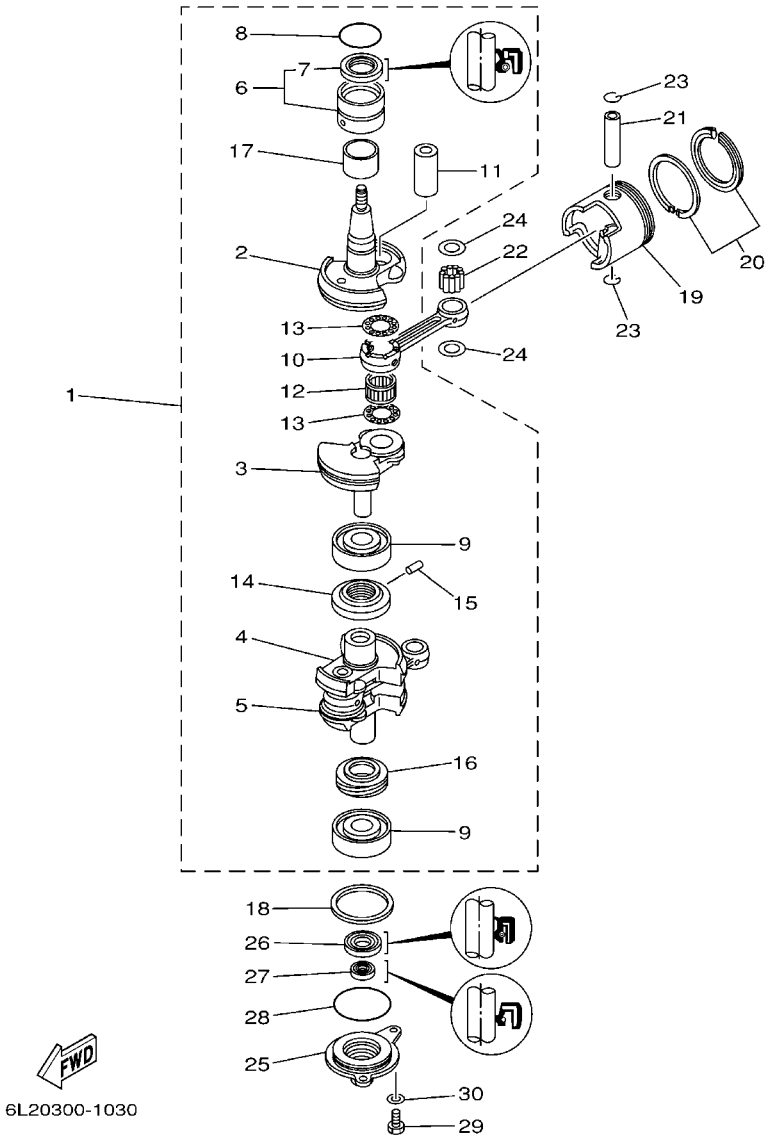


## FIG. 4 CRANKSHAFT & PISTON VILEBREQUIN & PISTON

| REF. NO. | PART NO. N° PIECES | DESCRIPTION DESCRIPTION | 6L2F | | | | | REMARKS REMARQUES |
|---|---|---|---|---|---|---|---|---|
| 24 | 90201–18522 | WASHER, PLATE<br>RONDELLE, PLATE | 4 | | | | | |
| 25 | 6L2–15396–00–1S | HOUSING, OIL SEAL<br>LOGEMENT DE JOINT SPY | 1 | | | | | |
| 26 | 93102–25142 | OIL SEAL<br>JOINT SPY | 1 | | | | | |
| 27 | 93101–13M37 | OIL SEAL<br>JOINT SPY | 1 | | | | | |
| 28 | 93210–56M80 | O-RING<br>JOINT TORIQUE | 1 | | | | | |
| 29 | 97095–06016 | BOLT<br>BOULON | 2 | | | | | |
| 30 | 92995–06600 | WASHER<br>RONDELLE | 2 | | | | | |

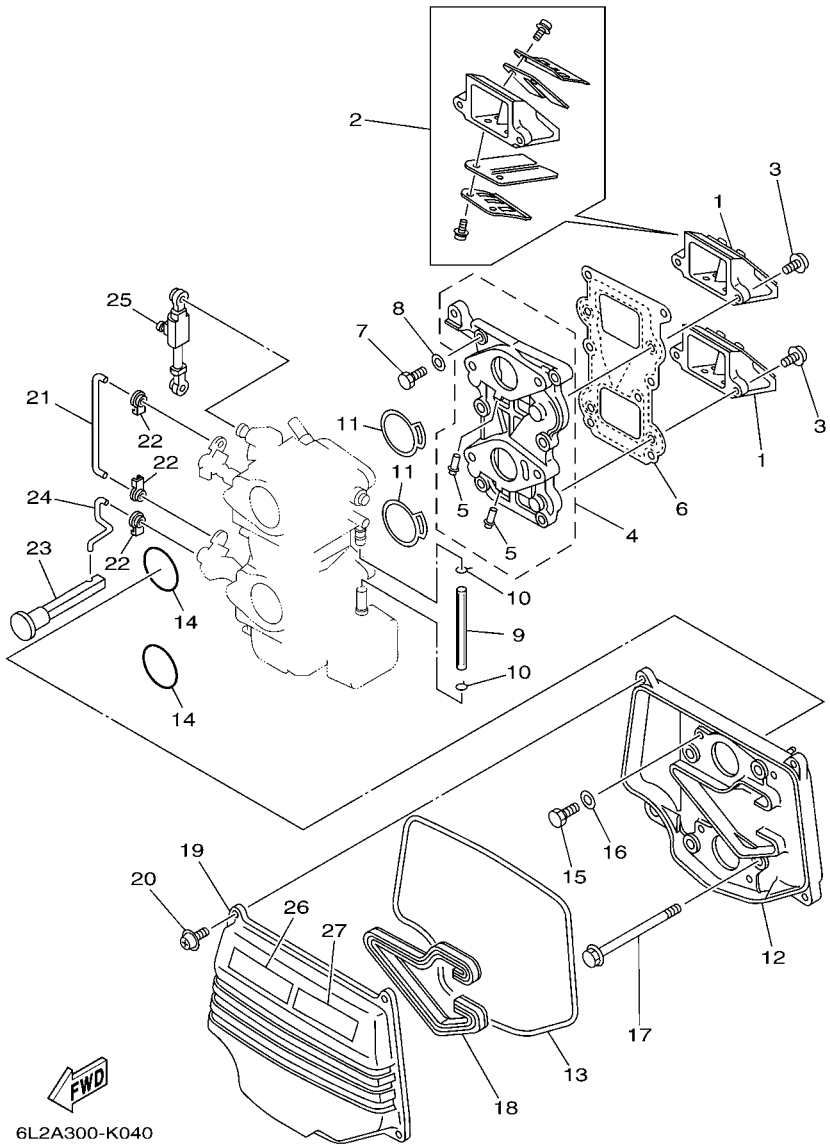


## FIG. 5 INTAKE — ADMISSION

| REF. NO. | PART NO. N° PIECES | DESCRIPTION DESCRIPTION | 6L2F | | | | | REMARKS REMARQUES |
|---|---|---|---|---|---|---|---|---|
| 1 | 6L2–13610–00 | REED VALVE ASSY<br>CLAPET COMPLET | 2 | | | | | |
| 2 | 6L2–W0004–00 | .REED SET<br>.JEU DE CLAPETS | 1 | | | | | |
| 3 | 97980–05216 | SCREW, WITH WASHER<br>VIS, AVEC RONDELLE | 4 | | | | | |
| 4 | 6L2–13641–10 | MANIFOLD, INTAKE 1<br>TUBULURE, ADMISSION 1 | 1 | | | | | O/I<br>O/I |
| 5 | 676–14485–00 | .PIPE, JOINT<br>.DURITE | 2 | | | | | |
| 6 | 6L2–13621–00 | GASKET, VALVE SEAT<br>JOINT, SIEGE DE CLAPET | 1 | | | | | |
| 7 | 97013–06025 | BOLT<br>BOULON | 6 | | | | | |
| 8 | 92903–06600 | WASHER, PLATE<br>RONDELLE, PLATE | 6 | | | | | |
| 9 | 90445–09012 | HOSE (L70)<br>DURITE (L70) | 1 | | | | | |
| 10 | 90467–08004 | CLIP<br>JONC | 2 | | | | | |
| 11 | 6L2–14198–00 | GASKET<br>JOINT | 2 | | | | | |
| 12 | 6L2–14417–00 | COVER 1<br>COUVERCLE 1 | 1 | | | | | |
| 13 | 6L2–14476–00 | SEAL<br>JOINT SPY | 1 | | | | | |
| 14 | 93210–35M86 | O-RING<br>JOINT TORIQUE | 2 | | | | | |
| 15 | 97013–05012 | BOLT<br>BOULON | 4 | | | | | |
| 16 | 92903–05600 | WASHER, PLATE<br>RONDELLE, PLATE | 4 | | | | | |
| 17 | 97513–06585 | BOLT, WITH WASHER<br>VIS HEXAGONAL AVC RONDELLE | 4 | | | | | |
| 18 | 6L2–14476–11 | SEAL<br>JOINT SPY | 1 | | | | | |
| 19 | 6L2–14418–00 | COVER 2<br>COUVERCLE 2 | 1 | | | | | |
| 20 | 97980–05216 | SCREW, WITH WASHER<br>VIS, AVEC RONDELLE | 4 | | | | | |
| 21 | 6J8–41259–00 | ROD, CHOKE 3<br>TRINGLE 3, STARTER | 1 | | | | | |
| 22 | 661–41262–02 | JOINT, CHOKE LEVER<br>RACCORD, LEVIER DE STARTER | 3 | | | | | |
| 23 | 6J8–41271–01 | KNOB, CHOKE<br>BOUTON DE STARTER | 1 | | | | | |
| 24 | 6L2–41257–00 | ROD, CHOKE 2<br>TRINGLE 2, STARTER | 1 | | | | | |
| 25 | 6L2–41217–00 | ROD, ACCEL. LEVER<br>TIGE, LEVIER ACCELERATION | 1 | | | | | |
| 26 | 6EE–81994–40 | LABEL, SAFETY<br>ETIQUETTE, SECURITE | 1 | | | | | |
| 27 | 6EE–81994–50 | LABEL, SAFETY<br>ETIQUETTE, SECURITE | 1 | | | | | |

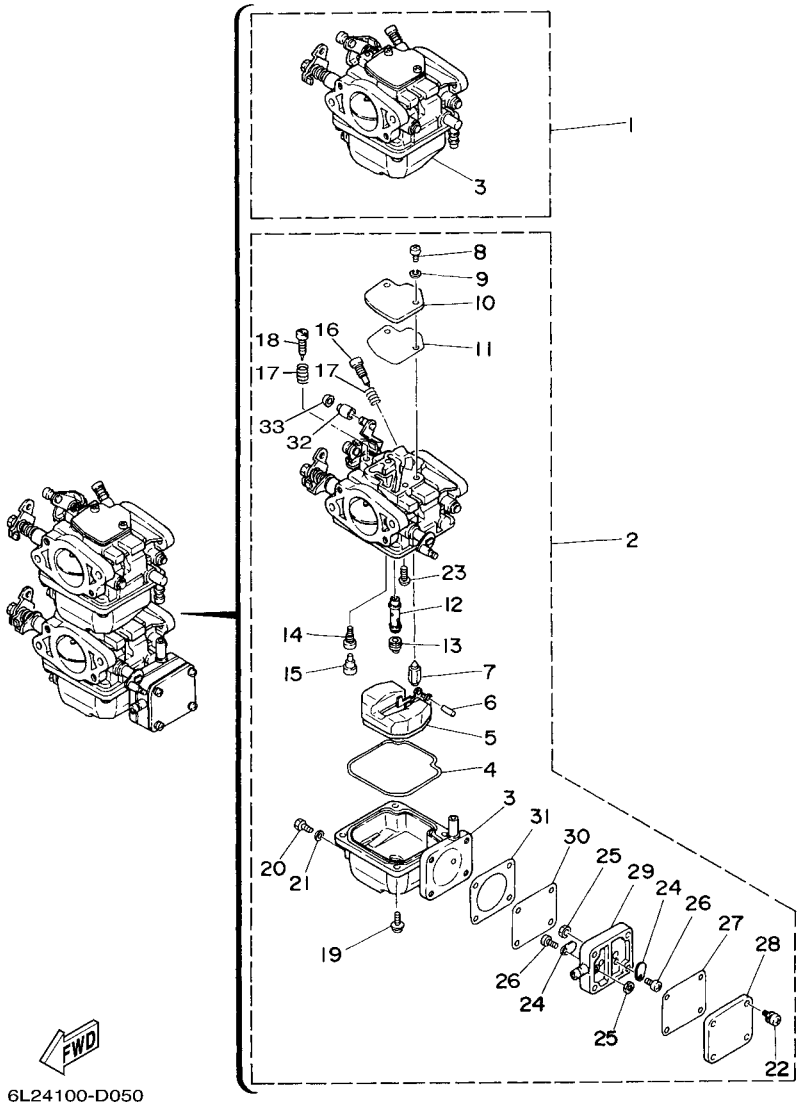


## FIG. 6 CARBURETOR CARBURATEUR

| REF. NO. | PART NO. N° PIECES | DESCRIPTION DESCRIPTION | 6L2F | | | | | REMARKS REMARQUES |
|---|---|---|---|---|---|---|---|---|
| 1 | 6L2–14301–02 | CARBURETOR ASSY 1<br>CARBURATEUR COMPLET 1 | 1 | | | | | #1<br>#1 |
| 2 | 6L2–14302–02 | CARBURETOR ASSY 2<br>CARBURATEUR COMPLET 2 | 1 | | | | | #2<br>#2 |
| 3 | 6L2–14381–00 | .BODY, FLOAT CHAMBER 1<br>.CORPS, CUVE DE FLOTTEUR 1 | 1 | | | | | #1<br>#1 |
| | 6L2–14383–00 | .BODY, FLOAT CHAMBER 2<br>.CORPS, CUVE DE FLOTTEUR 2 | 1 | | | | | #2<br>#2 |
| 4 | 6L2–14384–00 | .GASKET, FLOAT CHAMBER<br>.JOINT, CUVE DE FLOTTEUR | 2 | | | | | |
| 5 | 6L2–14385–00 | .FLOAT<br>.FLOTTEUR | 2 | | | | | |
| 6 | 6E5–14386–01 | .PIN, FLOAT<br>.AXE, FLOTTEUR | 2 | | | | | |
| 7 | 6L2–14392–00 | .VALVE, NEEDLE<br>.POINTEAU | 2 | | | | | |
| 8 | 97880–04010 | .SCREW, PAN HEAD<br>.VIS, TETE TRONCONIQUE | 4 | | | | | |
| 9 | 92900–04100 | .WASHER<br>.RONDELLE | 4 | | | | | |
| 10 | 6L2–14157–00 | .COVER, MIXING<br>.COUVERCLE DE CHAMBRE | 2 | | | | | |
| 11 | 6L2–14399–00 | .GASKET<br>.JOINT | 2 | | | | | |
| 12 | 6L2–14341–00 | .NOZZLE, MAIN<br>.PUITS D'AIGUILLE | 2 | | | | | |
| 13 | 30X–14343–63 | .JET, MAIN (#125)<br>.GICLEUR, PRINCIPAL (#125) | 2 | | | | | |
| 14 | 6L2–14342–30 | .JET, PILOT (# 60)<br>.GICLEUR, RALENTI (# 60) | 2 | | | | | |
| 15 | 50M–14355–00 | .PLUG<br>.PLOT | 2 | | | | | |
| 16 | 6L2–14323–00 | .SCREW, AIR ADJUSTING<br>.VIS DE DOSEUR D'AIR | 2 | | | | | |
| 17 | 646–14212–01 | .SPRING, PILOT ADJUSTING<br>.RESSORT, VIS DE RALENTI | 4 | | | | | |
| 18 | 664–14321–01 | .SCREW, THROTTLE<br>.VIS, ACCELERATEUR | 2 | | | | | |
| 19 | 97980–04112 | .SCREW, WITH WASHER<br>.VIS, AVEC RONDELLE | 8 | | | | | |
| 20 | 677–14383–01 | .SCREW, DRAIN<br>.BOUCHON, PURGE | 2 | | | | | |
| 21 | 6L2–14398–00 | .GASKET<br>.JOINT | 2 | | | | | |
| 22 | 677–24444–01 | .SCREW<br>.VIS | 4 | | | | | |
| 23 | 98980–04006 | .SCREW, BIND<br>.VIS, DE PRESSION | 2 | | | | | |
| 24 | 6A0–24421–01 | .VALVE, CHECK<br>.SOUPAPE, RETENUE | 2 | | | | | |
| 25 | 95380–03600 | .NUT<br>.ECROU | 2 | | | | | |
| 26 | 6E7–14325–00 | .SCREW, PAN HEAD<br>.VIS TETE CONIQUE | 2 | | | | | |

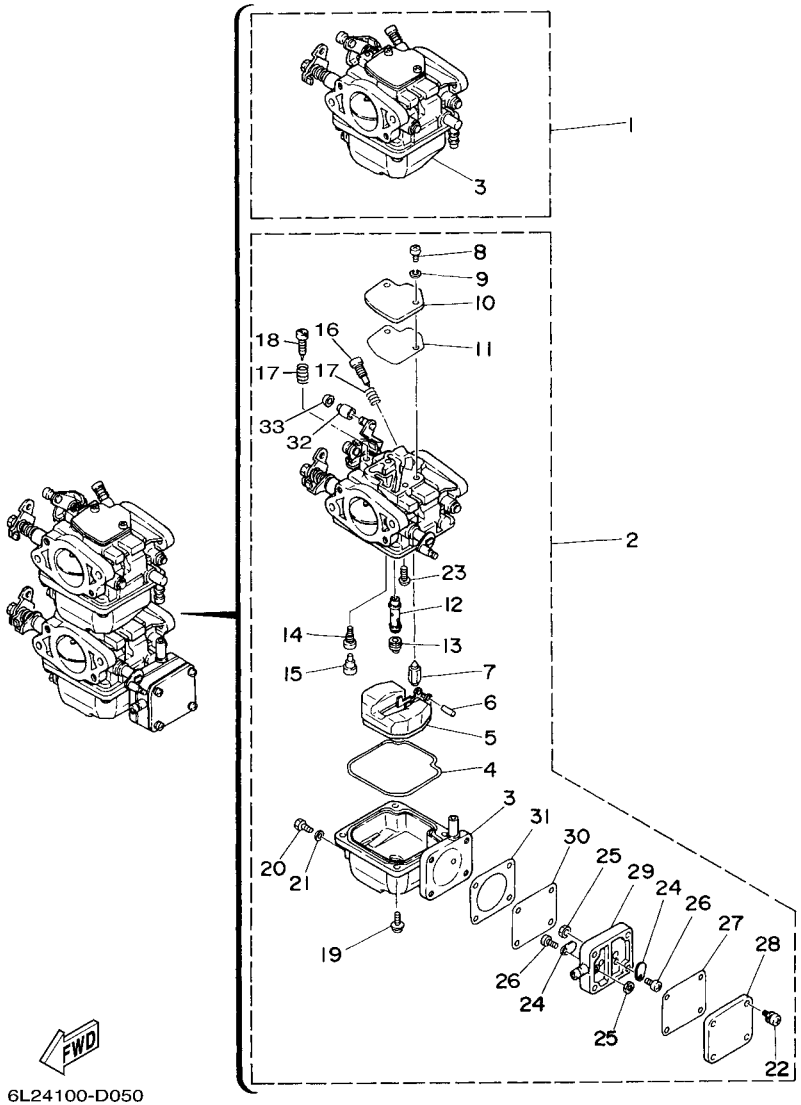


## FIG. 6 CARBURETOR CARBURATEUR

| REF. NO. | PART NO. N° PIECES | DESCRIPTION DESCRIPTION | 6L2F | | | | | REMARKS REMARQUES |
|---|---|---|---|---|---|---|---|---|
| 27 | 6L2–24435–00 | .GASKET, BODY 2<br>.JOINT, CORPS 2 | 1 | | | | | |
| 28 | 6L2–24413–00 | .BODY 2<br>.CORPS 2 | 1 | | | | | |
| 29 | 682–24412–01 | .BODY 1<br>.CORPS 1 | 1 | | | | | |
| 30 | 677–24411–02 | .DIAPHRAGM<br>.DIAPHRAGME | 1 | | | | | |
| 31 | 677–24434–02 | .GASKET, BODY<br>.JOINT, CORPS | 1 | | | | | |
| 32 | 6L2–14578–01 | .COLLAR<br>.COLLERETTE | 1 | | | | | #2<br>#2 |
| 33 | 6L2–14584–00 | .STOPPER<br>.BUTEE | 1 | | | | | #2<br>#2 |

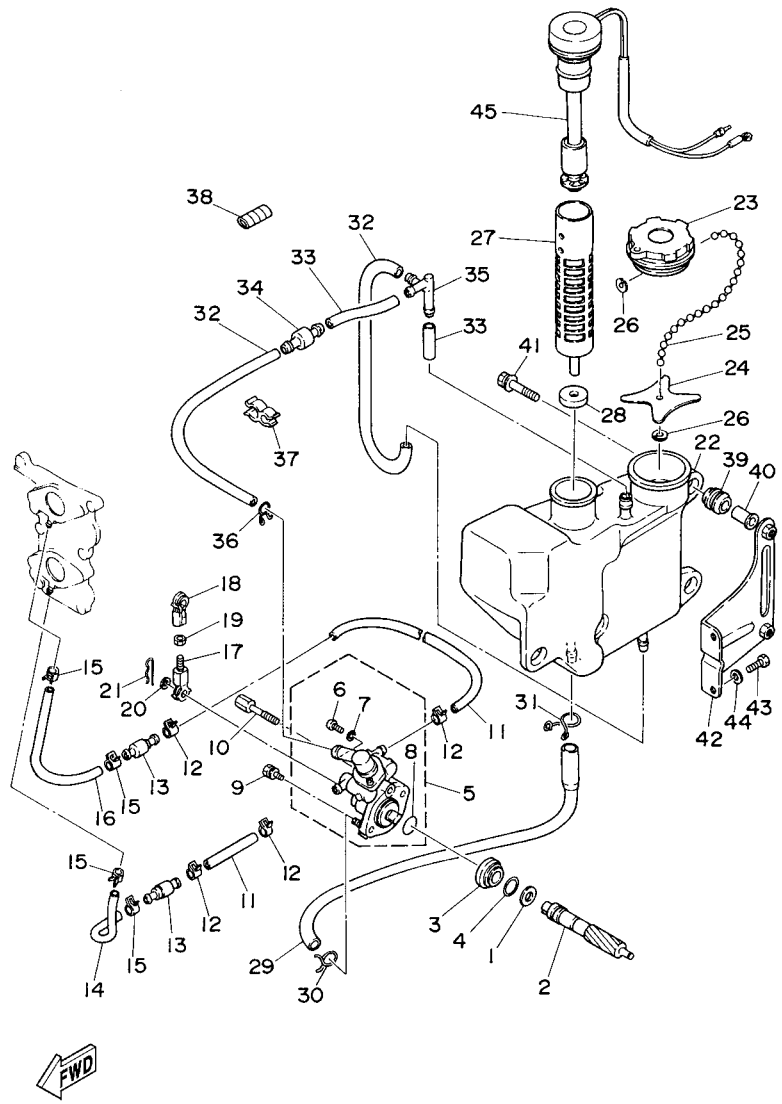


6L20300-4060

## FIG. 7 OIL PUMP — POMPE A HUILE

| REF. NO. | PART NO. N° PIECES | DESCRIPTION DESCRIPTION | 6L2F | | | | | REMARKS REMARQUES |
|---|---|---|---|---|---|---|---|---|
| 1 | 90201–08M93 | WASHER, PLATE<br>RONDELLE, PLATE | 1 | | | | | |
| 2 | 6L2–11537–00 | GEAR, DRIVEN<br>PIGNON SECONDAIRE | 1 | | | | | |
| 3 | 6J8–13117–00 | COLLAR, DISTANCE<br>ENTRETOISE | 1 | | | | | |
| 4 | 93210–13M04 | O-RING<br>JOINT TORIQUE | 1 | | | | | |
| 5 | 6L2–13200–00 | OIL INJECTION PUMP ASSY<br>POMPE A HUILE COMPLET | 1 | | | | | |
| 6 | 6L2–13471–00 | .PLUG, DRAIN<br>.PLOT, VIDANGE | 1 | | | | | |
| 7 | 6L2–13475–00 | .GASKET<br>.JOINT | 1 | | | | | |
| 8 | 93210–19M82 | .O-RING<br>.JOINT TORIQUE | 1 | | | | | |
| 9 | 97513–05518 | BOLT, WITH WASHER<br>VIS HEXAGONAL AVC RONDELLE | 1 | | | | | |
| 10 | 90109–05M33 | BOLT<br>BOULON | 1 | | | | | |
| 11 | 90445–07M32 | HOSE (L120)<br>DURITE (L120) | 2 | | | | | |
| 12 | 90468–07M02 | CLIP<br>JONC | 4 | | | | | |
| 13 | 6E9–13183–70 | VALVE, CHECK<br>CLAPET ANTI RETOUR | 2 | | | | | |
| 14 | 90445–07M04 | HOSE (L50)<br>DURITE (L50) | 1 | | | | | |
| 15 | 90468–07M02 | CLIP<br>JONC | 4 | | | | | |
| 16 | 90445–07M16 | HOSE (L85)<br>DURITE (L85) | 1 | | | | | |
| 17 | 682–41237–50 | JOINT, LINK<br>RACCORD | 1 | | | | | |
| 18 | 6H1–41237–00 | JOINT, LINK<br>RACCORD | 1 | | | | | |
| 19 | 95380–05700 | NUT<br>ECROU | 1 | | | | | |
| 20 | 90202–05088 | WASHER, PLATE<br>RONDELLE, PLATE | 1 | | | | | |
| 21 | 90468–05M03 | CLIP<br>JONC | 1 | | | | | |
| 22 | 6L2–21707–01 | OIL TANK COMP.<br>RESERVOIR A PETROLE COMP. | 1 | | | | | |
| 23 | 6H4–21770–00 | OIL TANK CAP ASSY<br>CABOCHON DE RESERVOIR A HUILE | 1 | | | | | |
| 24 | 6L2–21758–00 | WASHER, SPECIAL 2<br>RONDELLE, SPECIALE 2 | 1 | | | | | |
| 25 | 6H1–24633–00 | CHAIN, BALL<br>CHANE DE BALLE | 1 | | | | | |
| 26 | 6H1–21757–00 | WASHER, SPECIAL 1<br>RONDELLE, SPECIALE 1 | 2 | | | | | |
| 27 | 6J8–13411–00 | STRAINER, OIL<br>FILTRE, HUILE | 1 | | | | | |

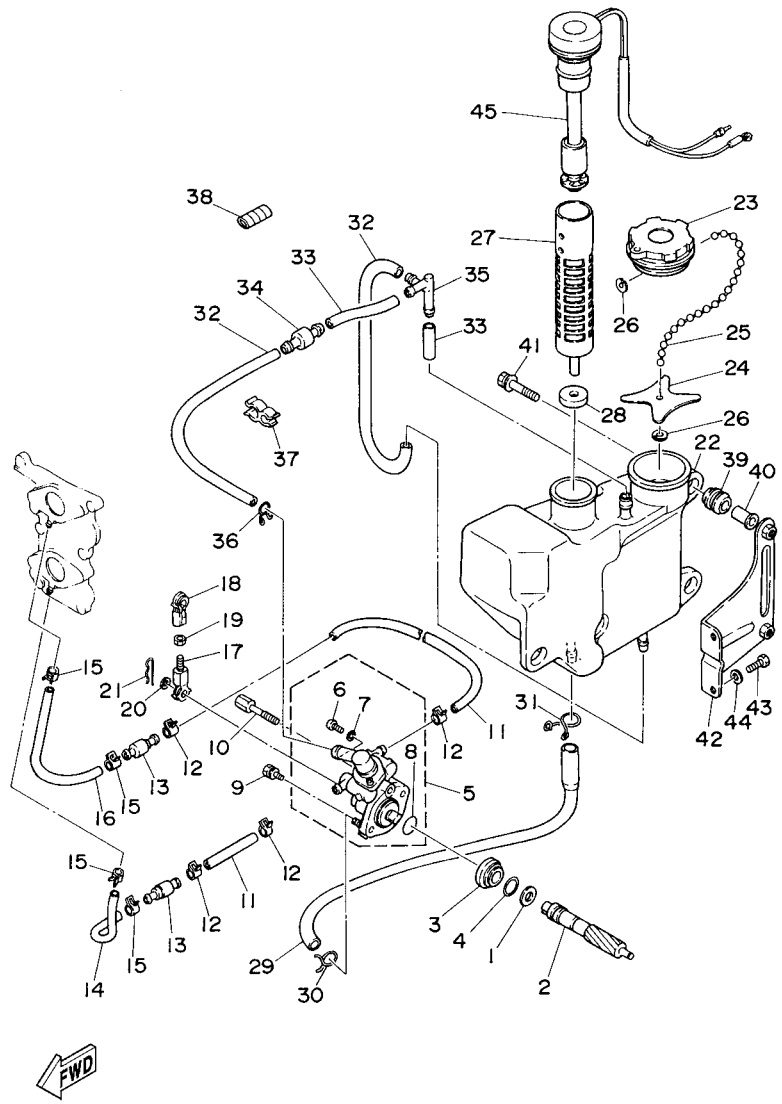


6L20300-4060

## FIG. 7 OIL PUMP — POMPE A HUILE

| REF. NO. | PART NO. N° PIECES | DESCRIPTION DESCRIPTION | 6L2F | | | | | REMARKS REMARQUES |
|---|---|---|---|---|---|---|---|---|
| 28 | 6J8–13414–00 | GASKET, STRAINER COVER<br>JOINT, COUVERCLE DE FILTRE | 1 | | | | | |
| 29 | 6L2–13416–00 | PIPE, OIL 1<br>DURITE A HUILE | 1 | | | | | |
| 30 | 90467–08004 | CLIP<br>JONC | 1 | | | | | |
| 31 | 90467–11M08 | CLIP<br>JONC | 1 | | | | | |
| 32 | 90445–11M03 | HOSE (L330)<br>DURITE (L330) | 2 | | | | | |
| 33 | 90445–11M07 | HOSE (L30)<br>DURITE (L30) | 2 | | | | | |
| 34 | 63D–21744–00 | BREATHER<br>RENIFLARD | 1 | | | | | |
| 35 | 6E5–24376–10 | PIPE, JOINT 1<br>DURITE 1, RACCORDEMENT | 1 | | | | | |
| 36 | 90467–10M04 | CLIP<br>JONC | 1 | | | | | |
| 37 | 90464–11M24 | CLAMP<br>BRIDE | 1 | | | | | |
| 38 | 90446–10M02 | HOSE<br>DURITE | 1 | | | | | |
| 39 | 6A0–82317–00 | DAMPER, IGNITION COIL<br>AMORTISSEUR, BOBINE D'ALLUM | 3 | | | | | |
| 40 | 90387–06119 | COLLAR<br>COLLERETTE | 3 | | | | | |
| 41 | 90119–06M65 | BOLT, WITH WASHER<br>BOULON, AVEC RONDELLE | 3 | | | | | |
| 42 | 6L2–21798–00 | BRACKET, DAMPER<br>SUPPORT, AMORTISSEUR | 1 | | | | | |
| 43 | 97095–06016 | BOLT<br>BOULON | 2 | | | | | |
| 44 | 92995–06600 | WASHER<br>RONDELLE | 2 | | | | | |
| 45 | 6L2–85720–02 | OIL LEVEL GAUGE ASSY<br>JAUGE A HUILE CPLT | 1 | | | | | |

## FIG. 8 FUEL CARBURANT

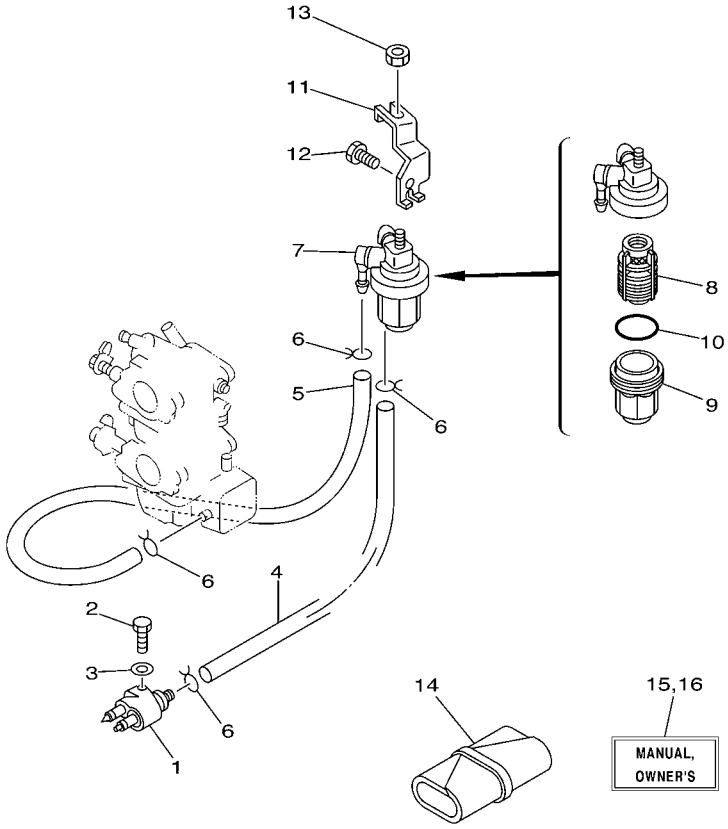


6L22300-3070

| REF. NO. | PART NO. N° PIECES | DESCRIPTION DESCRIPTION | 6L2F | | | | | REMARKS REMARQUES |
|---|---|---|---|---|---|---|---|---|
| 1 | 6G1–24304–02 | FUEL PIPE JOINT COMP. 1<br>DURITE RACCORDEMT. A ESSENCE | 1 | | | | | |
| 2 | 97095–06020 | BOLT<br>BOULON | 1 | | | | | |
| 3 | 92995–06600 | WASHER<br>RONDELLE | 1 | | | | | |
| 4 | 6H4–24311–00 | PIPE, FUEL 1<br>DURITE A ESSENCE | 1 | | | | | |
| 5 | 6L2–24311–00 | PIPE, FUEL 1<br>DURITE A ESSENCE | 1 | | | | | |
| 6 | 90467–08004 | CLIP<br>JONC | 4 | | | | | |
| 7 | 61N–24560–00 | FILTER ASSY<br>ENS FILTRE | 1 | | | | | |
| 8 | 61N–24563–00 | .ELEMENT, FILTER<br>.ELEMENT, FILTRE | 1 | | | | | |
| 9 | 61N–24521–00 | .CUP, FILTER<br>.CUVETTE, FILTRE | 1 | | | | | |
| 10 | 93210–32738 | .O-RING<br>.JOINT TORIQUE | 1 | | | | | |
| 11 | 6L2–24566–00 | BRACKET, FILTER<br>SUPPORT, FILTRE | 1 | | | | | |
| 12 | 97013–06014 | BOLT<br>BOULON | 1 | | | | | |
| 13 | 95380–08600 | NUT<br>ECROU | 1 | | | | | |
| 14 | 656–W2810–02 | TOOL KIT<br>TROUSSE A OUTILS | 1 | | | | | AP<br>AP |
| 15 | 6L3–28199–7G–E0 | MANUAL,OWNER'S<br>MANUEL D'UTILISATION | 1 | | | | | UR (E)<br>UR (E) |
| | 6L3–28199–7G–F0 | MANUAL,OWNER'S<br>MANUEL D'UTILISATION | 1 | | | | | UR (F)<br>UR (F) |
| | 6L3–28199–7G–S0 | MANUAL,OWNER'S<br>MANUEL D'UTILISATION | 1 | | | | | UR (ES)<br>UR (ES) |
| | 6L3–28199–7G–G0 | MANUAL,OWNER'S<br>MANUEL D'UTILISATION | 1 | | | | | UR (D)<br>UR (D) |
| | 6L3–28199–7G–D0 | MANUAL,OWNER'S<br>MANUEL D'UTILISATION | 1 | | | | | UR (NL)<br>UR (NL) |
| | 6L3–28199–7G–H0 | MANUAL,OWNER'S<br>MANUEL D'UTILISATION | 1 | | | | | UR (I)<br>UR (I) |
| 16 | 6L3–28199–8H–K0 | MANUAL,OWNER'S<br>MANUEL D'UTILISATION | 1 | | | | | UR (DK)<br>UR (DK) |
| | 6L3–28199–8H–R0 | MANUAL,OWNER'S<br>MANUEL D'UTILISATION | 1 | | | | | UR (GR)<br>UR (GR) |
| | 6L3–28199–8H–P0 | MANUAL,OWNER'S<br>MANUEL D'UTILISATION | 1 | | | | | UR (P)<br>UR (P) |
| | 6L3–28199–8H–N0 | MANUAL,OWNER'S<br>MANUEL D'UTILISATION | 1 | | | | | UR (N)<br>UR (N) |
| | 6L3–28199–8H–M0 | MANUAL,OWNER'S<br>MANUEL D'UTILISATION | 1 | | | | | UR (S)<br>UR (S) |
| | 6L3–28199–8H–L0 | MANUAL,OWNER'S<br>MANUEL D'UTILISATION | 1 | | | | | UR (SF)<br>UR (SF) |

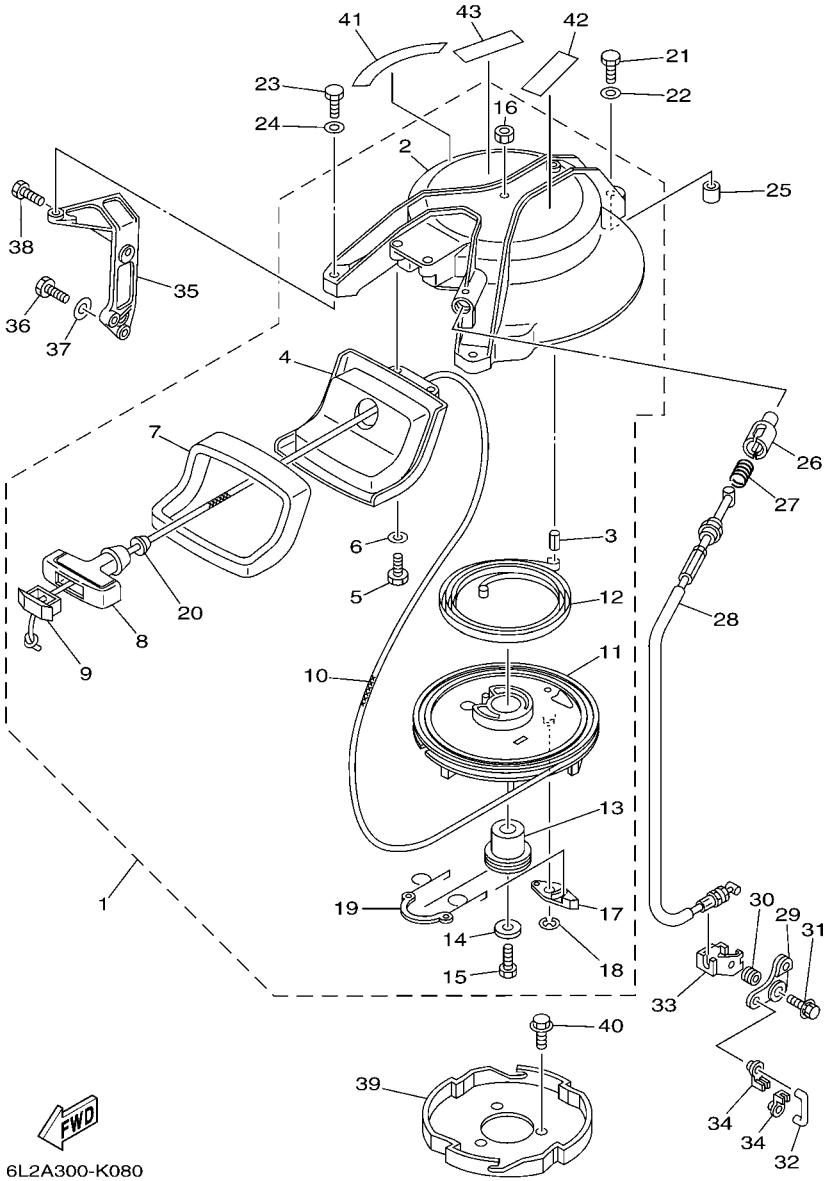


*1:CUT FROM 50M ROLLS,PART NO.90890-44373,CUTTING LENGTH 1.95M

*1:A PRELEVER SUR BOBINE 50M ,REFERENCE 90890-44373,
LONGUEUR DE COUPE 1.95M

## FIG. 9 STARTER DEMARREUR

| REF. NO. | PART NO. N° PIECES | DESCRIPTION DESCRIPTION | 6L2F | | | | | REMARKS REMARQUES |
|---|---|---|---|---|---|---|---|---|
| 1 | 6L2–15710–02 | STARTER ASSY<br>DEMARREUR COMPLET | 1 | | | | | |
| 2 | 6L2–15711–00–94 | .CASE, STARTER<br>.CARTER DE DEMARREUR | 1 | | | | | |
| 3 | 91690–40014 | .PIN, SPRING<br>.AGRAFFE | 1 | | | | | |
| 4 | 6L2–15758–01–94 | .GUIDE, ROPE<br>.GUIDE DE CABLE | 1 | | | | | |
| 5 | 97095–06016 | .BOLT<br>.BOULON | 2 | | | | | |
| 6 | 92995–06600 | .WASHER<br>.RONDELLE | 2 | | | | | |
| 7 | 6L2–15762–00 | .SEAL, RUBBER 2<br>.JOINT CAOUTCHOUC 2 | 1 | | | | | |
| 8 | 689–15755–01 | .HANDLE, STARTER<br>.POIGNEE, DE DEMARREUR | 1 | | | | | |
| 9 | 6F5–15779–02 | .COVER<br>.COUVERCLE | 1 | | | | | |
| 10 | * | .WIRE (L:1,950MM)<br>.FIL (L:1,950MM) | 1 | | | | | *1<br>*1 |
| 11 | 6J8–15714–00 | .DRUM, SHEAVE<br>.TAMBOUR, POULIE | 1 | | | | | |
| 12 | 90510–08M04 | .SPRING, SPIRAL<br>.RESSORT, HELICOIDAL | 1 | | | | | |
| 13 | 677–15717–01 | .SHAFT, STARTER<br>.AXE DE DEMARREUR | 1 | | | | | |
| 14 | 90201–06060 | .WASHER, PLATE<br>.RONDELLE, PLATE | 1 | | | | | |
| 15 | 97013–06025 | .BOLT<br>.BOULON | 1 | | | | | |
| 16 | 95303–06700 | .NUT<br>.ECROU | 1 | | | | | |
| 17 | 676–15741–03 | .PAWL, DRIVE<br>.CLIQUET, ENTRAINEMENT | 1 | | | | | |
| 18 | 93430–06M02 | .CIRCLIP<br>.CLIPS | 1 | | | | | |
| 19 | 6J8–15705–00 | .SPRING, DRIVE PAWL<br>.RESSORT DE CLIQUET | 1 | | | | | |
| 20 | 6A0–15789–00 | .DAMPER<br>.AMORTISSEUR | 1 | | | | | |
| 21 | 97095–06035 | BOLT<br>BOULON | 1 | | | | | |
| 22 | 92995–06600 | WASHER<br>RONDELLE | 1 | | | | | |
| 23 | 97095–06025 | BOLT<br>BOULON | 2 | | | | | |
| 24 | 92995–06600 | WASHER<br>RONDELLE | 2 | | | | | |
| 25 | 99530–10014 | PIN, DOWEL<br>GOUJON, D'ASSEMBLAGE | 1 | | | | | |
| 26 | 656–15748–00 | PLUNGER, STARTER STOP<br>PLONGEUR, BOUTE DE DEMAR | 1 | | | | | |
| 27 | 90501–10227 | SPRING, COMPRESSION<br>RESSORT, COMPRESSION | 1 | | | | | |

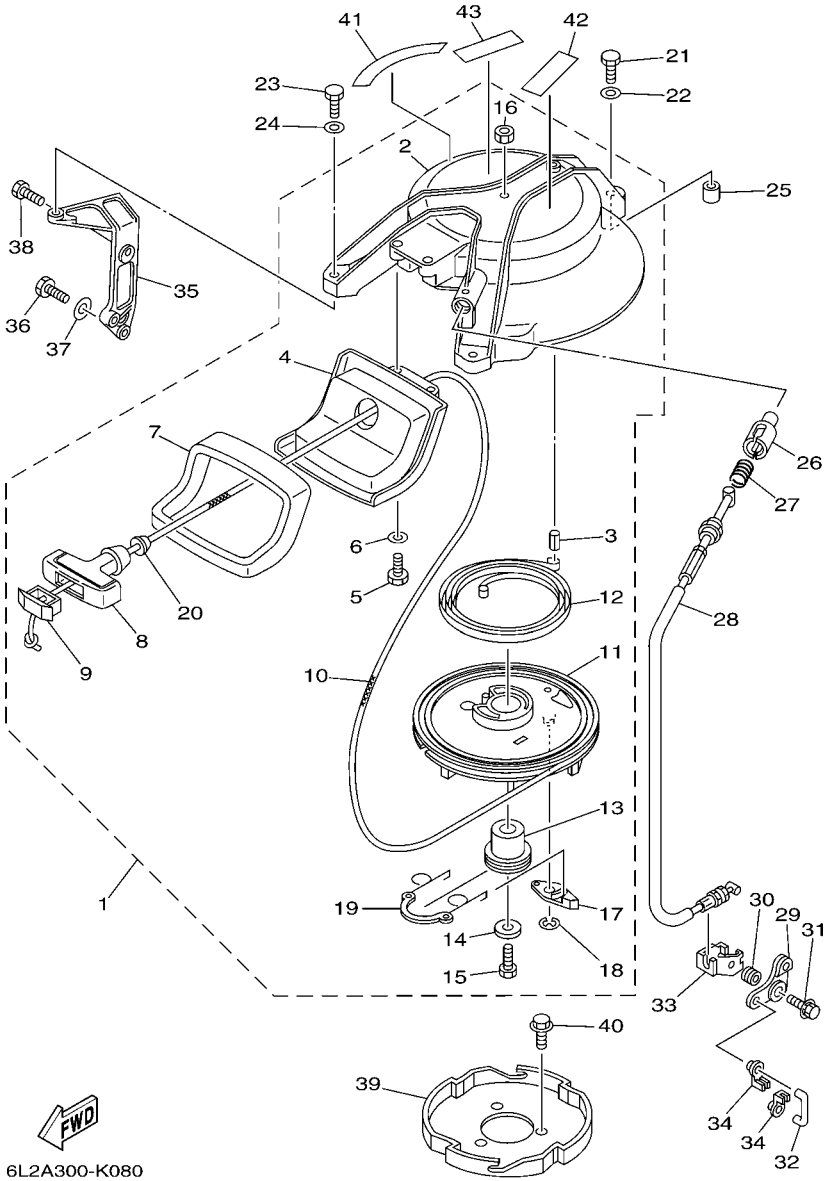


*1:CUT FROM 50M ROLLS,PART NO.90890-44373,CUTTING LENGTH 1.95M

*1:A PRELEVER SUR BOBINE 50M ,REFERENCE 90890-44373,
LONGUEUR DE COUPE 1.95M

## FIG. 9 STARTER DEMARREUR

| REF. NO. | PART NO. N° PIECES | DESCRIPTION DESCRIPTION | 6L2F | | | | | REMARKS REMARQUES |
|---|---|---|---|---|---|---|---|---|
| 28 | 6L2–15770–00 | CABLE COMP., STARTER STOP<br>CABLE, BUTEE DE DEMAR | 1 | | | | | |
| 29 | 6L2–15746–00 | ARM<br>BRAS | 1 | | | | | |
| 30 | 90387–06M51 | COLLAR<br>COLLERETTE | 1 | | | | | |
| 31 | 90119–06M53 | BOLT, WITH WASHER<br>BOULON, AVEC RONDELLE | 1 | | | | | |
| 32 | 6L2–15747–00 | LINK<br>BIELLETTE | 1 | | | | | |
| 33 | 6L2–15774–00 | STAY 4<br>SUPPORT 4 | 1 | | | | | |
| 34 | 661–41262–02 | JOINT, CHOKE LEVER<br>RACCORD, LEVIER DE STARTER | 2 | | | | | |
| 35 | 6L2–15772–00–94 | STAY 2<br>SUPPORT 2 | 1 | | | | | |
| 36 | 97013–06020 | BOLT<br>BOULON | 1 | | | | | |
| 37 | 92903–06600 | WASHER, PLATE<br>RONDELLE, PLATE | 1 | | | | | |
| 38 | 97095–06020 | BOLT<br>BOULON | 1 | | | | | |
| 39 | 6L2–15723–01 | PULLEY, STARTER<br>POULIE DE DEMARREUR | 1 | | | | | |
| 40 | 90105–08M10 | BOLT, FLANGE<br>BOULON | 3 | | | | | |
| 41 | 6L2–13437–21 | MARK, CAUTION<br>MAKER | 1 | | | | | |
| 42 | 6EE–81995–40 | LABEL, WARNING<br>ETIQUETTE, AVERTISSEMENT | 1 | | | | | |
| 43 | 6EE–81995–50 | LABEL, WARNING<br>ETIQUETTE, AVERTISSEMENT | 1 | | | | | |

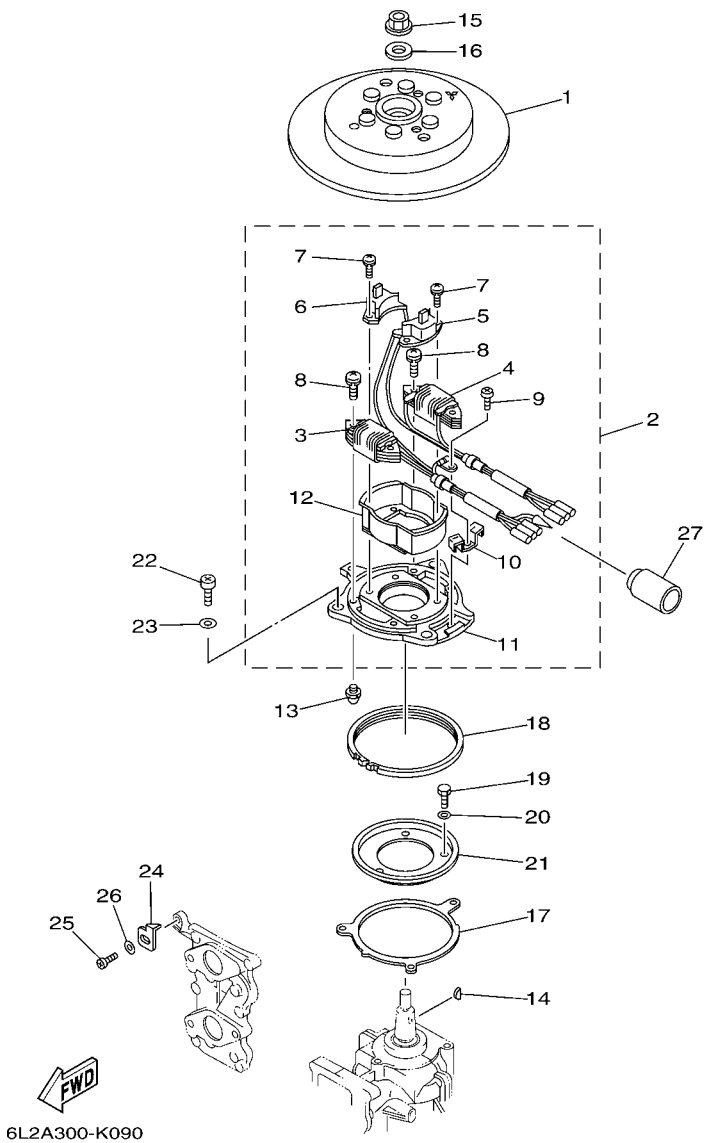


## FIG. 10 GENERATOR GENERATRICE

| REF. NO. | PART NO. N° PIECES | DESCRIPTION DESCRIPTION | 6L2F | | | | | REMARKS REMARQUES |
|---|---|---|---|---|---|---|---|---|
| 1 | 6L2–85550–00 | ROTOR ASSY<br>ROTOR CPLT | 1 | | | | | |
| 2 | 6L2–85560–10 | BASE ASSY<br>ENS. FLASQUE | 1 | | | | | |
| 3 | 6L2–85520–12 | .COIL, CHARGE<br>.BOBINE, CHARGE | 1 | | | | | |
| 4 | 6L2–85533–10 | .COIL, LIGHTING<br>.BOBINE, ECLAIRAGE | 1 | | | | | |
| 5 | 6L2–85580–10 | .COIL, PULSER<br>.BOBINE, PULSEUR | 1 | | | | | |
| 6 | 6L2–85580–20 | .COIL, PULSER<br>.BOBINE, PULSEUR | 1 | | | | | |
| 7 | 97607–04110 | .SCREW, WITH WASHER<br>.VIS HEXAGONAL | 4 | | | | | |
| 8 | 97607–06125 | .SCREW, WITH WASHER<br>.VIS HEXAGONAL | 4 | | | | | |
| 9 | 97802–04006 | .SCREW, PAN HEAD<br>.VIS | 1 | | | | | |
| 10 | 6E9–81328–70 | .CLAMP<br>.COLLIER | 1 | | | | | |
| 11 | 6L2–85561–10 | .BASE, MAGNETO<br>.BASE, MAGNETO | 1 | | | | | |
| 12 | 61N–85537–00 | .COVER<br>.COUVERCLE | 1 | | | | | |
| 13 | 663–85518–00 | JOINT, BALL<br>JOINT SPHERIQUE | 1 | | | | | |
| 14 | 90280–05013 | KEY, WOODRUFF<br>CLAVETTE, DEMI-LUNE | 1 | | | | | |
| 15 | 90179–12M04 | NUT<br>ECROU | 1 | | | | | |
| 16 | 90201–13M42 | WASHER, PLATE<br>RONDELLE, PLATE | 1 | | | | | |
| 17 | 6G1–41611–00 | RETAINER, MAGNETO BASE<br>FLASQUE, PLATEAU D'AVANCE | 1 | | | | | |
| 18 | 695–41613–00 | PLATE, BASE FRICTION<br>PLAQUE, FRICTION DE BASE | 1 | | | | | |
| 19 | 97095–06012 | BOLT<br>BOULON | 3 | | | | | |
| 20 | 92995–06600 | WASHER<br>RONDELLE | 3 | | | | | |
| 21 | 6G1–41612–00 | RETAINER, MAGNETO BASE<br>FLASQUE, PLATEAU D'AVANCE | 1 | | | | | |
| 22 | 97885–05010 | SCREW, PAN HEAD<br>VIS, A ENCOCHE | 3 | | | | | |
| 23 | 92995–05600 | WASHER<br>RONDELLE | 3 | | | | | |
| 24 | 6L2–81332–00 | PLATE, TIMING<br>PLATEAU, ALLUMAGE | 1 | | | | | |
| 25 | 97885–05010 | SCREW, PAN HEAD<br>VIS, A ENCOCHE | 1 | | | | | |
| 26 | 92995–05600 | WASHER<br>RONDELLE | 1 | | | | | |
| 27 | 6L2–82599–01 | COVER, CONNECTER<br>COUVERCLE, CONNECTEUR | 1 | | | | | |

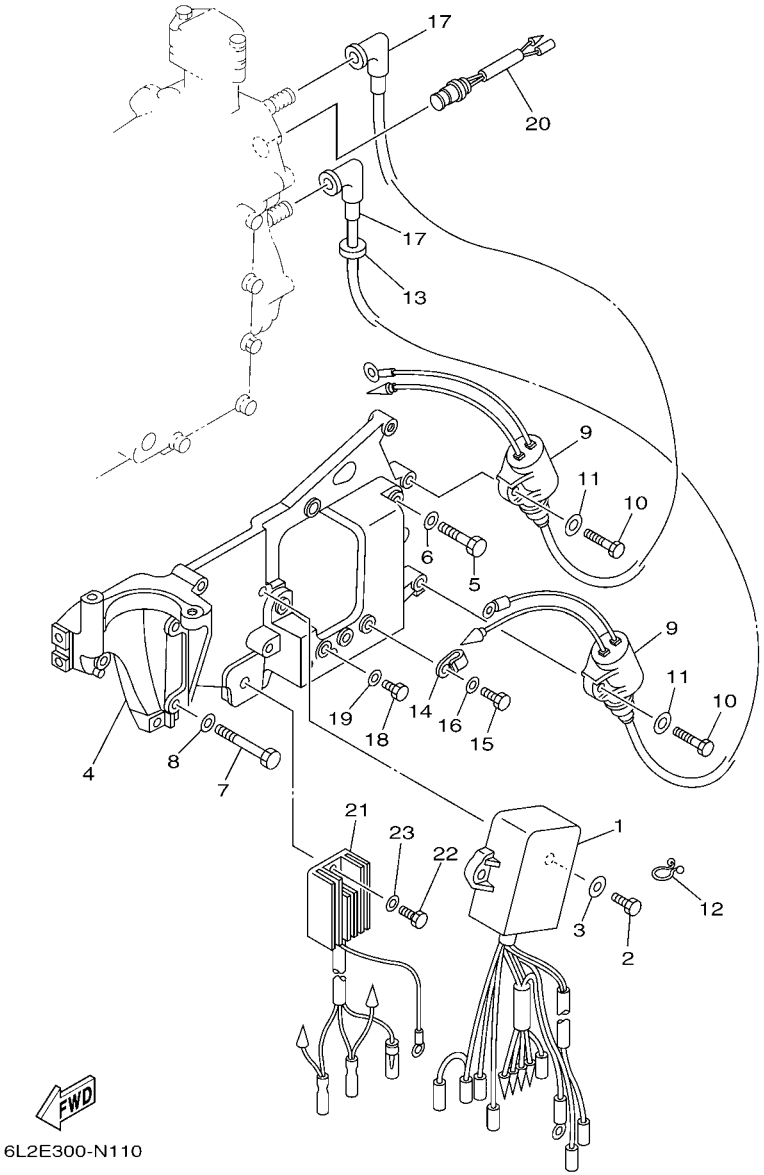


## FIG. 11 ELECTRICAL ELECTRIQUE

| REF. NO. | PART NO. N° PIECES | DESCRIPTION DESCRIPTION | 6L2F | | | | | REMARKS REMARQUES |
|---|---|---|---|---|---|---|---|---|
| 1 | 6L2–85540–23 | C.D.I. UNIT ASSY<br>BLOC C.D.I. | 1 | | | | | |
| 2 | 97095–06020 | BOLT<br>BOULON | 2 | | | | | |
| 3 | 92995–06600 | WASHER<br>RONDELLE | 2 | | | | | |
| 4 | 6L2–85542–02 | BRACKET<br>SUPPORT | 1 | | | | | |
| 5 | 97075–06030 | BOLT<br>BOULON | 3 | | | | | |
| 6 | 92995–06600 | WASHER<br>RONDELLE | 3 | | | | | |
| 7 | 90101–06M16 | BOLT<br>BOULON | 2 | | | | | |
| 8 | 92903–06600 | WASHER, PLATE<br>RONDELLE, PLATE | 2 | | | | | |
| 9 | 61N–85570–00 | IGNITION COIL ASSY<br>BOBINE D'ALLUMAGE (ENS.) | 2 | | | | | |
| 10 | 97095–06020 | BOLT<br>BOULON | 2 | | | | | |
| 11 | 92995–06600 | WASHER<br>RONDELLE | 2 | | | | | |
| 12 | 90464–08M07 | CLAMP<br>BRIDE | 1 | | | | | O/I<br>O/I |
| 13 | 90480–25161 | GROMMET<br>PASSE-FIL | 1 | | | | | |
| 14 | 90465–06M86 | CLAMP<br>BRIDE | 1 | | | | | O/I<br>O/I |
| 15 | 97095–06012 | BOLT<br>BOULON | 1 | | | | | |
| 16 | 92995–06600 | WASHER<br>RONDELLE | 1 | | | | | |
| 17 | 6G1–82370–21 | PLUG CAP ASSY<br>ANTIPARASITE | 2 | | | | | |
| 18 | 97095–06012 | BOLT<br>BOULON | 2 | | | | | |
| 19 | 92995–06600 | WASHER<br>RONDELLE | 2 | | | | | |
| 20 | 689–82560–00 | THERMO SWITCH ASSY<br>THERMO-CONTACT COMPLET | 1 | | | | | O/I<br>O/I |
| 21 | 6J8–81960–00 | RECTIFIER & REGULATOR ASSY<br>REDRESSEUR REGULATEUR CPLT | 1 | | | | | |
| 22 | 97095–06016 | BOLT<br>BOULON | 1 | | | | | |
| 23 | 92995–06600 | WASHER<br>RONDELLE | 1 | | | | | |

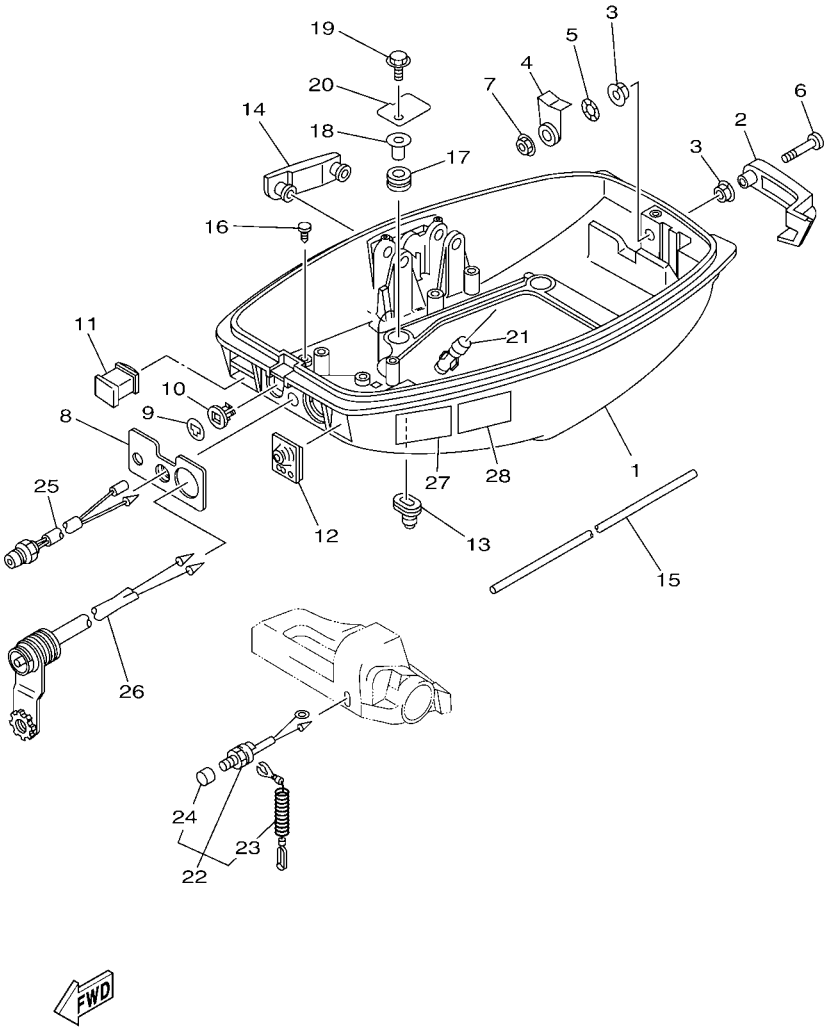


6L2B300-L110

## FIG. 12 BOTTOM COWLING CAPOT INFERIEUR

| REF. NO. | PART NO. N° PIECES | DESCRIPTION DESCRIPTION | 6L2F | | | | | REMARKS REMARQUES |
|---|---|---|---|---|---|---|---|---|
| 1 | 6L2–42711–03–4D | COWLING, BOTTOM 1<br>CUVETTE 1 | 1 | | | | | |
| 2 | 6L2–42815–01–4D | LEVER, CLAMP<br>LEVIER, PRESSE | 1 | | | | | |
| 3 | 90386–12M45 | BUSH<br>DOUILLE | 2 | | | | | |
| 4 | 6L2–42816–00 | LEVER, CLAMP<br>LEVIER, PRESSE | 1 | | | | | |
| 5 | 90206–12052 | WASHER, WAVE<br>RONDELLE, ONDULEE | 1 | | | | | |
| 6 | 97880–06035 | SCREW, PAN HEAD<br>VIS, TETE TRONCONIQUE | 1 | | | | | |
| 7 | 95780–06300 | NUT, FLANGE<br>ECROU | 1 | | | | | |
| 8 | 6L2–42719–A0 | PANEL, FRONT LOWER<br>PANNEAU, AVANT INFERIEUR | 1 | | | | | |
| 9 | 689–41273–00 | GROMMET<br>PASSE-FIL | 1 | | | | | |
| 10 | 6J8–41274–00 | GROMMET 2<br>PASSE-FIL 2 | 1 | | | | | |
| 11 | 6L2–42725–00 | GROMMET<br>PASSE-FIL | 1 | | | | | |
| 12 | 6L2–42726–01 | GROMMET<br>PASSE-FIL | 1 | | | | | |
| 13 | 6G1–42727–00 | GROMMET<br>PASSE-FIL | 1 | | | | | |
| 14 | 6L2–42748–01 | GROMMET<br>PASSE-FIL | 1 | | | | | |
| 15 | 6L2–42716–00 | RUBBER, SEAL 1<br>JOINT EN CAOUTCHOUC 1 | 1 | | | | | |
| 16 | 90338–05M03 | PLUG<br>PLOT | 2 | | | | | |
| 17 | 90480–15M31 | GROMMET<br>PASSE-FIL | 4 | | | | | |
| 18 | 90387–06M52 | COLLAR<br>COLLERETTE | 4 | | | | | |
| 19 | 95895–06020 | BOLT, FLANGE<br>BOULON | 4 | | | | | |
| 20 | 6L2–42738–01 | PLATE, FITTING<br>ETRIER | 2 | | | | | |
| 21 | 6BL–44391–00 | NIPPLE, HOSE<br>RACCORD D'ESSENCE | 1 | | | | | |
| 22 | 6L2–82575–00 | ENGINE STOP SWITCH ASSY<br>COUPE CIRCUIT CPLT | 1 | | | | | |
| 23 | 682–82556–00 | .LANYARD, STOP SWITCH<br>.CORDON DU COUPE CIRCUIT | 1 | | | | | |
| 24 | 689–8257Y–00 | .CAP<br>.COUVERCLE | 1 | | | | | |
| 25 | 6J8–85410–00 | EMERGENCY SIGNAL LIGHT ASSY<br>FEU DE DETRESSE | 1 | | | | | O/I<br>O/I |
| 26 | 682–84381–00 | 2P CONCENT<br>RALLONGE 2 FILS | 1 | | | | | |
| 27 | 6EE–42794–40 | LABEL, WARNING (GENERAL)<br>ETIQUETTE, AVERTISSEMENT | 1 | | | | | |

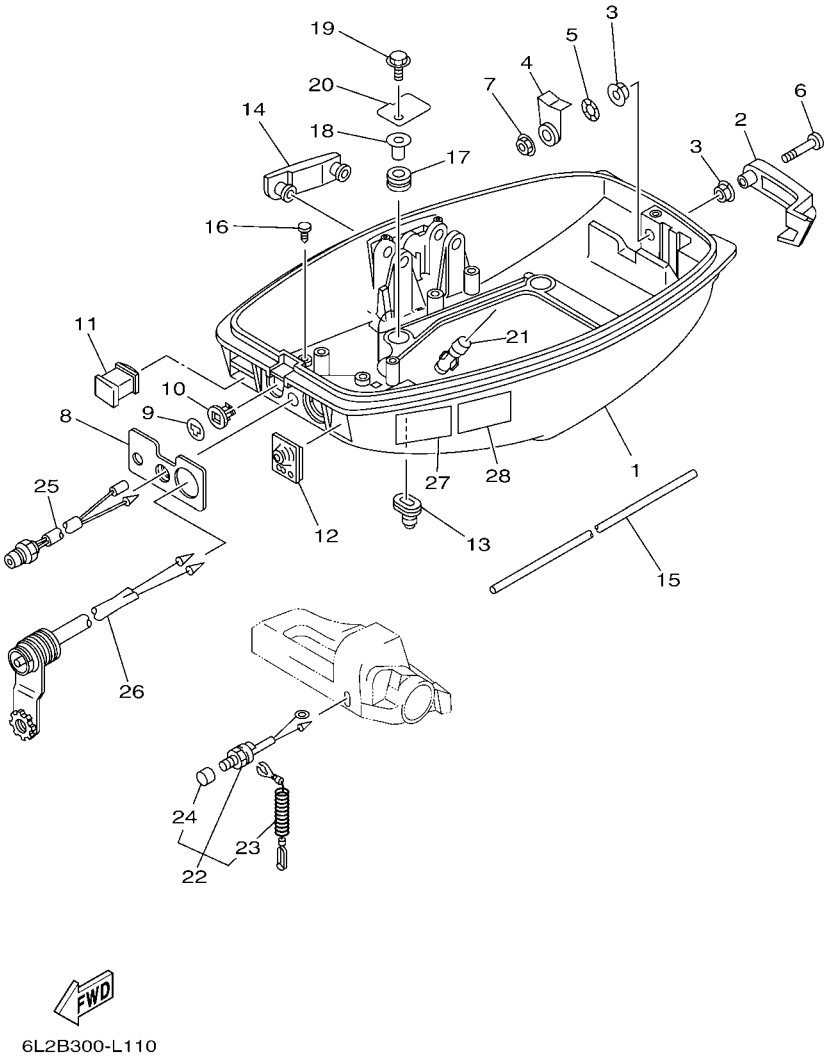


## FIG. 12 BOTTOM COWLING CAPOT INFERIEUR

| REF. NO. | PART NO. N° PIECES | DESCRIPTION DESCRIPTION | 6L2F | | | | | REMARKS REMARQUES |
|---|---|---|---|---|---|---|---|---|
| 28 | 6EE–42794–50 | LABEL, WARNING (GENERAL) ETIQUETTE, AVERTISSEMENT | 1 | | | | | |

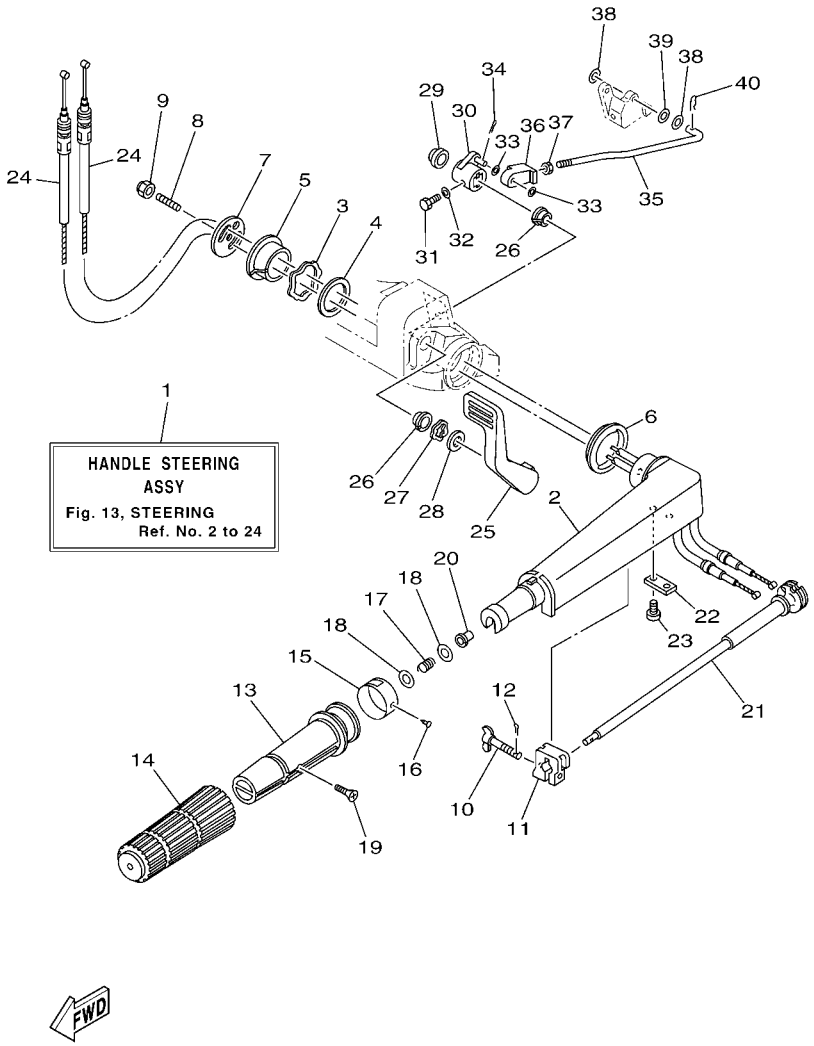


## FIG. 13 STEERING DIRECTION

| REF. NO. | PART NO. N° PIECES | DESCRIPTION DESCRIPTION | 6L2F | | | | | REMARKS REMARQUES |
|---|---|---|---|---|---|---|---|---|
| 1 | 6L2–W0084–11–4D | HANDLE STEERING ASSY<br>BARRE FRANCHE (ENS.) | 1 | | | | | |
| 2 | 6G1–42111–12–4D | HANDLE, STEERING<br>POIGNEE | 1 | | | | | |
| 3 | 90206–36M21 | WASHER, WAVE<br>RONDELLE, ONDULEE | 1 | | | | | |
| 4 | 90202–36M55 | WASHER, PLATE<br>RONDELLE, PLATE | 1 | | | | | |
| 5 | 90386–33M96 | BUSH<br>DOUILLE | 1 | | | | | |
| 6 | 90386–34M97 | BUSH<br>DOUILLE | 1 | | | | | |
| 7 | 6G1–42131–02 | COVER, HANDLE STEERING<br>COUVERCLE | 1 | | | | | |
| 8 | 90116–08016 | BOLT, STUD<br>GOUJON | 1 | | | | | |
| 9 | 90185–08057 | NUT, SELF-LOCKING<br>ECROU,AUTO-BLOQUANT | 1 | | | | | |
| 10 | 6G1–42125–01 | BOLT, FRICTION ADJUSTING<br>BOULON | 1 | | | | | |
| 11 | 6G1–42126–00 | FRICTION, STEERING HANDLE GRIP<br>CUVETTE, POIGNEE DE DIRECTION | 1 | | | | | |
| 12 | 91490–16010 | PIN. COTTER<br>GOUPILLE | 1 | | | | | |
| 13 | 664–42119–00 | GRIP, STEERING HANDLE<br>POIGNEE, BARRE FRANCHE | 1 | | | | | |
| 14 | 6G1–42177–00 | RUBBER, HANDLE<br>CAOUTCHOUC, POIGNEE | 1 | | | | | |
| 15 | 6L2–42137–00 | INDICATOR, THROTTLE<br>INDICATEUR, ACCELERATION | 1 | | | | | |
| 16 | 90269–02M09 | RIVET<br>RIVET | 1 | | | | | |
| 17 | 90501–23215 | SPRING, COMPRESSION<br>RESSORT, COMPRESSION | 1 | | | | | |
| 18 | 90201–10M02 | WASHER, PLATE<br>RONDELLE, PLATE | 2 | | | | | |
| 19 | 90152–05011 | SCREW, COUNTERSUNK<br>VIS, TETE NOYEE | 1 | | | | | |
| 20 | 90386–08032 | BUSH<br>DOUILLE | 1 | | | | | |
| 21 | 6G1–42138–01 | LEVER, THROTTLE<br>LEVIER, ACCELERATEUR | 1 | | | | | |
| 22 | 6E0–42159–02 | STAY<br>SUPPORT | 1 | | | | | |
| 23 | 97885–05012 | SCREW, PAN HEAD<br>VIS, A ENCOCHE | 2 | | | | | |
| 24 | 6L2–26301–01 | THROTTLE CABLE ASSY<br>CABLE D'ACCELERATEUR | 2 | | | | | |
| 25 | 6L2–44111–01–94 | HANDLE, GEAR SHIFT<br>POIGNEE, LEVIER D'EMBRAYAGE | 1 | | | | | |
| 26 | 90386–15M73 | BUSH<br>DOUILLE | 2 | | | | | |
| 27 | 90206–15M18 | WASHER, WAVE<br>RONDELLE, ONDULEE | 1 | | | | | |

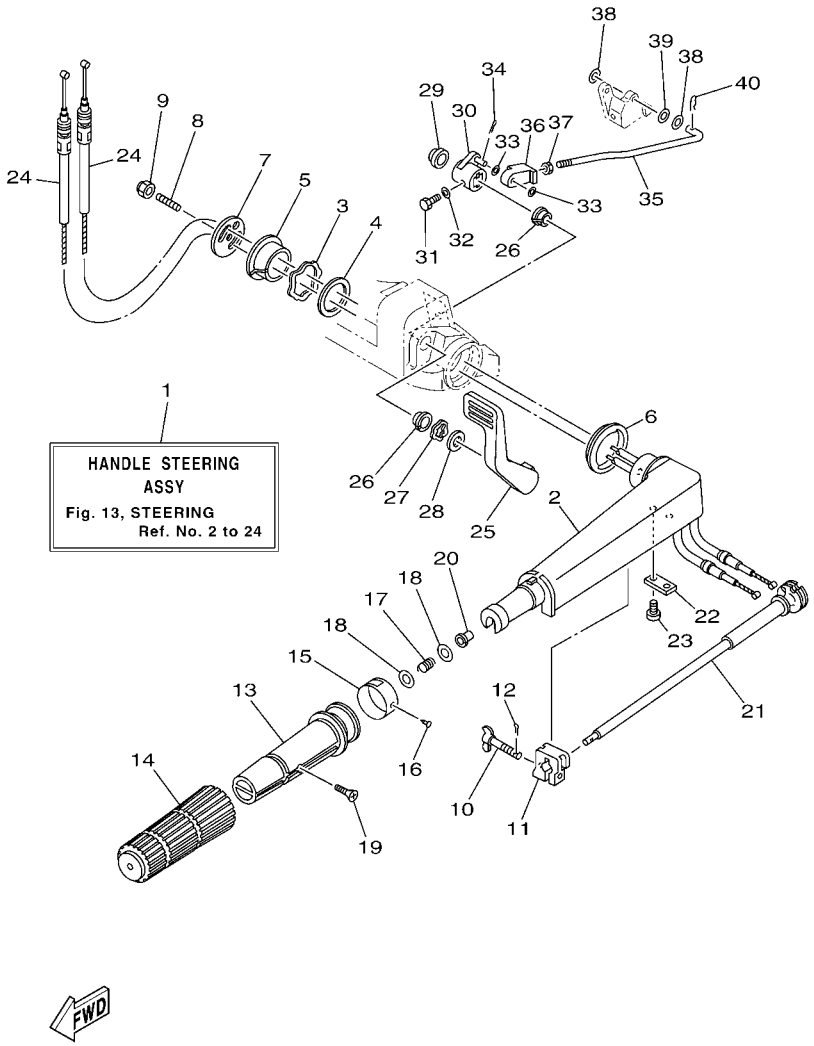


## FIG. 13 STEERING DIRECTION

| REF. NO. | PART NO. N° PIECES | DESCRIPTION DESCRIPTION | 6L2F | | | | | REMARKS REMARQUES |
|---|---|---|---|---|---|---|---|---|
| 28 | 90202–15M37 | WASHER, PLATE<br>RONDELLE, PLATE | 1 | | | | | |
| 29 | 90386–12M72 | BUSH<br>DOUILLE | 1 | | | | | |
| 30 | 6L2–44125–00–94 | LEVER, SHIFT ROD<br>LEVIER, TIGE D'INVERSION | 1 | | | | | |
| 31 | 97095–06020 | BOLT<br>BOULON | 1 | | | | | |
| 32 | 92995–06600 | WASHER<br>RONDELLE | 1 | | | | | |
| 33 | 90202–06009 | WASHER, PLATE<br>RONDELLE, PLATE | 2 | | | | | |
| 34 | 91490–20010 | PIN. COTTER<br>GOUPILLE | 1 | | | | | |
| 35 | 6L2–44124–00 | LINK, SHIFT ROD<br>BIELLETTE | 1 | | | | | |
| 36 | 6L2–26363–00 | END, CABLE<br>EMBOUT DE CABLE | 1 | | | | | |
| 37 | 95380–06700 | NUT<br>ECROU | 1 | | | | | |
| 38 | 90202–05088 | WASHER, PLATE<br>RONDELLE, PLATE | 2 | | | | | |
| 39 | 90202–05M38 | WASHER, PLATE<br>RONDELLE, PLATE | 1 | | | | | |
| 40 | 90468–05M03 | CLIP<br>JONC | 1 | | | | | |

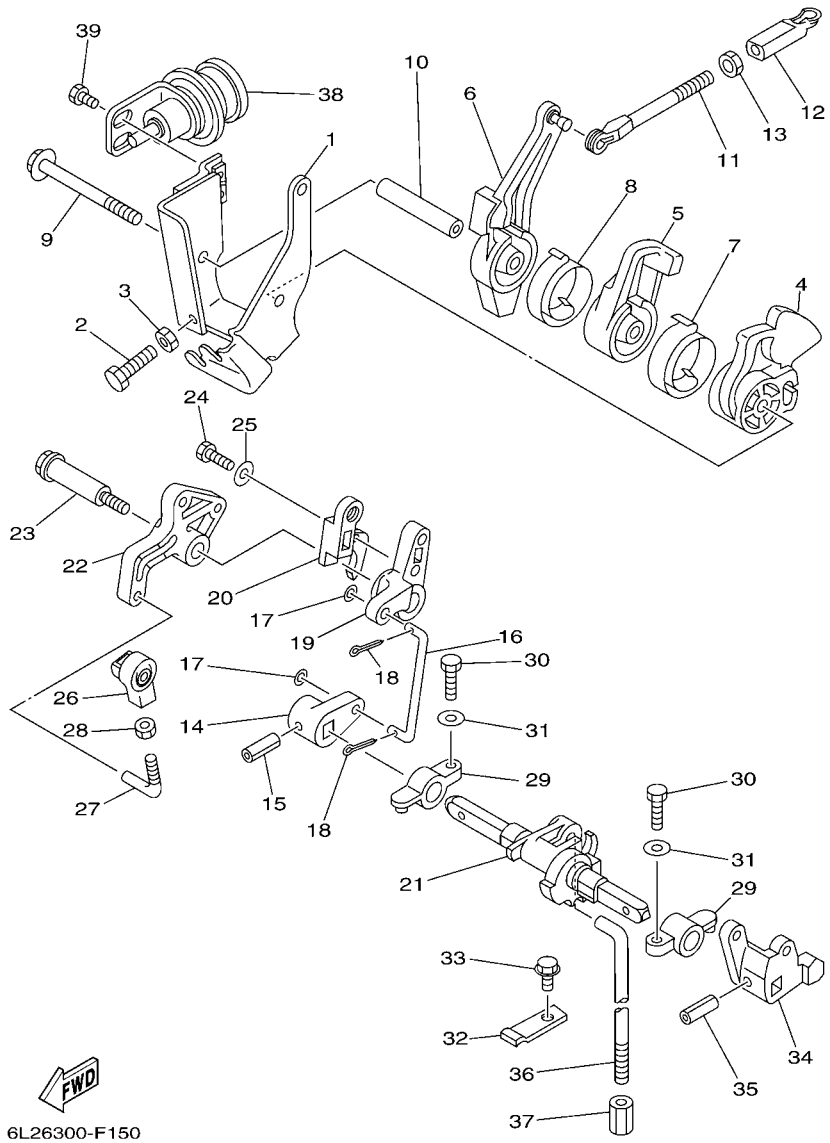


## FIG. 14 CONTROL COMMANDE

| REF. NO. | PART NO. N° PIECES | DESCRIPTION DESCRIPTION | 6L2F | | | | | REMARKS REMARQUES |
|---|---|---|---|---|---|---|---|---|
| 1 | 6L2–14497–00 | STAY, THROTTLE WIRE<br>SUPPORT DE BOISSEAU | 1 | | | | | |
| 2 | 97095–06020 | BOLT<br>BOULON | 1 | | | | | |
| 3 | 95380–06700 | NUT<br>ECROU | 1 | | | | | |
| 4 | 6L2–41213–00 | CAM, ACCEL.<br>CAME, ACCELERATION | 1 | | | | | |
| 5 | 6L2–41283–00 | LEVER, FREE ACCEL.<br>LEVIER | 1 | | | | | |
| 6 | 6L2–41631–00 | LEVER, MAGNETO CONTROL<br>LEVIER, COMMANDE D'AVANCE | 1 | | | | | |
| 7 | 6J8–42167–00 | SPRING 1<br>RESSORT1 | 1 | | | | | |
| 8 | 6L2–42167–00 | SPRING 1<br>RESSORT1 | 1 | | | | | |
| 9 | 97595–06575 | BOLT, WITH WASHER<br>VIS HEXAGONAL AVC RONDELLE | 1 | | | | | |
| 10 | 90387–06M18 | COLLAR<br>COLLERETTE | 1 | | | | | |
| 11 | 689–42169–01 | JOINT<br>AXE | 1 | | | | | |
| 12 | 662–41237–01 | JOINT, LINK<br>RACCORD | 1 | | | | | |
| 13 | 95380–05600 | NUT<br>ECROU | 1 | | | | | |
| 14 | 6L2–44122–00 | BUSHING, SHIFT ROD LEVER<br>DOUILLE, LEVIER D'EMBRAYAGE | 1 | | | | | |
| 15 | 90254–03M04 | PIN, SPRING<br>RIVET, TETE TRONCONIQUE | 1 | | | | | |
| 16 | 6L2–42192–00 | ROD 2<br>TRINGLE 2 | 1 | | | | | |
| 17 | 90202–05088 | WASHER, PLATE<br>RONDELLE, PLATE | 2 | | | | | |
| 18 | 91490–20010 | PIN. COTTER<br>GOUPILLE | 2 | | | | | |
| 19 | 6L2–44141–02 | LINK, SHIFT ROD<br>BIELLETTE | 1 | | | | | |
| 20 | 6L2–44141–10–94 | LINK, SHIFT ROD<br>BIELLETTE | 1 | | | | | |
| 21 | 6L2–44121–00 | LEVER, SHIFT ROD<br>LEVIER, TIGE D'INVERSION | 1 | | | | | |
| 22 | 6L2–41212–00 | ARM, ACCEL.<br>BRAS | 1 | | | | | |
| 23 | 90109–06M28 | BOLT<br>BOULON | 1 | | | | | |
| 24 | 97013–05016 | BOLT<br>BOULON | 1 | | | | | |
| 25 | 92903–05600 | WASHER, PLATE<br>RONDELLE, PLATE | 1 | | | | | |
| 26 | 6L2–41237–00 | JOINT, LINK<br>RACCORD | 1 | | | | | |
| 27 | 6L2–41238–00 | JOINT, LINK<br>RACCORD | 1 | | | | | |

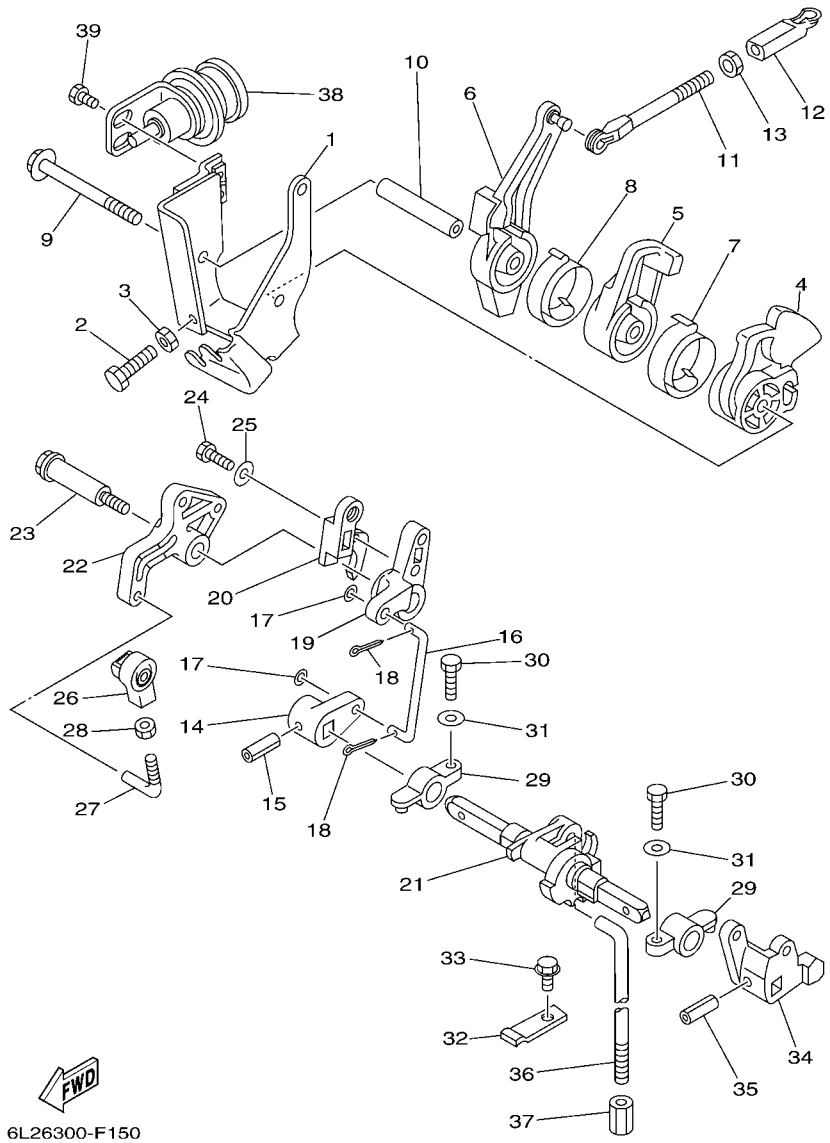


## FIG. 14 CONTROL COMMANDE

| REF. NO. | PART NO. N° PIECES | DESCRIPTION DESCRIPTION | 6L2F | | | | | REMARKS REMARQUES |
|---|---|---|---|---|---|---|---|---|
| 28 | 95380–05700 | NUT<br>ECROU | 1 | | | | | |
| 29 | 6G1–41662–01–94 | BRACKET 2<br>SUPPORT 2 | 2 | | | | | |
| 30 | 97013–06020 | BOLT<br>BOULON | 2 | | | | | |
| 31 | 92903–06600 | WASHER, PLATE<br>RONDELLE, PLATE | 2 | | | | | |
| 32 | 6J8–44116–00 | SPRING<br>RESSORT | 1 | | | | | |
| 33 | 95895–06012 | BOLT, FLANGE<br>BOULON | 1 | | | | | |
| 34 | 6L2–44123–00 | ARM, SHIFT ROD<br>BRAS, TIGE D'INVERSION | 1 | | | | | |
| 35 | 90254–03M04 | PIN, SPRING<br>RIVET, TETE TRONCONIQUE | 1 | | | | | |
| 36 | 6L2–44143–00 | ROD, SHIFT<br>TIGE D'EMBRAYAGE | 1 | | | | | |
| 37 | 90170–06015 | NUT<br>ECROU | 1 | | | | | |
| 38 | 6L2–14368–00 | DIAPHRAGM ASSY 1<br>DIAPHRAGME 1 | 1 | | | | | |
| 39 | 97095–06008 | BOLT<br>BOULON | 2 | | | | | |

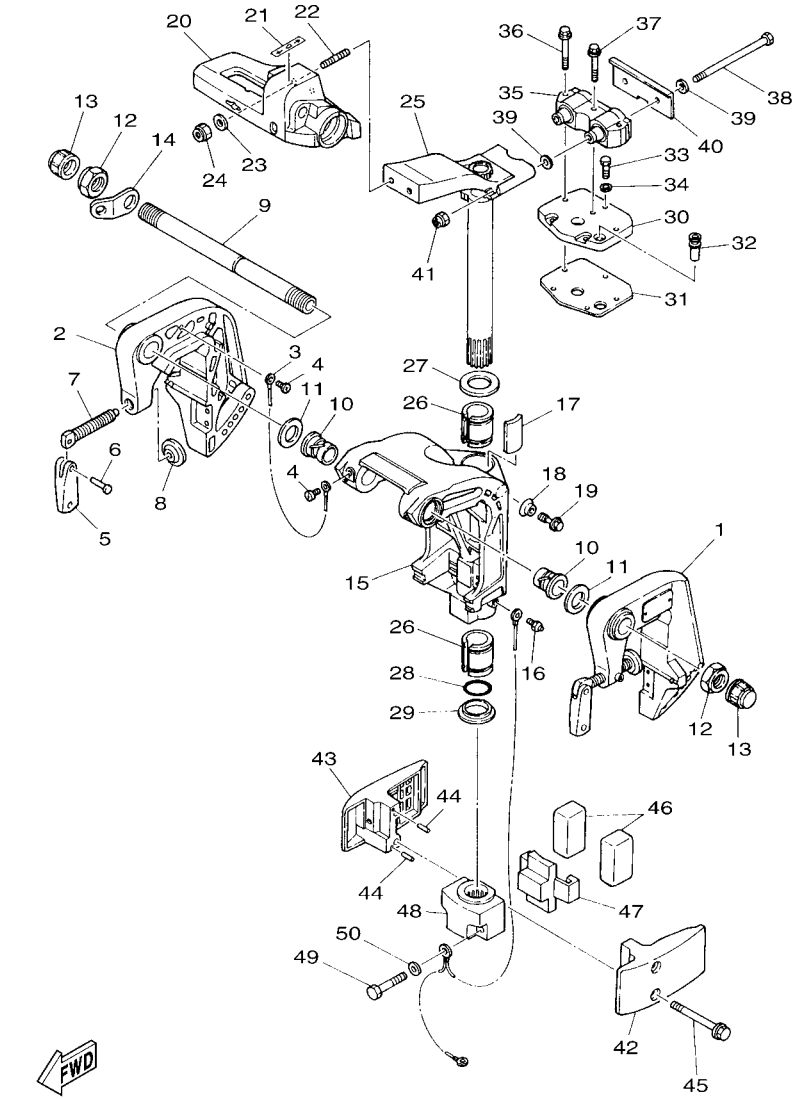


## FIG. 15 BRACKET 1 SUPPORT 1

| REF. NO. | PART NO. N° PIECES | DESCRIPTION DESCRIPTION | 6L2F | | | | | REMARKS REMARQUES |
|---|---|---|---|---|---|---|---|---|
| 1 | 6L2–43111–05–4D | BRACKET, CLAMP 1<br>PRESSE 1 | 1 | | | | | |
| 2 | 6L2–43112–06–4D | BRACKET, CLAMP 2<br>PRESSE 2 | 1 | | | | | |
| 3 | 6E5–82148–00 | WIRE, LEAD 4<br>FIL 4 | 1 | | | | | |
| 4 | 97885–06008 | SCREW, PAN HEAD<br>VIS, A ENCOCHE | 2 | | | | | |
| 5 | 6E0–43118–01 | HANDLE, TRANSOM CLAMP<br>POIGNEE DE VIS DE PRESSE | 2 | | | | | |
| 6 | 90243–04M01 | PIN<br>GOUPILLE | 2 | | | | | |
| 7 | 6L2–43116–00 | SCREW, TRANSOM CLAMP<br>VIS DE PRESSE | 2 | | | | | |
| 8 | 648–43114–01 | PAD, TRANSOM CLAMP<br>RONDELLE D'APPUI | 2 | | | | | |
| 9 | 6J8–43131–01 | BOLT, CLAMP BRACKET<br>BOULON, PRESSE | 1 | | | | | |
| 10 | 90386–22M67 | BUSH<br>DOUILLE | 2 | | | | | |
| 11 | 90201–22M03 | WASHER, PLATE<br>RONDELLE, PLATE | 2 | | | | | |
| 12 | 90185–22043 | NUT, SELF-LOCKING<br>ECROU,AUTO-BLOQUANT | 2 | | | | | |
| 13 | 6G5–43145–01 | CAP, CLAMP BRACKET<br>CAPUCHON, PRESSE | 2 | | | | | |
| 14 | 6J8–43113–01 | PLATE, CLAMP BRACKET<br>PLAQUETTE, PRESSE | 1 | | | | | |
| 15 | 6L2–43311–05–4D | BRACKET, SWIVEL 1<br>SUPPORT, PIVOT 1 | 1 | | | | | |
| 16 | 93700–06M03 | NIPPLE, GREASE<br>PION | 1 | | | | | |
| 17 | 6H4–42528–00 | PLATE, FRICTION<br>PLAQUE, FRICTION | 1 | | | | | |
| 18 | 689–43373–01 | SEAL, DAMPER<br>JOINT | 1 | | | | | |
| 19 | 90105–06M18 | BOLT, FLANGE<br>BOULON | 1 | | | | | |
| 20 | 6L2–42121–03–4D | BRACKET<br>SUPPORT | 1 | | | | | |
| 21 | 6X3–44191–00 | INDICATOR, SHIFT<br>ETIQUETTE, EMBRAYAGE | 1 | | | | | |
| 22 | 90116–10063 | BOLT, STUD<br>GOUJON | 2 | | | | | |
| 23 | 92995–10600 | WASHER<br>RONDELLE | 2 | | | | | |
| 24 | 90185–10027 | NUT, SELF-LOCKING<br>ECROU,AUTO-BLOQUANT | 2 | | | | | |
| 25 | 6L2–42510–01–4D | STEERING BRACKET ASSY<br>DIRECTION SUPPORT (ENS.) | 1 | | | | | |
| 26 | 90386–30M75 | BUSH<br>DOUILLE | 2 | | | | | |
| 27 | 90201–30M00 | WASHER, PLATE<br>RONDELLE, PLATE | 1 | | | | | |

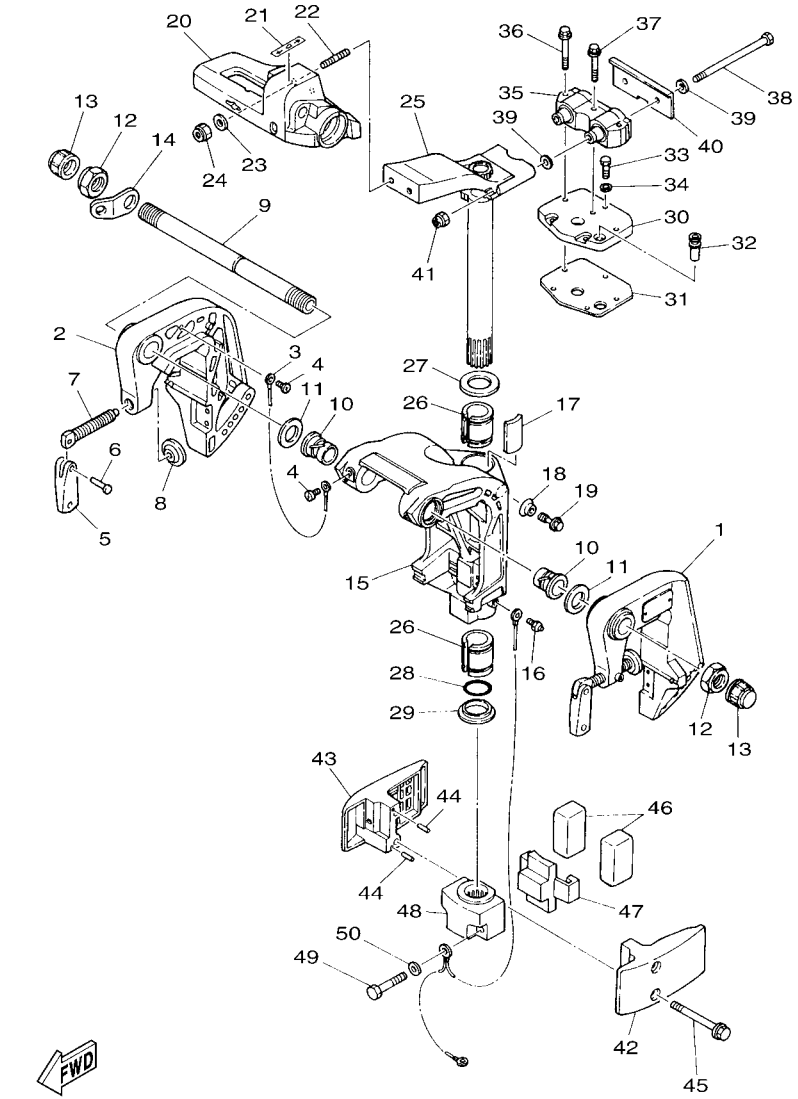


## FIG. 15 BRACKET 1 SUPPORT 1

| REF. NO. | PART NO. N° PIECES | DESCRIPTION DESCRIPTION | 6L2F | | | | | REMARKS REMARQUES |
|---|---|---|---|---|---|---|---|---|
| 28 | 93210–29375 | O-RING<br>JOINT TORIQUE | 1 | | | | | |
| 29 | 90386–30M60 | BUSH<br>DOUILLE | 1 | | | | | |
| 30 | 6L2–44512–00–4D | COVER, UPPER MOUNT<br>COUVERCLE | 1 | | | | | |
| 31 | 6L2–45114–A1 | GASKET, UPPER CASING<br>JOINT, TUBE D'ARBRE | 1 | | | | | |
| 32 | 6L2–44365–00 | DAMPER, WATER SEAL 1<br>JOINT, TUBE D'EAU 1 | 1 | | | | | |
| 33 | 97095–06020 | BOLT<br>BOULON | 3 | | | | | |
| 34 | 92995–06600 | WASHER<br>RONDELLE | 3 | | | | | |
| 35 | 6L2–44514–01 | MOUNT DAMPER, UPPER SIDE<br>SILENT-BLOC, SUPERIEUR LATERAL | 1 | | | | | |
| 36 | 90119–06M04 | BOLT, WITH WASHER<br>BOULON, AVEC RONDELLE | 2 | | | | | |
| 37 | 90119–06M05 | BOLT, WITH WASHER<br>BOULON, AVEC RONDELLE | 1 | | | | | |
| 38 | 90101–08M09 | BOLT<br>BOULON | 2 | | | | | |
| 39 | 90201–08M01 | WASHER, PLATE<br>RONDELLE, PLATE | 4 | | | | | |
| 40 | 6L2–44526–00 | PLATE<br>PLAQUE | 1 | | | | | |
| 41 | 90185–08057 | NUT, SELF-LOCKING<br>ECROU,AUTO-BLOQUANT | 2 | | | | | |
| 42 | 6L2–44551–01–4D | HOUSING, LOWER MOUNT RUBBER 1<br>BOITIER, SILENT-BLOC INFERIEUR | 1 | | | | | |
| 43 | 6L2–44552–01–4D | HOUSING, LOWER MOUNT RUBBER 2<br>BOITIER, SILENT-BLOC INFERIEUR | 1 | | | | | |
| 44 | 93604–12M07 | PIN, DOWEL<br>CLAVETTE | 2 | | | | | |
| 45 | 97595–08585 | BOLT, WITH WASHER<br>VIS HEXAGONAL AVC RONDELLE | 2 | | | | | |
| 46 | 6L2–44555–00 | MOUNT DAMPER, LOWER SIDE<br>SILENT-BLOC, INFERIEUR LATERAL | 2 | | | | | |
| 47 | 6L2–44557–00 | MOUNT DAMPER, LOWER FRONT<br>SILENT-BLOC, INFERIEUR AVANT | 1 | | | | | |
| 48 | 6L2–44553–01–4D | COVER, LOWER MOUNT<br>COUVERCLE, SUSPENSION INFERIEU | 1 | | | | | |
| 49 | 97095–08045 | BOLT<br>BOULON | 2 | | | | | |
| 50 | 92995–08600 | WASHER<br>RONDELLE | 2 | | | | | |

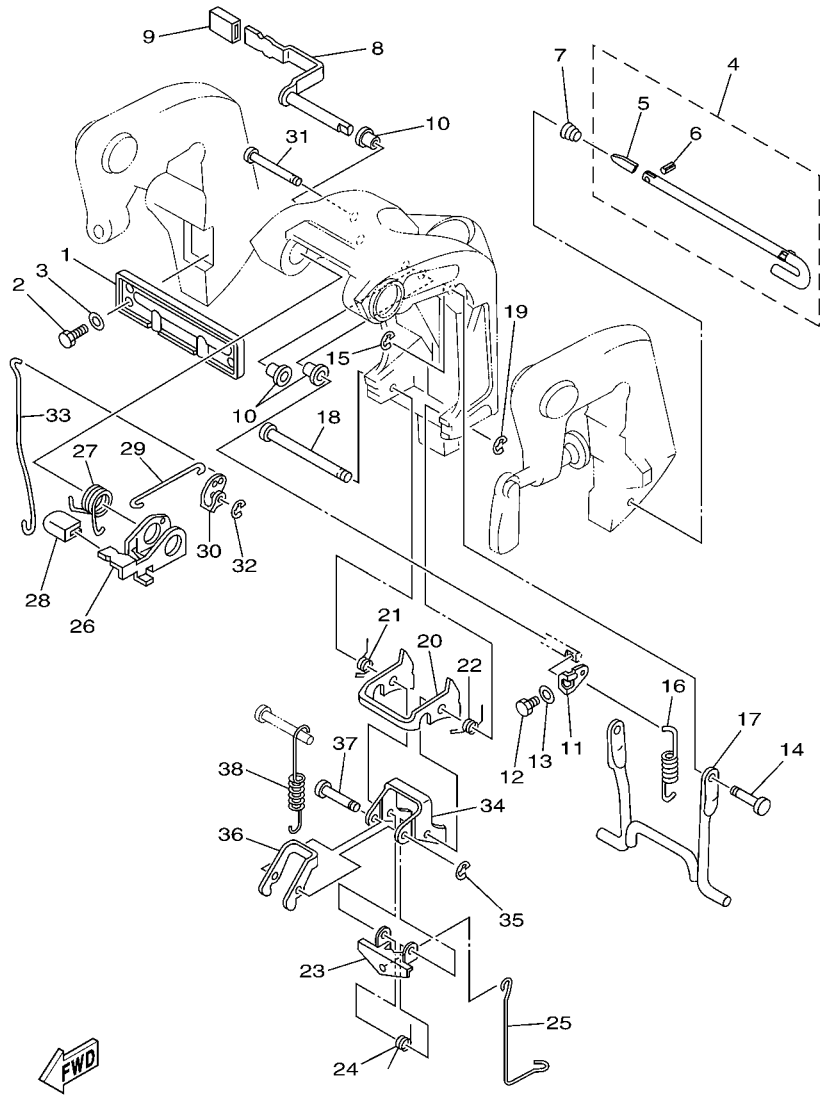


6L23300-C180

## FIG. 16 BRACKET 2 SUPPORT 2

| REF. NO. | PART NO. N° PIECES | DESCRIPTION DESCRIPTION | 6L2F | | | | | REMARKS REMARQUES |
|---|---|---|---|---|---|---|---|---|
| 1 | 6L2–43165–01 | PLATE, TILT LOCK<br>TAQUET, BROCHE INCLINAISON | 1 | | | | | |
| 2 | 97090–06010 | BOLT<br>BOULON | 4 | | | | | |
| 3 | 92990–06600 | WASHER, PLATE<br>RONDELLE, PLATE | 4 | | | | | |
| 4 | 6L2–43160–01 | TILT ROD ASSY<br>BROCHE D'INCLINAISON (ENS.) | 1 | | | | | |
| 5 | 689–43165–00 | .PLATE, TILT LOCK<br>.TAQUET, BROCHE INCLINAISON | 1 | | | | | |
| 6 | 91690–30008 | .PIN, SPRING<br>.AGRAFFE | 1 | | | | | |
| 7 | 90502–10M07 | SPRING, CONICAL<br>RESSORT, CONIQUE | 1 | | | | | |
| 8 | 6L2–43630–01 | TILT LEVER ASSY<br>LEVIER D'INCLINAISON | 1 | | | | | |
| 9 | 682–43318–01 | COVER<br>CAPUCHON | 1 | | | | | |
| 10 | 90386–08032 | BUSH<br>DOUILLE | 3 | | | | | |
| 11 | 6L2–43682–01 | LEVER, SHALLOW WATER DRIVE 2<br>LEVIER, PEU PROFOND D'EAU 2 | 1 | | | | | |
| 12 | 97095–05010 | BOLT<br>BOULON | 1 | | | | | |
| 13 | 92995–05600 | WASHER<br>RONDELLE | 1 | | | | | |
| 14 | 6L2–43191–01 | SHAFT, STOPPER<br>AXE, BUTEE | 1 | | | | | |
| 15 | 99080–05600 | CIRCLIP<br>CIRCLIP | 1 | | | | | |
| 16 | 90506–20M27 | SPRING, TENSION<br>RESSORT, TENSION | 1 | | | | | |
| 17 | 6L2–43350–02 | RECEIVER ASSY<br>RECEIVER ASSY | 1 | | | | | |
| 18 | 6J8–43611–01 | SHAFT, TILT LOCK<br>AXE, VERROUILLAGE MARCHE AR | 1 | | | | | |
| 19 | 99080–05600 | CIRCLIP<br>CIRCLIP | 1 | | | | | |
| 20 | 6L2–43614–00 | PLATE, TILT LOCK<br>ETRIER, VERROUILLAGE MARCHE AR | 1 | | | | | |
| 21 | 90508–12M28 | SPRING, TORSION<br>RESSORT, TORSION | 1 | | | | | |
| 22 | 90508–12M29 | SPRING, TORSION<br>RESSORT, TORSION | 1 | | | | | |
| 23 | 6L2–43615–00 | PLATE, TILT LOCK<br>ETRIER, VERROUILLAGE MARCHE AR | 1 | | | | | |
| 24 | 6L2–43657–00 | SPRING, LOCK<br>RESSORT, BLOCAGE | 1 | | | | | |
| 25 | 6L2–43676–00 | HOOK<br>CROCHET | 1 | | | | | |
| 26 | 6L2–43631–00 | LEVER, TILT<br>LEVIER, INCLINAISON | 1 | | | | | |
| 27 | 6L2–43188–00 | SPRING<br>RESSORT | 1 | | | | | |

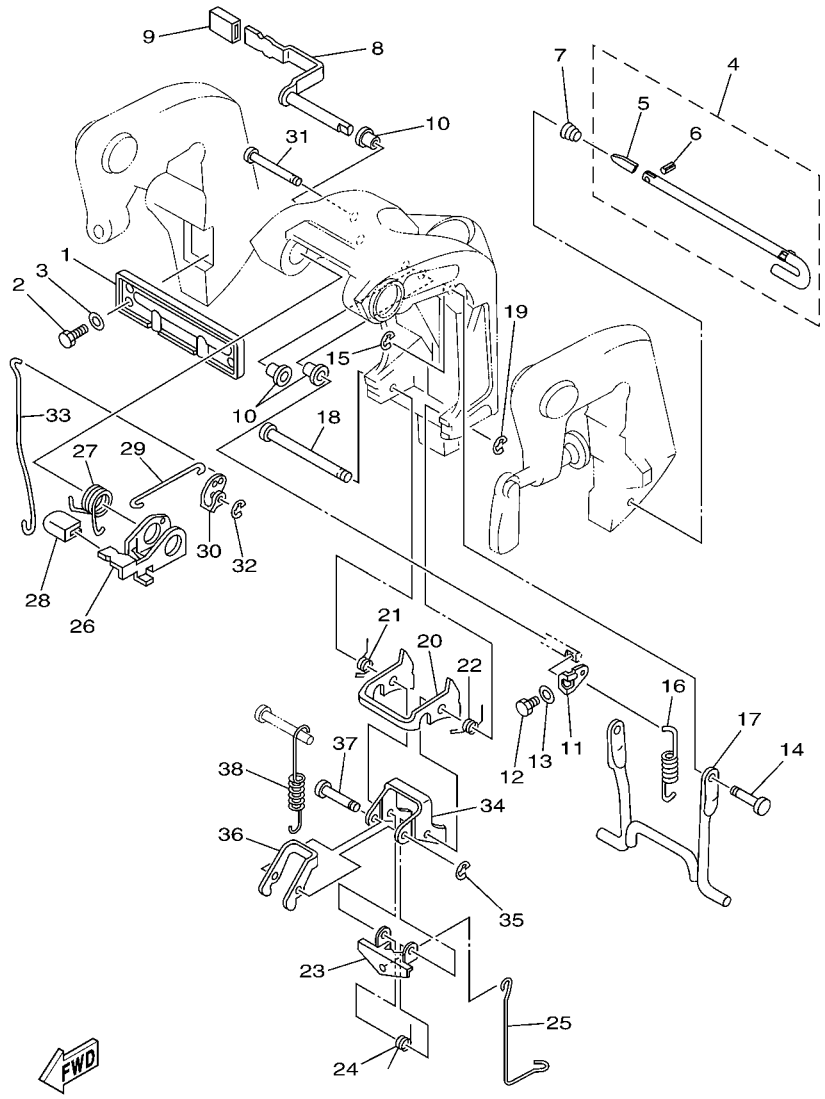


6L23300-C180

## FIG. 16 BRACKET 2 SUPPORT 2

| REF. NO. | PART NO. N° PIECES | DESCRIPTION DESCRIPTION | 6L2F | | | | | REMARKS REMARQUES |
|---|---|---|---|---|---|---|---|---|
| 28 | 6L2–43633–10 | COVER, TILT LEVER<br>COUVERCLE | 1 | | | | | |
| 29 | 6L2–43611–00 | SHAFT, TILT LOCK<br>AXE, VERROUILLAGE MARCHE AR | 1 | | | | | |
| 30 | 6L2–43641–00 | LEVER, TILT<br>LEVIER, INCLINAISON | 1 | | | | | |
| 31 | 6L2–43659–00 | SHAFT, REVERSE LOCK<br>AXE, VERROUILLAGE MARCHE AR | 1 | | | | | |
| 32 | 99080–05600 | CIRCLIP<br>CIRCLIP | 1 | | | | | |
| 33 | 6L2–43617–00 | ROD, TILT LOCK<br>TIGE | 1 | | | | | |
| 34 | 6L2–43613–00 | ARM, TILT LOCK<br>GUIDE | 1 | | | | | |
| 35 | 99080–05600 | CIRCLIP<br>CIRCLIP | 1 | | | | | |
| 36 | 6L2–43624–00 | PLATE, TILT ROCK<br>ETRIER, VERROUILLAGE MARCHE AR | 1 | | | | | |
| 37 | 6L2–43336–00 | PIN<br>CLAVETTE | 1 | | | | | |
| 38 | 90506–23M11 | SPRING, TENSION<br>RESSORT, TENSION | 1 | | | | | |

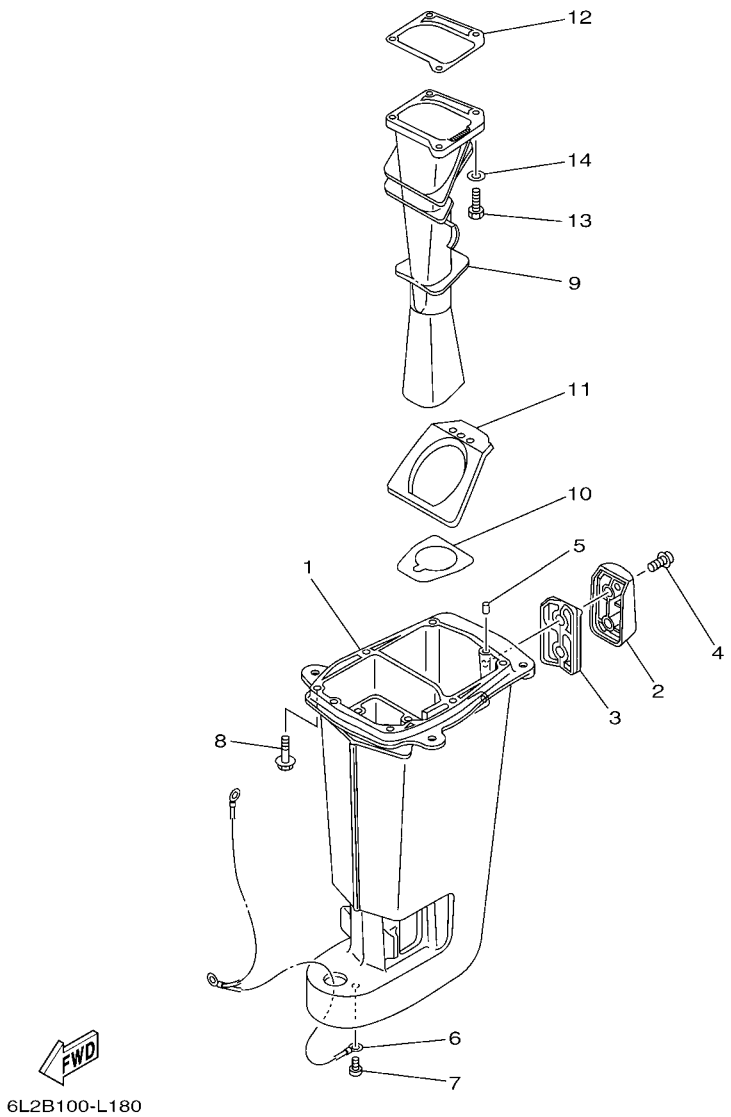


## FIG. 17 UPPER CASING FOURREAU

| REF. NO. | PART NO. N° PIECES | DESCRIPTION DESCRIPTION | 6L2F | | | | | REMARKS REMARQUES |
|---|---|---|---|---|---|---|---|---|
| 1 | 6L2–45111–03–4D | CASING, UPPER<br>FOURREAU | 1 | | | | | S(16.5")<br>S(16.5") |
| | 6L2–45111–13–4D | CASING, UPPER<br>FOURREAU | 1 | | | | | L(21.5")<br>L(21.5") |
| 2 | 6L2–45151–01–4D | COVER, UPPER CASING<br>CAPUCHON, FOURREAU | 1 | | | | | |
| 3 | 6L2–45115–00 | GASKET, UPPER CASING<br>JOINT, TUBE D'ARBRE | 1 | | | | | |
| 4 | 90159–06M11 | SCREW, WITH WASHER<br>VIS, AVEC RONDELLE | 2 | | | | | |
| 5 | 93604–12M07 | PIN, DOWEL<br>CLAVETTE | 2 | | | | | |
| 6 | 6L2–82127–00 | WIRE, LEAD 2<br>FIL 2 | 1 | | | | | |
| 7 | 90157–06M06 | SCREW, PAN HEAD<br>VIS, TETE TRONCONIQUE | 1 | | | | | |
| 8 | 97575–08530 | BOLT, WITH WASHER<br>VIS HEXAGONAL AVC RONDELLE | 6 | | | | | |
| 9 | 6L2–41131–00–CA | MANIFOLD, EXT. 1<br>PIPE D'ECHAPPEMENT | 1 | | | | | |
| 10 | 6L2–41134–00 | GASKET, EXHAUST MANIFOLD<br>JOINT, PIPE D'ECHAPPEMENT | 1 | | | | | |
| 11 | 6L2–45123–01 | GASKET, MUFFLER<br>JOINT, POT DE DETENTE | 1 | | | | | |
| 12 | 6L2–41133–A3 | GASKET, EXHAUST MANIFOLD 1<br>JOINT, PIPE D'ECHAPPEMENT | 1 | | | | | |
| 13 | 97095–06020 | BOLT<br>BOULON | 4 | | | | | |
| 14 | 92995–06600 | WASHER<br>RONDELLE | 4 | | | | | |

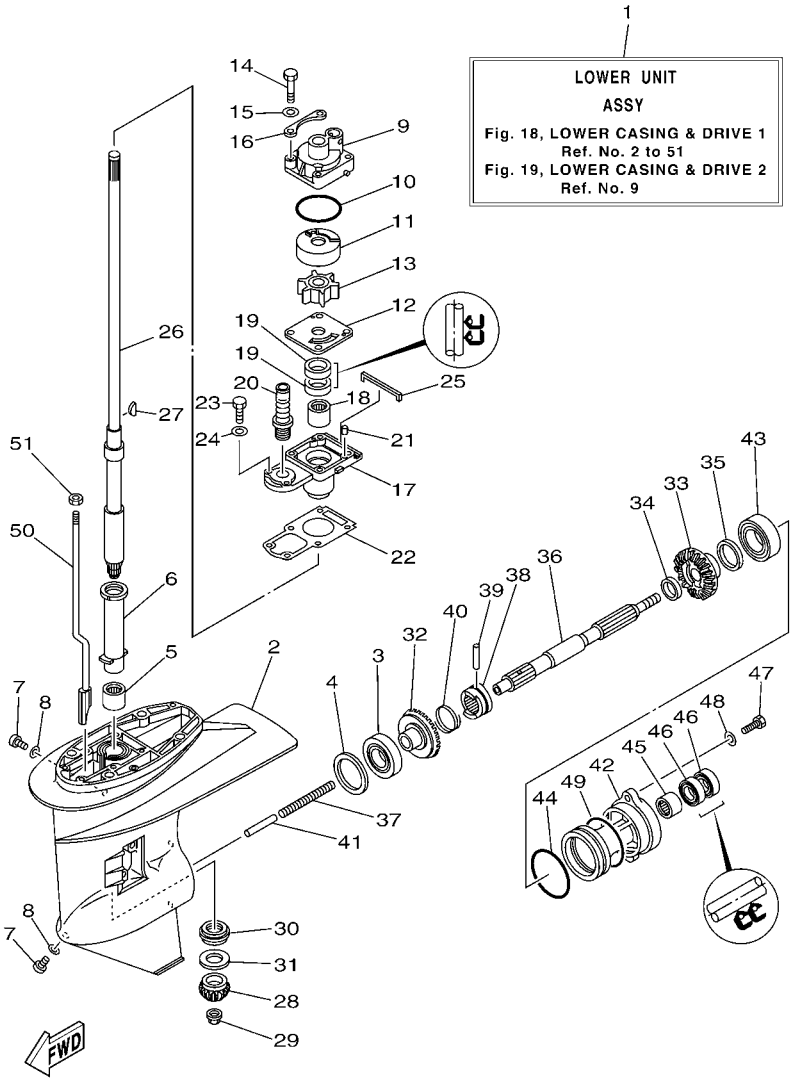


## FIG. 18 LOWER CASING & DRIVE 1 BOITIER D'HELICE TRANSMISSION1

| REF. NO. | PART NO. N° PIECES | DESCRIPTION DESCRIPTION | 6L2F | | | | | REMARKS REMARQUES |
|---|---|---|---|---|---|---|---|---|
| 1 | 6L2–45300–04–4D | LOWER UNIT ASSY<br>UNITE INFERIEURE (ENS.) | 1 | | | | | S(16.5")<br>S(16.5") |
| | 6L2–45300–14–4D | LOWER UNIT ASSY<br>UNITE INFERIEURE (ENS.) | 1 | | | | | L(21.5")<br>L(21.5") |
| 2 | 6L2–45311–02–4D | CASING, LOWER<br>BOITIER D'HELICE | 1 | | | | | |
| 3 | 93332–00005 | BEARING<br>ROULEMENT | 1 | | | | | |
| 4 | 6L2–45567–00 | SHIM (T:1.0MM)<br>CALE (T;1.0MM) | 1 | | | | | UR<br>UR |
| | 6L2–45567–10 | SHIM (T:1.1MM)<br>CALE (T:1.1MM) | 1 | | | | | UR<br>UR |
| | 6L2–45567–20 | SHIM (T:1.2MM)<br>CALE (T:1.2MM) | 1 | | | | | UR<br>UR |
| | 6L2–45567–30 | SHIM (T:1.3MM)<br>CALE (T:1.3MM) | 1 | | | | | UR<br>UR |
| | 6L2–45567–40 | SHIM (T:1.4MM)<br>CALE (T:1.4MM) | 1 | | | | | UR<br>UR |
| 5 | 93315–220V9 | BEARING<br>ROULEMENT | 1 | | | | | |
| 6 | 6L2–45536–00 | SLEEVE, DRIVE SHAFT<br>MANCHON, ARBRE MOTEUR | 1 | | | | | |
| 7 | 90340–08002 | PLUG, STRAIGHT SCREW<br>PLOT, FILETE DROIT | 2 | | | | | |
| 8 | 90430–08020 | GASKET<br>JOINT | 2 | | | | | |
| 9 | 6L2–44311–01 | HOUSING, WATER PUMP<br>CORPS, POMPE A EAU | 1 | | | | | |
| 10 | 93210–45161 | O-RING<br>JOINT TORIQUE | 1 | | | | | |
| 11 | 6L2–44322–00 | INSERT, CARTRIDGE<br>CUVETTE | 1 | | | | | |
| 12 | 6L2–44323–00 | OUTER PLATE, CARTRIDGE<br>PLAQUE EXTERIEURE | 1 | | | | | |
| 13 | 6L2–44352–00 | IMPELLER<br>TURBINE | 1 | | | | | |
| 14 | 97095–06040 | BOLT<br>BOULON | 4 | | | | | |
| 15 | 92995–06600 | WASHER<br>RONDELLE | 4 | | | | | |
| 16 | 6L2–44328–00 | PLATE<br>PLAQUETTE | 2 | | | | | |
| 17 | 6L2–45331–00–CA | HOUSING, BEARING<br>FLASQUE, ROULEMENT | 1 | | | | | |
| 18 | 93315–22004 | BEARING<br>ROULEMENT | 1 | | | | | |
| 19 | 93101–20048 | OIL SEAL<br>JOINT SPY | 2 | | | | | |
| 20 | 6L2–44147–00 | BOOT, SHIFT ROD<br>SOUFFLET, TIGE D'INVERSION | 1 | | | | | |
| 21 | 93604–12M07 | PIN, DOWEL<br>CLAVETTE | 2 | | | | | |
| 22 | 6L2–45315–A0 | PACKING, LOWER CASING<br>JOINT, BOITIER D'HELICE | 1 | | | | | |

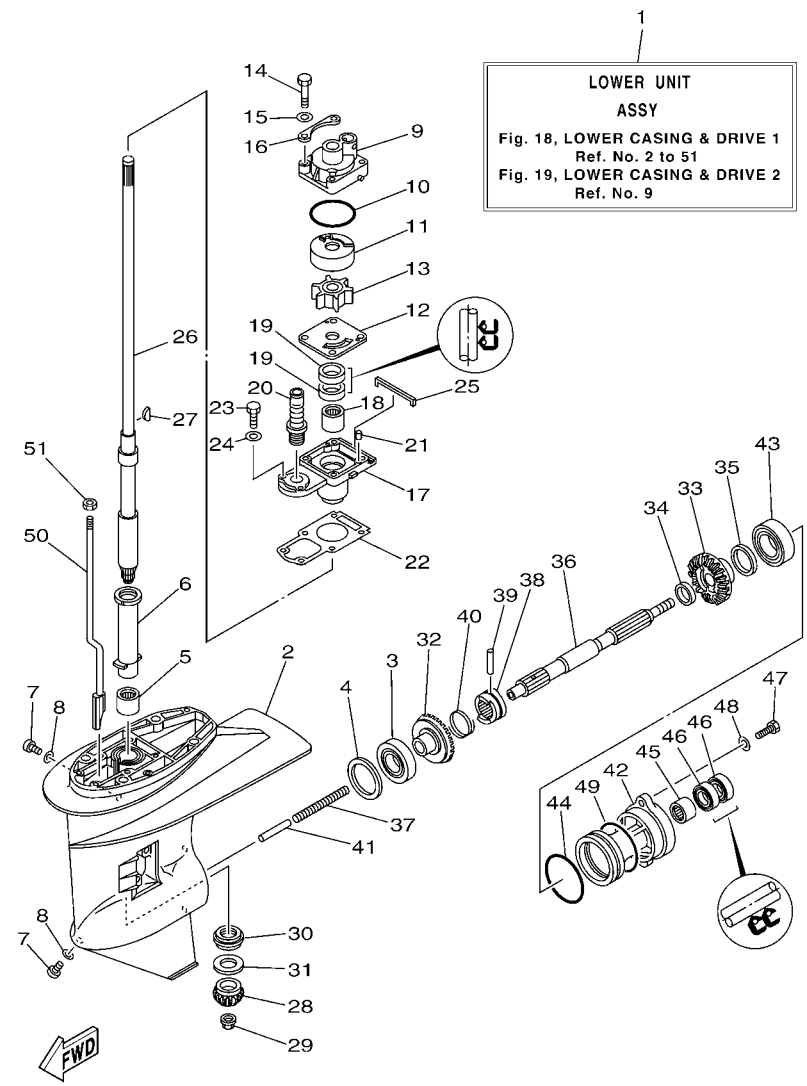


## FIG. 18 LOWER CASING & DRIVE 1 BOITIER D'HELICE TRANSMISSION1

| REF. NO. | PART NO. N° PIECES | DESCRIPTION DESCRIPTION | 6L2F | | | | | REMARKS REMARQUES |
|---|---|---|---|---|---|---|---|---|
| 23 | 97095–06020 | BOLT<br>BOULON | 2 | | | | | |
| 24 | 92995–06600 | WASHER<br>RONDELLE | 2 | | | | | |
| 25 | 6L2–45375–00 | DAMPER, SEAL<br>BOURRELET, CAOUTCHOUC | 1 | | | | | |
| 26 | 6L2–45510–00 | DRIVE SHAFT ASSY<br>ARBRE MOTEUR (ENS.) | 1 | | | | | S(16.5")<br>S(16.5") |
| | 6L2–45510–10 | DRIVE SHAFT ASSY<br>ARBRE MOTEUR (ENS.) | 1 | | | | | L(21.5")<br>L(21.5") |
| 27 | 90280–03024 | KEY, WOODRUFF<br>CLAVETTE, DEMI-LUNE | 1 | | | | | |
| 28 | 6L2–45551–01 | PINION (13T)<br>PIGNON D'ATTAQUE (13D) | 1 | | | | | |
| 29 | 90179–10M14 | NUT<br>ECROU | 1 | | | | | |
| 30 | 93341–320U0 | BEARING<br>CERVEAUX DE DIRECTION | 1 | | | | | |
| 31 | 6L2–45587–00 | SHIM (T:1.5MM)<br>CALE (T:1.5MM) | 1 | | | | | UR<br>UR |
| | 6L2–45587–10 | SHIM (T:1.6MM)<br>CALE (T:1.6MM) | 1 | | | | | UR<br>UR |
| 32 | 6L2–45560–10 | GEAR 1 (27T)<br>PIGNON 1 (27T) | 1 | | | | | |
| 33 | 6L2–45571–00 | GEAR 2 (27T)<br>PIGNON 2 (27T) | 1 | | | | | |
| 34 | 90201–20417 | WASHER, PLATE<br>RONDELLE, PLATE | 1 | | | | | |
| 35 | 6L2–45577–00 | SHIM (T:1.0MM)<br>CALE (T:1.0MM) | 1 | | | | | UR<br>UR |
| | 6L2–45577–10 | SHIM (T:1.1MM)<br>CALE (T:1.1MM) | 1 | | | | | UR<br>UR |
| | 6L2–45577–20 | SHIM (T:1.2MM)<br>CALE (T:1.2MM) | 1 | | | | | UR<br>UR |
| | 6L2–45577–30 | SHIM (T:1.3MM)<br>CALE (T:1.3MM) | 1 | | | | | UR<br>UR |
| 36 | 65W–45611–00 | SHAFT, PROPELLER<br>ARBRE, HELICE | 1 | | | | | |
| 37 | 90501–10065 | SPRING, COMPRESSION<br>RESSORT, COMPRESSION | 1 | | | | | |
| 38 | 6L2–45631–00 | CLUTCH, DOG<br>CRABOT | 1 | | | | | |
| 39 | 90250–05010 | PIN, STRAIGHT<br>GOUPILLE, DROITE | 1 | | | | | |
| 40 | 648–45633–00 | RING, CROSS PIN<br>JONC, GOUPILLE CRABOT | 1 | | | | | |
| 41 | 648–45635–00 | PLUNGER, SHIFT<br>POUSSOIR D'EMBRAYAGE | 1 | | | | | |
| 42 | 6L2–45361–03–4D | CAP, LOWER CASING<br>COUVERCLE, BOITIER D'HELICE | 1 | | | | | |
| 43 | 93306–00612 | BEARING<br>ROULEMENT | 1 | | | | | |
| 44 | 93210–60MA3 | O-RING<br>JOINT TORIQUE | 1 | | | | | |

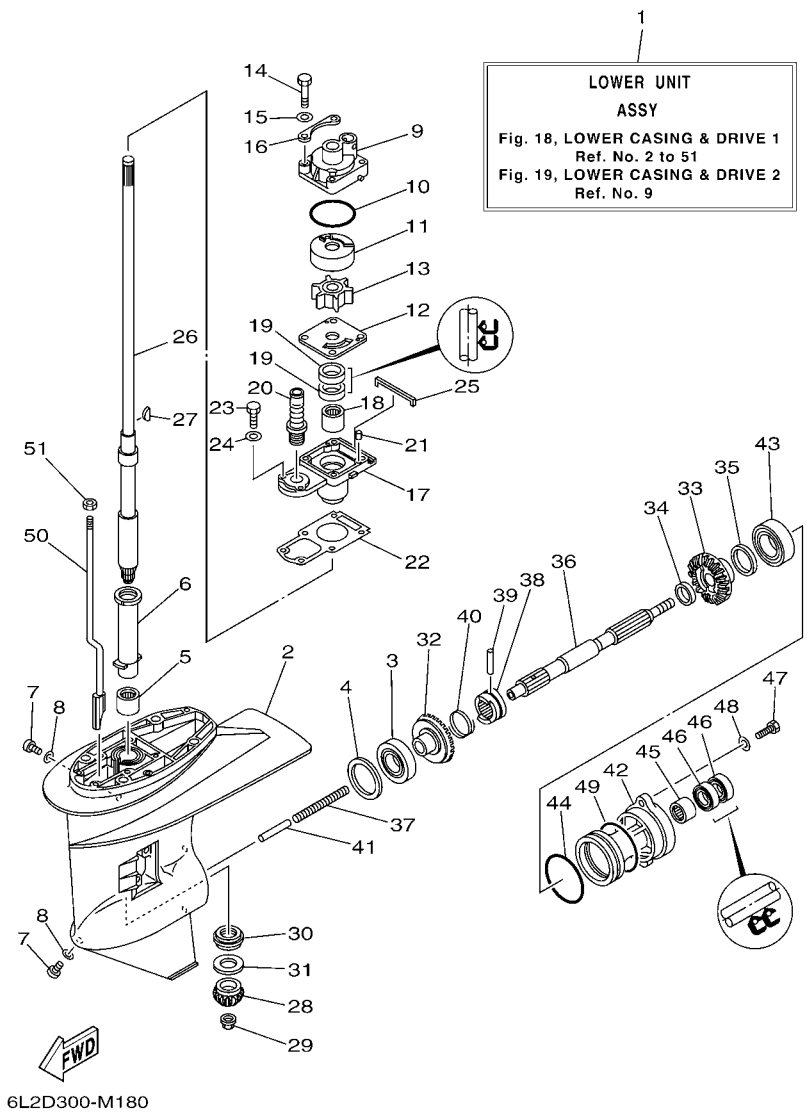


## FIG. 18 LOWER CASING & DRIVE 1 BOITIER D'HELICE TRANSMISSION1

| REF. NO. | PART NO. N° PIECES | DESCRIPTION DESCRIPTION | 6L2F | | | | | REMARKS REMARQUES |
|---|---|---|---|---|---|---|---|---|
| 45 | 93315–22004 | BEARING<br>ROULEMENT | 1 | | | | | |
| 46 | 93101–20M07 | OIL SEAL<br>JOINT SPY | 2 | | | | | |
| 47 | 97095–06020 | BOLT<br>BOULON | 2 | | | | | |
| 48 | 92995–06600 | WASHER<br>RONDELLE | 2 | | | | | |
| 49 | 93210–60M99 | O-RING<br>JOINT TORIQUE | 1 | | | | | |
| 50 | 6L2–44150–00 | SHIFT CAM ASSY<br>CAME D'INVERSION | 1 | | | | | S(16.5")<br>S(16.5") |
| | 6L2–44150–10 | SHIFT CAM ASSY<br>CAME D'INVERSION | 1 | | | | | L(21.5")<br>L(21.5") |
| 51 | 95380–06600 | NUT, HEXAGON<br>ECROU | 1 | | | | | |

## FIG. 19 LOWER CASING & DRIVE 2 BOITIER D'HELICE TRANSMISSION2

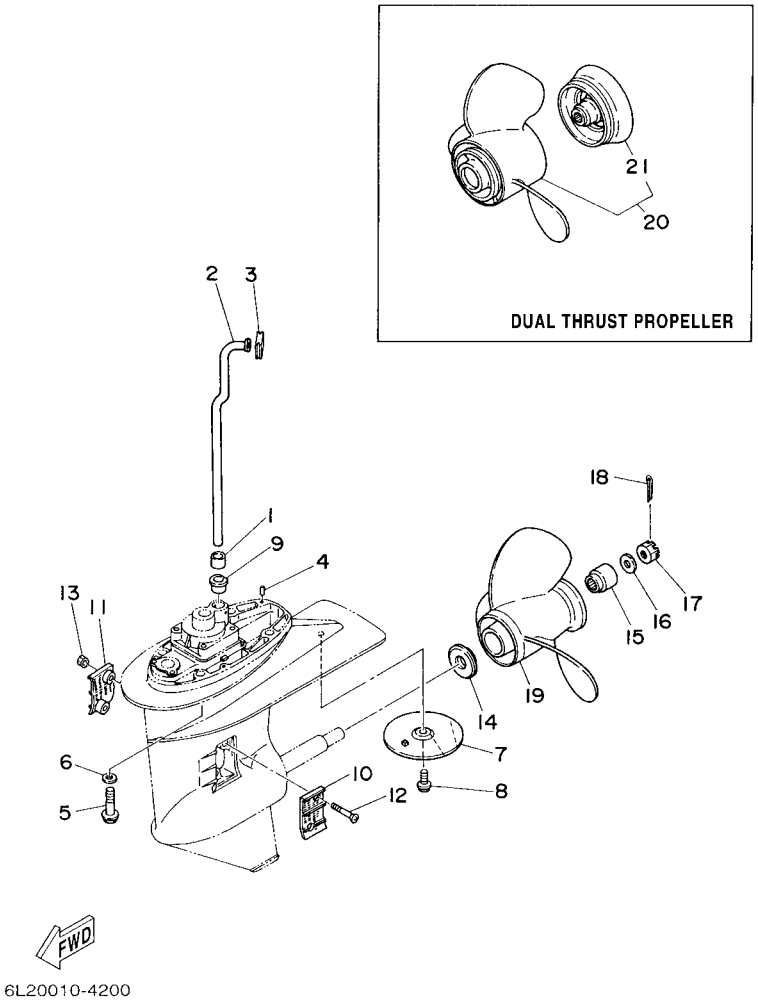


| REF. NO. | PART NO. N° PIECES | DESCRIPTION DESCRIPTION | 6L2F | | | | | REMARKS REMARQUES |
|---|---|---|---|---|---|---|---|---|
| 1 | 6L2–44368–00 | RUBBER, WATER SEAL 4<br>JOINT,TUBEDEAU | 1 | | | | | |
| 2 | 6L2–44361–00 | TUBE, WATER 1<br>TUBE D'EAU 1 | 1 | | | | | S(16.5")<br>S(16.5") |
| | 6L2–44361–10 | TUBE, WATER 1<br>TUBE D'EAU 1 | 1 | | | | | L(21.5")<br>L(21.5") |
| 3 | 6L2–44366–00 | DAMPER, WATER SEAL 2<br>JOINT, TUBE D'EAU 2 | 1 | | | | | |
| 4 | 93604–12M07 | PIN, DOWEL<br>CLAVETTE | 2 | | | | | |
| 5 | 90105–10M12 | BOLT, FLANGE<br>BOULON | 4 | | | | | |
| 6 | 92995–10600 | WASHER<br>RONDELLE | 4 | | | | | |
| 7 | 664–45371–01 | TAB-TRIM<br>ANODE DERIVE | 1 | | | | | |
| 8 | 90105–08M02 | BOLT, FLANGE<br>BOULON | 1 | | | | | |
| 9 | 6L2–44367–10 | DAMPER, WATER SEAL 3<br>JOINT TUBE D'EAU 3 | 1 | | | | | |
| 10 | 6L2–45214–00 | COVER, WATER INLET 1<br>GRILLE, ENTREE D'EAU 1 | 1 | | | | | |
| 11 | 6L2–45215–00 | COVER, WATER INLET 2<br>GRILLE, ENTREE D'EAU 2 | 1 | | | | | |
| 12 | 90151–05M05 | SCREW, COUNTERSUNK<br>VIS, TETE NOYEE | 2 | | | | | |
| 13 | 90185–05002 | NUT, NYLON<br>ECROU,AUTO-BLOQUANT | 2 | | | | | |
| 14 | 6L2–45987–01 | SPACER 1<br>ENTRETOISE 1 | 1 | | | | | |
| 15 | 689–45997–00 | SPACER 2<br>ENTRETOISE 2 | 1 | | | | | |
| 16 | 92990–14200 | WASHER, PLAIN<br>RONDELLE, PLATE | 1 | | | | | |
| 17 | 90171–14013 | NUT, CASTLE<br>ECROU, CRENELE | 1 | | | | | |
| 18 | 91490–30022 | PIN. COTTER<br>GOUPILLE | 1 | | | | | |
| 19 | 664–45941–01 | PROPELLER (3X9-7/8"X9"-F)<br>HELICE (3X9-7/8"X9"-F) | 1 | | | | | UR<br>UR |
| | 664–45943–01 | PROPELLER (3X9-7/8"X8"-F)<br>HELICE (3X9-7/8"X8"-F) | 1 | | | | | UR<br>UR |
| | 664–45945–00 | PROPELLER (3X9-7/8"X10-1/2"-F)<br>HELICE (3X9-7/8"X10-1/2"-F) | 1 | | | | | UR<br>UR |
| | 664–45947–01 | PROPELLER (3X9-7/8"X11-1/4"-F)<br>HELICE (3X9-7/8"X11-1/4"-F) | 1 | | | | | UR<br>UR |
| | 664–45949–02 | PROPELLER (3X9-7/8"X13"-F)<br>HELICE (3X9-7/8"X13"-F) | 1 | | | | | UR<br>UR |
| | 664–45952–00 | PROPELLER (3X9-7/8"X14"-F)<br>HELICE (3X9-7/8"X14"-F) | 1 | | | | | UR<br>UR |
| | 664–45954–01 | PROPELLER (3X9-7/8"X12"-F)<br>HELICE (3X9-7/8"X12"-F) | 1 | | | | | UR<br>UR |
| | 664–45970–00 | PROPELLER (3X9-1/8"X13"-F)<br>HELICE (3X9-1/8"X13"-F) | 1 | | | | | UR<br>UR |

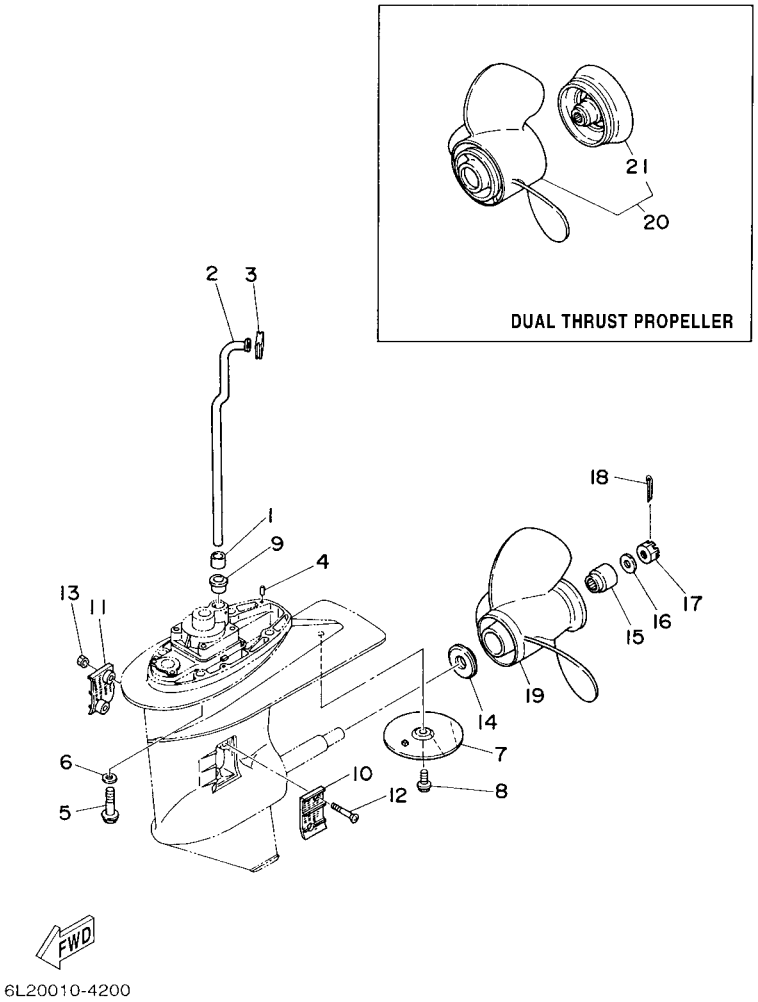


## FIG. 19 LOWER CASING & DRIVE 2 BOITIER D'HELICE TRANSMISSION2

| REF. NO. | PART NO. N° PIECES | DESCRIPTION DESCRIPTION | 6L2F | | | | | REMARKS REMARQUES |
|---|---|---|---|---|---|---|---|---|
| 19 | 664–45972–00 | PROPELLER (3X9-1/8"X12"-F)<br>HELICE (3X9-1/8"X12"-F) | 1 | | | | | UR<br>UR |
| 20 | 6J8–W4591–00 | PROPELLER (3X10-5/8"X8-1/4"-F)<br>HELICE (3X10-5/8"X8-1/4"-F) | 1 | | | | | |
| 21 | 6J8–45986–10 | .RING, DEFLECTOR<br>.DEFLECTEUR DE CERCLE | 1 | | | | | |

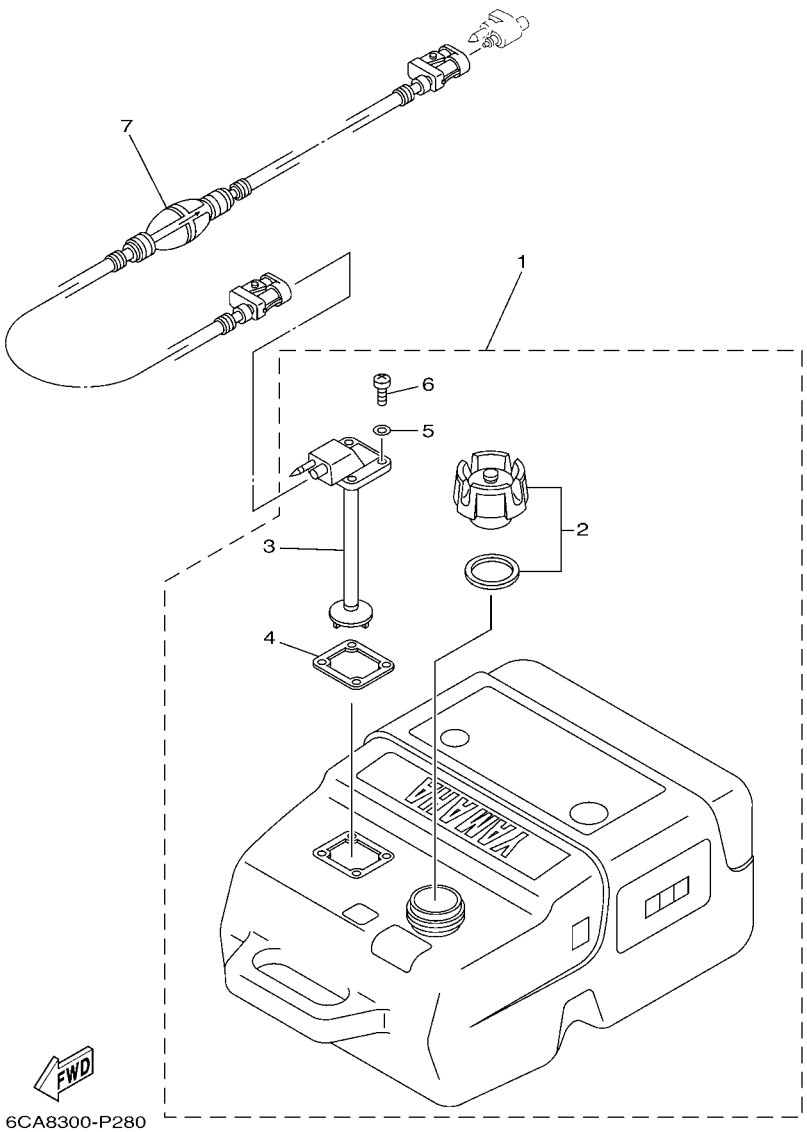


## FIG. 20 FUEL TANK 1 — RESERVOIR A CARBURANT 1

| REF. NO. | PART NO. N° PIECES | DESCRIPTION DESCRIPTION | 6L2F | | | | | REMARKS REMARQUES |
|---|---|---|---|---|---|---|---|---|
| 1 | 6YK–24201–04 | FUEL TANK ASSY (25L)<br>RESERVOIR A ESSENCE (ENS.) 25L | 1 | | | | | AP EXCEPT FOR RUS<br>AP EXCEPT FOR RUS |
| 2 | 6YK–24610–01 | .CAP ASSY<br>.BOUCHON | 1 | | | | | |
| 3 | 6YK–24260–10 | .FUEL METER ASSY<br>.INDICATEUR DE CARBURANT | 1 | | | | | |
| 4 | 6YL–24268–01 | .GASKET, FUEL METER<br>.JOINT, JAUGE A CARBURANT | 1 | | | | | |
| 5 | 6YL–24329–00 | .SEAL<br>.JOINT | 4 | | | | | |
| 6 | 90157–05M16 | .SCREW, PAN HEAD<br>.VIS, TETE TRONCONIQUE | 4 | | | | | |
| 7 | 6YL–24306–54 | FUEL PIPE COMP. 1<br>DURITE A ESSENCE 1 | 1 | | | | | AP EXCEPT FOR RUS<br>AP EXCEPT FOR RUS |

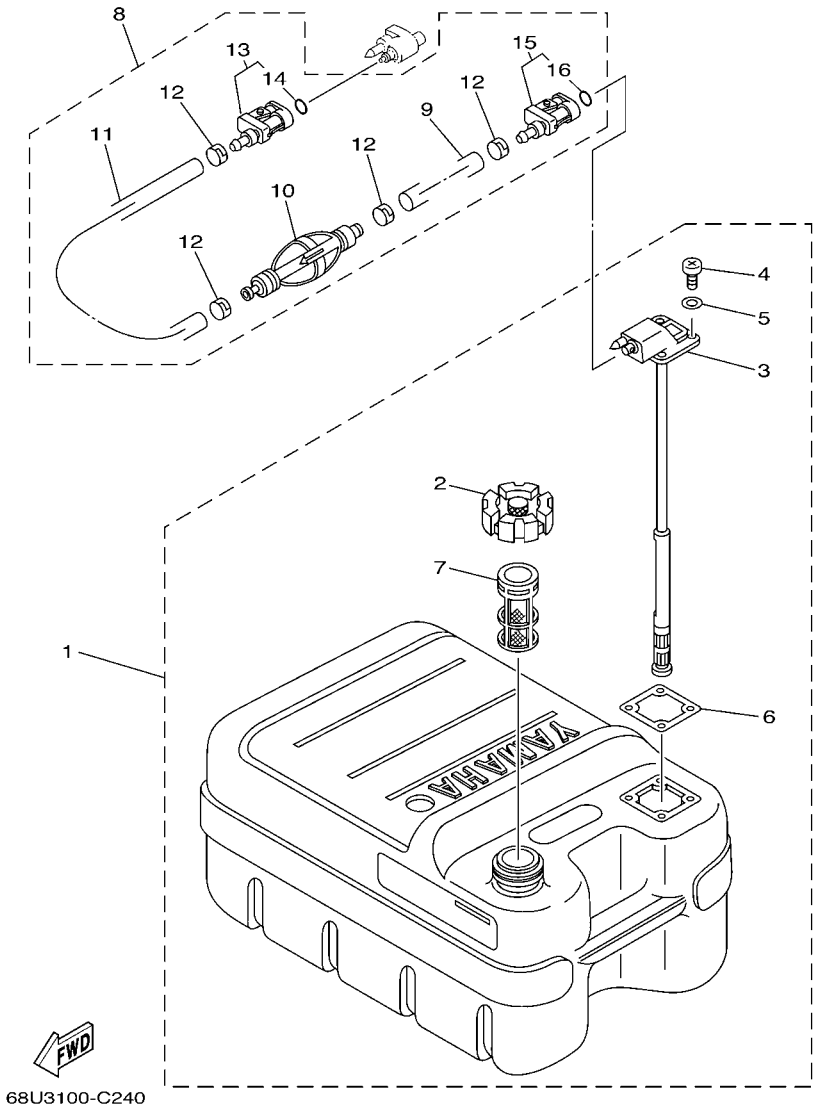


## FIG. 21 FUEL TANK 2 — RESERVOIR A CARBURANT 2

| REF. NO. | PART NO. N° PIECES | DESCRIPTION DESCRIPTION | 6L2F | | | | | REMARKS REMARQUES |
|---|---|---|---|---|---|---|---|---|
| 1 | 6YJ–24201–00 | FUEL TANK ASSY (24L)<br>RESERVOIR A ESSENCE (ENS.):24L | 1 | | | | | AP FOR RUS<br>AP FOR RUS |
| 2 | 6YJ–24610–01 | .CAP ASSY<br>.BOUCHON | 1 | | | | | |
| 3 | 6YJ–24260–00 | .FUEL METER ASSY<br>.INDICATEUR DE CARBURANT | 1 | | | | | |
| 4 | 90157–05M19 | .SCREW, PAN HEAD<br>.VIS, TETE TRONCONIQUE | 4 | | | | | |
| 5 | 6Y1–24329–00 | .SEAL<br>.JOINT | 4 | | | | | |
| 6 | 6Y1–24268–00 | .GASKET, FUEL METER<br>.JOINT, JAUGE A CARBURANT | 1 | | | | | |
| 7 | 6YJ–24167–00 | .STRAINER<br>.FILTRE | 1 | | | | | |
| 8 | 61J–24306–04 | FUEL PIPE COMP. 1<br>DURITE A ESSENCE 1 | 1 | | | | | AP FOR RUS<br>AP FOR RUS |
| 9 | 90445–11M06 | .HOSE (L2050)<br>.DURITE (L2050) | 1 | | | | | |
| 10 | 61J–24360–00 | .PRIMER PUMP ASSY<br>.POMPE D'AMORCAGE | 1 | | | | | |
| 11 | 90445–11M05 | .HOSE (L850)<br>.DURITE (L850) | 1 | | | | | |
| 12 | 650–24351–51 | .BAND 1<br>.COLLIER 1 | 4 | | | | | |
| 13 | 6G1–24305–05 | .FUEL PIPE JOINT COMP. 2<br>.DURITE RACCORDEMT. A ESSENCE | 1 | | | | | |
| 14 | 93210–08287 | ..O-RING<br>..JOINT TORIQUE | 1 | | | | | |
| 15 | 6Y1–24305–06 | .FUEL PIPE JOINT COMP. 2<br>.DURITE RACCORDEMT. A ESSENCE | 1 | | | | | |
| 16 | 93210–08287 | ..O-RING<br>..JOINT TORIQUE | 1 | | | | | |

## FIG. 22 REPAIR KIT 1 — KITS DE REPARATION 1

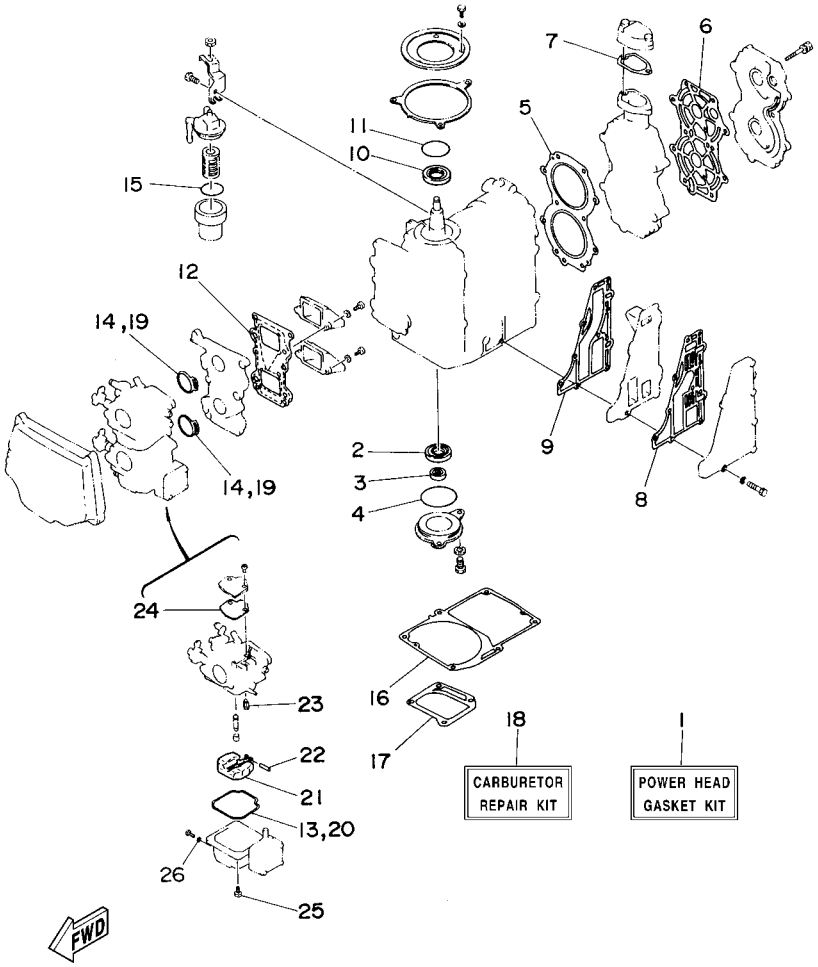


| REF. NO. | PART NO. N° PIECES | DESCRIPTION DESCRIPTION | 6L2F | | | | | REMARKS REMARQUES |
|---|---|---|---|---|---|---|---|---|
| 1 | 6L2–W0001–03 | POWER HEAD GASKET KIT<br>POCHETTE DE JINTS TETE MOTRICE | 1 | | | | | |
| 2 | 93102–25142 | .OIL SEAL<br>.JOINT SPY | 1 | | | | | |
| 3 | 93101–13M37 | .OIL SEAL<br>.JOINT SPY | 1 | | | | | |
| 4 | 93210–56M80 | .O-RING<br>.JOINT TORIQUE | 1 | | | | | |
| 5 | 6L2–11181–A3 | .GASKET, CYLINDER HEAD 1<br>.JOINT, DE CULASSE 1 | 1 | | | | | |
| 6 | 6L2–11193–A1 | .GASKET, HEAD COVER 1<br>.JOINT, COUVERCLE DE CULASSE 1 | 1 | | | | | |
| 7 | 6J8–12414–A0 | .GASKET, COVER<br>.JOINT, COUVERCLE | 1 | | | | | |
| 8 | 6L2–41114–A1 | .GASKET, EXHAUST OUTER COVER<br>.JOINT, COUVERCLE D'ECHAPPEMENT | 1 | | | | | |
| 9 | 6L2–41112–A3 | .GASKET, EXHAUST INNER COVER<br>.JOINT, PLAQUE D'ECHAPPEMENT | 1 | | | | | |
| 10 | 93102–26M27 | .OIL SEAL<br>.JOINT SPY | 1 | | | | | |
| 11 | 93210–42159 | .O-RING<br>.JOINT TORIQUE | 1 | | | | | |
| 12 | 6L2–13621–00 | .GASKET, VALVE SEAT<br>.JOINT, SIEGE DE CLAPET | 1 | | | | | |
| 13 | 6L2–14384–00 | .GASKET, FLOAT CHAMBER<br>.JOINT, CUVE DE FLOTTEUR | 2 | | | | | |
| 14 | 6L2–14198–00 | .GASKET<br>.JOINT | 2 | | | | | |
| 15 | 93210–32738 | .O-RING<br>.JOINT TORIQUE | 1 | | | | | |
| 16 | 6L2–45113–A2 | .GASKET, UPPER CASING<br>.JOINT, TUBE D'ARBRE | 1 | | | | | |
| 17 | 6L2–41133–A3 | .GASKET, EXHAUST MANIFOLD 1<br>.JOINT, PIPE D'ECHAPPEMENT | 1 | | | | | |
| 18 | 6L2–W0093–00 | CARBURETOR REPAIR KIT<br>KIT DE REPARATION CARBURATEUR | 1 | | | | | |
| 19 | 6L2–14198–00 | .GASKET<br>.JOINT | 2 | | | | | |
| 20 | 6L2–14384–00 | .GASKET, FLOAT CHAMBER<br>.JOINT, CUVE DE FLOTTEUR | 2 | | | | | |
| 21 | 6L2–14385–00 | .FLOAT<br>.FLOTTEUR | 2 | | | | | |
| 22 | 6E5–14386–01 | .PIN, FLOAT<br>.AXE, FLOTTEUR | 2 | | | | | |
| 23 | 6L2–14392–00 | .VALVE, NEEDLE<br>.POINTEAU | 2 | | | | | |
| 24 | 6L2–14399–00 | .GASKET<br>.JOINT | 2 | | | | | |
| 25 | 97980–04112 | .SCREW, WITH WASHER<br>.VIS, AVEC RONDELLE | 2 | | | | | |
| 26 | 6L2–14398–00 | .GASKET<br>.JOINT | 2 | | | | | |

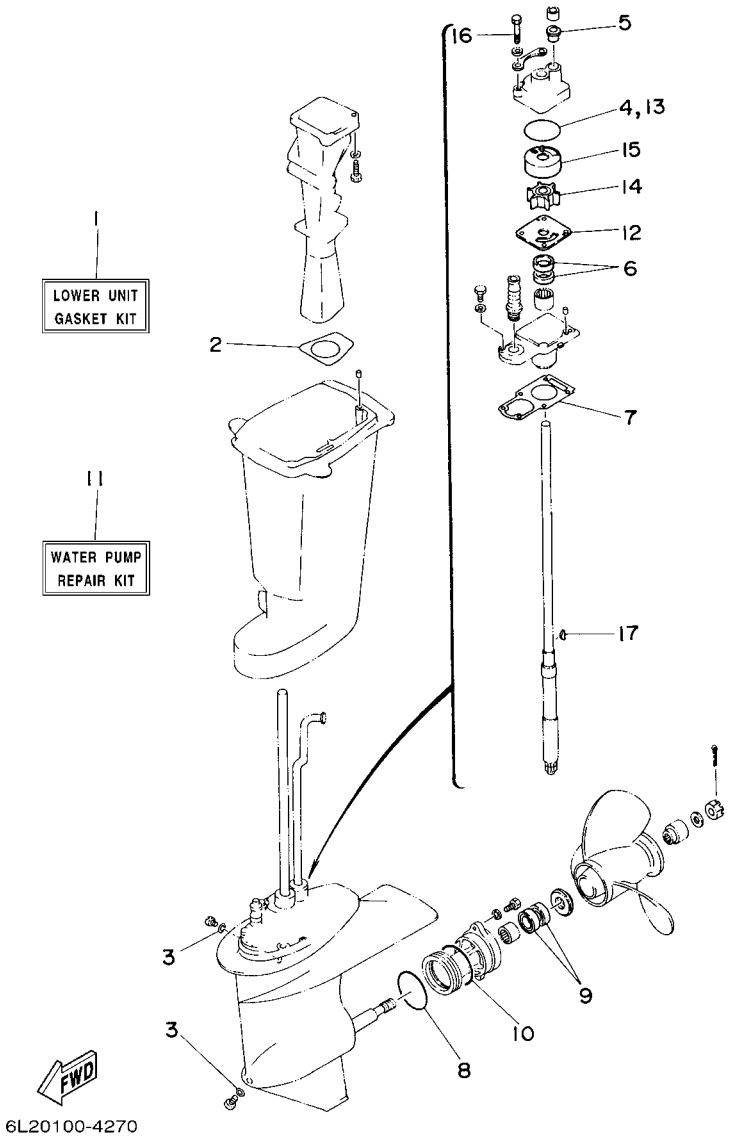


## FIG. 23 REPAIR KIT 2 — KITS DE REPARATION 2

| REF. NO. | PART NO. N° PIECES | DESCRIPTION DESCRIPTION | 6L2F | | | | | REMARKS REMARQUES |
|---|---|---|---|---|---|---|---|---|
| 1 | 6L2–W0001–C3 | LOWER UNITGASKETKIT<br>POCHETTE DE JOINTS EMBASE | 1 | | | | | |
| 2 | 6L2–41134–00 | .GASKET, EXHAUST MANIFOLD<br>.JOINT, PIPE D'ECHAPPEMENT | 1 | | | | | |
| 3 | 90430–08020 | .GASKET<br>.JOINT | 2 | | | | | |
| 4 | 93210–45161 | .O-RING<br>.JOINT TORIQUE | 1 | | | | | |
| 5 | 6L2–44367–00 | .DAMPER, WATER SEAL 3<br>.JOINT TUBE D'EAU 3 | 1 | | | | | |
| 6 | 93101–20048 | .OIL SEAL<br>.JOINT SPY | 2 | | | | | |
| 7 | 6L2–45315–A0 | .PACKING, LOWER CASING<br>.JOINT, BOITIER D'HELICE | 1 | | | | | |
| 8 | 93210–60MA3 | .O-RING<br>.JOINT TORIQUE | 1 | | | | | |
| 9 | 93101–20M07 | .OIL SEAL<br>.JOINT SPY | 2 | | | | | |
| 10 | 93210–60M99 | .O-RING<br>.JOINT TORIQUE | 1 | | | | | |
| 11 | 6L2–W0078–00 | WATER PUMP REPAIR KIT<br>KIT DE REPARATION DE LA POMPE | 1 | | | | | |
| 12 | 6L2–44323–00 | .OUTER PLATE, CARTRIDGE<br>.PLAQUE EXTERIEURE | 1 | | | | | |
| 13 | 93210–45161 | .O-RING<br>.JOINT TORIQUE | 1 | | | | | |
| 14 | 6L2–44352–00 | .IMPELLER<br>.TURBINE | 1 | | | | | |
| 15 | 6L2–44322–00 | .INSERT, CARTRIDGE<br>.CUVETTE | 1 | | | | | |
| 16 | 97095–06040 | .BOLT<br>.BOULON | 4 | | | | | |
| 17 | 90280–03024 | .KEY, WOODRUFF<br>.CLAVETTE, DEMI-LUNE | 1 | | | | | |

NUMERICAL INDEX
INDEX NUMERIQUE


| PART NO. N° PIECES | REF. NO. |
|---|---|
| 6L2–11111–01–1S | 3 – 17 |
| 6L2–11181–A3 | 3 – 18 |
| | 22 – 5 |
| 6L2–11191–00–1S | 3 – 19 |
| 6L2–11193–A1 | 3 – 20 |
| | 22 – 6 |
| 6J8–11325–00 | 1 – 1 |
| | 3 – 12 |
| 6H3–11327–00–94 | 3 – 13 |
| 6H3–11328–00 | 3 – 14 |
| 676–11372–00 | 3 – 31 |
| 6E5–11372–01 | 3 – 3 |
| 6L2–11400–10 | 4 – 1 |
| 6L2–11412–00 | 4 – 2 |
| 6L2–11422–00 | 4 – 3 |
| 6L2–11432–00 | 4 – 4 |
| 6L2–11442–00 | 4 – 5 |
| 6L2–11515–00 | 4 – 14 |
| 6J8–11536–00 | 4 – 16 |
| 6L2–11537–00 | 7 – 2 |
| 6L2–11610–00 | 4 – 20 |
| 6L2–11610–10 | 4 – 20 |
| 6L2–11610–20 | 4 – 20 |
| 6L2–11631–00–97 | 4 – 19 |
| 648–11633–00 | 4 – 21 |
| 6L2–11635–00 | 4 – 19 |
| 6L2–11636–00 | 4 – 19 |
| 6L2–11651–00 | 4 – 10 |
| 6L2–11681–00 | 4 – 11 |
| 6E5–12411–30 | 1 – 2 |
| | 3 – 23 |
| 688–12412–00 | 3 – 24 |
| 6H4–12413–00–1S | 3 – 25 |
| 6J8–12414–A0 | 1 – 3 |
| | 3 – 26 |
| | 22 – 7 |
| 6J8–13117–00 | 7 – 3 |
| 6E9–13183–70 | 7 – 13 |
| 6L2–13200–00 | 7 – 5 |
| 6J8–13411–00 | 7 – 27 |
| 6J8–13414–00 | 7 – 28 |
| 6L2–13416–00 | 7 – 29 |
| 6L2–13437–21 | 9 – 41 |
| 6L2–13471–00 | 7 – 6 |
| 6L2–13475–00 | 7 – 7 |
| 6L2–13610–00 | 5 – 1 |
| 6L2–13621–00 | 5 – 6 |
| | 22 – 12 |

| PART NO. N° PIECES | REF. NO. |
|---|---|
| 6L2–13641–10 | 5 – 4 |
| 6L2–14157–00 | 6 – 10 |
| 6L2–14198–00 | 5 – 11 |
| | 22 – 14 |
| | 22 – 19 |
| 646–14212–01 | 6 – 17 |
| 6L2–14301–02 | 6 – 1 |
| 6L2–14302–02 | 6 – 2 |
| 664–14321–01 | 6 – 18 |
| 6L2–14323–00 | 6 – 16 |
| 6E7–14325–00 | 6 – 26 |
| 6L2–14341–00 | 6 – 12 |
| 6L2–14342–30 | 6 – 14 |
| 30X–14343–63 | 6 – 13 |
| 50M–14355–00 | 6 – 15 |
| 6L2–14368–00 | 14 – 38 |
| 6L2–14381–00 | 6 – 3 |
| 6L2–14383–00 | 6 – 3 |
| 677–14383–01 | 6 – 20 |
| 6L2–14384–00 | 6 – 4 |
| | 22 – 13 |
| | 22 – 20 |
| 6L2–14385–00 | 6 – 5 |
| | 22 – 21 |
| 6E5–14386–01 | 6 – 6 |
| | 22 – 22 |
| 6L2–14392–00 | 6 – 7 |
| | 22 – 23 |
| 6L2–14398–00 | 6 – 21 |
| | 22 – 26 |
| 6L2–14399–00 | 6 – 11 |
| | 22 – 24 |
| 6L2–14417–00 | 5 – 12 |
| 6L2–14418–00 | 5 – 19 |
| 6L2–14476–00 | 5 – 13 |
| 6L2–14476–11 | 5 – 18 |
| 676–14485–00 | 5 – 5 |
| 6L2–14497–00 | 14 – 1 |
| 6L2–14578–01 | 6 – 32 |
| 6L2–14584–00 | 6 – 33 |
| 6L2–15100–10 | 3 – 2 |
| 6L2–15396–00–1S | 4 – 25 |
| 6J8–15705–00 | 9 – 19 |
| 6L2–15710–02 | 9 – 1 |
| 6L2–15711–00–94 | 9 – 2 |
| 6J8–15714–00 | 9 – 11 |
| 677–15717–01 | 9 – 13 |
| 6L2–15723–01 | 9 – 39 |

| PART NO. N° PIECES | REF. NO. |
|---|---|
| 676–15741–03 | 9 – 17 |
| 6L2–15746–00 | 9 – 29 |
| 6L2–15747–00 | 9 – 32 |
| 656–15748–00 | 9 – 26 |
| 689–15755–01 | 9 – 8 |
| 6L2–15758–01–94 | 9 – 4 |
| 6L2–15762–00 | 9 – 7 |
| 6L2–15770–00 | 9 – 28 |
| 6L2–15772–00–94 | 9 – 35 |
| 6L2–15774–00 | 9 – 33 |
| 6F5–15779–02 | 9 – 9 |
| 6A0–15789–00 | 9 – 20 |
| 6L2–21707–01 | 7 – 22 |
| 63D–21744–00 | 7 – 34 |
| 6H1–21757–00 | 7 – 26 |
| 6L2–21758–00 | 7 – 24 |
| 6H4–21770–00 | 7 – 23 |
| 6L2–21798–00 | 7 – 42 |
| 6YJ–24167–00 | 21 – 7 |
| 6YJ–24201–00 | 21 – 1 |
| 6YK–24201–04 | 20 – 1 |
| 6YJ–24260–00 | 21 – 3 |
| 6YK–24260–10 | 20 – 3 |
| 6Y1–24268–00 | 21 – 6 |
| 6YL–24268–01 | 20 – 4 |
| 6G1–24304–02 | 8 – 1 |
| 6G1–24305–05 | 21 – 13 |
| 6Y1–24305–06 | 21 – 15 |
| 61J–24306–04 | 21 – 8 |
| 6YL–24306–54 | 20 – 7 |
| 6H4–24311–00 | 8 – 4 |
| 6L2–24311–00 | 8 – 5 |
| 6Y1–24329–00 | 21 – 5 |
| 6YL–24329–00 | 20 – 5 |
| 650–24351–51 | 21 – 12 |
| 61J–24360–00 | 21 – 10 |
| 6E5–24376–10 | 7 – 35 |
| 677–24411–02 | 6 – 30 |
| 682–24412–01 | 6 – 29 |
| 6L2–24413–00 | 6 – 28 |
| 6A0–24421–01 | 6 – 24 |
| 677–24434–02 | 6 – 31 |
| 6L2–24435–00 | 6 – 27 |
| 677–24444–01 | 6 – 22 |
| 61N–24521–00 | 8 – 9 |
| 61N–24560–00 | 8 – 7 |
| 61N–24563–00 | 1 – 5 |
| | 8 – 8 |

| PART NO. N° PIECES | REF. NO. |
|---|---|
| 6L2–24566–00 | 8 – 11 |
| 6YJ–24610–01 | 21 – 2 |
| 6YK–24610–01 | 20 – 2 |
| 6H1–24633–00 | 7 – 25 |
| 6L2–26301–01 | 13 – 24 |
| 6L2–26363–00 | 13 – 36 |
| 6L3–28199–7G–D0 | 8 – 15 |
| 6L3–28199–7G–E0 | 8 – 15 |
| 6L3–28199–7G–F0 | 8 – 15 |
| 6L3–28199–7G–G0 | 8 – 15 |
| 6L3–28199–7G–H0 | 8 – 15 |
| 6L3–28199–7G–S0 | 8 – 15 |
| 6L3–28199–8H–K0 | 8 – 16 |
| 6L3–28199–8H–L0 | 8 – 16 |
| 6L3–28199–8H–M0 | 8 – 16 |
| 6L3–28199–8H–N0 | 8 – 16 |
| 6L3–28199–8H–P0 | 8 – 16 |
| 6L3–28199–8H–R0 | 8 – 16 |
| 6L2–41111–00–1S | 3 – 28 |
| 6L2–41112–A3 | 3 – 29 |
| | 22 – 9 |
| 6L2–41113–00–1S | 3 – 30 |
| 6L2–41114–A1 | 3 – 32 |
| | 22 – 8 |
| 6L2–41131–00–CA | 17 – 9 |
| 6L2–41133–A3 | 17 – 12 |
| | 22 – 17 |
| 6L2–41134–00 | 17 – 10 |
| | 23 – 2 |
| 6L2–41212–00 | 14 – 22 |
| 6L2–41213–00 | 14 – 4 |
| 6L2–41217–00 | 5 – 25 |
| 6H1–41237–00 | 7 – 18 |
| 6L2–41237–00 | 14 – 26 |
| 662–41237–01 | 14 – 12 |
| 682–41237–50 | 7 – 17 |
| 6L2–41238–00 | 14 – 27 |
| 6L2–41257–00 | 5 – 24 |
| 6J8–41259–00 | 5 – 21 |
| 661–41262–02 | 5 – 22 |
| | 9 – 34 |
| 6J8–41271–01 | 5 – 23 |
| 689–41273–00 | 12 – 9 |
| 6J8–41274–00 | 12 – 10 |
| 6L2–41283–00 | 14 – 5 |
| 6G1–41611–00 | 10 – 17 |
| 6G1–41612–00 | 10 – 21 |
| 695–41613–00 | 10 – 18 |

| PART NO. N° PIECES | REF. NO. |
|---|---|
| 6L2–41631–00 | 14 – 6 |
| 6G1–41662–01–94 | 14 – 29 |
| 6G1–42111–12–4D | 13 – 2 |
| 664–42119–00 | 13 – 13 |
| 6L2–42121–03–4D | 15 – 20 |
| 6G1–42125–01 | 13 – 10 |
| 6G1–42126–00 | 13 – 11 |
| 6G1–42131–02 | 13 – 7 |
| 6L2–42137–00 | 13 – 15 |
| 6G1–42138–01 | 13 – 21 |
| 6E0–42159–02 | 13 – 22 |
| 6J8–42167–00 | 14 – 7 |
| 6L2–42167–00 | 14 – 8 |
| 689–42169–01 | 14 – 11 |
| 6G1–42177–00 | 13 – 14 |
| 6L2–42192–00 | 14 – 16 |
| 6L2–42510–01–4D | 15 – 25 |
| 6H4–42528–00 | 15 – 17 |
| 6L2–42610–01 | 2 – 1 |
| 6L2–42613–01–4D | 2 – 7 |
| 6L2–42615–00 | 2 – 3 |
| 6L2–4261A–00 | 2 – 2 |
| 6L2–42647–00 | 2 – 5 |
| 6G1–42651–71 | 2 – 4 |
| 63V–42675–40 | 2 – 11 |
| 63V–42676–40 | 2 – 12 |
| 6L2–42678–40 | 2 – 13 |
| 6E0–42681–40 | 2 – 14 |
| | 2 – 15 |
| 6L2–42711–03–4D | 12 – 1 |
| 6L2–42716–00 | 12 – 15 |
| 6L2–42719–A0 | 12 – 8 |
| 6L2–42725–00 | 12 – 11 |
| 6L2–42726–01 | 12 – 12 |
| 6G1–42727–00 | 12 – 13 |
| 6L2–42738–01 | 12 – 20 |
| 6L2–42748–01 | 12 – 14 |
| 6EE–42794–40 | 12 – 27 |
| 6EE–42794–50 | 12 – 28 |
| 6L2–42815–01–4D | 12 – 2 |
| 6L2–42816–00 | 12 – 4 |
| 6L2–43111–05–4D | 15 – 1 |
| 6L2–43112–06–4D | 15 – 2 |
| 6J8–43113–01 | 15 – 14 |
| 648–43114–01 | 15 – 8 |
| 6L2–43116–00 | 15 – 7 |
| 6E0–43118–01 | 15 – 5 |
| 6J8–43131–01 | 15 – 9 |

| PART NO. N° PIECES | REF. NO. |
|---|---|
| 6G5–43145–01 | 15 – 13 |
| 6L2–43160–01 | 16 – 4 |
| 689–43165–00 | 16 – 5 |
| 6L2–43165–01 | 16 – 1 |
| 6L2–43188–00 | 16 – 27 |
| 6L2–43191–01 | 16 – 14 |
| 6L2–43311–05–4D | 15 – 15 |
| 682–43318–01 | 16 – 9 |
| 6L2–43336–00 | 16 – 37 |
| 6L2–43350–02 | 16 – 17 |
| 689–43373–01 | 15 – 18 |
| 6L2–43611–00 | 16 – 29 |
| 6J8–43611–01 | 16 – 18 |
| 6L2–43613–00 | 16 – 34 |
| 6L2–43614–00 | 16 – 20 |
| 6L2–43615–00 | 16 – 23 |
| 6L2–43617–00 | 16 – 33 |
| 6L2–43624–00 | 16 – 36 |
| 6L2–43630–01 | 16 – 8 |
| 6L2–43631–00 | 16 – 26 |
| 6L2–43633–10 | 16 – 28 |
| 6L2–43641–00 | 16 – 30 |
| 6L2–43657–00 | 16 – 24 |
| 6L2–43659–00 | 16 – 31 |
| 6L2–43676–00 | 16 – 25 |
| 6L2–43682–01 | 16 – 11 |
| 6L2–44111–01–94 | 13 – 25 |
| 6J8–44116–00 | 14 – 32 |
| 6L2–44121–00 | 14 – 21 |
| 6L2–44122–00 | 14 – 14 |
| 6L2–44123–00 | 14 – 34 |
| 6L2–44124–00 | 13 – 35 |
| 6L2–44125–00–94 | 13 – 30 |
| 6L2–44141–02 | 14 – 19 |
| 6L2–44141–10–94 | 14 – 20 |
| 6L2–44143–00 | 14 – 36 |
| 6L2–44147–00 | 18 – 20 |
| 6L2–44150–00 | 18 – 50 |
| 6L2–44150–10 | 18 – 50 |
| 6X3–44191–00 | 15 – 21 |
| 6L2–44311–01 | 18 – 9 |
| 6L2–44322–00 | 18 – 11 |
| | 23 – 15 |
| 6L2–44323–00 | 18 – 12 |
| | 23 – 12 |
| 6L2–44328–00 | 18 – 16 |
| 6L2–44352–00 | 18 – 13 |
| | 23 – 14 |

NUMERICAL INDEX
INDEX NUMERIQUE


| PART NO. N° PIECES | REF. NO. |
|---|---|
| 6L2–44361–00 | 19 – 2 |
| 6L2–44361–10 | 19 – 2 |
| 6L2–44365–00 | 15 – 32 |
| 6L2–44366–00 | 19 – 3 |
| 6L2–44367–00 | 23 – 5 |
| 6L2–44367–10 | 19 – 9 |
| 6L2–44368–00 | 19 – 1 |
| 6BL–44391–00 | 12 – 21 |
| 6L2–44512–00–4D | 15 – 30 |
| 6L2–44514–01 | 15 – 35 |
| 6L2–44526–00 | 15 – 40 |
| 6L2–44551–01–4D | 15 – 42 |
| 6L2–44552–01–4D | 15 – 43 |
| 6L2–44553–01–4D | 15 – 48 |
| 6L2–44555–00 | 15 – 46 |
| 6L2–44557–00 | 15 – 47 |
| 6L2–45111–03–4D | 17 – 1 |
| 6L2–45111–13–4D | 17 – 1 |
| 6L2–45113–A2 | 3 – 35 |
| | 22 – 16 |
| 6L2–45114–A1 | 15 – 31 |
| 6L2–45115–00 | 17 – 3 |
| 6L2–45123–01 | 17 – 11 |
| 6L2–45151–01–4D | 17 – 2 |
| 6L2–45214–00 | 19 – 10 |
| 6L2–45215–00 | 19 – 11 |
| 6L2–45300–04–4D | 18 – 1 |
| 6L2–45300–14–4D | 18 – 1 |
| 6L2–45311–02–4D | 18 – 2 |
| 6L2–45315–A0 | 18 – 22 |
| | 23 – 7 |
| 6L2–45331–00–CA | 18 – 17 |
| 6L2–45361–03–4D | 18 – 42 |
| 664–45371–01 | 1 – 8 |
| | 19 – 7 |
| 6L2–45375–00 | 18 – 25 |
| 6L2–45510–00 | 18 – 26 |
| 6L2–45510–10 | 18 – 26 |
| 6L2–45536–00 | 18 – 6 |
| 6L2–45551–01 | 18 – 28 |
| 6L2–45560–10 | 18 – 32 |
| 6L2–45567–00 | 18 – 4 |
| 6L2–45567–10 | 18 – 4 |
| 6L2–45567–20 | 18 – 4 |
| 6L2–45567–30 | 18 – 4 |
| 6L2–45567–40 | 18 – 4 |
| 6L2–45571–00 | 18 – 33 |
| 6L2–45577–00 | 18 – 35 |

| PART NO. N° PIECES | REF. NO. |
|---|---|
| 6L2–45577–10 | 18 – 35 |
| 6L2–45577–20 | 18 – 35 |
| 6L2–45577–30 | 18 – 35 |
| 6L2–45587–00 | 18 – 31 |
| 6L2–45587–10 | 18 – 31 |
| 65W–45611–00 | 18 – 36 |
| 6L2–45631–00 | 18 – 38 |
| 648–45633–00 | 18 – 40 |
| 648–45635–00 | 18 – 41 |
| 664–45941–01 | 19 – 19 |
| 664–45943–01 | 19 – 19 |
| 664–45945–00 | 19 – 19 |
| 664–45947–01 | 19 – 19 |
| 664–45949–02 | 19 – 19 |
| 664–45952–00 | 19 – 19 |
| 664–45954–01 | 19 – 19 |
| 664–45970–00 | 19 – 19 |
| 664–45972–00 | 19 – 19 |
| 6J8–45986–10 | 19 – 21 |
| 6L2–45987–01 | 19 – 14 |
| 689–45997–00 | 19 – 15 |
| 6E9–81328–70 | 10 – 10 |
| 6L2–81332–00 | 10 – 24 |
| 6J8–81960–00 | 11 – 21 |
| 6EE–81994–40 | 5 – 26 |
| 6EE–81994–50 | 5 – 27 |
| 6EE–81995–40 | 9 – 42 |
| 6EE–81995–50 | 9 – 43 |
| 6L2–82127–00 | 17 – 6 |
| 6E5–82148–00 | 15 – 3 |
| 6A0–82317–00 | 7 – 39 |
| 6G1–82370–21 | 11 – 17 |
| 682–82556–00 | 12 – 23 |
| 689–82560–00 | 11 – 20 |
| 6L2–82575–00 | 12 – 22 |
| 689–8257Y–00 | 12 – 24 |
| 6L2–82599–01 | 10 – 27 |
| 682–84381–00 | 12 – 26 |
| 6J8–85410–00 | 12 – 25 |
| 663–85518–00 | 10 – 13 |
| 6L2–85520–12 | 10 – 3 |
| 6L2–85533–10 | 10 – 4 |
| 61N–85537–00 | 10 – 12 |
| 6L2–85540–23 | 11 – 1 |
| 6L2–85542–02 | 11 – 4 |
| 6L2–85550–00 | 10 – 1 |
| 6L2–85560–10 | 10 – 2 |
| 6L2–85561–10 | 10 – 11 |

| PART NO. N° PIECES | REF. NO. |
|---|---|
| 61N–85570–00 | 11 – 9 |
| 6L2–85580–10 | 10 – 5 |
| 6L2–85580–20 | 10 – 6 |
| 6L2–85720–02 | 7 – 45 |
| 6L2–W0001–03 | 22 – 1 |
| 6L2–W0001–C3 | 23 – 1 |
| 6L2–W0004–00 | 5 – 2 |
| 6L2–W0078–00 | 1 – 9 |
| | 23 – 11 |
| 6L2–W0084–11–4D | 13 – 1 |
| 6L2–W0090–12–1S | 3 – 1 |
| 6L2–W0093–00 | 22 – 18 |
| 656–W2810–02 | 8 – 14 |
| 6J8–W4591–00 | 19 – 20 |
| 90101–06M16 | 11 – 7 |
| 90101–08M09 | 15 – 38 |
| 90105–06M18 | 15 – 19 |
| 90105–08M02 | 19 – 8 |
| 90105–08M10 | 9 – 40 |
| 90105–10M12 | 19 – 5 |
| 90109–05M33 | 7 – 10 |
| 90109–06M28 | 14 – 23 |
| 90116–08016 | 13 – 8 |
| 90116–10063 | 15 – 22 |
| 90119–06023 | 3 – 22 |
| 90119–06M04 | 15 – 36 |
| 90119–06M05 | 15 – 37 |
| 90119–06M14 | 3 – 11 |
| 90119–06M53 | 9 – 31 |
| 90119–06M65 | 7 – 41 |
| 90119–06MA3 | 3 – 27 |
| 90119–06MA4 | 3 – 33 |
| 90119–08M65 | 3 – 10 |
| 90119–08M91 | 3 – 21 |
| 90151–05M05 | 19 – 12 |
| 90152–05011 | 13 – 19 |
| 90157–05M16 | 20 – 6 |
| 90157–05M19 | 21 – 4 |
| 90157–06M06 | 17 – 7 |
| 90159–06M11 | 17 – 4 |
| 90170–06015 | 14 – 37 |
| 90171–14013 | 19 – 17 |
| 90179–10M14 | 18 – 29 |
| 90179–12M04 | 10 – 15 |
| 90185–05002 | 19 – 13 |
| 90185–08057 | 13 – 9 |
| | 15 – 41 |
| 90185–10027 | 15 – 24 |

| PART NO. N° PIECES | REF. NO. |
|---|---|
| 90185–22043 | 15 – 12 |
| 90201–06060 | 9 – 14 |
| 90201–08086 | 3 – 8 |
| 90201–08M01 | 15 – 39 |
| 90201–08M93 | 7 – 1 |
| 90201–10M02 | 13 – 18 |
| 90201–13M42 | 10 – 16 |
| 90201–18522 | 4 – 24 |
| 90201–20417 | 18 – 34 |
| 90201–22M03 | 15 – 11 |
| 90201–30M00 | 15 – 27 |
| 90201–50306 | 4 – 18 |
| 90202–05088 | 7 – 20 |
| | 13 – 38 |
| | 14 – 17 |
| 90202–05M38 | 13 – 39 |
| 90202–06009 | 13 – 33 |
| 90202–15M37 | 13 – 28 |
| 90202–36M55 | 13 – 4 |
| 90206–12052 | 12 – 5 |
| 90206–15M18 | 13 – 27 |
| 90206–36M21 | 13 – 3 |
| 90209–24M15 | 4 – 13 |
| 90243–04M01 | 15 – 6 |
| 90250–05010 | 18 – 39 |
| 90254–03M04 | 14 – 15 |
| | 14 – 35 |
| 90266–04M00 | 2 – 6 |
| 90266–04M04 | 2 – 10 |
| 90269–02M09 | 13 – 16 |
| 90280–03024 | 18 – 27 |
| | 23 – 17 |
| 90280–05013 | 10 – 14 |
| 90338–05M03 | 12 – 16 |
| 90340–08002 | 18 – 7 |
| 90386–08032 | 13 – 20 |
| | 16 – 10 |
| 90386–12M45 | 12 – 3 |
| 90386–12M72 | 13 – 29 |
| 90386–15M73 | 13 – 26 |
| 90386–22M67 | 15 – 10 |
| 90386–30M60 | 15 – 29 |
| 90386–30M75 | 15 – 26 |
| 90386–33M96 | 13 – 5 |
| 90386–34M97 | 13 – 6 |
| 90387–06119 | 7 – 40 |
| 90387–06M18 | 14 – 10 |
| 90387–06M51 | 9 – 30 |

| PART NO. N° PIECES | REF. NO. |
|---|---|
| 90387–06M52 | 12 – 18 |
| 90387–28M00 | 4 – 17 |
| 90430–08020 | 1 – 7 |
| | 18 – 8 |
| | 23 – 3 |
| 90445–07M04 | 7 – 14 |
| 90445–07M15 | 3 – 4 |
| 90445–07M16 | 7 – 16 |
| 90445–07M32 | 7 – 11 |
| 90445–09012 | 5 – 9 |
| 90445–10M40 | 3 – 34 |
| 90445–11M03 | 7 – 32 |
| 90445–11M05 | 21 – 11 |
| 90445–11M06 | 21 – 9 |
| 90445–11M07 | 7 – 33 |
| 90446–10M02 | 7 – 38 |
| 90464–08M07 | 11 – 12 |
| 90464–11M24 | 7 – 37 |
| 90465–06M86 | 11 – 14 |
| 90467–06016 | 3 – 5 |
| 90467–08004 | 5 – 10 |
| | 7 – 30 |
| | 8 – 6 |
| 90467–10M04 | 7 – 36 |
| 90467–11M08 | 7 – 31 |
| 90468–05M03 | 7 – 21 |
| | 13 – 40 |
| 90468–07M02 | 7 – 12 |
| | 7 – 15 |
| 90480–15M31 | 12 – 17 |
| 90480–25161 | 11 – 13 |
| 90501–10065 | 18 – 37 |
| 90501–10227 | 9 – 27 |
| 90501–23215 | 13 – 17 |
| 90502–10M07 | 16 – 7 |
| 90506–20M27 | 16 – 16 |
| 90506–23M11 | 16 – 38 |
| 90508–12M28 | 16 – 21 |
| 90508–12M29 | 16 – 22 |
| 90510–08M04 | 9 – 12 |
| 91490–16010 | 13 – 12 |
| 91490–20010 | 13 – 34 |
| | 14 – 18 |
| 91490–30022 | 19 – 18 |
| 91690–30008 | 16 – 6 |
| 91690–30010 | 4 – 15 |
| 91690–40014 | 9 – 3 |
| 92900–04100 | 6 – 9 |

| PART NO. N° PIECES | REF. NO. |
|---|---|
| 92903–05600 | 5 – 16 |
| | 14 – 25 |
| 92903–06600 | 3 – 16 |
| | 5 – 8 |
| | 9 – 37 |
| | 11 – 8 |
| | 14 – 31 |
| 92990–06600 | 16 – 3 |
| 92990–14200 | 19 – 16 |
| 92995–05600 | 10 – 23 |
| | 10 – 26 |
| | 16 – 13 |
| 92995–06600 | 2 – 9 |
| | 4 – 30 |
| | 7 – 44 |
| | 8 – 3 |
| | 9 – 6 |
| | 9 – 22 |
| | 9 – 24 |
| | 10 – 20 |
| | 11 – 3 |
| | 11 – 6 |
| | 11 – 11 |
| | 11 – 16 |
| | 11 – 19 |
| | 11 – 23 |
| | 13 – 32 |
| | 15 – 34 |
| | 17 – 14 |
| | 18 – 15 |
| | 18 – 24 |
| | 18 – 48 |
| 92995–08600 | 15 – 50 |
| 92995–10600 | 15 – 23 |
| | 19 – 6 |
| 93101–13M37 | 4 – 27 |
| | 22 – 3 |
| 93101–20048 | 18 – 19 |
| | 23 – 6 |
| 93101–20M07 | 18 – 46 |
| | 23 – 9 |
| 93102–25142 | 4 – 26 |
| | 22 – 2 |
| 93102–26M27 | 4 – 7 |
| | 22 – 10 |
| 93210–08287 | 21 – 14 |
| | 21 – 16 |
| 93210–13M04 | 7 – 4 |

NUMERICAL INDEX
INDEX NUMERIQUE

| PART NO. N° PIECES | REF. NO. |
|---|---|
| 93210–19M82 | 7 – 8 |
| 93210–29375 | 15 – 28 |
| 93210–32738 | 1 – 6 |
| | 8 – 10 |
| | 22 – 15 |
| 93210–35M86 | 5 – 14 |
| 93210–42159 | 4 – 8 |
| | 22 – 11 |
| 93210–45161 | 18 – 10 |
| | 23 – 4 |
| | 23 – 13 |
| 93210–56M80 | 4 – 28 |
| | 22 – 4 |
| 93210–60M99 | 18 – 49 |
| | 23 – 10 |
| 93210–60MA3 | 18 – 44 |
| | 23 – 8 |
| 93306–00612 | 18 – 43 |
| 93306–305U3 | 4 – 9 |
| 93310–424W9 | 4 – 12 |
| 93311–632U7 | 4 – 6 |
| 93315–22004 | 18 – 18 |
| | 18 – 45 |
| 93315–220V9 | 18 – 5 |
| 93332–00005 | 18 – 3 |
| 93341–320U0 | 18 – 30 |
| 93430–06M02 | 9 – 18 |
| 93450–20026 | 4 – 23 |
| 93602–18M12 | 4 – 22 |
| 93604–12M07 | 3 – 6 |
| | 15 – 44 |
| | 17 – 5 |
| | 18 – 21 |
| | 19 – 4 |
| 93700–06M03 | 15 – 16 |
| 94702–00271 | 1 – 4 |
| | 3 – 36 |
| 95303–06700 | 9 – 16 |
| 95333–08600 | 3 – 9 |
| 95380–03600 | 6 – 25 |
| 95380–05600 | 14 – 13 |
| 95380–05700 | 7 – 19 |
| | 14 – 28 |
| 95380–06600 | 18 – 51 |
| 95380–06700 | 13 – 37 |
| | 14 – 3 |
| 95380–08600 | 8 – 13 |
| 95617–08645 | 3 – 7 |

| PART NO. N° PIECES | REF. NO. |
|---|---|
| 95780–06300 | 12 – 7 |
| 95895–06012 | 14 – 33 |
| 95895–06020 | 12 – 19 |
| 97013–05012 | 5 – 15 |
| 97013–05016 | 14 – 24 |
| 97013–06014 | 8 – 12 |
| 97013–06016 | 3 – 15 |
| 97013–06020 | 9 – 36 |
| | 14 – 30 |
| 97013–06025 | 5 – 7 |
| | 9 – 15 |
| 97075–06030 | 11 – 5 |
| 97090–06010 | 16 – 2 |
| 97095–05010 | 16 – 12 |
| 97095–06008 | 14 – 39 |
| 97095–06012 | 10 – 19 |
| | 11 – 15 |
| | 11 – 18 |
| 97095–06016 | 2 – 8 |
| | 4 – 29 |
| | 7 – 43 |
| | 9 – 5 |
| | 11 – 22 |
| 97095–06020 | 8 – 2 |
| | 9 – 38 |
| | 11 – 2 |
| | 11 – 10 |
| | 13 – 31 |
| | 14 – 2 |
| | 15 – 33 |
| | 17 – 13 |
| | 18 – 23 |
| | 18 – 47 |
| 97095–06025 | 9 – 23 |
| 97095–06035 | 9 – 21 |
| 97095–06040 | 18 – 14 |
| | 23 – 16 |
| 97095–08045 | 15 – 49 |
| 97513–05518 | 7 – 9 |
| 97513–06585 | 5 – 17 |
| 97575–08530 | 17 – 8 |
| 97595–06575 | 14 – 9 |
| 97595–08585 | 15 – 45 |
| 97607–04110 | 10 – 7 |
| 97607–06125 | 10 – 8 |
| 97802–04006 | 10 – 9 |
| 97880–04010 | 6 – 8 |
| 97880–06035 | 12 – 6 |

| PART NO. N° PIECES | REF. NO. |
|---|---|
| 97885–05010 | 10 – 22 |
| | 10 – 25 |
| 97885–05012 | 13 – 23 |
| 97885–06008 | 15 – 4 |
| 97980–04112 | 6 – 19 |
| | 22 – 25 |
| 97980–05216 | 5 – 3 |
| | 5 – 20 |
| 98980–04006 | 6 – 23 |
| 99080–05600 | 16 – 15 |
| | 16 – 19 |
| | 16 – 32 |
| | 16 – 35 |
| 99530–10014 | 9 – 25 |

| PART NO. N° PIECES | REF. NO. |
|---|---|

| PART NO. N° PIECES | REF. NO. |
|---|---|

| PART NO. N° PIECES | REF. NO. |
|---|---|