YAMAHA

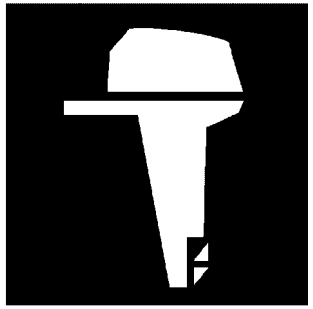

PARTS CATALOGUE
CATALOGUE DE PIECES DETACHEES

F150DET'15 (63PD)
FL150DET'15 (64PD)

YAMAHA
GENUINE
Parts & Accessories

1P63P-300F1

( )

F150DET/FL150DET
PARTS CATALOGUE
©2023 by Yamaha Motor Co., Ltd.
1st edition, April 2023
All rights reserved.
Any reprinting or unauthorized use
without the written permission of
Yamaha Motor Co., Ltd.
is expressly prohibited.
Printed in Japan.

F150DET/FL150DET
CATALOGUE DE PIECES DETACHEES
©2023 par Yamaha Motor Co., Ltd.
1re édition, avril 2023
Tous droits réservés
Toute réimpression ou utilisation
non autorisée sans la permission écrite
de la Yamaha Motor Co., Ltd.
est formellement interdite.
Imprimé au Japon

FOREWORD

This Parts Catalogue is related to the parts for the model(s) on the cover page. When you are ordering replacement parts, please refer to this Parts Catalogue and quote both part numbers and part names correctly.

1. Modifications or additions which have been made after the issue of the Parts Catalogue will be announced in the Parts News.
   It is advisable that you make the necessary corrections to the Parts Catalogue according to the Parts News.

2. Abbreviations
   The following abbreviations are used in this Parts Catalogue.
   "UR" Use specified parts number.
   "UN" Use as many as needed.
   "AP" Alternate Parts
   "LM" Locally Made (Parts need to be ordered locally)
   "F#" Frame No. (Applicable machine No.)
   "O/S" Over Size

3. The number of components for assembly
   - Parts, which are to be supplied in an assembly, are listed with a dot (.) in front of the part name as shown below.
   - The numeral appearing to the right of each component part indicates the quantity of parts for each assembly unit.

PART NO.	DESCRIPTION	Q'TY	REMARKS
2F5–83310–60	FRONT FLASHER LIGHT ASSY	2	
115–83311–60	.BULB (6V–18W)	1	

4. Applicable colours of graphics are represented in the "REMARKS" as shown below.

PART NO.	DESCRIPTION	Q'TY	REMARKS
2N4–24110–00–X5	FUEL TANK COMP.	2	MXR
3J1–24240–10	.GRAPHIC, FUEL TANK	1	FOR MXR

5. Note that the illustrations for reference in finding parts numbers are not to be used for assembling. When assembling, please use the applicable service manual.

6. The asterisk (*) before a reference number indicates modified items after the first edition.

7. Applicable Serial No.
   Engine Serial No.

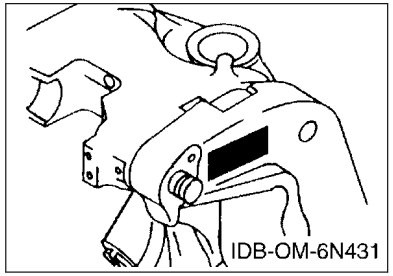

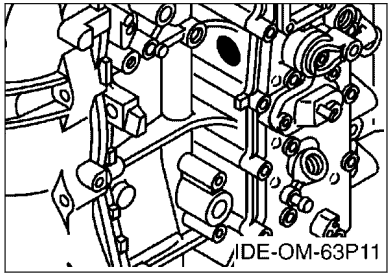

8. Applicable Engine Starting Serial No.

Model	Serial No.	Model	Serial No.
F150D	63P-1155514	FL150D	64P-1017647

9. Applicable Colour Code

Abbreviation	Colour Name	Colour Code
DBN1	DARK BLUISH GRAY 1	008D

10. Quantity Column Information

Column No.	Name Of Q'ty Column	Applicable Model
1	63PD	F150DET
2	64PD	FL150DET

AVANT–PROPOS

Ce catalogue de pièces détachées concerne les pièces pour le(s) modèle(s) indiqué(s) sur la page de couverture. Lorsque vous commandez des pièces de rechange, veuillez vous référer à ce catalogue de pieces détachées et indiquer clairement les numéros et les noms des pièces détachées.

1. Les modifications ou ajouts ayant été effectués après la parution du catalogue de pièces détachées seront décrits dans les Bulletins d'information concernant les pièces détachées.
   Il est recommandé que vous apportiez les corrections nécessaires au catalogue des pièces détachées en vous référant aux Bulletins d'information.

2. Abréviations
   Dans ce catalogue, les abréviations suivantes sont utilisées:
   "UR" Utiliser le numéro de pièces spécifié.
   "UN" Utiliser autant que nécessaire.
   "AP" Pièces de substitution
   "LM" Fabrication locale (les pièces doivent être commandées localement.)
   "F#" N° de cadre (applicable au N° de série)
   "O/S" Surdimensionné

3. Nombre de pièces d'un assemblage
   - Les pièces fournies comme composants d'un assemblage sont précédées d'un point (.) de la manière indiquée ci–dessous.
   - Le chiffre apparaissant à la droite de chaque composant indique la quantité de pièces pour chaque unité d'assemblage.

N° PIECES	DESCRIPTION	QTE	REMARQUES
2F5–83310–60	ENS. CLIGNOTANT AVANT	2	
115–83311–60	.AMPOULE (6V–18W)	1	

4. Les couleurs concernant les graphiques sont indiquées dans la colonne "REMARQUES", comme indiqué ci–dessous.

N° PIECES	DESCRIPTION	QTE	REMARQUES
2N4–24110–00–X5	RESERVOIR A ESSENCE.	2	MXR
3J1–24240–10	.GRAPHIQUE	1	POUR MXR

5. Veuillez noter que les illustrations sont indiquées à titre de référence pour trouver les numéros de pièces, non pour être utilisées lors de l'assemblage. Lors de l'assemblage, veuillez utiliser le manuel d'entretien adéquat.

6. L'astérisque (*) placé devant un numéro de référence indique des éléments qui ont été modifiés après la première édition.

7. N° de série applicable
   N° de Série du moteur

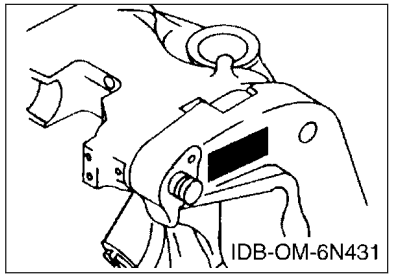

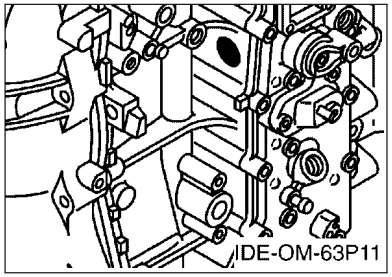

8. N° de série initial du moteur applicable

Modèle	N° de série	Modèle	N° de série
F150D	63P-1155514	FL150D	64P-1017647

9. Code couleur applicable

Abréviation	Nom de la couleur	Code couleur
DBN1	DARK BLUISH GRAY 1	008D

10. Informations relatives à la colonne Quantité

N° de la colonne	Nom de la colonne Qté	Modèle applicable
1	63PD	F150DET
2	64PD	FL150DET

CONTENTS

SCHEDULED SERVICE PARTS.....1
TOP COWLING.....2
CYLINDER & CRANKCASE 1.....3
CRANKSHAFT & PISTON.....5
CYLINDER & CRANKCASE 2.....6
CYLINDER & CRANKCASE 3.....8
VALVE.....10
INTAKE 1.....13
INTAKE 2.....14
INTAKE 3.....15
FUEL INJECTION PUMP 1.....17
FUEL INJECTION PUMP 2.....19
FUEL 1.....20
FUEL 2.....23
GENERATOR.....24
ELECTRICAL 1.....26
ELECTRICAL 2.....27
ELECTRICAL 3.....29
ELECTRICAL 4.....31
STARTING MOTOR.....32
BOTTOM COWLING 1.....34
BOTTOM COWLING 2.....36
CONTROL.....37
BRACKET 1.....39
BRACKET 2.....41
POWER TRIM & TILT ASSY 1.....43
POWER TRIM & TILT ASSY 2.....46
UPPER CASING.....47
OIL PAN.....49
LOWER CASING & DRIVE 1.....50
LOWER CASING & DRIVE 2.....54
LOWER CASING & DRIVE 3.....56
LOWER CASING & DRIVE 4.....60
STEERING GUIDE.....62
OPTIONAL PARTS 1.....63
OPTIONAL PARTS 2.....64
REPAIR KIT 1.....65
REPAIR KIT 2.....66

INDEX

NUMERICAL INDEX.....68

TABLE DES MATIERES

PIECES MAINTENANCE PERIODIQUE.....1
CAPOT SUPERIEUR..... 2
CYLINDRE & CARTER 1..... 3
VILEBREQUIN & PISTON.....5
CYLINDRE & CARTER 2..... 6
CYLINDRE & CARTER 3..... 8
SOUPAPE..... 10
ADMISSION 1.....13
ADMISSION 2.....14
ADMISSION 3.....15
POMPE A INJECTEUR 1..... 17
POMPE A INJECTEUR 2..... 19
CARBURANT 1..... 20
CARBURANT 2..... 23
GENERATRICE.....24
PARTIE ELECTRIQUE 1.....26
PARTIE ELECTRIQUE 2.....27
PARTIE ELECTRIQUE 3.....29
PARTIE ELECTRIQUE 4.....31
DEMARREUR ELECTRIQUE.....32
CAPOT INFERIEUR 1.....34
CAPOT INFERIEUR 2.....36
COMMANDE..... 37
SUPPORT 1..... 39
SUPPORT 2..... 41
PUISSANCE PARER ET INCLINER 1..... 43
PUISSANCE PARER ET INCLINER 2..... 46
FOURREAU.....47
VENTILATEUR D'HUILE..... 49
BOITIER D'HELICE TRANSMISSION1.....50
BOITIER D'HELICE TRANSMISSION2.....54
BOITIER D'HELICE TRANSMISSION3.....56
BOITIER D'HELICE TRANSMISSION4.....60
FIXATION DE DIRECTION..... 62
PIECES OPTIONNELLES 1.....63
PIECES OPTIONNELLES 2.....64
KITS DE REPARATION 1..... 65
KITS DE REPARATION 2..... 66

INDEX

INDEX NUMERIQUE.....68

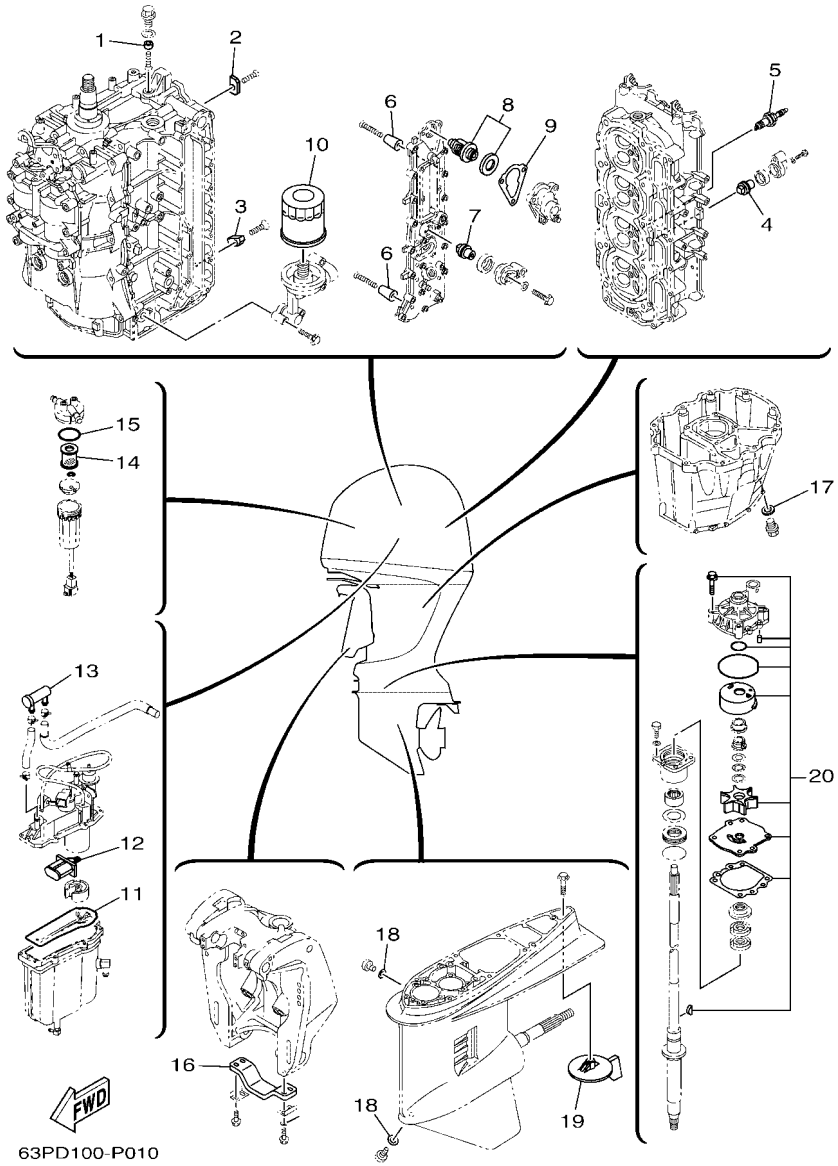

FIG. 1 SCHEDULED SERVICE PARTS — PIECES MAINTENANCE PERIODIQUE

REF. NO.	PART NO. N° PIECES	DESCRIPTION DESCRIPTION	63PD	64PD				REMARKS REMARQUES
1	63P–11325–21	ANODE ANODE	1	1				
2	63P–11325–11	ANODE ANODE	4	4				
3	63P–11325–01	ANODE ANODE	1	1				
4	67F–11325–01	ANODE ANODE	2	2				
5	94702–00391	PLUG, SPARK (NGK LFR5A-11) BOUGIE D'ALLUMAGE(NGK LFR5A-11	4	4				
6	68T–11325–00	ANODE ANODE	8	8				
7	67F–11325–01	ANODE ANODE	1	1				
8	67F–12411–01	THERMOSTAT THERMOSTAT	1	1				
9	63P–12414–00	GASKET, COVER JOINT, COUVERCLE	1	1				
10	69J–13440–03	ELEMENT ASSY, OIL CLEANER ELEMENT, FILTRE A HUILE	1	1				
11	63P–14984–00	GASKET, FLOAT CHAMBER JOINT, CUVE DE FLOTTEUR	1	1				
12	63P–13915–00	FILTER FILTRE	1	1				
13	69J–24501–10	FILTER, FUEL FILTRE	1	1				
14	6P3–24563–01	ELEMENT, FILTER ELEMENT, FILTRE	1	1				
15	6P3–24564–00	GASKET JOINT	1	1				
16	6G5–45251–02	ANODE ANODE	1	1				
17	90430–14M09	GASKET JOINT	1	1				
18	90430–08020	GASKET JOINT	2	2				
19	6J9–45371–01	TAB-TRIM ANODE DERIVE	1					
	6K1–45371–02	TAB-TRIM ANODE DERIVE		1				
20	61A–W0078–A3	WATER PUMP REPAIR KIT KIT DE REPARATION DE LA POMPE	1	1				

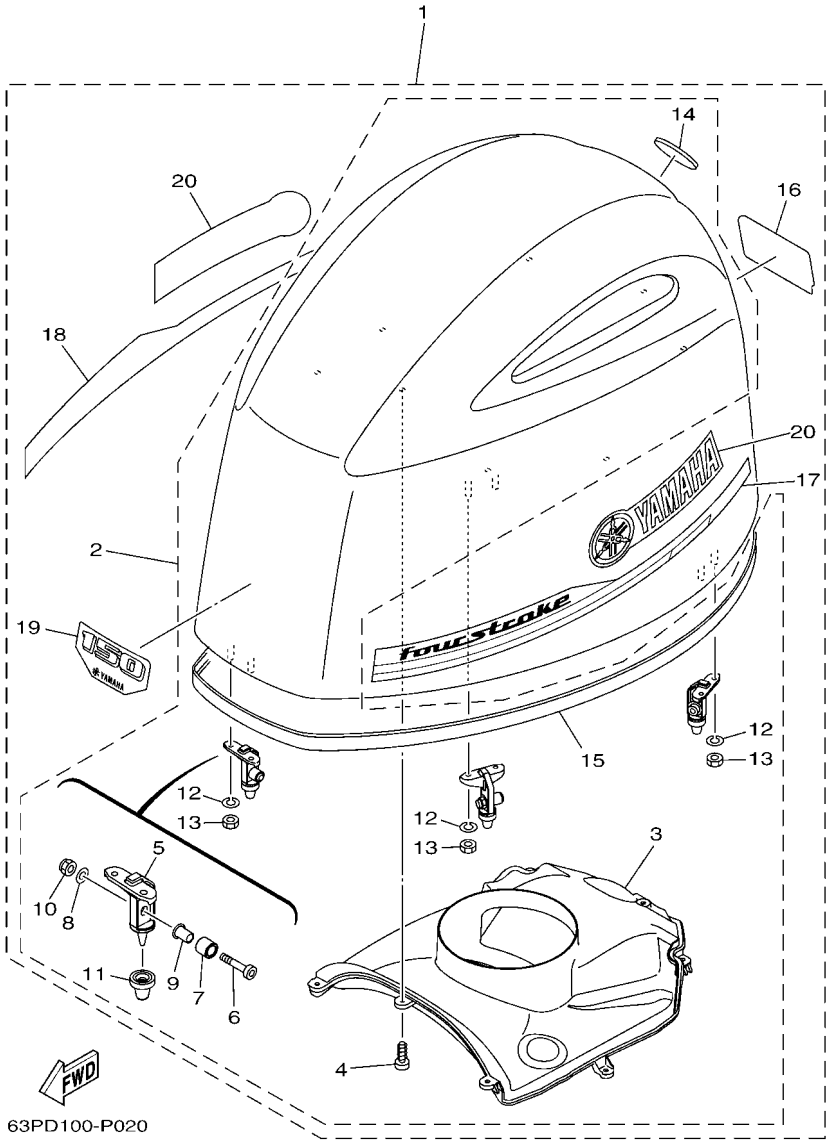

FIG. 2 TOP COWLING — CAPOT SUPERIEUR

REF. NO.	PART NO. N° PIECES	DESCRIPTION DESCRIPTION	63PD	64PD				REMARKS REMARQUES
1	63P–42610–70	TOP COWLING ASSY CAPOT (ENS.)	1	1				
2	63P–4261A–10	.TOP COWLING W/O GRAPHICS .CAPOT SUPERIEUR SANS GRAPHIQUE	1	1				
3	6DA–42613–00	..MOLDING, AIR DUCT ..MANCHON A AIR	1	1				
4	90167–05017	..SCREW, TAPPING ..VIS, TETE FRAISEE	8	8				
5	6CB–42647–A0	..HOLDER, CLAMP BAND ..SUPPORT, SANDOW DE SERRAGE	3	3				
6	90111–08078	..BOLT,HEX. SOCKET BUTTON ..BOULON	3	3				
7	90387–10094	..COLLAR ..COLLERETTE	3	3				
8	92990–08600	..WASHER, PLATE ..RONDELLE, PLATE	3	3				
9	90387–08M45	..COLLAR ..COLLERETTE	3	3				
10	95780–08300	..NUT, FLANGE ..ECROU	3	3				
11	6AW–42663–00	..DAMPER ..AMORTISSEUR	3	3				
12	92990–06100	..WASHER, SPRING ..RONDELLE, GROWER	6	6				
13	95380–06600	..NUT, HEXAGON ..ECROU	6	6				
14	6DA–42697–00	..TUNING FORK MARK ..MARQUE, YAMAHA	1	1				
15	6CB–42628–00	..SEAL ..JOINT	1	1				
16	63P–42678–60	.GRAPHIC, REAR .ADHESIF, ARRIERE	1	1				
17	6DA–42675–00	.GRAPHIC, SIDE 1 .EMBLEME	1	1				
18	6DA–42676–00	.GRAPHIC, SIDE 2 .EMBLEME	1	1				
19	63P–42677–60	.GRAPHIC, FRONT .ADHESIF, AVANT	1	1				
20	63P–42681–20	.MARK, COWLING .ADHESIF, CAPOT	2	2				

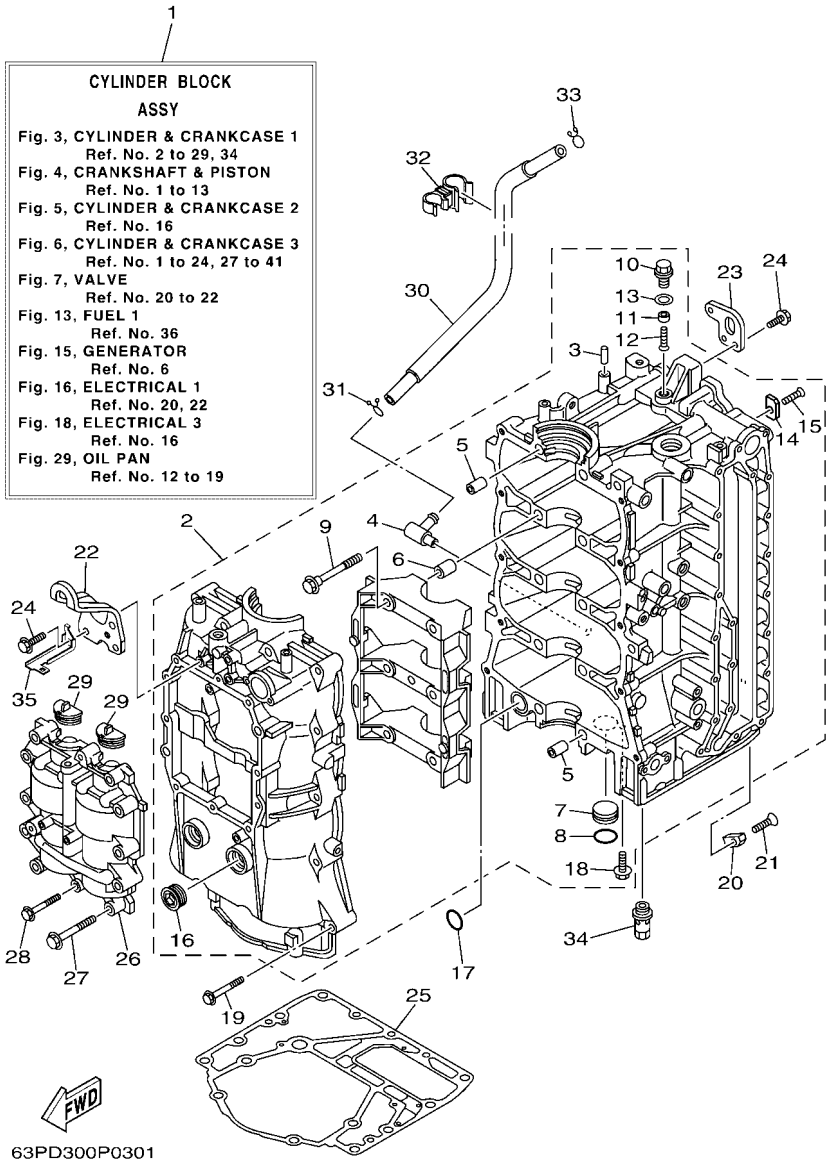

FIG. 3 CYLINDER & CRANKCASE 1 — CYLINDRE & CARTER 1

REF. NO.	PART NO. N° PIECES	DESCRIPTION DESCRIPTION	63PD	64PD				REMARKS REMARQUES
1	63P–W009B–12–9S	CYLINDER BLOCK ASSY CYLINDRE GROUPE (ENS.)	1	1				
2	63P–W1510–04–9S	CRANKCASE ASSY CARTER DE MOTEUR COMPLET	1	1				
3	93606–12019	.PIN, DOWEL .GOUPILLE	1	1				
4	63P–11372–00	.NIPPLE, HOSE .RACCORD, TUYAU	1	1				
5	91814–18002	.PIN, DOWEL .GOUJON, D'ASSEMBLAGE	4	4				
6	91814–18002	.PIN, DOWEL .GOUJON, D'ASSEMBLAGE	6	6				
7	90338–25004	.PLUG .PLOT	1	1				
8	93210–25647	.O-RING .JOINT TORIQUE	1	1				
9	90105–10071	.BOLT, FLANGE .BOULON	10	10				
10	63P–11197–A0	.PLUG, BLIND .PLOT, BORGNE	1	1				
11	63P–11325–21	.ANODE .ANODE	1	1				
12	98780–05016	.SCREW, FLAT HEAD .VIS A TETE FRAISEE	1	1				
13	90430–14115	.GASKET .JOINT	1	1				
14	63P–11325–11	.ANODE .ANODE	4	4				
15	90151–06M02	.SCREW, COUNTERSUNK .VIS, TETE NOYEE	4	4				
16	90340–27129	.PLUG, STRAIGHT SCREW .PLOT, FILETE DROIT	2	2				
17	93210–25552	O-RING JOINT TORIQUE	1	1				
18	90119–06M81	.BOLT, WITH WASHER .BOULON, AVEC RONDELLE	1	1				
19	90119–08M66	BOLT, WITH WASHER BOULON, AVEC RONDELLE	10	10				
20	63P–11325–01	ANODE ANODE	1	1				
21	90151–06M02	SCREW, COUNTERSUNK VIS, TETE NOYEE	1	1				
22	63P–11119–00	HANGER, ENGINE ANNEAU, LEVAGE	1	1				
23	63P–11119–10	HANGER, ENGINE ANNEAU, LEVAGE	1	1				
24	90119–06MA2	BOLT, WITH WASHER BOULON, AVEC RONDELLE	5	5				
25	63P–11351–02	GASKET, CYLINDER JOINT, D'EMBASE	1	1				
26	63P–11500–04	BALANCER ASSY ARBRE D'EQUILIBRAGE COMPLET	1	1				
27	90119–08M66	BOLT, WITH WASHER BOULON, AVEC RONDELLE	10	10				

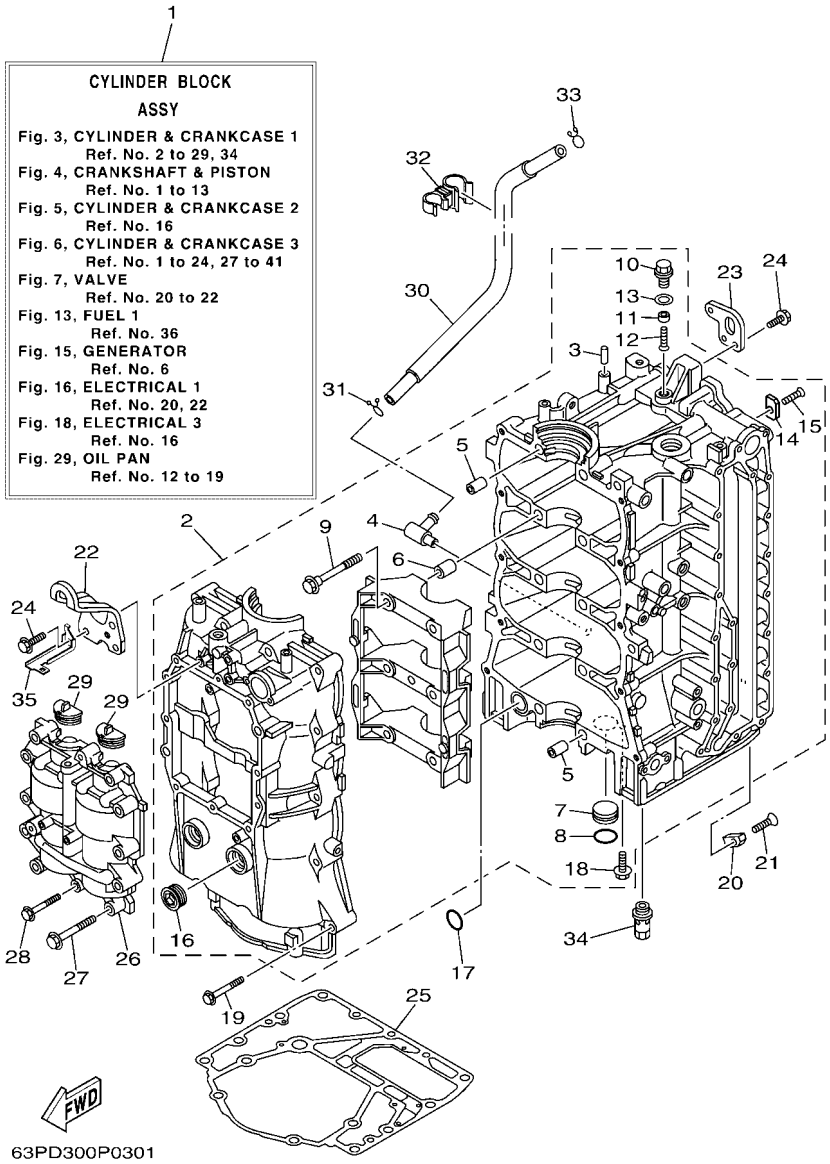

FIG. 3 CYLINDER & CRANKCASE 1 — CYLINDRE & CARTER 1

REF. NO.	PART NO. N° PIECES	DESCRIPTION DESCRIPTION	63PD	64PD				REMARKS REMARQUES
28	90119–06MA6	BOLT, WITH WASHER BOULON, AVEC RONDELLE	2	2				
29	63P–11512–00	SEAL, CRANK COVER JOINT, COUV DE VILEBREQUIN	2	2				
30	63P–11377–10	HOSE DURITE	1	1				
31	90467–15M14	CLIP JONC	1	1				
32	90464–15007	CLAMP BRIDE	1	1				
33	90467–15M14	CLIP JONC	1	1				
34	63P–13490–00	RELIEF VALVE ASSY SOUPAPE DE SECURITE COMPLET	1	1				
35	63P–82588–00	PLATE PLAQUE	1	1				

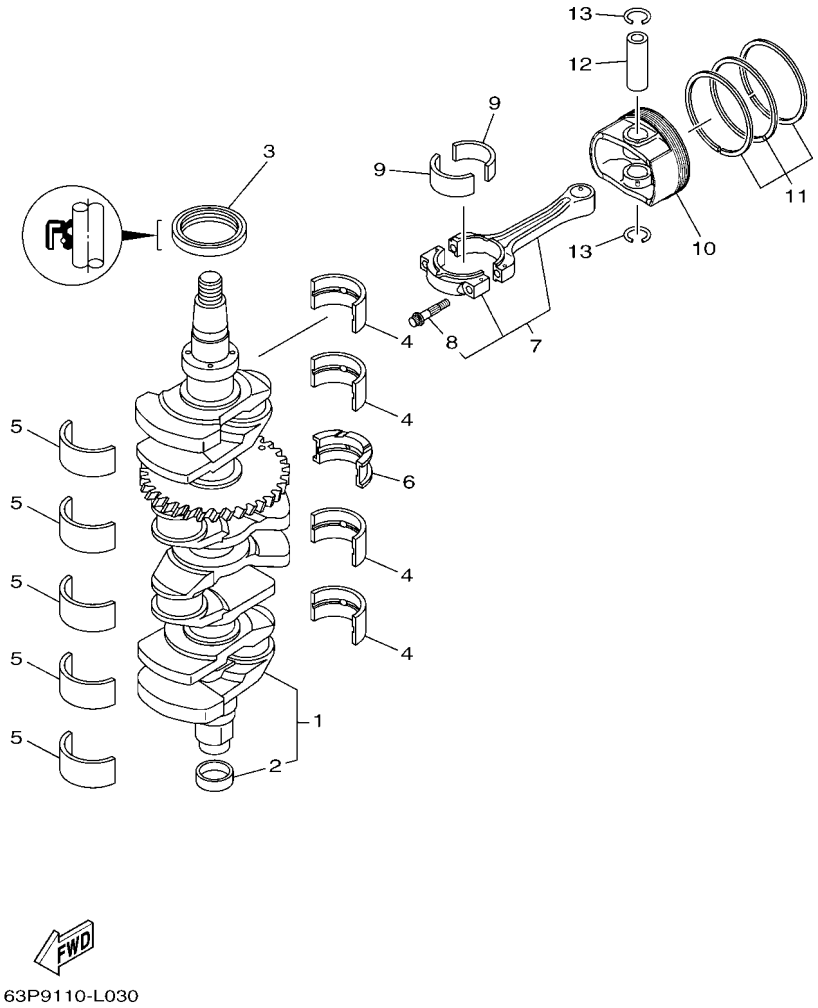

FIG. 4 CRANKSHAFT & PISTON — VILEBREQUIN & PISTON

REF. NO.	PART NO. N° PIECES	DESCRIPTION DESCRIPTION	63PD	64PD				REMARKS REMARQUES
1	63P–11410–03	CRANKSHAFT VILEBREQUIN COMPLET	1	1				
2	6CB–11478–00	.COLLAR .COLLERETTE	1	1				
3	93102–60004	OIL SEAL JOINT SPY	1	1				
4	63P–11416–31	PLANE BEARING, CRANKSHAFT 1 COUSSINET DE VILEBREQUIN 1	4	4				UR GREEN UR GREEN
	63P–11416–41	PLANE BEARING, CRANKSHAFT 1 COUSSINET DE VILEBREQUIN 1	4	4				UR RED UR RED
	63P–11416–51	PLANE BEARING, CRANKSHAFT 1 COUSSINET DE VILEBREQUIN 1	4	4				UR YELLOW UR YELLOW
5	63P–11417–41	PLANE BEARING, CRANKSHAFT 2 COUSSINET DE VILEBREQUIN 2	5	5				UR BROWN UR BROWN
	63P–11417–51	PLANE BEARING, CRANKSHAFT 2 COUSSINET DE VILEBREQUIN 2	5	5				UR GREEN UR GREEN
	63P–11417–61	PLANE BEARING, CRANKSHAFT 2 COUSSINET DE VILEBREQUIN 2	5	5				UR RED UR RED
	63P–11417–71	PLANE BEARING, CRANKSHAFT 2 COUSSINET DE VILEBREQUIN 2	5	5				UR YELLOW UR YELLOW
	63P–11417–81	PLANE BEARING, CRANKSHAFT 2 COUSSINET DE VILEBREQUIN 2	5	5				UR BLUE UR BLUE
6	63P–11426–31	BEARING, THRUST 1 ROULEMENT DE BUTEE 1	1	1				UR GREEN UR GREEN
	63P–11426–41	BEARING, THRUST 1 ROULEMENT DE BUTEE 1	1	1				UR RED UR RED
	63P–11426–51	BEARING, THRUST 1 ROULEMENT DE BUTEE 1	1	1				UR YELLOW UR YELLOW
7	63P–W1165–10	CONNECTING ROD ASSY BIELLE COMPLETTE	4	4				
8	63P–11654–10	.BOLT, CONNECTING ROD .BOULON, BIELLE	2	2				
9	63P–11656–30	PLANE BEARING, CONNECTING ROD ROULEMENT DE BIELLE	8	8				UR GREEN UR GREEN
	63P–11656–40	PLANE BEARING, CONNECTING ROD ROULEMENT DE BIELLE	8	8				UR BLUE UR BLUE
	63P–11656–50	PLANE BEARING, CONNECTING ROD ROULEMENT DE BIELLE	8	8				UR RED UR RED
10	63P–11631–10–93	PISTON (STD) PISTON (STD)	4	4				
	63P–11635–10	PISTON (0.25MM O/S) PISTON (0.25MM O/S)	4	4				AP AP
11	63P–11603–01	PISTON RING SET (STD) JEU DE SEGMENTS (STD)	4	4				
	63P–11604–00	PISTON RING SET (0.25MM O/S) JEU DE SEGMENTS (0.25MM O/S)	4	4				AP AP
12	63P–11633–10	PIN, PISTON AXE, PISTON	4	4				
13	63P–11634–00	CLIP, PISTON PIN AGRAFE, AXE DE PISTON	8	8				

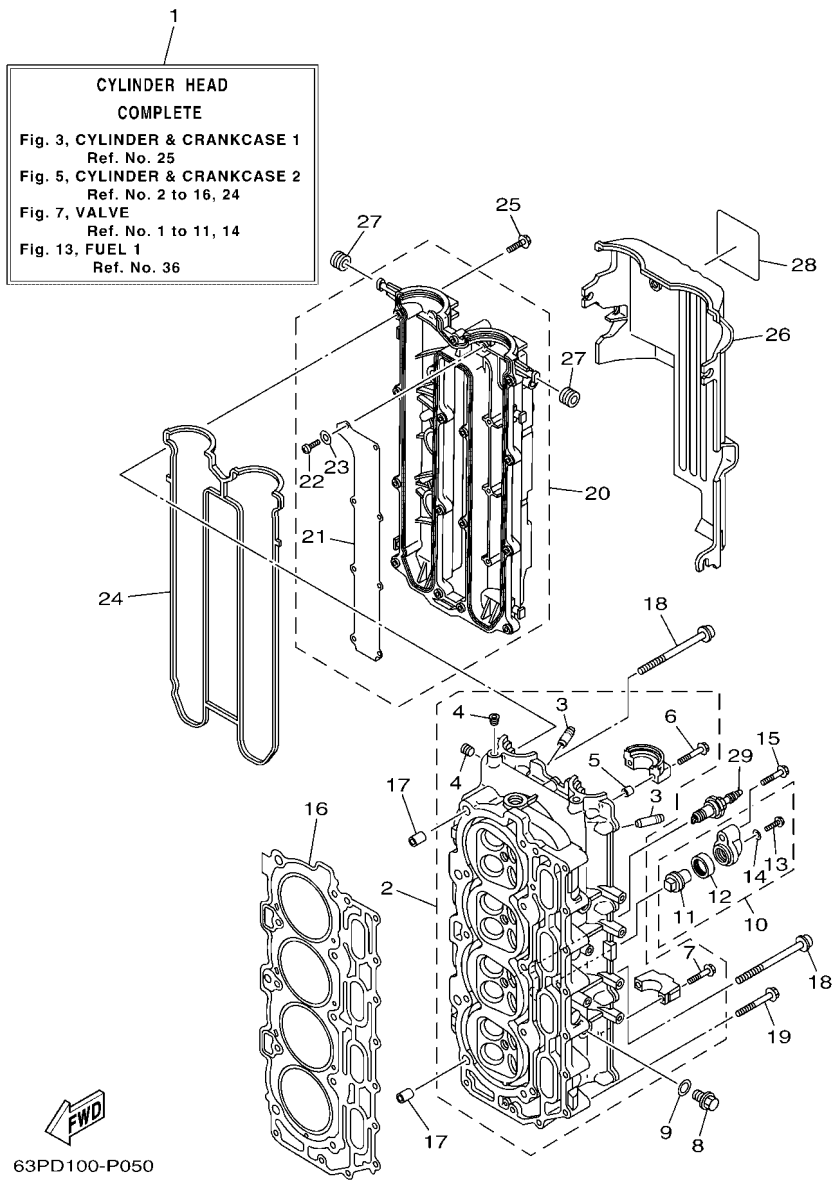

FIG. 5 CYLINDER & CRANKCASE 2 — CYLINDRE & CARTER 2

REF. NO.	PART NO. N° PIECES	DESCRIPTION DESCRIPTION	63PD	64PD				REMARKS REMARQUES
1	63P–W009A–04–9S	CYLINDER HEAD COMPLETE CULASSE (ENS.)	1	1				
2	63P–11110–11–9S	CYLINDER HEAD ASSY JEU DE CULASSE	1	1				
3	6DA–11133–10	.GUIDE, VALVE 1 .GUIDE, SOUPAPE 1	16	16				
4	90344–51019	.PLUG, TAPER SCREW .PLOT, FILETE CONIQUE	3	3				
5	91809–08006	.PIN, DOWEL .GOUJON, D'ASSEMBLAGE	4	4				
6	90119–07235	.BOLT/WASHER-CAM CAPS .BOULON, AVEC RONDELLE	4	4				
7	90119–07234	.BOLT, WITH WASHER .BOULON, AVEC RONDELLE	16	16				
8	90340–14M06	PLUG, STRAIGHT SCREW PLOT, FILETE DROIT	2	2				
9	90430–14115	GASKET JOINT	2	2				
10	69J–11301–00	ANODE COVER ASSY COUVERCLE ANODE (ENS.)	2	2				
11	67F–11325–01	.ANODE .ANODE	1	1				
12	67F–11328–00	.GROMMET, ANODE .PASSE-FIL	1	1				
13	90105–06M07	.BOLT, FLANGE .BOULON	1	1				
14	90430–06M03	.GASKET .JOINT	1	1				
15	97575–08540	BOLT, WITH WASHER VIS HEXAGONAL AVC RONDELLE	2	2				
16	63P–11181–00	GASKET, CYLINDER HEAD 1 JOINT, DE CULASSE 1	1	1				
17	99530–14016	PIN, DOWEL GOUJON, D'ASSEMBLAGE	2	2				
18	90155–10006	SCREW, FLAT FILLISTER VIS, TETE OVALE PLATE	10	10				
19	90119–08M91	BOLT, WITH WASHER BOULON, AVEC RONDELLE	10	10				
20	63P–11191–00–9S	COVER, CYLINDER HEAD 1 COUVERCLE, CULASSE 1	1	1				
21	63P–11135–00	.PLATE, BREATHER 3 .PLAQUE, RENIFLARD 3	1	1				
22	98507–04008	.SCREW, PAN HEAD .VIS, TETE TRONCONIQUE	8	8				
23	92907–04600	.WASHER .RONDELLE	8	8				
24	63P–11193–00	GASKET, HEAD COVER 1 JOINT, COUVERCLE DE CULASSE 1	1	1				
25	97595–06530	BOLT, WITH WASHER VIS HEXAGONAL AVC RONDELLE	13	13				
26	63P–11192–01	COVER, CYLINDER HEAD 2 COUVERCLE, CULASSE 2	1	1				
27	90480–12314	GROMMET PASSE-FIL	5	5				

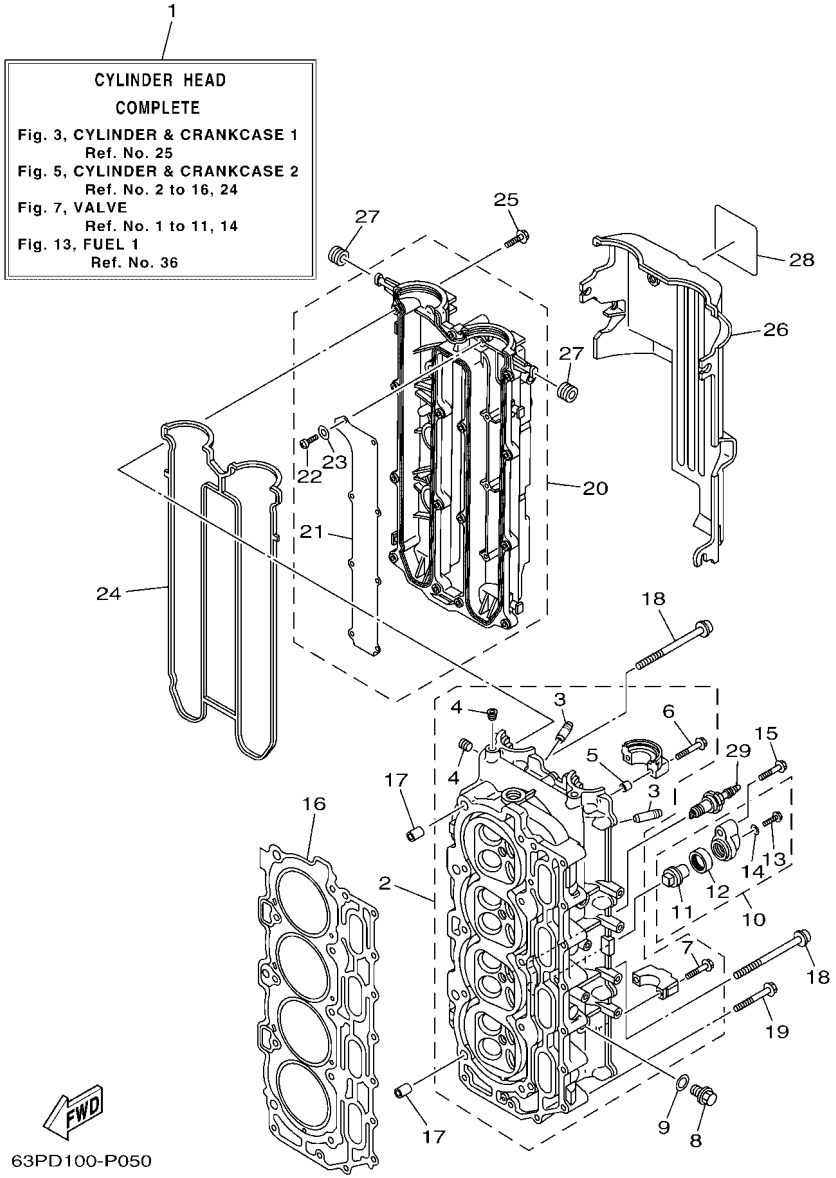

FIG. 5 CYLINDER & CRANKCASE 2 — CYLINDRE & CARTER 2

REF. NO.	PART NO. N° PIECES	DESCRIPTION DESCRIPTION	63PD	64PD				REMARKS REMARQUES
28	63P–83626–00	MARK 6 MARK 6	1	1				
29	94702–00391	PLUG, SPARK (NGK LFR5A-11) BOUGIE D'ALLUMAGE(NGK LFR5A-11	4	4				

FIG. 6 CYLINDER & CRANKCASE 3 — CYLINDRE & CARTER 3

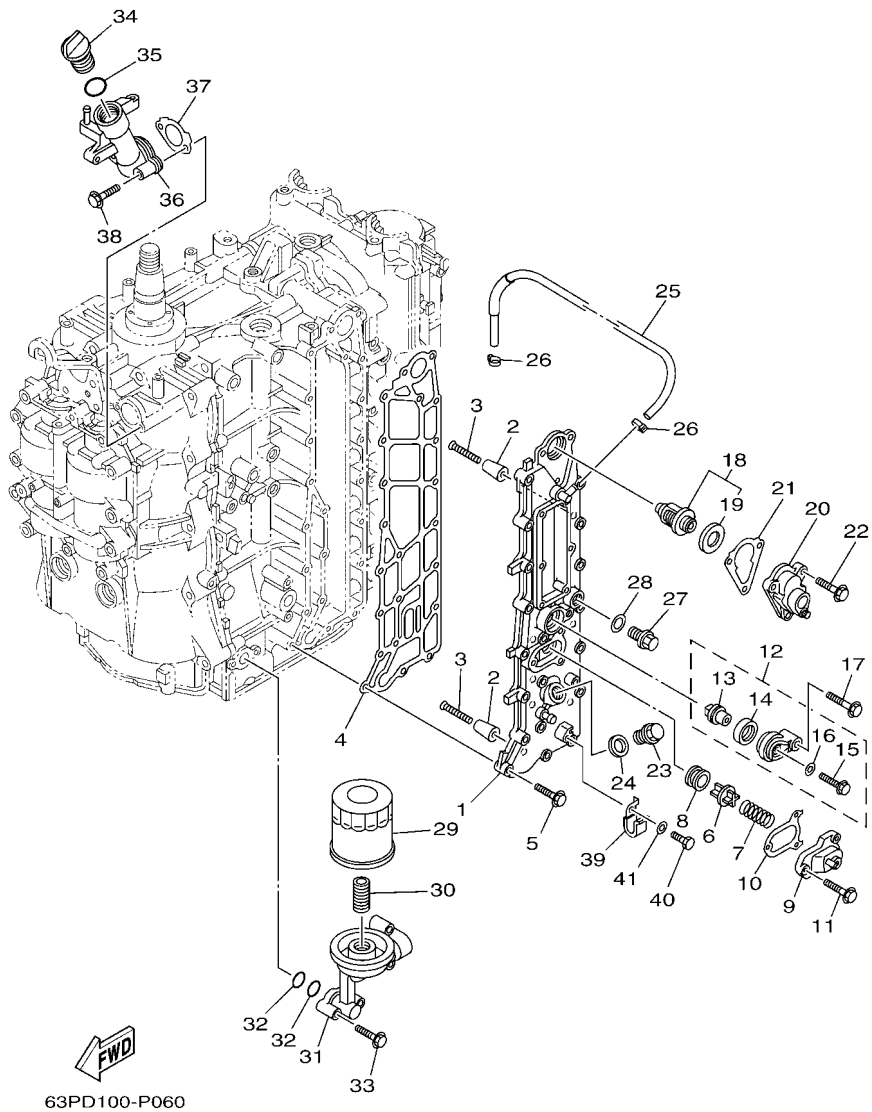

REF. NO.	PART NO. N° PIECES	DESCRIPTION DESCRIPTION	63PD	64PD				REMARKS REMARQUES
1	63P–41113–04–9S	OUTER COVER, EXHAUST COUVERCLE, ECHAPPEMENT	1	1				
2	68T–11325–00	ANODE ANODE	8	8				
3	90151–05M05	SCREW, COUNTERSUNK VIS, TETE NOYEE	8	8				
4	63P–41114–A2	GASKET, EXHAUST OUTER COVER JOINT, COUVERCLE D'ECHAPPEMENT	1	1				
5	90119–06MA4	BOLT, WITH WASHER BOULON, AVEC RONDELLE	19	19				
6	6G5–12416–00	VALVE, PRESSURE CONTROL SOUPAPE DE CONTROLEUR PRESS	1	1				
7	90501–16M11	SPRING, COMPRESSION RESSORT, COMPRESSION	1	1				
8	90480–20M05	GROMMET PASSE-FIL	1	1				
9	67F–1246A–A0–9S	COVER 1 COUVERCLE 1	1	1				
10	67F–12435–A0	GASKET JOINT	1	1				
11	90119–06MA2	BOLT, WITH WASHER BOULON, AVEC RONDELLE	3	3				
12	69J–11301–00	ANODE COVER ASSY COUVERCLE ANODE (ENS.)	1	1				
13	67F–11325–01	.ANODE .ANODE	1	1				
14	67F–11328–00	.GROMMET, ANODE .PASSE-FIL	1	1				
15	90105–06M07	.BOLT, FLANGE .BOULON	1	1				
16	90430–06M03	.GASKET .JOINT	1	1				
17	97575–08540	BOLT, WITH WASHER VIS HEXAGONAL AVC RONDELLE	1	1				
18	67F–12411–01	THERMOSTAT THERMOSTAT	1	1				
19	67F–12412–00	.SEAL, THERMOSTAT .JOINT, THERMOSTAT	1	1				
20	63P–1240H–01–9S	COVER ASSEMBLY BOITIER DISTRIBUTEUR COMPLET	1	1				
21	63P–12414–00	GASKET, COVER JOINT, COUVERCLE	1	1				
22	90119–06MA4	BOLT, WITH WASHER BOULON, AVEC RONDELLE	3	3				
23	90340–18M09	PLUG, STRAIGHT SCREW PLOT, FILETE DROIT	1	1				
24	90201–186F1	WASHER, PLATE RONDELLE, PLATE	1	1				
25	63P–1243A–00	HOSE 1 DURITE 1	1	1				
26	90465–11M10	CLAMP BRIDE	2	2				
27	90340–14M06	PLUG, STRAIGHT SCREW PLOT, FILETE DROIT	1	1				

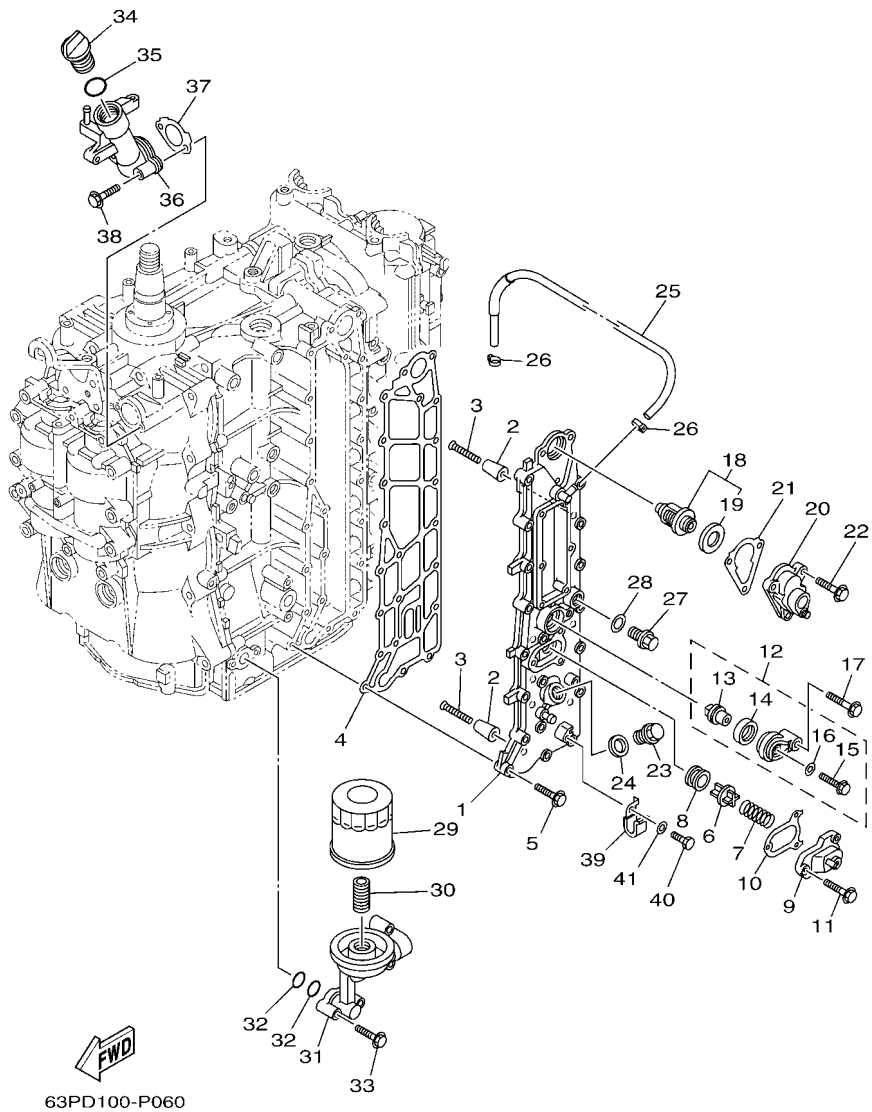

FIG. 6 CYLINDER & CRANKCASE 3 — CYLINDRE & CARTER 3

REF. NO.	PART NO. N° PIECES	DESCRIPTION DESCRIPTION	63PD	64PD				REMARKS REMARQUES
28	90430–14115	GASKET JOINT	1	1				
29	69J–13440–03	ELEMENT ASSY, OIL CLEANER ELEMENT, FILTRE A HUILE	1	1				
30	6S5–12858–00	BOLT, UNION BOULON, RACCORD	1	1				
31	63P–13446–00–9S	CONNECTOR CONNECTEUR	1	1				
32	93210–19MJ1	O-RING JOINT TORIQUE	2	2				
33	97575–06540	BOLT, WITH WASHER VIS HEXAGONAL AVC RONDELLE	4	4				
34	6G8–15363–00	PLUG, OIL PLOT, HUILE	1	1				
35	93210–24M79	O-RING JOINT TORIQUE	1	1				
36	63P–15319–00–9S	JOINT JOINT	1	1				
37	63P–15364–A0	GASKET, OIL PLUG JOINT, PLOT D'HUILE	1	1				
38	97595–06545	BOLT, WITH WASHER VIS HEXAGONAL AVC RONDELLE	2	2				
39	90462–06013	CLAMP BRIDE	1	1				
40	97095–06012	BOLT BOULON	1	1				
41	92995–06600	WASHER RONDELLE	1	1				

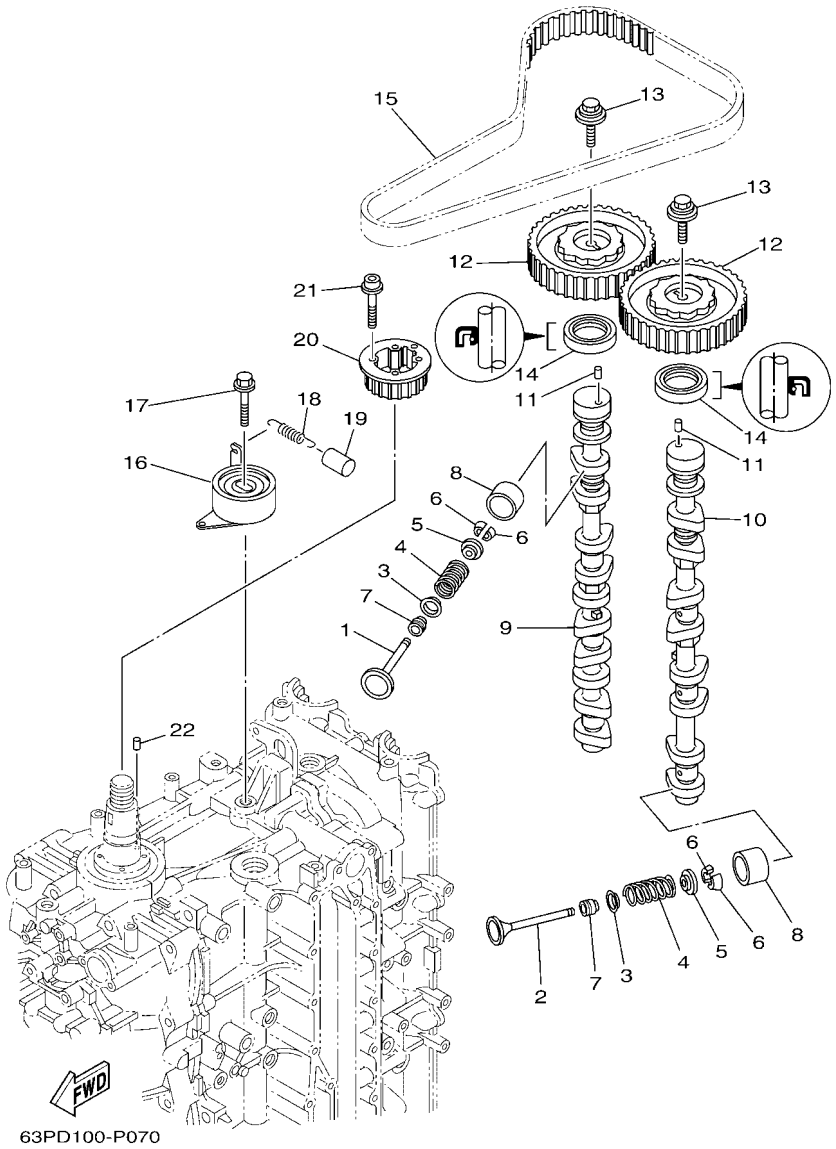

FIG. 7 VALVE — SOUPAPE

REF. NO.	PART NO. N° PIECES	DESCRIPTION DESCRIPTION	63PD	64PD				REMARKS REMARQUES
1	63P–12111–00	VALVE, INTAKE SOUPAPE, ADMISSION	8	8				
2	63P–12121–00	VALVE, EXHAUST SOUPAPE, ECHAPPEMENT	8	8				
3	K0F–A3743–00	SEAT, VALVE SPRING SIEGE, RESSORT DE SOUPAPE	16	16				
4	6CB–12113–00	SPRING, VALVE INNER RESSORT DE SOUPAPE, INTERNE	16	16				
5	K0F–A3741–00	RETAINER, VALVE SPRING BUTEE DE RESSORT DE SOUPAPA	16	16				
6	K0F–A3742–00	LOCK, VALVE SPRING RETAINER FRAISE, SOUPAPE	32	32				
7	51Y–12119–00	SEAL, VALVE STEM JOINT, QUEUE DE SOUPAPE	16	16				
8	K0F–A3751–00	LIFTER, VALVE (3.000) LEVE-SOUPAPE (3.000)	16	16				UR UR
	K0F–A3751–10	LIFTER, VALVE (3.025) LEVE-SOUPAPE (3.025)	16	16				UR UR
	K0F–A3751–20	LIFTER, VALVE (3.050) LEVE-SOUPAPE (3.050)	16	16				UR UR
	K0F–A3751–30	LIFTER, VALVE (3.075) LEVE-SOUPAPE (3.075)	16	16				UR UR
	K0F–A3751–40	LIFTER, VALVE (3.100) LEVE-SOUPAPE (3.100)	16	16				UR UR
	K0F–A3751–50	LIFTER, VALVE (3.122) LEVE-SOUPAPE (3.122)	16	16				UR UR
	K0F–A3751–60	LIFTER, VALVE (3.142) LEVE-SOUPAPE (3.142)	16	16				UR UR
	K0F–A3751–70	LIFTER, VALVE (3.162) LEVE-SOUPAPE (3.162)	16	16				UR UR
	K0F–A3751–80	LIFTER, VALVE (3.182) LEVE-SOUPAPE (3.182)	16	16				UR UR
	K0F–A3751–90	LIFTER, VALVE (3.202) LEVE-SOUPAPE (3.202)	16	16				UR UR
	K0F–A3751–A0	LIFTER, VALVE (3.222) LEVE-SOUPAPE (3.222)	16	16				UR UR
	K0F–A3751–B0	LIFTER, VALVE (3.242) LEVE-SOUPAPE (3.242)	16	16				UR UR
	K0F–A3751–C0	LIFTER, VALVE (3.262) LEVE-SOUPAPE (3.262)	16	16				UR UR
	K0F–A3751–D0	LIFTER, VALVE (3.282) LEVE-SOUPAPE (3.282)	16	16				UR UR
	K0F–A3751–E0	LIFTER, VALVE (3.302) LEVE-SOUPAPE (3.302)	16	16				UR UR
	K0F–A3751–F0	LIFTER, VALVE (3.322) LEVE-SOUPAPE (3.322)	16	16				UR UR
	K0F–A3751–G0	LIFTER, VALVE (3.342) LEVE-SOUPAPE (3.342)	16	16				UR UR
	K0F–A3751–H0	LIFTER, VALVE (3.362) LEVE-SOUPAPE (3.362)	16	16				UR UR
	K0F–A3751–J0	LIFTER, VALVE (3.382) LEVE-SOUPAPE (3.382)	16	16				UR UR
	K0F–A3751–K0	LIFTER, VALVE (3.402) LEVE-SOUPAPE (3.402)	16	16				UR UR

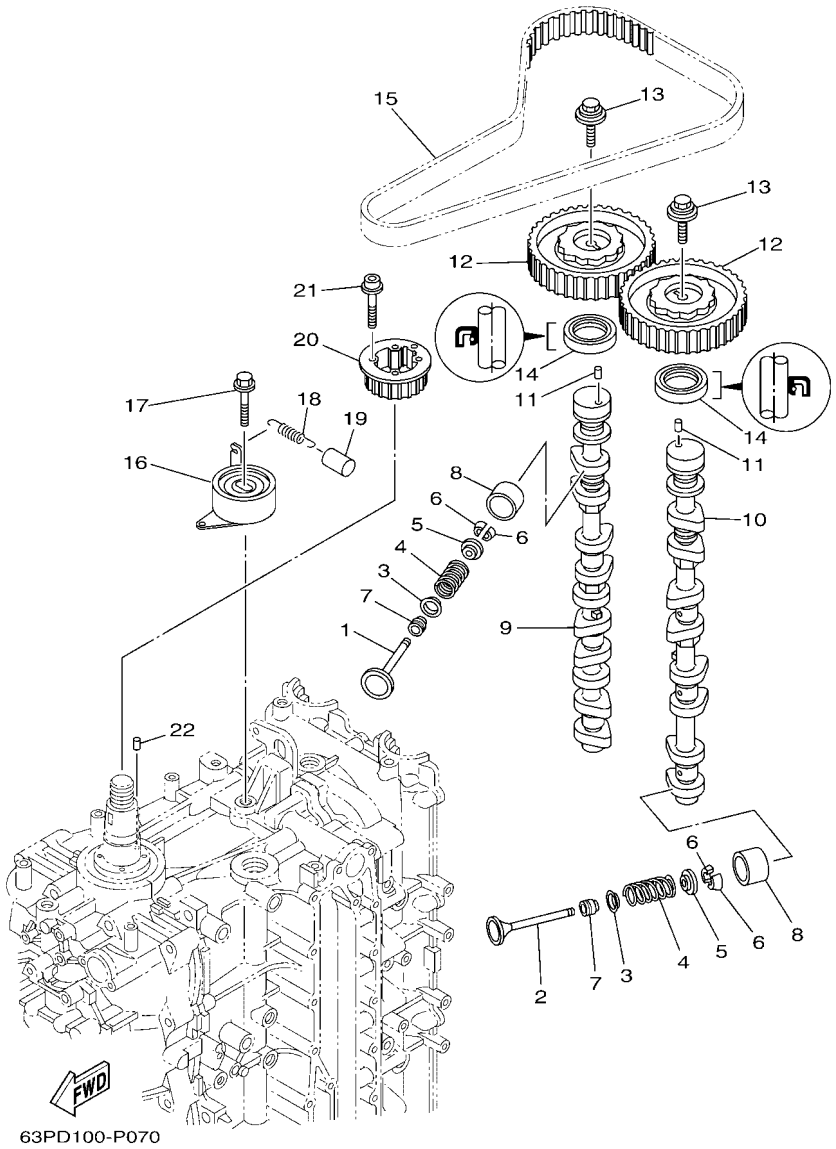

FIG. 7 VALVE — SOUPAPE

REF. NO.	PART NO. N° PIECES	DESCRIPTION DESCRIPTION	63PD	64PD				REMARKS REMARQUES
8	K0F–A3751–L0	LIFTER, VALVE (3.422) LEVE-SOUPAPE (3.422)	16	16				UR UR
	K0F–A3751–M0	LIFTER, VALVE (3.442) LEVE-SOUPAPE (3.442)	16	16				UR UR
	K0F–A3751–N0	LIFTER, VALVE (3.462) LEVE-SOUPAPE (3.462)	16	16				UR UR
	K0F–A3751–P0	LIFTER, VALVE (3.482) LEVE-SOUPAPE (3.482)	16	16				UR UR
	K0F–A3751–R0	LIFTER, VALVE (3.502) LEVE-SOUPAPE (3.502)	16	16				UR UR
	K0F–A3751–S0	LIFTER, VALVE (3.522) LEVE-SOUPAPE (3.522)	16	16				UR UR
	K0F–A3751–T0	LIFTER, VALVE (3.542) LEVE-SOUPAPE (3.542)	16	16				UR UR
	K0F–A3753–00	LIFTER, VALVE (3.562) LEVE-SOUPAPE (3.562)	16	16				UR UR
	K0F–A3753–10	LIFTER, VALVE (3.582) LEVE-SOUPAPE (3.582)	16	16				UR UR
	K0F–A3753–20	LIFTER, VALVE (3.602) LEVE-SOUPAPE (3.602)	16	16				UR UR
	K0F–A3753–30	LIFTER, VALVE (3.625) LEVE-SOUPAPE (3.625)	16	16				UR UR
	K0F–A3753–40	LIFTER, VALVE (3.650) LEVE-SOUPAPE (3.650)	16	16				UR UR
	K0F–A3753–50	LIFTER, VALVE (3.675) LEVE-SOUPAPE (3.675)	16	16				UR UR
	K0F–A3753–60	LIFTER, VALVE (3.700) LEVE-SOUPAPE (3.700)	16	16				UR UR
	K0F–A3753–70	LIFTER, VALVE (3.725) LEVE-SOUPAPE (3.725)	16	16				UR UR
9	63P–12171–10	CAMSHAFT 1 ARBRE A CAMES 1	1	1				
10	63P–12181–10	CAMSHAFT 2 ARBRE A CAMES 2	1	1				
11	93605–10108	PIN, DOWEL AXE	2	2				
12	63P–11537–00	GEAR, DRIVEN PIGNON SECONDAIRE	2	2				
13	90119–10050	BOLT, WITH WASHER BOULON, AVEC RONDELLE	2	2				
14	93102–38008	OIL SEAL JOINT SPY	2	2				
15	63P–46241–00	BELT COURROIE TRAPEZOIDALE	1	1				
16	63P–11590–10	TENSIONER ASSY TENDEUR (ENS.)	1	1				
17	90119–10M07	BOLT, WITH WASHER BOULON, AVEC RONDELLE	1	1				
18	90506–16M39	SPRING, TENSION RESSORT, TENSION	1	1				
19	90445–15M03	HOSE (L23) DURITE (L23)	1	1				
20	63P–11536–01	GEAR, DRIVE ENGRENAGE, MENANT	1	1				

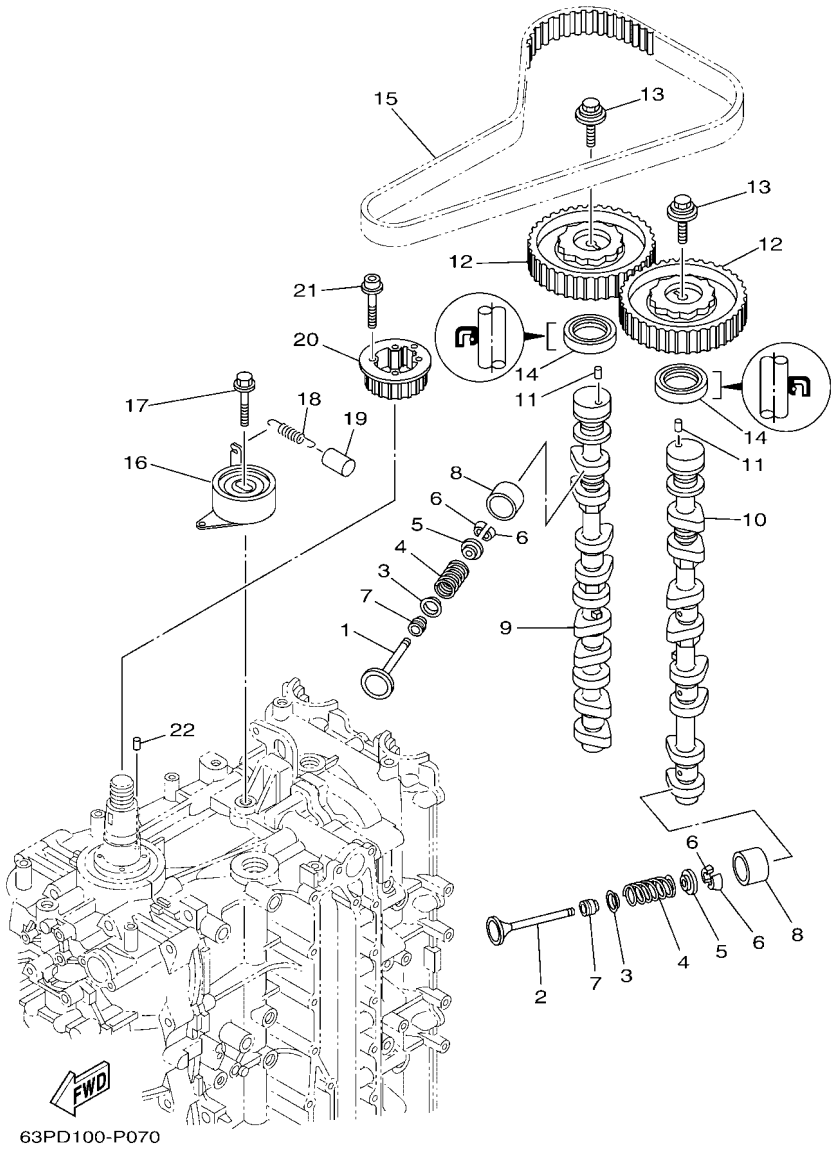

FIG. 7 VALVE SOUPAPE

REF. NO.	PART NO. N° PIECES	DESCRIPTION DESCRIPTION	63PD	64PD				REMARKS REMARQUES
21	90110–05020	BOLT, HEXAGON SOCKET HEAD BOULON, TETE HEXAGONALE CREUSE	4	4				
22	93605–17002	PIN, DOWEL AXE	1	1				

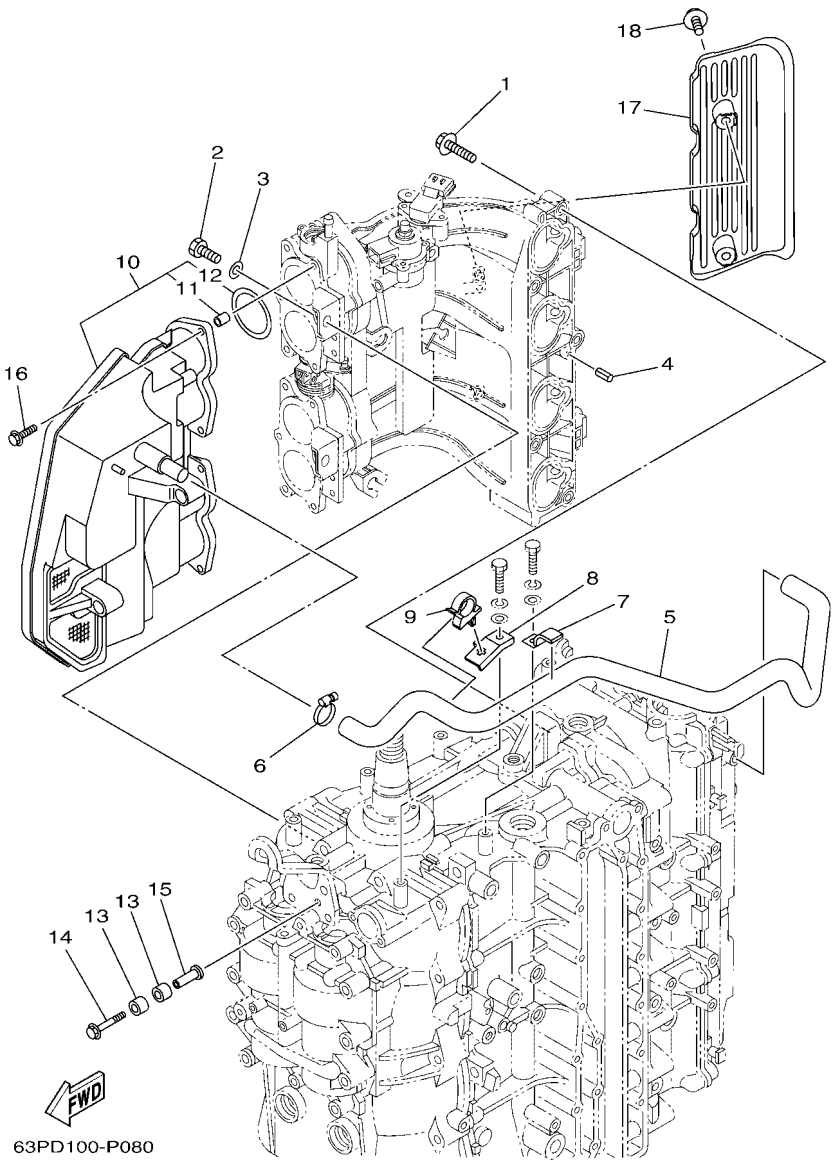

FIG. 8 INTAKE 1 — ADMISSION 1

REF. NO.	PART NO. N° PIECES	DESCRIPTION DESCRIPTION	63PD	64PD				REMARKS REMARQUES
1	97575–08540	BOLT, WITH WASHER VIS HEXAGONAL AVC RONDELLE	5	5				
2	97013–08020	BOLT BOULON	2	2				
3	92903–08600	WASHER, PLATE RONDELLE, PLATE	2	2				
4	91690–50014	PIN, SPRING AGRAFFE	2	2				
5	63P–15373–00	PIPE, BREATHER DURITE DE RENIFLARD	1	1				
6	90450–22M14	HOSE CLAMP ASSY BRIDE, DE DURITE	1	1				
7	90462–10023	CLAMP BRIDE	1	1				
8	63P–15378–00	HOLDER SUPPORT	1	1				
9	90464–20006	CLAMP BRIDE	1	1				
10	63P–14440–00	SILENCER ASSY, INTAKE SIENCIEUX D'ADMISSION	1	1				
11	63P–14449–00	.COLLAR .COLLERETTE	6	6				
12	63P–14457–00	.SEAL .JOINT	4	4				
13	90386–08001	BUSH DOUILLE	4	4				
14	90119–06076	BOLT, WITH WASHER BOULON, AVEC RONDELLE	2	2				
15	90387–06280	COLLAR COLLERETTE	2	2				
16	90119–06M82	BOLT, WITH WASHER BOULON, AVEC RONDELLE	6	6				
17	63P–13564–00	COVER, MANIFOLD COUVERCLE, TUBULURE	1	1				
18	95895–06016	BOLT, FLANGE BOULON	2	2				

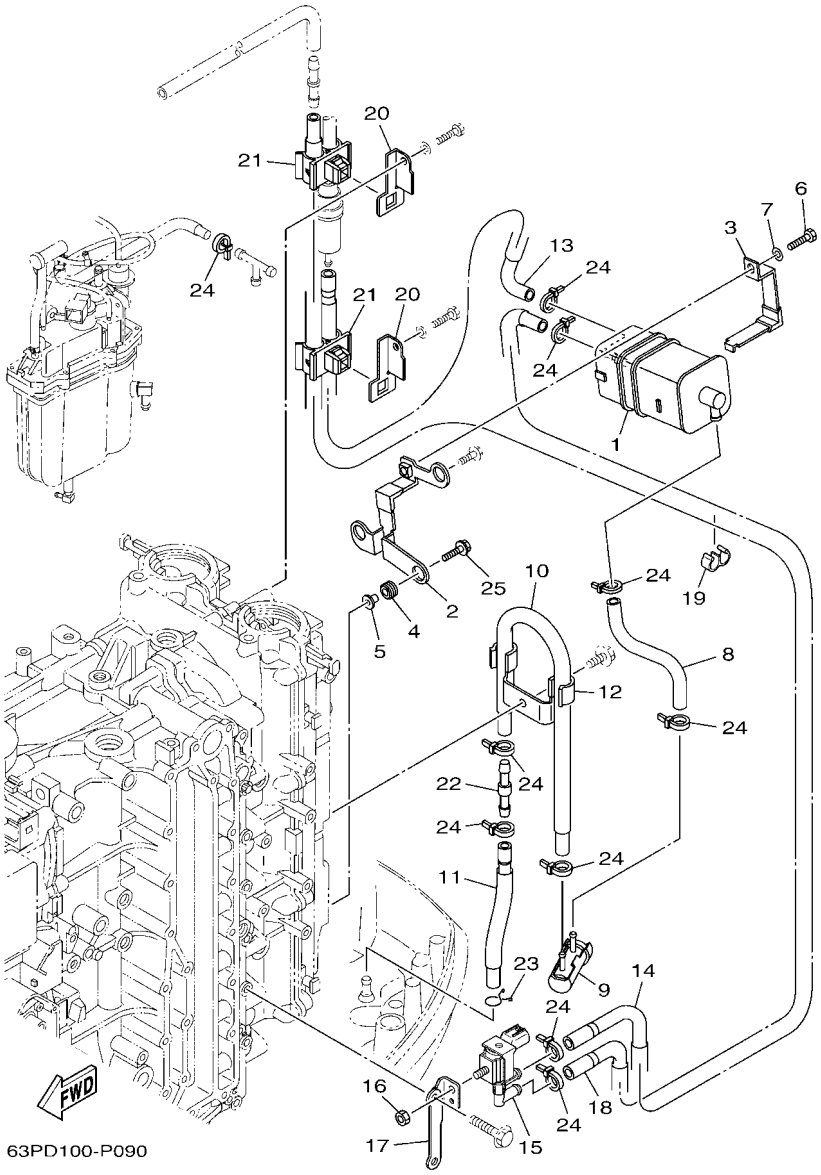

FIG. 9 INTAKE 2 — ADMISSION 2

REF. NO.	PART NO. N° PIECES	DESCRIPTION DESCRIPTION	63PD	64PD				REMARKS REMARQUES
1	6P2–24170–00	CANISTER ASSY BANDE, RASERVOIR A ESSENCE	1	1				
2	63P–2134X–00	BRACKET, CANISTER SUPPORT	1	1				
3	63P–2419A–01	HOLDER SUPPORT	1	1				
4	90480–10M23	GROMMET PASSE-FIL	3	3				
5	90387–06289	COLLAR COLLERETTE	3	3				
6	97095–06016	BOLT BOULON	1	1				
7	92995–06600	WASHER RONDELLE	1	1				
8	64P–24313–00	PIPE 3 DURITE 3	1	1				
9	69J–24502–00	FILTER, FUEL FILTRE	1	1				
10	64P–24312–00	PIPE 2 DURITE 2	1	1				
11	64P–24311–10	PIPE, FUEL 1 DURITE A ESSENCE	1	1				
12	63P–24367–01	CLAMP, FUEL PIPE 2 COLLIER DE DURITE A ESSENCE	1	1				
13	64P–24315–00	PIPE 5 DURITE 5	1	1				
14	64P–24316–10	PIPE 6 DURITE 6	1	1				
15	6C5–86120–00	SOLENOID VALVE ASSY SOLENOIDE	1	1				
16	95380–06600	NUT, HEXAGON ECROU	1	1				
17	63P–81845–20	PLATE PLAQUE	1	1				
18	64P–24314–10	PIPE 4 DURITE 4	1	1				
19	90464–09M31	CLAMP BRIDE	1	1				
20	63P–24364–01	STAY SUPPORT	2	2				
21	90464–11012	CLAMP BRIDE	2	2				
22	6E5–24379–00	PIPE, JOINT 4 DURITE RACCORDEMENT 4	1	1				
23	90467–09M09	CLIP JONC	1	1				
24	90465–11M10	CLAMP BRIDE	10	10				
25	90119–06135	BOLT, WITH WASHER BOULON, AVEC RONDELLE	2	2				

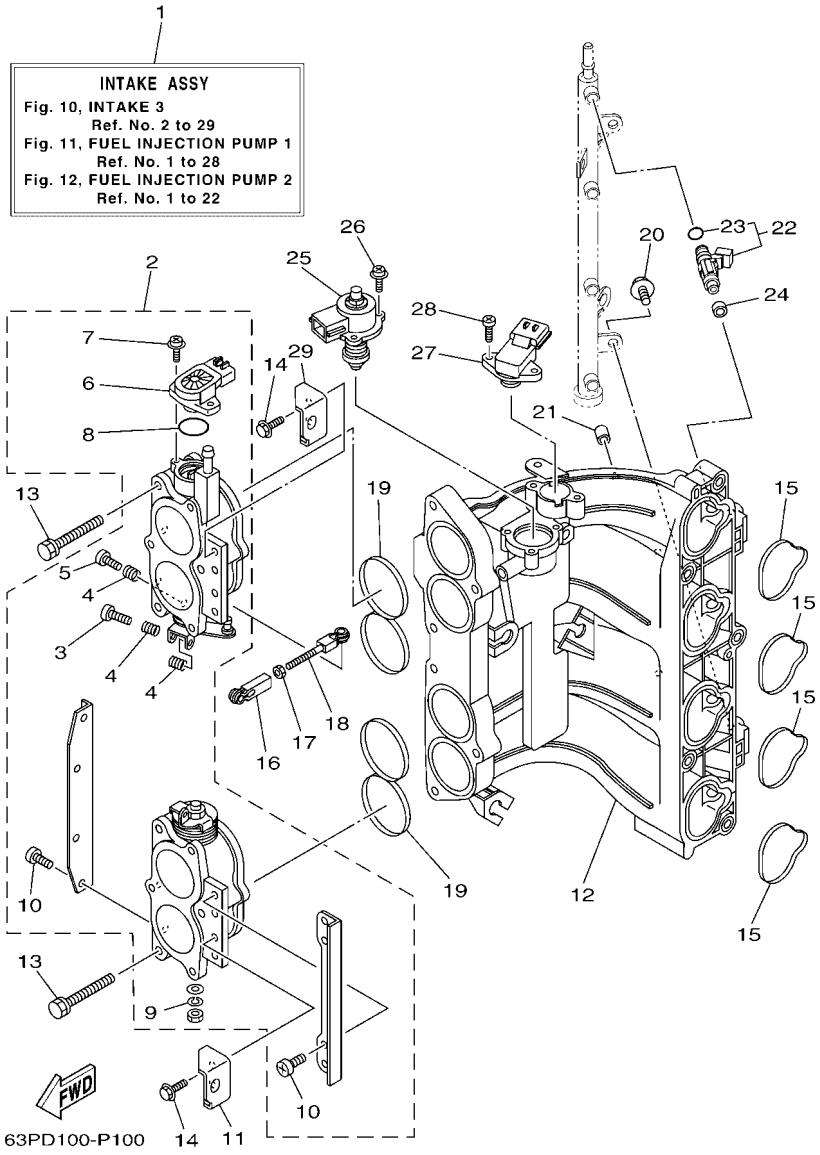

FIG. 10 INTAKE 3 — ADMISSION 3

REF. NO.	PART NO. N° PIECES	DESCRIPTION DESCRIPTION	63PD	64PD				REMARKS REMARQUES
1	63P–14200–60	INTAKE ASSY ADMISSION (ENS.)	1	1				FOR F(L)150DET FOR F(L)150DET
	63P–14200–90	INTAKE ASSY ADMISSION (ENS.)	1	1				FOR F(L)150DET1 FOR F(L)150DET1
2	63P–13751–20	BODY, THROTTLE 1 CARTER 1	1	1				
3	69J–14321–00	.SCREW, THROTTLE .VIS, ACCELERATEUR	1	1				
4	68V–14331–00	.SPRING, THROTTLE VALVE .RESSORT, BOISSEAU	3	3				
5	68V–14323–00	.SCREW, AIR ADJUSTING .VIS DE DOSEUR D'AIR	1	1				
6	6S1–85885–00	.THROTTLE SENSOR ASSY .SENSITOMETRE (ENS.)	1	1				
7	68V–81145–01	.SCREW 1 .VIS 1	2	2				
8	68V–8182L–00	.O-RING 1 .JOINT TORIQUE 1	1	1				
9	68V–14356–00	.WASHER, SPRING .RONDELLE	1	1				
10	68V–14565–00	.SCREW .VIS	8	8				
11	63P–14291–00	BRACKET 1 SUPPORT 1	1	1				
12	63P–13641–10	MANIFOLD, INTAKE 1 TUBULURE, ADMISSION 1	1	1				
13	63P–14496–00	BOLT BOULON	6	6				
14	97595–06516	BOLT, WITH WASHER VIS HEXAGONAL AVC RONDELLE	4	4				
15	63P–13645–00	GASKET, MANIFOLD 1 JOINT, TUBULURE 1	4	4				
16	6H4–41237–00	JOINT, LINK RACCORD	1	1				
17	95380–05700	NUT ECROU	1	1				
18	682–41238–01	JOINT, LINK RACCORD	1	1				
19	63P–13557–00	GASKET JOINT	2	2				
20	6P2–14446–00	BOLT BOULON	2	2				
21	63P–13643–00	COVER, MANIFOLD COUVERCLE, TUBULURE	4	4				
22	63P–13761–01	INJECTOR INJECTEUR	4	4				
23	68V–1416A–00	.O-RING .JOINT TORIQUE	1	1				
24	68V–13766–00	RUBBER, INJECTOR RONDELLE CAOUTCHOUC	4	4				
25	63P–1312A–01	VALVE, CONTROL SOUPAPE,CONTROLE	1	1				
26	68V–81146–01	SCREW 2 VIS 2	3	3				

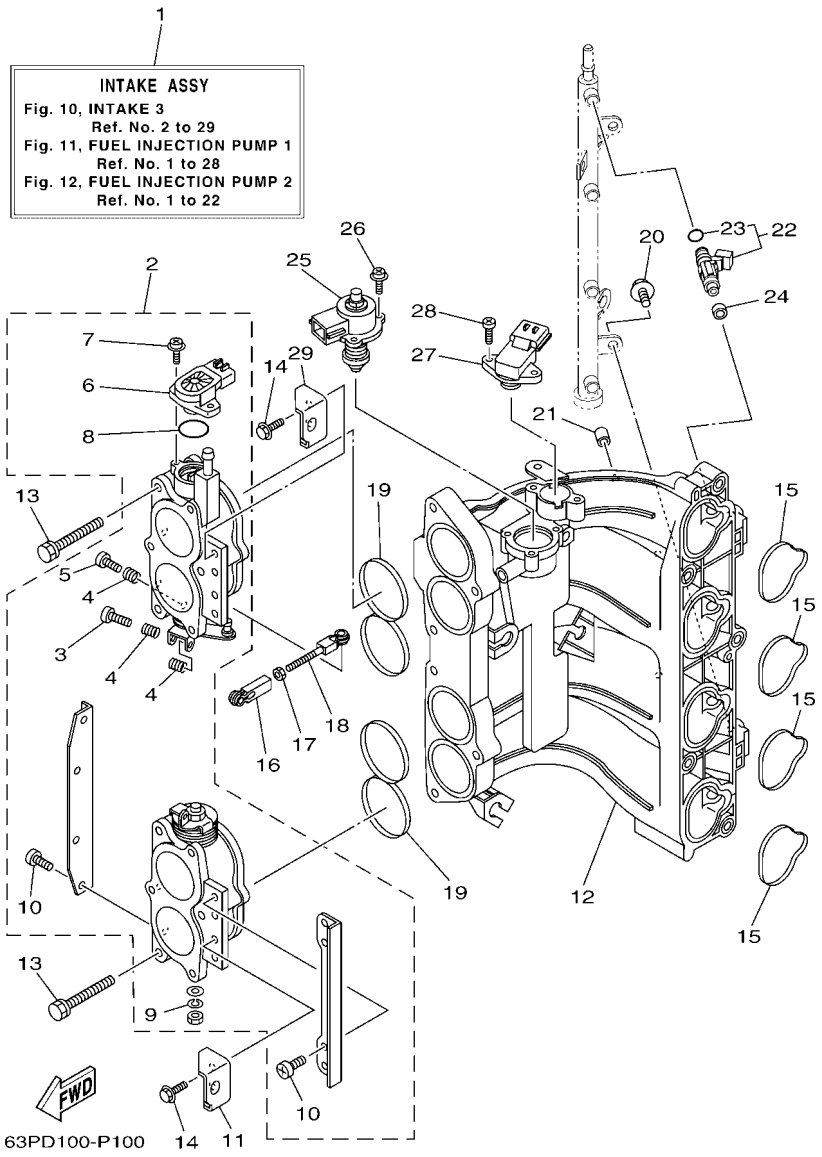

FIG. 10 INTAKE 3 — ADMISSION 3

REF. NO.	PART NO. N° PIECES	DESCRIPTION DESCRIPTION	63PD	64PD				REMARKS REMARQUES
27	63P–82380–00	SENSOR, PRESSURE SONDE DE PRESSION	1	1				
28	68V–81147–00	SCREW 3 VIS 3	2	2				
29	63P–14292–00	BRACKET 2 SUPPORT 2	1	1				

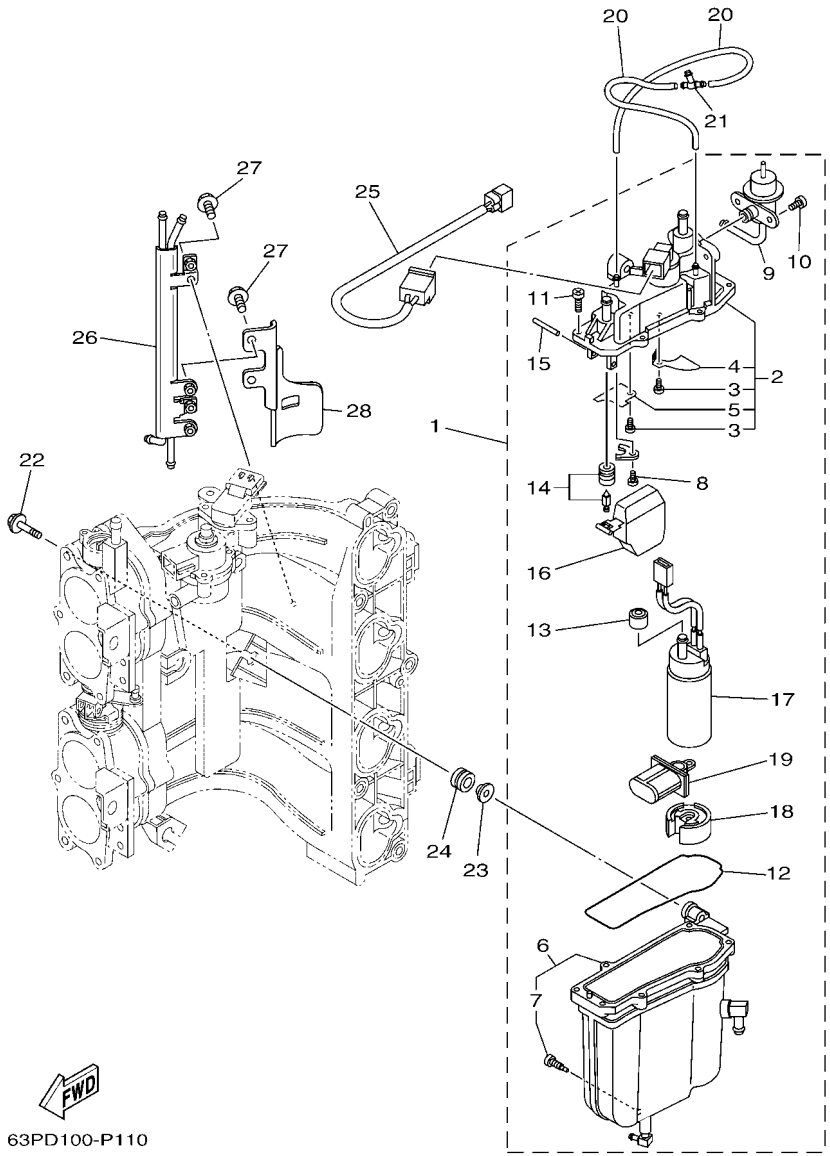

FIG. 11 FUEL INJECTION PUMP 1 — POMPE A INJECTEUR 1

REF. NO.	PART NO. N° PIECES	DESCRIPTION DESCRIPTION	63PD	64PD				REMARKS REMARQUES
1	63P–14180–20	FLOAT CHAMBER ASSY CUVE DE FLOTTEUR	1	1				
2	63P–14182–20	.COVER, FLOAT CHAMBER .COUVERCLE, CUVE DE FLOTTEUR	1	1				
3	4SV–24453–00	..SCREW ..VIS	2	2				
4	63P–2411R–00	..PLATE 1 ..PLAQUE 1	1	1				
5	63P–2411T–00	..PLATE 2 ..PLAQUE 2	1	1				
6	63P–14181–20	.BODY, FLOAT CHAMBER 1 .CORPS, CUVE DE FLOTTEUR 1	1	1				
7	63P–14191–00	..PLUG, DRAIN ..PLOT, VIDANGE	1	1				
8	4SV–24453–00	.SCREW .VIS	1	1				
9	63P–13906–00	.REGULATOR, PRESSURE .REGULATEUR DE PRESSION	1	1				
10	63P–14565–00	.SCREW .VIS	1	1				
11	63P–14567–00	.SCREW .VIS	7	7				
12	63P–14984–00	.GASKET, FLOAT CHAMBER .JOINT, CUVE DE FLOTTEUR	1	1				
13	68V–13781–20	.GROMMET & COLLAR SET .PASSE-FIL ET COLLERETTE	1	1				
14	63P–14546–00	.VALVE, NEEDLE .POINTEAU	1	1				
15	68V–14386–00	.PIN, FLOAT .AXE, FLOTTEUR	1	1				
16	63P–14985–00	.FLOAT .FLOTTEUR	1	1				
17	63P–13907–03	.FUEL PUMP COMP. .POMPE A CARBURANT COMP.	1	1				
18	63P–13784–00	.COVER, PUMP .COUVERCLE, POMPE	1	1				
19	63P–13915–00	.FILTER .FILTRE	1	1				
20	63P–14148–00	PIPE DURITE	2	2				
21	69J–24379–00	PIPE, JOINT 4 DURITE RACCORDEMENT 4	1	1				
22	90119–06269	BOLT, WITH WASHER BOULON, AVEC RONDELLE	3	3				
23	63P–13716–00	COLLAR COLLERETTE	3	3				
24	6BM–13593–00	DAMPER AMORTISSEUR	3	3				
25	63P–8259L–00	WIRE HARNESS ASSY 1 FAISCEAU DE FILS COMPLET 1	1	1				
26	63P–21841–10	COOLER RADIATEUR	1	1				
27	63P–13573–00	BOLT 1 BOULON 1	3	3				

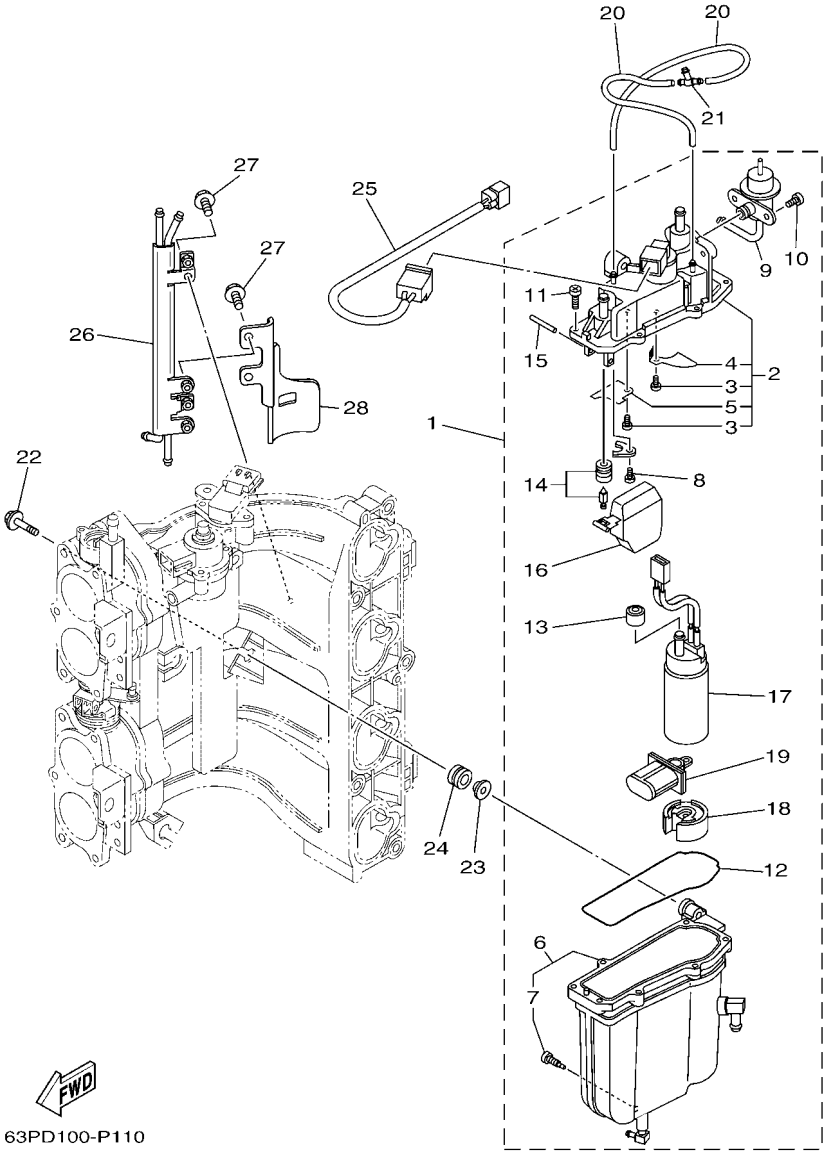

FIG. 11 FUEL INJECTION PUMP 1 — POMPE A INJECTEUR 1

REF. NO.	PART NO. N° PIECES	DESCRIPTION DESCRIPTION	63PD	64PD				REMARKS REMARQUES
28	63P–13882–00	COVER 2 COUVERCLE 2	1	1				

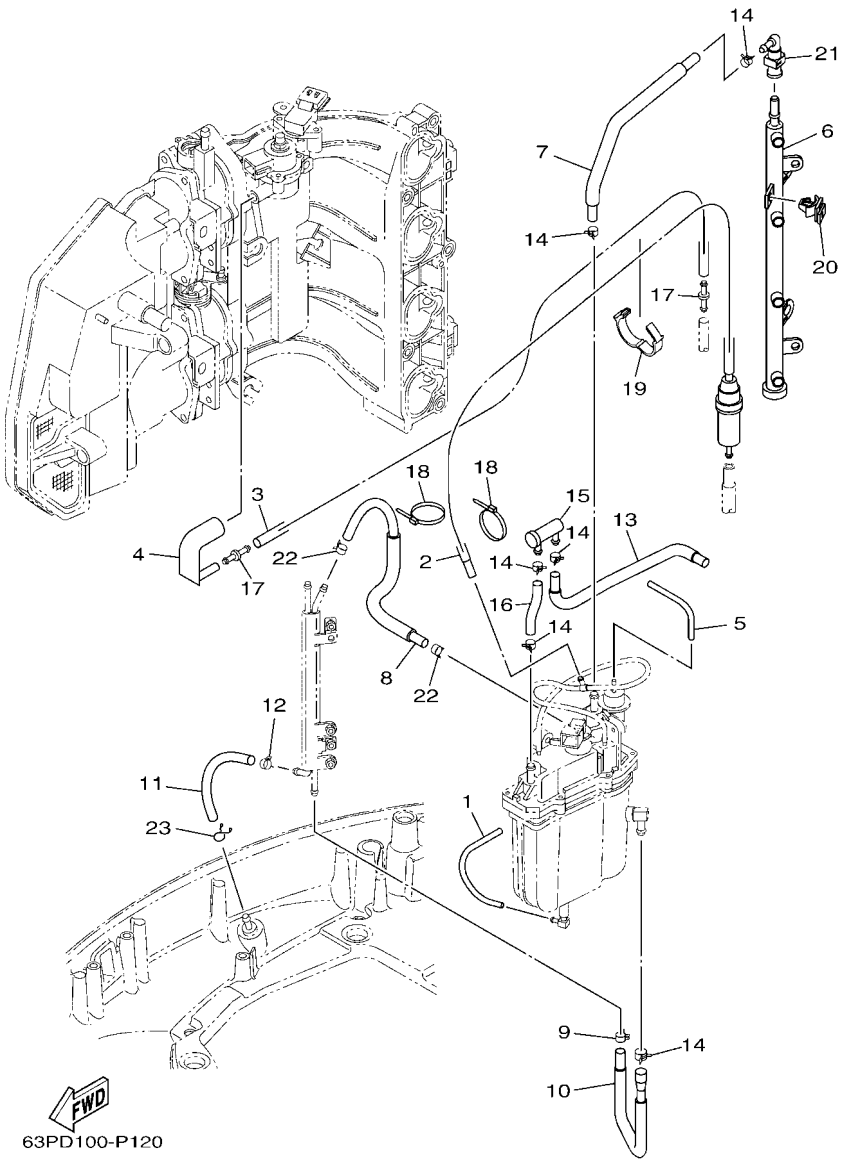

FIG. 12 FUEL INJECTION PUMP 2 — POMPE A INJECTEUR 2

REF. NO.	PART NO. N° PIECES	DESCRIPTION DESCRIPTION	63PD	64PD				REMARKS REMARQUES
1	63P–14149–00	PIPE DURITE	1	1				
2	63P–13971–10	PIPE, FUEL 1 TUBE 1, CARBURANT	1	1				WITH FILTER WITH FILTER
3	63P–13546–00	HOSE 2 DURITE 2	1	1				
4	63P–13545–00	HOSE 1 DURITE 1	1	1				
5	63P–13532–10	HOSE, VACUUM SENSING 3 DURITE 3	1	1				
6	63P–13160–10	DELIVERY PIPE ASSY 1 ENS. TUBE DE REFOULEMENT 1	1	1				
7	63P–13974–40	PIPE, FUEL 4 TUBE 4, CARBURANT	1	1				
8	63P–13976–40	PIPE, FUEL 6 TUBE 6, CARBURANT	1	1				FOR F(L)150DET FOR F(L)150DET
	63P–13976–50	PIPE, FUEL 6 TUBE 6, CARBURANT	1	1				FOR F(L)150DET1 FOR F(L)150DET1
9	68V–2411M–00	CLIP JONC	1	1				
10	63P–24317–30	PIPE 7 DURITE 7	1	1				FOR F(L)150DET FOR F(L)150DET
	63P–24317–40	PIPE 7 DURITE 7	1	1				FOR F(L)150DET1 FOR F(L)150DET1
11	63P–2247B–10	HOSE 2 DURITE 2	1	1				
12	68V–24519–00	CLIP JONC	1	1				
13	63P–24325–40	PIPE 14 DURITE 14	1	1				FOR F(L)150DET FOR F(L)150DET
	63P–24325–50	PIPE 14 DURITE 14	1	1				FOR F(L)150DET1 FOR F(L)150DET1
14	68V–13577–00	CLIP AGRAFE	6	6				
15	69J–24501–10	FILTER, FUEL FILTRE	1	1				
16	63P–13975–40	PIPE, FUEL 5 TUBE 5, CARBURANT	1	1				FOR F(L)150DET FOR F(L)150DET
	63P–13975–50	PIPE, FUEL 5 TUBE 5, CARBURANT	1	1				FOR F(L)150DET1 FOR F(L)150DET1
17	6P2–13758–00	PIPE, JOINT DURITE	2	2				
18	68V–2481H–00	CLAMP BRIDE	2	2				
19	90464–26001	CLAMP BRIDE	1	1				
20	90464–12002	CLAMP BRIDE	1	1				
21	6AW–24300–00	FUEL PIPE JOINT DURITE RACCORDEMT. A ESSENCE	1	1				
22	63P–24519–00	CLIP JONC	2	2				
23	90467–09M09	CLIP JONC	1	1				

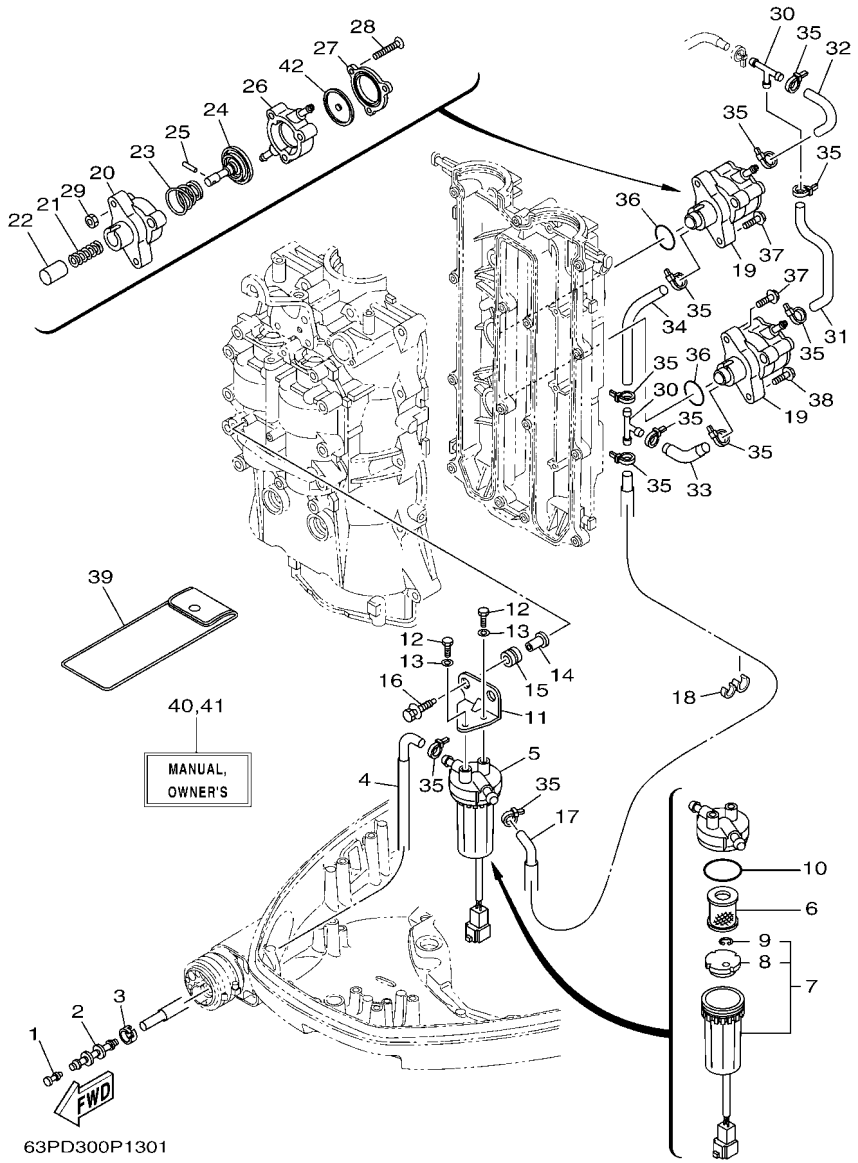

FIG. 13 FUEL 1 — CARBURANT 1

REF. NO.	PART NO. N° PIECES	DESCRIPTION DESCRIPTION	63PD	64PD				REMARKS REMARQUES
1	689–85547–00	DAMPER AMORTISSEUR	1	1				
2	6AW–24377–01	PIPE, JOINT 2 DURITE RACCORDEMENT 2	1	1				
3	6E5–24351–51	BAND 1 COLLIER 1	1	1				
4	63P–24316–30	PIPE 6 DURITE 6	1	1				FOR F(L)150DET FOR F(L)150DET
	63P–24316–40	PIPE 6 DURITE 6	1	1				FOR F(L)150DET1 FOR F(L)150DET1
5	6P3–24560–03	FILTER ASSY ENS FILTRE	1	1				
6	6P3–24563–01	.ELEMENT, FILTER .ELEMENT, FILTRE	1	1				
7	6P3–24562–03	.CUP, FILTER .CUVETTE, FILTRE	1	1				
8	6P3–24469–00	..FLOAT, WATER LEVEL ..FLOTTEUR	1	1				
9	6P3–24519–00	..CLIP ..JONC	1	1				
10	6P3–24564–00	.GASKET .JOINT	1	1				
11	63P–24566–00	BRACKET, FILTER SUPPORT, FILTRE	1	1				
12	97095–06014	BOLT BOULON	2	2				
13	92995–06600	WASHER RONDELLE	2	2				
14	90387–06289	COLLAR COLLERETTE	2	2				
15	90480–10M23	GROMMET PASSE-FIL	2	2				
16	90119–06071	BOLT, WITH WASHER BOULON, AVEC RONDELLE	2	2				
17	63P–24311–30	PIPE, FUEL 1 DURITE A ESSENCE	1	1				FOR F(L)150DET FOR F(L)150DET
	63P–24311–20	PIPE, FUEL 1 DURITE A ESSENCE	1	1				FOR F(L)150DET1 FOR F(L)150DET1
18	90464–13M34	CLAMP BRIDE	1	1				
19	63P–24410–20	FUEL PUMP ASSY POMPE A ESSENCE	2	2				
20	68V–24412–00	.BODY 1 .CORPS 1	1	1				
21	68V–24454–00	.SPRING .RESSORT	1	1				
22	63P–13131–00	.PLUNGER .PLONGEUR	1	1				
23	63P–24423–00	.SPRING, DIAPHRAGM .RESSORT, DIAPHRAGME	1	1				
24	68V–24411–00	.DIAPHRAGM .DIAPHRAGME	1	1				
25	68V–24374–00	.PIN .GOUPILLE	1	1				

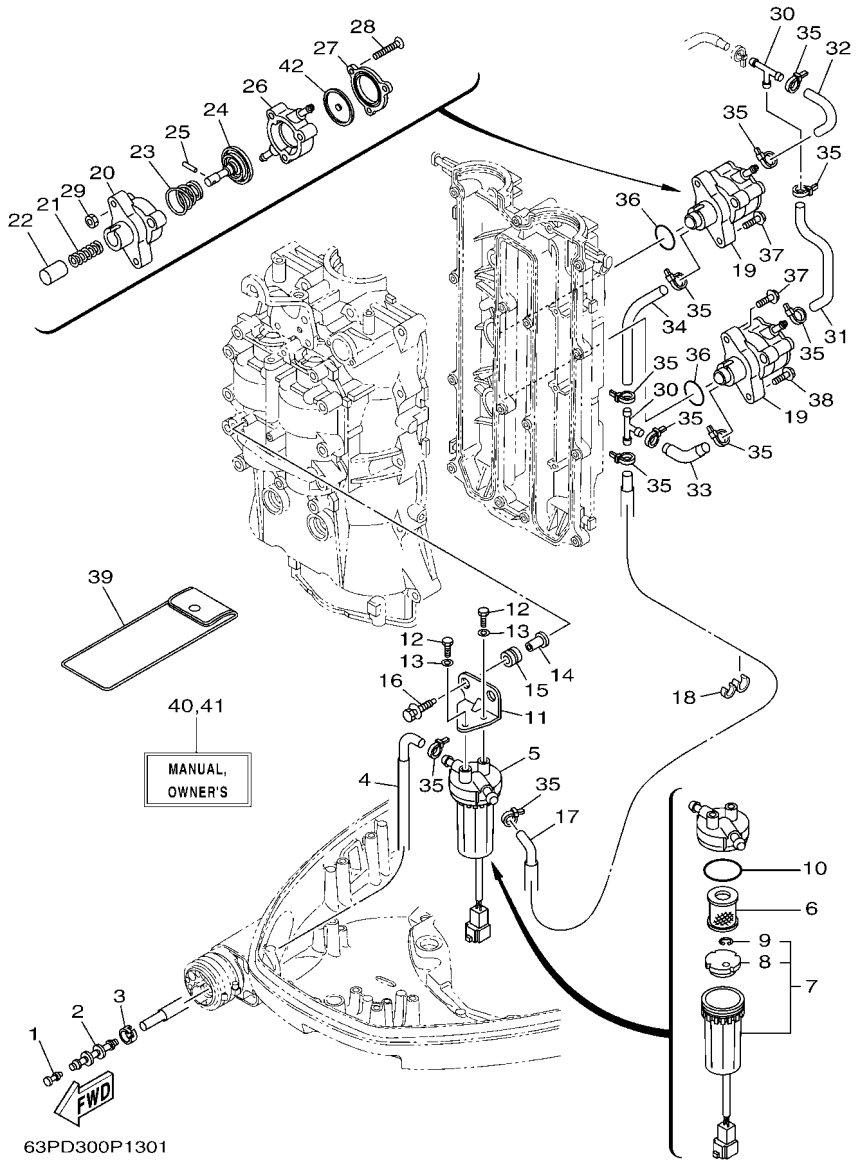

FIG. 13 FUEL 1 — CARBURANT 1

REF. NO.	PART NO. N° PIECES	DESCRIPTION DESCRIPTION	63PD	64PD				REMARKS REMARQUES
26	63P–24413–00	.BODY 2 .CORPS 2	1	1				
27	63P–24414–00	.BODY 3 .CORPS 3	1	1				
28	68V–24444–00	.SCREW .VIS	3	3				
29	68V–24149–00	.NUT .ECROU	3	3				
30	6E5–24378–00	PIPE, JOINT 3 DURITE, RACCORDEMENT 3	2	2				
31	63P–24314–00	PIPE 4 DURITE 4	1	1				FOR F(L)150DET FOR F(L)150DET
	63P–24314–10	PIPE 4 DURITE 4	1	1				FOR F(L)150DET1 FOR F(L)150DET1
32	63P–24315–00	PIPE 5 DURITE 5	1	1				FOR F(L)150DET FOR F(L)150DET
	63P–24315–10	PIPE 5 DURITE 5	1	1				FOR F(L)150DET1 FOR F(L)150DET1
33	63P–24312–10	PIPE 2 DURITE 2	1	1				FOR F(L)150DET FOR F(L)150DET
	63P–24312–20	PIPE 2 DURITE 2	1	1				FOR F(L)150DET1 FOR F(L)150DET1
34	63P–24313–10	PIPE 3 DURITE 3	1	1				FOR F(L)150DET FOR F(L)150DET
	63P–24313–20	PIPE 3 DURITE 3	1	1				FOR F(L)150DET1 FOR F(L)150DET1
35	90465–11M10	CLAMP BRIDE	11	11				
36	93210–30682	O-RING JOINT TORIQUE	2	2				
37	90119–06M83	BOLT, WITH WASHER BOULON, AVEC RONDELLE	3	3				
38	90119–06135	BOLT, WITH WASHER BOULON, AVEC RONDELLE	1	1				
39	67F–28100–01	TOOL KIT TROUSSE A OUTILS	1	1				AP AP
40	63P–28199–7F–E0	MANUAL,OWNER'S MANUEL D'UTILISATION	1	1				UR (E) UR (E)
	63P–28199–7F–F0	MANUAL,OWNER'S MANUEL D'UTILISATION	1	1				UR (F) UR (F)
	63P–28199–7F–S0	MANUAL,OWNER'S MANUEL D'UTILISATION	1	1				UR (ES) UR (ES)
	63P–28199–7F–G0	MANUAL,OWNER'S MANUEL D'UTILISATION	1	1				UR (D) UR (D)
	63P–28199–7F–D0	MANUAL,OWNER'S MANUEL D'UTILISATION	1	1				UR (NL) UR (NL)
	63P–28199–7F–H0	MANUAL,OWNER'S MANUEL D'UTILISATION	1	1				UR (I) UR (I)
41	63P–28199–8F–K0	MANUAL,OWNER'S MANUEL D'UTILISATION	1	1				UR (DK) UR (DK)
	63P–28199–8F–R0	MANUAL,OWNER'S MANUEL D'UTILISATION	1	1				UR (GR) UR (GR)
	63P–28199–8F–P0	MANUAL,OWNER'S MANUEL D'UTILISATION	1	1				UR (P) UR (P)

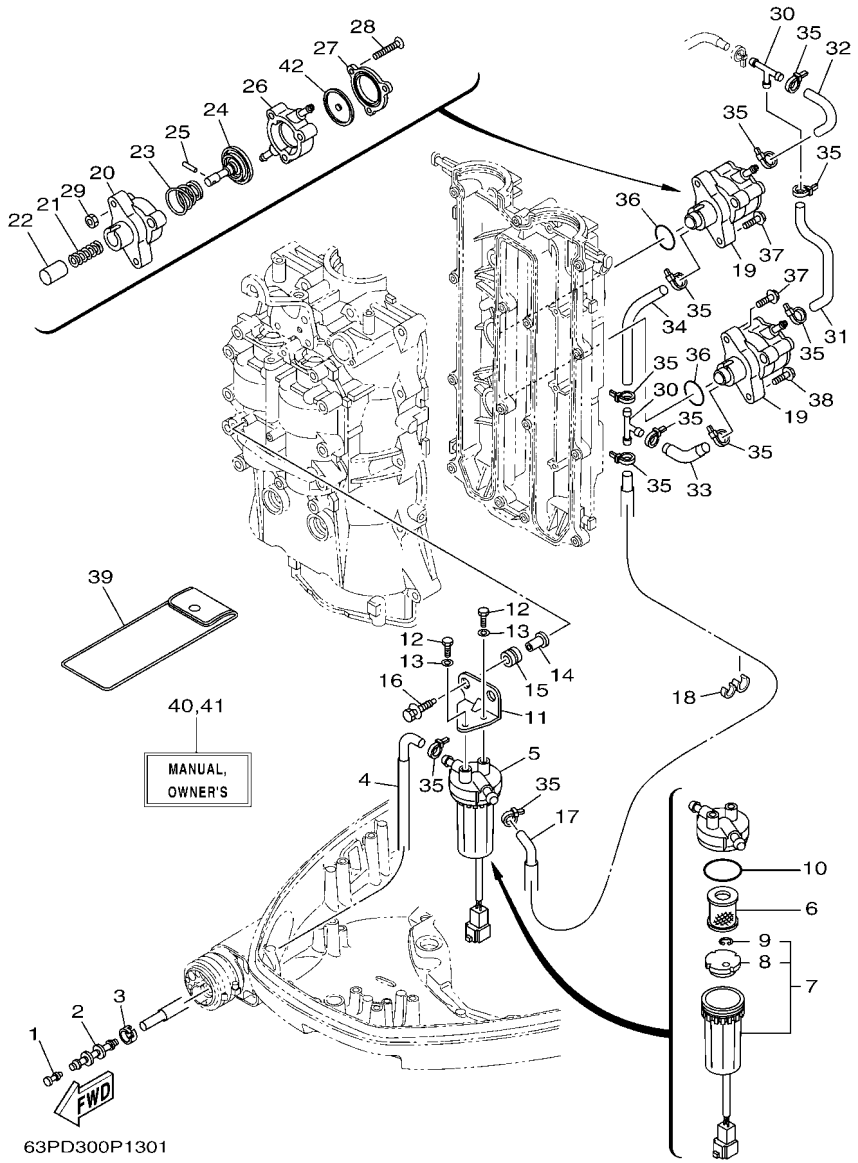

FIG. 13 FUEL 1 — CARBURANT 1

REF. NO.	PART NO. N° PIECES	DESCRIPTION DESCRIPTION	63PD	64PD				REMARKS REMARQUES
41	63P–28199–8F–N0	MANUAL,OWNER'S MANUEL D'UTILISATION	1	1				UR (N) UR (N)
	63P–28199–8F–M0	MANUAL,OWNER'S MANUEL D'UTILISATION	1	1				UR (S) UR (S)
	63P–28199–8F–L0	MANUAL,OWNER'S MANUEL D'UTILISATION	1	1				UR (SF) UR (SF)
42	68V–24471–10	.DIAPHRAGM .DIAPHRAGME	1	1				

FIG. 14 FUEL 2 — CARBURANT 2

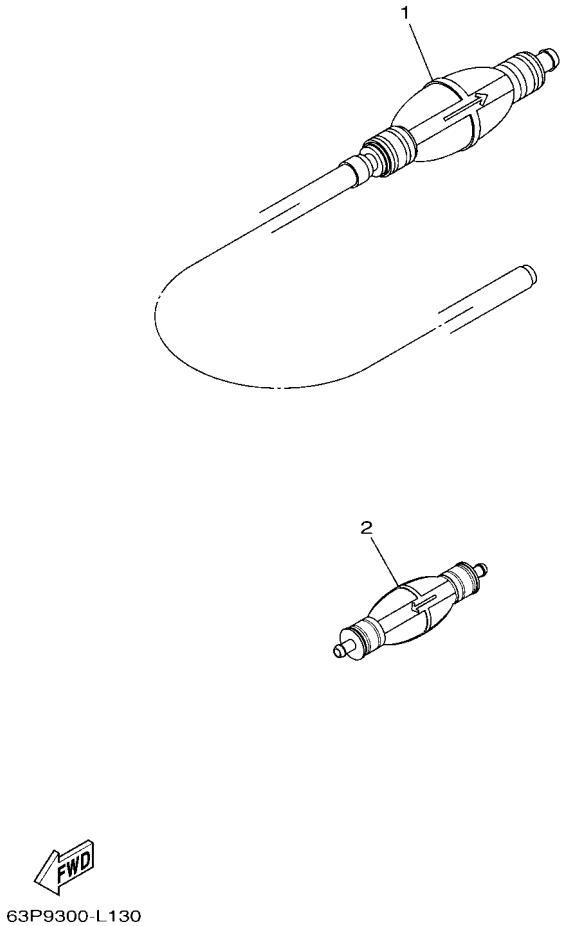

REF. NO.	PART NO. N° PIECES	DESCRIPTION DESCRIPTION	63PD	64PD				REMARKS REMARQUES
1	6YK–24307–42	FUEL PIPE COMP. 2 DURITE A ESSENCE 2	1	1				AP F(L)150DET AP F(L)150DET
2	6YK–24360–73	PRIMER PUMP ASSY POMPE D'AMORCAGE	1	1				AP F(L)150DET1 AP F(L)150DET1

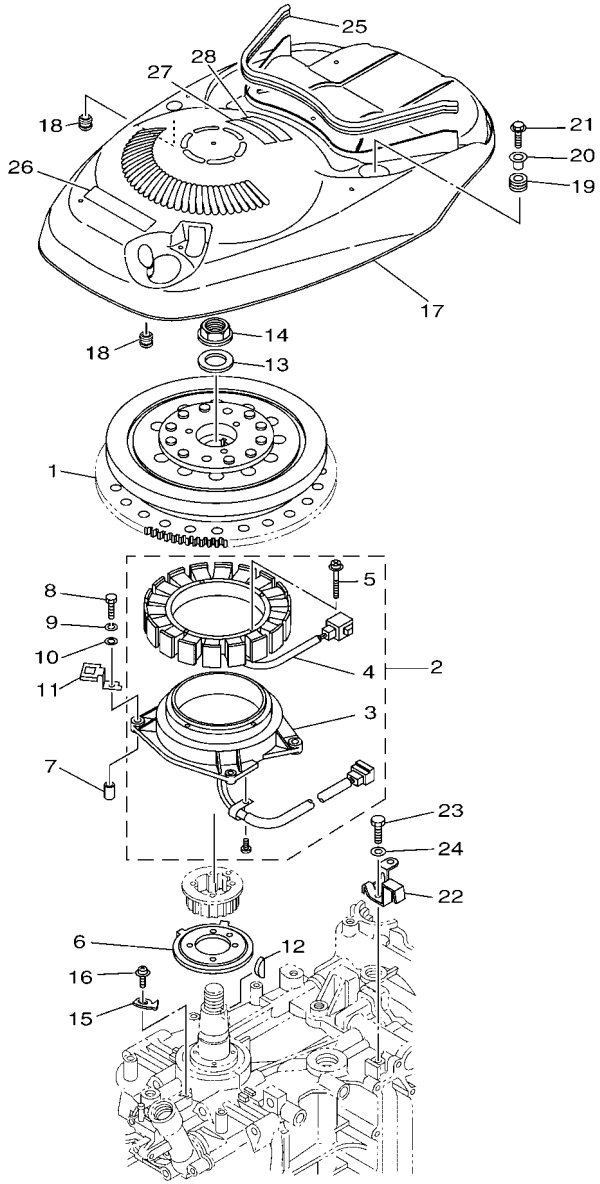

63PD370-P150

FIG. 15 GENERATOR — GENERATRICE

REF. NO.	PART NO. N° PIECES	DESCRIPTION DESCRIPTION	63PD	64PD				REMARKS REMARQUES
1	63P–81450–00	ROTOR ASSY ROTOR COMPLET	1	1				
2	63P–81460–00	BASE ASSY ENS. FLASQUE	1	1				
3	63P–85580–00	.COIL, PULSER .BOBINE, PULSEUR	1	1				
4	63P–81410–00	.STATOR ASSY .STATOR COMPLET	1	1				
5	63D–81345–20	.SCREW, WITH WASHER (M6X30) .VIS, AVEC RONDELLE (M6X30)	4	4				
6	63P–81673–01	ROTOR ROTOR	1	1				
7	99530–08012	PIN, DOWEL GOUJON, D'ASSEMBLAGE	2	2				
8	97095–06035	BOLT BOULON	4	4				
9	92995–06100	WASHER, SPRING RONDELLE, GROWER	4	4				
10	92995–06600	WASHER RONDELLE	4	4				
11	63P–81845–00	PLATE PLAQUE	2	2				
12	90280–05015	KEY, WOODRUFF CLAVETTE, DEMI-LUNE	1	1				
13	90201–24014	WASHER, PLATE RONDELLE, PLATE	1	1				
14	90179–24002	NUT ECROU	1	1				
15	6P2–81332–00	PLATE, TIMING PLATEAU, ALLUMAGE	1	1				
16	97985–06210	SCREW, WITH WASHER VIS, AVEC RONDELLE	1	1				
17	63P–81337–10	COVER, FLYWHEEL COUVERCLE, VOLANT	1	1				
18	6A0–82317–00	DAMPER, IGNITION COIL AMORTISSEUR, BOBINE D'ALLUM	2	2				
19	90480–15M31	GROMMET PASSE-FIL	1	1				
20	90387–06285	COLLAR COLLERETTE	1	1				
21	95895–06020	BOLT, FLANGE BOULON	1	1				
22	63P–8132G–10	PLATE PLAQUE	1	1				
23	97095–06016	BOLT BOULON	1	1				
24	92995–06600	WASHER RONDELLE	1	1				
25	6DA–42617–00	DAMPER, FORM BOURRELET, CAOUTCHOUC	1	1				
26	63P–13437–62	MARK, CAUTION MAKER	1	1				
27	6EE–81994–40	LABEL, SAFETY ETIQUETTE, SECURITE	1	1				

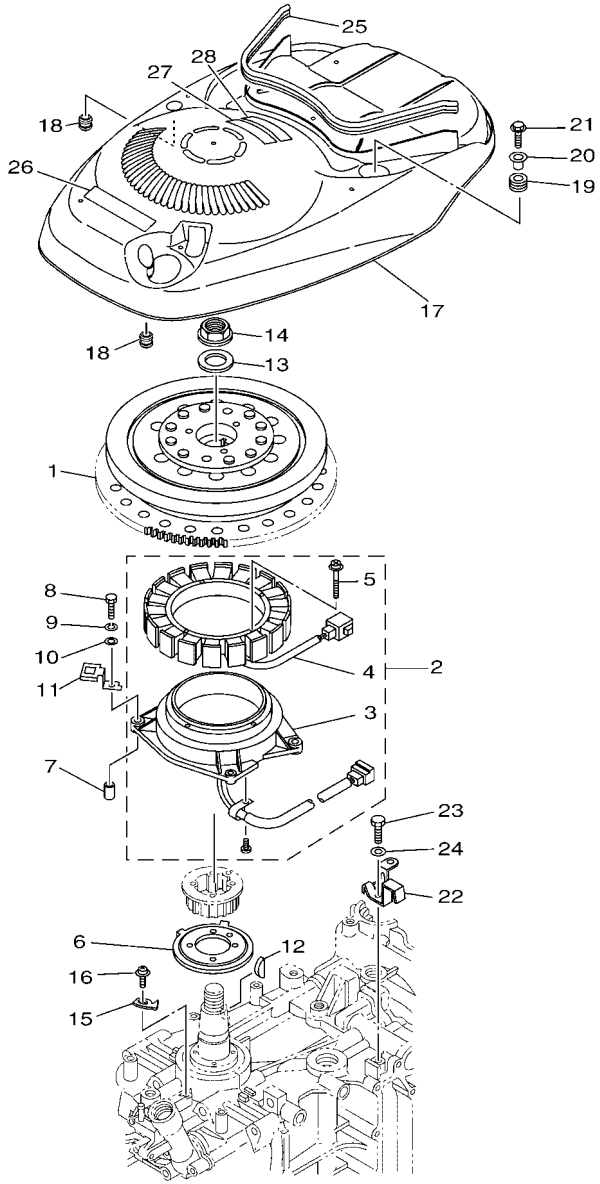

63PD370-P150

FIG. 15 GENERATOR — GENERATRICE

REF. NO.	PART NO. N° PIECES	DESCRIPTION DESCRIPTION	63PD	64PD				REMARKS REMARQUES
28	6EE–81994–50	LABEL, SAFETY ETIQUETTE, SECURITE	1	1				

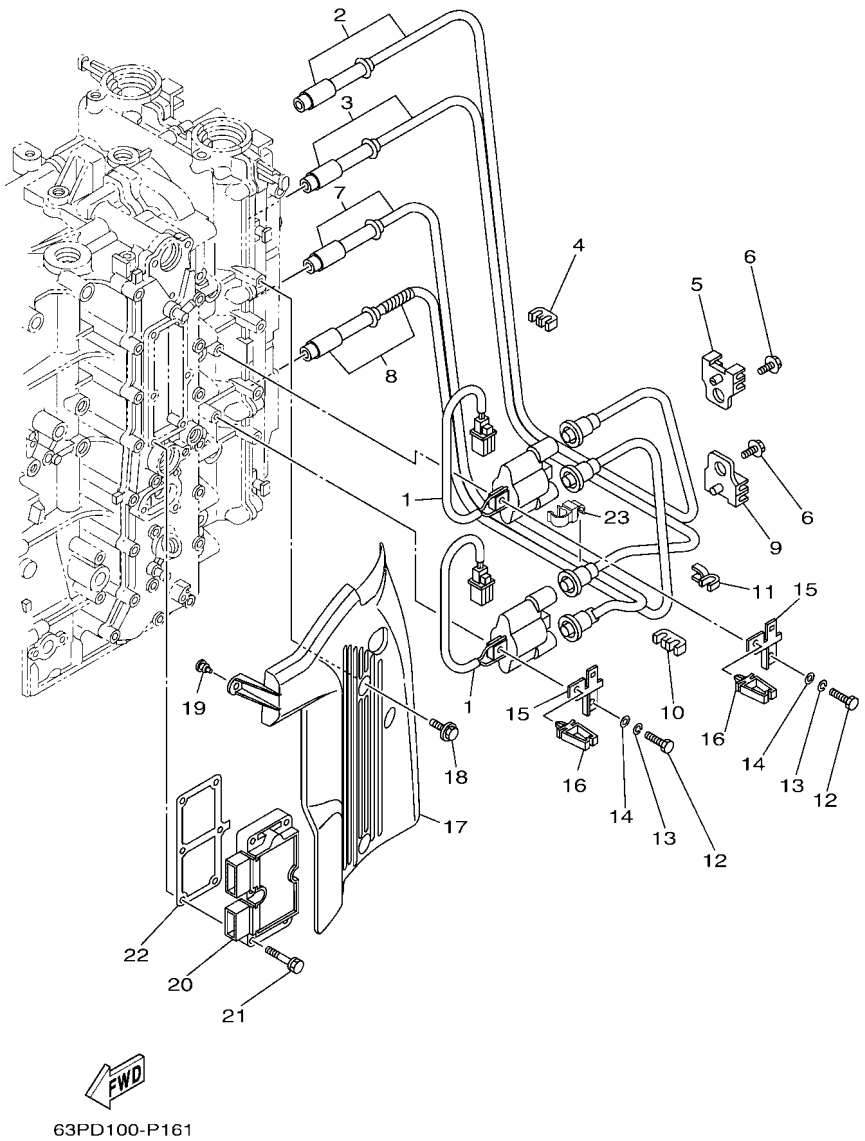

FIG. 16 ELECTRICAL 1 — PARTIE ELECTRIQUE 1

REF. NO.	PART NO. N° PIECES	DESCRIPTION DESCRIPTION	63PD	64PD				REMARKS REMARQUES
1	63P–82310–01	IGNITION COIL ASSY BOBINE D'ALLUMAGE	2	2				
2	63P–W823A–00	CORD, HIGH TENSION 1 CORDON, HAUTE-TENSION 1	1	1				
3	63P–W823B–00	CORD, HIGH TENSION 2 CORDON, HAUTE-TENSION 2	1	1				
4	67F–82361–00	CLAMP, CORD COLLIER, CORDON	1	1				
5	67F–82362–00	CLAMP, CORD 2 COLLIER, CABLE 2	1	1				
6	90119–06134	BOLT, WITH WASHER BOULON, AVEC RONDELLE	2	2				
7	63P–W823C–00	CORD, HIGH TENSION 3 CORDON, HAUTE-TENSION 3	1	1				
8	63P–W823D–00	CORD, HIGH TENSION 4 CORDON, HAUTE TENSION 4	1	1				
9	67F–82362–00	CLAMP, CORD 2 COLLIER, CABLE 2	1	1				
10	67F–82361–00	CLAMP, CORD COLLIER, CORDON	1	1				
11	90464–07M41	CLAMP BRIDE	1	1				
12	97095–06025	BOLT BOULON	4	4				
13	92995–06100	WASHER, SPRING RONDELLE, GROWER	4	4				
14	92995–06600	WASHER RONDELLE	4	4				
15	63P–82388–00	PLATE PLAQUETTE	2	2				
16	90464–05141	CLAMP BRIDE	2	2				
17	63P–82314–00	COVER, IGNITION COIL COUVERCLE, BOBINE D'ALLUMAGE	1	1				
18	95895–06020	BOLT, FLANGE BOULON	2	2				
19	90480–06M19	GROMMET PASSE-FIL	1	1				
20	63P–81960–01	RECTIFIER & REGULATOR ASSY REDRESSEUR REGULATEUR CPLT	1	1				
21	90119–06MA4	BOLT, WITH WASHER BOULON, AVEC RONDELLE	6	6				
22	63P–81975–00	PLATE, RECTIFIER FITTING PLAQUE, FIXATION DU REDRESSEUR	1	1				
23	90464–12017	CLAMP BRIDE	1	1				

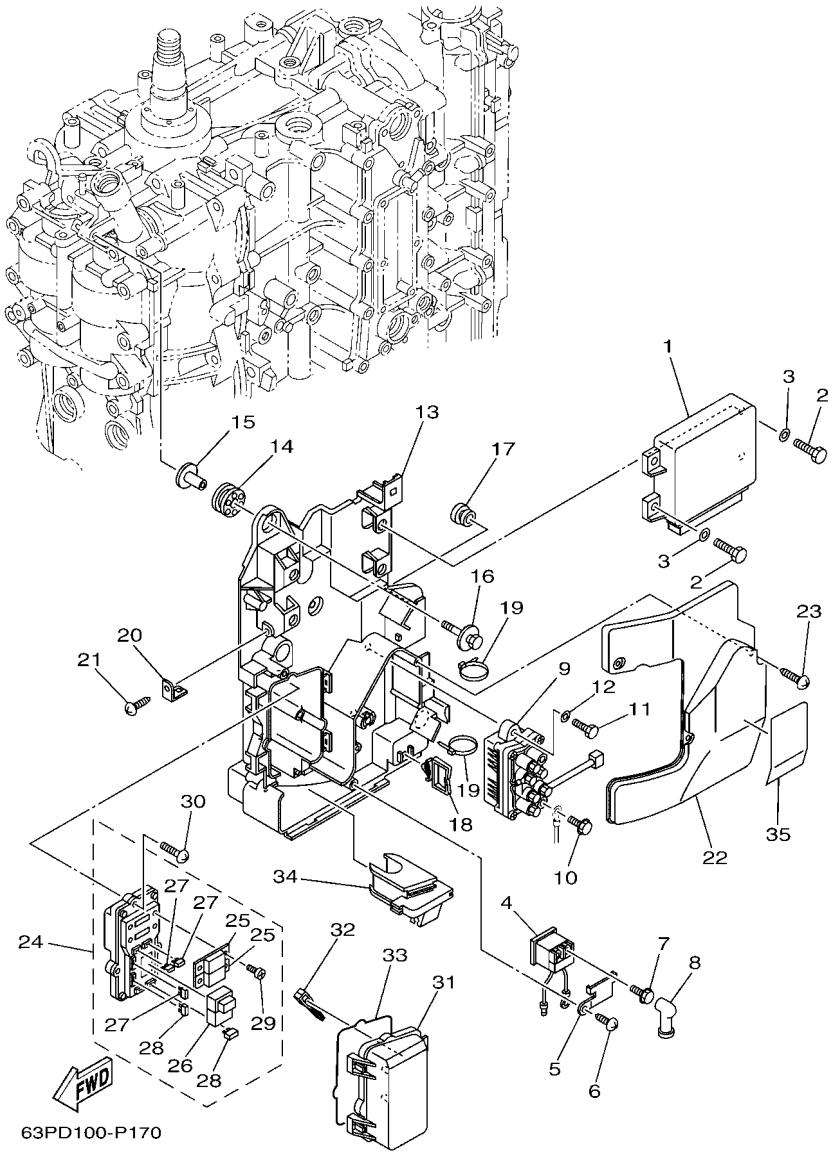

FIG. 17 ELECTRICAL 2 — PARTIE ELECTRIQUE 2

REF. NO.	PART NO. N° PIECES	DESCRIPTION DESCRIPTION	63PD	64PD				REMARKS REMARQUES
1	63P–8591A–65	ENGINE CONTROL UNIT ASSY BLOC DE CONTROL	1	1				
2	97095–06016	BOLT BOULON	4	4				
3	92995–06600	WASHER RONDELLE	4	4				
4	68V–8194A–00	RELAY RELAIS	1	1				
5	68V–81953–00	STAY, RELAY SUPPORT, RELAIS	1	1				
6	97780–60620	SCREW, TAPPING VIS, TETE BOMBEE	1	1				
7	97595–06610	BOLT, WITH WASHER VIS HEXAGONAL AVC RONDELLE	2	2				
8	6G5–82119–00	COVER, LEAD WIRE GARNITURE, FIL	2	2				
9	63P–81950–00	RELAY ASSY RELAIS COMPLET	1	1				
10	97595–06610	BOLT, WITH WASHER VIS HEXAGONAL AVC RONDELLE	2	2				
11	97013–06020	BOLT BOULON	2	2				
12	92903–06600	WASHER, PLATE RONDELLE, PLATE	2	2				
13	63P–81948–00	BRACKET SUPPORT	1	1				
14	68F–85516–01	SPACER ENTRETOISE	3	3				
15	90387–06176	COLLAR COLLERETTE	3	3				
16	68F–85119–00	BOLT BOULON	3	3				
17	90480–10627	GROMMET PASSE-FIL	1	1				
18	90464–23199	CLAMP BRIDE	1	1				
19	90465–13M18	CLAMP BRIDE	3	3				
20	68V–85548–00	HOLDER SUPPORT	1	1				
21	97780–60620	SCREW, TAPPING VIS, TETE BOMBEE	1	1				
22	63P–81942–00	COVER COUVERCLE	1	1				
23	90169–05M00	SCREW, TRUSS HEAD TAPPING VIS, TETE FRAISEE	3	3				
24	63P–82170–02	FUSE BOX ASSY BOITE A FUSIBLES	1	1				
25	63P–82151–00	.FUSE (50A) .FUSIBLE (50A)	2	2				
26	6AW–8195A–00	.RELAY ASSY .RELAIS COMPLET	1	1				
27	67F–82151–00	.FUSE (20A) .FUSIBLE (20A)	3	3				

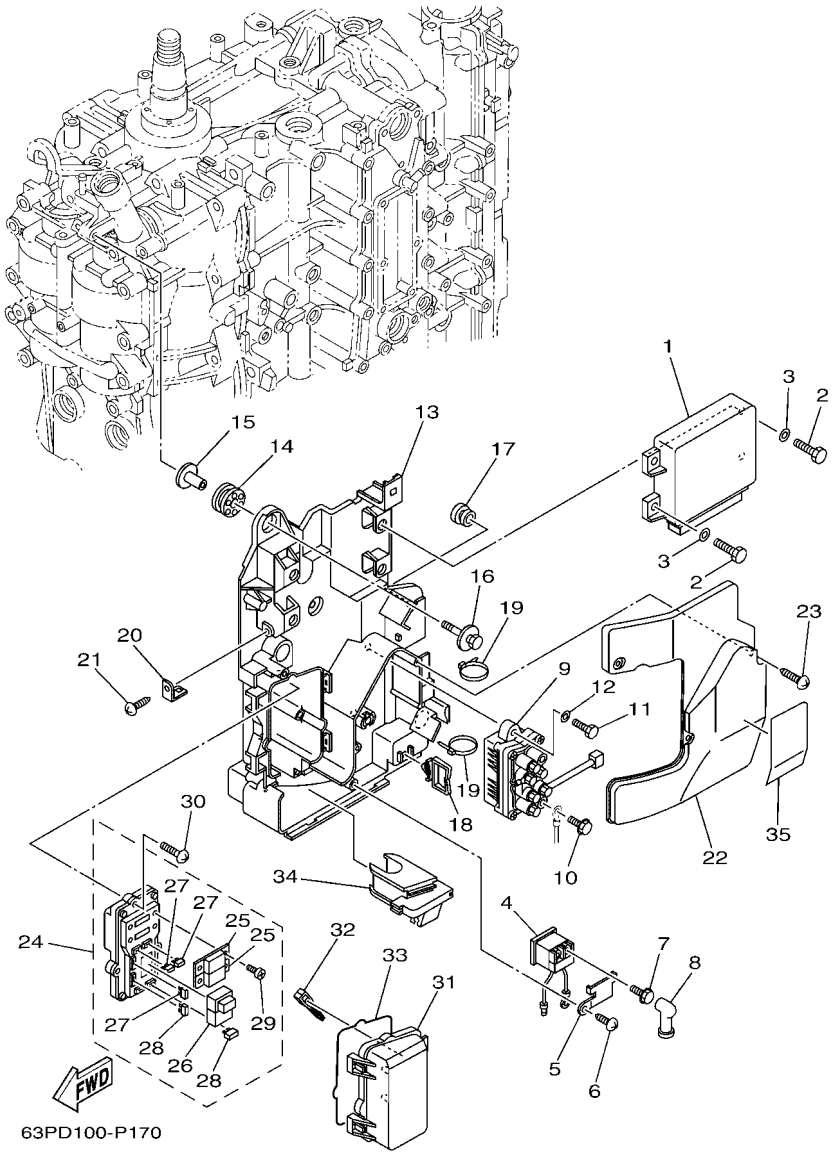

FIG. 17 ELECTRICAL 2 — PARTIE ELECTRIQUE 2

REF. NO.	PART NO. N° PIECES	DESCRIPTION DESCRIPTION	63PD	64PD				REMARKS REMARQUES
28	67F–82151–10	.FUSE (30A) .FUSIBLE (30A)	2	2				
29	68F–82846–00	.SCREW, PAN HEAD (M5) .VIS, TETE TRONCONIQUE (M5)	4	4				
30	97780–50620	SCREW, TAPPING VIS, TETE BOMBEE	3	3				
31	60V–85544–00	CASE BOITIER	1	1				
32	67F–2812A–00	PULLER, FUSE TENDEUR, FUSIBLE	1	1				
33	68F–82176–00	DAMPER AMORTISSEUR	1	1				
34	63P–81336–00	GROMMET OEILLET CAOUTCHOUC	1	1				
35	63P–81919–00	GRAPHIC, REGULATOR ADHESIF, REGULATEUR	1	1				

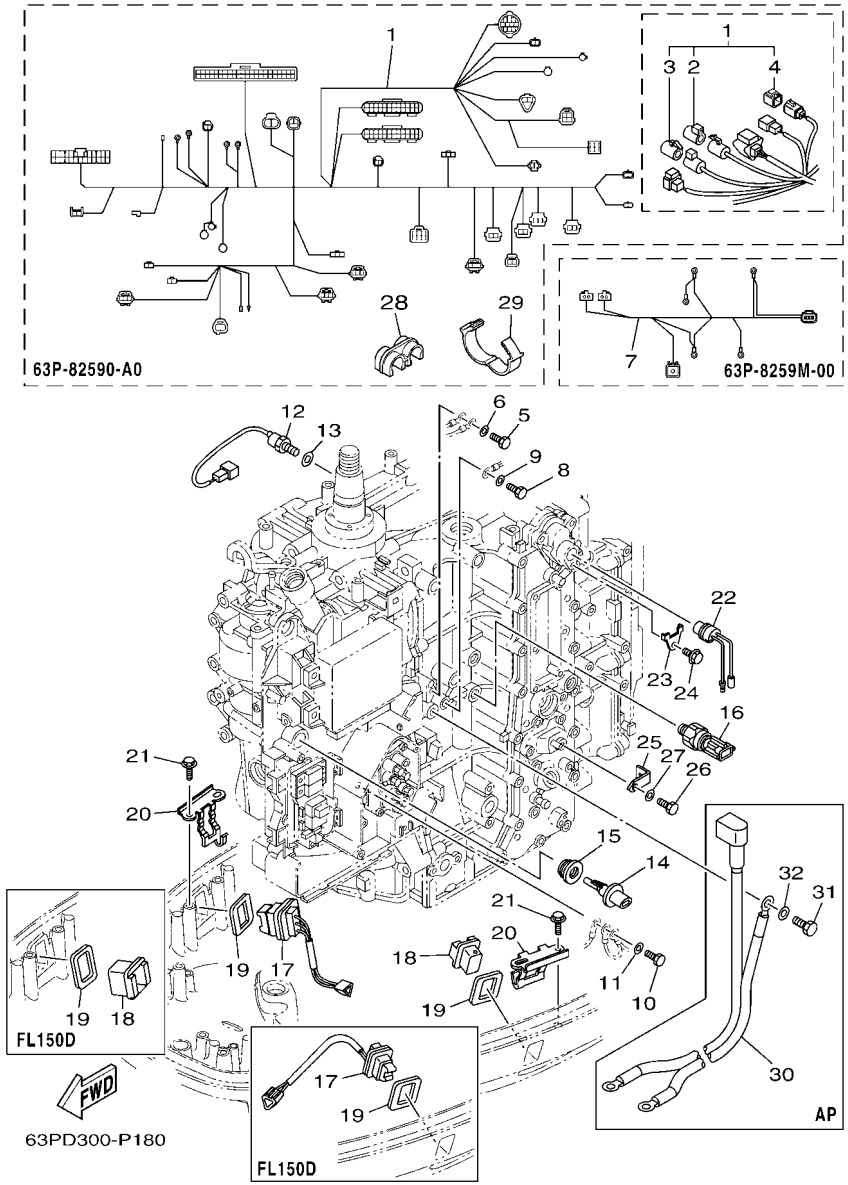

FIG. 18 ELECTRICAL 3 — PARTIE ELECTRIQUE 3

REF. NO.	PART NO. N° PIECES	DESCRIPTION DESCRIPTION	63PD	64PD				REMARKS REMARQUES
1	63P–82590–A0	WIRE HARNESS ASSY FAISCEAU DE FILS COMPLET	1	1				FOR TILT LIMIT FOR TILT LIMIT
2	6DA–82582–00	.CAP 1 (FEMALE) .BOUCHON 1 (FEMME)	1	1				
3	6DA–82582–10	.CAP 1 (MALE) .BOUCHON 1 (MALE)	1	1				
4	6Y8–82582–11	.CAP 1 (4PIN) .COUVERCLE, FAISCEAU DE FILS	1	1				
5	97095–06016	BOLT BOULON	1	1				
6	92995–06600	WASHER RONDELLE	1	1				
7	63P–8259M–00	WIRE HARNESS ASSY 2 FAISCEAU DE FILS	1	1				
8	97095–06016	BOLT BOULON	1	1				
9	92995–06600	WASHER RONDELLE	1	1				
10	97095–06012	BOLT BOULON	1	1				
11	92995–06600	WASHER RONDELLE	1	1				
12	61A–85790–00	THERMOSENSOR ASSY SENSITOMETRE	1	1				
13	92990–10600	WASHER, PLATE RONDELLE, PLATE	1	1				
14	63P–85886–00	SENSOR, AIR TEMPERATURE SONDE	1	1				
15	63P–14435–00	GROMMET RONDELLE CAOUTCHOUC	1	1				
16	6AW–83651–00	SENDER, OIL PRESSURE RACCORD, PRESSION D'HUILE	1	1				
17	69J–82563–01	TRIM & TILT SWITCH ASSY INCLINER ET PARER COMMUTATEUR	1	1				
18	69J–42723–01	COVER, BOTTOM COUVERCLE	1	1				
19	69J–82587–00	GASKET JOINT	2	2				
20	63P–83614–01	BRACKET SUPPORT	2	2				
21	90109–06M86	BOLT BOULON	4	4				
22	6P2–82560–01	THERMO SWITCH ASSY THERMO-CONTACT COMPLET	1	1				
23	6E9–82588–00	PLATE PLAQUE	1	1				
24	90109–06M80	BOLT BOULON	1	1				
25	63P–8366P–01	BRACKET 4 SUPPORT 4	1	1				
26	97095–06012	BOLT BOULON	1	1				
27	92995–06600	WASHER RONDELLE	1	1				

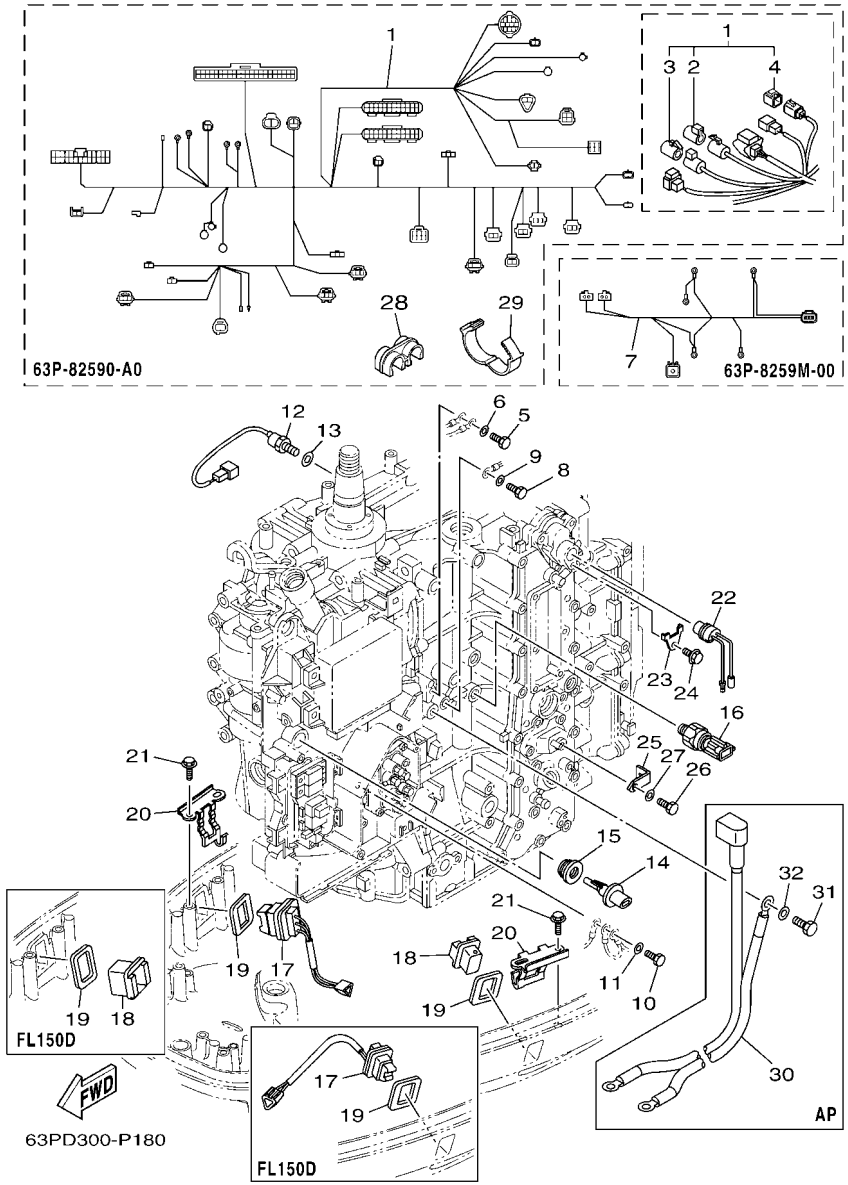

FIG. 18 ELECTRICAL 3 — PARTIE ELECTRIQUE 3

REF. NO.	PART NO. N° PIECES	DESCRIPTION DESCRIPTION	63PD	64PD				REMARKS REMARQUES
28	90464–12224	CLAMP BRIDE	1	1				
29	90464–26001	CLAMP BRIDE	1	1				
30	6DA–82105–01	BATTERY CABLE CABLE DE BATTERIE	1	1				AP AP
31	97095–08016	BOLT BOULON	1	1				AP AP
32	92995–08600	WASHER RONDELLE	1	1				AP AP

FIG. 19 ELECTRICAL 4 — PARTIE ELECTRIQUE 4

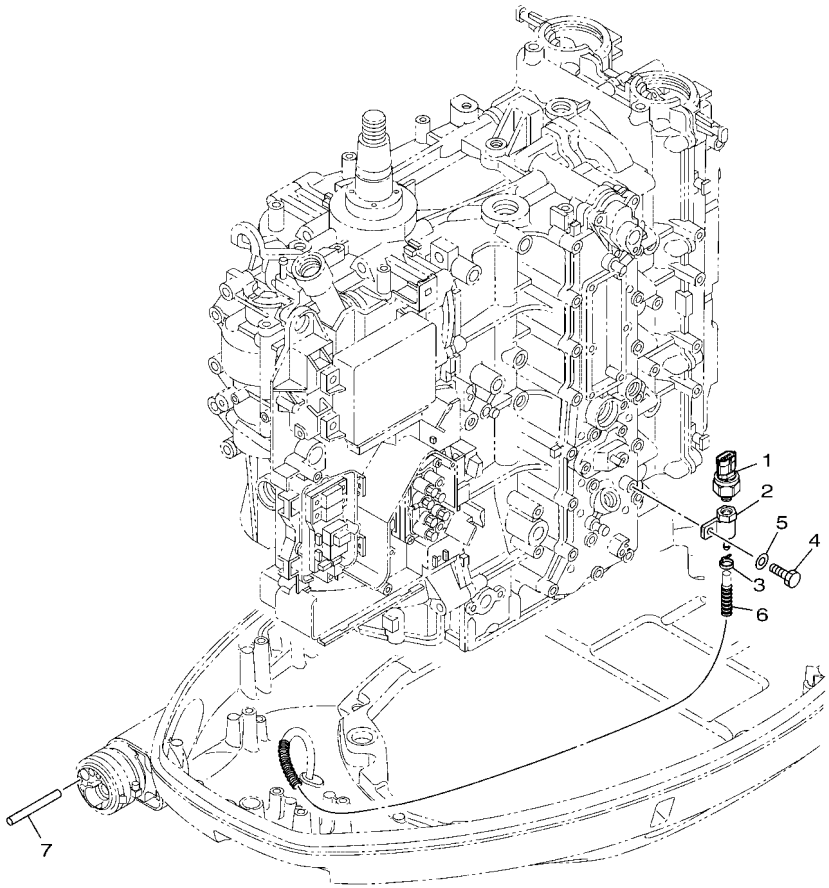

63PD300-P190

REF. NO.	PART NO. N° PIECES	DESCRIPTION DESCRIPTION	63PD	64PD				REMARKS REMARQUES
1	6AW–8366B–01	SENSOR, WATER PRESSURE SONDE DE PRESSION D'EAU	1					FOR LAN SPEED FOR LAN SPEED
2	60V–8366D–00	ADAPTOR, INPUT CONNECTEUR 3	1					FOR LAN SPEED FOR LAN SPEED
3	90465–11M10	CLAMP BRIDE	1					FOR LAN SPEED FOR LAN SPEED
4	97095–06016	BOLT BOULON	1					FOR LAN SPEED FOR LAN SPEED
5	92995–06600	WASHER RONDELLE	1					FOR LAN SPEED FOR LAN SPEED
6	90447–07013	HOSE, COVER (L: 700MM) DURITE, COUVERCLE (L: 700MM)	1					FOR LAN SPEED FOR LAN SPEED
7	60V–42629–00	SEAL JOINT	1					AP FOR LAN SPEED AP FOR LAN SPEED

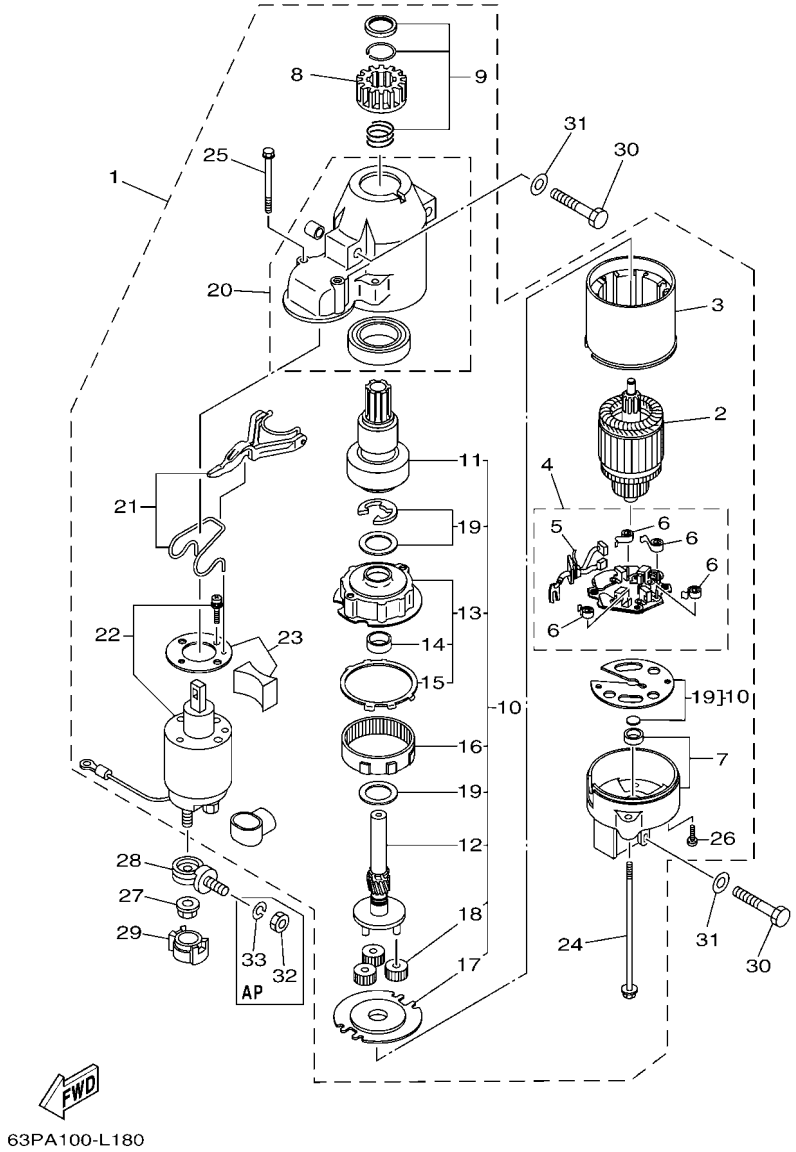

FIG. 20 STARTING MOTOR — DEMARREUR ELECTRIQUE

REF. NO.	PART NO. N° PIECES	DESCRIPTION DESCRIPTION	63PD	64PD				REMARKS REMARQUES
1	6BR–81800–01	STARTING MOTOR ASSY DEMARREUR ELECTRIQUE COMPLET	1	1				
2	67F–81850–00	.ARMATURE ASSY .INDUIT	1	1				
3	67F–81810–00	.STATOR ASSY .STATOR COMPLET	1	1				
4	69J–81840–00	.BRUSH HOLDER ASSY .SUPPORT DE CHARBON	1	1				
5	69J–81801–00	..BRUSH SET ..CHARBON	1	1				
6	67F–81813–00	..SPRING, BRUSH ..RESSORT, DE CHARBON	4	4				
7	67F–81820–00	.REAR BRACKET ASSY .SUPPORT ARRIERE COMPLET	1	1				
8	67F–81808–00	.PINION ASSY .PIGNON	1	1				
9	67F–81857–00	.PINION STOPPER SET .BUTEE PIGNON	1	1				
10	67F–81807–00	.GEAR ASSY, STARTING MOTOR .PIGNON, DEMARREUR ELECTRIQUE	1	1				
11	67F–81832–00	..CLUTCH, OVER RUN ..EMBRAYAGE, ROUE LIBRE	1	1				
12	67F–81836–00	..SHAFT, PINION ..AXE, PIGNON	1	1				
13	67F–81821–00	..BRACKET, CENTER 1 ..SUPPORT, CENTRE 1	1	1				
14	67F–81841–00	...BEARING ...ROULEMENT	1	1				
15	67F–8183R–00	...GASKET ...JOINT	1	1				
16	67F–81891–00	..GEAR, RING ..ROUE DENTEE	1	1				WITH 67F-8183R-00 WITH 67F-8183R-00
17	67F–81830–00	..BRACKET, CENTER 2 ..SUPPORT, CENTRE 2	1	1				
18	60V–8183T–00	..GEAR, IDLER ..PIGNON, INTERMEDIAIRE	3	3				
19	67F–81809–00	..WASHER KIT ..JEU DE RONDELLES	1	1				
20	69J–81842–00	.COVER .COUVERCLE	1	1				
21	6C5–81839–00	.LEVER ASSY .LEVIER COMPLET	1	1				
22	63P–81941–00	.STARTER RELAY ASSY .LANCEUR RELAIS (ENS.)	1	1				
23	6C5–81869–00	.COVER, DUST .COUVERCLE, POUSSIERE	1	1				
24	6K7–81826–11	.BOLT .BOULON	2	2				
25	69J–81828–00	.SCREW 2 .VIS 2	2	2				
26	67F–81846–00	.SCREW .VIS	2	2				
27	90179–08003	NUT ECROU	1	1				

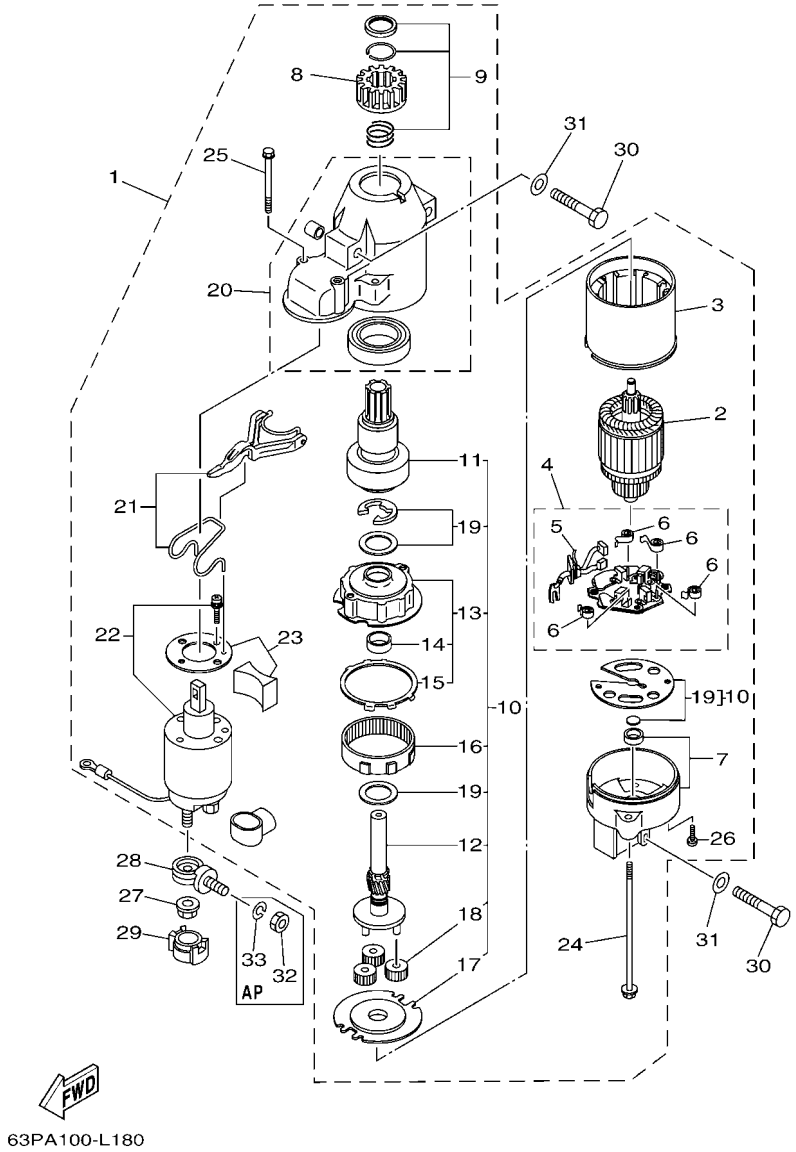

FIG. 20 STARTING MOTOR — DEMARREUR ELECTRIQUE

REF. NO.	PART NO. N° PIECES	DESCRIPTION DESCRIPTION	63PD	64PD				REMARKS REMARQUES
28	60V–81925–00	TERMINAL BORNE	1	1				
29	68F–82582–00	COVER, WIRE HARNESS COUVERCLE, FAISCEAU DE FILS	1	1				
30	97013–08045	BOLT BOULON	3	3				
31	92903–08600	WASHER, PLATE RONDELLE, PLATE	3	3				
32	95333–08600	NUT ECROU	1	1				AP AP
33	92903–08100	WASHER, SPRING RONDELLE, GROWER	1	1				AP AP

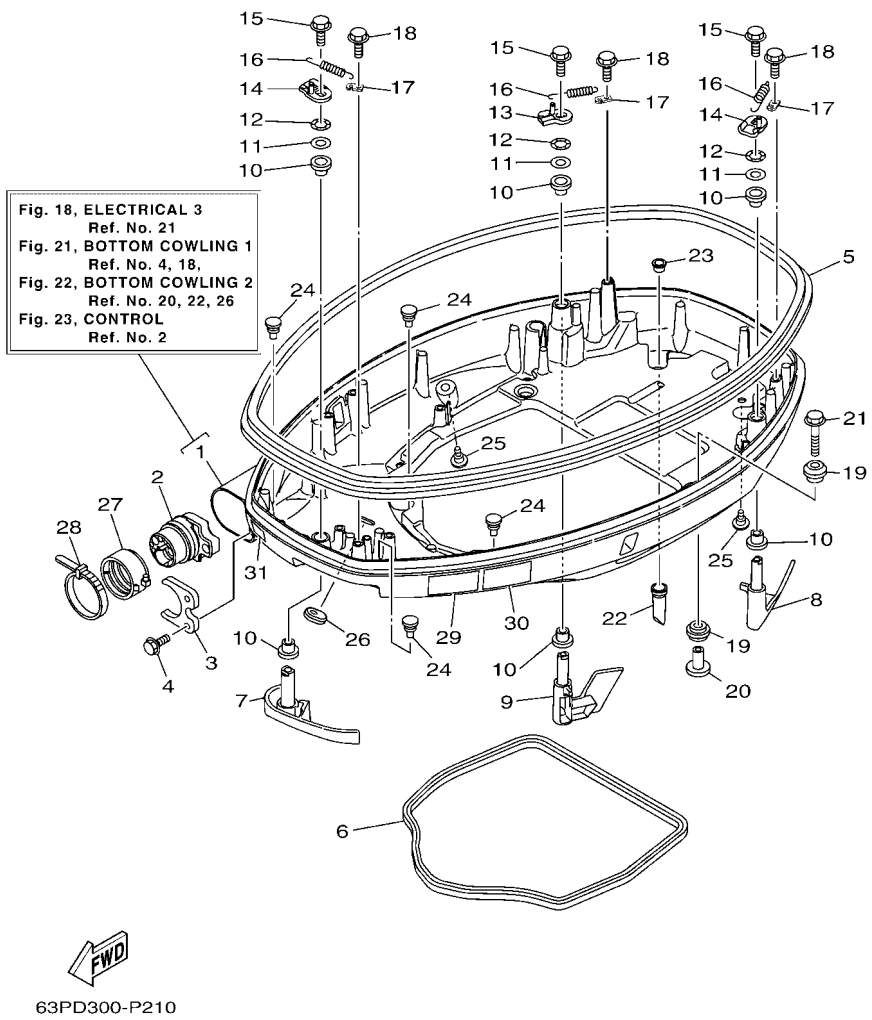

FIG. 21 BOTTOM COWLING 1 — CAPOT INFERIEUR 1

REF. NO.	PART NO. N° PIECES	DESCRIPTION DESCRIPTION	63PD	64PD				REMARKS REMARQUES
1	63P–42710–10–8D	BOTTOM COWLING ASSY ENS. EMBASE	1	1				
2	6DA–42725–00	GROMMET PASSE-FIL	1	1				
3	6CB–42761–00	STOPPER PLAQUETTE	1	1				
4	90109–06M86	BOLT BOULON	2	2				
5	63P–42615–10	SEAL JOINT	1	1				
6	63P–42716–00	RUBBER, SEAL 1 JOINT EN CAOUTCHOUC 1	1	1				
7	63P–42815–10–8D	LEVER, CLAMP LEVIER, PRESSE	1	1				
8	6DA–42816–01–8D	LEVER, CLAMP LEVIER, PRESSE	1	1				
9	6DA–42817–01–8D	LEVER, CLAMP LEVIER, PRESSE	1	1				
10	90386–15M73	BUSH DOUILLE	6	6				
11	90201–156J2	WASHER, PLATE RONDELLE, PLATE	3	3				
12	90206–15M18	WASHER, WAVE RONDELLE, ONDULEE	3	3				
13	6CB–42818–00	LEVER, CLAMP LEVIER, PRESSE	1	1				
14	6CB–42819–00	LEVER, CLAMP LEVIER, PRESSE	2	2				
15	95895–08012	BOLT, FLANGE BOULON	3	3				
16	90506–22001	SPRING, TENSION RESSORT, TENSION	3	3				
17	66T–43144–00	HOOK, SPRING CROCHET	3	3				
18	90109–06M86	BOLT BOULON	3	3				
19	90480–22M81	GROMMET PASSE-FIL	8	8				
20	90387–08M37	COLLAR COLLERETTE	4	4				
21	90119–08M22	BOLT, WITH WASHER BOULON, AVEC RONDELLE	4	4				
22	6DA–42717–00	RUBBER, SEAL 2 JOINT EN CAOUTCHOUC 2	4	4				
23	6DA–42384–00	SEAL, CAP JOINT, CAPUCHON	4	4				
24	6H4–42748–00	GROMMET PASSE-FIL	4	4				
25	6P2–44391–00	NIPPLE, HOSE RACCORD D'ESSENCE	2	2				
26	61A–42727–00	GROMMET PASSE-FIL	1	1				
27	68F–42753–00	FASTNER ATTACHE	1	1				AP AP

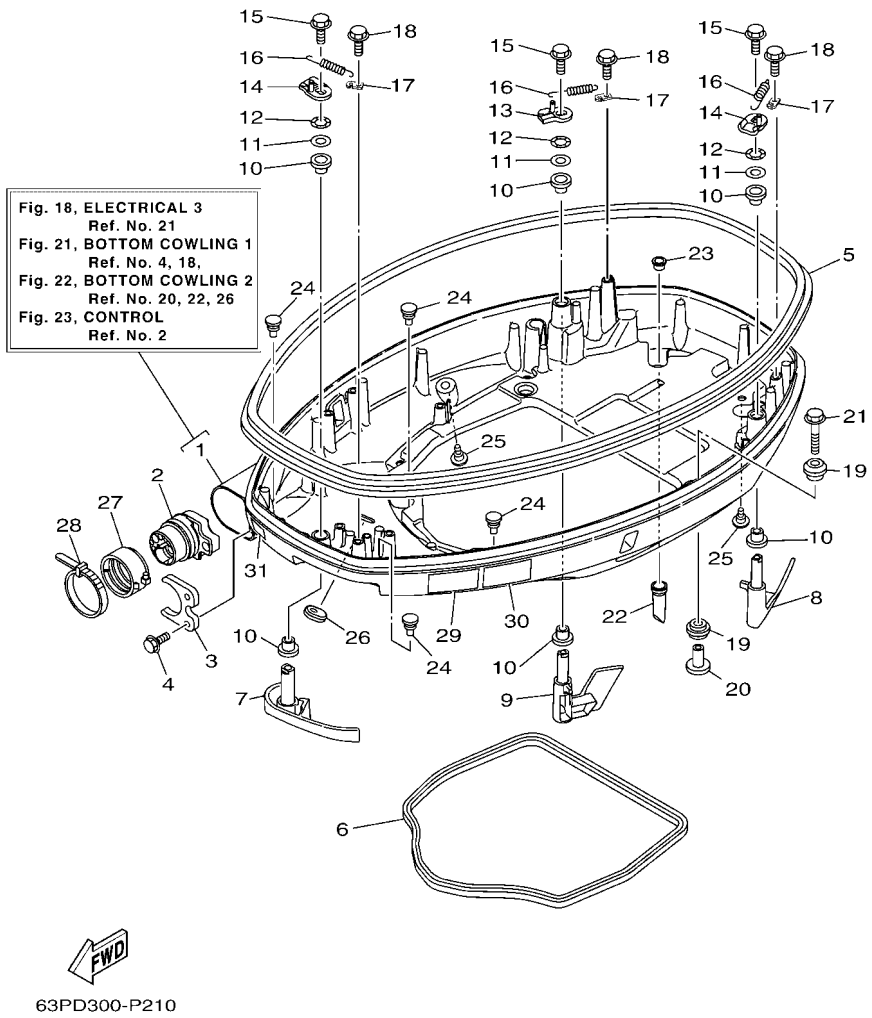

FIG. 21 BOTTOM COWLING 1 — CAPOT INFERIEUR 1

REF. NO.	PART NO. N° PIECES	DESCRIPTION DESCRIPTION	63PD	64PD				REMARKS REMARQUES
28	90464–20258	CLAMP BRIDE	1	1				AP AP
29	6EE–42794–40	LABEL, WARNING (GENERAL) ETIQUETTE, AVERTISSEMENT	1	1				
30	6EE–42794–50	LABEL, WARNING (GENERAL) ETIQUETTE, AVERTISSEMENT	1	1				
31	6AH–81996–00	MARK MARQUE	1	1				

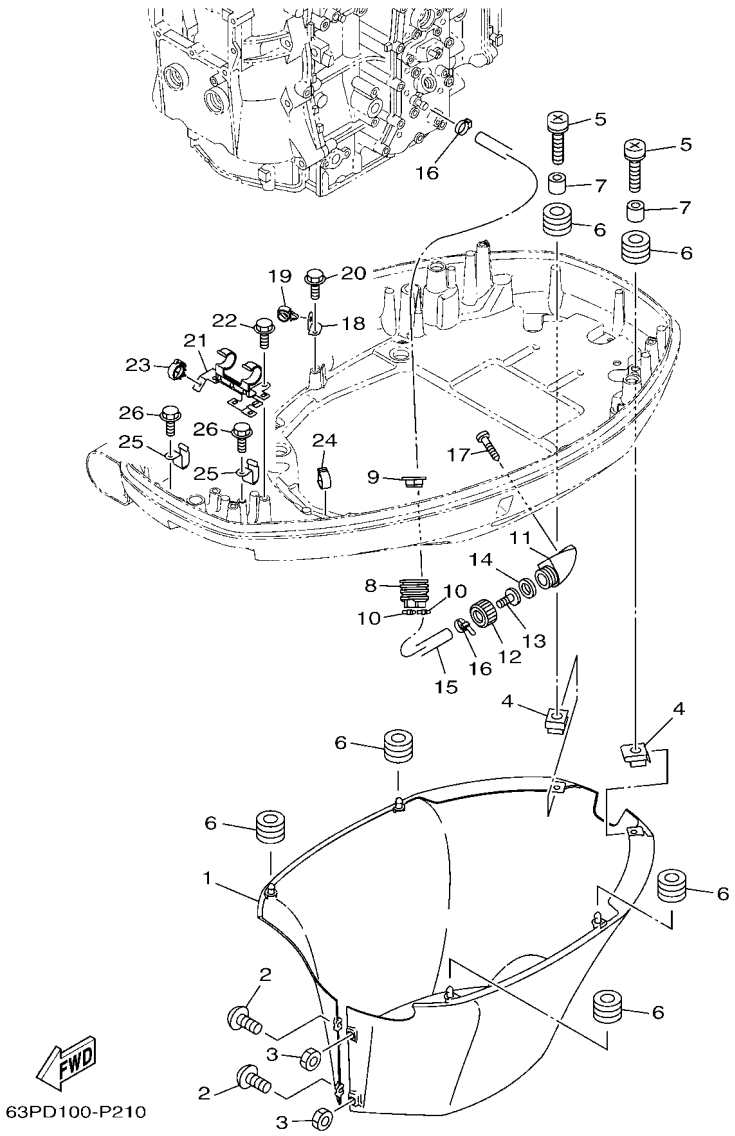

FIG. 22 BOTTOM COWLING 2 — CAPOT INFERIEUR 2

REF. NO.	PART NO. N° PIECES	DESCRIPTION DESCRIPTION	63PD	64PD				REMARKS REMARQUES
1	6DA–42741–10–8D	APRON CAPOT LATERAL	1	1				
2	90159–06M28	SCREW, WITH WASHER VIS, AVEC RONDELLE	2	2				
3	95380–06600	NUT, HEXAGON ECROU	2	2				
4	90183–061A6	NUT, SPRING ECROU, RESSORT	2	2				
5	90159–06053	SCREW, WITH WASHER VIS, AVEC RONDELLE	2	2				
6	90480–13M24	GROMMET PASSE-FIL	6	6				
7	90387–06M43	COLLAR COLLERETTE	2	2				
8	6H1–42726–21	GROMMET PASSE-FIL	1	1				
9	6BG–42384–00	SEAL, CAP JOINT, CAPUCHON	1	1				
10	90465–11M10	CLAMP BRIDE	2	2				
11	6AW–12572–00	ADAPTER ADAPTATEUR	1	1				
12	6R3–12581–00	JOINT, HOSE 1 JOINT DE TUYAU	1	1				
13	6R3–12582–00	JOINT, HOSE 2 RACCORD DE TUYAU 1	1	1				
14	6R3–12583–00	GASKET, HOSE JOINT JOINT	1	1				
15	63P–42541–10	PIPE 1 TUYAU 1	1	1				
16	90465–11M10	CLAMP BRIDE	2	2				
17	97780–60520	SCREW, TAPPING VIS, TETE BOMBEE	2	2				
18	63P–42756–00	STAY, CLAMP SUPPORT, COLLIER	1	1				
19	90464–13249	CLAMP BRIDE	1	1				
20	90109–06M86	BOLT BOULON	1	1				
21	63P–8366G–00	BRACKET 3 SUPPORT 3	1	1				
22	90109–06M86	BOLT BOULON	2	2				
23	90464–18246	CLAMP BRIDE	2	2				
24	90464–18004	CLAMP BRIDE	1	1				
25	90462–12013	CLAMP BRIDE	2	2				
26	90109–06M86	BOLT BOULON	2	2				

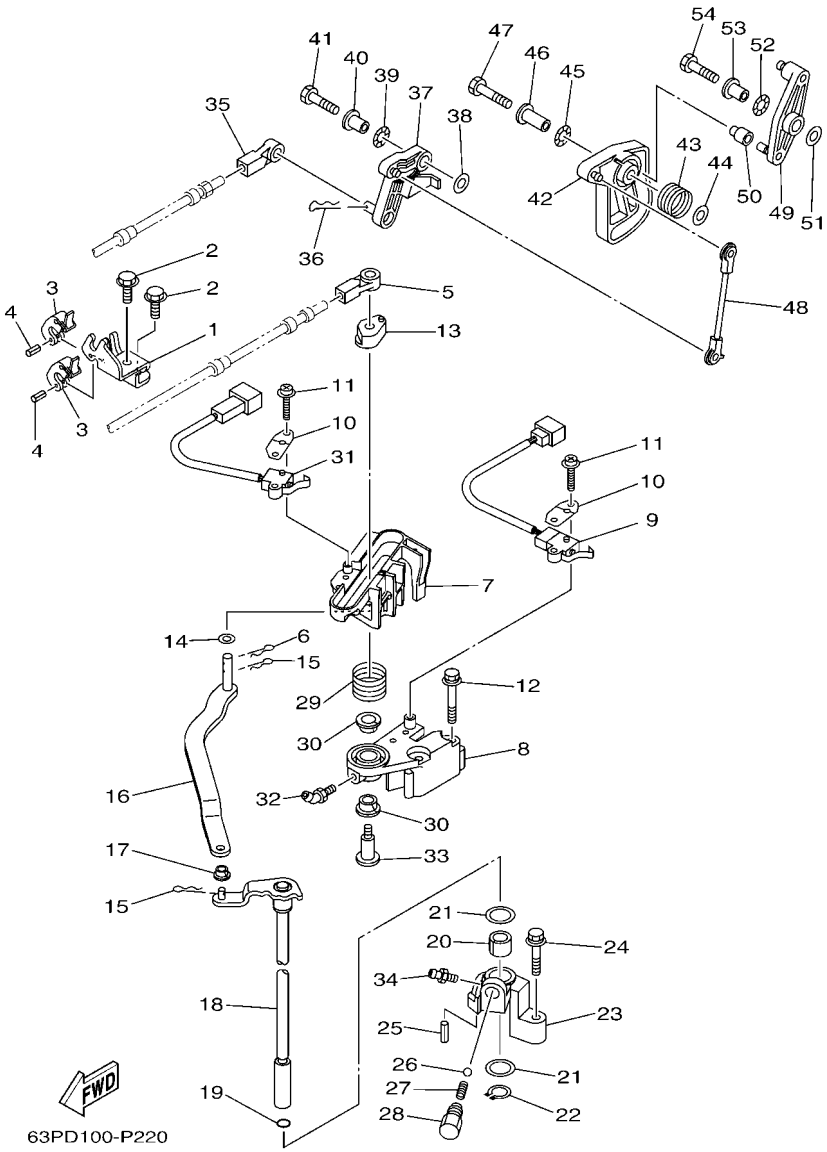

FIG. 23 CONTROL — COMMANDE

REF. NO.	PART NO. N° PIECES	DESCRIPTION DESCRIPTION	63PD	64PD				REMARKS REMARQUES
1	63P–48531–10	BRACKET, REMOTE CONTROL 1 ETRIER 1, COMMANDE A DISTANCE	1	1				
2	90109–06M86	BOLT BOULON	2	2				
3	6E5–48538–00	CLAMP, CABLE COLLIER	2	2				
4	91690–30010	PIN, SPRING AGRAFFE	2	2				
5	6E5–48344–00	CABLE END, REMOTE CONTROL CHAPE CABLE	1	1				
6	90468–18008	CLIP JONC	1	1				
7	6DA–44176–00	BRACKET SUPPORT	1	1				
8	63P–44117–01	BRACKET SUPPORT	1	1				
9	69J–8259F–00	SWITCH ASSY COMMUTATEUR	1	1				
10	61A–82588–01	PLATE PLAQUE	2	2				
11	97985–04116	SCREW, WITH WASHER VIS, AVEC RONDELLE	4	4				
12	97595–06550	BOLT, WITH WASHER VIS HEXAGONAL AVC RONDELLE	2	2				
13	63P–44122–00	BUSHING, SHIFT ROD LEVER DOUILLE, LEVIER D'EMBRAYAGE	1	1				
14	90202–08M20	WASHER, PLATE RONDELLE, PLATE	1	1				
15	90468–18008	CLIP JONC	2	2				
16	6DA–44121–00	LEVER, SHIFT ROD LEVIER, TIGE D'INVERSION	1	1				
17	90386–06M12	BUSH DOUILLE	1	1				
18	6DA–44120–11	HANDLE GEAR SHIFT ASSY LEVIER D'EMBRAYAGE	1	1				
19	93210–09165	O-RING JOINT TORIQUE	1	1				
20	90386–16M66	BUSH DOUILLE	1	1				
21	90202–16061	WASHER, PLATE RONDELLE, PLATE	2	2				
22	93410–16006	CIRCLIP CLIPS	1	1				
23	63P–44118–00	BRACKET SUPPORT	1	1				
24	97575–06535	BOLT, WITH WASHER VIS HEXAGONAL AVC RONDELLE	1	1				
25	91690–30010	PIN, SPRING AGRAFFE	1	1				
26	93501–04M02	BALL BILLE	1	1				
27	90501–12082	SPRING, COMPRESSION RESSORT, COMPRESSION	1	1				

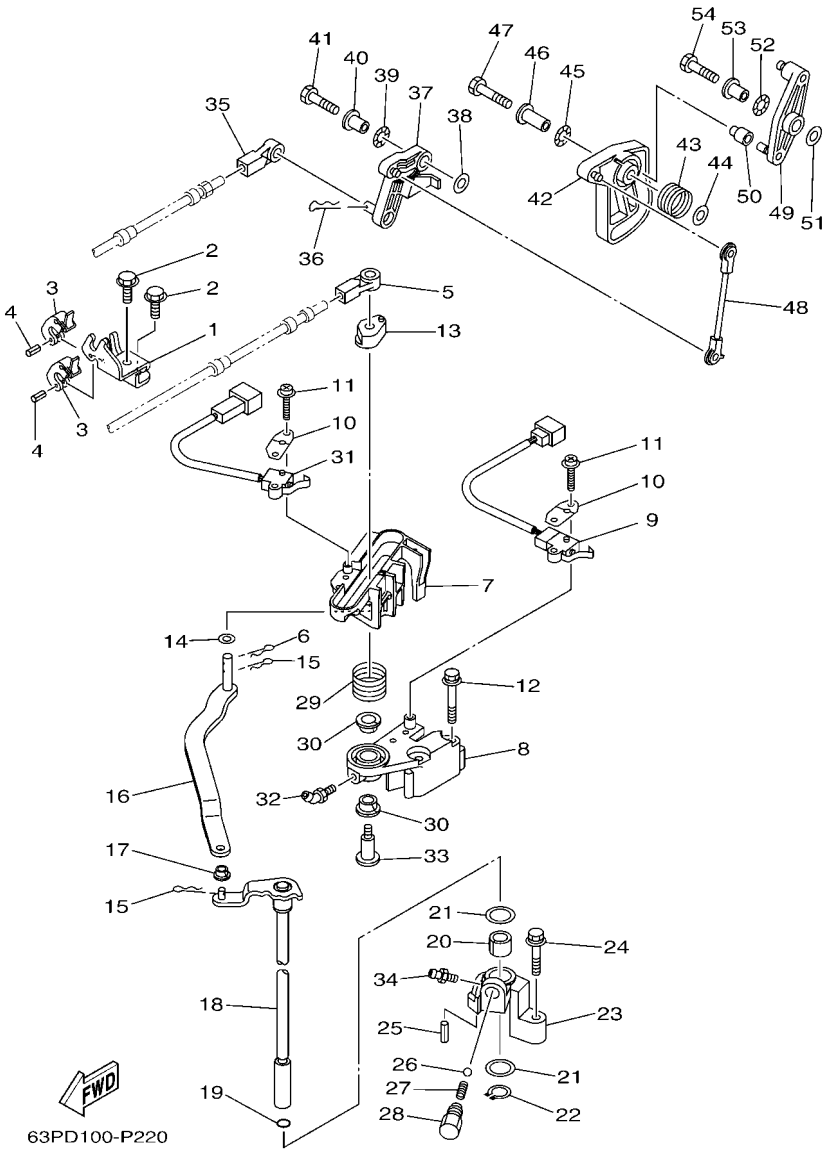

FIG. 23 CONTROL — COMMANDE

REF. NO.	PART NO. N° PIECES	DESCRIPTION DESCRIPTION	63PD	64PD				REMARKS REMARQUES
28	648–42715–00	BUSHING COUSSINET	1	1				
29	90508–20M31	SPRING, TORSION RESSORT, TORSION	1	1				
30	90386–12069	BUSH DOUILLE	2	2				
31	60V–8259F–00	SWITCH ASSY COMMUTATEUR	1	1				
32	93700–06M01	NIPPLE, GREASE PION	1	1				
33	90109–08019	BOLT BOULON	1	1				
34	93700–06M03	NIPPLE, GREASE PION	1	1				
35	6E5–48344–00	CABLE END, REMOTE CONTROL CHAPE CABLE	1	1				
36	90468–18008	CLIP JONC	1	1				
37	63P–42154–10	LEVER, THROTTLE CONTROL LEVIER DE COMMANDE D'AVANCE	1	1				
38	90201–06M31	WASHER, PLATE RONDELLE, PLATE	1	1				
39	90206–10M04	WASHER, WAVE RONDELLE, ONDULEE	1	1				
40	90387–06M29	COLLAR COLLERETTE	1	1				
41	97095–06025	BOLT BOULON	1	1				
42	63P–41213–00	CAM, ACCEL. CAME, ACCELERATION	1	1				
43	69J–44135–00	SPRING RESSORT	1	1				
44	90201–06M31	WASHER, PLATE RONDELLE, PLATE	1	1				
45	90206–10M04	WASHER, WAVE RONDELLE, ONDULEE	1	1				
46	90387–06M82	COLLAR COLLERETTE	1	1				
47	97095–06035	BOLT BOULON	1	1				
48	63P–41237–00	JOINT, LINK RACCORD	1	1				
49	63P–42157–00	LEVER, THROTTLE LEVIER DE AVANCE	1	1				
50	68V–42171–00	BUSHING COUSSINET	1	1				
51	90201–06M31	WASHER, PLATE RONDELLE, PLATE	1	1				
52	90206–10M04	WASHER, WAVE RONDELLE, ONDULEE	1	1				
53	90387–06M29	COLLAR COLLERETTE	1	1				
54	97095–06025	BOLT BOULON	1	1				

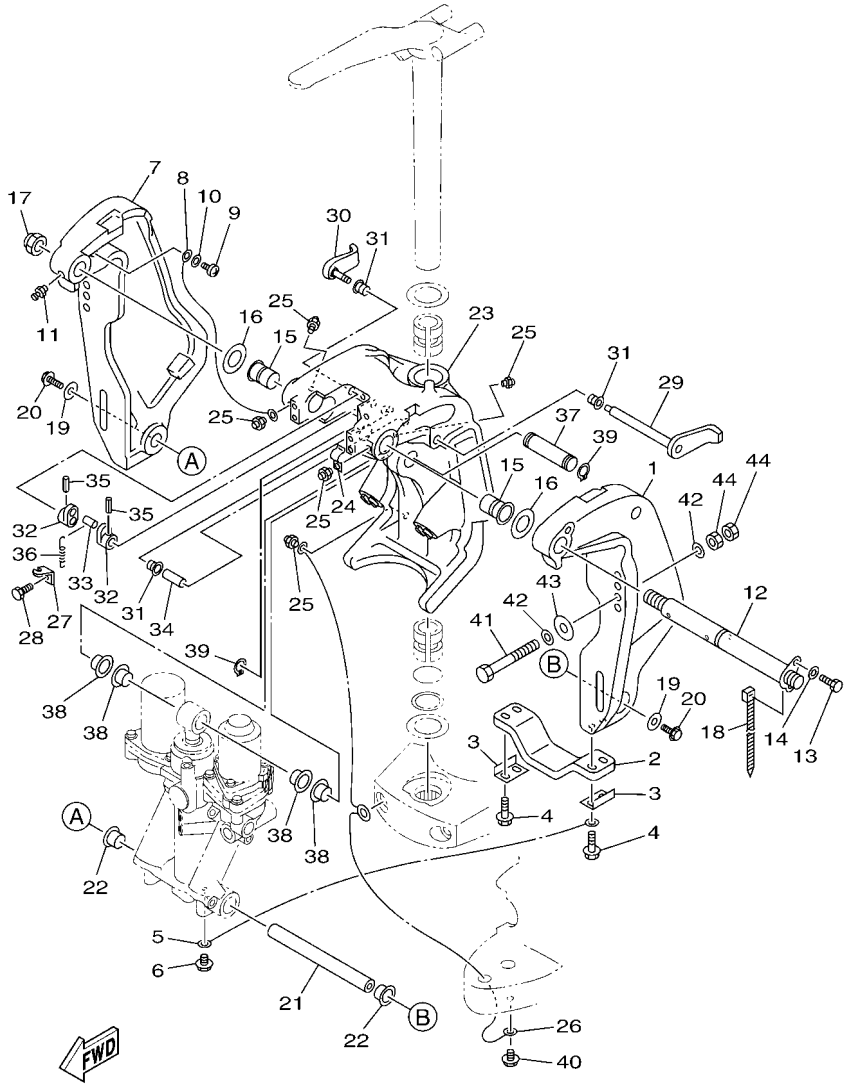

63PD100-P230

FIG. 24 BRACKET 1 — SUPPORT 1

REF. NO.	PART NO. N° PIECES	DESCRIPTION DESCRIPTION	63PD	64PD				REMARKS REMARQUES
1	64E–43111–02–8D	BRACKET, CLAMP 1 PRESSE 1	1	1				
2	6G5–45251–02	ANODE ANODE	1	1				
3	6G5–44526–00	PLATE PLAQUE	2	2				
4	97595–06530	BOLT, WITH WASHER VIS HEXAGONAL AVC RONDELLE	4	4				
5	6E5–82148–00	WIRE, LEAD 4 FIL 4	1	1				
6	97595–06510	BOLT, WITH WASHER VIS HEXAGONAL AVC RONDELLE	1	1				
7	64E–43112–02–8D	BRACKET, CLAMP 2 PRESSE 2	1	1				
8	6E5–82148–00	WIRE, LEAD 4 FIL 4	1	1				
9	97885–06012	SCREW, PAN HEAD VIS, A ENCOCHE	1	1				
10	92995–06600	WASHER RONDELLE	1	1				
11	93700–06M03	NIPPLE, GREASE PION	1	1				
12	64E–43131–30	BOLT, CLAMP BRACKET BOULON, PRESSE	1	1				FOR TILT LIMIT FOR TILT LIMIT
13	97095–08020	BOLT BOULON	1	1				
14	92995–08600	WASHER RONDELLE	1	1				
15	90386–25M31	BUSH DOUILLE	2	2				
16	90201–26M59	WASHER, PLATE RONDELLE, PLATE	2	2				
17	90185–22M11	NUT, SELF-LOCKING ECROU,AUTO-BLOQUANT	1	1				
18	90465–11M10	CLAMP BRIDE	1	1				
19	90201–10060	WASHER, PLATE RONDELLE, PLATE	2	2				
20	97575–10530	BOLT, WITH WASHER VIS HEXAGONAL AVC RONDELLE	2	2				
21	6BC–43818–00	PIN, LOWER SHOCK MOUNT AXE, INFERIEUR AMORTISSEUR	1	1				
22	90386–22M98	BUSH DOUILLE	2	2				
23	64E–43311–10–8D	BRACKET, SWIVEL 1 SUPPORT, PIVOT 1	1	1				
24	90465–08M63	CLAMP BRIDE	1	1				
25	93700–06M03	NIPPLE, GREASE PION	5	5				
26	66K–82149–00	WIRE, LEAD 3 FIL 3	1	1				
27	6G5–43144–00	HOOK, SPRING CROCHET	1	1				

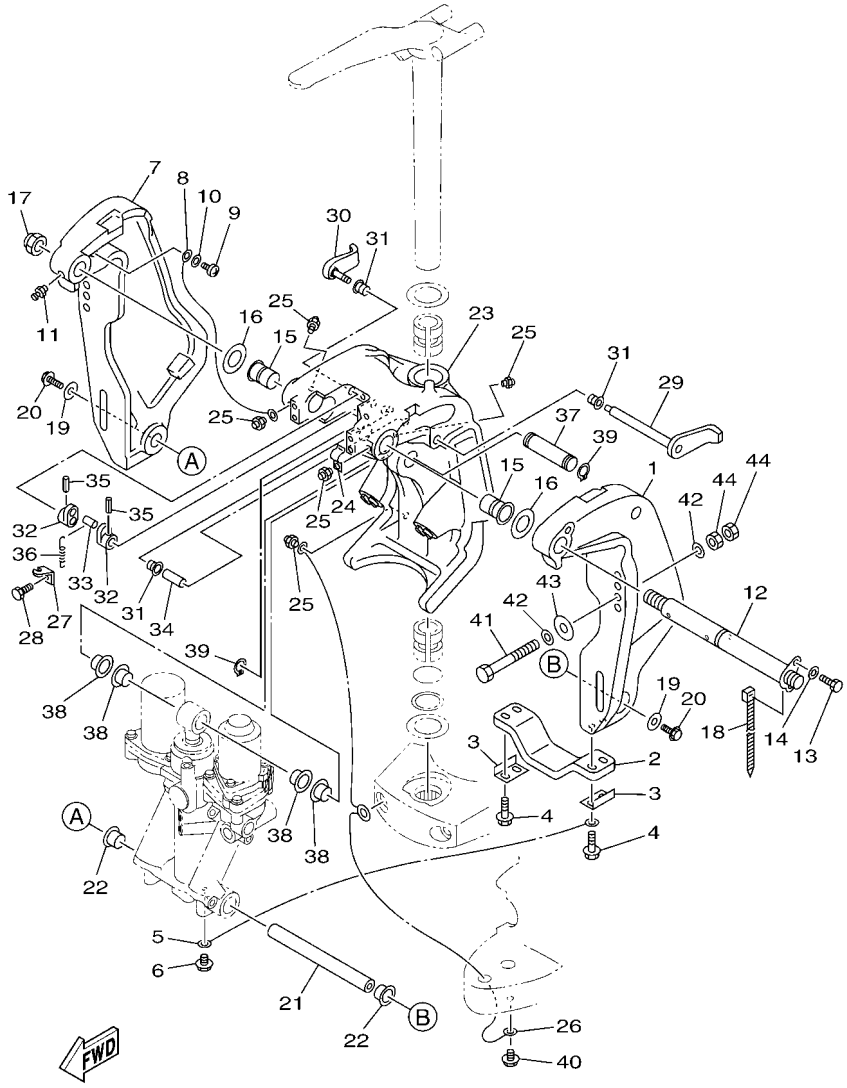

FIG. 24 BRACKET 1 — SUPPORT 1

REF. NO.	PART NO. N° PIECES	DESCRIPTION DESCRIPTION	63PD	64PD				REMARKS REMARQUES
28	97095–06010	BOLT BOULON	1	1				
29	6G5–43181–02	LEVER, TILT STOP 1 LEVIER VERROUILLAGE RELEVAGE 1	1	1				
30	6G5–43185–02	LEVER, TILT STOP 2 LEVIER VERROUILLAGE RELEVAGE 2	1	1				
31	90386–10M16	BUSH DOUILLE	3	3				
32	6G5–43148–00	COLLAR, DISTANCE ENTRETOISE	2	2				
33	90249–06M19	PIN GOUPILLE	1	1				
34	90387–10M05	COLLAR COLLERETTE	1	1				
35	91690–30020	PIN, SPRING AGRAFFE	2	2				
36	90506–16003	SPRING, TENSION RESSORT, TENSION	1	1				
37	64E–43126–10	PIN, UPPER SHOCK MOUNT AXE, SUPERIEUR AMORTISSEUR	1	1				
38	90386–22M98	BUSH DOUILLE	4	4				
39	93410–22M11	CIRCLIP CLIPS	2	2				
40	95895–06010	BOLT, FLANGE BOULON	1	1				
41	90101–12M05	BOLT (L:130MM) BOULON (L:130MM)	4					UR F150DET1L UR F150DET1L
	90101–12M05	BOLT (L:130MM) BOULON (L:130MM)	2	2				UR F(L)150DET1X UR F(L)150DET1X
	90101–12047	BOLT (L:150MM) BOULON (L:150MM)	2	2				UR F(L)150DET1X UR F(L)150DET1X
	90101–12047	BOLT (L:150MM) BOULON (L:150MM)	4	4				UR F(L)150DET UR F(L)150DET
42	90201–13M01	WASHER, PLATE RONDELLE, PLATE	8	8				
43	90201–12426	WASHER, PLATE RONDELLE, PLATE	4	4				
44	95380–12600	NUT ECROU	8	8				

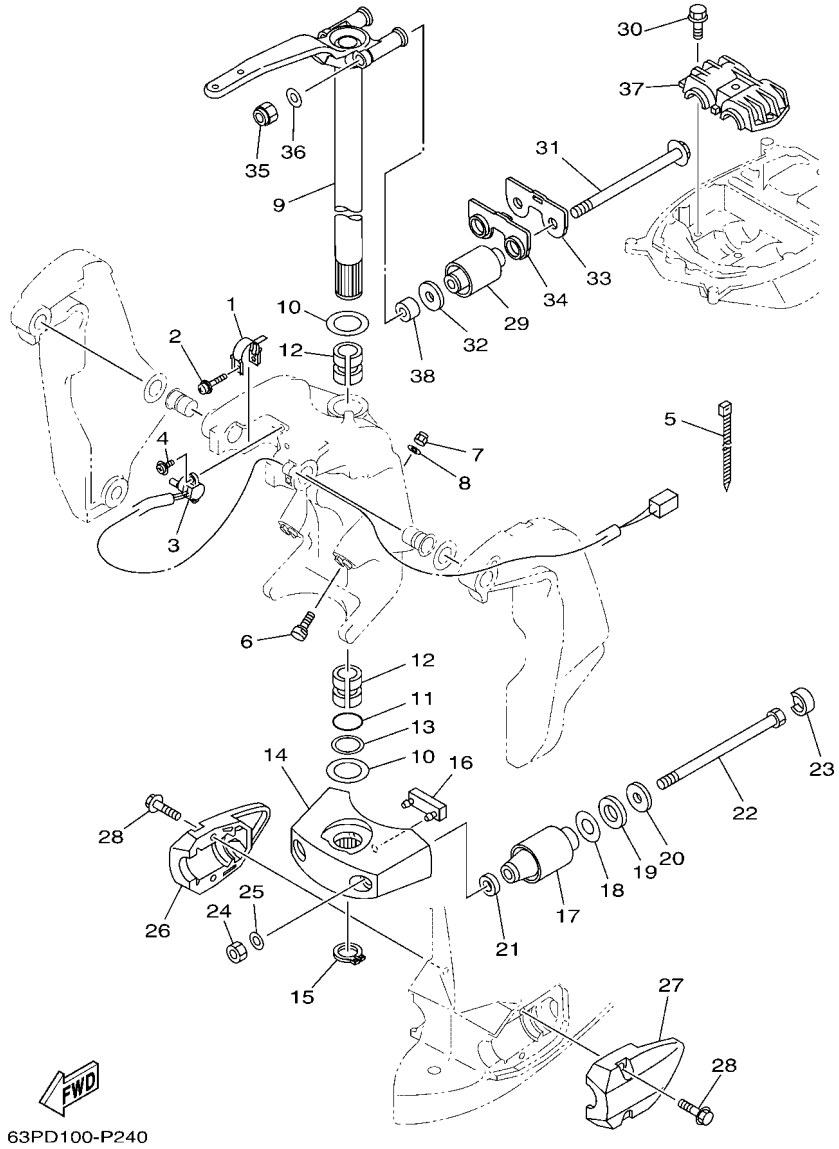

FIG. 25 BRACKET 2 — SUPPORT 2

REF. NO.	PART NO. N° PIECES	DESCRIPTION DESCRIPTION	63PD	64PD				REMARKS REMARQUES
1	64E–43139–10	CAM, TRIM SENDER VILEBREQUIN TRUM	1	1				
2	90159–05059	SCREW, WITH WASHER VIS, AVEC RONDELLE	1	1				
3	67H–83672–01	TRIM SENDER INCLINER RACCORD	1	1				
4	97985–06216	SCREW, WITH WASHER VIS, AVEC RONDELLE	2	2				
5	90465–11M10	CLAMP BRIDE	3	3				
6	63P–43376–00	BOLT, THRUST RECEIVER BOULON	2	2				
7	95780–10300	NUT, FLANGE ECROU	2	2				
8	92995–10600	WASHER RONDELLE	2	2				
9	6DA–42510–10–8D	STEERING BRACKET ASSY DIRECTION SUPPORT (ENS.)	1	1				
10	90201–38M60	WASHER, PLATE RONDELLE, PLATE	2	2				
11	93210–37MH7	O-RING JOINT TORIQUE	1	1				
12	90386–38M32	BUSH DOUILLE	2	2				
13	90202–40M47	WASHER, PLATE RONDELLE, PLATE	1	1				
14	68V–44551–00–8D	HOUSING, LOWER MOUNT RUBBER 1 BOITIER, SILENT-BLOC INFERIEUR	1	1				
15	93410–37M04	CIRCLIP CLIPS	1	1				
16	61A–44575–00	DAMPER, LOWER MOUNT RUBBER SILENT-BLOC, INFERIEUR	1	1				
17	60V–44555–00	MOUNT DAMPER, LOWER SIDE SILENT-BLOC, INFERIEUR LATERAL	2	2				L(20.3") L(20.3")
	63P–44555–00	MOUNT DAMPER, LOWER SIDE SILENT-BLOC, INFERIEUR LATERAL	2	2				X(25.3") X(25.3")
18	90201–35008	WASHER, PLATE RONDELLE, PLATE	2	2				
19	90202–32M19	WASHER, PLATE RONDELLE, PLATE	2	2				
20	90201–16M55	WASHER, PLATE RONDELLE, PLATE	2	2				
21	90201–15M58	WASHER, PLATE RONDELLE, PLATE	2	2				
22	90109–14007	BOLT BOULON	2	2				
23	69J–44533–00	DAMPER, UPPER MOUNT RUBBER COUVERCLE, SUSPENSION INFERIEU	2	2				
24	95380–14600	NUT ECROU	2	2				
25	92995–14600	WASHER RONDELLE	2	2				
26	63P–44553–00–8D	COVER, LOWER MOUNT COUVERCLE, SUSPENSION INFERIEU	1	1				

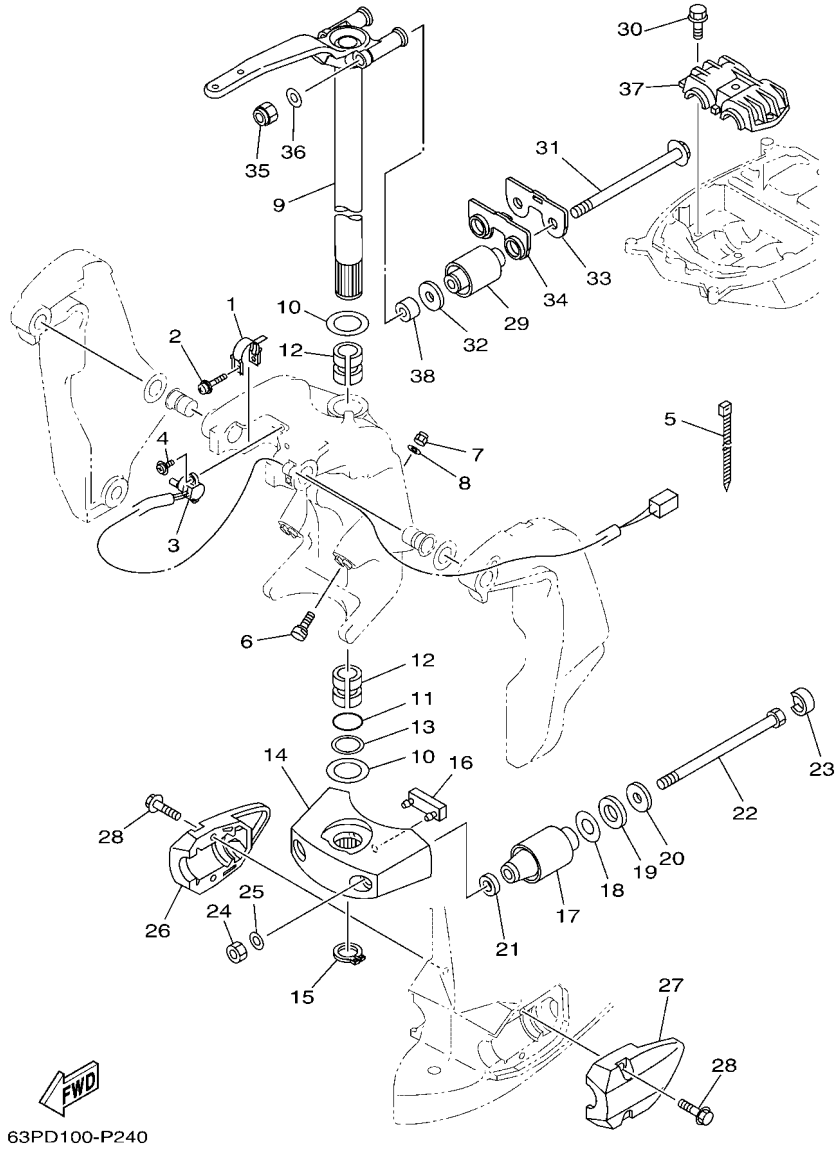

FIG. 25 BRACKET 2 — SUPPORT 2

REF. NO.	PART NO. N° PIECES	DESCRIPTION DESCRIPTION	63PD	64PD				REMARKS REMARQUES
27	63P–44556–00–8D	COVER, LOWER MOUNT 2 COUVERCLE,SUSPENSION INFERIEU	1	1				
28	97575–10540	BOLT, WITH WASHER VIS HEXAGONAL AVC RONDELLE	4	4				
29	6DA–44514–00	MOUNT DAMPER, UPPER SIDE SILENT-BLOC, SUPERIEUR LATERAL	2	2				
30	90119–10024	BOLT, WITH WASHER BOULON, AVEC RONDELLE	3	3				
31	90105–14009	BOLT, FLANGE BOULON	2	2				
32	90201–16M01	WASHER, PLATE RONDELLE, PLATE	2	2				
33	6DA–44526–00	PLATE PLAQUE	1	1				
34	6DA–44532–00	STOPPER, UPPER MOUNT PLAQUETTE	1	1				
35	90185–14M00	NUT, SELF-LOCKING ECROU,AUTO-BLOQUANT	2	2				
36	92995–14600	WASHER RONDELLE	2	2				
37	63P–44511–00	COVER, UPPER MOUNT COUVERCLE, SUSPENSION SUPERIEU	1	1				
38	90387–14004	COLLAR COLLERETTE	2	2				

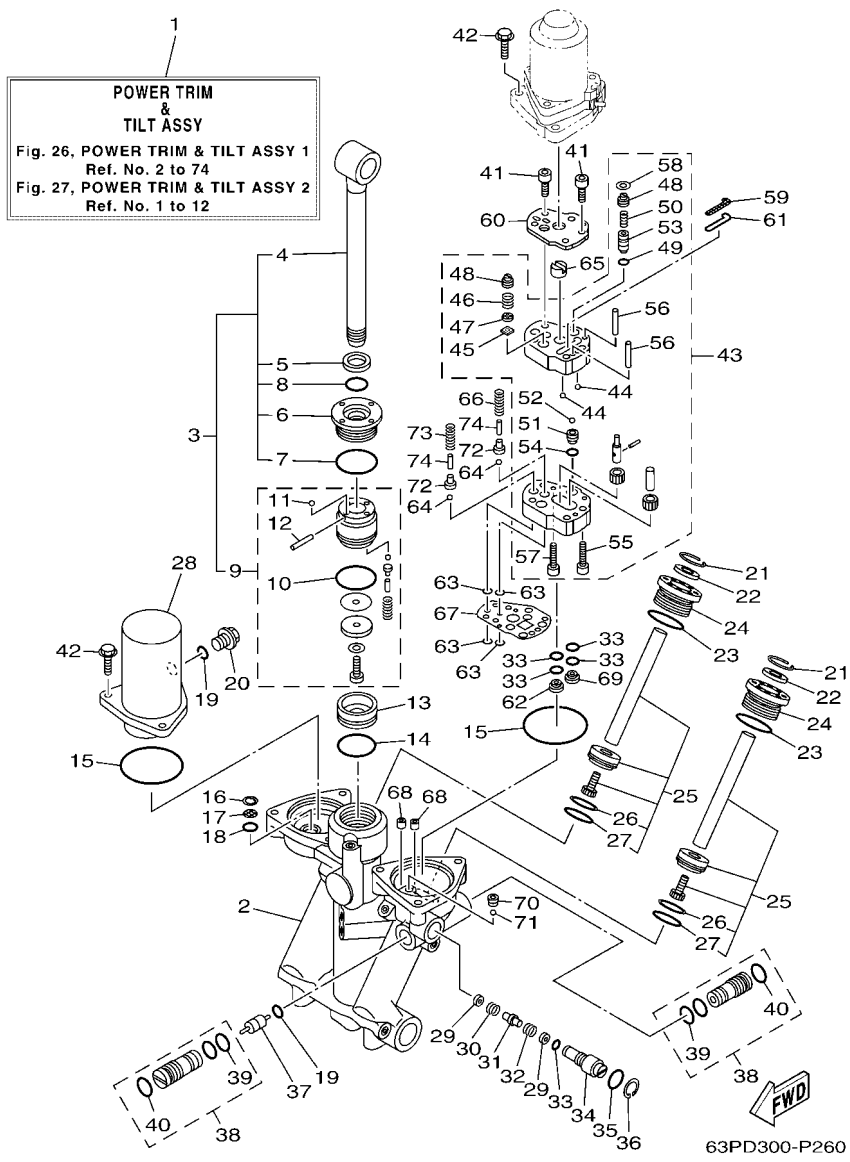

FIG. 26 POWER TRIM & TILT ASSY 1 — PUISSANCE PARER ET INCLINER 1

REF. NO.	PART NO. N° PIECES	DESCRIPTION DESCRIPTION	63PD	64PD				REMARKS REMARQUES
1	63P–43800–11	POWER TRIM & TILT ASSY PUISSANCE PARER ET INCLINER (E	1	1				
2	63P–4380L–10	HOUSING, TRIM & TILT SUB ASSY CARTER	1	1				
3	63P–43810–10	TILT PISTON SUB ASSY INCLINER PISTON AUXILIAIRE(ENS	1	1				
4	63P–43801–10	.ROD .TIGE	1	1				
5	93106–19N50	.OIL SEAL .JOINT SPY	1	1				
6	63P–43811–10	.SCREW, CYLINDER END .VIS, CYLINDRE RACCORD	1	1				
7	6H1–43861–00	.O-RING .JOINT TORIQUE	1	1				
8	63P–43863–10	.O-RING .JOINT TORIQUE	1	1				
9	63P–4380P–10	.PISTON SUB ASSY .PISTON AUXILIAIRE (ENS.)	1	1				
10	6H1–43862–00	..O-RING ..JOINT TORIQUE	1	1				
11	93505–32038	..BALL ..BILLE	1	1				
12	91609–16012	..PIN, SPRING ..AXE DE RESSORT	1	1				
13	63P–43814–10	PISTON, FREE PISTON	1	1				
14	6H1–43862–00	O-RING JOINT TORIQUE	1	1				
15	93210–68N50	O-RING JOINT TORIQUE	2	2				
16	63P–43876–10	RING, SNAP RESSORT	1	1				
17	63P–43816–10	FILTER 1 FILTRE 1	1	1				
18	93210–11N52	O-RING JOINT TORIQUE	1	1				
19	93210–09165	O-RING JOINT TORIQUE	2	2				
20	63P–43829–10	PLUG, RESERVOIR BOUCHON	1	1				
21	63P–43875–10	RING, SNAP RESSORT	2	2				
22	6H1–43822–10	SEAL, TRIM DUST JOINT	2	2				
23	63P–43862–10	O-RING JOINT TORIQUE	2	2				
24	63P–43821–10	SCREW, TRIM CYLINDER END VIS	2	2				
25	63P–43820–10	TRIM PISTON SUB ASSY PARER PISTON AUXILIAIRE (ENS.)	2	2				
26	62X–43871–00	.RING, BACK UP .SEGMENT	1	1				
27	93210–29375	.O-RING .JOINT TORIQUE	1	1				

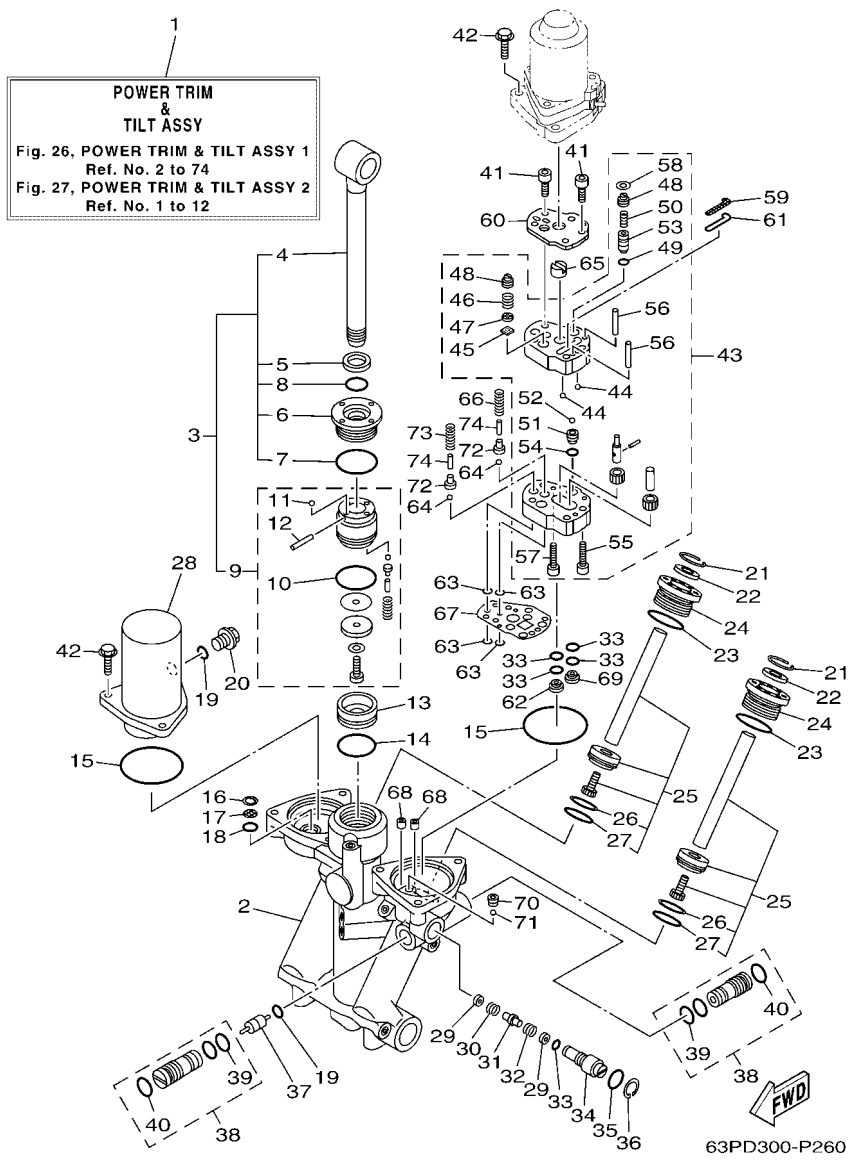

FIG. 26 POWER TRIM & TILT ASSY 1 — PUISSANCE PARER ET INCLINER 1

REF. NO.	PART NO. N° PIECES	DESCRIPTION DESCRIPTION	63PD	64PD				REMARKS REMARQUES
28	63P–43828–10	BODY, RESERVOIR CORPS	1	1				
29	63P–43847–10	SEAT, MANUAL VALVE SIEGE	2	2				
30	63P–43854–10	SPRING, MANUAL RELEASE RESSORT	1	1				
31	63P–4382A–10	ADAPTOR 1 ADAPTEUR 1	1	1				
32	63P–4384H–10	SPRING RESSORT	1	1				
33	69J–4389J–00	O-RING JOINT TORIQUE	5	5				
34	63P–43845–10	SCREW, MANUAL RELEASE VIS	1	1				
35	93210–18397	O-RING JOINT TORIQUE	1	1				
36	6H1–43875–00	RING, SNAP RESSORT	1	1				
37	6H1–43841–11	PISTON, SHUTTLE PISTON	1	1				
38	63P–43802–10	VALVE SUB ASSY CLAPET AUXILIAIRE (ENS.)	2	2				
39	93210–12N52	.O-RING .JOINT TORIQUE	1	1				
40	6H1–43866–01	.O-RING .JOINT TORIQUE	1	1				
41	91318–05040	BOLT BOULON	4	4				
42	97595–06625	BOLT, WITH WASHER VIS HEXAGONAL AVC RONDELLE	6	6				
43	63P–43830–10	GEAR PUMP ASSY POMPE A PIGNON (ENS.)	1	1				
44	93503–16003	.BALL .BILLES	2	2				
45	6H1–4384G–11	.SEAL, RELIEF VALVE .JOINT	1	1				
46	6H1–43856–10	.SPRING, DOWN RELIEF .RESSORT	1	1				
47	6H1–43844–10	.PIN, VALVE SUPPORT .GOUPILLE	1	1				
48	63P–43843–10	.SCREW, VALVE LOCK .VIS	2	2				
49	93210–064A5	.O-RING .JOINT TORIQUE	1	1				
50	69J–43855–00	.SPRING, UP RELIEF .RESSORT	1	1				
51	63P–43851–10	.SEAT, RELIEF VALVE .SIEGE	1	1				
52	93501–08001	.BALL .BILLE	1	1				
53	6CJ–43844–00	.PIN, VALVE SUPPORT .GOUPILLE	1	1				
54	93210–07N51	.O-RING .JOINT TORIQUE	1	1				

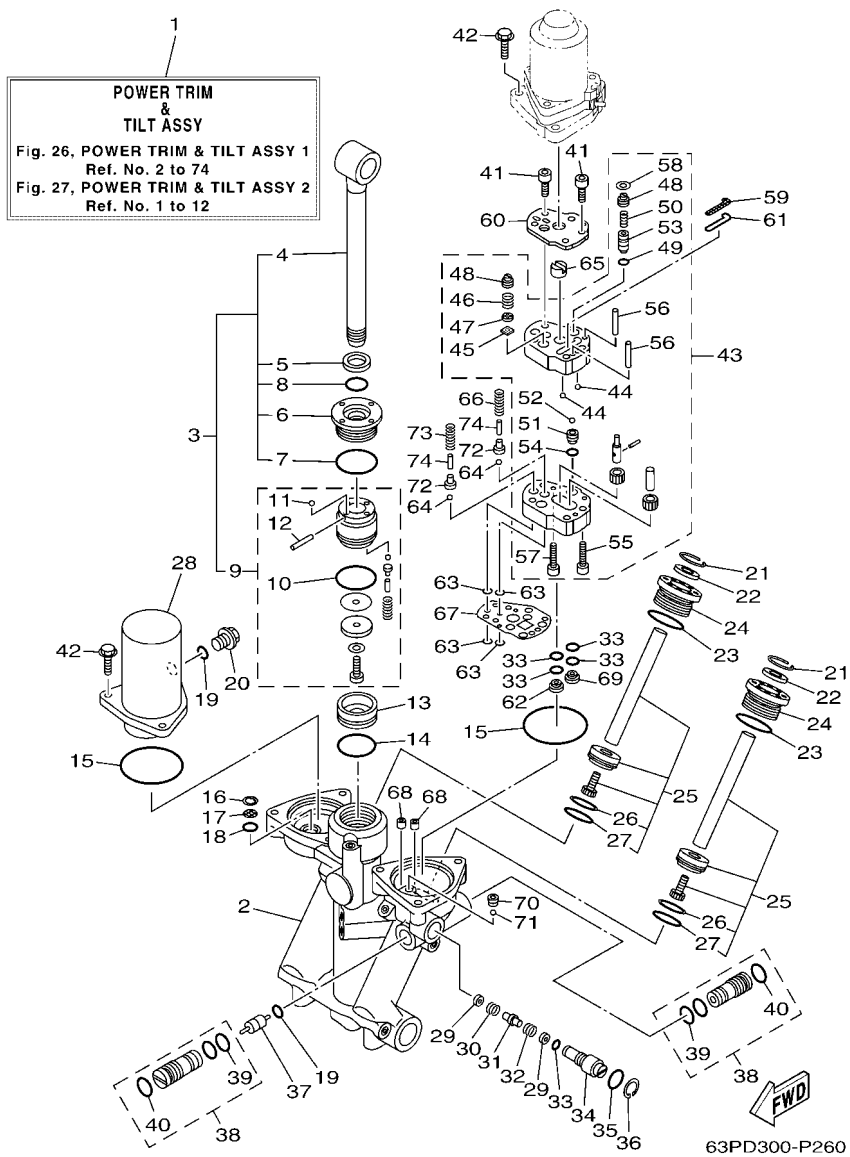

FIG. 26 POWER TRIM & TILT ASSY 1 — PUISSANCE PARER ET INCLINER 1

REF. NO.	PART NO. N° PIECES	DESCRIPTION DESCRIPTION	63PD	64PD				REMARKS REMARQUES
55	91318–04025	.BOLT .BOULON	1	1				
56	93604–29184	.PIN, DOWEL .CLAVETTE	2	2				
57	91318–05025	.BOLT .BOULON	1	1				
58	63P–43338–10	.WASHER, WAVE .RONDELLE, ONDULEE	1	1				
59	6CJ–43816–00	FILTER 1 FILTRE 1	1	1				
60	63P–4381J–10	PLATE PLAQUE	1	1				
61	62Y–43871–00	RING, BACK UP SEGMENT	1	1				
62	69J–43899–01	PLATE STOPPER PLAQUETTE	1	1				
63	93210–064A5	O-RING JOINT TORIQUE	4	4				
64	93501–08001	BALL BILLE	2	2				
65	69J–43831–00	CONNECTOR, SHAFT RACCORD	1	1				
66	63P–4385H–10	SPRING, SEAL RESSORT	1	1				
67	63P–4384G–10	SEAL, RELIEF VALVE JOINT	1	1				
68	63P–4388H–10	PLUG BOUCHON	2	2				
69	63P–43899–10	PLATE STOPPER PLAQUETTE	1	1				
70	61A–43878–00	BOLT, SOCKET BOULON	1	1				
71	93505–32038	BALL BILLE	1	1				
72	65W–4386A–00	PIN, ABSORBER VALVE GOUPILLE, SOUPAPE	2	2				
73	63P–43857–10	SPRING, ABSORBER VALVE RESSORT	1	1				
74	688–4386F–00	PIN, STRAIGHT RESSORT	2	2				

FIG. 27 POWER TRIM & TILT ASSY 2 — PUISSANCE PARER ET INCLINER 2

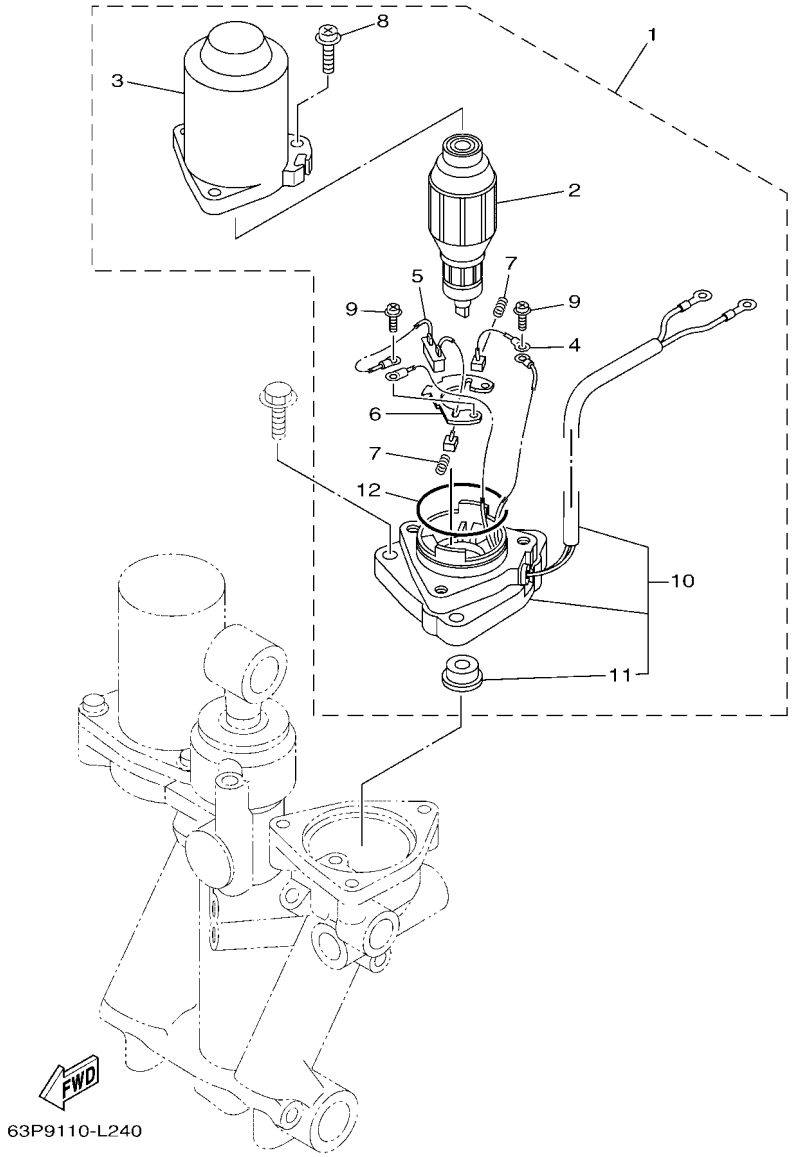

REF. NO.	PART NO. N° PIECES	DESCRIPTION DESCRIPTION	63PD	64PD				REMARKS REMARQUES
1	63P–43880–11	MOTOR ASSY MOTEUR (ENS.)	1	1				
2	63P–43805–10	.ARMATURE ASSY .INDUIT (ENS.)	1	1				
3	63P–43804–10	.STATOR ASSY .STATOR (ENS.)	1	1				
4	63P–43892–10	.BRUSH 2 .BALAI 2	1	1				
5	63P–82181–10	.CIRCUIT BREAKER COMP. .RUPTEUR COMPLET	1	1				
6	63P–4380F–10	.PLATE, BRUSH HOLDER .PLAQUE	1	1				
7	62X–4386K–00	.SPRING, BRUSH .RESSORT, BALAI	2	2				
8	63P–43879–10	.SCREW, WITH WASHER .VIS, AVEC RONDELLE	3	3				
9	97602–04316	.SCREW, PAN HEAD WITH WASHER .VIS	2	2				
10	63P–43881–11	.FRAME, END .BATI	1	1				
11	93102–08414	..OIL SEAL ..JOINT SPY	1	1				
12	93210–554A9	.O-RING .JOINT TORIQUE	1	1				

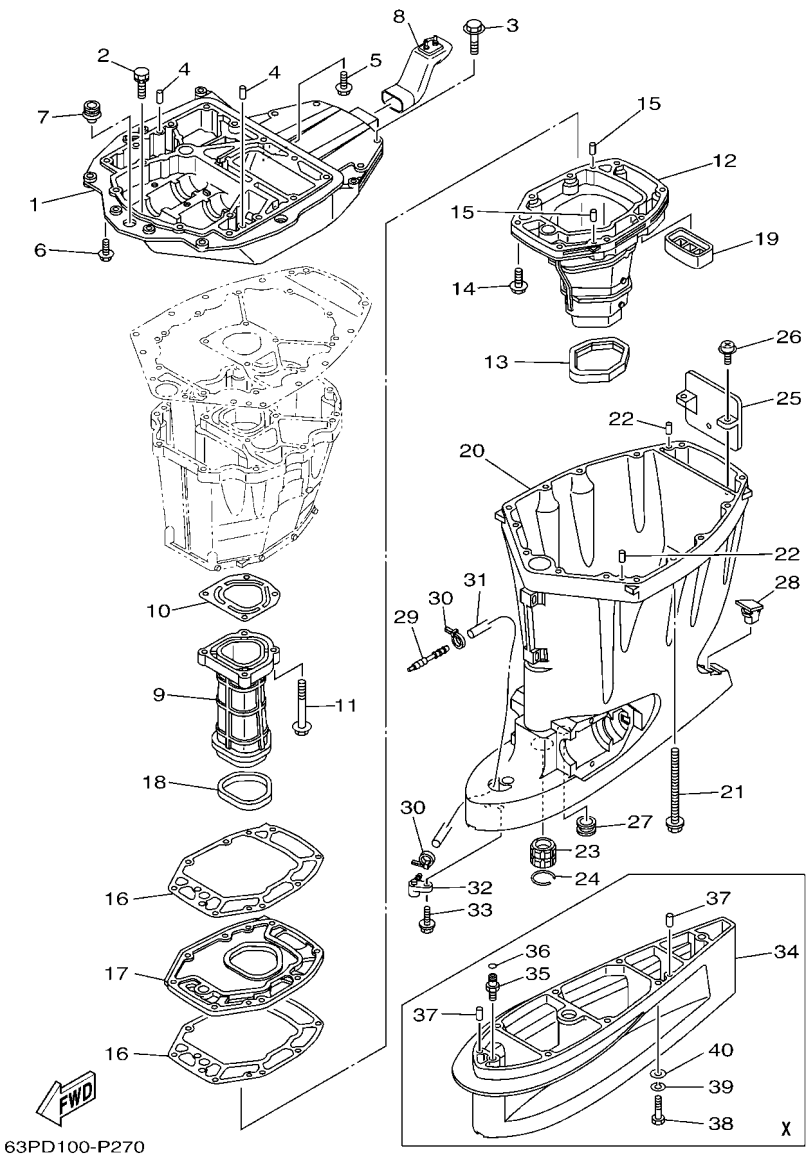

FIG. 28 UPPER CASING FOURREAU

REF. NO.	PART NO. N° PIECES	DESCRIPTION DESCRIPTION	63PD	64PD				REMARKS REMARQUES
1	63P–41137–04–CA	GUIDE, EXHAUST COLLECTEUR D'ECHAPPEMENT	1	1				
2	90119–08102	BOLT, WITH WASHER BOULON, AVEC RONDELLE	2	2				
3	97575–10545	BOLT, WITH WASHER VIS HEXAGONAL AVC RONDELLE	4	4				
4	93608–16M16	PIN, DOWEL AXE	2	2				
5	90119–08M58	BOLT, WITH WASHER BOULON, AVEC RONDELLE	3	3				
6	97575–10535	BOLT, WITH WASHER VIS HEXAGONAL AVC RONDELLE	4	4				
7	6E5–42724–00	GROMMET PASSE-FIL	1	1				
8	6DA–42769–00	SEAL, RUBBER BOURRELET, CAOUTCHOUC	1	1				
9	63P–41131–01–9S	MANIFOLD, EXT. 1 PIPE D'ECHAPPEMENT	1	1				
10	63P–41133–A0	GASKET, EXHAUST MANIFOLD 1 JOINT, PIPE D'ECHAPPEMENT	1	1				
11	97575–08560	BOLT, WITH WASHER VIS HEXAGONAL AVC RONDELLE	4	4				
12	63P–14711–01–9S	MUFFLER 1 POT D'ECHAPPEMENT 1	1	1				
13	69J–45123–00	GASKET, MUFFLER JOINT, POT DE DETENTE	1	1				
14	97575–08535	BOLT, WITH WASHER VIS HEXAGONAL AVC RONDELLE	8	8				
15	93606–19M23	PIN, DOWEL GOUPILLE	2	2				
16	63P–41134–A1	GASKET, EXHAUST MANIFOLD JOINT, PIPE D'ECHAPPEMENT	2	2				
17	63P–45181–01–9S	PLATE PLAQUETTE	1	1				
18	63P–41138–00	SEAL, EXT. 1 JOINT DE GROUPE 1	1	1				
19	69J–45127–00	SEAL JOINT	1	1				
20	63P–45111–00–8D	CASING, UPPER FOURREAU	1	1				
21	90119–10007	BOLT, WITH WASHER BOULON, AVEC RONDELLE	8	8				
22	93608–16M16	PIN, DOWEL AXE	2	2				
23	6E5–45318–00	BUSHING, DRIVE SHAFT DOUILLE, ARBRE MOTEUR	1	1				
24	93420–36M01	CIRCLIP CIRCLIP, TYPE S	1	1				
25	69J–14624–01	COVER, EXHAUST CACHE D'ECHAPPEMENT	1	1				
26	97980–06216	SCREW, WITH WASHER VIS, AVEC RONDELLE	2	2				
27	6E5–44366–00	DAMPER, WATER SEAL 2 JOINT, TUBE D'EAU 2	1	1				

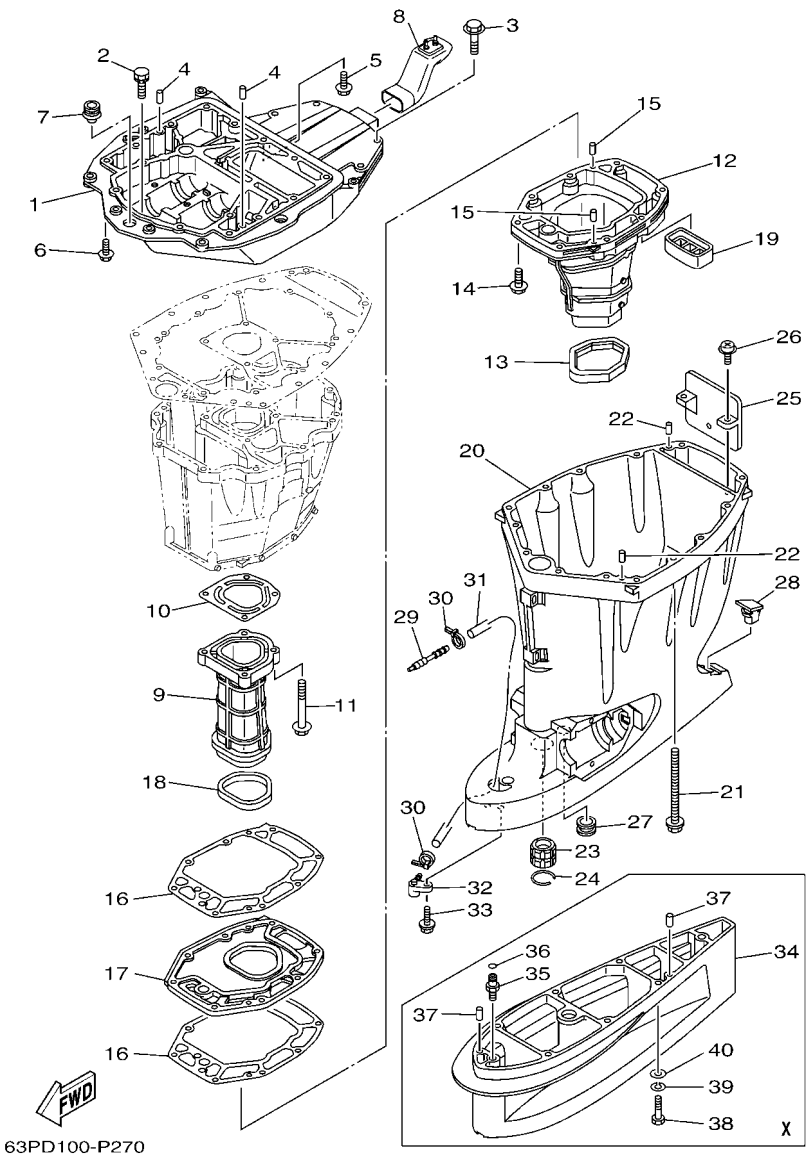

FIG. 28 UPPER CASING — FOURREAU

REF. NO.	PART NO. N° PIECES	DESCRIPTION DESCRIPTION	63PD	64PD				REMARKS REMARQUES
28	6C5–45155–00	CAP CAPUCHON	1	1				
29	6E5–83558–00	END, NIPPLE RACCORD DE NIPPLE	1	1				EXCEPT F150DET EXCEPT F150DET
30	90465–11M10	CLAMP BRIDE	2	2				EXCEPT F150DET EXCEPT F150DET
	90465–11M10	CLAMP BRIDE	1					FOR F150DET FOR F150DET
31	90445–070F1	HOSE (L950) DURITE (L950)	1	1				EXCEPT F150DET EXCEPT F150DET
	90445–07018	HOSE (L1400) DURITE (L1400)	1					FOR F150DET FOR F150DET
32	63P–45379–00	NIPPLE, HOSE RACCORD D'ESSENCE	1	1				
33	90119–06M18	BOLT, WITH WASHER BOULON, AVEC RONDELLE	1	1				
34	63P–45211–00–8D	EXTENSION EXTENSION	1	1				X(25.3") X(25.3")
35	63P–45378–00	NIPPLE, HOSE RACCORD, TUYAU	1	1				X(25.3") X(25.3")
36	93210–07003	O-RING JOINT TORIQUE	1	1				X(25.3") X(25.3")
37	93608–16M16	PIN, DOWEL AXE	2	2				X(25.3") X(25.3")
38	97095–10045	BOLT BOULON	6	6				X(25.3") X(25.3")
39	92995–10100	WASHER RONDELLE	6	6				X(25.3") X(25.3")
40	92995–10600	WASHER RONDELLE	6	6				X(25.3") X(25.3")

FIG. 29 OIL PAN — VENTILATEUR D'HUILE

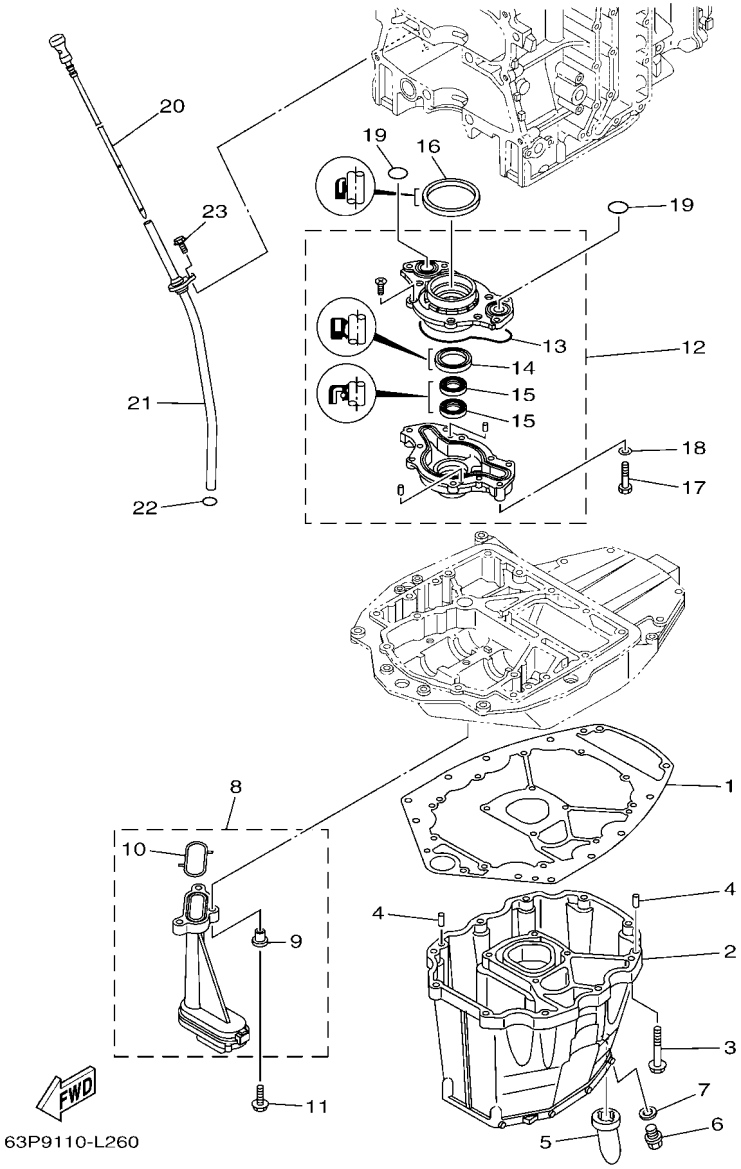

REF. NO.	PART NO. N° PIECES	DESCRIPTION DESCRIPTION	63PD	64PD				REMARKS REMARQUES
1	63P–15312–01	GASKET, OIL PAN JOINT DE VENTILATEUR D'HUILE	1	1				
2	63P–15311–02–CA	OIL PAN VENTILATEUR D'HUILE	1	1				
3	97575–08535	BOLT, WITH WASHER VIS HEXAGONAL AVC RONDELLE	10	10				
4	93608–16M16	PIN, DOWEL AXE	2	2				
5	63P–15316–00	DAMPER 1 AMORTISSEUR 1	1	1				
6	90340–14M06	PLUG, STRAIGHT SCREW PLOT, FILETE DROIT	1	1				
7	90430–14M09	GASKET JOINT	1	1				
8	63P–13411–00	STRAINER, OIL FILTRE, HUILE	1	1				
9	90387–06263	.COLLAR .COLLERETTE	3	3				
10	63P–13415–00	.SEAL, OIL STRAINER .JOINT, FILTRE A HUILE	1	1				
11	95812–06025	BOLT, FLANGE BOULON	3	3				
12	63P–13300–02	OIL PUMP ASSY POMPE A HUILE COMPLETE	1	1				
13	63P–13329–00	.GASKET, PUMP COVER .JOINT, COUVERCLE DE POMPE	1	1				
14	6AW–13119–00	.OIL SEAL .JOINT SPY	1	1				
15	69J–13631–00	.OIL SEAL .JOINT SPY	2	2				
16	69J–11355–00	SEAL, CYLINDER 1 JOINT, SPY CYLINDRE	1	1				
17	97095–06040	BOLT BOULON	4	4				
18	92995–06600	WASHER RONDELLE	4	4				
19	93210–25552	O-RING JOINT TORIQUE	2	2				
20	63P–15362–10	PLUG, OIL LEVEL PLOT, NIVEAU D'HUILE	1	1				
21	63P–15377–10	GUIDE, INLET GUIDE D'ADMISSION	1	1				
22	93210–19MJ3	O-RING JOINT TORIQUE	1	1				
23	95895–06016	BOLT, FLANGE BOULON	1	1				

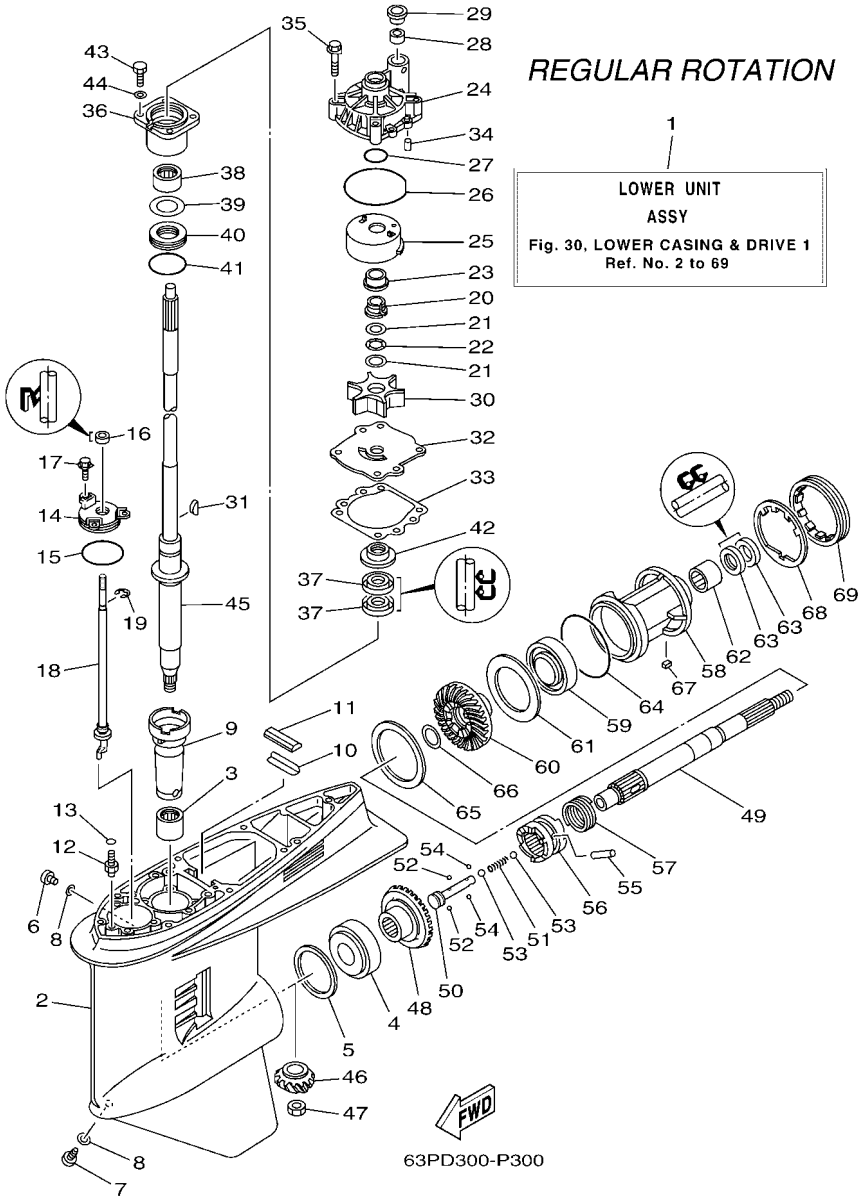

FIG. 30 LOWER CASING & DRIVE 1 — BOITIER D'HELICE TRANSMISSION1

REF. NO.	PART NO. N° PIECES	DESCRIPTION DESCRIPTION	63PD	64PD				REMARKS REMARQUES
1	63P–45300–04–8D	LOWER UNIT ASSY UNITE INFERIEURE (ENS.)	1					L(20.3"),RH L(20.3"),RH
	63P–45300–14–8D	LOWER UNIT ASSY UNITE INFERIEURE (ENS.)	1					X(25.3"),RH X(25.3"),RH
2	6J9–45301–07–8D	CASING, LOWER BEQUILLE	1					
3	93311–928U5	BEARING ROULEMENT	1					
4	93332–000V3	BEARING ROULEMENT	1					
5	6G5–45567–01	SHIM (T:0.10MM) CALE (T:0.10MM)	1					UR UR
	6G5–45567–10	SHIM (T:0.12MM) CALE (T:0.12MM)	1					UR UR
	6G5–45567–20	SHIM (T:0.15MM) CALE (T:0.15MM)	1					UR UR
	6G5–45567–30	SHIM (T:0.18MM) CALE (T:0.18MM)	1					UR UR
	6G5–45567–40	SHIM (T:0.30MM) CALE (T:0.30MM)	1					UR UR
	6G5–45567–50	SHIM (T:0.40MM) CALE (T:0.40MM)	1					UR UR
	6G5–45567–60	SHIM (T:0.50MM) CALE (T:0.50MM)	1					UR UR
6	90340–08002	PLUG, STRAIGHT SCREW PLOT, FILETE DROIT	1					
7	688–45341–10	PLUG, DRAIN BOUCHON DE VIDANGE	1					
8	90430–08020	GASKET JOINT	2					
9	6G5–45536–01	SLEEVE, DRIVE SHAFT MANCHON, ARBRE MOTEUR	1					
10	663–45376–00	GUIDE, SEAL DAMPER BUTEE, JOINT CAOUTCHOUC	1					
11	688–45375–00	DAMPER, SEAL BOURRELET, CAOUTCHOUC	1					
12	63P–45378–00	NIPPLE, HOSE RACCORD, TUYAU	1					
13	93210–07003	O-RING JOINT TORIQUE	1					
14	6E5–45321–00	PLATE PLAQUETTE	1					
15	93210–58144	O-RING JOINT TORIQUE	1					
16	93106–09014	OIL SEAL JOINT SPY	1					
17	90119–06M10	BOLT, WITH WASHER BOULON, AVEC RONDELLE	3					
18	63P–44150–01	SHIFT CAM ASSY CAME D'INVERSION	1					L(20.3"),RH L(20.3"),RH
	63P–44150–11	SHIFT CAM ASSY CAME D'INVERSION	1					X(25.3"),RH X(25.3"),RH
19	99001–08600	CIRCLIP CIRCLIP	1					

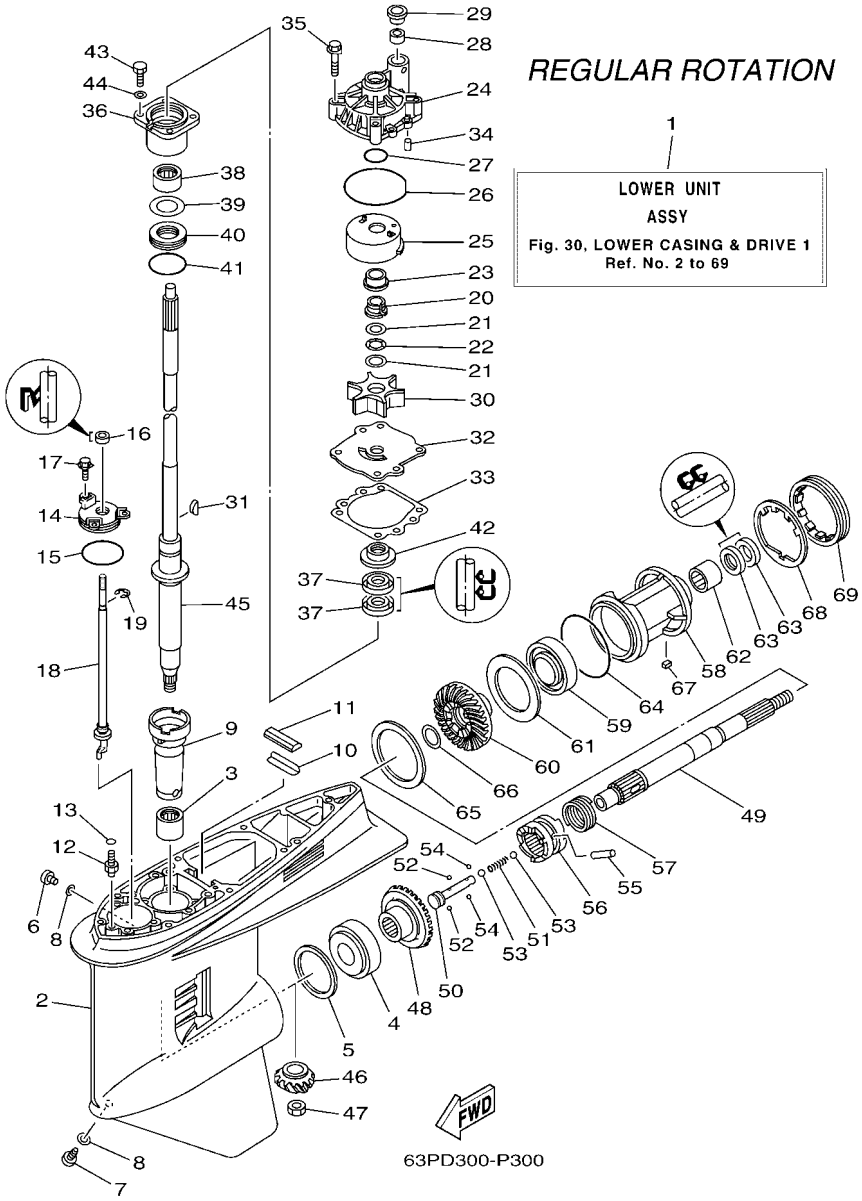

FIG. 30 LOWER CASING & DRIVE 1 — BOITIER D'HELICE TRANSMISSION1

REF. NO.	PART NO. N° PIECES	DESCRIPTION DESCRIPTION	63PD	64PD				REMARKS REMARQUES
20	61A–45538–00	SPACER 1 ENTRETOISE	1					
21	90201–22M01	WASHER, PLATE RONDELLE, PLATE	2					
22	90206–22M19	WASHER, WAVE RONDELLE, ONDULEE	1					
23	61A–45527–00	COLLAR, DRIVE SHAFT ENTRETOISE	1					
24	61A–44311–01	HOUSING, WATER PUMP CORPS, POMPE A EAU	1					
25	61A–44322–02	INSERT, CARTRIDGE CUVETTE	1					
26	93210–86M38	O-RING JOINT TORIQUE	1					
27	93210–37160	O-RING JOINT TORIQUE	1					
28	6E5–44365–00	DAMPER, WATER SEAL 1 JOINT, TUBE D'EAU 1	1					
29	6E5–44312–00	COVER, WATER PUMP HOUSING COUVERCLE	1					
30	6E5–44352–01	IMPELLER TURBINE	1					
31	90280–04M05	KEY, WOODRUFF CLAVETTE, DEMI-LUNE	1					
32	6G5–44323–01	OUTER PLATE, CARTRIDGE PLAQUE EXTERIEURE	1					
33	6E5–44315–A0	GASKET, WATER PUMP JOINT, POMPE A EAU	1					
34	93606–12019	PIN, DOWEL GOUPILLE	2					
35	90119–08M14	BOLT, WITH WASHER BOULON, AVEC RONDELLE	4					
36	6E5–45331–00–9S	HOUSING, BEARING FLASQUE, ROULEMENT	1					
37	93101–28M16	OIL SEAL JOINT SPY	2					
38	93317–330U2	BEARING ROULEMENT	1					
39	6E5–45587–01	SHIM (T:0.10MM) CALE (T:0.10MM)	1					UR UR
	6E5–45587–10	SHIM (T:0.12MM) CALE (T:0.12MM)	1					UR UR
	6E5–45587–20	SHIM (T:0.15MM) CALE (T:0.15MM)	1					UR UR
	6E5–45587–30	SHIM (T:0.18MM) CALE (T:0.18MM)	1					UR UR
	6E5–45587–40	SHIM (T:0.30MM) CALE (T:0.30MM)	1					UR UR
	6E5–45587–50	SHIM (T:0.40MM) CALE (T:0.40MM)	1					UR UR
	6E5–45587–60	SHIM (T:0.50MM) CALE (T:0.50MM)	1					UR UR
40	93341–930V2	BEARING CERVEAUX DE DIRECTION	1					

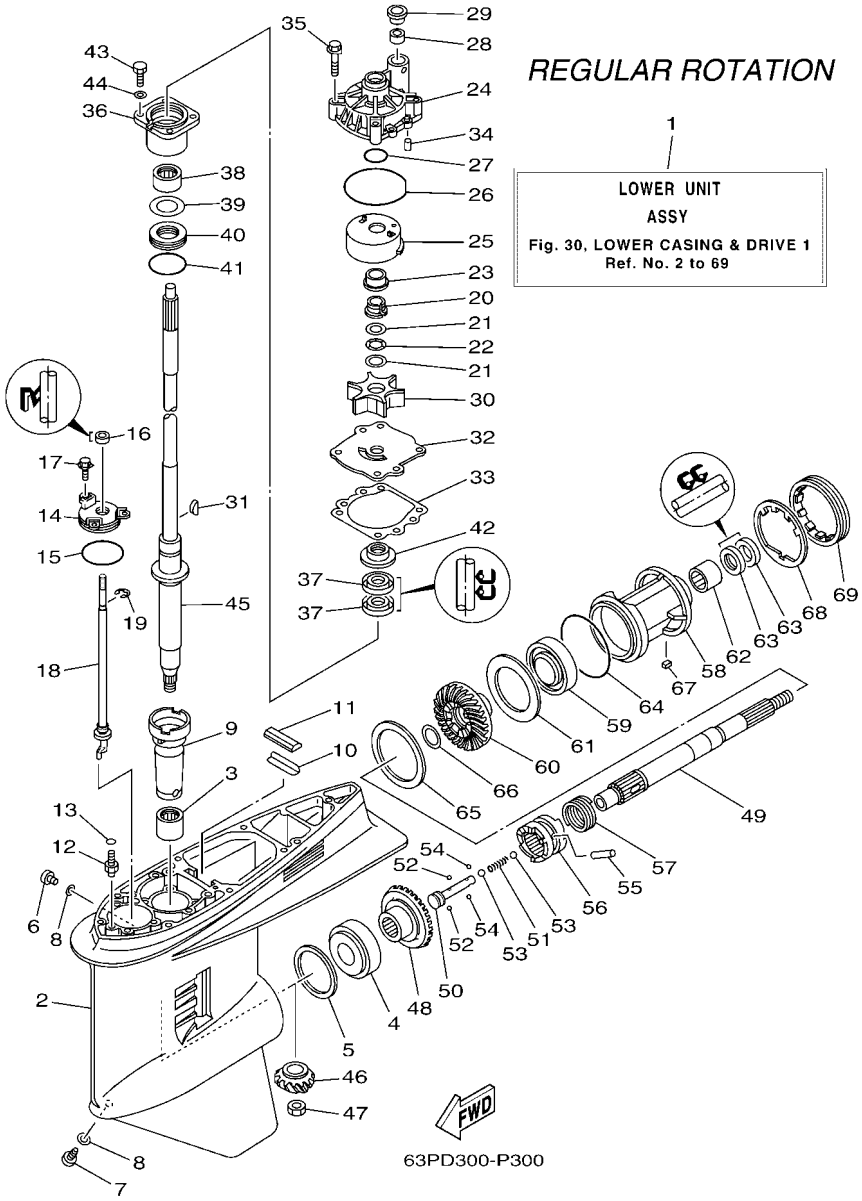

FIG. 30 LOWER CASING & DRIVE 1 — BOITIER D'HELICE TRANSMISSION1

REF. NO.	PART NO. N° PIECES	DESCRIPTION DESCRIPTION	63PD	64PD				REMARKS REMARQUES
41	93210–55M14	O-RING JOINT TORIQUE	1					
42	6E5–45344–00	COVER, OIL SEAL FLASQE, JOINT D'HUILE	1					
43	97095–08025	BOLT BOULON	4					
44	92995–08600	WASHER RONDELLE	4					
45	63P–45501–01	DRIVE SHAFT COMP. ARBRE MOTEUR COMP.	1					L(20.3") L(20.3")
	63P–45501–11	DRIVE SHAFT COMP. ARBRE MOTEUR COMP.	1					X(25.3") X(25.3")
46	63P–45551–00	PINION (14T) PIGNON D'ATTAQUE (14D)	1					
47	90170–16M01	NUT ECROU	1					
48	6EH–45560–00	GEAR 1 (28T) PIGNON 1 (28T)	1					
49	6J9–45611–01	SHAFT, PROPELLER ARBRE, HELICE	1					
50	6E5–45634–02	SLIDE, SHIFT CONTRE-POUSSOIR	1					
51	90501–16M37	SPRING, COMPRESSION RESSORT, COMPRESSION	1					
52	93507–32009	BALL BILLE	2					
53	93511–32017	BALL BILLES	2					
54	93503–16003	BALL BILLES	2					
55	90250–08M07	PIN, STRAIGHT GOUPILLE, DROITE	1					
56	6DA–45631–00	CLUTCH, DOG CRABOT	1					
57	6E5–45633–01	RING, CROSS PIN JONC, GOUPILLE CRABOT	1					
58	6J9–45332–00–CA	HOUSING, BEARING FLASQUE, ROULEMENT	1					
59	93306–209U0	BEARING ROULEMENT	1					
60	6EH–45571–00	GEAR 2 (28T) PIGNON 2 (28T)	1					
61	6G5–45576–10	WASHER, THRUST 2 RONDELLE DE CALAGE 2	1					
62	93315–43061	BEARING ROULEMENT	1					
63	93101–30M17	OIL SEAL JOINT SPY	2					
64	93210–97M55	O-RING JOINT TORIQUE	1					
65	6G5–45577–02	SHIM (T:0.10MM) CALE (T:0.10MM)	1					UR UR
	6G5–45577–10	SHIM (T:0.12MM) CALE (T:0.12MM)	1					UR UR

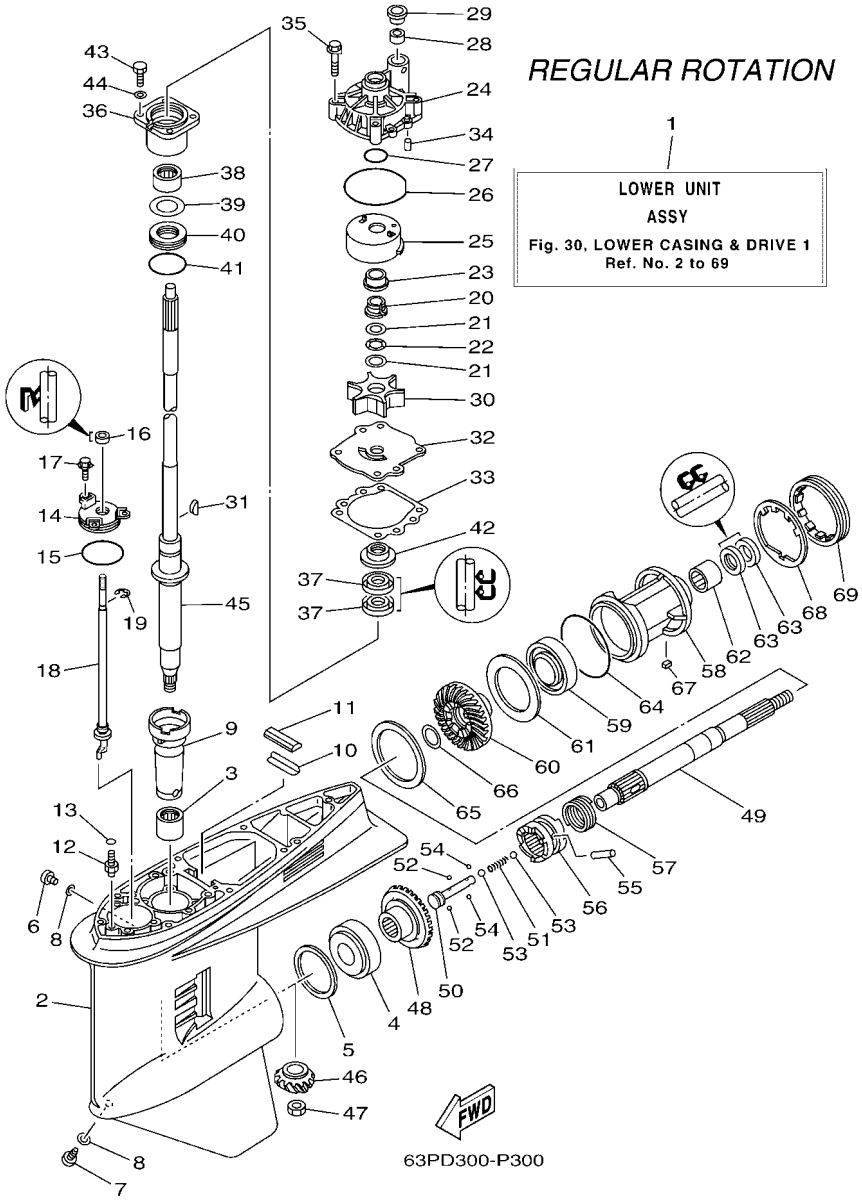

FIG. 30 LOWER CASING & DRIVE 1 — BOITIER D'HELICE TRANSMISSION1

REF. NO.	PART NO. N° PIECES	DESCRIPTION DESCRIPTION	63PD	64PD				REMARKS REMARQUES
65	6G5–45577–20	SHIM (T:0.15MM) CALE (T:0.15MM)	1					UR UR
	6G5–45577–30	SHIM (T:0.18MM) CALE (T:0.18MM)	1					UR UR
	6G5–45577–40	SHIM (T:0.30MM) CALE (T:0.30MM)	1					UR UR
	6G5–45577–50	SHIM (T:0.40MM) CALE (T:0.40MM)	1					UR UR
	6G5–45577–60	SHIM (T:0.50MM) CALE (T:0.50MM)	1					UR UR
66	90201–30M92	WASHER, PLATE RONDELLE, PLATE	1					
67	90282–04M00	KEY, STRAIGHT CLAVETTE, DROITE	1					
68	6G5–45383–01	WASHER, CLAW FREIN D'ECROU	1					
69	6G5–45384–02	NUT ECROU	1					

FIG. 31 LOWER CASING & DRIVE 2 — BOITIER D'HELICE TRANSMISSION2

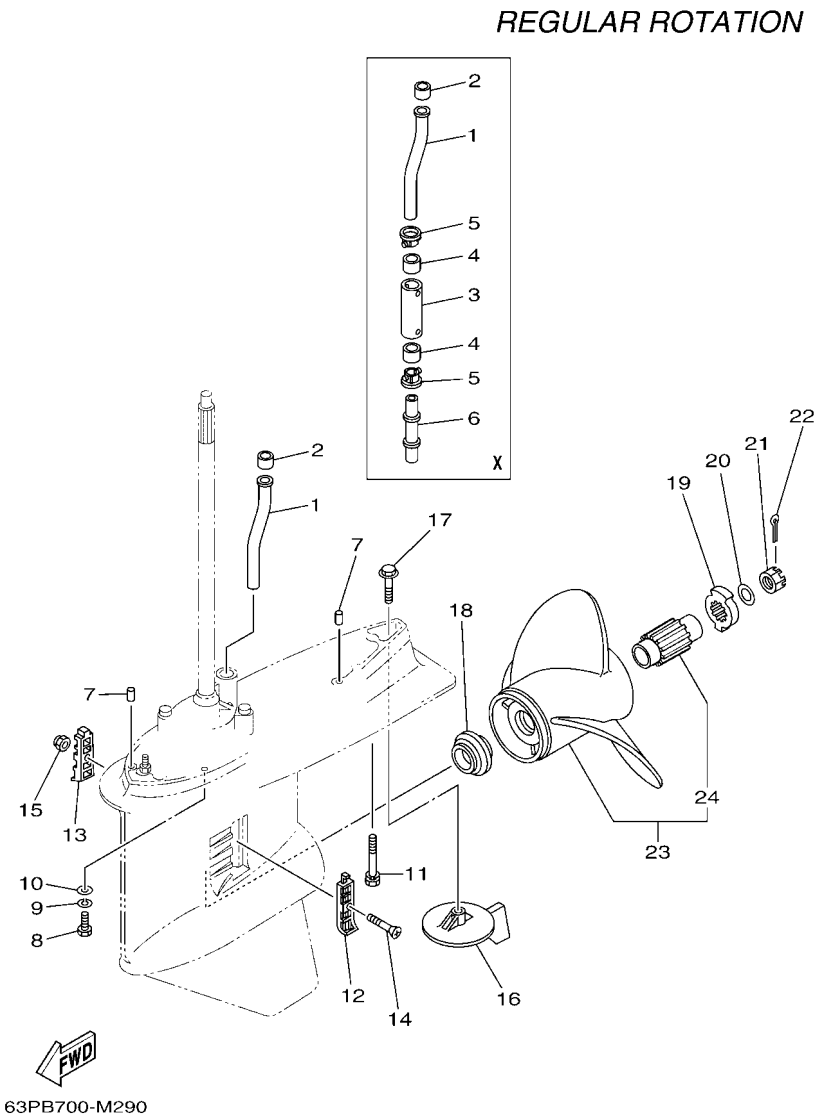

REF. NO.	PART NO. N° PIECES	DESCRIPTION DESCRIPTION	63PD	64PD				REMARKS REMARQUES
1	63P–44361–00	TUBE, WATER 1 TUBE D'EAU 1	1					
2	6E5–44365–00	DAMPER, WATER SEAL 1 JOINT, TUBE D'EAU 1	1					
3	63P–44362–00	TUBE, WATER 2 TUBE D'EAU 2	1					X(25.3") X(25.3")
4	6E5–44365–00	DAMPER, WATER SEAL 1 JOINT, TUBE D'EAU 1	2					X(25.3") X(25.3")
5	6E5–44312–00	COVER, WATER PUMP HOUSING COUVERCLE	2					X(25.3") X(25.3")
6	63P–44363–00	TUBE, WATER 3 TUBE D'EAU 3	1					X(25.3") X(25.3")
7	93608–16M16	PIN, DOWEL AXE	2					
8	97095–10045	BOLT BOULON	6					
9	92995–10100	WASHER RONDELLE	6					
10	92995–10600	WASHER RONDELLE	6					
11	90119–10MA2	BOLT, WITH WASHER BOULON, AVEC RONDELLE	1					L(20.3") L(20.3")
	90119–10008	BOLT, WITH WASHER BOULON, AVEC RONDELLE	1					X(25.3") X(25.3")
12	6J9–45214–00	COVER, WATER INLET 1 GRILLE, ENTREE D'EAU 1	1					
13	6J9–45215–00	COVER, WATER INLET 2 GRILLE, ENTREE D'EAU 2	1					
14	90152–05M08	SCREW, COUNTERSUNK VIS, TETE NOYEE	1					
15	90185–05002	NUT, NYLON ECROU,AUTO-BLOQUANT	1					
16	6J9–45371–01	TAB-TRIM ANODE DERIVE	1					
17	90105–10M00	BOLT, FLANGE BOULON	1					
18	63P–45987–00	SPACER 1 ENTRETOISE 1	1					
19	6CE–45997–00	SPACER 2 ENTRETOISE 2	1					
20	92990–18200	WASHER RONDELLE, PLATE	1					
21	90171–18M04	NUT, CASTLE ECROU, CRENELE	1					
22	91490–40030	PIN. COTTER GOUPILLE	1					
23	68F–45970–10	PROPELLER (3X14-1/2"X15"-M) HELICE (3X14-1/2"X15"-M)	1					UR SDS PROP. UR SDS PROP.
	68F–45972–10	PROPELLER (3X14-1/4"X17"-M) HELICE (3X14-1/4"X17"-M)	1					UR SDS PROP. UR SDS PROP.
	68F–45978–10	PROPELLER (3X14-1/4"X18"-M) HELICE (3X14-1/4"X18"-M)	1					UR SDS PROP. UR SDS PROP.
	68F–45974–10	PROPELLER (3X13-3/4"X19"-M) HELICE (3X13-3/4"X19"-M)	1					UR SDS PROP. UR SDS PROP.

FIG. 31 LOWER CASING & DRIVE 2 — BOITIER D'HELICE TRANSMISSION2

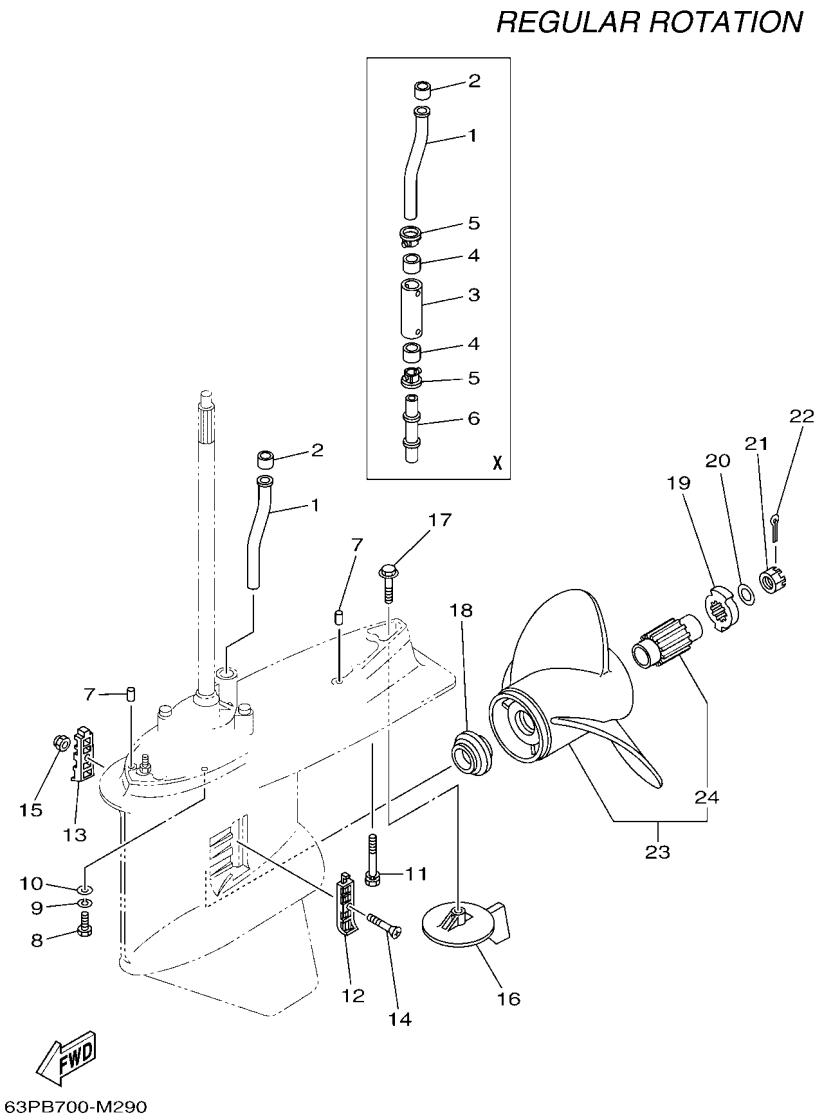

REF. NO.	PART NO. N° PIECES	DESCRIPTION DESCRIPTION	63PD	64PD				REMARKS REMARQUES
23	68F–45976–10	PROPELLER (3X13-3/4"X21"-M) HELICE (3X13-3/4"X21"-M)	1					UR SDS PROP. UR SDS PROP.
24	6CE–45C81–00	.DAMPER RUBBER, PROPELLER 1 .AMORTISSEUR HELICE 1	1					

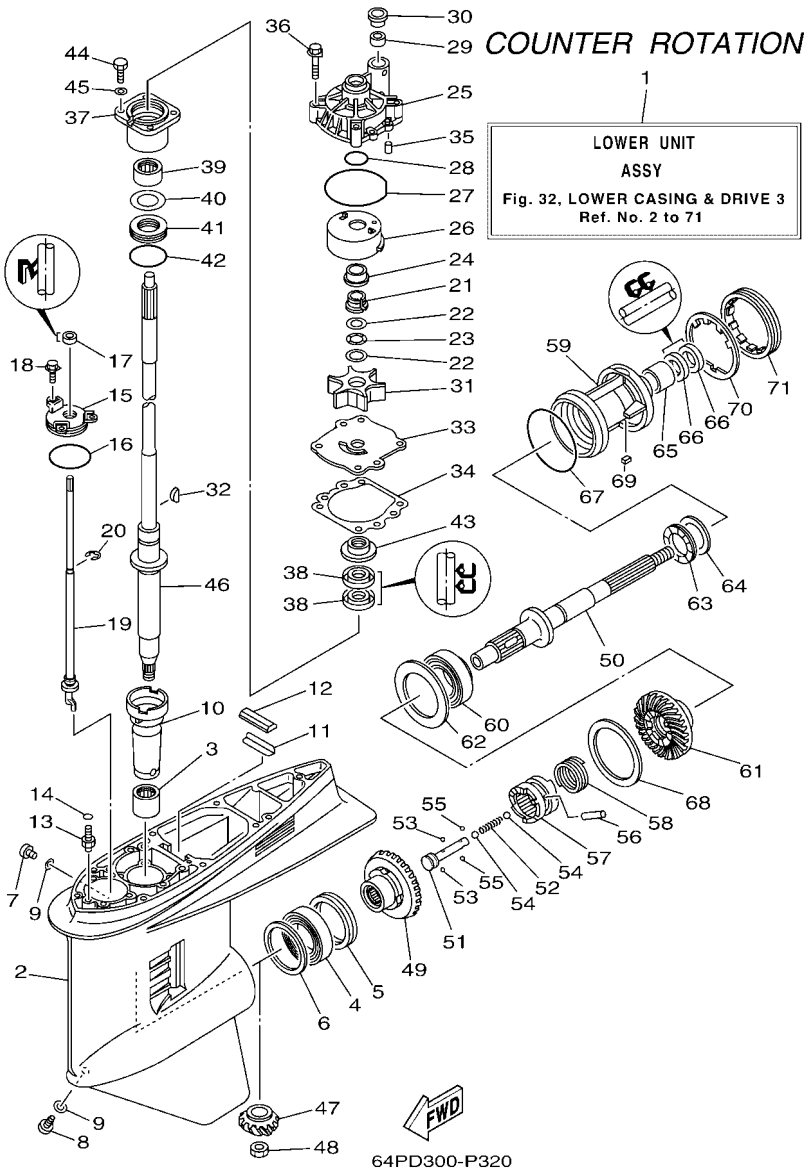

FIG. 32 LOWER CASING & DRIVE 3 — BOITIER D'HELICE TRANSMISSION3

REF. NO.	PART NO. N° PIECES	DESCRIPTION DESCRIPTION	63PD	64PD				REMARKS REMARQUES
1	64P–45300–03–8D	LOWER UNIT ASSY UNITE INFERIEURE (ENS.)		1				L(20.3"),LH L(20.3"),LH
	64P–45300–13–8D	LOWER UNIT ASSY UNITE INFERIEURE (ENS.)		1				X(25.3"),LH X(25.3"),LH
2	6J9–45301–07–8D	CASING, LOWER BEQUILLE		1				
3	93311–928U5	BEARING ROULEMENT		1				
4	93390–000U2	BEARING ROULEMENT		1				
5	93341–465U4	BEARING CERVEAUX DE DIRECTION		1				
6	6G5–45567–01	SHIM (T:0.10MM) CALE (T:0.10MM)		1				UR UR
	6G5–45567–10	SHIM (T:0.12MM) CALE (T:0.12MM)		1				UR UR
	6G5–45567–20	SHIM (T:0.15MM) CALE (T:0.15MM)		1				UR UR
	6G5–45567–30	SHIM (T:0.18MM) CALE (T:0.18MM)		1				UR UR
	6G5–45567–40	SHIM (T:0.30MM) CALE (T:0.30MM)		1				UR UR
	6G5–45567–50	SHIM (T:0.40MM) CALE (T:0.40MM)		1				UR UR
	6G5–45567–60	SHIM (T:0.50MM) CALE (T:0.50MM)		1				UR UR
7	90340–08002	PLUG, STRAIGHT SCREW PLOT, FILETE DROIT		1				
8	688–45341–10	PLUG, DRAIN BOUCHON DE VIDANGE		1				
9	90430–08020	GASKET JOINT		2				
10	6G5–45536–01	SLEEVE, DRIVE SHAFT MANCHON, ARBRE MOTEUR		1				
11	663–45376–00	GUIDE, SEAL DAMPER BUTEE, JOINT CAOUTCHOUC		1				
12	688–45375–00	DAMPER, SEAL BOURRELET, CAOUTCHOUC		1				
13	63P–45378–00	NIPPLE, HOSE RACCORD, TUYAU		1				
14	93210–07003	O-RING JOINT TORIQUE		1				
15	6E5–45321–00	PLATE PLAQUETTE		1				
16	93210–58144	O-RING JOINT TORIQUE		1				
17	93106–09014	OIL SEAL JOINT SPY		1				
18	90119–06M10	BOLT, WITH WASHER BOULON, AVEC RONDELLE		3				
19	64P–44150–01	SHIFT CAM ASSY CAME D'INVERSION		1				L(20.3"),LH L(20.3"),LH
	64P–44150–11	SHIFT CAM ASSY CAME D'INVERSION		1				X(25.3"),LH X(25.3"),LH

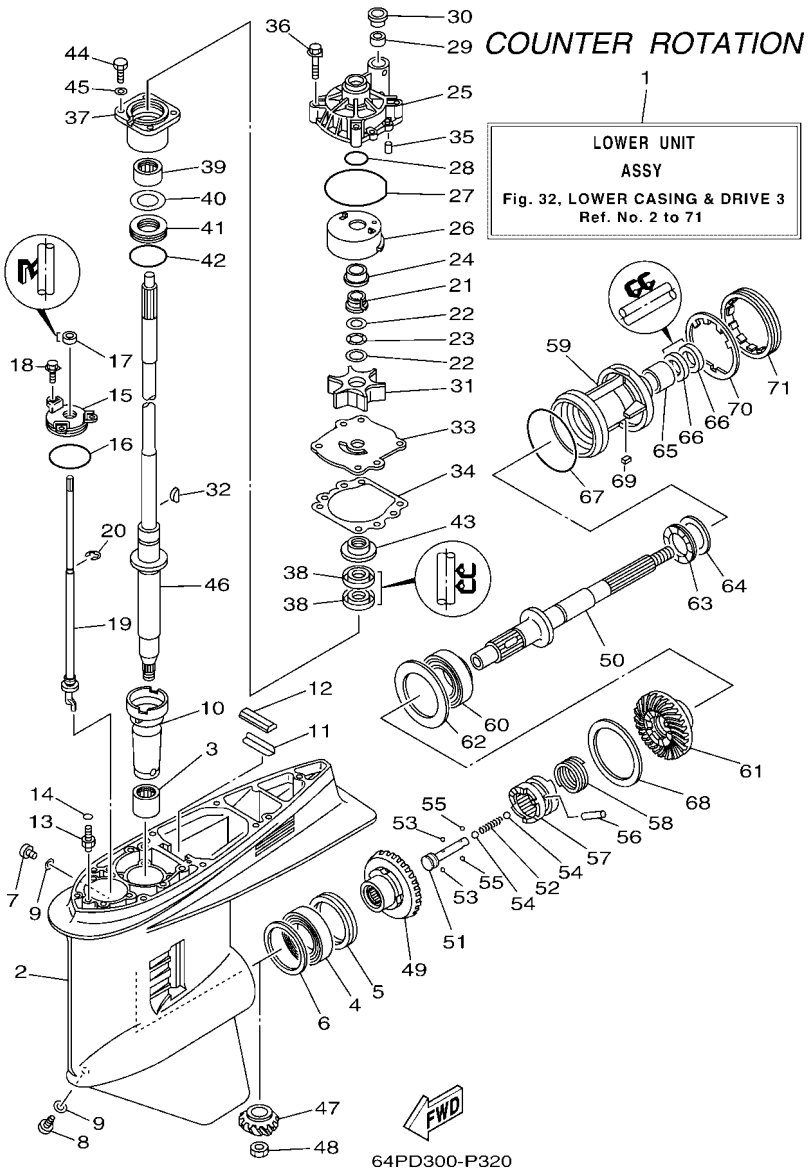

FIG. 32 LOWER CASING & DRIVE 3 — BOITIER D'HELICE TRANSMISSION3

REF. NO.	PART NO. N° PIECES	DESCRIPTION DESCRIPTION	63PD	64PD				REMARKS REMARQUES
20	99001–08600	CIRCLIP CIRCLIP		1				
21	61A–45538–00	SPACER 1 ENTRETOISE		1				
22	90201–22M01	WASHER, PLATE RONDELLE, PLATE		2				
23	90206–22M19	WASHER, WAVE RONDELLE, ONDULEE		1				
24	61A–45527–00	COLLAR, DRIVE SHAFT ENTRETOISE		1				
25	61A–44311–01	HOUSING, WATER PUMP CORPS, POMPE A EAU		1				
26	61A–44322–02	INSERT, CARTRIDGE CUVETTE		1				
27	93210–86M38	O-RING JOINT TORIQUE		1				
28	93210–37160	O-RING JOINT TORIQUE		1				
29	6E5–44365–00	DAMPER, WATER SEAL 1 JOINT, TUBE D'EAU 1		1				
30	6E5–44312–00	COVER, WATER PUMP HOUSING COUVERCLE		1				
31	6E5–44352–01	IMPELLER TURBINE		1				
32	90280–04M05	KEY, WOODRUFF CLAVETTE, DEMI-LUNE		1				
33	6G5–44323–01	OUTER PLATE, CARTRIDGE PLAQUE EXTERIEURE		1				
34	6E5–44315–A0	GASKET, WATER PUMP JOINT, POMPE A EAU		1				
35	93606–12019	PIN, DOWEL GOUPILLE		2				
36	90119–08M14	BOLT, WITH WASHER BOULON, AVEC RONDELLE		4				
37	6E5–45331–00–9S	HOUSING, BEARING FLASQUE, ROULEMENT		1				
38	93101–28M16	OIL SEAL JOINT SPY		2				
39	93317–330U2	BEARING ROULEMENT		1				
40	6E5–45587–01	SHIM (T:0.10MM) CALE (T:0.10MM)		1				UR UR
	6E5–45587–10	SHIM (T:0.12MM) CALE (T:0.12MM)		1				UR UR
	6E5–45587–20	SHIM (T:0.15MM) CALE (T:0.15MM)		1				UR UR
	6E5–45587–30	SHIM (T:0.18MM) CALE (T:0.18MM)		1				UR UR
	6E5–45587–40	SHIM (T:0.30MM) CALE (T:0.30MM)		1				UR UR
	6E5–45587–50	SHIM (T:0.40MM) CALE (T:0.40MM)		1				UR UR
	6E5–45587–60	SHIM (T:0.50MM) CALE (T:0.50MM)		1				UR UR

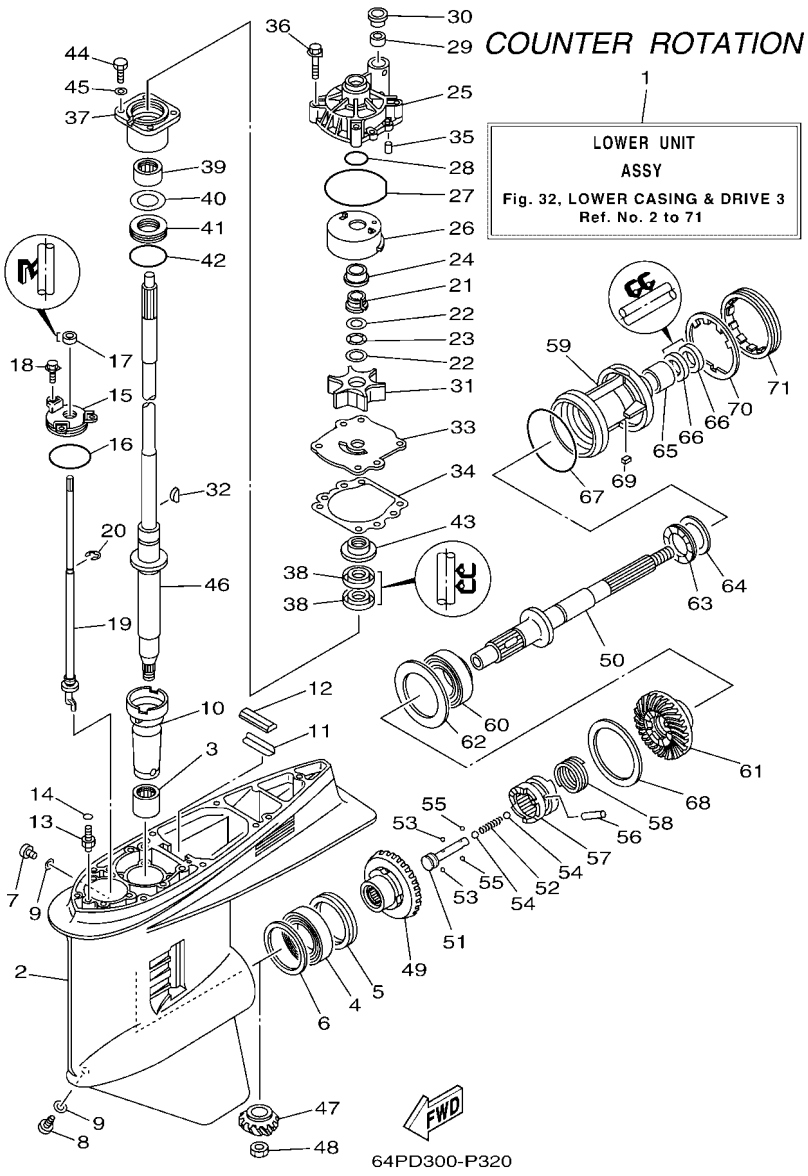

FIG. 32 LOWER CASING & DRIVE 3 — BOITIER D'HELICE TRANSMISSION3

REF. NO.	PART NO. N° PIECES	DESCRIPTION DESCRIPTION	63PD	64PD				REMARKS REMARQUES
41	93341–930V2	BEARING CERVEAUX DE DIRECTION		1				
42	93210–55M14	O-RING JOINT TORIQUE		1				
43	6E5–45344–00	COVER, OIL SEAL FLASQE, JOINT D'HUILE		1				
44	97095–08025	BOLT BOULON		4				
45	92995–08600	WASHER RONDELLE		4				
46	63P–45501–01	DRIVE SHAFT COMP. ARBRE MOTEUR COMP.		1				L(20.3") L(20.3")
	63P–45501–11	DRIVE SHAFT COMP. ARBRE MOTEUR COMP.		1				X(25.3") X(25.3")
47	63P–45551–00	PINION (14T) PIGNON D'ATTAQUE (14D)		1				
48	90170–16M01	NUT ECROU		1				
49	64P–45560–10	GEAR 1 (28T) PIGNON 1 (28T)		1				
50	6K1–45611–10	SHAFT, PROPELLER ARBRE, HELICE		1				
51	6E5–45634–02	SLIDE, SHIFT CONTRE-POUSSOIR		1				
52	90501–16M37	SPRING, COMPRESSION RESSORT, COMPRESSION		1				
53	93507–32009	BALL BILLE		2				
54	93511–32017	BALL BILLES		2				
55	93503–16003	BALL BILLES		2				
56	90250–08M07	PIN, STRAIGHT GOUPILLE, DROITE		1				
57	6DA–45631–00	CLUTCH, DOG CRABOT		1				
58	6E5–45633–01	RING, CROSS PIN JONC, GOUPILLE CRABOT		1				
59	6K1–45332–01–CA	HOUSING, BEARING FLASQUE, ROULEMENT		1				
60	93332–00048	BEARING ROULEMENT		1				
61	64P–45570–10	GEAR 2 (28T) PIGNON 2 (28T)		1				
62	6K1–45576–00	WASHER, THRUST 2 RONDELLE DE CALAGE 2		1				
63	93341–440U5	BEARING CERVEAUX DE DIRECTION		1				
64	6K1–45578–01	SHIM (T:0.10MM) CALE (T:0.10MM)		1				UR UR
	6K1–45578–10	SHIM (T:0.12MM) CALE (T:0.12MM)		1				UR UR
	6K1–45578–20	SHIM (T:0.15MM) CALE (T:0.15MM)		1				UR UR

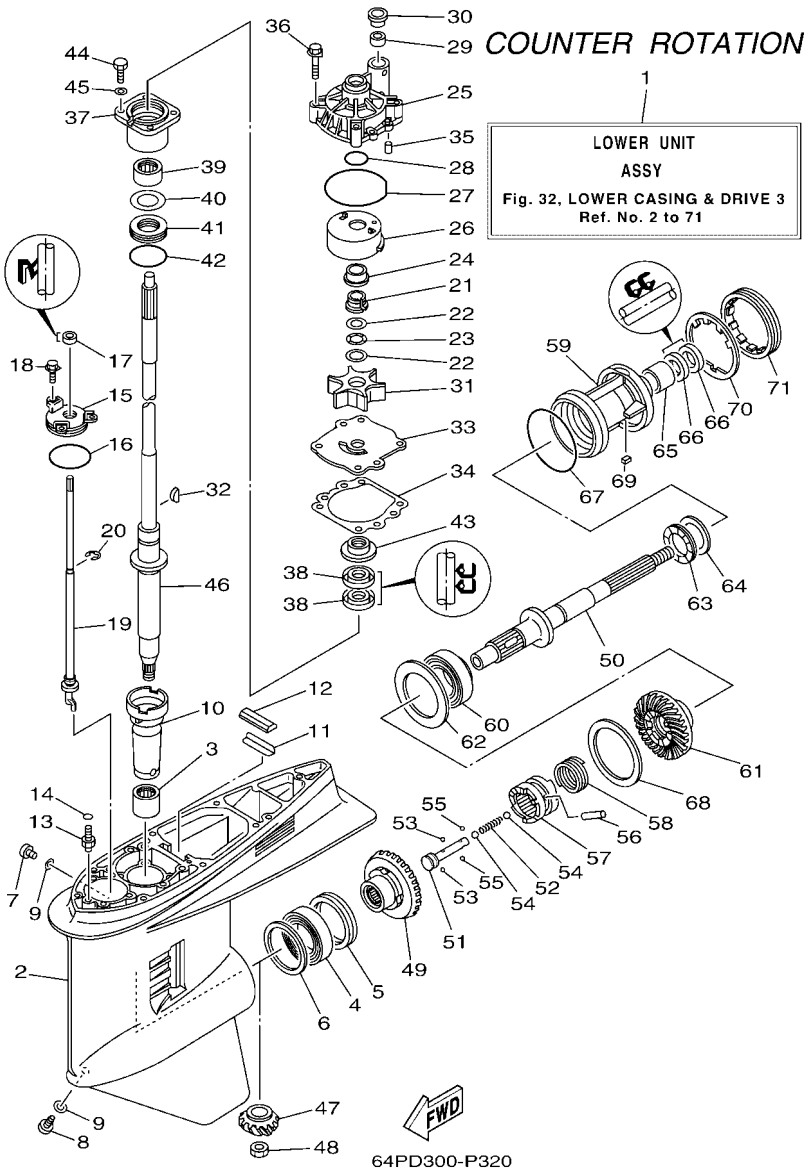

FIG. 32 LOWER CASING & DRIVE 3 — BOITIER D'HELICE TRANSMISSION3

REF. NO.	PART NO. N° PIECES	DESCRIPTION DESCRIPTION	63PD	64PD				REMARKS REMARQUES
64	6K1–45578–30	SHIM (T:0.18MM) CALE (T:0.18MM)		1				UR UR
	6K1–45578–40	SHIM (T:0.30MM) CALE (T:0.30MM)		1				UR UR
	6K1–45578–50	SHIM (T:0.40MM) CALE (T:0.40MM)		1				UR UR
	6K1–45578–60	SHIM (T:0.50MM) CALE (T:0.50MM)		1				UR UR
65	93315–43061	BEARING ROULEMENT		1				
66	93101–30M17	OIL SEAL JOINT SPY		2				
67	93210–97M55	O-RING JOINT TORIQUE		1				
68	6G5–45577–02	SHIM (T:0.10MM) CALE (T:0.10MM)		1				UR UR
	6G5–45577–10	SHIM (T:0.12MM) CALE (T:0.12MM)		1				UR UR
	6G5–45577–20	SHIM (T:0.15MM) CALE (T:0.15MM)		1				UR UR
	6G5–45577–30	SHIM (T:0.18MM) CALE (T:0.18MM)		1				UR UR
	6G5–45577–40	SHIM (T:0.30MM) CALE (T:0.30MM)		1				UR UR
	6G5–45577–50	SHIM (T:0.40MM) CALE (T:0.40MM)		1				UR UR
	6G5–45577–60	SHIM (T:0.50MM) CALE (T:0.50MM)		1				UR UR
69	90282–04M00	KEY, STRAIGHT CLAVETTE, DROITE		1				
70	6G5–45383–01	WASHER, CLAW FREIN D'ECROU		1				
71	6G5–45384–02	NUT ECROU		1				

FIG. 33 LOWER CASING & DRIVE 4 — BOITIER D'HELICE TRANSMISSION4

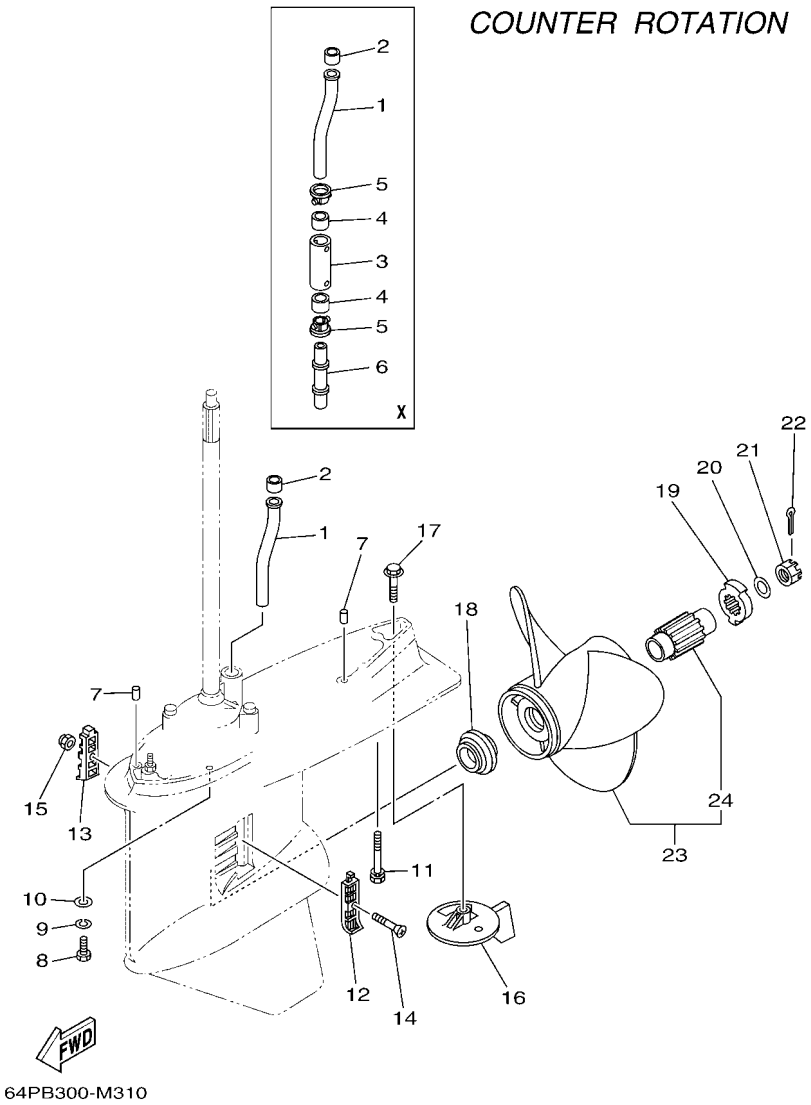

REF. NO.	PART NO. N° PIECES	DESCRIPTION DESCRIPTION	63PD	64PD				REMARKS REMARQUES
1	63P–44361–00	TUBE, WATER 1 TUBE D'EAU 1		1				
2	6E5–44365–00	DAMPER, WATER SEAL 1 JOINT, TUBE D'EAU 1		1				
3	63P–44362–00	TUBE, WATER 2 TUBE D'EAU 2		1				X(25.3") X(25.3")
4	6E5–44365–00	DAMPER, WATER SEAL 1 JOINT, TUBE D'EAU 1		2				X(25.3") X(25.3")
5	6E5–44312–00	COVER, WATER PUMP HOUSING COUVERCLE		2				X(25.3") X(25.3")
6	63P–44363–00	TUBE, WATER 3 TUBE D'EAU 3		1				X(25.3") X(25.3")
7	93608–16M16	PIN, DOWEL AXE		2				
8	97095–10045	BOLT BOULON		6				
9	92995–10100	WASHER RONDELLE		6				
10	92995–10600	WASHER RONDELLE		6				
11	90119–10MA2	BOLT, WITH WASHER BOULON, AVEC RONDELLE		1				L(20.3") L(20.3")
	90119–10008	BOLT, WITH WASHER BOULON, AVEC RONDELLE		1				X(25.3") X(25.3")
12	6J9–45214–00	COVER, WATER INLET 1 GRILLE, ENTREE D'EAU 1		1				
13	6J9–45215–00	COVER, WATER INLET 2 GRILLE, ENTREE D'EAU 2		1				
14	90152–05M08	SCREW, COUNTERSUNK VIS, TETE NOYEE		1				
15	90185–05002	NUT, NYLON ECROU,AUTO-BLOQUANT		1				
16	6K1–45371–02	TAB-TRIM ANODE DERIVE		1				
17	90105–10M00	BOLT, FLANGE BOULON		1				
18	63P–45987–00	SPACER 1 ENTRETOISE 1		1				
19	6CE–45997–00	SPACER 2 ENTRETOISE 2		1				
20	92990–18200	WASHER RONDELLE, PLATE		1				
21	90171–18M04	NUT, CASTLE ECROU, CRENELE		1				
22	91490–40030	PIN. COTTER GOUPILLE		1				
23	68G–45970–10	PROPELLER (3X14-1/2X15-ML) HELICE (3X14-1/2X15-ML)		1				UR SDS PROP. UR SDS PROP.
	68G–45972–10	PROPELLER (3X14-1/4"X17"-ML) HELICE (3X14-1/4"X17"-ML)		1				UR SDS PROP. UR SDS PROP.
	68G–45978–10	PROPELLER (3X14-1/4"X18"-ML) HELICE (3X14-1/4"X18"-ML)		1				UR SDS PROP. UR SDS PROP.
	68G–45974–10	PROPELLER (3X13-3/4"X19"-ML) HELICE (3X13-3/4"X19"-ML)		1				UR SDS PROP. UR SDS PROP.

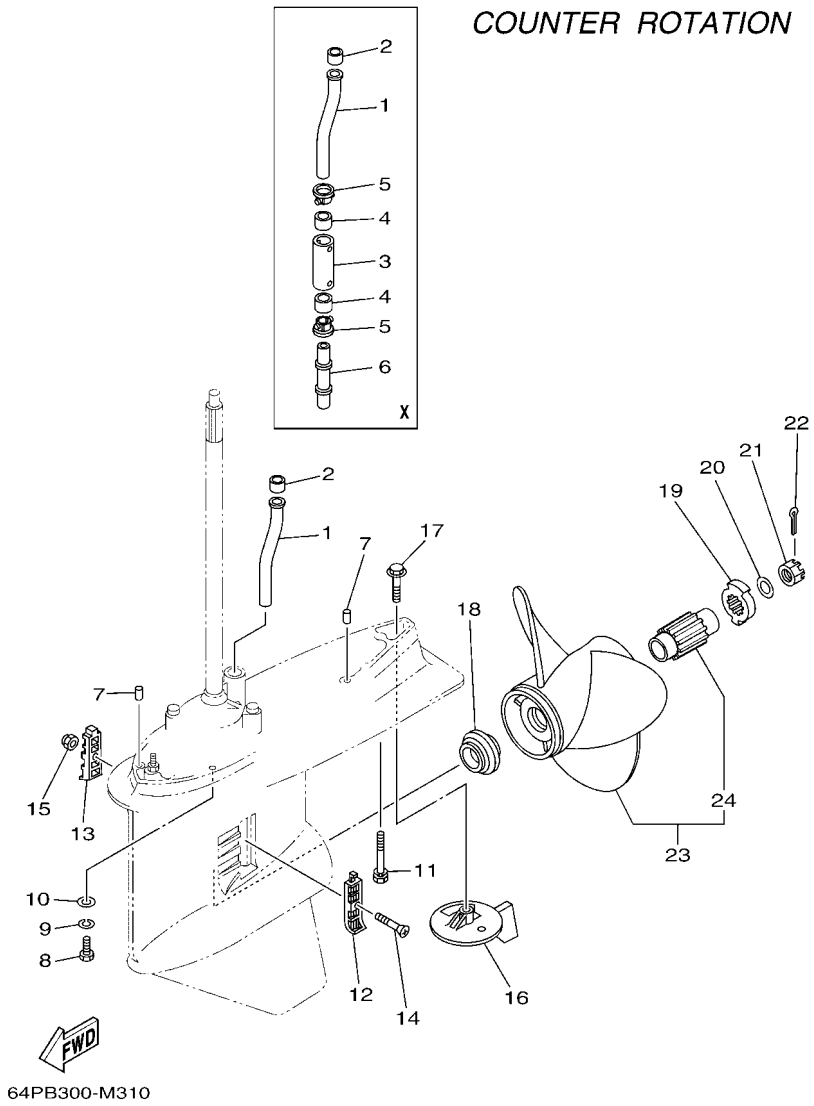

FIG. 33 LOWER CASING & DRIVE 4 BOITIER D'HELICE TRANSMISSION4

REF. NO.	PART NO. N° PIECES	DESCRIPTION DESCRIPTION	63PD	64PD				REMARKS REMARQUES
23	68G–45976–10	PROPELLER (3X13-3/4"X21"-ML) HELICE (3X13-3/4"X21"-ML)		1				UR SDS PROP. UR SDS PROP.
24	6CE–45C81–00	.DAMPER RUBBER, PROPELLER 1 .AMORTISSEUR HELICE 1		1				

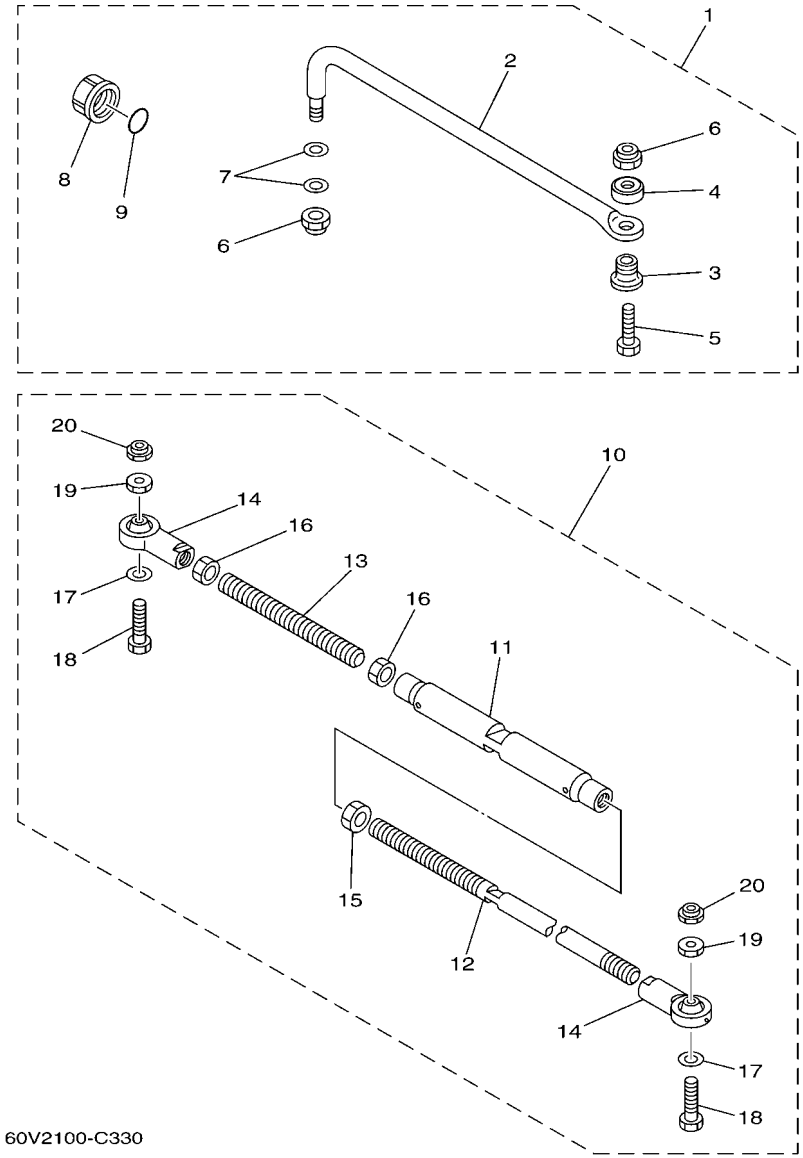

FIG. 34 STEERING GUIDE — FIXATION DE DIRECTION

REF. NO.	PART NO. N° PIECES	DESCRIPTION DESCRIPTION	63PD	64PD				REMARKS REMARQUES
1	6E5–61350–02	STEERING GUIDE ATTACHMENT KIT FIXATIONS DE DIRECTION	1					AP AP
2	6E5–61351–01	.ROD, STEERING LINK .RENVOI DE DIRECTION	1					
3	90387–10M61	.COLLAR .COLLERETTE	1					
4	90560–12M01	.SPACER .ENTRETOISE	1					
5	6E5–61355–00	.BOLT .BOULON	1					
6	90185–09M01	.NUT, SELF-LOCKING .ECROU,AUTO-BLOQUANT	2					
7	90201–10M20	.WASHER, PLATE .RONDELLE, PLATE	2					
8	6E5–43145–01	.CAP, CLAMP BRACKET .CAPUCHON, PRESSE	1					
9	93210–16275	.O-RING .JOINT TORIQUE	1					
10	6E5–61301–01	TWIN KIT (L:600-800MM) JUMELE KIT (L:600-800MM)		1				AP AP
11	6E5–61313–00	.ADJUSTER .TENDEUR		1				
12	6E5–61311–11	.TIE BAR .BARRE D'ACCOUPLEMENT		1				
13	6E5–61315–00	.TIE BAR .BARRE D'ACCOUPLEMENT		1				
14	6E5–61303–00	.STEERING AXLE COMP. .AXLE COMP.		2				
15	90170–14M06	.NUT .ECROU		1				
16	95380–14700	.NUT .ECROU		2				
17	90201–10M76	.WASHER, PLATE .RONDELLE, PLATE		2				
18	90101–09M70	.BOLT .BOULON		2				
19	90170–09M05	.NUT .ECROU		2				
20	90185–09M01	.NUT, SELF-LOCKING .ECROU,AUTO-BLOQUANT		2				

FIG. 35 OPTIONAL PARTS 1 — PIECES OPTIONNELLES 1

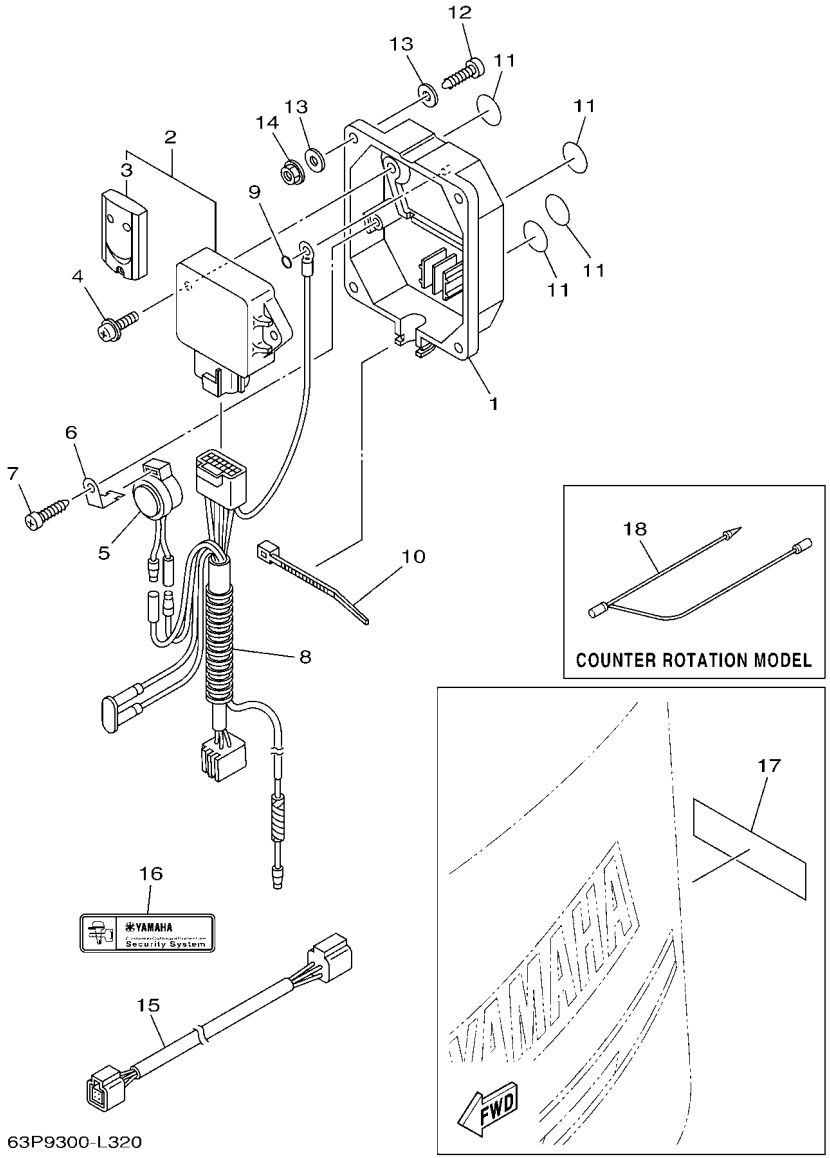

REF. NO.	PART NO. N° PIECES	DESCRIPTION DESCRIPTION	63PD	64PD				REMARKS REMARQUES
1	6Y8–86267–00	CASE COMPLETE 1 CARTER (ENS.) 1	1					
2	6Y8–86260–02	REMOTE CONTROL UNIT ASSY UNITE DE TELECOMMANDE (ENS.)	1					UR FOR EUR UR FOR EUR
	6Y8–86260–12	REMOTE CONTROL UNIT ASSY UNITE DE TELECOMMANDE (ENS.)	1					AP FOR USA/CAN AP FOR USA/CAN
3	6AA–86261–00	.XMTR. COMP. .XMTR. COMP.	2					FOR 6Y8-86260-02 FOR 6Y8-86260-02
	6AA–86261–22	.XMTR. COMP. .XMTR. COMP.	2					FOR 6Y8-86260-12 FOR 6Y8-86260-12
4	97980–06216	SCREW, WITH WASHER VIS, AVEC RONDELLE	2					
5	6X4–83383–00	BUZZER RONFLEUR	1					
6	6X4–83386–00	STAY, BUZZER SUPPOR, RONFLEUR	1					
7	97780–60620	SCREW, TAPPING VIS, TETE BOMBEE	1					
8	6Y8–82509–10	WIRE, SUB LEAD FIL, SECONDAIRE	1					
9	93210–04279	O-RING JOINT TORIQUE	1					
10	90465–11M10	CLAMP BRIDE	1					
11	6Y8–8454G–00	PATCH 1 TAMPON 1	4					
12	90167–06M00	SCREW, TAPPING VIS, TETE FRAISEE	4					UR UR
	97880–06035	SCREW, PAN HEAD VIS, TETE TRONCONIQUE	4					UR UR
13	90201–06M30	WASHER, PLATE RONDELLE, PLATE	8					
14	95780–06300	NUT, FLANGE ECROU	4					
15	6Y8–82521–11	2FT PIGTAIL BUS FAISCEAU (L: 2FT.)	1					
16	6Y8–48277–00	STICKER 1 ETIQUETTE 1	1					UR FOR EUR UR FOR EUR
	6Y8–48277–00	STICKER 1 ETIQUETTE 1	4					AP FOR USA/CAN AP FOR USA/CAN
17	6Y8–48277–00	STICKER 1 ETIQUETTE 1	1	1				
18	6H5–81315–00	LEAD WIRE ASSY FIL		1				

FIG. 36 OPTIONAL PARTS 2 — PIECES OPTIONNELLES 2

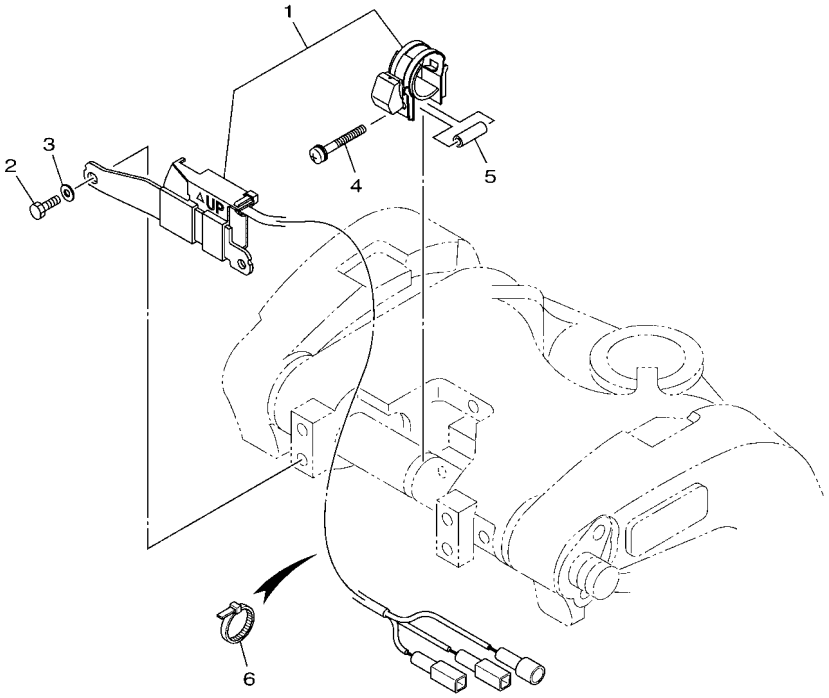

68VB110-L300

REF. NO.	PART NO. N° PIECES	DESCRIPTION DESCRIPTION	63PD	64PD				REMARKS REMARQUES
1	63P–825E0–01	TILT LIMIT SWITCH ASSY COMMUTATEUR, LIMIT INCLINAISON	1	1				
2	97095–06016	BOLT BOULON	2	2				
3	92995–06600	WASHER RONDELLE	2	2				
4	90159–05059	SCREW, WITH WASHER VIS, AVEC RONDELLE	1	1				
5	90387–05004	COLLAR COLLERETTE	1	1				
6	90465–11M10	CLAMP BRIDE	5	5				

FIG. 37 REPAIR KIT 1 — KITS DE REPARATION 1

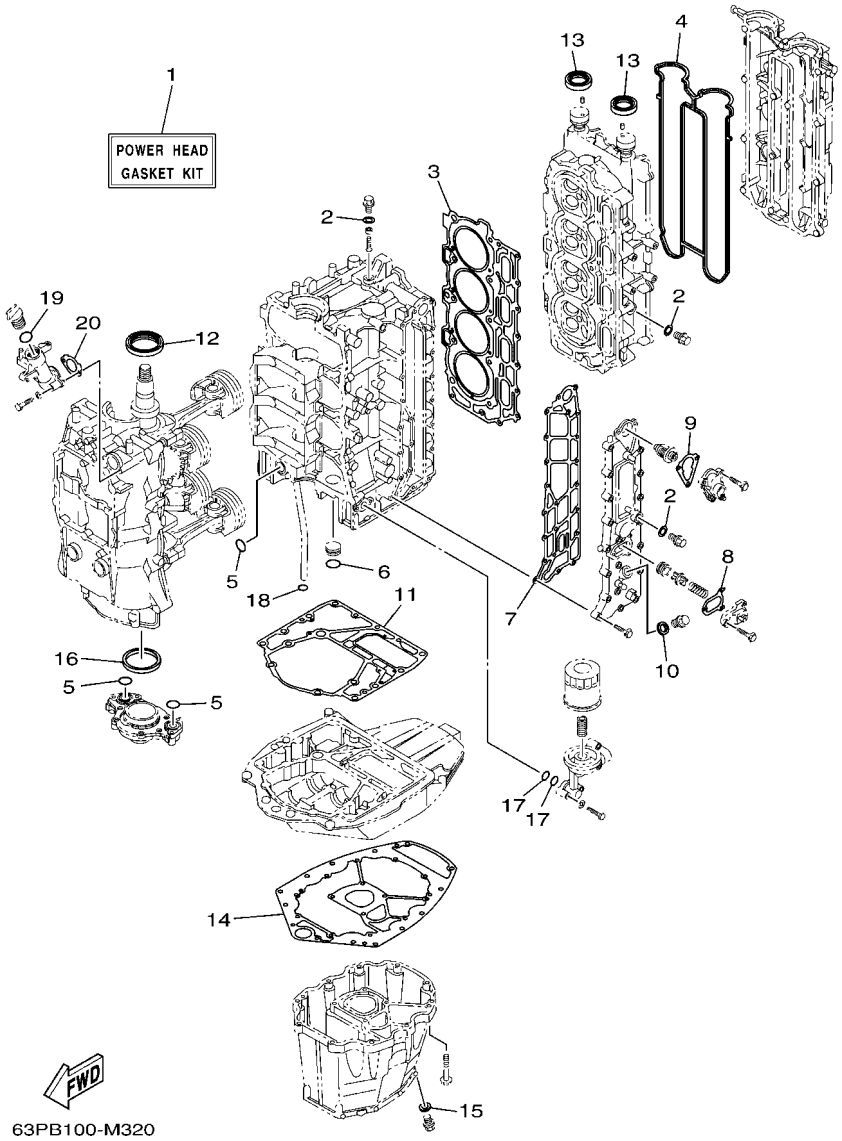

REF. NO.	PART NO. N° PIECES	DESCRIPTION DESCRIPTION	63PD	64PD				REMARKS REMARQUES
1	63P–W0001–04	POWER HEAD GASKET KIT POCHETTE DE JINTS TETE MOTRICE	1	1				
2	90430–14115	.GASKET .JOINT	4	4				
3	63P–11181–00	.GASKET, CYLINDER HEAD 1 .JOINT, DE CULASSE 1	1	1				
4	63P–11193–00	.GASKET, HEAD COVER 1 .JOINT, COUVERCLE DE CULASSE 1	1	1				
5	93210–25552	.O-RING .JOINT TORIQUE	3	3				
6	93210–25647	.O-RING .JOINT TORIQUE	1	1				
7	63P–41114–A2	.GASKET, EXHAUST OUTER COVER .JOINT, COUVERCLE D'ECHAPPEMENT	1	1				
8	67F–12435–A0	.GASKET .JOINT	1	1				
9	63P–12414–00	.GASKET, COVER .JOINT, COUVERCLE	1	1				
10	90201–186F1	.WASHER, PLATE .RONDELLE, PLATE	1	1				
11	63P–11351–02	.GASKET, CYLINDER .JOINT, D'EMBASE	1	1				
12	93102–60004	.OIL SEAL .JOINT SPY	1	1				
13	93102–38008	.OIL SEAL .JOINT SPY	2	2				
14	63P–15312–01	.GASKET, OIL PAN .JOINT DE VENTILATEUR D'HUILE	1	1				
15	90430–14M09	.GASKET .JOINT	1	1				
16	69J–11355–00	.SEAL, CYLINDER 1 .JOINT, SPY CYLINDRE	1	1				
17	93210–19MJ1	.O-RING .JOINT TORIQUE	2	2				
18	93210–19MJ3	.O-RING .JOINT TORIQUE	1	1				
19	93210–24M79	.O-RING .JOINT TORIQUE	1	1				
20	63P–15364–A0	.GASKET, OIL PLUG .JOINT, PLOT D'HUILE	1	1				

FIG. 38 REPAIR KIT 2 — KITS DE REPARATION 2

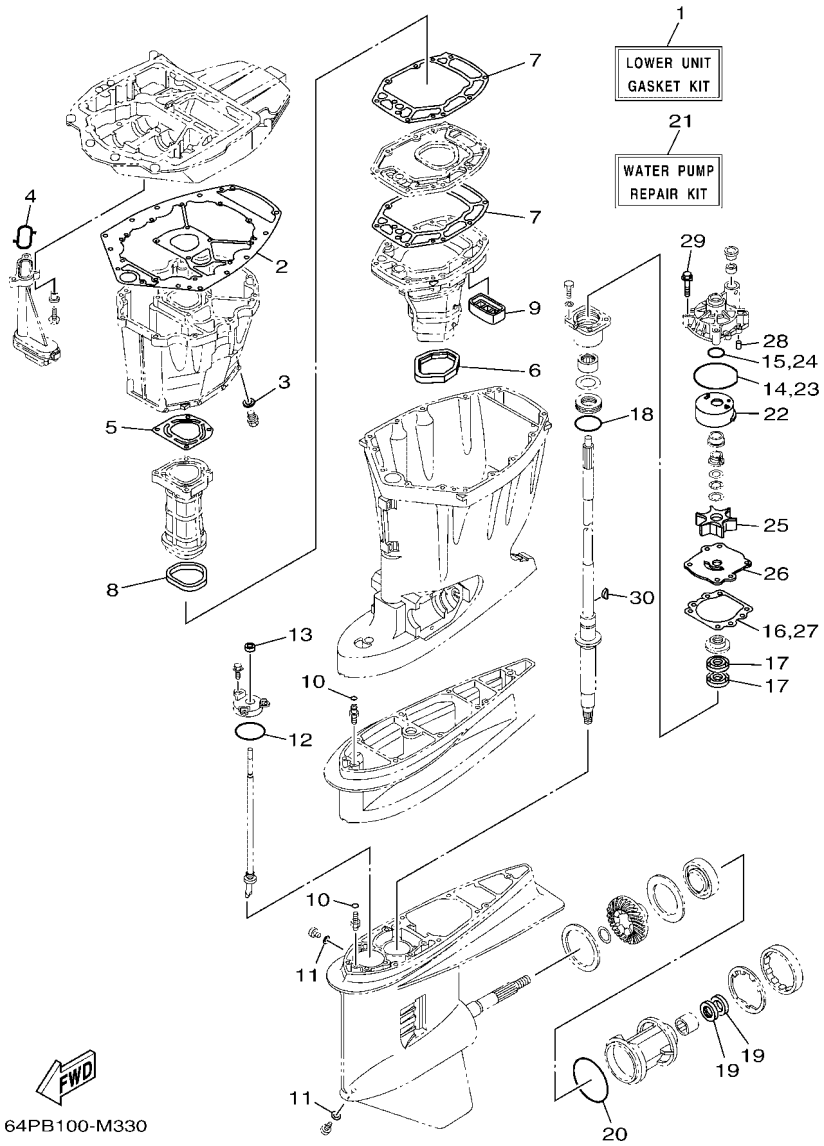

REF. NO.	PART NO. N° PIECES	DESCRIPTION DESCRIPTION	63PD	64PD				REMARKS REMARQUES
1	63P–W0001–21	LOWER UNIT GASKET KIT POCHETTE DE JOINTS EMBASE	1	1				
2	63P–15312–01	.GASKET, OIL PAN .JOINT DE VENTILATEUR D'HUILE	1	1				
3	90430–14M09	.GASKET .JOINT	1	1				
4	63P–13415–00	.SEAL, OIL STRAINER .JOINT, FILTRE A HUILE	1	1				
5	63P–41133–A0	.GASKET, EXHAUST MANIFOLD 1 .JOINT, PIPE D'ECHAPPEMENT	1	1				
6	69J–45123–00	.GASKET, MUFFLER .JOINT, POT DE DETENTE	1	1				
7	63P–41134–A1	.GASKET, EXHAUST MANIFOLD .JOINT, PIPE D'ECHAPPEMENT	2	2				
8	63P–41138–00	.SEAL, EXT. 1 .JOINT DE GROUPE 1	1	1				
9	69J–45127–00	.SEAL .JOINT	1	1				
10	93210–07003	.O-RING .JOINT TORIQUE	2	2				
11	90430–08020	.GASKET .JOINT	2	2				
12	93210–58144	.O-RING .JOINT TORIQUE	1	1				
13	93106–09014	.OIL SEAL .JOINT SPY	1	1				
14	93210–86M38	.O-RING .JOINT TORIQUE	1	1				
15	93210–37160	.O-RING .JOINT TORIQUE	1	1				
16	6E5–44315–A0	.GASKET, WATER PUMP .JOINT, POMPE A EAU	1	1				
17	93101–28M16	.OIL SEAL .JOINT SPY	2	2				
18	93210–55M14	.O-RING .JOINT TORIQUE	1	1				
19	93101–30M17	.OIL SEAL .JOINT SPY	2	2				
20	93210–97M55	.O-RING .JOINT TORIQUE	1	1				
21	61A–W0078–A3	WATER PUMP REPAIR KIT KIT DE REPARATION DE LA POMPE	1	1				
22	61A–44322–02	.INSERT, CARTRIDGE .CUVETTE	1	1				
23	93210–86M38	.O-RING .JOINT TORIQUE	1	1				
24	93210–37160	.O-RING .JOINT TORIQUE	1	1				
25	6E5–44352–01	.IMPELLER .TURBINE	1	1				
26	6G5–44323–01	.OUTER PLATE, CARTRIDGE .PLAQUE EXTERIEURE	1	1				
27	6E5–44315–A0	.GASKET, WATER PUMP .JOINT, POMPE A EAU	1	1				

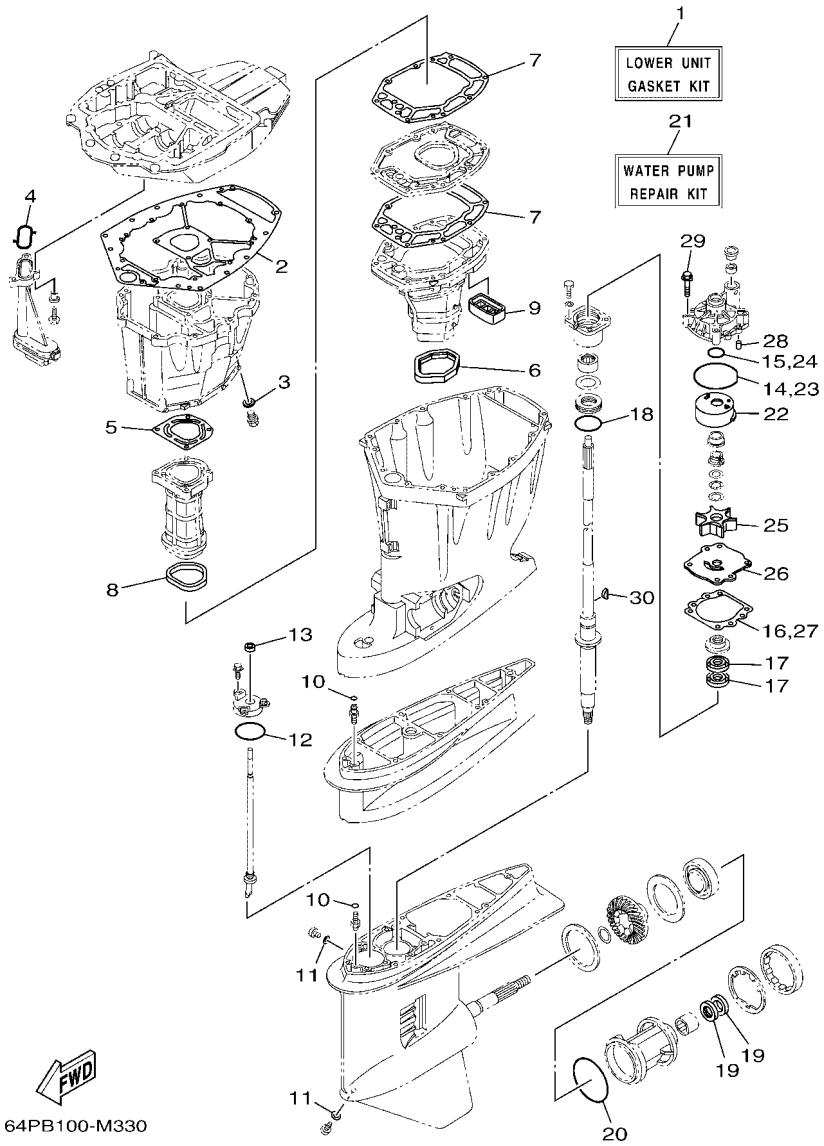

FIG. 38 REPAIR KIT 2 — KITS DE REPARATION 2

REF. NO.	PART NO. N° PIECES	DESCRIPTION DESCRIPTION	63PD	64PD				REMARKS REMARQUES
28	93606–12019	.PIN, DOWEL .GOUPILLE	2	2				
29	90119–08M14	.BOLT, WITH WASHER .BOULON, AVEC RONDELLE	4	4				
30	90280–04M05	.KEY, WOODRUFF .CLAVETTE, DEMI-LUNE	1	1				

NUMERICAL INDEX
INDEX NUMERIQUE

PART NO. N° PIECES	REF. NO.
63P–11110–11–9S	5 – 2
63P–11119–00	3 – 22
63P–11119–10	3 – 23
6DA–11133–10	5 – 3
63P–11135–00	5 – 21
63P–11181–00	5 – 16
	37 – 3
63P–11191–00–9S	5 – 20
63P–11192–01	5 – 26
63P–11193–00	5 – 24
	37 – 4
63P–11197–A0	3 – 10
69J–11301–00	5 – 10
	6 – 12
68T–11325–00	1 – 6
	6 – 2
63P–11325–01	1 – 3
	3 – 20
67F–11325–01	1 – 4
	1 – 7
	5 – 11
	6 – 13
63P–11325–11	1 – 2
	3 – 14
63P–11325–21	1 – 1
	3 – 11
67F–11328–00	5 – 12
	6 – 14
63P–11351–02	3 – 25
	37 – 11
69J–11355–00	29 – 16
	37 – 16
63P–11372–00	3 – 4
63P–11377–10	3 – 30
63P–11410–03	4 – 1
63P–11416–31	4 – 4
63P–11416–41	4 – 4
63P–11416–51	4 – 4
63P–11417–41	4 – 5
63P–11417–51	4 – 5
63P–11417–61	4 – 5
63P–11417–71	4 – 5
63P–11417–81	4 – 5
63P–11426–31	4 – 6
63P–11426–41	4 – 6
63P–11426–51	4 – 6
6CB–11478–00	4 – 2
63P–11500–04	3 – 26

PART NO. N° PIECES	REF. NO.
63P–11512–00	3 – 29
63P–11536–01	7 – 20
63P–11537–00	7 – 12
63P–11590–10	7 – 16
63P–11603–01	4 – 11
63P–11604–00	4 – 11
63P–11631–10–93	4 – 10
63P–11633–10	4 – 12
63P–11634–00	4 – 13
63P–11635–10	4 – 10
63P–11654–10	4 – 8
63P–11656–30	4 – 9
63P–11656–40	4 – 9
63P–11656–50	4 – 9
63P–12111–00	7 – 1
6CB–12113–00	7 – 4
51Y–12119–00	7 – 7
63P–12121–00	7 – 2
63P–12171–10	7 – 9
63P–12181–10	7 – 10
63P–1240H–01–9S	6 – 20
67F–12411–01	1 – 8
	6 – 18
67F–12412–00	6 – 19
63P–12414–00	1 – 9
	6 – 21
	37 – 9
6G5–12416–00	6 – 6
67F–12435–A0	6 – 10
	37 – 8
63P–1243A–00	6 – 25
67F–1246A–A0–9S	6 – 9
6AW–12572–00	22 – 11
6R3–12581–00	22 – 12
6R3–12582–00	22 – 13
6R3–12583–00	22 – 14
6S5–12858–00	6 – 30
6AW–13119–00	29 – 14
63P–1312A–01	10 – 25
63P–13131–00	13 – 22
63P–13160–10	12 – 6
63P–13300–02	29 – 12
63P–13329–00	29 – 13
63P–13411–00	29 – 8
63P–13415–00	29 – 10
	38 – 4
63P–13437–62	15 – 26
69J–13440–03	1 – 10

PART NO. N° PIECES	REF. NO.
69J–13440–03	6 – 29
63P–13446–00–9S	6 – 31
63P–13490–00	3 – 34
63P–13532–10	12 – 5
63P–13545–00	12 – 4
63P–13546–00	12 – 3
63P–13557–00	10 – 19
63P–13564–00	8 – 17
63P–13573–00	11 – 27
68V–13577–00	12 – 14
6BM–13593–00	11 – 24
69J–13631–00	29 – 15
63P–13641–10	10 – 12
63P–13643–00	10 – 21
63P–13645–00	10 – 15
63P–13716–00	11 – 23
63P–13751–20	10 – 2
6P2–13758–00	12 – 17
63P–13761–01	10 – 22
68V–13766–00	10 – 24
68V–13781–20	11 – 13
63P–13784–00	11 – 18
63P–13882–00	11 – 28
63P–13906–00	11 – 9
63P–13907–03	11 – 17
63P–13915–00	1 – 12
	11 – 19
63P–13971–10	12 – 2
63P–13974–40	12 – 7
63P–13975–40	12 – 16
63P–13975–50	12 – 16
63P–13976–40	12 – 8
63P–13976–50	12 – 8
63P–14148–00	11 – 20
63P–14149–00	12 – 1
68V–1416A–00	10 – 23
63P–14180–20	11 – 1
63P–14181–20	11 – 6
63P–14182–20	11 – 2
63P–14191–00	11 – 7
63P–14200–60	10 – 1
63P–14200–90	10 – 1
63P–14291–00	10 – 11
63P–14292–00	10 – 29
69J–14321–00	10 – 3
68V–14323–00	10 – 5
68V–14331–00	10 – 4
68V–14356–00	10 – 9

PART NO. N° PIECES	REF. NO.
68V–14386–00	11 – 15
63P–14435–00	18 – 15
63P–14440–00	8 – 10
6P2–14446–00	10 – 20
63P–14449–00	8 – 11
63P–14457–00	8 – 12
63P–14496–00	10 – 13
63P–14546–00	11 – 14
63P–14565–00	11 – 10
68V–14565–00	10 – 10
63P–14567–00	11 – 11
69J–14624–01	28 – 25
63P–14711–01–9S	28 – 12
63P–14984–00	1 – 11
	11 – 12
63P–14985–00	11 – 16
63P–15311–02–CA	29 – 2
63P–15312–01	29 – 1
	37 – 14
	38 – 2
63P–15316–00	29 – 5
63P–15319–00–9S	6 – 36
63P–15362–10	29 – 20
6G8–15363–00	6 – 34
63P–15364–A0	6 – 37
	37 – 20
63P–15373–00	8 – 5
63P–15377–10	29 – 21
63P–15378–00	8 – 8
63P–2134X–00	9 – 2
63P–21841–10	11 – 26
63P–2247B–10	12 – 11
68V–2411M–00	12 – 9
63P–2411R–00	11 – 4
63P–2411T–00	11 – 5
68V–24149–00	13 – 29
6P2–24170–00	9 – 1
63P–2419A–01	9 – 3
6AW–24300–00	12 – 21
6YK–24307–42	14 – 1
64P–24311–10	9 – 11
63P–24311–20	13 – 17
63P–24311–30	13 – 17
64P–24312–00	9 – 10
63P–24312–10	13 – 33
63P–24312–20	13 – 33
64P–24313–00	9 – 8
63P–24313–10	13 – 34

PART NO. N° PIECES	REF. NO.
63P–24313–20	13 – 34
63P–24314–00	13 – 31
63P–24314–10	13 – 31
64P–24314–10	9 – 18
63P–24315–00	13 – 32
64P–24315–00	9 – 13
63P–24315–10	13 – 32
64P–24316–10	9 – 14
63P–24316–30	13 – 4
63P–24316–40	13 – 4
63P–24317–30	12 – 10
63P–24317–40	12 – 10
63P–24325–40	12 – 13
63P–24325–50	12 – 13
6E5–24351–51	13 – 3
6YK–24360–73	14 – 2
63P–24364–01	9 – 20
63P–24367–01	9 – 12
68V–24374–00	13 – 25
6AW–24377–01	13 – 2
6E5–24378–00	13 – 30
69J–24379–00	11 – 21
6E5–24379–00	9 – 22
63P–24410–20	13 – 19
68V–24411–00	13 – 24
68V–24412–00	13 – 20
63P–24413–00	13 – 26
63P–24414–00	13 – 27
63P–24423–00	13 – 23
68V–24444–00	13 – 28
4SV–24453–00	11 – 3
	11 – 8
68V–24454–00	13 – 21
6P3–24469–00	13 – 8
68V–24471–10	13 – 42
69J–24501–10	1 – 13
	12 – 15
69J–24502–00	9 – 9
63P–24519–00	12 – 22
68V–24519–00	12 – 12
6P3–24519–00	13 – 9
6P3–24560–03	13 – 5
6P3–24562–03	13 – 7
6P3–24563–01	1 – 14
	13 – 6
6P3–24564–00	1 – 15
	13 – 10
63P–24566–00	13 – 11

PART NO. N° PIECES	REF. NO.
68V–2481H–00	12 – 18
67F–28100–01	13 – 39
67F–2812A–00	17 – 32
63P–28199–7F–D0	13 – 40
63P–28199–7F–E0	13 – 40
63P–28199–7F–F0	13 – 40
63P–28199–7F–G0	13 – 40
63P–28199–7F–H0	13 – 40
63P–28199–7F–S0	13 – 40
63P–28199–8F–K0	13 – 41
63P–28199–8F–L0	13 – 41
63P–28199–8F–M0	13 – 41
63P–28199–8F–N0	13 – 41
63P–28199–8F–P0	13 – 41
63P–28199–8F–R0	13 – 41
63P–41113–04–9S	6 – 1
63P–41114–A2	6 – 4
	37 – 7
63P–41131–01–9S	28 – 9
63P–41133–A0	28 – 10
	38 – 5
63P–41134–A1	28 – 16
	38 – 7
63P–41137–04–CA	28 – 1
63P–41138–00	28 – 18
	38 – 8
63P–41213–00	23 – 42
63P–41237–00	23 – 48
6H4–41237–00	10 – 16
682–41238–01	10 – 18
63P–42154–10	23 – 37
63P–42157–00	23 – 49
68V–42171–00	23 – 50
6BG–42384–00	22 – 9
6DA–42384–00	21 – 23
6DA–42510–10–8D	25 – 9
63P–42541–10	22 – 15
63P–42610–70	2 – 1
6DA–42613–00	2 – 3
63P–42615–10	21 – 5
6DA–42617–00	15 – 25
63P–4261A–10	2 – 2
6CB–42628–00	2 – 15
60V–42629–00	19 – 7
6CB–42647–A0	2 – 5
6AW–42663–00	2 – 11
6DA–42675–00	2 – 17
6DA–42676–00	2 – 18

NUMERICAL INDEX
INDEX NUMERIQUE

PART NO. N° PIECES	REF. NO.
63P–42677–60	2 – 19
63P–42678–60	2 – 16
63P–42681–20	2 – 20
6DA–42697–00	2 – 14
63P–42710–10–8D	21 – 1
648–42715–00	23 – 28
63P–42716–00	21 – 6
6DA–42717–00	21 – 22
69J–42723–01	18 – 18
6E5–42724–00	28 – 7
6DA–42725–00	21 – 2
6H1–42726–21	22 – 8
61A–42727–00	21 – 26
6DA–42741–10–8D	22 – 1
6H4–42748–00	21 – 24
68F–42753–00	21 – 27
63P–42756–00	22 – 18
6CB–42761–00	21 – 3
6DA–42769–00	28 – 8
6EE–42794–40	21 – 29
6EE–42794–50	21 – 30
63P–42815–10–8D	21 – 7
6DA–42816–01–8D	21 – 8
6DA–42817–01–8D	21 – 9
6CB–42818–00	21 – 13
6CB–42819–00	21 – 14
64E–43111–02–8D	24 – 1
64E–43112–02–8D	24 – 7
64E–43126–10	24 – 37
64E–43131–30	24 – 12
64E–43139–10	25 – 1
66T–43144–00	21 – 17
6G5–43144–00	24 – 27
6E5–43145–01	34 – 8
6G5–43148–00	24 – 32
6G5–43181–02	24 – 29
6G5–43185–02	24 – 30
64E–43311–10–8D	24 – 23
63P–43338–10	26 – 58
63P–43376–00	25 – 6
63P–43800–11	26 – 1
63P–43801–10	26 – 4
63P–43802–10	26 – 38
63P–43804–10	27 – 3
63P–43805–10	27 – 2
63P–4380F–10	27 – 6
63P–4380L–10	26 – 2
63P–4380P–10	26 – 9

PART NO. N° PIECES	REF. NO.
63P–43810–10	26 – 3
63P–43811–10	26 – 6
63P–43814–10	26 – 13
6CJ–43816–00	26 – 59
63P–43816–10	26 – 17
6BC–43818–00	24 – 21
63P–4381J–10	26 – 60
63P–43820–10	26 – 25
63P–43821–10	26 – 24
6H1–43822–10	26 – 22
63P–43828–10	26 – 28
63P–43829–10	26 – 20
63P–4382A–10	26 – 31
63P–43830–10	26 – 43
69J–43831–00	26 – 65
6H1–43841–11	26 – 37
63P–43843–10	26 – 48
6CJ–43844–00	26 – 53
6H1–43844–10	26 – 47
63P–43845–10	26 – 34
63P–43847–10	26 – 29
63P–4384G–10	26 – 67
6H1–4384G–11	26 – 45
63P–4384H–10	26 – 32
63P–43851–10	26 – 51
63P–43854–10	26 – 30
69J–43855–00	26 – 50
6H1–43856–10	26 – 46
63P–43857–10	26 – 73
63P–4385H–10	26 – 66
6H1–43861–00	26 – 7
6H1–43862–00	26 – 10
	26 – 14
63P–43862–10	26 – 23
63P–43863–10	26 – 8
6H1–43866–01	26 – 40
65W–4386A–00	26 – 72
688–4386F–00	26 – 74
62X–4386K–00	27 – 7
62X–43871–00	26 – 26
62Y–43871–00	26 – 61
6H1–43875–00	26 – 36
63P–43875–10	26 – 21
63P–43876–10	26 – 16
61A–43878–00	26 – 70
63P–43879–10	27 – 8
63P–43880–11	27 – 1
63P–43881–11	27 – 10

PART NO. N° PIECES	REF. NO.
63P–4388H–10	26 – 68
63P–43892–10	27 – 4
69J–43899–01	26 – 62
63P–43899–10	26 – 69
69J–4389J–00	26 – 33
63P–44117–01	23 – 8
63P–44118–00	23 – 23
6DA–44120–11	23 – 18
6DA–44121–00	23 – 16
63P–44122–00	23 – 13
69J–44135–00	23 – 43
63P–44150–01	30 – 18
64P–44150–01	32 – 19
63P–44150–11	30 – 18
64P–44150–11	32 – 19
6DA–44176–00	23 – 7
61A–44311–01	30 – 24
	32 – 25
6E5–44312–00	30 – 29
	31 – 5
	32 – 30
	33 – 5
6E5–44315–A0	30 – 33
	32 – 34
	38 – 16
	38 – 27
61A–44322–02	30 – 25
	32 – 26
	38 – 22
6G5–44323–01	30 – 32
	32 – 33
	38 – 26
6E5–44352–01	30 – 30
	32 – 31
	38 – 25
63P–44361–00	31 – 1
	33 – 1
63P–44362–00	31 – 3
	33 – 3
63P–44363–00	31 – 6
	33 – 6
6E5–44365–00	30 – 28
	31 – 2
	31 – 4
	32 – 29
	33 – 2
	33 – 4
6E5–44366–00	28 – 27

PART NO. N° PIECES	REF. NO.
6P2–44391–00	21 – 25
63P–44511–00	25 – 37
6DA–44514–00	25 – 29
6DA–44526–00	25 – 33
6G5–44526–00	24 – 3
6DA–44532–00	25 – 34
69J–44533–00	25 – 23
68V–44551–00–8D	25 – 14
63P–44553–00–8D	25 – 26
60V–44555–00	25 – 17
63P–44555–00	25 – 17
63P–44556–00–8D	25 – 27
61A–44575–00	25 – 16
63P–45111–00–8D	28 – 20
69J–45123–00	28 – 13
	38 – 6
69J–45127–00	28 – 19
	38 – 9
6C5–45155–00	28 – 28
63P–45181–01–9S	28 – 17
63P–45211–00–8D	28 – 34
6J9–45214–00	31 – 12
	33 – 12
6J9–45215–00	31 – 13
	33 – 13
6G5–45251–02	1 – 16
	24 – 2
64P–45300–03–8D	32 – 1
63P–45300–04–8D	30 – 1
64P–45300–13–8D	32 – 1
63P–45300–14–8D	30 – 1
6J9–45301–07–8D	30 – 2
	32 – 2
6E5–45318–00	28 – 23
6E5–45321–00	30 – 14
	32 – 15
6E5–45331–00–9S	30 – 36
	32 – 37
6J9–45332–00–CA	30 – 58
6K1–45332–01–CA	32 – 59
688–45341–10	30 – 7
	32 – 8
6E5–45344–00	30 – 42
	32 – 43
6J9–45371–01	1 – 19
	31 – 16
6K1–45371–02	1 – 19
	33 – 16

PART NO. N° PIECES	REF. NO.
688–45375–00	30 – 11
	32 – 12
663–45376–00	30 – 10
	32 – 11
63P–45378–00	28 – 35
	30 – 12
	32 – 13
63P–45379–00	28 – 32
6G5–45383–01	30 – 68
	32 – 70
6G5–45384–02	30 – 69
	32 – 71
63P–45501–01	30 – 45
	32 – 46
63P–45501–11	30 – 45
	32 – 46
61A–45527–00	30 – 23
	32 – 24
6G5–45536–01	30 – 9
	32 – 10
61A–45538–00	30 – 20
	32 – 21
63P–45551–00	30 – 46
	32 – 47
6EH–45560–00	30 – 48
64P–45560–10	32 – 49
6G5–45567–01	30 – 5
	32 – 6
6G5–45567–10	30 – 5
	32 – 6
6G5–45567–20	30 – 5
	32 – 6
6G5–45567–30	30 – 5
	32 – 6
6G5–45567–40	30 – 5
	32 – 6
6G5–45567–50	30 – 5
	32 – 6
6G5–45567–60	30 – 5
	32 – 6
64P–45570–10	32 – 61
6EH–45571–00	30 – 60
6K1–45576–00	32 – 62
6G5–45576–10	30 – 61
6G5–45577–02	30 – 65
	32 – 68
6G5–45577–10	30 – 65
	32 – 68

PART NO. N° PIECES	REF. NO.
6G5–45577–20	30 – 65
	32 – 68
6G5–45577–30	30 – 65
	32 – 68
6G5–45577–40	30 – 65
	32 – 68
6G5–45577–50	30 – 65
	32 – 68
6G5–45577–60	30 – 65
	32 – 68
6K1–45578–01	32 – 64
6K1–45578–10	32 – 64
6K1–45578–20	32 – 64
6K1–45578–30	32 – 64
6K1–45578–40	32 – 64
6K1–45578–50	32 – 64
6K1–45578–60	32 – 64
6E5–45587–01	30 – 39
	32 – 40
6E5–45587–10	30 – 39
	32 – 40
6E5–45587–20	30 – 39
	32 – 40
6E5–45587–30	30 – 39
	32 – 40
6E5–45587–40	30 – 39
	32 – 40
6E5–45587–50	30 – 39
	32 – 40
6E5–45587–60	30 – 39
	32 – 40
6J9–45611–01	30 – 49
6K1–45611–10	32 – 50
6DA–45631–00	30 – 56
	32 – 57
6E5–45633–01	30 – 57
	32 – 58
6E5–45634–02	30 – 50
	32 – 51
68F–45970–10	31 – 23
68G–45970–10	33 – 23
68F–45972–10	31 – 23
68G–45972–10	33 – 23
68F–45974–10	31 – 23
68G–45974–10	33 – 23
68F–45976–10	31 – 23
68G–45976–10	33 – 23
68F–45978–10	31 – 23

NUMERICAL INDEX
INDEX NUMERIQUE

PART NO. N° PIECES	REF. NO.
68G–45978–10	33 – 23
63P–45987–00	31 – 18
	33 – 18
6CE–45997–00	31 – 19
	33 – 19
6CE–45C81–00	31 – 24
	33 – 24
63P–46241–00	7 – 15
6Y8–48277–00	35 – 16
	35 – 16
	35 – 17
6E5–48344–00	23 – 5
	23 – 35
63P–48531–10	23 – 1
6E5–48538–00	23 – 3
6E5–61301–01	34 – 10
6E5–61303–00	34 – 14
6E5–61311–11	34 – 12
6E5–61313–00	34 – 11
6E5–61315–00	34 – 13
6E5–61350–02	34 – 1
6E5–61351–01	34 – 2
6E5–61355–00	34 – 5
68V–81145–01	10 – 7
68V–81146–01	10 – 26
68V–81147–00	10 – 28
6H5–81315–00	35 – 18
63P–8132G–10	15 – 22
6P2–81332–00	15 – 15
63P–81336–00	17 – 34
63P–81337–10	15 – 17
63D–81345–20	15 – 5
63P–81410–00	15 – 4
63P–81450–00	15 – 1
63P–81460–00	15 – 2
63P–81673–01	15 – 6
6BR–81800–01	20 – 1
69J–81801–00	20 – 5
67F–81807–00	20 – 10
67F–81808–00	20 – 8
67F–81809–00	20 – 19
67F–81810–00	20 – 3
67F–81813–00	20 – 6
67F–81820–00	20 – 7
67F–81821–00	20 – 13
6K7–81826–11	20 – 24
69J–81828–00	20 – 25
68V–8182L–00	10 – 8

PART NO. N° PIECES	REF. NO.
67F–81830–00	20 – 17
67F–81832–00	20 – 11
67F–81836–00	20 – 12
6C5–81839–00	20 – 21
67F–8183R–00	20 – 15
60V–8183T–00	20 – 18
69J–81840–00	20 – 4
67F–81841–00	20 – 14
69J–81842–00	20 – 20
63P–81845–00	15 – 11
63P–81845–20	9 – 17
67F–81846–00	20 – 26
67F–81850–00	20 – 2
67F–81857–00	20 – 9
6C5–81869–00	20 – 23
67F–81891–00	20 – 16
63P–81919–00	17 – 35
60V–81925–00	20 – 28
63P–81941–00	20 – 22
63P–81942–00	17 – 22
63P–81948–00	17 – 13
68V–8194A–00	17 – 4
63P–81950–00	17 – 9
68V–81953–00	17 – 5
6AW–8195A–00	17 – 26
63P–81960–01	16 – 20
63P–81975–00	16 – 22
6EE–81994–40	15 – 27
6EE–81994–50	15 – 28
6AH–81996–00	21 – 31
6DA–82105–01	18 – 30
6G5–82119–00	17 – 8
6E5–82148–00	24 – 5
	24 – 8
66K–82149–00	24 – 26
63P–82151–00	17 – 25
67F–82151–00	17 – 27
67F–82151–10	17 – 28
63P–82170–02	17 – 24
68F–82176–00	17 – 33
63P–82181–10	27 – 5
63P–82310–01	16 – 1
63P–82314–00	16 – 17
6A0–82317–00	15 – 18
67F–82361–00	16 – 4
	16 – 10
67F–82362–00	16 – 5
	16 – 9

PART NO. N° PIECES	REF. NO.
63P–82380–00	10 – 27
63P–82388–00	16 – 15
6Y8–82509–10	35 – 8
6Y8–82521–11	35 – 15
6P2–82560–01	18 – 22
69J–82563–01	18 – 17
68F–82582–00	20 – 29
6DA–82582–00	18 – 2
6DA–82582–10	18 – 3
6Y8–82582–11	18 – 4
69J–82587–00	18 – 19
63P–82588–00	3 – 35
6E9–82588–00	18 – 23
61A–82588–01	23 – 10
63P–82590–A0	18 – 1
60V–8259F–00	23 – 31
69J–8259F–00	23 – 9
63P–8259L–00	11 – 25
63P–8259M–00	18 – 7
63P–825E0–01	36 – 1
68F–82846–00	17 – 29
6X4–83383–00	35 – 5
6X4–83386–00	35 – 6
6E5–83558–00	28 – 29
63P–83614–01	18 – 20
63P–83626–00	5 – 28
6AW–83651–00	18 – 16
6AW–8366B–01	19 – 1
60V–8366D–00	19 – 2
63P–8366G–00	22 – 21
63P–8366P–01	18 – 25
67H–83672–01	25 – 3
6Y8–8454G–00	35 – 11
68F–85119–00	17 – 16
68F–85516–01	17 – 14
60V–85544–00	17 – 31
689–85547–00	13 – 1
68V–85548–00	17 – 20
63P–85580–00	15 – 3
61A–85790–00	18 – 12
6S1–85885–00	10 – 6
63P–85886–00	18 – 14
63P–8591A–65	17 – 1
6C5–86120–00	9 – 15
6Y8–86260–02	35 – 2
6Y8–86260–12	35 – 2
6AA–86261–00	35 – 3
6AA–86261–22	35 – 3

PART NO. N° PIECES	REF. NO.
6Y8–86267–00	35 – 1
K0F–A3741–00	7 – 5
K0F–A3742–00	7 – 6
K0F–A3743–00	7 – 3
K0F–A3751–00	7 – 8
K0F–A3751–10	7 – 8
K0F–A3751–20	7 – 8
K0F–A3751–30	7 – 8
K0F–A3751–40	7 – 8
K0F–A3751–50	7 – 8
K0F–A3751–60	7 – 8
K0F–A3751–70	7 – 8
K0F–A3751–80	7 – 8
K0F–A3751–90	7 – 8
K0F–A3751–A0	7 – 8
K0F–A3751–B0	7 – 8
K0F–A3751–C0	7 – 8
K0F–A3751–D0	7 – 8
K0F–A3751–E0	7 – 8
K0F–A3751–F0	7 – 8
K0F–A3751–G0	7 – 8
K0F–A3751–H0	7 – 8
K0F–A3751–J0	7 – 8
K0F–A3751–K0	7 – 8
K0F–A3751–L0	7 – 8
K0F–A3751–M0	7 – 8
K0F–A3751–N0	7 – 8
K0F–A3751–P0	7 – 8
K0F–A3751–R0	7 – 8
K0F–A3751–S0	7 – 8
K0F–A3751–T0	7 – 8
K0F–A3753–00	7 – 8
K0F–A3753–10	7 – 8
K0F–A3753–20	7 – 8
K0F–A3753–30	7 – 8
K0F–A3753–40	7 – 8
K0F–A3753–50	7 – 8
K0F–A3753–60	7 – 8
K0F–A3753–70	7 – 8
63P–W0001–04	37 – 1
63P–W0001–21	38 – 1
61A–W0078–A3	1 – 20
	38 – 21
63P–W009A–04–9S	5 – 1
63P–W009B–12–9S	3 – 1
63P–W1165–10	4 – 7
63P–W1510–04–9S	3 – 2
63P–W823A–00	16 – 2

PART NO. N° PIECES	REF. NO.
63P–W823B–00	16 – 3
63P–W823C–00	16 – 7
63P–W823D–00	16 – 8
90101–09M70	34 – 18
90101–12047	24 – 41
	24 – 41
90101–12M05	24 – 41
	24 – 41
90105–06M07	5 – 13
	6 – 15
90105–10071	3 – 9
90105–10M00	31 – 17
	33 – 17
90105–14009	25 – 31
90109–06M80	18 – 24
90109–06M86	18 – 21
	21 – 4
	21 – 18
	22 – 20
	22 – 22
	22 – 26
	23 – 2
90109–08019	23 – 33
90109–14007	25 – 22
90110–05020	7 – 21
90111–08078	2 – 6
90119–06071	13 – 16
90119–06076	8 – 14
90119–06134	16 – 6
90119–06135	9 – 25
	13 – 38
90119–06269	11 – 22
90119–06M10	30 – 17
	32 – 18
90119–06M18	28 – 33
90119–06M81	3 – 18
90119–06M82	8 – 16
90119–06M83	13 – 37
90119–06MA2	3 – 24
	6 – 11
90119–06MA4	6 – 5
	6 – 22
	16 – 21
90119–06MA6	3 – 28
90119–07234	5 – 7
90119–07235	5 – 6
90119–08102	28 – 2
90119–08M14	30 – 35

PART NO. N° PIECES	REF. NO.
90119–08M14	32 – 36
	38 – 29
90119–08M22	21 – 21
90119–08M58	28 – 5
90119–08M66	3 – 19
	3 – 27
90119–08M91	5 – 19
90119–10007	28 – 21
90119–10008	31 – 11
	33 – 11
90119–10024	25 – 30
90119–10050	7 – 13
90119–10M07	7 – 17
90119–10MA2	31 – 11
	33 – 11
90151–05M05	6 – 3
90151–06M02	3 – 15
	3 – 21
90152–05M08	31 – 14
	33 – 14
90155–10006	5 – 18
90159–05059	25 – 2
	36 – 4
90159–06053	22 – 5
90159–06M28	22 – 2
90167–05017	2 – 4
90167–06M00	35 – 12
90169–05M00	17 – 23
90170–09M05	34 – 19
90170–14M06	34 – 15
90170–16M01	30 – 47
	32 – 48
90171–18M04	31 – 21
	33 – 21
90179–08003	20 – 27
90179–24002	15 – 14
90183–061A6	22 – 4
90185–05002	31 – 15
	33 – 15
90185–09M01	34 – 6
	34 – 20
90185–14M00	25 – 35
90185–22M11	24 – 17
90201–06M30	35 – 13
90201–06M31	23 – 38
	23 – 44
	23 – 51
90201–10060	24 – 19

NUMERICAL INDEX
INDEX NUMERIQUE

PART NO. N° PIECES	REF. NO.
90201–10M20	34 – 7
90201–10M76	34 – 17
90201–12426	24 – 43
90201–13M01	24 – 42
90201–156J2	21 – 11
90201–15M58	25 – 21
90201–16M01	25 – 32
90201–16M55	25 – 20
90201–186F1	6 – 24
	37 – 10
90201–22M01	30 – 21
	32 – 22
90201–24014	15 – 13
90201–26M59	24 – 16
90201–30M92	30 – 66
90201–35008	25 – 18
90201–38M60	25 – 10
90202–08M20	23 – 14
90202–16061	23 – 21
90202–32M19	25 – 19
90202–40M47	25 – 13
90206–10M04	23 – 39
	23 – 45
	23 – 52
90206–15M18	21 – 12
90206–22M19	30 – 22
	32 – 23
90249–06M19	24 – 33
90250–08M07	30 – 55
	32 – 56
90280–04M05	30 – 31
	32 – 32
	38 – 30
90280–05015	15 – 12
90282–04M00	30 – 67
	32 – 69
90338–25004	3 – 7
90340–08002	30 – 6
	32 – 7
90340–14M06	5 – 8
	6 – 27
	29 – 6
90340–18M09	6 – 23
90340–27129	3 – 16
90344–51019	5 – 4
90386–06M12	23 – 17
90386–08001	8 – 13
90386–10M16	24 – 31

PART NO. N° PIECES	REF. NO.
90386–12069	23 – 30
90386–15M73	21 – 10
90386–16M66	23 – 20
90386–22M98	24 – 22
	24 – 38
90386–25M31	24 – 15
90386–38M32	25 – 12
90387–05004	36 – 5
90387–06176	17 – 15
90387–06263	29 – 9
90387–06280	8 – 15
90387–06285	15 – 20
90387–06289	9 – 5
	13 – 14
90387–06M29	23 – 40
	23 – 53
90387–06M43	22 – 7
90387–06M82	23 – 46
90387–08M37	21 – 20
90387–08M45	2 – 9
90387–10094	2 – 7
90387–10M05	24 – 34
90387–10M61	34 – 3
90387–14004	25 – 38
90430–06M03	5 – 14
	6 – 16
90430–08020	1 – 18
	30 – 8
	32 – 9
	38 – 11
90430–14115	3 – 13
	5 – 9
	6 – 28
	37 – 2
90430–14M09	1 – 17
	29 – 7
	37 – 15
	38 – 3
90445–07018	28 – 31
90445–070F1	28 – 31
90445–15M03	7 – 19
90447–07013	19 – 6
90450–22M14	8 – 6
90462–06013	6 – 39
90462–10023	8 – 7
90462–12013	22 – 25
90464–05141	16 – 16
90464–07M41	16 – 11

PART NO. N° PIECES	REF. NO.
90464–09M31	9 – 19
90464–11012	9 – 21
90464–12002	12 – 20
90464–12017	16 – 23
90464–12224	18 – 28
90464–13249	22 – 19
90464–13M34	13 – 18
90464–15007	3 – 32
90464–18004	22 – 24
90464–18246	22 – 23
90464–20006	8 – 9
90464–20258	21 – 28
90464–23199	17 – 18
90464–26001	12 – 19
	18 – 29
90465–08M63	24 – 24
90465–11M10	6 – 26
	9 – 24
	13 – 35
	19 – 3
	22 – 10
	22 – 16
	24 – 18
	25 – 5
	28 – 30
	28 – 30
	35 – 10
	36 – 6
90465–13M18	17 – 19
90467–09M09	9 – 23
	12 – 23
90467–15M14	3 – 31
	3 – 33
90468–18008	23 – 6
	23 – 15
	23 – 36
90480–06M19	16 – 19
90480–10627	17 – 17
90480–10M23	9 – 4
	13 – 15
90480–12314	5 – 27
90480–13M24	22 – 6
90480–15M31	15 – 19
90480–20M05	6 – 8
90480–22M81	21 – 19
90501–12082	23 – 27
90501–16M11	6 – 7
90501–16M37	30 – 51

PART NO. N° PIECES	REF. NO.
90501–16M37	32 – 52
90506–16003	24 – 36
90506–16M39	7 – 18
90506–22001	21 – 16
90508–20M31	23 – 29
90560–12M01	34 – 4
91318–04025	26 – 55
91318–05025	26 – 57
91318–05040	26 – 41
91490–40030	31 – 22
	33 – 22
91609–16012	26 – 12
91690–30010	23 – 4
	23 – 25
91690–30020	24 – 35
91690–50014	8 – 4
91809–08006	5 – 5
91814–18002	3 – 5
	3 – 6
92903–06600	17 – 12
92903–08100	20 – 33
92903–08600	8 – 3
	20 – 31
92907–04600	5 – 23
92990–06100	2 – 12
92990–08600	2 – 8
92990–10600	18 – 13
92990–18200	31 – 20
	33 – 20
92995–06100	15 – 9
	16 – 13
92995–06600	6 – 41
	9 – 7
	13 – 13
	15 – 10
	15 – 24
	16 – 14
	17 – 3
	18 – 6
	18 – 9
	18 – 11
	18 – 27
	19 – 5
	24 – 10
	29 – 18
	36 – 3
92995–08600	18 – 32
	24 – 14

PART NO. N° PIECES	REF. NO.
92995–08600	30 – 44
	32 – 45
92995–10100	28 – 39
	31 – 9
	33 – 9
92995–10600	25 – 8
	28 – 40
	31 – 10
	33 – 10
92995–14600	25 – 25
	25 – 36
93101–28M16	30 – 37
	32 – 38
	38 – 17
93101–30M17	30 – 63
	32 – 66
	38 – 19
93102–08414	27 – 11
93102–38008	7 – 14
	37 – 13
93102–60004	4 – 3
	37 – 12
93106–09014	30 – 16
	32 – 17
	38 – 13
93106–19N50	26 – 5
93210–04279	35 – 9
93210–064A5	26 – 49
	26 – 63
93210–07003	28 – 36
	30 – 13
	32 – 14
	38 – 10
93210–07N51	26 – 54
93210–09165	23 – 19
	26 – 19
93210–11N52	26 – 18
93210–12N52	26 – 39
93210–16275	34 – 9
93210–18397	26 – 35
93210–19MJ1	6 – 32
	37 – 17
93210–19MJ3	29 – 22
	37 – 18
93210–24M79	6 – 35
	37 – 19
93210–25552	3 – 17
	29 – 19

PART NO. N° PIECES	REF. NO.
93210–25552	37 – 5
93210–25647	3 – 8
	37 – 6
93210–29375	26 – 27
93210–30682	13 – 36
93210–37160	30 – 27
	32 – 28
	38 – 15
	38 – 24
93210–37MH7	25 – 11
93210–554A9	27 – 12
93210–55M14	30 – 41
	32 – 42
	38 – 18
93210–58144	30 – 15
	32 – 16
	38 – 12
93210–68N50	26 – 15
93210–86M38	30 – 26
	32 – 27
	38 – 14
	38 – 23
93210–97M55	30 – 64
	32 – 67
	38 – 20
93306–209U0	30 – 59
93311–928U5	30 – 3
	32 – 3
93315–43061	30 – 62
	32 – 65
93317–330U2	30 – 38
	32 – 39
93332–00048	32 – 60
93332–000V3	30 – 4
93341–440U5	32 – 63
93341–465U4	32 – 5
93341–930V2	30 – 40
	32 – 41
93390–000U2	32 – 4
93410–16006	23 – 22
93410–22M11	24 – 39
93410–37M04	25 – 15
93420–36M01	28 – 24
93501–04M02	23 – 26
93501–08001	26 – 52
	26 – 64
93503–16003	26 – 44
	30 – 54

NUMERICAL INDEX
INDEX NUMERIQUE

PART NO. N° PIECES	REF. NO.
93503–16003	32 – 55
93505–32038	26 – 11
	26 – 71
93507–32009	30 – 52
	32 – 53
93511–32017	30 – 53
	32 – 54
93604–29184	26 – 56
93605–10108	7 – 11
93605–17002	7 – 22
93606–12019	3 – 3
	30 – 34
	32 – 35
	38 – 28
93606–19M23	28 – 15
93608–16M16	28 – 4
	28 – 22
	28 – 37
	29 – 4
	31 – 7
	33 – 7
93700–06M01	23 – 32
93700–06M03	23 – 34
	24 – 11
	24 – 25
94702–00391	1 – 5
	5 – 29
95333–08600	20 – 32
95380–05700	10 – 17
95380–06600	2 – 13
	9 – 16
	22 – 3
95380–12600	24 – 44
95380–14600	25 – 24
95380–14700	34 – 16
95780–06300	35 – 14
95780–08300	2 – 10
95780–10300	25 – 7
95812–06025	29 – 11
95895–06010	24 – 40
95895–06016	8 – 18
	29 – 23
95895–06020	15 – 21
	16 – 18
95895–08012	21 – 15
97013–06020	17 – 11
97013–08020	8 – 2
97013–08045	20 – 30

PART NO. N° PIECES	REF. NO.
97095–06010	24 – 28
97095–06012	6 – 40
	18 – 10
	18 – 26
97095–06014	13 – 12
97095–06016	9 – 6
	15 – 23
	17 – 2
	18 – 5
	18 – 8
	19 – 4
	36 – 2
97095–06025	16 – 12
	23 – 41
	23 – 54
97095–06035	15 – 8
	23 – 47
97095–06040	29 – 17
97095–08016	18 – 31
97095–08020	24 – 13
97095–08025	30 – 43
	32 – 44
97095–10045	28 – 38
	31 – 8
	33 – 8
97575–06535	23 – 24
97575–06540	6 – 33
97575–08535	28 – 14
	29 – 3
97575–08540	5 – 15
	6 – 17
	8 – 1
97575–08560	28 – 11
97575–10530	24 – 20
97575–10535	28 – 6
97575–10540	25 – 28
97575–10545	28 – 3
97595–06510	24 – 6
97595–06516	10 – 14
97595–06530	5 – 25
	24 – 4
97595–06545	6 – 38
97595–06550	23 – 12
97595–06610	17 – 7
	17 – 10
97595–06625	26 – 42
97602–04316	27 – 9
97780–50620	17 – 30

PART NO. N° PIECES	REF. NO.
97780–60520	22 – 17
97780–60620	17 – 6
	17 – 21
	35 – 7
97880–06035	35 – 12
97885–06012	24 – 9
97980–06216	28 – 26
	35 – 4
97985–04116	23 – 11
97985–06210	15 – 16
97985–06216	25 – 4
98507–04008	5 – 22
98780–05016	3 – 12
99001–08600	30 – 19
	32 – 20
99530–08012	15 – 7
99530–14016	5 – 17

PART NO. N° PIECES	REF. NO.

PART NO. N° PIECES	REF. NO.

PART NO. N° PIECES	REF. NO.