YAMAHA

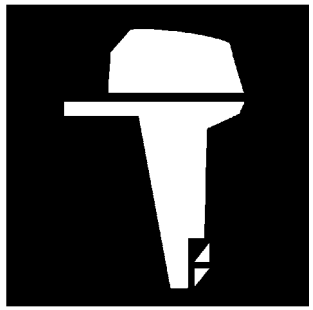

PARTS CATALOGUE
CATALOGUE DE PIECES DETACHEES

F225CET'15 (6BB9)

1P6BB-300F1

( )

YAMAHA GENUINE Parts & Accessories

2020/11/2

NEWS NO.	DATE	COMMENT
PE0-OM-200015	Nov.,2,2020	MOD:F225CET(6BB5-9) CYLINDER&CRANKCASE 1 LIST REVISION

F225CET
PARTS CATALOGUE
©2015 by Yamaha Motor Co., Ltd.
1st edition, April 2015
All rights reserved.
Any reprinting or unauthorized use
without the written permission of
Yamaha Motor Co., Ltd.
is expressly prohibited.
Printed in Japan.

F225CET
CATALOGUE DE PIECES DETACHEES
©2015 par Yamaha Motor Co., Ltd.
1re édition, avril 2015
Tous droits réservés
Toute réimpression ou utilisation
non autorisée sans la permission écrite
de la Yamaha Motor Co., Ltd.
est formellement interdite.
Imprimé au Japon

FOREWORD

This Parts Catalogue is related to the parts for the model(s) on the cover page. When you are ordering replacement parts, please refer to this Parts Catalogue and quote both part numbers and part names correctly.

1. Modifications or additions which have been made after the issue of the Parts Catalogue will be announced in the Parts News.
   It is advisable that you make the necessary corrections to the Parts Catalogue according to the Parts News.

2. Abbreviations
   The following abbreviations are used in this Parts Catalogue.

   "UR" Use specified parts number.
   "UN" Use as many as needed.
   "AP" Alternate Parts
   "LM" Locally Made (Parts need to be ordered locally)
   "F#" Frame No. (Applicable machine No.)
   "O/S" Over Size

3. The number of components for assembly
   - Parts, which are to be supplied in an assembly, are listed with a dot (.) in front of the part name as shown below.
   - The numeral appearing to the right of each component part indicates the quantity of parts for each assembly unit.

PART NO.	DESCRIPTION	Q'TY	REMARKS
2F5–83310–60	FRONT FLASHER LIGHT ASSY	2	
115–83311–60	.BULB (6V–18W)	1	

4. Applicable colours of graphics are represented in the "REMARKS" as shown below.

PART NO.	DESCRIPTION	Q'TY	REMARKS
2N4–24110–00–X5	FUEL TANK COMP.	2	MXR
3J1–24240–10	.GRAPHIC, FUEL TANK	1	FOR MXR

5. Note that the illustrations for reference in finding parts numbers are not to be used for assembling. When assembling, please use the applicable service manual.

6. The asterisk (*) before a reference number indicates modified items after the first edition.

7. Applicable Serial No.

   Engine Serial No.

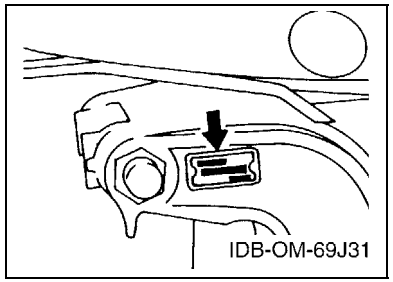

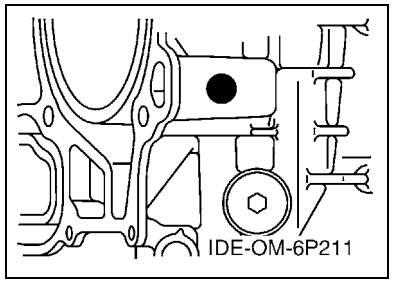

8. Applicable Engine Starting Serial No.

Model	Serial No.	Model	Serial No.
F225C	6BB-1001548		

9. Applicable Colour Code

Abbreviation	Colour Name	Colour Code
DBN1	DARK BLUISH GRAY 1	008D

10. Quantity Column Information

Column No.	Name Of Q'ty Column	Applicable Model
1	6BB9	F225CET

AVANT–PROPOS

Ce catalogue de pièces détachées concerne les pièces pour le(s) modèle(s) indiqué(s) sur la page de couverture. Lorsque vous commandez des pièces de rechange, veuillez vous référer à ce catalogue de pieces détachées et indiquer clairement les numéros et les noms des pièces détachées.

1. Les modifications ou ajouts ayant été effectués après la parution du catalogue de pièces détachées seront décrits dans les Bulletins d'information concernant les pièces détachées.
   Il est recommandé que vous apportiez les corrections nécessaires au catalogue des pièces détachées en vous référant aux Bulletins d'information.

2. Abréviations
   Dans ce catalogue, les abréviations suivantes sont utilisées:

   "UR" Utiliser le numéro de pièces spécifié.
   "UN" Utiliser autant que nécessaire.
   "AP" Pièces de substitution
   "LM" Fabrication locale (les pièces doivent être commandées localement.)
   "F#" N° de cadre (applicable au N° de série)
   "O/S" Surdimensionné

3. Nombre de pièces d'un assemblage
   - Les pièces fournies comme composants d'un assemblage sont précédées d'un point (.) de la manière indiquée ci–dessous.
   - Le chiffre apparaissant à la droite de chaque composant indique la quantité de pièces pour chaque unité d'assemblage.

N° PIECES	DESCRIPTION	QTE	REMARQUES
2F5–83310–60	ENS. CLIGNOTANT AVANT	2	
115–83311–60	.AMPOULE (6V–18W)	1	

4. Les couleurs concernant les graphiques sont indiquées dans la colonne "REMARQUES", comme indiqué ci–dessous.

N° PIECES	DESCRIPTION	QTE	REMARQUES
2N4–24110–00–X5	RESERVOIR A ESSENCE.	2	MXR
3J1–24240–10	.GRAPHIQUE	1	POUR MXR

5. Veuillez noter que les illustrations sont indiquées à titre de référence pour trouver les numéros de pièces, non pour être utilisées lors de l'assemblage. Lors de l'assemblage, veuillez utiliser le manuel d'entretien adéquat.

6. L'astérisque (*) placé devant un numéro de référence indique des éléments qui ont été modifiés après la première édition.

7. N° de série applicable

   N° de Série du moteur

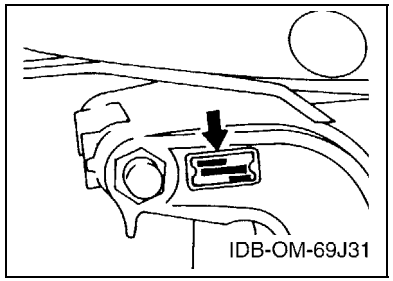

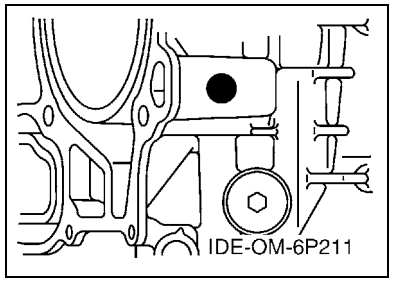

8. N° de série initial du moteur applicable

Modèle	N° de série	Modèle	N° de série
F225C	6BB-1001548		

9. Code couleur applicable

Abréviation	Nom de la couleur	Code couleur
DBN1	DARK BLUISH GRAY 1	008D

10. Informations relatives à la colonne Quantité

N° de la colonne	Nom de la colonne Qté	Modèle applicable
1	6BB9	F225CET

CONTENTS

SCHEDULED SERVICE PARTS 1
TOP COWLING 2
CYLINDER & CRANKCASE 1 3
CRANKSHAFT & PISTON 6
CYLINDER & CRANKCASE 2 7
CYLINDER & CRANKCASE 3 9
VALVE 10
INTAKE 1 13
INTAKE 2 15
THROTTLE BODY ASSY 1 17
THROTTLE BODY ASSY 2 18
THROTTLE BODY ASSY 3 19
FUEL INJECTION PUMP 1 20
FUEL INJECTION PUMP 2 22
FUEL 1 23
FUEL 2 25
GENERATOR 26
ELECTRICAL 1 27
ELECTRICAL 2 29
ELECTRICAL 3 32
ELECTRICAL 4 33
STARTING MOTOR 34
BOTTOM COWLING 1 36
BOTTOM COWLING 2 39
CONTROL 40
BRACKET 1 42
BRACKET 2 44
POWER TRIM & TILT ASSY 1 46
POWER TRIM & TILT ASSY 2 48
UPPER CASING 50
OIL PAN 52
LOWER CASING & DRIVE 1 53
LOWER CASING & DRIVE 2 57
OPTIONAL PARTS 59
REPAIR KIT 1 60
REPAIR KIT 2 61

INDEX

NUMERICAL INDEX 63

TABLE DES MATIERES

PIECES MAINTENANCE PERIODIQUE 1
CAPOT SUPERIEUR 2
CYLINDRE & CARTER 1 3
VILEBREQUIN & PISTON 6
CYLINDRE & CARTER 2 7
CYLINDRE & CARTER 3 9
SOUPAPE 10
ADMISSION 1 13
ADMISSION 2 15
CARTER D'ACCELERATEUR 1 17
CARTER D'ACCELERATEUR 2 18
CARTER D'ACCELERATEUR 3 19
POMPE A INJECTEUR 1 20
POMPE A INJECTEUR 2 22
CARBURANT 1 23
CARBURANT 2 25
GENERATRICE 26
PARTIE ELECTRIQUE 1 27
PARTIE ELECTRIQUE 2 29
PARTIE ELECTRIQUE 3 32
PARTIE ELECTRIQUE 4 33
DEMARREUR ELECTRIQUE 34
CAPOT INFERIEUR 1 36
CAPOT INFERIEUR 2 39
COMMANDE 40
SUPPORT 1 42
SUPPORT 2 44
PUISSANCE PARER ET INCLINER 1 46
PUISSANCE PARER ET INCLINER 2 48
FOURREAU 50
VENTILATEUR D'HUILE 52
BOITIER D'HELICE TRANSMISSION1 53
BOITIER D'HELICE TRANSMISSION2 57
PIECES OPTIONNELLES 59
KITS DE REPARATION 1 60
KITS DE REPARATION 2 61

INDEX

INDEX NUMERIQUE 63

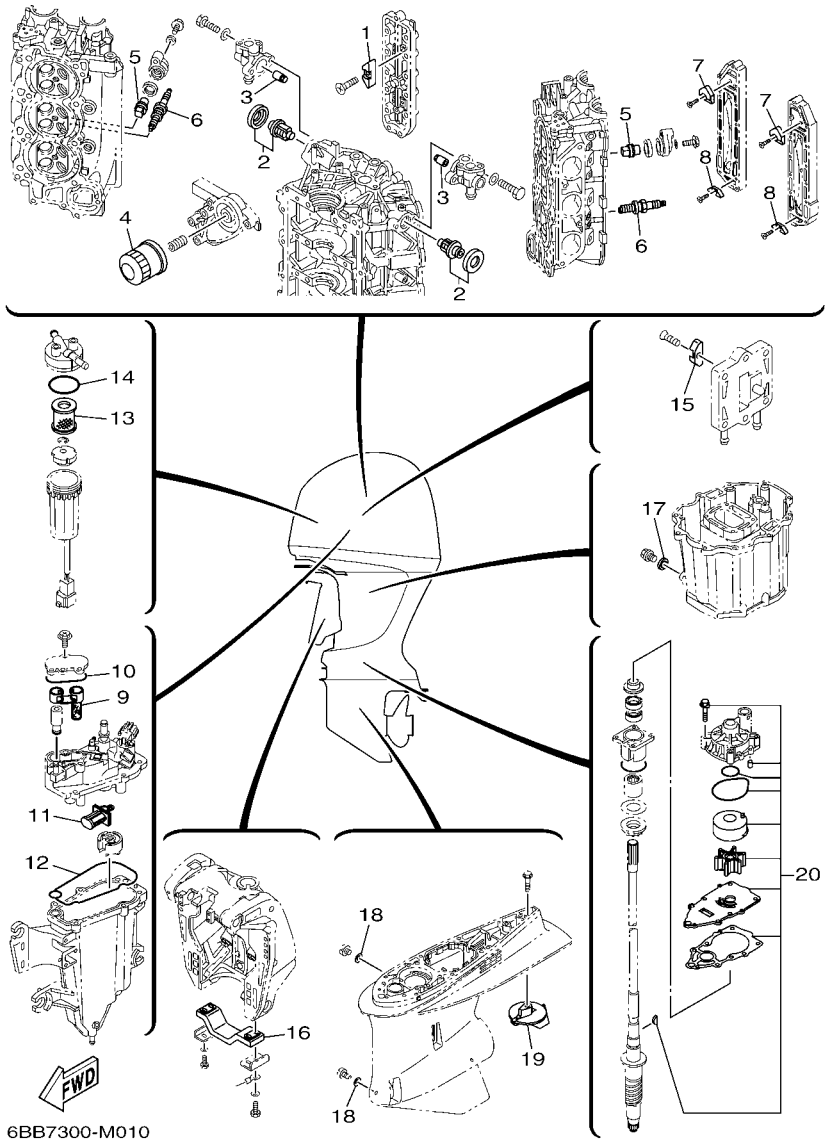

FIG. 1 SCHEDULED SERVICE PARTS PIECES MAINTENANCE PERIODIQUE

REF. NO.	PART NO. N° PIECES	DESCRIPTION DESCRIPTION	6BB9					REMARKS REMARQUES
1	6E5–11325–00	ANODE ANODE	4					
2	67F–12411–01	THERMOSTAT THERMOSTAT	2					
3	6P3–11325–00	ANODE ANODE	2					
4	69J–13440–03	ELEMENT ASSY, OIL CLEANER ELEMENT, FILTRE A HUILE	1					
5	67F–11325–01	ANODE ANODE	4					
6	94702–00400	PLUG, SPARK (NGK LFR6A-11) BOUGIE D'ALLUMAGE(NGK LFR6A-11	6					
7	6P2–11325–00	ANODE ANODE	2					
8	6E5–11325–00	ANODE ANODE	2					
9	6CB–24501–01	FILTER, FUEL FILTRE	1					
10	6CB–13016–00	O-RING JOINT TORIQUE	1					
11	63P–13915–00	FILTER FILTRE	1					
12	6CB–14984–00	GASKET, FLOAT CHAMBER JOINT, CUVE DE FLOTTEUR	1					
13	6P3–24563–01	ELEMENT, FILTER ELEMENT, FILTRE	1					
14	6P3–24564–00	GASKET JOINT	1					
15	6E5–11325–00	ANODE ANODE	1					
16	6G5–45251–02	ANODE ANODE	1					
17	90430–14M09	GASKET JOINT	1					
18	90430–08020	GASKET JOINT	2					
19	69L–45371–00	TAB-TRIM ANODE DERIVE	1					
20	6P2–W0078–00	WATER PUMP REPAIR KIT KIT DE REPARATION DE LA POMPE	1					

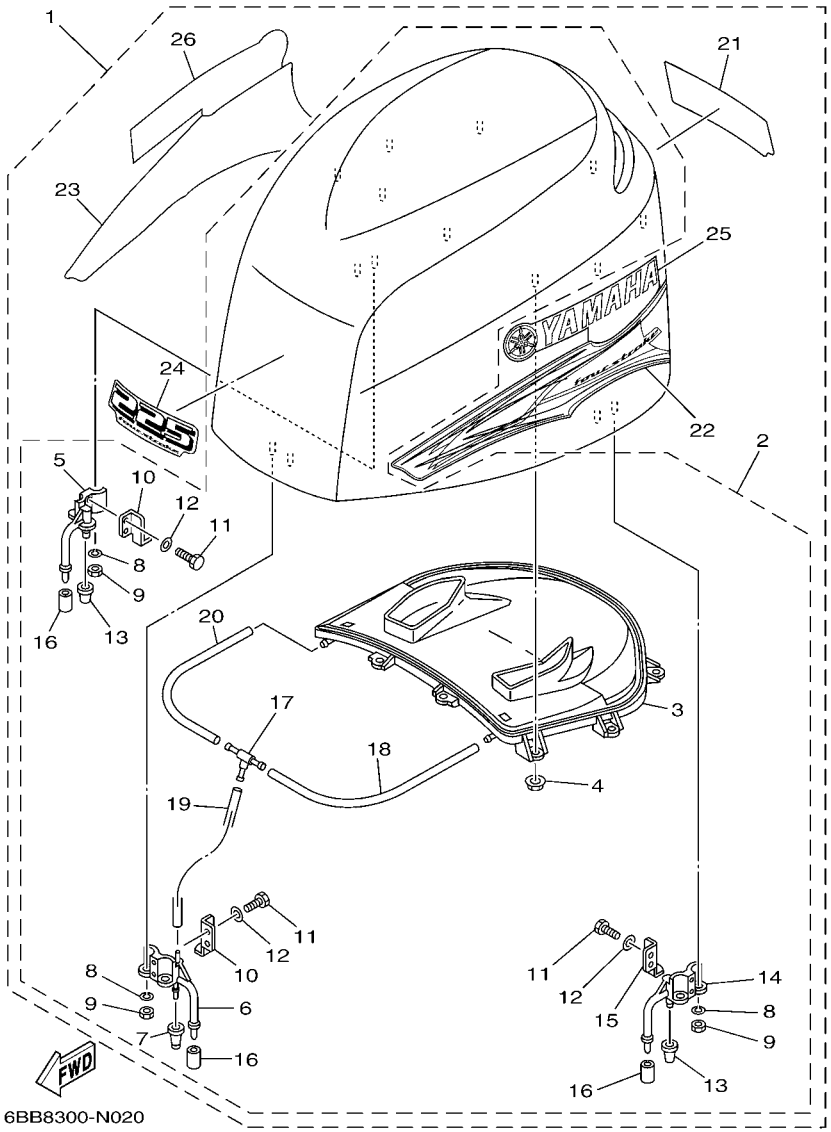

FIG. 2 TOP COWLING — CAPOT SUPERIEUR

REF. NO.	PART NO. N° PIECES	DESCRIPTION DESCRIPTION	6BB9					REMARKS REMARQUES
1	6BB–42610–00	TOP COWLING ASSY CAPOT (ENS.)	1					
2	6P2–4261A–00	.TOP COWLING W/O GRAPHICS .CAPOT SUPERIEUR SANS GRAPHIQUE	1					
3	6P2–42613–00	..MOLDING, AIR DUCT ..MANCHON A AIR	1					
4	90179–06M28	..NUT ..ECROU	9					
5	68F–42647–01	..HOLDER, CLAMP BAND ..SUPPORT, SANDOW DE SERRAGE	1					
6	69J–42647–01	..HOLDER, CLAMP BAND ..SUPPORT, SANDOW DE SERRAGE	1					
7	69J–42663–00	..DAMPER ..AMORTISSEUR	1					
8	92990–06100	..WASHER, SPRING ..RONDELLE, GROWER	6					
9	95380–06600	..NUT, HEXAGON ..ECROU	6					
10	60V–42651–01	..HOOK ..CROCHET	2					
11	97095–06016	..BOLT ..BOULON	6					
12	92995–06600	..WASHER ..RONDELLE	6					
13	68F–42663–00	..DAMPER ..AMORTISSEUR	2					
14	68F–42648–01	..HOLDER, CLAMP BAND ..SUPPORT, SANDOW DE SERRAGE	1					
15	60V–42652–00	..HOOK ..CROCHET	1					
16	67F–13448–00	..CAP ..CAPUCHON	3					
17	69J–24378–00	..PIPE, JOINT 3 ..DURITE RACCORDEMENT 3	1					
18	90445–11M27	..HOSE (L240) ..DURITE (L240)	1					
19	90445–11699	..HOSE (L500) ..DURITE (L500)	1					
20	90445–11182	..HOSE (L300) ..DURITE (L300)	1					
21	6BB–42678–00	.GRAPHIC, REAR .ADHESIF, ARRIERE	1					
22	6BB–42675–00	.GRAPHIC, SIDE 1 .EMBLEME	1					
23	6BB–42676–00	.GRAPHIC, SIDE 2 .EMBLEME	1					
24	6BB–42677–00	.GRAPHIC, FRONT .ADHESIF, AVANT	1					
25	6BB–42681–00	.MARK, COWLING .ADHESIF, CAPOT	1					
26	6BB–42682–00	.MARK, COWLING .ADHESIF, CAPOT	1					

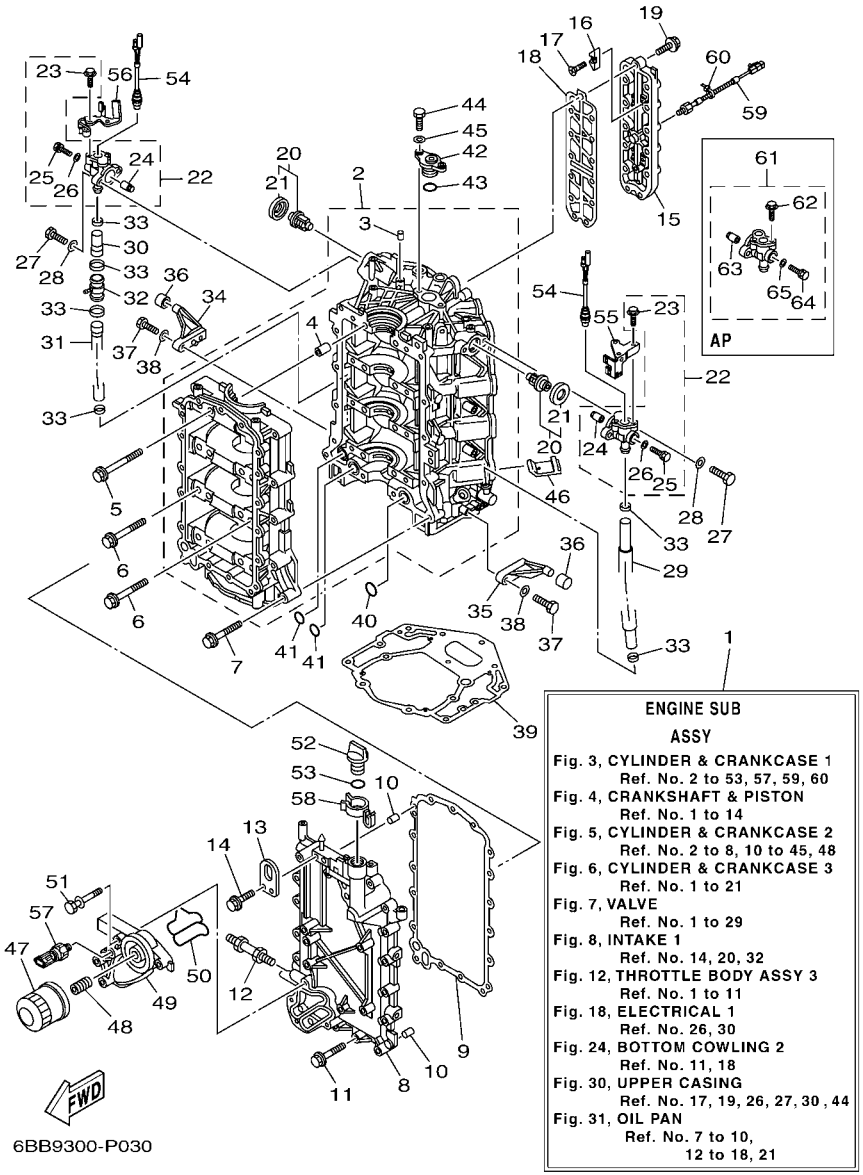

FIG. 3 CYLINDER & CRANKCASE 1 CYLINDRE & CARTER 1

REF. NO.	PART NO. N° PIECES	DESCRIPTION DESCRIPTION	6BB9					REMARKS REMARQUES
1	6P2–11000–00	ENGINE SUB ASSY SOUS-ASSEMBLEE DU MOTEUR	1					
2	6P2–15100–10	CRANKCASE ASSY CARTER DE MOTEUR COMPLET	1					
3	93606–12019	.PIN, DOWEL .GOUPILLE	1					
4	91814–18002	.PIN, DOWEL .GOUJON, D'ASSEMBLAGE	8					
5	6P2–15187–00	BOLT BOULON	8					
6	6P2–15481–00	BOLT 1 BOULON 1	8					
7	90119–08M66	BOLT, WITH WASHER BOULON, AVEC RONDELLE	13					
8	6P2–15411–01–9S	COVER, CRANKCASE 1 COUVERCLE 1, CARTER MOTEUR	1					
9	69J–15451–00	GASKET, CRANKCASE COVER 1 JOINT, COUVERCLE DE CARTER 1	1					
10	93606–12019	PIN, DOWEL GOUPILLE	2					
11	90119–08009	BOLT, WITH WASHER BOULON, AVEC RONDELLE	17					
12	90116–10027	BOLT, STUD GOUJON	1					
13	69J–11119–00	HANGER, ENGINE ANNEAU, LEVAGE	1					
14	90105–06M09	BOLT, FLANGE BOULON	2					
15	6P2–1131C–00–9S	COVER, JOINT COUVERCLE, RACCORDEMENT	1					
16	6E5–11325–00	ANODE ANODE	4					
17	98780–04016	SCREW, FLAT HEAD VIS A TETE FRAISEE	4					
18	6P2–1131B–00	GASKET, COVER JOINT, COUVERCLE	1					
19	90119–06MA4	BOLT, WITH WASHER BOULON, AVEC RONDELLE	13					
20	67F–12411–01	THERMOSTAT THERMOSTAT	2					
21	67F–12412–00	.SEAL, THERMOSTAT .JOINT, THERMOSTAT	1					
22	6P2–1240H–00–9S	ANODE ASSY ANODE COMPLET	2					
23	90109–06M80	.BOLT .BOULON	2					
24	6P3–11325–00	.ANODE .ANODE	1					
25	90105–05012	.BOLT, FLANGE .BOULON	1					
26	90430–05002	.GASKET .JOINT	1					
27	97095–06025	BOLT BOULON	4					

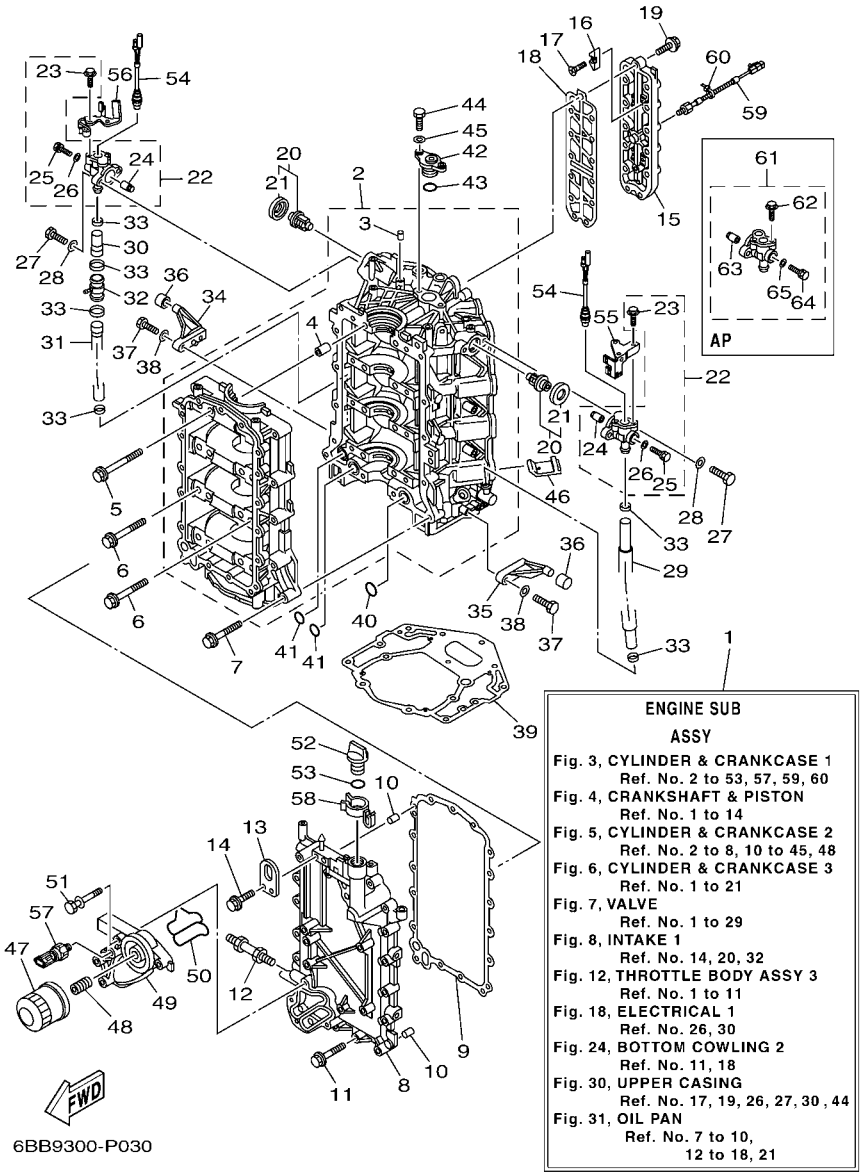

FIG. 3 CYLINDER & CRANKCASE 1 CYLINDRE & CARTER 1

REF. NO.	PART NO. N° PIECES	DESCRIPTION DESCRIPTION	6BB9					REMARKS REMARQUES
28	92995–06600	WASHER RONDELLE	4					
29	6P2–1243A–00	HOSE 1 DURITE 1	1					
30	6P2–1243E–00	HOSE 2 DURITE 2	1					
31	6P2–1243F–00	HOSE,3 DURITE 3	1					
32	6S1–24378–00	PIPE, JOINT 3 DURITE RACCORDEMENT 3	1					
33	90465–11M59	CLAMP BRIDE	6					
34	67F–42761–01	STOPPER PLAQUETTE	1					
35	6P2–42761–00	STOPPER PLAQUETTE	1					
36	68F–44533–01	DAMPER, UPPER MOUNT RUBBER COUVERCLE, SUSPENSION INFERIEU	2					
37	97095–06025	BOLT BOULON	4					
38	92995–06600	WASHER RONDELLE	4					
39	69J–11351–11	GASKET, CYLINDER JOINT, D'EMBASE	1					
40	93210–25552	O-RING JOINT TORIQUE	1					
41	93210–19MJ1	O-RING JOINT TORIQUE	2					
42	69J–11313–00	PLUG, BLIND PLOT, BORGNE	1					
43	93210–25647	O-RING JOINT TORIQUE	1					
44	97095–06020	BOLT BOULON	2					
45	92995–06600	WASHER RONDELLE	2					
46	69J–14664–00	GROMMET, WATER SHUT PASSE-FIL	2					
47	69J–13440–03	ELEMENT ASSY, OIL CLEANER ELEMENT, FILTRE A HUILE	1					
48	6S5–12858–00	BOLT, UNION BOULON, RACCORD	1					
49	6P2–13446–00–9S	CONNECTOR CONNECTEUR	1					
50	6P2–13477–00	GASKET JOINT	1					
51	90119–06025	BOLT, WITH WASHER BOULON, AVEC RONDELLE	5					
52	6G8–15363–00	PLUG, OIL PLOT, HUILE	1					
53	93210–24M79	O-RING JOINT TORIQUE	1					
54	6P2–82560–01	THERMO SWITCH ASSY THERMO-CONTACT COMPLET	2					

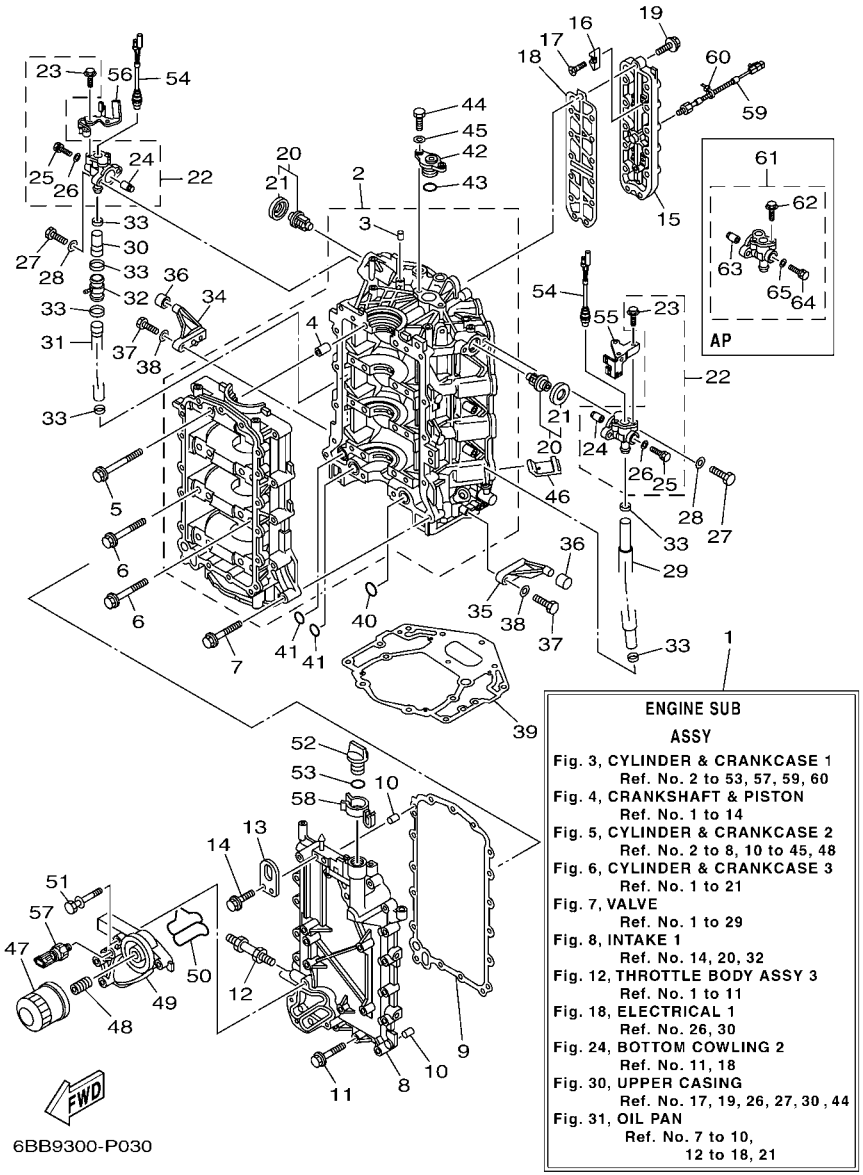

FIG. 3 CYLINDER & CRANKCASE 1 CYLINDRE & CARTER 1

REF. NO.	PART NO. N° PIECES	DESCRIPTION DESCRIPTION	6BB9					REMARKS REMARQUES
55	6P2–82588–01	PLATE PLAQUE	1					
56	6P2–82389–00	PLATE 2 PLAQUETTE 2	1					
57	6AW–83651–00	SENDER, OIL PRESSURE RACCORD, PRESSION D'HUILE	1					
58	6P2–83597–00	CLAMP COLLIER	1					
59	6P2–85780–00	SENSOR, KNOCK SONDE DE COGNEMENT	1					
60	90465–11M10	CLAMP BRIDE	1					
61	6P3–1240H–00–9S	ANODE ASSY ANODE COMPLET	1					AP AP
62	90109–06M80	.BOLT .BOULON	2					
63	6P3–11325–00	.ANODE .ANODE	1					
64	90105–05012	.BOLT, FLANGE .BOULON	1					
65	90430–05002	.GASKET .JOINT	1					

FIG. 4 CRANKSHAFT & PISTON VILEBREQUIN & PISTON

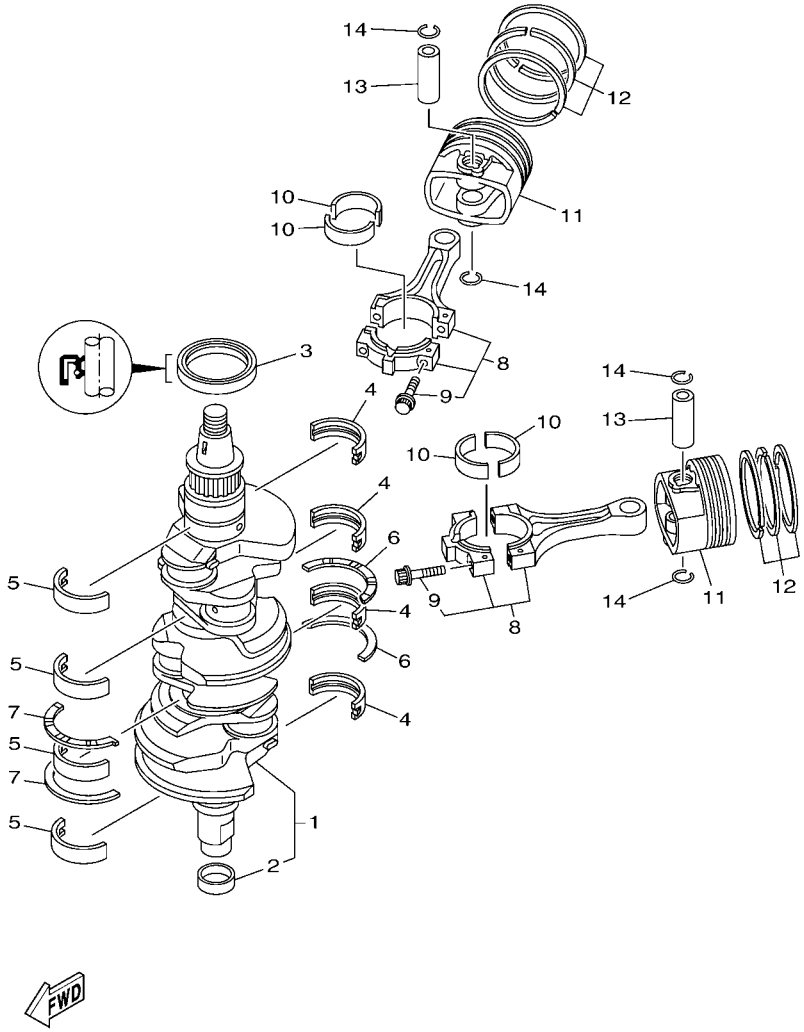

6ALB100-P040

REF. NO.	PART NO. N° PIECES	DESCRIPTION DESCRIPTION	6BB9					REMARKS REMARQUES
1	6P2–11410–10	CRANKSHAFT VILEBREQUIN COMPLET	1					
2	6CB–11478–00	.COLLAR .COLLERETTE	1					
3	93102–63004	OIL SEAL JOINT SPY	1					
4	6P2–11416–00	PLANE BEARING, CRANKSHAFT 1 COUSSINET DE VILEBREQUIN 1	4					UR YELLOW UR YELLOW
	6P2–11416–10	PLANE BEARING, CRANKSHAFT 1 COUSSINET DE VILEBREQUIN 1	4					UR GREEN UR GREEN
	6P2–11416–20	PLANE BEARING, CRANKSHAFT 1 COUSSINET DE VILEBREQUIN 1	4					UR BLUE UR BLUE
5	6P2–11417–00	PLANE BEARING, CRANKSHAFT 2 COUSSINET DE VILEBREQUIN 2	4					UR YELLOW UR YELLOW
	6P2–11417–10	PLANE BEARING, CRANKSHAFT 2 COUSSINET DE VILEBREQUIN 2	4					UR GREEN UR GREEN
	6P2–11417–20	PLANE BEARING, CRANKSHAFT 2 COUSSINET DE VILEBREQUIN 2	4					UR BLUE UR BLUE
6	6AW–11426–01	BEARING, THRUST 1 ROULEMENT DE BUTEE 1	2					
7	6AW–11427–01	BEARING, THRUST 2 ROULEMENT DE BUTEE 2	2					
8	6P2–11650–00	CONNECTING ROD ASSY BIELLE COMPLETTE	6					
9	63P–11654–10	.BOLT, CONNECTING ROD .BOULON, BIELLE	2					
10	6P2–11656–00	PLANE BEARING, CONNECTING ROD ROULEMENT DE BIELLE	12					UR YELLOW UR YELLOW
	6P2–11656–10	PLANE BEARING, CONNECTING ROD ROULEMENT DE BIELLE	12					UR GREEN UR GREEN
	6P2–11656–20	PLANE BEARING, CONNECTING ROD ROULEMENT DE BIELLE	12					UR BLUE UR BLUE
11	6P2–11631–10–93	PISTON (STD) PISTON (STD)	6					
	6P2–11635–10	PISTON (0.25MM O/S) PISTON (0.25MM O/S)	6					AP AP
12	63P–11603–01	PISTON RING SET (STD) JEU DE SEGMENTS (STD)	6					
	63P–11604–00	PISTON RING SET (0.25MM O/S) JEU DE SEGMENTS (0.25MM O/S)	6					AP AP
13	63P–11633–10	PIN, PISTON AXE, PISTON	6					
14	63P–11634–00	CLIP, PISTON PIN AGRAFE, AXE DE PISTON	12					

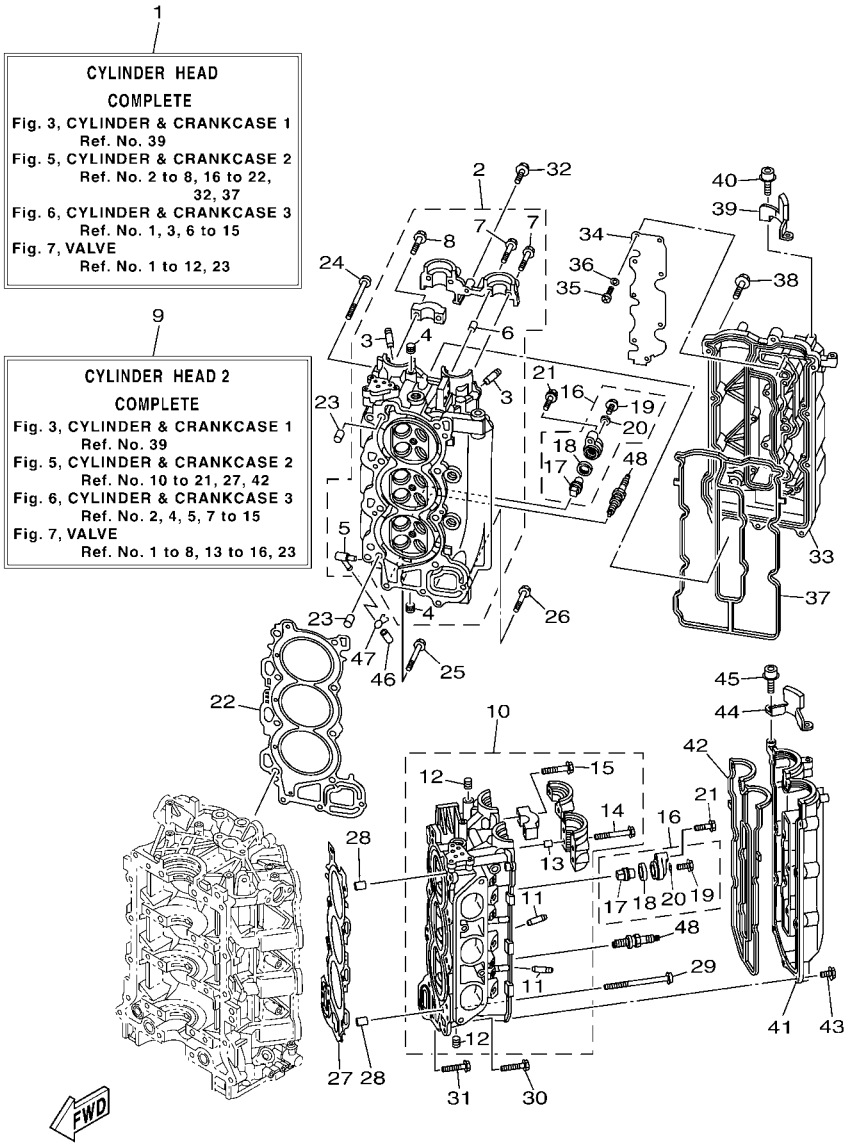

6ALB100-P050

FIG. 5 CYLINDER & CRANKCASE 2 CYLINDRE & CARTER 2

REF. NO.	PART NO. N° PIECES	DESCRIPTION DESCRIPTION	6BB9					REMARKS REMARQUES
1	6P2–W009A–04–9S	CYLINDER HEAD COMPLETE CULASSE (ENS.)	1					
2	6P2–11110–11–9S	CYLINDER HEAD ASSY JEU DE CULASSE	1					
3	6S5–11133–10	.GUIDE, VALVE 1 .GUIDE, SOUPAPE 1	12					
4	90344–51019	.PLUG, TAPER SCREW .PLOT, FILETE CONIQUE	7					
5	676–11372–00	.NIPPLE, HOSE .RACCORD, TUYAU	1					
6	91809–08006	.PIN, DOWEL .GOUJON, D'ASSEMBLAGE	2					
7	90119–07001	.BOLT, WITH WASHER .BOULON, AVEC RONDELLE	4					
8	90119–07234	.BOLT, WITH WASHER .BOULON, AVEC RONDELLE	14					
9	6P2–W009C–04–9S	CYLINDER HEAD 2 COMPLETE CULASSE 2	1					
10	6P2–11120–11–9S	CYLINDER HEAD ASSY 2 CULASSE 2	1					
11	6S5–11133–10	.GUIDE, VALVE 1 .GUIDE, SOUPAPE 1	12					
12	90344–51019	.PLUG, TAPER SCREW .PLOT, FILETE CONIQUE	3					
13	91809–08006	.PIN, DOWEL .GOUJON, D'ASSEMBLAGE	4					
14	90119–07235	.BOLT/WASHER-CAM CAPS .BOULON, AVEC RONDELLE	6					
15	90119–07234	.BOLT, WITH WASHER .BOULON, AVEC RONDELLE	12					
16	69J–11301–00	ANODE COVER ASSY COUVERCLE ANODE (ENS.)	4					
17	67F–11325–01	.ANODE .ANODE	1					
18	67F–11328–00	.GROMMET, ANODE .PASSE-FIL	1					
19	90105–06M07	.BOLT, FLANGE .BOULON	1					
20	90430–06M03	.GASKET .JOINT	1					
21	97575–08540	BOLT, WITH WASHER VIS HEXAGONAL AVC RONDELLE	4					
22	6P2–11181–00	GASKET, CYLINDER HEAD 1 JOINT, DE CULASSE 1	1					
23	99530–14016	PIN, DOWEL GOUJON, D'ASSEMBLAGE	2					
24	90155–10004	SCREW, FLAT FILLISTER VIS, TETE OVALE PLATE	8					
25	90119–08M91	BOLT, WITH WASHER BOULON, AVEC RONDELLE	2					
26	90119–08021	BOLT, WITH WASHER BOULON, AVEC RONDELLE	1					
27	6P2–11182–00	GASKET, CYLINDER HEAD 2 JOINT, CULASSE 2	1					

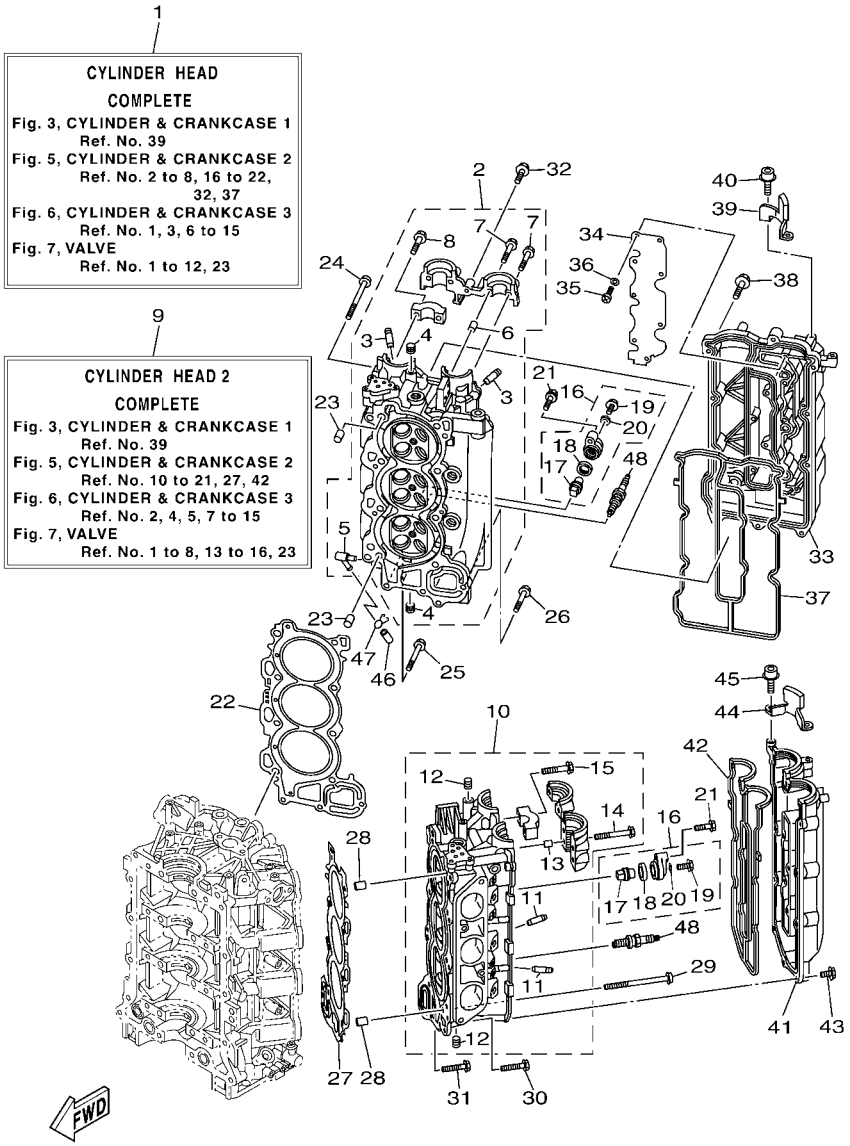

6ALB100-P050

FIG. 5 CYLINDER & CRANKCASE 2 CYLINDRE & CARTER 2

REF. NO.	PART NO. N° PIECES	DESCRIPTION DESCRIPTION	6BB9					REMARKS REMARQUES
28	99530–14016	PIN, DOWEL GOUJON, D'ASSEMBLAGE	2					
29	90155–10004	SCREW, FLAT FILLISTER VIS, TETE OVALE PLATE	8					
30	90119–08M91	BOLT, WITH WASHER BOULON, AVEC RONDELLE	2					
31	90119–08021	BOLT, WITH WASHER BOULON, AVEC RONDELLE	1					
32	97595–06530	BOLT, WITH WASHER VIS HEXAGONAL AVC RONDELLE	1					
33	6P2–11191–00–9S	COVER, CYLINDER HEAD 1 COUVERCLE, CULASSE 1	1					
34	6P2–11135–00	PLATE, BREATHER 3 PLAQUE, RENIFLARD 3	1					
35	98507–04008	SCREW, PAN HEAD VIS, TETE TRONCONIQUE	9					
36	92907–04600	WASHER RONDELLE	9					
37	6P2–11193–00	GASKET, HEAD COVER 1 JOINT, COUVERCLE DE CULASSE 1	1					
38	97595–06530	BOLT, WITH WASHER VIS HEXAGONAL AVC RONDELLE	14					
39	6P2–15142–00	GUIDE 1 GUIDE 1	1					
40	90110–06150	BOLT, HEXAGON SOCKET HEAD BOULON, TETE HEXAGONALE CREUSE	2					
41	6P2–11192–00–9S	COVER, CYLINDER HEAD 2 COUVERCLE, CULASSE 2	1					
42	6P2–11194–00	GASKET, HEAD COVER 2 JOINT, COUVERCLE DE CULASSE 2	1					
43	97595–06530	BOLT, WITH WASHER VIS HEXAGONAL AVC RONDELLE	14					
44	6P2–15143–00	GUIDE GUIDE	1					
45	90110–06150	BOLT, HEXAGON SOCKET HEAD BOULON, TETE HEXAGONALE CREUSE	2					
46	6P2–13448–00	CAP CAPUCHON	1					
47	90467–08M18	CLIP JONC	1					
48	94702–00400	PLUG, SPARK (NGK LFR6A-11) BOUGIE D'ALLUMAGE(NGK LFR6A-11	6					

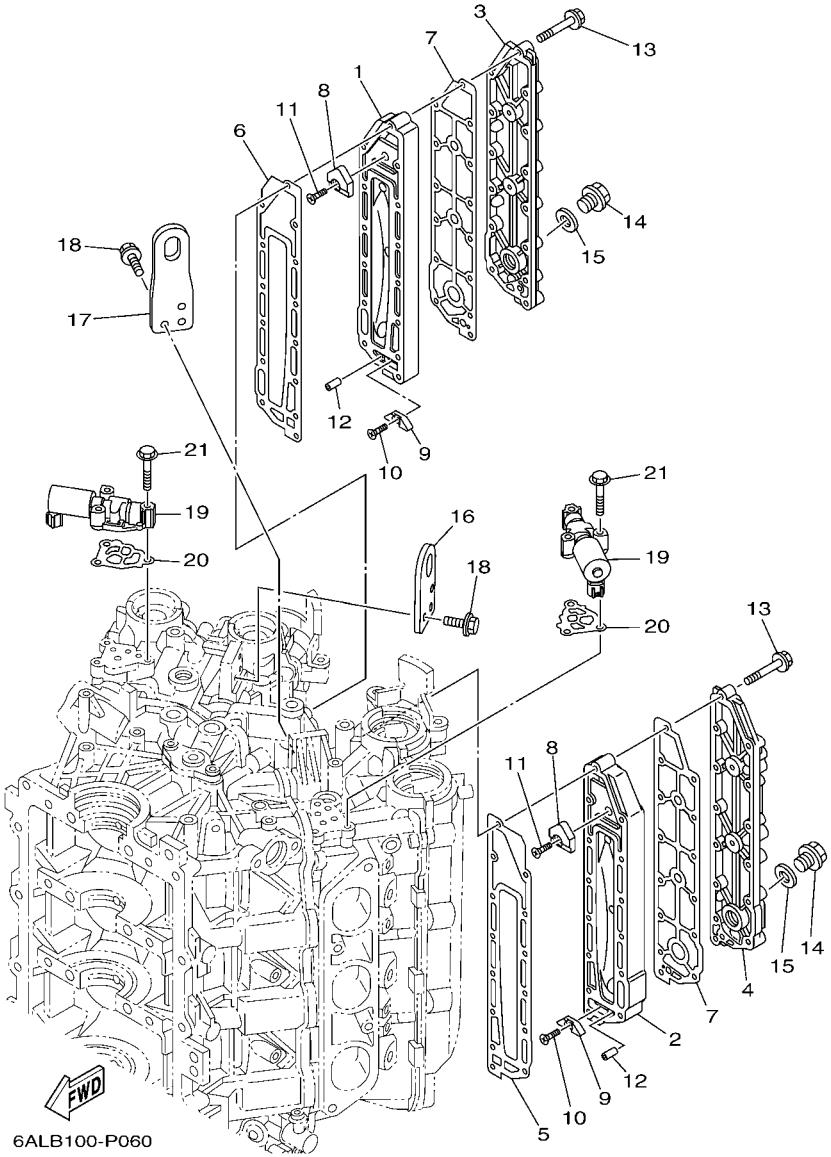

FIG. 6 CYLINDER & CRANKCASE 3 CYLINDRE & CARTER 3

REF. NO.	PART NO. N° PIECES	DESCRIPTION DESCRIPTION	6BB9					REMARKS REMARQUES
1	69J–41111–01–9S	INNER COVER, EXHAUST PLAQUE, ECHAPPEMENT	1					
2	69J–41121–01–9S	INNER COVER,EXHAUST PLAQUE, ECHAPPEMENT	1					
3	69J–41113–02–9S	OUTER COVER, EXHAUST COUVERCLE, ECHAPPEMENT	1					
4	69J–41123–02–9S	OUTER COVER, EXHAUST COUVERCLE, ECHAPPEMENT	1					
5	6P2–41112–00	GASKET, EXHAUST INNER COVER JOINT, PLAQUE D'ECHAPPEMENT	1					
6	6P2–41122–00	GASKET, EXHAUST INNER COVER JOINT, PLAQUE D'EHAPPEMENT	1					
7	6P2–41114–00	GASKET, EXHAUST OUTER COVER JOINT, COUVERCLE D'ECHAPPEMENT	2					
8	6P2–11325–00	ANODE ANODE	2					
9	6E5–11325–00	ANODE ANODE	2					
10	98780–04016	SCREW, FLAT HEAD VIS A TETE FRAISEE	2					
11	90151–06M02	SCREW, COUNTERSUNK VIS, TETE NOYEE	2					
12	91690–40010	PIN, SPRING AGRAFFE	2					
13	90119–06027	BOLT, WITH WASHER BOULON, AVEC RONDELLE	28					
14	90340–18M09	PLUG, STRAIGHT SCREW PLOT, FILETE DROIT	2					
15	90201–186F1	WASHER, PLATE RONDELLE, PLATE	2					
16	6P2–11119–00	HANGER, ENGINE ANNEAU, LEVAGE	1					
17	6P2–1111E–00	HANGER, ENGINE 2 ANNEAU, LEVAGE 2	1					
18	90105–06M09	BOLT, FLANGE BOULON	6					
19	6CB–86120–00	SOLENOID VALVE ASSY SOLENOIDE	2					
20	6CB–1242F–00	GASKET, FILTER JOINT, FILTRE	2					
21	90105–06035	BOLT, FLANGE BOULON	6					

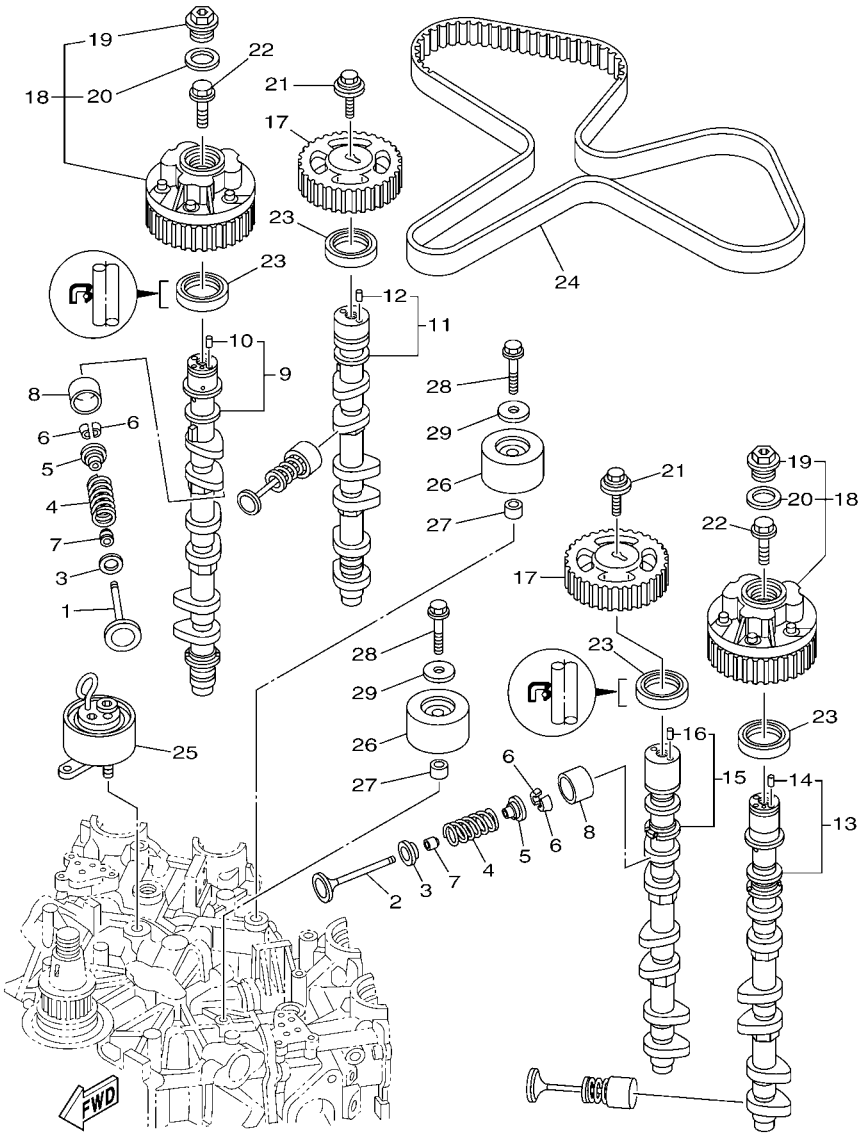

6P28110-L060

FIG. 7 VALVE SOUPAPE

REF. NO.	PART NO. N° PIECES	DESCRIPTION DESCRIPTION	6BB9					REMARKS REMARQUES
1	6P2–12111–10	VALVE, INTAKE SOUPAPE, ADMISSION	12					
2	6DX–12121–00	VALVE, EXHAUST SOUPAPE, ECHAPPEMENT	12					
3	K0F–A3743–00	SEAT, VALVE SPRING SIEGE, RESSORT DE SOUPAPE	24					
4	6CB–12113–00	SPRING, VALVE INNER RESSORT DE SOUPAPE, INTERNE	24					
5	K0F–A3741–00	RETAINER, VALVE SPRING BUTEE DE RESSORT DE SOUPAPA	24					
6	K0F–A3742–00	LOCK, VALVE SPRING RETAINER FRAISE, SOUPAPE	48					
7	51Y–12119–00	SEAL, VALVE STEM JOINT, QUEUE DE SOUPAPE	24					
8	K0F–A3751–00	LIFTER, VALVE (3.000) LEVE-SOUPAPE (3.000)	24					UR UR
	K0F–A3751–10	LIFTER, VALVE (3.025) LEVE-SOUPAPE (3.025)	24					UR UR
	K0F–A3751–20	LIFTER, VALVE (3.050) LEVE-SOUPAPE (3.050)	24					UR UR
	K0F–A3751–30	LIFTER, VALVE (3.075) LEVE-SOUPAPE (3.075)	24					UR UR
	K0F–A3751–40	LIFTER, VALVE (3.100) LEVE-SOUPAPE (3.100)	24					UR UR
	K0F–A3751–50	LIFTER, VALVE (3.122) LEVE-SOUPAPE (3.122)	24					UR UR
	K0F–A3751–60	LIFTER, VALVE (3.142) LEVE-SOUPAPE (3.142)	24					UR UR
	K0F–A3751–70	LIFTER, VALVE (3.162) LEVE-SOUPAPE (3.162)	24					UR UR
	K0F–A3751–80	LIFTER, VALVE (3.182) LEVE-SOUPAPE (3.182)	24					UR UR
	K0F–A3751–90	LIFTER, VALVE (3.202) LEVE-SOUPAPE (3.202)	24					UR UR
	K0F–A3751–A0	LIFTER, VALVE (3.222) LEVE-SOUPAPE (3.222)	24					UR UR
	K0F–A3751–B0	LIFTER, VALVE (3.242) LEVE-SOUPAPE (3.242)	24					UR UR
	K0F–A3751–C0	LIFTER, VALVE (3.262) LEVE-SOUPAPE (3.262)	24					UR UR
	K0F–A3751–D0	LIFTER, VALVE (3.282) LEVE-SOUPAPE (3.282)	24					UR UR
	K0F–A3751–E0	LIFTER, VALVE (3.302) LEVE-SOUPAPE (3.302)	24					UR UR
	K0F–A3751–F0	LIFTER, VALVE (3.322) LEVE-SOUPAPE (3.322)	24					UR UR
	K0F–A3751–G0	LIFTER, VALVE (3.342) LEVE-SOUPAPE (3.342)	24					UR UR
	K0F–A3751–H0	LIFTER, VALVE (3.362) LEVE-SOUPAPE (3.362)	24					UR UR
	K0F–A3751–J0	LIFTER, VALVE (3.382) LEVE-SOUPAPE (3.382)	24					UR UR
	K0F–A3751–K0	LIFTER, VALVE (3.402) LEVE-SOUPAPE (3.402)	24					UR UR

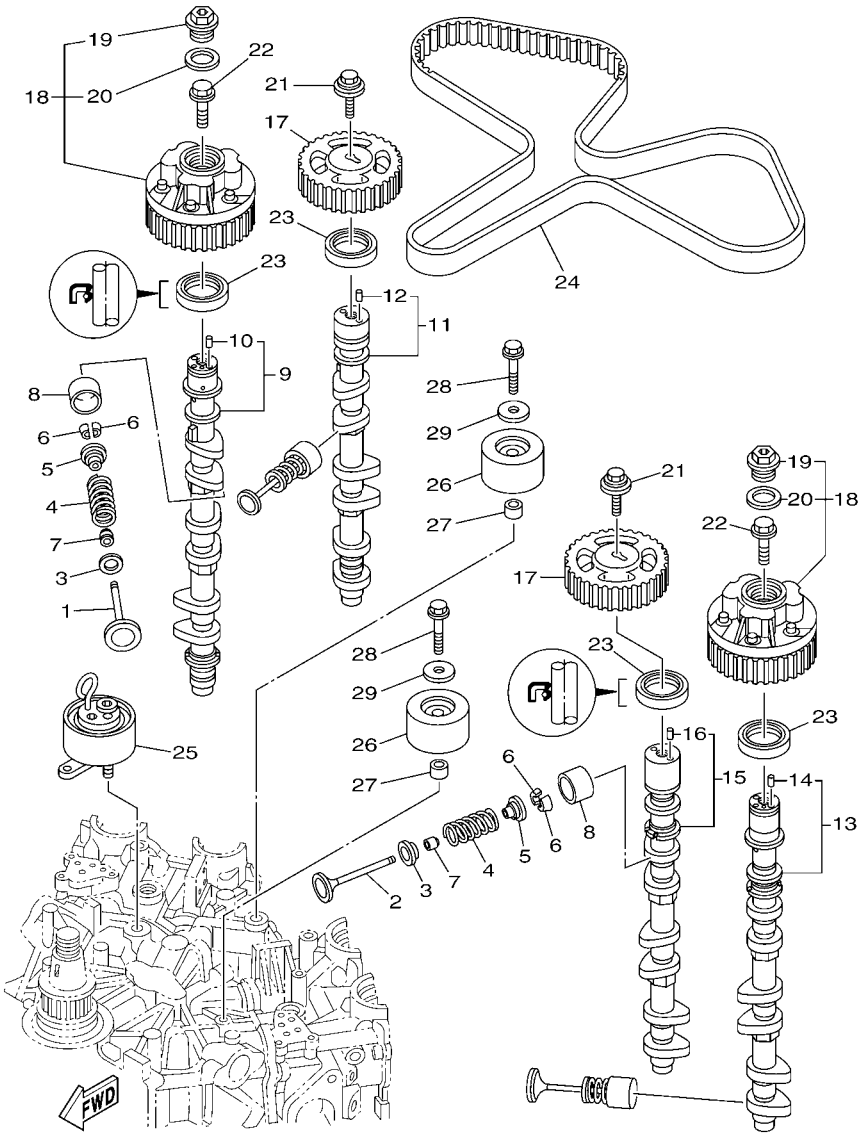

6P28110-L060

FIG. 7 VALVE SOUPAPE

REF. NO.	PART NO. N° PIECES	DESCRIPTION DESCRIPTION	6BB9					REMARKS REMARQUES
8	K0F–A3751–L0	LIFTER, VALVE (3.422) LEVE-SOUPAPE (3.422)	24					UR UR
	K0F–A3751–M0	LIFTER, VALVE (3.442) LEVE-SOUPAPE (3.442)	24					UR UR
	K0F–A3751–N0	LIFTER, VALVE (3.462) LEVE-SOUPAPE (3.462)	24					UR UR
	K0F–A3751–P0	LIFTER, VALVE (3.482) LEVE-SOUPAPE (3.482)	24					UR UR
	K0F–A3751–R0	LIFTER, VALVE (3.502) LEVE-SOUPAPE (3.502)	24					UR UR
	K0F–A3751–S0	LIFTER, VALVE (3.522) LEVE-SOUPAPE (3.522)	24					UR UR
	K0F–A3751–T0	LIFTER, VALVE (3.542) LEVE-SOUPAPE (3.542)	24					UR UR
	K0F–A3753–00	LIFTER, VALVE (3.562) LEVE-SOUPAPE (3.562)	24					UR UR
	K0F–A3753–10	LIFTER, VALVE (3.582) LEVE-SOUPAPE (3.582)	24					UR UR
	K0F–A3753–20	LIFTER, VALVE (3.602) LEVE-SOUPAPE (3.602)	24					UR UR
	K0F–A3753–30	LIFTER, VALVE (3.625) LEVE-SOUPAPE (3.625)	24					UR UR
	K0F–A3753–40	LIFTER, VALVE (3.650) LEVE-SOUPAPE (3.650)	24					UR UR
	K0F–A3753–50	LIFTER, VALVE (3.675) LEVE-SOUPAPE (3.675)	24					UR UR
	K0F–A3753–60	LIFTER, VALVE (3.700) LEVE-SOUPAPE (3.700)	24					UR UR
	K0F–A3753–70	LIFTER, VALVE (3.725) LEVE-SOUPAPE (3.725)	24					UR UR
9	6P2–12171–11	CAMSHAFT 1 ARBRE A CAMES 1	1					
10	93605–10108	.PIN, DOWEL .AXE	1					
11	6P2–12181–11	CAMSHAFT 2 ARBRE A CAMES 2	1					
12	93605–10108	.PIN, DOWEL .AXE	1					
13	6P2–12172–11	CAMSHAFT 3 ARBRE A CAMES 3	1					
14	93605–10108	.PIN, DOWEL .AXE	1					
15	6P2–12182–11	CAMSHAFT 4 ARBRE A CAMES 4	1					
16	93605–10108	.PIN, DOWEL .AXE	1					
17	6P2–11537–01	GEAR, DRIVEN PIGNON SECONDAIRE	2					
18	6P2–12645–20	PULLEY ASSY 1 POULIE COMPLET 1	2					
19	6P2–12623–00	.BOLT .BOULON	1					
20	6P2–12663–00	.GASKET .JOINT	1					

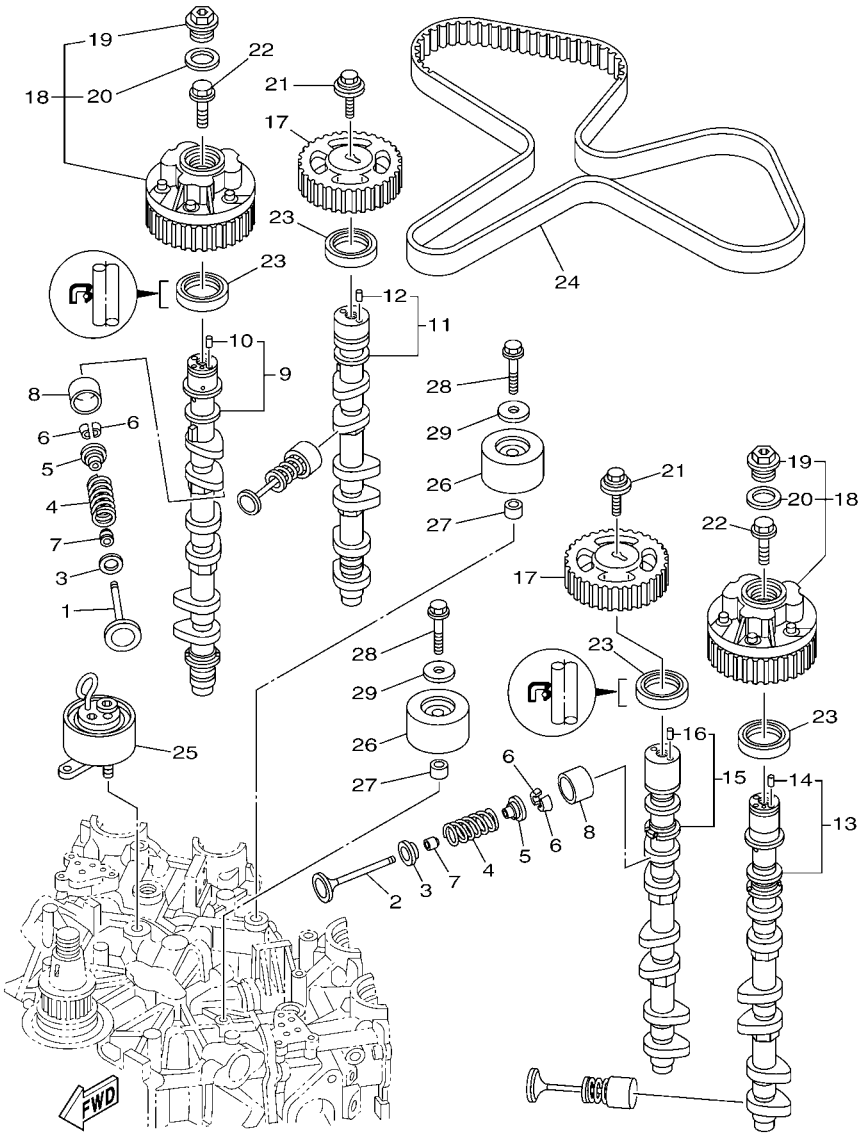

6P28110-L060

FIG. 7 VALVE SOUPAPE

REF. NO.	PART NO. N° PIECES	DESCRIPTION DESCRIPTION	6BB9					REMARKS REMARQUES
21	90119–10050	BOLT, WITH WASHER BOULON, AVEC RONDELLE	2					
22	6P2–12615–00	BOLT BOULON	2					
23	93102–38008	OIL SEAL JOINT SPY	4					
24	6P2–46241–02	BELT COURROIE TRAPEZOIDALE	1					
25	6P2–11590–01	TENSIONER ASSY TENDEUR (ENS.)	1					
26	6P2–15512–00	GEAR, IDLER 1 PIGNON, INTERMEDIAIRE 1	2					
27	99530–14016	PIN, DOWEL GOUJON, D'ASSEMBLAGE	2					
28	90119–10M07	BOLT, WITH WASHER BOULON, AVEC RONDELLE	2					
29	90201–10M01	WASHER, PLATE RONDELLE, PLATE	2					

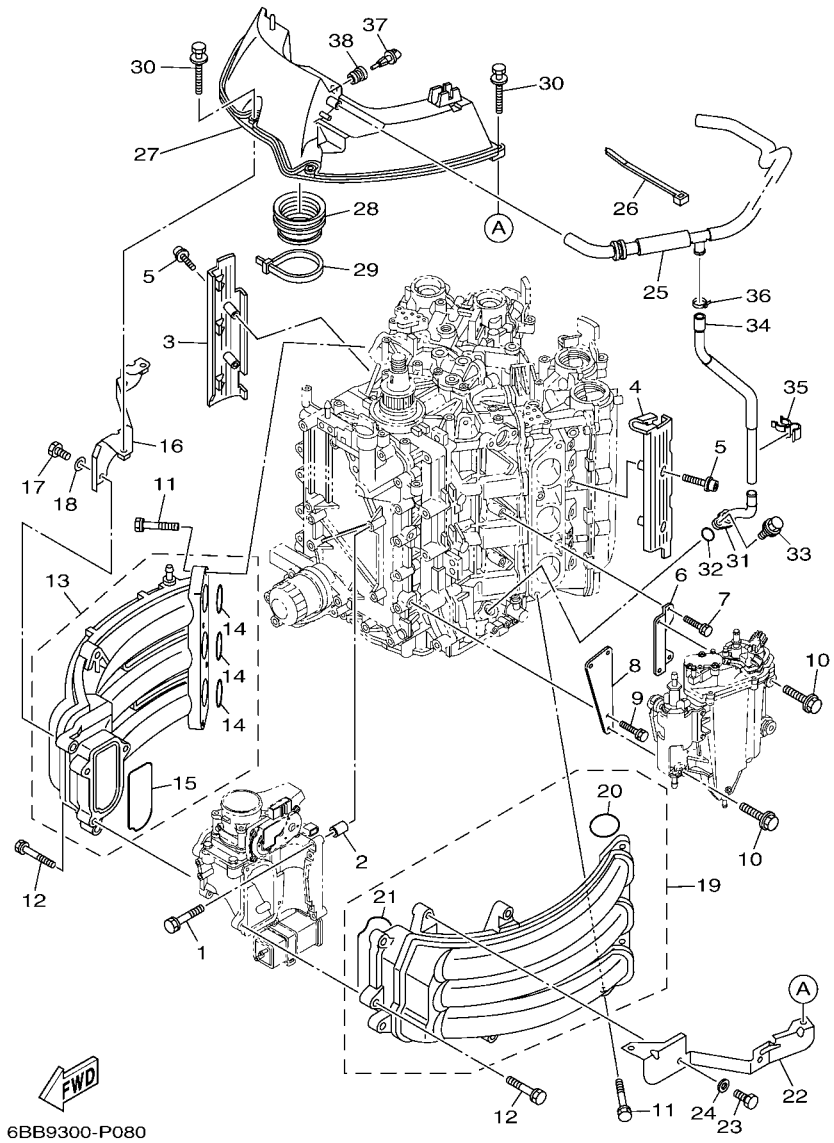

FIG. 8 INTAKE 1 — ADMISSION 1

REF. NO.	PART NO. N° PIECES	DESCRIPTION DESCRIPTION	6BB9					REMARKS REMARQUES
1	97575–08540	BOLT, WITH WASHER VIS HEXAGONAL AVC RONDELLE	4					
2	99530–10114	PIN, DOWEL GOUJON, D'ASSEMBLAGE	2					
3	6P2–13564–00	COVER, MANIFOLD COUVERCLE, TUBULURE	1					
4	6P2–13594–00	COVER, MANIFOLD 2 COUVERCLE, TUBULURE 2	1					
5	90110–06038	BOLT, HEXAGON SOCKET HEAD BOULON, TETE HEXAGONALE CREUSE	4					
6	6P2–24422–10	PLATE PLAQUETTE	1					
7	97575–06516	BOLT, WITH WASHER VIS HEXAGONAL AVC RONDELLE	2					
8	6P2–24419–00	BRKT., SEPARATOR SUPPORT	1					
9	97575–06516	BOLT, WITH WASHER VIS HEXAGONAL AVC RONDELLE	2					
10	90119–06M24	BOLT, WITH WASHER BOULON, AVEC RONDELLE	4					
11	97575–08540	BOLT, WITH WASHER VIS HEXAGONAL AVC RONDELLE	8					
12	90119–06MA6	BOLT, WITH WASHER BOULON, AVEC RONDELLE	6					
13	6BB–13641–00	MANIFOLD, INTAKE 1 TUBULURE, ADMISSION 1	1					
14	6P2–13645–00	.GASKET, MANIFOLD 1 .JOINT, TUBULURE 1	3					
15	6BB–13646–00	.GASKET, MANIFOLD 2 .JOINT, TUBULURE 2	1					
16	6BB–13898–00	HOLDER SUPPORT	1					
17	97095–06016	BOLT BOULON	2					
18	92995–06600	WASHER RONDELLE	2					
19	6BB–13642–00	MANIFOLD 2 TUBULURE 2	1					
20	6P2–13645–00	.GASKET, MANIFOLD 1 .JOINT, TUBULURE 1	3					
21	6BB–13646–00	.GASKET, MANIFOLD 2 .JOINT, TUBULURE 2	1					
22	6BB–13898–10	HOLDER SUPPORT	1					
23	97095–06016	BOLT BOULON	2					
24	92995–06600	WASHER RONDELLE	2					
25	6P2–15373–01	PIPE, BREATHER DURITE DE RENIFLARD	1					
26	90465–13M18	CLAMP BRIDE	1					
27	6P2–14440–00	SILENCER ASSY, INTAKE SIENCIEUX D'ADMISSION	1					

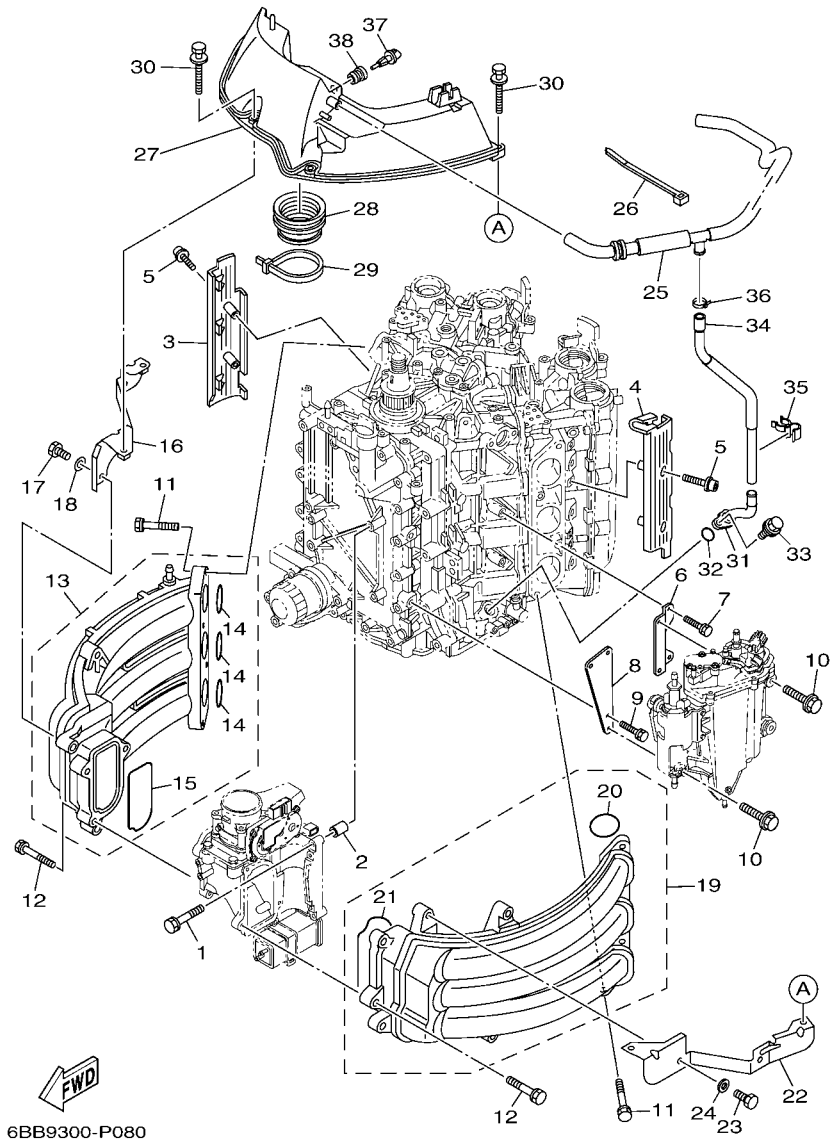

FIG. 8 INTAKE 1 — ADMISSION 1

REF. NO.	PART NO. N° PIECES	DESCRIPTION DESCRIPTION	6BB9					REMARKS REMARQUES
28	6P2–1441J–00	PIPE, SILENCER DURITE, DE SILENCIEUX	1					
29	90464–99004	CLAMP BRIDE	1					
30	90119–06M35	BOLT, WITH WASHER BOULON, AVEC RONDELLE	4					
31	6P2–11372–00	NIPPLE, HOSE RACCORD, TUYAU	1					
32	93210–19MJ3	O-RING JOINT TORIQUE	1					
33	97595–06620	BOLT, WITH WASHER VIS HEXAGONAL AVC RONDELLE	1					
34	6P2–11377–00	HOSE DURITE	1					
35	90464–20011	CLAMP BRIDE	1					
36	90465–11M10	CLAMP BRIDE	1					
37	63P–85886–00	SENSOR, AIR TEMPERATURE SONDE	1					
38	63P–14435–00	GROMMET RONDELLE CAOUTCHOUC	1					

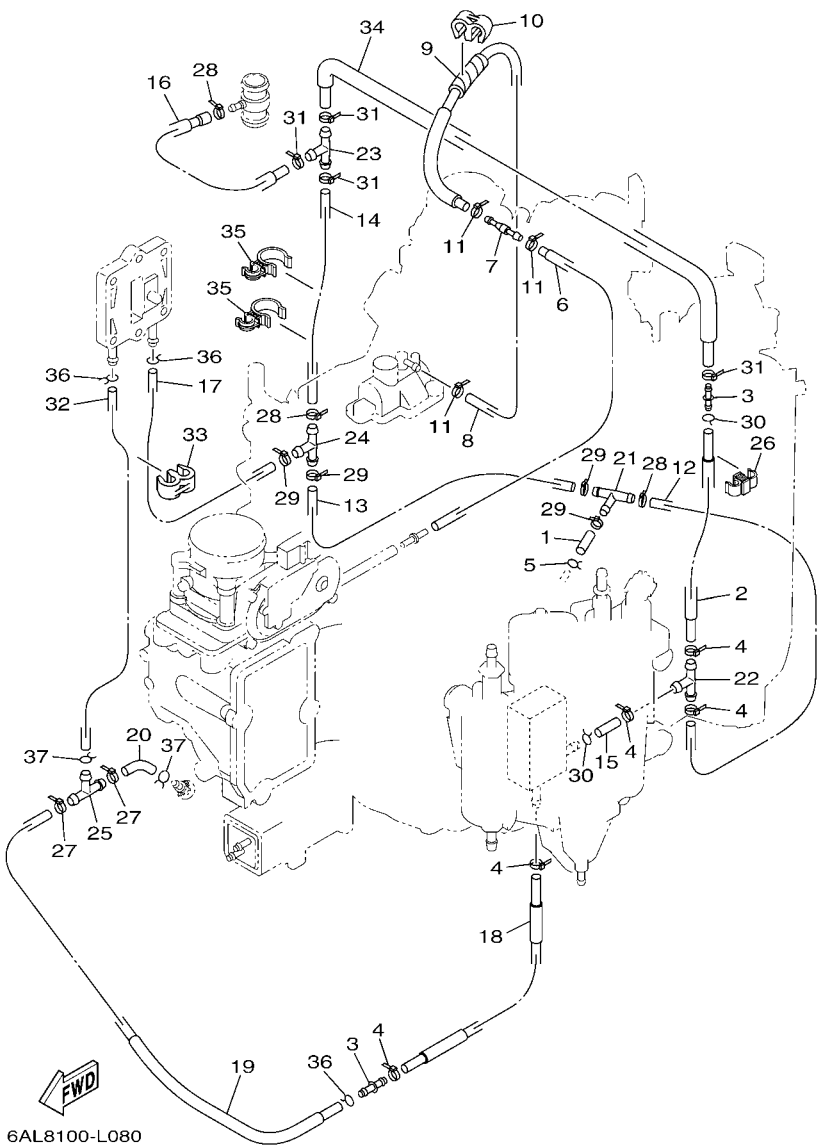

FIG. 9 INTAKE 2 — ADMISSION 2

REF. NO.	PART NO. N° PIECES	DESCRIPTION DESCRIPTION	6BB9					REMARKS REMARQUES
1	90445–09040	HOSE (L50) DURITE (L50)	1					
2	6P2–12484–01	PIPE 4 DURITE 4	1					
3	6CE–24376–00	PIPE, JOINT 1 DURITE 1, RACCORDEMENT	2					
4	90465–11M10	CLAMP BRIDE	5					
5	90467–09M03	CLIP JONC	1					
6	6P2–12482–00	PIPE 2 DURITE 2	1					
7	6E5–21744–00	BREATHER RENIFLARD	1					
8	6P2–12483–00	PIPE 3 DURITE 3	1					
9	90446–10M01	HOSE (L60) DURITE (L60)	1					
10	90464–60067	CLAMP BRIDE	1					
11	90465–11M10	CLAMP BRIDE	3					
12	90445–09041	HOSE (L500) DURITE (L500)	1					
13	90445–09224	HOSE (L270) DURITE (L270)	1					
14	90445–09097	HOSE (L250) DURITE (L250)	1					
15	90445–09220	HOSE (L30) DURITE (L30)	1					
16	6P2–12485–00	PIPE 5 DURITE 5	1					
17	6P2–1248A–00	PIPE 8 DURITE 8	1					
18	6P2–1248E–00	PIPE 9 DURITE	1					
19	6P2–14752–00	PIPE, OUTLET PMBOUT DE SILENCIEUX	1					
20	61A–24316–00	PIPE 6 DURITE 6	1					
21	688–24378–00	PIPE, JOINT 3 DURITE RACCORDEMENT 3	1					
22	688–24378–00	PIPE, JOINT 3 DURITE RACCORDEMENT 3	1					
23	688–24378–00	PIPE, JOINT 3 DURITE RACCORDEMENT 3	1					
24	688–24378–00	PIPE, JOINT 3 DURITE RACCORDEMENT 3	1					
25	688–24378–00	PIPE, JOINT 3 DURITE RACCORDEMENT 3	1					
26	90464–09013	CLAMP BRIDE	1					
27	90465–11M10	CLAMP BRIDE	2					

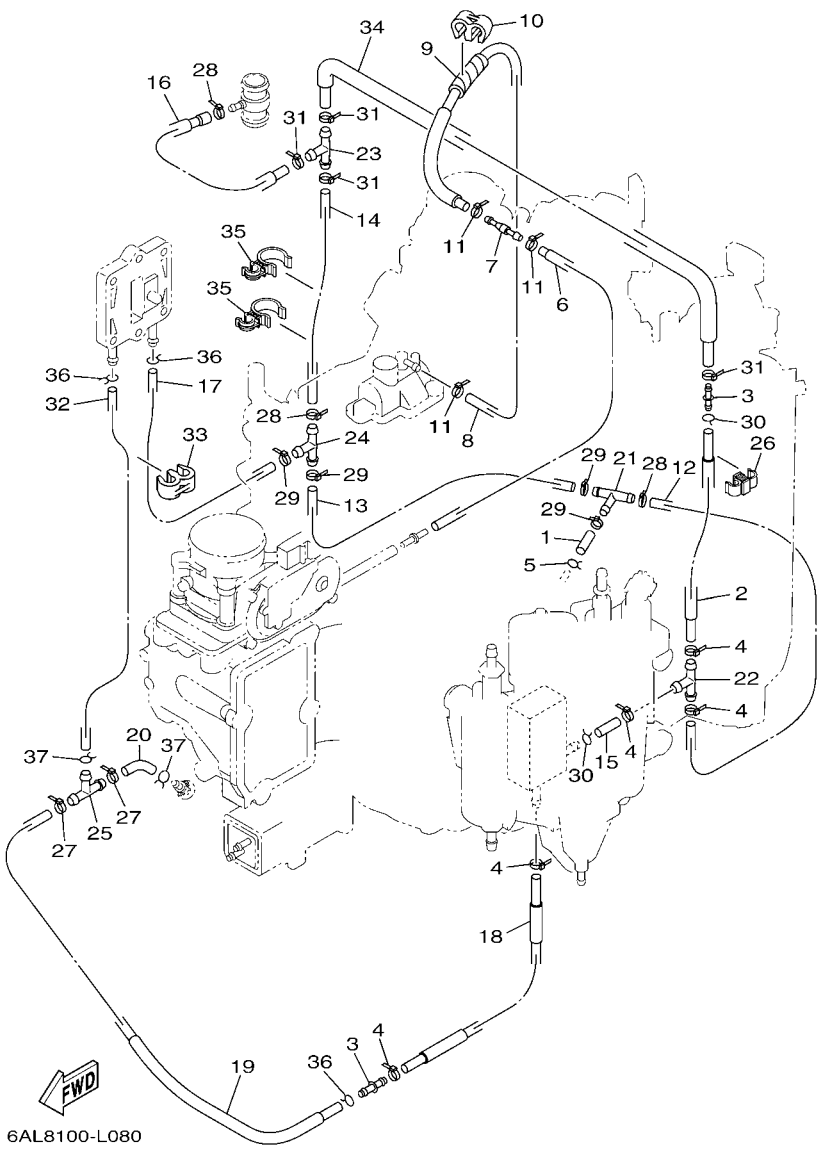

FIG. 9 INTAKE 2 — ADMISSION 2

REF. NO.	PART NO. N° PIECES	DESCRIPTION DESCRIPTION	6BB9					REMARKS REMARQUES
28	90465–11M10	CLAMP BRIDE	3					
29	90465–11M10	CLAMP BRIDE	4					
30	90467–08M18	CLIP JONC	2					
31	90465–11M10	CLAMP BRIDE	4					
32	90445–09304	HOSE (L310) DURITE (L310)	1					
33	90464–60067	CLAMP BRIDE	1					
34	6P2–12481–12	PIPE 1 DURITE 1	1					
35	90464–21002	CLAMP BRIDE	2					
36	90467–08M18	CLIP JONC	3					
37	90467–09M09	CLIP JONC	2					

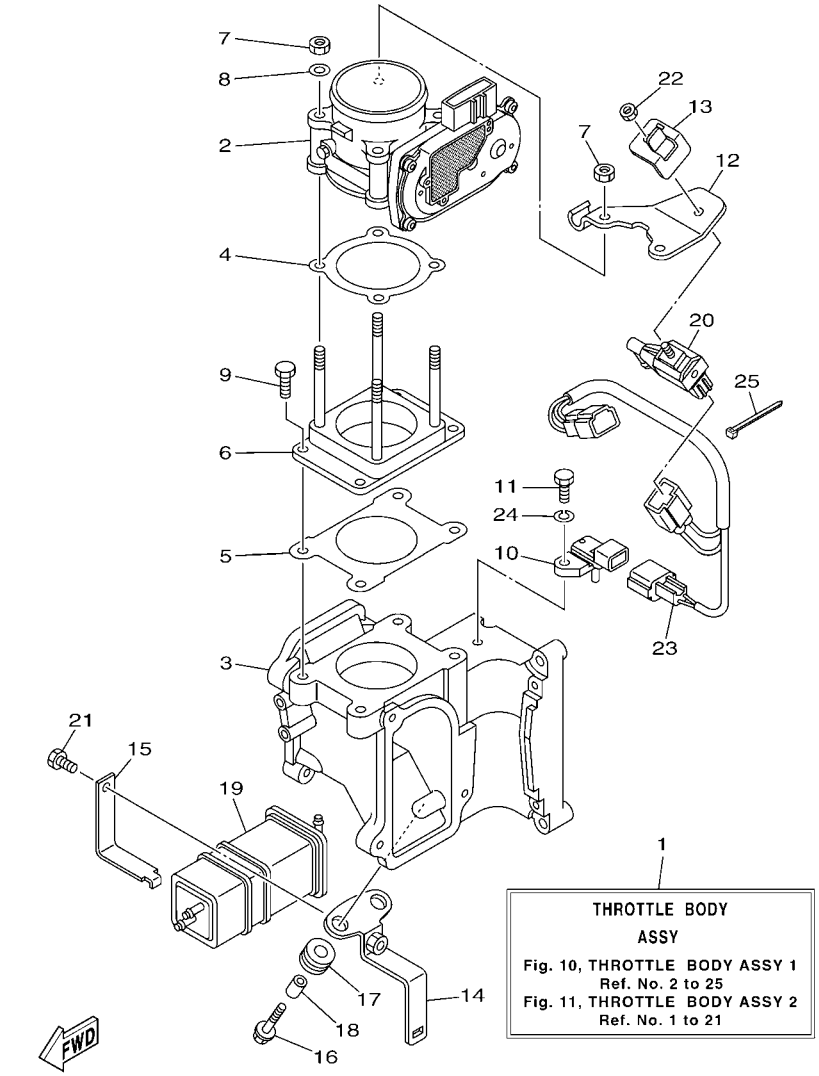

6BB7300-M100

FIG. 10 THROTTLE BODY ASSY 1 CARTER D'ACCELERATEUR 1

REF. NO.	PART NO. N° PIECES	DESCRIPTION DESCRIPTION	6BB9					REMARKS REMARQUES
1	6BB–13750–10	THROTTLE BODY ASSY CARTER D'ACCELERATEUR COMPLET	1					
2	6P2–13751–01	BODY, THROTTLE 1 CARTER 1	1					
3	6BB–13711–00	MIXING BODY CHAMBRE DE MELANGE	1					
4	6P2–13556–00	GASKET, MANIFOLD JOINT, TUBULURE	1					
5	6P2–13557–00	GASKET JOINT	1					
6	6P2–14360–00	THROTTLE DAMPER ASSY AMORIISSEUR D'ACCELERATEUR	1					
7	6P2–13588–00	NUT ECROU	4					
8	6P2–13578–00	WASHER RONDELLE	2					
9	6P2–14496–00	BOLT BOULON	4					
10	6P2–82380–00	SENSOR, PRESSURE SONDE DE PRESSION	1					
11	6P2–13573–00	BOLT 1 BOULON 1	1					
12	6P2–14255–00	PLATE PLAQUE	1					
13	6P2–14159–00	CLIP JONC	1					
14	6P2–2134X–00	BRACKET, CANISTER SUPPORT	1					
15	6P2–2419A–00	HOLDER SUPPORT	1					
16	90119–06M59	BOLT, WITH WASHER BOULON, AVEC RONDELLE	2					
17	90480–10M23	GROMMET PASSE-FIL	2					
18	90387–06289	COLLAR COLLERETTE	2					
19	6P2–24170–00	CANISTER ASSY BANDE, RASERVOIR A ESSENCE	1					
20	6C5–86120–00	SOLENOID VALVE ASSY SOLENOIDE	1					
21	6P2–13574–00	BOLT 2 BOULON 2	1					
22	69J–14164–00	NUT, HOLDING ECROU, FIXATION	1					
23	6P2–8258A–00	EXTENSION, WIRE HARNESS EXTENSION, FAISCEAU DE FILS	1					
24	68V–14356–00	WASHER, SPRING RONDELLE	1					
25	68V–2481H–00	CLAMP BRIDE	1					

FIG. 11 THROTTLE BODY ASSY 2 CARTER D'ACCELERATEUR 2

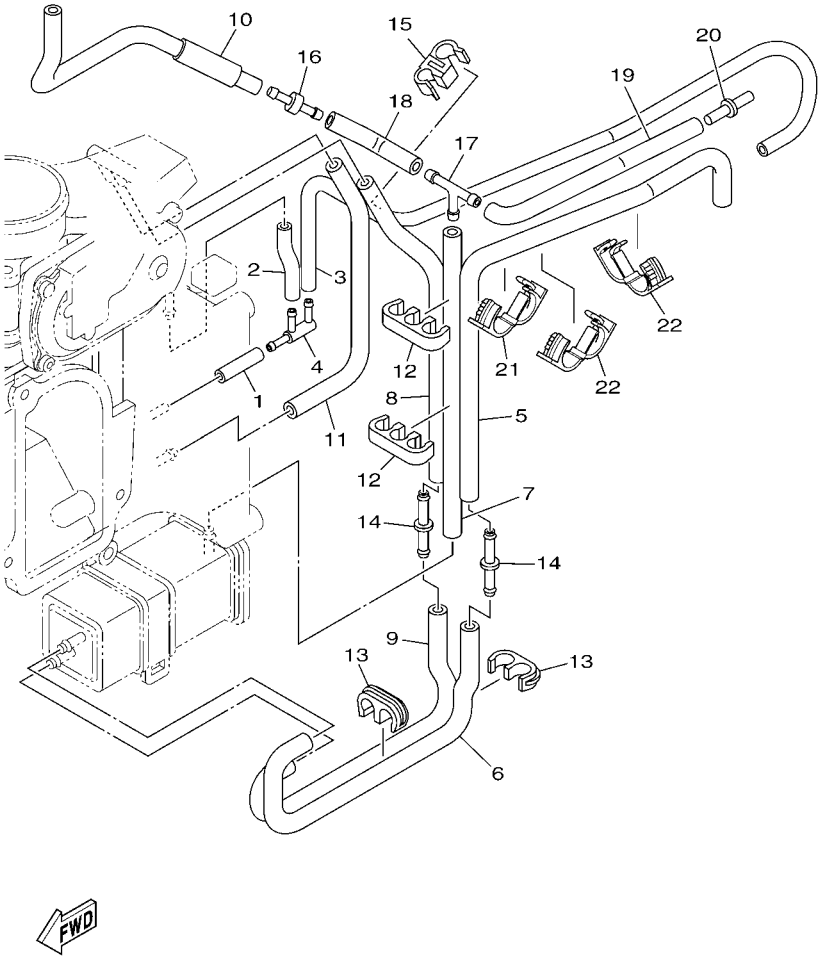

REF. NO.	PART NO. N° PIECES	DESCRIPTION DESCRIPTION	6BB9					REMARKS REMARQUES
1	6P2–14349–00	PIPE DURITE	1					
2	6P2–13533–00	HOSE, VACUUM SENSING 4 DURITE 4	1					
3	6P2–13532–10	HOSE, VACUUM SENSING 3 DURITE 3	1					
4	6P2–13595–00	JOINT RACCORD	1					
5	6P2–1475A–10	PIPE 1 DURITE 1	1					
6	6P2–1475E–00	PIPE 2 DURITE	1					
7	6P2–13545–00	HOSE 1 DURITE 1	1					
8	6P2–1475F–00	PIPE 3 DURITE 3	1					
9	6P2–1475G–00	PIPE 4 DURITE 4	1					
10	6P2–13546–00	HOSE 2 DURITE 2	1					
11	6P2–2416A–00	HOSE DURITE	1					
12	6P2–24135–00	CLAMP 1 COLLIER 1	2					
13	6P2–24136–00	CLAMP 2 COLLIER 2	2					
14	6P2–13758–00	PIPE, JOINT DURITE	2					
15	6P2–24137–00	CLAMP 3 COLLIER 3	1					
16	6E5–21744–00	BREATHER RENIFLARD	1					
17	688–24378–00	PIPE, JOINT 3 DURITE RACCORDEMENT 3	1					
18	6P2–13547–00	HOSE 3 DURITE 3	1					
19	6P2–13548–10	HOSE, AIR 4 DURITE, A AIR 4	1					
20	6P2–24376–00	PIPE, JOINT 1 DURITE 1, RACCORDEMENT	1					
21	90464–18004	CLAMP BRIDE	1					
22	90464–18004	CLAMP BRIDE	2					

FIG. 12 THROTTLE BODY ASSY 3 CARTER D'ACCELERATEUR 3

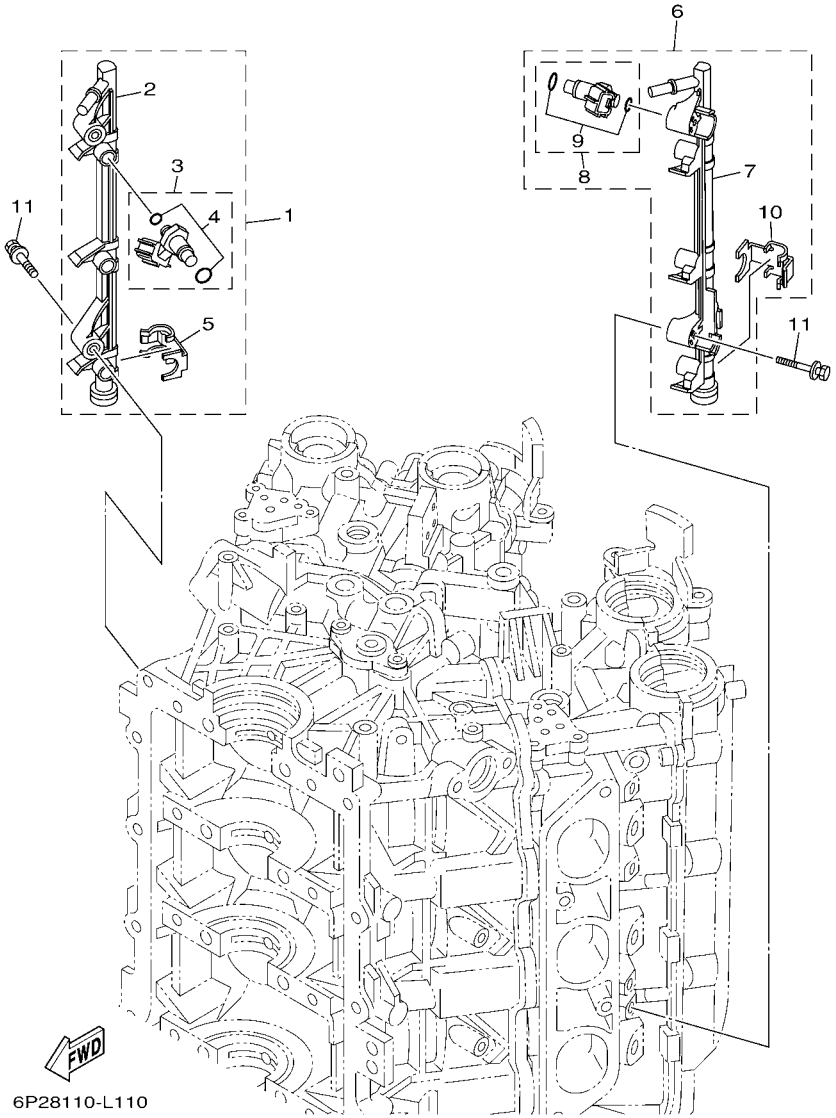

REF. NO.	PART NO. N° PIECES	DESCRIPTION DESCRIPTION	6BB9					REMARKS REMARQUES
1	6P2–13160–10	DELIVERY PIPE ASSY 1 ENS. TUBE DE REFOULEMENT 1	1					
2	6P2–13161–00	.PIPE, DELIVERY 1 .DURITE REFOULEMENT 1	1					
3	6P2–13761–10	.INJECTOR .INJECTEUR	3					
4	6C5–1410B–00	..PACKING KIT ..POCHETTE DE JOINTS	1					
5	6P2–13577–00	.CLIP .AGRAFE	3					
6	6P2–13170–10	DELIVERY PIPE ASSY 2 ENS. TUBE DE REFOULEMENT 2	1					
7	6P2–13171–00	.PIPE, DELIVERY 2 .DURITE REFOULEMENT	1					
8	6P2–13761–10	.INJECTOR .INJECTEUR	3					
9	6C5–1410B–00	..PACKING KIT ..POCHETTE DE JOINTS	1					
10	6P2–13577–00	.CLIP .AGRAFE	3					
11	90119–06122	BOLT, WITH WASHER BOULON, AVEC RONDELLE	4					

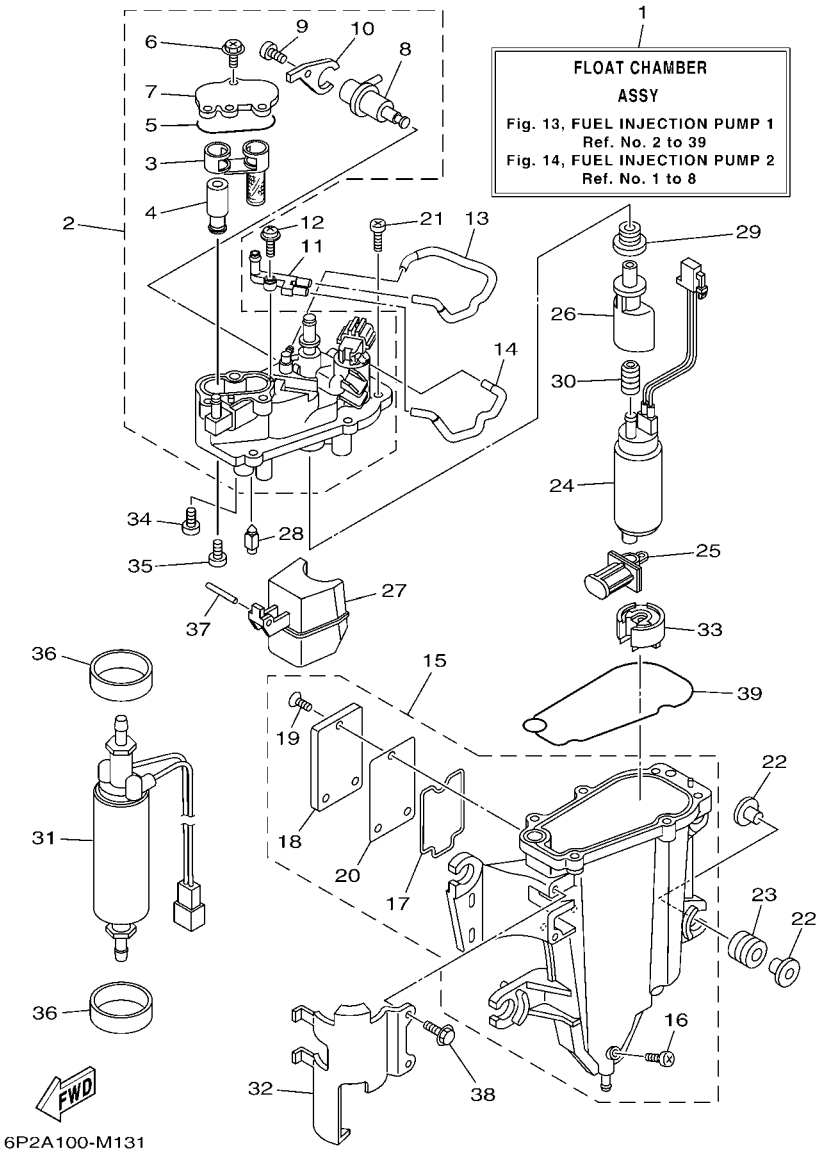

FIG. 13 FUEL INJECTION PUMP 1 POMPE A INJECTEUR 1

REF. NO.	PART NO. N° PIECES	DESCRIPTION DESCRIPTION	6BB9					REMARKS REMARQUES
1	6P2–14180–31	FLOAT CHAMBER ASSY CUVE DE FLOTTEUR	1					
2	6AW–14182–11	COVER, FLOAT CHAMBER COUVERCLE, CUVE DE FLOTTEUR	1					
3	6CB–24501–01	.FILTER, FUEL .FILTRE	1					
4	6CB–24460–00	.RELIEF VALVE ASSY .SOUPAPE DE SECURITE COMPLET	1					
5	6CB–13016–00	.O-RING .JOINT TORIQUE	1					
6	6CB–14216–00	.SCREW .VIS	3					
7	6CB–24217–00	.COVER .COUVERCLE	1					
8	6CB–13906–01	.REGULATOR, PRESSURE .REGULATEUR DE PRESSION	1					
9	6CB–14564–00	.SCREW .VIS	1					
10	6CB–14146–00	.PLATE .PLAQUE	1					
11	68V–24379–10	PIPE, JOINT 4 DURITE RACCORDEMENT 4	1					
12	68V–14216–00	SCREW VIS	1					
13	68V–1475H–00	PIPE 5 DURITE 5	1					
14	68V–1475J–00	PIPE 6 DURITE 6	1					
15	6AW–14181–11	BODY, FLOAT CHAMBER 1 CORPS, CUVE DE FLOTTEUR 1	1					
16	6P2–14191–00	.PLUG, DRAIN .PLOT, VIDANGE	1					
17	6CB–14239–00	.SEAL .JOINT	1					
18	6CB–24452–10	.COVER .COUVERCLE	1					
19	6CB–14429–01	.SCREW .VIS	3					
20	6CB–24482–00	.GASKET 1 .JOINT 1	1					
21	63P–14567–00	SCREW VIS	6					
22	69J–13716–00	COLLAR COLLERETTE	8					
23	6CB–13593–00	DAMPER AMORTISSEUR	4					
24	6P2–13907–20	FUEL PUMP COMP. POMPE A CARBURANT COMP.	1					
25	63P–13915–00	FILTER FILTRE	1					
26	6AW–13132–00	JOINT RACCORD	1					
27	6CB–14985–00	FLOAT FLOTTEUR	1					

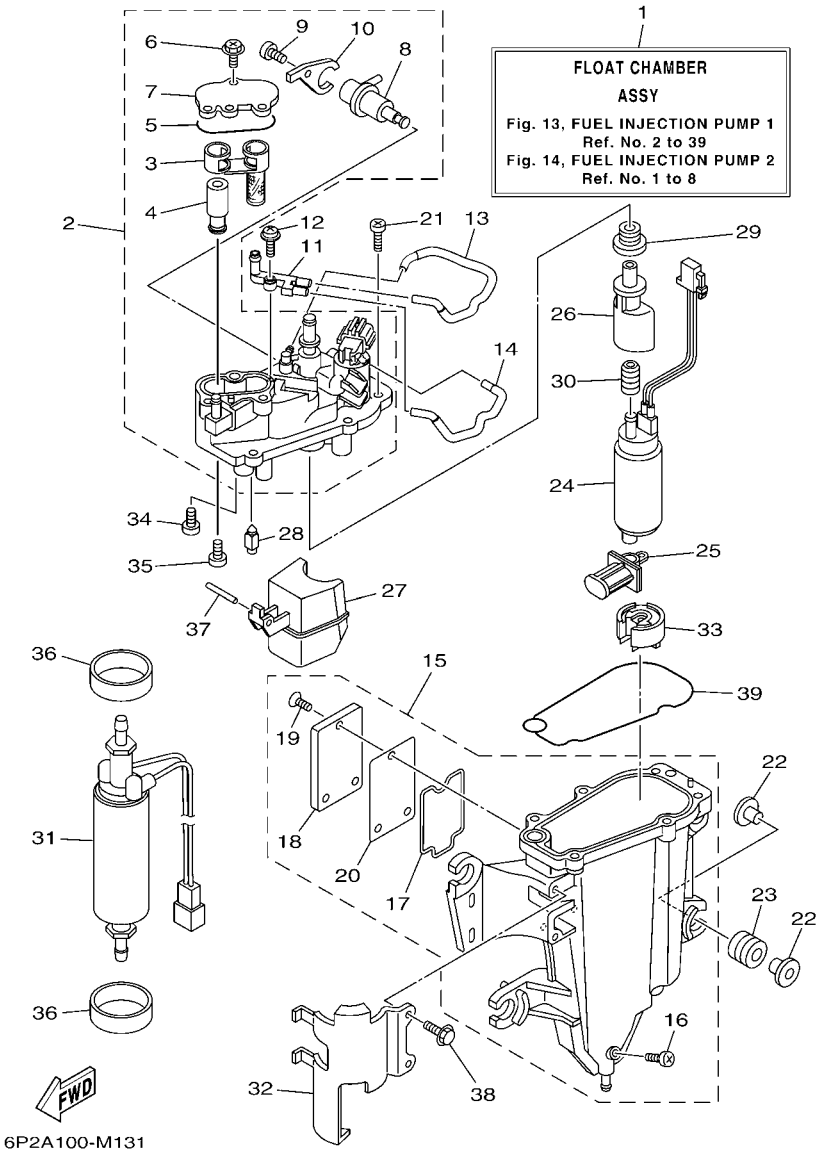

FIG. 13 FUEL INJECTION PUMP 1 POMPE A INJECTEUR 1

REF. NO.	PART NO. N° PIECES	DESCRIPTION DESCRIPTION	6BB9					REMARKS REMARQUES
28	6CB–14546–00	VALVE, NEEDLE POINTEAU	1					
29	6CB–1447B–00	BUSH 1 DOUILLE 1	1					
30	6AW–13781–00	DAMPER, PUMP AMORTISSEUR, POMPE	1					
31	6CB–24410–00	FUEL PUMP ASSY POMPE A ESSENCE	1					
32	6AW–24491–10	BRACKET, FUEL PUMP SUPPORT, POMPE A ESSENCE	1					
33	6AW–13784–00	COVER, PUMP COUVERCLE, POMPE	1					
34	4SV–24453–00	SCREW VIS	1					
35	98507–04008	SCREW, PAN HEAD VIS, TETE TRONCONIQUE	1					
36	6CB–24492–00	BUSH, FUEL PUMP BAGUE	2					
37	6P2–14386–00	PIN, FLOAT AXE, FLOTTEUR	1					
38	6CB–24592–00	BOLT BOLTE	2					
39	6CB–14984–00	GASKET, FLOAT CHAMBER JOINT, CUVE DE FLOTTEUR	1					

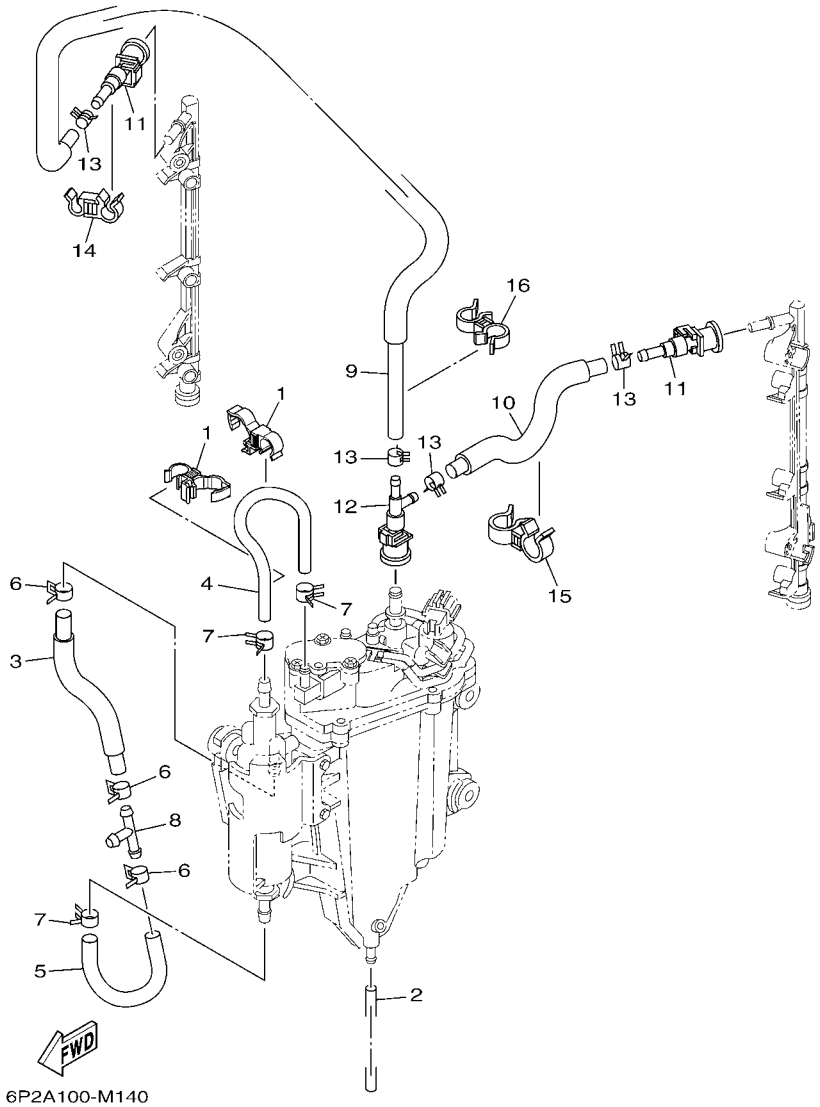

FIG. 14 FUEL INJECTION PUMP 2 POMPE A INJECTEUR 2

REF. NO.	PART NO. N° PIECES	DESCRIPTION DESCRIPTION	6BB9					REMARKS REMARQUES
1	90464–12012	CLAMP BRIDE	2					
2	6P2–14149–00	PIPE DURITE	1					
3	6AW–24323–20	PIPE 12 DURITE 12	1					
4	6AW–24324–20	PIPE 13 DURITE 13	1					
5	6AW–24317–20	PIPE 7 DURITE 7	1					
6	69J–14137–00	CLIP JONC	3					
7	68V–13577–00	CLIP AGRAFE	3					
8	6E5–24378–00	PIPE, JOINT 3 DURITE, RACCORDEMENT 3	1					
9	6P2–13973–30	PIPE, FUEL 3 TUBE 3, CARBURANT	1					
10	6P2–13974–30	PIPE, FUEL 4 TUBE 4, CARBURANT	1					
11	6AW–24300–10	FUEL PIPE JOINT DURITE RACCORDEMT. A ESSENCE	2					
12	6P2–24300–00	FUEL PIPE JOINT DURITE RACCORDEMT. A ESSENCE	1					
13	68V–13577–00	CLIP AGRAFE	4					
14	90464–12010	CLAMP BRIDE	1					
15	90464–18005	CLAMP BRIDE	1					
16	90464–12009	CLAMP BRIDE	1					

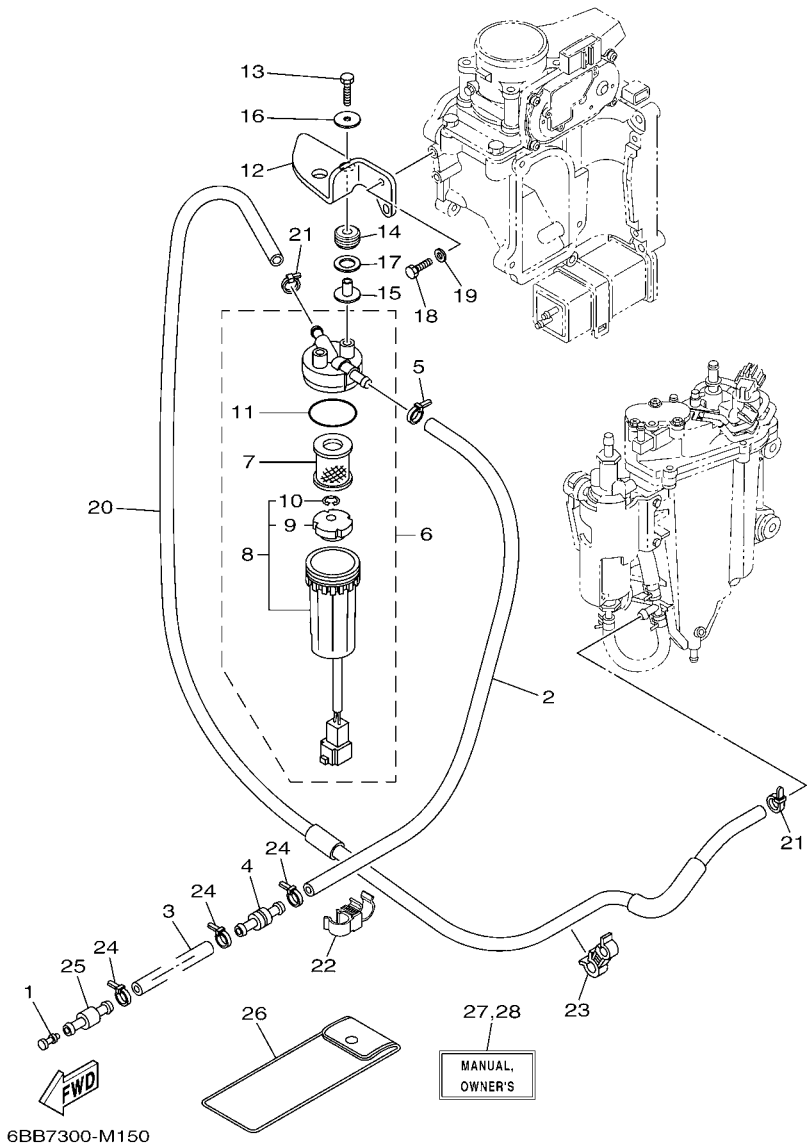

FIG. 15 FUEL 1 — CARBURANT 1

REF. NO.	PART NO. N° PIECES	DESCRIPTION DESCRIPTION	6BB9					REMARKS REMARQUES
1	689–85547–00	DAMPER AMORTISSEUR	1					
2	6P2–24314–00	PIPE 4 DURITE 4	1					
3	90445–13511	HOSE (L2000) DURITE (L2000)	1					
4	6R3–24377–10	PIPE, JOINT 2 DURITE RACCORDEMENT 2	1					
5	90465–11M10	CLAMP BRIDE	1					
6	6P3–24560–03	FILTER ASSY ENS FILTRE	1					
7	6P3–24563–01	.ELEMENT, FILTER .ELEMENT, FILTRE	1					
8	6P3–24562–03	.CUP, FILTER .CUVETTE, FILTRE	1					
9	6P3–24469–00	..FLOAT, WATER LEVEL ..FLOTTEUR	1					
10	6P3–24519–00	..CLIP ..JONC	1					
11	6P3–24564–00	.GASKET .JOINT	1					
12	6BB–24566–00	BRACKET, FILTER SUPPORT, FILTRE	1					
13	97095–06030	BOLT BOULON	2					
14	69L–85516–00	SPACER ENTRETOISE	2					
15	90387–06M03	COLLAR COLLERETTE	2					
16	90201–06101	WASHER, PLATE RONDELLE, PLATE	2					
17	90201–15021	WASHER, PLATE RONDELLE, PLATE	2					
18	97095–06016	BOLT BOULON	2					
19	92995–06600	WASHER RONDELLE	2					
20	6P2–24313–30	PIPE 3 DURITE 3	1					
21	90465–11M10	CLAMP BRIDE	2					
22	90464–12009	CLAMP BRIDE	1					
23	90464–12010	CLAMP BRIDE	1					
24	90465–11M10	CLAMP BRIDE	3					
25	6R3–24377–00	PIPE, JOINT 2 DURITE RACCORDEMENT 2	1					
26	69J–28100–01	TOOL KIT TROUSSE A OUTILS	1					AP AP
27	6P2–28199–7B–E0	MANUAL,OWNER'S MANUEL D'UTILISATION	1					UR (E) UR (E)

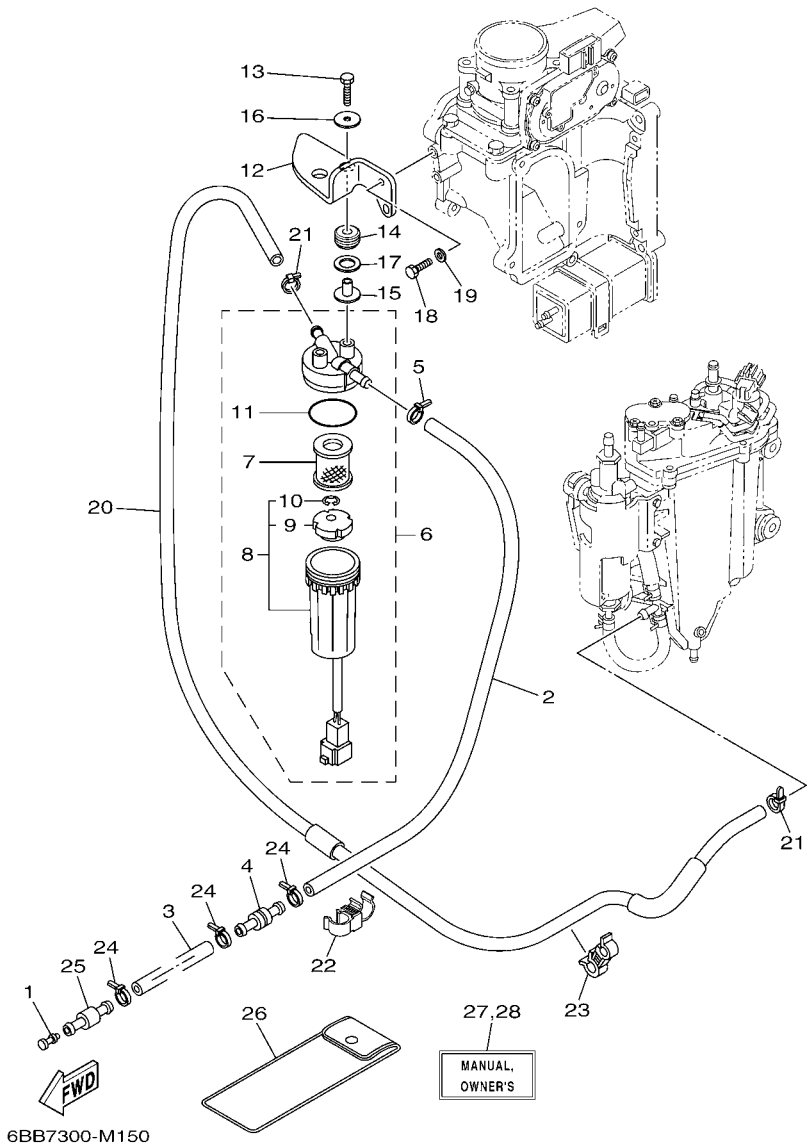

FIG. 15 FUEL 1 — CARBURANT 1

REF. NO.	PART NO. N° PIECES	DESCRIPTION DESCRIPTION	6BB9					REMARKS REMARQUES
27	6P2–28199–7B–F0	MANUAL,OWNER'S MANUEL D'UTILISATION	1					UR (F) UR (F)
	6P2–28199–7B–S0	MANUAL,OWNER'S MANUEL D'UTILISATION	1					UR (ES) UR (ES)
	6P2–28199–7B–G0	MANUAL,OWNER'S MANUEL D'UTILISATION	1					UR (D) UR (D)
	6P2–28199–7B–D0	MANUAL,OWNER'S MANUEL D'UTILISATION	1					UR (NL) UR (NL)
	6P2–28199–7B–H0	MANUAL,OWNER'S MANUEL D'UTILISATION	1					UR (I) UR (I)
28	6P2–28199–8B–K0	MANUAL,OWNER'S MANUEL D'UTILISATION	1					UR (DK) UR (DK)
	6P2–28199–8B–R0	MANUAL,OWNER'S MANUEL D'UTILISATION	1					UR (GR) UR (GR)
	6P2–28199–8B–P0	MANUAL,OWNER'S MANUEL D'UTILISATION	1					UR (P) UR (P)
	6P2–28199–8B–N0	MANUAL,OWNER'S MANUEL D'UTILISATION	1					UR (N) UR (N)
	6P2–28199–8B–M0	MANUAL,OWNER'S MANUEL D'UTILISATION	1					UR (S) UR (S)
	6P2–28199–8B–L0	MANUAL,OWNER'S MANUEL D'UTILISATION	1					UR (SF) UR (SF)

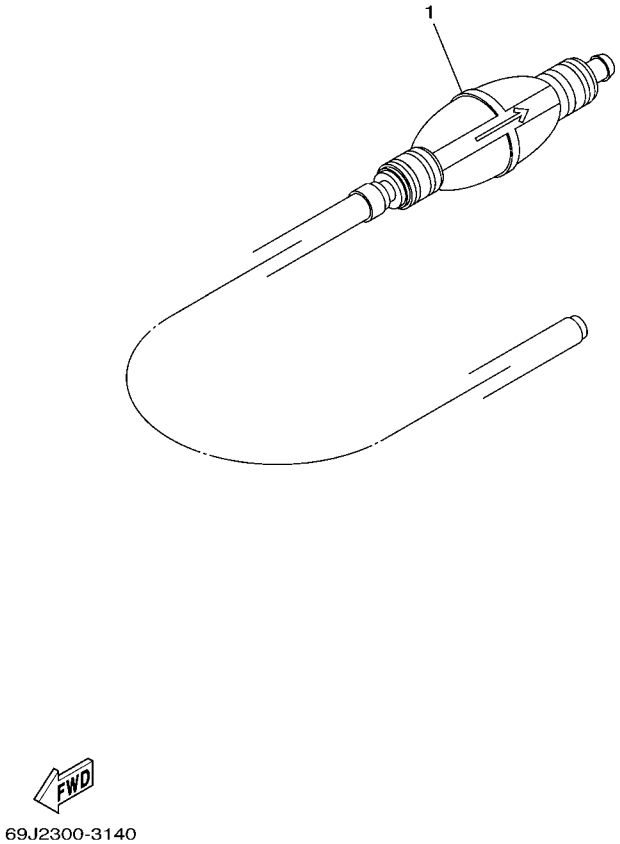

FIG. 16 FUEL 2 — CARBURANT 2

REF. NO.	PART NO. N° PIECES	DESCRIPTION DESCRIPTION	6BB9					REMARKS REMARQUES
1	6YK–24307–42	FUEL PIPE COMP. 2 DURITE A ESSENCE 2	1					AP AP

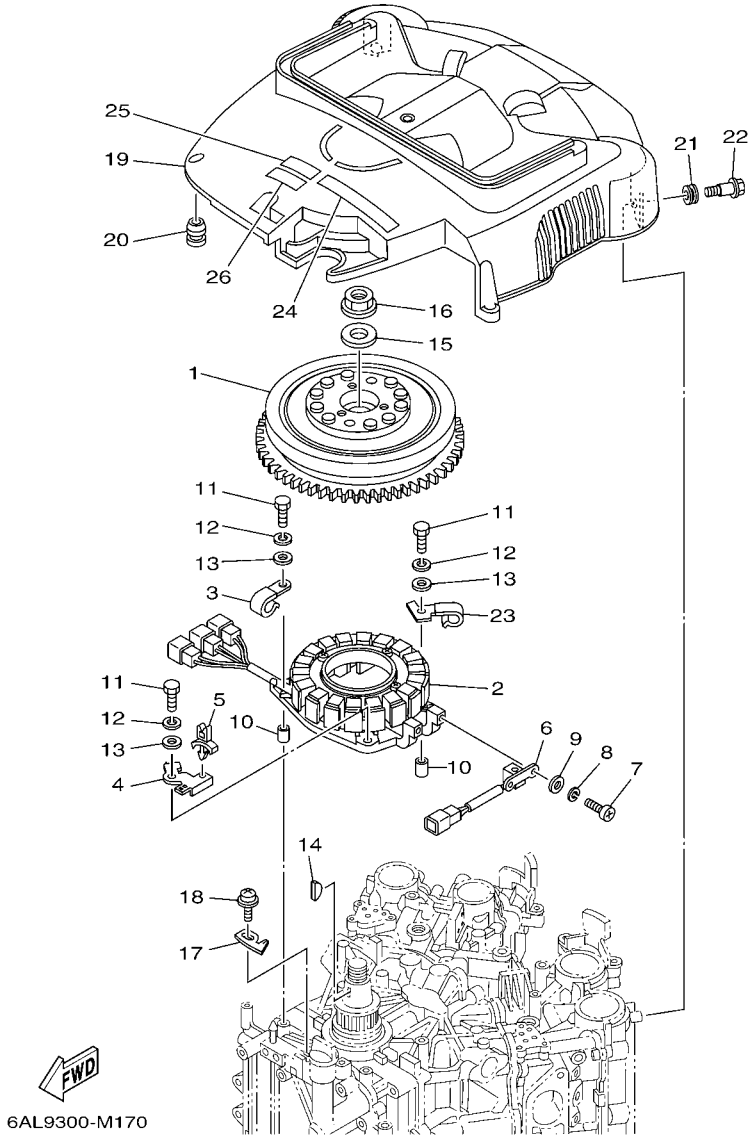

FIG. 17 GENERATOR GENERATRICE

REF. NO.	PART NO. N° PIECES	DESCRIPTION DESCRIPTION	6BB9					REMARKS REMARQUES
1	6P2–81450–00	ROTOR ASSY ROTOR COMPLET	1					
2	6P2–81460–00	BASE ASSY ENS. FLASQUE	1					
3	90462–08032	CLAMP BRIDE	1					
4	6P2–8257V–00	PLATE, CONNECTOR PLAQUE, CONNECTEUR	1					
5	90464–06001	CLAMP BRIDE	1					
6	6P2–85580–00	COIL, PULSER BOBINE, PULSEUR	1					
7	97880–05012	SCREW, PAN HEAD VIS, TETE TRONCONIQUE	2					
8	92990–05100	WASHER, SPRING RONDELLE, GROWER	2					
9	92990–05600	WASHER, PLATE RONDELLE, PLATE	2					
10	99530–08012	PIN, DOWEL GOUJON, D'ASSEMBLAGE	2					
11	97095–06035	BOLT BOULON	4					
12	92995–06100	WASHER, SPRING RONDELLE, GROWER	4					
13	92995–06600	WASHER RONDELLE	4					
14	90280–05015	KEY, WOODRUFF CLAVETTE, DEMI-LUNE	1					
15	90201–24014	WASHER, PLATE RONDELLE, PLATE	1					
16	90179–24002	NUT ECROU	1					
17	6P2–81332–00	PLATE, TIMING PLATEAU, ALLUMAGE	1					
18	97985–06210	SCREW, WITH WASHER VIS, AVEC RONDELLE	1					
19	6P2–81337–02	COVER, FLYWHEEL COUVERCLE, VOLANT	1					
20	663–82317–01	DAMPER, IGNITION COIL AMORTISSEUR, BOBINE D'ALLUM	4					
21	90480–12314	GROMMET PASSE-FIL	2					
22	90109–06MA1	BOLT BOULON	2					
23	6P2–81128–00	CLAMP BRIDE	1					
24	60L–13437–62	MARK, CAUTION MAKER	1					
25	6EE–81994–40	LABEL, SAFETY ETIQUETTE, SECURITE	1					
26	6EE–81994–50	LABEL, SAFETY ETIQUETTE, SECURITE	1					

FIG. 18 ELECTRICAL 1 PARTIE ELECTRIQUE 1

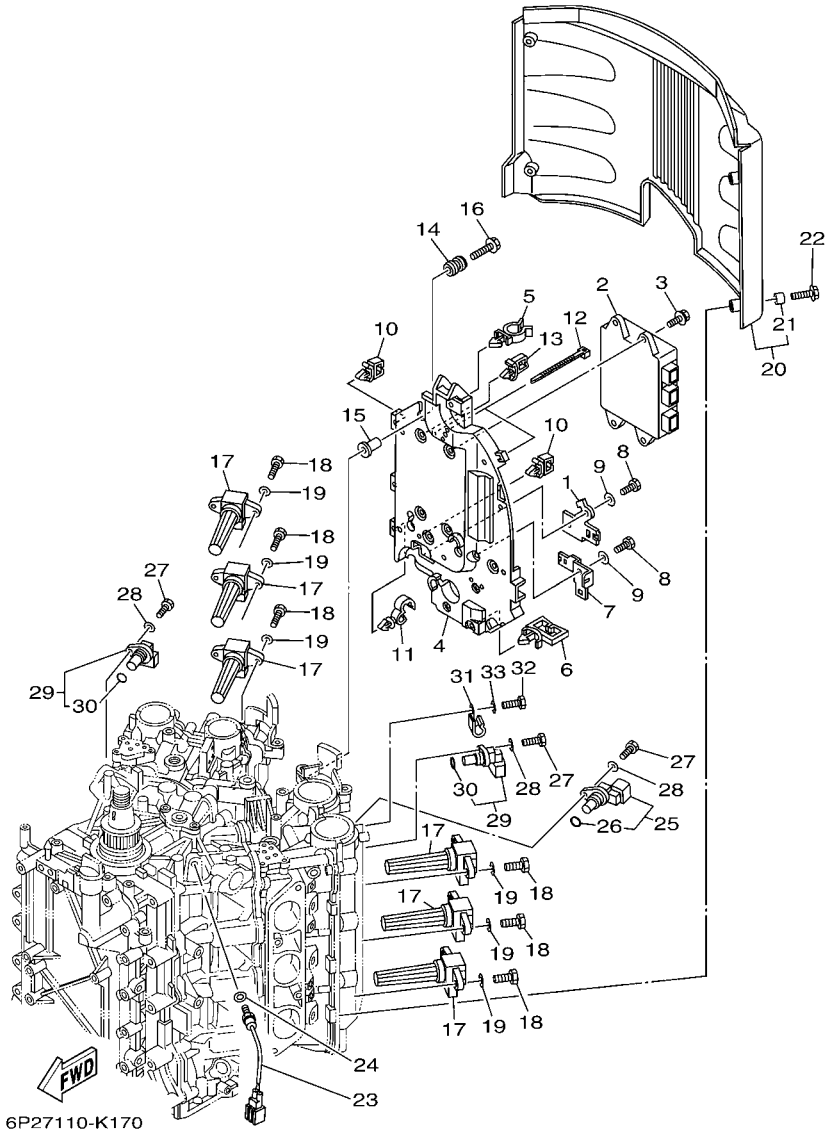

REF. NO.	PART NO. N° PIECES	DESCRIPTION DESCRIPTION	6BB9					REMARKS REMARQUES
1	6P2–8257V–00	PLATE, CONNECTOR PLAQUE, CONNECTEUR	1					
2	6BB–8591A–02	ENGINE CONTROL UNIT ASSY BLOC DE CONTROL	1					
3	90119–06M82	BOLT, WITH WASHER BOULON, AVEC RONDELLE	4					
4	6P2–82316–00	BRACKET, IGNITION COIL SUPPORT, BOBINE D'ALLUMAGE	1					
5	90464–19M45	CLAMP BRIDE	1					
6	90464–23199	CLAMP BRIDE	1					
7	6P2–81845–00	PLATE PLAQUE	1					
8	97095–06016	BOLT BOULON	2					
9	92995–06600	WASHER RONDELLE	2					
10	90464–11121	CLAMP BRIDE	4					
11	90464–13249	CLAMP BRIDE	2					
12	90465–14M66	CLAMP BRIDE	2					
13	90464–08004	CLAMP BRIDE	1					
14	6A0–82317–00	DAMPER, IGNITION COIL AMORTISSEUR, BOBINE D'ALLUM	4					
15	90387–06119	COLLAR COLLERETTE	4					
16	90119–06M59	BOLT, WITH WASHER BOULON, AVEC RONDELLE	4					
17	6P2–82310–01	IGNITION COIL ASSY BOBINE D'ALLUMAGE	6					
18	97095–06020	BOLT BOULON	12					
19	92995–06600	WASHER RONDELLE	12					
20	6P2–82314–00	COVER, IGNITION COIL COUVERCLE, BOBINE D'ALLUMAGE	1					
21	90387–06044	.COLLAR .COLLERETTE	4					
22	90119–06M92	BOLT, WITH WASHER BOULON, AVEC RONDELLE	4					
23	61A–85790–00	THERMOSENSOR ASSY SENSITOMETRE	1					
24	92990–10600	WASHER, PLATE RONDELLE, PLATE	1					
25	6P2–85896–00	SENSOR, CAM POSITION SONDE DE CAME	1					
26	6P2–85075–00	.O-RING .JOINT TORIQUE	1					
27	97095–06020	BOLT BOULON	3					

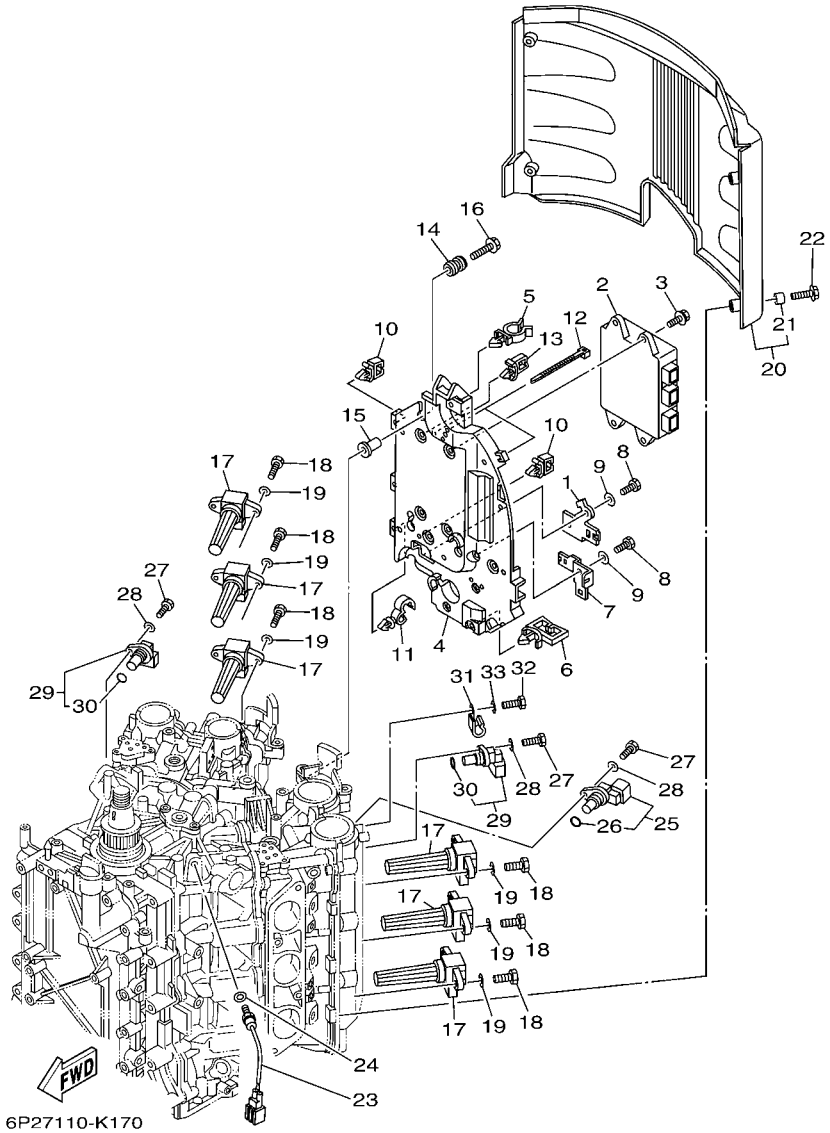

FIG. 18 ELECTRICAL 1 — PARTIE ELECTRIQUE 1

REF. NO.	PART NO. N° PIECES	DESCRIPTION DESCRIPTION	6BB9					REMARKS REMARQUES
28	92995–06600	WASHER RONDELLE	3					
29	6P2–85897–00	SENSOR, CAM POSITION 2 SONDE DE CAME 2	2					
30	6P2–85075–00	.O-RING .JOINT TORIQUE	1					
31	90462–08032	CLAMP BRIDE	1					
32	97095–06012	BOLT BOULON	1					
33	92995–06600	WASHER RONDELLE	1					

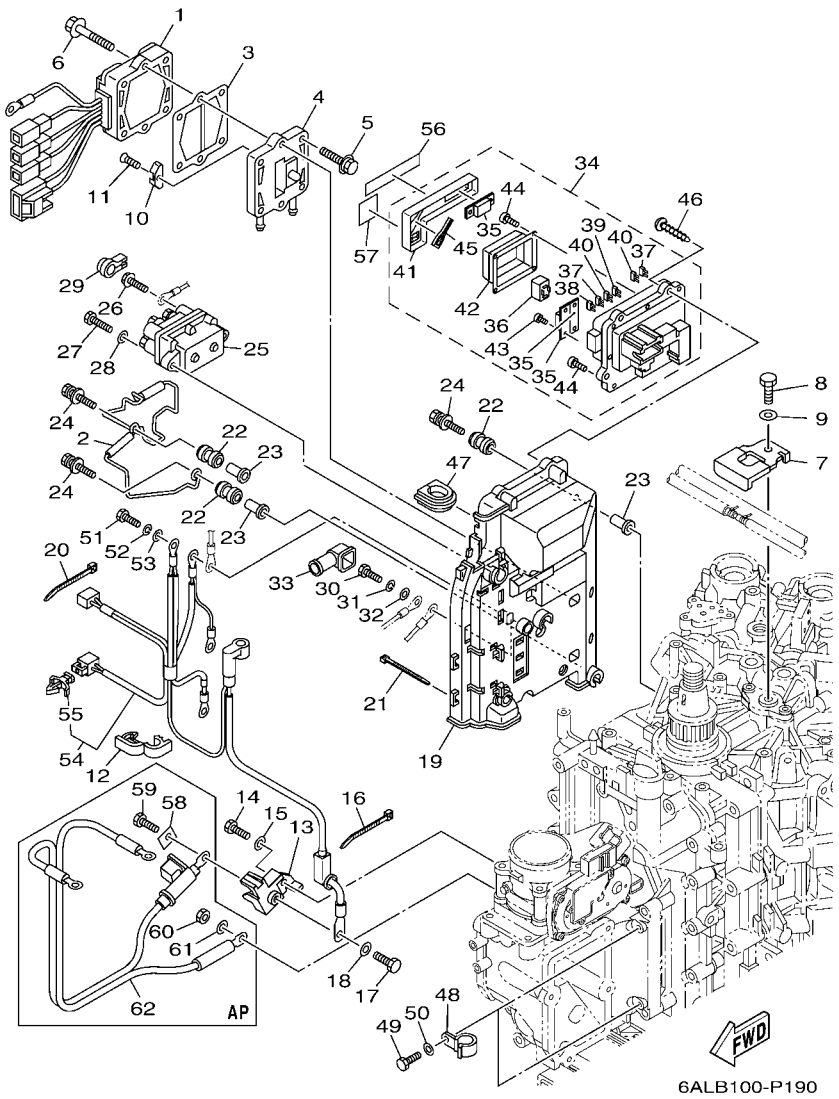

FIG. 19 ELECTRICAL 2 — PARTIE ELECTRIQUE 2

REF. NO.	PART NO. N° PIECES	DESCRIPTION DESCRIPTION	6BB9					REMARKS REMARQUES
1	6P2–81960–02	RECTIFIER & REGULATOR ASSY REDRESSEUR REGULATEUR CPLT	1					
2	6P2–81614–00	PROTECTOR PROTECTEUR	1					
3	60V–81975–A0	PLATE, RECTIFIER FITTING PLAQUE, FIXATION DU REDRESSEUR	1					
4	6P2–81972–00–9S	COVER, RECTIFIER COUVERCLE, REDRESSEUR	1					
5	90119–06MA3	BOLT, WITH WASHER BOULON, AVEC RONDELLE	4					
6	90119–06MA5	BOLT, WITH WASHER BOULON, AVEC RONDELLE	2					
7	6P2–12491–00	CLAMP 1 COLLIER 1	1					
8	97095–06012	BOLT BOULON	1					
9	92995–06600	WASHER RONDELLE	1					
10	6E5–11325–00	ANODE ANODE	1					
11	98780–04015	SCREW, FLAT HEAD VIS A TETE FRAISEE	1					
12	90464–18004	CLAMP BRIDE	5					
13	6P2–81925–01	TERMINAL BORNE	1					
14	97095–08020	BOLT BOULON	1					
15	92995–08600	WASHER RONDELLE	1					
16	90465–13M18	CLAMP BRIDE	1					
17	97095–08016	BOLT BOULON	1					
18	92995–08600	WASHER RONDELLE	1					
19	6P2–81948–00	BRACKET SUPPORT	1					
20	90465–13M18	CLAMP BRIDE	6					
21	90465–14M66	CLAMP BRIDE	3					
22	6A0–82317–00	DAMPER, IGNITION COIL AMORTISSEUR, BOBINE D'ALLUM	5					
23	90387–06119	COLLAR COLLERETTE	5					
24	90119–06M95	BOLT, WITH WASHER BOULON, AVEC RONDELLE	5					
25	63P–81950–00	RELAY ASSY RELAIS COMPLET	1					
26	97595–06610	BOLT, WITH WASHER VIS HEXAGONAL AVC RONDELLE	2					
27	97013–06025	BOLT BOULON	2					

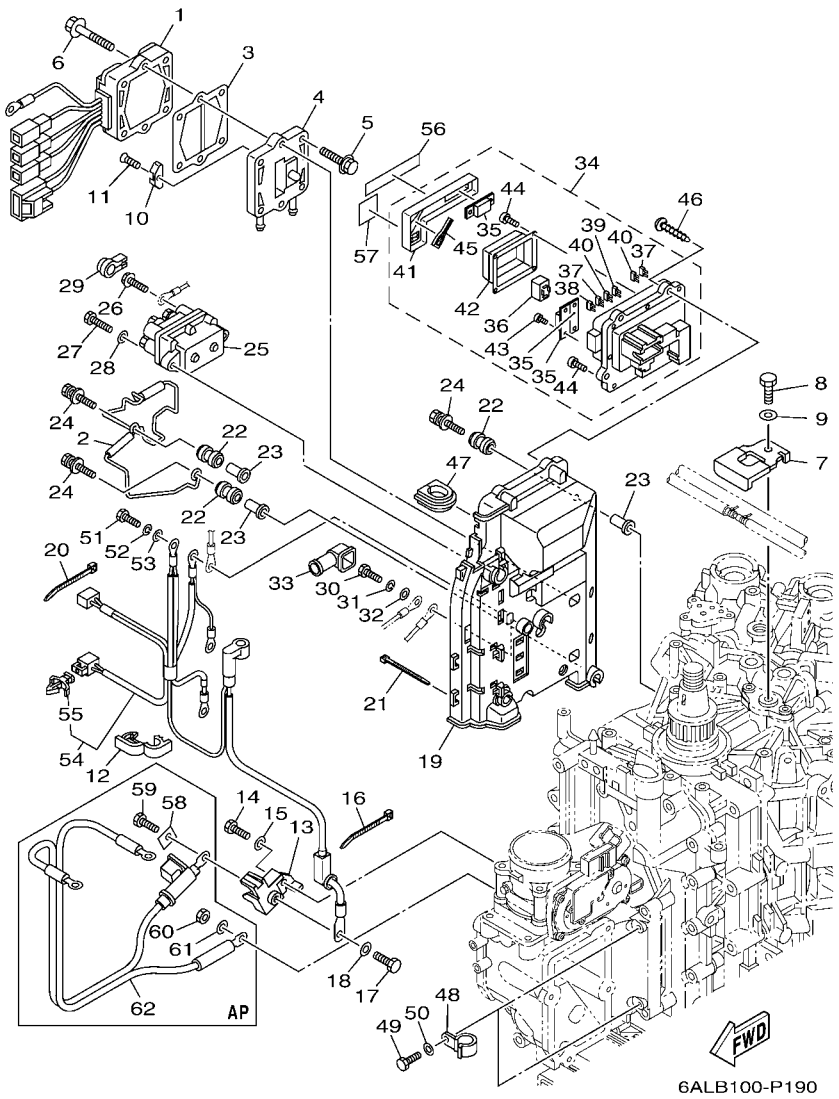

FIG. 19 ELECTRICAL 2 — PARTIE ELECTRIQUE 2

REF. NO.	PART NO. N° PIECES	DESCRIPTION DESCRIPTION	6BB9					REMARKS REMARQUES
28	92903–06600	WASHER, PLATE RONDELLE, PLATE	2					
29	6P2–8183X–00	CAP, TERMINAL COUVERCLE, BORNE	2					
30	97095–06016	BOLT BOULON	1					
31	92995–06100	WASHER, SPRING RONDELLE, GROWER	1					
32	92995–06600	WASHER RONDELLE	1					
33	6P2–82119–00	COVER, LEAD WIRE GARNITURE, FIL	1					
34	6P2–82170–11	FUSE BOX ASSY BOITE A FUSIBLES	1					
35	6P2–82151–00	.FUSE (60A) .FUSIBLE (60A)	3					
36	6AW–8195A–00	.RELAY ASSY .RELAIS COMPLET	4					
37	67F–82151–40	.FUSE (10A) .FUSIBLE (10A)	3					
38	67F–82151–50	.FUSE (15A) .FUSIBLE (15A)	2					
39	67F–82151–00	.FUSE (20A) .FUSIBLE (20A)	2					
40	67F–82151–10	.FUSE (30A) .FUSIBLE (30A)	3					
41	6P2–85544–00	.CASE .BOITIER	1					
42	6P2–81639–10	.COVER .COUVERCLE	1					
43	68F–82846–00	.SCREW, PAN HEAD (M5) .VIS, TETE TRONCONIQUE (M5)	4					
44	6P2–82113–00	.SCREW .VIS	12					
45	67F–2812A–00	.PULLER, FUSE .TENDEUR, FUSIBLE	1					
46	97780–50620	SCREW, TAPPING VIS, TETE BOMBEE	4					
47	6P2–81336–00	GROMMET OEILLET CAOUTCHOUC	1					
48	90462–08026	CLAMP BRIDE	2					
49	97095–06016	BOLT BOULON	2					
50	92995–06600	WASHER RONDELLE	2					
51	97095–06016	BOLT BOULON	3					
52	92995–06100	WASHER, SPRING RONDELLE, GROWER	3					
53	92995–06600	WASHER RONDELLE	3					
54	6P2–8259M–00	WIRE HARNESS ASSY 2 FAISCEAU DE FILS	1					

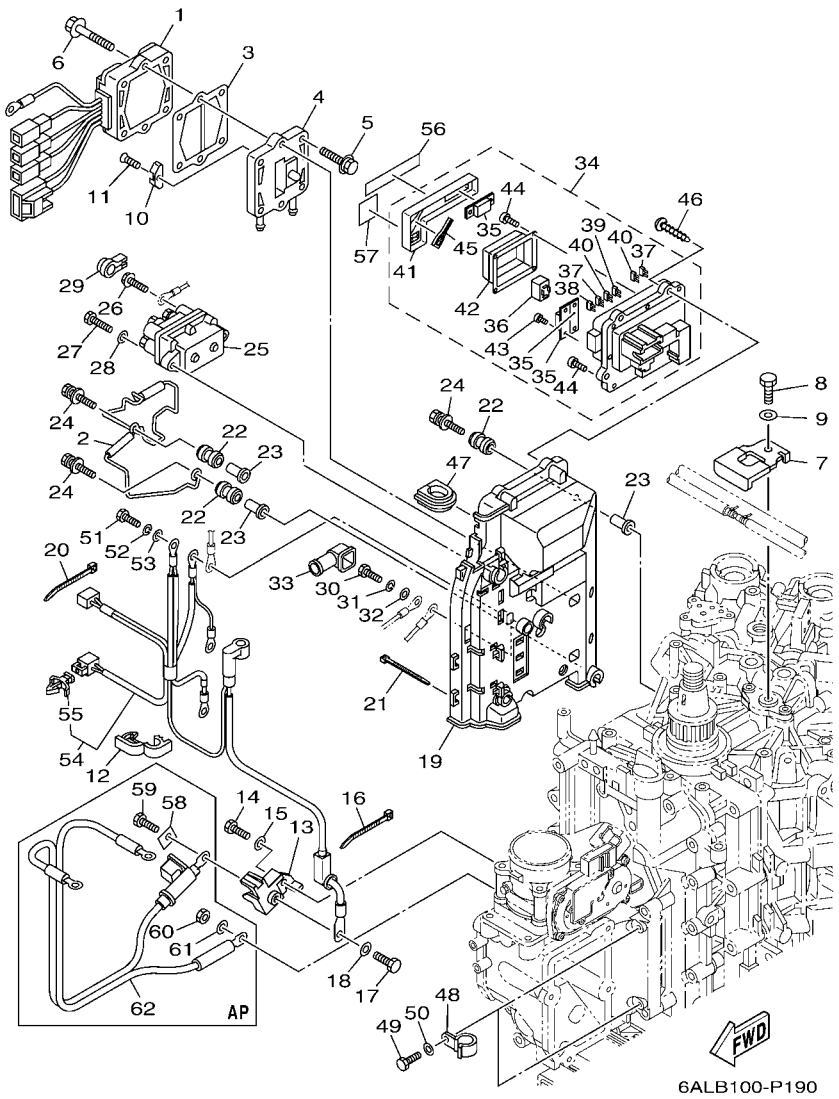

FIG. 19 ELECTRICAL 2 — PARTIE ELECTRIQUE 2

REF. NO.	PART NO. N° PIECES	DESCRIPTION DESCRIPTION	6BB9					REMARKS REMARQUES
55	90464–09M47	.CLAMP .BRIDE	1					
56	6P2–81919–40	GRAPHIC, REGULATOR ADHESIF, REGULATEUR	1					
57	6P2–81919–31	GRAPHIC, REGULATOR ADHESIF, REGULATEUR	1					
58	6P2–81923–00	WASHER RONDELLE	1					AP AP
59	97095–08016	BOLT BOULON	1					AP AP
60	95333–08600	NUT ECROU	1					AP AP
61	92903–08100	WASHER, SPRING RONDELLE, GROWER	1					AP AP
62	6P2–82105–02	BATTERY CABLE CABLE DE BATTERIE	1					AP AP

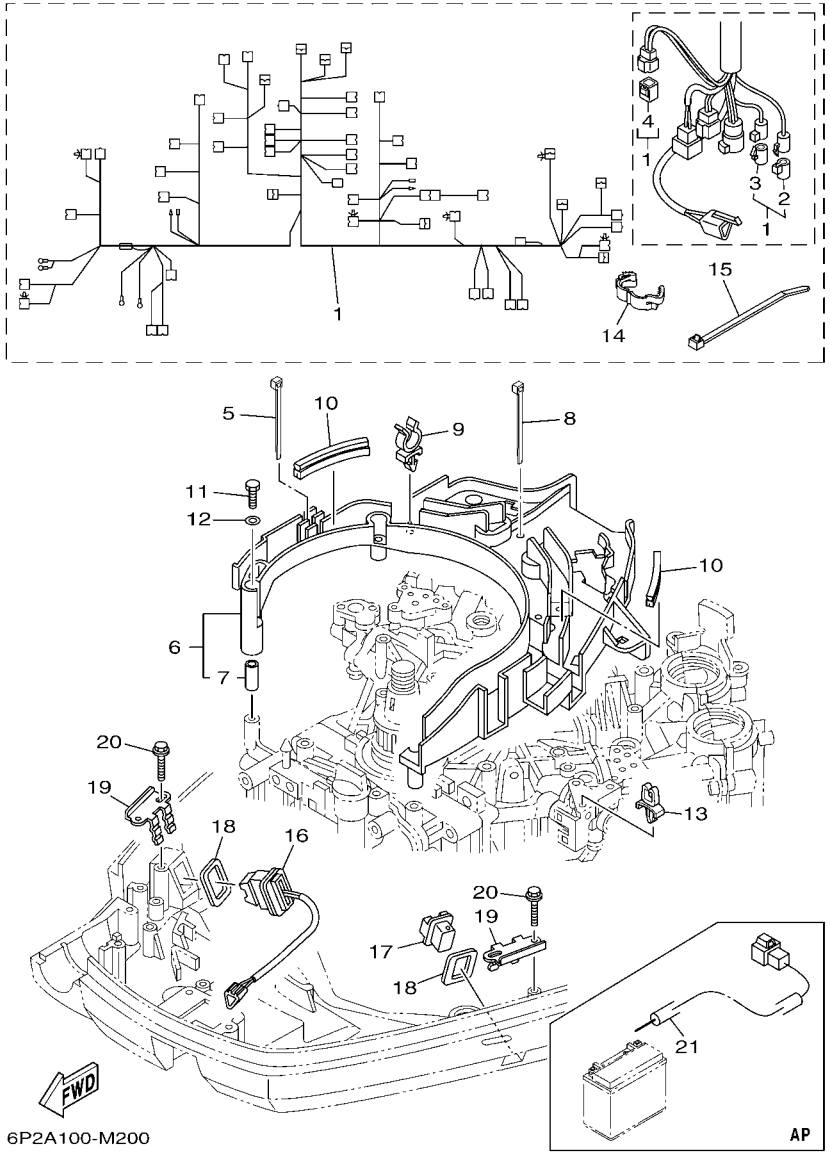

FIG. 20 ELECTRICAL 3 PARTIE ELECTRIQUE 3

REF. NO.	PART NO. N° PIECES	DESCRIPTION DESCRIPTION	6BB9					REMARKS REMARQUES
1	6P2–82590–41	WIRE HARNESS ASSY FAISCEAU DE FILS COMPLET	1					
2	6DA–82582–00	.CAP 1 (FEMALE) .BOUCHON 1 (FEMME)	1					
3	6DA–82582–10	.CAP 1 (MALE) .BOUCHON 1 (MALE)	1					
4	6Y8–82582–11	.CAP 1 (4PIN) .COUVERCLE, FAISCEAU DE FILS	1					
5	90465–14M66	CLAMP BRIDE	1					
6	6P2–82589–00	PROTECTER, WIRE HARNESS PROTECTEUR, FAISCEAU DE FILS	1					
7	90387–06M26	.COLLAR .COLLERETTE	6					
8	90465–14M66	CLAMP BRIDE	2					
9	90464–19M45	CLAMP BRIDE	4					
10	6P2–85722–00	INSULATOR ISOLATEUR	2					
11	97095–06035	BOLT BOULON	6					
12	92995–06600	WASHER RONDELLE	6					
13	90464–06001	CLAMP BRIDE	1					
14	90464–14010	CLAMP BRIDE	1					
15	90465–13M18	CLAMP BRIDE	3					
16	69J–82563–01	TRIM & TILT SWITCH ASSY INCLINER ET PARER COMMUTATEUR	1					
17	69J–42723–01	COVER, BOTTOM COUVERCLE	1					
18	69J–82587–00	GASKET JOINT	2					
19	69J–83614–10	BRACKET SUPPORT	2					
20	90109–06M86	BOLT BOULON	4					
21	69J–81949–02	WIRE, LEAD (ISOLATOR, 3.8M) FIL (ISOLATOR, 3.8M)	1					AP AP

FIG. 21 ELECTRICAL 4 PARTIE ELECTRIQUE 4

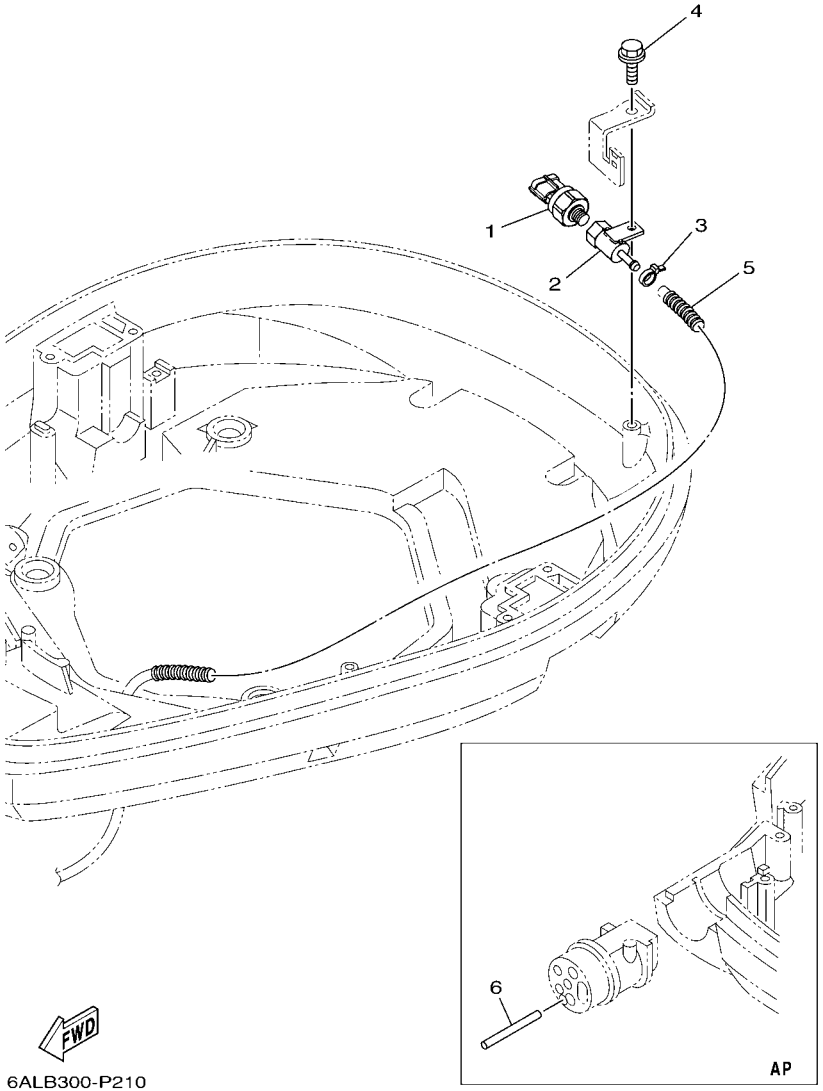

REF. NO.	PART NO. N° PIECES	DESCRIPTION DESCRIPTION	6BB9					REMARKS REMARQUES
1	6AW–8366B–01	SENSOR, WATER PRESSURE SONDE DE PRESSION D'EAU	1					FOR LAN SPEED FOR LAN SPEED
2	60V–8366D–00	ADAPTOR, INPUT CONNECTEUR 3	1					FOR LAN SPEED FOR LAN SPEED
3	90465–11M10	CLAMP BRIDE	1					FOR LAN SPEED FOR LAN SPEED
4	90109–06M81	BOLT BOULON	1					FOR LAN SPEED FOR LAN SPEED
5	90447–07002	TUBE (L650) DURITE	1					FOR LAN SPEED FOR LAN SPEED
6	60V–42629–00	SEAL JOINT	1					AP FOR LAN SPEED AP FOR LAN SPEED

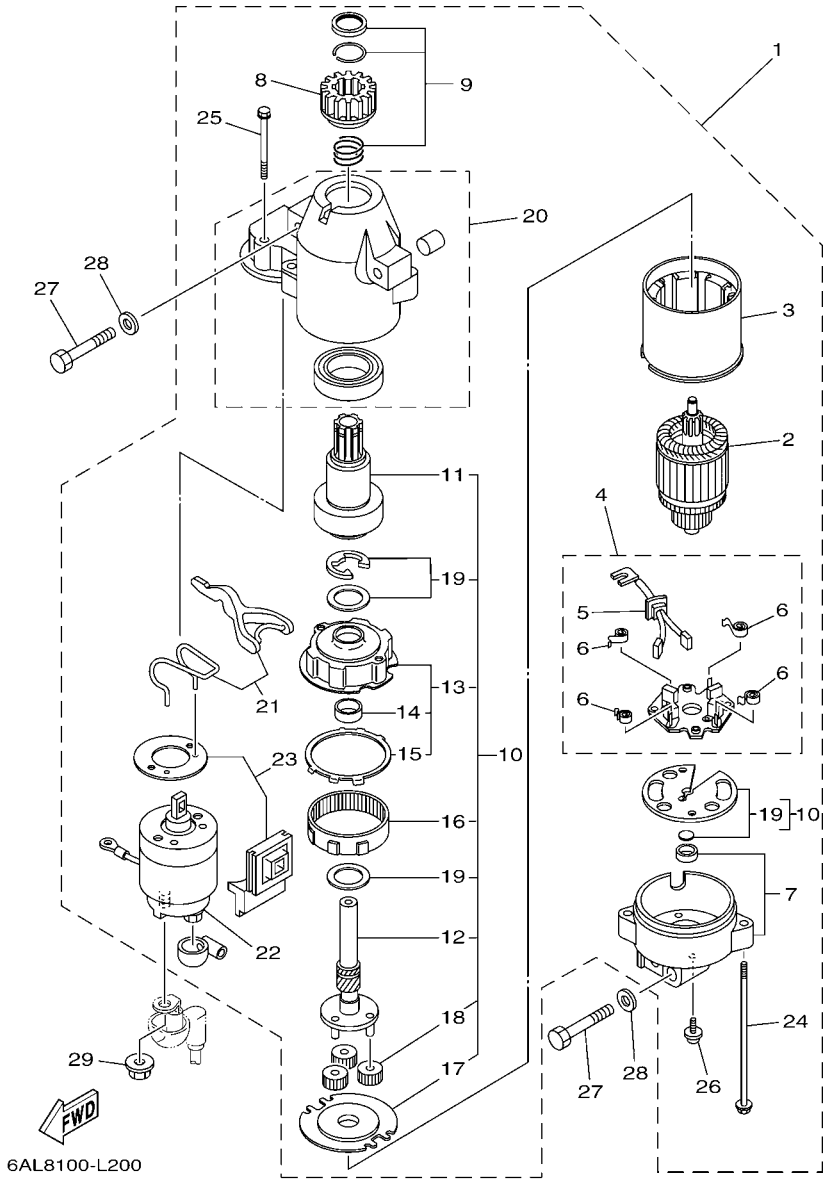

FIG. 22 STARTING MOTOR DEMARREUR ELECTRIQUE

REF. NO.	PART NO. N° PIECES	DESCRIPTION DESCRIPTION	6BB9					REMARKS REMARQUES
1	6BR–81800–01	STARTING MOTOR ASSY DEMARREUR ELECTRIQUE COMPLET	1					
2	67F–81850–00	.ARMATURE ASSY .INDUIT	1					
3	67F–81810–00	.STATOR ASSY .STATOR COMPLET	1					
4	69J–81840–00	.BRUSH HOLDER ASSY .SUPPORT DE CHARBON	1					
5	69J–81801–00	..BRUSH SET ..CHARBON	1					
6	67F–81813–00	..SPRING, BRUSH ..RESSORT, DE CHARBON	4					
7	67F–81820–00	.REAR BRACKET ASSY .SUPPORT ARRIERE COMPLET	1					
8	67F–81808–00	.PINION ASSY .PIGNON	1					
9	67F–81857–00	.PINION STOPPER SET .BUTEE PIGNON	1					
10	67F–81807–00	.GEAR ASSY, STARTING MOTOR .PIGNON, DEMARREUR ELECTRIQUE	1					
11	67F–81832–00	..CLUTCH, OVER RUN ..EMBRAYAGE, ROUE LIBRE	1					
12	67F–81836–00	..SHAFT, PINION ..AXE, PIGNON	1					
13	67F–81821–00	..BRACKET, CENTER 1 ..SUPPORT, CENTRE 1	1					
14	67F–81841–00	...BEARING ...ROULEMENT	1					
15	67F–8183R–00	...GASKET ...JOINT	1					
16	67F–81891–00	..GEAR, RING ..ROUE DENTEE	1					WITH 67F-8183R-00 WITH 67F-8183R-00
17	67F–81830–00	..BRACKET, CENTER 2 ..SUPPORT, CENTRE 2	1					
18	60V–8183T–00	..GEAR, IDLER ..PIGNON, INTERMEDIAIRE	3					
19	67F–81809–00	..WASHER KIT ..JEU DE RONDELLES	1					
20	69J–81842–00	.COVER .COUVERCLE	1					
21	6C5–81839–00	.LEVER ASSY .LEVIER COMPLET	1					
22	63P–81941–00	.STARTER RELAY ASSY .LANCEUR RELAIS (ENS.)	1					
23	6C5–81869–00	.COVER, DUST .COUVERCLE, POUSSIERE	1					
24	6K7–81826–11	.BOLT .BOULON	2					
25	69J–81828–00	.SCREW 2 .VIS 2	2					
26	67F–81846–00	.SCREW .VIS	2					
27	97013–08045	BOLT BOULON	3					

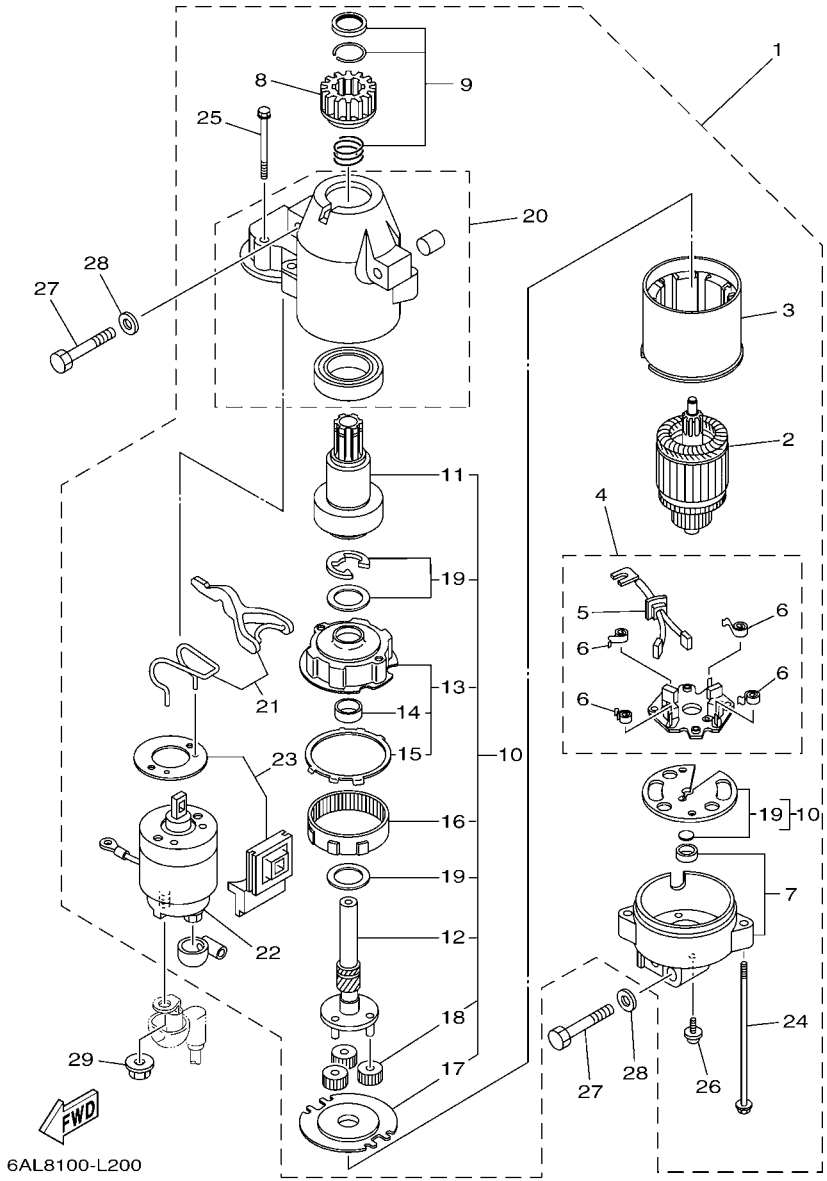

FIG. 22 STARTING MOTOR DEMARREUR ELECTRIQUE

REF. NO.	PART NO. N° PIECES	DESCRIPTION DESCRIPTION	6BB9					REMARKS REMARQUES
28	92903–08600	WASHER, PLATE RONDELLE, PLATE	3					
29	90179–08003	NUT ECROU	1					

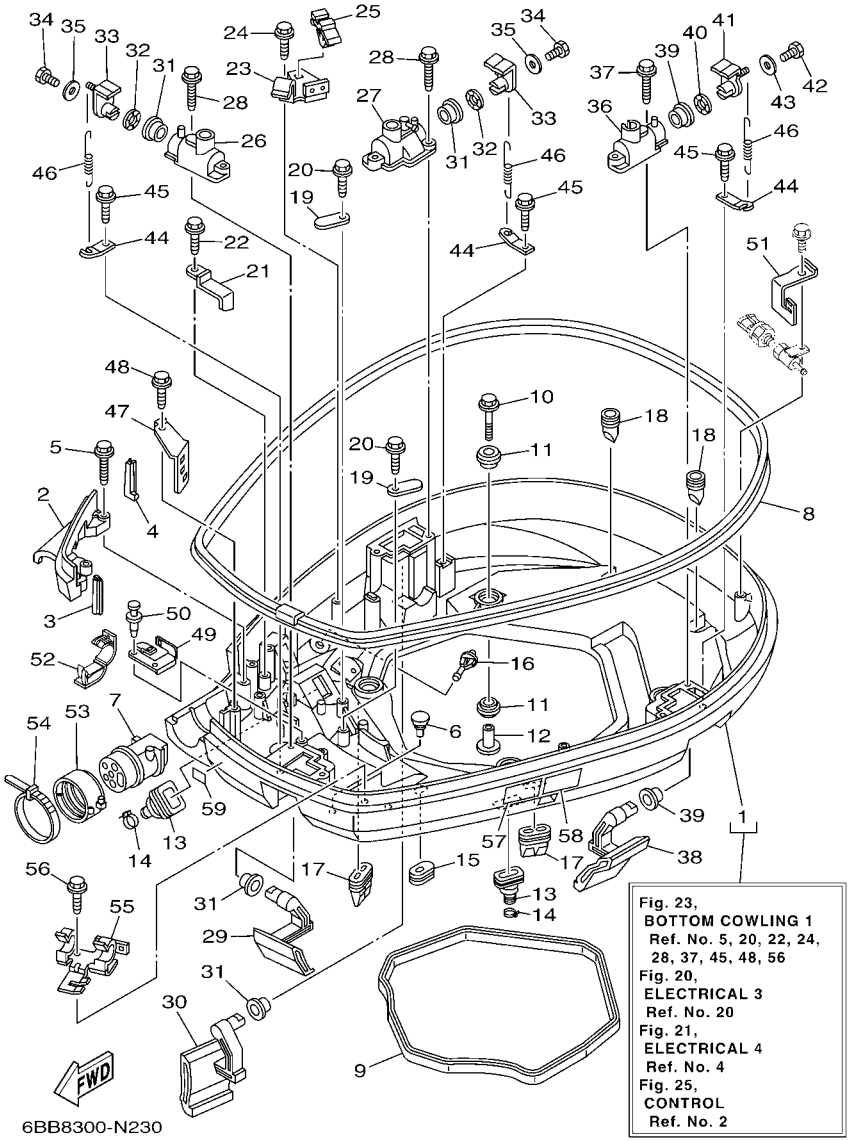

FIG. 23 BOTTOM COWLING 1 CAPOT INFERIEUR 1

REF. NO.	PART NO. N° PIECES	DESCRIPTION DESCRIPTION	6BB9					REMARKS REMARQUES
1	6BB–42710–00–8D	BOTTOM COWLING ASSY ENS. EMBASE	1					
2	6P2–42738–00–8D	PLATE, FITTING ETRIER	1					
3	6P2–42717–00	RUBBER, SEAL 2 JOINT EN CAOUTCHOUC 2	1					
4	6P2–42718–00	RUBBER, SEAL 3 JOINT	1					
5	90109–06M82	BOLT BOULON	2					
6	6H4–42748–00	GROMMET PASSE-FIL	2					
7	6P2–42725–00	GROMMET PASSE-FIL	1					
8	6P2–42615–00	SEAL JOINT	1					
9	69J–42716–00	RUBBER, SEAL 1 JOINT EN CAOUTCHOUC 1	1					
10	90119–08M22	BOLT, WITH WASHER BOULON, AVEC RONDELLE	4					
11	90480–22M81	GROMMET PASSE-FIL	8					
12	90387–08M37	COLLAR COLLERETTE	4					
13	6BG–42724–00	GROMMET PASSE-FIL	2					
14	90465–11M10	CLAMP BRIDE	2					
15	61A–42727–00	GROMMET PASSE-FIL	1					
16	6P2–44391–00	NIPPLE, HOSE RACCORD D'ESSENCE	1					
17	69J–42717–00	RUBBER, SEAL 2 JOINT EN CAOUTCHOUC 2	2					
18	61A–42717–00	RUBBER, SEAL 2 JOINT EN CAOUTCHOUC 2	2					
19	6E5–82588–00	PLATE PLAQUE	2					
20	90109–06M81	BOLT BOULON	2					
21	90462–20001	CLAMP BRIDE	1					
22	90109–06M86	BOLT BOULON	1					
23	6P2–82554–00	STAY, NEUTRAL SWITCH SUPPORT, CONT DE POINT-MORT	1					
24	90109–06M86	BOLT BOULON	1					
25	90464–09M47	CLAMP BRIDE	1					
26	69J–42828–02–9S	PLATE, CLAMP PLAQUE, PRESSE	1					
27	6P2–42828–00–9S	PLATE, CLAMP PLAQUE, PRESSE	1					

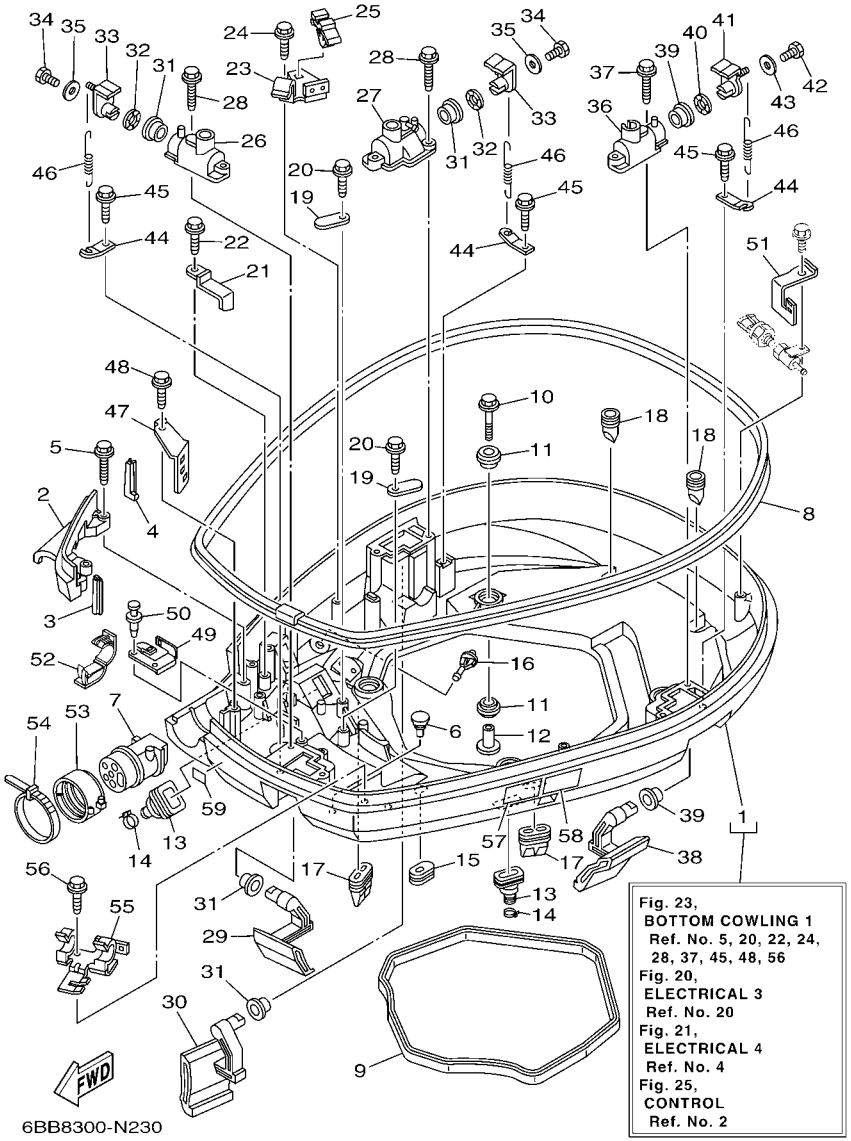

FIG. 23 BOTTOM COWLING 1 CAPOT INFERIEUR 1

REF. NO.	PART NO. N° PIECES	DESCRIPTION DESCRIPTION	6BB9					REMARKS REMARQUES
28	90109–06M82	BOLT BOULON	4					
29	69J–42815–00–8D	LEVER, CLAMP LEVIER, PRESSE	1					
30	69J–42817–00–8D	LEVER, CLAMP LEVIER, PRESSE	1					
31	90386–15M73	BUSH DOUILLE	4					
32	90206–15M18	WASHER, WAVE RONDELLE, ONDULEE	2					
33	63P–42818–01	LEVER, CLAMP LEVIER, PRESSE	2					
34	97095–06020	BOLT BOULON	2					
35	90201–06068	WASHER, PLATE RONDELLE, PLATE	2					
36	68F–42828–11–9S	PLATE, CLAMP PLAQUE, PRESSE	1					
37	90109–06M82	BOLT BOULON	2					
38	69J–42816–00–8D	LEVER, CLAMP LEVIER, PRESSE	1					
39	90386–15M73	BUSH DOUILLE	2					
40	90206–15M18	WASHER, WAVE RONDELLE, ONDULEE	1					
41	68V–42818–01	LEVER, CLAMP LEVIER, PRESSE	1					
42	97095–06020	BOLT BOULON	1					
43	90201–06068	WASHER, PLATE RONDELLE, PLATE	1					
44	64D–43144–00	HOOK, SPRING CROCHET	3					
45	90109–06M86	BOLT BOULON	3					
46	90506–18M40	SPRING, TENSION RESSORT, TENSION	3					
47	6P2–42743–00	BRACKET SUPPORT	1					
48	90109–06M82	BOLT BOULON	1					
49	6P2–42766–10	BRACKET 2 SUPPORT 2	1					
50	90269–05005	RIVET RIVET	2					
51	69J–8366G–02	BRACKET 3 SUPPORT 3	1					
52	90464–18004	CLAMP BRIDE	2					
53	68F–42753–00	FASTNER ATTACHE	1					AP AP
54	90464–20258	CLAMP BRIDE	1					AP AP

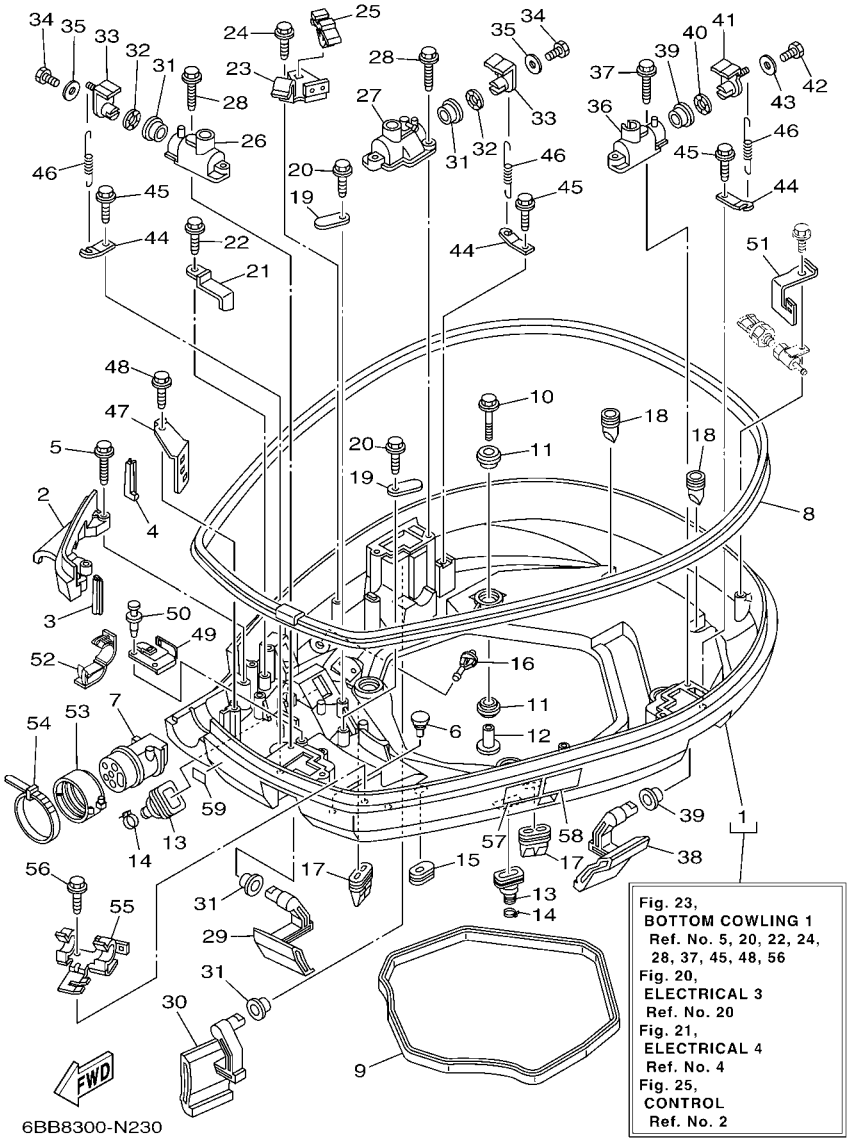

FIG. 23 BOTTOM COWLING 1 CAPOT INFERIEUR 1

REF. NO.	PART NO. N° PIECES	DESCRIPTION DESCRIPTION	6BB9					REMARKS REMARQUES
55	6P2–82594–00	CLAMP BRIDE	1					
56	90109–06M86	BOLT BOULON	1					
57	6EE–42794–40	LABEL, WARNING (GENERAL) ETIQUETTE, AVERTISSEMENT	1					
58	6EE–42794–50	LABEL, WARNING (GENERAL) ETIQUETTE, AVERTISSEMENT	1					
59	6AH–81996–00	MARK MARQUE	1					

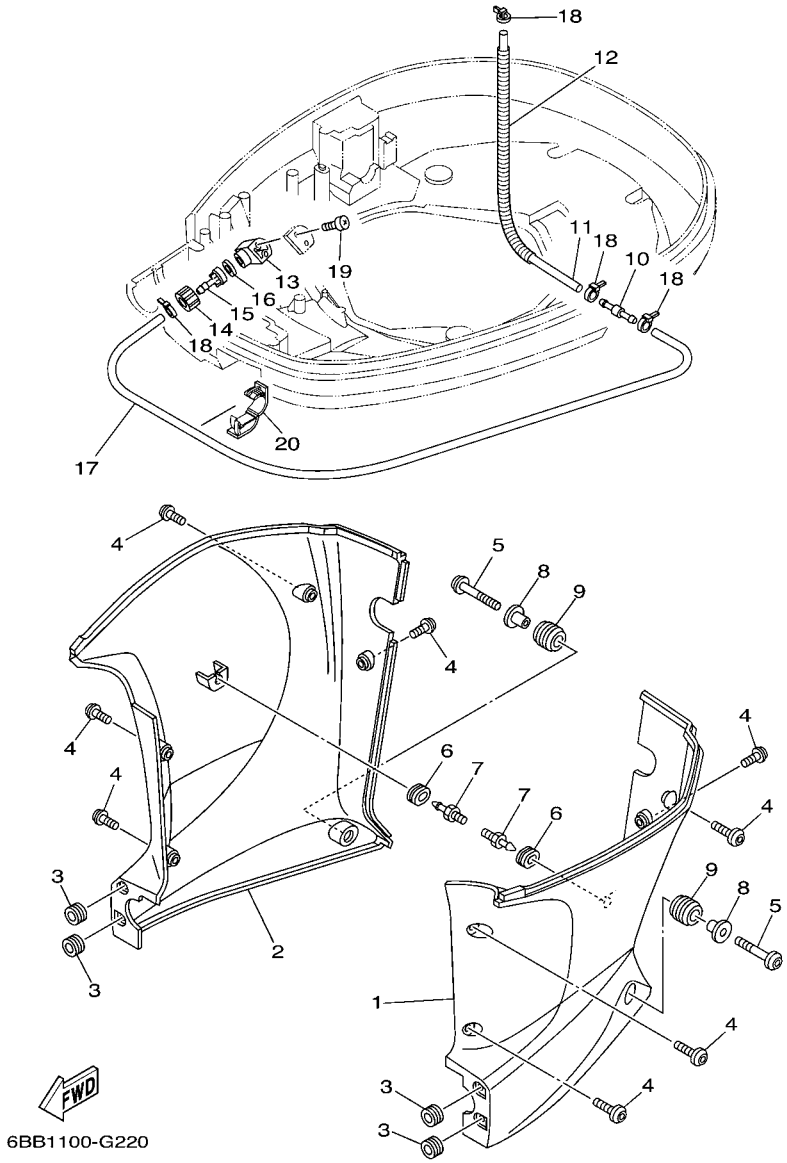

FIG. 24 BOTTOM COWLING 2 CAPOT INFERIEUR 2

REF. NO.	PART NO. N° PIECES	DESCRIPTION DESCRIPTION	6BB9					REMARKS REMARQUES
1	6BB–42741–00–8D	APRON CAPOT LATERAL	1					
2	6BB–42771–00–8D	APRON CAPOT LATERAL	1					
3	90480–11012	GROMMET PASSE-FIL	4					
4	90111–06144	BOLT,HEX. SOCKET BUTTON BOULON	8					
5	90111–06142	BOLT,HEX. SOCKET BUTTON BOULON	2					
6	90480–14M17	GROMMET PASSE-FIL	2					
7	69J–42774–10	STAY, APRON 1 COUSSINET	2					
8	90387–07028	COLLAR COLLERETTE	2					
9	90480–16009	GROMMET PASSE-FIL	2					
10	6E5–24379–00	PIPE, JOINT 4 DURITE RACCORDEMENT 4	1					
11	90445–11M47	HOSE (L370) DURITE (L370)	1					
12	90447–13009	TUBE DURITE	1					
13	6DR–12572–00	ADAPTER ADAPTATEUR	1					
14	6R3–12581–00	JOINT, HOSE 1 JOINT DE TUYAU	1					
15	6R3–12582–00	JOINT, HOSE 2 RACCORD DE TUYAU 1	1					
16	6R3–12583–00	GASKET, HOSE JOINT JOINT	1					
17	90445–11028	HOSE (L1050) DURITE (L1050)	1					
18	90465–11M10	CLAMP BRIDE	4					
19	97780–60520	SCREW, TAPPING VIS, TETE BOMBEE	2					
20	90464–18004	CLAMP BRIDE	1					

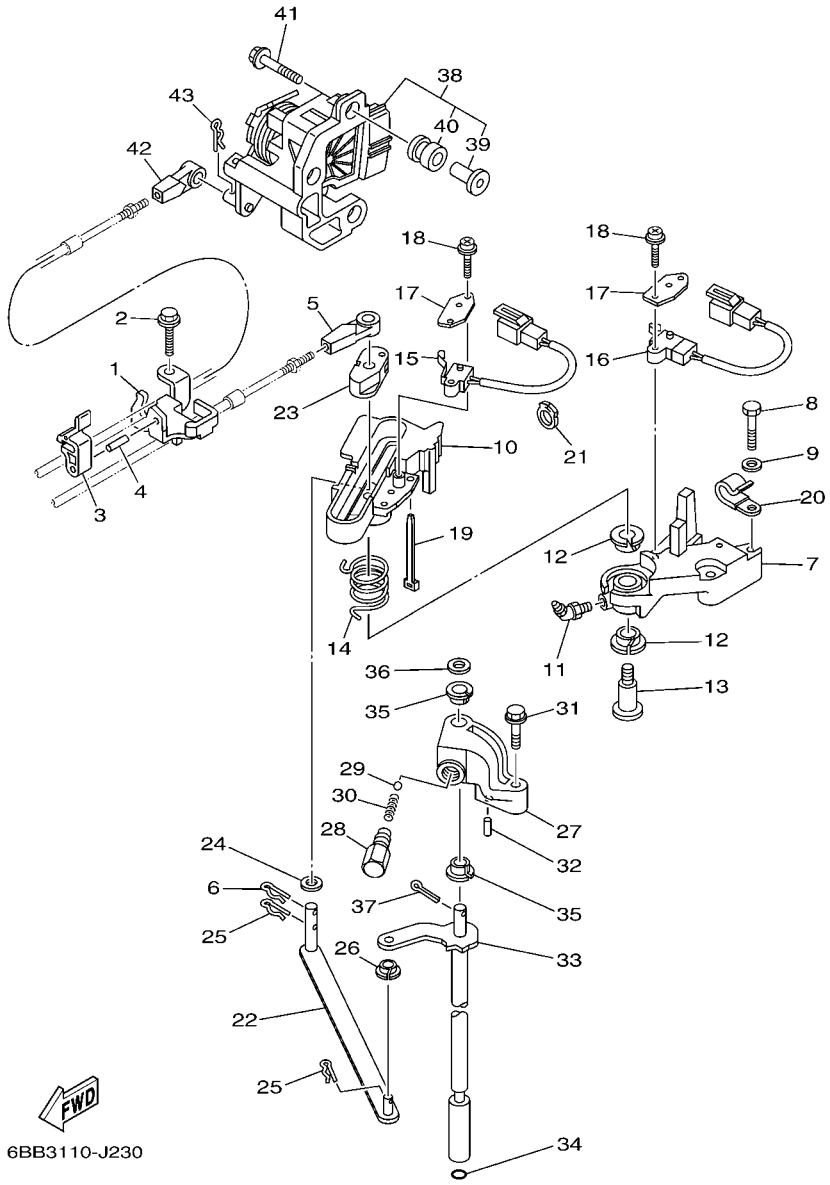

FIG. 25 CONTROL COMMANDE

REF. NO.	PART NO. N° PIECES	DESCRIPTION DESCRIPTION	6BB9					REMARKS REMARQUES
1	6P2–48531–00	BRACKET, REMOTE CONTROL 1 ETRIER 1, COMMANDE A DISTANCE	1					
2	90109–06M86	BOLT BOULON	2					
3	63P–48538–00	CLAMP, CABLE 1 COLLIER	1					
4	91690–30010	PIN, SPRING AGRAFFE	1					
5	6E5–48344–00	CABLE END, REMOTE CONTROL CHAPE CABLE	1					
6	90468–18008	CLIP JONC	1					
7	69J–44117–00	BRACKET SUPPORT	1					
8	97095–06035	BOLT BOULON	2					
9	92995–06600	WASHER RONDELLE	2					
10	69J–44176–01	BRACKET SUPPORT	1					
11	93700–06M01	NIPPLE, GREASE PION	1					
12	90386–12069	BUSH DOUILLE	2					
13	90109–08019	BOLT BOULON	1					
14	90508–20020	SPRING, TORSION RESSORT, TORSION	1					
15	60V–8259F–00	SWITCH ASSY COMMUTATEUR	1					
16	69J–8259F–00	SWITCH ASSY COMMUTATEUR	1					
17	61A–82588–01	PLATE PLAQUE	2					
18	97985–04116	SCREW, WITH WASHER VIS, AVEC RONDELLE	4					
19	90465–11M10	CLAMP BRIDE	1					
20	90465–06M86	CLAMP BRIDE	1					
21	90464–09010	CLAMP BRIDE	1					
22	6P2–44121–00	LEVER, SHIFT ROD LEVIER, TIGE D'INVERSION	1					
23	69J–44122–00	BUSHING, SHIFT ROD LEVER DOUILLE, LEVIER D'EMBRAYAGE	1					
24	90202–08M20	WASHER, PLATE RONDELLE, PLATE	1					
25	90468–18008	CLIP JONC	2					
26	90386–06M12	BUSH DOUILLE	1					
27	69J–44118–00	BRACKET SUPPORT	1					

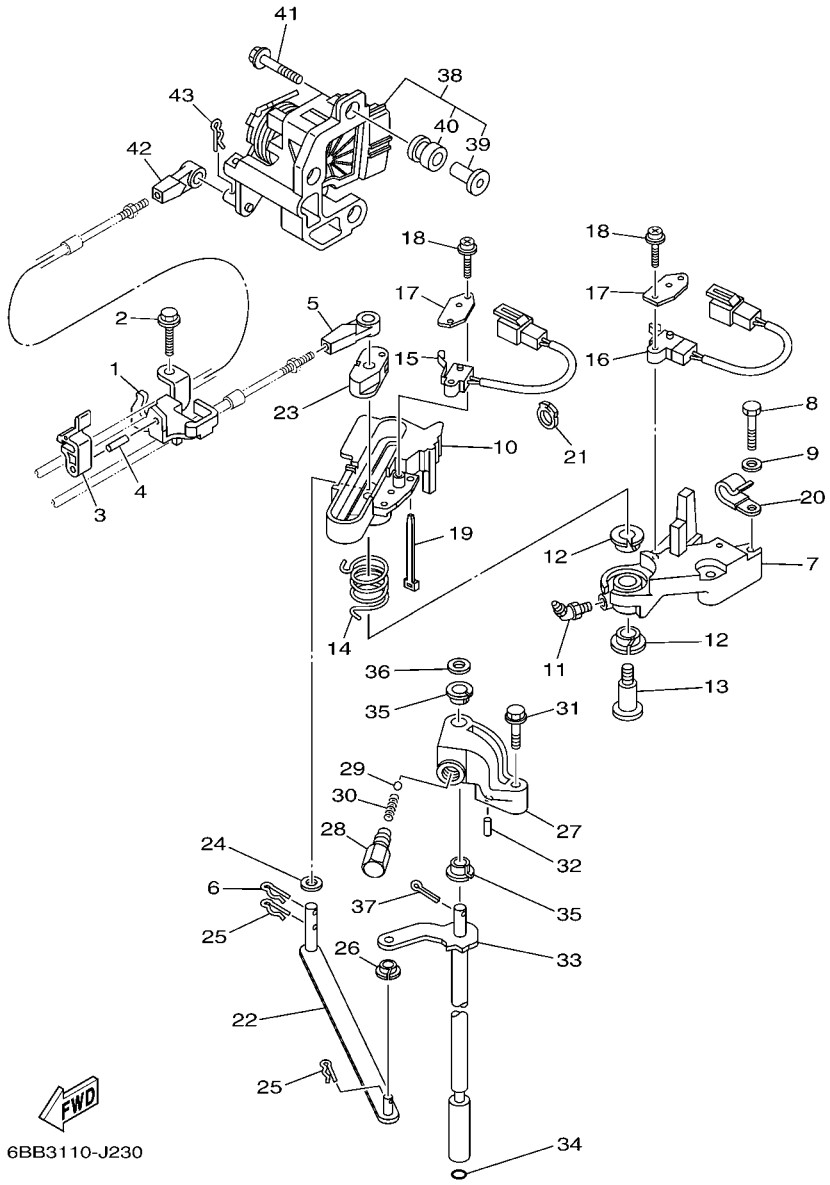

FIG. 25 CONTROL COMMANDE

REF. NO.	PART NO. N° PIECES	DESCRIPTION DESCRIPTION	6BB9					REMARKS REMARQUES
28	648–42715–00	BUSHING COUSSINET	1					
29	93501–04M02	BALL BILLE	1					
30	90501–12082	SPRING, COMPRESSION RESSORT, COMPRESSION	1					
31	97575–06535	BOLT, WITH WASHER VIS HEXAGONAL AVC RONDELLE	1					
32	91690–30010	PIN, SPRING AGRAFFE	1					
33	6BB–44120–01	HANDLE GEAR SHIFT ASSY LEVIER D'EMBRAYAGE	1					
34	93210–09165	O-RING JOINT TORIQUE	1					
35	90386–90M90	BUSH DOUILLE	2					
36	90201–09M02	WASHER, PLATE RONDELLE, PLATE	1					
37	91490–20015	PIN. COTTER GOUPILLE	1					
38	6P2–8A410–01	SENSOR UNIT UNITE DE CAPTEUR	1					
39	6P2–44139–00	.COLLAR .COLLIER	3					
40	6CB–41273–00	.GROMMET .PASSE-FIL	3					
41	90119–06126	BOLT, WITH WASHER BOULON, AVEC RONDELLE	3					
42	6E5–48344–00	CABLE END, REMOTE CONTROL CHAPE CABLE	1					
43	90468–18008	CLIP JONC	1					

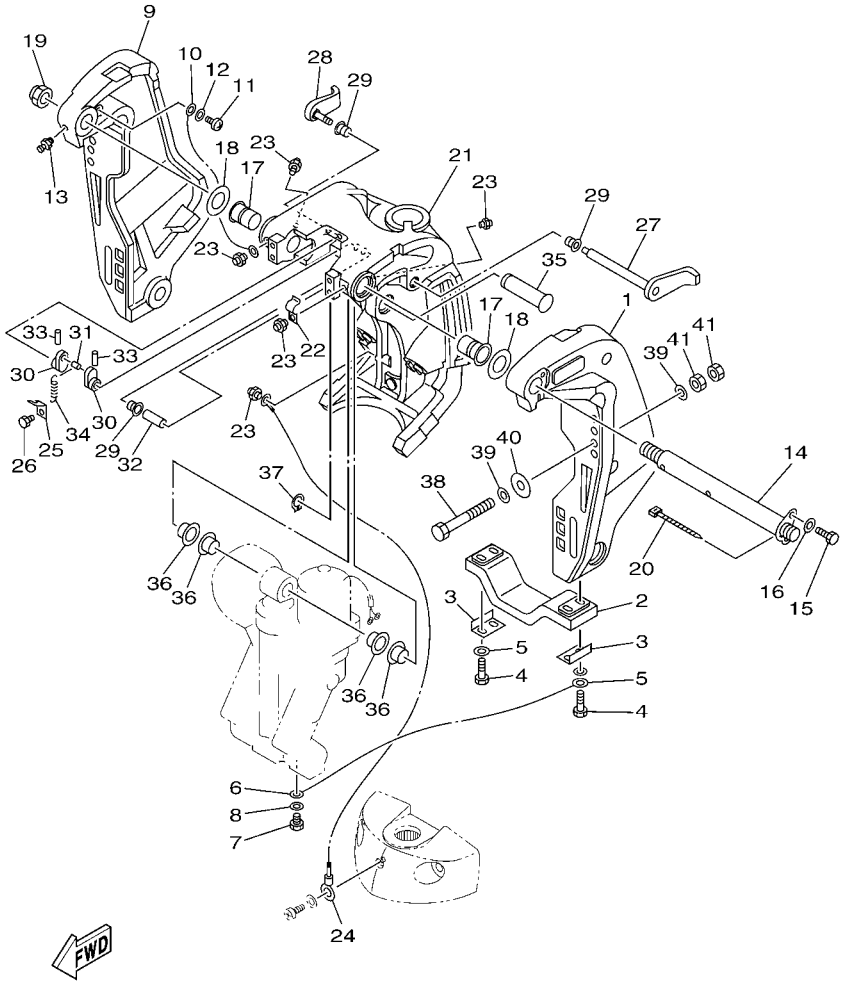

6BB7300-M250

FIG. 26 BRACKET 1 SUPPORT 1

REF. NO.	PART NO. N° PIECES	DESCRIPTION DESCRIPTION	6BB9					REMARKS REMARQUES
1	68V–43111–01–8D	BRACKET, CLAMP 1 PRESSE 1	1					
2	6G5–45251–02	ANODE ANODE	1					
3	6G5–44526–00	PLATE PLAQUE	2					
4	97095–06030	BOLT BOULON	4					
5	92995–06600	WASHER RONDELLE	4					
6	6E5–82148–00	WIRE, LEAD 4 FIL 4	1					
7	97095–06010	BOLT BOULON	1					
8	92995–06600	WASHER RONDELLE	1					
9	68V–43112–01–8D	BRACKET, CLAMP 2 PRESSE 2	1					
10	6E5–82148–00	WIRE, LEAD 4 FIL 4	1					
11	97885–06012	SCREW, PAN HEAD VIS, A ENCOCHE	1					
12	92995–06600	WASHER RONDELLE	1					
13	93700–06M03	NIPPLE, GREASE PION	1					
14	64E–43131–01	BOLT, CLAMP BRACKET BOULON, PRESSE	1					
15	97095–08020	BOLT BOULON	1					
16	92995–08600	WASHER RONDELLE	1					
17	90386–25M31	BUSH DOUILLE	2					
18	90201–26M59	WASHER, PLATE RONDELLE, PLATE	2					
19	90185–22M11	NUT, SELF-LOCKING ECROU,AUTO-BLOQUANT	1					
20	90465–11M10	CLAMP BRIDE	1					
21	64E–43311–10–8D	BRACKET, SWIVEL 1 SUPPORT, PIVOT 1	1					
22	90465–08M63	CLAMP BRIDE	1					
23	93700–06M03	NIPPLE, GREASE PION	5					
24	6H1–82148–00	WIRE, LEAD 4 FIL 4	1					
25	6G5–43144–00	HOOK, SPRING CROCHET	1					
26	97095–06010	BOLT BOULON	1					
27	6G5–43181–02	LEVER, TILT STOP 1 LEVIER VERROUILLAGE RELEVAGE 1	1					

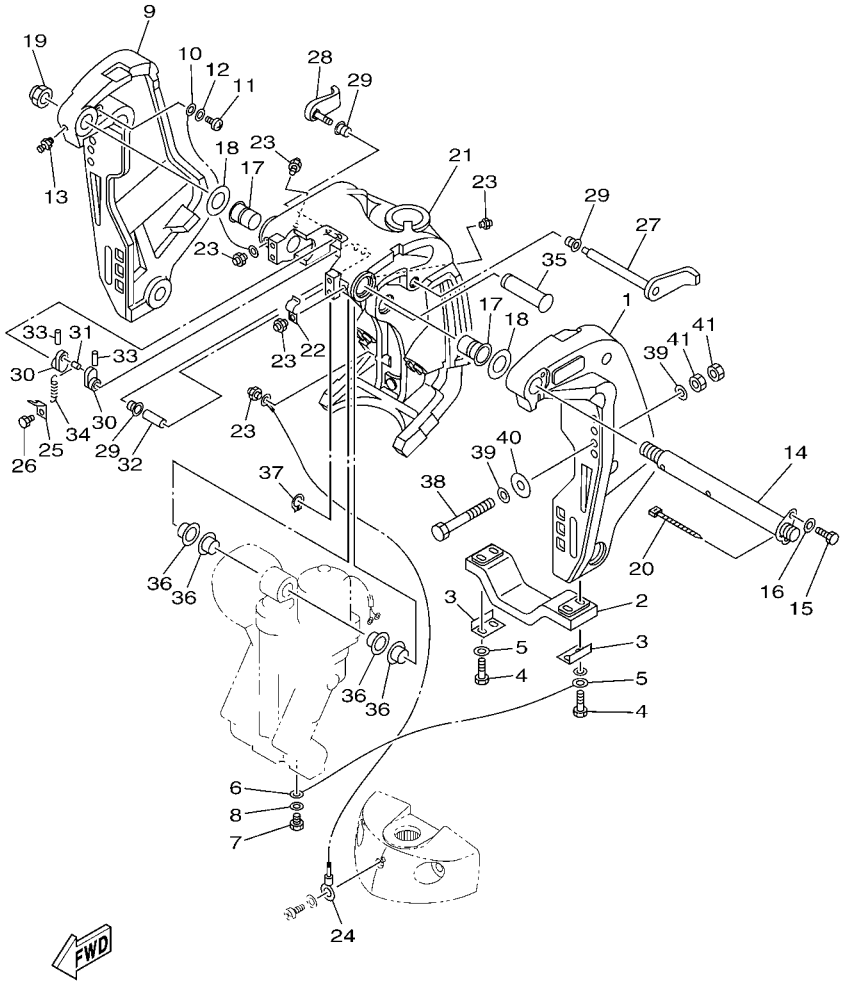

6BB7300-M250

FIG. 26 BRACKET 1 SUPPORT 1

REF. NO.	PART NO. N° PIECES	DESCRIPTION DESCRIPTION	6BB9					REMARKS REMARQUES
28	6G5–43185–02	LEVER, TILT STOP 2 LEVIER VERROUILLAGE RELEVAGE 2	1					
29	90386–10M16	BUSH DOUILLE	3					
30	6G5–43148–00	COLLAR, DISTANCE ENTRETOISE	2					
31	90249–06M19	PIN GOUPILLE	1					
32	90387–10M05	COLLAR COLLERETTE	1					
33	91690–30020	PIN, SPRING AGRAFFE	2					
34	90506–16003	SPRING, TENSION RESSORT, TENSION	1					
35	64E–43126–00	PIN, UPPER SHOCK MOUNT AXE, SUPERIEUR AMORTISSEUR	1					
36	90386–22M98	BUSH DOUILLE	4					
37	93410–22M11	CIRCLIP CLIPS	1					
38	90101–12047	BOLT (L:150MM) BOULON (L:150MM)	4					
39	90201–13M01	WASHER, PLATE RONDELLE, PLATE	8					
40	90201–12426	WASHER, PLATE RONDELLE, PLATE	4					
41	95380–12600	NUT ECROU	8					

FIG. 27 BRACKET 2 SUPPORT 2

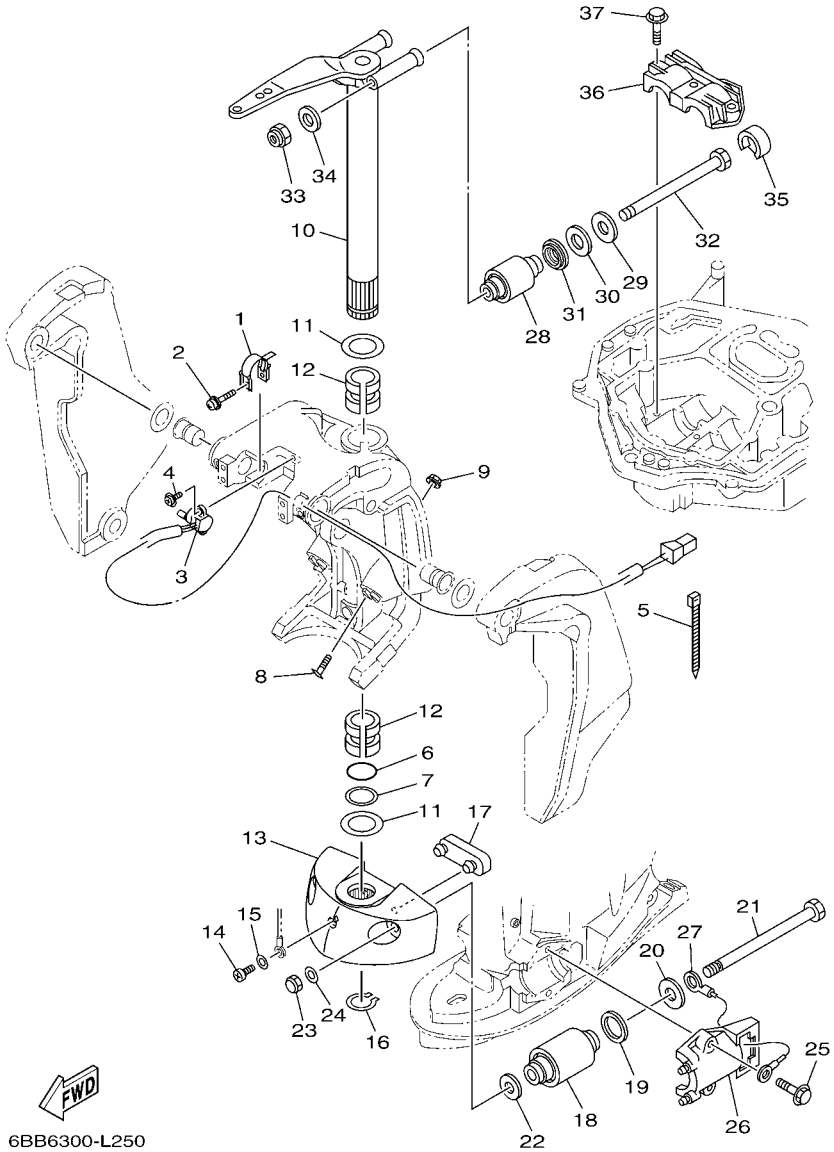

REF. NO.	PART NO. N° PIECES	DESCRIPTION DESCRIPTION	6BB9					REMARKS REMARQUES
1	64E–43139–10	CAM, TRIM SENDER VILEBREQUIN TRUM	1					
2	90159–05059	SCREW, WITH WASHER VIS, AVEC RONDELLE	1					
3	67H–83672–01	TRIM SENDER INCLINER RACCORD	1					
4	97985–06216	SCREW, WITH WASHER VIS, AVEC RONDELLE	2					
5	90465–11M10	CLAMP BRIDE	3					
6	93210–37MH7	O-RING JOINT TORIQUE	1					
7	90202–40M47	WASHER, PLATE RONDELLE, PLATE	1					
8	64E–43376–00	BOLT, THRUST RECEIVER BOULON	2					
9	95780–10300	NUT, FLANGE ECROU	2					
10	66K–42510–02–8D	STEERING BRACKET ASSY DIRECTION SUPPORT (ENS.)	1					
11	90201–38M60	WASHER, PLATE RONDELLE, PLATE	2					
12	90386–38M32	BUSH DOUILLE	2					
13	6BB–44551–00–8D	HOUSING, LOWER MOUNT RUBBER 1 BOITIER, SILENT-BLOC INFERIEUR	1					
14	97885–06012	SCREW, PAN HEAD VIS, A ENCOCHE	1					
15	92995–06600	WASHER RONDELLE	1					
16	93410–37M04	CIRCLIP CLIPS	1					
17	6E5–44575–00	DAMPER, LOWER MOUNT RUBBER SILENT-BLOC, INFERIEUR	1					
18	60X–44555–00	MOUNT DAMPER, LOWER SIDE SILENT-BLOC, INFERIEUR LATERAL	2					
19	90202–32M19	WASHER, PLATE RONDELLE, PLATE	2					
20	90201–16016	WASHER, PLATE RONDELLE, PLATE	2					
21	90109–14M80	BOLT BOULON	2					
22	90201–15M58	WASHER, PLATE RONDELLE, PLATE	2					
23	95380–14800	NUT ECROU	2					
24	92995–14600	WASHER RONDELLE	2					
25	90119–10024	BOLT, WITH WASHER BOULON, AVEC RONDELLE	4					
26	61A–44552–01–CA	HOUSING, LOWER MOUNT RUBBER 2 BOITIER, SILENT-BLOC INFERIEUR	2					
27	6E5–82149–00	WIRE, LEAD 3 FIL 3	1					

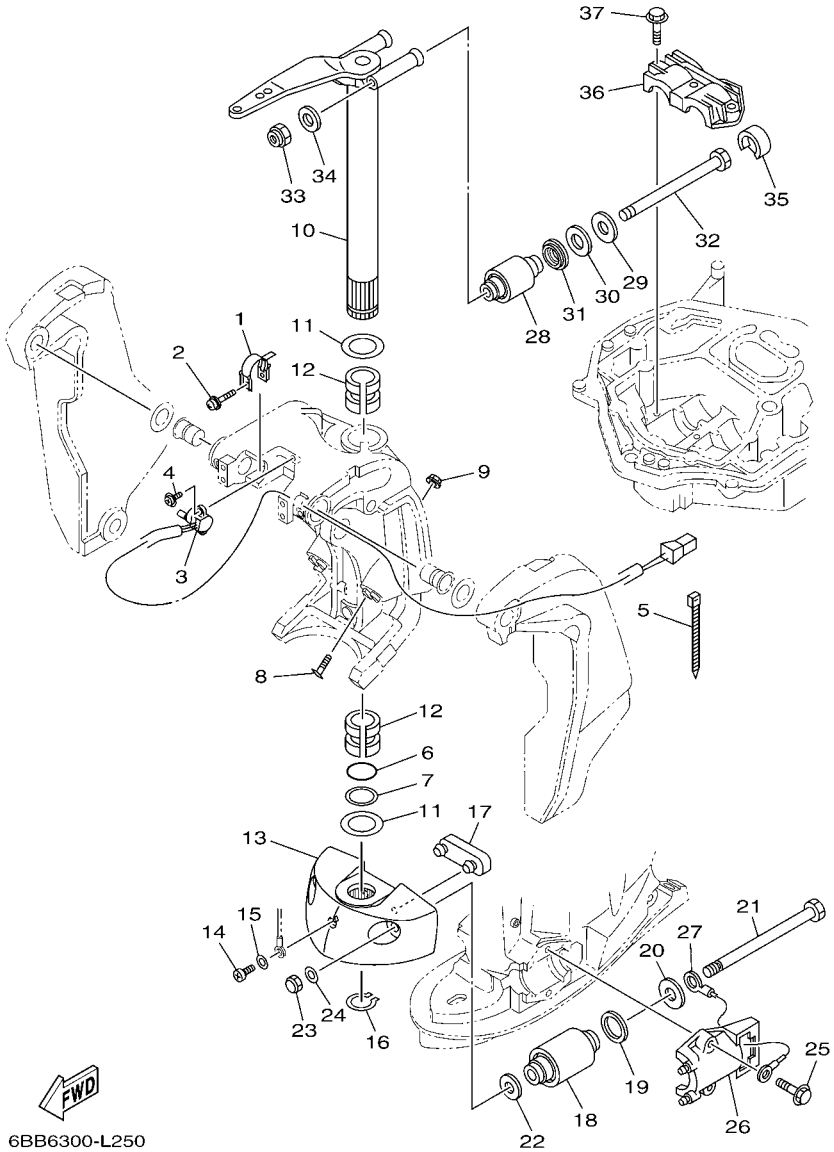

FIG. 27 BRACKET 2 SUPPORT 2

REF. NO.	PART NO. N° PIECES	DESCRIPTION DESCRIPTION	6BB9					REMARKS REMARQUES
28	69J–44514–00	MOUNT DAMPER, UPPER SIDE SILENT-BLOC, SUPERIEUR LATERAL	2					
29	90201–16015	WASHER, PLATE RONDELLE, PLATE	2					
30	90202–28M46	WASHER, PLATE RONDELLE, PLATE	2					
31	69J–44532–00	STOPPER, UPPER MOUNT PLAQUETTE	2					
32	90101–14003	BOLT BOULON	2					
33	90185–14M00	NUT, SELF-LOCKING ECROU,AUTO-BLOQUANT	2					
34	92995–14600	WASHER RONDELLE	2					
35	69J–44533–00	DAMPER, UPPER MOUNT RUBBER COUVERCLE, SUSPENSION INFERIEU	2					
36	61A–44511–01	COVER, UPPER MOUNT COUVERCLE, SUSPENSION SUPERIEU	1					
37	90119–10024	BOLT, WITH WASHER BOULON, AVEC RONDELLE	3					

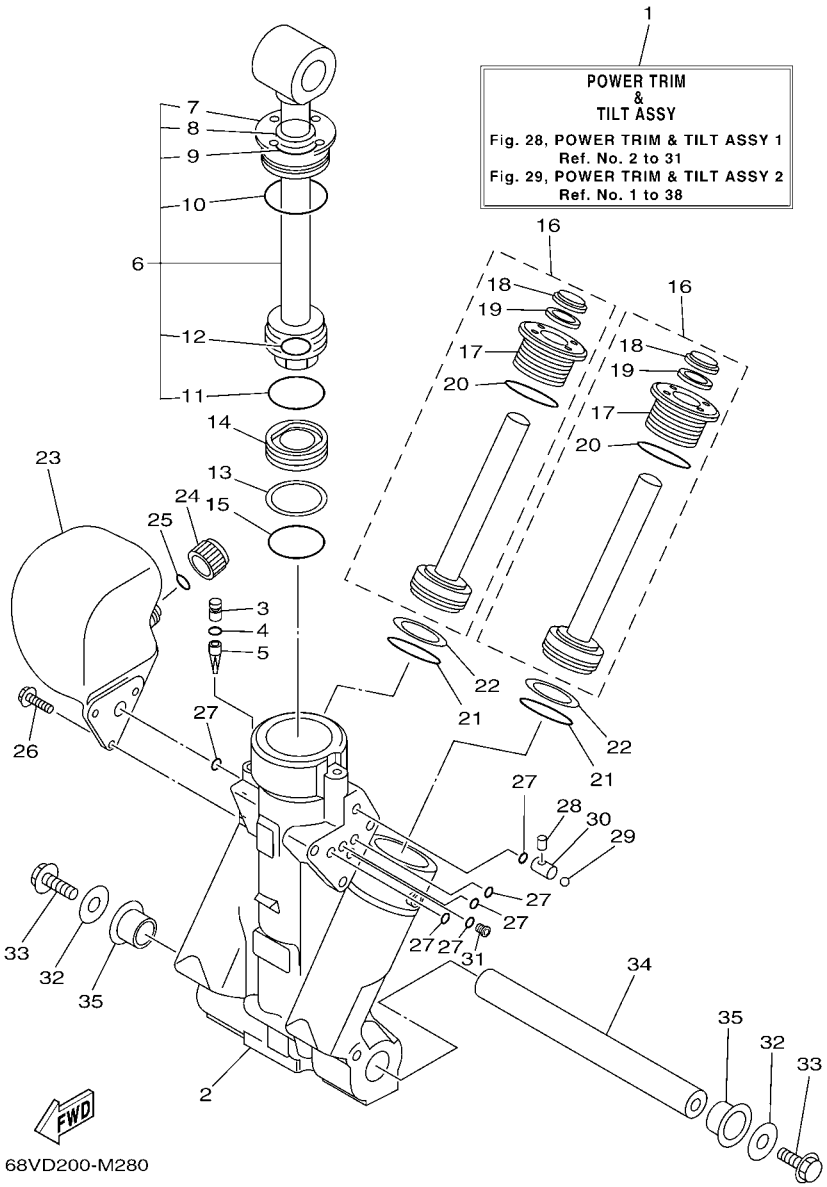

FIG. 28 POWER TRIM & TILT ASSY 1 PUISSANCE PARER ET INCLINER 1

REF. NO.	PART NO. N° PIECES	DESCRIPTION DESCRIPTION	6BB9					REMARKS REMARQUES
1	63P–43800–06	POWER TRIM & TILT ASSY PUISSANCE PARER ET INCLINER (E	1					
2	64E–43825–03	HOUSING, TRIM & TILT CARTER	1					
3	6AW–4388J–00	PLUG 2 BOUCHON 2	1					
4	93210–10M74	O-RING JOINT TORIQUE	1					
5	64E–43817–00	FILTER 2 FILTRE 2	1					
6	63P–43810–02	TILT PISTON SUB ASSY INCLINER PISTON AUXILIAIRE(ENS	1					
7	64E–43811–02	.SCREW, CYLINDER END .VIS, CYLINDRE RACCORD	1					
8	64E–43898–00	.SEAL, DUST 2 .JOINT ANTI-PUSSIERE	1					
9	64E–43867–00	.O-RING .JOINT TORIQUE	1					
10	64E–43866–00	.O-RING .JOINT TORIQUE	1					
11	6E5–43862–00	.O-RING .JOINT TORIQUE	1					
12	64E–43883–00	.O-RING .JOINT TORIQUE	1					
13	6E5–43872–00	RING, BACK UP RESSORT	1					
14	6E5–43814–02	PISTON, FREE PISTON	1					
15	6E5–43862–00	O-RING JOINT TORIQUE	1					
16	64E–43820–03	TRIM PISTON SUB ASSY PARER PISTON AUXILIAIRE (ENS.)	2					
17	64E–43821–03	.SCREW, TRIM CYLINDER END .VIS	1					
18	64E–43822–00	.SEAL, TRIM DUST .JOINT	1					
19	64E–4384J–00	.SEAL, TRIM DOWN .JOINT	1					
20	6G5–43864–00	.O-RING .JOINT TORIQUE	1					
21	6E5–43864–00	O-RING JOINT TORIQUE	2					
22	6E5–43874–01	RING, BACK UP RESSORT	2					
23	64E–43828–01	BODY, RESERVOIR CORPS	1					
24	64E–43829–01	PLUG, RESERVOIR BOUCHON	1					
25	64E–43897–00	O-RING JOINT TORIQUE	1					
26	64E–4388E–01	BOLT ,SCREW (L:14MM) VIS (L:14MM)	3					
27	64E–43869–00	O-RING JOINT TORIQUE	6					

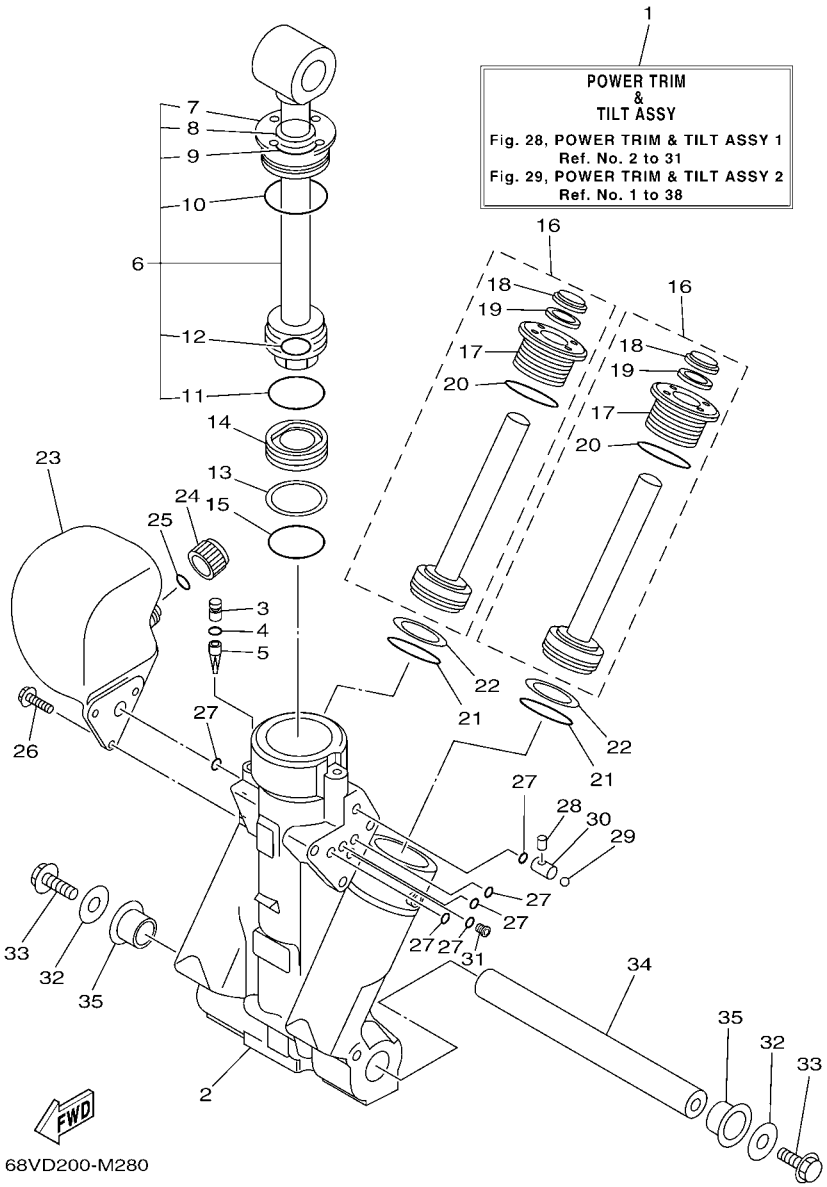

FIG. 28 POWER TRIM & TILT ASSY 1 PUISSANCE PARER ET INCLINER 1

REF. NO.	PART NO. N° PIECES	DESCRIPTION DESCRIPTION	6BB9					REMARKS REMARQUES
28	64E–4381G–00	PIN COUPILL	1					
29	6E5–43858–00	BALL BILLE	1					
30	64E–4382G–00	VALVE, SEAT JEU DE POINTEAUX	1					
31	64E–4384N–00	PLUG, ORIFICE PLOT, ORIFICE	1					
32	90201–10060	WASHER, PLATE RONDELLE, PLATE	2					
33	97575–10530	BOLT, WITH WASHER VIS HEXAGONAL AVC RONDELLE	2					
34	6BC–43818–00	PIN, LOWER SHOCK MOUNT AXE, INFERIEUR AMORTISSEUR	1					
35	90386–22M98	BUSH DOUILLE	2					

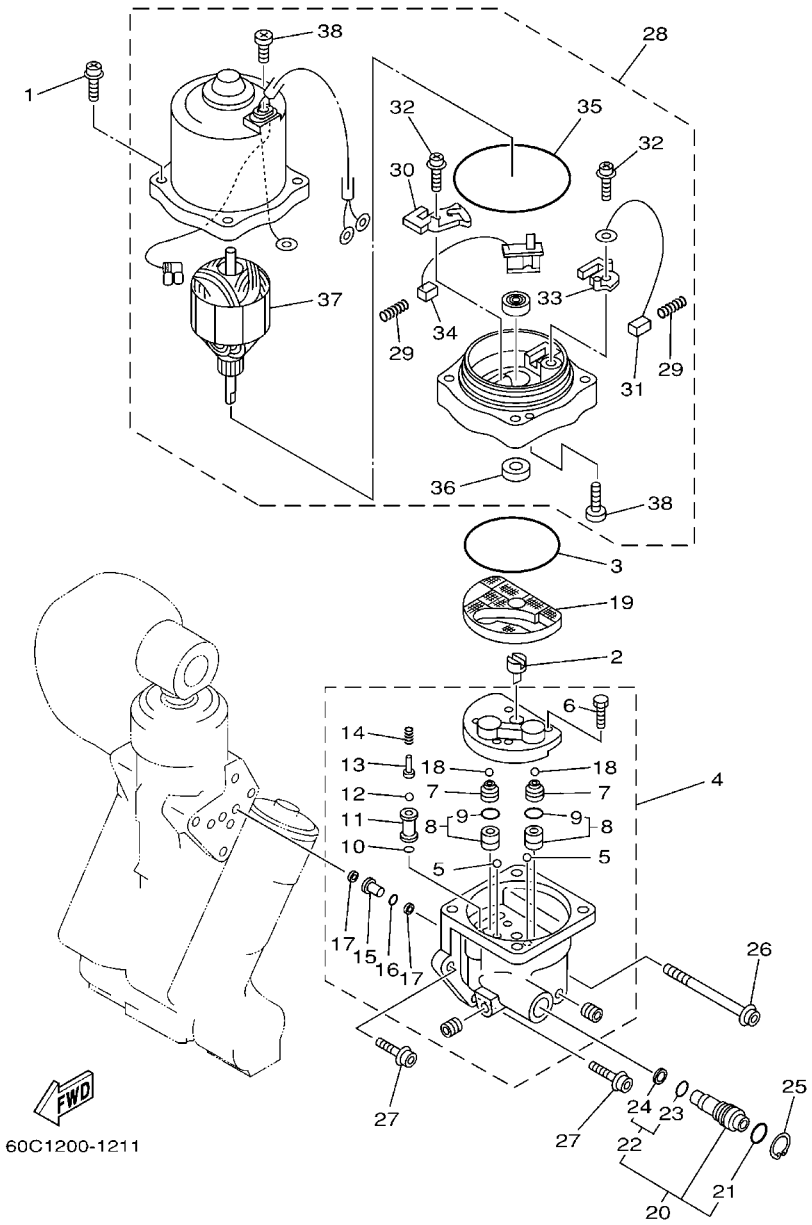

FIG. 29 POWER TRIM & TILT ASSY 2 PUISSANCE PARER ET INCLINER 2

REF. NO.	PART NO. N° PIECES	DESCRIPTION DESCRIPTION	6BB9					REMARKS REMARQUES
1	64E–4388E–11	BOLT ,SCREW (L:34.7MM) VIS (L:34.7MM)	4					
2	64E–43831–00	CONNECTOR, SHAFT RACCORD	1					
3	64E–43868–00	O-RING JOINT TORIQUE	1					
4	64E–43830–01	GEAR PUMP ASSY POMPE A PIGNON (ENS.)	1					
5	72X–43858–00	.BALL .BILLE	2					
6	64E–43843–00	.SCREW, VALVE LOCK .VIS	4					
7	6AW–43841–00	.PISTON, SHUTTLE .PISTON	2					
8	64E–43802–00	.VALVE SUB ASSY .CLAPET AUXILIAIRE (ENS.)	2					
9	6E5–43896–00	..O-RING ..JOINT TORIQUE	1					
10	6G5–43863–00	.O-RING .JOINT TORIQUE	1					
11	64E–43851–00	.SEAT, RELIEF VALVE .SIEGE	1					
12	64E–43858–00	.BALL .BILLE	1					
13	64E–43859–00	.PIN, VALVE SUPPORT .GOUPILLE	1					
14	64E–43855–00	.SPRING, UP RELIEF .RESSORT	1					
15	64E–43850–00	.VALVE SUB ASSY .CLAPET AUXILIAIRE (ENS.)	1					
16	64E–43865–00	.O-RING .JOINT TORIQUE	1					
17	64E–43816–00	.FILTER 1 .FILTRE 1	2					
18	6AW–43858–00	.BALL .BILLE	2					
19	64E–43817–11	FILTER 2 FILTRE 2	1					
20	64E–43860–01	MANUAL VALVE SUB-ASSY SOUPAPE, MANUEL (ENS.)	1					
21	72X–85075–L0	.O-RING .JOINT TORIQUE	1					
22	64E–43827–00	.RING SET .BILLE	1					
23	64E–4387A–00	..O-RING ..JOINT TORIQUE	1					
24	64E–43873–00	..RING, BACK UP ..RESSORT	1					
25	6AW–43875–00	RING, SNAP RESSORT	1					
26	64E–43879–11	SCREW, WITH WASHER VIS, AVEC RONDELLE	1					
27	64E–43879–01	SCREW, WITH WASHER VIS, AVEC RONDELLE	2					

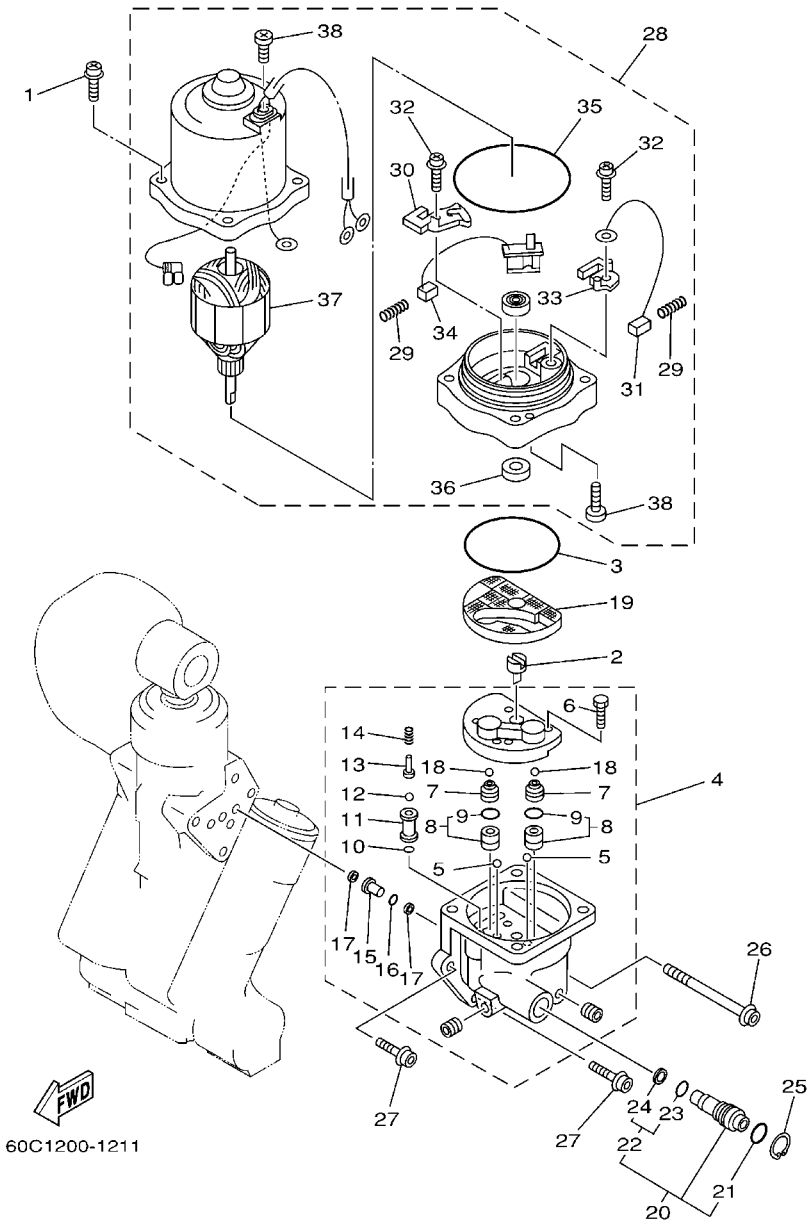

FIG. 29 POWER TRIM & TILT ASSY 2 PUISSANCE PARER ET INCLINER 2

REF. NO.	PART NO. N° PIECES	DESCRIPTION DESCRIPTION	6BB9					REMARKS REMARQUES
28	67H–43880–04	MOTOR ASSY MOTEUR (ENS.)	1					
29	6H1–4386K–10	.SPRING, BRUSH .RESSORT, BALAI	2					
30	64E–4380J–00	.HOLDER, BRUSH .PORTE-BALAI	1					
31	64E–43891–00	.BRUSH 1 .BALAI 1	1					
32	97607–04310	.SCREW, WITH WASHER .VIS HEXAGONAL	2					
33	64E–4380F–00	.HOLDER, BRUSH 2 .PORTE-BALAI 2	1					
34	64E–43892–00	.BREAKER COMP. (BRUSH 2) .RUPTEUR COMP. (BALAI 2)	1					
35	6G5–43865–01	.O-RING .JOINT TORIQUE	1					
36	93102–08M43	.OIL SEAL .JOINT SPY	1					
37	64E–43805–01	.ARMATURE ASSY .INDUIT (ENS.)	1					
38	64E–43843–10	.SCREW, VALVE LOCK .VIS	3					

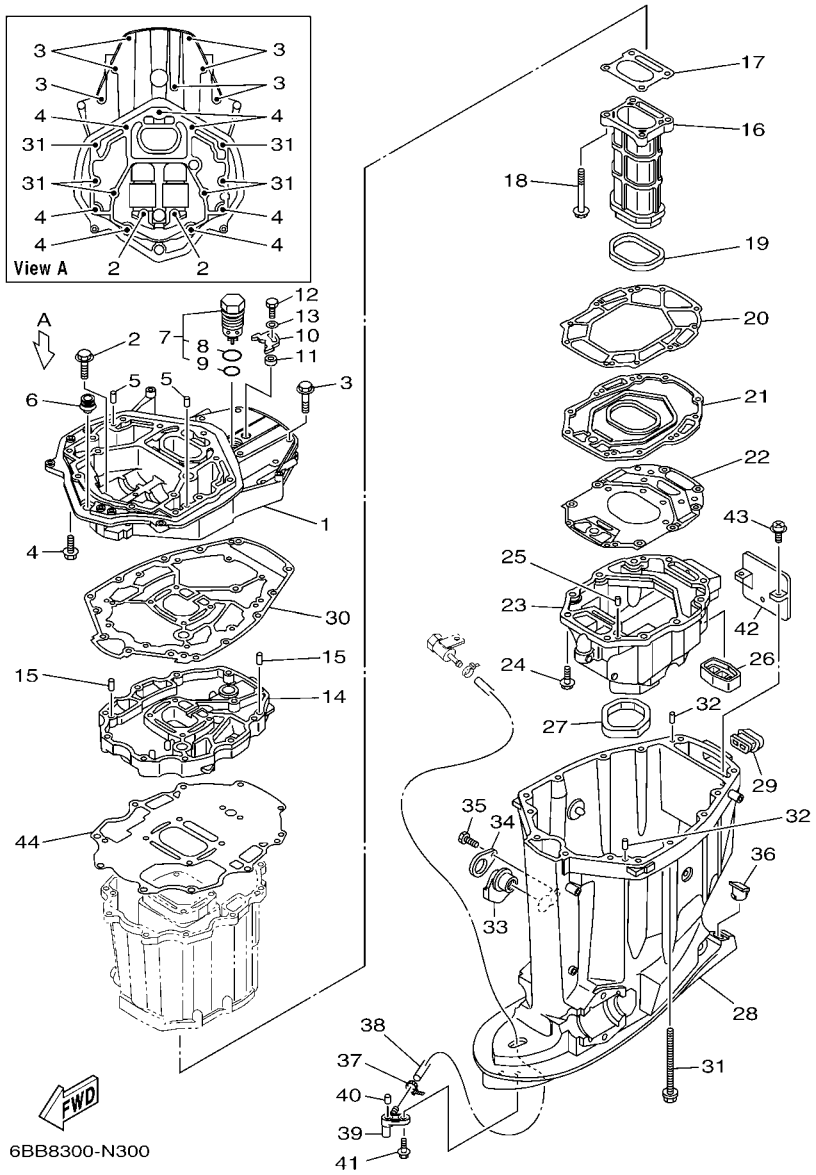

FIG. 30 UPPER CASING FOURREAU

REF. NO.	PART NO. N° PIECES	DESCRIPTION DESCRIPTION	6BB9					REMARKS REMARQUES
1	69J–41137–10–CA	GUIDE, EXHAUST COLLECTEUR D'ECHAPPEMENT	1					
2	90119–08102	BOLT, WITH WASHER BOULON, AVEC RONDELLE	2					
3	97575–10545	BOLT, WITH WASHER VIS HEXAGONAL AVC RONDELLE	7					
4	97575–10535	BOLT, WITH WASHER VIS HEXAGONAL AVC RONDELLE	7					
5	93608–16M16	PIN, DOWEL AXE	2					
6	6E5–42724–00	GROMMET PASSE-FIL	1					
7	6AW–11371–10	PRESSURE CONTROL VALVE ASSY SOUPAPE, COMMANDE DE PRESSION	1					
8	93210–347A1	.O-RING .JOINT TORIQUE	1					
9	93210–28543	.O-RING .JOINT TORIQUE	1					
10	69J–12233–00	PLATE, GUIDE STOPPER 1 PLAQUE, GUIDE BUTEE 1	1					
11	90387–06037	COLLAR COLLERETTE	1					
12	97095–06020	BOLT BOULON	1					
13	92995–06600	WASHER RONDELLE	1					
14	69J–41131–11–CA	MANIFOLD, EXT. 1 PIPE D'ECHAPPEMENT	1					
15	93608–16M16	PIN, DOWEL AXE	2					
16	69J–41132–20–9S	MANIFOLD, EXHAUST PIPE D'ECHAPPEMENT	1					
17	6P2–41134–00	GASKET, EXHAUST MANIFOLD JOINT, PIPE D'ECHAPPEMENT	1					
18	97575–08590	BOLT, WITH WASHER VIS HEXAGONAL AVC RONDELLE	4					
19	69J–41138–00	SEAL, EXT. 1 JOINT DE GROUPE 1	1					
20	69J–41135–A0	GASKET, EXHAUST MANIFOLD JOINT, PIPE D'ECHAPPEMENT	1					
21	69J–45181–10–9S	PLATE PLAQUETTE	1					
22	6S1–41136–00	GASKET, EXHAUST MANIFOLD 4 JOINT, PIPE D'ECHAPPEMENT 4	1					
23	6BB–14711–00–9S	MUFFLER 1 POT D'ECHAPPEMENT 1	1					
24	97575–08535	BOLT, WITH WASHER VIS HEXAGONAL AVC RONDELLE	10					
25	93606–19M23	PIN, DOWEL GOUPILLE	2					
26	69J–45127–00	SEAL JOINT	1					
27	69J–45123–00	GASKET, MUFFLER JOINT, POT DE DETENTE	1					

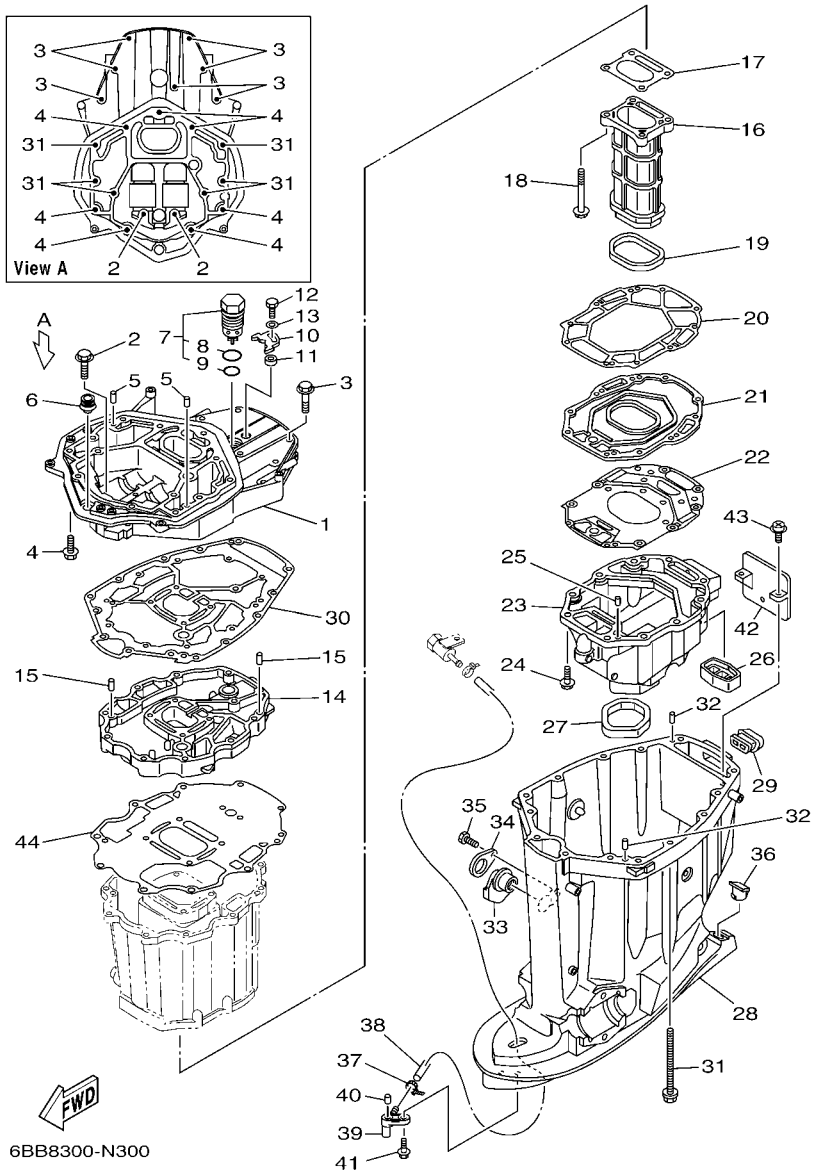

FIG. 30 UPPER CASING FOURREAU

REF. NO.	PART NO. N° PIECES	DESCRIPTION DESCRIPTION	6BB9					REMARKS REMARQUES
28	6BB–45111–00–8D	CASING, UPPER FOURREAU	1					
29	69J–42769–00	SEAL, RUBBER BOURRELET, CAOUTCHOUC	1					
30	69J–45113–20	GASKET, UPPER CASING JOINT, TUBE D'ARBRE	1					
31	90119–10007	BOLT, WITH WASHER BOULON, AVEC RONDELLE	6					
32	93608–16M16	PIN, DOWEL AXE	2					
33	6BB–15316–00	DAMPER 1 AMORTISSEUR 1	1					
34	6BB–45152–01	COVER, UPPER CASING 2 CAPUCHON FOURREAU	1					
35	97095–06012	BOLT BOULON	1					
36	61A–45155–00	CAP CAPUCHON	1					
37	90465–11M10	CLAMP BRIDE	1					FOR LAN SPEED FOR LAN SPEED
38	90445–07012	HOSE (L1457) DURITE (L1457)	1					FOR LAN SPEED FOR LAN SPEED
39	66K–45378–00	NIPPLE, HOSE RACCORD, TUYAU	1					
40	93606–12019	PIN, DOWEL GOUPILLE	1					
41	90119–06M17	BOLT, WITH WASHER BOULON, AVEC RONDELLE	1					
42	69J–14624–01	COVER, EXHAUST CACHE D'ECHAPPEMENT	1					
43	97980–06216	SCREW, WITH WASHER VIS, AVEC RONDELLE	2					
44	69J–15312–01	GASKET, OIL PAN JOINT DE VENTILATEUR D'HUILE	1					

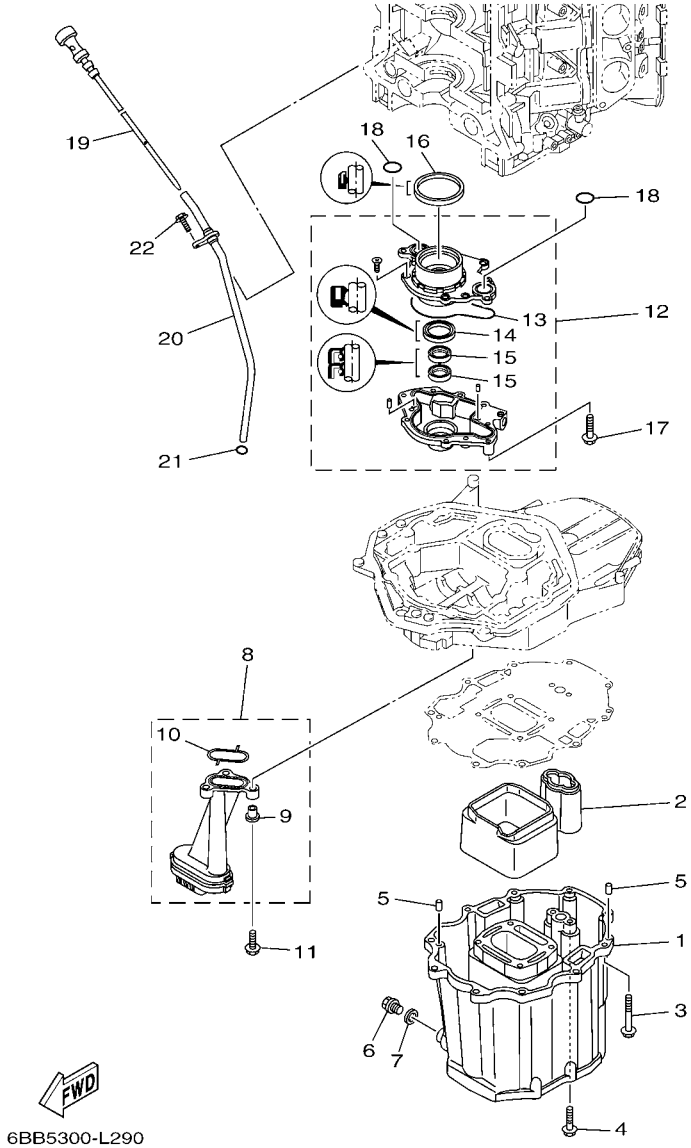

FIG. 31 OIL PAN — VENTILATEUR D'HUILE

REF. NO.	PART NO. N° PIECES	DESCRIPTION DESCRIPTION	6BB9					REMARKS REMARQUES
1	69J–15311–00–CA	OIL PAN VENTILATEUR D'HUILE	1					
2	69J–15761–00	SEAL, RUBBER 1 JOINT CAOUTCHOUC 1	1					
3	97575–08560	BOLT, WITH WASHER VIS HEXAGONAL AVC RONDELLE	10					
4	97575–08535	BOLT, WITH WASHER VIS HEXAGONAL AVC RONDELLE	2					
5	93608–16M16	PIN, DOWEL AXE	2					
6	90340–14M06	PLUG, STRAIGHT SCREW PLOT, FILETE DROIT	1					
7	90430–14M09	GASKET JOINT	1					
8	69J–13411–00	STRAINER, OIL FILTRE, HUILE	1					
9	90387–06263	.COLLAR .COLLERETTE	3					
10	69J–13415–00	.SEAL, OIL STRAINER .JOINT, FILTRE A HUILE	1					
11	95812–06025	BOLT, FLANGE BOULON	3					
12	6P2–13300–00	OIL PUMP ASSY POMPE A HUILE COMPLETE	1					
13	69J–13329–01	.GASKET, PUMP COVER .JOINT, COUVERCLE DE POMPE	1					
14	6AW–13119–00	.OIL SEAL .JOINT SPY	1					
15	69J–13631–00	.OIL SEAL .JOINT SPY	2					
16	69J–11355–00	SEAL, CYLINDER 1 JOINT, SPY CYLINDRE	1					
17	97575–06540	BOLT, WITH WASHER VIS HEXAGONAL AVC RONDELLE	4					
18	93210–25552	O-RING JOINT TORIQUE	2					
19	6P2–15362–10	PLUG, OIL LEVEL PLOT, NIVEAU D'HUILE	1					
20	6P2–15377–10	GUIDE, INLET GUIDE D'ADMISSION	1					
21	93210–19MJ3	O-RING JOINT TORIQUE	1					
22	95895–06016	BOLT, FLANGE BOULON	1					

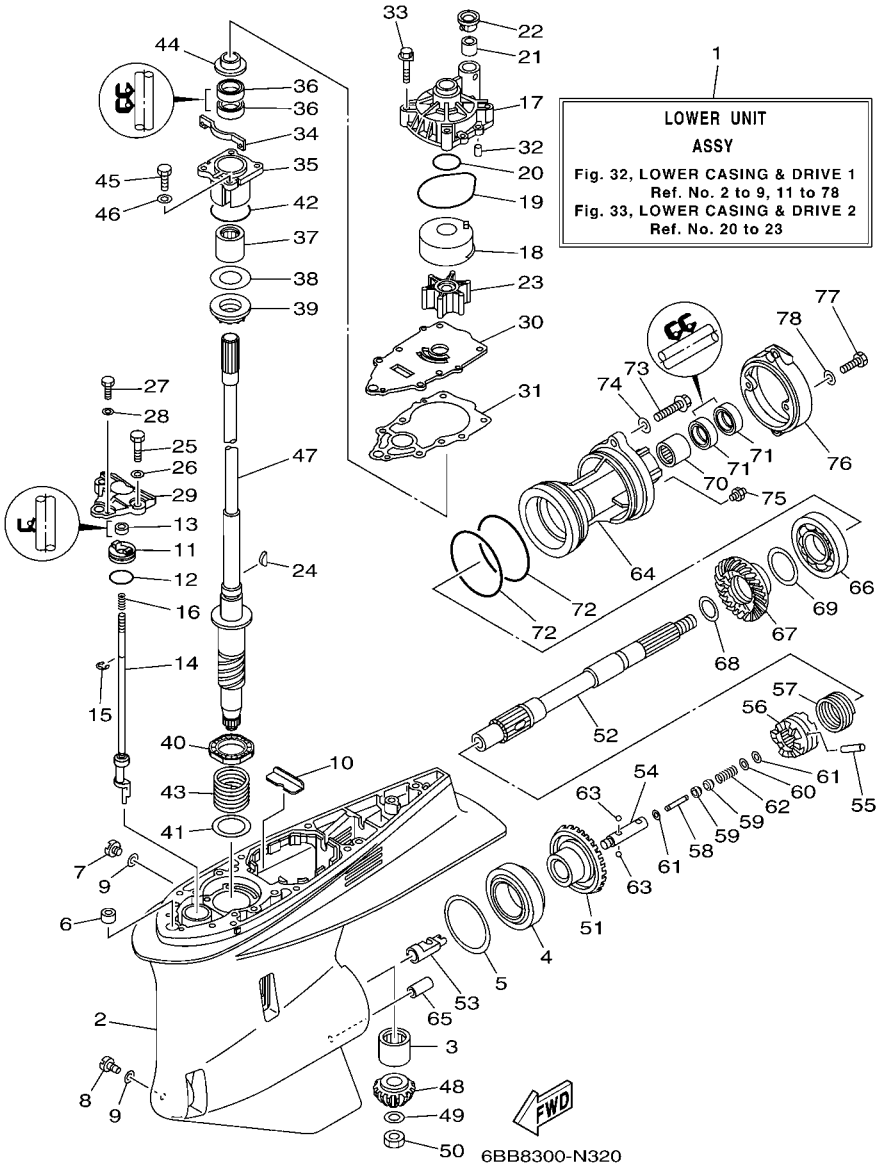

FIG. 32 LOWER CASING & DRIVE 1 BOITIER D'HELICE TRANSMISSION1

REF. NO.	PART NO. N° PIECES	DESCRIPTION DESCRIPTION	6BB9					REMARKS REMARQUES
1	6BB–45300–01–8D	LOWER UNIT ASSY UNITE INFERIEURE (ENS.)	1					
2	6P2–45301–10–8D	CASING, LOWER BEQUILLE	1					
3	93311–83280	BEARING ROULEMENT	1					
4	93332–000W1	BEARING ROULEMENT	1					
5	61A–45567–00	SHIM (T:0.10MM) CALE (T:0.10MM)	1					UR UR
	61A–45567–10	SHIM (T:0.12MM) CALE (T:0.12MM)	1					UR UR
	61A–45567–20	SHIM (T:0.15MM) CALE (T:0.15MM)	1					UR UR
	61A–45567–30	SHIM (T:0.18MM) CALE (T:0.18MM)	1					UR UR
	61A–45567–40	SHIM (T:0.30MM) CALE (T:0.30MM)	1					UR UR
	61A–45567–50	SHIM (T:0.40MM) CALE (T:0.40MM)	1					UR UR
	61A–45567–60	SHIM (T:0.50MM) CALE (T:0.50MM)	1					UR UR
6	663–44366–00	DAMPER, WATER SEAL 2 JOINT, TUBE D'EAU 2	1					
7	90340–08002	PLUG, STRAIGHT SCREW PLOT, FILETE DROIT	1					
8	688–45341–10	PLUG, DRAIN BOUCHON DE VIDANGE	1					
9	90430–08020	GASKET JOINT	2					
10	61A–45376–00	GUIDE, SEAL DAMPER BUTEE, JOINT CAOUTCHOUC	1					
11	65N–45321–00	PLATE PLAQUETTE	1					
12	93210–33M49	O-RING JOINT TORIQUE	1					
13	93106–09014	OIL SEAL JOINT SPY	1					
14	6P2–44150–00	SHIFT CAM ASSY CAME D'INVERSION	1					
15	99001–08600	CIRCLIP CIRCLIP	1					
16	90501–11M10	SPRING, COMPRESSION RESSORT, COMPRESSION	1					
17	61A–44311–01	HOUSING, WATER PUMP CORPS, POMPE A EAU	1					
18	61A–44322–02	INSERT, CARTRIDGE CUVETTE	1					
19	93210–86M38	O-RING JOINT TORIQUE	1					
20	93210–37160	O-RING JOINT TORIQUE	1					
21	6E5–44365–00	DAMPER, WATER SEAL 1 JOINT, TUBE D'EAU 1	1					

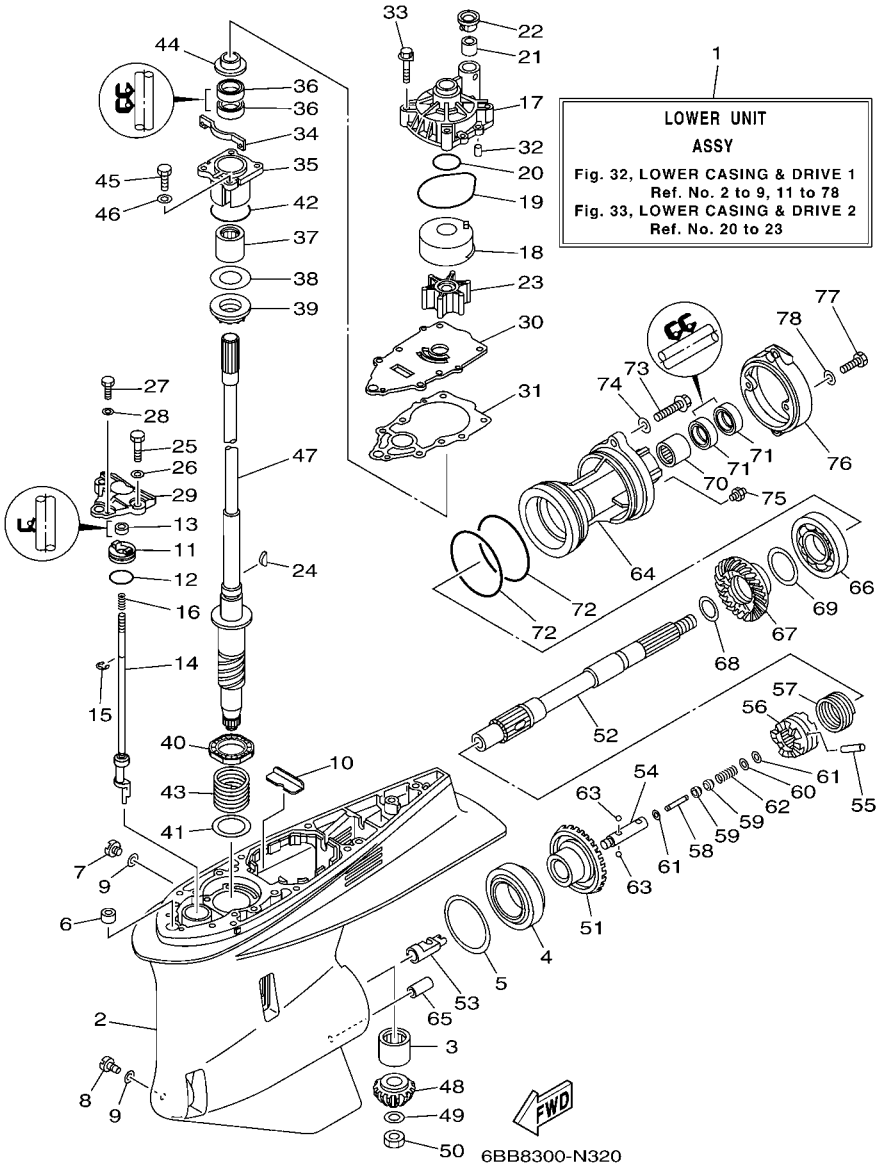

FIG. 32 LOWER CASING & DRIVE 1 BOITIER D'HELICE TRANSMISSION1

REF. NO.	PART NO. N° PIECES	DESCRIPTION DESCRIPTION	6BB9					REMARKS REMARQUES
22	6E5–44312–00	COVER, WATER PUMP HOUSING COUVERCLE	1					
23	6E5–44352–01	IMPELLER TURBINE	1					
24	90280–04M05	KEY, WOODRUFF CLAVETTE, DEMI-LUNE	1					
25	97095–08030	BOLT BOULON	2					
26	92995–08600	WASHER RONDELLE	2					
27	97095–06016	BOLT BOULON	1					
28	92995–06600	WASHER RONDELLE	1					
29	60X–44312–00	COVER, WATER PUMP HOUSING COUVERCLE	1					
30	6P2–44323–00	OUTER PLATE, CARTRIDGE PLAQUE EXTERIEURE	1					
31	60X–44315–A0	GASKET, WATER PUMP JOINT, POMPE A EAU	1					
32	93606–12019	PIN, DOWEL GOUPILLE	2					
33	90119–08M14	BOLT, WITH WASHER BOULON, AVEC RONDELLE	4					
34	6P2–45723–00	PLATE, SEAL PLAQUE, JOINT	1					
35	6P2–45331–00–9S	HOUSING, BEARING FLASQUE, ROULEMENT	1					
36	93101–28M16	OIL SEAL JOINT SPY	2					
37	93317–330U2	BEARING ROULEMENT	1					
38	61A–45587–00	SHIM (T:0.10MM) CALE (T:0.10MM)	1					UR UR
	61A–45587–10	SHIM (T:0.12MM) CALE (T:0.12MM)	1					UR UR
	61A–45587–20	SHIM (T:0.15MM) CALE (T:0.15MM)	1					UR UR
	61A–45587–30	SHIM (T:0.18MM) CALE (T:0.18MM)	1					UR UR
	61A–45587–40	SHIM (T:0.30MM) CALE (T:0.30MM)	1					UR UR
	61A–45587–50	SHIM (T:0.40MM) CALE (T:0.40MM)	1					UR UR
	61A–45587–60	SHIM (T:0.50MM) CALE (T:0.50MM)	1					UR UR
39	93341–93020	BEARING CERVEAUX DE DIRECTION	1					
40	93341–34019	BEARING CERVEAUX DE DIRECTION	1					
41	90201–42014	WASHER, PLATE RONDELLE, PLATE	1					
42	93210–55M14	O-RING JOINT TORIQUE	1					

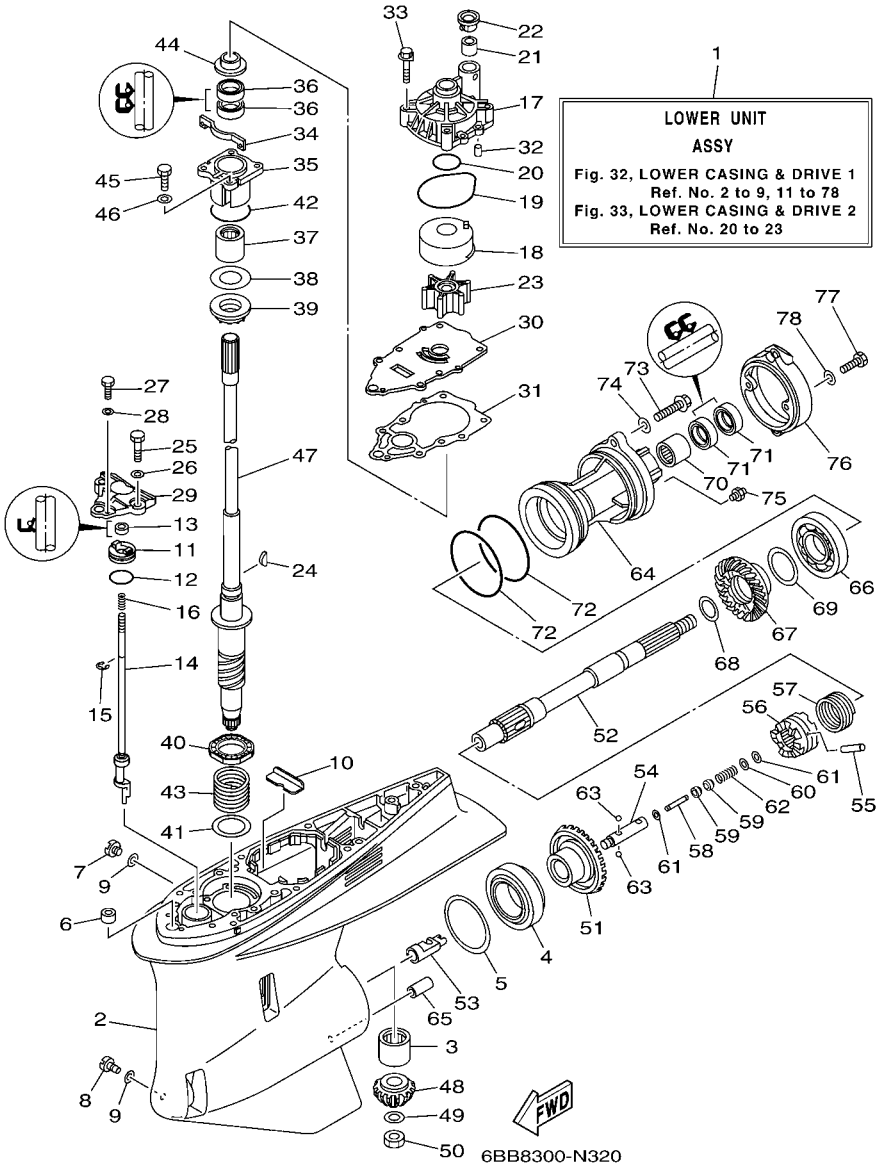

FIG. 32 LOWER CASING & DRIVE 1 BOITIER D'HELICE TRANSMISSION1

REF. NO.	PART NO. N° PIECES	DESCRIPTION DESCRIPTION	6BB9					REMARKS REMARQUES
43	90501–450A2	SPRING, COMPRESSION RESSORT, COMPRESSION	1					
44	6E5–45344–00	COVER, OIL SEAL FLASQE, JOINT D'HUILE	1					
45	97095–08025	BOLT BOULON	4					
46	92995–08600	WASHER RONDELLE	4					
47	6BB–45501–00	DRIVE SHAFT COMP. ARBRE MOTEUR COMP.	1					
48	6P2–45551–02	PINION (15T) PIGNON D'ATTAQUE (15D)	1					
49	90201–16M00	WASHER, PLATE RONDELLE, PLATE	1					
50	90170–16M19	NUT ECROU	1					
51	6P2–45560–01	GEAR 1 (30T) PIGNON 1 (30T)	1					
52	69J–45611–00	SHAFT, PROPELLER ARBRE, HELICE	1					
53	61A–45641–02	SHIFTER EMBRAYAGE	1					
54	61A–45634–01	SLIDE, SHIFT CONTRE-POUSSOIR	1					
55	61A–45632–00	PIN, CROSS GOUPILLE DE CRABOT	1					
56	69J–45631–00	CLUTCH, DOG CRABOT	1					
57	61A–45633–00	RING, CROSS PIN JONC, GOUPILLE CRABOT	1					
58	6H1–45668–00	SHAFT, FREE 1 AXE 1	1					
59	61A–45635–00	PLUNGER, SHIFT POUSSOIR D'EMBRAYAGE	2					
60	90201–02M00	WASHER, PLATE RONDELLE, PLATE	1					
61	90183–02M03	NUT, SPRING ECROU, RESSORT	2					
62	90501–10M77	SPRING, COMPRESSION RESSORT, COMPRESSION	1					
63	93501–04011	BALL BILLE	2					
64	6D0–45332–00–CA	HOUSING, BEARING FLASQUE, ROULEMENT	1					
65	99590–10114	PIN, DOWEL GOUJON, D'ASSEMBLAGE	1					
66	93306–210U0	BEARING ROULEMENT	1					
67	6P2–45571–00	GEAR 2 (30T) PIGNON 2 (30T)	1					
68	6P2–45578–00	SHIM (T:1.80MM) CALE (T:1.80MM)	1					UR UR
	6P2–45578–10	SHIM (T:1.90MM) CALE (T:1.90MM)	1					UR UR

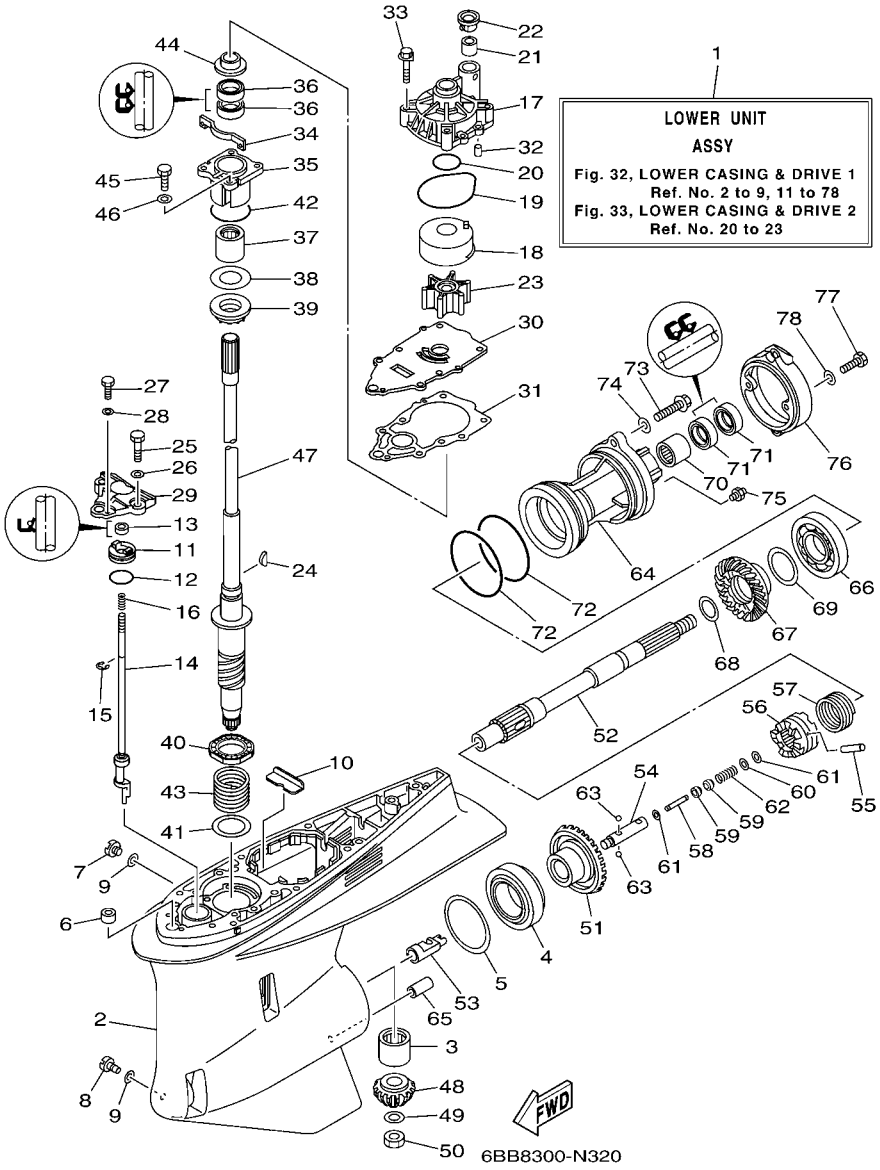

FIG. 32 LOWER CASING & DRIVE 1 BOITIER D'HELICE TRANSMISSION1

REF. NO.	PART NO. N° PIECES	DESCRIPTION DESCRIPTION	6BB9					REMARKS REMARQUES
68	6P2–45578–20	SHIM (T:2.00MM) CALE (T:2.00MM)	1					UR UR
	6P2–45578–30	SHIM (T:2.10MM) CALE (T:2.10MM)	1					UR UR
	6P2–45578–40	SHIM (T:2.20MM) CALE (T:2.20MM)	1					UR UR
69	61A–45577–00	SHIM (T:0.10MM) CALE (T:0.10MM)	1					UR UR
	61A–45577–10	SHIM (T:0.12MM) CALE (T:0.12MM)	1					UR UR
	61A–45577–20	SHIM (T:0.15MM) CALE (T:0.15MM)	1					UR UR
	61A–45577–30	SHIM (T:0.18MM) CALE (T:0.18MM)	1					UR UR
	61A–45577–40	SHIM (T:0.30MM) CALE (T:0.30MM)	1					UR UR
	61A–45577–50	SHIM (T:0.40MM) CALE (T:0.40MM)	1					UR UR
	61A–45577–60	SHIM (T:0.50MM) CALE (T:0.50MM)	1					UR UR
70	93315–43064	BEARING ROULEMENT	1					
71	93101–30002	OIL SEAL JOINT SPY	2					
72	93211–04384	O-RING JOINT TORIQUE	2					
73	90105–08049	BOLT, FLANGE BOULON	2					
74	90201–08023	WASHER, PLATE RONDELLE, PLATE	2					
75	93700–09M00	NIPPLE, GREASE PION	1					
76	6D0–45361–00–8D	CAP, LOWER CASING COUVERCLE, BOITIER D'HELICE	1					
77	97095–08020	BOLT BOULON	2					
78	92995–08600	WASHER RONDELLE	2					

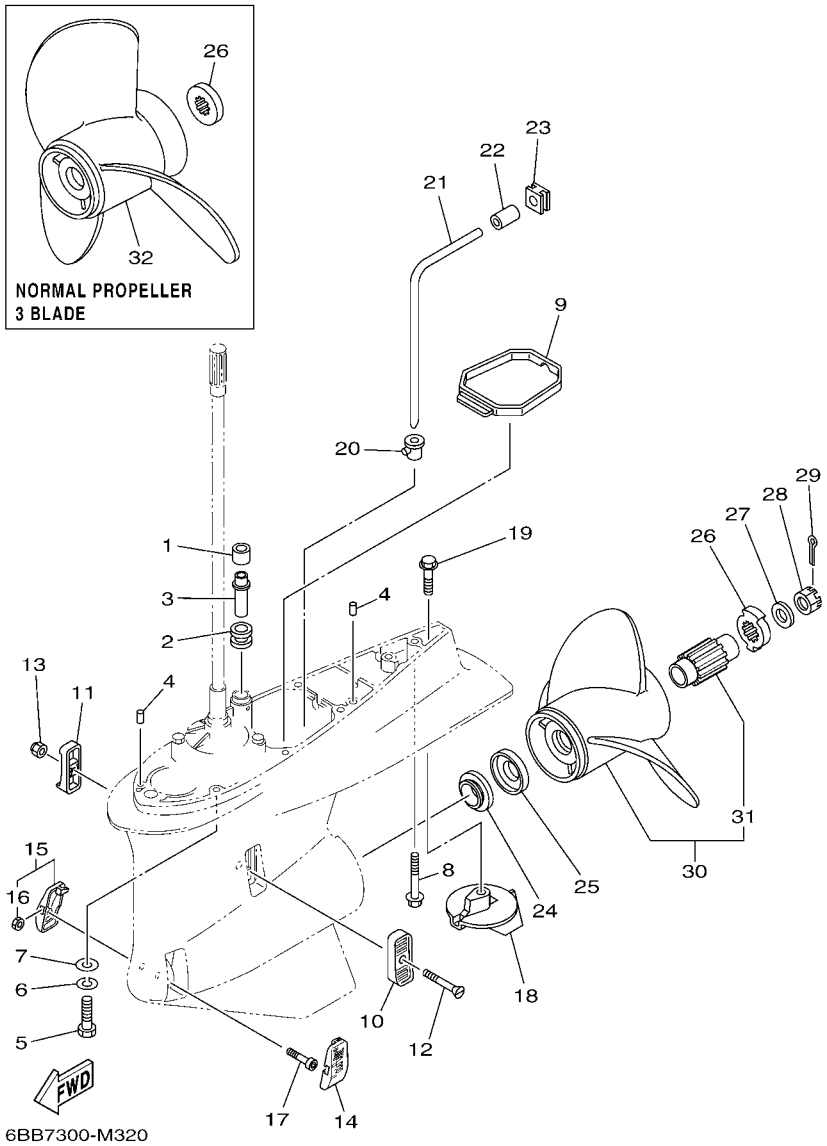

FIG. 33 LOWER CASING & DRIVE 2 BOITIER D'HELICE TRANSMISSION2

REF. NO.	PART NO. N° PIECES	DESCRIPTION DESCRIPTION	6BB9					REMARKS REMARQUES
1	6E5–44365–00	DAMPER, WATER SEAL 1 JOINT, TUBE D'EAU 1	1					
2	6E5–44366–00	DAMPER, WATER SEAL 2 JOINT, TUBE D'EAU 2	1					
3	6BB–44361–00	TUBE, WATER 1 TUBE D'EAU 1	1					
4	93608–12M05	PIN, DOWEL AXE	2					
5	97095–10045	BOLT BOULON	7					
6	92995–10100	WASHER RONDELLE	7					
7	92995–10600	WASHER RONDELLE	7					
8	90119–10MA2	BOLT, WITH WASHER BOULON, AVEC RONDELLE	1					
9	6D0–45375–01	DAMPER, SEAL BOURRELET, CAOUTCHOUC	1					
10	6P2–45214–00	COVER, WATER INLET 1 GRILLE, ENTREE D'EAU 1	1					
11	6P2–45215–00	COVER, WATER INLET 2 GRILLE, ENTREE D'EAU 2	1					
12	90152–05M08	SCREW, COUNTERSUNK VIS, TETE NOYEE	1					
13	90185–05002	NUT, NYLON ECROU,AUTO-BLOQUANT	1					
14	6CE–45224–00	COVER, WATER INLET 3 GRILLE, ENTREE D'EAU 3	1					
15	6CE–45225–00	COVER, WATER INLET 4 GRILLE, ENTREE D'EAU 4	1					
16	90185–05002	.NUT, NYLON .ECROU,AUTO-BLOQUANT	1					
17	90110–05039	BOLT, HEXAGON SOCKET HEAD BOULON, TETE HEXAGONALE CREUSE	1					
18	69L–45371–00	TAB-TRIM ANODE DERIVE	1					
19	90105–10M00	BOLT, FLANGE BOULON	1					
20	6D0–44367–00	DAMPER, WATER SEAL 3 JOINT TUBE D'EAU 3	1					
21	6D0–44362–01	TUBE, WATER 2 TUBE D'EAU 2	1					
22	6D0–44365–00	DAMPER, WATER SEAL 1 JOINT, TUBE D'EAU 1	1					
23	6D0–44366–00	DAMPER, WATER SEAL 2 JOINT, TUBE D'EAU 2	1					
24	60X–45987–10	SPACER 1 ENTRETOISE 1	1					
25	60X–45995–00	SPACER 3 ENTRETOISE 3	1					
26	6CE–45997–00	SPACER 2 ENTRETOISE 2	1					FOR SDS PROP. FOR SDS PROP.
	688–45997–01	SPACER 2 ENTRETOISE 2	1					AP NORMAL PROP. AP NORMAL PROP.

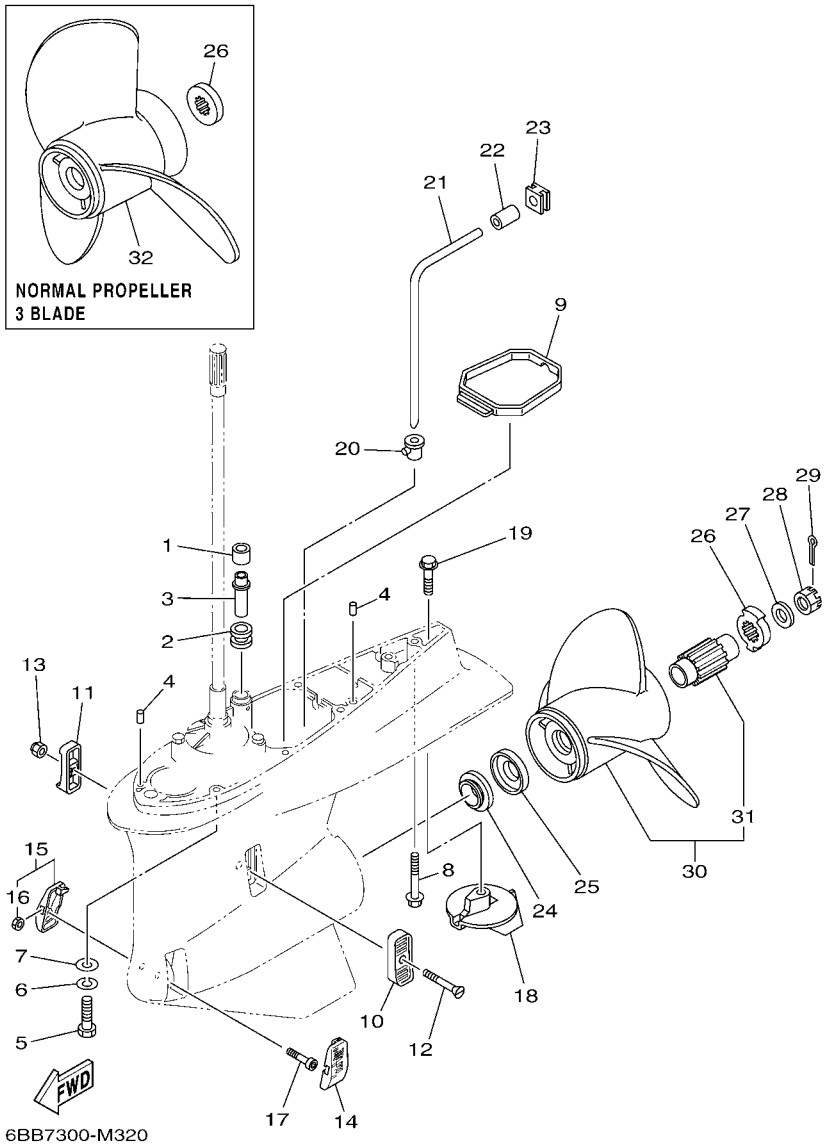

FIG. 33 LOWER CASING & DRIVE 2 BOITIER D'HELICE TRANSMISSION2

REF. NO.	PART NO. N° PIECES	DESCRIPTION DESCRIPTION	6BB9					REMARKS REMARQUES
27	92990–18200	WASHER RONDELLE, PLATE	1					
28	90171–18M04	NUT, CASTLE ECROU, CRENELE	1					
29	91490–40030	PIN. COTTER GOUPILLE	1					
30	6CE–45930–00	PROPELLER (3X15-3/4"X13"-T) HELICE (3X15-3/4"X13"-T)	1					UR SDS PROP. UR SDS PROP.
	6CE–45976–00	PROPELLER (3X15-3/4"X15"-T) HELICE (3X15-3/4"X15"-T)	1					UR SDS PROP. UR SDS PROP.
	6CE–45978–00	PROPELLER (3X15-1/2"X17"-T) HELICE (3X15-1/2"X17"-T)	1					UR SDS PROP. UR SDS PROP.
	6CE–45934–00	PROPELLER (3X15-1/4"X18"-T) HELICE (3X15-1/4"X18"-T)	1					UR SDS PROP. UR SDS PROP.
	6CE–45970–00	PROPELLER (3X15-1/4"X19"-T) HELICE (3X15-1/4"X19"-T)	1					UR SDS PROP. UR SDS PROP.
	6CE–45932–00	PROPELLER (3X15"X20"-T) HELICE (3X15"X20"-T)	1					UR SDS PROP. UR SDS PROP.
	6CE–45972–00	PROPELLER (3X15"X21"-T) HELICE (3X15"X21"-T)	1					UR SDS PROP. UR SDS PROP.
	6CE–45974–00	PROPELLER (3X14-3/4"X23"-T) HELICE (3X14-3/4"X23"-T)	1					UR SDS PROP. UR SDS PROP.
31	6CE–45C81–00	.DAMPER RUBBER, PROPELLER 1 .AMORTISSEUR HELICE 1	1					
32	6G5–45970–02	PROPELLER (3X15-1/4"X15"-M) HELICE (3X15-1/4"X15"-M)	1					AP NORMAL 3 BLADE AP NORMAL 3 BLADE
	6G5–45972–02	PROPELLER (3X13-3/4"X21"-M) HELICE (3X13-3/4"X21"-M)	1					AP NORMAL 3 BLADE AP NORMAL 3 BLADE
	6G5–45974–03	PROPELLER (3X13-3/4"X19"-M2) HELICE (3X13-3/4"X19"-M2)	1					AP NORMAL 3 BLADE AP NORMAL 3 BLADE
	6G5–45978–03	PROPELLER (3X13-3/4"X17"-M2) HELICE (3X13-3/4"X17"-M2)	1					AP NORMAL 3 BLADE AP NORMAL 3 BLADE
	61A–45972–00	PROPELLER (3X14-1/2"X21"-T) HELICE (3X14-1/2"X21"-T)	1					AP NORMAL 3 BLADE AP NORMAL 3 BLADE
	61A–45974–00	PROPELLER (3X14-1/2"X19"-T) HELICE (3X14-1/2"X19"-T)	1					AP NORMAL 3 BLADE AP NORMAL 3 BLADE
	61A–45978–00	PROPELLER (3X15"X17"-T) HELICE (3X15"X17"-T)	1					AP NORMAL 3 BLADE AP NORMAL 3 BLADE
	6R4–45970–A1	PROPELLER (3X15-1/4"X19"-M) HELICE (3X15-1/4"X19"-M)	1					AP NORMAL 3 BLADE AP NORMAL 3 BLADE
	6R4–45972–A0	PROPELLER (3X14-7/8"X21"-M) HELICE (3X14-7/8"X21"-M)	1					AP NORMAL 3 BLADE AP NORMAL 3 BLADE
	6R4–45974–A0	PROPELLER (3X14-1/2"X23"-M) HELICE (3X14-1/2"X23"-M)	1					AP NORMAL 3 BLADE AP NORMAL 3 BLADE
	6R4–45976–A0	PROPELLER (3X14-1/2"X15"-M) HELICE (3X14-1/2"X15"-M)	1					AP NORMAL 3 BLADE AP NORMAL 3 BLADE
	6R4–45978–A0	PROPELLER (3X15-1/4"X17"-M) HELICE (3X15-1/4"X17"-M)	1					AP NORMAL 3 BLADE AP NORMAL 3 BLADE

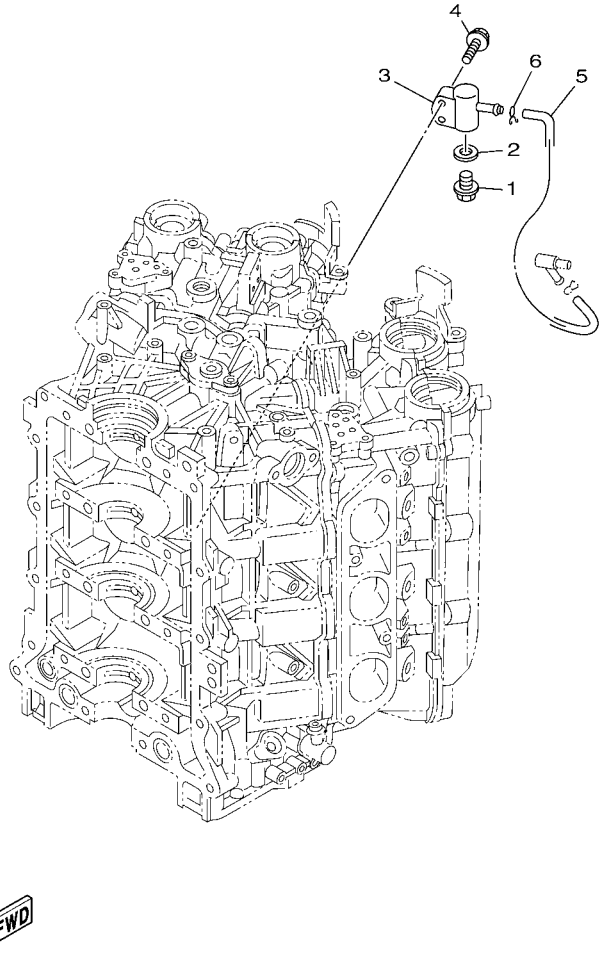

6ALB100-P340

FIG. 34 OPTIONAL PARTS PIECES OPTIONNELLES

REF. NO.	PART NO. N° PIECES	DESCRIPTION DESCRIPTION	6BB9					REMARKS REMARQUES
1	90340–14M06	PLUG, STRAIGHT SCREW PLOT, FILETE DROIT	1					
2	90430–14115	GASKET JOINT	1					
3	6P2–83652–00	CONNECTOR CONNECTEUR	1					
4	97595–06530	BOLT, WITH WASHER VIS HEXAGONAL AVC RONDELLE	2					
5	6H4–24311–00	PIPE, FUEL 1 DURITE A ESSENCE	1					
6	90467–08M18	CLIP JONC	1					

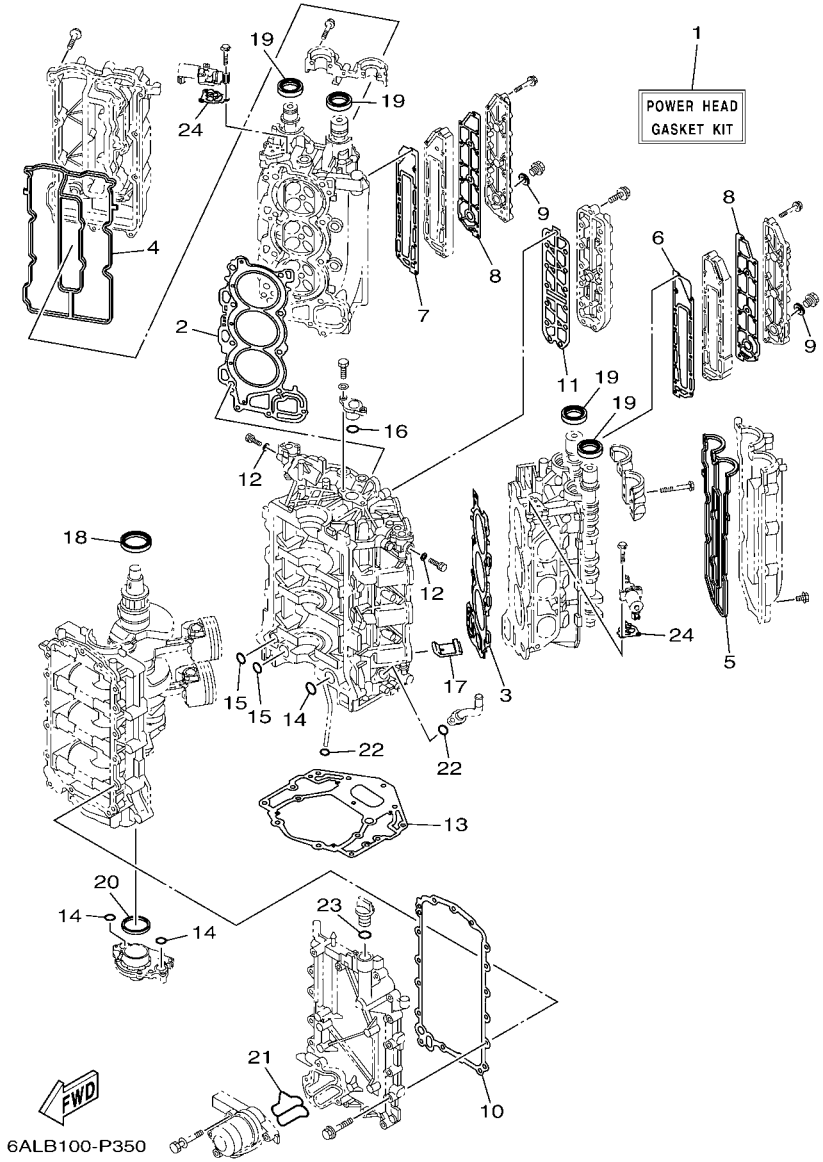

FIG. 35 REPAIR KIT 1 — KITS DE REPARATION 1

REF. NO.	PART NO. N° PIECES	DESCRIPTION DESCRIPTION	6BB9					REMARKS REMARQUES
1	6P2–W0001–03	POWER HEAD GASKET KIT POCHETTE DE JINTS TETE MOTRICE	1					
2	6P2–11181–00	.GASKET, CYLINDER HEAD 1 .JOINT, DE CULASSE 1	1					
3	6P2–11182–00	.GASKET, CYLINDER HEAD 2 .JOINT, CULASSE 2	1					
4	6P2–11193–00	.GASKET, HEAD COVER 1 .JOINT, COUVERCLE DE CULASSE 1	1					
5	6P2–11194–00	.GASKET, HEAD COVER 2 .JOINT, COUVERCLE DE CULASSE 2	1					
6	6P2–41112–00	.GASKET, EXHAUST INNER COVER .JOINT, PLAQUE D'ECHAPPEMENT	1					
7	6P2–41122–00	.GASKET, EXHAUST INNER COVER .JOINT, PLAQUE D'EHAPPEMENT	1					
8	6P2–41114–00	.GASKET, EXHAUST OUTER COVER .JOINT, COUVERCLE D'ECHAPPEMENT	2					
9	90201–186F1	.WASHER, PLATE .RONDELLE, PLATE	2					
10	69J–15451–00	.GASKET, CRANKCASE COVER 1 .JOINT, COUVERCLE DE CARTER 1	1					
11	6P2–1131B–00	.GASKET, COVER .JOINT, COUVERCLE	1					
12	90430–05002	.GASKET .JOINT	2					
13	69J–11351–11	.GASKET, CYLINDER .JOINT, D'EMBASE	1					
14	93210–25552	.O-RING .JOINT TORIQUE	3					
15	93210–19MJ1	.O-RING .JOINT TORIQUE	2					
16	93210–25647	.O-RING .JOINT TORIQUE	1					
17	69J–14664–00	.GROMMET, WATER SHUT .PASSE-FIL	2					
18	93102–63004	.OIL SEAL .JOINT SPY	1					
19	93102–38008	.OIL SEAL .JOINT SPY	4					
20	69J–11355–00	.SEAL, CYLINDER 1 .JOINT, SPY CYLINDRE	1					
21	6P2–13477–00	.GASKET .JOINT	1					
22	93210–19MJ3	.O-RING .JOINT TORIQUE	2					
23	93210–24M79	.O-RING .JOINT TORIQUE	1					
24	6CB–1242F–00	.GASKET, FILTER .JOINT, FILTRE	2					

FIG. 36 REPAIR KIT 2 — KITS DE REPARATION 2

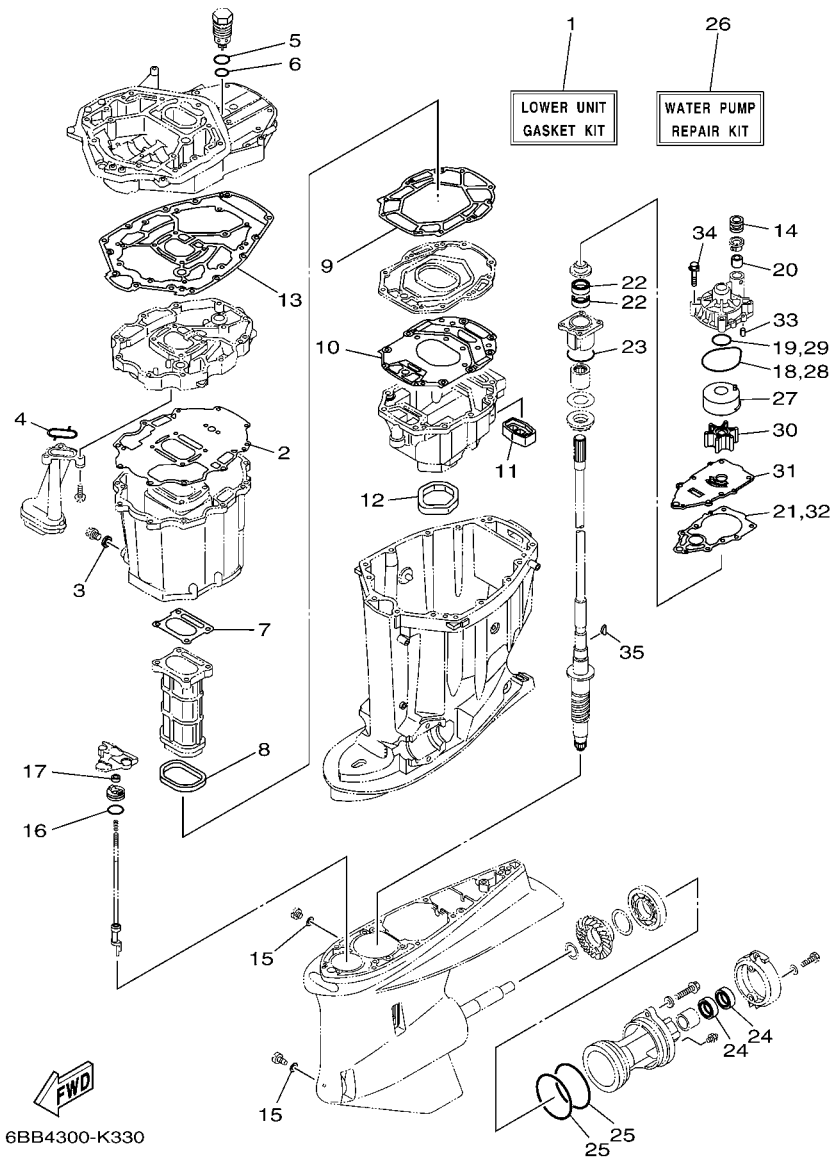

REF. NO.	PART NO. N° PIECES	DESCRIPTION DESCRIPTION	6BB9					REMARKS REMARQUES
1	6P2–W0001–30	LOWER UNIT GASKET KIT POCHETTE DE JOINTS EMBASE	1					
2	69J–15312–01	.GASKET, OIL PAN .JOINT DE VENTILATEUR D'HUILE	1					
3	90430–14M09	.GASKET .JOINT	1					
4	69J–13415–00	.SEAL, OIL STRAINER .JOINT, FILTRE A HUILE	1					
5	93210–347A1	.O-RING .JOINT TORIQUE	1					
6	93210–28543	.O-RING .JOINT TORIQUE	1					
7	6P2–41134–00	.GASKET, EXHAUST MANIFOLD .JOINT, PIPE D'ECHAPPEMENT	1					
8	69J–41138–00	.SEAL, EXT. 1 .JOINT DE GROUPE 1	1					
9	69J–41135–A0	.GASKET, EXHAUST MANIFOLD .JOINT, PIPE D'ECHAPPEMENT	1					
10	6S1–41136–00	.GASKET, EXHAUST MANIFOLD 4 .JOINT, PIPE D'ECHAPPEMENT 4	1					
11	69J–45127–00	.SEAL .JOINT	1					
12	69J–45123–00	.GASKET, MUFFLER .JOINT, POT DE DETENTE	1					
13	69J–45113–20	.GASKET, UPPER CASING .JOINT, TUBE D'ARBRE	1					
14	6E5–44366–00	.DAMPER, WATER SEAL 2 .JOINT, TUBE D'EAU 2	1					
15	90430–08020	.GASKET .JOINT	2					
16	93210–33M49	.O-RING .JOINT TORIQUE	1					
17	93106–09014	.OIL SEAL .JOINT SPY	1					
18	93210–86M38	.O-RING .JOINT TORIQUE	1					
19	93210–37160	.O-RING .JOINT TORIQUE	1					
20	6E5–44365–00	.DAMPER, WATER SEAL 1 .JOINT, TUBE D'EAU 1	1					
21	60X–44315–A0	.GASKET, WATER PUMP .JOINT, POMPE A EAU	1					
22	93101–28M16	.OIL SEAL .JOINT SPY	2					
23	93210–55M14	.O-RING .JOINT TORIQUE	1					
24	93101–30002	.OIL SEAL .JOINT SPY	2					
25	93211–04384	.O-RING .JOINT TORIQUE	2					
26	6P2–W0078–00	WATER PUMP REPAIR KIT KIT DE REPARATION DE LA POMPE	1					
27	61A–44322–02	.INSERT, CARTRIDGE .CUVETTE	1					

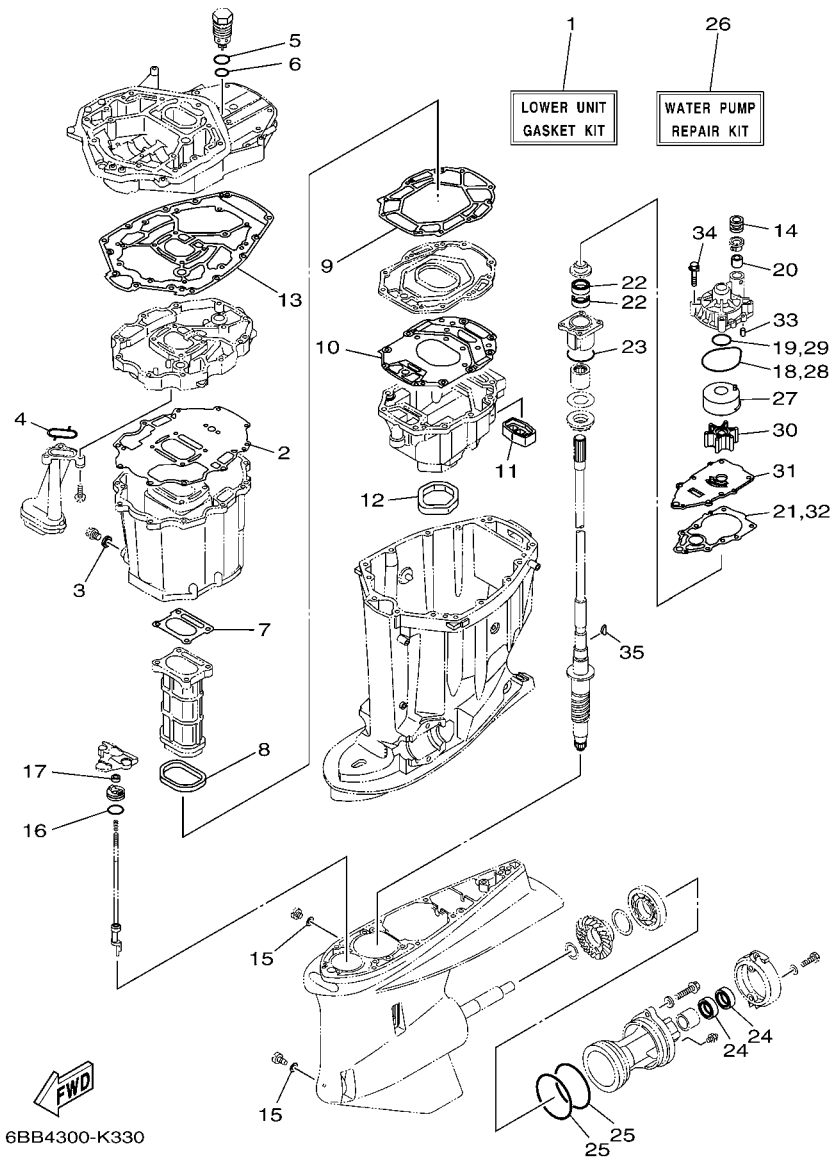

FIG. 36 REPAIR KIT 2 — KITS DE REPARATION 2

REF. NO.	PART NO. N° PIECES	DESCRIPTION DESCRIPTION	6BB9					REMARKS REMARQUES
28	93210–86M38	.O-RING .JOINT TORIQUE	1					
29	93210–37160	.O-RING .JOINT TORIQUE	1					
30	6E5–44352–01	.IMPELLER .TURBINE	1					
31	6P2–44323–00	.OUTER PLATE, CARTRIDGE .PLAQUE EXTERIEURE	1					
32	60X–44315–A0	.GASKET, WATER PUMP .JOINT, POMPE A EAU	1					
33	93606–12019	.PIN, DOWEL .GOUPILLE	2					
34	90119–08M14	.BOLT, WITH WASHER .BOULON, AVEC RONDELLE	4					
35	90280–04M05	.KEY, WOODRUFF .CLAVETTE, DEMI-LUNE	1					

NUMERICAL INDEX
INDEX NUMERIQUE

PART NO. N° PIECES	REF. NO.
6P2–11000–00	3 – 1
6P2–11110–11–9S	5 – 2
69J–11119–00	3 – 13
6P2–11119–00	6 – 16
6P2–1111E–00	6 – 17
6P2–11120–11–9S	5 – 10
6S5–11133–10	5 – 3
	5 – 11
6P2–11135–00	5 – 34
6P2–11181–00	5 – 22
	35 – 2
6P2–11182–00	5 – 27
	35 – 3
6P2–11191–00–9S	5 – 33
6P2–11192–00–9S	5 – 41
6P2–11193–00	5 – 37
	35 – 4
6P2–11194–00	5 – 42
	35 – 5
69J–11301–00	5 – 16
69J–11313–00	3 – 42
6P2–1131B–00	3 – 18
	35 – 11
6P2–1131C–00–9S	3 – 15
6E5–11325–00	1 – 1
	1 – 8
	1 – 15
	3 – 16
	6 – 9
	19 – 10
6P2–11325–00	1 – 7
	6 – 8
6P3–11325–00	1 – 3
	3 – 24
	3 – 63
67F–11325–01	1 – 5
	5 – 17
67F–11328–00	5 – 18
69J–11351–11	3 – 39
	35 – 13
69J–11355–00	31 – 16
	35 – 20
6AW–11371–10	30 – 7
676–11372–00	5 – 5
6P2–11372–00	8 – 31
6P2–11377–00	8 – 34
6P2–11410–10	4 – 1
6P2–11416–00	4 – 4

PART NO. N° PIECES	REF. NO.
6P2–11416–10	4 – 4
6P2–11416–20	4 – 4
6P2–11417–00	4 – 5
6P2–11417–10	4 – 5
6P2–11417–20	4 – 5
6AW–11426–01	4 – 6
6AW–11427–01	4 – 7
6CB–11478–00	4 – 2
6P2–11537–01	7 – 17
6P2–11590–01	7 – 25
63P–11603–01	4 – 12
63P–11604–00	4 – 12
6P2–11631–10–93	4 – 11
63P–11633–10	4 – 13
63P–11634–00	4 – 14
6P2–11635–10	4 – 11
6P2–11650–00	4 – 8
63P–11654–10	4 – 9
6P2–11656–00	4 – 10
6P2–11656–10	4 – 10
6P2–11656–20	4 – 10
6P2–12111–10	7 – 1
6CB–12113–00	7 – 4
51Y–12119–00	7 – 7
6DX–12121–00	7 – 2
6P2–12171–11	7 – 9
6P2–12172–11	7 – 13
6P2–12181–11	7 – 11
6P2–12182–11	7 – 15
69J–12233–00	30 – 10
6P2–1240H–00–9S	3 – 22
6P3–1240H–00–9S	3 – 61
67F–12411–01	1 – 2
	3 – 20
67F–12412–00	3 – 21
6CB–1242F–00	6 – 20
	35 – 24
6P2–1243A–00	3 – 29
6P2–1243E–00	3 – 30
6P2–1243F–00	3 – 31
6P2–12481–12	9 – 34
6P2–12482–00	9 – 6
6P2–12483–00	9 – 8
6P2–12484–01	9 – 2
6P2–12485–00	9 – 16
6P2–1248A–00	9 – 17
6P2–1248E–00	9 – 18
6P2–12491–00	19 – 7

PART NO. N° PIECES	REF. NO.
6DR–12572–00	24 – 13
6R3–12581–00	24 – 14
6R3–12582–00	24 – 15
6R3–12583–00	24 – 16
6P2–12615–00	7 – 22
6P2–12623–00	7 – 19
6P2–12645–20	7 – 18
6P2–12663–00	7 – 20
6S5–12858–00	3 – 48
6CB–13016–00	1 – 10
	13 – 5
6AW–13119–00	31 – 14
6AW–13132–00	13 – 26
6P2–13160–10	12 – 1
6P2–13161–00	12 – 2
6P2–13170–10	12 – 6
6P2–13171–00	12 – 7
6P2–13300–00	31 – 12
69J–13329–01	31 – 13
69J–13411–00	31 – 8
69J–13415–00	31 – 10
	36 – 4
60L–13437–62	17 – 24
69J–13440–03	1 – 4
	3 – 47
6P2–13446–00–9S	3 – 49
67F–13448–00	2 – 16
6P2–13448–00	5 – 46
6P2–13477–00	3 – 50
	35 – 21
6P2–13532–10	11 – 3
6P2–13533–00	11 – 2
6P2–13545–00	11 – 7
6P2–13546–00	11 – 10
6P2–13547–00	11 – 18
6P2–13548–10	11 – 19
6P2–13556–00	10 – 4
6P2–13557–00	10 – 5
6P2–13564–00	8 – 3
6P2–13573–00	10 – 11
6P2–13574–00	10 – 21
68V–13577–00	14 – 7
	14 – 13
6P2–13577–00	12 – 5
	12 – 10
6P2–13578–00	10 – 8
6P2–13588–00	10 – 7
6CB–13593–00	13 – 23

PART NO. N° PIECES	REF. NO.
6P2–13594–00	8 – 4
6P2–13595–00	11 – 4
69J–13631–00	31 – 15
6BB–13641–00	8 – 13
6BB–13642–00	8 – 19
6P2–13645–00	8 – 14
	8 – 20
6BB–13646–00	8 – 15
	8 – 21
6BB–13711–00	10 – 3
69J–13716–00	13 – 22
6BB–13750–10	10 – 1
6P2–13751–01	10 – 2
6P2–13758–00	11 – 14
6P2–13761–10	12 – 3
	12 – 8
6AW–13781–00	13 – 30
6AW–13784–00	13 – 33
6BB–13898–00	8 – 16
6BB–13898–10	8 – 22
6CB–13906–01	13 – 8
6P2–13907–20	13 – 24
63P–13915–00	1 – 11
	13 – 25
6P2–13973–30	14 – 9
6P2–13974–30	14 – 10
6C5–1410B–00	12 – 4
	12 – 9
69J–14137–00	14 – 6
6CB–14146–00	13 – 10
6P2–14149–00	14 – 2
6P2–14159–00	10 – 13
69J–14164–00	10 – 22
6P2–14180–31	13 – 1
6AW–14181–11	13 – 15
6AW–14182–11	13 – 2
6P2–14191–00	13 – 16
68V–14216–00	13 – 12
6CB–14216–00	13 – 6
6CB–14239–00	13 – 17
6P2–14255–00	10 – 12
6P2–14349–00	11 – 1
68V–14356–00	10 – 24
6P2–14360–00	10 – 6
6P2–14386–00	13 – 37
6P2–1441J–00	8 – 28
6CB–14429–01	13 – 19
63P–14435–00	8 – 38

PART NO. N° PIECES	REF. NO.
6P2–14440–00	8 – 27
6CB–1447B–00	13 – 29
6P2–14496–00	10 – 9
6CB–14546–00	13 – 28
6CB–14564–00	13 – 9
63P–14567–00	13 – 21
69J–14624–01	30 – 42
69J–14664–00	3 – 46
	35 – 17
6BB–14711–00–9S	30 – 23
6P2–14752–00	9 – 19
6P2–1475A–10	11 – 5
6P2–1475E–00	11 – 6
6P2–1475F–00	11 – 8
6P2–1475G–00	11 – 9
68V–1475H–00	13 – 13
68V–1475J–00	13 – 14
6CB–14984–00	1 – 12
	13 – 39
6CB–14985–00	13 – 27
6P2–15100–10	3 – 2
6P2–15142–00	5 – 39
6P2–15143–00	5 – 44
6P2–15187–00	3 – 5
69J–15311–00–CA	31 – 1
69J–15312–01	30 – 44
	36 – 2
6BB–15316–00	30 – 33
6P2–15362–10	31 – 19
6G8–15363–00	3 – 52
6P2–15373–01	8 – 25
6P2–15377–10	31 – 20
6P2–15411–01–9S	3 – 8
69J–15451–00	3 – 9
	35 – 10
6P2–15481–00	3 – 6
6P2–15512–00	7 – 26
69J–15761–00	31 – 2
6P2–2134X–00	10 – 14
6E5–21744–00	9 – 7
	11 – 16
6P2–24135–00	11 – 12
6P2–24136–00	11 – 13
6P2–24137–00	11 – 15
6P2–2416A–00	11 – 11
6P2–24170–00	10 – 19
6P2–2419A–00	10 – 15
6CB–24217–00	13 – 7

PART NO. N° PIECES	REF. NO.
6P2–24300–00	14 – 12
6AW–24300–10	14 – 11
6YK–24307–42	16 – 1
6H4–24311–00	34 – 5
6P2–24313–30	15 – 20
6P2–24314–00	15 – 2
61A–24316–00	9 – 20
6AW–24317–20	14 – 5
6AW–24323–20	14 – 3
6AW–24324–20	14 – 4
6CE–24376–00	9 – 3
6P2–24376–00	11 – 20
6R3–24377–00	15 – 25
6R3–24377–10	15 – 4
688–24378–00	9 – 21
	9 – 22
	9 – 23
	9 – 24
	9 – 25
	11 – 17
69J–24378–00	2 – 17
6CE–24378–00	3 – 32
6E5–24378–00	14 – 8
6E5–24379–00	24 – 10
68V–24379–10	13 – 11
6CB–24410–00	13 – 31
6P2–24419–00	8 – 8
6P2–24422–10	8 – 6
6CB–24452–10	13 – 18
4SV–24453–00	13 – 34
6CB–24460–00	13 – 4
6P3–24469–00	15 – 9
6CB–24482–00	13 – 20
6AW–24491–10	13 – 32
6CB–24492–00	13 – 36
6CB–24501–01	1 – 9
	13 – 3
6P3–24519–00	15 – 10
6P3–24560–03	15 – 6
6P3–24562–03	15 – 8
6P3–24563–01	1 – 13
	15 – 7
6P3–24564–00	1 – 14
	15 – 11
6BB–24566–00	15 – 12
6CB–24592–00	13 – 38
68V–2481H–00	10 – 25
69J–28100–01	15 – 26

NUMERICAL INDEX
INDEX NUMERIQUE

PART NO. N° PIECES	REF. NO.
67F–2812A–00	19 – 45
6P2–28199–7B–D0	15 – 27
6P2–28199–7B–E0	15 – 27
6P2–28199–7B–F0	15 – 27
6P2–28199–7B–G0	15 – 27
6P2–28199–7B–H0	15 – 27
6P2–28199–7B–S0	15 – 27
6P2–28199–8B–K0	15 – 28
6P2–28199–8B–L0	15 – 28
6P2–28199–8B–M0	15 – 28
6P2–28199–8B–N0	15 – 28
6P2–28199–8B–P0	15 – 28
6P2–28199–8B–R0	15 – 28
69J–41111–01–9S	6 – 1
6P2–41112–00	6 – 5
	35 – 6
69J–41113–02–9S	6 – 3
6P2–41114–00	6 – 7
	35 – 8
69J–41121–01–9S	6 – 2
6P2–41122–00	6 – 6
	35 – 7
69J–41123–02–9S	6 – 4
69J–41131–11–CA	30 – 14
69J–41132–20–9S	30 – 16
6P2–41134–00	30 – 17
	36 – 7
69J–41135–A0	30 – 20
	36 – 9
6S1–41136–00	30 – 22
	36 – 10
69J–41137–10–CA	30 – 1
69J–41138–00	30 – 19
	36 – 8
6CB–41273–00	25 – 40
66K–42510–02–8D	27 – 10
6BB–42610–00	2 – 1
6P2–42613–00	2 – 3
6P2–42615–00	23 – 8
6P2–4261A–00	2 – 2
60V–42629–00	21 – 6
68F–42647–01	2 – 5
69J–42647–01	2 – 6
68F–42648–01	2 – 14
60V–42651–01	2 – 10
60V–42652–00	2 – 15
68F–42663–00	2 – 13
69J–42663–00	2 – 7

PART NO. N° PIECES	REF. NO.
6BB–42675–00	2 – 22
6BB–42676–00	2 – 23
6BB–42677–00	2 – 24
6BB–42678–00	2 – 21
6BB–42681–00	2 – 25
6BB–42682–00	2 – 26
6BB–42710–00–8D	23 – 1
648–42715–00	25 – 28
69J–42716–00	23 – 9
61A–42717–00	23 – 18
69J–42717–00	23 – 17
6P2–42717–00	23 – 3
6P2–42718–00	23 – 4
69J–42723–01	20 – 17
6BG–42724–00	23 – 13
6E5–42724–00	30 – 6
6P2–42725–00	23 – 7
61A–42727–00	23 – 15
6P2–42738–00–8D	23 – 2
6BB–42741–00–8D	24 – 1
6P2–42743–00	23 – 47
6H4–42748–00	23 – 6
68F–42753–00	23 – 53
6P2–42761–00	3 – 35
67F–42761–01	3 – 34
6P2–42766–10	23 – 49
69J–42769–00	30 – 29
6BB–42771–00–8D	24 – 2
69J–42774–10	24 – 7
6EE–42794–40	23 – 57
6EE–42794–50	23 – 58
69J–42815–00–8D	23 – 29
69J–42816–00–8D	23 – 38
69J–42817–00–8D	23 – 30
63P–42818–01	23 – 33
68V–42818–01	23 – 41
6P2–42828–00–9S	23 – 27
69J–42828–02–9S	23 – 26
68F–42828–11–9S	23 – 36
68V–43111–01–8D	26 – 1
68V–43112–01–8D	26 – 9
64E–43126–00	26 – 35
64E–43131–01	26 – 14
64E–43139–10	27 – 1
64D–43144–00	23 – 44
6G5–43144–00	26 – 25
6G5–43148–00	26 – 30
6G5–43181–02	26 – 27

PART NO. N° PIECES	REF. NO.
6G5–43185–02	26 – 28
64E–43311–10–8D	26 – 21
64E–43376–00	27 – 8
63P–43800–06	28 – 1
64E–43802–00	29 – 8
64E–43805–01	29 – 37
64E–4380F–00	29 – 33
64E–4380J–00	29 – 30
63P–43810–02	28 – 6
64E–43811–02	28 – 7
6E5–43814–02	28 – 14
64E–43816–00	29 – 17
64E–43817–00	28 – 5
64E–43817–11	29 – 19
6BC–43818–00	28 – 34
64E–4381G–00	28 – 28
64E–43820–03	28 – 16
64E–43821–03	28 – 17
64E–43822–00	28 – 18
64E–43825–03	28 – 2
64E–43827–00	29 – 22
64E–43828–01	28 – 23
64E–43829–01	28 – 24
64E–4382G–00	28 – 30
64E–43830–01	29 – 4
64E–43831–00	29 – 2
6AW–43841–00	29 – 7
64E–43843–00	29 – 6
64E–43843–10	29 – 38
64E–4384J–00	28 – 19
64E–4384N–00	28 – 31
64E–43850–00	29 – 15
64E–43851–00	29 – 11
64E–43855–00	29 – 14
64E–43858–00	29 – 12
6AW–43858–00	29 – 18
6E5–43858–00	28 – 29
72X–43858–00	29 – 5
64E–43859–00	29 – 13
64E–43860–01	29 – 20
6E5–43862–00	28 – 11
	28 – 15
6G5–43863–00	29 – 10
6E5–43864–00	28 – 21
6G5–43864–00	28 – 20
64E–43865–00	29 – 16
6G5–43865–01	29 – 35
64E–43866–00	28 – 10

PART NO. N° PIECES	REF. NO.
64E–43867–00	28 – 9
64E–43868–00	29 – 3
64E–43869–00	28 – 27
6H1–4386K–10	29 – 29
6E5–43872–00	28 – 13
64E–43873–00	29 – 24
6E5–43874–01	28 – 22
6AW–43875–00	29 – 25
64E–43879–01	29 – 27
64E–43879–11	29 – 26
64E–4387A–00	29 – 23
67H–43880–04	29 – 28
64E–43883–00	28 – 12
64E–4388E–01	28 – 26
64E–4388E–11	29 – 1
6AW–4388J–00	28 – 3
64E–43891–00	29 – 31
64E–43892–00	29 – 34
6E5–43896–00	29 – 9
64E–43897–00	28 – 25
64E–43898–00	28 – 8
69J–44117–00	25 – 7
69J–44118–00	25 – 27
6BB–44120–01	25 – 33
6P2–44121–00	25 – 22
69J–44122–00	25 – 23
6P2–44139–00	25 – 39
6P2–44150–00	32 – 14
69J–44176–01	25 – 10
61A–44311–01	32 – 17
60X–44312–00	32 – 29
6E5–44312–00	32 – 22
60X–44315–A0	32 – 31
	36 – 21
	36 – 32
61A–44322–02	32 – 18
	36 – 27
6P2–44323–00	32 – 30
	36 – 31
6E5–44352–01	32 – 23
	36 – 30
6BB–44361–00	33 – 3
6D0–44362–01	33 – 21
6D0–44365–00	33 – 22
6E5–44365–00	32 – 21
	33 – 1
	36 – 20
663–44366–00	32 – 6

PART NO. N° PIECES	REF. NO.
6D0–44366–00	33 – 23
6E5–44366–00	33 – 2
	36 – 14
6D0–44367–00	33 – 20
6P2–44391–00	23 – 16
61A–44511–01	27 – 36
69J–44514–00	27 – 28
6G5–44526–00	26 – 3
69J–44532–00	27 – 31
69J–44533–00	27 – 35
68F–44533–01	3 – 36
6BB–44551–00–8D	27 – 13
61A–44552–01–CA	27 – 26
60X–44555–00	27 – 18
6E5–44575–00	27 – 17
6BB–45111–00–8D	30 – 28
69J–45113–20	30 – 30
	36 – 13
69J–45123–00	30 – 27
	36 – 12
69J–45127–00	30 – 26
	36 – 11
6BB–45152–01	30 – 34
61A–45155–00	30 – 36
69J–45181–10–9S	30 – 21
6P2–45214–00	33 – 10
6P2–45215–00	33 – 11
6CE–45224–00	33 – 14
6CE–45225–00	33 – 15
6G5–45251–02	1 – 16
	26 – 2
6BB–45300–01–8D	32 – 1
6P2–45301–10–8D	32 – 2
65N–45321–00	32 – 11
6P2–45331–00–9S	32 – 35
6D0–45332–00–CA	32 – 64
688–45341–10	32 – 8
6E5–45344–00	32 – 44
6D0–45361–00–8D	32 – 76
69L–45371–00	1 – 19
	33 – 18
6D0–45375–01	33 – 9
61A–45376–00	32 – 10
66K–45378–00	30 – 39
6BB–45501–00	32 – 47
6P2–45551–02	32 – 48
6P2–45560–01	32 – 51
61A–45567–00	32 – 5

PART NO. N° PIECES	REF. NO.
61A–45567–10	32 – 5
61A–45567–20	32 – 5
61A–45567–30	32 – 5
61A–45567–40	32 – 5
61A–45567–50	32 – 5
61A–45567–60	32 – 5
6P2–45571–00	32 – 67
61A–45577–00	32 – 69
61A–45577–10	32 – 69
61A–45577–20	32 – 69
61A–45577–30	32 – 69
61A–45577–40	32 – 69
61A–45577–50	32 – 69
61A–45577–60	32 – 69
6P2–45578–00	32 – 68
6P2–45578–10	32 – 68
6P2–45578–20	32 – 68
6P2–45578–30	32 – 68
6P2–45578–40	32 – 68
61A–45587–00	32 – 38
61A–45587–10	32 – 38
61A–45587–20	32 – 38
61A–45587–30	32 – 38
61A–45587–40	32 – 38
61A–45587–50	32 – 38
61A–45587–60	32 – 38
69J–45611–00	32 – 52
69J–45631–00	32 – 56
61A–45632–00	32 – 55
61A–45633–00	32 – 57
61A–45634–01	32 – 54
61A–45635–00	32 – 59
61A–45641–02	32 – 53
6H1–45668–00	32 – 58
6P2–45723–00	32 – 34
6CE–45930–00	33 – 30
6CE–45932–00	33 – 30
6CE–45934–00	33 – 30
6CE–45970–00	33 – 30
6G5–45970–02	33 – 32
6R4–45970–A1	33 – 32
61A–45972–00	33 – 32
6CE–45972–00	33 – 30
6G5–45972–02	33 – 32
6R4–45972–A0	33 – 32
61A–45974–00	33 – 32
6CE–45974–00	33 – 30
6G5–45974–03	33 – 32

NUMERICAL INDEX
INDEX NUMERIQUE

PART NO. N° PIECES	REF. NO.
6R4–45974–A0	33 – 32
6CE–45976–00	33 – 30
6R4–45976–A0	33 – 32
61A–45978–00	33 – 32
6CE–45978–00	33 – 30
6G5–45978–03	33 – 32
6R4–45978–A0	33 – 32
60X–45987–10	33 – 24
60X–45995–00	33 – 25
6CE–45997–00	33 – 26
688–45997–01	33 – 26
6CE–45C81–00	33 – 31
6P2–46241–02	7 – 24
6E5–48344–00	25 – 5
	25 – 42
6P2–48531–00	25 – 1
63P–48538–00	25 – 3
6P2–81128–00	17 – 23
6P2–81332–00	17 – 17
6P2–81336–00	19 – 47
6P2–81337–02	17 – 19
6P2–81450–00	17 – 1
6P2–81460–00	17 – 2
6P2–81614–00	19 – 2
6P2–81639–10	19 – 42
6BR–81800–01	22 – 1
69J–81801–00	22 – 5
67F–81807–00	22 – 10
67F–81808–00	22 – 8
67F–81809–00	22 – 19
67F–81810–00	22 – 3
67F–81813–00	22 – 6
67F–81820–00	22 – 7
67F–81821–00	22 – 13
6K7–81826–11	22 – 24
69J–81828–00	22 – 25
67F–81830–00	22 – 17
67F–81832–00	22 – 11
67F–81836–00	22 – 12
6C5–81839–00	22 – 21
67F–8183R–00	22 – 15
60V–8183T–00	22 – 18
6P2–8183X–00	19 – 29
69J–81840–00	22 – 4
67F–81841–00	22 – 14
69J–81842–00	22 – 20
6P2–81845–00	18 – 7
67F–81846–00	22 – 26

PART NO. N° PIECES	REF. NO.
67F–81850–00	22 – 2
67F–81857–00	22 – 9
6C5–81869–00	22 – 23
67F–81891–00	22 – 16
6P2–81919–31	19 – 57
6P2–81919–40	19 – 56
6P2–81923–00	19 – 58
6P2–81925–01	19 – 13
63P–81941–00	22 – 22
6P2–81948–00	19 – 19
69J–81949–02	20 – 21
63P–81950–00	19 – 25
6AW–8195A–00	19 – 36
6P2–81960–02	19 – 1
6P2–81972–00–9S	19 – 4
60V–81975–A0	19 – 3
6EE–81994–40	17 – 25
6EE–81994–50	17 – 26
6AH–81996–00	23 – 59
6P2–82105–02	19 – 62
6P2–82113–00	19 – 44
6P2–82119–00	19 – 33
6E5–82148–00	26 – 6
	26 – 10
6H1–82148–00	26 – 24
6E5–82149–00	27 – 27
67F–82151–00	19 – 39
6P2–82151–00	19 – 35
67F–82151–10	19 – 40
67F–82151–40	19 – 37
67F–82151–50	19 – 38
6P2–82170–11	19 – 34
6P2–82310–01	18 – 17
6P2–82314–00	18 – 20
6P2–82316–00	18 – 4
6A0–82317–00	18 – 14
	19 – 22
663–82317–01	17 – 20
6P2–82380–00	10 – 10
6P2–82389–00	3 – 56
6P2–82554–00	23 – 23
6P2–82560–01	3 – 54
69J–82563–01	20 – 16
6P2–8257V–00	17 – 4
	18 – 1
6DA–82582–00	20 – 2
6DA–82582–10	20 – 3
6Y8–82582–11	20 – 4

PART NO. N° PIECES	REF. NO.
69J–82587–00	20 – 18
6E5–82588–00	23 – 19
61A–82588–01	25 – 17
6P2–82588–01	3 – 55
6P2–82589–00	20 – 6
6P2–8258A–00	10 – 23
6P2–82590–41	20 – 1
6P2–82594–00	23 – 55
60V–8259F–00	25 – 15
69J–8259F–00	25 – 16
6P2–8259M–00	19 – 54
68F–82846–00	19 – 43
6P2–83597–00	3 – 58
69J–83614–10	20 – 19
6AW–83651–00	3 – 57
6P2–83652–00	34 – 3
6AW–8366B–01	21 – 1
60V–8366D–00	21 – 2
69J–8366G–02	23 – 51
67H–83672–01	27 – 3
6P2–85075–00	18 – 26
	18 – 30
72X–85075–L0	29 – 21
69L–85516–00	15 – 14
6P2–85544–00	19 – 41
689–85547–00	15 – 1
6P2–85580–00	17 – 6
6P2–85722–00	20 – 10
6P2–85780–00	3 – 59
61A–85790–00	18 – 23
63P–85886–00	8 – 37
6P2–85896–00	18 – 25
6P2–85897–00	18 – 29
6BB–8591A–02	18 – 2
6C5–86120–00	10 – 20
6CB–86120–00	6 – 19
6P2–8A410–01	25 – 38
K0F–A3741–00	7 – 5
K0F–A3742–00	7 – 6
K0F–A3743–00	7 – 3
K0F–A3751–00	7 – 8
K0F–A3751–10	7 – 8
K0F–A3751–20	7 – 8
K0F–A3751–30	7 – 8
K0F–A3751–40	7 – 8
K0F–A3751–50	7 – 8
K0F–A3751–60	7 – 8
K0F–A3751–70	7 – 8

PART NO. N° PIECES	REF. NO.
K0F–A3751–80	7 – 8
K0F–A3751–90	7 – 8
K0F–A3751–A0	7 – 8
K0F–A3751–B0	7 – 8
K0F–A3751–C0	7 – 8
K0F–A3751–D0	7 – 8
K0F–A3751–E0	7 – 8
K0F–A3751–F0	7 – 8
K0F–A3751–G0	7 – 8
K0F–A3751–H0	7 – 8
K0F–A3751–J0	7 – 8
K0F–A3751–K0	7 – 8
K0F–A3751–L0	7 – 8
K0F–A3751–M0	7 – 8
K0F–A3751–N0	7 – 8
K0F–A3751–P0	7 – 8
K0F–A3751–R0	7 – 8
K0F–A3751–S0	7 – 8
K0F–A3751–T0	7 – 8
K0F–A3753–00	7 – 8
K0F–A3753–10	7 – 8
K0F–A3753–20	7 – 8
K0F–A3753–30	7 – 8
K0F–A3753–40	7 – 8
K0F–A3753–50	7 – 8
K0F–A3753–60	7 – 8
K0F–A3753–70	7 – 8
6P2–W0001–03	35 – 1
6P2–W0001–30	36 – 1
6P2–W0078–00	1 – 20
	36 – 26
6P2–W009A–04–9S	5 – 1
6P2–W009C–04–9S	5 – 9
90101–12047	26 – 38
90101–14003	27 – 32
90105–05012	3 – 25
	3 – 64
90105–06035	6 – 21
90105–06M07	5 – 19
90105–06M09	3 – 14
	6 – 18
90105–08049	32 – 73
90105–10M00	33 – 19
90109–06M80	3 – 23
	3 – 62
90109–06M81	21 – 4
	23 – 20
90109–06M82	23 – 5

PART NO. N° PIECES	REF. NO.
90109–06M82	23 – 28
	23 – 37
	23 – 48
90109–06M86	20 – 20
	23 – 22
	23 – 24
	23 – 45
	23 – 56
	25 – 2
90109–06MA1	17 – 22
90109–08019	25 – 13
90109–14M80	27 – 21
90110–05039	33 – 17
90110–06038	8 – 5
90110–06150	5 – 40
	5 – 45
90111–06142	24 – 5
90111–06144	24 – 4
90116–10027	3 – 12
90119–06025	3 – 51
90119–06027	6 – 13
90119–06122	12 – 11
90119–06126	25 – 41
90119–06M17	30 – 41
90119–06M24	8 – 10
90119–06M35	8 – 30
90119–06M59	10 – 16
	18 – 16
90119–06M82	18 – 3
90119–06M92	18 – 22
90119–06M95	19 – 24
90119–06MA3	19 – 5
90119–06MA4	3 – 19
90119–06MA5	19 – 6
90119–06MA6	8 – 12
90119–07001	5 – 7
90119–07234	5 – 8
	5 – 15
90119–07235	5 – 14
90119–08009	3 – 11
90119–08021	5 – 26
	5 – 31
90119–08102	30 – 2
90119–08M14	32 – 33
	36 – 34
90119–08M22	23 – 10
90119–08M66	3 – 7
90119–08M91	5 – 25

PART NO. N° PIECES	REF. NO.
90119–08M91	5 – 30
90119–10007	30 – 31
90119–10024	27 – 25
	27 – 37
90119–10050	7 – 21
90119–10M07	7 – 28
90119–10MA2	33 – 8
90151–06M02	6 – 11
90152–05M08	33 – 12
90155–10004	5 – 24
	5 – 29
90159–05059	27 – 2
90170–16M19	32 – 50
90171–18M04	33 – 28
90179–06M28	2 – 4
90179–08003	22 – 29
90179–24002	17 – 16
90183–02M03	32 – 61
90185–05002	33 – 13
	33 – 16
90185–14M00	27 – 33
90185–22M11	26 – 19
90201–02M00	32 – 60
90201–06068	23 – 35
	23 – 43
90201–06101	15 – 16
90201–08023	32 – 74
90201–09M02	25 – 36
90201–10060	28 – 32
90201–10M01	7 – 29
90201–12426	26 – 40
90201–13M01	26 – 39
90201–15021	15 – 17
90201–15M58	27 – 22
90201–16015	27 – 29
90201–16016	27 – 20
90201–16M00	32 – 49
90201–186F1	6 – 15
	35 – 9
90201–24014	17 – 15
90201–26M59	26 – 18
90201–38M60	27 – 11
90201–42014	32 – 41
90202–08M20	25 – 24
90202–28M46	27 – 30
90202–32M19	27 – 19
90202–40M47	27 – 7
90206–15M18	23 – 32

NUMERICAL INDEX
INDEX NUMERIQUE

PART NO. N° PIECES	REF. NO.
90206–15M18	23 – 40
90249–06M19	26 – 31
90269–05005	23 – 50
90280–04M05	32 – 24
	36 – 35
90280–05015	17 – 14
90340–08002	32 – 7
90340–14M06	31 – 6
	34 – 1
90340–18M09	6 – 14
90344–51019	5 – 4
	5 – 12
90386–06M12	25 – 26
90386–10M16	26 – 29
90386–12069	25 – 12
90386–15M73	23 – 31
	23 – 39
90386–22M98	26 – 36
	28 – 35
90386–25M31	26 – 17
90386–38M32	27 – 12
90386–90M90	25 – 35
90387–06037	30 – 11
90387–06044	18 – 21
90387–06119	18 – 15
	19 – 23
90387–06263	31 – 9
90387–06289	10 – 18
90387–06M03	15 – 15
90387–06M26	20 – 7
90387–07028	24 – 8
90387–08M37	23 – 12
90387–10M05	26 – 32
90430–05002	3 – 26
	3 – 65
	35 – 12
90430–06M03	5 – 20
90430–08020	1 – 18
	32 – 9
	36 – 15
90430–14115	34 – 2
90430–14M09	1 – 17
	31 – 7
	36 – 3
90445–07012	30 – 38
90445–09040	9 – 1
90445–09041	9 – 12
90445–09097	9 – 14

PART NO. N° PIECES	REF. NO.
90445–09220	9 – 15
90445–09224	9 – 13
90445–09304	9 – 32
90445–11028	24 – 17
90445–11182	2 – 20
90445–11699	2 – 19
90445–11M27	2 – 18
90445–11M47	24 – 11
90445–13511	15 – 3
90446–10M01	9 – 9
90447–07002	21 – 5
90447–13009	24 – 12
90462–08026	19 – 48
90462–08032	17 – 3
	18 – 31
90462–20001	23 – 21
90464–06001	17 – 5
	20 – 13
90464–08004	18 – 13
90464–09010	25 – 21
90464–09013	9 – 26
90464–09M47	19 – 55
	23 – 25
90464–11121	18 – 10
90464–12009	14 – 16
	15 – 22
90464–12010	14 – 14
	15 – 23
90464–12012	14 – 1
90464–13249	18 – 11
90464–14010	20 – 14
90464–18004	11 – 21
	11 – 22
	19 – 12
	23 – 52
	24 – 20
90464–18005	14 – 15
90464–19M45	18 – 5
	20 – 9
90464–20011	8 – 35
90464–20258	23 – 54
90464–21002	9 – 35
90464–23199	18 – 6
90464–60067	9 – 10
	9 – 33
90464–99004	8 – 29
90465–06M86	25 – 20
90465–08M63	26 – 22

PART NO. N° PIECES	REF. NO.
90465–11M10	3 – 60
	8 – 36
	9 – 4
	9 – 11
	9 – 27
	9 – 28
	9 – 29
	9 – 31
	15 – 5
	15 – 21
	15 – 24
	21 – 3
	23 – 14
	24 – 18
	25 – 19
	26 – 20
	27 – 5
	30 – 37
90465–11M59	3 – 33
90465–13M18	8 – 26
	19 – 16
	19 – 20
	20 – 15
90465–14M66	18 – 12
	19 – 21
	20 – 5
	20 – 8
90467–08M18	5 – 47
	9 – 30
	9 – 36
	34 – 6
90467–09M03	9 – 5
90467–09M09	9 – 37
90468–18008	25 – 6
	25 – 25
	25 – 43
90480–10M23	10 – 17
90480–11012	24 – 3
90480–12314	17 – 21
90480–14M17	24 – 6
90480–16009	24 – 9
90480–22M81	23 – 11
90501–10M77	32 – 62
90501–11M10	32 – 16
90501–12082	25 – 30
90501–450A2	32 – 43
90506–16003	26 – 34
90506–18M40	23 – 46

PART NO. N° PIECES	REF. NO.
90508–20020	25 – 14
91490–20015	25 – 37
91490–40030	33 – 29
91690–30010	25 – 4
	25 – 32
91690–30020	26 – 33
91690–40010	6 – 12
91809–08006	5 – 6
	5 – 13
91814–18002	3 – 4
92903–06600	19 – 28
92903–08100	19 – 61
92903–08600	22 – 28
92907–04600	5 – 36
92990–05100	17 – 8
92990–05600	17 – 9
92990–06100	2 – 8
92990–10600	18 – 24
92990–18200	33 – 27
92995–06100	17 – 12
	19 – 31
	19 – 52
92995–06600	2 – 12
	3 – 28
	3 – 38
	3 – 45
	8 – 18
	8 – 24
	15 – 19
	17 – 13
	18 – 9
	18 – 19
	18 – 28
	18 – 33
	19 – 9
	19 – 32
	19 – 50
	19 – 53
	20 – 12
	25 – 9
	26 – 5
	26 – 8
	26 – 12
	27 – 15
	30 – 13
	32 – 28
92995–08600	19 – 15
	19 – 18

PART NO. N° PIECES	REF. NO.
92995–08600	26 – 16
	32 – 26
	32 – 46
	32 – 78
92995–10100	33 – 6
92995–10600	33 – 7
92995–14600	27 – 24
	27 – 34
93101–28M16	32 – 36
	36 – 22
93101–30002	32 – 71
	36 – 24
93102–08M43	29 – 36
93102–38008	7 – 23
	35 – 19
93102–63004	4 – 3
	35 – 18
93106–09014	32 – 13
	36 – 17
93210–09165	25 – 34
93210–10M74	28 – 4
93210–19MJ1	3 – 41
	35 – 15
93210–19MJ3	8 – 32
	31 – 21
	35 – 22
93210–24M79	3 – 53
	35 – 23
93210–25552	3 – 40
	31 – 18
	35 – 14
93210–25647	3 – 43
	35 – 16
93210–28543	30 – 9
	36 – 6
93210–33M49	32 – 12
	36 – 16
93210–347A1	30 – 8
	36 – 5
93210–37160	32 – 20
	36 – 19
	36 – 29
93210–37MH7	27 – 6
93210–55M14	32 – 42
	36 – 23
93210–86M38	32 – 19
	36 – 18
	36 – 28

PART NO. N° PIECES	REF. NO.
93211–04384	32 – 72
	36 – 25
93306–210U0	32 – 66
93311–83280	32 – 3
93315–43064	32 – 70
93317–330U2	32 – 37
93332–000W1	32 – 4
93341–34019	32 – 40
93341–93020	32 – 39
93410–22M11	26 – 37
93410–37M04	27 – 16
93501–04011	32 – 63
93501–04M02	25 – 29
93605–10108	7 – 10
	7 – 12
	7 – 14
	7 – 16
93606–12019	3 – 3
	3 – 10
	30 – 40
	32 – 32
	36 – 33
93606–19M23	30 – 25
93608–12M05	33 – 4
93608–16M16	30 – 5
	30 – 15
	30 – 32
	31 – 5
93700–06M01	25 – 11
93700–06M03	26 – 13
	26 – 23
93700–09M00	32 – 75
94702–00400	1 – 6
	5 – 48
95333–08600	19 – 60
95380–06600	2 – 9
95380–12600	26 – 41
95380–14800	27 – 23
95780–10300	27 – 9
95812–06025	31 – 11
95895–06016	31 – 22
97013–06025	19 – 27
97013–08045	22 – 27
97095–06010	26 – 7
	26 – 26
97095–06012	18 – 32
	19 – 8
	30 – 35

PART NO. N° PIECES	REF. NO.
97095–06016	2 – 11
	8 – 17
	8 – 23
	15 – 18
	18 – 8
	19 – 30
	19 – 49
	19 – 51
	32 – 27
97095–06020	3 – 44
	18 – 18
	18 – 27
	23 – 34
	23 – 42
	30 – 12
97095–06025	3 – 27
	3 – 37
97095–06030	15 – 13
	26 – 4
97095–06035	17 – 11
	20 – 11
	25 – 8
97095–08016	19 – 17
	19 – 59
97095–08020	19 – 14
	26 – 15
	32 – 77
97095–08025	32 – 45
97095–08030	32 – 25
97095–10045	33 – 5
97575–06516	8 – 7
	8 – 9
97575–06535	25 – 31
97575–06540	31 – 17
97575–08535	30 – 24
	31 – 4
97575–08540	5 – 21
	8 – 1
	8 – 11
97575–08560	31 – 3
97575–08590	30 – 18
97575–10530	28 – 33
97575–10535	30 – 4
97575–10545	30 – 3
97595–06530	5 – 32
	5 – 38
	5 – 43
	34 – 4

PART NO. N° PIECES	REF. NO.
97595–06610	19 – 26
97595–06620	8 – 33
97607–04310	29 – 32
97780–50620	19 – 46
97780–60520	24 – 19
97880–05012	17 – 7
97885–06012	26 – 11
	27 – 14
97980–06216	30 – 43
97985–04116	25 – 18
97985–06210	17 – 18
97985–06216	27 – 4
98507–04008	5 – 35
	13 – 35
98780–04015	19 – 11
98780–04016	3 – 17
	6 – 10
99001–08600	32 – 15
99530–08012	17 – 10
99530–10114	8 – 2
99530–14016	5 – 23
	5 – 28
	7 – 27
99590–10114	32 – 65