YAMAHA

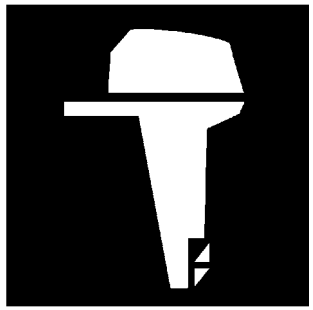

PARTS CATALOGUE
CATALOGUE DE PIECES DETACHEES

F30B'15 (6BT8)
F40F'15 (6BG8)

1P6BT-300F1

( )

YAMAHA GENUINE Parts & Accessories

2015/10/15

NEWS NO.	DATE	COMMENT
PE0-OM-150038	Oct.,5,2015	MOD:F40F/F30B UPPER CASING, REPAIR KIT2 LIST/ILLUST. REVISION

F30B/F40F
PARTS CATALOGUE
©2015 by Yamaha Motor Co., Ltd.
1st edition, February 2015
All rights reserved.
Any reprinting or unauthorized use
without the written permission of
Yamaha Motor Co., Ltd.
is expressly prohibited.
Printed in Japan.

F30B/F40F
CATALOGUE DE PIECES DETACHEES
©2015 par Yamaha Motor Co., Ltd.
1re édition, février 2015
Tous droits réservés
Toute réimpression ou utilisation
non autorisée sans la permission écrite
de la Yamaha Motor Co., Ltd.
est formellement interdite.
Imprimé au Japon

FOREWORD

This Parts Catalogue is related to the parts for the model(s) on the cover page. When you are ordering replacement parts, please refer to this Parts Catalogue and quote both part numbers and part names correctly.

1. Modifications or additions which have been made after the issue of the Parts Catalogue will be announced in the Parts News.
   It is advisable that you make the necessary corrections to the Parts Catalogue according to the Parts News.

2. Abbreviations
   The following abbreviations are used in this Parts Catalogue.

   "UR" Use specified parts number.
   "UN" Use as many as needed.
   "AP" Alternate Parts
   "LM" Locally Made (Parts need to be ordered locally)
   "F#" Frame No. (Applicable machine No.)
   "O/S" Over Size

3. The number of components for assembly
   - Parts, which are to be supplied in an assembly, are listed with a dot (.) in front of the part name as shown below.
   - The numeral appearing to the right of each component part indicates the quantity of parts for each assembly unit.

PART NO.	DESCRIPTION	Q'TY	REMARKS
2F5–83310–60	FRONT FLASHER LIGHT ASSY	2	
115–83311–60	.BULB (6V–18W)	1	

4. Applicable colours of graphics are represented in the "REMARKS" as shown below.

PART NO.	DESCRIPTION	Q'TY	REMARKS
2N4–24110–00–X5	FUEL TANK COMP.	2	MXR
3J1–24240–10	.GRAPHIC, FUEL TANK	1	FOR MXR

5. Note that the illustrations for reference in finding parts numbers are not to be used for assembling. When assembling, please use the applicable service manual.

6. The asterisk (*) before a reference number indicates modified items after the first edition.

7. Applicable Serial No.

   Engine Serial No.

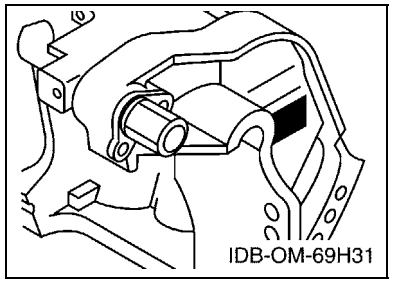

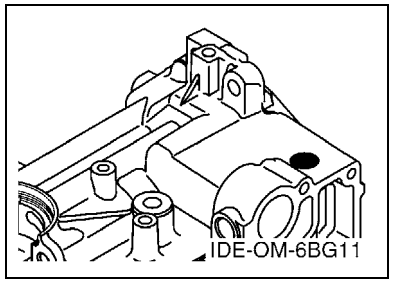

8. Applicable Engine Starting Serial No.

Model	Serial No.	Model	Serial No.
F30B	6BT-1010936	F40F	6BG-1048196

9. Applicable Colour Code

Abbreviation	Colour Name	Colour Code
DBN1	DARK BLUISH GRAY 1	008D

10. Quantity Column Information

Column No.	Name Of Q'ty Column	Applicable Model
1	ET	F30BET,F40FET
2	ED	F40FED
3	EHD	F30BEHD,F40FEHD

AVANT–PROPOS

Ce catalogue de pièces détachées concerne les pièces pour le(s) modèle(s) indiqué(s) sur la page de couverture. Lorsque vous commandez des pièces de rechange, veuillez vous référer à ce catalogue de pieces détachées et indiquer clairement les numéros et les noms des pièces détachées.

1. Les modifications ou ajouts ayant été effectués après la parution du catalogue de pièces détachées seront décrits dans les Bulletins d'information concernant les pièces détachées.
   Il est recommandé que vous apportiez les corrections nécessaires au catalogue des pièces détachées en vous référant aux Bulletins d'information.

2. Abréviations
   Dans ce catalogue, les abréviations suivantes sont utilisées:

   "UR" Utiliser le numéro de pièces spécifié.
   "UN" Utiliser autant que nécessaire.
   "AP" Pièces de substitution
   "LM" Fabrication locale (les pièces doivent être commandées localement.)
   "F#" N° de cadre (applicable au N° de série)
   "O/S" Surdimensionné

3. Nombre de pièces d'un assemblage
   - Les pièces fournies comme composants d'un assemblage sont précédées d'un point (.) de la manière indiquée ci–dessous.
   - Le chiffre apparaissant à la droite de chaque composant indique la quantité de pièces pour chaque unité d'assemblage.

N° PIECES	DESCRIPTION	QTE	REMARQUES
2F5–83310–60	ENS. CLIGNOTANT AVANT	2	
115–83311–60	.AMPOULE (6V–18W)	1	

4. Les couleurs concernant les graphiques sont indiquées dans la colonne "REMARQUES", comme indiqué ci–dessous.

N° PIECES	DESCRIPTION	QTE	REMARQUES
2N4–24110–00–X5	RESERVOIR A ESSENCE.	2	MXR
3J1–24240–10	.GRAPHIQUE	1	POUR MXR

5. Veuillez noter que les illustrations sont indiquées à titre de référence pour trouver les numéros de pièces, non pour être utilisées lors de l'assemblage. Lors de l'assemblage, veuillez utiliser le manuel d'entretien adéquat.

6. L'astérisque (*) placé devant un numéro de référence indique des éléments qui ont été modifiés après la première édition.

7. N° de série applicable

   N° de Série du moteur

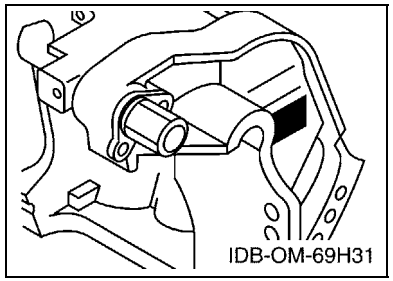

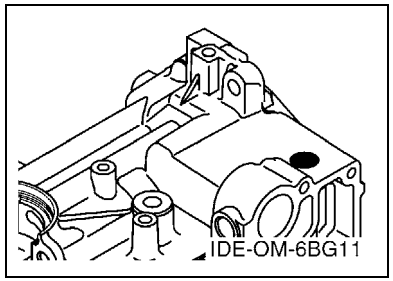

8. N° de série initial du moteur applicable

Modèle	N° de série	Modèle	N° de série
F30B	6BT-1010936	F40F	6BG-1048196

9. Code couleur applicable

Abréviation	Nom de la couleur	Code couleur
DBN1	DARK BLUISH GRAY 1	008D

10. Informations relatives à la colonne Quantité

N° de la colonne	Nom de la colonne Qté	Modèle applicable
1	ET	F30BET,F40FET
2	ED	F40FED
3	EHD	F30BEHD,F40FEHD

CONTENTS

SCHEDULED SERVICE PARTS 1
TOP COWLING 2
CYLINDER & CRANKCASE 1 3
CRANKSHAFT & PISTON 4
CYLINDER & CRANKCASE 2 5
VALVE 6
INTAKE 1 7
INTAKE 2 8
FUEL INJECTION PUMP 1 9
FUEL INJECTION PUMP 2 10
OIL PUMP 11
FUEL 12
GENERATOR 14
ELECTRICAL 1 15
ELECTRICAL 2 16
ELECTRICAL 3 17
ELECTRICAL 4 19
ELECTRICAL 5 20
STARTING MOTOR 22
BOTTOM COWLING 1 23
BOTTOM COWLING 2 25
STEERING 1 26
STEERING 2 29
STEERING FRICTION 30
CONTROL 31
BRACKET 1 33
BRACKET 2 35
BRACKET 3 37
POWER TRIM & TILT ASSY 39
UPPER CASING 42
OIL PAN 44
LOWER CASING & DRIVE 1 45
LOWER CASING & DRIVE 2 48
FUEL TANK 50
STEERING GUIDE 51
OPTIONAL PARTS 52
REPAIR KIT 1 53
REPAIR KIT 2 54

INDEX

NUMERICAL INDEX 56

TABLE DES MATIERES

PIECES MAINTENANCE PERIODIQUE 1
CAPOT SUPERIEUR 2
CYLINDRE & CARTER 1 3
VILEBREQUIN & PISTON 4
CYLINDRE & CARTER 2 5
SOUPAPE 6
ADMISSION 1 7
ADMISSION 2 8
POMPE A INJECTEUR 1 9
POMPE A INJECTEUR 2 10
POMPE A HUILE 11
CARBURANT 12
GENERATRICE 14
PARTIE ELECTRIQUE 1 15
PARTIE ELECTRIQUE 2 16
PARTIE ELECTRIQUE 3 17
PARTIE ELECTRIQUE 4 19
PARTIE ELECTRIQUE 5 20
DEMARREUR ELECTRIQUE 22
CAPOT INFERIEUR 1 23
CAPOT INFERIEUR 2 25
DIRECTION 1 26
DIRECTION 2 29
CUVETTE POIGNEE DE DIRECTION 30
COMMANDE 31
SUPPORT 1 33
SUPPORT 2 35
SUPPORT 3 37
PUISSANCE PARER ET INCLINER 39
FOURREAU 42
VENTILATEUR D'HUILE 44
BOITIER D'HELICE TRANSMISSION1 45
BOITIER D'HELICE TRANSMISSION2 48
RESERVOIR A CARBURANT 50
FIXATION DE DIRECTION 51
PIECES OPTIONNELLES 52
KITS DE REPARATION 1 53
KITS DE REPARATION 2 54

INDEX

INDEX NUMERIQUE 56

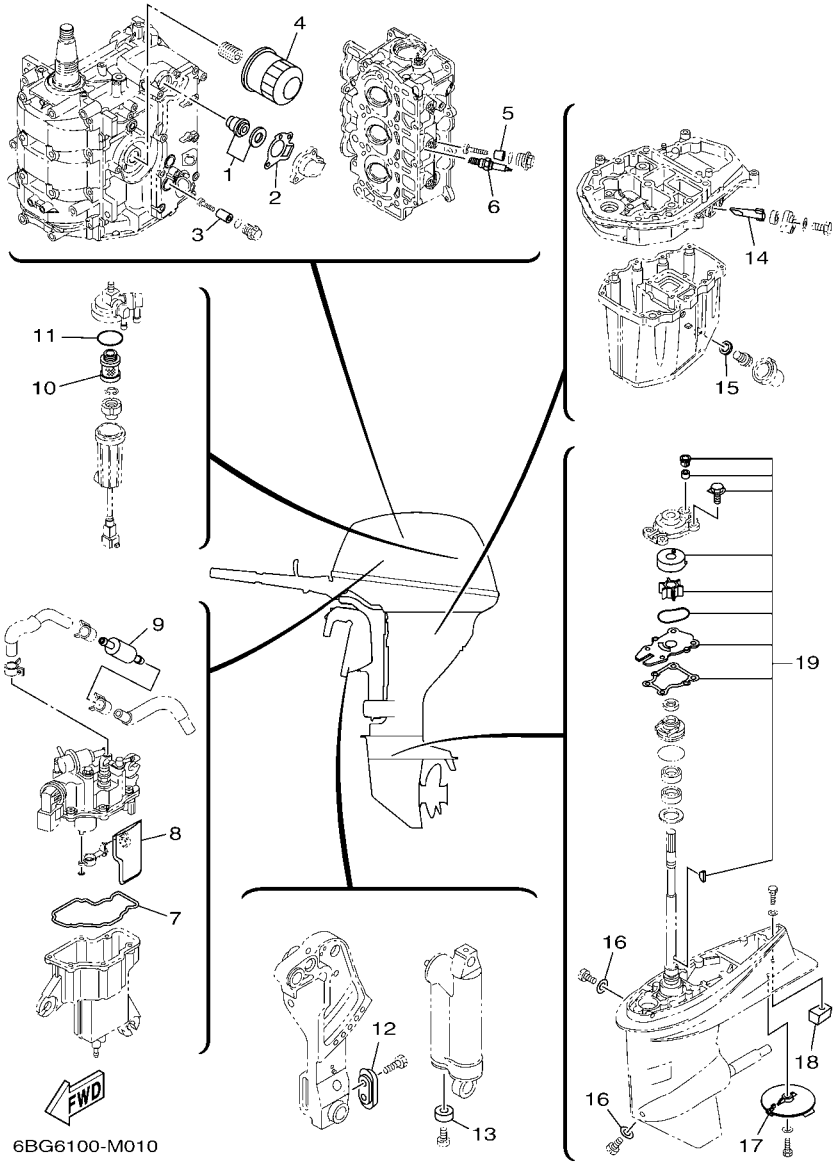

FIG. 1 SCHEDULED SERVICE PARTS PIECES MAINTENANCE PERIODIQUE

REF. NO.	PART NO. N° PIECES	DESCRIPTION DESCRIPTION	ET	ED	EHD			REMARKS REMARQUES
1	6G8–12411–03	THERMOSTAT THERMOSTAT	1	1	1			
2	62Y–12414–00	GASKET, COVER JOINT, COUVERCLE	1	1	1			
3	6G8–11325–00	ANODE ANODE	1	1	1			
4	5GH–13440–50	ELEMENT ASSY, OIL CLEANER ELEMENT, FILTRE A HUILE	1	1	1			
5	6G8–11325–00	ANODE ANODE	3	3	3			
6	94702–00418	PLUG, SPARK (NGK DPR6EB) BOUGIE D,ALLUMAGE (NGK DPR6EB)	3	3	3			
7	6BG–14984–00	GASKET, FLOAT CHAMBER JOINT, CUVE DE FLOTTEUR	1	1	1			
8	6BG–13915–01	FILTER FILTRE	1	1	1			
9	6C5–24251–00	STRAINER 1 FILTRE 1	1	1	1			
10	6D8–24563–00	ELEMENT, FILTER ELEMENT, FILTRE	1	1	1			
11	6D8–24564–00	GASKET JOINT	1	1	1			
12	65W–45251–00	ANODE ANODE	1	1	1			
13	663–45251–00	ANODE ANODE		1	1			
14	62Y–11325–00	ANODE ANODE	1	1	1			
15	90430–14M09	GASKET JOINT	1	1	1			
16	90430–08020	GASKET JOINT	2	2	2			
17	67C–45371–00	TAB-TRIM ANODE DERIVE	1	1	1			
18	67C–45251–00	ANODE ANODE	1	1	1			
19	6BG–W0078–00	WATER PUMP REPAIR KIT KIT DE REPARATION DE LA POMPE	1	1	1			

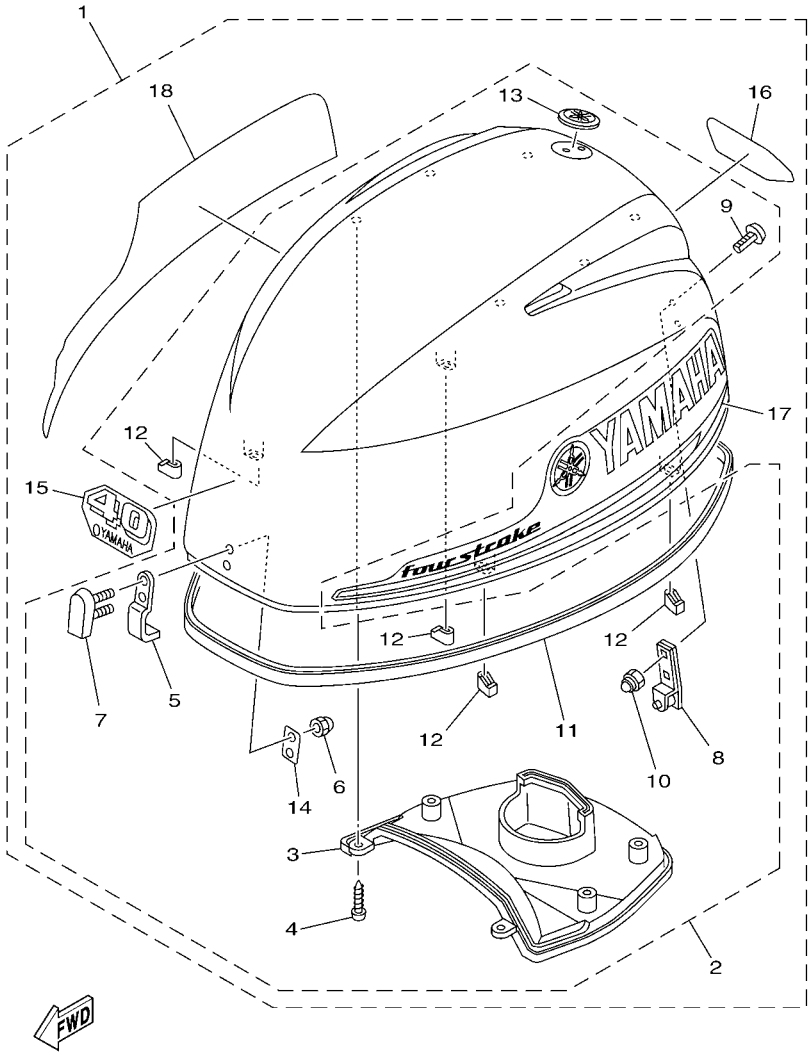

6BG7100-N020

FIG. 2 TOP COWLING — CAPOT SUPERIEUR

REF. NO.	PART NO. N° PIECES	DESCRIPTION DESCRIPTION	ET	ED	EHD			REMARKS REMARQUES
1	6BG–42610–02	TOP COWLING ASSY CAPOT (ENS.)	1	1	1			F40F F40F
	6BT–42610–02	TOP COWLING ASSY CAPOT (ENS.)	1		1			F30B F30B
2	6BG–4261A–00	.TOP COWLING W/O GRAPHICS .CAPOT SUPERIEUR SANS GRAPHIQUE	1	1	1			
3	6BG–42613–00	..MOLDING, AIR DUCT ..MANCHON A AIR	1	1	1			
4	90167–05017	..SCREW, TAPPING ..VIS, TETE FRAISEE	6	6	6			
5	6BG–42651–00	..HOOK ..CROCHET	1	1	1			
6	95380–05800	..NUT ..ECROU	2	2	2			
7	6BG–42851–00	..COVER, CLAMP ..COUVERCLE, BRIDE	1	1	1			
8	6BG–42652–00	..HOOK ..CROCHET	1	1	1			
9	90109–06047	..BOLT ..BOULON	2	2	2			
10	90185–06M05	..NUT, SELF-LOCKING ..ECROU,AUTO-BLOQUANT	2	2	2			
11	6BG–42615–00	..SEAL ..JOINT	1	1	1			
12	6BG–42662–00	..DAMPER ..AMORTISSEUR	4	4	4			
13	6AH–42697–10	..TUNING FORK MARK ..MARQUE, YAMAHA	1	1	1			
14	6BG–42649–00	..HOLDER, CLAMP BAND ..SUPPORT, SANDOW DE SERRAGE	1	1	1			
15	6BG–42677–00	.GRAPHIC, FRONT .ADHESIF, AVANT	1	1	1			F40F F40F
	6BG–42677–10	.GRAPHIC, FRONT .ADHESIF, AVANT	1		1			F30B F30B
16	6BG–42678–20	.GRAPHIC, REAR .ADHESIF, ARRIERE	1	1	1			F40F F40F
	6BT–42678–01	.GRAPHIC, REAR .ADHESIF, ARRIERE	1		1			F30B F30B
17	6BG–42675–00	.GRAPHIC, SIDE 1 .EMBLEME	1	1	1			
18	6BG–42676–00	.GRAPHIC, SIDE 2 .EMBLEME	1	1	1			

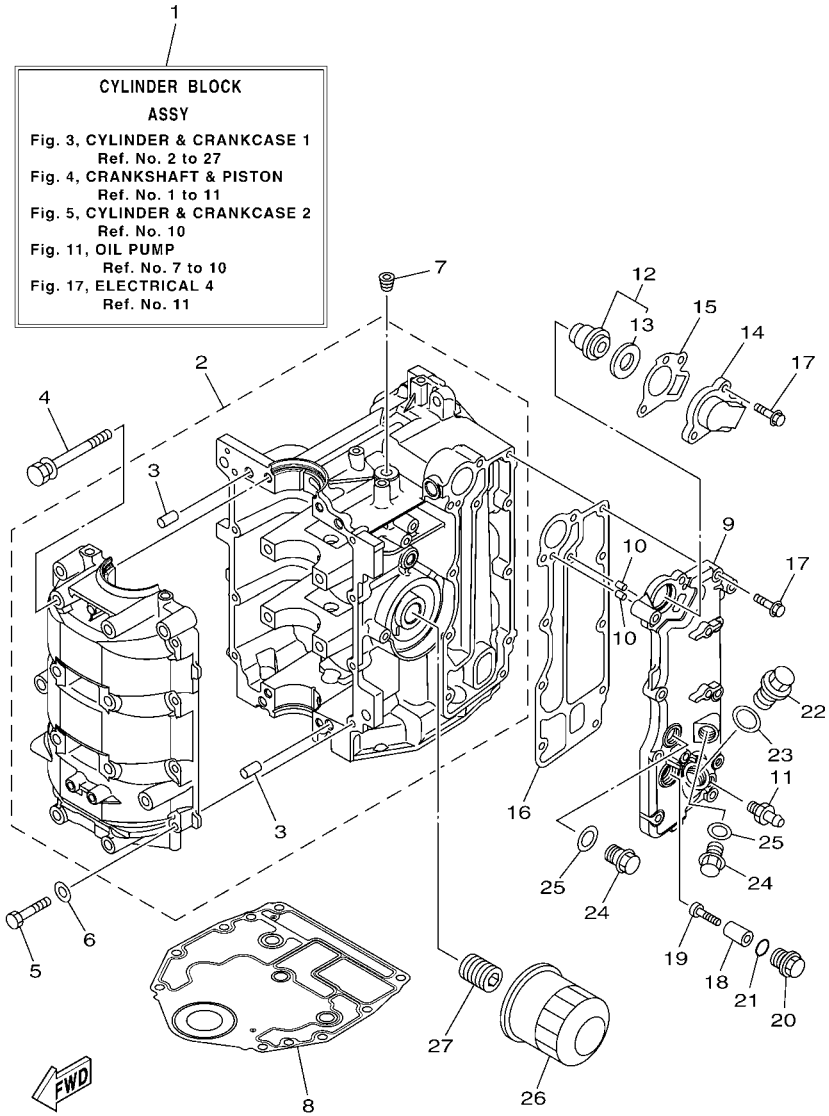

FIG. 3 CYLINDER & CRANKCASE 1 CYLINDRE & CARTER 1

REF. NO.	PART NO. N° PIECES	DESCRIPTION DESCRIPTION	ET	ED	EHD			REMARKS REMARQUES
1	6BG–W009B–00–9S	CYLINDER BLOCK ASSY CYLINDRE GROUPE (ENS.)	1	1	1			
2	6BG–15100–00	CRANKCASE ASSY CARTER DE MOTEUR COMPLET	1	1	1			
3	93606–12019	.PIN, DOWEL .GOUPILLE	4	4	4			
4	90119–08154	BOLT, WITH WASHER BOULON, AVEC RONDELLE	8	8	8			
5	97013–06035	BOLT BOULON	8	8	8			
6	92903–06600	WASHER, PLATE RONDELLE, PLATE	8	8	8			
7	90344–51003	PLUG, TAPER SCREW PLOT, FILETE CONIQUE	1	1	1			
8	6BG–11351–00	GASKET, CYLINDER JOINT, D'EMBASE	1	1	1			
9	6BG–41113–00–9S	OUTER COVER, EXHAUST COUVERCLE, ECHAPPEMENT	1	1	1			
10	93604–10M03	PIN, DOWEL CLAVETTE	2	2	2			
11	62Y–12481–10	PIPE 1 DURITE 1	1	1	1			
12	6G8–12411–03	THERMOSTAT THERMOSTAT	1	1	1			
13	688–12412–00	.SEAL, THERMOSTAT .JOINT, THERMOSTAT	1	1	1			
14	6C5–12413–00–9S	COVER, THERMOSTAT COUVERCLE, THERMOSTAT	1	1	1			
15	62Y–12414–00	GASKET, COVER JOINT, COUVERCLE	1	1	1			
16	6BG–41114–00	GASKET, EXHAUST OUTER COVER JOINT, COUVERCLE D'ECHAPPEMENT	1	1	1			
17	90119–06MA5	BOLT, WITH WASHER BOULON, AVEC RONDELLE	10	10	10			
18	6G8–11325–00	ANODE ANODE	1	1	1			
19	98980–05025	SCREW, BIND VIS, DE PRESSION	1	1	1			
20	6G8–11197–A0	PLUG, BLIND PLOT, BORGNE	1	1	1			
21	93210–13M63	O-RING JOINT TORIQUE	1	1	1			
22	90340–18M09	PLUG, STRAIGHT SCREW PLOT, FILETE DROIT	1	1	1			
23	90201–186F1	WASHER, PLATE RONDELLE, PLATE	1	1	1			
24	90340–14M06	PLUG, STRAIGHT SCREW PLOT, FILETE DROIT	2	2	2			
25	90430–14115	GASKET JOINT	2	2	2			
26	5GH–13440–50	ELEMENT ASSY, OIL CLEANER ELEMENT, FILTRE A HUILE	1	1	1			
27	6C5–12858–00	BOLT, UNION BOULON, RACCORD	1	1	1			

FIG. 4 CRANKSHAFT & PISTON VILEBREQUIN & PISTON

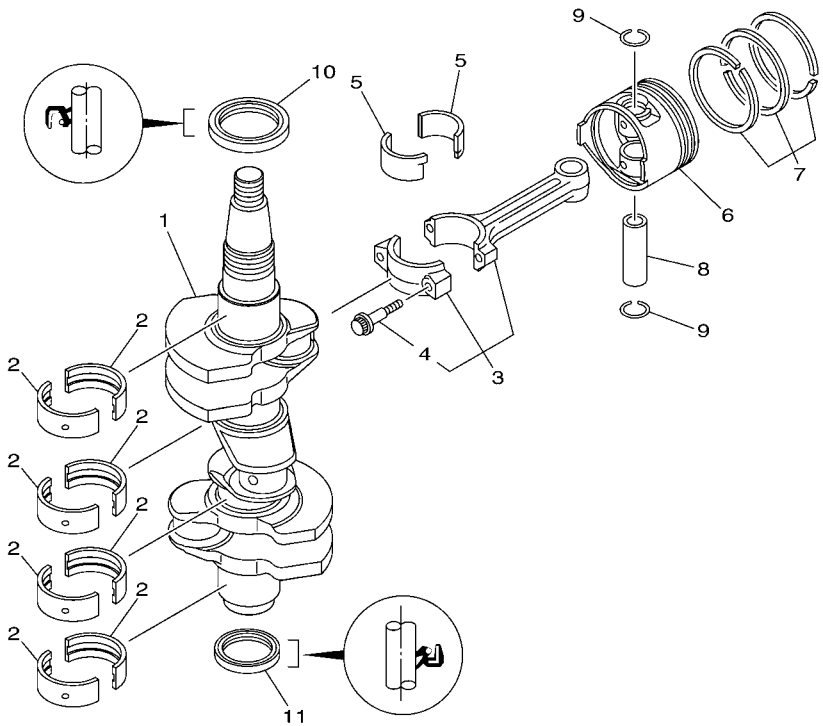

6BG1100-H030

REF. NO.	PART NO. N° PIECES	DESCRIPTION DESCRIPTION	ET	ED	EHD			REMARKS REMARQUES
1	6BG–11411–00	CRANKSHAFT VILEBREQUIN COMPLET	1	1	1			
2	6BG–11416–00	PLANE BEARING, CRANKSHAFT 1 COUSSINET DE VILEBREQUIN 1	8	8	8			UR YELLOW UR YELLOW
	6BG–11416–10	PLANE BEARING, CRANKSHAFT 1 COUSSINET DE VILEBREQUIN 1	8	8	8			UR RED UR RED
	6BG–11416–20	PLANE BEARING, CRANKSHAFT 1 COUSSINET DE VILEBREQUIN 1	8	8	8			UR PINK UR PINK
	6BG–11416–30	PLANE BEARING, CRANKSHAFT 1 COUSSINET DE VILEBREQUIN 1	8	8	8			UR GREEN UR GREEN
3	6C5–11650–10	CONNECTING ROD ASSY BIELLE COMPLETTE	3	3	3			
4	6C5–11654–00	.BOLT, CONNECTING ROD .BOULON, BIELLE	2	2	2			
5	6CJ–11656–00	PLANE BEARING, CONNECTING ROD ROULEMENT DE BIELLE	6	6	6			UR YELLOW UR YELLOW
	6CJ–11656–10	PLANE BEARING, CONNECTING ROD ROULEMENT DE BIELLE	6	6	6			UR RED UR RED
	6CJ–11656–20	PLANE BEARING, CONNECTING ROD ROULEMENT DE BIELLE	6	6	6			UR PINK UR PINK
	6CJ–11656–30	PLANE BEARING, CONNECTING ROD ROULEMENT DE BIELLE	6	6	6			UR GREEN UR GREEN
6	69W–11631–01–97	PISTON (STD) PISTON (STD)	3	3	3			
	69W–11635–01	PISTON (0.25MM O/S) PISTON (0.25MM O/S)	3	3	3			AP AP
	69W–11636–01	PISTON (0.50MM O/S) PISTON (0.50MM O/S)	3	3	3			AP AP
7	67C–11603–00	PISTON RING SET (STD) JEU DE SEGMENTS (STD)	3	3	3			
	67C–11604–00	PISTON RING SET (0.25MM O/S) JEU DE SEGMENTS (0.25MM O/S)	3	3	3			AP AP
	67C–11605–00	PISTON RING SET (0.50MM O/S) JEU DE SEGMENTS (0.50MM O/S)	3	3	3			AP AP
8	62Y–11633–00	PIN, PISTON AXE, PISTON	3	3	3			
9	93450–17129	CIRCLIP CIRCLIP, TYPE S	6	6	6			
10	93102–43M42	OIL SEAL JOINT SPY	1	1	1			
11	93101–35002	OIL SEAL JOINT SPY	1	1	1			

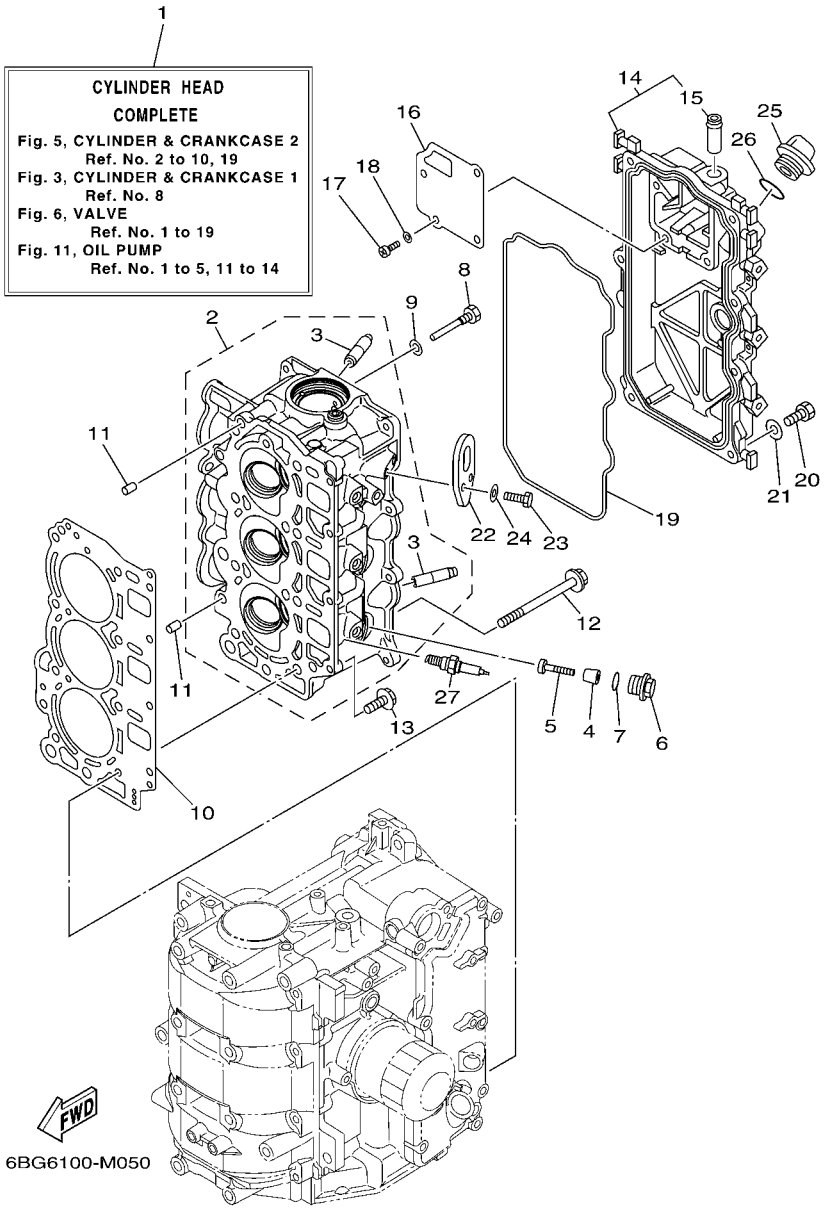

FIG. 5 CYLINDER & CRANKCASE 2 CYLINDRE & CARTER 2

REF. NO.	PART NO. N° PIECES	DESCRIPTION DESCRIPTION	ET	ED	EHD			REMARKS REMARQUES
1	6BG–W009A–02–9S	CYLINDER HEAD COMPLETE CULASSE (ENS.)	1	1	1			
2	6BG–11111–10–9S	HEAD, CYLINDER 1 CULASSE	1	1	1			
3	62Y–11133–30	.GUIDE, VALVE 1 .GUIDE, SOUPAPE 1	6	6	6			
4	6G8–11325–00	ANODE ANODE	3	3	3			
5	98980–05025	SCREW, BIND VIS, DE PRESSION	3	3	3			
6	6G8–11197–A0	PLUG, BLIND PLOT, BORGNE	3	3	3			
7	93210–13M63	O-RING JOINT TORIQUE	3	3	3			
8	90109–06M65	BOLT BOULON	1	1	1			
9	90430–06014	GASKET JOINT	1	1	1			
10	6BG–11181–00	GASKET, CYLINDER HEAD 1 JOINT, DE CULASSE 1	1	1	1			
11	99530–08012	PIN, DOWEL GOUJON, D'ASSEMBLAGE	2	2	2			
12	90105–09009	BOLT, FLANGE BOULON	8	8	8			
13	90119–06MA3	BOLT, WITH WASHER BOULON, AVEC RONDELLE	4	4	4			
14	6BG–11191–00–9S	COVER, CYLINDER HEAD 1 COUVERCLE, CULASSE 1	1	1	1			
15	62Y–14485–00	.PIPE, JOINT .DURITE	1	1	1			
16	6BG–11168–00	COVER, BREATHER COUVERCLE, RENIFLARD	1	1	1			
17	98507–04010	SCREW, PAN HEAD VIS, TETE TRONCONIQUE	4	4	4			
18	92907–04600	WASHER RONDELLE	4	4	4			
19	6BG–11356–00	SEAL, CYLINDER 2 JOINT, SPY CYLINDRE	1	1	1			
20	97095–06020	BOLT BOULON	7	7	7			
21	92995–06600	WASHER RONDELLE	7	7	7			
22	6BG–11119–00	HANGER, ENGINE ANNEAU, LEVAGE	1	1	1			
23	97095–06020	BOLT BOULON	2	2	2			
24	92995–06600	WASHER RONDELLE	2	2	2			
25	6G8–15363–00	PLUG, OIL PLOT, HUILE	1	1	1			
26	93210–24M79	O-RING JOINT TORIQUE	1	1	1			
27	94702–00418	PLUG, SPARK (NGK DPR6EB) BOUGIE D,ALLUMAGE (NGK DPR6EB)	3	3	3			

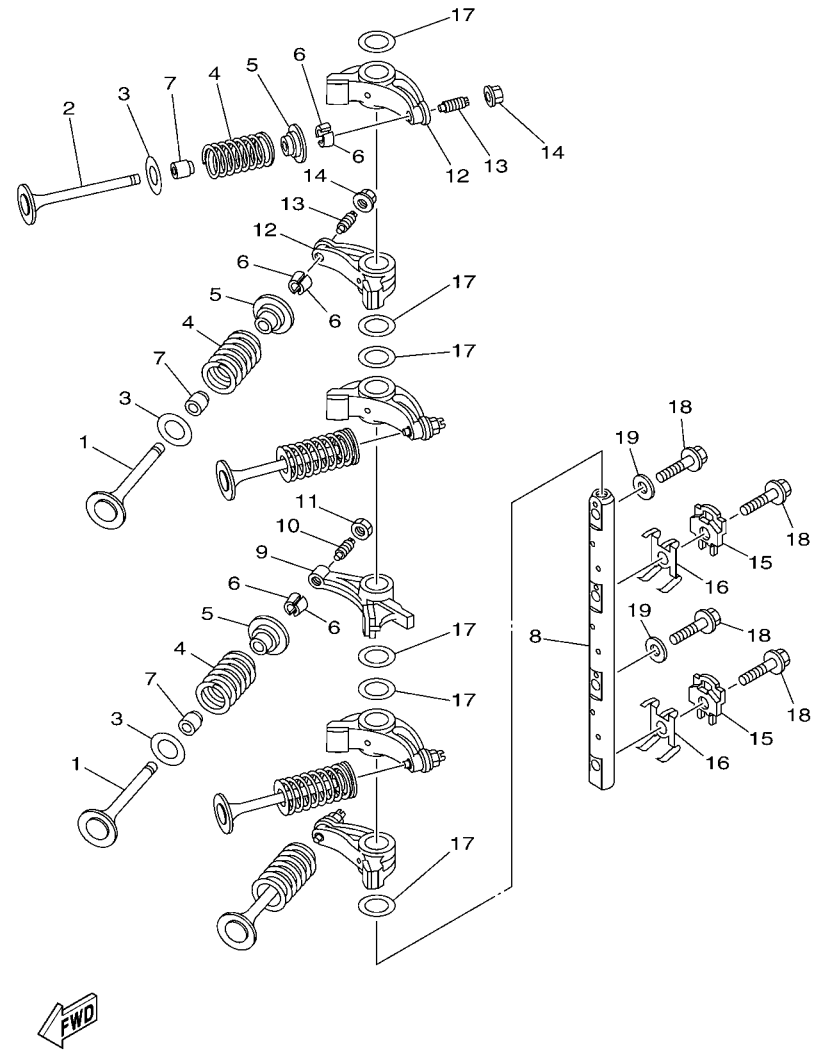

6BG1100-H050

FIG. 6 VALVE SOUPAPE

REF. NO.	PART NO. N° PIECES	DESCRIPTION DESCRIPTION	ET	ED	EHD			REMARKS REMARQUES
1	69W–12111–00	VALVE, INTAKE SOUPAPE, ADMISSION	3	3	3			
2	69W–12121–10	VALVE, EXHAUST SOUPAPE, ECHAPPEMENT	3	3	3			
3	62Y–12116–00	SEAT, VALVE SPRING SIEGE, RESSORT DE SOUPAPE	6	6	6			
4	51Y–12114–00	SPRING, VALVE OUTER RESSORT DE SOUPAPE, EXTERNE	6	6	6			
5	30X–12117–00	RETAINER, VALVE SPRING BUTEE DE RESSORT DE SOUPAPE	6	6	6			
6	30X–12118–00	LOCK, VALVE SPRING RETAINER FRAISE, SOUPAPE	12	12	12			
7	51Y–12119–00	SEAL, VALVE STEM JOINT, QUEUE DE SOUPAPE	6	6	6			
8	6BG–12146–00	SHAFT, ROCKER AXE, CULBUTEUR	1	1	1			
9	62Y–12151–00	ARM, VALVE ROCKER CULBUTEUR	1	1	1			
10	64J–12159–00	SCREW, VALVE ADJUSTING VIS, REGLAGE DE SOUPAPE	1	1	1			
11	62Y–12158–00	NUT, LOCK CONTRE-ECROU	1	1	1			
12	6C5–12151–00	ARM, VALVE ROCKER CULBUTEUR	5	5	5			
13	6C5–12159–00	SCREW, VALVE ADJUSTING VIS, REGLAGE DE SOUPAPE	5	5	5			
14	6C5–12158–00	NUT, LOCK CONTRE-ECROU	5	5	5			
15	6C5–12231–00	GUIDE, STOPPER 1 GUIDE, BUTEE 1	2	2	2			
16	6C5–12233–00	PLATE, GUIDE STOPPER 1 PLAQUE, GUIDE BUTEE 1	2	2	2			
17	90201–16014	WASHER, PLATE RONDELLE, PLATE	6	6	6			
18	90105–08060	BOLT, FLANGE BOULON	4	4	4			
19	92990–08200	WASHER, PLAIN RONDELLE, PLATE	2	2	2			

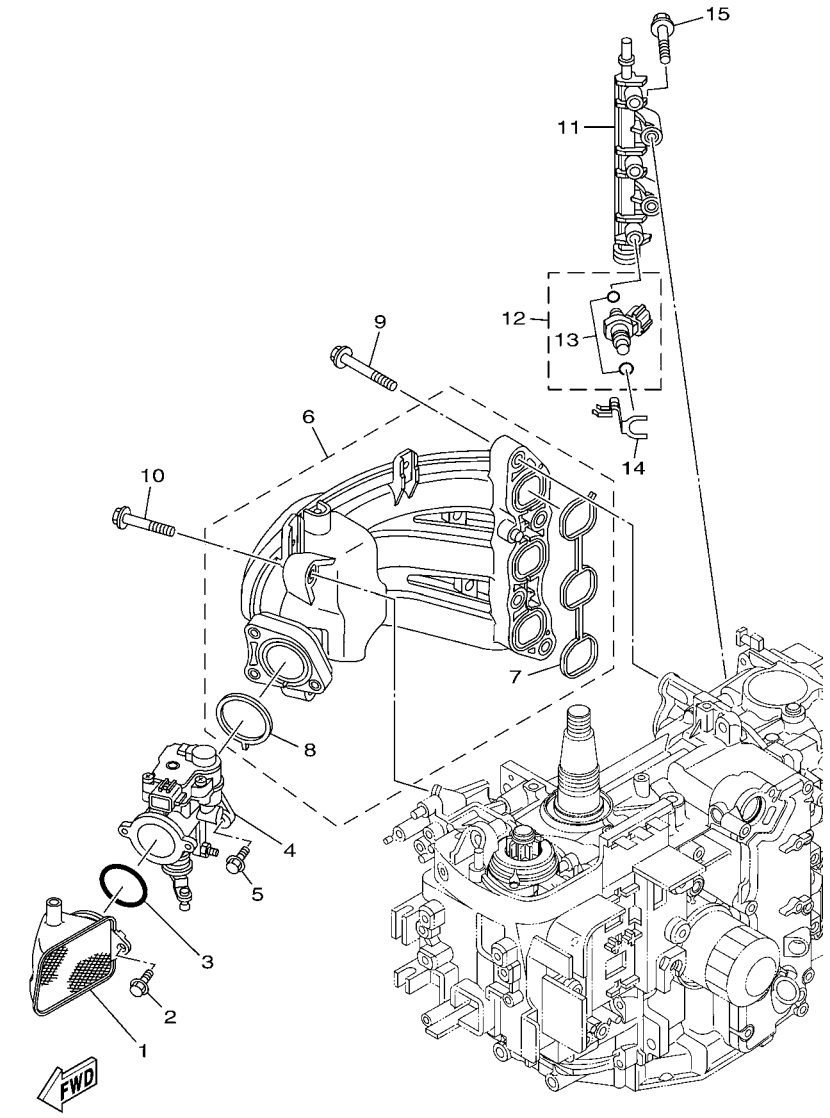

6BG1100-H060

FIG. 7 INTAKE 1 — ADMISSION 1

REF. NO.	PART NO. N° PIECES	DESCRIPTION DESCRIPTION	ET	ED	EHD			REMARKS REMARQUES
1	6BG–14440–00	SILENCER ASSY, INTAKE SIENCIEUX D'ADMISSION	1	1	1			F40F F40F
	6BT–14440–00	SILENCER ASSY, INTAKE SIENCIEUX D'ADMISSION	1		1			F30B F30B
2	95895–06016	BOLT, FLANGE BOULON	2	2	2			
3	93210–42159	O-RING JOINT TORIQUE	1	1	1			
4	6BG–13750–02	THROTTLE BODY ASSY CARTER D'ACCELERATEUR COMPLET	1	1	1			
5	95895–06016	BOLT, FLANGE BOULON	3	3	3			
6	6BG–13641–00	MANIFOLD, INTAKE 1 TUBULURE, ADMISSION 1	1	1	1			
7	6BG–13645–00	.GASKET, MANIFOLD 1 .JOINT, TUBULURE 1	1	1	1			
8	6BG–13557–00	.GASKET .JOINT	1	1	1			
9	90119–08069	BOLT, WITH WASHER BOULON, AVEC RONDELLE	4	4	4			
10	90119–06126	BOLT, WITH WASHER BOULON, AVEC RONDELLE	2	2	2			
11	6BG–13161–00	PIPE, DELIVERY 1 DURITE REFOULEMENT 1	1	1	1			
12	6BG–13761–00	INJECTOR INJECTEUR	3	3	3			
13	6C5–1410B–00	.PACKING KIT .POCHETTE DE JOINTS	1	1	1			
14	6BG–13577–00	CLIP AGRAFE	3	3	3			
15	95895–06040	BOLT, FLANGE BOULON	2	2	2			

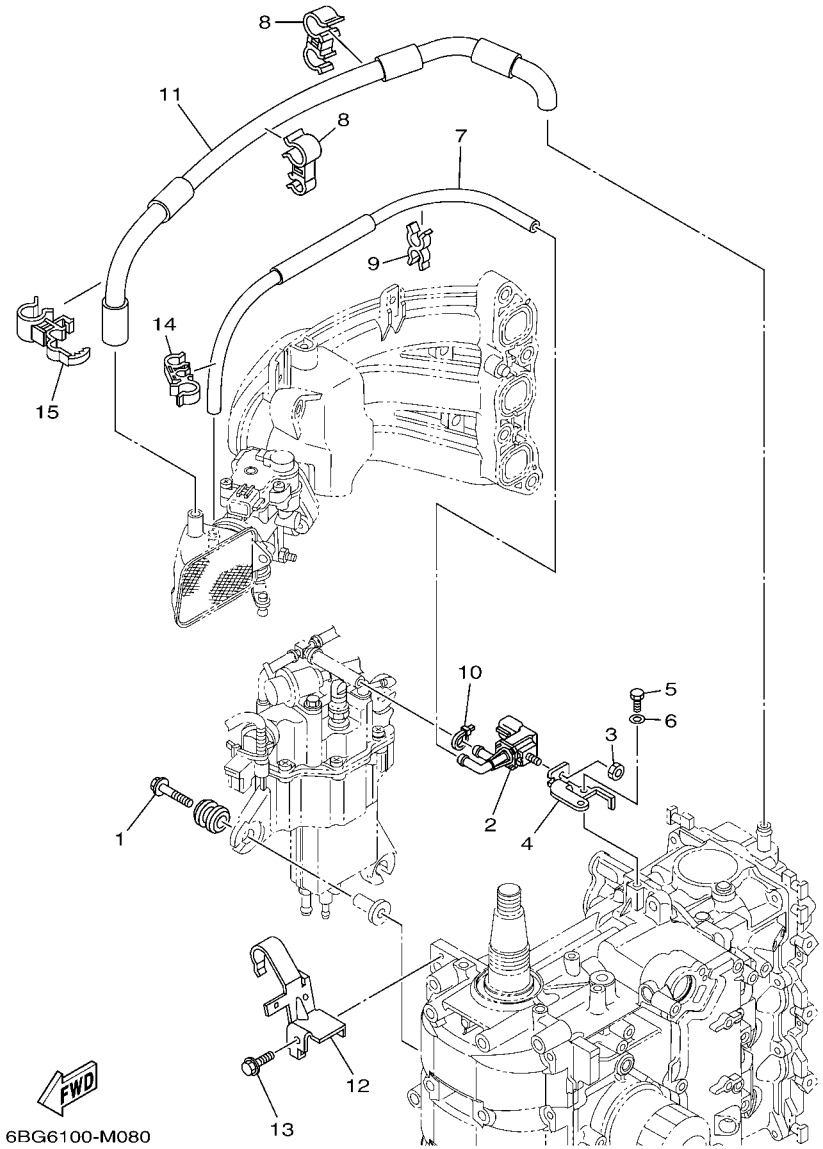

FIG. 8 INTAKE 2 — ADMISSION 2

REF. NO.	PART NO. N° PIECES	DESCRIPTION DESCRIPTION	ET	ED	EHD			REMARKS REMARQUES
1	90119–06M61	BOLT, WITH WASHER BOULON, AVEC RONDELLE	3	3	3			
2	6C5–86120–00	SOLENOID VALVE ASSY SOLENOIDE	1	1	1			
3	95380–06600	NUT, HEXAGON ECROU	1	1	1			
4	6BG–86112–10	STAY, SOLENOID SUPPORT, SOLENOIDE	1	1	1			
5	97095–06016	BOLT BOULON	1	1	1			
6	92995–06600	WASHER RONDELLE	1	1	1			
7	6BG–12576–00	HOSE 1 TUYAU 1	1	1	1			
8	90464–15007	CLAMP BRIDE	2	2	2			
9	90464–11M24	CLAMP BRIDE	1	1	1			
10	90465–11M10	CLAMP BRIDE	1	1	1			
11	6BG–1531A–00	HOSE, BREATHER 1 DURITE DE RENIFLARD 1	1	1	1			
12	6BG–15378–00	HOLDER SUPPORT	1	1	1			
13	90119–06037	BOLT, WITH WASHER BOULON, AVEC RONDELLE	1	1	1			
14	90464–15008	CLAMP BRIDE	1	1	1			
15	90464–15011	CLAMP BRIDE	1	1	1			

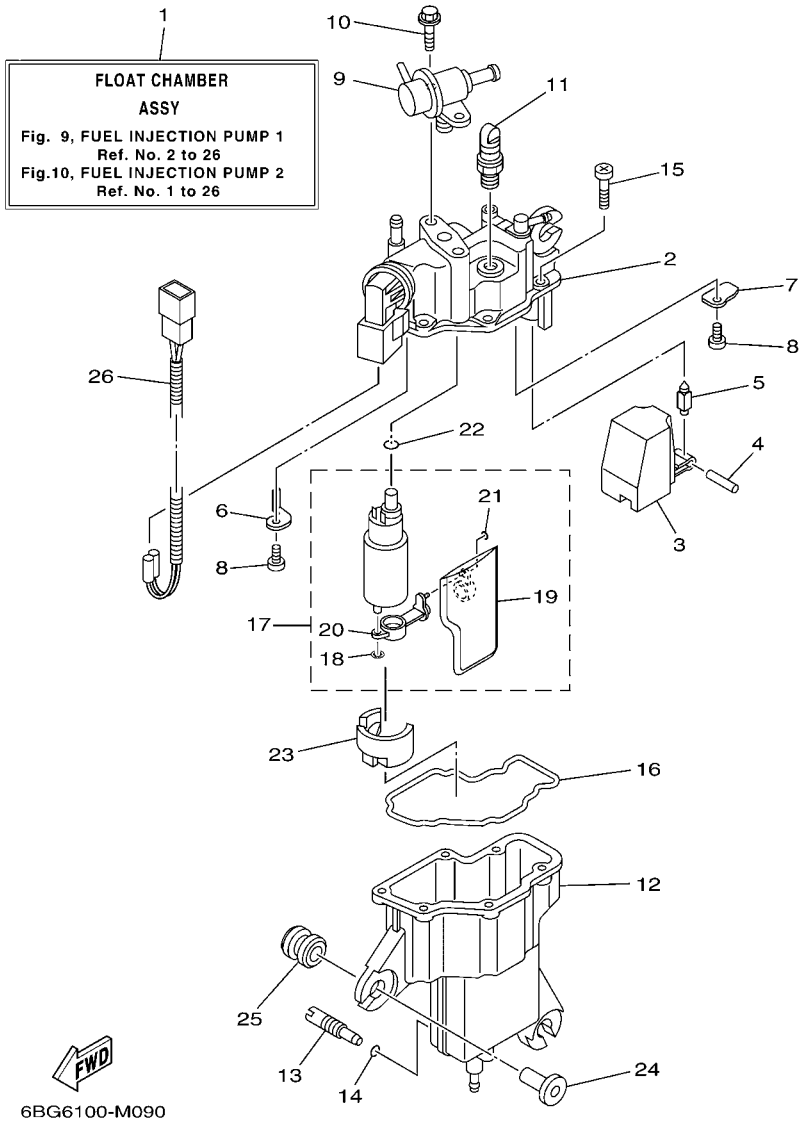

FIG. 9 FUEL INJECTION PUMP 1 POMPE A INJECTEUR 1

REF. NO.	PART NO. N° PIECES	DESCRIPTION DESCRIPTION	ET	ED	EHD			REMARKS REMARQUES
1	6BG–14180–04	FLOAT CHAMBER ASSY CUVE DE FLOTTEUR	1	1	1			
2	6BG–14182–10	COVER, FLOAT CHAMBER COUVERCLE, CUVE DE FLOTTEUR	1	1	1			
3	6BG–14985–00	FLOAT FLOTTEUR	1	1	1			
4	6C5–14386–00	PIN, FLOAT AXE, FLOTTEUR	1	1	1			
5	6C5–14546–10	VALVE, NEEDLE POINTEAU	1	1	1			
6	6BG–2441R–10	PLATE, BAFFLE 1 SEPARATEUR 1	1	1	1			
7	6BG–2441T–10	PLATE, BAFFLE 2 SEPARATEUR 2	1	1	1			
8	6C5–24453–00	SCREW VIS	2	2	2			
9	6C5–13906–01	REGULATOR, PRESSURE REGULATEUR DE PRESSION	1	1	1			
10	6C5–24592–00	BOLT BOLTE	2	2	2			
11	6C5–14225–00	CAP COUVERCLE	1	1	1			
12	6BG–14960–10	BODY ASSY CARTER (ENS.)	1	1	1			
13	6C5–14191–00	PLUG, DRAIN PLOT, VIDANGE	1	1	1			
14	6C5–14397–00	O-RING JOINT TORIQUE	1	1	1			
15	6C5–14567–00	SCREW VIS	6	6	6			
16	6BG–14984–00	GASKET, FLOAT CHAMBER JOINT, CUVE DE FLOTTEUR	1	1	1			
17	6BG–13910–02	FUEL PUMP ASSY POMPE A ESSENCE COMPLET	1	1	1			
18	6C5–14127–10	.CLIP .JONC	1	1	1			
19	6BG–13915–01	.FILTER .FILTRE	1	1	1			
20	6BG–13938–00	.PIPE .DURITE	1	1	1			
21	6BG–14137–00	.CLIP .JONC	1	1	1			
22	6BG–14561–00	O-RING JOINT TORIQUE	1	1	1			
23	6BG–13593–00	DAMPER AMORTISSEUR	1	1	1			
24	90387–06M69	COLLAR COLLERETTE	3	3	3			
25	90480–09M12	GROMMET PASSE-FIL	3	3	3			
26	6BG–82553–00	EXTENSION, WIRE LEAD EXTENSION, FAISCEAU	1	1	1			

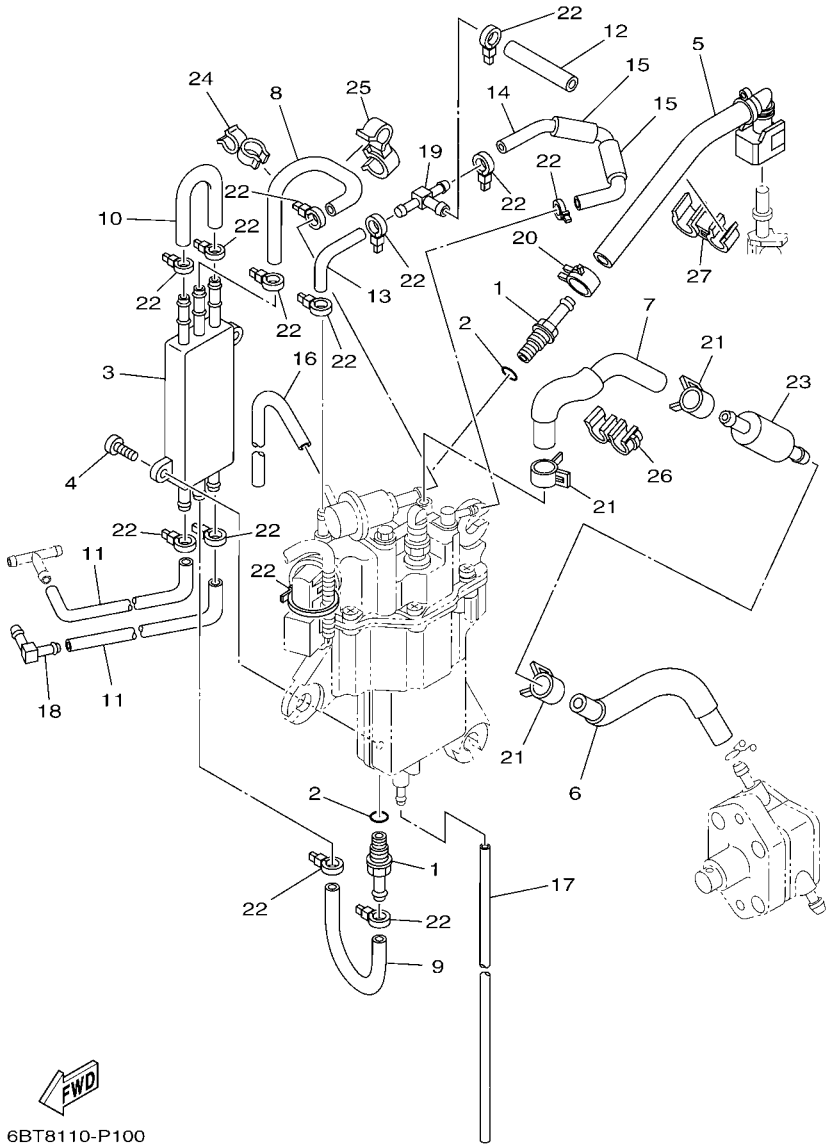

FIG. 10 FUEL INJECTION PUMP 2 POMPE A INJECTEUR 2

REF. NO.	PART NO. N° PIECES	DESCRIPTION DESCRIPTION	ET	ED	EHD			REMARKS REMARQUES
1	6C5–14251–00	NIPPLE RACCORD	2	2	2			
2	6C5–13739–00	O-RING JOINT TORIQUE	2	2	2			
3	6C5–21841–01	COOLER RADIATEUR	1	1	1			
4	6C5–24444–00	SCREW VIS	2	2	2			
5	6BG–13974–00	PIPE, FUEL 4 TUBE 4, CARBURANT	1	1	1			
6	6BG–2451B–00	HOSE, FUEL INLET DURITE	1	1	1			
7	6BG–14148–00	PIPE DURITE	1	1	1			
8	6BG–24321–00	PIPE 10 DURITE 10	1	1	1			
9	6BG–24322–00	PIPE 11 DURITE 11	1	1	1			
10	6BG–24323–00	PIPE 12 DURITE 12	1	1	1			
11	6BG–24324–00	PIPE 13 DURITE 13	2	2	2			
12	6C5–13547–00	HOSE 3 DURITE 3	1	1	1			
13	6BG–13545–00	HOSE 1 DURITE 1	1	1	1			
14	6BG–13546–00	HOSE 2 DURITE 2	1	1	1			
15	6BG–13548–00	HOSE, AIR 4 DURITE, A AIR 4	2	2	2			
16	6BG–13542–00	HOSE, VACUUM SENSING 1 DURITE 1	1	1	1			
17	6BG–14149–00	PIPE DURITE	1	1	1			
18	6C5–1410F–00	CONNECTOR CONNECTEUR	1	1	1			
19	6C5–24379–00	PIPE, JOINT 4 DURITE RACCORDEMENT 4	1	1	1			
20	6C5–13577–00	CLIP AGRAFE	1	1	1			
21	6BG–24387–00	CLIP SANDOW	3	3	3			
22	90465–11M10	CLAMP BRIDE	14	14	14			
23	6C5–24251–00	STRAINER 1 FILTRE 1	1	1	1			
24	90464–12006	CLAMP BRIDE	1	1	1			
25	90464–12010	CLAMP BRIDE	1	1	1			
26	90464–12224	CLAMP BRIDE	1	1	1			
27	90464–15007	CLAMP BRIDE	1	1	1			

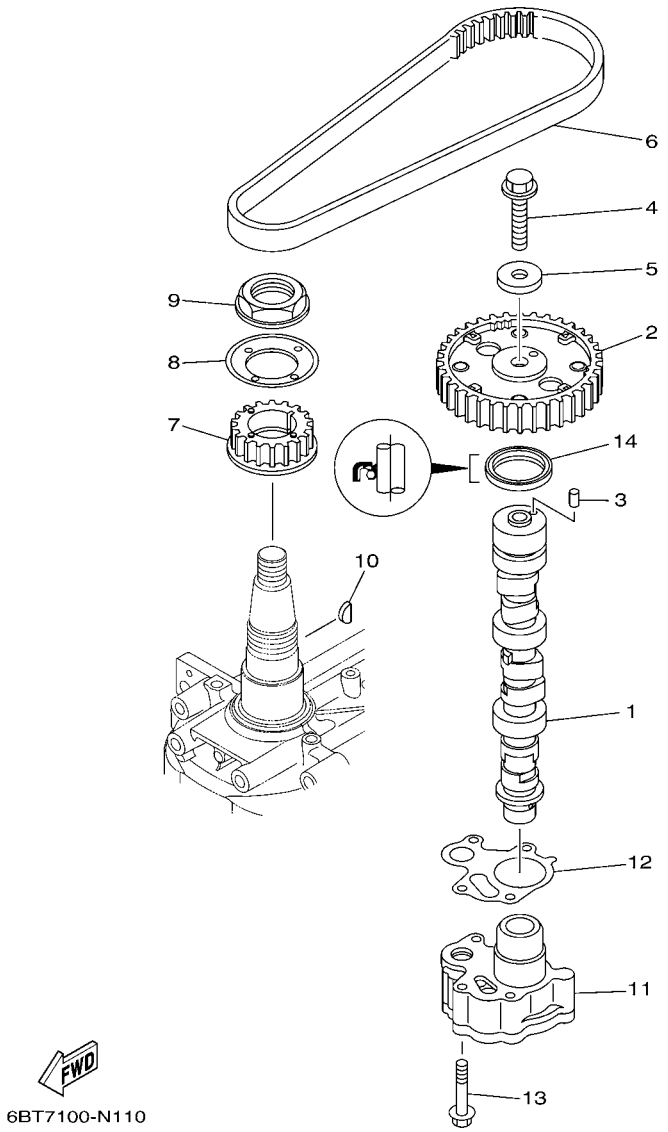

FIG. 11 OIL PUMP POMPE A HUILE

REF. NO.	PART NO. N° PIECES	DESCRIPTION DESCRIPTION	ET	ED	EHD			REMARKS REMARQUES
1	6BG–12171–00	CAMSHAFT 1 ARBRE A CAMES 1	1	1	1			
2	6C5–11537–10	GEAR, DRIVEN PIGNON SECONDAIRE	1	1	1			
3	93605–17002	PIN, DOWEL AXE	1	1	1			
4	95817–10035	BOLT, FLANGE BOULON, A COLLERETTE	1	1	1			
5	90201–10144	WASHER, PLATE RONDELLE, PLATE	1	1	1			
6	6C5–46241–00	BELT COURROIE TRAPEZOIDALE	1	1	1			
7	6C5–11536–00	GEAR, DRIVE ENGRENAGE, MENANT	1	1	1			
8	62Y–11557–00	WASHER 1 RONDELLE 1	1	1	1			
9	90179–35001	NUT ECROU	1	1	1			
10	90280–03017	KEY, WOODRUFF CLAVETTE, DEMI-LUNE	1	1	1			
11	6BG–13300–01	OIL PUMP ASSY POMPE A HUILE COMPLETE	1	1	1			
12	6C5–13329–00	GASKET, PUMP COVER JOINT, COUVERCLE DE POMPE	1	1	1			
13	90119–06025	BOLT, WITH WASHER BOULON, AVEC RONDELLE	4	4	4			
14	93102–37M40	OIL SEAL JOINT SPY	1	1	1			

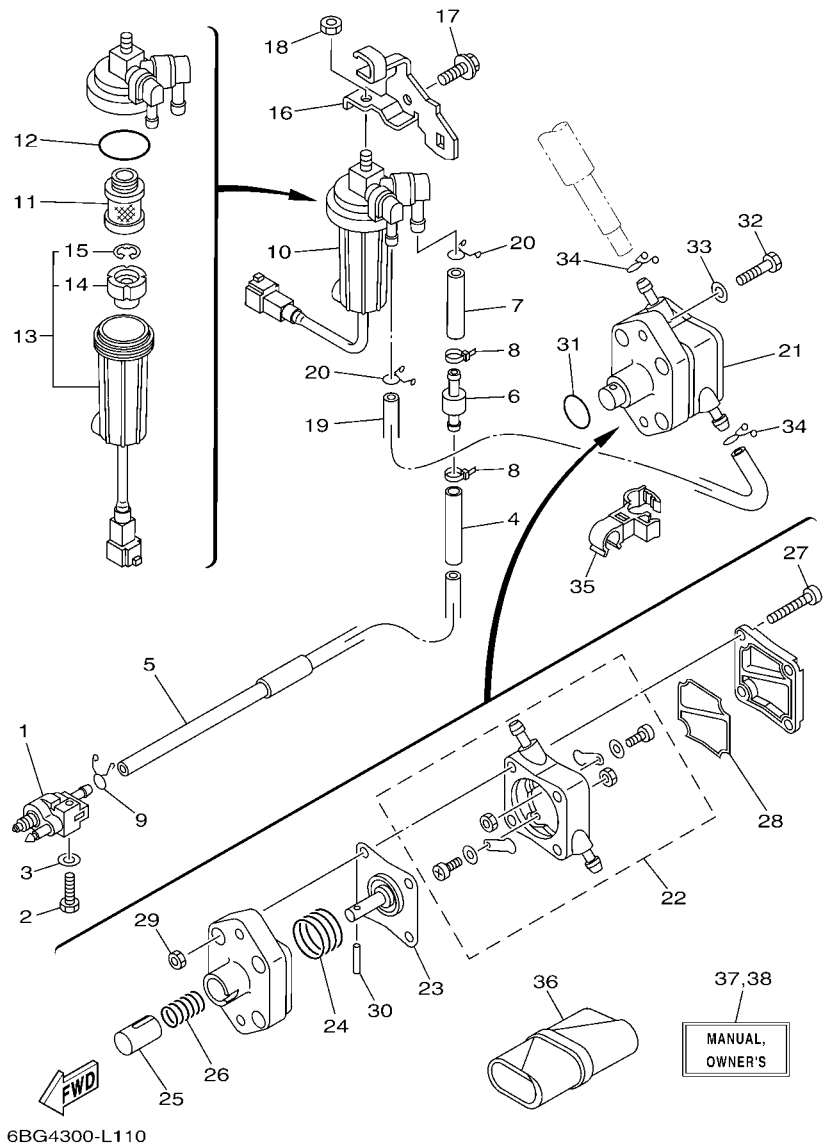

FIG. 12 FUEL CARBURANT

REF. NO.	PART NO. N° PIECES	DESCRIPTION DESCRIPTION	ET	ED	EHD			REMARKS REMARQUES
1	6G1–24304–02	FUEL PIPE JOINT COMP. 1 DURITE RACCORDEMT. A ESSENCE	1	1	1			
2	97095–06025	BOLT BOULON	1	1	1			
3	92995–06600	WASHER RONDELLE	1	1	1			
4	90445–14020	HOSE (L65) DURITE (L65)	1	1	1			
5	6BG–24313–00	PIPE 3 DURITE 3	1	1	1			
6	67F–24377–00	PIPE, JOINT 2 DURITE RACCORDEMENT 2	1	1	1			
7	90445–13M02	HOSE (L40) DURITE (L40)	1	1	1			
8	90465–11M10	CLAMP BRIDE	2	2	2			
9	90467–09M17	CLIP JONC	1	1	1			
10	6D8–24560–01	FILTER ASSY ENS FILTRE	1	1	1			
11	6D8–24563–00	.ELEMENT, FILTER .ELEMENT, FILTRE	1	1	1			
12	6D8–24564–00	.GASKET .JOINT	1	1	1			
13	6D8–24562–00	.CUP, FILTER .CUVETTE, FILTRE	1	1	1			
14	6D8–24469–00	..FLOAT, WATER LEVEL ..FLOTTEUR	1	1	1			
15	6D8–24519–00	..CLIP ..JONC	1	1	1			
16	6BG–24566–01	BRACKET, FILTER SUPPORT, FILTRE	1	1	1			
17	95895–08016	BOLT, FLANGE BOULON	1	1	1			
18	95380–08600	NUT ECROU	1	1	1			
19	6BG–24311–00	PIPE, FUEL 1 DURITE A ESSENCE	1	1	1			
20	90467–11M08	CLIP JONC	2	2	2			
21	6C5–24410–00	FUEL PUMP ASSY POMPE A ESSENCE	1	1	1			
22	6C5–24415–00	.BODY 4 .CORPS 4	1	1	1			
23	62Y–24411–02	.DIAPHRAGM .DIAPHRAGME	1	1	1			
24	62Y–24423–00	.SPRING, DIAPHRAGM .RESSORT, DIAPHRAGME	1	1	1			
25	62Y–13131–00	.PLUNGER .PLONGEUR	1	1	1			
26	62Y–24454–00	.SPRING .RESSORT	1	1	1			
27	62Y–24444–01	.SCREW .VIS	4	4	4			

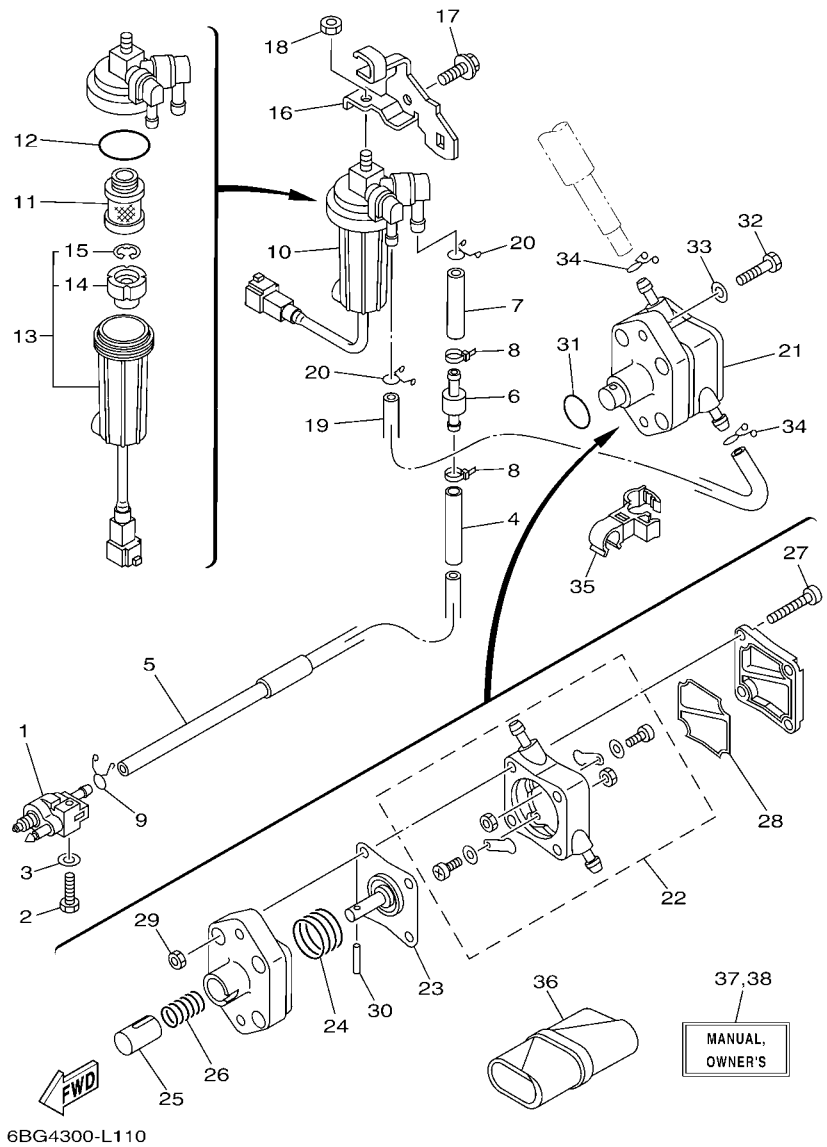

FIG. 12 FUEL — CARBURANT

REF. NO.	PART NO. N° PIECES	DESCRIPTION DESCRIPTION	ET	ED	EHD			REMARKS REMARQUES
28	6C5–24471–00	.DIAPHRAGM .DIAPHRAGME	1	1	1			
29	95380–05600	.NUT .ECROU	4	4	4			
30	62Y–24374–01	.PIN .PIN	1	1	1			
31	93210–24M79	O-RING JOINT TORIQUE	1	1	1			
32	97095–06030	BOLT BOULON	2	2	2			
33	92995–06600	WASHER RONDELLE	2	2	2			
34	90467–10M04	CLIP JONC	2	2	2			
35	90464–12012	CLAMP BRIDE	1	1	1			
36	6C5–28100–00	TOOL KIT TROUSSE A OUTILS	1	1	1			AP AP
37	6BG–28199–78–E0	MANUAL,OWNER'S MANUEL D'UTILISATION	1	1	1			UR (E) UR (E)
	6BG–28199–78–F0	MANUAL,OWNER'S MANUEL D'UTILISATION	1	1	1			UR (F) UR (F)
	6BG–28199–78–S0	MANUAL,OWNER'S MANUEL D'UTILISATION	1	1	1			UR (ES) UR (ES)
	6BG–28199–78–G0	MANUAL,OWNER'S MANUEL D'UTILISATION	1	1	1			UR (D) UR (D)
	6BG–28199–78–D0	MANUAL,OWNER'S MANUEL D'UTILISATION	1	1	1			UR (NL) UR (NL)
	6BG–28199–78–H0	MANUAL,OWNER'S MANUEL D'UTILISATION	1	1	1			UR (I) UR (I)
38	6BG–28199–88–K0	MANUAL,OWNER'S MANUEL D'UTILISATION	1	1	1			UR (DK) UR (DK)
	6BG–28199–88–R0	MANUAL,OWNER'S MANUEL D'UTILISATION	1	1	1			UR (GR) UR (GR)
	6BG–28199–88–P0	MANUAL,OWNER'S MANUEL D'UTILISATION	1	1	1			UR (P) UR (P)
	6BG–28199–88–N0	MANUAL,OWNER'S MANUEL D'UTILISATION	1	1	1			UR (N) UR (N)
	6BG–28199–88–M0	MANUAL,OWNER'S MANUEL D'UTILISATION	1	1	1			UR (S) UR (S)
	6BG–28199–88–L0	MANUAL,OWNER'S MANUEL D'UTILISATION	1	1	1			UR (SF) UR (SF)

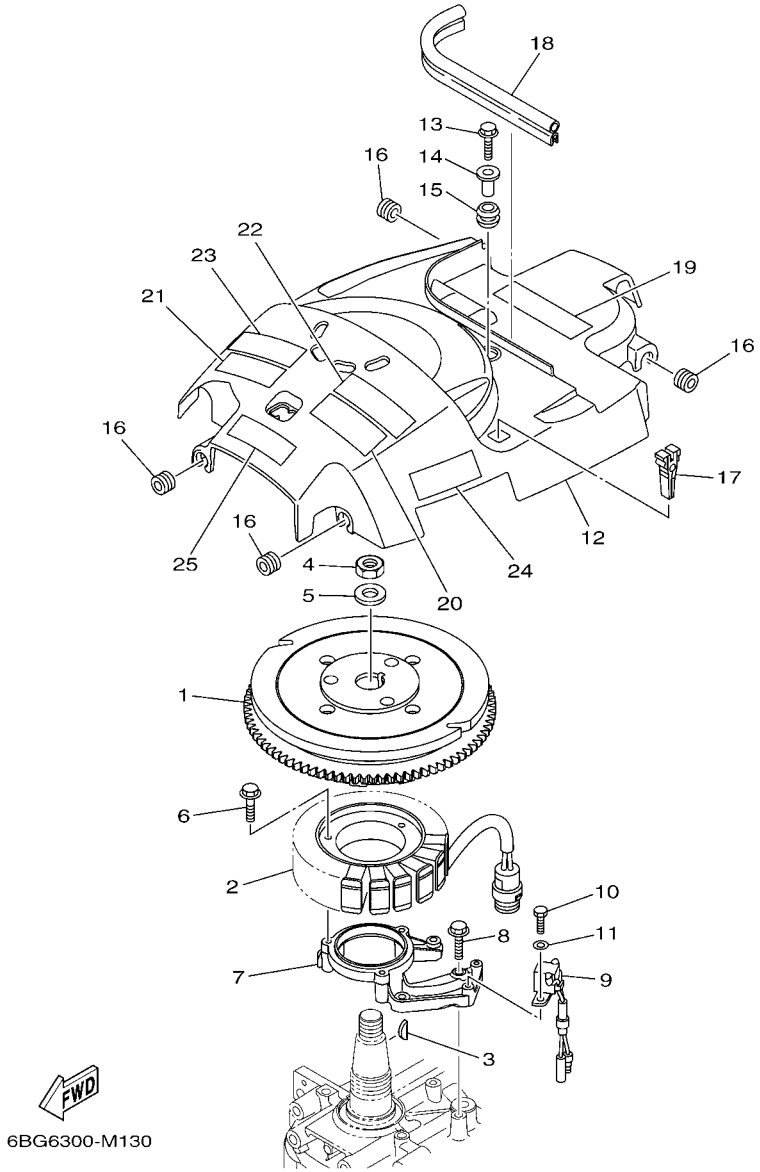

FIG. 13 GENERATOR GENERATRICE

REF. NO.	PART NO. N° PIECES	DESCRIPTION DESCRIPTION	ET	ED	EHD			REMARKS REMARQUES
1	6BG–81450–00	ROTOR ASSY ROTOR COMPLET	1	1	1			
2	6BG–81410–00	STATOR ASSY STATOR COMPLET	1	1	1			
3	6H4–11545–00	KEY, WOODRUFF CLAVETTE, DEMI-LUNE	1	1	1			
4	90170–20137	NUT ECROU	1	1	1			
5	90201–21M18	WASHER, PLATE RONDELLE, PLATE	1	1	1			
6	95023–06030	BOLT BOULON, A COLLERETTE	3	3	3			
7	6BG–85561–00–94	BASE, MAGNETO BASE, MAGNETO	1	1	1			
8	95023–06030	BOLT BOULON, A COLLERETTE	4	4	4			
9	6AH–85580–00	COIL, PULSER BOBINE, PULSEUR	1	1	1			
10	97095–05016	BOLT BOULON	2	2	2			
11	92995–05600	WASHER RONDELLE	2	2	2			
12	6BG–81337–10	COVER, FLYWHEEL COUVERCLE, VOLANT	1	1	1			
13	95895–06020	BOLT, FLANGE BOULON	1	1	1			
14	90387–06285	COLLAR COLLERETTE	1	1	1			
15	90480–15M31	GROMMET PASSE-FIL	1	1	1			
16	90480–12314	GROMMET PASSE-FIL	4	4	4			
17	67F–2812A–00	PULLER, FUSE TENDEUR, FUSIBLE	1	1	1			
18	6BG–42617–00	DAMPER, FORM BOURRELET, CAOUTCHOUC	1	1	1			
19	6BG–13437–60	MARK, CAUTION MAKER	1	1	1			
20	6EE–81995–40	LABEL, WARNING ETIQUETTE, AVERTISSEMENT	1	1	1			
21	6EE–81995–50	LABEL, WARNING ETIQUETTE, AVERTISSEMENT	1	1	1			
22	6EE–81994–40	LABEL, SAFETY ETIQUETTE, SECURITE	1	1	1			
23	6EE–81994–50	LABEL, SAFETY ETIQUETTE, SECURITE	1	1	1			
24	6BG–81919–00	GRAPHIC, REGULATOR ADHESIF, REGULATEUR	1	1	1			
25	6AG–81996–00	MARK MARQUE	1	1				

FIG. 14 ELECTRICAL 1 PARTIE ELECTRIQUE 1

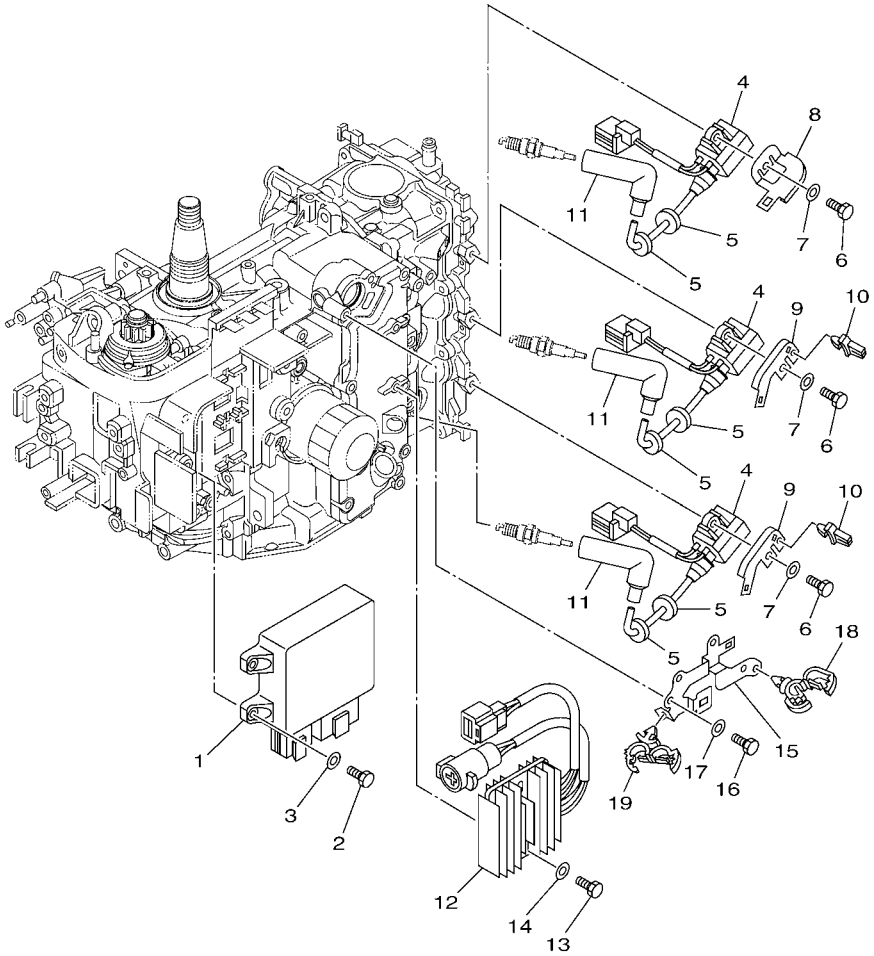

6BG1100-H130

REF. NO.	PART NO. N° PIECES	DESCRIPTION DESCRIPTION	ET	ED	EHD			REMARKS REMARQUES
1	6BG–8591A–04	ENGINE CONTROL UNIT ASSY BLOC DE CONTROL	1	1	1			F40F F40F
	6BT–8591A–03	ENGINE CONTROL UNIT ASSY BLOC DE CONTROL	1		1			F30B F30B
2	97095–06025	BOLT BOULON	4	4	4			
3	92995–06600	WASHER RONDELLE	4	4	4			
4	6BG–85570–00	IGNITION COIL ASSY BOBINE D'ALLUMAGE (ENS.)	3	3	3			
5	90480–25003	GROMMET PASSE-FIL	6	6	6			
6	97095–06025	BOLT BOULON	3	3	3			
7	92995–06600	WASHER RONDELLE	3	3	3			
8	6BG–82398–00	PLATE 3 PLAQUETTE 3	1	1	1			
9	6BG–82389–00	PLATE 2 PLAQUETTE 2	2	2	2			
10	90464–06001	CLAMP BRIDE	2	2	2			
11	6AH–82370–00	PLUG CAP ASSY ANTIPARASITE	3	3	3			
12	6BG–81960–00	RECTIFIER & REGULATOR ASSY REDRESSEUR REGULATEUR CPLT	1	1	1			
13	97095–06025	BOLT BOULON	2	2	2			
14	92995–06600	WASHER RONDELLE	2	2	2			
15	6BG–81528–00	CLAMP 1 COLLIER 1	1	1	1			
16	97095–06016	BOLT BOULON	2	2	2			
17	92995–06600	WASHER RONDELLE	2	2	2			
18	90464–13249	CLAMP BRIDE	3	3	3			
19	90464–18246	CLAMP BRIDE	1	1	1			

FIG. 15 ELECTRICAL 2 PARTIE ELECTRIQUE 2

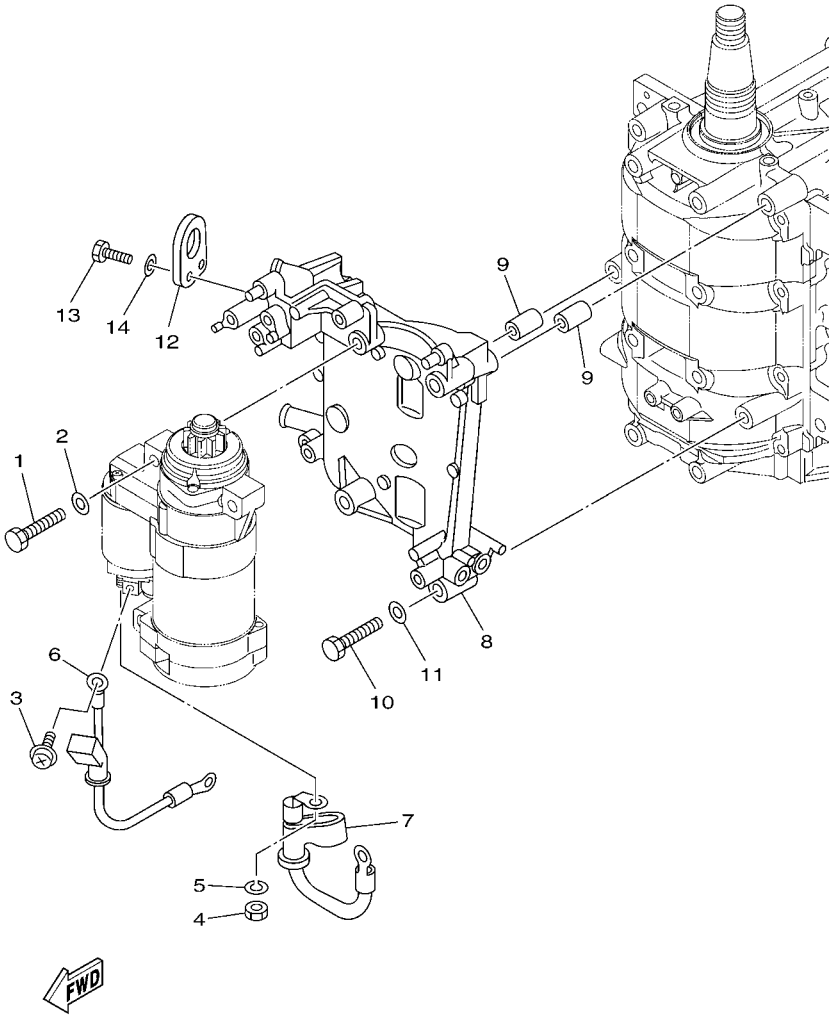

REF. NO.	PART NO. N° PIECES	DESCRIPTION DESCRIPTION	ET	ED	EHD			REMARKS REMARQUES
1	97013–08045	BOLT BOULON	3	3	3			
2	92903–08600	WASHER, PLATE RONDELLE, PLATE	3	3	3			
3	90159–05M12	SCREW, WITH WASHER VIS, AVEC RONDELLE	1	1	1			
4	95333–08600	NUT ECROU	1	1	1			
5	92903–08100	WASHER, SPRING RONDELLE, GROWER	1	1	1			
6	6BG–81815–00	CORD, STARTER MOTOR FIL, DEMARREUR ELECTRIQUE	1	1	1			
7	6BG–82115–00	WIRE, PLUS LEAD FIL, POSITIF	1	1	1			
8	6BG–81822–00	BRACKET, STARTING MOTOR SUPPORT, DEMARREUR ELECTRIQUE	1	1	1			
9	99530–10114	PIN, DOWEL GOUJON, D'ASSEMBLAGE	2	2	2			
10	97095–08045	BOLT BOULON	4	4	4			
11	92995–08600	WASHER RONDELLE	4	4	4			
12	62Y–11119–00	HANGER, ENGINE ANNEAU, LEVAGE	1	1	1			
13	97095–06020	BOLT BOULON	2	2	2			
14	92995–06600	WASHER RONDELLE	2	2	2			

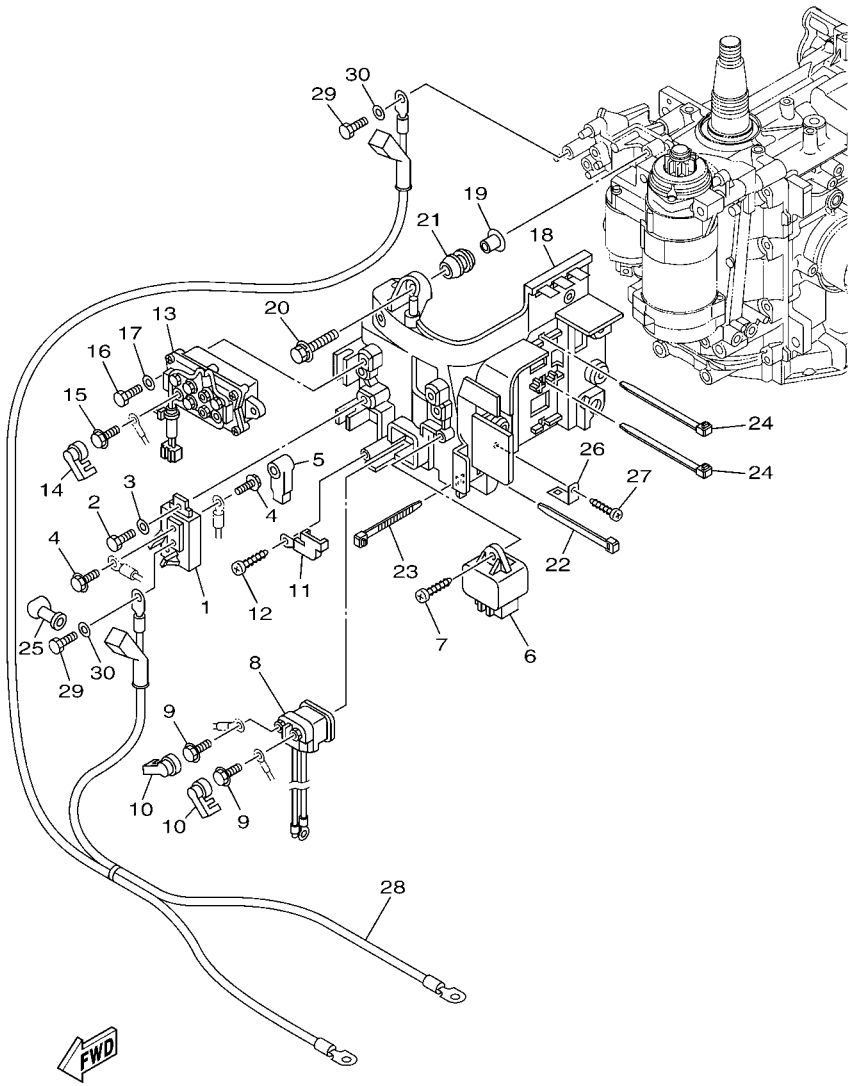

6BG3110-K160

FIG. 16 ELECTRICAL 3 — PARTIE ELECTRIQUE 3

REF. NO.	PART NO. N° PIECES	DESCRIPTION DESCRIPTION	ET	ED	EHD			REMARKS REMARQUES
1	6BG–81925–00	TERMINAL BORNE	1	1	1			
2	97095–06016	BOLT BOULON	1	1	1			
3	92995–06600	WASHER RONDELLE	1	1	1			
4	97595–06610	BOLT, WITH WASHER VIS HEXAGONAL AVC RONDELLE	2	2	2			
5	682–82119–01	COVER, LEAD WIRE GARNITURE, FIL	1	1	1			
6	60E–81950–00	RELAY ASSY RELAIS COMPLET	1	1	1			
7	97780–60620	SCREW, TAPPING VIS, TETE BOMBEE	1	1	1			
8	6AW–8194A–00	RELAY RELAIS	1	1	1			
9	97595–06610	BOLT, WITH WASHER VIS HEXAGONAL AVC RONDELLE	2	2	2			
10	6P2–8183X–00	CAP, TERMINAL COUVERCLE, BORNE	2	2	2			
11	68F–81953–00	STAY, RELAY SUPPORT, RELAIS	1	1	1			
12	97780–60620	SCREW, TAPPING VIS, TETE BOMBEE	1	1	1			
13	63P–81950–00	RELAY ASSY RELAIS COMPLET	1					
14	6P2–8183X–00	CAP, TERMINAL COUVERCLE, BORNE	2					
15	97595–06610	BOLT, WITH WASHER VIS HEXAGONAL AVC RONDELLE	2					
16	97095–06020	BOLT BOULON	2					
17	92995–06600	WASHER RONDELLE	2					
18	6BG–81948–00	BRACKET SUPPORT	1	1	1			
19	90387–06119	COLLAR COLLERETTE	6	6	6			
20	90119–06M59	BOLT, WITH WASHER BOULON, AVEC RONDELLE	6	6	6			
21	6A0–82317–00	DAMPER, IGNITION COIL AMORTISSEUR, BOBINE D'ALLUM	6	6	6			
22	90465–13M24	CLAMP BRIDE	1	1	1			
23	90465–13M39	CLAMP BRIDE	1	1	1			
24	90465–14M66	CLAMP BRIDE	2	2	2			
25	6G5–82119–00	COVER, LEAD WIRE GARNITURE, FIL	1	1	1			
26	68V–85548–00	HOLDER SUPPORT	1	1	1			
27	97780–60620	SCREW, TAPPING VIS, TETE BOMBEE	1	1	1			

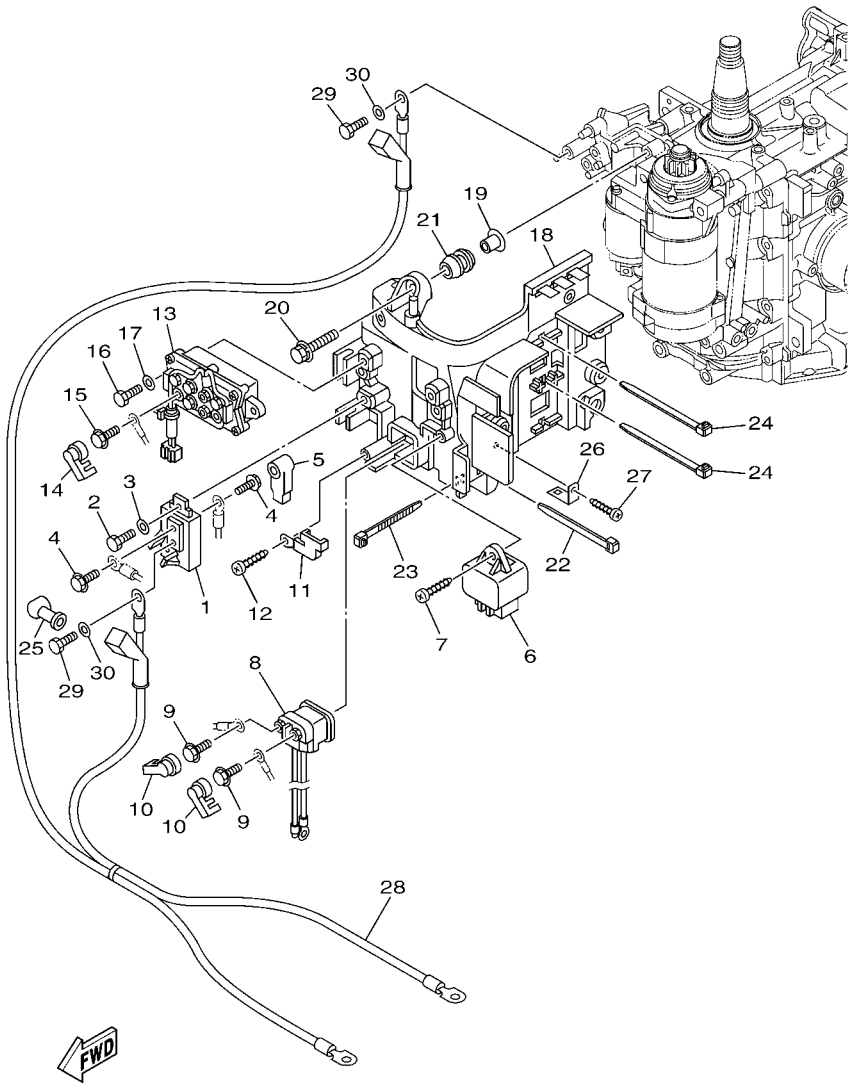

FIG. 16 ELECTRICAL 3 — PARTIE ELECTRIQUE 3

REF. NO.	PART NO. N° PIECES	DESCRIPTION DESCRIPTION	ET	ED	EHD			REMARKS REMARQUES
28	6BG–82105–01	BATTERY CABLE CABLE DE BATTERIE	1	1	1			AP AP
29	97095–06016	BOLT BOULON	2	2	2			AP AP
30	92995–06600	WASHER RONDELLE	2	2	2			AP AP

FIG. 17 ELECTRICAL 4 PARTIE ELECTRIQUE 4

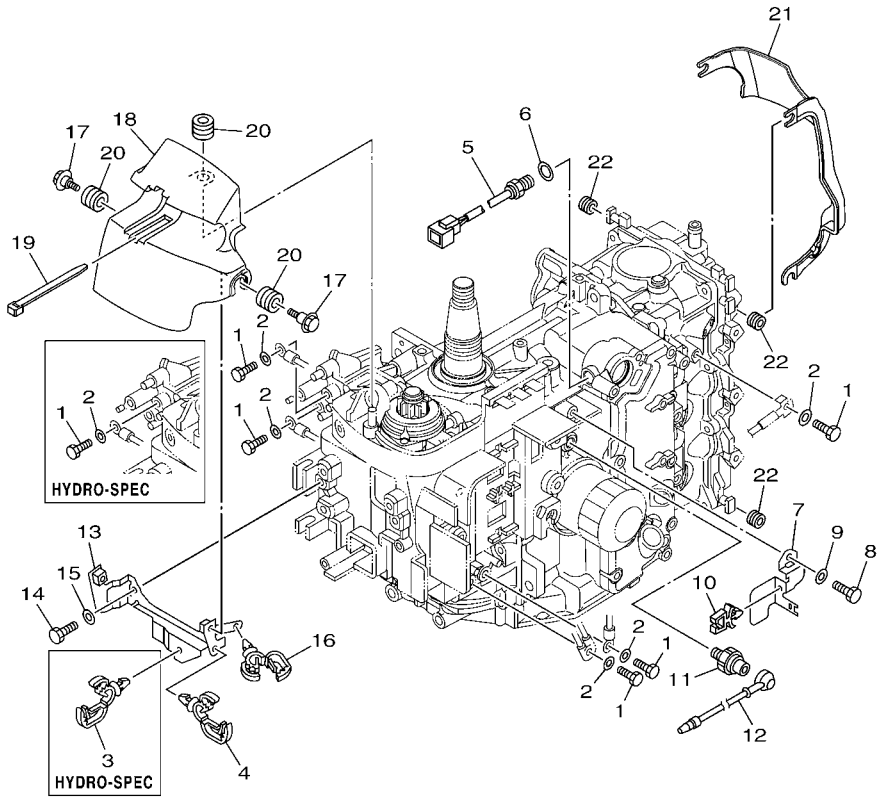

REF. NO.	PART NO. N° PIECES	DESCRIPTION DESCRIPTION	ET	ED	EHD			REMARKS REMARQUES
1	97095–06016	BOLT BOULON	5					
	97095–06016	BOLT BOULON		4	4			
2	92995–06600	WASHER RONDELLE	5					
	92995–06600	WASHER RONDELLE		4	4			
3	90464–13249	CLAMP BRIDE		1	1			
4	90464–13249	CLAMP BRIDE	1	1	1			
5	6CJ–85790–00	THERMOSENSOR ASSY SENSITOMETRE	1	1	1			
6	90430–14115	GASKET JOINT	1	1	1			
7	6BG–82388–00	PLATE PLAQUETTE	1	1	1			
8	97095–06016	BOLT BOULON	1	1	1			
9	92995–06600	WASHER RONDELLE	1	1	1			
10	90464–06001	CLAMP BRIDE	1	1	1			
11	64J–82504–00	OIL PRESSURE SWITCH ASSY CONTACTEUR DE PRESSION D'HUILE	1	1	1			
12	68V–81315–00	LEAD WIRE ASSY FIL	1	1	1			
13	6BG–8257V–00	PLATE, CONNECTOR PLAQUE, CONNECTEUR	1	1	1			
14	97095–06016	BOLT BOULON	2	2	2			
15	92995–06600	WASHER RONDELLE	2	2	2			
16	90464–18246	CLAMP BRIDE	1	1	1			
17	90109–06MA1	BOLT BOULON	2	2	2			
18	6BG–81942–00	COVER COUVERCLE	1	1	1			
19	90465–13M24	CLAMP BRIDE	1	1	1			
20	90480–12314	GROMMET PASSE-FIL	3	3	3			
21	6BG–11192–00	COVER, CYLINDER HEAD 2 COUVERCLE, CULASSE 2	1	1	1			
22	90480–12314	GROMMET PASSE-FIL	3	3	3			

FIG. 18 ELECTRICAL 5 — PARTIE ELECTRIQUE 5

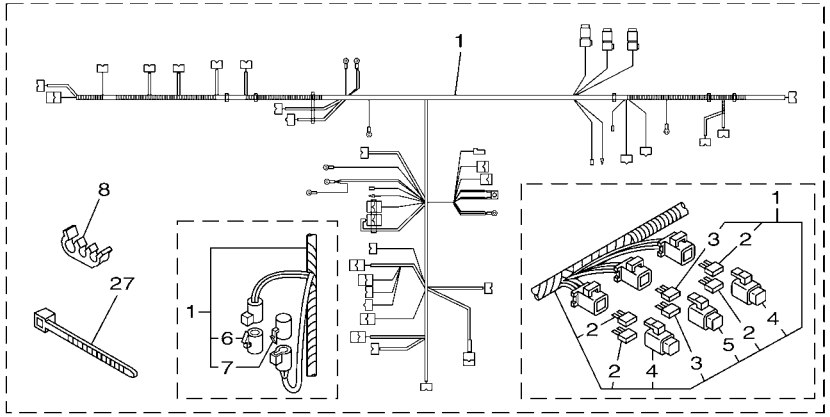

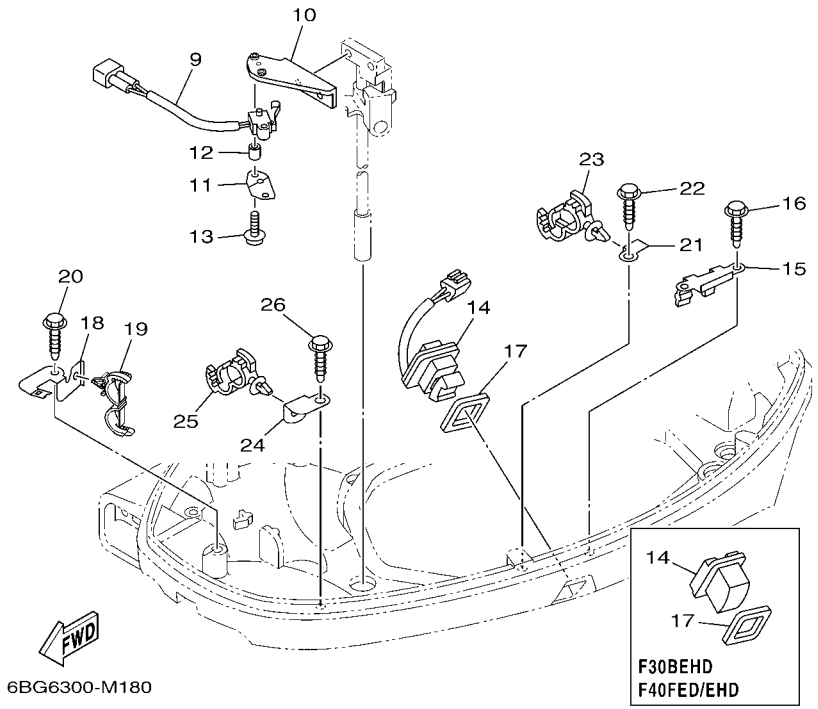

6BG6300-M180

REF. NO.	PART NO. N° PIECES	DESCRIPTION DESCRIPTION	ET	ED	EHD			REMARKS REMARQUES
1	6BG–82590–03	WIRE HARNESS ASSY FAISCEAU DE FILS COMPLET	1					
	6BG–82590–13	WIRE HARNESS ASSY FAISCEAU DE FILS COMPLET		1	1			
2	67F–82151–00	.FUSE (20A) .FUSIBLE (20A)	4	4	4			
3	67F–82151–10	.FUSE (30A) .FUSIBLE (30A)	2	2	2			
4	67F–8215B–10	.CAP (YELLOW) .BOUCHON (YELLOW)	2	2	2			
5	67F–8215B–20	.CAP (GREEN) .BOUCHON (GREEN)	1	1	1			
6	6P2–82582–00	.CAP 1 (FEMALE) .BOUCHON 1 (FEMME)	1					FOR 6BG-82590-03 FOR 6BG-82590-03
7	6P2–82582–10	.CAP 1 (MALE) .BOUCHON 1 (MALE)	1					FOR 6BG-82590-03 FOR 6BG-82590-03
8	90464–11008	CLAMP BRIDE	1	1	1			
9	60V–8259F–00	SWITCH ASSY COMMUTATEUR	1	1	1			
10	6CJ–82554–00	STAY, NEUTRAL SWITCH SUPPORT, CONT DE POINT-MORT	1	1	1			
11	61A–82588–01	PLATE PLAQUE	1	1	1			
12	90387–04001	COLLAR COLLERETTE	1	1	1			
13	97985–04116	SCREW, WITH WASHER VIS, AVEC RONDELLE	2	2	2			
14	69J–82563–01	TRIM & TILT SWITCH ASSY INCLINER ET PARER COMMUTATEUR	1					
	69J–42723–01	COVER, BOTTOM COUVERCLE		1	1			
15	6BG–83614–00	BRACKET SUPPORT	1	1	1			
16	90109–06M86	BOLT BOULON	2	2	2			
17	69J–82587–00	GASKET JOINT	1	1	1			
18	6BG–42811–01	STAY SUPPORT	1	1	1			
19	90464–18205	CLAMP BRIDE	1	1	1			
20	90109–06M86	BOLT BOULON	1	1	1			
21	6BG–42743–00	BRACKET SUPPORT	1	1	1			
22	90109–06M86	BOLT BOULON	1	1	1			
23	90464–20181	CLAMP BRIDE	1	1	1			
24	63P–42756–00	STAY, CLAMP SUPPORT, COLLIER	1	1	1			
25	90464–20181	CLAMP BRIDE	1	1	1			

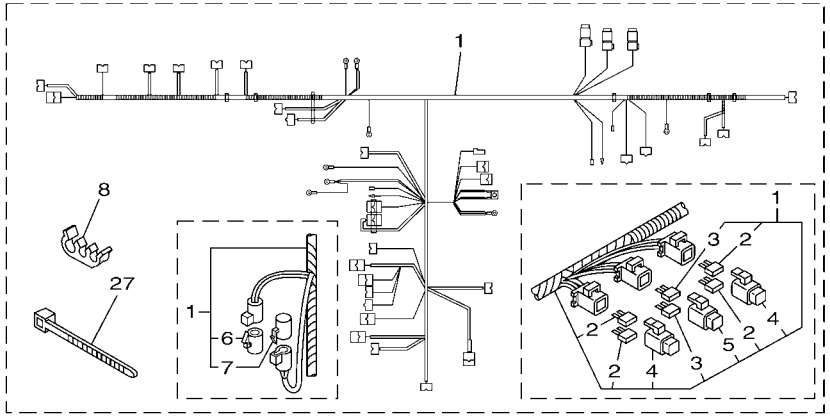

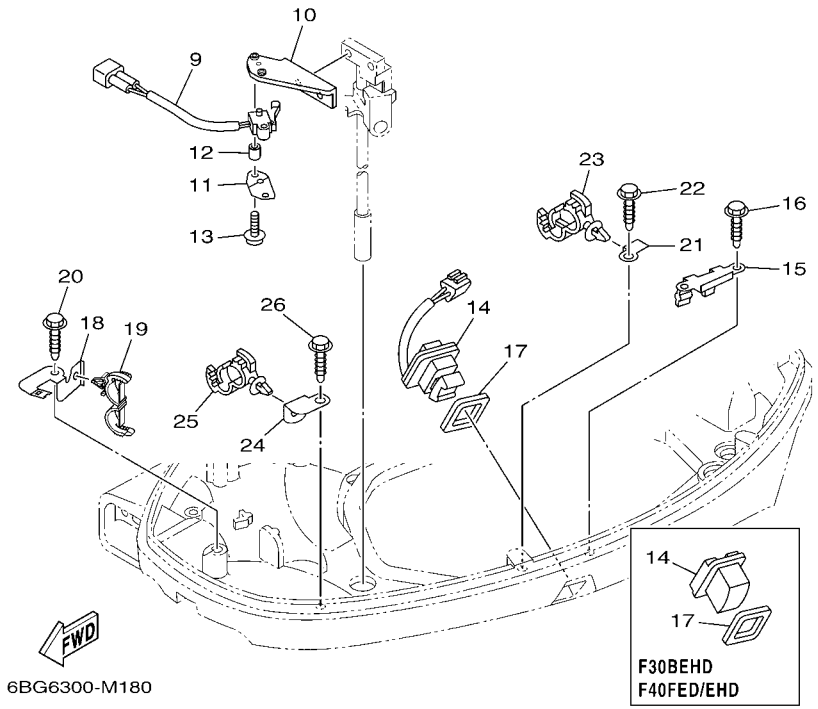

6BG6300-M180

FIG. 18 ELECTRICAL 5 — PARTIE ELECTRIQUE 5

REF. NO.	PART NO. N° PIECES	DESCRIPTION DESCRIPTION	ET	ED	EHD			REMARKS REMARQUES
26	90109–06M86	BOLT BOULON	1	1	1			
27	90465–13M97	CLAMP BRIDE	1	1	1			

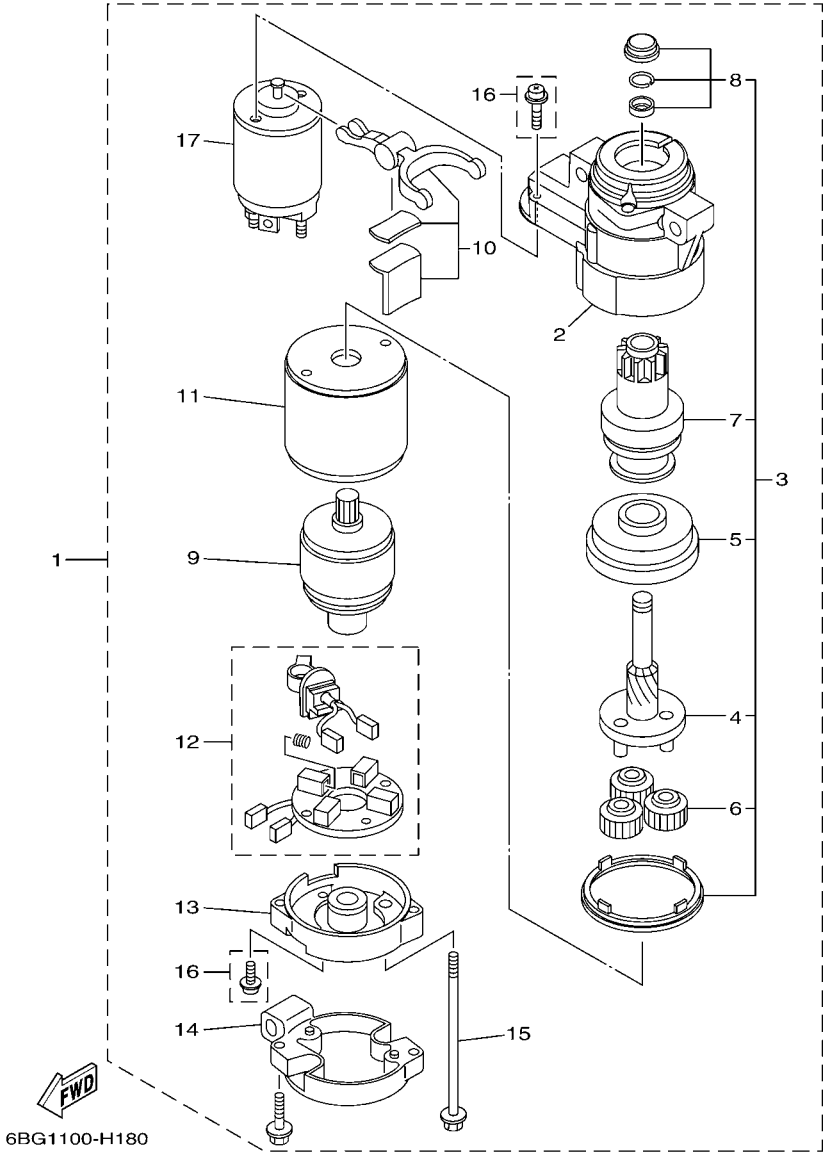

FIG. 19 STARTING MOTOR DEMARREUR ELECTRIQUE

REF. NO.	PART NO. N° PIECES	DESCRIPTION DESCRIPTION	ET	ED	EHD			REMARKS REMARQUES
1	6BG–81800–00	STARTING MOTOR ASSY DEMARREUR ELECTRIQUE COMPLET	1	1	1			
2	6BG–81830–00	.FRONT BRACKET ASSY .SUPPORT AVANT	1	1	1			
3	6BG–81807–00	.GEAR ASSY, STARTING MOTOR .PIGNON, DEMARREUR ELECTRIQUE	1	1	1			
4	6BG–81836–00	..SPRING, LEVER ..RESSORT, LEVIER	1	1	1			
5	6BG–81891–00	..GEAR, RING ..ROUE DENTEE	1	1	1			
6	6AW–8183T–00	..GEAR, IDLER ..PIGNON, INTERMEDIAIRE	3	3	3			
7	6BG–81832–00	..CLUTCH, OVER RUN ..EMBRAYAGE, ROUE LIBRE	1	1	1			
8	6BG–81857–00	..RETAINER ..ARRETOIR	1	1	1			
9	6BG–81850–00	.ARMATURE ASSY .INDUIT	1	1	1			
10	6BG–81839–00	.LEVER ASSY .LEVIER COMPLET	1	1	1			
11	6BG–81810–00	.STATOR ASSY .STATOR COMPLET	1	1	1			
12	6BG–81840–00	.BRUSH HOLDER ASSY .SUPPORT DE CHARBON	1	1	1			
13	6BG–81820–00	.REAR BRACKET ASSY .SUPPORT ARRIERE COMPLET	1	1	1			
14	6BG–8182J–00	.BRACKET COMPLETE .SUPPORTE COMPLETE	1	1	1			
15	6BG–81826–00	.BOLT .BOULON	2	2	2			
16	6BG–81846–00	.SCREW SET .VIS	1	1	1			
17	6BG–81941–00	.STARTER RELAY ASSY .LANCEUR RELAIS (ENS.)	1	1	1			

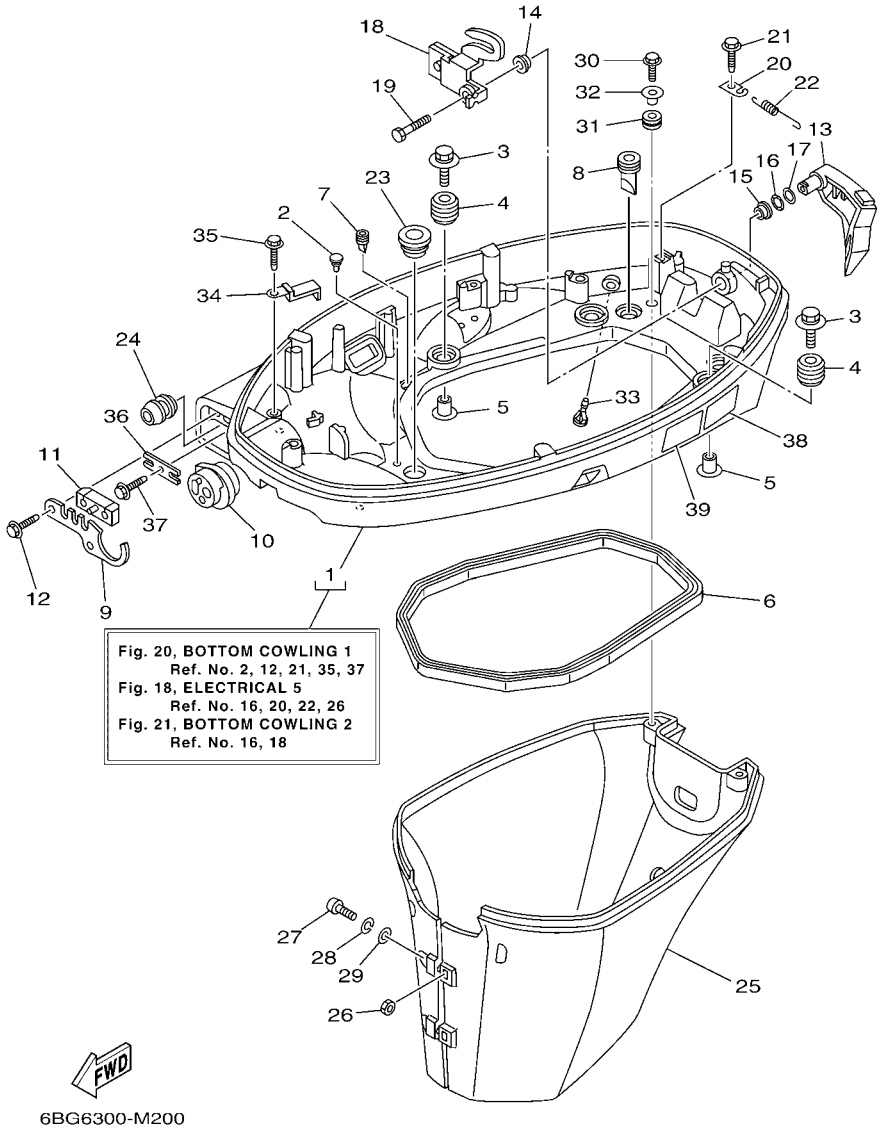

FIG. 20 BOTTOM COWLING 1 CAPOT INFERIEUR 1

REF. NO.	PART NO. N° PIECES	DESCRIPTION DESCRIPTION	ET	ED	EHD			REMARKS REMARQUES
1	6BG–42710–01–8D	BOTTOM COWLING ASSY ENS. EMBASE	1	1	1			
2	6H4–42748–00	GROMMET PASSE-FIL	3	3	3			
3	90119–06M61	BOLT, WITH WASHER BOULON, AVEC RONDELLE	4	4	4			
4	6BG–42748–00	GROMMET PASSE-FIL	4	4	4			
5	90387–06M69	COLLAR COLLERETTE	4	4	4			
6	62Y–42716–00	RUBBER, SEAL 1 JOINT EN CAOUTCHOUC 1	1	1	1			
7	65W–42717–00	RUBBER, SEAL 2 JOINT EN CAOUTCHOUC 2	2	2	2			
8	61A–42717–00	RUBBER, SEAL 2 JOINT EN CAOUTCHOUC 2	2	2	2			
9	6BG–42761–00	STOPPER PLAQUETTE	1	1	1			
10	6BG–42725–00	GROMMET PASSE-FIL	1	1	1			
11	6BG–42727–00	GROMMET PASSE-FIL	1	1	1			
12	90109–06M86	BOLT BOULON	2	2	2			
13	6BG–42815–00–8D	LEVER, CLAMP LEVIER, PRESSE	1	1	1			
14	90386–12M37	BUSH DOUILLE	1	1	1			
15	90386–12MA2	BUSH DOUILLE	1	1	1			
16	90206–12052	WASHER, WAVE RONDELLE, ONDULEE	1	1	1			
17	90201–12M07	WASHER, PLATE RONDELLE, PLATE	1	1	1			
18	6BG–42816–00	LEVER, CLAMP LEVIER, PRESSE	1	1	1			
19	97095–06014	BOLT BOULON	1	1	1			
20	66T–43144–00	HOOK, SPRING CROCHET	1	1	1			
21	90109–06M86	BOLT BOULON	1	1	1			
22	90506–18M40	SPRING, TENSION RESSORT, TENSION	1	1	1			
23	68U–42727–00	GROMMET PASSE-FIL	1	1	1			
24	6BG–24329–00	SEAL JOINT	1	1	1			
25	6BG–42741–00–8D	APRON CAPOT LATERAL	1		1			S(16.1") S(16.1")
	6BG–42741–10–8D	APRON CAPOT LATERAL	1	1	1			L(21.0") L(21.0")
26	95380–06600	NUT, HEXAGON ECROU	2	2	2			

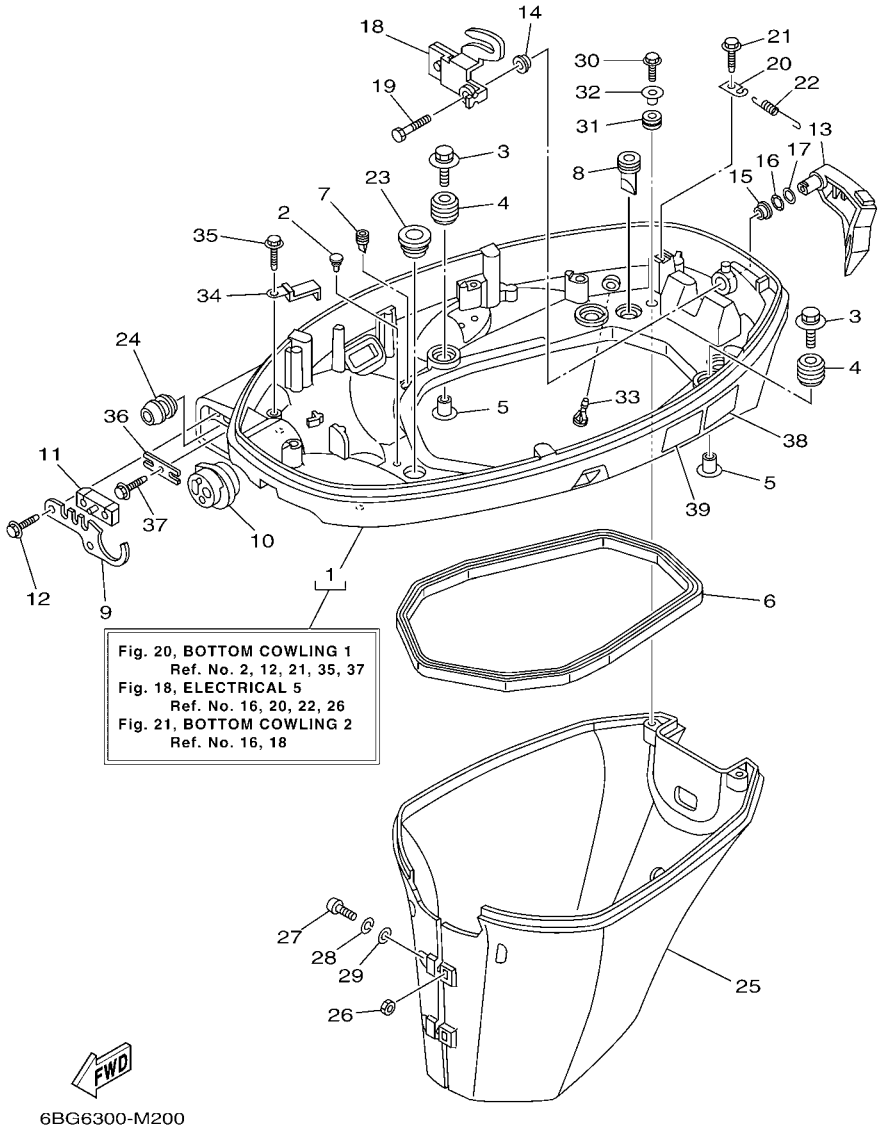

FIG. 20 BOTTOM COWLING 1 CAPOT INFERIEUR 1

REF. NO.	PART NO. N° PIECES	DESCRIPTION DESCRIPTION	ET	ED	EHD			REMARKS REMARQUES
27	97880–06025	SCREW, PAN HEAD VIS, TETE TRONCONIQUE	2	2	2			
28	92990–06100	WASHER, SPRING RONDELLE, GROWER	2	2	2			
29	92990–06600	WASHER, PLATE RONDELLE, PLATE	2	2	2			
30	90109–06M80	BOLT BOULON	2	2	2			
31	90480–13M24	GROMMET PASSE-FIL	2	2	2			
32	90387–06M43	COLLAR COLLERETTE	2	2	2			
33	6BL–44391–00	NIPPLE, HOSE RACCORD D'ESSENCE	1	1	1			
34	90462–20005	CLAMP BRIDE	1	1	1			
35	90109–06M86	BOLT BOULON	1	1	1			
36	6BG–48538–00	CLAMP, CABLE 1 COLLIER	1	1	1			
37	90109–06M86	BOLT BOULON	1	1	1			
38	6EE–42794–40	LABEL, WARNING (GENERAL) ETIQUETTE, AVERTISSEMENT	1	1	1			
39	6EE–42794–50	LABEL, WARNING (GENERAL) ETIQUETTE, AVERTISSEMENT	1	1	1			

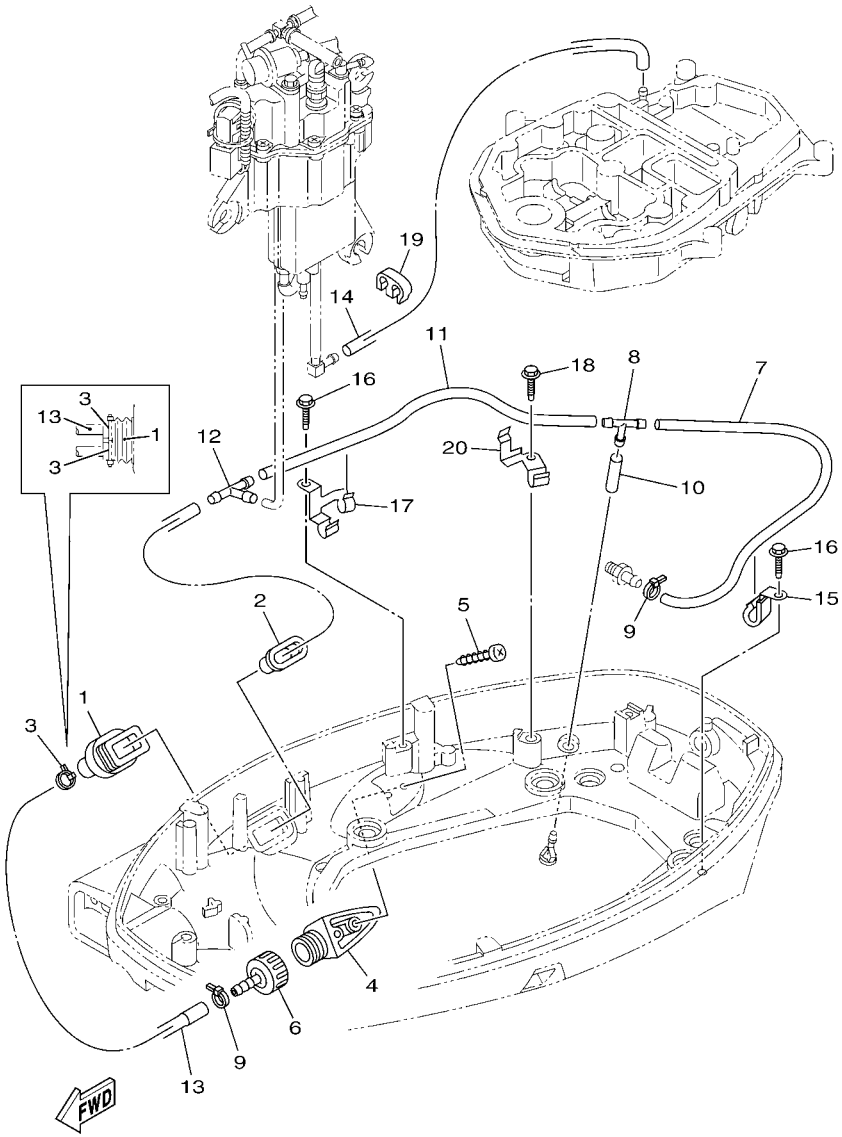

FIG. 21 BOTTOM COWLING 2 CAPOT INFERIEUR 2

REF. NO.	PART NO. N° PIECES	DESCRIPTION DESCRIPTION	ET	ED	EHD			REMARKS REMARQUES
1	6H1–42726–21	GROMMET PASSE-FIL	1	1	1			
2	6BG–42384–00	SEAL, CAP JOINT, CAPUCHON	1	1	1			
3	90465–11M10	CLAMP BRIDE	2	2	2			
4	6AW–12572–00	ADAPTER ADAPTATEUR	1	1	1			
5	97780–60520	SCREW, TAPPING VIS, TETE BOMBEE	2	2	2			
6	6R3–12580–00	JOINT ASSY ARTICULER (ENS.)	1	1	1			
7	90445–09035	HOSE (L380) DURITE (L380)	1	1	1			
8	688–24378–00	PIPE, JOINT 3 DURITE RACCORDEMENT 3	1	1	1			
9	90465–11M10	CLAMP BRIDE	2	2	2			
10	90445–09220	HOSE (L30) DURITE (L30)	1	1	1			
11	90445–09224	HOSE (L270) DURITE (L270)	1	1	1			
12	688–24378–00	PIPE, JOINT 3 DURITE RACCORDEMENT 3	1	1	1			
13	6BG–12481–00	PIPE 1 DURITE 1	1	1	1			
14	6A1–24311–00	PIPE, FUEL 1 DURITE A ESSENCE	1	1	1			
15	90462–08067	CLAMP BRIDE	1	1	1			
16	90109–06M86	BOLT BOULON	2	2	2			
17	6BG–24135–01	CLAMP 1 COLLIER 1	1	1	1			
18	90109–06M86	BOLT BOULON	1	1	1			
19	90464–09M21	CLAMP BRIDE	1	1	1			
20	6BG–24136–01	CLAMP 2 COLLIER 2	1	1	1			

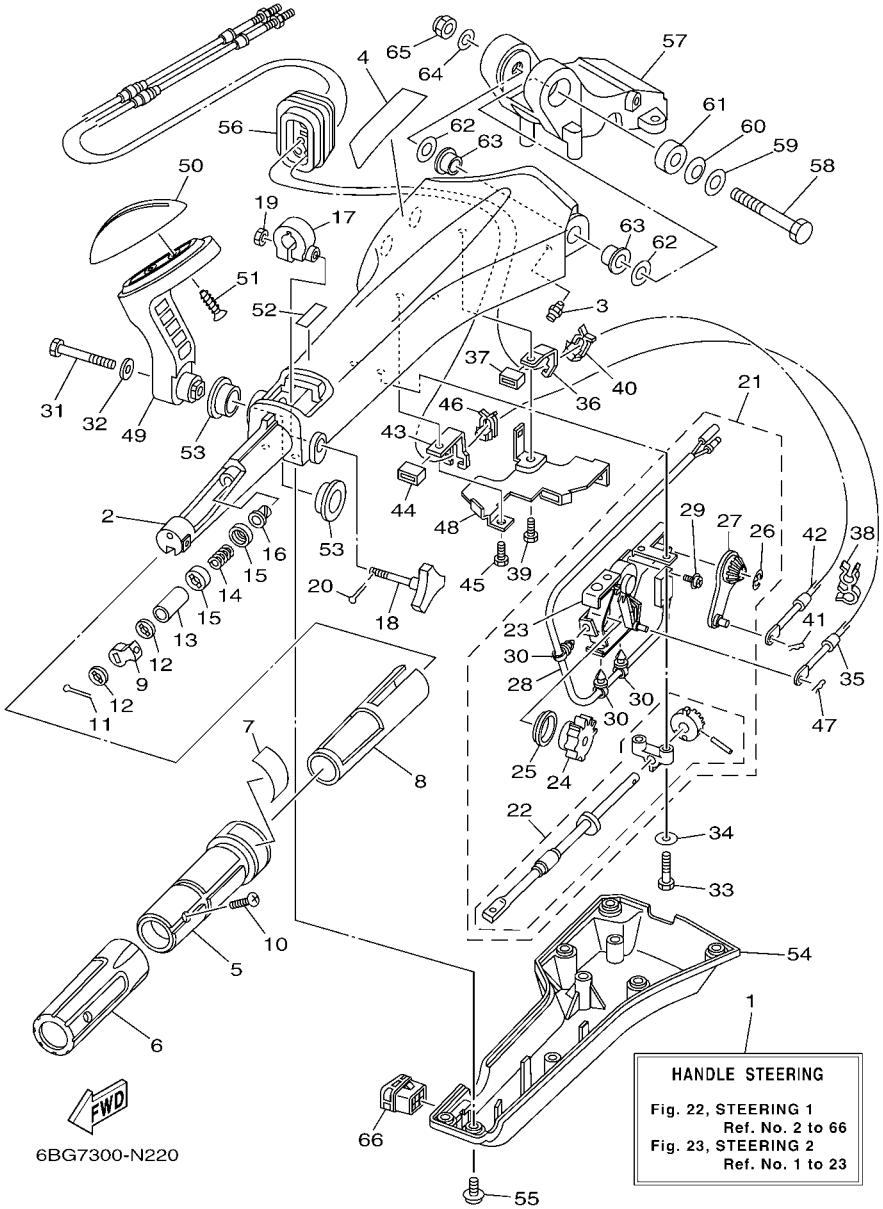

FIG. 22 STEERING 1 DIRECTION 1

REF. NO.	PART NO. N° PIECES	DESCRIPTION DESCRIPTION	ET	ED	EHD			REMARKS REMARQUES
1	6BC–42101–32	HANDLE, STEERING POIGNEE			1			
2	6X4–42111–02–8D	HANDLE, STEERING POIGNEE			1			
3	93700–06M03	NIPPLE, GREASE PION			1			
4	6X4–48215–00	GRAPHIC ADHESIF			1			
5	6X4–42119–01	GRIP, STEERING HANDLE POIGNEE, BARRE FRANCHE			1			
6	6X4–42177–00	RUBBER, HANDLE CAOUTCHOUC, POIGNEE			1			
7	6X4–42137–00	INDICATOR, THROTTLE INDICATEUR, ACCELERATION			1			
8	6X4–41291–00	BUSHING COUSSINET			1			
9	6X4–44139–01	COLLAR COLLIER			1			
10	90152–05007	SCREW, COUNTERSUNK VIS, TETE NOYEE			1			
11	91490–20010	PIN. COTTER GOUPILLE			1			
12	6X4–44177–00	WASHER RONDELLE			2			
13	6X4–42128–00	COLLAR, DISTANCE 1 COLLIER, D'ENTRETOISE 1			1			
14	90501–23215	SPRING, COMPRESSION RESSORT, COMPRESSION			1			
15	6X4–44188–00	WASHER RONDELLE			2			
16	90386–08032	BUSH DOUILLE			1			
17	63D–42126–00	FRICTION, STEERING HANDLE GRIP CUVETTE, POIGNEE DE DIRECTION			1			
18	6X4–48154–00	KNOB, THROTTLE BOUTON, ACCELERATEUR			1			
19	95380–06600	NUT, HEXAGON ECROU			1			
20	91490–20010	PIN. COTTER GOUPILLE			1			
21	6X4–44100–01	SHIFT LINK ASSY MAILLON DE SELECTEUR			1			
22	6X4–42115–00	.SHAFT, STEERING HANDLE .AXE, BARRE FRANCHE			1			
23	6X4–44102–00	.SHIFT ASSIST ASSY. .SELECTEUR DE MAINTIEN			1			
24	6X4–47731–01	.GEAR, DRIVE .PIGNON D'ENTRAINEMENT			1			
25	6X4–44132–00	.BUSHING .COUSSINET			1			
26	6X4–14137–00	.CLIP .JONC			1			
27	6X4–48261–00	.ARM, THROTTLE .BRAS, ACCELERATION			1			

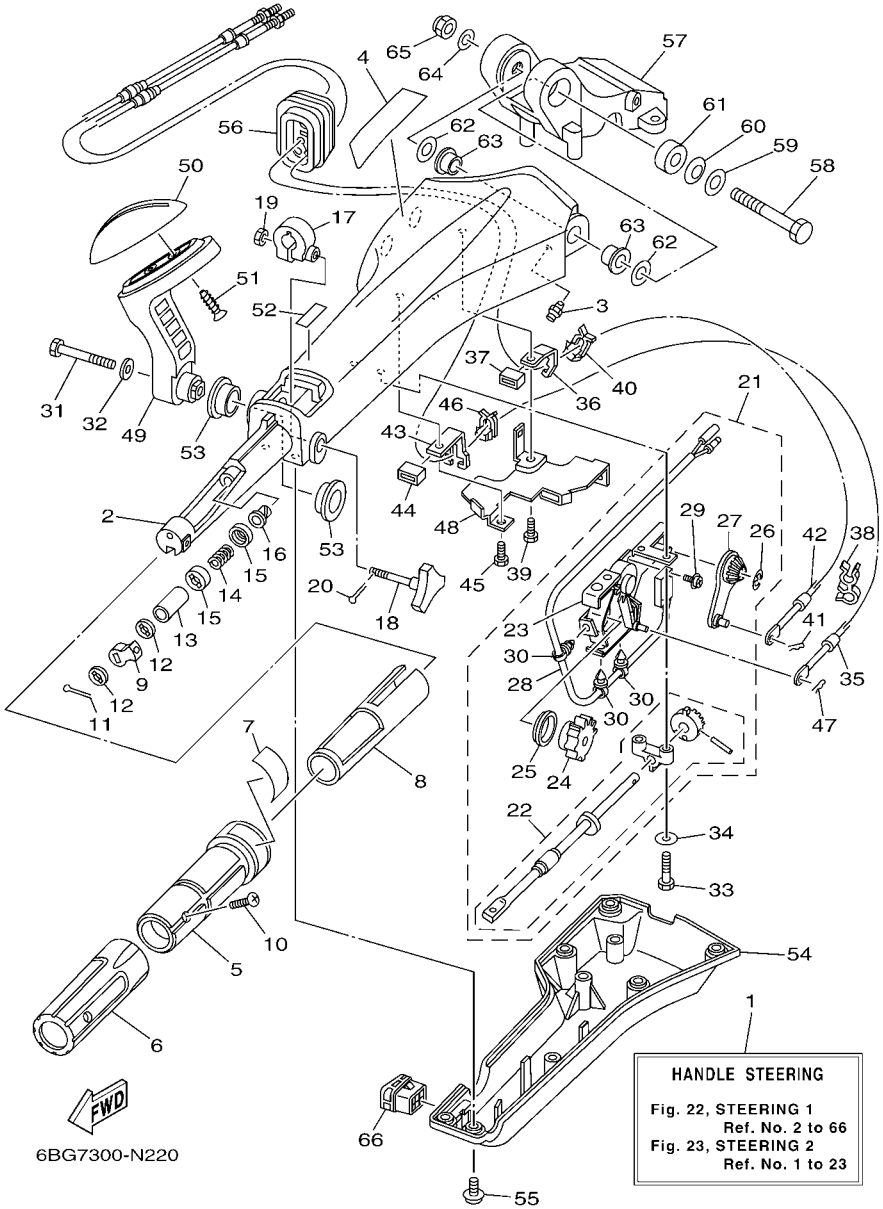

FIG. 22 STEERING 1 DIRECTION 1

REF. NO.	PART NO. N° PIECES	DESCRIPTION DESCRIPTION	ET	ED	EHD			REMARKS REMARQUES
28	6X4–82540–00	.NEUTRAL SWITCH ASSY .CONTACTEUR DE POINT-MORT			1			
29	703–48129–00	.SCREW 3 .VIS 3			2			
30	6X4–42821–00	.BAND, CLAMP .BRIDE, COLLIER			3			
31	97095–08040	BOLT BOULON			1			
32	92995–08600	WASHER RONDELLE			1			
33	97095–06030	BOLT BOULON			2			
34	92995–06600	WASHER RONDELLE			2			
35	67C–48321–11	CABLE CABLE			1			
36	6X4–48538–00	CLAMP, CABLE 1 COLLIER			1			
37	6X4–26367–00	PROTECTOR PROTECTEUR			1			
38	90464–09M42	CLAMP BRIDE			1			
39	97095–06014	BOLT BOULON			1			
40	63D–48538–00	CLAMP, CABLE 1 COLLIER			1			
41	90468–10005	CLIP JONC			1			
42	69W–26301–00	THROTTLE CABLE ASSY CABLE D'ACCELERATEUR			1			
43	6X4–48538–10	CLAMP, CABLE 1 COLLIER			1			
44	6X4–26367–00	PROTECTOR PROTECTEUR			1			
45	97095–06014	BOLT BOULON			1			
46	63D–48538–00	CLAMP, CABLE 1 COLLIER			1			
47	90468–10005	CLIP JONC			1			
48	6X4–42159–00	STAY SUPPORT			1			
49	6X4–44159–00–8D	HANDLE, GEAR SHIFT POIGNEE, LEVIER D'EMBRAYAGE			1			
50	6X4–44173–00	LEVER, SHIFT CONTROL POIGNEE, INVERSION			1			
51	97780–60920	SCREW, TAPPING VIS, TETE BOMBEE			2			
52	6X3–44191–00	INDICATOR, SHIFT ETIQUETTE, EMBRAYAGE			1			
53	90386–26MA3	BUSH DOUILLE			2			
54	6X4–42131–11	COVER, HANDLE STEERING COUVERCLE			1			

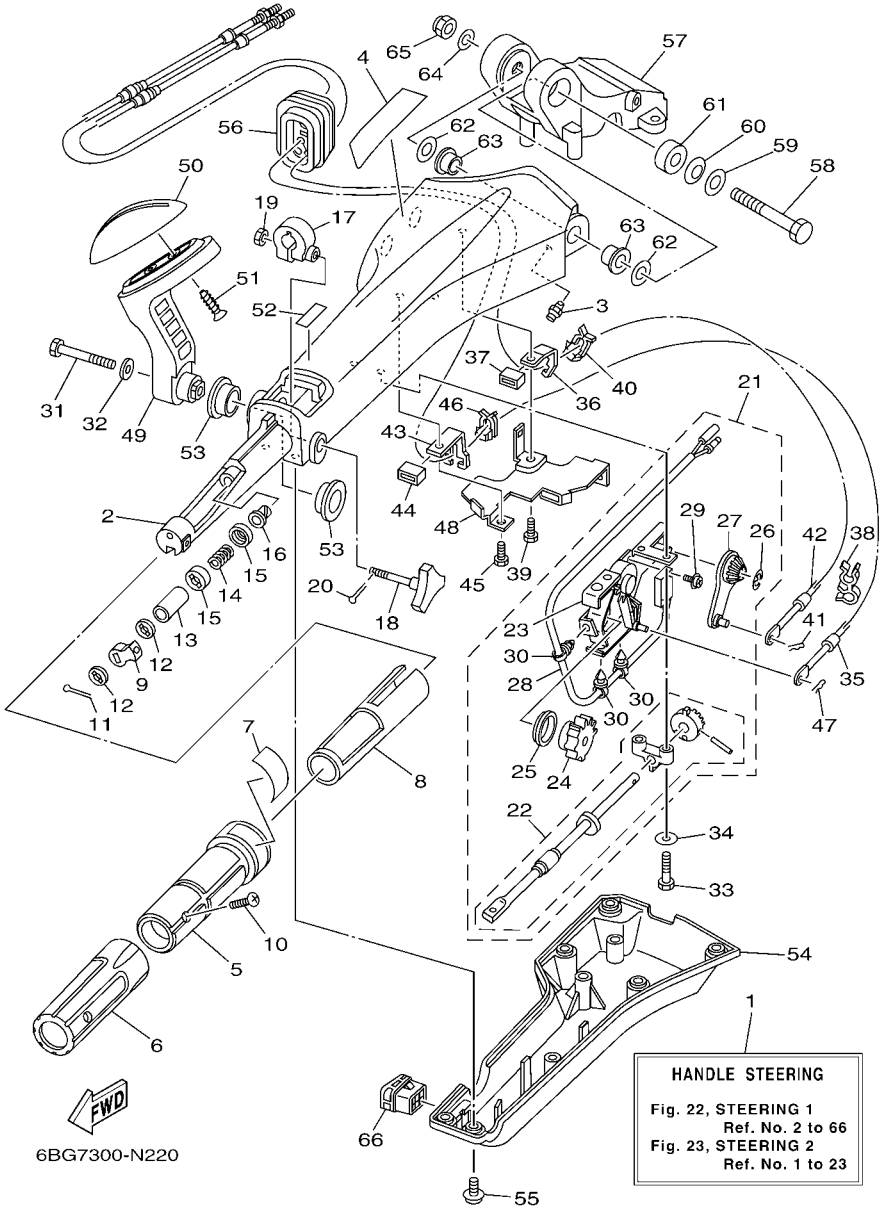

FIG. 22 STEERING 1 DIRECTION 1

REF. NO.	PART NO. N° PIECES	DESCRIPTION DESCRIPTION	ET	ED	EHD			REMARKS REMARQUES
55	97985–06216	SCREW, WITH WASHER VIS, AVEC RONDELLE			6			
56	6X4–42725–01	GROMMET PASSE-FIL			1			
57	63D–42121–22–8D	BRACKET SUPPORT			1			
58	90101–12014	BOLT BOULON			1			
59	92990–12200	WASHER, PLAIN RONDELLE, PLATE			1			
60	90206–12M22	WASHER, WAVE RONDELLE, ONDULEE			1			
61	90387–12M02	COLLAR COLLERETTE			1			
62	90201–12035	WASHER, PLATE RONDELLE, PLATE			2			
63	90386–12003	BUSH DOUILLE			2			
64	92990–12600	WASHER, PLATE RONDELLE, PLATE			1			
65	90185–12M12	NUT, SELF-LOCKING ECROU,AUTO-BLOQUANT			1			
66	6X4–42728–10	CAP CAPUCHON			1			

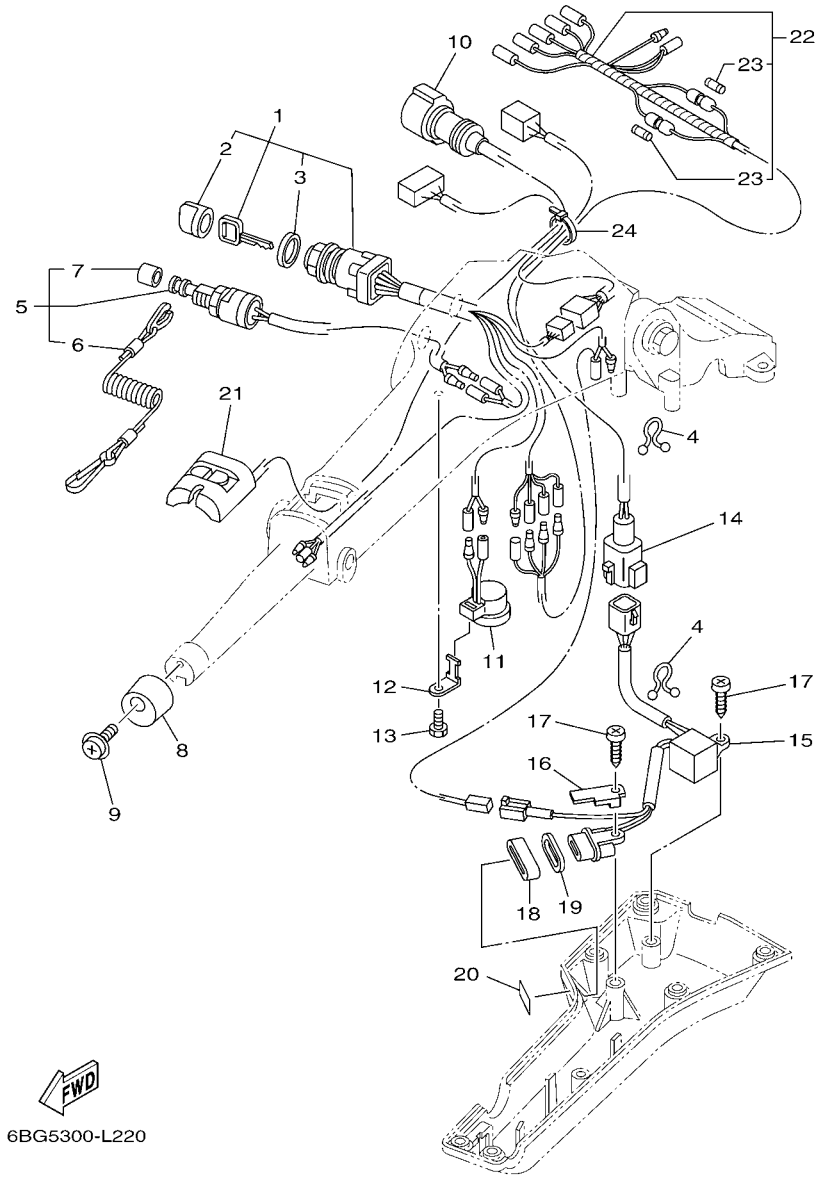

FIG. 23 STEERING 2 DIRECTION 2

REF. NO.	PART NO. N° PIECES	DESCRIPTION DESCRIPTION	ET	ED	EHD			REMARKS REMARQUES
1	6X4–82510–41	MAIN SWITCH ASSY CONTACTEUR A CLEF COMPLET			1			
2	676–82577–01	.CAP, KEY .CABOCHON			1			
3	703–82532–00	.CAP .COUVERCLE			1			
4	90464–08M07	CLAMP BRIDE			2			
5	69W–82575–00	ENGINE STOP SWITCH ASSY COUPE CIRCUIT CPLT			1			
6	682–82556–00	.LANYARD, STOP SWITCH .CORDON DU COUPE CIRCUIT			1			
7	689–8257Y–00	.CAP .COUVERCLE			1			
8	6X4–42728–00	CAP CAPUCHON			1			
9	97980–06216	SCREW, WITH WASHER VIS, AVEC RONDELLE			1			
10	6X4–82586–10	EXT., WIRE HARNESS (L:950MM) EXT, FAISCEAU DE FILS (L:950MM			1			
11	6X4–83383–00	BUZZER RONFLEUR			1			
12	6X4–83386–00	STAY, BUZZER SUPPOR, RONFLEUR			1			
13	97095–06014	BOLT BOULON			1			
14	6X4–83653–20	WIRE, LEAD (L:700MM) FIL (L:700MM)			1			
15	6C5–84301–00	PILOT LIGHT ASSY 1 LAMPE-TEMOIN 1			1			
16	6X4–44114–00	STOPPER PLAQUETTE			1			
17	97780–60620	SCREW, TAPPING VIS, TETE BOMBEE			2			
18	6X4–42727–00	GROMMET PASSE-FIL			1			
19	6H4–83589–00	GASKET GARNITURE			1			
20	6X4–85415–00	MARK, SIGNAL LAMP ETIQUETTE			1			
21	6X4–81860–00	SWITCH ASSY COMMUTATEUR COMPLET			1			
22	6Y5–83553–M0	WIRE, LEAD (L=2.5M) FIL (L=2.5M)			1			
23	1E6–82151–00	.FUSE (10A) .FUSIBLE (10A)			2			
24	90465–13M36	CLAMP BRIDE			1			

FIG. 24 STEERING FRICTION CUVETTE POIGNEE DE DIRECTION

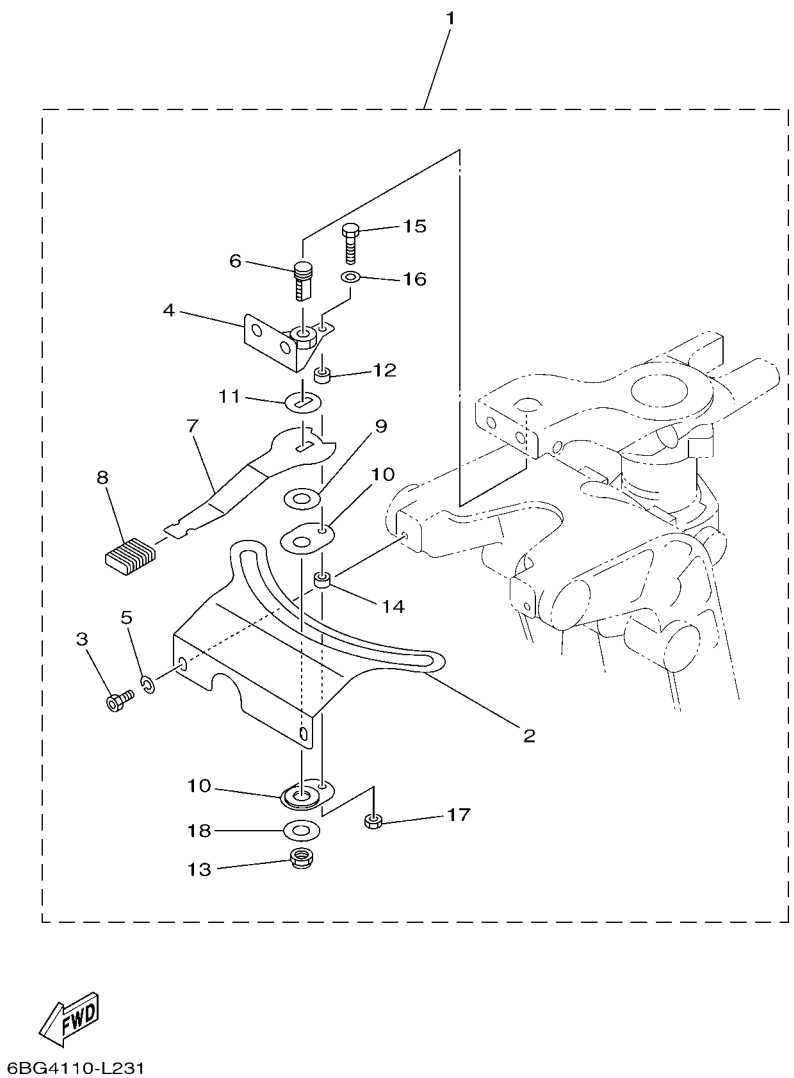

REF. NO.	PART NO. N° PIECES	DESCRIPTION DESCRIPTION	ET	ED	EHD			REMARKS REMARQUES
1	67C–42508–04	STEERING FRICTION ASSY DIRECTION FRICTION (ENS.)			1			
2	67C–42527–03	.PLATE, FRICTION .PLAQUE, FRICTION			1			
3	90109–06M88	.BOLT .BOULON			2			
4	67C–42525–00	.PLATE, FRICTION .PLAQUE, FRICTION			1			
5	92990–06100	.WASHER, SPRING .RONDELLE, GROWER			2			
6	67C–42562–00	.SHAFT, STEERING LOCK .ARBRE,ANTIVOL DE DIRECTION			1			
7	67C–42561–00	.KNOB, STEERING LOCK .BOUTON			1			
8	689–43633–00	.COVER, TILT LEVER .COUVERCLE			1			
9	90202–10M56	.WASHER, PLATE .RONDELLE, PLATE			1			
10	65W–42528–00	.PLATE, FRICTION .PLAQUE, FRICTION			2			
11	90209–10M26	.WASHER .RONDELLE			1			
12	90387–05053	.COLLAR .COLLERETTE			1			
13	90185–10M14	.NUT, SELF-LOCKING .ECROU,AUTO-BLOQUANT			1			
14	90387–05054	.COLLAR .COLLERETTE			1			
15	97095–05020	.BOLT .BOULON			1			
16	92995–05600	.WASHER .RONDELLE			1			
17	95380–05600	.NUT .ECROU			1			
18	90201–106M5	.WASHER, PLATE .RONDELLE, PLATE			1			

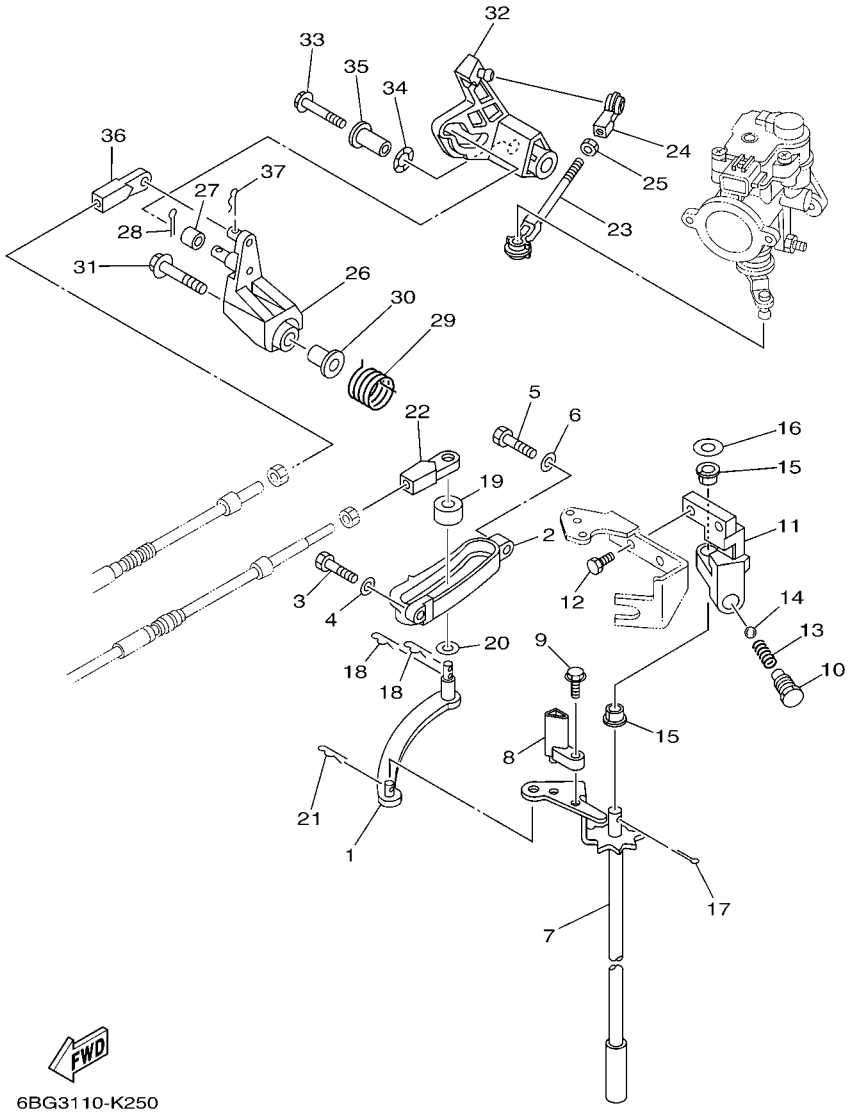

FIG. 25 CONTROL COMMANDE

REF. NO.	PART NO. N° PIECES	DESCRIPTION DESCRIPTION	ET	ED	EHD			REMARKS REMARQUES
1	69W–44121–00	LEVER, SHIFT ROD LEVIER, TIGE D'INVERSION	1	1	1			
2	62Y–44117–01	BRACKET SUPPORT	1	1	1			
3	97095–06020	BOLT BOULON	1	1	1			
4	92995–06600	WASHER RONDELLE	1	1	1			
5	97095–06025	BOLT BOULON	1	1	1			
6	92995–06600	WASHER RONDELLE	1	1	1			
7	6BG–44120–01	HANDLE GEAR SHIFT ASSY LEVIER D'EMBRAYAGE	1		1			S(16.1") S(16.1")
	6C5–44120–02	HANDLE GEAR SHIFT ASSY LEVIER D'EMBRAYAGE	1	1	1			L(21.0") L(21.0")
8	6C5–44122–00	BUSHING, SHIFT ROD LEVER DOUILLE, LEVIER D'EMBRAYAGE	1	1	1			
9	97595–05514	BOLT, WITH WASHER VIS HEXAGONAL AVC RONDELLE	1	1	1			
10	62Y–42715–01	BUSHING COUSSINET	1	1	1			
11	62Y–44118–00–94	BRACKET SUPPORT	1	1	1			
12	90101–06054	BOLT BOULON	2	2	2			
13	90501–12082	SPRING, COMPRESSION RESSORT, COMPRESSION	1	1	1			
14	93501–04M02	BALL BILLE	1	1	1			
15	90386–90M90	BUSH DOUILLE	2	2	2			
16	90201–10M20	WASHER, PLATE RONDELLE, PLATE	1	1	1			
17	91490–20015	PIN. COTTER GOUPILLE	1	1	1			
18	90468–18008	CLIP JONC	2	2	2			
19	688–44122–00	BUSHING, SHIFT ROD LEVER DOUILLE, LEVIER D'EMBRAYAGE	1	1	1			
20	90202–07M07	WASHER, PLATE RONDELLE, PLATE	1	1	1			
21	90468–18008	CLIP JONC	1	1	1			
22	69W–48344–00	CABLE END, REMOTE CONTROL CHAPE CABLE	1	1	1			
23	6J8–41237–00	JOINT, LINK RACCORD	1	1	1			
24	682–41237–00	JOINT, LINK RACCORD	1	1	1			
25	95380–05700	NUT ECROU	1	1	1			
26	62Y–42154–00	LEVER, THROTTLE CONTROL LEVIER DE COMMANDE D'AVANCE	1	1	1			

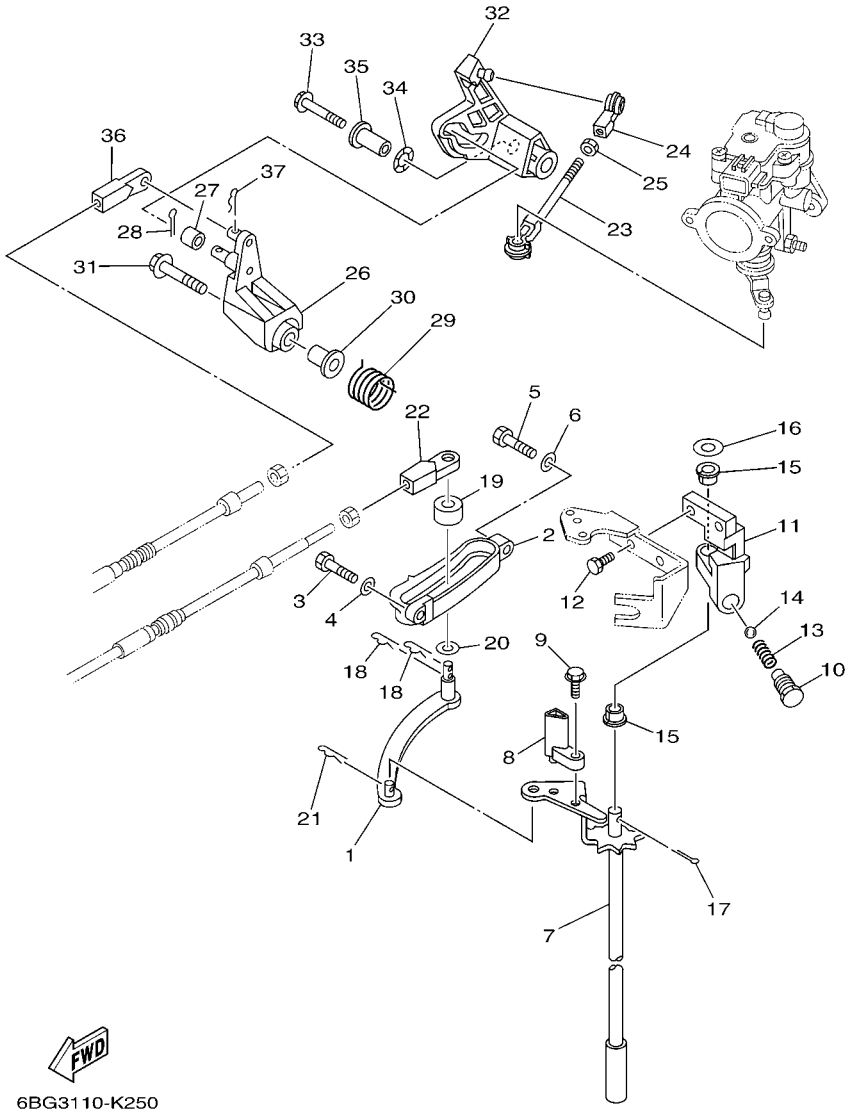

FIG. 25 CONTROL COMMANDE

REF. NO.	PART NO. N° PIECES	DESCRIPTION DESCRIPTION	ET	ED	EHD			REMARKS REMARQUES
27	6C5–42171–00	BUSHING COUSSINET	1	1	1			
28	91490–16010	PIN. COTTER GOUPILLE	1	1	1			
29	62Y–44135–00	SPRING RESSORT	1	1	1			
30	90387–06M45	COLLAR COLLERETTE	1	1	1			
31	90119–06126	BOLT, WITH WASHER BOULON, AVEC RONDELLE	1	1	1			
32	6BG–42335–00	LEVER, ACCEL. CONTROL LEVIER, ACCELERATION	1	1	1			
33	95895–06045	BOLT, FLANGE BOULON	1	1	1			
34	90206–10M04	WASHER, WAVE RONDELLE, ONDULEE	1	1	1			
35	90387–06279	COLLAR COLLERETTE	1	1	1			
36	69W–48344–00	CABLE END, REMOTE CONTROL CHAPE CABLE	1	1	1			
37	90468–18008	CLIP JONC	1	1	1			

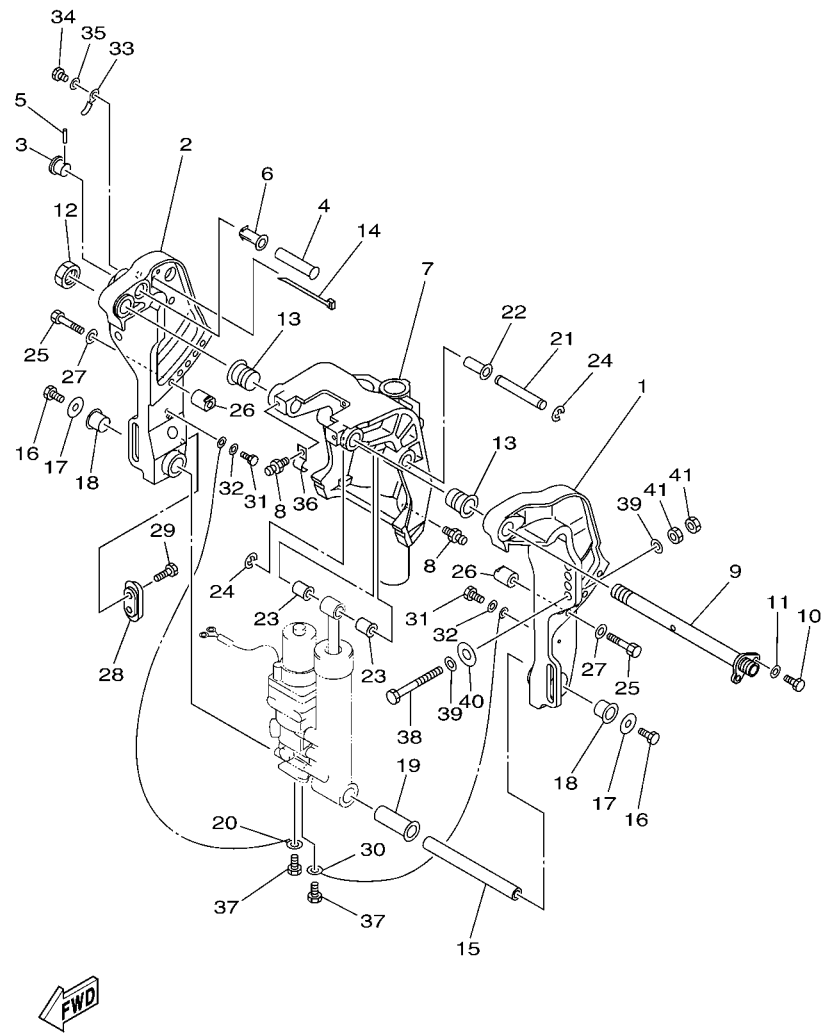

FIG. 26 BRACKET 1 SUPPORT 1

REF. NO.	PART NO. N° PIECES	DESCRIPTION DESCRIPTION	ET	ED	EHD			REMARKS REMARQUES
1	6K9–43111–10–8D	BRACKET, CLAMP 1 PRESSE 1	1					
2	6BG–43112–10–8D	BRACKET, CLAMP 2 PRESSE 2	1					
3	65W–43192–00	KNOB, STOPPER BOUTON, BUTEE DE RELEVAGE	1					
4	65W–43191–00	SHAFT, STOPPER AXE, BUTEE	1					
5	91690–30018	PIN, SPRING AGRAFFE	1					
6	90386–14MA1	BUSH DOUILLE	1					
7	6BG–43311–00–8D	BRACKET, SWIVEL 1 SUPPORT, PIVOT 1	1					S(16.1") S(16.1")
	6BG–43311–10–8D	BRACKET, SWIVEL 1 SUPPORT, PIVOT 1	1					L(21.0") L(21.0")
8	93700–06M03	NIPPLE, GREASE PION	3					
9	6K9–43131–01	BOLT, CLAMP BRACKET BOULON, PRESSE	1					
10	97095–08020	BOLT BOULON	1					
11	92995–08600	WASHER RONDELLE	1					
12	90185–22M11	NUT, SELF-LOCKING ECROU,AUTO-BLOQUANT	1					
13	90386–22MA4	BUSH DOUILLE	2					
14	90465–13M11	CLAMP BRIDE	2					
15	90249–18M35	PIN GOUPILLE	1					
16	97080–08016	BOLT BOULON	2					
17	90201–08M00	WASHER, PLATE RONDELLE, PLATE	2					
18	90386–18M44	BUSH DOUILLE	2					
19	90386–18MA0	BUSH DOUILLE	1					
20	6H1–82148–00	WIRE, LEAD 4 FIL 4	1					
21	90249–12M38	PIN GOUPILLE	1					
22	90381–12M10	BUSH, SOLID DOUILLE, SOLIDE	1					
23	90381–12M11	BUSH, SOLID DOUILLE, SOLIDE	2					
24	99080–10600	CIRCLIP CIRCLIP	2					
25	97095–10050	BOLT BOULON	2					
26	6BG–43654–00	NUT 1 ECROU 1	2					

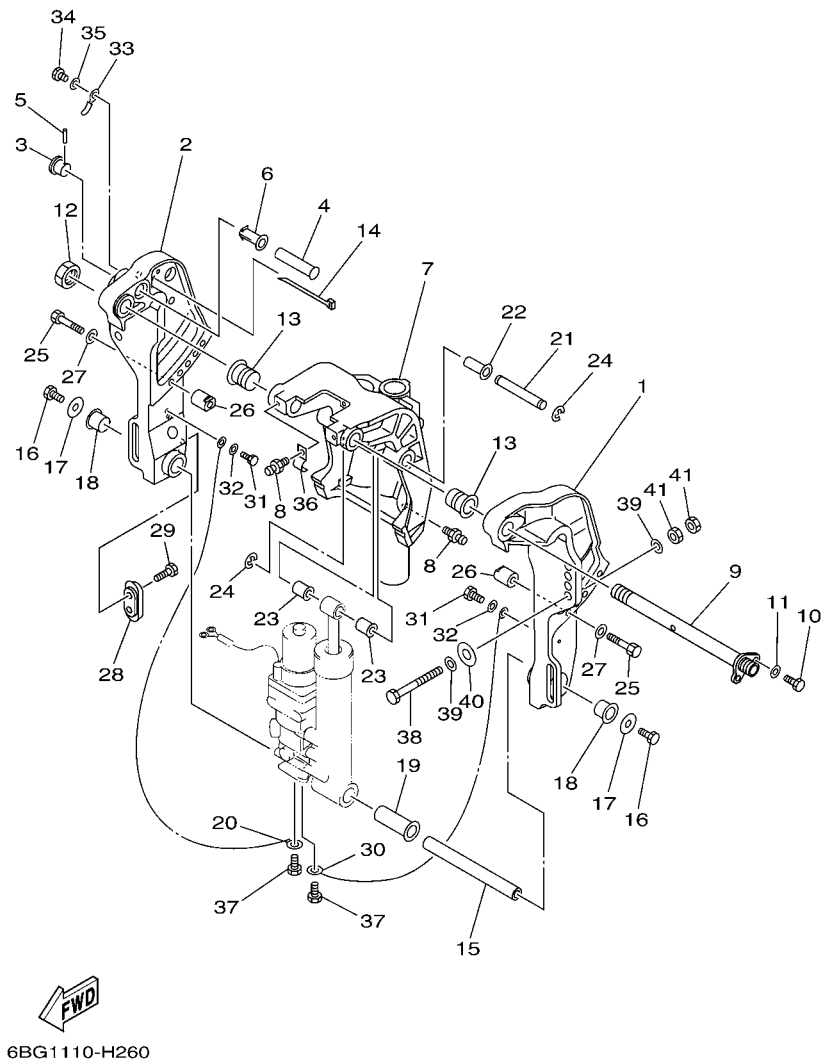

6BG1110-H260

FIG. 26 BRACKET 1 SUPPORT 1

REF. NO.	PART NO. N° PIECES	DESCRIPTION DESCRIPTION	ET	ED	EHD			REMARKS REMARQUES
27	92995–10600	WASHER RONDELLE	2					
28	65W–45251–00	ANODE ANODE	1					
29	90101–06020	BOLT BOULON	2					
30	6U0–82127–00	WIRE, LEAD 2 FIL 2	1					
31	97095–06014	BOLT BOULON	2					
32	92995–06600	WASHER RONDELLE	2					
33	90465–10M77	CLAMP BRIDE	1					
34	97095–06014	BOLT BOULON	1					
35	92995–06600	WASHER RONDELLE	1					
36	90465–08M63	CLAMP BRIDE	1					
37	97085–06010	BOLT BOULON	2					
38	90101–12M65	BOLT BOULON	4					
39	90201–12062	WASHER, PLATE RONDELLE, PLATE	8					
40	90201–12426	WASHER, PLATE RONDELLE, PLATE	4					
41	95380–12600	NUT ECROU	8					

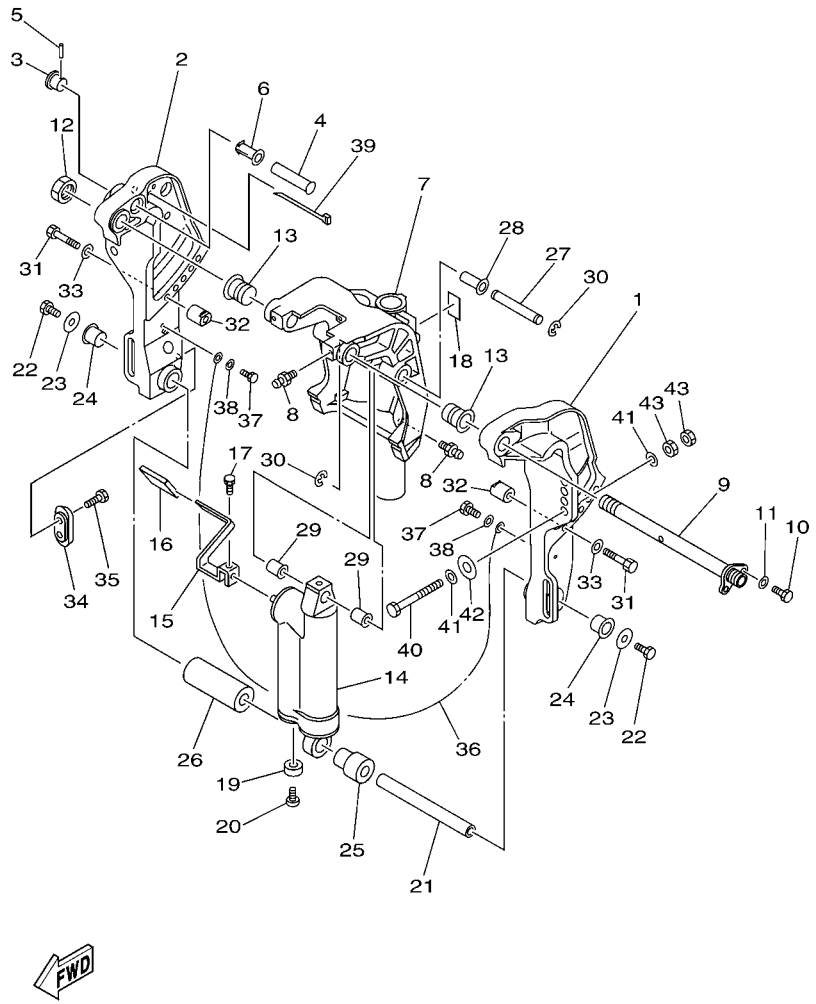

6BG1110-H270

FIG. 27 BRACKET 2 SUPPORT 2

REF. NO.	PART NO. N° PIECES	DESCRIPTION DESCRIPTION	ET	ED	EHD			REMARKS REMARQUES
1	6K9–43111–10–8D	BRACKET, CLAMP 1 PRESSE 1		1	1			
2	6BG–43112–10–8D	BRACKET, CLAMP 2 PRESSE 2		1	1			
3	65W–43192–00	KNOB, STOPPER BOUTON, BUTEE DE RELEVAGE		1	1			
4	65W–43191–00	SHAFT, STOPPER AXE, BUTEE		1	1			
5	91690–30018	PIN, SPRING AGRAFFE		1	1			
6	90386–14MA1	BUSH DOUILLE		1	1			
7	6BG–43311–00–8D	BRACKET, SWIVEL 1 SUPPORT, PIVOT 1			1			S(16.1") S(16.1")
	6BG–43311–10–8D	BRACKET, SWIVEL 1 SUPPORT, PIVOT 1		1	1			L(21.0") L(21.0")
8	93700–06M03	NIPPLE, GREASE PION		3				
	93700–06M03	NIPPLE, GREASE PION			1			
9	6K9–43131–01	BOLT, CLAMP BRACKET BOULON, PRESSE		1	1			
10	97095–08020	BOLT BOULON		1	1			
11	92995–08600	WASHER RONDELLE		1	1			
12	90185–22M11	NUT, SELF-LOCKING ECROU,AUTO-BLOQUANT		1	1			
13	90386–22MA4	BUSH DOUILLE		2	2			
14	67C–43107–02–8D	SHOCK ABSORBER SUB-ASSY AMORTISSEUR (ENS.)			1			S(16.1") S(16.1")
	67C–43107–12–8D	SHOCK ABSORBER SUB-ASSY AMORTISSEUR (ENS.)		1	1			L(21.0") L(21.0")
15	67C–43631–00	LEVER, TILT LEVIER, INCLINAISON		1	1			
16	682–43318–01	COVER CAPUCHON		1	1			
17	97095–06010	BOLT BOULON		1	1			
18	63D–43691–00	INDICATOR, TILT ETIQUETTE, RELEVAGE		1	1			
19	663–45251–00	ANODE ANODE		1	1			
20	98680–06525	SCREW, OVAL HEAD VIS, TETE FRAISEE BOMBEE		1	1			
21	90249–18M35	PIN GOUPILLE		1	1			
22	97080–08016	BOLT BOULON		2	2			
23	90201–08M00	WASHER, PLATE RONDELLE, PLATE		2	2			
24	90386–18M44	BUSH DOUILLE		2	2			

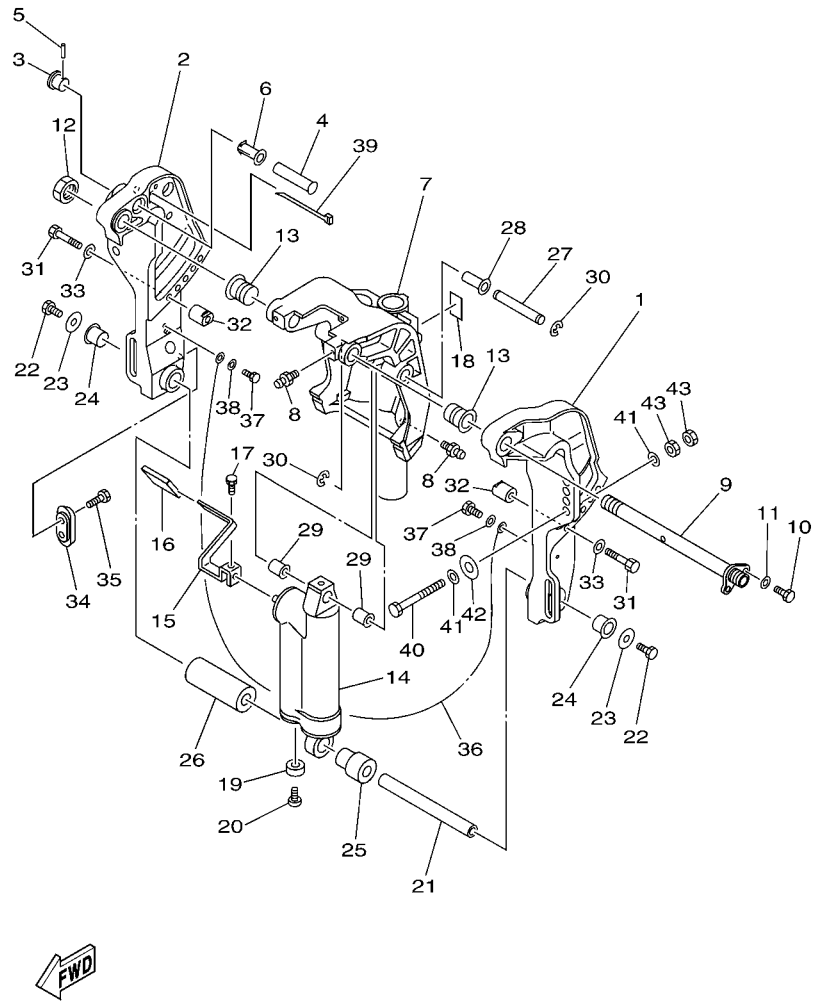

FIG. 27 BRACKET 2 SUPPORT 2

REF. NO.	PART NO. N° PIECES	DESCRIPTION DESCRIPTION	ET	ED	EHD			REMARKS REMARQUES
25	90386–18MA5	BUSH DOUILLE		1	1			
26	90387–18M03	COLLAR COLLERETTE		1	1			
27	90249–12M38	PIN GOUPILLE		1	1			
28	90381–12M10	BUSH, SOLID DOUILLE, SOLIDE		1	1			
29	90381–12M11	BUSH, SOLID DOUILLE, SOLIDE		2	2			
30	99080–10600	CIRCLIP CIRCLIP		2	2			
31	97095–10050	BOLT BOULON		2	2			
32	6BG–43654–00	NUT 1 ECROU 1		2	2			
33	92995–10600	WASHER RONDELLE		2	2			
34	65W–45251–00	ANODE ANODE		1	1			
35	90101–06020	BOLT BOULON		2	2			
36	67C–82127–20	WIRE, LEAD 2 FIL 2		1	1			
37	97095–06014	BOLT BOULON		2	2			
38	92995–06600	WASHER RONDELLE		2	2			
39	90465–13M11	CLAMP BRIDE		1	1			
40	90101–12M65	BOLT BOULON		4	4			
41	90201–12062	WASHER, PLATE RONDELLE, PLATE		8	8			
42	90201–12426	WASHER, PLATE RONDELLE, PLATE		4	4			
43	95380–12600	NUT ECROU		8	8			

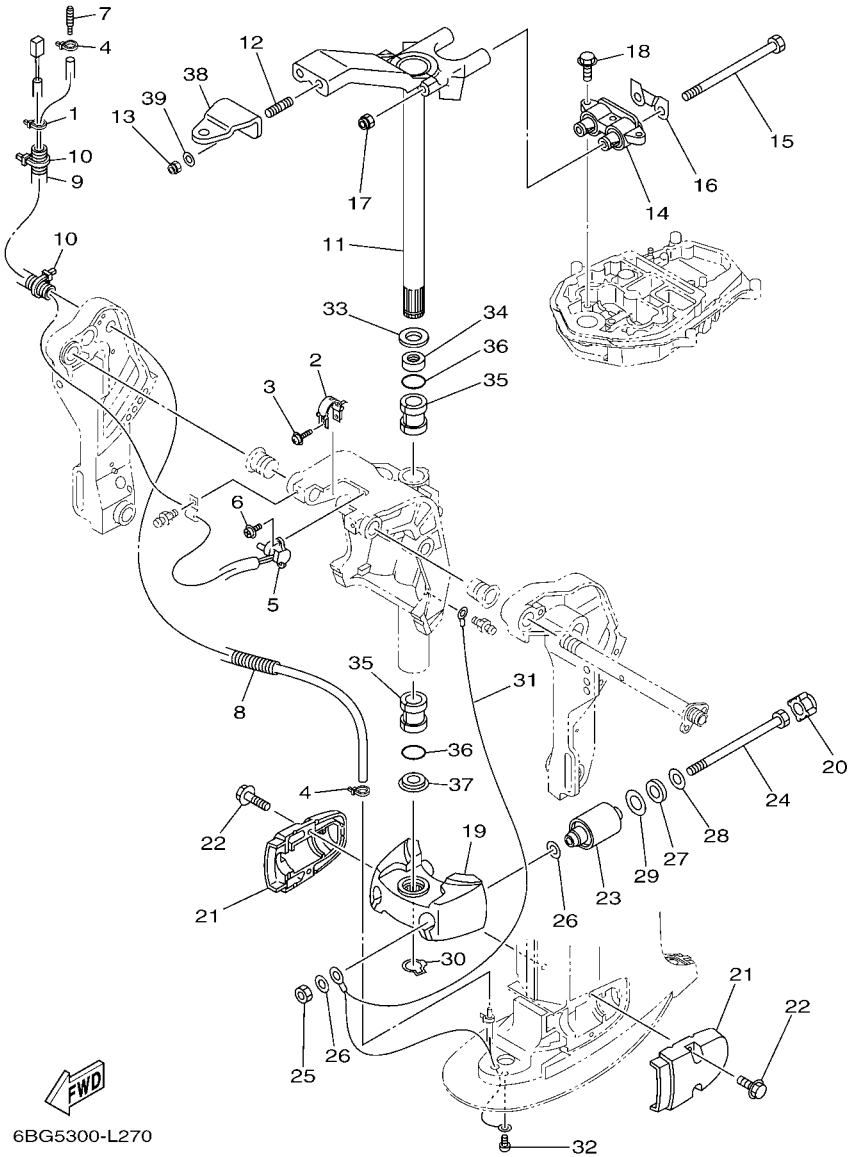

FIG. 28 BRACKET 3 SUPPORT 3

REF. NO.	PART NO. N° PIECES	DESCRIPTION DESCRIPTION	ET	ED	EHD			REMARKS REMARQUES
1	90465–11M10	CLAMP BRIDE	1					
2	6K9–43139–10	CAM, TRIM SENDER VILEBREQUIN TRUM	1					
3	90159–05059	SCREW, WITH WASHER VIS, AVEC RONDELLE	1					
4	90465–11M10	CLAMP BRIDE	2	2	2			
5	67H–83672–01	TRIM SENDER INCLINER RACCORD	1					
6	97985–06216	SCREW, WITH WASHER VIS, AVEC RONDELLE	2					
7	6E5–83558–00	END, NIPPLE RACCORD DE NIPPLE	1	1	1			
8	6BG–44385–00	HOSE, WATER 1 TUBE D'EAU 1	1		1			S(16.1") S(16.1")
	6BG–44385–10	HOSE, WATER 1 TUBE D'EAU 1	1	1	1			L(21.0") L(21.0")
9	90447–19014	TUBE DURITE	1					
10	90465–13M18	CLAMP BRIDE	2					
11	6BG–42510–00–8D	STEERING BRACKET ASSY DIRECTION SUPPORT (ENS.)	1		1			S(16.1") S(16.1")
	6BG–42510–10–8D	STEERING BRACKET ASSY DIRECTION SUPPORT (ENS.)	1	1	1			L(21.0") L(21.0")
12	90116–10063	BOLT, STUD GOUJON	2	2	2			
13	90185–10027	NUT, SELF-LOCKING ECROU,AUTO-BLOQUANT	2	2	2			
14	67C–44514–00	MOUNT DAMPER, UPPER SIDE SILENT-BLOC, SUPERIEUR LATERAL	1		1			S(16.1") S(16.1")
	67C–44514–10	MOUNT DAMPER, UPPER SIDE SILENT-BLOC, SUPERIEUR LATERAL	1	1	1			L(21.0") L(21.0")
15	90109–08229	BOLT BOULON	2	2	2			
16	66T–44526–30	PLATE PLAQUE	1	1	1			
17	90185–08018	NUT, SELF-LOCKING ECROU,AUTO-BLOQUANT	2	2	2			
18	97575–08530	BOLT, WITH WASHER VIS HEXAGONAL AVC RONDELLE	3	3	3			
19	67C–44551–01–8D	HOUSING, LOWER MOUNT RUBBER 1 BOITIER, SILENT-BLOC INFERIEUR	1		1			S(16.1") S(16.1")
	6C5–44551–00–8D	HOUSING, LOWER MOUNT RUBBER 1 BOITIER, SILENT-BLOC INFERIEUR	1	1	1			L(21.0") L(21.0")
20	69W–44575–00	DAMPER, LOWER MOUNT RUBBER SILENT-BLOC, INFERIEUR	2	2	2			
21	6C5–44552–00–8D	HOUSING, LOWER MOUNT RUBBER 2 BOITIER, SILENT-BLOC INFERIEUR	2	2	2			
22	97575–08530	BOLT, WITH WASHER VIS HEXAGONAL AVC RONDELLE	4	4	4			
23	67C–44555–21	MOUNT DAMPER, LOWER SIDE SILENT-BLOC, INFERIEUR LATERAL	2		2			S(16.1") S(16.1")

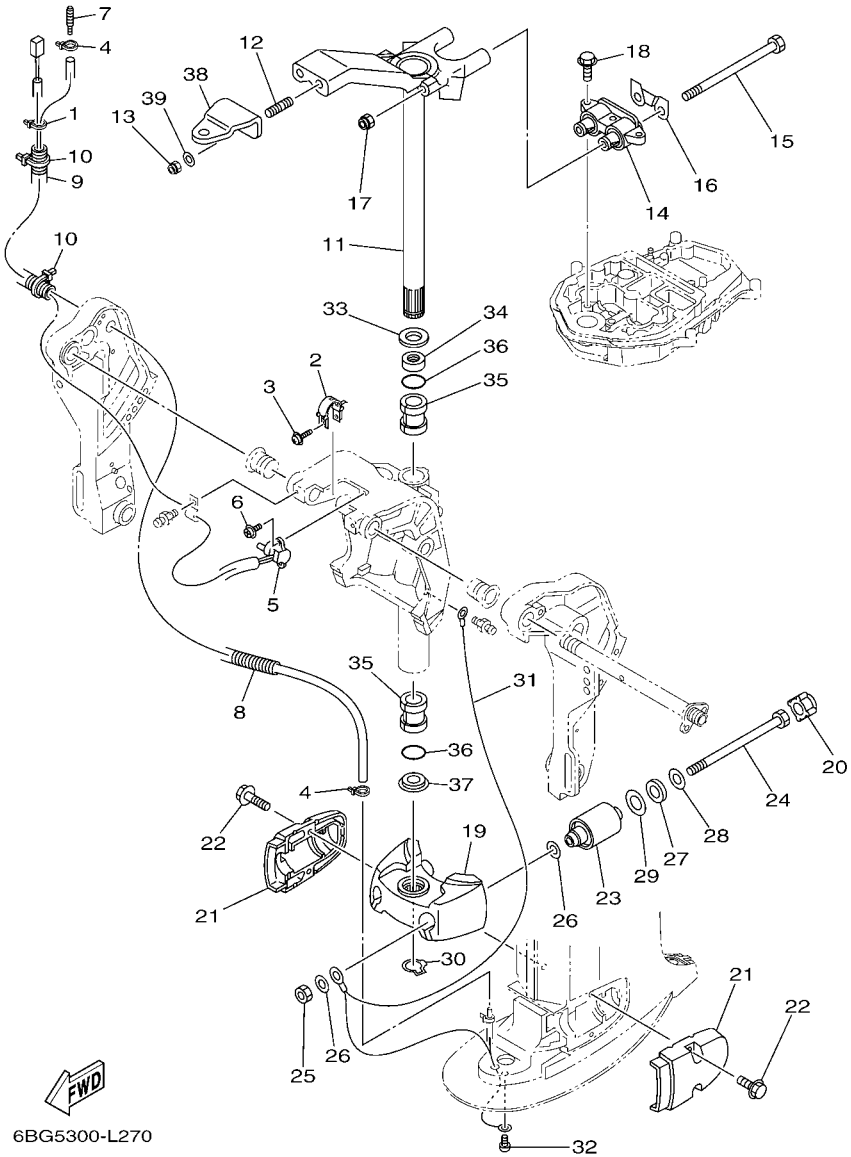

FIG. 28 BRACKET 3 SUPPORT 3

REF. NO.	PART NO. N° PIECES	DESCRIPTION DESCRIPTION	ET	ED	EHD			REMARKS REMARQUES
23	67C–44555–11	MOUNT DAMPER, LOWER SIDE SILENT-BLOC, INFERIEUR LATERAL	2	2	2			L(21.0") L(21.0")
24	90109–12MA3	BOLT BOULON	2	2	2			
25	95380–12700	NUT ECROU	2	2	2			
26	90201–12M16	WASHER, PLATE RONDELLE, PLATE	4	4	4			
27	90202–21100	WASHER, PLATE RONDELLE, PLATE	2	2	2			
28	90201–13M19	WASHER, PLATE RONDELLE, PLATE	2	2	2			
29	90201–22M05	WASHER, PLATE RONDELLE, PLATE	2	2	2			
30	93410–28M06	CIRCLIP CLIPS	1	1	1			
31	67C–82127–00	WIRE, LEAD 2 FIL 2	1		1			S(16.1") S(16.1")
	67C–82127–10	WIRE, LEAD 2 FIL 2	1	1	1			L(21.0") L(21.0")
32	97885–06008	SCREW, PAN HEAD VIS, A ENCOCHE	1	1	1			
33	90201–30M00	WASHER, PLATE RONDELLE, PLATE	1	1	1			
34	90386–30M78	BUSH DOUILLE	1	1	1			
35	90386–30M77	BUSH DOUILLE	2	2	2			
36	93210–29M94	O-RING JOINT TORIQUE	2	2	2			
37	90386–30M60	BUSH DOUILLE	1	1	1			
38	65W–48511–01	HOOK, STEERING ATTACHE, DIRECTION	1	1				
39	90201–10049	WASHER, PLATE RONDELLE, PLATE	2	2				

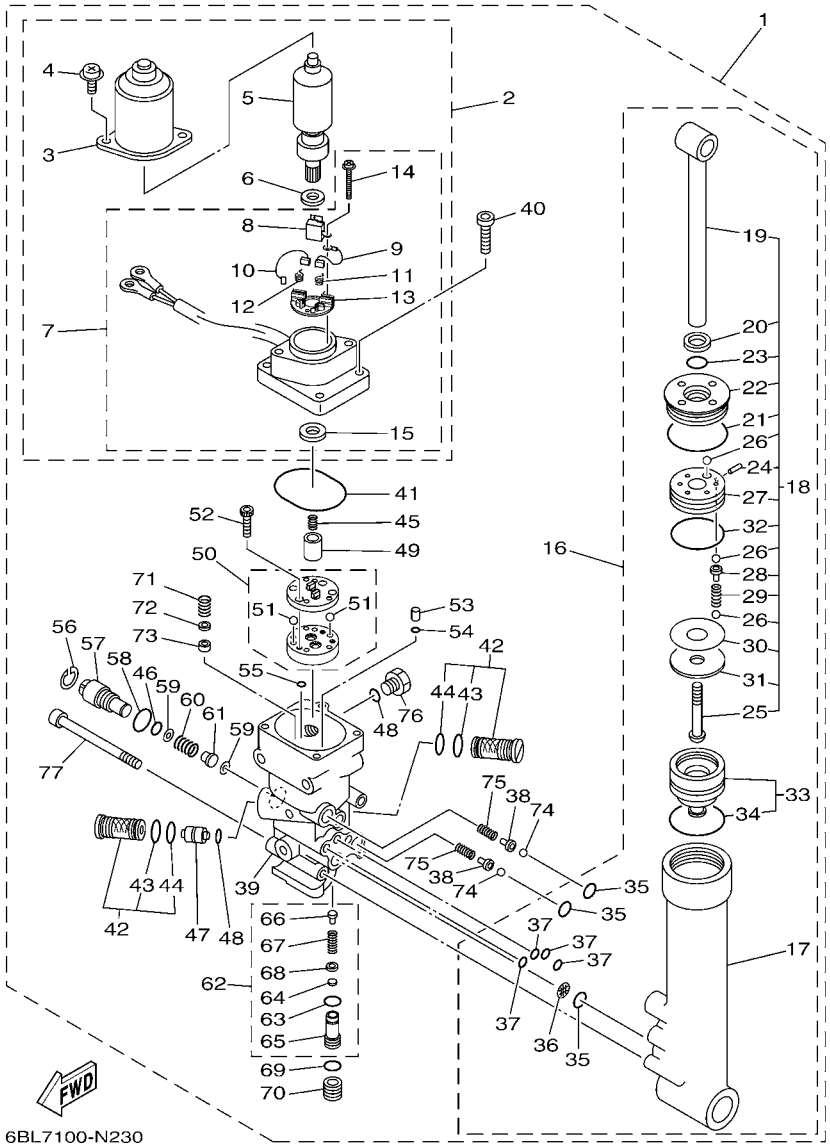

FIG. 29 POWER TRIM & TILT ASSY PUISSANCE PARER ET INCLINER

REF. NO.	PART NO. N° PIECES	DESCRIPTION DESCRIPTION	ET	ED	EHD			REMARKS REMARQUES
1	67C–43800–11–8D	POWER TRIM & TILT ASSY PUISSANCE PARER ET INCLINER (E	1					
2	67C–43880–01	.MOTOR ASSY .MOTEUR (ENS.)	1					
3	65W–43804–01	..STATOR ASSY ..STATOR (ENS.)	1					
4	65W–43887–01	..BOLT ..BOULON	2					
5	65W–43805–01	..ARMATURE ASSY ..INDUIT (ENS.)	1					
6	65W–4387G–00	..WASHER ..RONDELLE	1					
7	67C–43881–01	..FRAME, END ..BATI	1					
8	65W–82181–00	...CIRCUIT BREAKER COMP. ...RUPTEUR COMPLET	1					
9	65W–43892–01	...BRUSH 2 ...BALAI 2	1					
10	65W–43891–01	...BRUSH 1 ...BALAI 1	1					
11	65W–4386K–01	...SPRING, BRUSH ...RESSORT, BALAI	1					
12	65W–4386L–00	...SPRING, BRUSH 2 ...RESSORT, BALAI 2	1					
13	65W–4380F–01	...PLATE, BRUSH HOLDER ...PLAQUE	1					
14	65W–43879–01	...SCREW, WITH WASHER ...VIS, AVEC RONDELLE	2					
15	65W–43882–01	...OIL SEAL ...JOINT SPI	1					
16	67C–43840–01	.POWER TILT ASSY .PUISSANCE INCLINER (ENS.)	1					
17	65W–4380K–00	..CYLINDER, TILT SUB ASSY ..CYLINDRE	1					
18	67C–43810–01	..TILT PISTON SUB ASSY ..INCLINER PISTON AUXILIAIRE(ENS	1					
19	65W–43801–01	...ROD ...TIGE	1					
20	65W–43812–00	...SEAL, DUST ...JOINT	1					
21	65W–43865–00	...O-RING ...JOINT TORIQUE	1					
22	65W–43811–01	...SCREW, CYLINDER END ...VIS, CYLINDRE RACCORD	1					
23	67C–43867–00	...O-RING ...JOINT TORIQUE	1					
24	91609–16012	...PIN, SPRING ...AXE DE RESSORT	1					
25	67C–43886–00	...BOLT ...BOULON	1					
26	93505–32038	...BALL ...BILLE	11					
27	65W–4385A–01	...PISTON, TILT ...PISTON	1					

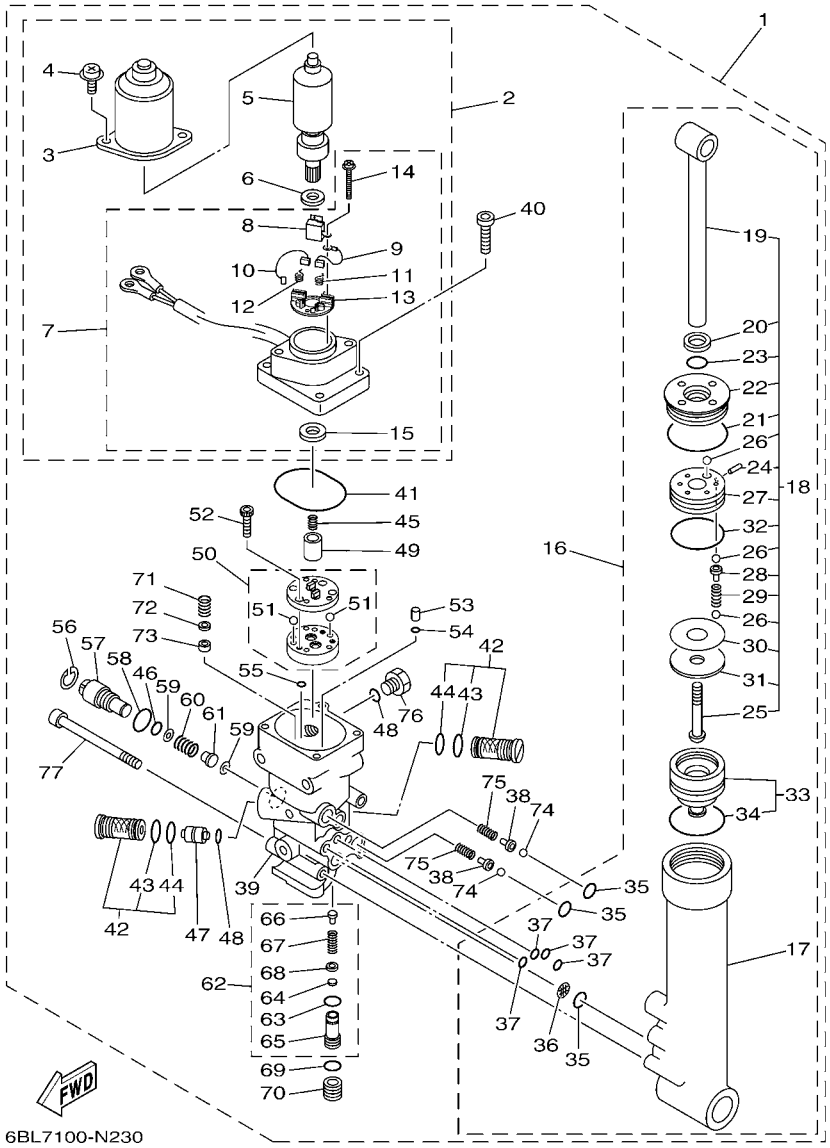

FIG. 29 POWER TRIM & TILT ASSY PUISSANCE PARER ET INCLINER

REF. NO.	PART NO. N° PIECES	DESCRIPTION DESCRIPTION	ET	ED	EHD			REMARKS REMARQUES
28	65W–4386A–00	...PIN, ABSORBER VALVE ...GOUPILLE, SOUPAPE	5					
29	67C–43857–00	...SPRING, ABSORBER VALVE ...RESSORT	5					
30	15A–22442–00	...SHIM ...CALE	1					UN UN
31	90201–10038	...WASHER, PLATE ...RONDELLE, PLATE	1					
32	6H1–43862–00	...O-RING ...JOINT TORIQUE	1					
33	65W–4381B–00	..FREE PISTON SUB ASSY ..PISTON AUXILIAIRE (ENS.)	1					
34	6H1–43861–10	...O-RING ...JOINT TORIQUE	1					
35	93210–11368	..O-RING ..JOINT TORIQUE	3					
36	69J–4381C–00	..FILTER 3 ..FILTRE 3	1					
37	93210–064A5	..O-RING ..JOINT TORIQUE	4					
38	65W–4386A–00	.PIN, ABSORBER VALVE .GOUPILLE, SOUPAPE	2					
39	67C–4380L–02	.HOUSING, TRIM & TILT SUB ASSY .CARTER	1					
40	91380–06020	.BOLT .BOULON	4					
41	93210–50768	.O-RING .JOINT TORIQUE	1					
42	67F–43802–00	.VALVE SUB ASSY .CLAPET AUXILIAIRE (ENS.)	2					
43	6H1–43866–01	..O-RING ..JOINT TORIQUE	1					
44	93210–12N52	..O-RING ..JOINT TORIQUE	1					
45	6T4–43853–00	.SPRING, MAIN VALVE .RESSORT	1					
46	93210–10M74	.O-RING .JOINT TORIQUE	1					
47	62X–43841–00	.PISTON, SHUTTLE .PISTON	1					
48	93210–09165	.O-RING .JOINT TORIQUE	2					
49	65W–43831–00	.CONNECTOR, SHAFT .RACCORD	1					
50	65W–43830–00	.GEAR PUMP ASSY .POMPE A PIGNON (ENS.)	1					
51	93505–32038	..BALL ..BILLE	2					
52	91318–04025	.BOLT .BOULON	4					
53	65W–43817–00	.FILTER 2 .FILTRE 2	2					
54	93210–04N50	.O-RING .JOINT TORIQUE	2					

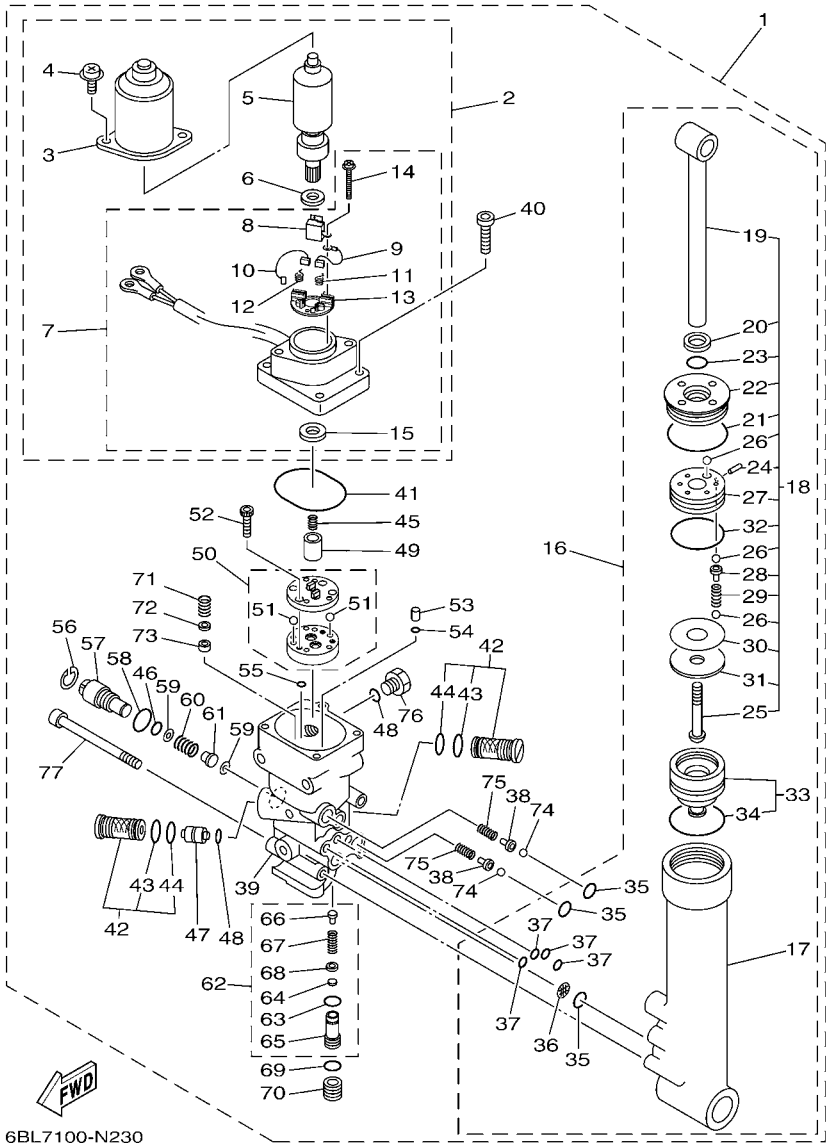

FIG. 29 POWER TRIM & TILT ASSY PUISSANCE PARER ET INCLINER

REF. NO.	PART NO. N° PIECES	DESCRIPTION DESCRIPTION	ET	ED	EHD			REMARKS REMARQUES
55	93210–04N51	.O-RING .JOINT TORIQUE	2					
56	6H1–43875–00	.RING, SNAP .RESSORT	1					
57	6H1–43845–00	.SCREW, MANUAL RELEASE .VIS	1					
58	6D8–43863–00	.O-RING .JOINT TORIQUE	1					
59	6H1–43847–00	.SEAT, MANUAL VALVE .SIEGE	2					
60	65W–43854–00	.SPRING, MANUAL RELEASE .RESSORT	1					
61	65W–4382A–00	.ADAPTOR 1 .ADAPTEUR 1	1					
62	CS2–43803–81	.CASE VALVE COMP. .CARTER VALVE COMP.	1					
63	93210–10M74	..O-RING ..JOINT TORIQUE	1					
64	6H1–4384G–11	..SEAL, RELIEF VALVE ..JOINT	1					
65	67C–43851–00	..SEAT, RELIEF VALVE ..SIEGE	1					
66	67F–43843–00	..SCREW, VALVE LOCK ..VIS	1					
67	6H1–43856–10	..SPRING, DOWN RELIEF ..RESSORT	1					
68	6H1–43844–10	..PIN, VALVE SUPPORT ..GOUPILLE	1					
69	93210–11073	.O-RING .JOINT TORIQUE	1					
70	65W–43843–00	.SCREW, VALVE LOCK .VIS	1					
71	6H1–43856–10	.SPRING, DOWN RELIEF .RESSORT	1					
72	6H1–43844–10	.PIN, VALVE SUPPORT .GOUPILLE	1					
73	6H1–4384F–10	.SEAL, MAIN VALVE .JOINT	1					
74	93501–08001	.BALL .BILLE	2					
75	65W–43853–00	.SPRING, MAIN VALVE .RESSORT	2					
76	6H1–43829–00	.PLUG, RESERVOIR .BOUCHON	1					
77	62X–43878–01	.BOLT, SOCKET .BOULON	3					

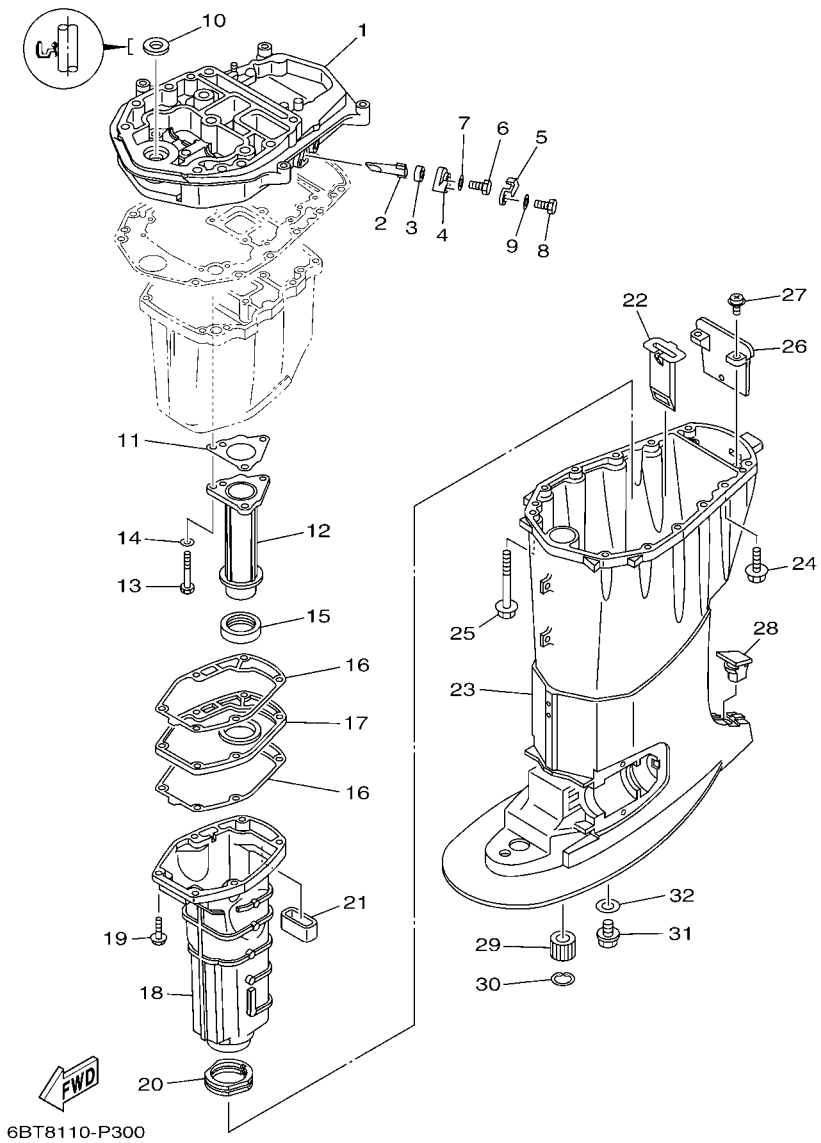

FIG. 30 UPPER CASING FOURREAU

REF. NO.	PART NO. N° PIECES	DESCRIPTION DESCRIPTION	ET	ED	EHD			REMARKS REMARQUES
1	6BG–41137–00–CA	GUIDE, EXHAUST COLLECTEUR D'ECHAPPEMENT	1	1	1			Go to P/N : PE0-OM-150038
2	62Y–11325–00	ANODE ANODE	1	1	1			
3	66M–11328–00	GROMMET, ANODE PASSE-FIL	1	1	1			
4	66M–11327–00–94	COVER, ANODE COUVERCLE ANODE	1	1	1			
5	66M–12535–00	PLATE PLAQUE	1	1	1			
6	97095–05012	BOLT BOULON	1	1	1			
7	92995–05600	WASHER RONDELLE	1	1	1			
8	97013–06020	BOLT BOULON	1	1	1			
9	92903–06600	WASHER, PLATE RONDELLE, PLATE	1	1	1			
10	93110–16004	OIL SEAL JOINT SPY	1	1	1			Go to P/N : PE0-OM-150038
11	64J–41133–10	GASKET, EXHAUST MANIFOLD 1 JOINT, PIPE D'ECHAPPEMENT	1	1	1			
12	6BG–41131–00–CA	MANIFOLD, EXT. 1 PIPE D'ECHAPPEMENT	1	1	1			
13	97075–06050	BOLT BOULON	3	3	3			
14	92995–06600	WASHER RONDELLE	3	3	3			
15	64J–46132–10	GASKET 1 JOINT 1	1	1	1			
16	6BG–41134–00	GASKET, EXHAUST MANIFOLD JOINT, PIPE D'ECHAPPEMENT	2	2	2			
17	6BG–45181–00–CA	PLATE PLAQUETTE	1	1	1			
18	6BG–14711–00–CA	MUFFLER 1 POT D'ECHAPPEMENT 1	1		1			S(16.1") S(16.1")
	69W–14711–00–CA	MUFFLER 1 POT D'ECHAPPEMENT 1	1	1	1			L(21.0") L(21.0")
19	97575–06525	BOLT, WITH WASHER VIS HEXAGONAL AVC RONDELLE	6	6	6			
20	67C–45123–00	GASKET, MUFFLER JOINT, POT DE DETENTE	1	1	1			
21	62Y–45127–00	SEAL JOINT	1	1	1			
22	64J–77123–00	GUIDE 1 GUIDE 1	1	1	1			
23	6BG–45111–00–8D	CASING, UPPER FOURREAU	1		1			S(16.1") S(16.1")
	6BG–45111–20–8D	CASING, UPPER FOURREAU	1	1	1			L(21.0") L(21.0")
24	90119–08102	BOLT, WITH WASHER BOULON, AVEC RONDELLE	4	4	4			
25	90119–08132	BOLT, WITH WASHER BOULON, AVEC RONDELLE	8	8	8			

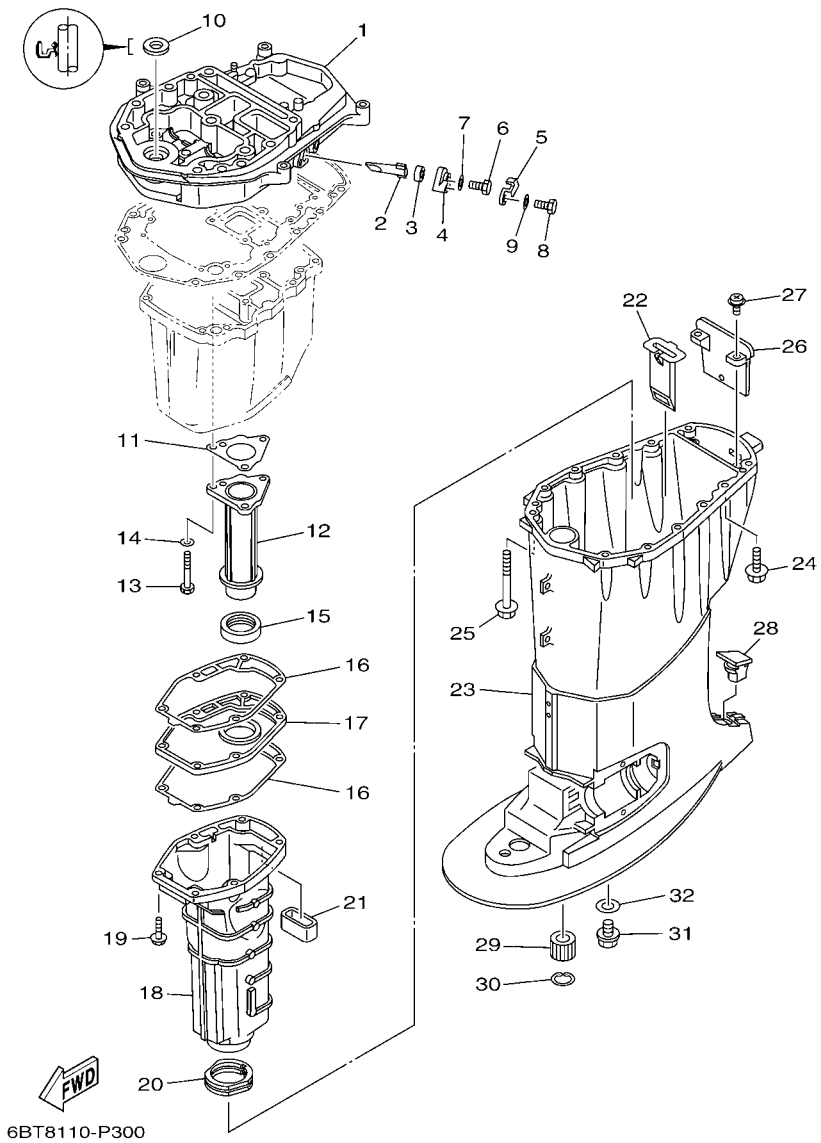

FIG. 30 UPPER CASING FOURREAU

REF. NO.	PART NO. N° PIECES	DESCRIPTION DESCRIPTION	ET	ED	EHD			REMARKS REMARQUES
26	67C–45151–00	COVER, UPPER CASING CAPUCHON, FOURREAU	1	1	1			
27	97980–05216	SCREW, WITH WASHER VIS, AVEC RONDELLE	2	2	2			
28	63D–45155–00	CAP CAPUCHON	1		1			S(16.1") S(16.1")
	6C5–45155–00	CAP CAPUCHON	1	1	1			L(21.0") L(21.0")
29	6A0–45318–00	BUSHING, DRIVE SHAFT DOUILLE, ARBRE MOTEUR	1	1	1			L(21.0") L(21.0")
30	93420–36M01	CIRCLIP CIRCLIP, TYPE S	1	1	1			L(21.0") L(21.0")
31	90340–14M06	PLUG, STRAIGHT SCREW PLOT, FILETE DROIT	1	1	1			L(21.0") L(21.0")
32	90430–14M09	GASKET JOINT	1	1	1			L(21.0") L(21.0")

PARTS NEWS

YAMAHA MOTOR CO., LTD.
2500 SHINGAI IWATA SHIZUOKA JAPAN

News No.PE0-OM-150038 Revise (1/2)

Date:2015/10/13

***Added Interchangeability (Revise : Oct.,14,2015)**

Signature:K.Tanaka

Cause : ☑ Revision Notice ☐ Correction ☐ Sales Unit Change ☐ Others

Model	F40A, F40F(6BG8) / F30A, F30B(6BT8)
Subject	PARTS CATALOGUE CORRECTIONS
CATALOGUE NO.	See the"List of Models and CATALOGUE No's below."

Time of YPEC Revision Text, Illustration --> Nov./13/2015 PDF Replace --> Nov./13/2015

(YPEC = Yamaha Parts Electrical Catalogue = Website parts catalogue)

Applicable Engine Serial No.

MODEL NAME	MODEL CODE	Applicable Engine Serial No.
F40A, F40F	6BG8	6BG:1052700-
F30A, F30B	6BT8	6BT:1012242-

*1: Interchangeability

A	Old Parts →	Old Parts
	New Parts →	New Parts
B	Old Parts →	Old Parts
	New Parts →	New Parts
C	Old Parts →	Old Parts
	New Parts →	New Parts
	These parts are interchangeable with a set	

UPPER CASING

1 .LIST CORRECTION

Fig. No.	Ref. No.	OLD P/No.	NEW P/No.	DESCRIPTION	Q'TY	*Interchangeability	REMARKS
*1	1	6BG-41137-00-CA	**6BG-41137-10-CA**	GUIDE, EXHAUST	1	○	***Part number revision**
	10	93110-16004	**93103-16011**	OIL SEAL	1	○	***Part number revision**

2. ILLUSTRATION CORRECTION

(OLD)

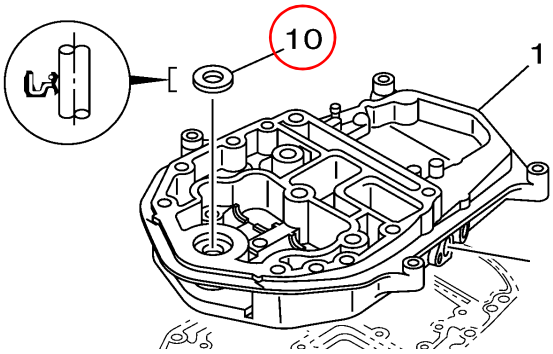

(NEW)

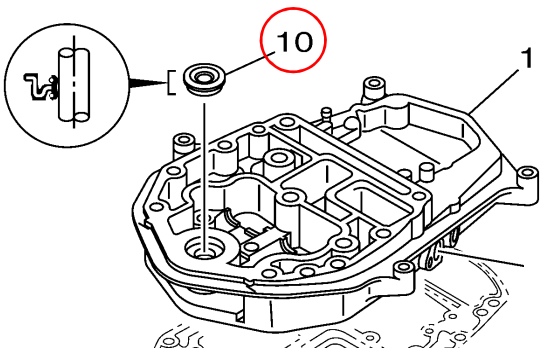

Parts Manager Check	Service Manager Check	Parts Manager File

YAMAHA MOTOR CO.,LTD
2500 Shingai Iwata Shizuoka 438-8501.Japan
Parts & Acc. Engineering Div., YMC

YAMAHA GENUINE Parts & Accessories

PARTS NEWS

YAMAHA MOTOR CO., LTD.
2500 SHINGAI IWATA SHIZUOKA JAPAN

News No.PE0-OM-150038 Revise (2/2)

Date:2015/10/13

***Added Interchangeability (Revise : Oct.,14,2015)**

Signature:K.Tanaka

Cause : ☑ Revision Notice ☐ Correction ☐ Sales Unit Change ☐ Others

Model	F40A, F40F(6BG8) / F30A, F30B(6BT8)
Subject	PARTS CATALOGUE CORRECTIONS
CATALOGUE NO.	See the"List of Models and CATALOGUE No's below."

Time of YPEC Revision Text, Illustration --> Nov./13/2015 PDF Replace --> Nov./13/2015

(YPEC = Yamaha Parts Electrical Catalogue = Website parts catalogue)

Applicable Engine Serial No.

MODEL NAME	MODEL CODE	Applicable Engine Serial No.
F40A, F40F	6BG8	6BG:1052700-
F30A, F30B	6BT8	6BT:1012242-

*1: Interchangeability

A	Old Parts	Old Parts
	New Parts	New Parts
B	Old Parts	Old Parts
	New Parts	New Parts
C	Old Parts	Old Parts
	New Parts	New Parts
	These parts are interchangeable with a set	

REPAIR KIT 2

1 .LIST CORRECTION

Fig. No.	Ref. No.	OLD P/No.	NEW P/No.	DESCRIPTION	Q'TY	REMARKS
*2	1	6BG-W0001-20	**6BG-W0001-21**	LOWER UNIT GASKET KIT	1	***Part number revision**
	5	93110-16004	**93103-16011**	. OIL SEAL	1	***Part number revision**

2. ILLUSTRATION CORRECTION

(OLD)

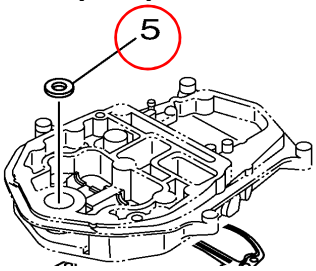

(NEW)

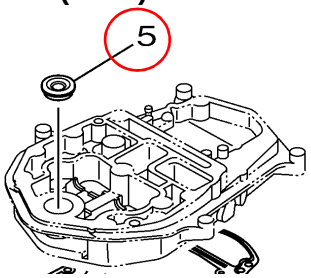

3. LIST of Models and CATALOGUE No's.

The applicable MODELS, MODEL CODES, and CATALOGUE No's are as follows.

MODEL NAME	MODEL CODE	MODEL YEAR	CATALOGUE NO.	Fig.No. *1	Fig.No. *2
F40A	6BG8	2015	1P6BG-100E1	30	38
F30A	6BT8		1P6BT-100E1		
F40A	6BG8		1P6BG-110E1		
F30A	6BT8		1P6BT-110E1		
F40F/F30B	6BG8/6BT8		1P6BG-200S1		43
F40F/F30B	6BG8/6BT8		1P6BT-300F1		38
F40F/F30B	6BG8/6BT8		1P6BT-370E1	27	39

Thank you very much for your cooperation.

Parts Manager Check	Service Manager Check	Parts Manager File

YAMAHA MOTOR CO.,LTD
2500 Shingai Iwata Shizuoka 438-8501.Japan
Parts & Acc. Engineering Div., YMC

YAMAHA GENUINE Parts & Accessories

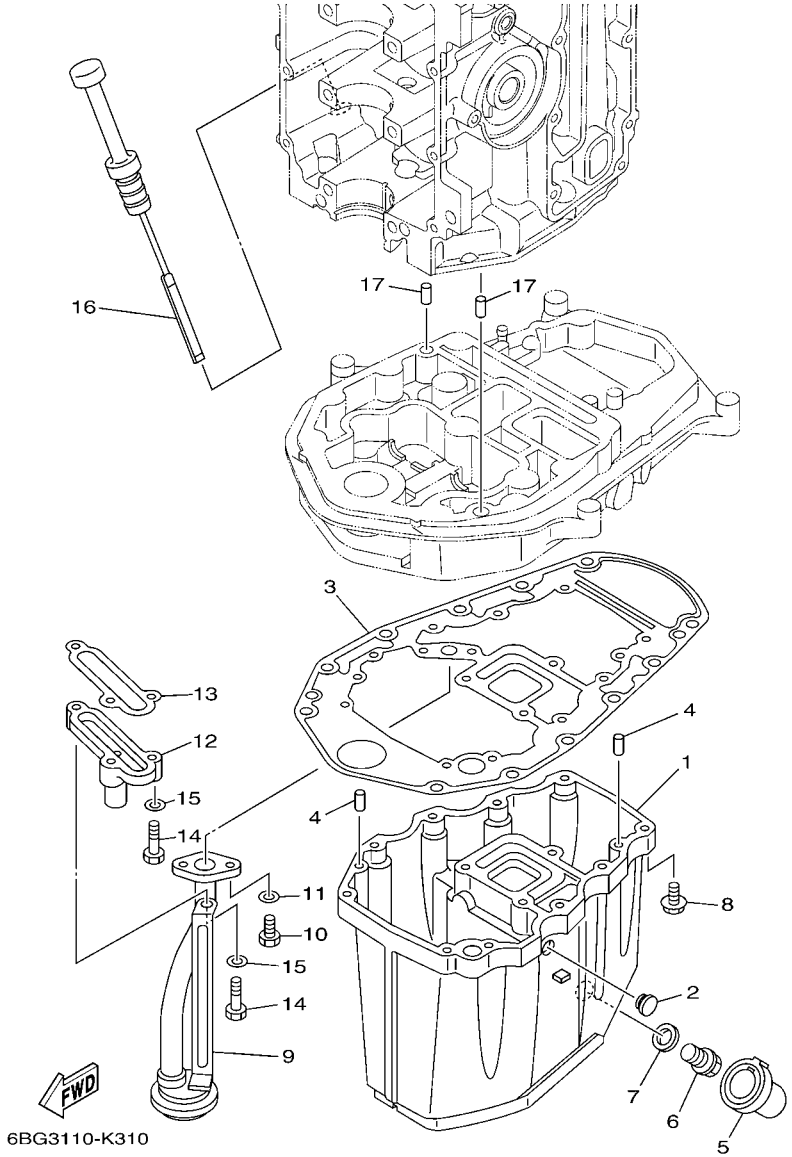

FIG. 31 OIL PAN — VENTILATEUR D'HUILE

REF. NO.	PART NO. N° PIECES	DESCRIPTION DESCRIPTION	ET	ED	EHD			REMARKS REMARQUES
1	6BG–15311–00–CA	OIL PAN VENTILATEUR D'HUILE	1	1	1			
2	90480–12M25	GROMMET PASSE-FIL	1	1	1			
3	69W–15312–00	GASKET, OIL PAN JOINT DE VENTILATEUR D'HUILE	1	1	1			
4	93606–12019	PIN, DOWEL GOUPILLE	4	4	4			
5	67C–15316–10	DAMPER 1 AMORTISSEUR 1	1		1			S(16.1") S(16.1")
	67C–15316–00	DAMPER 1 AMORTISSEUR 1	1	1	1			L(21.0") L(21.0")
6	90340–14M06	PLUG, STRAIGHT SCREW PLOT, FILETE DROIT	1	1	1			
7	90430–14M09	GASKET JOINT	1	1	1			
8	97575–06525	BOLT, WITH WASHER VIS HEXAGONAL AVC RONDELLE	10	10	10			
9	62Y–13411–00	STRAINER, OIL FILTRE, HUILE	1	1	1			
10	97013–06016	BOLT BOULON	2	2	2			
11	92903–06600	WASHER, PLATE RONDELLE, PLATE	2	2	2			
12	6BG–11576–00–94	BODY, RELIEF CORPS DE SECURITE	1	1	1			
13	62Y–13475–00	GASKET JOINT	1	1	1			
14	97013–06025	BOLT BOULON	3	3	3			
15	92903–06600	WASHER, PLATE RONDELLE, PLATE	3	3	3			
16	6BG–15362–00	PLUG, OIL LEVEL PLOT, NIVEAU D'HUILE	1	1	1			
17	93608–12M05	PIN, DOWEL AXE	2	2	2			

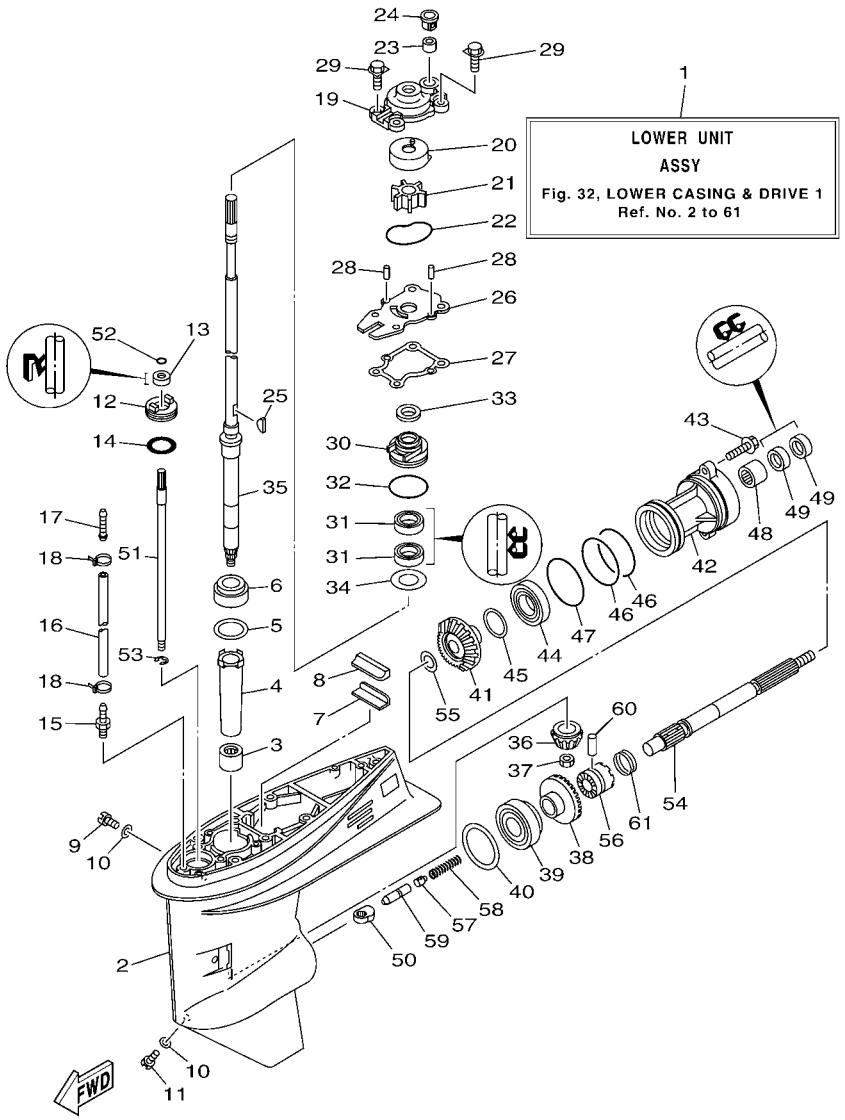

FIG. 32 LOWER CASING & DRIVE 1 BOITIER D'HELICE TRANSMISSION1

REF. NO.	PART NO. N° PIECES	DESCRIPTION DESCRIPTION	ET	ED	EHD			REMARKS REMARQUES
1	6BG–45300–00–8D	LOWER UNIT ASSY UNITE INFERIEURE (ENS.)	1		1			S(16.1") S(16.1")
	6BG–45300–10–8D	LOWER UNIT ASSY UNITE INFERIEURE (ENS.)	1	1	1			L(21.0") L(21.0")
2	62Y–45301–00–8D	CASING, LOWER BEQUILLE	1	1	1			
3	93315–32224	BEARING ROULEMENT	1	1	1			
4	6H4–45536–00	SLEEVE, DRIVE SHAFT MANCHON, ARBRE MOTEUR	1	1	1			
5	663–45587–01	SHIM (T:0.10MM) CALE (T:0.10MM)	1	1	1			UR UR
	663–45587–10	SHIM (T:0.12MM) CALE (T:0.12MM)	1	1	1			UR UR
	663–45587–20	SHIM (T:0.15MM) CALE (T:0.15MM)	1	1	1			UR UR
	663–45587–30	SHIM (T:0.18MM) CALE (T:0.18MM)	1	1	1			UR UR
	663–45587–40	SHIM (T:0.30MM) CALE (T:0.30MM)	1	1	1			UR UR
	663–45587–50	SHIM (T:0.40MM) CALE (T:0.40MM)	1	1	1			UR UR
	663–45587–60	SHIM (T:0.50MM) CALE (T:0.50MM)	1	1	1			UR UR
6	93332–00001	BEARING ROULEMENT	1	1	1			
7	663–45376–00	GUIDE, SEAL DAMPER BUTEE, JOINT CAOUTCHOUC	1	1	1			
8	63D–45375–00	DAMPER, SEAL BOURRELET, CAOUTCHOUC	1	1	1			
9	90340–08002	PLUG, STRAIGHT SCREW PLOT, FILETE DROIT	1	1	1			
10	90430–08020	GASKET JOINT	2	2	2			
11	688–45341–10	PLUG, DRAIN BOUCHON DE VIDANGE	1	1	1			
12	63D–45321–00	PLATE PLAQUETTE	1	1	1			
13	93106–09014	OIL SEAL JOINT SPY	1	1	1			
14	93210–33MG4	O-RING JOINT TORIQUE	1	1	1			
15	6E5–45378–00	NIPPLE, HOSE RACCORD, TUYAU	1	1	1			
16	90445–07ME8	HOSE (L80) DURITE (L80)	1	1	1			
17	6E5–83558–10	END, NIPPLE RACCORD DE NIPPLE	1	1	1			
18	90465–11M10	CLAMP BRIDE	2	2	2			
19	66T–44311–00	HOUSING, WATER PUMP CORPS, POMPE A EAU	1	1	1			
20	63D–44322–00	INSERT, CARTRIDGE CUVETTE	1	1	1			

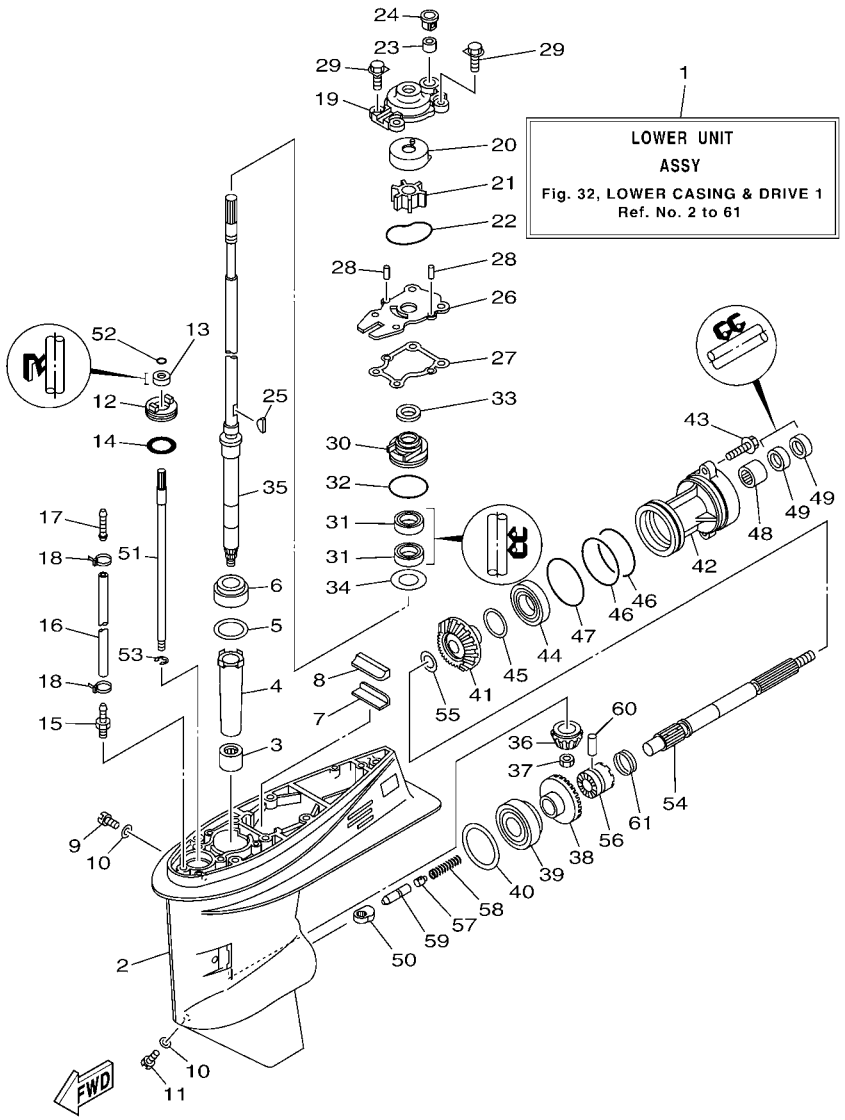

FIG. 32 LOWER CASING & DRIVE 1 BOITIER D'HELICE TRANSMISSION1

REF. NO.	PART NO. N° PIECES	DESCRIPTION DESCRIPTION	ET	ED	EHD			REMARKS REMARQUES
21	6H4–44352–02	IMPELLER TURBINE	1	1	1			
22	93210–59MG7	O-RING JOINT TORIQUE	1	1	1			
23	663–44366–00	DAMPER, WATER SEAL 2 JOINT, TUBE D'EAU 2	1	1	1			
24	63D–44312–00	COVER, WATER PUMP HOUSING COUVERCLE	1	1	1			
25	90280–03M03	KEY, WOODRUFF CLAVETTE, DEMI-LUNE	1	1	1			
26	63D–44323–00	OUTER PLATE, CARTRIDGE PLAQUE EXTERIEURE	1	1	1			
27	63D–44316–00	GASKET, WATER PUMP JOINT, POMPE A EAU	1	1	1			
28	93604–08062	PIN, DOWEL CLAVETTE	2	2	2			
29	90119–08M15	BOLT, WITH WASHER BOULON, AVEC RONDELLE	4	4	4			
30	6BG–44341–00	HOUSING, WATER PUMP CORPS, POMPE A EAU	1	1	1			
31	93101–22M60	OIL SEAL JOINT SPY	2	2	2			
32	93210–48001	O-RING JOINT TORIQUE	1	1	1			
33	66T–45344–01	COVER, OIL SEAL FLASQE, JOINT D'HUILE	1	1	1			
34	90201–27M00	WASHER, PLATE RONDELLE, PLATE	1	1	1			
35	67C–45501–00	DRIVE SHAFT COMP. ARBRE MOTEUR COMP.	1		1			S(16.1") S(16.1")
	67C–45501–10	DRIVE SHAFT COMP. ARBRE MOTEUR COMP.	1	1	1			L(21.0") L(21.0")
36	66T–45551–00	PINION (13T) PIGNON D'ATTAQUE (13D)	1	1	1			
37	90170–12138	NUT ECROU	1	1	1			
38	66T–45560–01	GEAR 1 (26T) PIGNON 1 (26T)	1	1	1			
39	93332–00003	BEARING ROULEMENT	1	1	1			
40	663–45567–01	SHIM (T:0.10MM) CALE (T:0.10MM)	1	1	1			UR UR
	663–45567–10	SHIM (T:0.12MM) CALE (T:0.12MM)	1	1	1			UR UR
	663–45567–20	SHIM (T:0.15MM) CALE (T:0.15MM)	1	1	1			UR UR
	663–45567–30	SHIM (T:0.18MM) CALE (T:0.18MM)	1	1	1			UR UR
	663–45567–40	SHIM (T:0.30MM) CALE (T:0.30MM)	1	1	1			UR UR
	663–45567–50	SHIM (T:0.40MM) CALE (T:0.40MM)	1	1	1			UR UR
	663–45567–60	SHIM (T:0.50MM) CALE (T:0.50MM)	1	1	1			UR UR

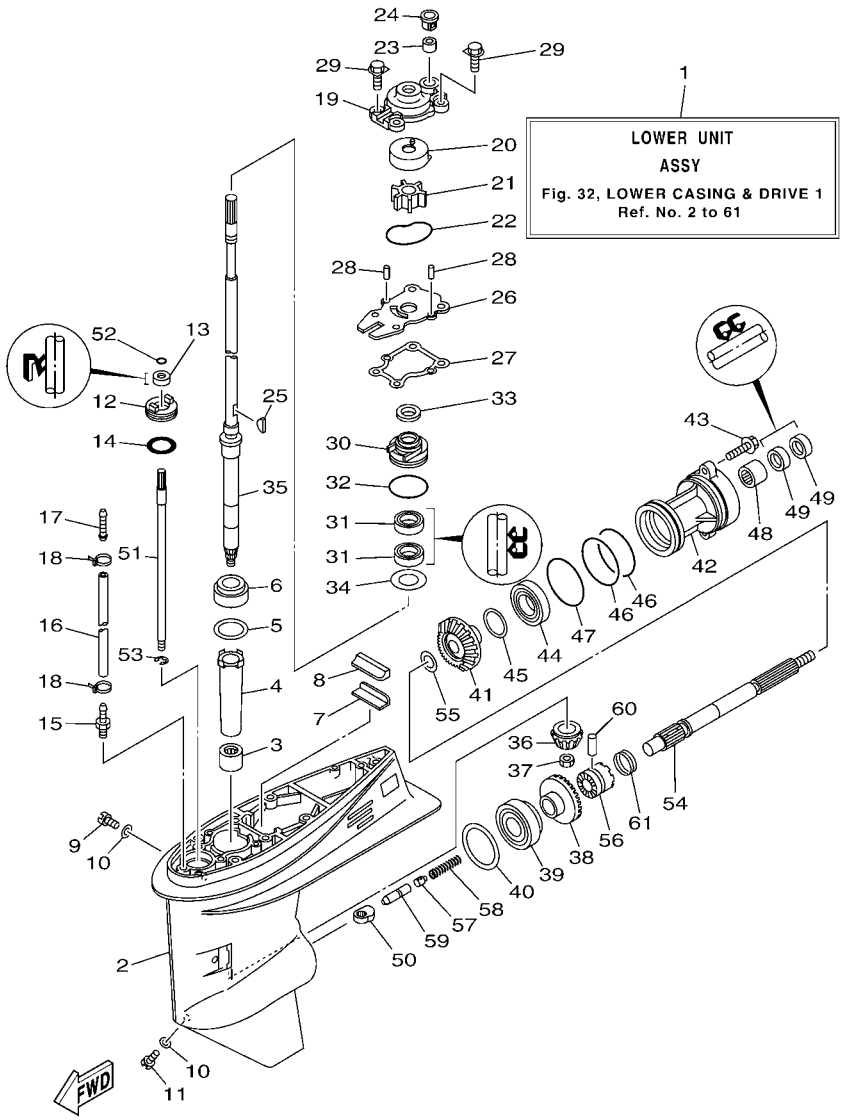

FIG. 32 LOWER CASING & DRIVE 1 BOITIER D'HELICE TRANSMISSION1

REF. NO.	PART NO. N° PIECES	DESCRIPTION DESCRIPTION	ET	ED	EHD			REMARKS REMARQUES
41	66T–45571–00	GEAR 2 (26T) PIGNON 2 (26T)	1	1	1			
42	63D–45361–02–8D	CAP, LOWER CASING COUVERCLE, BOITIER D'HELICE	1	1	1			
43	90105–08M61	BOLT, FLANGE BOULON	2	2	2			
44	93306–001U1	BEARING ROULEMENT	1	1	1			
45	63D–45577–00	SHIM (T:0.10MM) CALE (T:0.10MM)	1	1	1			UR UR
	63D–45577–10	SHIM (T:0.12MM) CALE (T:0.12MM)	1	1	1			UR UR
	63D–45577–20	SHIM (T:0.15MM) CALE (T:0.15MM)	1	1	1			UR UR
	63D–45577–30	SHIM (T:0.18MM) CALE (T:0.18MM)	1	1	1			UR UR
	63D–45577–40	SHIM (T:0.30MM) CALE (T:0.30MM)	1	1	1			UR UR
	63D–45577–50	SHIM (T:0.40MM) CALE (T:0.40MM)	1	1	1			UR UR
	63D–45577–60	SHIM (T:0.50MM) CALE (T:0.50MM)	1	1	1			UR UR
46	93210–74MG5	O-RING JOINT TORIQUE	2	2	2			
47	93210–69MG6	O-RING JOINT TORIQUE	1	1	1			
48	93317–22204	BEARING ROULEMENT	1	1	1			
49	93101–22M00	OIL SEAL JOINT SPY	2	2	2			
50	62Y–44151–00	CAM, SHIFT CAME, INVERSION	1	1	1			
51	63D–44144–00	ROD, SHIFT TIGE D'EMBRAYAGE	1	1	1			
52	93210–07003	O-RING JOINT TORIQUE	1	1	1			
53	99001–08600	CIRCLIP CIRCLIP	1	1	1			
54	63D–45611–00	SHAFT, PROPELLER ARBRE, HELICE	1	1	1			
55	90201–22429	WASHER, PLATE RONDELLE, PLATE	1	1	1			
56	63D–45631–01	CLUTCH, DOG CRABOT	1	1	1			
57	663–45634–00	SLIDE, SHIFT CONTRE-POUSSOIR	1	1	1			
58	90501–18001	SPRING, COMPRESSION RESSORT, COMPRESSION	1	1	1			
59	63D–45635–00	PLUNGER, SHIFT POUSSOIR D'EMBRAYAGE	1	1	1			
60	90250–06023	PIN, STRAIGHT GOUPILLE, DROITE	1	1	1			
61	67C–45633–00	RING, CROSS PIN JONC, GOUPILLE CRABOT	1	1	1			

FIG. 33 LOWER CASING & DRIVE 2 BOITIER D'HELICE TRANSMISSION2

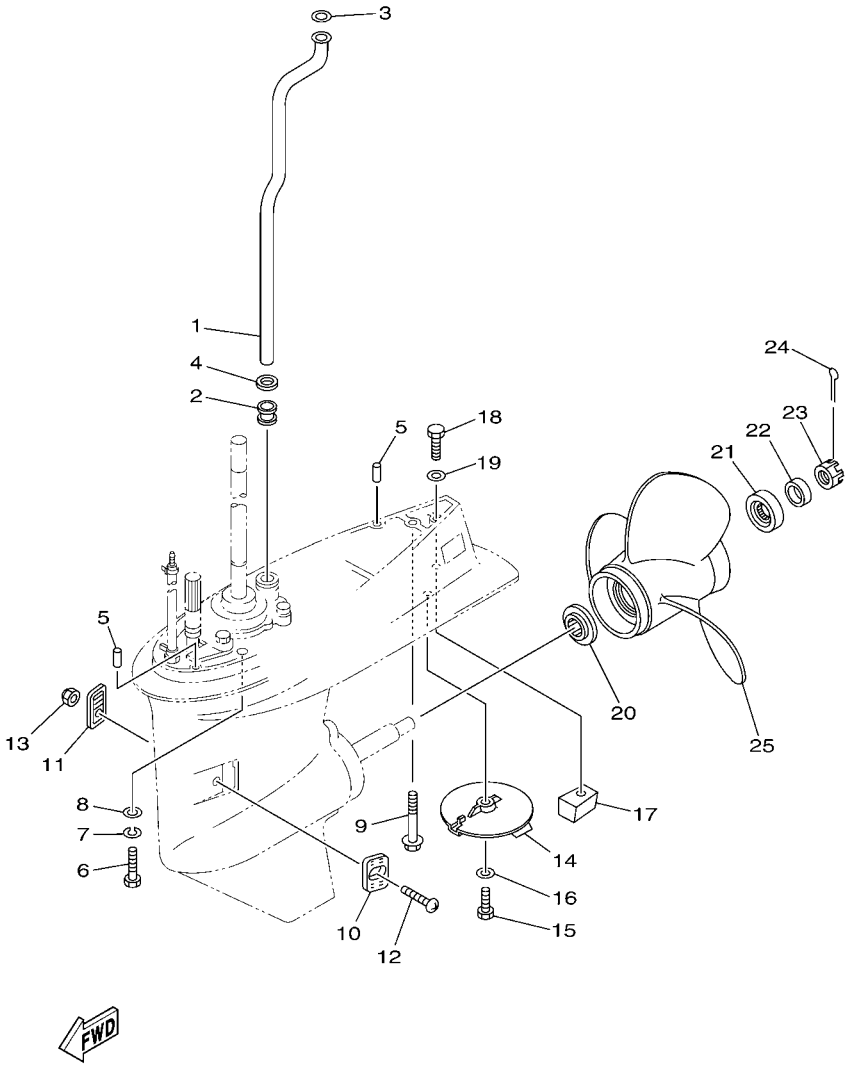

6BT6100-M330

REF. NO.	PART NO. N° PIECES	DESCRIPTION DESCRIPTION	ET	ED	EHD			REMARKS REMARQUES
1	67C–44361–00	TUBE, WATER 1 TUBE D'EAU 1	1		1			S(16.1") S(16.1")
	62Y–44361–00	TUBE, WATER 1 TUBE D'EAU 1	1	1	1			L(21.0") L(21.0")
2	663–44367–00	DAMPER, WATER SEAL 3 JOINT TUBE D'EAU 3	1	1	1			
3	90202–12060	WASHER, PLATE RONDELLE, PLATE	1	1	1			
4	90430–12072	GASKET JOINT	1	1	1			
5	93606–12019	PIN, DOWEL GOUPILLE	2	2	2			
6	97075–10040	BOLT BOULON	4	4	4			
7	92995–10100	WASHER RONDELLE	4	4	4			
8	92995–10600	WASHER RONDELLE	4	4	4			
9	90119–08M84	BOLT, WITH WASHER BOULON, AVEC RONDELLE	1	1	1			
10	63D–45214–00	COVER, WATER INLET 1 GRILLE, ENTREE D'EAU 1	1	1	1			
11	63D–45215–00	COVER, WATER INLET 2 GRILLE, ENTREE D'EAU 2	1	1	1			
12	90152–05010	SCREW, COUNTERSUNK VIS, TETE NOYEE	1	1	1			
13	95380–05600	NUT ECROU	1	1	1			
14	67C–45371–00	TAB-TRIM ANODE DERIVE	1	1	1			
15	97095–08025	BOLT BOULON	1	1	1			
16	92995–08600	WASHER RONDELLE	1	1	1			
17	67C–45251–00	ANODE ANODE	1	1	1			
18	97095–08035	BOLT BOULON	1	1	1			
19	92995–08600	WASHER RONDELLE	1	1	1			
20	663–45987–02	SPACER 1 ENTRETOISE 1	1	1	1			
21	66T–45997–00	SPACER 2 ENTRETOISE 2	1	1	1			
22	90389–22M01	BUSH DOUILLE	1	1	1			
23	90171–16011	NUT, CASTLE ECROU, CRENELE	1	1	1			
24	91490–30025	PIN. COTTER GOUPILLE	1	1	1			
25	69W–45943–00	PROPELLER (3X11"X15"-G) HELICE (3X11"X15"-G)	1	1	1			UR UR
	69W–45945–00	PROPELLER (3X11-1/8"X13"-G) HELICE (3X11-1/8"X13"-G)	1	1	1			UR UR

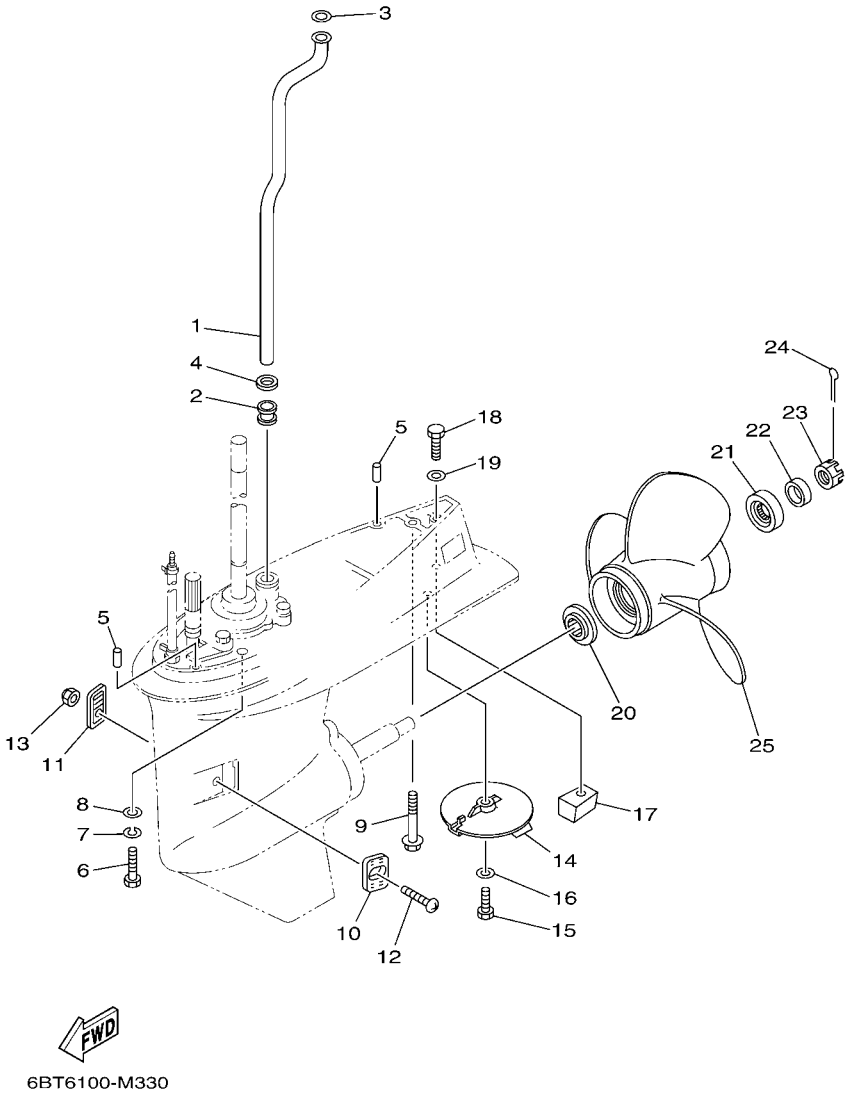

FIG. 33 LOWER CASING & DRIVE 2 BOITIER D'HELICE TRANSMISSION2

REF. NO.	PART NO. N° PIECES	DESCRIPTION DESCRIPTION	ET	ED	EHD			REMARKS REMARQUES
25	69W–45947–00	PROPELLER (3X11-5/8"X11"-G) HELICE (3X11-5/8"X11"-G)	1	1	1			UR UR
	69W–45952–00	PROPELLER (3X11-3/8"X12"-G) HELICE (3X11-3/8"X12"-G)	1	1	1			UR UR
	663–45941–01	PROPELLER (3X10-3/4"X17"-G) HELICE (3X10-3/4"X17"-G)	1	1	1			UR UR
	663–45949–01	PROPELLER (3X10-3/4"X16"-G) HELICE (3X10-3/4"X16"-G)	1	1	1			UR UR
	663–45952–02	PROPELLER (3X11-3/8"X12"-G) HELICE (3X11-3/8"X12"-G)	1	1	1			UR UR
	663–45956–01	PROPELLER (3X12-1/4"X9"-G) HELICE (3X12-1/4"X9"-G)	1	1	1			UR UR
	663–45958–01	PROPELLER (3X11-1/4"X14"-G) HELICE (3X11-1/4"X14"-G)	1	1	1			UR UR
	6H5–45943–00	PROPELLER (3X10"X15"-G) HELICE (3X10"X15"-G)	1	1	1			UR WITH LIP CUP UR WITH LIP CUP
	6H5–45945–00	PROPELLER (3X10-3/8"X13"-G) HELICE (3X10-3/8"X13"-G)	1	1	1			UR WITH LIP CUP UR WITH LIP CUP
	6H5–45952–00	PROPELLER (3X10-5/8"X12"-G) HELICE (3X10-5/8"X12"-G)	1	1	1			UR WITH LIP CUP UR WITH LIP CUP
	6H5–45958–00	PROPELLER (3X10-1/4"X14"-G) HELICE (3X10-1/4"X14"-G)	1	1	1			UR WITH LIP CUP UR WITH LIP CUP
	663–45970–60	PROPELLER (3X11-3/4"X12"-G) HELICE (3X11-3/4"X12"-G)	1	1	1			UR UR
	663–45972–60	PROPELLER (3X12"X11"-G) HELICE (3X12"X11"-G)	1	1	1			UR UR
	663–45974–60	PROPELLER (3X11-1/2"X13"-G) HELICE (3X11-1/2"X13"-G)	1	1	1			UR UR
	697–45970–00	PROPELLER (3X11-1/4"X14"-G) HELICE (3X11-1/4"X14"-G)	1	1	1			UR UR
	663–45930–00	PROPELLER (3X10-1/4"X14"-G) HELICE (3X10-1/4"X14"-G)	1	1	1			UR UR
	663–45974–02	PROPELLER (3X10-5/8"X13"-G) HELICE (3X10-5/8"X13"-G)	1	1	1			UR UR
	663–45976–00	PROPELLER (3X10-1/4"X15"-G) HELICE (3X10-1/4"X15"-G)	1	1	1			UR UR
	663–45978–00	PROPELLER (3X10-1/4"X16"-G) HELICE (3X10-1/4"X16"-G)	1	1	1			UR UR

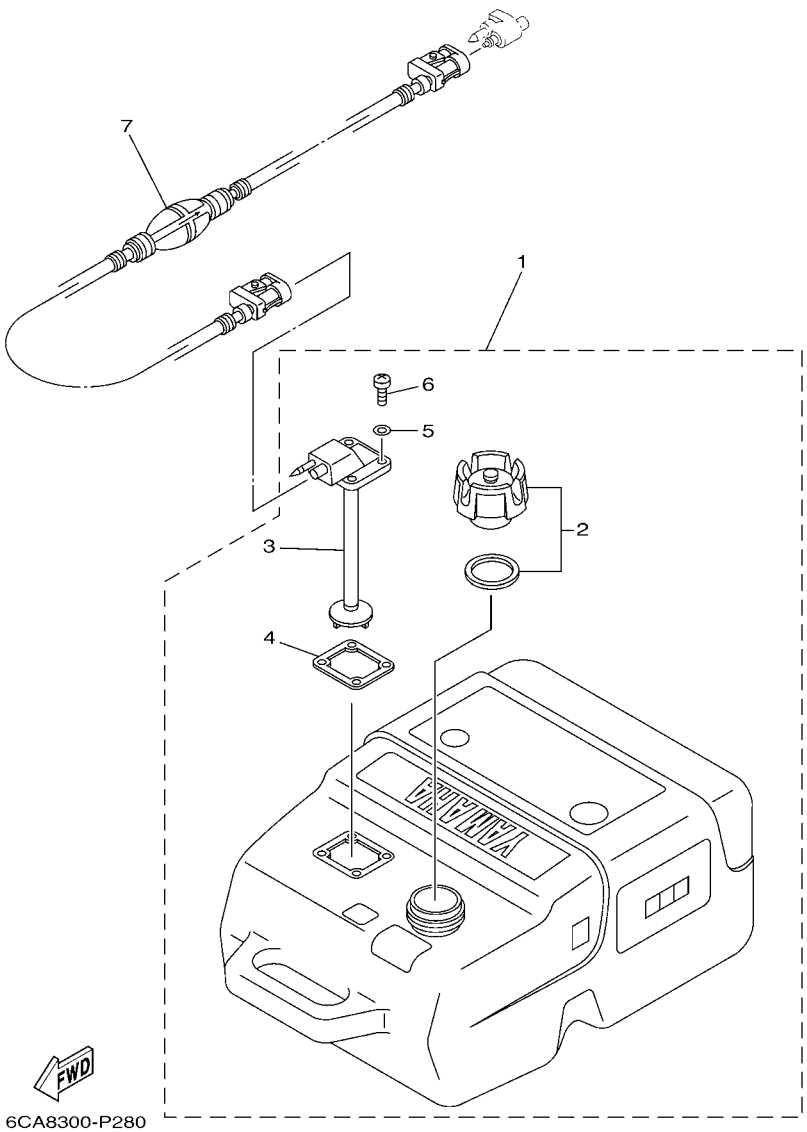

FIG. 34 FUEL TANK — RESERVOIR A CARBURANT

REF. NO.	PART NO. N° PIECES	DESCRIPTION DESCRIPTION	ET	ED	EHD			REMARKS REMARQUES
1	6YK–24201–04	FUEL TANK ASSY (25L) RESERVOIR A ESSENCE (ENS.) 25L	1	1	1			AP AP
2	6YK–24610–01	.CAP ASSY .BOUCHON	1	1	1			
3	6YK–24260–10	.FUEL METER ASSY .INDICATEUR DE CARBURANT	1	1	1			
4	6YL–24268–01	.GASKET, FUEL METER .JOINT, JAUGE A CARBURANT	1	1	1			
5	6YL–24329–00	.SEAL .JOINT	4	4	4			
6	90157–05M16	.SCREW, PAN HEAD .VIS, TETE TRONCONIQUE	4	4	4			
7	6YL–24306–54	FUEL PIPE COMP. 1 DURITE A ESSENCE 1	1	1	1			AP AP

FIG. 35 STEERING GUIDE FIXATION DE DIRECTION

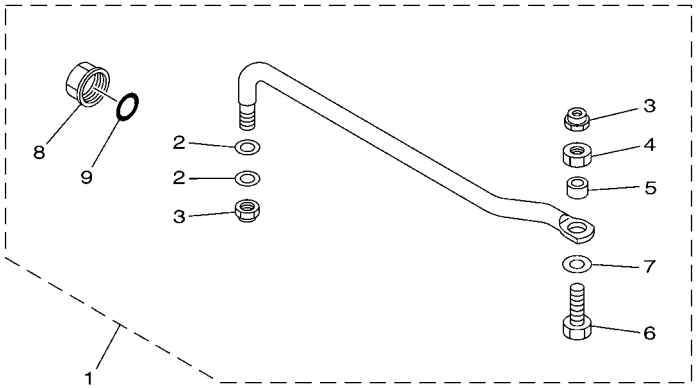

6BG1100-H340

REF. NO.	PART NO. N° PIECES	DESCRIPTION DESCRIPTION	ET	ED	EHD			REMARKS REMARQUES
1	6BG–61350–00	STEERING GUIDE ATTACHMENT KIT FIXATIONS DE DIRECTION	1	1				AP AP
2	90201–10M20	.WASHER, PLATE .RONDELLE, PLATE	2	2				
3	90185–09M01	.NUT, SELF-LOCKING .ECROU,AUTO-BLOQUANT	2	2				
4	90170–09M03	.NUT .ECROU	1	1				
5	90387–10M42	.COLLAR .COLLERETTE	1	1				
6	90101–09M01	.BOLT .BOULON	1	1				
7	90201–10M63	.WASHER, PLATE .RONDELLE, PLATE	1	1				
8	6E5–43145–01	.CAP, CLAMP BRACKET .CAPUCHON, PRESSE	1	1				
9	93210–16275	.O-RING .JOINT TORIQUE	1	1				

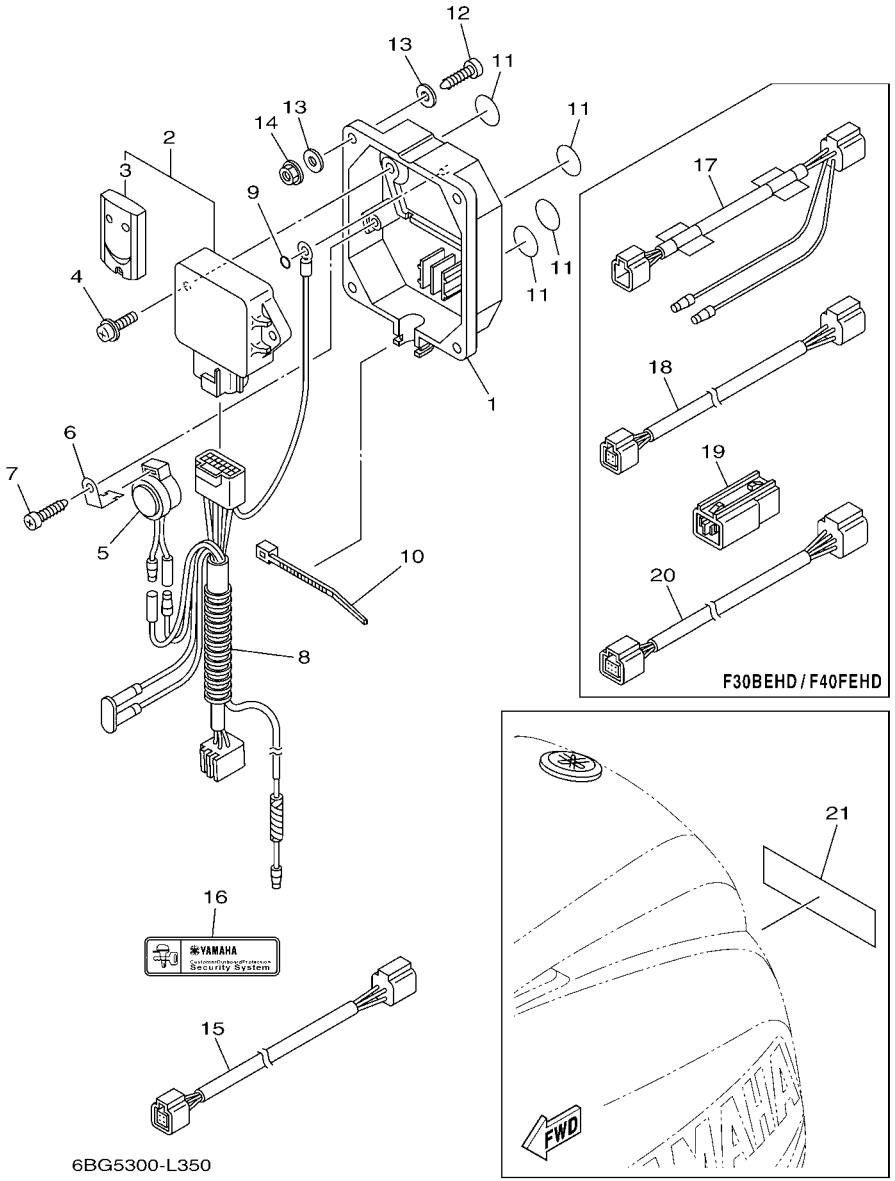

FIG. 36 OPTIONAL PARTS PIECES OPTIONNELLES

REF. NO.	PART NO. N° PIECES	DESCRIPTION DESCRIPTION	ET	ED	EHD			REMARKS REMARQUES
1	6Y8–86267–00	CASE COMPLETE 1 CARTER (ENS.) 1	1	1	1			
2	6Y8–86260–02	REMOTE CONTROL UNIT ASSY UNITE DE TELECOMMANDE (ENS.)	1	1	1			
3	6AA–86261–00	.XMTR. COMP. .XMTR. COMP.	2	2	2			
4	97980–06216	SCREW, WITH WASHER VIS, AVEC RONDELLE	2	2	2			
5	6X4–83383–00	BUZZER RONFLEUR	1	1	1			
6	6X4–83386–00	STAY, BUZZER SUPPOR, RONFLEUR	1	1	1			
7	97780–60620	SCREW, TAPPING VIS, TETE BOMBEE	1	1	1			
8	6Y8–82509–10	WIRE, SUB LEAD FIL, SECONDAIRE	1	1	1			
9	93210–04279	O-RING JOINT TORIQUE	1	1	1			
10	90465–11M10	CLAMP BRIDE	1	1	1			
11	6Y8–8454G–00	PATCH 1 TAMPON 1	4	4	4			
12	90167–06M00	SCREW, TAPPING VIS, TETE FRAISEE	4	4	4			UR UR
	97880–06035	SCREW, PAN HEAD VIS, TETE TRONCONIQUE	4	4	4			UR UR
13	90201–06M30	WASHER, PLATE RONDELLE, PLATE	8	8	8			
14	95780–06300	NUT, FLANGE ECROU	4	4	4			
15	6Y8–82521–11	2FT PIGTAIL BUS FAISCEAU (L: 2FT.)	1	1				
16	6Y8–48277–00	STICKER 1 ETIQUETTE 1	1	1	1			
17	6Y8–82117–00	WIRE, LEAD FIL			1			
18	6Y8–82521–51	12FT PIGTAIL BUS FAISCEAU (L: 12FT.)			1			
19	6Y8–81920–11	IN-LINE HUB ASSY BORNE			2			
20	6Y8–82553–01	1FT MAIN BUS EXTENSION, FAISCEAU			1			
21	6Y8–48277–00	STICKER 1 ETIQUETTE 1	1	1	1			

FIG. 37 REPAIR KIT 1 — KITS DE REPARATION 1

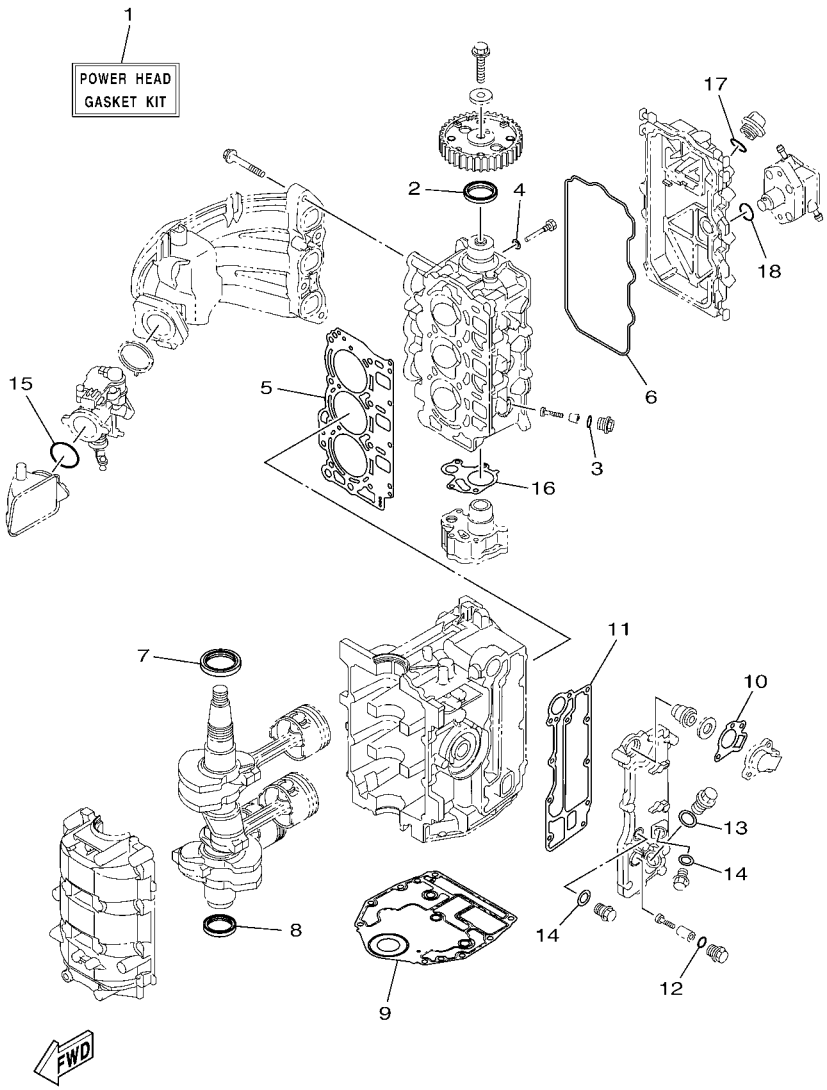

REF. NO.	PART NO. N° PIECES	DESCRIPTION DESCRIPTION	ET	ED	EHD			REMARKS REMARQUES
1	6BG–W0001–01	POWER HEAD GASKET KIT POCHETTE DE JINTS TETE MOTRICE	1	1	1			
2	93102–37M40	.OIL SEAL .JOINT SPY	1	1	1			
3	93210–13M63	.O-RING .JOINT TORIQUE	3	3	3			
4	90430–06014	.GASKET .JOINT	1	1	1			
5	6BG–11181–00	.GASKET, CYLINDER HEAD 1 .JOINT, DE CULASSE 1	1	1	1			
6	6BG–11356–00	.SEAL, CYLINDER 2 .JOINT, SPY CYLINDRE	1	1	1			
7	93102–43M42	.OIL SEAL .JOINT SPY	1	1	1			
8	93101–35002	.OIL SEAL .JOINT SPY	1	1	1			
9	6BG–11351–00	.GASKET, CYLINDER .JOINT, D'EMBASE	1	1	1			
10	62Y–12414–00	.GASKET, COVER .JOINT, COUVERCLE	1	1	1			
11	6BG–41114–00	.GASKET, EXHAUST OUTER COVER .JOINT, COUVERCLE D'ECHAPPEMENT	1	1	1			
12	93210–13M63	.O-RING .JOINT TORIQUE	1	1	1			
13	90201–186F1	.WASHER, PLATE .RONDELLE, PLATE	1	1	1			
14	90430–14115	.GASKET .JOINT	2	2	2			
15	93210–42159	.O-RING .JOINT TORIQUE	1	1	1			
16	6C5–13329–00	.GASKET, PUMP COVER .JOINT, COUVERCLE DE POMPE	1	1	1			
17	93210–24M79	.O-RING .JOINT TORIQUE	1	1	1			
18	93210–24M79	.O-RING .JOINT TORIQUE	1	1	1			

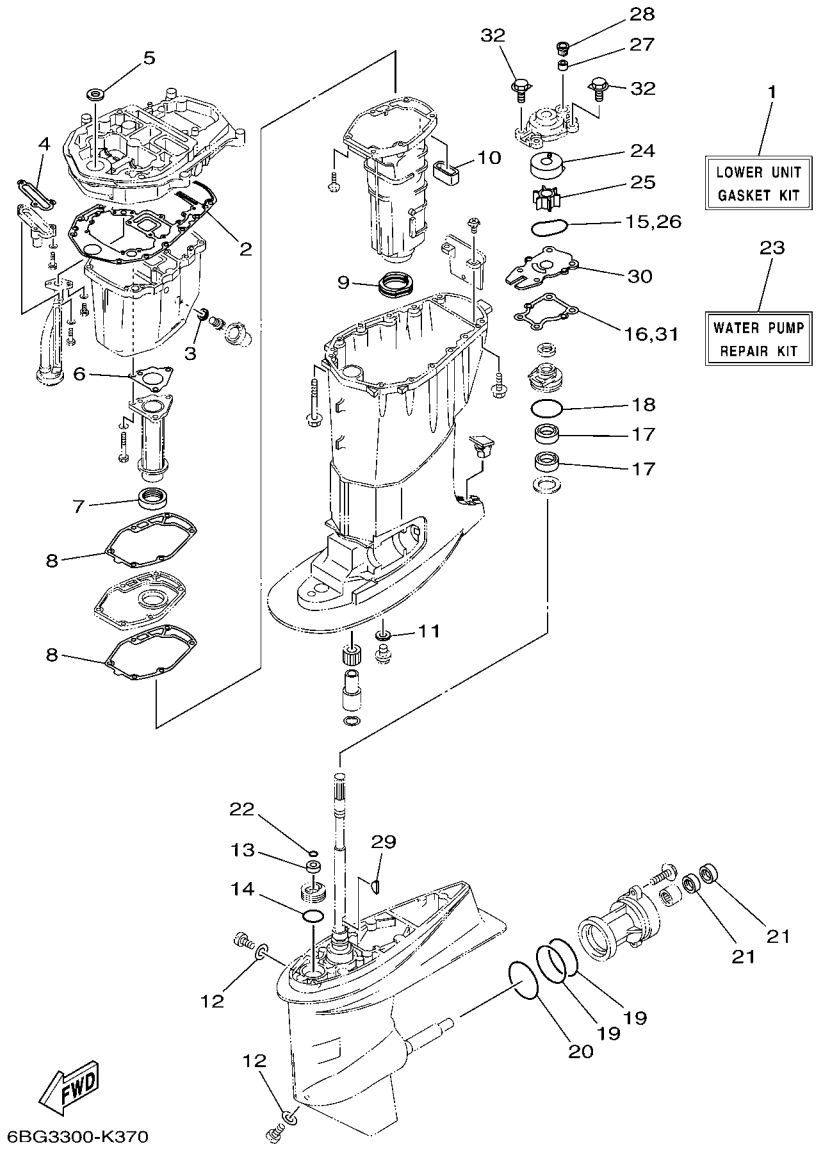

FIG. 38 REPAIR KIT 2 — KITS DE REPARATION 2

REF. NO.	PART NO. N° PIECES	DESCRIPTION DESCRIPTION	ET	ED	EHD			REMARKS REMARQUES
1	6BG–W0001–20	LOWER UNIT GASKET KIT POCHETTE DE JOINTS EMBASE	1	1	1			Go to P/N : PE0-OM-150038
2	69W–15312–00	.GASKET, OIL PAN .JOINT DE VENTILATEUR D'HUILE	1	1	1			
3	90430–14M09	.GASKET .JOINT	1	1	1			
4	62Y–13475–00	.GASKET .JOINT	1	1	1			
5	93110–16004	.OIL SEAL .JOINT SPY	1	1	1			Go to P/N : PE0-OM-150038
6	64J–41133–10	.GASKET, EXHAUST MANIFOLD 1 .JOINT, PIPE D'ECHAPPEMENT	1	1	1			
7	64J–46132–10	.GASKET 1 .JOINT 1	1	1	1			
8	6BG–41134–00	.GASKET, EXHAUST MANIFOLD .JOINT, PIPE D'ECHAPPEMENT	2	2	2			
9	67C–45123–00	.GASKET, MUFFLER .JOINT, POT DE DETENTE	1	1	1			
10	62Y–45127–00	.SEAL .JOINT	1	1	1			
11	90430–14M09	.GASKET .JOINT	1	1	1			
12	90430–08020	.GASKET .JOINT	2	2	2			
13	93106–09014	.OIL SEAL .JOINT SPY	1	1	1			
14	93210–33MG4	.O-RING .JOINT TORIQUE	1	1	1			
15	93210–59MG7	.O-RING .JOINT TORIQUE	1	1	1			
16	63D–44316–00	.GASKET, WATER PUMP .JOINT, POMPE A EAU	1	1	1			
17	93101–22M60	.OIL SEAL .JOINT SPY	2	2	2			
18	93210–48001	.O-RING .JOINT TORIQUE	1	1	1			
19	93210–74MG5	.O-RING .JOINT TORIQUE	2	2	2			
20	93210–69MG6	.O-RING .JOINT TORIQUE	1	1	1			
21	93101–22M00	.OIL SEAL .JOINT SPY	2	2	2			
22	93210–07003	.O-RING .JOINT TORIQUE	1	1	1			
23	6BG–W0078–00	WATER PUMP REPAIR KIT KIT DE REPARATION DE LA POMPE	1	1	1			
24	63D–44322–00	.INSERT, CARTRIDGE .CUVETTE	1	1	1			
25	6H4–44352–02	.IMPELLER .TURBINE	1	1	1			
26	93210–59MG7	.O-RING .JOINT TORIQUE	1	1	1			
27	663–44366–00	.DAMPER, WATER SEAL 2 .JOINT, TUBE D'EAU 2	1	1	1			

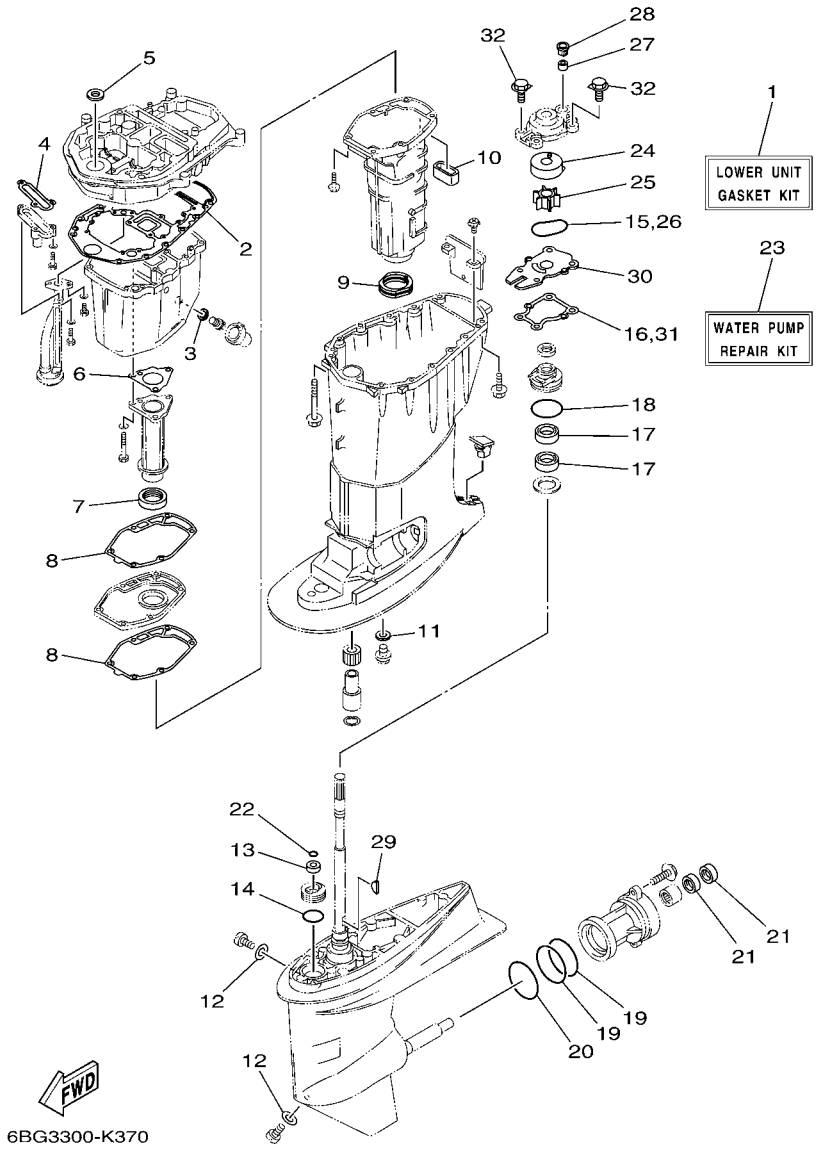

FIG. 38 REPAIR KIT 2 — KITS DE REPARATION 2

REF. NO.	PART NO. N° PIECES	DESCRIPTION DESCRIPTION	ET	ED	EHD			REMARKS REMARQUES
28	63D–44312–00	.COVER, WATER PUMP HOUSING .COUVERCLE	1	1	1			
29	90280–03M03	.KEY, WOODRUFF .CLAVETTE, DEMI-LUNE	1	1	1			
30	63D–44323–00	.OUTER PLATE, CARTRIDGE .PLAQUE EXTERIEURE	1	1	1			
31	63D–44316–00	.GASKET, WATER PUMP .JOINT, POMPE A EAU	1	1	1			
32	90119–08M15	.BOLT, WITH WASHER .BOULON, AVEC RONDELLE	4	4	4			

NUMERICAL INDEX
INDEX NUMERIQUE

PART NO. N° PIECES	REF. NO.
6BG–11111–10–9S	5 – 2
62Y–11119–00	15 – 12
6BG–11119–00	5 – 22
62Y–11133–30	5 – 3
6BG–11168–00	5 – 16
6BG–11181–00	5 – 10
	37 – 5
6BG–11191–00–9S	5 – 14
6BG–11192–00	17 – 21
6G8–11197–A0	3 – 20
	5 – 6
62Y–11325–00	1 – 14
	30 – 2
6G8–11325–00	1 – 3
	1 – 5
	3 – 18
	5 – 4
66M–11327–00–94	30 – 4
66M–11328–00	30 – 3
6BG–11351–00	3 – 8
	37 – 9
6BG–11356–00	5 – 19
	37 – 6
6BG–11411–00	4 – 1
6BG–11416–00	4 – 2
6BG–11416–10	4 – 2
6BG–11416–20	4 – 2
6BG–11416–30	4 – 2
6C5–11536–00	11 – 7
6C5–11537–10	11 – 2
6H4–11545–00	13 – 3
62Y–11557–00	11 – 8
6BG–11576–00–94	31 – 12
67C–11603–00	4 – 7
67C–11604–00	4 – 7
67C–11605–00	4 – 7
69W–11631–01–97	4 – 6
62Y–11633–00	4 – 8
69W–11635–01	4 – 6
69W–11636–01	4 – 6
6C5–11650–10	4 – 3
6C5–11654–00	4 – 4
6CJ–11656–00	4 – 5
6CJ–11656–10	4 – 5
6CJ–11656–20	4 – 5
6CJ–11656–30	4 – 5
69W–12111–00	6 – 1
51Y–12114–00	6 – 4

PART NO. N° PIECES	REF. NO.
62Y–12116–00	6 – 3
30X–12117–00	6 – 5
30X–12118–00	6 – 6
51Y–12119–00	6 – 7
69W–12121–10	6 – 2
6BG–12146–00	6 – 8
62Y–12151–00	6 – 9
6C5–12151–00	6 – 12
62Y–12158–00	6 – 11
6C5–12158–00	6 – 14
64J–12159–00	6 – 10
6C5–12159–00	6 – 13
6BG–12171–00	11 – 1
6C5–12231–00	6 – 15
6C5–12233–00	6 – 16
6G8–12411–03	1 – 1
	3 – 12
688–12412–00	3 – 13
6C5–12413–00–9S	3 – 14
62Y–12414–00	1 – 2
	3 – 15
	37 – 10
6BG–12481–00	21 – 13
62Y–12481–10	3 – 11
66M–12535–00	30 – 5
6AW–12572–00	21 – 4
6BG–12576–00	8 – 7
6R3–12580–00	21 – 6
6C5–12858–00	3 – 27
62Y–13131–00	12 – 25
6BG–13161–00	7 – 11
6BG–13300–01	11 – 11
6C5–13329–00	11 – 12
	37 – 16
62Y–13411–00	31 – 9
6BG–13437–60	13 – 19
5GH–13440–50	1 – 4
	3 – 26
62Y–13475–00	31 – 13
	38 – 4
6BG–13542–00	10 – 16
6BG–13545–00	10 – 13
6BG–13546–00	10 – 14
6C5–13547–00	10 – 12
6BG–13548–00	10 – 15
6BG–13557–00	7 – 8
6BG–13577–00	7 – 14
6C5–13577–00	10 – 20

PART NO. N° PIECES	REF. NO.
6BG–13593–00	9 – 23
6BG–13641–00	7 – 6
6BG–13645–00	7 – 7
6C5–13739–00	10 – 2
6BG–13750–02	7 – 4
6BG–13761–00	7 – 12
6C5–13906–01	9 – 9
6BG–13910–02	9 – 17
6BG–13915–01	1 – 8
	9 – 19
6BG–13938–00	9 – 20
6BG–13974–00	10 – 5
6C5–1410B–00	7 – 13
6C5–1410F–00	10 – 18
6C5–14127–10	9 – 18
6BG–14137–00	9 – 21
6X4–14137–00	22 – 26
6BG–14148–00	10 – 7
6BG–14149–00	10 – 17
6BG–14180–04	9 – 1
6BG–14182–10	9 – 2
6C5–14191–00	9 – 13
6C5–14225–00	9 – 11
6C5–14251–00	10 – 1
6C5–14386–00	9 – 4
6C5–14397–00	9 – 14
6BG–14440–00	7 – 1
6BT–14440–00	7 – 1
62Y–14485–00	5 – 15
6C5–14546–10	9 – 5
6BG–14561–00	9 – 22
6C5–14567–00	9 – 15
69W–14711–00–CA	30 – 18
6BG–14711–00–CA	30 – 18
6BG–14960–10	9 – 12
6BG–14984–00	1 – 7
	9 – 16
6BG–14985–00	9 – 3
6BG–15100–00	3 – 2
6BG–15311–00–CA	31 – 1
69W–15312–00	31 – 3
	38 – 2
67C–15316–00	31 – 5
67C–15316–10	31 – 5
6BG–1531A–00	8 – 11
6BG–15362–00	31 – 16
6G8–15363–00	5 – 25
6BG–15378–00	8 – 12

PART NO. N° PIECES	REF. NO.
6C5–21841–01	10 – 3
15A–22442–00	29 – 30
6BG–24135–01	21 – 17
6BG–24136–01	21 – 20
6YK–24201–04	34 – 1
6C5–24251–00	1 – 9
	10 – 23
6YK–24260–10	34 – 3
6YL–24268–01	34 – 4
6G1–24304–02	12 – 1
6YL–24306–54	34 – 7
6A1–24311–00	21 – 14
6BG–24311–00	12 – 19
6BG–24313–00	12 – 5
6BG–24321–00	10 – 8
6BG–24322–00	10 – 9
6BG–24323–00	10 – 10
6BG–24324–00	10 – 11
6BG–24329–00	20 – 24
6YL–24329–00	34 – 5
62Y–24374–01	12 – 30
67F–24377–00	12 – 6
688–24378–00	21 – 8
	21 – 12
6C5–24379–00	10 – 19
6BG–24387–00	10 – 21
6C5–24410–00	12 – 21
62Y–24411–02	12 – 23
6C5–24415–00	12 – 22
6BG–2441R–10	9 – 6
6BG–2441T–10	9 – 7
62Y–24423–00	12 – 24
6C5–24444–00	10 – 4
62Y–24444–01	12 – 27
6C5–24453–00	9 – 8
62Y–24454–00	12 – 26
6D8–24469–00	12 – 14
6C5–24471–00	12 – 28
6D8–24519–00	12 – 15
6BG–2451B–00	10 – 6
6D8–24560–01	12 – 10
6D8–24562–00	12 – 13
6D8–24563–00	1 – 10
	12 – 11
6D8–24564–00	1 – 11
	12 – 12
6BG–24566–01	12 – 16
6C5–24592–00	9 – 10

PART NO. N° PIECES	REF. NO.
6YK–24610–01	34 – 2
69W–26301–00	22 – 42
6X4–26367–00	22 – 37
	22 – 44
6C5–28100–00	12 – 36
67F–2812A–00	13 – 17
6BG–28199–78–D0	12 – 37
6BG–28199–78–E0	12 – 37
6BG–28199–78–F0	12 – 37
6BG–28199–78–G0	12 – 37
6BG–28199–78–H0	12 – 37
6BG–28199–78–S0	12 – 37
6BG–28199–88–K0	12 – 38
6BG–28199–88–L0	12 – 38
6BG–28199–88–M0	12 – 38
6BG–28199–88–N0	12 – 38
6BG–28199–88–P0	12 – 38
6BG–28199–88–R0	12 – 38
6BG–41113–00–9S	3 – 9
6BG–41114–00	3 – 16
	37 – 11
6BG–41131–00–CA	30 – 12
64J–41133–10	30 – 11
	38 – 6
6BG–41134–00	30 – 16
	38 – 8
6BG–41137–00–CA	30 – 1
682–41237–00	25 – 24
6J8–41237–00	25 – 23
6X4–41291–00	22 – 8
6BC–42101–32	22 – 1
6X4–42111–02–8D	22 – 2
6X4–42115–00	22 – 22
6X4–42119–01	22 – 5
63D–42121–22–8D	22 – 57
63D–42126–00	22 – 17
6X4–42128–00	22 – 13
6X4–42131–11	22 – 54
6X4–42137–00	22 – 7
62Y–42154–00	25 – 26
6X4–42159–00	22 – 48
6C5–42171–00	25 – 27
6X4–42177–00	22 – 6
6BG–42335–00	25 – 32
6BG–42384–00	21 – 2
67C–42508–04	24 – 1
6BG–42510–00–8D	28 – 11
6BG–42510–10–8D	28 – 11

PART NO. N° PIECES	REF. NO.
67C–42525–00	24 – 4
67C–42527–03	24 – 2
65W–42528–00	24 – 10
67C–42561–00	24 – 7
67C–42562–00	24 – 6
6BG–42610–02	2 – 1
6BT–42610–02	2 – 1
6BG–42613–00	2 – 3
6BG–42615–00	2 – 11
6BG–42617–00	13 – 18
6BG–4261A–00	2 – 2
6BG–42649–00	2 – 14
6BG–42651–00	2 – 5
6BG–42652–00	2 – 8
6BG–42662–00	2 – 12
6BG–42675–00	2 – 17
6BG–42676–00	2 – 18
6BG–42677–00	2 – 15
6BG–42677–10	2 – 15
6BT–42678–01	2 – 16
6BG–42678–20	2 – 16
6AH–42697–10	2 – 13
6BG–42710–01–8D	20 – 1
62Y–42715–01	25 – 10
62Y–42716–00	20 – 6
61A–42717–00	20 – 8
65W–42717–00	20 – 7
69J–42723–01	18 – 14
6BG–42725–00	20 – 10
6X4–42725–01	22 – 56
6H1–42726–21	21 – 1
68U–42727–00	20 – 23
6BG–42727–00	20 – 11
6X4–42727–00	23 – 18
6X4–42728–00	23 – 8
6X4–42728–10	22 – 66
6BG–42741–00–8D	20 – 25
6BG–42741–10–8D	20 – 25
6BG–42743–00	18 – 21
6BG–42748–00	20 – 4
6H4–42748–00	20 – 2
63P–42756–00	18 – 24
6BG–42761–00	20 – 9
6EE–42794–40	20 – 38
6EE–42794–50	20 – 39
6BG–42811–01	18 – 18
6BG–42815–00–8D	20 – 13
6BG–42816–00	20 – 18

NUMERICAL INDEX
INDEX NUMERIQUE

PART NO. N° PIECES	REF. NO.
6X4–42821–00	22 – 30
6BG–42851–00	2 – 7
67C–43107–02–8D	27 – 14
67C–43107–12–8D	27 – 14
6K9–43111–10–8D	26 – 1
	27 – 1
6BG–43112–10–8D	26 – 2
	27 – 2
6K9–43131–01	26 – 9
	27 – 9
6K9–43139–10	28 – 2
66T–43144–00	20 – 20
6E5–43145–01	35 – 8
65W–43191–00	26 – 4
	27 – 4
65W–43192–00	26 – 3
	27 – 3
6BG–43311–00–8D	26 – 7
	27 – 7
6BG–43311–10–8D	26 – 7
	27 – 7
682–43318–01	27 – 16
67C–43631–00	27 – 15
689–43633–00	24 – 8
6BG–43654–00	26 – 26
	27 – 32
63D–43691–00	27 – 18
67C–43800–11–8D	29 – 1
65W–43801–01	29 – 19
67F–43802–00	29 – 42
CS2–43803–81	29 – 62
65W–43804–01	29 – 3
65W–43805–01	29 – 5
65W–4380F–01	29 – 13
65W–4380K–00	29 – 17
67C–4380L–02	29 – 39
67C–43810–01	29 – 18
65W–43811–01	29 – 22
65W–43812–00	29 – 20
65W–43817–00	29 – 53
65W–4381B–00	29 – 33
69J–4381C–00	29 – 36
6H1–43829–00	29 – 76
65W–4382A–00	29 – 61
65W–43830–00	29 – 50
65W–43831–00	29 – 49
67C–43840–01	29 – 16
62X–43841–00	29 – 47

PART NO. N° PIECES	REF. NO.
65W–43843–00	29 – 70
67F–43843–00	29 – 66
6H1–43844–10	29 – 68
	29 – 72
6H1–43845–00	29 – 57
6H1–43847–00	29 – 59
6H1–4384F–10	29 – 73
6H1–4384G–11	29 – 64
67C–43851–00	29 – 65
65W–43853–00	29 – 75
6T4–43853–00	29 – 45
65W–43854–00	29 – 60
6H1–43856–10	29 – 67
	29 – 71
67C–43857–00	29 – 29
65W–4385A–01	29 – 27
6H1–43861–10	29 – 34
6H1–43862–00	29 – 32
6D8–43863–00	29 – 58
65W–43865–00	29 – 21
6H1–43866–01	29 – 43
67C–43867–00	29 – 23
65W–4386A–00	29 – 28
	29 – 38
65W–4386K–01	29 – 11
65W–4386L–00	29 – 12
6H1–43875–00	29 – 56
62X–43878–01	29 – 77
65W–43879–01	29 – 14
65W–4387G–00	29 – 6
67C–43880–01	29 – 2
67C–43881–01	29 – 7
65W–43882–01	29 – 15
67C–43886–00	29 – 25
65W–43887–01	29 – 4
65W–43891–01	29 – 10
65W–43892–01	29 – 9
6X4–44100–01	22 – 21
6X4–44102–00	22 – 23
6X4–44114–00	23 – 16
62Y–44117–01	25 – 2
62Y–44118–00–94	25 – 11
6BG–44120–01	25 – 7
6C5–44120–02	25 – 7
69W–44121–00	25 – 1
688–44122–00	25 – 19
6C5–44122–00	25 – 8
6X4–44132–00	22 – 25

PART NO. N° PIECES	REF. NO.
62Y–44135–00	25 – 29
6X4–44139–01	22 – 9
63D–44144–00	32 – 51
62Y–44151–00	32 – 50
6X4–44159–00–8D	22 – 49
6X4–44173–00	22 – 50
6X4–44177–00	22 – 12
6X4–44188–00	22 – 15
6X3–44191–00	22 – 52
66T–44311–00	32 – 19
63D–44312–00	32 – 24
	38 – 28
63D–44316–00	32 – 27
	38 – 16
	38 – 31
63D–44322–00	32 – 20
	38 – 24
63D–44323–00	32 – 26
	38 – 30
6BG–44341–00	32 – 30
6H4–44352–02	32 – 21
	38 – 25
62Y–44361–00	33 – 1
67C–44361–00	33 – 1
663–44366–00	32 – 23
	38 – 27
663–44367–00	33 – 2
6BG–44385–00	28 – 8
6BG–44385–10	28 – 8
6BL–44391–00	20 – 33
67C–44514–00	28 – 14
67C–44514–10	28 – 14
66T–44526–30	28 – 16
6C5–44551–00–8D	28 – 19
67C–44551–01–8D	28 – 19
6C5–44552–00–8D	28 – 21
67C–44555–11	28 – 23
67C–44555–21	28 – 23
69W–44575–00	28 – 20
6BG–45111–00–8D	30 – 23
6BG–45111–20–8D	30 – 23
67C–45123–00	30 – 20
	38 – 9
62Y–45127–00	30 – 21
	38 – 10
67C–45151–00	30 – 26
63D–45155–00	30 – 28
6C5–45155–00	30 – 28

PART NO. N° PIECES	REF. NO.
6BG–45181–00–CA	30 – 17
63D–45214–00	33 – 10
63D–45215–00	33 – 11
65W–45251–00	1 – 12
	26 – 28
	27 – 34
663–45251–00	1 – 13
	27 – 19
67C–45251–00	1 – 18
	33 – 17
6BG–45300–00–8D	32 – 1
6BG–45300–10–8D	32 – 1
62Y–45301–00–8D	32 – 2
6A0–45318–00	30 – 29
63D–45321–00	32 – 12
688–45341–10	32 – 11
66T–45344–01	32 – 33
63D–45361–02–8D	32 – 42
67C–45371–00	1 – 17
	33 – 14
63D–45375–00	32 – 8
663–45376–00	32 – 7
6E5–45378–00	32 – 15
67C–45501–00	32 – 35
67C–45501–10	32 – 35
6H4–45536–00	32 – 4
66T–45551–00	32 – 36
66T–45560–01	32 – 38
663–45567–01	32 – 40
663–45567–10	32 – 40
663–45567–20	32 – 40
663–45567–30	32 – 40
663–45567–40	32 – 40
663–45567–50	32 – 40
663–45567–60	32 – 40
66T–45571–00	32 – 41
63D–45577–00	32 – 45
63D–45577–10	32 – 45
63D–45577–20	32 – 45
63D–45577–30	32 – 45
63D–45577–40	32 – 45
63D–45577–50	32 – 45
63D–45577–60	32 – 45
663–45587–01	32 – 5
663–45587–10	32 – 5
663–45587–20	32 – 5
663–45587–30	32 – 5
663–45587–40	32 – 5

PART NO. N° PIECES	REF. NO.
663–45587–50	32 – 5
663–45587–60	32 – 5
63D–45611–00	32 – 54
63D–45631–01	32 – 56
67C–45633–00	32 – 61
663–45634–00	32 – 57
63D–45635–00	32 – 59
663–45930–00	33 – 25
663–45941–01	33 – 25
69W–45943–00	33 – 25
6H5–45943–00	33 – 25
69W–45945–00	33 – 25
6H5–45945–00	33 – 25
69W–45947–00	33 – 25
663–45949–01	33 – 25
69W–45952–00	33 – 25
6H5–45952–00	33 – 25
663–45952–02	33 – 25
663–45956–01	33 – 25
6H5–45958–00	33 – 25
663–45958–01	33 – 25
697–45970–00	33 – 25
663–45970–60	33 – 25
663–45972–60	33 – 25
663–45974–02	33 – 25
663–45974–60	33 – 25
663–45976–00	33 – 25
663–45978–00	33 – 25
663–45987–02	33 – 20
66T–45997–00	33 – 21
64J–46132–10	30 – 15
	38 – 7
6C5–46241–00	11 – 6
6X4–47731–01	22 – 24
703–48129–00	22 – 29
6X4–48154–00	22 – 18
6X4–48215–00	22 – 4
6X4–48261–00	22 – 27
6Y8–48277–00	36 – 16
	36 – 21
67C–48321–11	22 – 35
69W–48344–00	25 – 22
	25 – 36
65W–48511–01	28 – 38
63D–48538–00	22 – 40
	22 – 46
6BG–48538–00	20 – 36
6X4–48538–00	22 – 36

PART NO. N° PIECES	REF. NO.
6X4–48538–10	22 – 43
6BG–61350–00	35 – 1
64J–77123–00	30 – 22
68V–81315–00	17 – 12
6BG–81337–10	13 – 12
6BG–81410–00	13 – 2
6BG–81450–00	13 – 1
6BG–81528–00	14 – 15
6BG–81800–00	19 – 1
6BG–81807–00	19 – 3
6BG–81810–00	19 – 11
6BG–81815–00	15 – 6
6BG–81820–00	19 – 13
6BG–81822–00	15 – 8
6BG–81826–00	19 – 15
6BG–8182J–00	19 – 14
6BG–81830–00	19 – 2
6BG–81832–00	19 – 7
6BG–81836–00	19 – 4
6BG–81839–00	19 – 10
6AW–8183T–00	19 – 6
6P2–8183X–00	16 – 10
	16 – 14
6BG–81840–00	19 – 12
6BG–81846–00	19 – 16
6BG–81850–00	19 – 9
6BG–81857–00	19 – 8
6X4–81860–00	23 – 21
6BG–81891–00	19 – 5
6BG–81919–00	13 – 24
6Y8–81920–11	36 – 19
6BG–81925–00	16 – 1
6BG–81941–00	19 – 17
6BG–81942–00	17 – 18
6BG–81948–00	16 – 18
6AW–8194A–00	16 – 8
60E–81950–00	16 – 6
63P–81950–00	16 – 13
68F–81953–00	16 – 11
6BG–81960–00	14 – 12
6EE–81994–40	13 – 22
6EE–81994–50	13 – 23
6EE–81995–40	13 – 20
6EE–81995–50	13 – 21
6AG–81996–00	13 – 25
6BG–82105–01	16 – 28
6BG–82115–00	15 – 7
6Y8–82117–00	36 – 17

NUMERICAL INDEX
INDEX NUMERIQUE

PART NO. N° PIECES	REF. NO.
6G5–82119–00	16 – 25
682–82119–01	16 – 5
67C–82127–00	28 – 31
6U0–82127–00	26 – 30
67C–82127–10	28 – 31
67C–82127–20	27 – 36
6H1–82148–00	26 – 20
1E6–82151–00	23 – 23
67F–82151–00	18 – 2
67F–82151–10	18 – 3
67F–8215B–10	18 – 4
67F–8215B–20	18 – 5
65W–82181–00	29 – 8
6A0–82317–00	16 – 21
6AH–82370–00	14 – 11
6BG–82388–00	17 – 7
6BG–82389–00	14 – 9
6BG–82398–00	14 – 8
64J–82504–00	17 – 11
6Y8–82509–10	36 – 8
6X4–82510–41	23 – 1
6Y8–82521–11	36 – 15
6Y8–82521–51	36 – 18
703–82532–00	23 – 3
6X4–82540–00	22 – 28
6BG–82553–00	9 – 26
6Y8–82553–01	36 – 20
6CJ–82554–00	18 – 10
682–82556–00	23 – 6
69J–82563–01	18 – 14
69W–82575–00	23 – 5
676–82577–01	23 – 2
6BG–8257V–00	17 – 13
689–8257Y–00	23 – 7
6P2–82582–00	18 – 6
6P2–82582–10	18 – 7
6X4–82586–10	23 – 10
69J–82587–00	18 – 17
61A–82588–01	18 – 11
6BG–82590–03	18 – 1
6BG–82590–13	18 – 1
60V–8259F–00	18 – 9
6X4–83383–00	23 – 11
	36 – 5
6X4–83386–00	23 – 12
	36 – 6
6Y5–83553–M0	23 – 22
6E5–83558–00	28 – 7

PART NO. N° PIECES	REF. NO.
6E5–83558–10	32 – 17
6H4–83589–00	23 – 19
6BG–83614–00	18 – 15
6X4–83653–20	23 – 14
67H–83672–01	28 – 5
6C5–84301–00	23 – 15
6Y8–8454G–00	36 – 11
6X4–85415–00	23 – 20
68V–85548–00	16 – 26
6BG–85561–00–94	13 – 7
6BG–85570–00	14 – 4
6AH–85580–00	13 – 9
6CJ–85790–00	17 – 5
6BT–8591A–03	14 – 1
6BG–8591A–04	14 – 1
6BG–86112–10	8 – 4
6C5–86120–00	8 – 2
6Y8–86260–02	36 – 2
6AA–86261–00	36 – 3
6Y8–86267–00	36 – 1
6BG–W0001–01	37 – 1
6BG–W0001–20	38 – 1
6BG–W0078–00	1 – 19
	38 – 23
6BG–W009A–02–9S	5 – 1
6BG–W009B–00–9S	3 – 1
90101–06020	26 – 29
	27 – 35
90101–06054	25 – 12
90101–09M01	35 – 6
90101–12014	22 – 58
90101–12M65	26 – 38
	27 – 40
90105–08060	6 – 18
90105–08M61	32 – 43
90105–09009	5 – 12
90109–06047	2 – 9
90109–06M65	5 – 8
90109–06M80	20 – 30
90109–06M86	18 – 16
	18 – 20
	18 – 22
	18 – 26
	20 – 12
	20 – 21
	20 – 35
	20 – 37
	21 – 16

PART NO. N° PIECES	REF. NO.
90109–06M86	21 – 18
90109–06M88	24 – 3
90109–06MA1	17 – 17
90109–08229	28 – 15
90109–12MA3	28 – 24
90116–10063	28 – 12
90119–06025	11 – 13
90119–06037	8 – 13
90119–06126	7 – 10
	25 – 31
90119–06M59	16 – 20
90119–06M61	8 – 1
	20 – 3
90119–06MA3	5 – 13
90119–06MA5	3 – 17
90119–08069	7 – 9
90119–08102	30 – 24
90119–08132	30 – 25
90119–08154	3 – 4
90119–08M15	32 – 29
	38 – 32
90119–08M84	33 – 9
90152–05007	22 – 10
90152–05010	33 – 12
90157–05M16	34 – 6
90159–05059	28 – 3
90159–05M12	15 – 3
90167–05017	2 – 4
90167–06M00	36 – 12
90170–09M03	35 – 4
90170–12138	32 – 37
90170–20137	13 – 4
90171–16011	33 – 23
90179–35001	11 – 9
90185–06M05	2 – 10
90185–08018	28 – 17
90185–09M01	35 – 3
90185–10027	28 – 13
90185–10M14	24 – 13
90185–12M12	22 – 65
90185–22M11	26 – 12
	27 – 12
90201–06M30	36 – 13
90201–08M00	26 – 17
	27 – 23
90201–10038	29 – 31
90201–10049	28 – 39
90201–10144	11 – 5

PART NO. N° PIECES	REF. NO.
90201–106M5	24 – 18
90201–10M20	25 – 16
	35 – 2
90201–10M63	35 – 7
90201–12035	22 – 62
90201–12062	26 – 39
	27 – 41
90201–12426	26 – 40
	27 – 42
90201–12M07	20 – 17
90201–12M16	28 – 26
90201–13M19	28 – 28
90201–16014	6 – 17
90201–186F1	3 – 23
	37 – 13
90201–21M18	13 – 5
90201–22429	32 – 55
90201–22M05	28 – 29
90201–27M00	32 – 34
90201–30M00	28 – 33
90202–07M07	25 – 20
90202–10M56	24 – 9
90202–12060	33 – 3
90202–21100	28 – 27
90206–10M04	25 – 34
90206–12052	20 – 16
90206–12M22	22 – 60
90209–10M26	24 – 11
90249–12M38	26 – 21
	27 – 27
90249–18M35	26 – 15
	27 – 21
90250–06023	32 – 60
90280–03017	11 – 10
90280–03M03	32 – 25
	38 – 29
90340–08002	32 – 9
90340–14M06	3 – 24
	30 – 31
	31 – 6
90340–18M09	3 – 22
90344–51003	3 – 7
90381–12M10	26 – 22
	27 – 28
90381–12M11	26 – 23
	27 – 29
90386–08032	22 – 16
90386–12003	22 – 63

PART NO. N° PIECES	REF. NO.
90386–12M37	20 – 14
90386–12MA2	20 – 15
90386–14MA1	26 – 6
	27 – 6
90386–18M44	26 – 18
	27 – 24
90386–18MA0	26 – 19
90386–18MA5	27 – 25
90386–22MA4	26 – 13
	27 – 13
90386–26MA3	22 – 53
90386–30M60	28 – 37
90386–30M77	28 – 35
90386–30M78	28 – 34
90386–90M90	25 – 15
90387–04001	18 – 12
90387–05053	24 – 12
90387–05054	24 – 14
90387–06119	16 – 19
90387–06279	25 – 35
90387–06285	13 – 14
90387–06M43	20 – 32
90387–06M45	25 – 30
90387–06M69	9 – 24
	20 – 5
90387–10M42	35 – 5
90387–12M02	22 – 61
90387–18M03	27 – 26
90389–22M01	33 – 22
90430–06014	5 – 9
	37 – 4
90430–08020	1 – 16
	32 – 10
	38 – 12
90430–12072	33 – 4
90430–14115	3 – 25
	17 – 6
	37 – 14
90430–14M09	1 – 15
	30 – 32
	31 – 7
	38 – 3
	38 – 11
90445–07ME8	32 – 16
90445–09035	21 – 7
90445–09220	21 – 10
90445–09224	21 – 11
90445–13M02	12 – 7

PART NO. N° PIECES	REF. NO.
90445–14020	12 – 4
90447–19014	28 – 9
90462–08067	21 – 15
90462–20005	20 – 34
90464–06001	14 – 10
	17 – 10
90464–08M07	23 – 4
90464–09M21	21 – 19
90464–09M42	22 – 38
90464–11008	18 – 8
90464–11M24	8 – 9
90464–12006	10 – 24
90464–12010	10 – 25
90464–12012	12 – 35
90464–12224	10 – 26
90464–13249	14 – 18
	17 – 3
	17 – 4
90464–15007	8 – 8
	10 – 27
90464–15008	8 – 14
90464–15011	8 – 15
90464–18205	18 – 19
90464–18246	14 – 19
	17 – 16
90464–20181	18 – 23
	18 – 25
90465–08M63	26 – 36
90465–10M77	26 – 33
90465–11M10	8 – 10
	10 – 22
	12 – 8
	21 – 3
	21 – 9
	28 – 1
	28 – 4
	32 – 18
	36 – 10
90465–13M11	26 – 14
	27 – 39
90465–13M18	28 – 10
90465–13M24	16 – 22
	17 – 19
90465–13M36	23 – 24
90465–13M39	16 – 23
90465–13M97	18 – 27
90465–14M66	16 – 24
90467–09M17	12 – 9

NUMERICAL INDEX
INDEX NUMERIQUE

PART NO. N° PIECES	REF. NO.
90467–10M04	12 – 34
90467–11M08	12 – 20
90468–10005	22 – 41
	22 – 47
90468–18008	25 – 18
	25 – 21
	25 – 37
90480–09M12	9 – 25
90480–12314	13 – 16
	17 – 20
	17 – 22
90480–12M25	31 – 2
90480–13M24	20 – 31
90480–15M31	13 – 15
90480–25003	14 – 5
90501–12082	25 – 13
90501–18001	32 – 58
90501–23215	22 – 14
90506–18M40	20 – 22
91318–04025	29 – 52
91380–06020	29 – 40
91490–16010	25 – 28
91490–20010	22 – 11
	22 – 20
91490–20015	25 – 17
91490–30025	33 – 24
91609–16012	29 – 24
91690–30018	26 – 5
	27 – 5
92903–06600	3 – 6
	30 – 9
	31 – 11
	31 – 15
92903–08100	15 – 5
92903–08600	15 – 2
92907–04600	5 – 18
92990–06100	20 – 28
	24 – 5
92990–06600	20 – 29
92990–08200	6 – 19
92990–12200	22 – 59
92990–12600	22 – 64
92995–05600	13 – 11
	24 – 16
	30 – 7
92995–06600	5 – 21
	5 – 24
	8 – 6

PART NO. N° PIECES	REF. NO.
92995–06600	12 – 3
	12 – 33
	14 – 3
	14 – 7
	14 – 14
	14 – 17
	15 – 14
	16 – 3
	16 – 17
	16 – 30
	17 – 2
	17 – 2
	17 – 9
	17 – 15
	22 – 34
	25 – 4
	25 – 6
	26 – 32
	26 – 35
	27 – 38
	30 – 14
92995–08600	15 – 11
	22 – 32
	26 – 11
	27 – 11
	33 – 16
	33 – 19
92995–10100	33 – 7
92995–10600	26 – 27
	27 – 33
	33 – 8
93101–22M00	32 – 49
	38 – 21
93101–22M60	32 – 31
	38 – 17
93101–35002	4 – 11
	37 – 8
93102–37M40	11 – 14
	37 – 2
93102–43M42	4 – 10
	37 – 7
93106–09014	32 – 13
	38 – 13
93110–16004	30 – 10
	38 – 5
93210–04279	36 – 9
93210–04N50	29 – 54
93210–04N51	29 – 55

PART NO. N° PIECES	REF. NO.
93210–064A5	29 – 37
93210–07003	32 – 52
	38 – 22
93210–09165	29 – 48
93210–10M74	29 – 46
	29 – 63
93210–11073	29 – 69
93210–11368	29 – 35
93210–12N52	29 – 44
93210–13M63	3 – 21
	5 – 7
	37 – 3
	37 – 12
93210–16275	35 – 9
93210–24M79	5 – 26
	12 – 31
	37 – 17
	37 – 18
93210–29M94	28 – 36
93210–33MG4	32 – 14
	38 – 14
93210–42159	7 – 3
	37 – 15
93210–48001	32 – 32
	38 – 18
93210–50768	29 – 41
93210–59MG7	32 – 22
	38 – 15
	38 – 26
93210–69MG6	32 – 47
	38 – 20
93210–74MG5	32 – 46
	38 – 19
93306–001U1	32 – 44
93315–32224	32 – 3
93317–22204	32 – 48
93332–00001	32 – 6
93332–00003	32 – 39
93410–28M06	28 – 30
93420–36M01	30 – 30
93450–17129	4 – 9
93501–04M02	25 – 14
93501–08001	29 – 74
93505–32038	29 – 26
	29 – 51
93604–08062	32 – 28
93604–10M03	3 – 10
93605–17002	11 – 3

PART NO. N° PIECES	REF. NO.
93606–12019	3 – 3
	31 – 4
	33 – 5
93608–12M05	31 – 17
93700–06M03	22 – 3
	26 – 8
	27 – 8
	27 – 8
94702–00418	1 – 6
	5 – 27
95023–06030	13 – 6
	13 – 8
95333–08600	15 – 4
95380–05600	12 – 29
	24 – 17
	33 – 13
95380–05700	25 – 25
95380–05800	2 – 6
95380–06600	8 – 3
	20 – 26
	22 – 19
95380–08600	12 – 18
95380–12600	26 – 41
	27 – 43
95380–12700	28 – 25
95780–06300	36 – 14
95817–10035	11 – 4
95895–06016	7 – 2
	7 – 5
95895–06020	13 – 13
95895–06040	7 – 15
95895–06045	25 – 33
95895–08016	12 – 17
97013–06016	31 – 10
97013–06020	30 – 8
97013–06025	31 – 14
97013–06035	3 – 5
97013–08045	15 – 1
97075–06050	30 – 13
97075–10040	33 – 6
97080–08016	26 – 16
	27 – 22
97085–06010	26 – 37
97095–05012	30 – 6
97095–05016	13 – 10
97095–05020	24 – 15
97095–06010	27 – 17
97095–06014	20 – 19

PART NO. N° PIECES	REF. NO.
97095–06014	22 – 39
	22 – 45
	23 – 13
	26 – 31
	26 – 34
	27 – 37
97095–06016	8 – 5
	14 – 16
	16 – 2
	16 – 29
	17 – 1
	17 – 1
	17 – 8
	17 – 14
97095–06020	5 – 20
	5 – 23
	15 – 13
	16 – 16
	25 – 3
97095–06025	12 – 2
	14 – 2
	14 – 6
	14 – 13
	25 – 5
97095–06030	12 – 32
	22 – 33
97095–08020	26 – 10
	27 – 10
97095–08025	33 – 15
97095–08035	33 – 18
97095–08040	22 – 31
97095–08045	15 – 10
97095–10050	26 – 25
	27 – 31
97575–06525	30 – 19
	31 – 8
97575–08530	28 – 18
	28 – 22
97595–05514	25 – 9
97595–06610	16 – 4
	16 – 9
	16 – 15
97780–60520	21 – 5
97780–60620	16 – 7
	16 – 12
	16 – 27
	23 – 17
	36 – 7

PART NO. N° PIECES	REF. NO.
97780–60920	22 – 51
97880–06025	20 – 27
97880–06035	36 – 12
97885–06008	28 – 32
97980–05216	30 – 27
97980–06216	23 – 9
	36 – 4
97985–04116	18 – 13
97985–06216	22 – 55
	28 – 6
98507–04010	5 – 17
98680–06525	27 – 20
98980–05025	3 – 19
	5 – 5
99001–08600	32 – 53
99080–10600	26 – 24
	27 – 30
99530–08012	5 – 11
99530–10114	15 – 9