YAMAHA

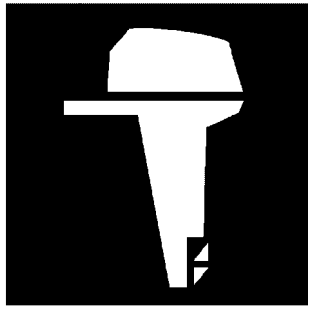

PARTS CATALOGUE
CATALOGUE DE PIECES DETACHEES

F80BET'15 (6D7C)
F100DET'15 (6D9C)

YAMAHA
GENUINE
Parts & Accessories

1P6D7-300F1

( )

F80BET/F100DET
PARTS CATALOGUE
©2025 by Yamaha Motor Co., Ltd.
1st edition, April 2025
All rights reserved.
Any reprinting or unauthorized use
without the written permission of
Yamaha Motor Co., Ltd.
is expressly prohibited.
Printed in Japan.

F80BET/F100DET
CATALOGUE DE PIECES DETACHEES
©2025 par Yamaha Motor Co., Ltd.
1re édition, avril 2025
Tous droits réservés
Toute réimpression ou utilisation
non autorisée sans la permission écrite
de Yamaha Motor Co., Ltd.
est formellement interdite.
Imprimé au Japon

FOREWORD

This Parts Catalogue is related to the parts for the model(s) on the cover page. When you are ordering replacement parts, please refer to this Parts Catalogue and quote both part numbers and part names correctly.

1. Modifications or additions which have been made after the issue of the Parts Catalogue will be announced in the Parts News.
   It is advisable that you make the necessary corrections to the Parts Catalogue according to the Parts News.

2. Abbreviations
   The following abbreviations are used in this Parts Catalogue.
   "UR" Use specified parts number.
   "UN" Use as many as needed.
   "AP" Alternate Parts
   "LM" Locally Made (Parts need to be ordered locally)
   "F#" Frame No. (Applicable machine No.)
   "O/S" Over Size

3. The number of components for assembly
   - Parts, which are to be supplied in an assembly, are listed with a dot (.) in front of the part name as shown below.
   - The numeral appearing to the right of each component part indicates the quantity of parts for each assembly unit.

PART NO.	DESCRIPTION	Q'TY	REMARKS
2F5–83310–60	FRONT FLASHER LIGHT ASSY	2	
115–83311–60	.BULB (6V–18W)	1	

4. Applicable colours of graphics are represented in the "REMARKS" as shown below.

PART NO.	DESCRIPTION	Q'TY	REMARKS
2N4–24110–00–X5	FUEL TANK COMP.	2	MXR
3J1–24240–10	.GRAPHIC, FUEL TANK	1	FOR MXR

5. Note that the illustrations for reference in finding parts numbers are not to be used for assembling. When assembling, please use the applicable service manual.

6. The asterisk (*) before a reference number indicates modified items after the first edition.

7. Applicable Serial No.
   Engine Serial No.

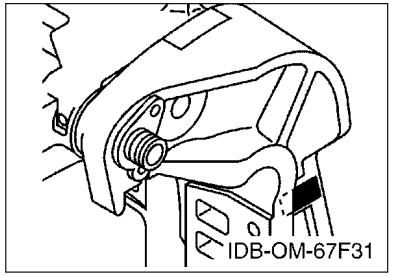

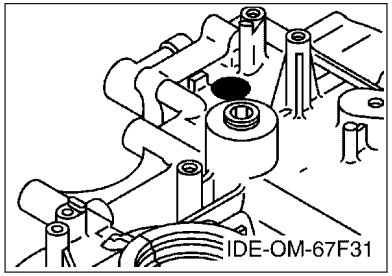

8. Applicable Engine Starting Serial No.

Model	Serial No.	Model	Serial No.
F80B	6D7-1017404	F100D	6D9-1025587

9. Applicable Colour Code

Abbreviation	Colour Name	Colour Code
DBN1	DARK BLUISH GRAY 1	008D

10. Quantity Column Information

Column No.	Name Of Q'ty Column	Applicable Model
1	6D7C	F80BET
2	6D9C	F100DET

AVANT–PROPOS

Ce catalogue de pièces détachées concerne les pièces pour le(s) modèle(s) indiqué(s) sur la page de couverture. Lorsque vous commandez des pièces de rechange, veuillez vous référer à ce catalogue de pieces détachées et indiquer clairement les numéros et les noms des pièces détachées.

1. Les modifications ou ajouts ayant été effectués après la parution du catalogue de pièces détachées seront décrits dans les Bulletins d'information concernant les pièces détachées.
   Il est recommandé que vous apportiez les corrections nécessaires au catalogue des pièces détachées en vous référant aux Bulletins d'information.

2. Abréviations
   Dans ce catalogue, les abréviations suivantes sont utilisées:
   "UR" Utiliser le numéro de pièces spécifié.
   "UN" Utiliser autant que nécessaire.
   "AP" Pièces de substitution
   "LM" Fabrication locale (les pièces doivent être commandées localement.)
   "F#" N° de cadre (applicable au N° de série)
   "O/S" Surdimensionné

3. Nombre de pièces d'un assemblage
   - Les pièces fournies comme composants d'un assemblage sont précédées d'un point (.) de la manière indiquée ci–dessous.
   - Le chiffre apparaissant à la droite de chaque composant indique la quantité de pièces pour chaque unité d'assemblage.

N° PIECES	DESCRIPTION	QTE	REMARQUES
2F5–83310–60	ENS. CLIGNOTANT AVANT	2	
115–83311–60	.AMPOULE (6V–18W)	1	

4. Les couleurs concernant les graphiques sont indiquées dans la colonne "REMARQUES", comme indiqué ci–dessous.

N° PIECES	DESCRIPTION	QTE	REMARQUES
2N4–24110–00–X5	RESERVOIR A ESSENCE.	2	MXR
3J1–24240–10	.GRAPHIQUE	1	POUR MXR

5. Veuillez noter que les illustrations sont indiquées à titre de référence pour trouver les numéros de pièces, non pour être utilisées lors de l'assemblage. Lors de l'assemblage, veuillez utiliser le manuel d'entretien adéquat.

6. L'astérisque (*) placé devant un numéro de référence indique des éléments qui ont été modifiés après la première édition.

7. N° de série applicable
   N° de Série du moteur

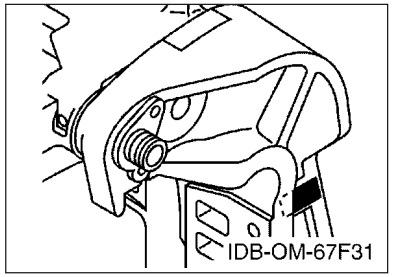

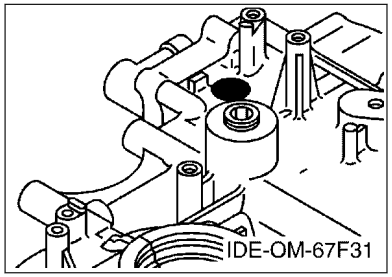

8. N° de série initial du moteur applicable

Modèle	N° de série	Modèle	N° de série
F80B	6D7-1017404	F100D	6D9-1025587

9. Code couleur applicable

Abréviation	Nom de la couleur	Code couleur
DBN1	DARK BLUISH GRAY 1	008D

10. Informations relatives à la colonne Quantité

N° de la colonne	Nom de la colonne Qté	Modèle applicable
1	6D7C	F80BET
2	6D9C	F100DET

CONTENTS

SCHEDULED SERVICE PARTS.....1
TOP COWLING.....2
CYLINDER & CRANKCASE 1.....3
CRANKSHAFT & PISTON.....5
CYLINDER & CRANKCASE 2.....6
VALVE.....8
INTAKE 1.....10
INTAKE 2.....11
INTAKE 3.....12
FUEL INJECTION PUMP 1.....13
FUEL INJECTION PUMP 2.....15
FUEL.....16
GENERATOR.....18
ELECTRICAL 1.....19
ELECTRICAL 2.....21
ELECTRICAL 3.....23
ELECTRICAL 4.....24
STARTING MOTOR.....25
BOTTOM COWLING.....27
CONTROL.....30
BRACKET 1.....32
BRACKET 2.....34
OPTIONAL PARTS 1.....36
POWER TRIM & TILT ASSY 1.....37
POWER TRIM & TILT ASSY 2.....40
UPPER CASING.....41
OIL PAN.....43
LOWER CASING & DRIVE 1.....44
LOWER CASING & DRIVE 2.....48
FUEL TANK.....50
STEERING GUIDE.....51
OPTIONAL PARTS 2.....52
OPTIONAL PARTS 3.....53
OPTIONAL PARTS 4.....54
REPAIR KIT 1.....55
REPAIR KIT 2.....56

INDEX

NUMERICAL INDEX.....58

TABLE DES MATIERES

PIECES MAINTENANCE PERIODIQUE.....1
CAPOT SUPERIEUR..... 2
CYLINDRE & CARTER 1..... 3
VILEBREQUIN & PISTON.....5
CYLINDRE & CARTER 2..... 6
SOUPAPE..... 8
ADMISSION 1.....10
ADMISSION 2.....11
ADMISSION 3.....12
POMPE A INJECTEUR 1..... 13
POMPE A INJECTEUR 2..... 15
CARBURANT..... 16
GENERATRICE.....18
PARTIE ELECTRIQUE 1.....19
PARTIE ELECTRIQUE 2.....21
PARTIE ELECTRIQUE 3.....23
PARTIE ELECTRIQUE 4.....24
DEMARREUR ELECTRIQUE.....25
CAPOT INFERIEUR.....27
COMMANDE..... 30
SUPPORT 1..... 32
SUPPORT 2..... 34
PIECES OPTIONNELLES 1.....36
PUISSANCE PARER ET INCLINER 1..... 37
PUISSANCE PARER ET INCLINER 2..... 40
FOURREAU.....41
VENTILATEUR D'HUILE..... 43
BOITIER D'HELICE TRANSMISSION1.....44
BOITIER D'HELICE TRANSMISSION2.....48
RESERVOIR A CARBURANT.....50
FIXATION DE DIRECTION..... 51
PIECES OPTIONNELLES 2.....52
PIECES OPTIONNELLES 3.....53
PIECES OPTIONNELLES 4.....54
KITS DE REPARATION 1..... 55
KITS DE REPARATION 2..... 56

INDEX

INDEX NUMERIQUE.....58

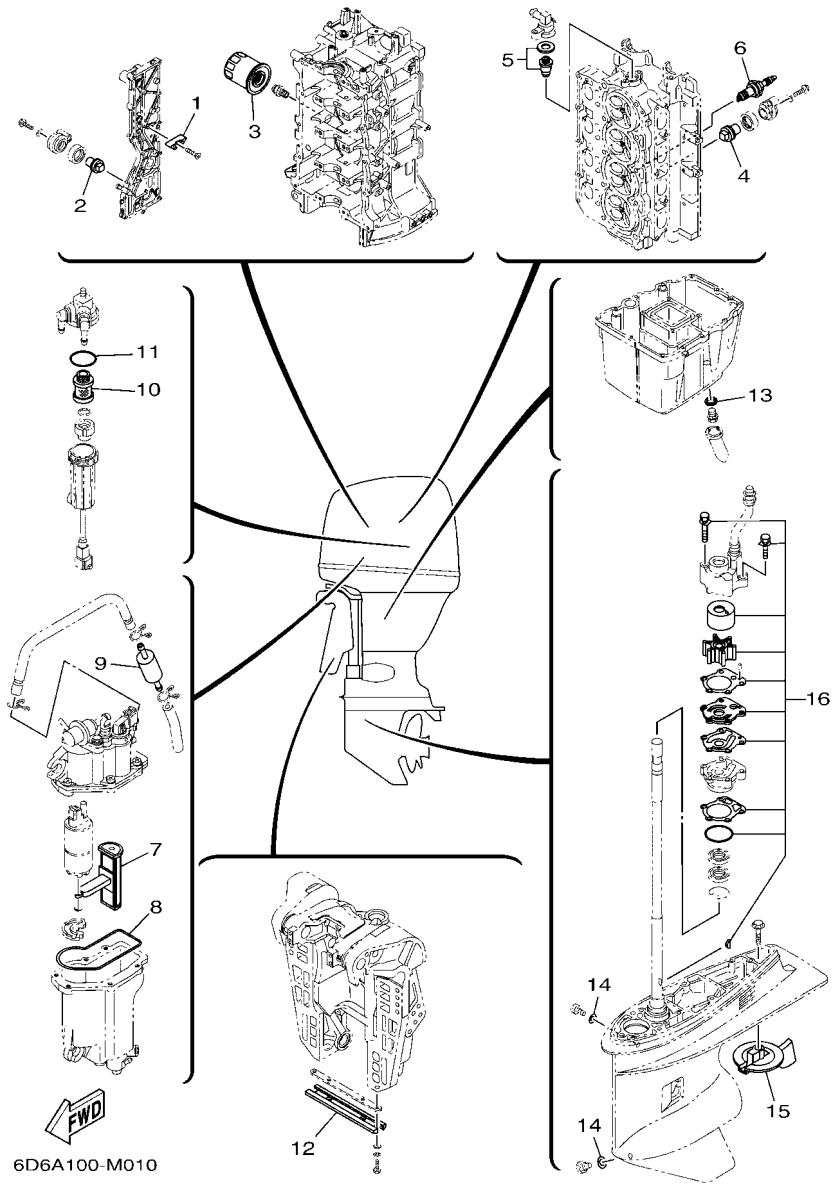

FIG. 1 SCHEDULED SERVICE PARTS — PIECES MAINTENANCE PERIODIQUE

REF. NO.	PART NO. N° PIECES	DESCRIPTION DESCRIPTION	6D7C	6D9C				REMARKS REMARQUES
1	6E5–11325–00	ANODE ANODE	3	3				
2	67F–11325–01	ANODE ANODE	1	1				
3	5GH–13440–30	ELEMENT ASSY, OIL CLEANER ELEMENT, FILTRE A HUILE	1	1				
4	67F–11325–01	ANODE ANODE	2	2				
5	67F–12411–01	THERMOSTAT THERMOSTAT	1					
	6D9–12411–00	THERMOSTAT THERMOSTAT		1				
6	94702–00391	PLUG, SPARK (NGK LFR5A-11) BOUGIE D'ALLUMAGE(NGK LFR5A-11	4	4				
7	6C5–13915–00	FILTER FILTRE	1	1				
8	6C5–14984–00	GASKET, FLOAT CHAMBER JOINT, CUVE DE FLOTTEUR	1					6D7:-1017804
	6C5–14984–10	GASKET, FLOAT CHAMBER JOINT, CUVE DE FLOTTEUR	1					6D7:1017805-
	6C5–14984–00	GASKET, FLOAT CHAMBER JOINT, CUVE DE FLOTTEUR		1				6D9:-1026470
	6C5–14984–10	GASKET, FLOAT CHAMBER JOINT, CUVE DE FLOTTEUR		1				6D9:1026471-
9	6C5–24251–00	STRAINER 1 FILTRE 1	1	1				
10	6D8–24563–00	ELEMENT, FILTER ELEMENT, FILTRE	1	1				
11	6D8–24564–00	GASKET JOINT	1	1				
12	6H1–45251–03	ANODE ANODE	1	1				
13	90430–14M09	GASKET JOINT	1	1				
14	90430–08020	GASKET JOINT	2	2				
15	67F–45371–00	TAB-TRIM ANODE DERIVE	1	1				
16	67F–W0078–00	WATER PUMP REPAIR KIT KIT DE REPARATION DE LA POMPE	1	1				

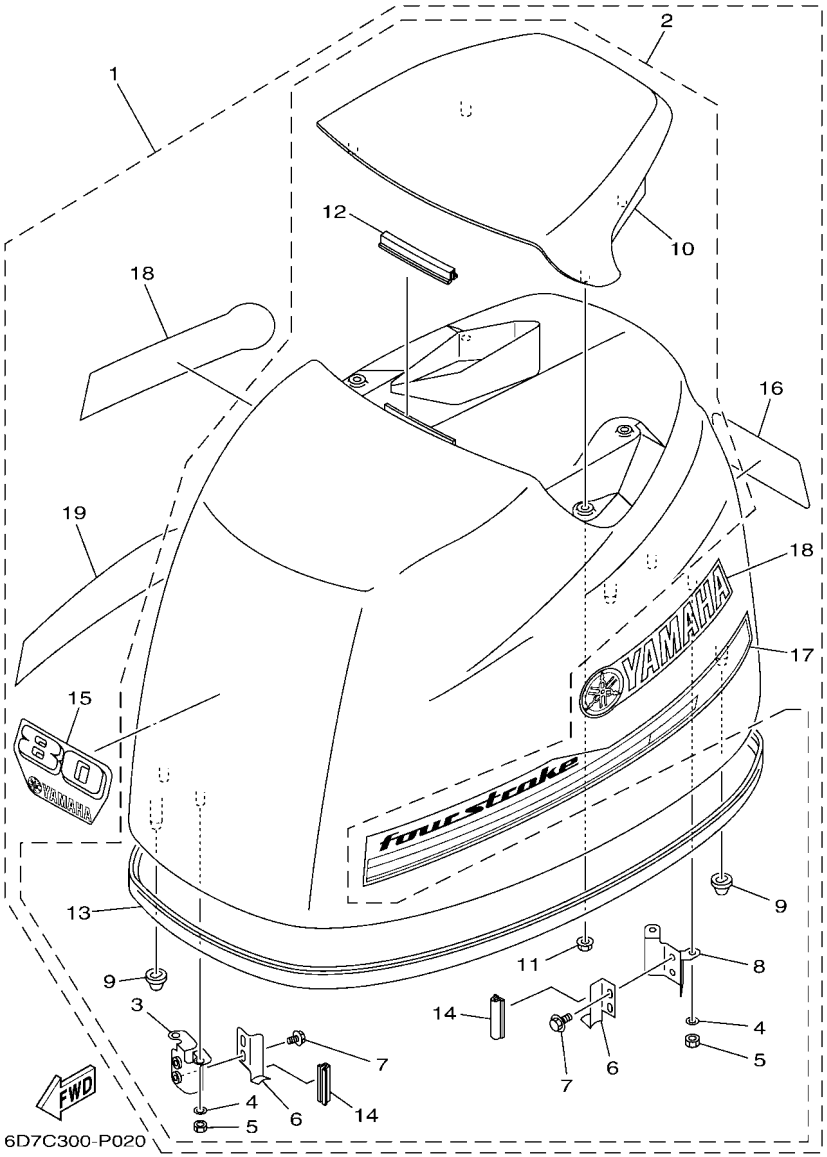

FIG. 2 TOP COWLING — CAPOT SUPERIEUR

REF. NO.	PART NO. N° PIECES	DESCRIPTION DESCRIPTION	6D7C	6D9C				REMARKS REMARQUES
1	6D7–42610–21	TOP COWLING ASSY CAPOT (ENS.)	1					
	6D9–42610–21	TOP COWLING ASSY CAPOT (ENS.)		1				
2	67F–4261A–00	.TOP COWLING W/O GRAPHICS .CAPOT SUPERIEUR SANS GRAPHIQUE	1	1				
3	67F–42647–00	..HOLDER, CLAMP BAND ..SUPPORT, SANDOW DE SERRAGE	1	1				
4	92990–06100	..WASHER, SPRING ..RONDELLE, GROWER	4	4				
5	95380–06600	..NUT, HEXAGON ..ECROU	4	4				
6	68V–42652–00	..HOOK ..CROCHET	2	2				
7	97595–06512	..BOLT, WITH WASHER ..VIS HEXAGONAL AVC RONDELLE	4	4				
8	67F–42649–00	..HOLDER, CLAMP BAND ..SUPPORT, SANDOW DE SERRAGE	1	1				
9	67F–42662–00	..DAMPER ..AMORTISSEUR	3	3				
10	67F–42613–00–8D	..MOLDING, AIR DUCT ..MANCHON A AIR	1	1				
11	90179–06M24	..NUT ..ECROU	4	4				
12	61N–42628–00	..SEAL ..JOINT	1	1				
13	67F–42615–00	..SEAL ..JOINT	1	1				
14	67F–42628–00	..SEAL ..JOINT	2	2				
15	6D7–42677–10	.GRAPHIC, FRONT .ADHESIF, AVANT	1					
	60C–42677–10	.GRAPHIC, FRONT .ADHESIF, AVANT		1				
16	6D7–42678–21	.GRAPHIC, REAR .ADHESIF, ARRIERE	1					
	60C–42678–10	.GRAPHIC, REAR .ADHESIF, ARRIERE		1				
17	6D6–42675–00	.GRAPHIC, SIDE 1 .EMBLEME	1	1				
18	6D6–42681–00	.MARK, COWLING .ADHESIF, CAPOT	2	2				
19	6D6–42676–00	.GRAPHIC, SIDE 2 .EMBLEME	1	1				

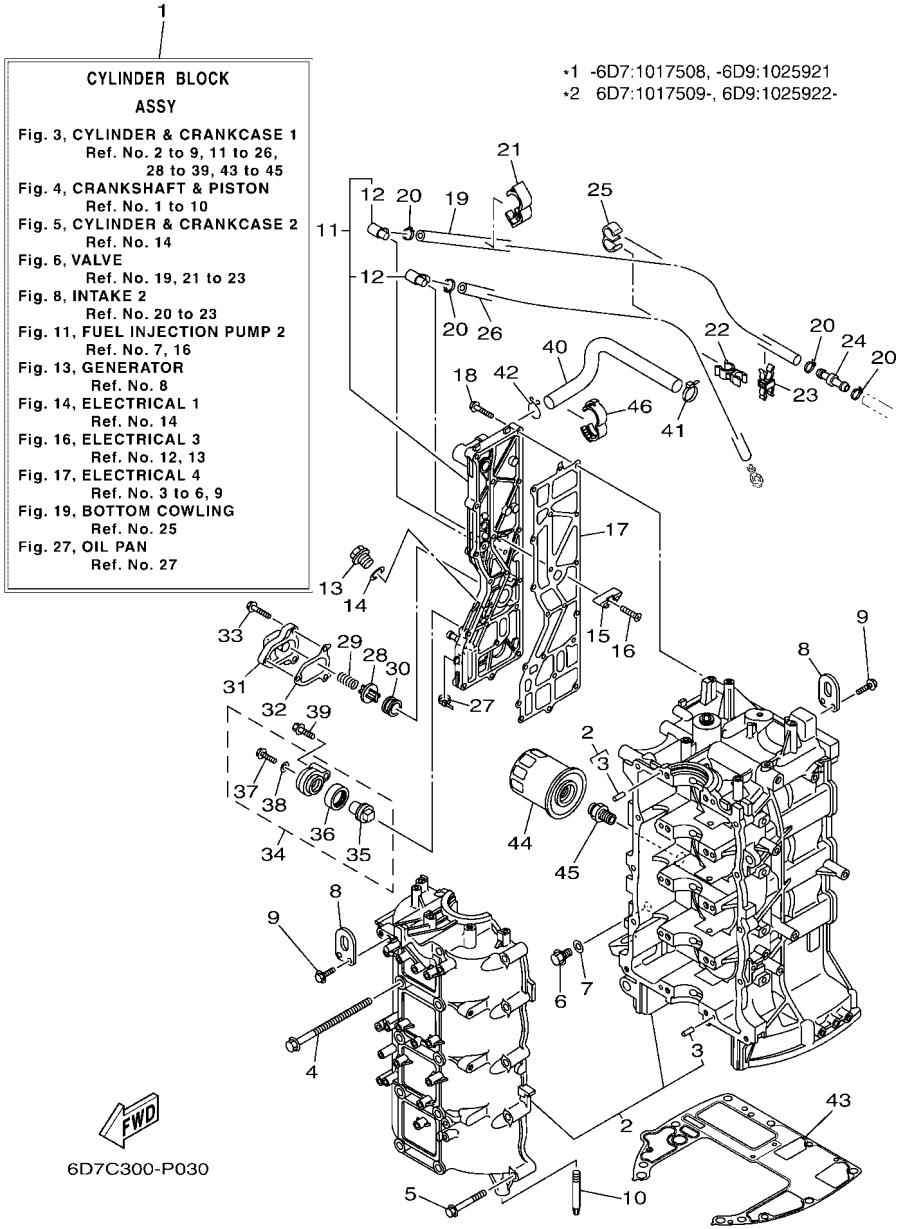

FIG. 3 CYLINDER & CRANKCASE 1 — CYLINDRE & CARTER 1

REF. NO.	PART NO. N° PIECES	DESCRIPTION DESCRIPTION	6D7C	6D9C				REMARKS REMARQUES
1	6D8–W009B–07–9S	CYLINDER BLOCK ASSY CYLINDRE GROUPE (ENS.)	1	1				*1 *1
	6D8–W009B–08–9S	CYLINDER BLOCK ASSY CYLINDRE GROUPE (ENS.)	1	1				*2 *2
2	6D8–15100–02	CRANKCASE ASSY CARTER DE MOTEUR COMPLET	1	1				
3	93606–12019	.PIN, DOWEL .GOUPILLE	10	10				
4	90119–10M88	BOLT, WITH WASHER BOULON, AVEC RONDELLE	10	10				
5	90119–08M66	BOLT, WITH WASHER BOULON, AVEC RONDELLE	10	10				
6	90340–14M06	PLUG, STRAIGHT SCREW PLOT, FILETE DROIT	1	1				
7	90430–14115	GASKET JOINT	1	1				
8	62Y–11119–00	HANGER, ENGINE ANNEAU, LEVAGE	2	2				
9	97595–06520	BOLT, WITH WASHER VIS HEXAGONAL AVC RONDELLE	4	4				
10	67F–15142–00	GUIDE 1 GUIDE 1	2	2				
11	6D8–41113–51–9S	OUTER COVER, EXHAUST COUVERCLE, ECHAPPEMENT	1	1				
12	676–11372–00	.NIPPLE, HOSE .RACCORD, TUYAU	2	2				
13	90340–18M09	PLUG, STRAIGHT SCREW PLOT, FILETE DROIT	1	1				
14	90201–186F1	WASHER, PLATE RONDELLE, PLATE	1	1				
15	6E5–11325–00	ANODE ANODE	3	3				
16	98780–04016	SCREW, FLAT HEAD VIS A TETE FRAISEE	3	3				
17	67F–41114–A2	GASKET, EXHAUST OUTER COVER JOINT, COUVERCLE D'ECHAPPEMENT	1	1				
18	90119–06MA4	BOLT, WITH WASHER BOULON, AVEC RONDELLE	18	18				
19	6D8–42541–00	PIPE 1 TUYAU 1	1	1				
20	90465–11M10	CLAMP BRIDE	4	4				
21	90464–18004	CLAMP BRIDE	1	1				
22	90464–10010	CLAMP BRIDE	1	1				
23	90464–11009	CLAMP BRIDE	1	1				
24	6D8–24378–00	PIPE, JOINT 3 DURITE RACCORDEMENT 3	1	1				
25	90464–09M31	CLAMP BRIDE	1	1				
26	68V–42541–20	PIPE 1 TUYAU 1	1	1				

FIG. 3 CYLINDER & CRANKCASE 1 — CYLINDRE & CARTER 1

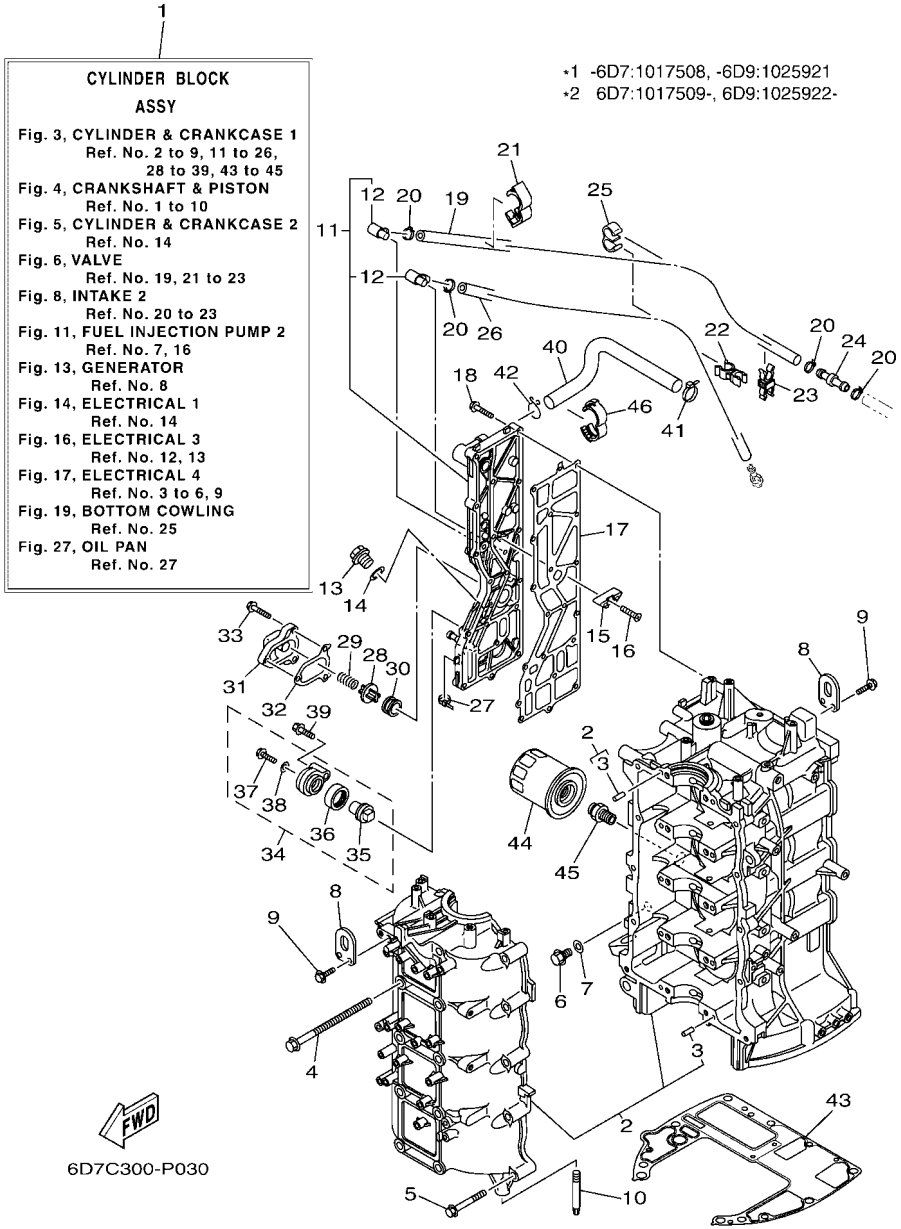

REF. NO.	PART NO. N° PIECES	DESCRIPTION DESCRIPTION	6D7C	6D9C				REMARKS REMARQUES
27	90465–11M10	CLAMP BRIDE	1	1				
28	6G5–12416–00	VALVE, PRESSURE CONTROL SOUPAPE DE CONTROLEUR PRESS	1	1				
29	90501–16M11	SPRING, COMPRESSION RESSORT, COMPRESSION	1	1				
30	90480–20M05	GROMMET PASSE-FIL	1	1				
31	67F–1246A–A0–9S	COVER 1 COUVERCLE 1	1	1				
32	67F–12435–A0	GASKET JOINT	1	1				
33	90119–06MA2	BOLT, WITH WASHER BOULON, AVEC RONDELLE	3	3				
34	69J–11301–00	ANODE COVER ASSY COUVERCLE ANODE (ENS.)	1	1				
35	67F–11325–01	.ANODE .ANODE	1	1				
36	67F–11328–00	.GROMMET, ANODE .PASSE-FIL	1	1				
37	90105–06M07	.BOLT, FLANGE .BOULON	1	1				
38	90430–06M03	.GASKET .JOINT	1	1				
39	97575–08540	BOLT, WITH WASHER VIS HEXAGONAL AVC RONDELLE	1	1				
40	67F–1243A–00	HOSE 1 DURITE 1	1	1				
41	90465–11M59	CLAMP BRIDE	1	1				
42	90467–20M15	CLIP JONC	1	1				
43	68V–11351–00	GASKET, CYLINDER JOINT, D'EMBASE	1	1				
44	5GH–13440–30	ELEMENT ASSY, OIL CLEANER ELEMENT, FILTRE A HUILE	1	1				
45	90401–20007	BOLT, UNION BOULON, RACCORD	1	1				
46	90464–16001	CLAMP BRIDE	1	1				

FIG. 4 CRANKSHAFT & PISTON — VILEBREQUIN & PISTON

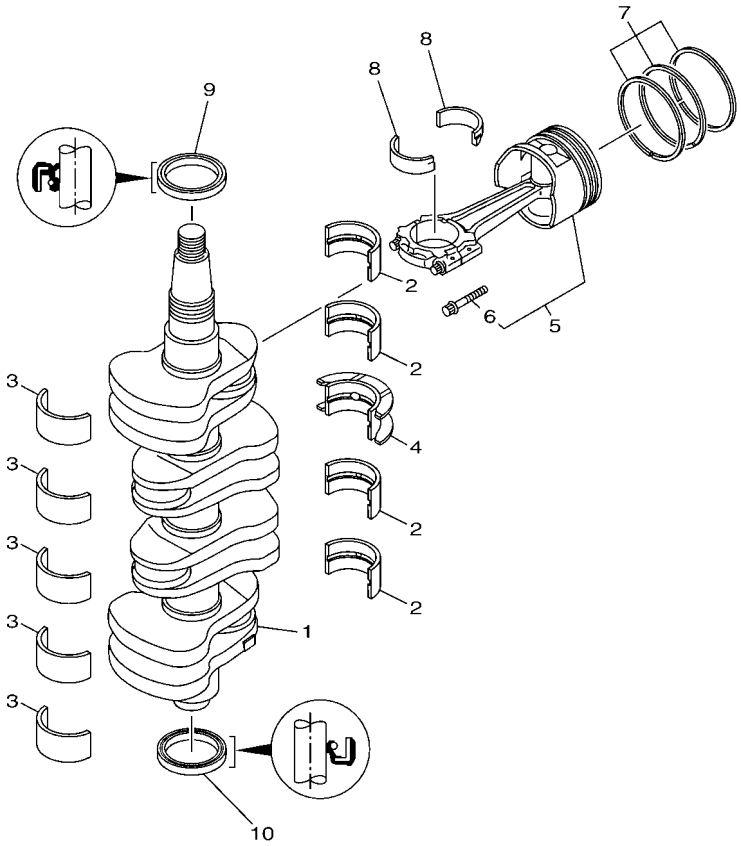

6D67110-K030

REF. NO.	PART NO. N° PIECES	DESCRIPTION DESCRIPTION	6D7C	6D9C				REMARKS REMARQUES
1	6D8–11411–01	CRANKSHAFT VILEBREQUIN COMPLET	1	1				
2	6D8–11416–00	PLANE BEARING, CRANKSHAFT 1 COUSSINET DE VILEBREQUIN 1	4	4				UR GREEN UR GREEN
	6D8–11416–10	PLANE BEARING, CRANKSHAFT 1 COUSSINET DE VILEBREQUIN 1	4	4				UR BLUE UR BLUE
	6D8–11416–20	PLANE BEARING, CRANKSHAFT 1 COUSSINET DE VILEBREQUIN 1	4	4				UR RED UR RED
3	6D8–11417–00	PLANE BEARING, CRANKSHAFT 2 COUSSINET DE VILEBREQUIN 2	5	5				UR YELLOW UR YELLOW
	6D8–11417–10	PLANE BEARING, CRANKSHAFT 2 COUSSINET DE VILEBREQUIN 2	5	5				UR GREEN UR GREEN
	6D8–11417–20	PLANE BEARING, CRANKSHAFT 2 COUSSINET DE VILEBREQUIN 2	5	5				UR BLUE UR BLUE
	6D8–11417–30	PLANE BEARING, CRANKSHAFT 2 COUSSINET DE VILEBREQUIN 2	5	5				UR RED UR RED
4	6D8–11418–00	PLANE BEARING, CRANKSHAFT 3 COUSSINET DE VILEBREQUIN 3	1	1				UR GREEN UR GREEN
	6D8–11418–10	PLANE BEARING, CRANKSHAFT 3 COUSSINET DE VILEBREQUIN 3	1	1				UR BLUE UR BLUE
	6D8–11418–20	PLANE BEARING, CRANKSHAFT 3 COUSSINET DE VILEBREQUIN 3	1	1				UR RED UR RED
5	6D8–W1164–21	PISTON/CON-ROD ASSY(STD) PISTON/BIELLE COMPLETTE(STD)	4	4				
	6D8–W1164–31	PISTON/CON-ROD ASSY(0.25MM OS) PISTON/BIELLE COMPLETTE:0.25MM	4	4				AP AP
6	K1C–A3275–00	.BOLT, CONNECTING ROD .BOULON, BIELLE	2	2				
7	6D8–11603–10	PISTON RING SET (STD) JEU DE SEGMENTS (STD)	4	4				
	6D8–11604–10	PISTON RING SET (0.25MM O/S) JEU DE SEGMENTS (0.25MM O/S)	4	4				AP AP
8	6D8–11656–00	PLANE BEARING, CONNECTING ROD ROULEMENT DE BIELLE	8	8				UR YELLOW UR YELLOW
	6D8–11656–10	PLANE BEARING, CONNECTING ROD ROULEMENT DE BIELLE	8	8				UR GREEN UR GREEN
	6D8–11656–20	PLANE BEARING, CONNECTING ROD ROULEMENT DE BIELLE	8	8				UR BLUE UR BLUE
	6D8–11656–30	PLANE BEARING, CONNECTING ROD ROULEMENT DE BIELLE	8	8				UR RED UR RED
9	93102–48017	OIL SEAL JOINT SPY	1	1				
10	93101–48001	OIL SEAL JOINT SPY	1	1				

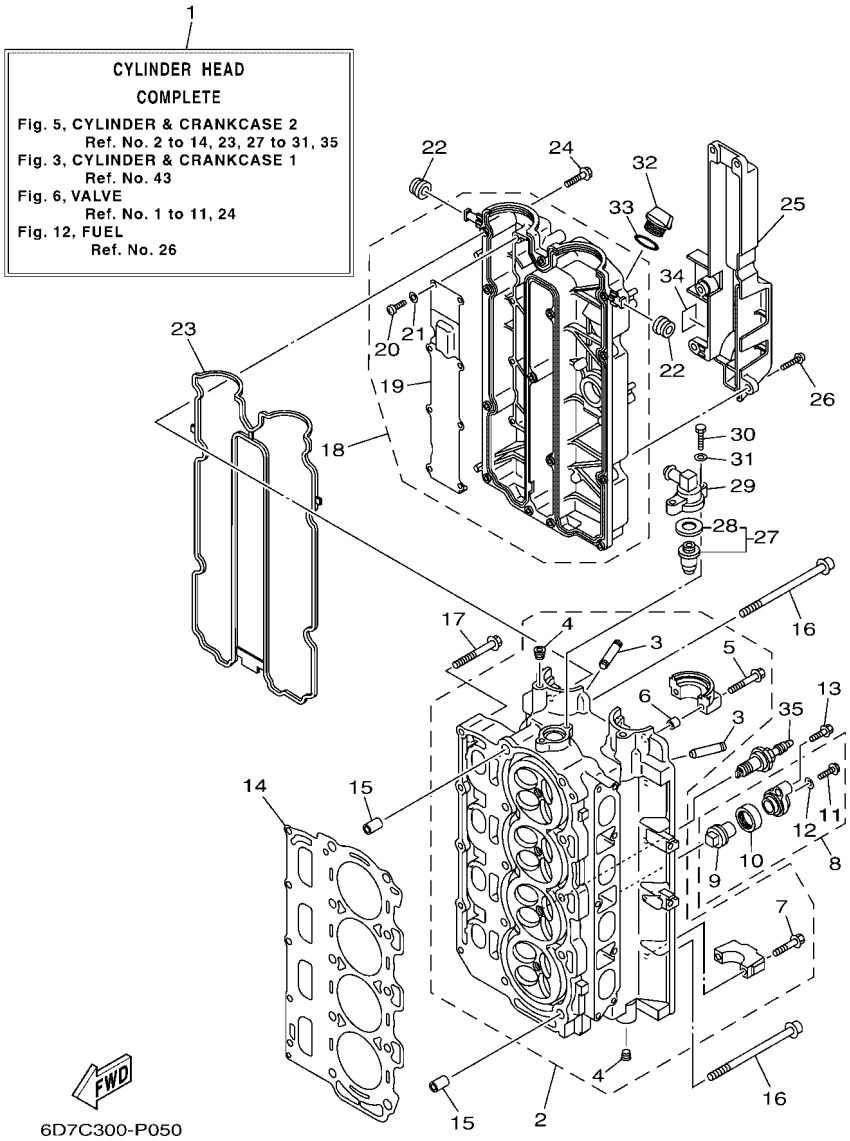

FIG. 5 CYLINDER & CRANKCASE 2 — CYLINDRE & CARTER 2

REF. NO.	PART NO. N° PIECES	DESCRIPTION DESCRIPTION	6D7C	6D9C				REMARKS REMARQUES
1	6D8–W009A–04–9S	CYLINDER HEAD COMPLETE CULASSE (ENS.)	1					
	6D9–W009A–04–9S	CYLINDER HEAD COMPLETE CULASSE (ENS.)		1				
2	6D8–11110–20–9S	CYLINDER HEAD ASSY JEU DE CULASSE	1	1				
3	67F–11133–10	.GUIDE, VALVE 1 .GUIDE, SOUPAPE 1	16	16				
4	90344–51019	.PLUG, TAPER SCREW .PLOT, FILETE CONIQUE	4	4				
5	90119–07235	.BOLT/WASHER-CAM CAPS .BOULON, AVEC RONDELLE	4	4				
6	91809–08006	.PIN, DOWEL .GOUJON, D'ASSEMBLAGE	4	4				
7	90119–07234	.BOLT, WITH WASHER .BOULON, AVEC RONDELLE	16	16				
8	69J–11301–00	ANODE COVER ASSY COUVERCLE ANODE (ENS.)	2	2				
9	67F–11325–01	.ANODE .ANODE	1	1				
10	67F–11328–00	.GROMMET, ANODE .PASSE-FIL	1	1				
11	90105–06M07	.BOLT, FLANGE .BOULON	1	1				
12	90430–06M03	.GASKET .JOINT	1	1				
13	97575–08540	BOLT, WITH WASHER VIS HEXAGONAL AVC RONDELLE	2	2				
14	67F–11181–03	GASKET, CYLINDER HEAD 1 JOINT, DE CULASSE 1	1	1				
15	99530–14016	PIN, DOWEL GOUJON, D'ASSEMBLAGE	2	2				
16	90155–10005	SCREW, FLAT FILLISTER VIS, TETE OVALE PLATE	10	10				
17	90119–08M91	BOLT, WITH WASHER BOULON, AVEC RONDELLE	5	5				
18	6D8–11191–01–9S	COVER, CYLINDER HEAD 1 COUVERCLE, CULASSE 1	1	1				
19	67F–11168–00	.COVER, BREATHER .COUVERCLE, RENIFLARD	1	1				
20	98507–04008	.SCREW, PAN HEAD .VIS, TETE TRONCONIQUE	8	8				
21	92907–04600	.WASHER .RONDELLE	8	8				
22	90480–12072	GROMMET PASSE-FIL	2	2				
23	6D8–11356–01	SEAL, CYLINDER 2 JOINT, SPY CYLINDRE	1	1				
24	97595–06530	BOLT, WITH WASHER VIS HEXAGONAL AVC RONDELLE	14	14				
25	67F–11192–01	COVER, CYLINDER HEAD 2 COUVERCLE, CULASSE 2	1	1				
26	90119–06M79	BOLT, WITH WASHER BOULON, AVEC RONDELLE	5	5				

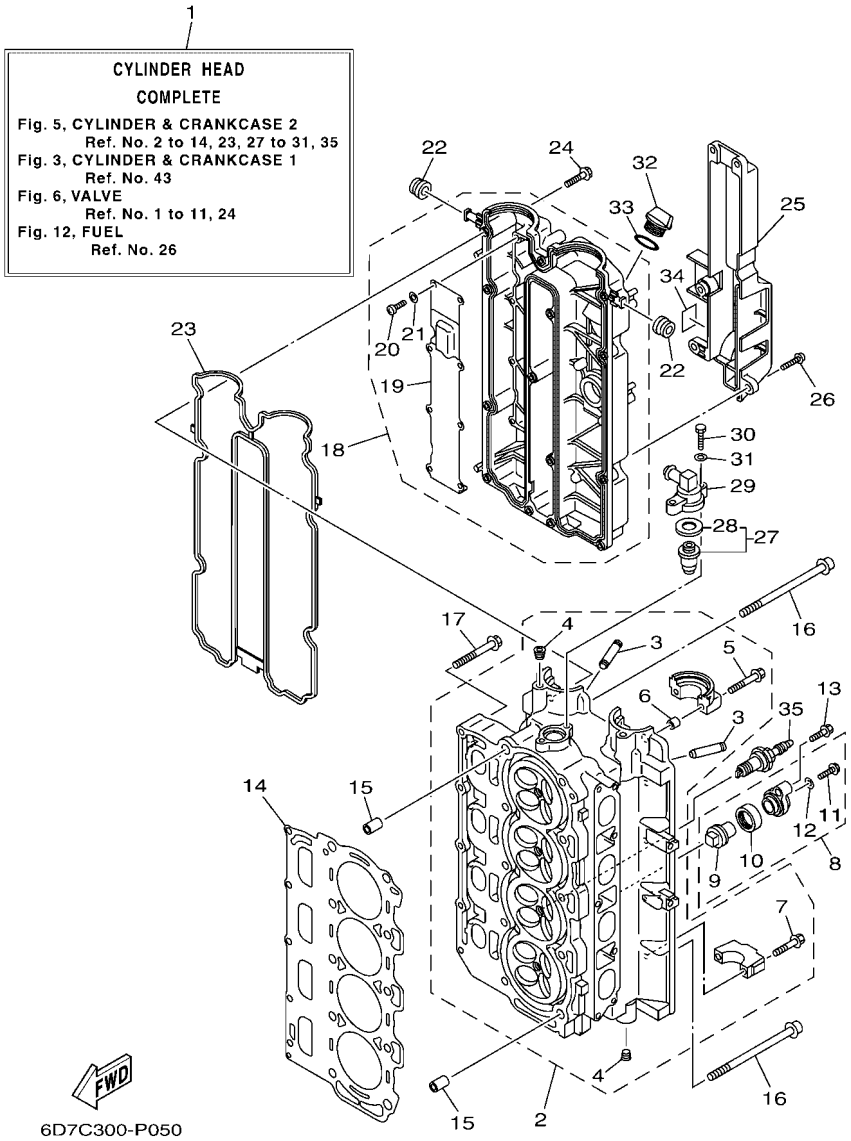

FIG. 5 CYLINDER & CRANKCASE 2 — CYLINDRE & CARTER 2

REF. NO.	PART NO. N° PIECES	DESCRIPTION DESCRIPTION	6D7C	6D9C				REMARKS REMARQUES
27	67F–12411–01	THERMOSTAT THERMOSTAT	1					
	6D9–12411–00	THERMOSTAT THERMOSTAT		1				
28	67F–12412–00	.SEAL, THERMOSTAT .JOINT, THERMOSTAT	1	1				
29	68V–12413–00–9S	COVER, THERMOSTAT COUVERCLE, THERMOSTAT	1	1				
30	97095–06025	BOLT BOULON	2	2				
31	92995–06600	WASHER RONDELLE	2	2				
32	6G8–15363–00	PLUG, OIL PLOT, HUILE	1	1				
33	93210–24M79	O-RING JOINT TORIQUE	1	1				
34	6D8–83626–00	MARK 6 MARK 6	1	1				
35	94702–00391	PLUG, SPARK (NGK LFR5A-11) BOUGIE D'ALLUMAGE(NGK LFR5A-11	4	4				

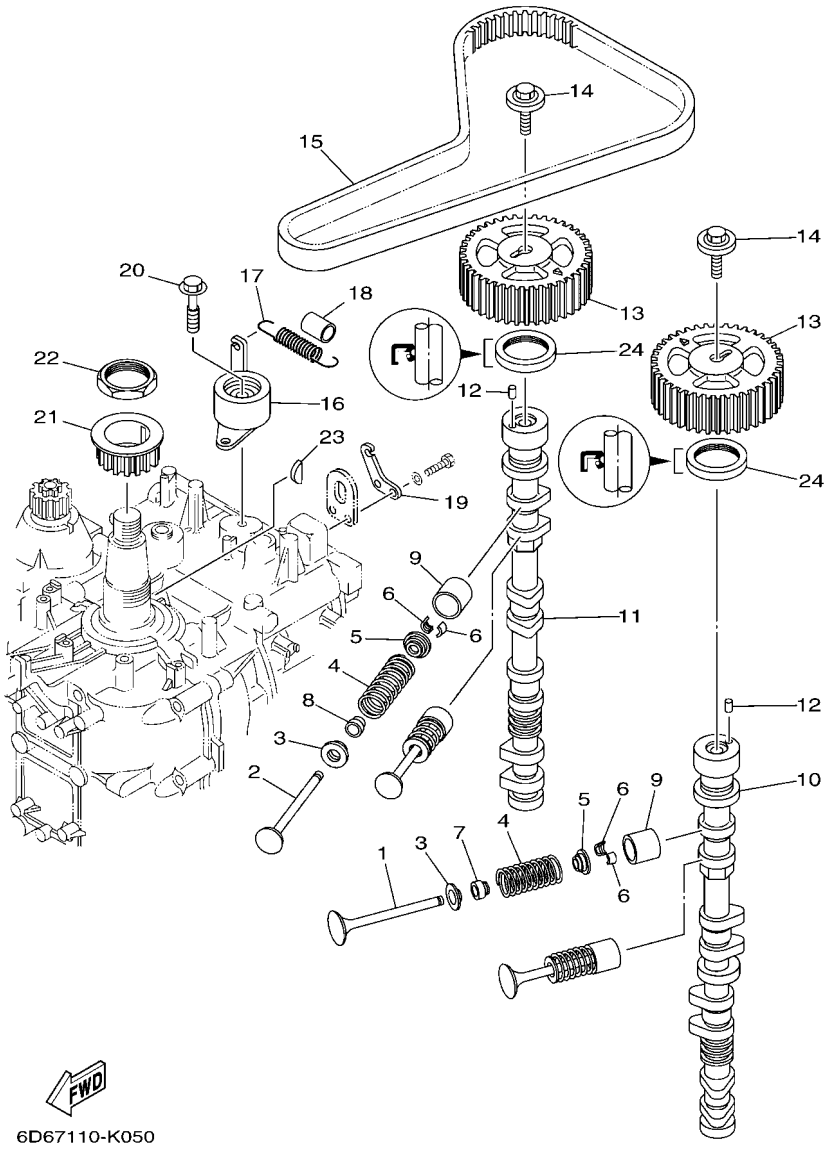

FIG. 6 VALVE — SOUPAPE

REF. NO.	PART NO. N° PIECES	DESCRIPTION DESCRIPTION	6D7C	6D9C				REMARKS REMARQUES
1	6D8–12111–00	VALVE, INTAKE SOUPAPE, ADMISSION	8	8				
2	6D8–12121–10	VALVE, EXHAUST SOUPAPE, ECHAPPEMENT	8	8				
3	6D8–12116–00	SEAT, VALVE SPRING SIEGE, RESSORT DE SOUPAPE	16	16				
4	6D8–12113–00	SPRING, VALVE INNER RESSORT DE SOUPAPE, INTERNE	16	16				
5	26H–12117–00	RETAINER, VALVE SPRING BUTEE DE RESSORT DE SOUPAPE	16	16				
6	4G0–12118–00	COTTER, VALVE FRAISE, SOUPAPE	32	32				
7	K0A–A3721–00	SEAL, VALVE STEM JOINT, QUEUE DE SOUPAPE	8	8				
8	K0A–A3722–00	SEAL, VALVE STEM 2 JOINT, QUEUE DE SOUPAPE 2	8	8				
9	6D8–12153–00	LIFTER, VALVE (12) LEVE-SOUPAPE (12)	16	16				UR UR
	6D8–12153–10	LIFTER, VALVE (14) LEVE-SOUPAPE (14)	16	16				UR UR
	6D8–12153–20	LIFTER, VALVE (16) LEVE-SOUPAPE (16)	16	16				UR UR
	6D8–12153–30	LIFTER, VALVE (18) LEVE-SOUPAPE (18)	16	16				UR UR
	6D8–12153–40	LIFTER, VALVE (20) LEVE-SOUPAPE (20)	16	16				UR UR
	6D8–12153–50	LIFTER, VALVE (22) LEVE-SOUPAPE (22)	16	16				UR UR
	6D8–12153–60	LIFTER, VALVE (24) LEVE-SOUPAPE (24)	16	16				UR UR
	6D8–12153–70	LIFTER, VALVE (26) LEVE-SOUPAPE (26)	16	16				UR UR
	6D8–12153–80	LIFTER, VALVE (28) LEVE-SOUPAPE (28)	16	16				UR UR
	6D8–12153–90	LIFTER, VALVE (30) LEVE-SOUPAPE (30)	16	16				UR UR
	6D8–12153–A0	LIFTER, VALVE (32) LEVE-SOUPAPE (32)	16	16				UR UR
	6D8–12153–B0	LIFTER, VALVE (34) LEVE-SOUPAPE (34)	16	16				UR UR
	6D8–12153–C0	LIFTER, VALVE (36) LEVE-SOUPAPE (36)	16	16				UR UR
	6D8–12153–D0	LIFTER, VALVE (38) LEVE-SOUPAPE (38)	16	16				UR UR
	6D8–12153–E0	LIFTER, VALVE (40) LEVE-SOUPAPE (40)	16	16				UR UR
	6D8–12153–F0	LIFTER, VALVE (42) LEVE-SOUPAPE (42)	16	16				UR UR
	6D8–12153–G0	LIFTER, VALVE (44) LEVE-SOUPAPE (44)	16	16				UR UR
	6D8–12153–H0	LIFTER, VALVE (46) LEVE-SOUPAPE (46)	16	16				UR UR
	6D8–12153–J0	LIFTER, VALVE (48) LEVE-SOUPAPE (48)	16	16				UR UR

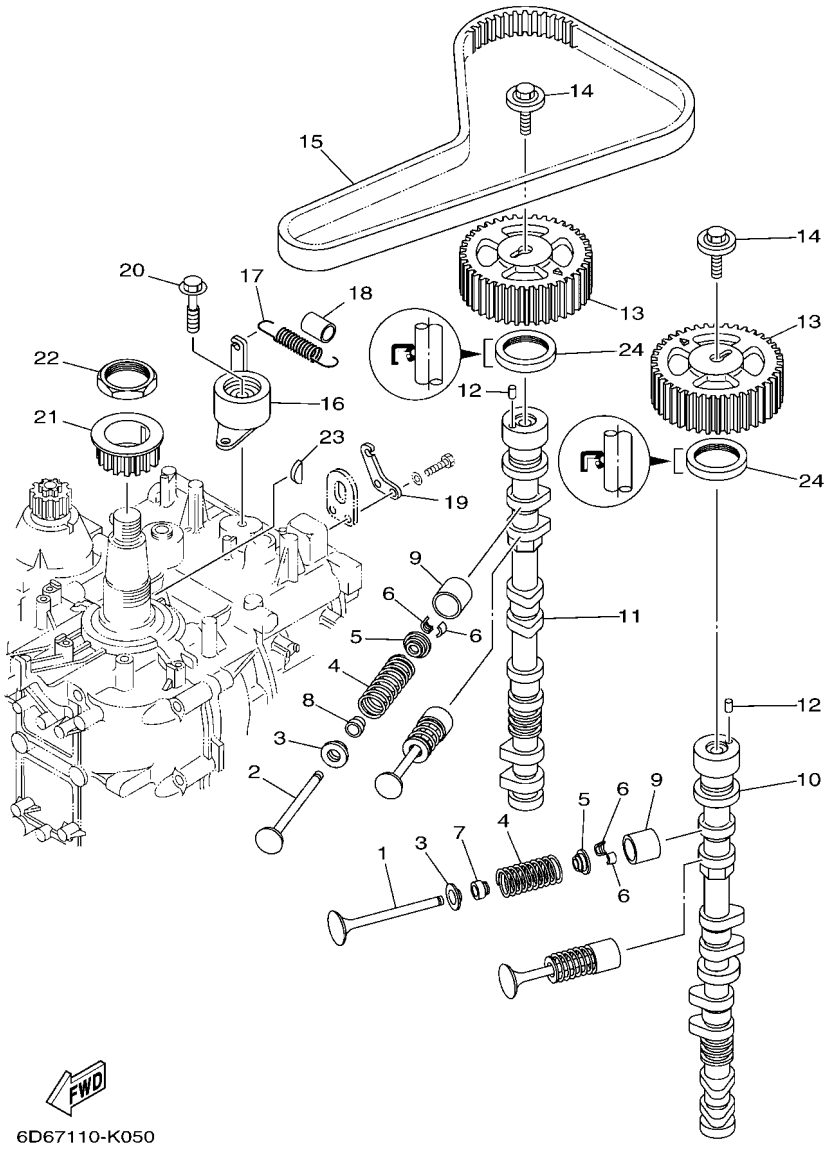

FIG. 6 VALVE — SOUPAPE

REF. NO.	PART NO. N° PIECES	DESCRIPTION DESCRIPTION	6D7C	6D9C				REMARKS REMARQUES
9	6D8–12153–K0	LIFTER, VALVE (50) LEVE-SOUPAPE (50)	16	16				UR UR
	6D8–12153–L0	LIFTER, VALVE (52) LEVE-SOUPAPE (52)	16	16				UR UR
	6D8–12153–M0	LIFTER, VALVE (54) LEVE-SOUPAPE (54)	16	16				UR UR
	6D8–12153–N0	LIFTER, VALVE (56) LEVE-SOUPAPE (56)	16	16				UR UR
	6D8–12153–P0	LIFTER, VALVE (58) LEVE-SOUPAPE (58)	16	16				UR UR
	6D8–12153–R0	LIFTER, VALVE (60) LEVE-SOUPAPE (60)	16	16				UR UR
	6D8–12153–S0	LIFTER, VALVE (62) LEVE-SOUPAPE (62)	16	16				UR UR
	6D8–12153–T0	LIFTER, VALVE (64) LEVE-SOUPAPE (64)	16	16				UR UR
	6D8–12153–U0	LIFTER, VALVE (66) LEVE-SOUPAPE (66)	16	16				UR UR
	6D8–12153–V0	LIFTER, VALVE (68) LEVE-SOUPAPE (68)	16	16				UR UR
10	6D8–12171–00	CAMSHAFT 1 ARBRE A CAMES 1	1					
	6D9–12171–00	CAMSHAFT 1 ARBRE A CAMES 1		1				
11	6D8–12181–00	CAMSHAFT 2 ARBRE A CAMES 2	1	1				
12	93605–10108	PIN, DOWEL AXE	2	2				
13	67F–11537–00	GEAR, DRIVEN PIGNON SECONDAIRE	2	2				
14	90119–10050	BOLT, WITH WASHER BOULON, AVEC RONDELLE	2	2				
15	67F–46241–00	BELT COURROIE TRAPEZOIDALE	1	1				
16	67F–11590–00	TENSIONER ASSY TENDEUR (ENS.)	1	1				
17	90506–16M39	SPRING, TENSION RESSORT, TENSION	1	1				
18	90445–15M03	HOSE (L23) DURITE (L23)	1	1				
19	67F–11595–00	PLATE,VALVE PLAQUE DE SOUPAPE	1	1				
20	90119–10M72	BOLT, WITH WASHER BOULON, AVEC RONDELLE	1	1				
21	6D8–11536–01	GEAR, DRIVE ENGRENAGE, MENANT	1	1				
22	90170–40008	NUT ECROU	1	1				
23	90280–04008	KEY, WOODRUFF CLAVETTE, DEMI-LUNE	1	1				
24	93102–38008	OIL SEAL JOINT SPY	2	2				

FIG. 7 INTAKE 1 — ADMISSION 1

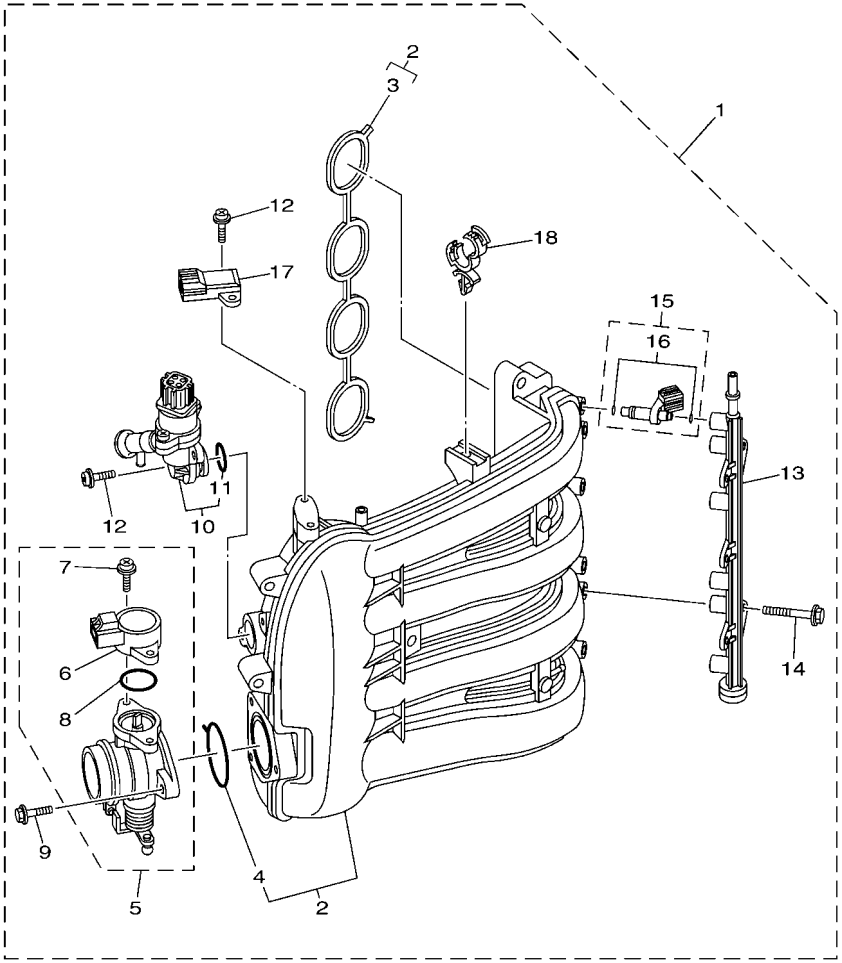

6D81100-D060

REF. NO.	PART NO. N° PIECES	DESCRIPTION DESCRIPTION	6D7C	6D9C				REMARKS REMARQUES
1	6D8–14200–00	INTAKE ASSY ADMISSION (ENS.)	1	1				
2	6D8–13641–00	.MANIFOLD, INTAKE 1 .TUBULURE, ADMISSION 1	1	1				
3	6D8–13645–00	..GASKET, MANIFOLD 1 ..JOINT, TUBULURE 1	1	1				
4	6D8–13557–00	..GASKET ..JOINT	1	1				
5	6D8–13750–00	.THROTTLE BODY ASSY .CARTER D'ACCELERATEUR COMPLET	1	1				
6	6C5–85885–00	..THROTTLE SENSOR ASSY ..SENSITOMETRE (ENS.)	1	1				
7	6C5–81145–00	..SCREW 1 ..VIS 1	2	2				
8	6C5–8182L–00	..O-RING 1 ..JOINT TORIQUE 1	1	1				
9	6C5–14496–00	.BOLT .BOULON	3	3				
10	6D8–13105–01	.CONTROL VALVE ASSY .SOUPAPE DE CONTROLE COMPLET	1	1				
11	6C5–1319C–00	..O-RING ..JOINT TORIQUE	1	1				
12	6C5–81146–10	.SCREW 2 .VIS 2	4	4				
13	6D8–13161–00	.PIPE, DELIVERY 1 .DURITE REFOULEMENT 1	1	1				
14	6C5–14446–00	.BOLT .BOULON	2	2				
15	6D8–13761–00	.INJECTOR .INJECTEUR	4	4				
16	6C5–1410B–00	..PACKING KIT ..POCHETTE DE JOINTS	1	1				
17	68F–83688–00	.SENSOR ASSY .SONDE (ENS.)	1	1				
18	90464–18246	.CLAMP .BRIDE	1	1				

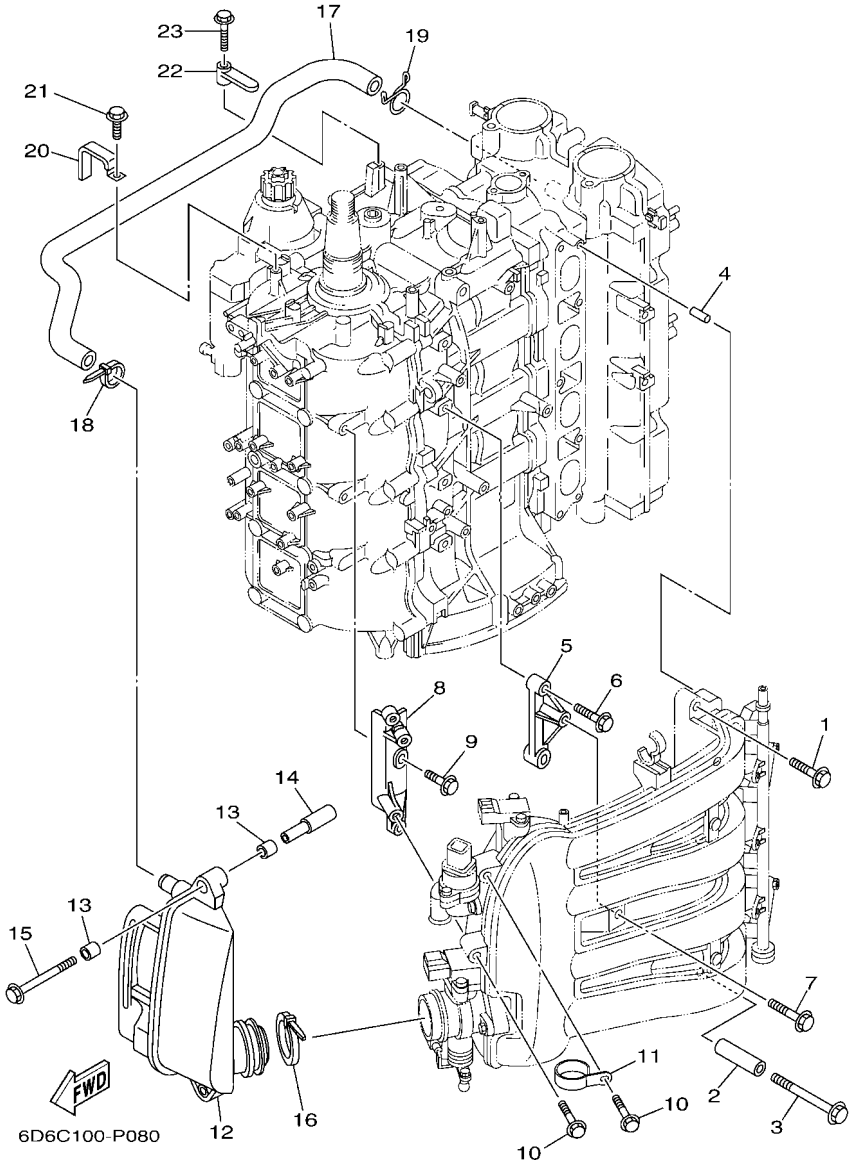

FIG. 8 INTAKE 2 — ADMISSION 2

REF. NO.	PART NO. N° PIECES	DESCRIPTION DESCRIPTION	6D7C	6D9C				REMARKS REMARQUES
1	90119–08069	BOLT, WITH WASHER BOULON, AVEC RONDELLE	4	4				
2	90387–08033	COLLAR COLLERETTE	1	1				
3	90119–08M03	BOLT, WITH WASHER BOULON, AVEC RONDELLE	1	1				
4	91690–50014	PIN, SPRING AGRAFFE	2	2				
5	6D8–14291–00	BRACKET 1 SUPPORT 1	1	1				
6	97595–06530	BOLT, WITH WASHER VIS HEXAGONAL AVC RONDELLE	2	2				
7	90119–06087	BOLT, WITH WASHER BOULON, AVEC RONDELLE	1	1				
8	6D8–14292–00	BRACKET 2 SUPPORT 2	1	1				
9	97595–06520	BOLT, WITH WASHER VIS HEXAGONAL AVC RONDELLE	2	2				
10	90119–06087	BOLT, WITH WASHER BOULON, AVEC RONDELLE	2	2				
11	6D8–13782–00	STAY SUPPORT	1	1				
12	6D6–14440–01	SILENCER ASSY, INTAKE SIENCIEUX D'ADMISSION	1					
	6D9–14440–02	SILENCER ASSY, INTAKE SIENCIEUX D'ADMISSION		1				
13	90386–08001	BUSH DOUILLE	4	4				
14	90387–07013	COLLAR COLLERETTE	2	2				
15	90119–06113	BOLT, WITH WASHER BOULON, AVEC RONDELLE	2	2				
16	90464–76001	CLAMP BRIDE	1	1				
17	6D8–15373–00	PIPE, BREATHER DURITE DE RENIFLARD	1	1				
18	90465–11M59	CLAMP BRIDE	1	1				
19	90467–20M15	CLIP JONC	1	1				
20	90465–12M03	CLAMP BRIDE	1	1				
21	97595–06512	BOLT, WITH WASHER VIS HEXAGONAL AVC RONDELLE	1	1				
22	6D8–82544–00	CLAMP COLLIER	1	1				
23	95895–06025	BOLT, FLANGE BOULON	1	1				

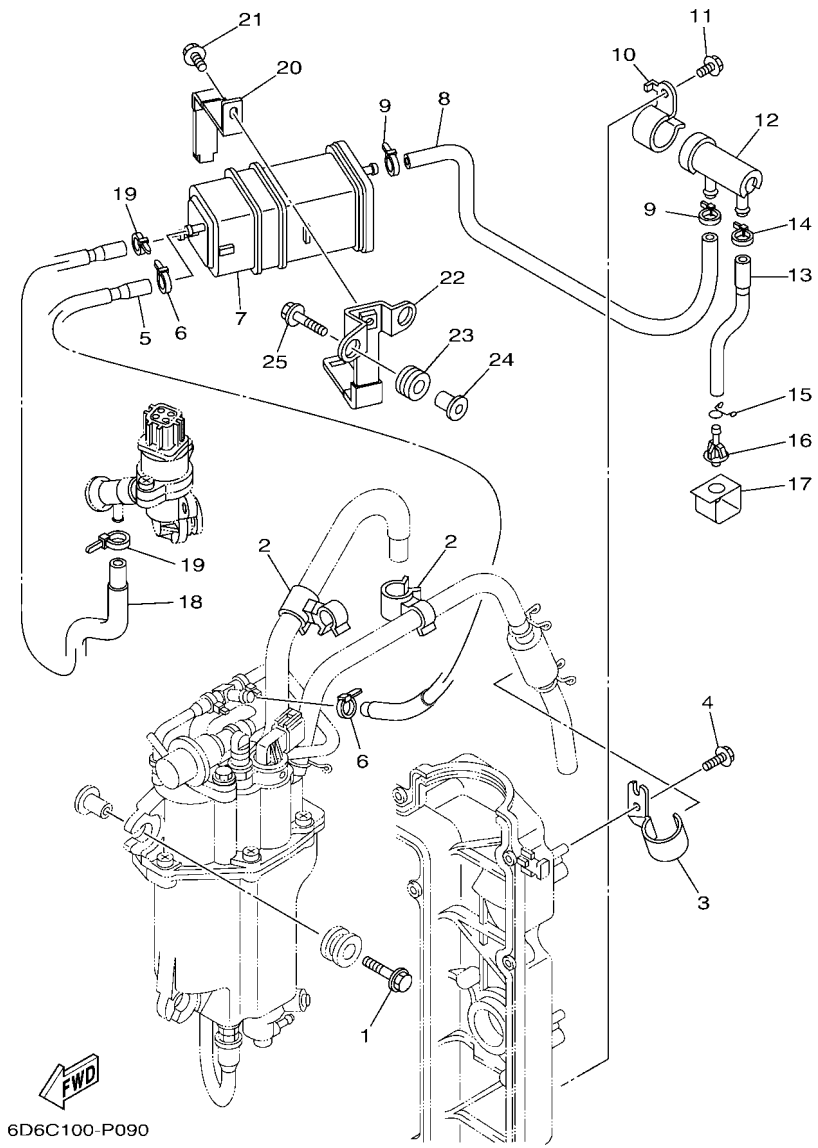

FIG. 9 INTAKE 3 — ADMISSION 3

REF. NO.	PART NO. N° PIECES	DESCRIPTION DESCRIPTION	6D7C	6D9C				REMARKS REMARQUES
1	90119–06M08	BOLT, WITH WASHER BOULON, AVEC RONDELLE	3	3				
2	90464–15007	CLAMP BRIDE	2	2				
3	6D8–13428–01	BRACKET, STRAINER 1 SUPPORT, FILTRE 1	1	1				
4	97595–06512	BOLT, WITH WASHER VIS HEXAGONAL AVC RONDELLE	1	1				
5	6D8–24314–01	PIPE 4 DURITE 4	1	1				
6	90465–11M10	CLAMP BRIDE	2	2				
7	69J–24170–00	CANISTER ASSY BANDE, RASERVOIR A ESSENCE	1	1				
8	6D8–24315–00	PIPE 5 DURITE 5	1	1				
9	90465–11M10	CLAMP BRIDE	2	2				
10	6D8–2417H–01	CLAMP 1 COLLIER 1	1	1				
11	97595–06510	BOLT, WITH WASHER VIS HEXAGONAL AVC RONDELLE	1	1				
12	69J–24502–00	FILTER, FUEL FILTRE	1	1				
13	6D8–24316–00	PIPE 6 DURITE 6	1	1				
14	90465–11M10	CLAMP BRIDE	1	1				
15	90467–09M03	CLIP JONC	1	1				
16	69J–44391–00	NIPPLE, HOSE RACCORD D'ESSENCE	1	1				
17	6D8–2413X–01	PLATE PLAQUE	1	1				
18	6D8–24317–01	PIPE 7 DURITE 7	1	1				
19	90465–11M10	CLAMP BRIDE	2	2				
20	69J–2419A–01	HOLDER SUPPORT	1	1				
21	97595–06516	BOLT, WITH WASHER VIS HEXAGONAL AVC RONDELLE	1	1				
22	6D8–2134X–00	BRACKET, CANISTER SUPPORT	1	1				
23	90480–10M23	GROMMET PASSE-FIL	2	2				
24	90387–06289	COLLAR COLLERETTE	2	2				
25	90119–06M59	BOLT, WITH WASHER BOULON, AVEC RONDELLE	2	2				

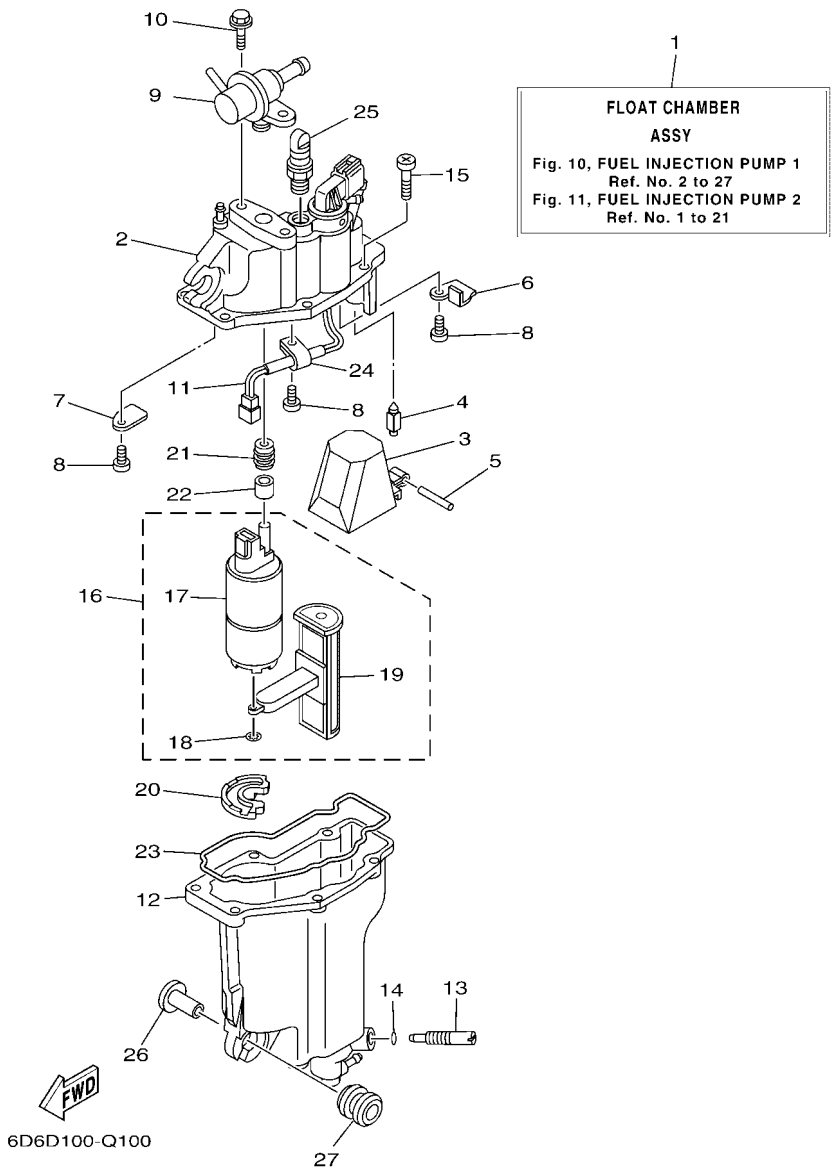

FIG. 10 FUEL INJECTION PUMP 1 POMPE A INJECTEUR 1

REF. NO.	PART NO. N° PIECES	DESCRIPTION DESCRIPTION	6D7C	6D9C				REMARKS REMARQUES
1	6D8–14180–21	FLOAT CHAMBER ASSY CUVE DE FLOTTEUR	1	1				OLD PARTS OLD PARTS
	6D8–14180–22	FLOAT CHAMBER ASSY CUVE DE FLOTTEUR	1	1				NEW PARTS NEW PARTS
2	6D8–14182–10	COVER, FLOAT CHAMBER COUVERCLE, CUVE DE FLOTTEUR	1	1				OLD PARTS OLD PARTS
	6D8–14182–20	COVER, FLOAT CHAMBER COUVERCLE, CUVE DE FLOTTEUR	1	1				NEW PARTS NEW PARTS
3	6C5–14985–00	FLOAT FLOTTEUR	1	1				
4	6C5–14546–10	VALVE, NEEDLE POINTEAU	1	1				
5	6C5–14386–00	PIN, FLOAT AXE, FLOTTEUR	1	1				
6	6C5–2441R–10	PLATE, BAFFLE 1 SEPARATEUR 1	1	1				
7	6C5–2441T–10	PLATE, BAFFLE 2 SEPARATEUR 2	1	1				
8	6C5–24453–00	SCREW VIS	3	3				
9	6C5–13906–01	REGULATOR, PRESSURE REGULATEUR DE PRESSION	1	1				
10	6C5–24592–00	BOLT BOLTE	2	2				
11	6C5–87226–00	WIRE HARNESS ASSY ENS. FAISCEAU ELECTRIQUE	1	1				
12	6D8–14960–10	BODY ASSY CARTER (ENS.)	1	1				OLD PARTS OLD PARTS
	6D8–14960–20	BODY ASSY CARTER (ENS.)	1	1				NEW PARTS NEW PARTS
13	6C5–14191–00	PLUG, DRAIN PLOT, VIDANGE	1	1				
14	6C5–14397–00	O-RING JOINT TORIQUE	1	1				
15	6C5–14567–00	SCREW VIS	6	6				
16	6C5–13910–10	FUEL PUMP ASSY POMPE A ESSENCE COMPLET	1	1				
17	6C5–13907–00	.FUEL PUMP COMP. .POMPE A CARBURANT COMP.	1	1				
18	6C5–14127–10	.CLIP .JONC	1	1				
19	6C5–13915–00	.FILTER .FILTRE	1	1				
20	6C5–13593–00	DAMPER AMORTISSEUR	1	1				
21	6C5–13781–00	DAMPER, PUMP AMORTISSEUR, POMPE	1	1				
22	6C5–13716–00	COLLAR COLLERETTE	1	1				
23	6C5–14984–00	GASKET, FLOAT CHAMBER JOINT, CUVE DE FLOTTEUR	1	1				OLD PARTS OLD PARTS
	6C5–14984–10	GASKET, FLOAT CHAMBER JOINT, CUVE DE FLOTTEUR	1	1				NEW PARTS NEW PARTS

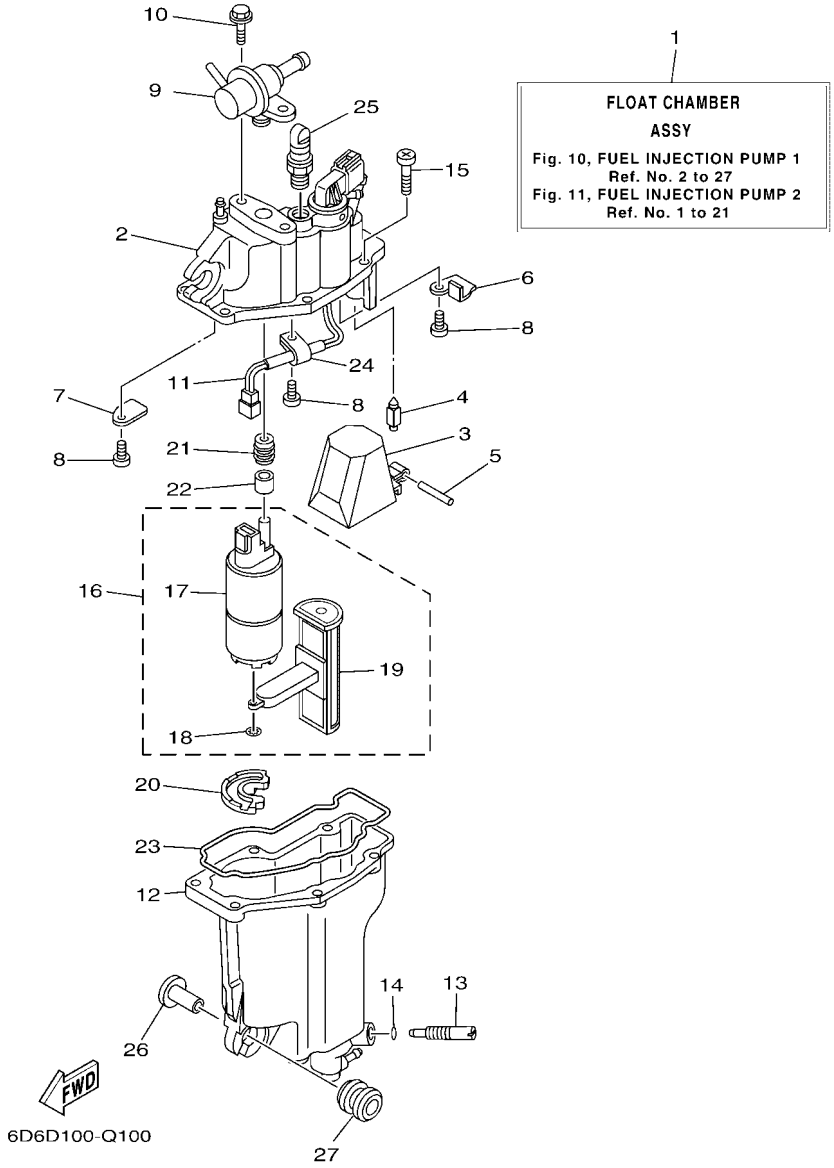

FIG. 10 FUEL INJECTION PUMP 1 POMPE A INJECTEUR 1

REF. NO.	PART NO. N° PIECES	DESCRIPTION DESCRIPTION	6D7C	6D9C				REMARKS REMARQUES
24	6C5–21337–10	CLAMP, CABLE COLLIER, CABLE	1	1				
25	6C5–14225–00	CAP COUVERCLE	1	1				
26	90387–06M69	COLLAR COLLERETTE	3	3				
27	90480–09M12	GROMMET PASSE-FIL	3	3				

FIG. 11 FUEL INJECTION PUMP 2 POMPE A INJECTEUR 2

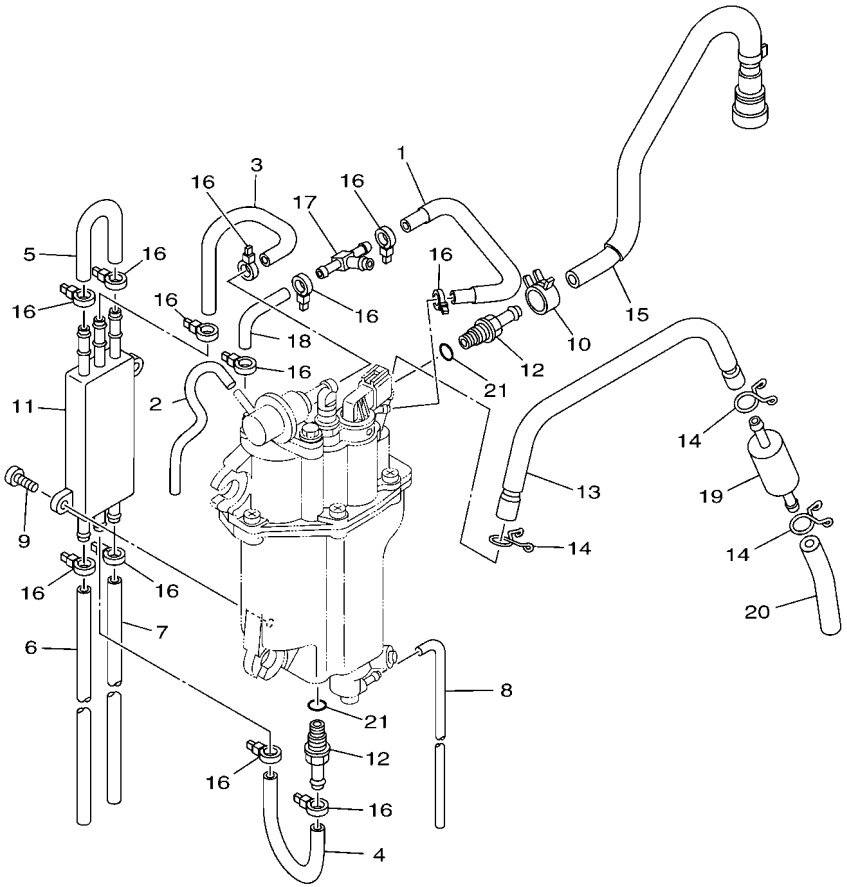

6D67110-K100

REF. NO.	PART NO. N° PIECES	DESCRIPTION DESCRIPTION	6D7C	6D9C				REMARKS REMARQUES
1	6D8–13546–01	HOSE 2 DURITE 2	1	1				
2	6D8–13542–01	HOSE, VACUUM SENSING 1 DURITE 1	1	1				
3	6C5–24321–00	PIPE 10 DURITE 10	1	1				
4	6C5–24322–00	PIPE 11 DURITE 11	1	1				
5	6C5–24323–00	PIPE 12 DURITE 12	1	1				
6	6D8–24324–01	PIPE 13 DURITE 13	1	1				
7	6D8–24325–10	PIPE 14 DURITE 14	1	1				
8	6BG–14149–00	PIPE DURITE	1	1				
9	6C5–24444–00	SCREW VIS	2	2				
10	6C5–13577–00	CLIP AGRAFE	1	1				
11	6C5–21841–01	COOLER RADIATEUR	1	1				
12	6C5–14251–00	NIPPLE RACCORD	2	2				
13	6D8–14148–00	PIPE DURITE	1	1				
14	6C5–24387–00	CLIP SANDOW	3	3				
15	6D8–13974–00	PIPE, FUEL 4 TUBE 4, CARBURANT	1	1				
16	90465–11M10	CLAMP BRIDE	12	12				
17	6C5–24379–00	PIPE, JOINT 4 DURITE RACCORDEMENT 4	1	1				
18	6C5–13545–00	HOSE 1 DURITE 1	1	1				
19	6C5–24251–00	STRAINER 1 FILTRE 1	1	1				
20	6D8–2451B–00	HOSE, FUEL INLET DURITE	1	1				
21	6C5–13739–00	O-RING JOINT TORIQUE	2	2				

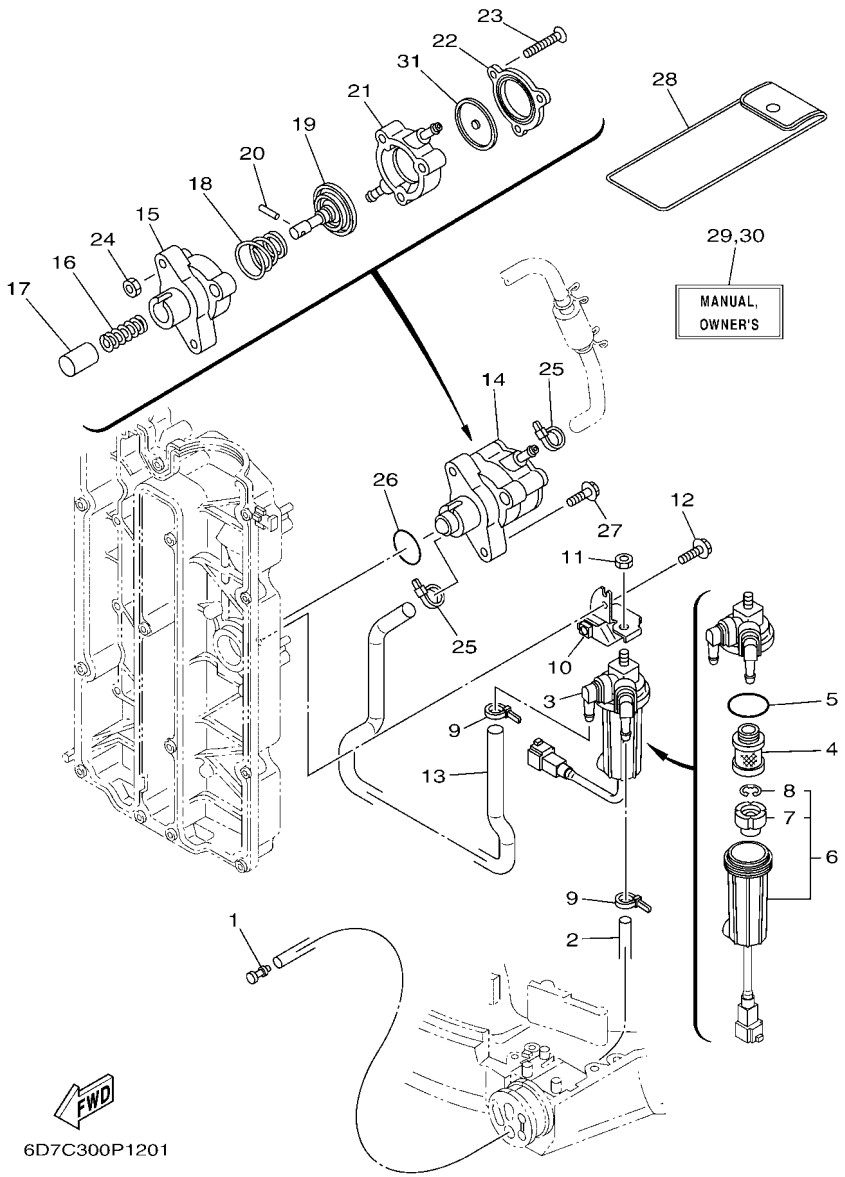

FIG. 12 FUEL — CARBURANT

REF. NO.	PART NO. N° PIECES	DESCRIPTION DESCRIPTION	6D7C	6D9C				REMARKS REMARQUES
1	689–85547–00	DAMPER AMORTISSEUR	1	1				
2	90445–13M37	HOSE (L2300) DURITE (L2300)	1	1				
3	6D8–24560–01	FILTER ASSY ENS FILTRE	1	1				
4	6D8–24563–00	.ELEMENT, FILTER .ELEMENT, FILTRE	1	1				
5	6D8–24564–00	.GASKET .JOINT	1	1				
6	6D8–24562–00	.CUP, FILTER .CUVETTE, FILTRE	1	1				
7	6D8–24469–00	..FLOAT, WATER LEVEL ..FLOTTEUR	1	1				
8	6D8–24519–00	..CLIP ..JONC	1	1				
9	90465–11M10	CLAMP BRIDE	2	2				
10	6D8–24566–00	BRACKET, FILTER SUPPORT, FILTRE	1	1				
11	95380–08600	NUT ECROU	1	1				
12	97595–06516	BOLT, WITH WASHER VIS HEXAGONAL AVC RONDELLE	1	1				
13	6D8–24311–00	PIPE, FUEL 1 DURITE A ESSENCE	1	1				
14	6D8–24410–10	FUEL PUMP ASSY POMPE A ESSENCE	1	1				
15	68V–24412–00	.BODY 1 .CORPS 1	1	1				
16	68V–24454–00	.SPRING .RESSORT	1	1				
17	63P–13131–00	.PLUNGER .PLONGEUR	1	1				
18	68V–24423–00	.SPRING, DIAPHRAGM .RESSORT, DIAPHRAGME	1	1				
19	68V–24411–00	.DIAPHRAGM .DIAPHRAGME	1	1				
20	68V–24374–00	.PIN .GOUPILLE	1	1				
21	68V–24413–10	.BODY 2 .CORPS 2	1	1				
22	6D8–24414–00	.BODY 3 .CORPS 3	1	1				
23	68V–24444–00	.SCREW .VIS	3	3				
24	68V–24149–00	.NUT .ECROU	3	3				
25	90465–11M10	CLAMP BRIDE	2	2				
26	93210–30682	O-RING JOINT TORIQUE	1	1				
27	90119–06M83	BOLT, WITH WASHER BOULON, AVEC RONDELLE	2	2				

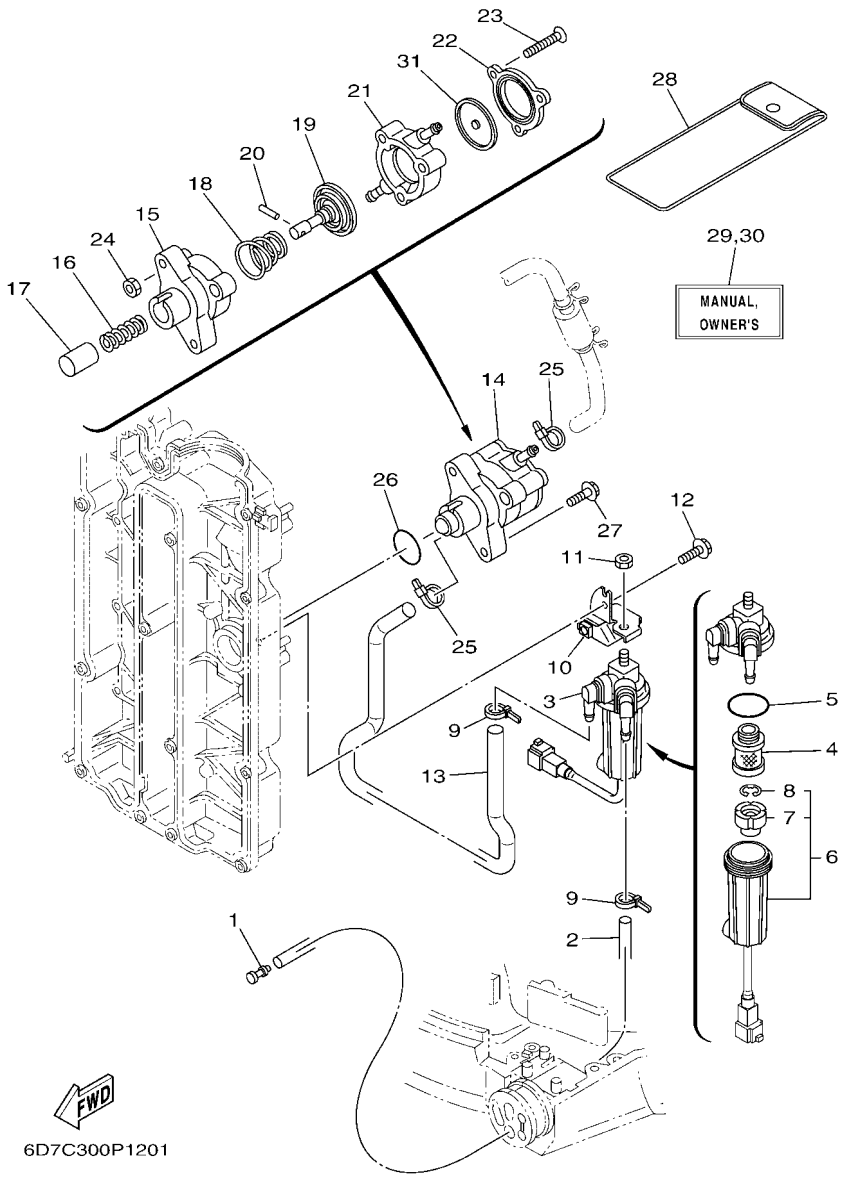

FIG. 12 FUEL CARBURANT

REF. NO.	PART NO. N° PIECES	DESCRIPTION DESCRIPTION	6D7C	6D9C				REMARKS REMARQUES
28	67F–28100–01	TOOL KIT TROUSSE A OUTILS	1	1				AP AP
29	6D7–28199–7C–E0	MANUAL,OWNER'S MANUEL D'UTILISATION	1	1				UR (E) UR (E)
	6D7–28199–7C–F0	MANUAL,OWNER'S MANUEL D'UTILISATION	1	1				UR (F) UR (F)
	6D7–28199–7C–S0	MANUAL,OWNER'S MANUEL D'UTILISATION	1	1				UR (ES) UR (ES)
	6D7–28199–7C–G0	MANUAL,OWNER'S MANUEL D'UTILISATION	1	1				UR (D) UR (D)
	6D7–28199–7C–D0	MANUAL,OWNER'S MANUEL D'UTILISATION	1	1				UR (NL) UR (NL)
	6D7–28199–7C–H0	MANUAL,OWNER'S MANUEL D'UTILISATION	1	1				UR (I) UR (I)
30	6D7–28199–8C–K0	MANUAL,OWNER'S MANUEL D'UTILISATION	1	1				UR (DK) UR (DK)
	6D7–28199–8C–R0	MANUAL,OWNER'S MANUEL D'UTILISATION	1	1				UR (GR) UR (GR)
	6D7–28199–8C–P0	MANUAL,OWNER'S MANUEL D'UTILISATION	1	1				UR (P) UR (P)
	6D7–28199–8C–N0	MANUAL,OWNER'S MANUEL D'UTILISATION	1	1				UR (N) UR (N)
	6D7–28199–8C–M0	MANUAL,OWNER'S MANUEL D'UTILISATION	1	1				UR (S) UR (S)
	6D7–28199–8C–L0	MANUAL,OWNER'S MANUEL D'UTILISATION	1	1				UR (SF) UR (SF)
31	68V–24471–10	.DIAPHRAGM .DIAPHRAGME	1	1				

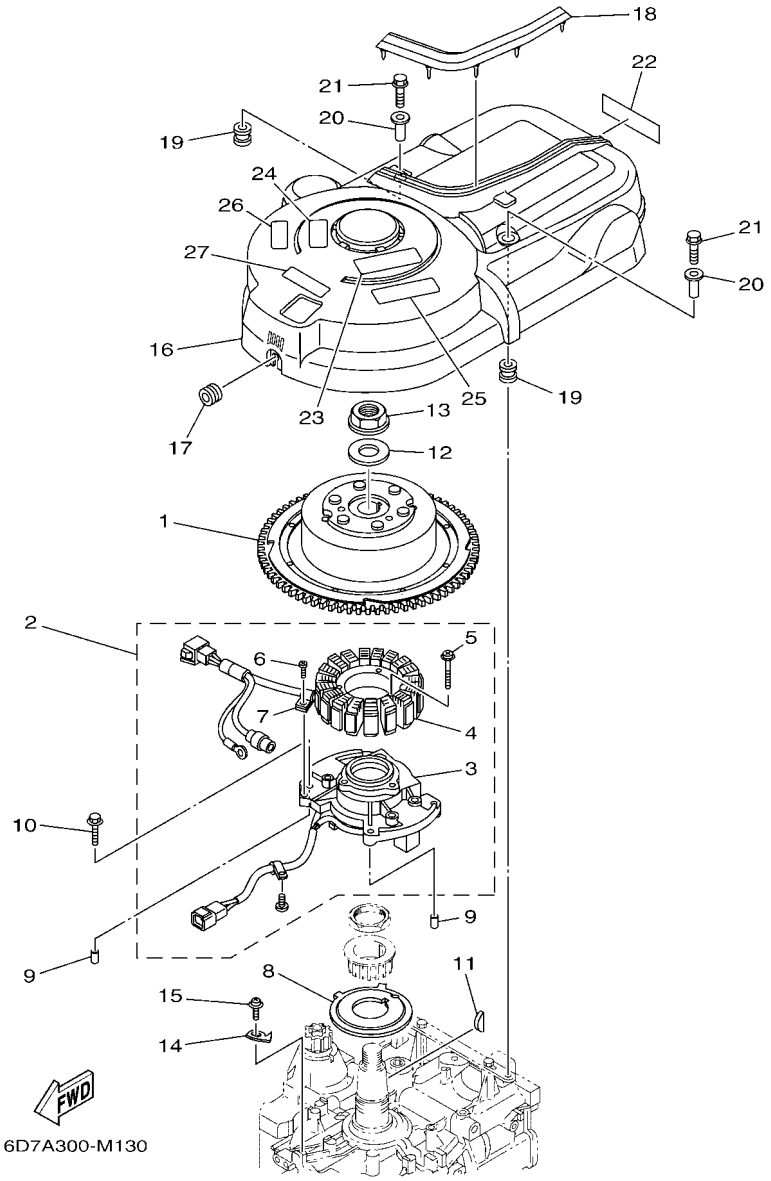

FIG. 13 GENERATOR — GENERATRICE

REF. NO.	PART NO. N° PIECES	DESCRIPTION DESCRIPTION	6D7C	6D9C				REMARKS REMARQUES
1	6D8–81450–00	ROTOR ASSY ROTOR COMPLET	1	1				
2	6D8–81460–00	BASE ASSY ENS. FLASQUE	1	1				
3	6D8–85580–00	.COIL, PULSER .BOBINE, PULSEUR	1	1				
4	6D8–81410–00	.STATOR ASSY .STATOR COMPLET	1	1				
5	63D–81345–20	.SCREW, WITH WASHER (M6X30) .VIS, AVEC RONDELLE (M6X30)	3	3				
6	97607–04110	.SCREW, WITH WASHER .VIS HEXAGONAL	1	1				
7	445–81328–20	.CLAMP .COLLIER	1	1				
8	68V–81673–10	ROTOR ROTOR	1	1				
9	99530–08012	PIN, DOWEL GOUJON, D'ASSEMBLAGE	2	2				
10	97595–06630	BOLT, WITH WASHER VIS HEXAGONAL AVC RONDELLE	4	4				
11	90280–05015	KEY, WOODRUFF CLAVETTE, DEMI-LUNE	1	1				
12	90201–24014	WASHER, PLATE RONDELLE, PLATE	1	1				
13	90179–24002	NUT ECROU	1	1				
14	6D8–81332–00	PLATE, TIMING PLATEAU, ALLUMAGE	1	1				
15	97985–06210	SCREW, WITH WASHER VIS, AVEC RONDELLE	1	1				
16	6D8–81337–00	COVER, FLYWHEEL COUVERCLE, VOLANT	1	1				
17	90480–12314	GROMMET PASSE-FIL	1	1				
18	6D8–85547–00	DAMPER AMORTISSEUR	1	1				
19	663–82317–01	DAMPER, IGNITION COIL AMORTISSEUR, BOBINE D'ALLUM	2	2				
20	90387–06119	COLLAR COLLERETTE	2	2				
21	95895–06020	BOLT, FLANGE BOULON	2	2				
22	68V–13437–62	MARK, CAUTION MAKER	1	1				
23	6EE–81995–40	LABEL, WARNING ETIQUETTE, AVERTISSEMENT	1	1				
24	6EE–81995–50	LABEL, WARNING ETIQUETTE, AVERTISSEMENT	1	1				
25	6EE–81994–40	LABEL, SAFETY ETIQUETTE, SECURITE	1	1				
26	6EE–81994–50	LABEL, SAFETY ETIQUETTE, SECURITE	1	1				
27	6AG–81996–00	MARK MARQUE	1	1				

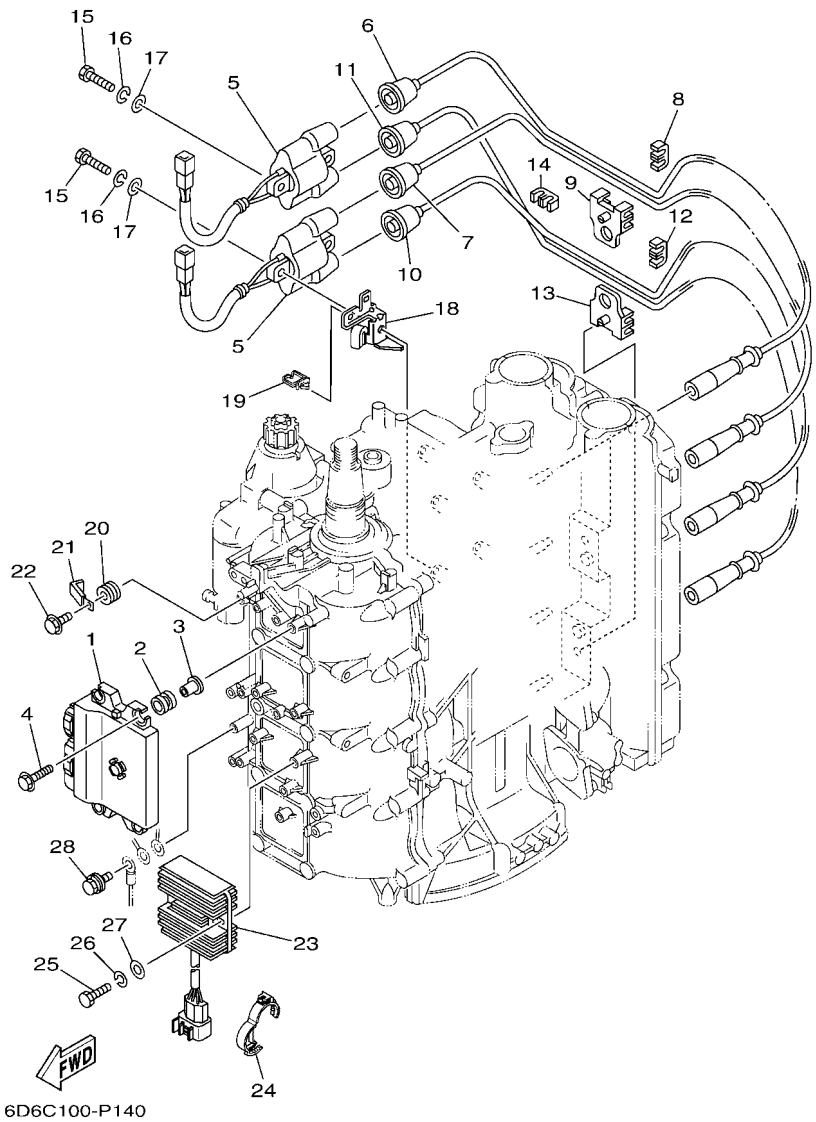

FIG. 14 ELECTRICAL 1 — PARTIE ELECTRIQUE 1

REF. NO.	PART NO. N° PIECES	DESCRIPTION DESCRIPTION	6D7C	6D9C				REMARKS REMARQUES
1	6D7–8591A–16	ENGINE CONTROL UNIT ASSY BLOC DE CONTROL	1					
	6D9–8591A–16	ENGINE CONTROL UNIT ASSY BLOC DE CONTROL		1				
2	68V–82317–00	DAMPER, IGNITION COIL AMORTISSEUR, BOBINE D'ALLUM	4	4				
3	90387–06119	COLLAR COLLERETTE	4	4				
4	90119–06M59	BOLT, WITH WASHER BOULON, AVEC RONDELLE	4	4				
5	63P–82310–01	IGNITION COIL ASSY BOBINE D'ALLUMAGE	2	2				
6	67F–82341–00	CORD, HIGH TENSION 1 CORDON, HAUTE-TENSION 1	1	1				#1 #1
7	67F–82342–00	CORD, HIGH TENSION 2 CORDON, HAUTE-TENSION 2	1	1				#2 #2
8	67F–82361–00	CLAMP, CORD COLLIER, CORDON	1	1				
9	67F–82362–00	CLAMP, CORD 2 COLLIER, CABLE 2	1	1				
10	67F–82343–00	CORD, HIGH TENSION 3 CORDON, HAUTE-TENSION 3	1	1				#3 #3
11	67F–82344–00	CORD, HIGH TENSION 4 CORDON, HAUTE TENSION 4	1	1				#4 #4
12	67F–82361–00	CLAMP, CORD COLLIER, CORDON	1	1				
13	67F–82362–00	CLAMP, CORD 2 COLLIER, CABLE 2	1	1				
14	67F–82361–00	CLAMP, CORD COLLIER, CORDON	1	1				
15	97095–06025	BOLT BOULON	4	4				
16	92995–06100	WASHER, SPRING RONDELLE, GROWER	4	4				
17	92995–06600	WASHER RONDELLE	4	4				
18	6D8–82388–01	PLATE PLAQUETTE	2	2				
19	90464–08004	CLAMP BRIDE	2	2				
20	90480–14329	GROMMET PASSE-FIL	1	1				
21	90465–08M23	CLAMP BRIDE	1	1				
22	97595–06514	BOLT, WITH WASHER VIS HEXAGONAL AVC RONDELLE	1	1				
23	6D8–81960–10	RECTIFIER & REGULATOR ASSY REDRESSEUR REGULATEUR CPLT	1	1				
24	90464–30003	CLAMP BRIDE	1	1				
25	97095–06025	BOLT BOULON	2	2				
26	92995–06100	WASHER, SPRING RONDELLE, GROWER	2	2				

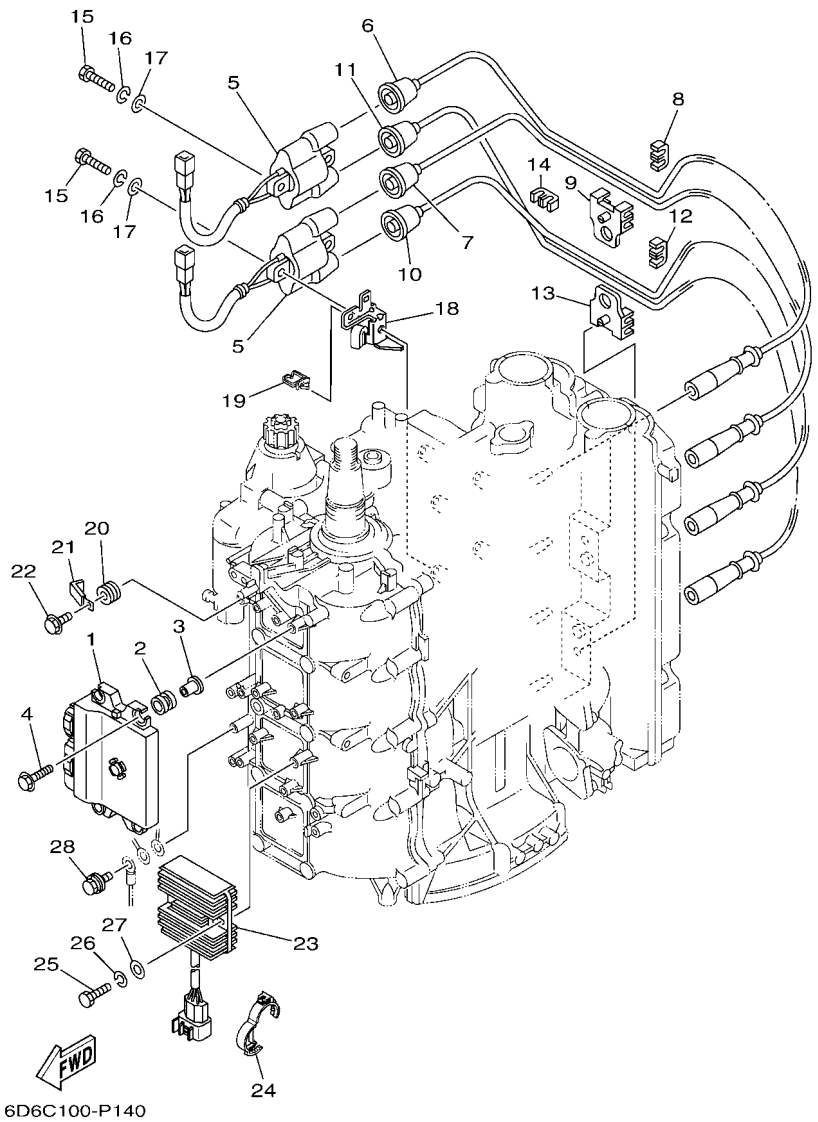

FIG. 14 ELECTRICAL 1 — PARTIE ELECTRIQUE 1

REF. NO.	PART NO. N° PIECES	DESCRIPTION DESCRIPTION	6D7C	6D9C				REMARKS REMARQUES
27	92995–06600	WASHER RONDELLE	2	2				
28	97595–06616	BOLT, WITH WASHER VIS HEXAGONAL AVC RONDELLE	1	1				

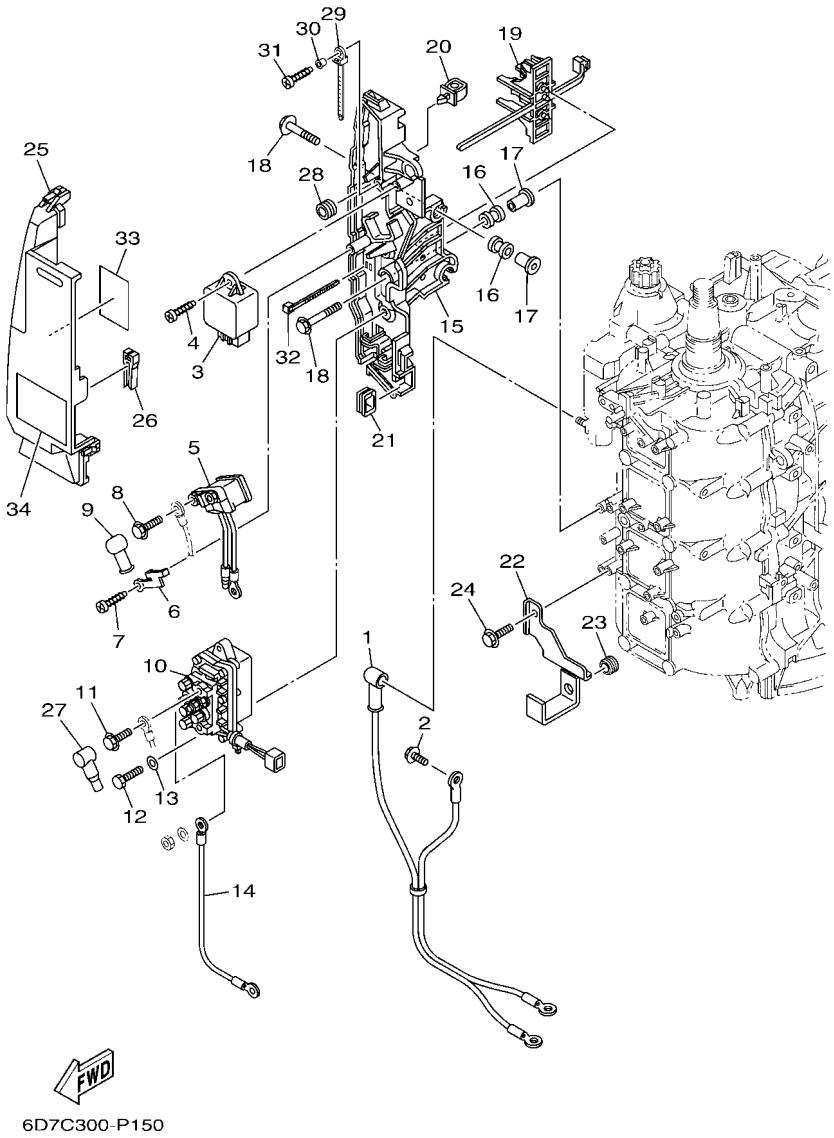

FIG. 15 ELECTRICAL 2 — PARTIE ELECTRIQUE 2

REF. NO.	PART NO. N° PIECES	DESCRIPTION DESCRIPTION	6D7C	6D9C				REMARKS REMARQUES
1	68V–82105–01	BATTERY CABLE CABLE DE BATTERIE	1	1				
2	90105–06M14	BOLT FLANGE BOULON	1	1				
3	60E–81950–00	RELAY ASSY RELAIS COMPLET	1	1				
4	97780–60625	SCREW, TAPPING VIS, TETE BOMBEE	1	1				
5	68V–8194A–00	RELAY RELAIS	1	1				
6	68V–81953–00	STAY, RELAY SUPPORT, RELAIS	1	1				
7	97780–60620	SCREW, TAPPING VIS, TETE BOMBEE	1	1				
8	97595–06610	BOLT, WITH WASHER VIS HEXAGONAL AVC RONDELLE	2	2				
9	6G5–82119–00	COVER, LEAD WIRE GARNITURE, FIL	2	2				
10	63P–81950–00	RELAY ASSY RELAIS COMPLET	1	1				
11	97595–06610	BOLT, WITH WASHER VIS HEXAGONAL AVC RONDELLE	2	2				
12	97013–06020	BOLT BOULON	2	2				
13	92903–06600	WASHER, PLATE RONDELLE, PLATE	2	2				
14	61A–81949–00	WIRE, LEAD FIL	1	1				
15	68V–81948–03	BRACKET SUPPORT	1	1				
16	6A0–82317–00	DAMPER, IGNITION COIL AMORTISSEUR, BOBINE D'ALLUM	5	5				
17	90387–06119	COLLAR COLLERETTE	5	5				
18	90119–06M59	BOLT, WITH WASHER BOULON, AVEC RONDELLE	5	5				
19	68V–82594–00	CLAMP BRIDE	1	1				
20	90464–12M58	CLAMP BRIDE	1	1				
21	6D8–81518–00	GROMMET PASSE-FIL	1	1				
22	6D8–81528–02	CLAMP 1 COLLIER 1	1	1				
23	90480–13M24	GROMMET PASSE-FIL	1	1				
24	97595–06514	BOLT, WITH WASHER VIS HEXAGONAL AVC RONDELLE	1	1				
25	68V–81942–03	COVER COUVERCLE	1	1				
26	67F–2812A–00	PULLER, FUSE TENDEUR, FUSIBLE	1	1				
27	682–82119–01	COVER, LEAD WIRE GARNITURE, FIL	2	2				

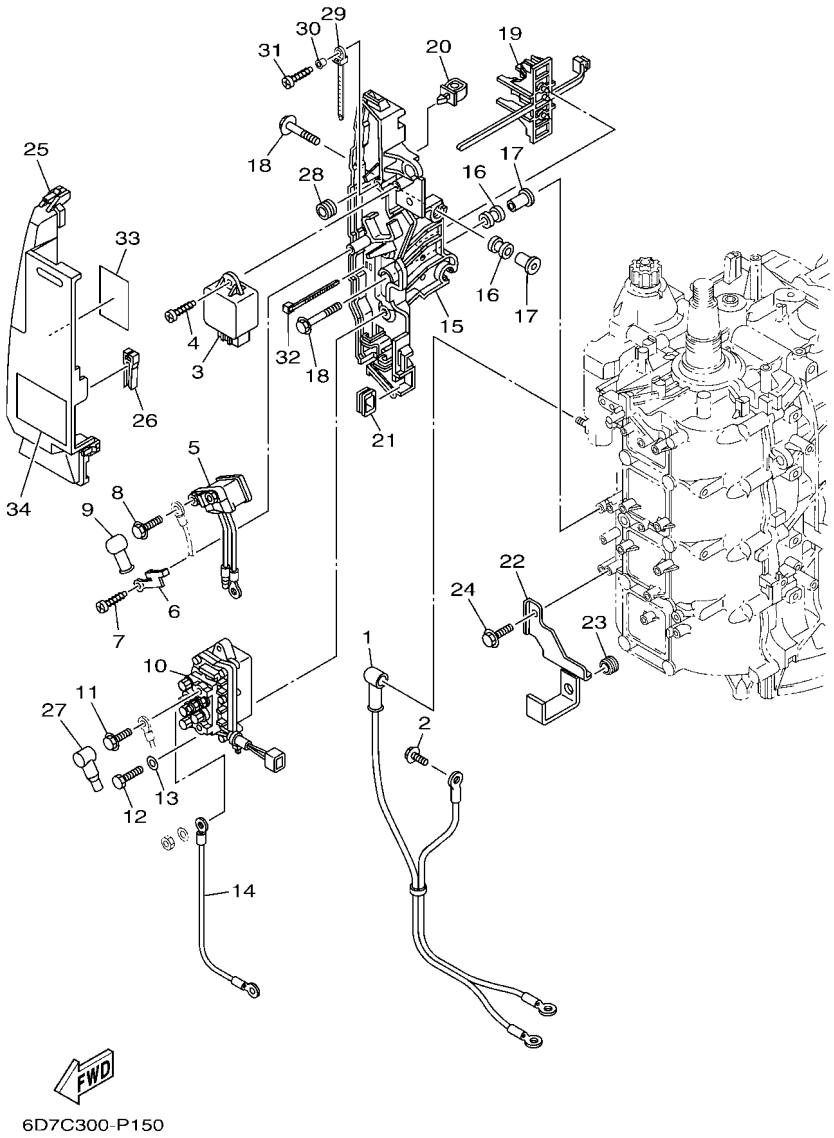

FIG. 15 ELECTRICAL 2 — PARTIE ELECTRIQUE 2

REF. NO.	PART NO. N° PIECES	DESCRIPTION DESCRIPTION	6D7C	6D9C				REMARKS REMARQUES
28	6A0–82317–00	DAMPER, IGNITION COIL AMORTISSEUR, BOBINE D'ALLUM	1	1				
29	90465–12M53	CLAMP BRIDE	1	1				
30	90387–06M05	COLLAR COLLERETTE	1	1				
31	97780–60625	SCREW, TAPPING VIS, TETE BOMBEE	1	1				
32	90465–13M18	CLAMP BRIDE	2	2				
33	6D8–81919–00	GRAPHIC, REGULATOR ADHESIF, REGULATEUR	1	1				
34	6D8–81919–10	GRAPHIC, REGULATOR ADHESIF, REGULATEUR	1	1				

FIG. 16 ELECTRICAL 3 — PARTIE ELECTRIQUE 3

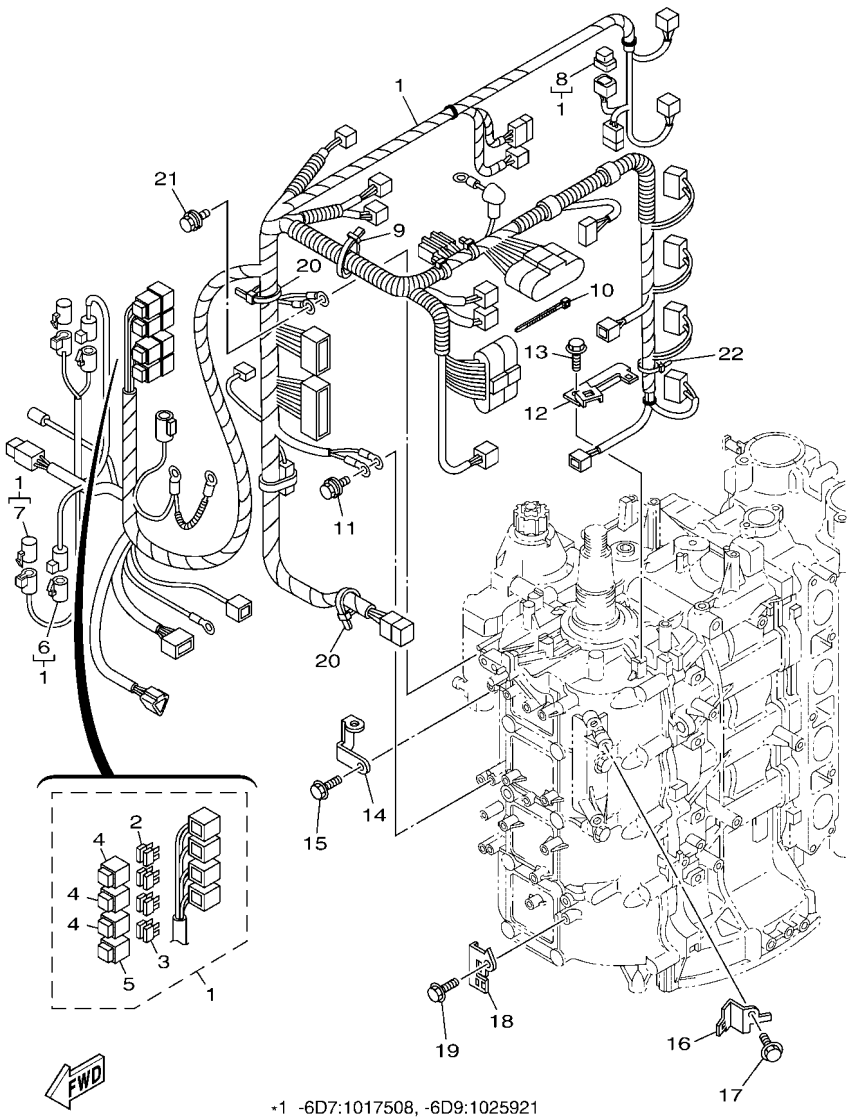

6D7C300-P160

*1 -6D7:1017508, -6D9:1025921
*2 6D7:1017509-, 6D9:1025922-

REF. NO.	PART NO. N° PIECES	DESCRIPTION DESCRIPTION	6D7C	6D9C				REMARKS REMARQUES
1	6D8–82590–41	WIRE HARNESS ASSY FAISCEAU DE FILS COMPLET	1	1				*1 *1
	6D8–82590–60	WIRE HARNESS ASSY FAISCEAU DE FILS COMPLET	1	1				*2 *2
2	67F–82151–00	.FUSE (20A) .FUSIBLE (20A)	6	6				
3	67F–82151–10	.FUSE (30A) .FUSIBLE (30A)	2	2				
4	67F–8215B–10	.CAP (YELLOW) .BOUCHON (YELLOW)	3	3				
5	67F–8215B–20	.CAP (GREEN) .BOUCHON (GREEN)	1	1				
6	6DA–82582–00	.CAP 1 (FEMALE) .BOUCHON 1 (FEMME)	1	1				
7	6DA–82582–10	.CAP 1 (MALE) .BOUCHON 1 (MALE)	1	1				
8	6Y8–82582–11	.CAP 1 (4PIN) .COUVERCLE, FAISCEAU DE FILS	1	1				
9	90464–76001	CLAMP BRIDE	1	1				
10	90465–13M97	CLAMP BRIDE	1	1				
11	97595–06616	BOLT, WITH WASHER VIS HEXAGONAL AVC RONDELLE	1	1				
12	6D8–82588–01	PLATE PLAQUE	1	1				
13	97595–06512	BOLT, WITH WASHER VIS HEXAGONAL AVC RONDELLE	1	1				
14	6D8–82581–01	STAY, CORD CLAMP SUPPORT, COLLIER DE CORDON	1	1				
15	97595–06514	BOLT, WITH WASHER VIS HEXAGONAL AVC RONDELLE	1	1				
16	6D8–82389–01	PLATE 2 PLAQUETTE 2	1	1				
17	97595–06512	BOLT, WITH WASHER VIS HEXAGONAL AVC RONDELLE	1	1				
18	6D8–82398–01	PLATE 3 PLAQUETTE 3	1	1				
19	97595–06512	BOLT, WITH WASHER VIS HEXAGONAL AVC RONDELLE	1	1				
20	90465–13M18	CLAMP BRIDE	2	2				
21	97595–06616	BOLT, WITH WASHER VIS HEXAGONAL AVC RONDELLE	1	1				
22	90465–13M11	CLAMP BRIDE	1	1				

FIG. 17 ELECTRICAL 4 — PARTIE ELECTRIQUE 4

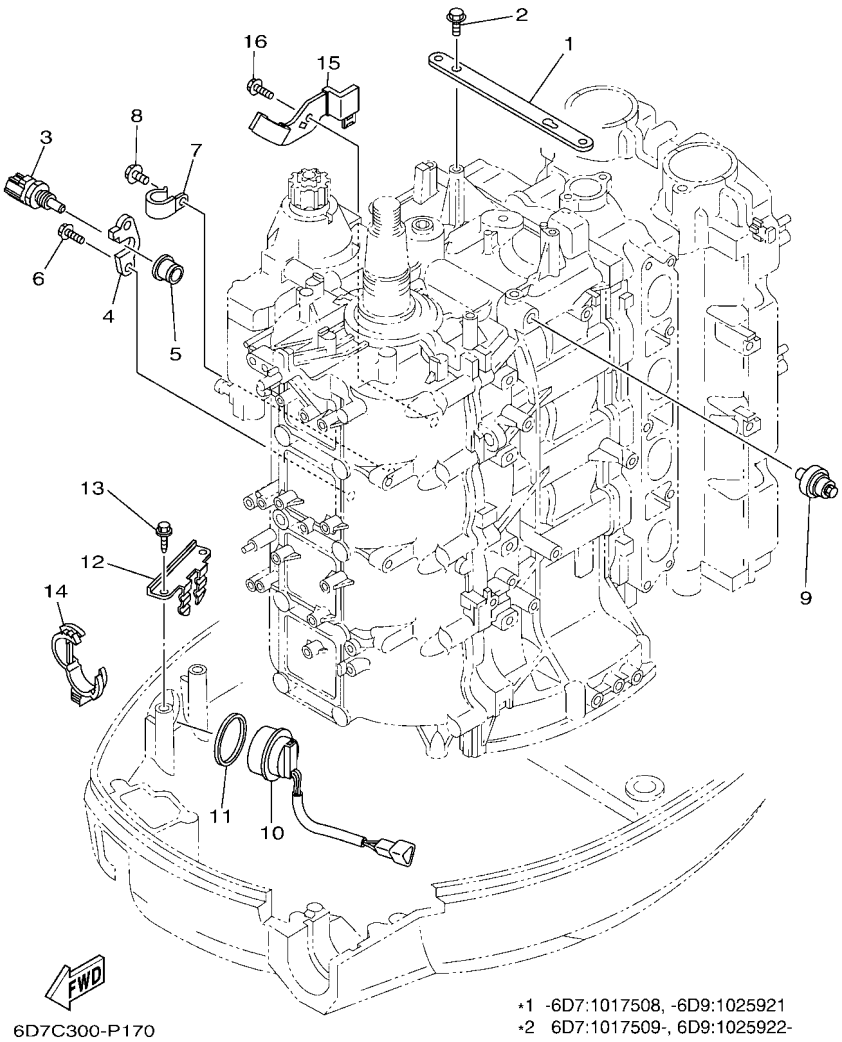

*1 -6D7:1017508, -6D9:1025921
*2 6D7:1017509-, 6D9:1025922-

REF. NO.	PART NO. N° PIECES	DESCRIPTION DESCRIPTION	6D7C	6D9C				REMARKS REMARQUES
1	6D8–8132G–10	PLATE PLAQUE	1	1				
2	97595–06516	BOLT, WITH WASHER VIS HEXAGONAL AVC RONDELLE	2	2				
3	67F–85790–00	THERMOSENSOR ASSY SENSITOMETRE	1	1				*1 *1
	6D8–85790–00	THERMOSENSOR ASSY SENSITOMETRE	1	1				*2 *2
4	67F–85757–00	RETAINER ARRETOIR	1	1				
5	68V–85753–00	GASKET, SENDER UNIT JOINT, DE PERCEPTION	1	1				
6	97595–06516	BOLT, WITH WASHER VIS HEXAGONAL AVC RONDELLE	2	2				
7	90465–06M86	CLAMP BRIDE	1	1				
8	97595–06512	BOLT, WITH WASHER VIS HEXAGONAL AVC RONDELLE	1	1				
9	68V–82504–00	OIL PRESSURE SWITCH ASSY CONTACTEUR DE PRESSION D'HUILE	1	1				
10	63D–82563–11	TRIM & TILT SWITCH ASSY INCLINER ET PARER COMMUTATEUR	1	1				
11	6E5–82587–00	GASKET JOINT	1	1				
12	67F–83614–00	BRACKET SUPPORT	1	1				
13	90109–06M86	BOLT BOULON	2	2				
14	90464–30003	CLAMP BRIDE	2	2				
15	6D8–8252H–01	PLATE, HOLDER PLAQUE, SUPPORT	1	1				
16	97595–06512	BOLT, WITH WASHER VIS HEXAGONAL AVC RONDELLE	1	1				

FIG. 18 STARTING MOTOR — DEMARREUR ELECTRIQUE

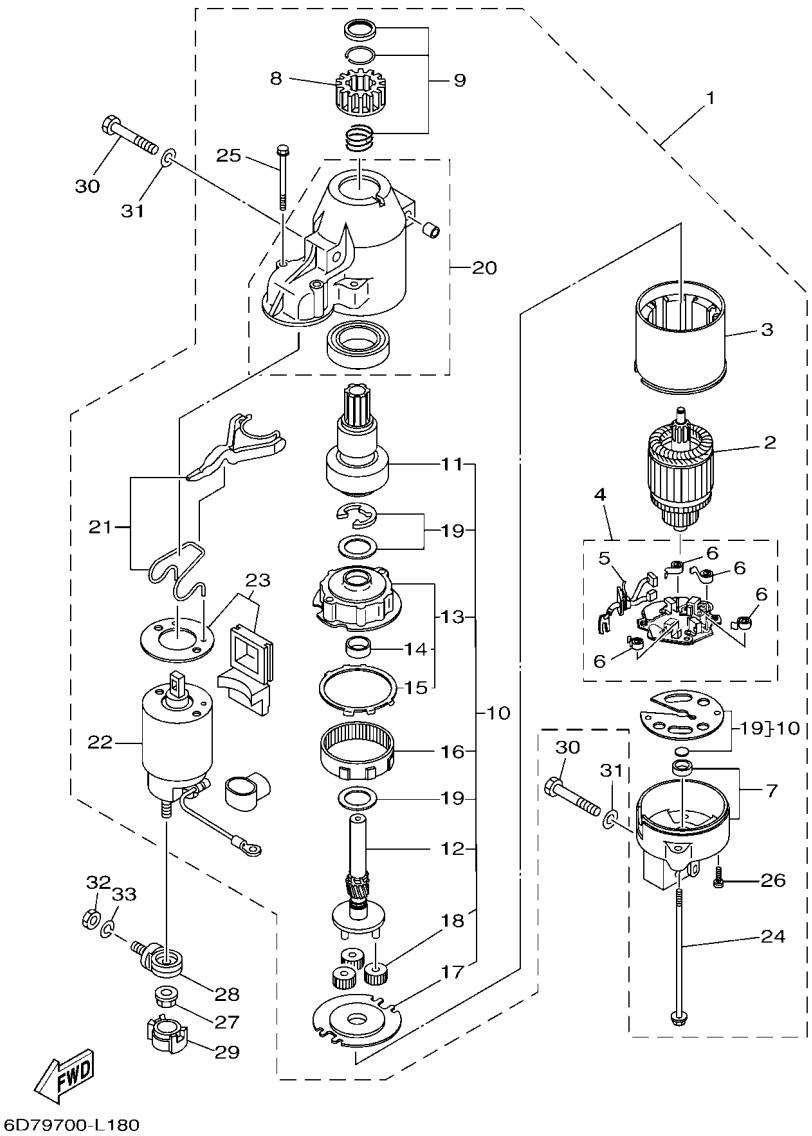

REF. NO.	PART NO. N° PIECES	DESCRIPTION DESCRIPTION	6D7C	6D9C				REMARKS REMARQUES
1	68V–81800–02	STARTING MOTOR ASSY DEMARREUR ELECTRIQUE COMPLET	1	1				
2	67F–81850–00	.ARMATURE ASSY .INDUIT	1	1				
3	67F–81810–00	.STATOR ASSY .STATOR COMPLET	1	1				
4	69J–81840–00	.BRUSH HOLDER ASSY .SUPPORT DE CHARBON	1	1				
5	69J–81801–00	..BRUSH SET ..CHARBON	1	1				
6	67F–81813–00	..SPRING, BRUSH ..RESSORT, DE CHARBON	4	4				
7	68F–81820–00	.REAR BRACKET ASSY .SUPPORT ARRIERE COMPLET	1	1				
8	67F–81808–00	.PINION ASSY .PIGNON	1	1				
9	67F–81857–00	.PINION STOPPER SET .BUTEE PIGNON	1	1				
10	67F–81807–00	.GEAR ASSY, STARTING MOTOR .PIGNON, DEMARREUR ELECTRIQUE	1	1				
11	67F–81832–00	..CLUTCH, OVER RUN ..EMBRAYAGE, ROUE LIBRE	1	1				
12	67F–81836–00	..SHAFT, PINION ..AXE, PIGNON	1	1				
13	67F–81821–00	..BRACKET, CENTER 1 ..SUPPORT, CENTRE 1	1	1				
14	67F–81841–00	...BEARING ...ROULEMENT	1	1				
15	67F–8183R–00	...GASKET ...JOINT	1	1				
16	67F–81891–00	..GEAR, RING ..ROUE DENTEE	1	1				WITH 67F-8183R-00 WITH 67F-8183R-00
17	67F–81830–00	..BRACKET, CENTER 2 ..SUPPORT, CENTRE 2	1	1				
18	60V–8183T–00	..GEAR, IDLER ..PIGNON, INTERMEDIAIRE	3	3				
19	67F–81809–00	..WASHER KIT ..JEU DE RONDELLES	1	1				
20	60X–81842–00	.COVER .COUVERCLE	1	1				
21	6C5–81839–00	.LEVER ASSY .LEVIER COMPLET	1	1				
22	68V–81941–02	.STARTER RELAY ASSY .LANCEUR RELAIS (ENS.)	1	1				
23	6C5–81869–00	.COVER, DUST .COUVERCLE, POUSSIERE	1	1				
24	6K7–81826–11	.BOLT .BOULON	2	2				
25	69J–81828–00	.SCREW 2 .VIS 2	2	2				
26	67F–81846–00	.SCREW .VIS	2	2				
27	90179–08003	NUT ECROU	1	1				

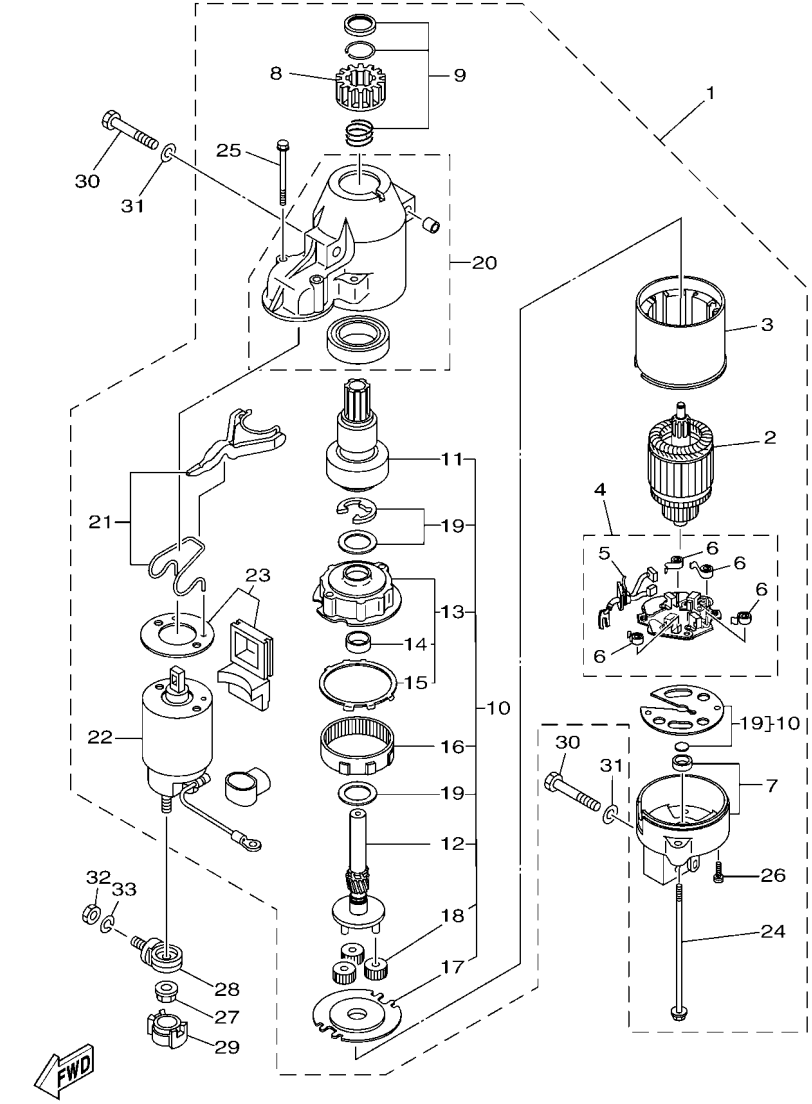

FIG. 18 STARTING MOTOR — DEMARREUR ELECTRIQUE

REF. NO.	PART NO. N° PIECES	DESCRIPTION DESCRIPTION	6D7C	6D9C				REMARKS REMARQUES
28	60V–81925–00	TERMINAL BORNE	1	1				
29	68F–82582–00	COVER, WIRE HARNESS COUVERCLE, FAISCEAU DE FILS	1	1				
30	97013–08045	BOLT BOULON	3	3				
31	92903–08600	WASHER, PLATE RONDELLE, PLATE	3	3				
32	95333–08600	NUT ECROU	1	1				
33	92903–08100	WASHER, SPRING RONDELLE, GROWER	1	1				

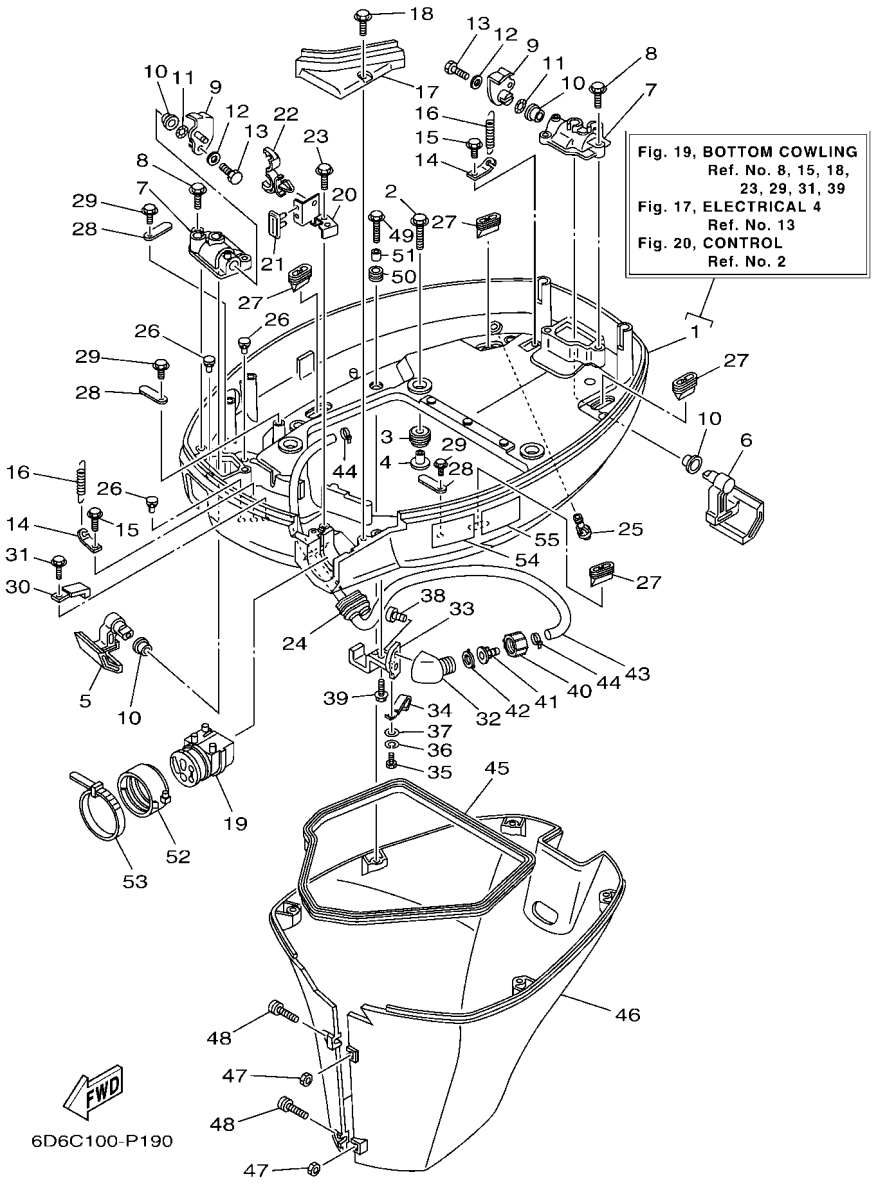

FIG. 19 BOTTOM COWLING — CAPOT INFERIEUR

REF. NO.	PART NO. N° PIECES	DESCRIPTION DESCRIPTION	6D7C	6D9C				REMARKS REMARQUES
1	6D8–42710–00–8D	BOTTOM COWLING ASSY ENS. EMBASE	1	1				
2	90119–08M22	BOLT, WITH WASHER BOULON, AVEC RONDELLE	4	4				
3	90480–22M15	GROMMET PASSE-FIL	4	4				
4	90387–08M37	COLLAR COLLERETTE	4	4				
5	67F–42815–00–8D	LEVER, CLAMP LEVIER, PRESSE	1	1				
6	67F–42816–00–8D	LEVER, CLAMP LEVIER, PRESSE	1	1				
7	67F–42828–00–9S	PLATE, CLAMP PLAQUE, PRESSE	2	2				
8	90109–06M82	BOLT BOULON	4	4				
9	68V–42818–01	LEVER, CLAMP LEVIER, PRESSE	2	2				
10	90386–15M73	BUSH DOUILLE	4	4				
11	90206–15M18	WASHER, WAVE RONDELLE, ONDULEE	2	2				
12	90201–06068	WASHER, PLATE RONDELLE, PLATE	2	2				
13	97095–06016	BOLT BOULON	2	2				
14	64D–43144–00	HOOK, SPRING CROCHET	2	2				
15	90109–06M86	BOLT BOULON	2	2				
16	90506–16M34	SPRING, TENSION RESSORT, TENSION	2	2				
17	67F–42738–00–8D	PLATE, FITTING ETRIER	1	1				
18	90109–06M96	BOLT BOULON	2	2				
19	68V–42725–00	GROMMET PASSE-FIL	1	1				
20	6D8–42756–02	STAY, CLAMP SUPPORT, COLLIER	1	1				
21	6D8–42717–00	RUBBER, SEAL 2 JOINT EN CAOUTCHOUC 2	1	1				
22	90464–18246	CLAMP BRIDE	1	1				
23	90109–06M86	BOLT BOULON	1	1				
24	6H1–42726–21	GROMMET PASSE-FIL	1	1				FLUSHING KIT FLUSHING KIT
25	6BL–44391–00	NIPPLE, HOSE RACCORD D'ESSENCE	1	1				
26	6H4–42748–00	GROMMET PASSE-FIL	3	3				
27	67F–42717–00	RUBBER, SEAL 2 JOINT EN CAOUTCHOUC 2	4	4				

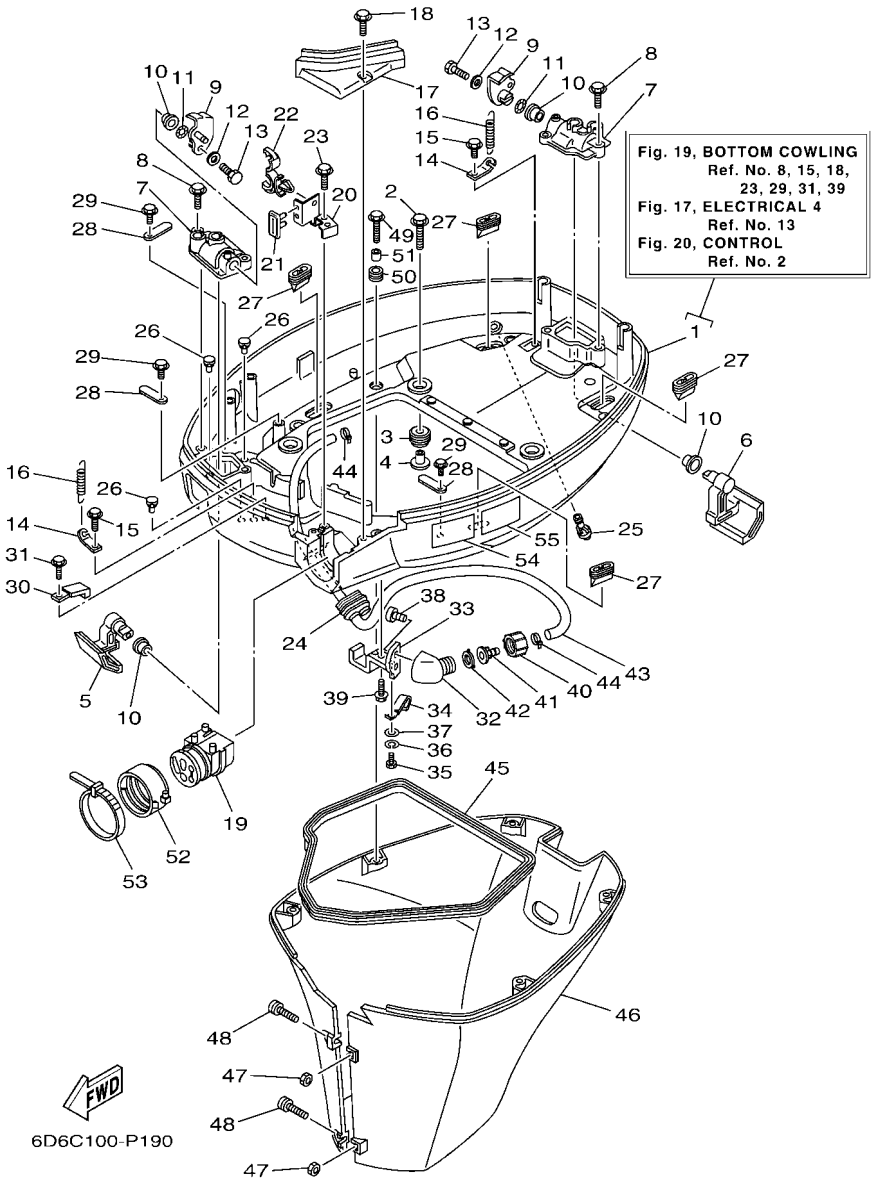

FIG. 19 BOTTOM COWLING — CAPOT INFERIEUR

REF. NO.	PART NO. N° PIECES	DESCRIPTION DESCRIPTION	6D7C	6D9C				REMARKS REMARQUES
28	6E5–82588–00	PLATE PLAQUE	3	3				
29	90109–06M81	BOLT BOULON	3	3				
30	90465–08M23	CLAMP BRIDE	1	1				
31	90109–06M86	BOLT BOULON	1	1				
32	6DR–12572–00	ADAPTER ADAPTATEUR	1	1				FLUSHING KIT FLUSHING KIT
33	67F–12535–01	PLATE PLAQUE	1	1				FLUSHING KIT FLUSHING KIT
34	90462–06018	CLAMP BRIDE	1	1				FLUSHING KIT FLUSHING KIT
35	97095–06008	BOLT BOULON	1	1				FLUSHING KIT FLUSHING KIT
36	92995–06100	WASHER, SPRING RONDELLE, GROWER	1	1				FLUSHING KIT FLUSHING KIT
37	92995–06200	WASHER RONDELLE	1	1				FLUSHING KIT FLUSHING KIT
38	90167–06002	SCREW, TAPPING VIS, TETE FRAISEE	2	2				FLUSHING KIT FLUSHING KIT
39	90109–06M86	BOLT BOULON	1	1				FLUSHING KIT FLUSHING KIT
40	6R3–12581–00	JOINT, HOSE 1 JOINT DE TUYAU	1	1				FLUSHING KIT FLUSHING KIT
41	6R3–12582–00	JOINT, HOSE 2 RACCORD DE TUYAU 1	1	1				FLUSHING KIT FLUSHING KIT
42	6R3–12583–00	GASKET, HOSE JOINT JOINT	1	1				FLUSHING KIT FLUSHING KIT
43	67F–24312–00	PIPE 2 DURITE 2	1	1				FLUSHING KIT FLUSHING KIT
44	90465–11M10	CLAMP BRIDE	2	2				FLUSHING KIT FLUSHING KIT
45	61A–42716–00	RUBBER, SEAL 1 JOINT EN CAOUTCHOUC 1	1	1				
46	67F–42741–01–8D	APRON CAPOT LATERAL	1	1				
47	95380–06600	NUT, HEXAGON ECROU	2	2				
48	90159–06M28	SCREW, WITH WASHER VIS, AVEC RONDELLE	2	2				
49	90109–06M80	BOLT BOULON	5	5				
50	90480–13M24	GROMMET PASSE-FIL	5	5				
51	90387–06M43	COLLAR COLLERETTE	5	5				
52	68F–42753–00	FASTNER ATTACHE	1	1				AP AP
53	90464–20258	CLAMP BRIDE	1	1				AP AP
54	6EE–42794–40	LABEL, WARNING (GENERAL) ETIQUETTE, AVERTISSEMENT	1	1				

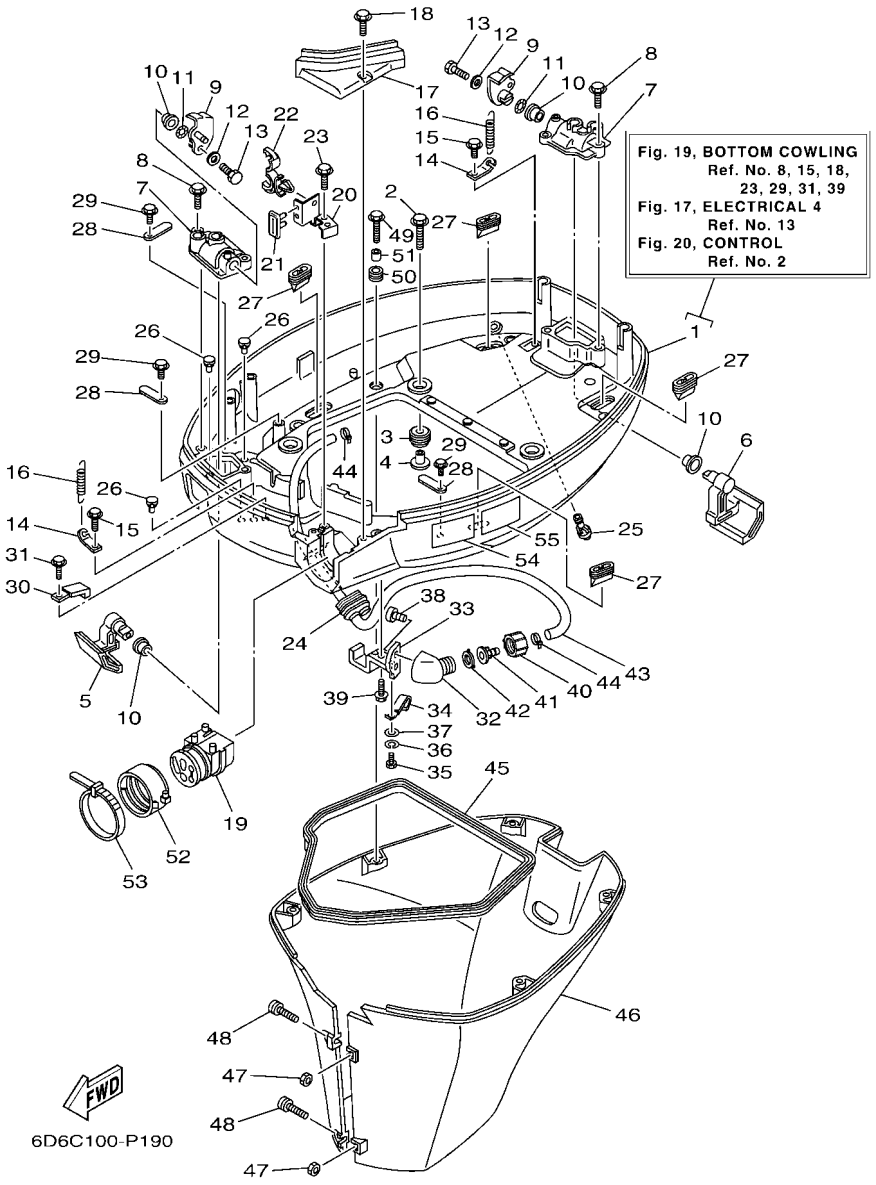

FIG. 19 BOTTOM COWLING — CAPOT INFERIEUR

REF. NO.	PART NO. N° PIECES	DESCRIPTION DESCRIPTION	6D7C	6D9C				REMARKS REMARQUES
55	6EE–42794–50	LABEL, WARNING (GENERAL) ETIQUETTE, AVERTISSEMENT	1	1				

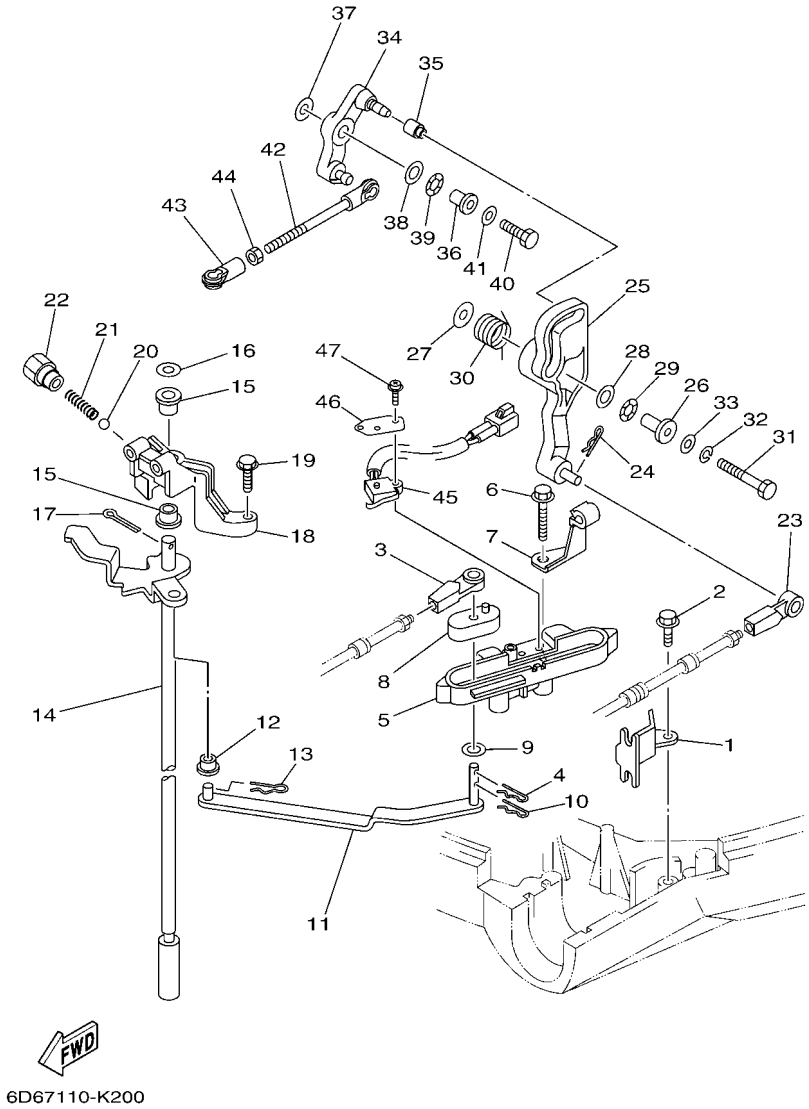

FIG. 20 CONTROL — COMMANDE

REF. NO.	PART NO. N° PIECES	DESCRIPTION DESCRIPTION	6D7C	6D9C				REMARKS REMARQUES
1	67F–48538–00	CLAMP, CABLE 1 COLLIER	1	1				
2	90109–06M86	BOLT BOULON	1	1				
3	663–48344–00	CABLE END, REMOTE CONTROL CHAPE CABLE	1	1				
4	90468–18008	CLIP JONC	1	1				
5	6D8–44117–00–94	BRACKET SUPPORT	1	1				
6	97595–06550	BOLT, WITH WASHER VIS HEXAGONAL AVC RONDELLE	2	2				
7	90462–10027	CLAMP BRIDE	1	1				
8	68V–44122–01	BUSHING, SHIFT ROD LEVER DOUILLE, LEVIER D'EMBRAYAGE	1	1				
9	90202–07M07	WASHER, PLATE RONDELLE, PLATE	1	1				
10	90468–18008	CLIP JONC	1	1				
11	67F–44121–00	LEVER, SHIFT ROD LEVIER, TIGE D'INVERSION	1	1				
12	90386–06M12	BUSH DOUILLE	1	1				
13	90468–18008	CLIP JONC	1	1				
14	67F–44120–11	HANDLE GEAR SHIFT ASSY LEVIER D'EMBRAYAGE	1	1				L(21.1") L(21.1")
	67F–44120–31	HANDLE GEAR SHIFT ASSY LEVIER D'EMBRAYAGE	1	1				X(26.1") X(26.1")
15	90386–90M90	BUSH DOUILLE	2	2				
16	90201–09M02	WASHER, PLATE RONDELLE, PLATE	1	1				
17	91490–20015	PIN. COTTER GOUPILLE	1	1				
18	67F–44118–00	BRACKET SUPPORT	1	1				
19	97575–06525	BOLT, WITH WASHER VIS HEXAGONAL AVC RONDELLE	2	2				
20	93501–04M02	BALL BILLE	1	1				
21	90501–12082	SPRING, COMPRESSION RESSORT, COMPRESSION	1	1				
22	648–42715–00	BUSHING COUSSINET	1	1				
23	663–48344–00	CABLE END, REMOTE CONTROL CHAPE CABLE	1	1				
24	90468–18008	CLIP JONC	1	1				
25	6D8–42154–00	LEVER, THROTTLE CONTROL LEVIER DE COMMANDE D'AVANCE	1	1				
26	90387–06M21	COLLAR COLLERETTE	1	1				

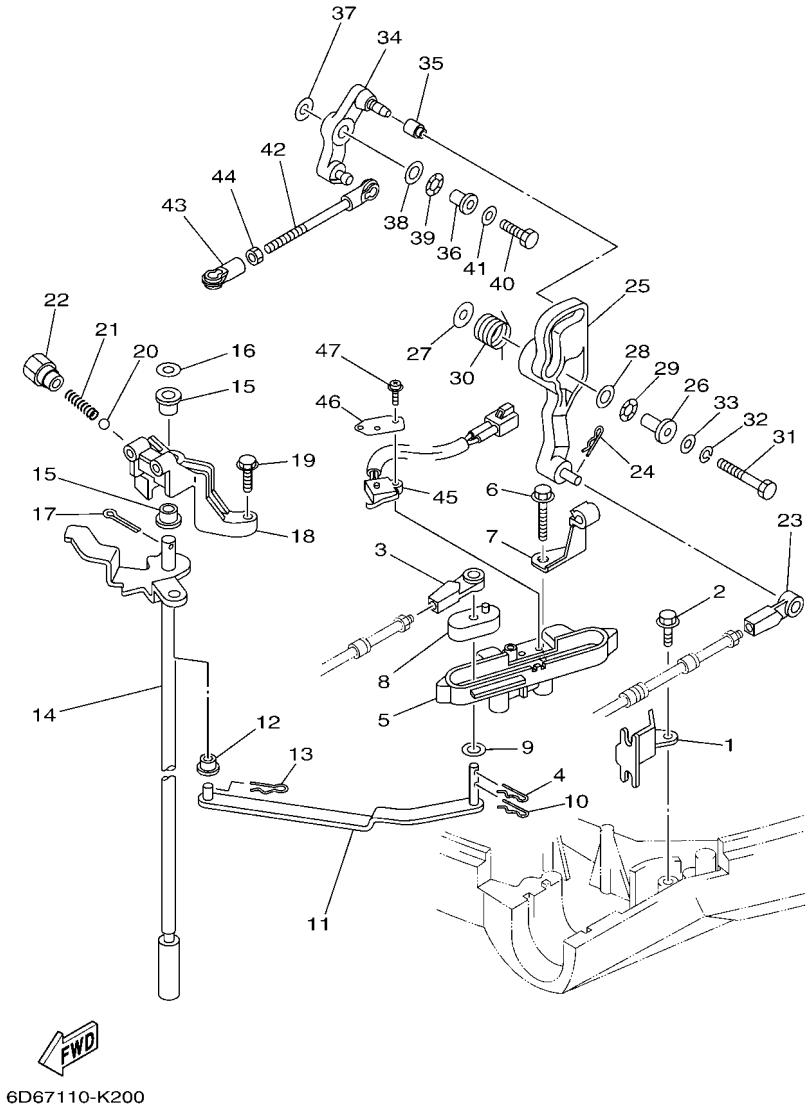

FIG. 20 CONTROL — COMMANDE

REF. NO.	PART NO. N° PIECES	DESCRIPTION DESCRIPTION	6D7C	6D9C				REMARKS REMARQUES
27	90201–06M62	WASHER, PLATE RONDELLE, PLATE	1	1				
28	90201–10M02	WASHER, PLATE RONDELLE, PLATE	1	1				
29	90206–10M04	WASHER, WAVE RONDELLE, ONDULEE	1	1				
30	67F–44135–00	SPRING RESSORT	1	1				
31	97095–06035	BOLT BOULON	1	1				
32	92995–06100	WASHER, SPRING RONDELLE, GROWER	1	1				
33	92995–06600	WASHER RONDELLE	1	1				
34	6D8–42157–00	LEVER, THROTTLE LEVIER DE AVANCE	1	1				
35	68V–42171–00	BUSHING COUSSINET	1	1				
36	90387–06013	COLLAR COLLERETTE	1	1				
37	90201–06M31	WASHER, PLATE RONDELLE, PLATE	1	1				
38	90201–10M02	WASHER, PLATE RONDELLE, PLATE	1	1				
39	90206–10M04	WASHER, WAVE RONDELLE, ONDULEE	1	1				
40	97095–06025	BOLT BOULON	1	1				
41	92995–06600	WASHER RONDELLE	1	1				
42	6D8–41237–00	JOINT, LINK RACCORD	1	1				
43	682–41237–00	JOINT, LINK RACCORD	1	1				
44	95380–05600	NUT ECROU	1	1				
45	60V–8259F–00	SWITCH ASSY COMMUTATEUR	1	1				
46	61A–82588–01	PLATE PLAQUE	1	1				
47	97985–04116	SCREW, WITH WASHER VIS, AVEC RONDELLE	2	2				

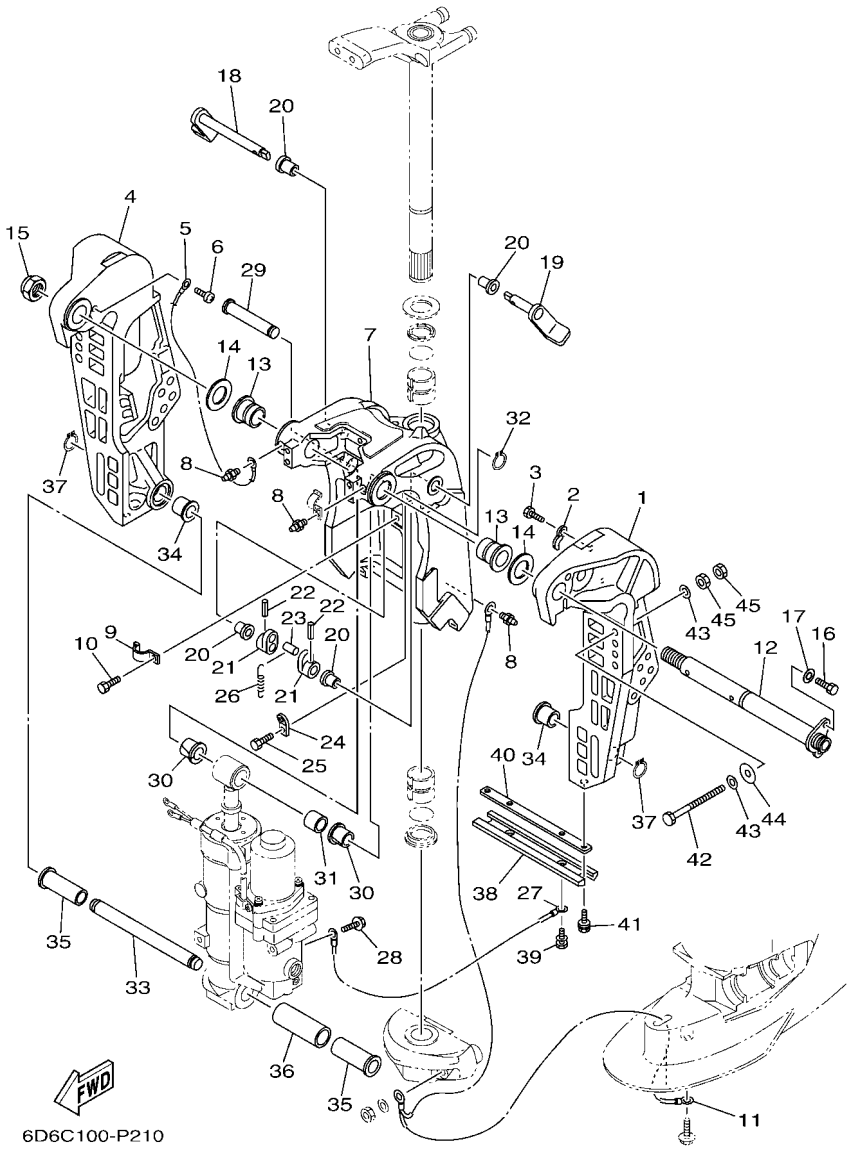

FIG. 21 BRACKET 1 SUPPORT 1

REF. NO.	PART NO. N° PIECES	DESCRIPTION DESCRIPTION	6D7C	6D9C				REMARKS REMARQUES
1	67F–43111–00–8D	BRACKET, CLAMP 1 PRESSE 1	1	1				
2	90465–10M77	CLAMP BRIDE	2	2				
3	97095–06010	BOLT BOULON	2	2				
4	67F–43112–00–8D	BRACKET, CLAMP 2 PRESSE 2	1	1				
5	6E5–82148–00	WIRE, LEAD 4 FIL 4	1	1				
6	97880–06012	SCREW, PAN HEAD VIS, TETE TRONCONIQUE	1	1				
7	6D8–43311–01–8D	BRACKET, SWIVEL 1 SUPPORT, PIVOT 1	1	1				
8	93700–06M03	NIPPLE, GREASE PION	3	3				
9	90465–08M63	CLAMP BRIDE	1	1				
10	97095–06010	BOLT BOULON	1	1				
11	67F–82127–00	WIRE, LEAD 2 FIL 2	1	1				
12	64E–43131–30	BOLT, CLAMP BRACKET BOULON, PRESSE	1	1				FOR TILT LIMIT FOR TILT LIMIT
13	90386–25M31	BUSH DOUILLE	2	2				
14	90201–26M59	WASHER, PLATE RONDELLE, PLATE	2	2				
15	90185–22M11	NUT, SELF-LOCKING ECROU,AUTO-BLOQUANT	1	1				
16	97095–08020	BOLT BOULON	1	1				
17	92995–08600	WASHER RONDELLE	1	1				
18	6D8–43181–00	LEVER, TILT STOP 1 LEVIER VERROUILLAGE RELEVAGE 1	1	1				
19	6D8–43185–00	LEVER, TILT STOP 2 LEVIER VERROUILLAGE RELEVAGE 2	1	1				
20	90386–10M16	BUSH DOUILLE	4	4				
21	6G5–43148–00	COLLAR, DISTANCE ENTRETOISE	2	2				
22	91690–30020	PIN, SPRING AGRAFFE	2	2				
23	90249–06M19	PIN GOUPILLE	1	1				
24	66T–43144–00	HOOK, SPRING CROCHET	1	1				
25	97095–06010	BOLT BOULON	1	1				
26	90506–14M24	SPRING, TENSION RESSORT, TENSION	1	1				
27	6D8–82148–00	WIRE, LEAD 4 FIL 4	1	1				

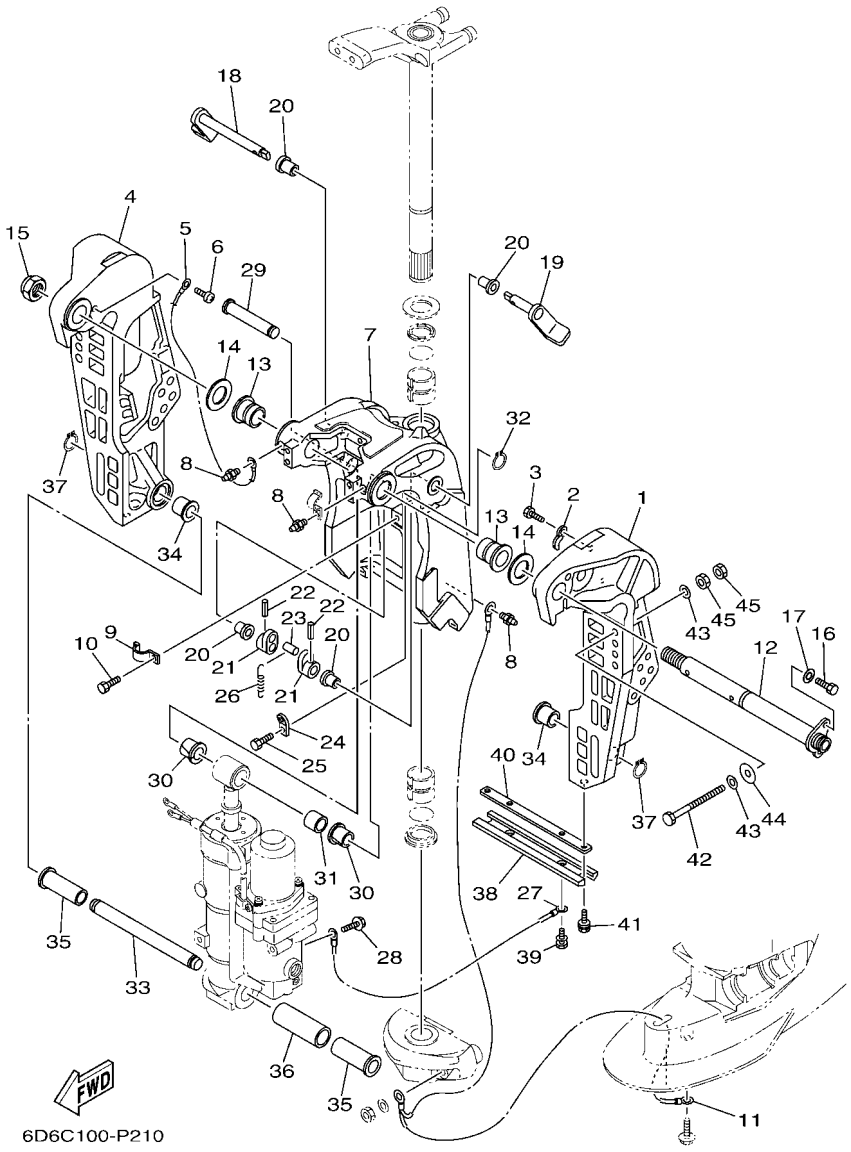

FIG. 21 BRACKET 1 — SUPPORT 1

REF. NO.	PART NO. N° PIECES	DESCRIPTION DESCRIPTION	6D7C	6D9C				REMARKS REMARQUES
28	97595–06510	BOLT, WITH WASHER VIS HEXAGONAL AVC RONDELLE	1	1				
29	6D8–43126–00	PIN, UPPER SHOCK MOUNT AXE, SUPERIEUR AMORTISSEUR	1	1				
30	90386–18M35	BUSH DOUILLE	2	2				
31	90386–18001	BUSH DOUILLE	1	1				
32	93410–18M05	CIRCLIP CLIPS	1	1				
33	67F–43818–00	PIN, LOWER SHOCK MOUNT AXE, INFERIEUR AMORTISSEUR	1	1				
34	90387–18M01	COLLAR COLLERETTE	2	2				
35	90386–18MA0	BUSH DOUILLE	2	2				
36	90387–22M01	COLLAR COLLERETTE	1	1				
37	93410–18M05	CIRCLIP CLIPS	2	2				
38	6H1–45251–03	ANODE ANODE	1	1				
39	90119–06M81	BOLT, WITH WASHER BOULON, AVEC RONDELLE	2	2				
40	6EK–44536–00	PLATE 2 PLAQUETTE 2	1	1				
41	97595–06616	BOLT, WITH WASHER VIS HEXAGONAL AVC RONDELLE	2	2				
42	90101–12M05	BOLT (L:130MM) BOULON (L:130MM)	4	4				
43	90201–13M01	WASHER, PLATE RONDELLE, PLATE	8	8				
44	90201–12426	WASHER, PLATE RONDELLE, PLATE	4	4				
45	95380–12600	NUT ECROU	8	8				

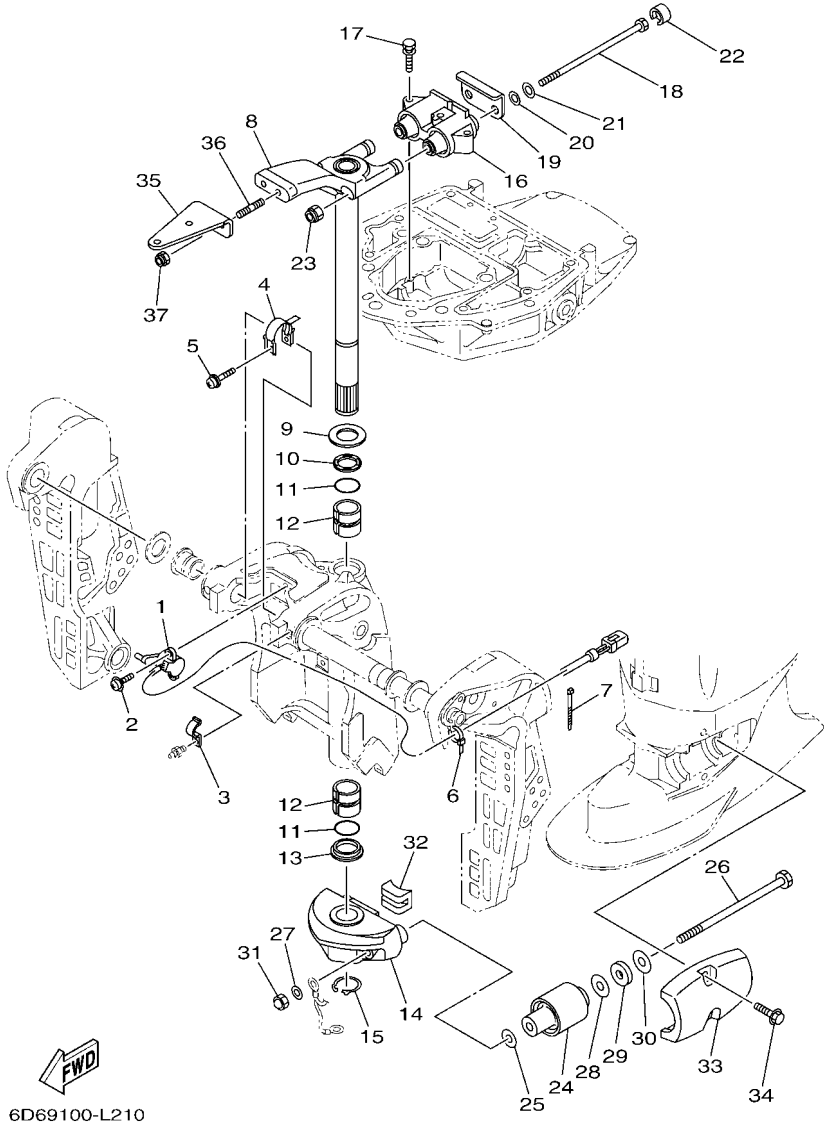

FIG. 22 BRACKET 2 — SUPPORT 2

REF. NO.	PART NO. N° PIECES	DESCRIPTION DESCRIPTION	6D7C	6D9C				REMARKS REMARQUES
1	67H–83672–01	TRIM SENDER INCLINER RACCORD	1	1				
2	97985–06216	SCREW, WITH WASHER VIS, AVEC RONDELLE	2	2				
3	90465–08M63	CLAMP BRIDE	1	1				
4	64E–43139–10	CAM, TRIM SENDER VILEBREQUIN TRUM	1	1				
5	90159–05059	SCREW, WITH WASHER VIS, AVEC RONDELLE	1	1				
6	90465–11M10	CLAMP BRIDE	1	1				
7	90465–11M10	CLAMP BRIDE	3	3				
8	67F–42510–11–8D	STEERING BRACKET ASSY DIRECTION SUPPORT (ENS.)	1	1				
9	90201–30M00	WASHER, PLATE RONDELLE, PLATE	1	1				
10	90386–30M78	BUSH DOUILLE	1	1				
11	93210–29M94	O-RING JOINT TORIQUE	2	2				
12	90386–30M77	BUSH DOUILLE	2	2				
13	90386–30M60	BUSH DOUILLE	1	1				
14	67F–44551–00–8D	HOUSING, LOWER MOUNT RUBBER 1 BOITIER, SILENT-BLOC INFERIEUR	1	1				
15	93410–28M06	CIRCLIP CLIPS	1	1				
16	67F–44514–01	MOUNT DAMPER, UPPER SIDE SILENT-BLOC, SUPERIEUR LATERAL	1	1				
17	90119–08091	BOLT, WITH WASHER BOULON, AVEC RONDELLE	3	3				
18	90109–12007	BOLT BOULON	2	2				
19	67F–44526–00	PLATE PLAQUE	1	1				
20	90201–12M16	WASHER, PLATE RONDELLE, PLATE	2	2				
21	90201–13M01	WASHER, PLATE RONDELLE, PLATE	2	2				
22	67F–44533–00	DAMPER, UPPER MOUNT RUBBER COUVERCLE, SUSPENSION INFERIEU	2	2				
23	95780–12300	NUT, FLANGE ECROU	2	2				
24	67F–44555–00	MOUNT DAMPER, LOWER SIDE SILENT-BLOC, INFERIEUR LATERAL	2	2				
25	90201–13M03	WASHER, PLATE RONDELLE, PLATE	2	2				
26	90109–12012	BOLT BOULON	2	2				
27	90201–12M16	WASHER, PLATE RONDELLE, PLATE	2	2				

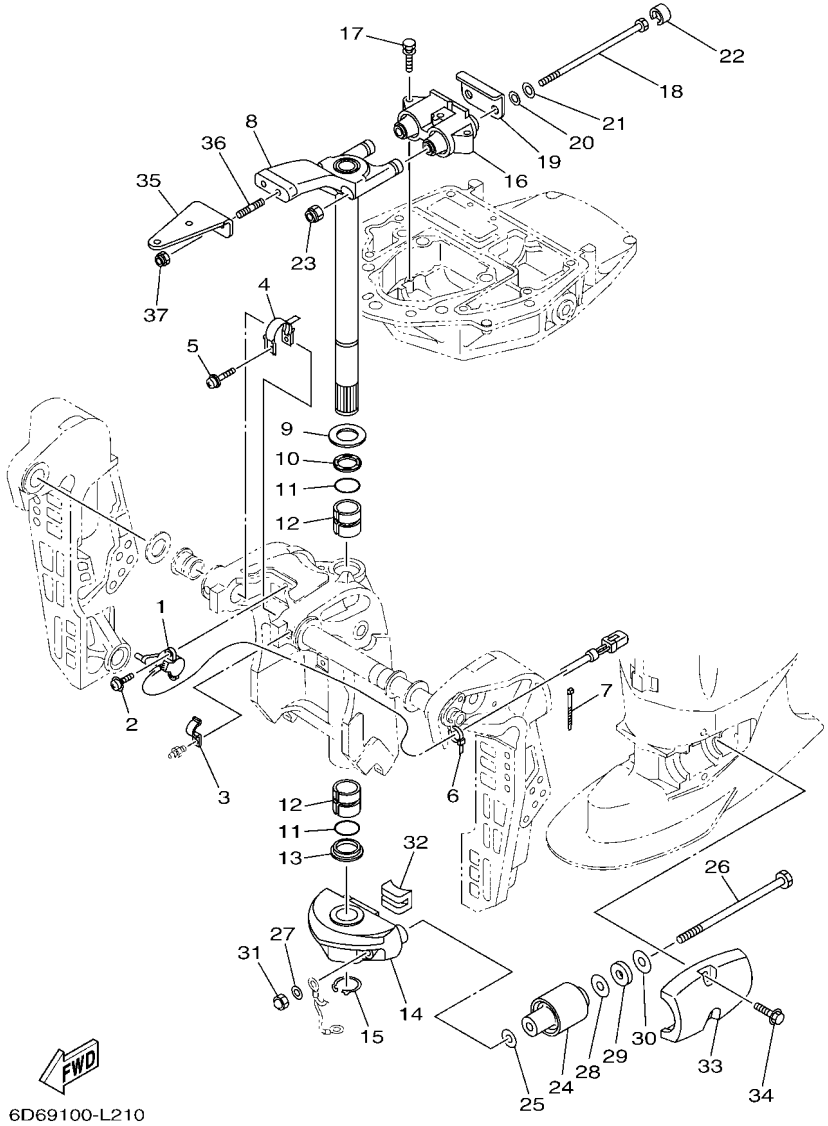

FIG. 22 BRACKET 2 — SUPPORT 2

REF. NO.	PART NO. N° PIECES	DESCRIPTION DESCRIPTION	6D7C	6D9C				REMARKS REMARQUES
28	90201–24M02	WASHER, PLATE RONDELLE, PLATE	2	2				
29	90202–25M04	WASHER, PLATE RONDELLE, PLATE	2	2				
30	90201–13M19	WASHER, PLATE RONDELLE, PLATE	2	2				
31	95380–12800	NUT, CROWN ECROU, BORGNE	2	2				
32	67F–44575–00	DAMPER, LOWER MOUNT RUBBER SILENT-BLOC, INFERIEUR	1	1				
33	67F–44553–00–8D	COVER, LOWER MOUNT COUVERCLE, SUSPENSION INFERIEU	2	2				
34	97575–10540	BOLT, WITH WASHER VIS HEXAGONAL AVC RONDELLE	4	4				
35	67F–48511–01	HOOK, STEERING ATTACHE, DIRECTION	1	1				
36	90116–10062	BOLT, STUD GOUJON	2	2				
37	90185–10027	NUT, SELF-LOCKING ECROU,AUTO-BLOQUANT	2	2				

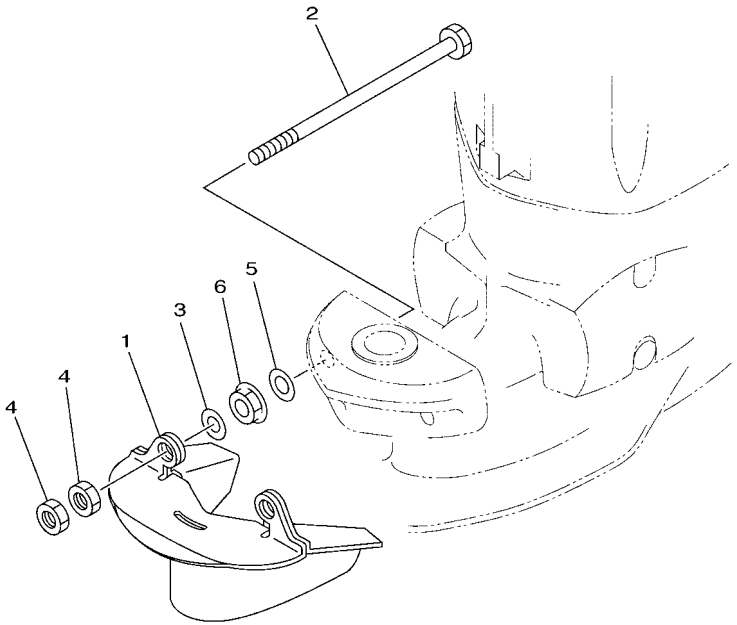

6D6C100-P230

FIG. 23 OPTIONAL PARTS 1 — PIECES OPTIONNELLES 1

REF. NO.	PART NO. N° PIECES	DESCRIPTION DESCRIPTION	6D7C	6D9C				REMARKS REMARQUES
1	67F–45180–00–4D	PLATE, SPLASH PLAQUE, EAU	1	1				AP AP
2	90109–12006	BOLT BOULON	2	2				AP AP
3	90201–12M01	WASHER, PLATE RONDELLE, PLATE	2	2				AP AP
4	95380–12700	NUT ECROU	4	4				AP AP
5	90201–12M16	WASHER, PLATE RONDELLE, PLATE	2	2				AP AP
6	95780–12300	NUT, FLANGE ECROU	2	2				AP AP

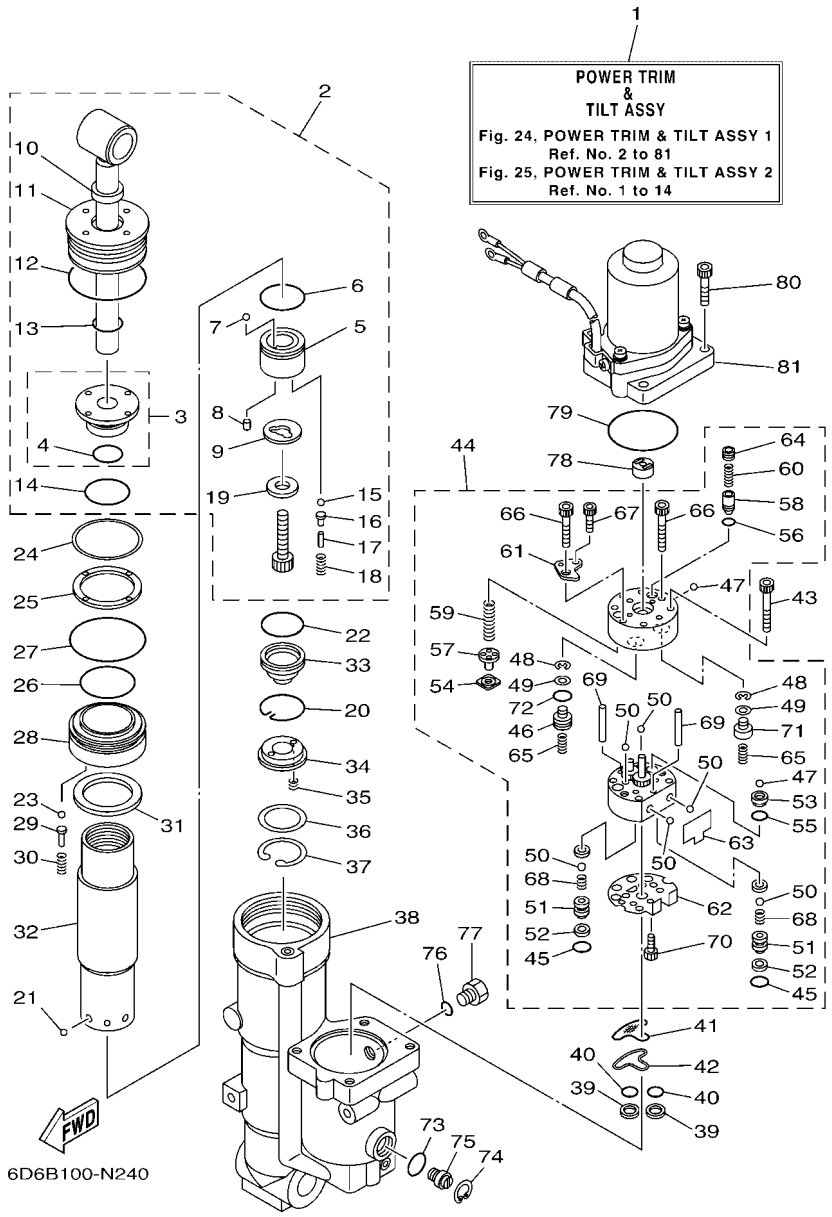

FIG. 24 POWER TRIM & TILT ASSY 1 — PUISSANCE PARER ET INCLINER 1

REF. NO.	PART NO. N° PIECES	DESCRIPTION DESCRIPTION	6D7C	6D9C				REMARKS REMARQUES
1	6D8–43800–11–8D	POWER TRIM & TILT ASSY PUISSANCE PARER ET INCLINER (E	1	1				
2	67F–43810–02	TILT PISTON SUB ASSY INCLINER PISTON AUXILIAIRE(ENS	1	1				
3	67F–4380R–01	.CYLINDER END SUB ASSY .CYLINDRE RACCORD (ENS.)	1	1				
4	6D8–43861–00	..O-RING ..JOINT TORIQUE	1	1				
5	67F–4385A–02	.PISTON, TILT .PISTON	1	1				
6	67F–43863–00	.O-RING .JOINT TORIQUE	1	1				
7	93501–08001	.BALL .BILLE	1	1				
8	93602–07244	.PIN, DOWEL .GOUJON	2	2				
9	67F–22435–00	.PLATE, VALVE 2 .PLAQUE, CLAPET 2	1	1				
10	6H1–43812–00	.SEAL, DUST .JOINT	1	1				
11	67F–43821–01	.SCREW, TRIM CYLINDER END .VIS	1	1				
12	67F–43861–00	.O-RING .JOINT TORIQUE	1	1				
13	6D8–43861–00	.O-RING .JOINT TORIQUE	1	1				
14	62X–43862–00	.O-RING .JOINT TORIQUE	1	1				
15	93501–08001	.BALL .BILLE	2	2				
16	65W–4386A–00	.PIN, ABSORBER VALVE .GOUPILLE, SOUPAPE	2	2				
17	688–4386F–00	.PIN, STRAIGHT .RESSORT	2	2				
18	65W–43853–00	.SPRING, MAIN VALVE .RESSORT	2	2				
19	67F–43893–00	.WASHER .RONDELLE	1	1				
20	67F–43875–00	RING, SNAP RESSORT	1	1				
21	93503–16003	BALL BILLES	6	6				
22	67F–43863–00	O-RING JOINT TORIQUE	1	1				
23	93501–08001	BALL BILLE	5	5				
24	67F–43899–00	PLATE STOPPER PLAQUETTE	1	1				
25	67F–43816–00	FILTER 1 FILTRE 1	1	1				
26	67F–43862–00	O-RING JOINT TORIQUE	1	1				
27	67F–43865–00	O-RING JOINT TORIQUE	1	1				

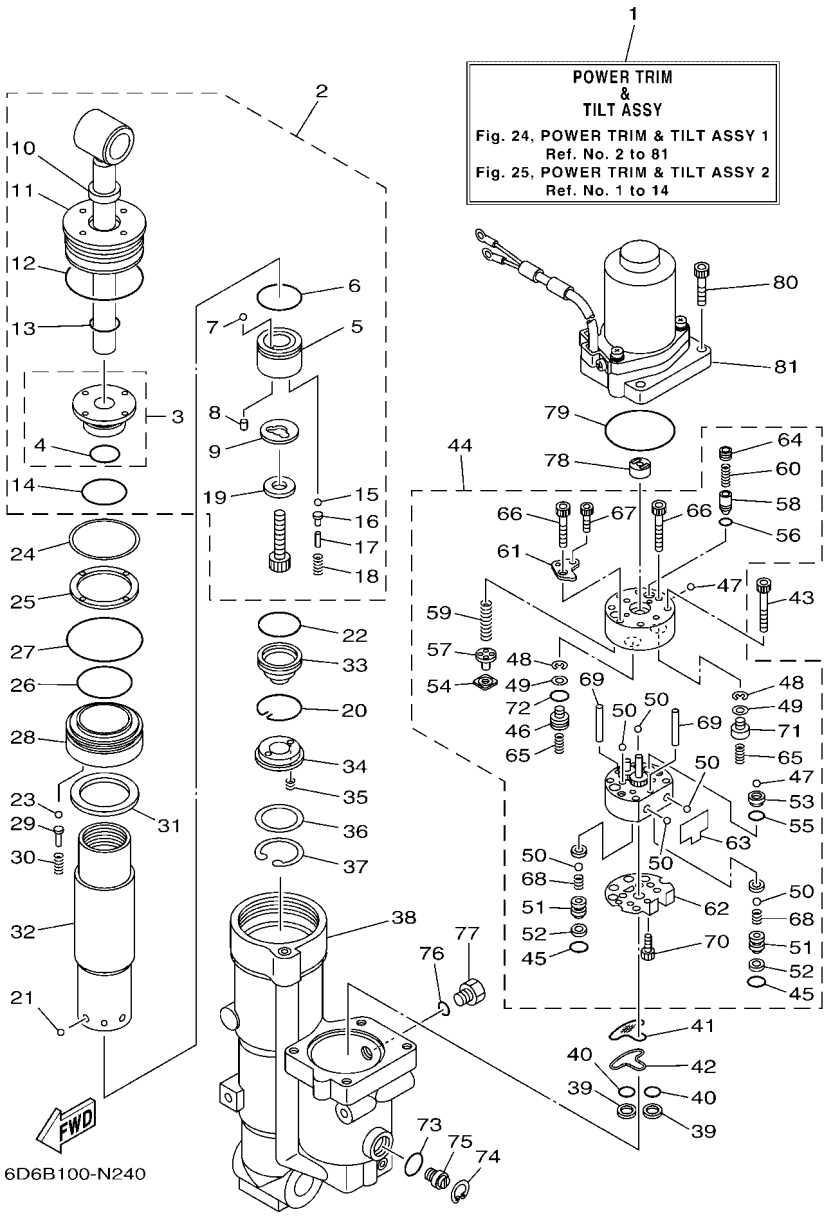

FIG. 24 POWER TRIM & TILT ASSY 1 — PUISSANCE PARER ET INCLINER 1

REF. NO.	PART NO. N° PIECES	DESCRIPTION DESCRIPTION	6D7C	6D9C				REMARKS REMARQUES
28	67F–4388A–01	PISTON, TRIM PISTON	1	1				
29	6T4–4386A–00	PIN, ABSORBER VALVE GOUPILLE, SOUPAPE	5	5				
30	67F–43857–00	SPRING, ABSORBER VALVE RESSORT	5	5				
31	67F–4381J–00	PLATE PLAQUE	1	1				
32	67F–22471–01	CYLINDER, SHOCK ABSORBER CYLINDRE, AMORTISSEUR	1	1				
33	67F–4381B–00	FREE PISTON SUB ASSY PISTON AUXILIAIRE (ENS.)	1	1				
34	62X–43899–00	PLATE STOPPER PLAQUETTE	1	1				
35	62X–4384H–00	SPRING RESSORT	2	2				
36	1UF–22434–00	PLATE, VALVE 1 PLATEAU, SOUPAPE 1	1	1				
37	62X–43875–00	RING, SNAP RESSORT	1	1				
38	6D8–4380K–02	CYLINDER, TILT SUB ASSY CYLINDRE	1	1				
39	6C5–43817–10	FILTER 2 FILTRE 2	2	2				
40	69J–4389J–00	O-RING JOINT TORIQUE	2	2				
41	6C5–43816–00	FILTER 1 FILTRE 1	1	1				
42	6C5–4380G–00	PLATE PLAQUE	1	1				
43	91318–05045	BOLT BOULON	4	4				
44	6D8–43830–01	GEAR PUMP ASSY POMPE A PIGNON (ENS.)	1	1				
45	69J–4389J–00	.O-RING .JOINT TORIQUE	2	2				
46	6D8–43841–00	.PISTON, SHUTTLE .PISTON	1	1				
47	93501–08001	.BALL .BILLE	2	2				
48	99002–03600	.CLIP .CIRCLIP	2	2				
49	69A–4384F–00	.SEAL, MAIN VALVE .JOINT	2	2				
50	93505–32038	.BALL .BILLE	6	6				
51	6EK–4382E–00	.ADAPTOR 2 .ADAPTEUR 2	2	2				
52	6C6–4387G–00	.WASHER .RONDELLE	2	2				
53	6D8–43851–00	.SEAT, RELIEF VALVE .SIEGE	1	1				
54	6H1–4384G–11	.SEAL, RELIEF VALVE .JOINT	1	1				

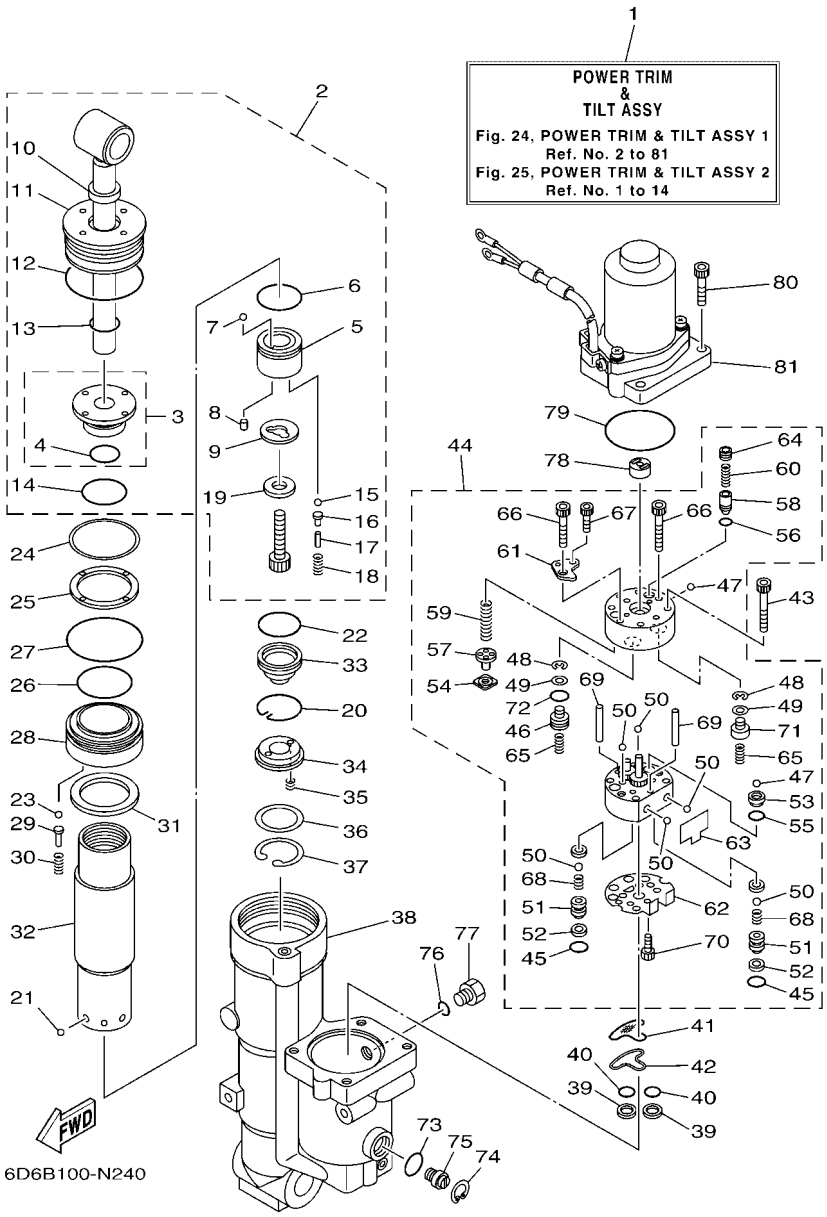

FIG. 24 POWER TRIM & TILT ASSY 1 — PUISSANCE PARER ET INCLINER 1

REF. NO.	PART NO. N° PIECES	DESCRIPTION DESCRIPTION	6D7C	6D9C				REMARKS REMARQUES
55	93210–064A5	.O-RING .JOINT TORIQUE	1	1				
56	93210–04N51	.O-RING .JOINT TORIQUE	1	1				
57	6H1–43844–10	.PIN, VALVE SUPPORT .GOUPILLE	1	1				
58	6D8–43844–00	.PIN, VALVE SUPPORT .GOUPILLE	1	1				
59	6EK–43856–00	.SPRING, DOWN RELIEF .RESSORT	1	1				
60	6C5–43855–10	.SPRING, UP RELIEF .RESSORT	1	1				
61	6D8–4382L–00	.CAP, RELIEF VALVE .CAPUCHON	1	1				
62	6C5–43895–00	.SEAT, RELIEF VALVE .SIEGE	1	1				
63	6C5–43854–00	.SPRING, MANUAL RELEASE .RESSORT	1	1				
64	6D8–43843–00	.SCREW, VALVE LOCK .VIS	1	1				
65	69J–43894–00	.SPRING, SHUTTLE RETURN .RESSORT	2	2				
66	91318–05030	.BOLT .BOULON	2	2				
67	91318–03025	.BOLT .BOULON	2	2				
68	6C6–43853–00	.SPRING, MAIN VALVE .RESSORT	2	2				
69	93604–26256	.PIN, DOWEL .CLAVETTE	2	2				
70	91318–03005	.BOLT .BOULON	1	1				
71	6D8–4384M–00	.PISTON, SHUTTLE 2 .PISTON 2	1	1				
72	6H1–43883–00	.O-RING .JOINT TORIQUE	1	1				
73	6D8–43863–00	O-RING JOINT TORIQUE	1	1				
74	6H1–43875–00	RING, SNAP RESSORT	1	1				
75	6D8–43845–00	SCREW, MANUAL RELEASE VIS	1	1				
76	93210–09165	O-RING JOINT TORIQUE	1	1				
77	6H1–43829–00	PLUG, RESERVOIR BOUCHON	1	1				
78	6D8–43831–00	CONNECTOR, SHAFT RACCORD	1	1				
79	93210–64488	O-RING JOINT TORIQUE	1	1				
80	91380–06020	BOLT BOULON	4	4				
81	6D8–43880–01	MOTOR ASSY MOTEUR (ENS.)	1	1				REFER TO FIG.25 REFER TO FIG.25

FIG. 25 POWER TRIM & TILT ASSY 2 — PUISSANCE PARER ET INCLINER 2

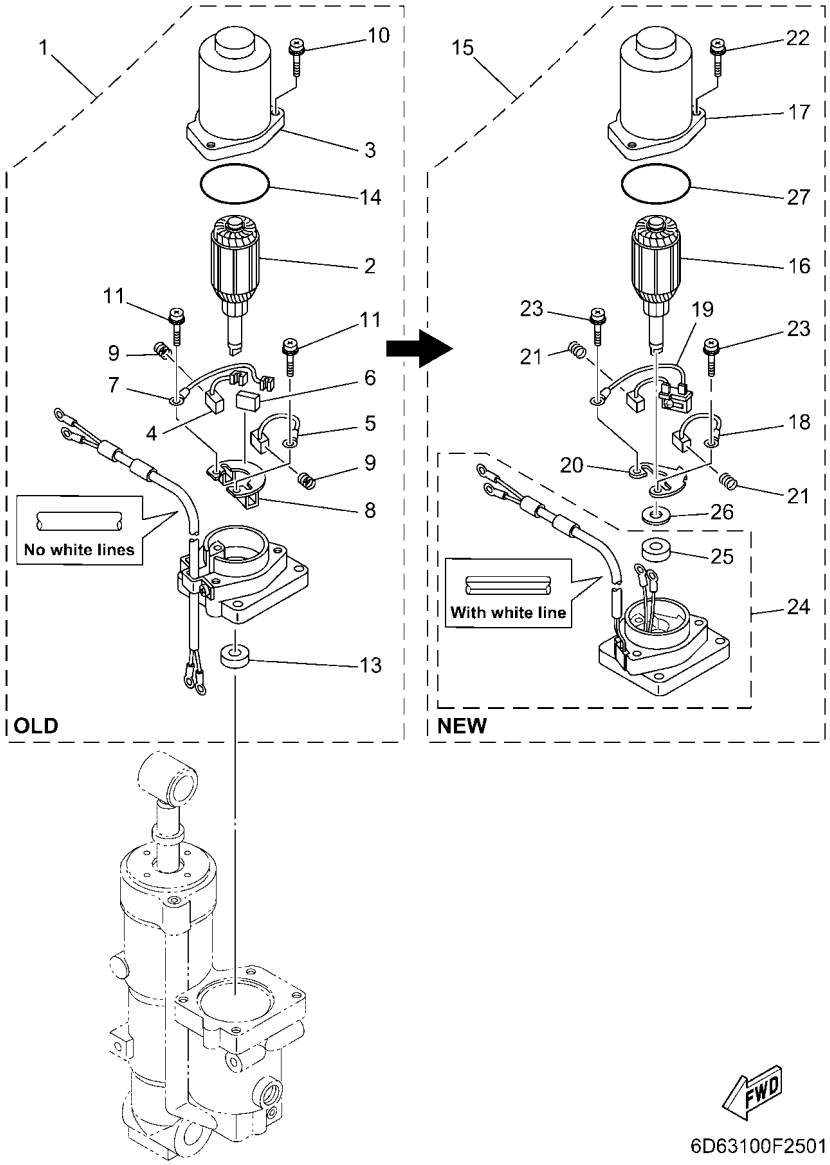

If you need FRAME, END: 6D8-43881-00/01
please order MOTOR ASSY: 6D8-43880-08

REF. NO.	PART NO. N° PIECES	DESCRIPTION DESCRIPTION	6D7C	6D9C				REMARKS REMARQUES
1	6D8–43880–01	MOTOR ASSY MOTEUR (ENS.)	1	1				
2	6D8–43805–01	.ARMATURE ASSY .INDUIT (ENS.)	1	1				
3	6D8–43804–01	.STATOR ASSY .STATOR (ENS.)	1	1				
4	6H1–43891–11	.BRUSH 1 .BALAI 1	1	1				
5	6H1–43892–11	.BRUSH 2 .BALAI 2	1	1				
6	6H1–82181–10	.CIRCUIT BREAKER COMP. .RUPTEUR COMPLET	1	1				
7	62X–43807–00	.WIRE SUB ASSY .AUXILIAIRE CABLE (ENS.)	1	1				
8	6H1–4380F–11	.PLATE, BRUSH HOLDER .PLAQUE	1	1				
9	62X–4386K–00	.SPRING, BRUSH .RESSORT, BALAI	2	2				
10	97980–05225	.SCREW, WITH WASHER .VIS, AVEC RONDELLE	3	3				
11	97602–04216	.SCREW, PAN HEAD WITH WASHER .VIS	2	2				
13	93102–08414	.OIL SEAL .JOINT SPY	1	1				
14	93210–554A9	.O-RING .JOINT TORIQUE	1	1				
15	6D8–43880–08	MOTOR ASSY MOTEUR (ENS.)	1	1				
16	6D8–43805–02	.ARMATURE ASSY .INDUIT (ENS.)	1	1				
17	6EK–43804–11	.STATOR ASSY .STATOR (ENS.)	1	1				
18	6EK–43892–00	.BRUSH 2 .BALAI 2	1	1				
19	63P–82181–20	.CIRCUIT BREAKER COMP. .RUPTEUR COMPLET	1	1				
20	6EK–4380F–00	.PLATE, BRUSH HOLDER .PLAQUE	1	1				
21	62X–4386K–00	.SPRING, BRUSH .RESSORT, BALAI	2	2				
22	63P–43879–10	.SCREW, WITH WASHER .VIS, AVEC RONDELLE	3	3				
23	97602–04316	.SCREW, PAN HEAD WITH WASHER .VIS, AVEC RONDELLE	2	2				
24	6D8–43881–09	.FRAME, END .BATI	1	1				
25	6LH–43882–00	..OIL SEAL ..JOINT SPY	1	1				
26	90206–14086	.WASHER, WAVE .RONDELLE, ONDULEE	2	2				
27	6EK–43862–01	.O-RING .JOINT TORIQUE	1	1				

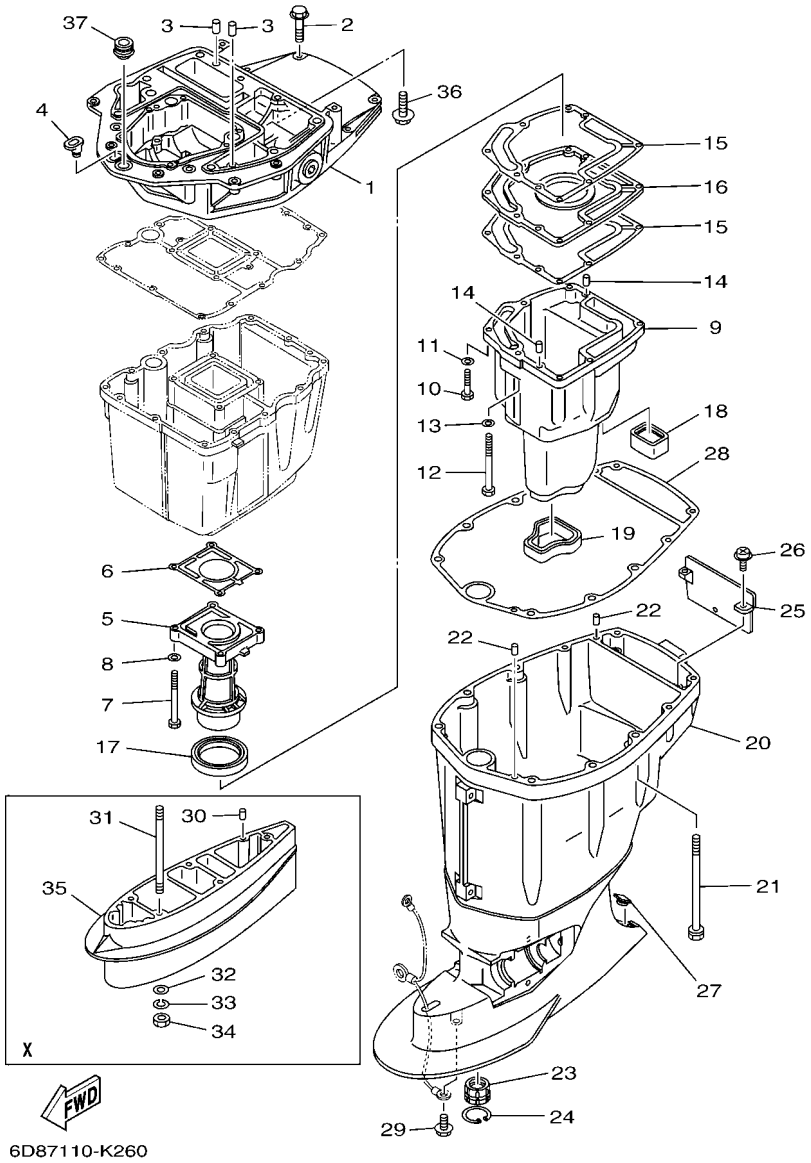

FIG. 26 UPPER CASING FOURREAU

REF. NO.	PART NO. N° PIECES	DESCRIPTION DESCRIPTION	6D7C	6D9C				REMARKS REMARQUES
1	6D8–41137–00–CA	GUIDE, EXHAUST COLLECTEUR D'ECHAPPEMENT	1	1				
2	97575–08540	BOLT, WITH WASHER VIS HEXAGONAL AVC RONDELLE	4	4				
3	93608–16M16	PIN, DOWEL AXE	2	2				
4	6G1–42727–00	GROMMET PASSE-FIL	1	1				
5	67F–41131–01–CA	MANIFOLD, EXT. 1 PIPE D'ECHAPPEMENT	1	1				
6	67F–41133–A1	GASKET, EXHAUST MANIFOLD 1 JOINT, PIPE D'ECHAPPEMENT	1	1				
7	97075–06070	BOLT BOULON	4	4				
8	92995–06600	WASHER RONDELLE	4	4				
9	67F–14711–00–CA	MUFFLER 1 POT D'ECHAPPEMENT 1	1	1				
10	97075–06030	BOLT BOULON	6	6				
11	92995–06600	WASHER RONDELLE	6	6				
12	97075–06050	BOLT BOULON	1	1				
13	92995–06600	WASHER RONDELLE	1	1				
14	93606–19M23	PIN, DOWEL GOUPILLE	2	2				
15	67F–41134–A0	GASKET, EXHAUST MANIFOLD JOINT, PIPE D'ECHAPPEMENT	2	2				
16	67F–45181–00–CA	PLATE PLAQUETTE	1	1				
17	67F–41138–00	SEAL, EXT. 1 JOINT DE GROUPE 1	1	1				
18	67F–45127–00	SEAL JOINT	1	1				
19	67F–45123–00	GASKET, MUFFLER JOINT, POT DE DETENTE	1	1				
20	67F–45111–11–8D	CASING, UPPER FOURREAU	1	1				
21	90119–10M08	BOLT, WITH WASHER BOULON, AVEC RONDELLE	6	6				
22	93608–16M16	PIN, DOWEL AXE	2	2				
23	67F–45318–00	BUSHING, DRIVE SHAFT DOUILLE, ARBRE MOTEUR	1	1				
24	93420–36M01	CIRCLIP CIRCLIP, TYPE S	1	1				
25	67F–45151–00	COVER, UPPER CASING CAPUCHON, FOURREAU	1	1				
26	97980–06216	SCREW, WITH WASHER VIS, AVEC RONDELLE	2	2				
27	67F–45155–00	CAP CAPUCHON	1	1				

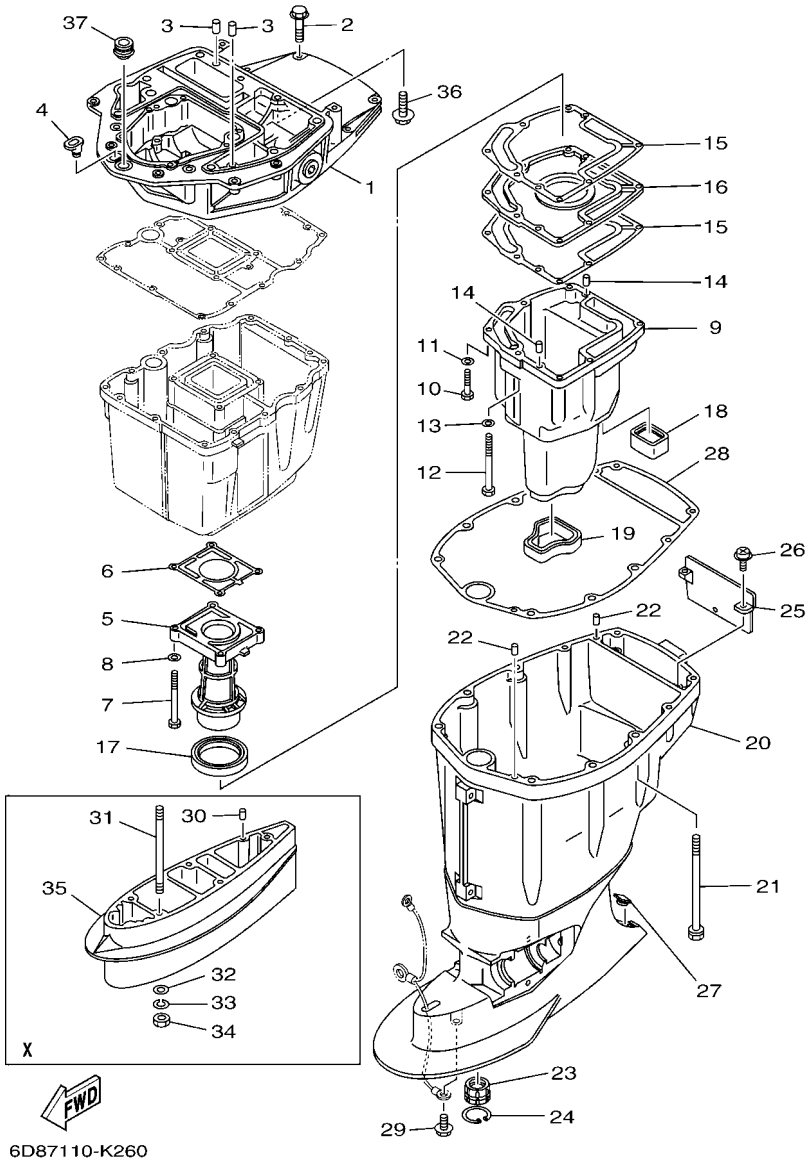

FIG. 26 UPPER CASING FOURREAU

REF. NO.	PART NO. N° PIECES	DESCRIPTION DESCRIPTION	6D7C	6D9C				REMARKS REMARQUES
28	67F–45113–00	GASKET, UPPER CASING JOINT, TUBE D'ARBRE	1	1				
29	95895–08014	BOLT, FLANGE BOULON	1	1				
30	93606–12019	PIN, DOWEL GOUPILLE	2	2				X(26.1") X(26.1")
31	90116–10M05	BOLT, STUD GOUJON	4	4				X(26.1") X(26.1")
32	92995–10600	WASHER RONDELLE	4	4				X(26.1") X(26.1")
33	92990–10100	WASHER, SPRING RONDELLE, GROWER	4	4				X(26.1") X(26.1")
34	95380–10600	NUT ECROU	4	4				X(26.1") X(26.1")
35	688–45211–01–8D	EXTENSION EXTENSION	1	1				X(26.1") X(26.1")
36	90119–08M58	BOLT, WITH WASHER BOULON, AVEC RONDELLE	2	2				
37	67F–42724–00	GROMMET PASSE-FIL	1	1				

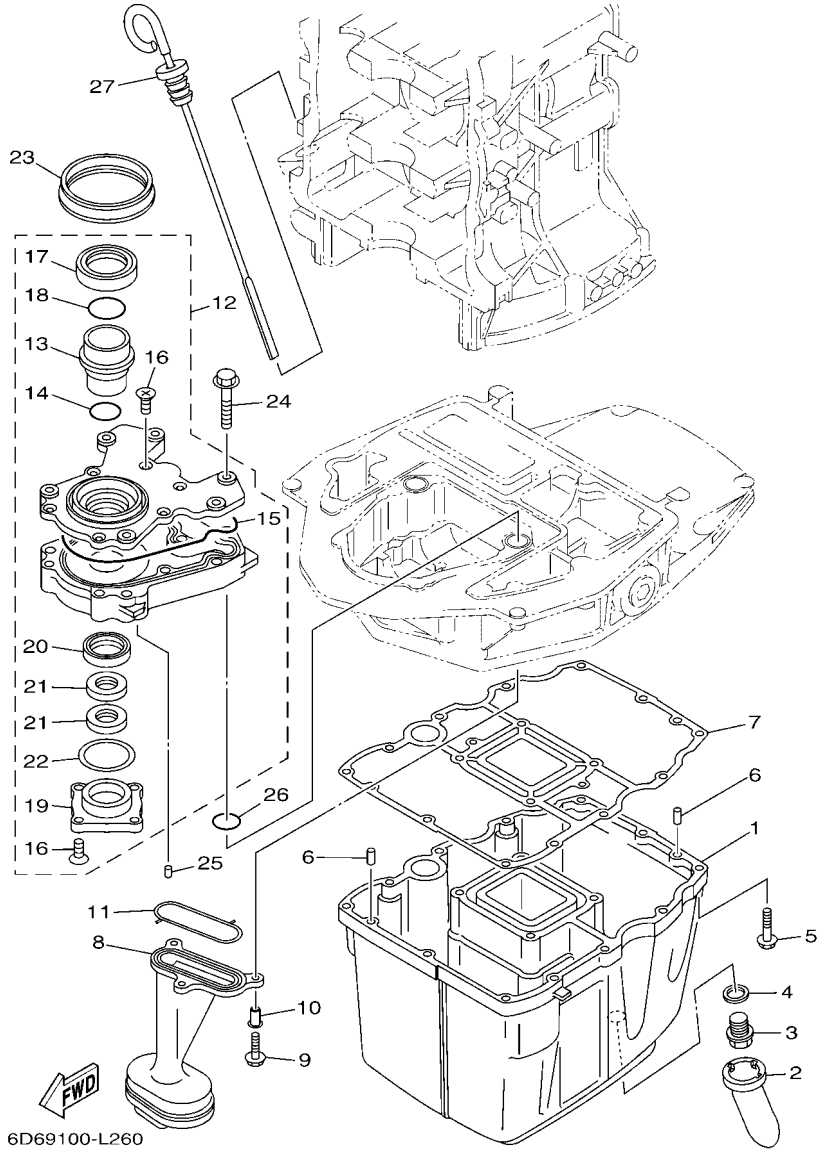

FIG. 27 OIL PAN — VENTILATEUR D'HUILE

REF. NO.	PART NO. N° PIECES	DESCRIPTION DESCRIPTION	6D7C	6D9C				REMARKS REMARQUES
1	67F–15311–03–CA	OIL PAN VENTILATEUR D'HUILE	1	1				
2	63P–15316–00	DAMPER 1 AMORTISSEUR 1	1	1				
3	90340–14M06	PLUG, STRAIGHT SCREW PLOT, FILETE DROIT	1	1				
4	90430–14M09	GASKET JOINT	1	1				
5	97575–06525	BOLT, WITH WASHER VIS HEXAGONAL AVC RONDELLE	12	12				
6	93606–12019	PIN, DOWEL GOUPILLE	2	2				
7	68V–15312–00	GASKET, OIL PAN JOINT DE VENTILATEUR D'HUILE	1	1				
8	67F–13411–00	STRAINER, OIL FILTRE, HUILE	1	1				
9	95812–06025	BOLT, FLANGE BOULON	3	3				
10	90387–06263	COLLAR COLLERETTE	3	3				
11	67F–13415–00	SEAL, OIL STRAINER JOINT, FILTRE A HUILE	1	1				
12	67F–13300–10	OIL PUMP ASSY POMPE A HUILE COMPLETE	1	1				
13	67F–13314–02	.SHAFT, PUMP .AXE DE POMPE	1	1				
14	67F–13473–01	.O-RING .JOINT TORIQUE	1	1				
15	67F–13329–00	.GASKET, PUMP COVER .JOINT, COUVERCLE DE POMPE	1	1				
16	67F–13495–00	.SCREW .VIS	10	10				
17	67F–13119–01	.OIL SEAL .JOINT SPY	1	1				
18	67F–13769–00	.O-RING .JOINT TORIQUE	1	1				
19	67F–13914–00	.HOUSING, PUMP .CORPS, POMPE	1	1				
20	67F–13631–03	.OIL SEAL .JOINT SPY	1	1				
21	67F–13149–00	.OIL SEAL .JOINT SPY	2	2				
22	67F–13339–00	.GASKET, PUMP COVER .BAINT, COUVERCLE DE POME	1	1				
23	67F–13338–00	SEAL JOINT	1	1				
24	97595–06545	BOLT, WITH WASHER VIS HEXAGONAL AVC RONDELLE	6	6				
25	93604–12M07	PIN, DOWEL CLAVETTE	2	2				
26	93210–19MJ1	O-RING JOINT TORIQUE	2	2				
27	6D8–15362–00	PLUG, OIL LEVEL PLOT, NIVEAU D'HUILE	1	1				

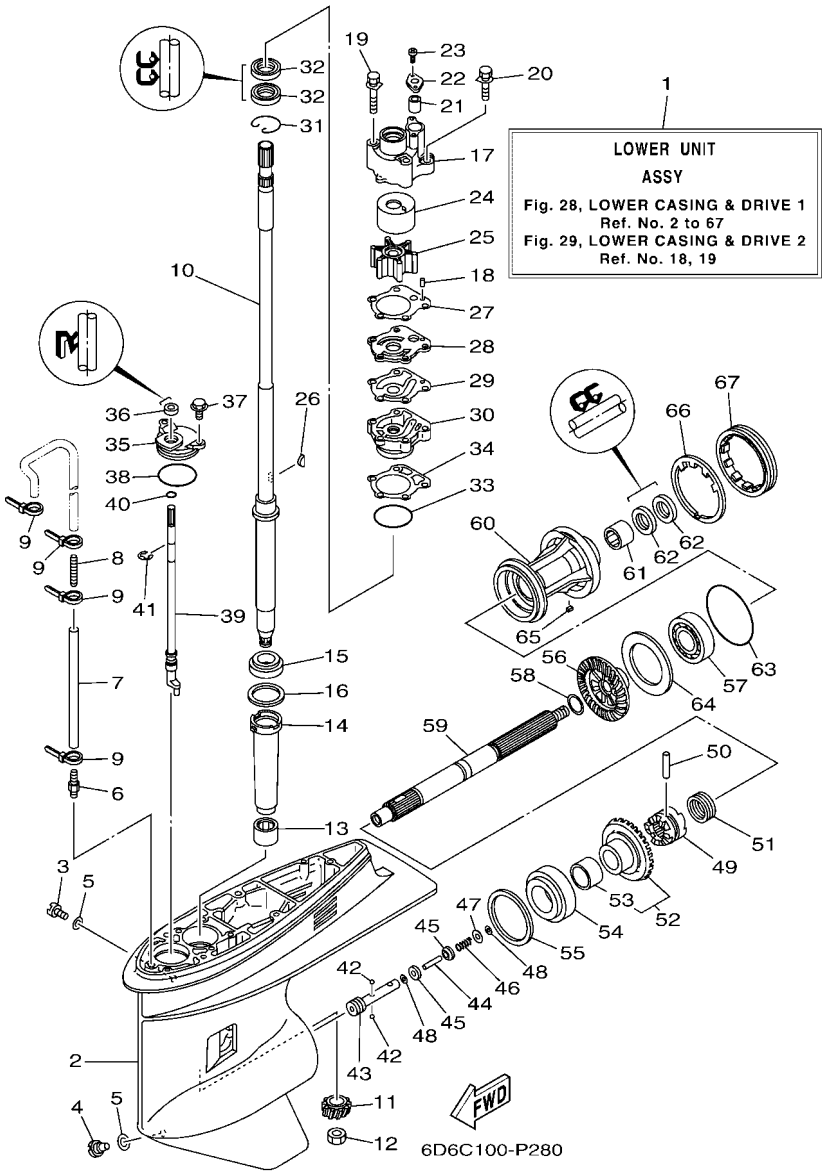

FIG. 28 LOWER CASING & DRIVE 1 — BOITIER D'HELICE TRANSMISSION1

REF. NO.	PART NO. N° PIECES	DESCRIPTION DESCRIPTION	6D7C	6D9C				REMARKS REMARQUES
1	6D9–45300–13–8D	LOWER UNIT ASSY UNITE INFERIEURE (ENS.)	1	1				L(21.1") L(21.1")
	6D9–45300–33–8D	LOWER UNIT ASSY UNITE INFERIEURE (ENS.)	1	1				X(26.1") X(26.1")
2	67F–45301–00–8D	CASING, LOWER BEQUILLE	1	1				
3	90340–08002	PLUG, STRAIGHT SCREW PLOT, FILETE DROIT	1	1				
4	688–45341–10	PLUG, DRAIN BOUCHON DE VIDANGE	1	1				
5	90430–08020	GASKET JOINT	2	2				
6	6E5–45378–00	NIPPLE, HOSE RACCORD, TUYAU	1	1				
7	90445–07M31	HOSE (L200) DURITE (L200)	1	1				L(21.1") L(21.1")
	90445–07M38	HOSE (L300) DURITE (L300)	1	1				X(26.1") X(26.1")
8	6E5–83558–10	END, NIPPLE RACCORD DE NIPPLE	1	1				
9	90465–11M10	CLAMP BRIDE	4	4				
10	67F–45501–10	DRIVE SHAFT COMP. ARBRE MOTEUR COMP.	1	1				L(21.1") L(21.1")
	67F–45501–30	DRIVE SHAFT COMP. ARBRE MOTEUR COMP.	1	1				X(26.1") X(26.1")
11	6D9–45551–10	PINION (11T) PIGNON D'ATTAQUE (11D)	1	1				
12	90170–16M01	NUT ECROU	1	1				
13	93315–52563	BEARING ROULEMENT	1	1				
14	688–45536–01	SLEEVE, DRIVE SHAFT MANCHON, ARBRE MOTEUR	1	1				
15	93332–000U3	BEARING ROULEMENT	1	1				
16	688–45587–01	SHIM (T:0.10MM) CALE (T:0.10MM)	1	1				UR UR
	688–45587–10	SHIM (T:0.12MM) CALE (T:0.12MM)	1	1				UR UR
	688–45587–20	SHIM (T:0.15MM) CALE (T:0.15MM)	1	1				UR UR
	688–45587–30	SHIM (T:0.18MM) CALE (T:0.18MM)	1	1				UR UR
	688–45587–40	SHIM (T:0.30MM) CALE (T:0.30MM)	1	1				UR UR
	688–45587–50	SHIM (T:0.40MM) CALE (T:0.40MM)	1	1				UR UR
	688–45587–60	SHIM (T:0.50MM) CALE (T:0.50MM)	1	1				UR UR
17	67F–44311–01	HOUSING, WATER PUMP CORPS, POMPE A EAU	1	1				
18	93604–10M03	PIN, DOWEL CLAVETTE	2	2				

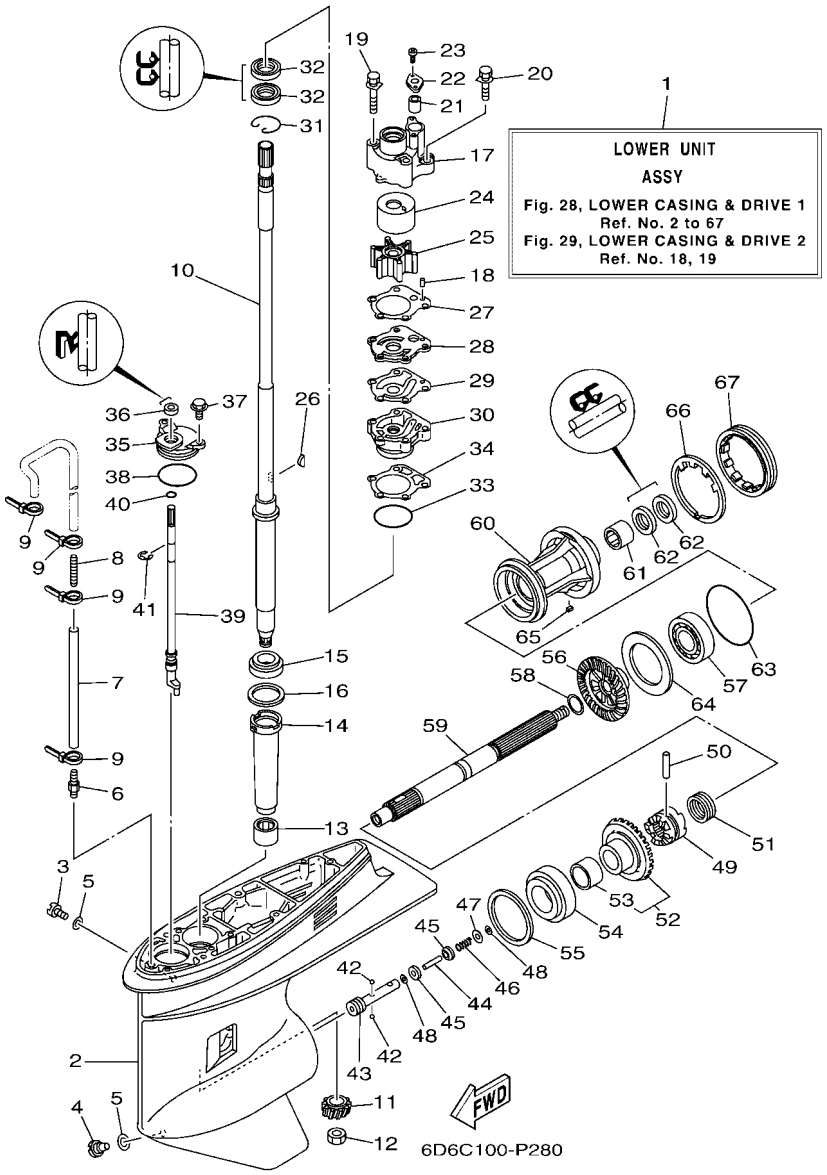

FIG. 28 LOWER CASING & DRIVE 1 — BOITIER D'HELICE TRANSMISSION1

REF. NO.	PART NO. N° PIECES	DESCRIPTION DESCRIPTION	6D7C	6D9C				REMARKS REMARQUES
19	90119–08M87	BOLT, WITH WASHER BOULON, AVEC RONDELLE	2	2				
20	90119–08M13	BOLT, WITH WASHER BOULON, AVEC RONDELLE	2	2				
21	663–44366–00	DAMPER, WATER SEAL 2 JOINT, TUBE D'EAU 2	1	1				
22	90480–19M06	GROMMET PASSE-FIL	1	1				
23	90160–04006	SCREW, ROUND TAPPING VIS, TETE RONDE FRAISEE	2	2				
24	67F–44322–00	INSERT, CARTRIDGE CUVETTE	1	1				
25	67F–44352–00	IMPELLER TURBINE	1	1				
26	90280–04M04	KEY, WOODRUFF CLAVETTE, DEMI-LUNE	1	1				
27	688–44315–A0	GASKET, WATER PUMP JOINT, POMPE A EAU	1	1				
28	67F–44323–00	OUTER PLATE, CARTRIDGE PLAQUE EXTERIEURE	1	1				
29	688–44324–A0	GASKET, CARTRIDGE JOINT	1	1				
30	6D8–44341–01–CA	HOUSING, WATER PUMP CORPS, POMPE A EAU	1	1				
31	93450–44166	CIRCLIP CIRCLIP, TYPE S	1	1				
32	93101–25M03	OIL SEAL JOINT SPY	2	2				
33	93210–46044	O-RING JOINT TORIQUE	1	1				
34	688–44316–A0	GASKET, WATER PUMP JOINT, POMPE A EAU	1	1				
35	688–45321–00	PLATE PLAQUETTE	1	1				
36	93106–09014	OIL SEAL JOINT SPY	1	1				
37	97595–06516	BOLT, WITH WASHER VIS HEXAGONAL AVC RONDELLE	2	2				
38	93210–49046	O-RING JOINT TORIQUE	1	1				
39	67F–44150–01	SHIFT CAM ASSY CAME D'INVERSION	1	1				
40	93210–07003	O-RING JOINT TORIQUE	1	1				
41	99001–08600	CIRCLIP CIRCLIP	1	1				
42	93503–16003	BALL BILLES	2	2				
43	67F–45634–00	SLIDE, SHIFT CONTRE-POUSSOIR	1	1				
44	6H1–45668–00	SHAFT, FREE 1 AXE 1	1	1				
45	6H1–45635–00	PLUNGER, SHIFT POUSSOIR D'EMBRAYAGE	2	2				

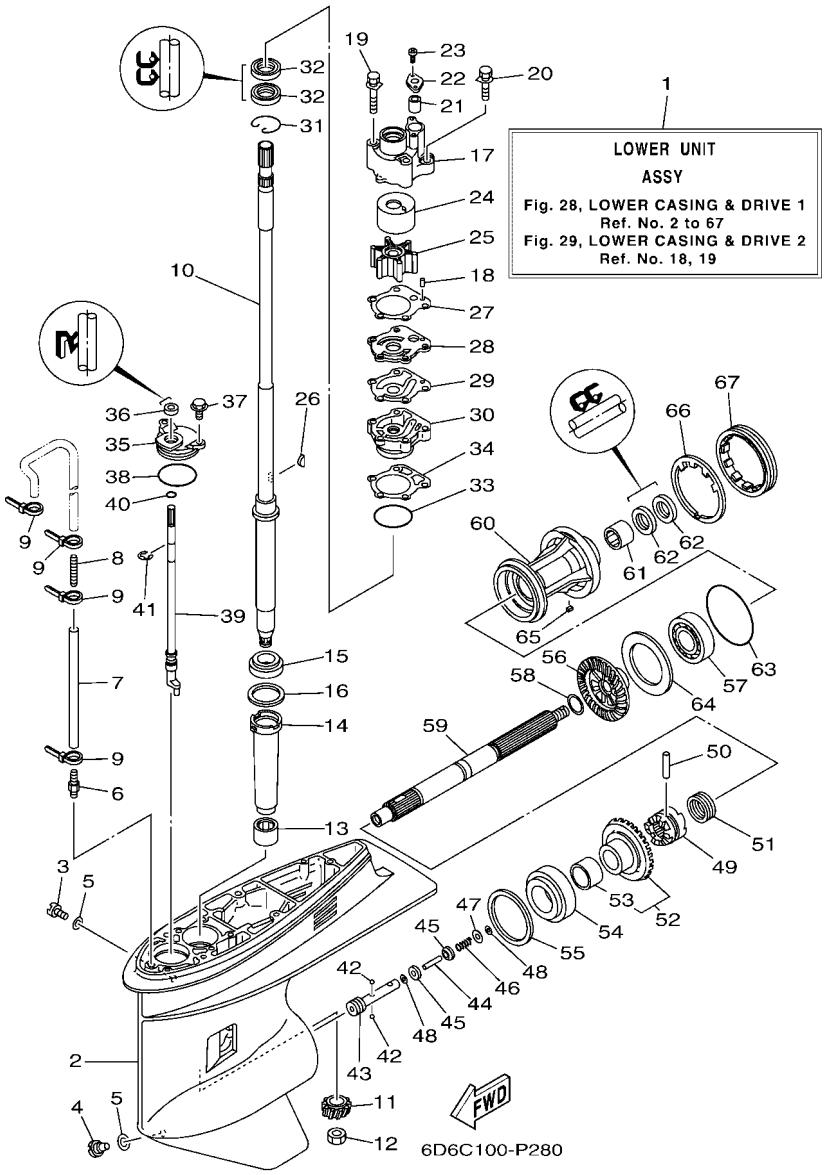

FIG. 28 LOWER CASING & DRIVE 1 — BOITIER D'HELICE TRANSMISSION1

REF. NO.	PART NO. N° PIECES	DESCRIPTION DESCRIPTION	6D7C	6D9C				REMARKS REMARQUES
46	90501–12M48	SPRING, COMPRESSION RESSORT, COMPRESSION	1	1				
47	90201–03313	WASHER, PLATE RONDELLE, PLATE	1	1				
48	90183–02M03	NUT, SPRING ECROU, RESSORT	2	2				
49	6D8–45631–00	CLUTCH, DOG CRABOT	1	1				
50	90250–07M02	PIN, STRAIGHT GOUPILLE, DROITE	1	1				
51	688–45633–00	RING, CROSS PIN JONC, GOUPILLE CRABOT	1	1				
52	6D9–45560–10	GEAR 1 (25T) PIGNON 1 (25T)	1	1				
53	93317–322V0	.BEARING .ROULEMENT	1	1				
54	93332–000UD	BEARING ROULEMENT	1	1				
55	688–45567–01	SHIM (T:0.10MM) CALE (T:0.10MM)	1	1				UR UR
	688–45567–10	SHIM (T:0.12MM) CALE (T:0.12MM)	1	1				UR UR
	688–45567–20	SHIM (T:0.15MM) CALE (T:0.15MM)	1	1				UR UR
	688–45567–30	SHIM (T:0.18MM) CALE (T:0.18MM)	1	1				UR UR
	688–45567–40	SHIM (T:0.30MM) CALE (T:0.30MM)	1	1				UR UR
	688–45567–50	SHIM (T:0.40MM) CALE (T:0.40MM)	1	1				UR UR
	688–45567–60	SHIM (T:0.50MM) CALE (T:0.50MM)	1	1				UR UR
56	6D9–45571–10	GEAR 2 (25T) PIGNON 2 (25T)	1	1				
57	93306–207U0	BEARING ROULEMENT	1	1				
58	90201–25M05	WASHER, PLATE RONDELLE, PLATE	1	1				
59	67F–45611–01	SHAFT, PROPELLER ARBRE, HELICE	1	1				
60	67F–45331–00–CA	HOUSING, BEARING FLASQUE, ROULEMENT	1	1				
61	93317–325U0	BEARING ROULEMENT	1	1				
62	93101–25M03	OIL SEAL JOINT SPY	2	2				
63	93210–86M39	O-RING JOINT TORIQUE	1	1				
64	67F–45576–00	WASHER, THRUST 2 RONDELLE DE CALAGE 2	1	1				
65	90282–04010	KEY, STRAIGHT CLAVETTE, DROITE	1	1				
66	688–45383–02	WASHER, CLAW FREIN D'ECROU	1	1				

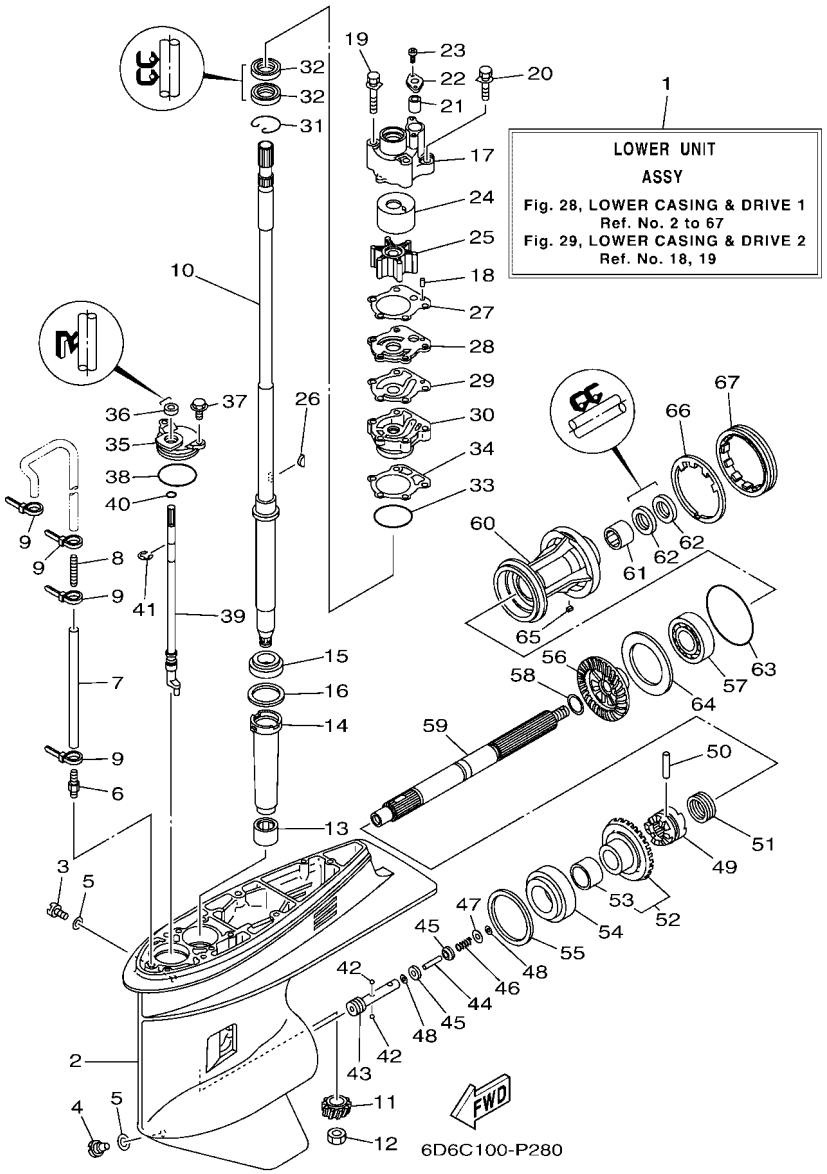

FIG. 28 LOWER CASING & DRIVE 1 — BOITIER D'HELICE TRANSMISSION1

REF. NO.	PART NO. N° PIECES	DESCRIPTION DESCRIPTION	6D7C	6D9C				REMARKS REMARQUES
67	688–45384–02	NUT ECROU	1	1				

FIG. 29 LOWER CASING & DRIVE 2 — BOITIER D'HELICE TRANSMISSION2

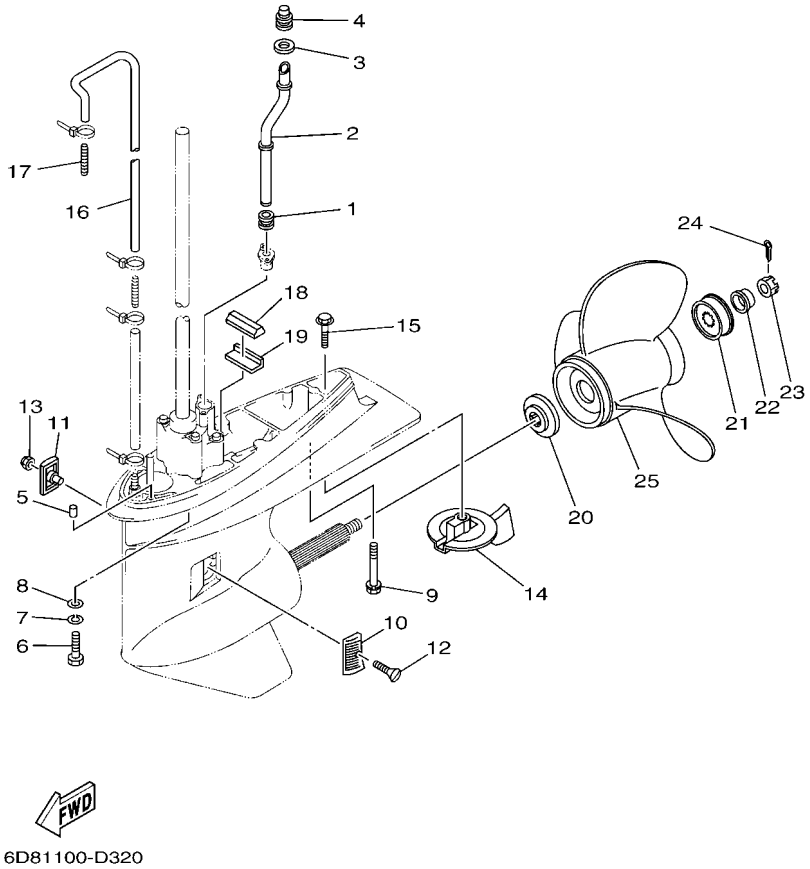

REF. NO.	PART NO. N° PIECES	DESCRIPTION DESCRIPTION	6D7C	6D9C				REMARKS REMARQUES
1	663–44367–00	DAMPER, WATER SEAL 3 JOINT TUBE D'EAU 3	1	1				
2	6D8–44361–00	TUBE, WATER 1 TUBE D'EAU 1	1	1				L(21.1") L(21.1")
	6D8–44361–10	TUBE, WATER 1 TUBE D'EAU 1	1	1				X(26.1") X(26.1")
3	6D8–44314–00	SPACER ENTRETOISE	1	1				
4	67F–44365–00	DAMPER, WATER SEAL 1 JOINT, TUBE D'EAU 1	1	1				
5	93606–12019	PIN, DOWEL GOUPILLE	2	2				
6	97075–10040	BOLT BOULON	4	4				L(21.1") L(21.1")
7	92995–10100	WASHER RONDELLE	4	4				L(21.1") L(21.1")
8	92995–10600	WASHER RONDELLE	4	4				L(21.1") L(21.1")
9	90119–08M84	BOLT, WITH WASHER BOULON, AVEC RONDELLE	1	1				L(21.1") L(21.1")
	90119–08M86	BOLT, WITH WASHER BOULON, AVEC RONDELLE	1	1				X(26.1") X(26.1")
10	6H1–45214–00	COVER, WATER INLET 1 GRILLE, ENTREE D'EAU 1	1	1				
11	6H1–45215–00	COVER, WATER INLET 2 GRILLE, ENTREE D'EAU 2	1	1				
12	90151–05M00	SCREW, COUNTERSUNK VIS, TETE NOYEE	1	1				
13	90185–05002	NUT, NYLON ECROU,AUTO-BLOQUANT	1	1				
14	67F–45371–00	TAB-TRIM ANODE DERIVE	1	1				
15	90105–10M67	BOLT, FLANGE BOULON	1	1				
16	90445–07ME0	HOSE (L1220) DURITE (L1220)	1	1				
17	6E5–83558–00	END, NIPPLE RACCORD DE NIPPLE	1	1				
18	688–45375–00	DAMPER, SEAL BOURRELET, CAOUTCHOUC	1	1				
19	663–45376–00	GUIDE, SEAL DAMPER BUTEE, JOINT CAOUTCHOUC	1	1				
20	688–45987–01	SPACER 1 ENTRETOISE 1	1	1				
21	67F–45997–00	SPACER 2 ENTRETOISE 2	1	1				
22	90389–25M00	BUSH DOUILLE	1	1				
23	90171–16011	NUT, CASTLE ECROU, CRENELE	1	1				
24	91490–40030	PIN. COTTER GOUPILLE	1	1				
25	6E5–45941–00	PROPELLER (3X13"X19"-K) HELICE (3X13"X19"-K)	1	1				UR UR

FIG. 29 LOWER CASING & DRIVE 2 — BOITIER D'HELICE TRANSMISSION2

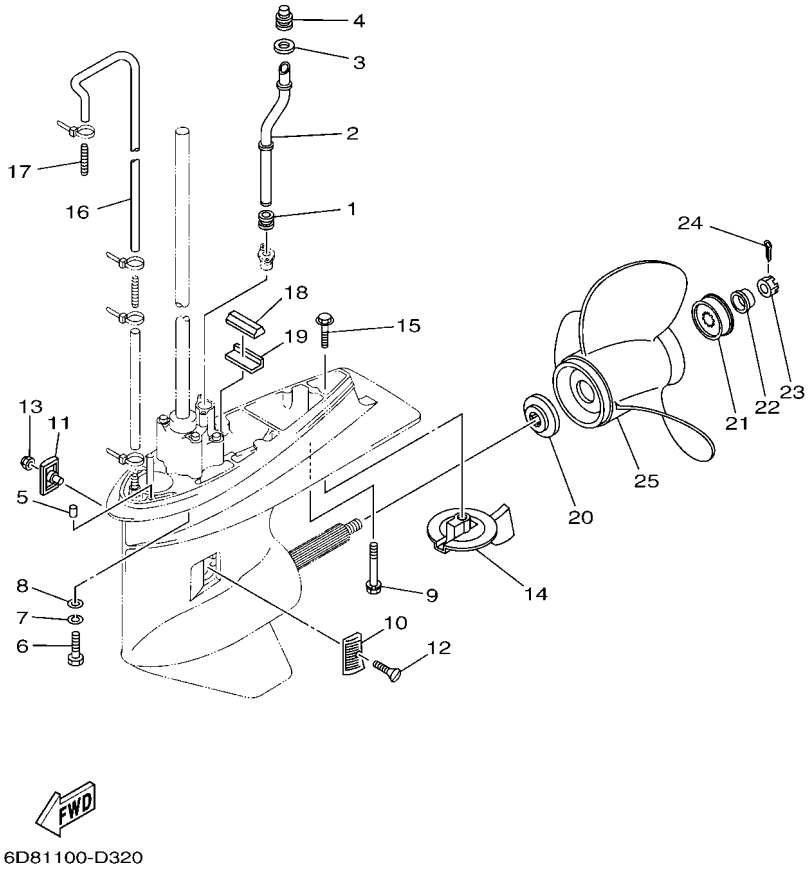

REF. NO.	PART NO. N° PIECES	DESCRIPTION DESCRIPTION	6D7C	6D9C				REMARKS REMARQUES
25	6E5–45943–00	PROPELLER (3X12-5/8"X21"-K) HELICE (3X12-5/8"X21"-K)	1	1				UR UR
	6E5–45945–01	PROPELLER (3X13-1/4"X17"-K) HELICE (3X13-1/4"X17"-K)	1	1				UR UR
	6E5–45947–00	PROPELLER (3X13-1/2"X15"-K) HELICE (3X13-1/2"X15"-K)	1	1				UR UR
	6E5–45949–00	PROPELLER (3X13-5/8"X13"-K) HELICE (3X13-5/8"X13"-K)	1	1				UR UR
	6E5–45952–00	PROPELLER (3X13"X23"-K) HELICE (3X13"X23"-K)	1	1				UR UR
	6E5–45954–00	PROPELLER (3X14"X11"-K) HELICE (3X14"X11"-K)	1	1				UR UR
	6E5–45956–00	PROPELLER (3X13"X25"-K) HELICE (3X13"X25"-K)	1	1				UR UR
	6E5–45958–00	PROPELLER (3X13-5/8"X14"-K) HELICE (3X13-5/8"X14"-K)	1	1				UR UR
	688–45970–03	PROPELLER (3X13"X19"-K) HELICE (3X13"X19"-K)	1	1				UR UR
	688–45972–02	PROPELLER (3X13"X21"-K) HELICE (3X13"X21"-K)	1	1				UR UR
	688–45974–02	PROPELLER (3X13"X23"-K) HELICE (3X13"X23"-K)	1	1				UR UR
	688–45976–01	PROPELLER (3X13"X25"-K) HELICE (3X13"X25"-K)	1	1				UR UR
	688–45978–60	PROPELLER (3X13-1/2"X16"-K) HELICE (3X13-1/2"X16"-K)	1	1				UR UR
	688–45930–02	PROPELLER (3X13"X17"-K2) HELICE (3X13"X17"-K2)	1	1				UR UR
	688–45932–60	PROPELLER (3X13-1/2"X14"-K) HELICE (3X13-1/2"X14"-K)	1	1				UR UR

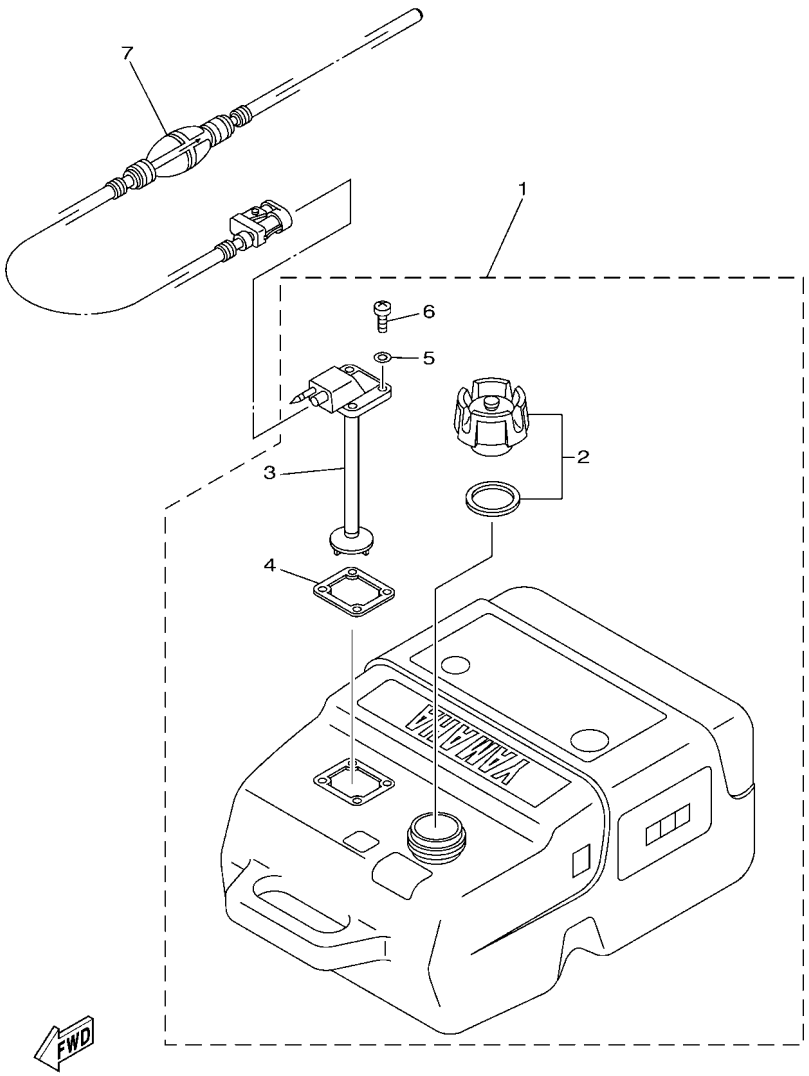

6D7C300-P300

FIG. 30 FUEL TANK — RESERVOIR A CARBURANT

REF. NO.	PART NO. N° PIECES	DESCRIPTION DESCRIPTION	6D7C	6D9C				REMARKS REMARQUES
1	6YK–24201–04	FUEL TANK ASSY (25L) RESERVOIR A ESSENCE (ENS.) 25L	1	1				AP AP
2	6YK–24610–01	.CAP ASSY .BOUCHON	1	1				
3	6YK–24260–10	.FUEL METER ASSY .INDICATEUR DE CARBURANT	1	1				
4	6YL–24268–01	.GASKET, FUEL METER .JOINT, JAUGE A CARBURANT	1	1				
5	6YL–24329–00	.SEAL .JOINT	4	4				
6	90157–05M16	.SCREW, PAN HEAD .VIS, TETE TRONCONIQUE	4	4				
7	6YK–24306–44	FUEL PIPE COMP. 1 DURITE A ESSENCE 1	1	1				AP AP

FIG. 31 STEERING GUIDE — FIXATION DE DIRECTION

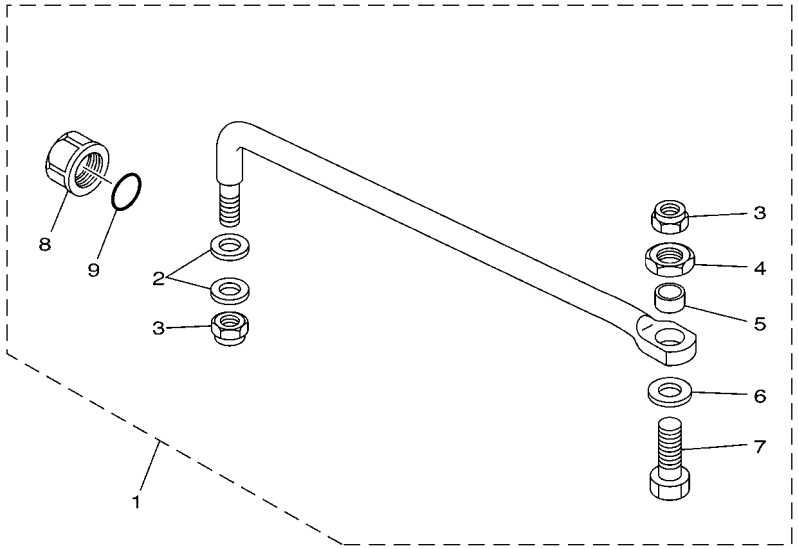

67F0010-9250

REF. NO.	PART NO. N° PIECES	DESCRIPTION DESCRIPTION	6D7C	6D9C				REMARKS REMARQUES
1	67F–61350–00	STEERING GUIDE ATTACHMENT KIT FIXATIONS DE DIRECTION	1	1				AP AP
2	90201–10M20	.WASHER, PLATE .RONDELLE, PLATE	2	2				
3	90185–09M01	.NUT, SELF-LOCKING .ECROU,AUTO-BLOQUANT	2	2				
4	90170–09M03	.NUT .ECROU	1	1				
5	90387–10M42	.COLLAR .COLLERETTE	1	1				
6	90201–10M63	.WASHER, PLATE .RONDELLE, PLATE	1	1				
7	90101–09M01	.BOLT .BOULON	1	1				
8	6E5–43145–01	.CAP, CLAMP BRACKET .CAPUCHON, PRESSE	1	1				
9	93210–16275	.O-RING .JOINT TORIQUE	1	1				

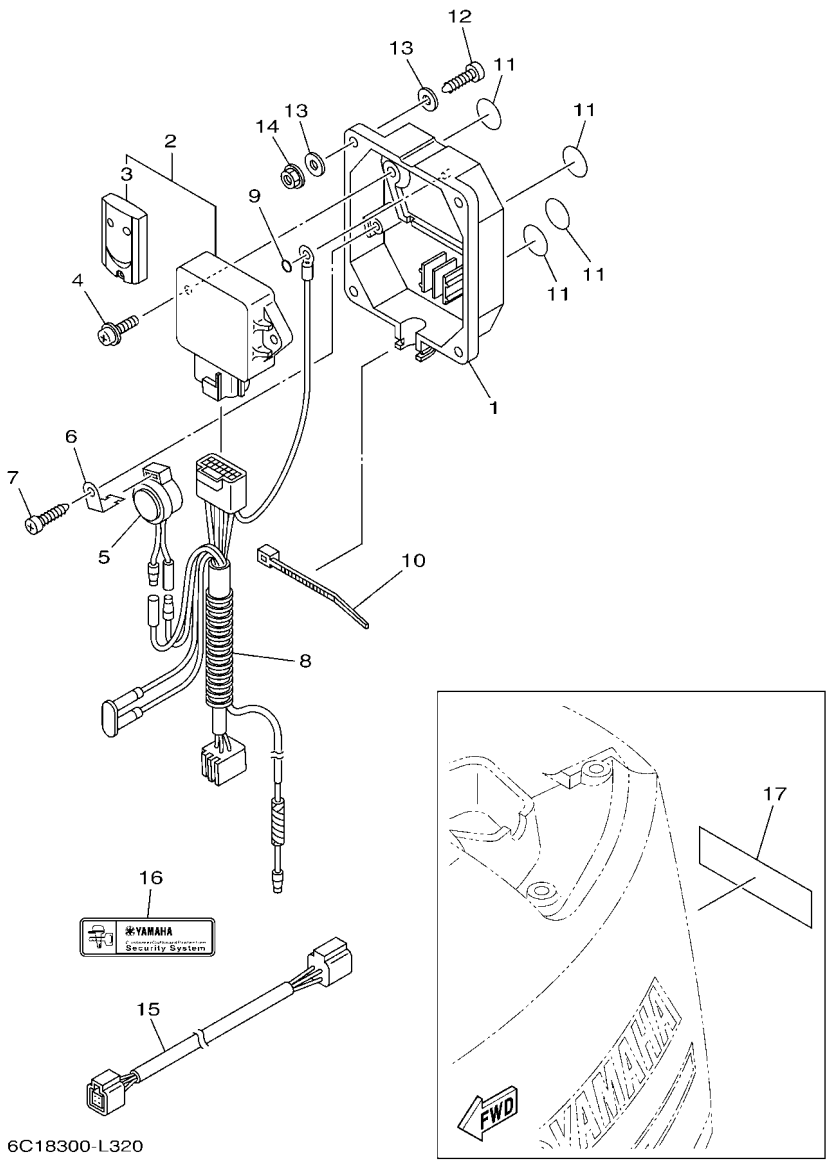

FIG. 32 OPTIONAL PARTS 2 — PIECES OPTIONNELLES 2

REF. NO.	PART NO. N° PIECES	DESCRIPTION DESCRIPTION	6D7C	6D9C				REMARKS REMARQUES
1	6Y8–86267–00	CASE COMPLETE 1 CARTER (ENS.) 1	1	1				
2	6Y8–86260–02	REMOTE CONTROL UNIT ASSY UNITE DE TELECOMMANDE (ENS.)	1	1				
3	6AA–86261–00	.XMTR. COMP. .XMTR. COMP.	2	2				
4	97980–06216	SCREW, WITH WASHER VIS, AVEC RONDELLE	2	2				
5	6X4–83383–00	BUZZER RONFLEUR	1	1				
6	6X4–83386–00	STAY, BUZZER SUPPOR, RONFLEUR	1	1				
7	97780–60620	SCREW, TAPPING VIS, TETE BOMBEE	1	1				
8	6Y8–82509–10	WIRE, SUB LEAD FIL, SECONDAIRE	1	1				
9	93210–04279	O-RING JOINT TORIQUE	1	1				
10	90465–11M10	CLAMP BRIDE	1	1				
11	6Y8–8454G–00	PATCH 1 TAMPON 1	4	4				
12	90167–06M00	SCREW, TAPPING VIS, TETE FRAISEE	4	4				UR UR
	97880–06035	SCREW, PAN HEAD VIS, TETE TRONCONIQUE	4	4				UR UR
13	90201–06M30	WASHER, PLATE RONDELLE, PLATE	8	8				
14	95780–06300	NUT, FLANGE ECROU	4	4				
15	6Y8–82521–11	2FT PIGTAIL BUS FAISCEAU (L: 2FT.)	1	1				
16	6Y8–48277–00	STICKER 1 ETIQUETTE 1	1	1				
17	6Y8–48277–00	STICKER 1 ETIQUETTE 1	1	1				

FIG. 33 OPTIONAL PARTS 3 — PIECES OPTIONNELLES 3

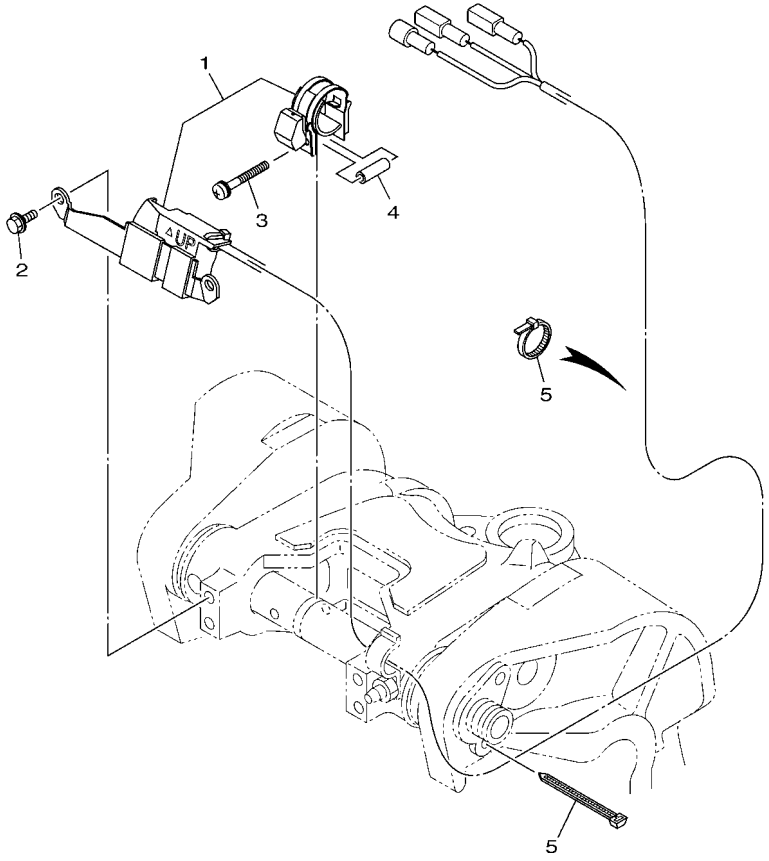

6D6C100-P330

REF. NO.	PART NO. N° PIECES	DESCRIPTION DESCRIPTION	6D7C	6D9C				REMARKS REMARQUES
1	6D8–825E0–00	TILT LIMIT SWITCH ASSY COMMUTATEUR, LIMIT INCLINAISON	1	1				
2	97595–06512	BOLT, WITH WASHER VIS HEXAGONAL AVC RONDELLE	2	2				
3	90159–05059	SCREW, WITH WASHER VIS, AVEC RONDELLE	1	1				
4	90387–05004	COLLAR COLLERETTE	1	1				
5	90465–11M10	CLAMP BRIDE	4	4				

FIG. 34 OPTIONAL PARTS 4 — PIECES OPTIONNELLES 4

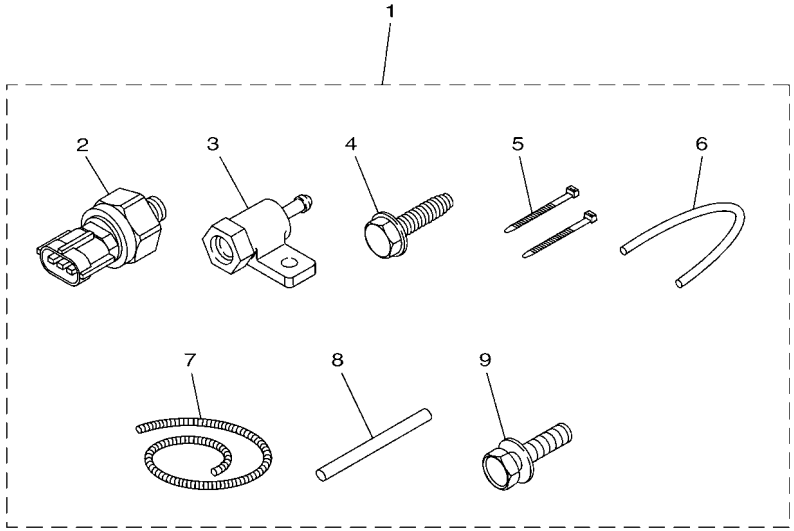

6CE6300-P430

REF. NO.	PART NO. N° PIECES	DESCRIPTION DESCRIPTION	6D7C	6D9C				REMARKS REMARQUES
1	60V–8A4L1–14	SENSOR, MODULE 1 SENSOR (ENS.) 1	1	1				
2	6AW–8366B–01	.SENSOR, WATER PRESSURE .SONDE DE PRESSION D'EAU	1	1				
3	60V–8366D–00	.ADAPTOR, INPUT .CONNECTEUR 3	1	1				
4	90109–06M81	.BOLT .BOULON	1	1				
5	90465–11M10	.CLAMP .BRIDE	2	2				
6	90445–07017	.HOSE (L: 550MM) .DURITE (L: 550MM)	1	1				
7	90447–07013	.HOSE, COVER (L: 700MM) .DURITE, COUVERCLE (L: 700MM)	1	1				
8	60V–42629–00	.SEAL .JOINT	1	1				
9	97595–06516	.BOLT, WITH WASHER .VIS HEXAGONAL AVC RONDELLE	1	1				

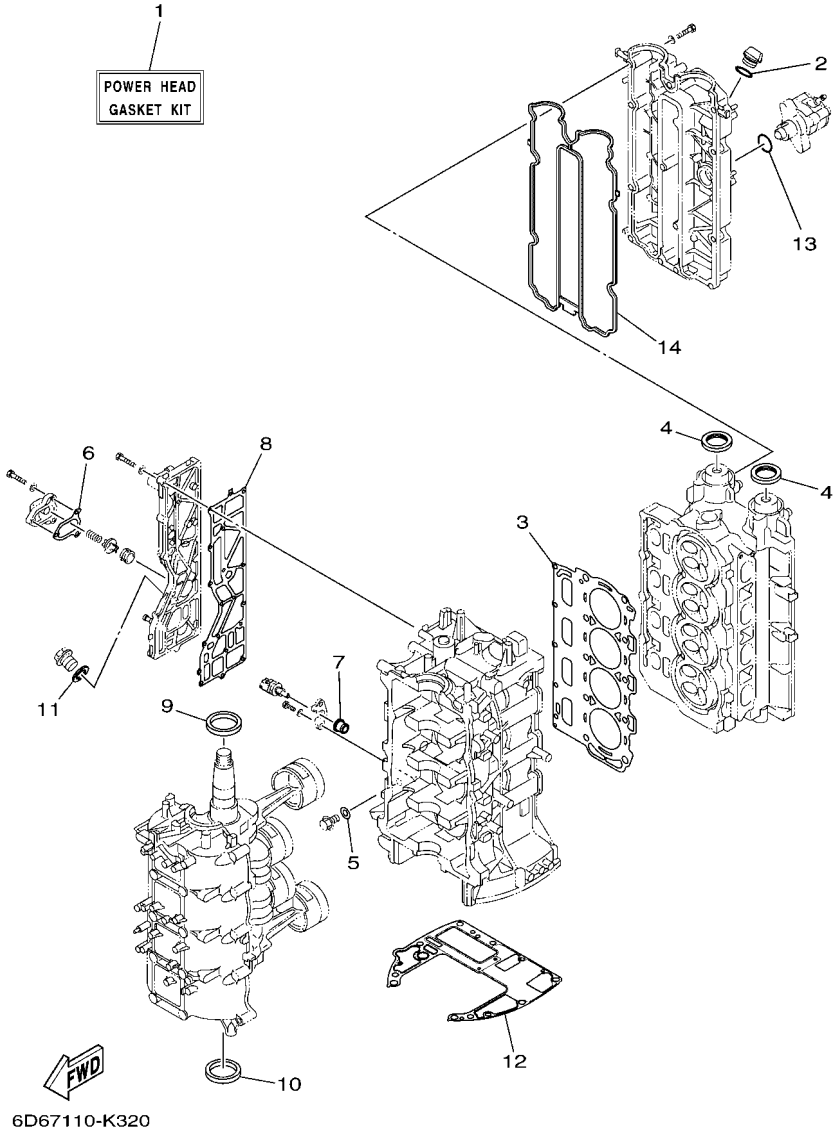

FIG. 35 REPAIR KIT 1 — KITS DE REPARATION 1

REF. NO.	PART NO. N° PIECES	DESCRIPTION DESCRIPTION	6D7C	6D9C				REMARKS REMARQUES
1	6D8–W0001–04	POWER HEAD GASKET KIT POCHETTE DE JINTS TETE MOTRICE	1	1				
2	93210–24M79	.O-RING .JOINT TORIQUE	1	1				
3	67F–11181–03	.GASKET, CYLINDER HEAD 1 .JOINT, DE CULASSE 1	1	1				
4	93102–38008	.OIL SEAL .JOINT SPY	2	2				
5	90430–14115	.GASKET .JOINT	1	1				
6	67F–12435–A0	.GASKET .JOINT	1	1				
7	68V–85753–00	.GASKET, SENDER UNIT .JOINT, DE PERCEPTION	1	1				
8	67F–41114–A2	.GASKET, EXHAUST OUTER COVER .JOINT, COUVERCLE D'ECHAPPEMENT	1	1				
9	93102–48017	.OIL SEAL .JOINT SPY	1	1				
10	93101–48001	.OIL SEAL .JOINT SPY	1	1				
11	90201–186F1	.WASHER, PLATE .RONDELLE, PLATE	1	1				
12	68V–11351–00	.GASKET, CYLINDER .JOINT, D'EMBASE	1	1				
13	93210–30682	.O-RING .JOINT TORIQUE	1	1				
14	6D8–11356–01	.SEAL, CYLINDER 2 .JOINT, SPY CYLINDRE	1	1				

FIG. 36 REPAIR KIT 2 — KITS DE REPARATION 2

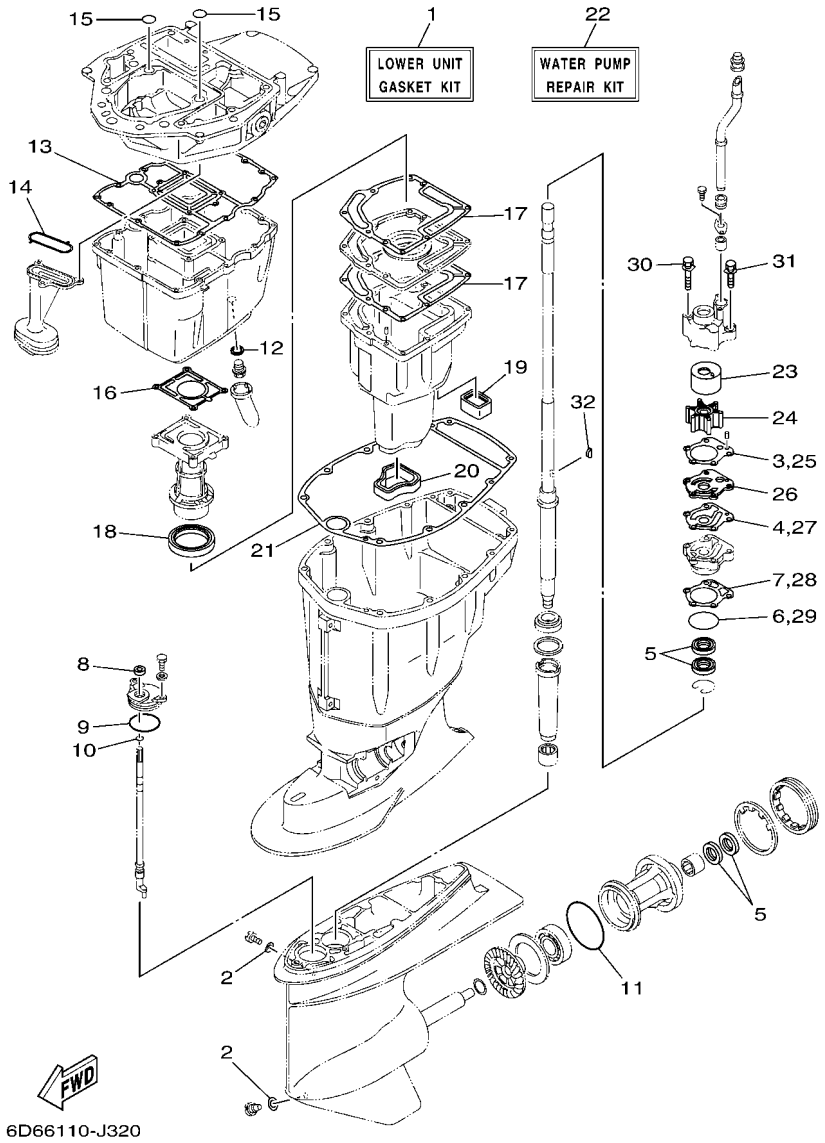

REF. NO.	PART NO. N° PIECES	DESCRIPTION DESCRIPTION	6D7C	6D9C				REMARKS REMARQUES
1	67F–W0001–21	LOWER UNIT GASKET KIT POCHETTE DE JOINTS EMBASE	1	1				
2	90430–08020	.GASKET .JOINT	2	2				
3	688–44315–A0	.GASKET, WATER PUMP .JOINT, POMPE A EAU	1	1				
4	688–44324–A0	.GASKET, CARTRIDGE .JOINT	1	1				
5	93101–25M03	.OIL SEAL .JOINT SPY	4	4				
6	93210–46044	.O-RING .JOINT TORIQUE	1	1				
7	688–44316–A0	.GASKET, WATER PUMP .JOINT, POMPE A EAU	1	1				
8	93106–09014	.OIL SEAL .JOINT SPY	1	1				
9	93210–49046	.O-RING .JOINT TORIQUE	1	1				
10	93210–07003	.O-RING .JOINT TORIQUE	1	1				
11	93210–86M39	.O-RING .JOINT TORIQUE	1	1				
12	90430–14M09	.GASKET .JOINT	1	1				
13	68V–15312–00	.GASKET, OIL PAN .JOINT DE VENTILATEUR D'HUILE	1	1				
14	67F–13415–00	.SEAL, OIL STRAINER .JOINT, FILTRE A HUILE	1	1				
15	93210–19MJ1	.O-RING .JOINT TORIQUE	2	2				
16	67F–41133–A1	.GASKET, EXHAUST MANIFOLD 1 .JOINT, PIPE D'ECHAPPEMENT	1	1				
17	67F–41134–A0	.GASKET, EXHAUST MANIFOLD .JOINT, PIPE D'ECHAPPEMENT	2	2				
18	67F–41138–00	.SEAL, EXT. 1 .JOINT DE GROUPE 1	1	1				
19	67F–45127–00	.SEAL .JOINT	1	1				
20	67F–45123–00	.GASKET, MUFFLER .JOINT, POT DE DETENTE	1	1				
21	67F–45113–00	.GASKET, UPPER CASING .JOINT, TUBE D'ARBRE	1	1				
22	67F–W0078–00	WATER PUMP REPAIR KIT KIT DE REPARATION DE LA POMPE	1	1				
23	67F–44322–00	.INSERT, CARTRIDGE .CUVETTE	1	1				
24	67F–44352–00	.IMPELLER .TURBINE	1	1				
25	688–44315–A0	.GASKET, WATER PUMP .JOINT, POMPE A EAU	1	1				
26	67F–44323–00	.OUTER PLATE, CARTRIDGE .PLAQUE EXTERIEURE	1	1				
27	688–44324–A0	.GASKET, CARTRIDGE .JOINT	1	1				

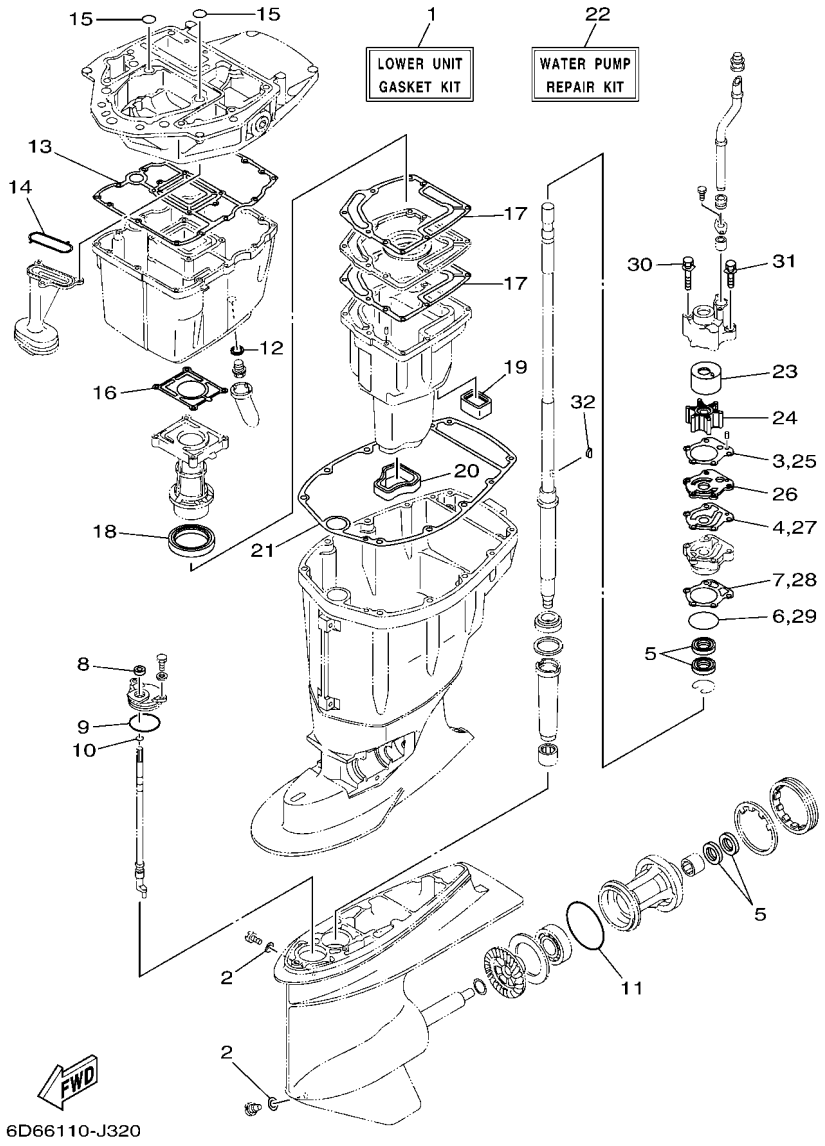

FIG. 36 REPAIR KIT 2 — KITS DE REPARATION 2

REF. NO.	PART NO. N° PIECES	DESCRIPTION DESCRIPTION	6D7C	6D9C				REMARKS REMARQUES
28	688–44316–A0	.GASKET, WATER PUMP .JOINT, POMPE A EAU	1	1				
29	93210–46044	.O-RING .JOINT TORIQUE	1	1				
30	90119–08M87	.BOLT, WITH WASHER .BOULON, AVEC RONDELLE	2	2				
31	90119–08M13	.BOLT, WITH WASHER .BOULON, AVEC RONDELLE	2	2				
32	90280–04M04	.KEY, WOODRUFF .CLAVETTE, DEMI-LUNE	1	1				

NUMERICAL INDEX
INDEX NUMERIQUE

PART NO. N° PIECES	REF. NO.
6D8–11110–20–9S	5 – 2
62Y–11119–00	3 – 8
67F–11133–10	5 – 3
67F–11168–00	5 – 19
67F–11181–03	5 – 14
	35 – 3
6D8–11191–01–9S	5 – 18
67F–11192–01	5 – 25
69J–11301–00	3 – 34
	5 – 8
6E5–11325–00	1 – 1
	3 – 15
67F–11325–01	1 – 2
	1 – 4
	3 – 35
	5 – 9
67F–11328–00	3 – 36
	5 – 10
68V–11351–00	3 – 43
	35 – 12
6D8–11356–01	5 – 23
	35 – 14
676–11372–00	3 – 12
6D8–11411–01	4 – 1
6D8–11416–00	4 – 2
6D8–11416–10	4 – 2
6D8–11416–20	4 – 2
6D8–11417–00	4 – 3
6D8–11417–10	4 – 3
6D8–11417–20	4 – 3
6D8–11417–30	4 – 3
6D8–11418–00	4 – 4
6D8–11418–10	4 – 4
6D8–11418–20	4 – 4
6D8–11536–01	6 – 21
67F–11537–00	6 – 13
67F–11590–00	6 – 16
67F–11595–00	6 – 19
6D8–11603–10	4 – 7
6D8–11604–10	4 – 7
6D8–11656–00	4 – 8
6D8–11656–10	4 – 8
6D8–11656–20	4 – 8
6D8–11656–30	4 – 8
6D8–12111–00	6 – 1
6D8–12113–00	6 – 4
6D8–12116–00	6 – 3
26H–12117–00	6 – 5

PART NO. N° PIECES	REF. NO.
4G0–12118–00	6 – 6
6D8–12121–10	6 – 2
6D8–12153–00	6 – 9
6D8–12153–10	6 – 9
6D8–12153–20	6 – 9
6D8–12153–30	6 – 9
6D8–12153–40	6 – 9
6D8–12153–50	6 – 9
6D8–12153–60	6 – 9
6D8–12153–70	6 – 9
6D8–12153–80	6 – 9
6D8–12153–90	6 – 9
6D8–12153–A0	6 – 9
6D8–12153–B0	6 – 9
6D8–12153–C0	6 – 9
6D8–12153–D0	6 – 9
6D8–12153–E0	6 – 9
6D8–12153–F0	6 – 9
6D8–12153–G0	6 – 9
6D8–12153–H0	6 – 9
6D8–12153–J0	6 – 9
6D8–12153–K0	6 – 9
6D8–12153–L0	6 – 9
6D8–12153–M0	6 – 9
6D8–12153–N0	6 – 9
6D8–12153–P0	6 – 9
6D8–12153–R0	6 – 9
6D8–12153–S0	6 – 9
6D8–12153–T0	6 – 9
6D8–12153–U0	6 – 9
6D8–12153–V0	6 – 9
6D8–12171–00	6 – 10
6D9–12171–00	6 – 10
6D8–12181–00	6 – 11
6D9–12411–00	1 – 5
	5 – 27
67F–12411–01	1 – 5
	5 – 27
67F–12412–00	5 – 28
68V–12413–00–9S	5 – 29
6G5–12416–00	3 – 28
67F–12435–A0	3 – 32
	35 – 6
67F–1243A–00	3 – 40
67F–1246A–A0–9S	3 – 31
67F–12535–01	19 – 33
6DR–12572–00	19 – 32
6R3–12581–00	19 – 40

PART NO. N° PIECES	REF. NO.
6R3–12582–00	19 – 41
6R3–12583–00	19 – 42
6D8–13105–01	7 – 10
67F–13119–01	27 – 17
63P–13131–00	12 – 17
67F–13149–00	27 – 21
6D8–13161–00	7 – 13
6C5–1319C–00	7 – 11
67F–13300–10	27 – 12
67F–13314–02	27 – 13
67F–13329–00	27 – 15
67F–13338–00	27 – 23
67F–13339–00	27 – 22
67F–13411–00	27 – 8
67F–13415–00	27 – 11
	36 – 14
6D8–13428–01	9 – 3
68V–13437–62	13 – 22
5GH–13440–30	1 – 3
	3 – 44
67F–13473–01	27 – 14
67F–13495–00	27 – 16
6D8–13542–01	11 – 2
6C5–13545–00	11 – 18
6D8–13546–01	11 – 1
6D8–13557–00	7 – 4
6C5–13577–00	11 – 10
6C5–13593–00	10 – 20
67F–13631–03	27 – 20
6D8–13641–00	7 – 2
6D8–13645–00	7 – 3
6C5–13716–00	10 – 22
6C5–13739–00	11 – 21
6D8–13750–00	7 – 5
6D8–13761–00	7 – 15
67F–13769–00	27 – 18
6C5–13781–00	10 – 21
6D8–13782–00	8 – 11
6C5–13906–01	10 – 9
6C5–13907–00	10 – 17
6C5–13910–10	10 – 16
67F–13914–00	27 – 19
6C5–13915–00	1 – 7
	10 – 19
6D8–13974–00	11 – 15
6C5–1410B–00	7 – 16
6C5–14127–10	10 – 18
6D8–14148–00	11 – 13

PART NO. N° PIECES	REF. NO.
6BG–14149–00	11 – 8
6D8–14180–21	10 – 1
6D8–14180–22	10 – 1
6D8–14182–10	10 – 2
6D8–14182–20	10 – 2
6C5–14191–00	10 – 13
6D8–14200–00	7 – 1
6C5–14225–00	10 – 25
6C5–14251–00	11 – 12
6D8–14291–00	8 – 5
6D8–14292–00	8 – 8
6C5–14386–00	10 – 5
6C5–14397–00	10 – 14
6D6–14440–01	8 – 12
6D9–14440–02	8 – 12
6C5–14446–00	7 – 14
6C5–14496–00	7 – 9
6C5–14546–10	10 – 4
6C5–14567–00	10 – 15
67F–14711–00–CA	26 – 9
6D8–14960–10	10 – 12
6D8–14960–20	10 – 12
6C5–14984–00	1 – 8
	1 – 8
	10 – 23
6C5–14984–10	1 – 8
	1 – 8
	10 – 23
6C5–14985–00	10 – 3
6D8–15100–02	3 – 2
67F–15142–00	3 – 10
67F–15311–03–CA	27 – 1
68V–15312–00	27 – 7
	36 – 13
63P–15316–00	27 – 2
6D8–15362–00	27 – 27
6G8–15363–00	5 – 32
6D8–15373–00	8 – 17
6C5–21337–10	10 – 24
6D8–2134X–00	9 – 22
6C5–21841–01	11 – 11
1UF–22434–00	24 – 36
67F–22435–00	24 – 9
67F–22471–01	24 – 32
6D8–2413X–01	9 – 17
68V–24149–00	12 – 24
69J–24170–00	9 – 7
6D8–2417H–01	9 – 10

PART NO. N° PIECES	REF. NO.
69J–2419A–01	9 – 20
6YK–24201–04	30 – 1
6C5–24251–00	1 – 9
	11 – 19
6YK–24260–10	30 – 3
6YL–24268–01	30 – 4
6YK–24306–44	30 – 7
6D8–24311–00	12 – 13
67F–24312–00	19 – 43
6D8–24314–01	9 – 5
6D8–24315–00	9 – 8
6D8–24316–00	9 – 13
6D8–24317–01	9 – 18
6C5–24321–00	11 – 3
6C5–24322–00	11 – 4
6C5–24323–00	11 – 5
6D8–24324–01	11 – 6
6D8–24325–10	11 – 7
6YL–24329–00	30 – 5
68V–24374–00	12 – 20
6D8–24378–00	3 – 24
6C5–24379–00	11 – 17
6C5–24387–00	11 – 14
6D8–24410–10	12 – 14
68V–24411–00	12 – 19
68V–24412–00	12 – 15
68V–24413–10	12 – 21
6D8–24414–00	12 – 22
6C5–2441R–10	10 – 6
6C5–2441T–10	10 – 7
68V–24423–00	12 – 18
68V–24444–00	12 – 23
6C5–24444–00	11 – 9
6C5–24453–00	10 – 8
68V–24454–00	12 – 16
6D8–24469–00	12 – 7
68V–24471–10	12 – 31
69J–24502–00	9 – 12
6D8–24519–00	12 – 8
6D8–2451B–00	11 – 20
6D8–24560–01	12 – 3
6D8–24562–00	12 – 6
6D8–24563–00	1 – 10
	12 – 4
6D8–24564–00	1 – 11
	12 – 5
6D8–24566–00	12 – 10
6C5–24592–00	10 – 10

PART NO. N° PIECES	REF. NO.
6YK–24610–01	30 – 2
67F–28100–01	12 – 28
67F–2812A–00	15 – 26
6D7–28199–7C–D0	12 – 29
6D7–28199–7C–E0	12 – 29
6D7–28199–7C–F0	12 – 29
6D7–28199–7C–G0	12 – 29
6D7–28199–7C–H0	12 – 29
6D7–28199–7C–S0	12 – 29
6D7–28199–8C–K0	12 – 30
6D7–28199–8C–L0	12 – 30
6D7–28199–8C–M0	12 – 30
6D7–28199–8C–N0	12 – 30
6D7–28199–8C–P0	12 – 30
6D7–28199–8C–R0	12 – 30
6D8–41113–51–9S	3 – 11
67F–41114–A2	3 – 17
	35 – 8
67F–41131–01–CA	26 – 5
67F–41133–A1	26 – 6
	36 – 16
67F–41134–A0	26 – 15
	36 – 17
6D8–41137–00–CA	26 – 1
67F–41138–00	26 – 17
	36 – 18
682–41237–00	20 – 43
6D8–41237–00	20 – 42
6D8–42154–00	20 – 25
6D8–42157–00	20 – 34
68V–42171–00	20 – 35
67F–42510–11–8D	22 – 8
6D8–42541–00	3 – 19
68V–42541–20	3 – 26
6D7–42610–21	2 – 1
6D9–42610–21	2 – 1
67F–42613–00–8D	2 – 10
67F–42615–00	2 – 13
67F–4261A–00	2 – 2
61N–42628–00	2 – 12
67F–42628–00	2 – 14
60V–42629–00	34 – 8
67F–42647–00	2 – 3
67F–42649–00	2 – 8
68V–42652–00	2 – 6
67F–42662–00	2 – 9
6D6–42675–00	2 – 17
6D6–42676–00	2 – 19

NUMERICAL INDEX
INDEX NUMERIQUE

PART NO. N° PIECES	REF. NO.
60C–42677–10	2 – 15
6D7–42677–10	2 – 15
60C–42678–10	2 – 16
6D7–42678–21	2 – 16
6D6–42681–00	2 – 18
6D8–42710–00–8D	19 – 1
648–42715–00	20 – 22
61A–42716–00	19 – 45
67F–42717–00	19 – 27
6D8–42717–00	19 – 21
67F–42724–00	26 – 37
68V–42725–00	19 – 19
6H1–42726–21	19 – 24
6G1–42727–00	26 – 4
67F–42738–00–8D	19 – 17
67F–42741–01–8D	19 – 46
6H4–42748–00	19 – 26
68F–42753–00	19 – 52
6D8–42756–02	19 – 20
6EE–42794–40	19 – 54
6EE–42794–50	19 – 55
67F–42815–00–8D	19 – 5
67F–42816–00–8D	19 – 6
68V–42818–01	19 – 9
67F–42828–00–9S	19 – 7
67F–43111–00–8D	21 – 1
67F–43112–00–8D	21 – 4
6D8–43126–00	21 – 29
64E–43131–30	21 – 12
64E–43139–10	22 – 4
64D–43144–00	19 – 14
66T–43144–00	21 – 24
6E5–43145–01	31 – 8
6G5–43148–00	21 – 21
6D8–43181–00	21 – 18
6D8–43185–00	21 – 19
6D8–43311–01–8D	21 – 7
6D8–43800–11–8D	24 – 1
6D8–43804–01	25 – 3
6EK–43804–11	25 – 17
6D8–43805–01	25 – 2
6D8–43805–02	25 – 16
62X–43807–00	25 – 7
6EK–4380F–00	25 – 20
6H1–4380F–11	25 – 8
6C5–4380G–00	24 – 42
6D8–4380K–02	24 – 38
67F–4380R–01	24 – 3

PART NO. N° PIECES	REF. NO.
67F–43810–02	24 – 2
6H1–43812–00	24 – 10
67F–43816–00	24 – 25
6C5–43816–00	24 – 41
6C5–43817–10	24 – 39
67F–43818–00	21 – 33
67F–4381B–00	24 – 33
67F–4381J–00	24 – 31
67F–43821–01	24 – 11
6H1–43829–00	24 – 77
6EK–4382E–00	24 – 51
6D8–4382L–00	24 – 61
6D8–43830–01	24 – 44
6D8–43831–00	24 – 78
6D8–43841–00	24 – 46
6D8–43843–00	24 – 64
6D8–43844–00	24 – 58
6H1–43844–10	24 – 57
6D8–43845–00	24 – 75
69A–4384F–00	24 – 49
6H1–4384G–11	24 – 54
62X–4384H–00	24 – 35
6D8–4384M–00	24 – 71
6D8–43851–00	24 – 53
65W–43853–00	24 – 18
6C6–43853–00	24 – 68
6C5–43854–00	24 – 63
6C5–43855–10	24 – 60
6EK–43856–00	24 – 59
67F–43857–00	24 – 30
67F–4385A–02	24 – 5
67F–43861–00	24 – 12
6D8–43861–00	24 – 4
	24 – 13
62X–43862–00	24 – 14
67F–43862–00	24 – 26
6EK–43862–01	25 – 27
67F–43863–00	24 – 6
	24 – 22
6D8–43863–00	24 – 73
67F–43865–00	24 – 27
65W–4386A–00	24 – 16
6T4–4386A–00	24 – 29
688–4386F–00	24 – 17
62X–4386K–00	25 – 9
	25 – 21
62X–43875–00	24 – 37
67F–43875–00	24 – 20

PART NO. N° PIECES	REF. NO.
6H1–43875–00	24 – 74
63P–43879–10	25 – 22
6C6–4387G–00	24 – 52
6D8–43880–01	24 – 81
	25 – 1
6D8–43880–08	25 – 15
6D8–43881–09	25 – 24
6LH–43882–00	25 – 25
6H1–43883–00	24 – 72
67F–4388A–01	24 – 28
6H1–43891–11	25 – 4
6EK–43892–00	25 – 18
6H1–43892–11	25 – 5
67F–43893–00	24 – 19
69J–43894–00	24 – 65
6C5–43895–00	24 – 62
62X–43899–00	24 – 34
67F–43899–00	24 – 24
69J–4389J–00	24 – 40
	24 – 45
6D8–44117–00–94	20 – 5
67F–44118–00	20 – 18
67F–44120–11	20 – 14
67F–44120–31	20 – 14
67F–44121–00	20 – 11
68V–44122–01	20 – 8
67F–44135–00	20 – 30
67F–44150–01	28 – 39
67F–44311–01	28 – 17
6D8–44314–00	29 – 3
688–44315–A0	28 – 27
	36 – 3
	36 – 25
688–44316–A0	28 – 34
	36 – 7
	36 – 28
67F–44322–00	28 – 24
	36 – 23
67F–44323–00	28 – 28
	36 – 26
688–44324–A0	28 – 29
	36 – 4
	36 – 27
6D8–44341–01–CA	28 – 30
67F–44352–00	28 – 25
	36 – 24
6D8–44361–00	29 – 2
6D8–44361–10	29 – 2

PART NO. N° PIECES	REF. NO.
67F–44365–00	29 – 4
663–44366–00	28 – 21
663–44367–00	29 – 1
69J–44391–00	9 – 16
6BL–44391–00	19 – 25
67F–44514–01	22 – 16
67F–44526–00	22 – 19
67F–44533–00	22 – 22
6EK–44536–00	21 – 40
67F–44551–00–8D	22 – 14
67F–44553–00–8D	22 – 33
67F–44555–00	22 – 24
67F–44575–00	22 – 32
67F–45111–11–8D	26 – 20
67F–45113–00	26 – 28
	36 – 21
67F–45123–00	26 – 19
	36 – 20
67F–45127–00	26 – 18
	36 – 19
67F–45151–00	26 – 25
67F–45155–00	26 – 27
67F–45180–00–4D	23 – 1
67F–45181–00–CA	26 – 16
688–45211–01–8D	26 – 35
6H1–45214–00	29 – 10
6H1–45215–00	29 – 11
6H1–45251–03	1 – 12
	21 – 38
6D9–45300–13–8D	28 – 1
6D9–45300–33–8D	28 – 1
67F–45301–00–8D	28 – 2
67F–45318–00	26 – 23
688–45321–00	28 – 35
67F–45331–00–CA	28 – 60
688–45341–10	28 – 4
67F–45371–00	1 – 15
	29 – 14
688–45375–00	29 – 18
663–45376–00	29 – 19
6E5–45378–00	28 – 6
688–45383–02	28 – 66
688–45384–02	28 – 67
67F–45501–10	28 – 10
67F–45501–30	28 – 10
688–45536–01	28 – 14
6D9–45551–10	28 – 11
6D9–45560–10	28 – 52

PART NO. N° PIECES	REF. NO.
688–45567–01	28 – 55
688–45567–10	28 – 55
688–45567–20	28 – 55
688–45567–30	28 – 55
688–45567–40	28 – 55
688–45567–50	28 – 55
688–45567–60	28 – 55
6D9–45571–10	28 – 56
67F–45576–00	28 – 64
688–45587–01	28 – 16
688–45587–10	28 – 16
688–45587–20	28 – 16
688–45587–30	28 – 16
688–45587–40	28 – 16
688–45587–50	28 – 16
688–45587–60	28 – 16
67F–45611–01	28 – 59
6D8–45631–00	28 – 49
688–45633–00	28 – 51
67F–45634–00	28 – 43
6H1–45635–00	28 – 45
6H1–45668–00	28 – 44
688–45930–02	29 – 25
688–45932–60	29 – 25
6E5–45941–00	29 – 25
6E5–45943–00	29 – 25
6E5–45945–01	29 – 25
6E5–45947–00	29 – 25
6E5–45949–00	29 – 25
6E5–45952–00	29 – 25
6E5–45954–00	29 – 25
6E5–45956–00	29 – 25
6E5–45958–00	29 – 25
688–45970–03	29 – 25
688–45972–02	29 – 25
688–45974–02	29 – 25
688–45976–01	29 – 25
688–45978–60	29 – 25
688–45987–01	29 – 20
67F–45997–00	29 – 21
67F–46241–00	6 – 15
6Y8–48277–00	32 – 16
	32 – 17
663–48344–00	20 – 3
	20 – 23
67F–48511–01	22 – 35
67F–48538–00	20 – 1
67F–61350–00	31 – 1

PART NO. N° PIECES	REF. NO.
6C5–81145–00	7 – 7
6C5–81146–10	7 – 12
445–81328–20	13 – 7
6D8–8132G–10	17 – 1
6D8–81332–00	13 – 14
6D8–81337–00	13 – 16
63D–81345–20	13 – 5
6D8–81410–00	13 – 4
6D8–81450–00	13 – 1
6D8–81460–00	13 – 2
6D8–81518–00	15 – 21
6D8–81528–02	15 – 22
68V–81673–10	13 – 8
68V–81800–02	18 – 1
69J–81801–00	18 – 5
67F–81807–00	18 – 10
67F–81808–00	18 – 8
67F–81809–00	18 – 19
67F–81810–00	18 – 3
67F–81813–00	18 – 6
68F–81820–00	18 – 7
67F–81821–00	18 – 13
6K7–81826–11	18 – 24
69J–81828–00	18 – 25
6C5–8182L–00	7 – 8
67F–81830–00	18 – 17
67F–81832–00	18 – 11
67F–81836–00	18 – 12
6C5–81839–00	18 – 21
67F–8183R–00	18 – 15
60V–8183T–00	18 – 18
69J–81840–00	18 – 4
67F–81841–00	18 – 14
60X–81842–00	18 – 20
67F–81846–00	18 – 26
67F–81850–00	18 – 2
67F–81857–00	18 – 9
6C5–81869–00	18 – 23
67F–81891–00	18 – 16
6D8–81919–00	15 – 33
6D8–81919–10	15 – 34
60V–81925–00	18 – 28
68V–81941–02	18 – 22
68V–81942–03	15 – 25
68V–81948–03	15 – 15
61A–81949–00	15 – 14
68V–8194A–00	15 – 5
60E–81950–00	15 – 3

NUMERICAL INDEX
INDEX NUMERIQUE

PART NO. N° PIECES	REF. NO.
63P–81950–00	15 – 10
68V–81953–00	15 – 6
6D8–81960–10	14 – 23
6EE–81994–40	13 – 25
6EE–81994–50	13 – 26
6EE–81995–40	13 – 23
6EE–81995–50	13 – 24
6AG–81996–00	13 – 27
68V–82105–01	15 – 1
6G5–82119–00	15 – 9
682–82119–01	15 – 27
67F–82127–00	21 – 11
6D8–82148–00	21 – 27
6E5–82148–00	21 – 5
67F–82151–00	16 – 2
67F–82151–10	16 – 3
67F–8215B–10	16 – 4
67F–8215B–20	16 – 5
6H1–82181–10	25 – 6
63P–82181–20	25 – 19
63P–82310–01	14 – 5
68V–82317–00	14 – 2
6A0–82317–00	15 – 16
	15 – 28
663–82317–01	13 – 19
67F–82341–00	14 – 6
67F–82342–00	14 – 7
67F–82343–00	14 – 10
67F–82344–00	14 – 11
67F–82361–00	14 – 8
	14 – 12
	14 – 14
67F–82362–00	14 – 9
	14 – 13
6D8–82388–01	14 – 18
6D8–82389–01	16 – 16
6D8–82398–01	16 – 18
68V–82504–00	17 – 9
6Y8–82509–10	32 – 8
6Y8–82521–11	32 – 15
6D8–8252H–01	17 – 15
6D8–82544–00	8 – 22
63D–82563–11	17 – 10
6D8–82581–01	16 – 14
68F–82582–00	18 – 29
6DA–82582–00	16 – 6
6DA–82582–10	16 – 7
6Y8–82582–11	16 – 8

PART NO. N° PIECES	REF. NO.
6E5–82587–00	17 – 11
6E5–82588–00	19 – 28
61A–82588–01	20 – 46
6D8–82588–01	16 – 12
6D8–82590–41	16 – 1
6D8–82590–60	16 – 1
68V–82594–00	15 – 19
60V–8259F–00	20 – 45
6D8–825E0–00	33 – 1
6X4–83383–00	32 – 5
6X4–83386–00	32 – 6
6E5–83558–00	29 – 17
6E5–83558–10	28 – 8
67F–83614–00	17 – 12
6D8–83626–00	5 – 34
6AW–8366B–01	34 – 2
60V–8366D–00	34 – 3
67H–83672–01	22 – 1
68F–83688–00	7 – 17
6Y8–8454G–00	32 – 11
689–85547–00	12 – 1
6D8–85547–00	13 – 18
6D8–85580–00	13 – 3
68V–85753–00	17 – 5
	35 – 7
67F–85757–00	17 – 4
67F–85790–00	17 – 3
6D8–85790–00	17 – 3
6C5–85885–00	7 – 6
6D7–8591A–16	14 – 1
6D9–8591A–16	14 – 1
6Y8–86260–02	32 – 2
6AA–86261–00	32 – 3
6Y8–86267–00	32 – 1
6C5–87226–00	10 – 11
60V–8A4L1–14	34 – 1
K1C–A3275–00	4 – 6
K0A–A3721–00	6 – 7
K0A–A3722–00	6 – 8
6D8–W0001–04	35 – 1
67F–W0001–21	36 – 1
67F–W0078–00	1 – 16
	36 – 22
6D8–W009A–04–9S	5 – 1
6D9–W009A–04–9S	5 – 1
6D8–W009B–07–9S	3 – 1
6D8–W009B–08–9S	3 – 1
6D8–W1164–21	4 – 5

PART NO. N° PIECES	REF. NO.
6D8–W1164–31	4 – 5
90101–09M01	31 – 7
90101–12M05	21 – 42
90105–06M07	3 – 37
	5 – 11
90105–06M14	15 – 2
90105–10M67	29 – 15
90109–06M80	19 – 49
90109–06M81	19 – 29
	34 – 4
90109–06M82	19 – 8
90109–06M86	17 – 13
	19 – 15
	19 – 23
	19 – 31
	19 – 39
	20 – 2
90109–06M96	19 – 18
90109–12006	23 – 2
90109–12007	22 – 18
90109–12012	22 – 26
90116–10062	22 – 36
90116–10M05	26 – 31
90119–06087	8 – 7
	8 – 10
90119–06113	8 – 15
90119–06M08	9 – 1
90119–06M59	9 – 25
	14 – 4
	15 – 18
90119–06M79	5 – 26
90119–06M81	21 – 39
90119–06M83	12 – 27
90119–06MA2	3 – 33
90119–06MA4	3 – 18
90119–07234	5 – 7
90119–07235	5 – 5
90119–08069	8 – 1
90119–08091	22 – 17
90119–08M03	8 – 3
90119–08M13	28 – 20
	36 – 31
90119–08M22	19 – 2
90119–08M58	26 – 36
90119–08M66	3 – 5
90119–08M84	29 – 9
90119–08M86	29 – 9
90119–08M87	28 – 19

PART NO. N° PIECES	REF. NO.
90119–08M87	36 – 30
90119–08M91	5 – 17
90119–10050	6 – 14
90119–10M08	26 – 21
90119–10M72	6 – 20
90119–10M88	3 – 4
90151–05M00	29 – 12
90155–10005	5 – 16
90157–05M16	30 – 6
90159–05059	22 – 5
	33 – 3
90159–06M28	19 – 48
90160–04006	28 – 23
90167–06002	19 – 38
90167–06M00	32 – 12
90170–09M03	31 – 4
90170–16M01	28 – 12
90170–40008	6 – 22
90171–16011	29 – 23
90179–06M24	2 – 11
90179–08003	18 – 27
90179–24002	13 – 13
90183–02M03	28 – 48
90185–05002	29 – 13
90185–09M01	31 – 3
90185–10027	22 – 37
90185–22M11	21 – 15
90201–03313	28 – 47
90201–06068	19 – 12
90201–06M30	32 – 13
90201–06M31	20 – 37
90201–06M62	20 – 27
90201–09M02	20 – 16
90201–10M02	20 – 28
	20 – 38
90201–10M20	31 – 2
90201–10M63	31 – 6
90201–12426	21 – 44
90201–12M01	23 – 3
90201–12M16	22 – 20
	22 – 27
	23 – 5
90201–13M01	21 – 43
	22 – 21
90201–13M03	22 – 25
90201–13M19	22 – 30
90201–186F1	3 – 14
	35 – 11

PART NO. N° PIECES	REF. NO.
90201–24014	13 – 12
90201–24M02	22 – 28
90201–25M05	28 – 58
90201–26M59	21 – 14
90201–30M00	22 – 9
90202–07M07	20 – 9
90202–25M04	22 – 29
90206–10M04	20 – 29
	20 – 39
90206–14086	25 – 26
90206–15M18	19 – 11
90249–06M19	21 – 23
90250–07M02	28 – 50
90280–04008	6 – 23
90280–04M04	28 – 26
	36 – 32
90280–05015	13 – 11
90282–04010	28 – 65
90340–08002	28 – 3
90340–14M06	3 – 6
	27 – 3
90340–18M09	3 – 13
90344–51019	5 – 4
90386–06M12	20 – 12
90386–08001	8 – 13
90386–10M16	21 – 20
90386–15M73	19 – 10
90386–18001	21 – 31
90386–18M35	21 – 30
90386–18MA0	21 – 35
90386–25M31	21 – 13
90386–30M60	22 – 13
90386–30M77	22 – 12
90386–30M78	22 – 10
90386–90M90	20 – 15
90387–05004	33 – 4
90387–06013	20 – 36
90387–06119	13 – 20
	14 – 3
	15 – 17
90387–06263	27 – 10
90387–06289	9 – 24
90387–06M05	15 – 30
90387–06M21	20 – 26
90387–06M43	19 – 51
90387–06M69	10 – 26
90387–07013	8 – 14
90387–08033	8 – 2

PART NO. N° PIECES	REF. NO.
90387–08M37	19 – 4
90387–10M42	31 – 5
90387–18M01	21 – 34
90387–22M01	21 – 36
90389–25M00	29 – 22
90401–20007	3 – 45
90430–06M03	3 – 38
	5 – 12
90430–08020	1 – 14
	28 – 5
	36 – 2
90430–14115	3 – 7
	35 – 5
90430–14M09	1 – 13
	27 – 4
	36 – 12
90445–07017	34 – 6
90445–07M31	28 – 7
90445–07M38	28 – 7
90445–07ME0	29 – 16
90445–13M37	12 – 2
90445–15M03	6 – 18
90447–07013	34 – 7
90462–06018	19 – 34
90462–10027	20 – 7
90464–08004	14 – 19
90464–09M31	3 – 25
90464–10010	3 – 22
90464–11009	3 – 23
90464–12M58	15 – 20
90464–15007	9 – 2
90464–16001	3 – 46
90464–18004	3 – 21
90464–18246	7 – 18
	19 – 22
90464–20258	19 – 53
90464–30003	14 – 24
	17 – 14
90464–76001	8 – 16
	16 – 9
90465–06M86	17 – 7
90465–08M23	14 – 21
	19 – 30
90465–08M63	21 – 9
	22 – 3
90465–10M77	21 – 2
90465–11M10	3 – 20
	3 – 27

NUMERICAL INDEX
INDEX NUMERIQUE

PART NO. N° PIECES	REF. NO.
90465–11M10	9 – 6
	9 – 9
	9 – 14
	9 – 19
	11 – 16
	12 – 9
	12 – 25
	19 – 44
	22 – 6
	22 – 7
	28 – 9
	32 – 10
	33 – 5
	34 – 5
90465–11M59	3 – 41
	8 – 18
90465–12M03	8 – 20
90465–12M53	15 – 29
90465–13M11	16 – 22
90465–13M18	15 – 32
	16 – 20
90465–13M97	16 – 10
90467–09M03	9 – 15
90467–20M15	3 – 42
	8 – 19
90468–18008	20 – 4
	20 – 10
	20 – 13
	20 – 24
90480–09M12	10 – 27
90480–10M23	9 – 23
90480–12072	5 – 22
90480–12314	13 – 17
90480–13M24	15 – 23
	19 – 50
90480–14329	14 – 20
90480–19M06	28 – 22
90480–20M05	3 – 30
90480–22M15	19 – 3
90501–12082	20 – 21
90501–12M48	28 – 46
90501–16M11	3 – 29
90506–14M24	21 – 26
90506–16M34	19 – 16
90506–16M39	6 – 17
91318–03005	24 – 70
91318–03025	24 – 67
91318–05030	24 – 66

PART NO. N° PIECES	REF. NO.
91318–05045	24 – 43
91380–06020	24 – 80
91490–20015	20 – 17
91490–40030	29 – 24
91690–30020	21 – 22
91690–50014	8 – 4
91809–08006	5 – 6
92903–06600	15 – 13
92903–08100	18 – 33
92903–08600	18 – 31
92907–04600	5 – 21
92990–06100	2 – 4
92990–10100	26 – 33
92995–06100	14 – 16
	14 – 26
	19 – 36
	20 – 32
92995–06200	19 – 37
92995–06600	5 – 31
	14 – 17
	14 – 27
	20 – 33
	20 – 41
	26 – 8
	26 – 11
	26 – 13
92995–08600	21 – 17
92995–10100	29 – 7
92995–10600	26 – 32
	29 – 8
93101–25M03	28 – 32
	28 – 62
	36 – 5
93101–48001	4 – 10
	35 – 10
93102–08414	25 – 13
93102–38008	6 – 24
	35 – 4
93102–48017	4 – 9
	35 – 9
93106–09014	28 – 36
	36 – 8
93210–04279	32 – 9
93210–04N51	24 – 56
93210–064A5	24 – 55
93210–07003	28 – 40
	36 – 10
93210–09165	24 – 76

PART NO. N° PIECES	REF. NO.
93210–16275	31 – 9
93210–19MJ1	27 – 26
	36 – 15
93210–24M79	5 – 33
	35 – 2
93210–29M94	22 – 11
93210–30682	12 – 26
	35 – 13
93210–46044	28 – 33
	36 – 6
	36 – 29
93210–49046	28 – 38
	36 – 9
93210–554A9	25 – 14
93210–64488	24 – 79
93210–86M39	28 – 63
	36 – 11
93306–207U0	28 – 57
93315–52563	28 – 13
93317–322V0	28 – 53
93317–325U0	28 – 61
93332–000U3	28 – 15
93332–000UD	28 – 54
93410–18M05	21 – 32
	21 – 37
93410–28M06	22 – 15
93420–36M01	26 – 24
93450–44166	28 – 31
93501–04M02	20 – 20
93501–08001	24 – 7
	24 – 15
	24 – 23
	24 – 47
93503–16003	24 – 21
	28 – 42
93505–32038	24 – 50
93602–07244	24 – 8
93604–10M03	28 – 18
93604–12M07	27 – 25
93604–26256	24 – 69
93605–10108	6 – 12
93606–12019	3 – 3
	26 – 30
	27 – 6
	29 – 5
93606–19M23	26 – 14
93608–16M16	26 – 3
	26 – 22

PART NO. N° PIECES	REF. NO.
93700–06M03	21 – 8
94702–00391	1 – 6
	5 – 35
95333–08600	18 – 32
95380–05600	20 – 44
95380–06600	2 – 5
	19 – 47
95380–08600	12 – 11
95380–10600	26 – 34
95380–12600	21 – 45
95380–12700	23 – 4
95380–12800	22 – 31
95780–06300	32 – 14
95780–12300	22 – 23
	23 – 6
95812–06025	27 – 9
95895–06020	13 – 21
95895–06025	8 – 23
95895–08014	26 – 29
97013–06020	15 – 12
97013–08045	18 – 30
97075–06030	26 – 10
97075–06050	26 – 12
97075–06070	26 – 7
97075–10040	29 – 6
97095–06008	19 – 35
97095–06010	21 – 3
	21 – 10
	21 – 25
97095–06016	19 – 13
97095–06025	5 – 30
	14 – 15
	14 – 25
	20 – 40
97095–06035	20 – 31
97095–08020	21 – 16
97575–06525	20 – 19
	27 – 5
97575–08540	3 – 39
	5 – 13
	26 – 2
97575–10540	22 – 34
97595–06510	9 – 11
	21 – 28
97595–06512	2 – 7
	8 – 21
	9 – 4
	16 – 13

PART NO. N° PIECES	REF. NO.
97595–06512	16 – 17
	16 – 19
	17 – 8
	17 – 16
	33 – 2
97595–06514	14 – 22
	15 – 24
	16 – 15
97595–06516	9 – 21
	12 – 12
	17 – 2
	17 – 6
	28 – 37
	34 – 9
97595–06520	3 – 9
	8 – 9
97595–06530	5 – 24
	8 – 6
97595–06545	27 – 24
97595–06550	20 – 6
97595–06610	15 – 8
	15 – 11
97595–06616	14 – 28
	16 – 11
	16 – 21
	21 – 41
97595–06630	13 – 10
97602–04216	25 – 11
97602–04316	25 – 23
97607–04110	13 – 6
97780–60620	15 – 7
	32 – 7
97780–60625	15 – 4
	15 – 31
97880–06012	21 – 6
97880–06035	32 – 12
97980–05225	25 – 10
97980–06216	26 – 26
	32 – 4
97985–04116	20 – 47
97985–06210	13 – 15
97985–06216	22 – 2
98507–04008	5 – 20
98780–04016	3 – 16
99001–08600	28 – 41
99002–03600	24 – 48
99530–08012	13 – 9
99530–14016	5 – 15

PART NO. N° PIECES	REF. NO.