YAMAHA

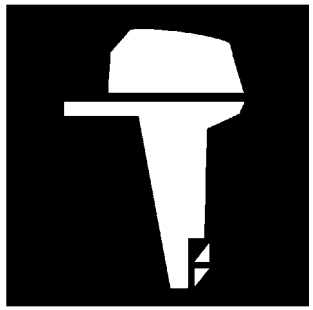

PARTS CATALOGUE
CATALOGUE DE PIECES DETACHEES

FT9.9LMH'15 (6EA3)
FT9.9LE'15 (6EA3)
FT9.9LEP'15 (6EA3)

1P6EA-300F1

( )

YAMAHA
GENUINE
Parts & Accessories

FT9.9LMH
FT9.9LE/FT9.9LEP
PARTS CATALOGUE
©2015 by Yamaha Motor Co., Ltd.
1st edition, February 2015
All rights reserved.
Any reprinting or unauthorized use
without the written permission of
Yamaha Motor Co., Ltd.
is expressly prohibited.
Printed in Japan.

FT9.9LMH
FT9.9LE/FT9.9LEP
CATALOGUE DE PIECES DETACHEES
©2015 par Yamaha Motor Co., Ltd.
1re édition, février 2015
Tous droits réservés
Toute réimpression ou utilisation
non autorisée sans la permission écrite
de la Yamaha Motor Co., Ltd.
est formellement interdite.
Imprimé au Japon

FOREWORD

This Parts Catalogue is related to the parts for the model(s) on the cover page. When you are ordering replacement parts, please refer to this Parts Catalogue and quote both part numbers and part names correctly.

1. Modifications or additions which have been made after the issue of the Parts Catalogue will be announced in the Parts News.
   It is advisable that you make the necessary corrections to the Parts Catalogue according to the Parts News.

2. Abbreviations
   The following abbreviations are used in this Parts Catalogue.

   "UR" Use specified parts number.
   "UN" Use as many as needed.
   "AP" Alternate Parts
   "LM" Locally Made (Parts need to be ordered locally)
   "F#" Frame No. (Applicable machine No.)
   "O/S" Over Size

3. The number of components for assembly
   - Parts, which are to be supplied in an assembly, are listed with a dot (.) in front of the part name as shown below.
   - The numeral appearing to the right of each component part indicates the quantity of parts for each assembly unit.

PART NO.	DESCRIPTION	Q'TY	REMARKS
2F5–83310–60	FRONT FLASHER LIGHT ASSY	2	
115–83311–60	.BULB (6V–18W)	1	

4. Applicable colours of graphics are represented in the "REMARKS" as shown below.

PART NO.	DESCRIPTION	Q'TY	REMARKS
2N4–24110–00–X5	FUEL TANK COMP.	2	MXR
3J1–24240–10	.GRAPHIC, FUEL TANK	1	FOR MXR

5. Note that the illustrations for reference in finding parts numbers are not to be used for assembling. When assembling, please use the applicable service manual.

6. The asterisk (*) before a reference number indicates modified items after the first edition.

7. Applicable Serial No.

   Engine Serial No.

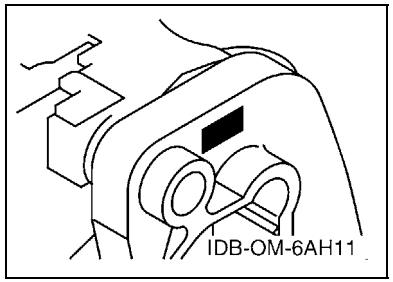

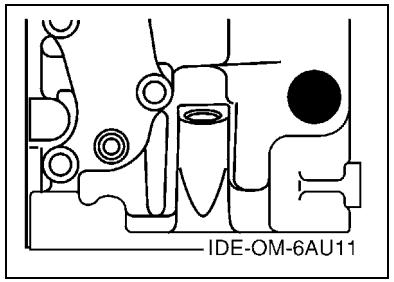

8. Applicable Engine Starting Serial No.

Model	Serial No.	Model	Serial No.
FT9.9L	6AVK-1029444		

9. Applicable Colour Code

Abbreviation	Colour Name	Colour Code
DBNM2	DARK BLUISH GRAY METALLIC 2	004D

10. Quantity Column Information

Column No.	Name Of Q'ty Column	Applicable Model
1	MH	FT9.9LMH
2	E	FT9.9LE
3	EP	FT9.9LEP

AVANT–PROPOS

Ce catalogue de pièces détachées concerne les pièces pour le(s) modèle(s) indiqué(s) sur la page de couverture. Lorsque vous commandez des pièces de rechange, veuillez vous référer à ce catalogue de pieces détachées et indiquer clairement les numéros et les noms des pièces détachées.

1. Les modifications ou ajouts ayant été effectués après la parution du catalogue de pièces détachées seront décrits dans les Bulletins d'information concernant les pièces détachées.
   Il est recommandé que vous apportiez les corrections nécessaires au catalogue des pièces détachées en vous référant aux Bulletins d'information.

2. Abréviations
   Dans ce catalogue, les abréviations suivantes sont utilisées:

   "UR" Utiliser le numéro de pièces spécifié.
   "UN" Utiliser autant que nécessaire.
   "AP" Pièces de substitution
   "LM" Fabrication locale (les pièces doivent être commandées localement.)
   "F#" N° de cadre (applicable au N° de série)
   "O/S" Surdimensionné

3. Nombre de pièces d'un assemblage
   - Les pièces fournies comme composants d'un assemblage sont précédées d'un point (.) de la manière indiquée ci–dessous.
   - Le chiffre apparaissant à la droite de chaque composant indique la quantité de pièces pour chaque unité d'assemblage.

N° PIECES	DESCRIPTION	QTE	REMARQUES
2F5–83310–60	ENS. CLIGNOTANT AVANT	2	
115–83311–60	.AMPOULE (6V–18W)	1	

4. Les couleurs concernant les graphiques sont indiquées dans la colonne "REMARQUES", comme indiqué ci–dessous.

N° PIECES	DESCRIPTION	QTE	REMARQUES
2N4–24110–00–X5	RESERVOIR A ESSENCE.	2	MXR
3J1–24240–10	.GRAPHIQUE	1	POUR MXR

5. Veuillez noter que les illustrations sont indiquées à titre de référence pour trouver les numéros de pièces, non pour être utilisées lors de l'assemblage. Lors de l'assemblage, veuillez utiliser le manuel d'entretien adéquat.

6. L'astérisque (*) placé devant un numéro de référence indique des éléments qui ont été modifiés après la première édition.

7. N° de série applicable

   N° de Série du moteur

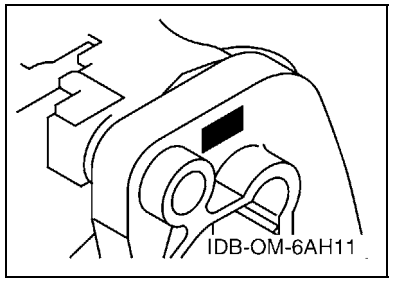

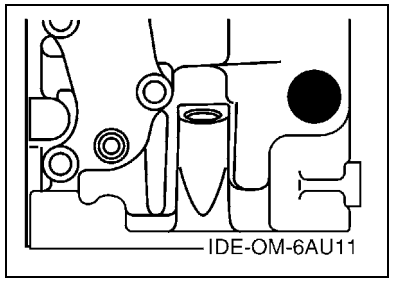

8. N° de série initial du moteur applicable

Modèle	N° de série	Modèle	N° de série
FT9.9L	6AVK-1029444		

9. Code couleur applicable

Abréviation	Nom de la couleur	Code couleur
DBNM2	DARK BLUISH GRAY METALLIC 2	004D

10. Informations relatives à la colonne Quantité

N° de la colonne	Nom de la colonne Qté	Modèle applicable
1	MH	FT9.9LMH
2	E	FT9.9LE
3	EP	FT9.9LEP

CONTENTS

SCHEDULED SERVICE PARTS 1
TOP COWLING 2
CYLINDER & CRANKCASE 1 3
CRANKSHAFT & PISTON 4
CYLINDER & CRANKCASE 2 5
VALVE 6
INTAKE 7
CARBURETOR 8
OIL PUMP 10
FUEL 11
STARTER 13
GENERATOR 15
ELECTRICAL 1 16
ELECTRICAL 2 17
ELECTRICAL 3 18
ELECTRICAL 4 20
STARTING MOTOR 21
BOTTOM COWLING 22
STEERING 24
STEERING FRICTION 27
CONTROL 1 28
CONTROL 2 30
REMO CON ATTACHMENT 32
BRACKET 1 33
BRACKET 2 35
BRACKET 3 37
POWER TILT ASSY 38
UPPER CASING 41
OIL PAN 42
LOWER CASING & DRIVE 1 43
LOWER CASING & DRIVE 2 46
FUEL TANK 47
STEERING GUIDE 48
REMOTE CONTROL BOX 49
REMOTE CONTROL ASSY 1 50
REMOTE CONTROL ASSY 2 53
OPTIONAL PARTS 1 56
OPTIONAL PARTS 2 58
OPTIONAL PARTS 3 59
REPAIR KIT 1 60
REPAIR KIT 2 61
REPAIR KIT 3 62

INDEX

NUMERICAL INDEX 63

TABLE DES MATIERES

PIECES MAINTENANCE PERIODIQUE 1
CAPOT SUPERIEUR 2
CYLINDRE & CARTER 1 3
VILEBREQUIN & PISTON 4
CYLINDRE & CARTER 2 5
SOUPAPE 6
ADMISSION 7
CARBURATEUR 8
POMPE A HUILE 10
CARBURANT 11
DEMARREUR 13
GENERATRICE 15
PARTIE ELECTRIQUE 1 16
PARTIE ELECTRIQUE 2 17
PARTIE ELECTRIQUE 3 18
PARTIE ELECTRIQUE 4 20
DEMARREUR ELECTRIQUE 21
CAPOT INFERIEUR 22
DIRECTION 24
CUVETTE POIGNEE DE DIRECTION 27
COMMANDE 1 28
COMMANDE 2 30
COMMANDE A DISTANCE 32
SUPPORT 1 33
SUPPORT 2 35
SUPPORT 3 37
PUISSANCE PARER ET INCLINER 38
FOURREAU 41
VENTILATEUR D'HUILE 42
BOITIER D'HELICE TRANSMISSION1 43
BOITIER D'HELICE TRANSMISSION2 46
RESERVOIR A CARBURANT 47
FIXATION DE DIRECTION 48
BOITIER DE COMMANDE A DISTANCE 49
BOITIER DE COMMANDE A DISTANCE 50
BOITIER DE COMMANDE A DISTANCE 53
PIECES OPTIONNELLES 1 56
PIECES OPTIONNELLES 2 58
PIECES OPTIONNELLES 3 59
KITS DE REPARATION 1 60
KITS DE REPARATION 2 61
KITS DE PEPARATION 3 62

INDEX

INDEX NUMERIQUE 63

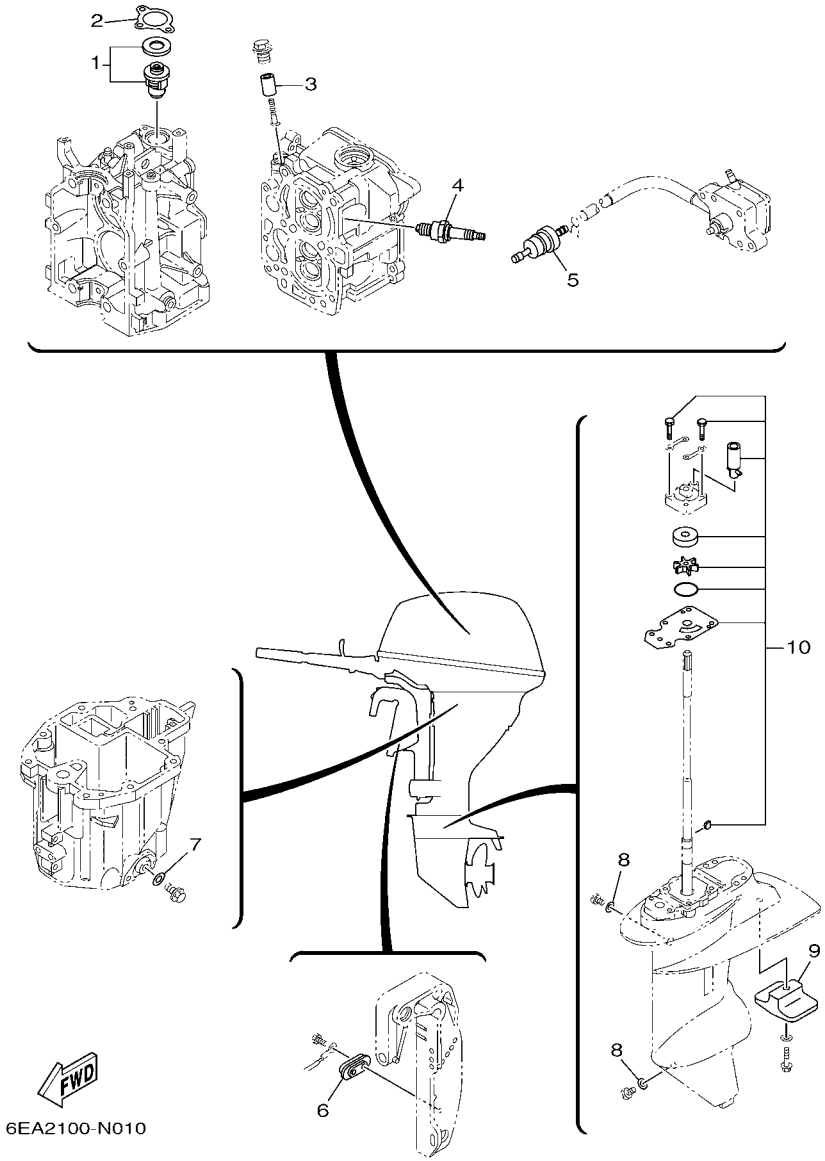

FIG. 1 SCHEDULED SERVICE PARTS PIECES MAINTENANCE PERIODIQUE

REF. NO.	PART NO. N° PIECES	DESCRIPTION DESCRIPTION	MH	E	EP			REMARKS REMARQUES
1	66M–12411–01	THERMOSTAT THERMOSTAT	1	1	1			
2	6G8–12414–A0	GASKET, COVER JOINT, COUVERCLE	1	1	1			
3	6G8–11325–00	ANODE ANODE	1	1	1			
4	94702–00274	PLUG, SPARK (NGK BR6HS-10) BOUGIE D'ALLUMAGE(NGK BR6HS-10	2	2	2			
5	68T–24251–01	STRAINER 1 FILTRE 1	1	1	1			
6	65W–45251–00	ANODE ANODE			1			
7	90430–10M11	GASKET JOINT	1	1	1			
8	90430–08020	GASKET JOINT	2	2	2			
9	61N–45251–01	ANODE ANODE	1	1	1			
10	69G–W0078–00	WATER PUMP REPAIR KIT KIT DE REPARATION DE LA POMPE	1	1	1			

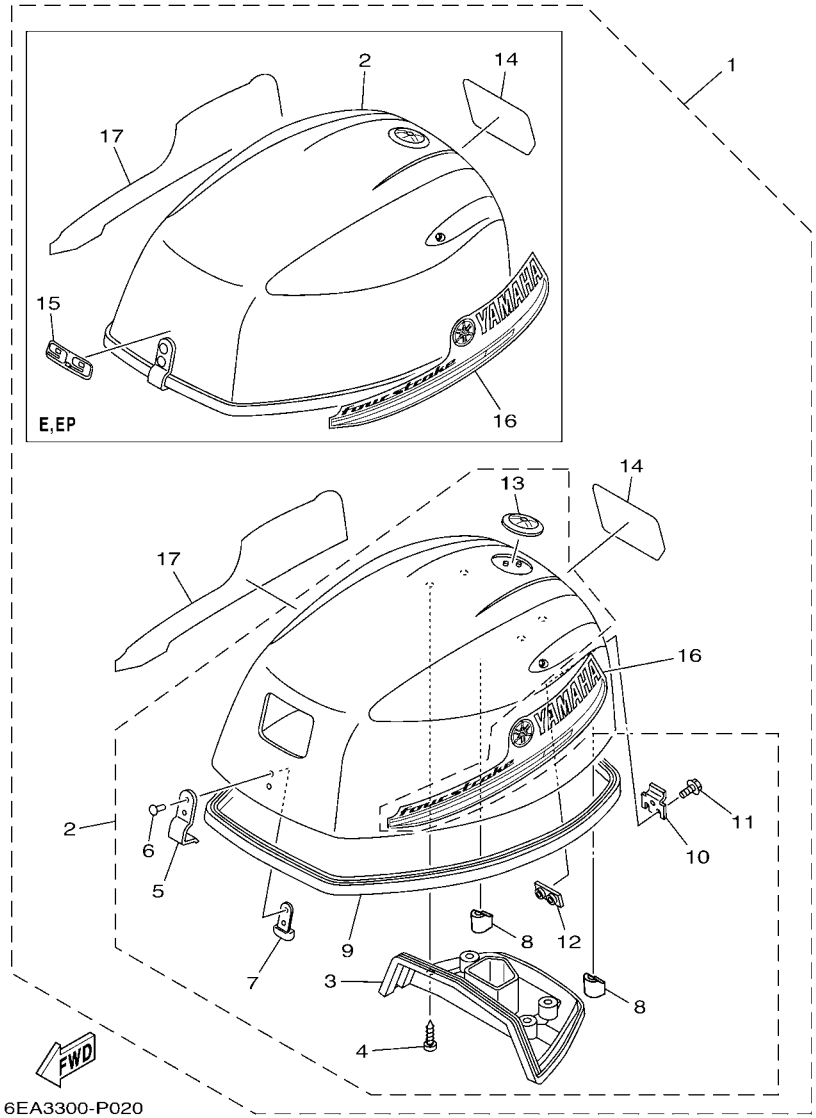

FIG. 2 TOP COWLING — CAPOT SUPERIEUR

REF. NO.	PART NO. N° PIECES	DESCRIPTION DESCRIPTION	MH	E	EP			REMARKS REMARQUES
1	6EA–42610–00	TOP COWLING ASSY CAPOT (ENS.)	1					
	6EA–42610–10	TOP COWLING ASSY CAPOT (ENS.)		1	1			
2	6DR–4261A–00	.TOP COWLING W/O GRAPHICS .CAPOT SUPERIEUR SANS GRAPHIQUE	1					
	6DR–4261A–10	.TOP COWLING W/O GRAPHICS .CAPOT SUPERIEUR SANS GRAPHIQUE		1	1			
3	6DR–42613–00	..MOLDING, AIR DUCT ..MANCHON A AIR	1	1	1			
4	90167–05017	..SCREW, TAPPING ..VIS, TETE FRAISEE	4	4	4			
5	6DR–42651–00	..HOOK ..CROCHET	1	1	1			
6	90266–04005	..RIVET ..RIVET	2	2	2			
7	6DR–42649–00	..HOLDER, CLAMP BAND ..SUPPORT, SANDOW DE SERRAGE	1	1	1			
8	6BG–42662–00	..DAMPER ..AMORTISSEUR	2	2	2			
9	60R–42615–00	..SEAL ..JOINT	1	1	1			
10	60R–42652–00	..HOOK ..CROCHET	1	1	1			
11	97595–05514	..BOLT, WITH WASHER ..VIS HEXAGONAL AVC RONDELLE	2	2	2			
12	68T–42649–00	..HOLDER, CLAMP BAND ..SUPPORT, SANDOW DE SERRAGE	1	1	1			
13	6AH–42697–10	..TUNING FORK MARK ..MARQUE, YAMAHA	1	1	1			
14	6AV–42678–10	.GRAPHIC, REAR .ADHESIF, ARRIERE	1	1	1			
15	6AU–42678–10	.GRAPHIC, REAR .ADHESIF, ARRIERE		1	1			
16	60R–42675–00	.GRAPHIC, SIDE 1 .EMBLEME	1	1	1			
17	60R–42676–10	.GRAPHIC, SIDE 2 .EMBLEME	1	1	1			

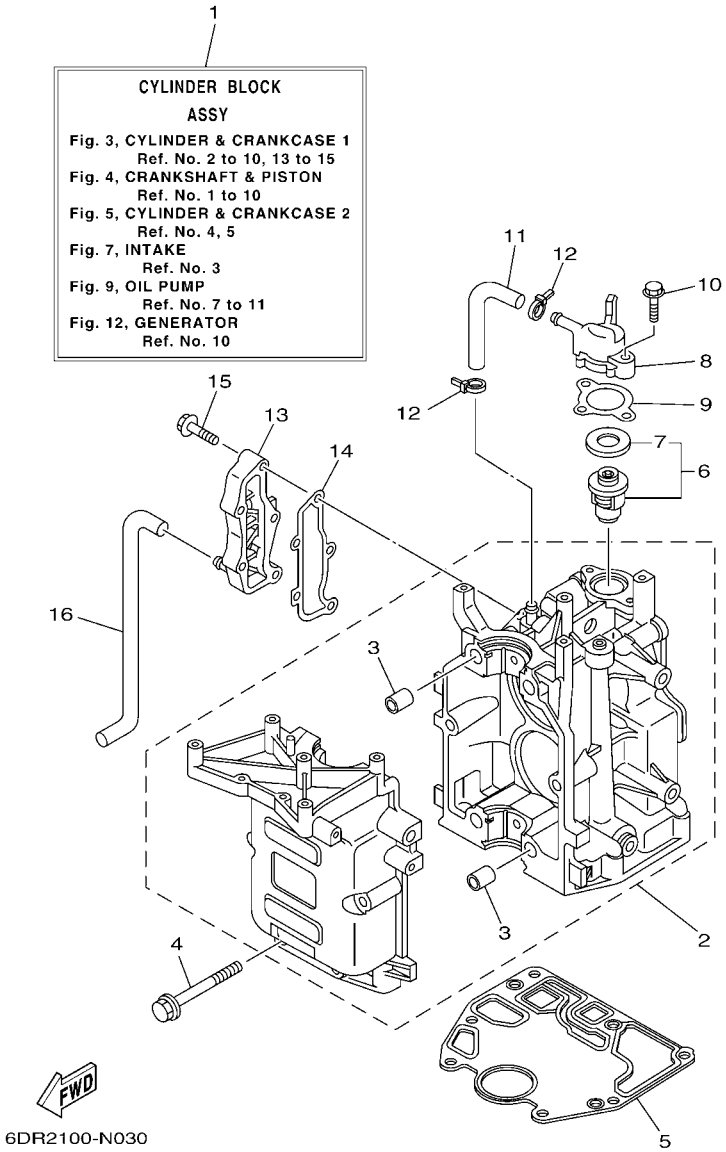

FIG. 3 CYLINDER & CRANKCASE 1 CYLINDRE & CARTER 1

REF. NO.	PART NO. N° PIECES	DESCRIPTION DESCRIPTION	MH	E	EP			REMARKS REMARQUES
1	6AU–W009B–00–1S	CYLINDER BLOCK ASSY CYLINDRE GROUPE (ENS.)	1	1	1			
2	6AU–15100–00	CRANKCASE ASSY CARTER DE MOTEUR COMPLET	1	1	1			
3	99530–12016	.PIN, DOWEL .GOUJON, D'ASSEMBLAGE	4	4	4			
4	90119–08M29	BOLT, WITH WASHER BOULON, AVEC RONDELLE	6	6	6			
5	68T–11351–00	GASKET, CYLINDER JOINT, D'EMBASE	1	1	1			
6	66M–12411–01	THERMOSTAT THERMOSTAT	1	1	1			
7	688–12412–00	.SEAL, THERMOSTAT .JOINT, THERMOSTAT	1	1	1			
8	68T–12413–00–1S	COVER, THERMOSTAT COUVERCLE, THERMOSTAT	1	1	1			
9	6G8–12414–A0	GASKET, COVER JOINT, COUVERCLE	1	1	1			
10	90119–06MA2	BOLT, WITH WASHER BOULON, AVEC RONDELLE	2	2	2			
11	68T–12481–00	PIPE 1 DURITE 1	1	1	1			
12	90465–11M10	CLAMP BRIDE	2	2	2			
13	6AU–41113–00–1S	OUTER COVER, EXHAUST COUVERCLE, ECHAPPEMENT	1	1	1			
14	68T–41114–A0	GASKET, EXHAUST OUTER COVER JOINT, COUVERCLE D'ECHAPPEMENT	1	1	1			
15	90119–06MA3	BOLT, WITH WASHER BOULON, AVEC RONDELLE	5	5	5			
16	68T–12482–00	PIPE 2 DURITE 2	1	1	1			

FIG. 4 CRANKSHAFT & PISTON VILEBREQUIN & PISTON

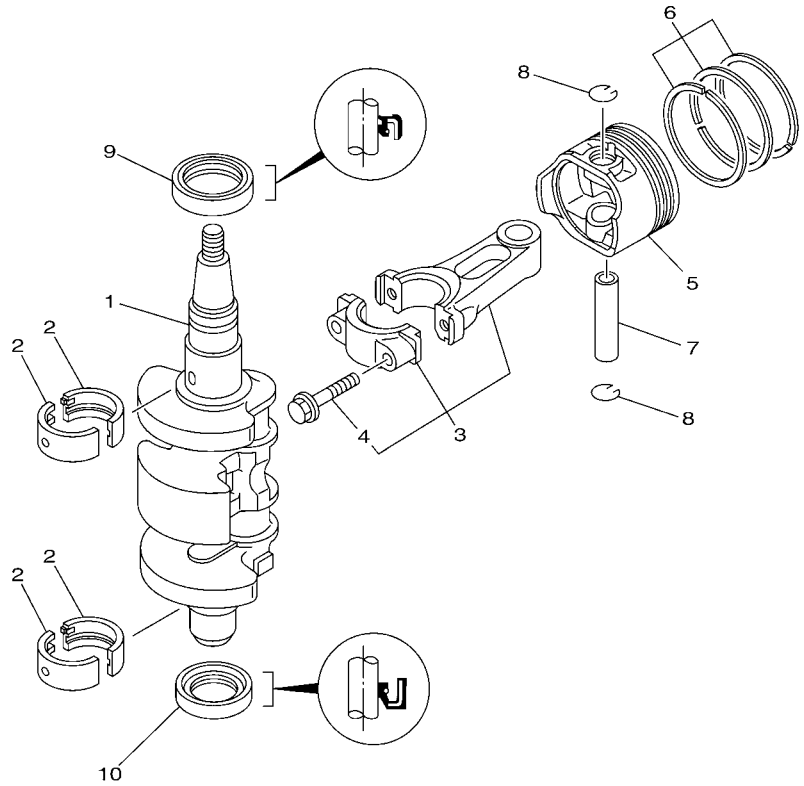

6DR1100-M040

REF. NO.	PART NO. N° PIECES	DESCRIPTION DESCRIPTION	MH	E	EP			REMARKS REMARQUES
1	6AU–11411–00	CRANKSHAFT VILEBREQUIN COMPLET	1	1	1			
2	68T–11416–01	PLANE BEARING, CRANKSHAFT 1 COUSSINET DE VILEBREQUIN 1	4	4	4			UR BROWN UR BROWN
	68T–11416–11	PLANE BEARING, CRANKSHAFT 1 COUSSINET DE VILEBREQUIN 1	4	4	4			UR BLACK UR BLACK
	68T–11416–21	PLANE BEARING, CRANKSHAFT 1 COUSSINET DE VILEBREQUIN 1	4	4	4			UR BLUE UR BLUE
3	6AU–11650–00	CONNECTING ROD ASSY BIELLE COMPLETTE	2	2	2			
4	67D–11654–00	.BOLT, CONNECTING ROD .BOULON, BIELLE	2	2	2			
5	6AU–11631–00–96	PISTON (STD) PISTON (STD)	2	2	2			
	6AU–11635–00	PISTON (0.25MM O/S) PISTON (0.25MM O/S)	2	2	2			AP AP
	6AU–11636–00	PISTON (0.50MM O/S) PISTON (0.50MM O/S)	2	2	2			AP AP
6	68T–11603–01	PISTON RING SET (STD) JEU DE SEGMENTS (STD)	2	2	2			
	68T–11604–01	PISTON RING SET (0.25MM O/S) JEU DE SEGMENTS (0.25MM O/S)	2	2	2			AP AP
	68T–11605–01	PISTON RING SET (0.50MM O/S) JEU DE SEGMENTS (0.50MM O/S)	2	2	2			AP AP
7	68T–11633–00	PIN, PISTON AXE, PISTON	2	2	2			
8	93450–15023	CIRCLIP CIRCLIP, TYPE S	4	4	4			
9	93102–30M22	OIL SEAL JOINT SPY	1	1	1			
10	93101–25M69	OIL SEAL JOINT SPY	1	1	1			

FIG. 5 CYLINDER & CRANKCASE 2 CYLINDRE & CARTER 2

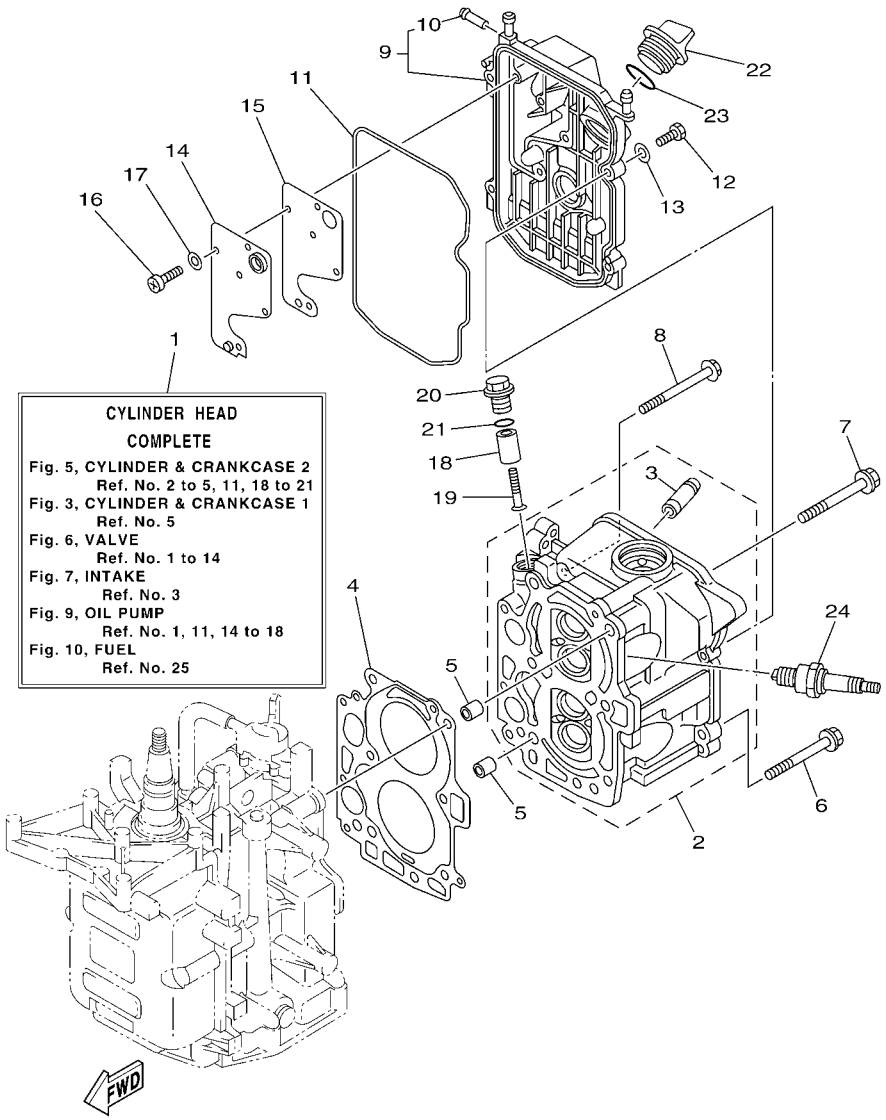

REF. NO.	PART NO. N° PIECES	DESCRIPTION DESCRIPTION	MH	E	EP			REMARKS REMARQUES
1	6AU–W009A–01–1S	CYLINDER HEAD COMPLETE CULASSE (ENS.)	1	1	1			
2	6AU–11111–00–1S	HEAD, CYLINDER 1 CULASSE	1	1	1			
3	6AU–11133–10	.GUIDE, VALVE 1 .GUIDE, SOUPAPE 1	4	4	4			
4	68T–11181–00	GASKET, CYLINDER HEAD 1 JOINT, DE CULASSE 1	1	1	1			
5	99530–10114	PIN, DOWEL GOUJON, D'ASSEMBLAGE	2	2	2			
6	90105–08M36	BOLT, FLANGE BOULON	2	2	2			
7	90105–08M78	BOLT, FLANGE BOULON	4	4	4			
8	90119–06049	BOLT, WITH WASHER BOULON, AVEC RONDELLE	3	3	3			
9	68T–11191–00–1S	COVER, CYLINDER HEAD 1 COUVERCLE, CULASSE 1	1	1	1			
10	650–24378–00	.PIPE, JOINT 4 .DURITE RACCORDEMENT 3	1	1	1			
11	68T–11356–00	SEAL, CYLINDER 2 JOINT, SPY CYLINDRE	1	1	1			
12	97095–06020	BOLT BOULON	4	4	4			
13	92995–06600	WASHER RONDELLE	4	4	4			
14	68T–11168–00	COVER, BREATHER COUVERCLE, RENIFLARD	1	1	1			
15	68T–11169–A0	GASKET, BREATHER COVER JOINT, COUVERCLE DE RENIFLARD	1	1	1			
16	98507–04010	SCREW, PAN HEAD VIS, TETE TRONCONIQUE	5	5	5			
17	92907–04600	WASHER RONDELLE	5	5	5			
18	6G8–11325–00	ANODE ANODE	1	1	1			
19	98980–05025	SCREW, BIND VIS, DE PRESSION	1	1	1			
20	6G8–11197–A0	PLUG, BLIND PLOT, BORGNE	1	1	1			
21	93210–13M63	O-RING JOINT TORIQUE	1	1	1			
22	6G8–15363–00	PLUG, OIL PLOT, HUILE	1	1	1			
23	93210–24M79	O-RING JOINT TORIQUE	1	1	1			
24	94702–00274	PLUG, SPARK (NGK BR6HS-10) BOUGIE D'ALLUMAGE(NGK BR6HS-10	2	2	2			

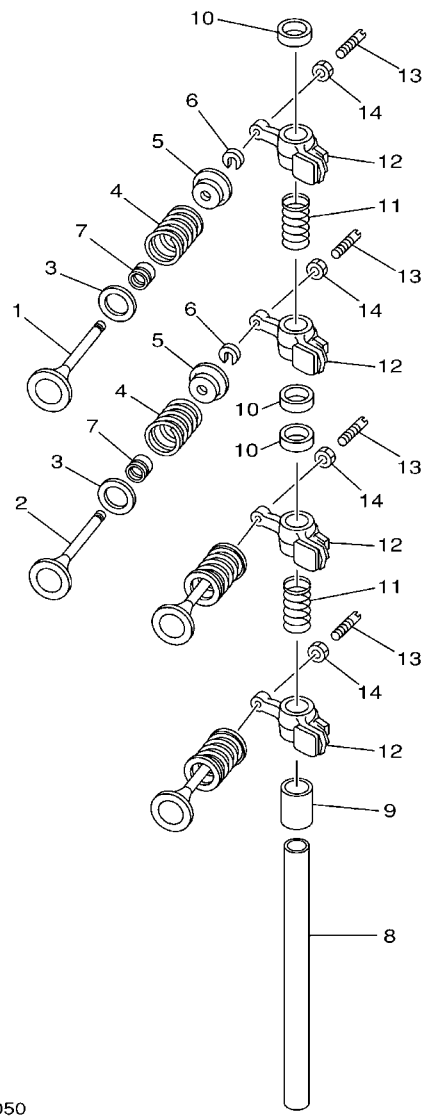

FIG. 6 VALVE SOUPAPE

REF. NO.	PART NO. N° PIECES	DESCRIPTION DESCRIPTION	MH	E	EP			REMARKS REMARQUES
1	6AU–12111–00	VALVE, INTAKE SOUPAPE, ADMISSION	2	2	2			
2	6AU–12121–00	VALVE, EXHAUST SOUPAPE, ECHAPPEMENT	2	2	2			
3	68T–12116–00	SEAT, VALVE SPRING SIEGE, RESSORT DE SOUPAPE	4	4	4			
4	60R–12113–00	SPRING, VALVE INNER RESSORT DE SOUPAPE, INTERNE	4	4	4			
5	7NJ–12117–00	RETAINER, VALVE SPRING BUTEE DE RESSORT DE SOUPAPE	4	4	4			
6	7NJ–12118–00	LOCK, VALVE SPRING RETAINER FRAISE, SOUPAPE	4	4	4			
7	51Y–12119–00	SEAL, VALVE STEM JOINT, QUEUE DE SOUPAPE	4	4	4			
8	68T–12146–00	SHAFT, ROCKER AXE, CULBUTEUR	1	1	1			
9	90387–13M56	COLLAR COLLERETTE	1	1	1			
10	90387–14M03	COLLAR COLLERETTE	3	3	3			
11	90501–12M40	SPRING, COMPRESSION RESSORT, COMPRESSION	2	2	2			
12	68T–12151–00	ARM, VALVE ROCKER CULBUTEUR	4	4	4			
13	6G8–12159–00	SCREW, VALVE ADJUSTING VIS, REGLAGE DE SOUPAPE	4	4	4			
14	6G8–12158–00	NUT, LOCK CONTRE-ECROU	4	4	4			

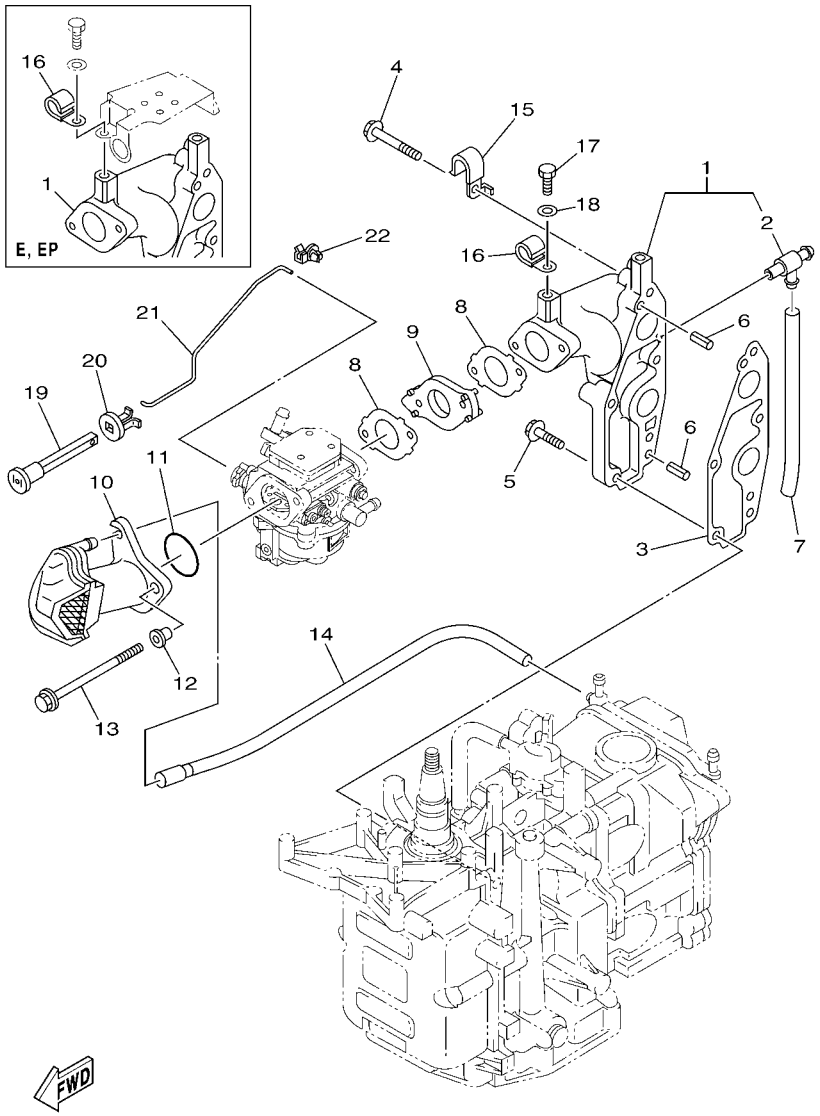

6EA1300-M070

FIG. 7 INTAKE — ADMISSION

REF. NO.	PART NO. N° PIECES	DESCRIPTION DESCRIPTION	MH	E	EP			REMARKS REMARQUES
1	68T–13641–20–1S	MANIFOLD, INTAKE 1 TUBULURE, ADMISSION 1	1	1	1			FLUSHING KIT FLUSHING KIT
2	67F–12482–00	.PIPE 2 .DURITE 2	1	1	1			
3	68T–13645–00	GASKET, MANIFOLD 1 JOINT, TUBULURE 1	1	1	1			
4	90119–06MA5	BOLT, WITH WASHER BOULON, AVEC RONDELLE	3	3	3			
5	90119–06MA3	BOLT, WITH WASHER BOULON, AVEC RONDELLE	2	2	2			
6	91690–50014	PIN, SPRING AGRAFFE	2	2	2			
7	90445–09M20	HOSE (L95) DURITE (L95)	1	1	1			FLUSHING KIT FLUSHING KIT
8	68T–13646–A0	GASKET, MANIFOLD 2 JOINT, TUBULURE 2	2	2	2			
9	68T–14271–00	INSULATOR ISOLATEUR	1	1	1			
10	6AU–14440–00	SILENCER ASSY, INTAKE SIENCIEUX D'ADMISSION	1	1	1			
11	93210–31MJ5	O-RING JOINT TORIQUE	1	1	1			
12	90387–06M70	COLLAR COLLERETTE	2	2	2			
13	90105–06188	BOLT, FLANGE BOULON	2	2	2			
14	68T–12483–00	PIPE 3 DURITE 3	1	1	1			
15	90465–08M99	CLAMP BRIDE	1	1	1			
16	90465–08M83	CLAMP BRIDE	1	1	1			FLUSHING KIT FLUSHING KIT
17	97095–06010	BOLT BOULON	1					FLUSHING KIT FLUSHING KIT
18	92995–06600	WASHER RONDELLE	1					FLUSHING KIT FLUSHING KIT
19	6H4–41271–02	KNOB, CHOKE BOUTON DE STARTER	1					
20	689–41273–00	GROMMET PASSE-FIL	1					
21	68T–41256–00	ROD, CHOKE 1 TRINGLE 1, STARTER	1					
22	6J8–41262–00	JOINT, CHOKE LEVER RACCORD, LEVIER DE STARTER	1					

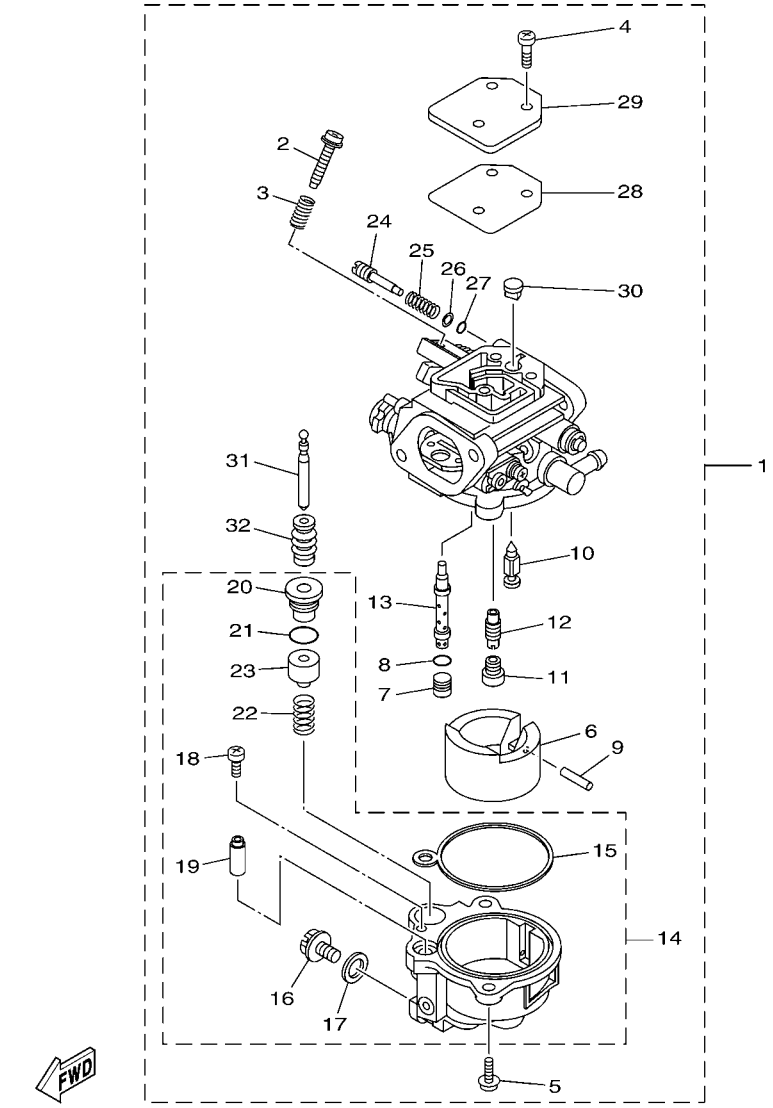

6DR1700-M080

FIG. 8 CARBURETOR CARBURATEUR

REF. NO.	PART NO. N° PIECES	DESCRIPTION DESCRIPTION	MH	E	EP			REMARKS REMARQUES
1	6DR–14301–20	CARBURETOR ASSY 1 CARBURATEUR COMPLET 1	1					
	6DR–14301–50	CARBURETOR ASSY 1 CARBURATEUR COMPLET 1		1	1			
2	69W–14321–00	.SCREW, THROTTLE .VIS, ACCELERATEUR	1	1	1			
3	62Y–14212–00	.SPRING, PILOT ADJUSTING .RESSORT, VIS DE RALENTI	1	1	1			
4	6DR–14321–00	.SCREW, THROTTLE .VIS, ACCELERATEUR	3	3	3			
5	62Y–14321–00	.SCREW, THROTTLE .VIS, ACCELERATEUR	2	2	2			
6	6DR–14385–00	.FLOAT .FLOTTEUR	1	1	1			
7	6DR–1432A–00	.PLUG .PLOT	1	1	1			
8	6DR–14561–00	.O-RING .JOINT TORIQUE	1	1	1			
9	4FP–14386–00	.PIN, FLOAT .AXE, FLOTTEUR	1	1	1			
10	6DR–14336–00	.NEEDLE .AIGUILLE	1	1	1			
11	6DR–14343–45	.JET, MAIN (#90) .GICLEUR, PRINCIPAL (#90)	1	1	1			
12	6DR–14342–71	.JET, PILOT (#43) .GICLEUR, RALENTI (#43)	1	1	1			
13	6DR–14341–00	.NOZZLE, MAIN .PUITS D'AIGUILLE	1	1	1			
14	6DR–14381–00	.BODY, FLOAT CHAMBER .CORPS, CUVE DE FLOTTEUR	1	1	1			
15	6DR–14984–00	..GASKET, FLOAT CHAMBER ..JOINT, CUVE DE FLOTTEUR	1	1	1			
16	62Y–14383–30	..SCREW, DRAIN ..BOUCHON, PURGE	1	1	1			
17	652–14397–00	..O-RING ..JOINT TORIQUE	1	1	1			
18	6DR–14216–00	..SCREW ..VIS	1	1	1			
19	6DR–14860–00	..CHECK VALVE ASSY ..SOUPAPE, RETENUE COMPLET	1	1	1			
20	6DR–14680–00	..STOPPER ..BUTEE	1	1	1			
21	6DR–14147–00	..O-RING ..JOINT TORIQUE	1	1	1			
22	6DR–14335–00	..SPRING, PLUNGER ..RESSORT, PLONGEUR	1	1	1			
23	6DR–14371–00	..PLUNGER, STARTER ..PLONGEUR, STARTER	1	1	1			
24	6DR–14323–10	.SCREW, AIR ADJUSTING .VIS DE DOSEUR D'AIR	1	1	1			
25	6DR–14334–00	.SPRING, AIR ADJUSTING .RESSORT, VIS DE DOSEUR D'AIR	1	1	1			
26	6DR–14285–00	.WASHER .RONDELLE	1	1	1			

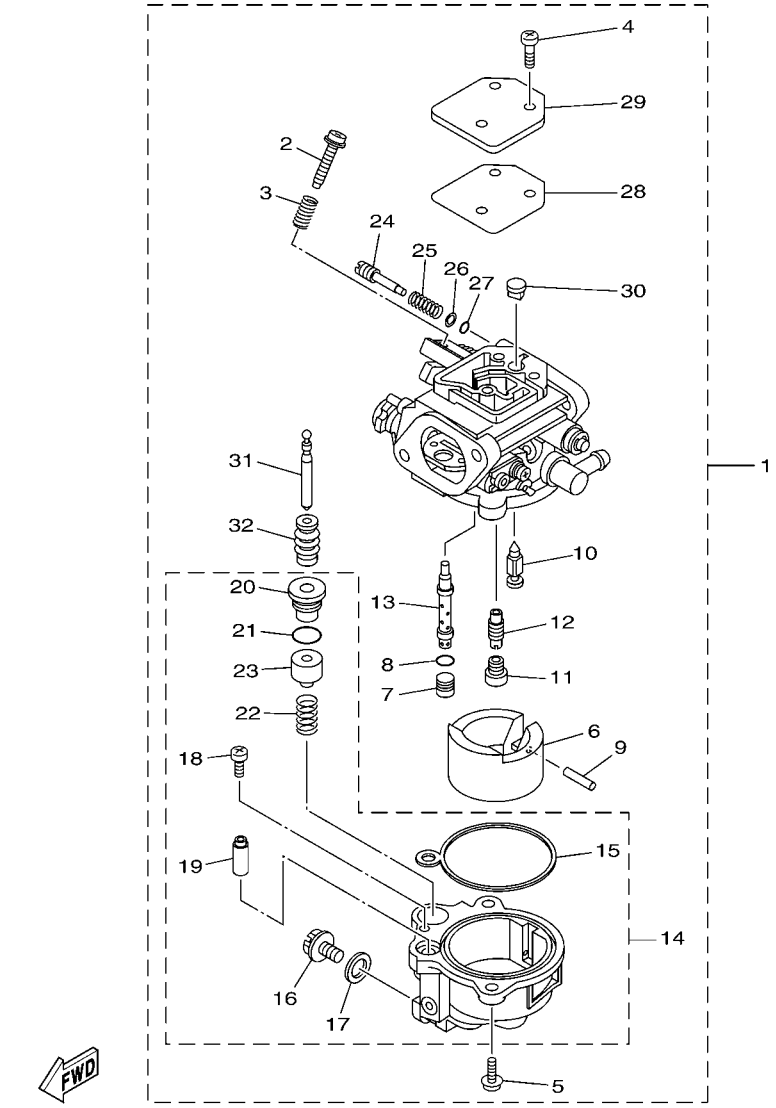

6DR1700-M080

FIG. 8 CARBURETOR CARBURATEUR

REF. NO.	PART NO. N° PIECES	DESCRIPTION DESCRIPTION	MH	E	EP			REMARKS REMARQUES
27	6DR–14397–00	.O-RING .JOINT TORIQUE	1	1	1			
28	6DR–14818–00	.COVER GASKET .JOINT DE COURERCLE	1	1	1			
29	6DR–14157–00	.COVER, MIXING .COUVERCLE DE CHAMBRE	1	1	1			
30	6DR–14862–00	.PLUG .PLOT	1	1	1			
31	6DR–14379–00	.ROD, STARTER .TRINGLE, STARTER	1	1	1			
32	6DR–14373–00	.COVER, PLUNGER CAP .COUVERCLE DE PLONGEUR	1	1	1			

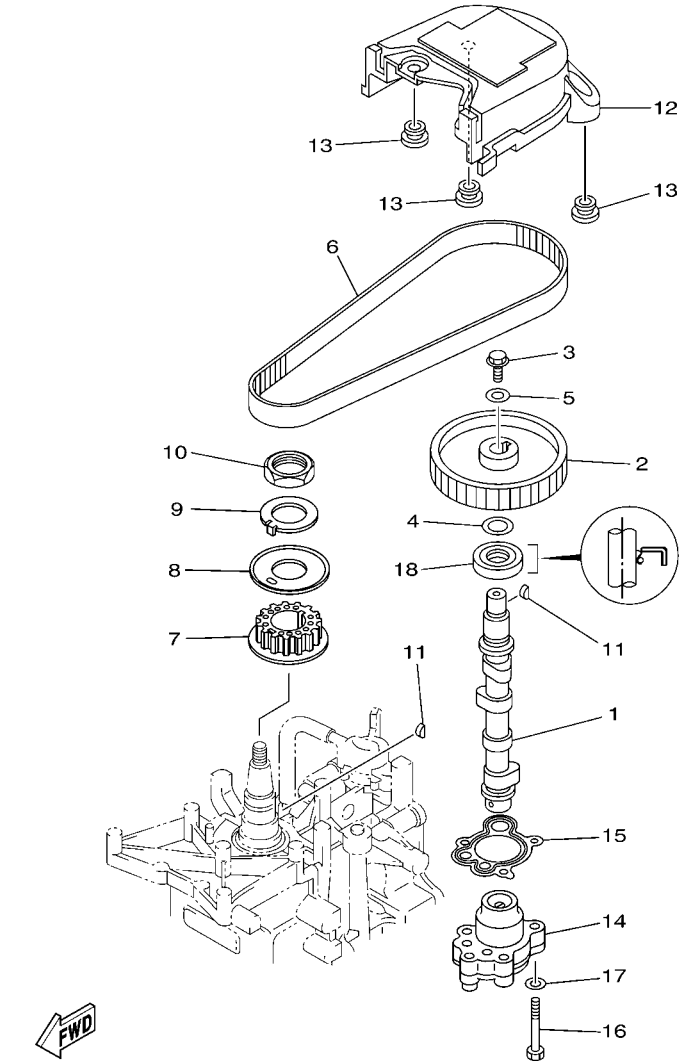

6DR1200-M090

FIG. 9 OIL PUMP — POMPE A HUILE

REF. NO.	PART NO. N° PIECES	DESCRIPTION DESCRIPTION	MH	E	EP			REMARKS REMARQUES
1	68T–12171–00	CAMSHAFT 1 ARBRE A CAMES 1	1	1	1			
2	66M–11537–00–94	GEAR, DRIVEN PIGNON SECONDAIRE	1	1	1			
3	90105–06M14	BOLT FLANGE BOULON	1	1	1			
4	90201–13201	WASHER, PLATE RONDELLE, PLATE	1	1	1			
5	90201–06M94	WASHER, PLATE RONDELLE, PLATE	1	1	1			
6	68T–46241–00	BELT COURROIE TRAPEZOIDALE	1	1	1			
7	68T–11536–00	GEAR, DRIVE ENGRENAGE, MENANT	1	1	1			
8	68T–11557–00	WASHER 1 RONDELLE 1	1	1	1			
9	6G8–11587–01	WASHER, LOCK RONDELLE, FREIN	1	1	1			
10	90170–24M09	NUT ECROU	1	1	1			
11	90280–03M01	KEY, WOODRUFF CLAVETTE, DEMI-LUNE	2	2	2			
12	6AU–46297–00	COVER, DUST COUVERCLE, POUSSIERE	1	1	1			
13	90480–10627	GROMMET PASSE-FIL	3	3	3			
14	68T–13300–00	OIL PUMP ASSY POMPE A HUILE COMPLETE	1	1	1			
15	68T–13329–00	GASKET, PUMP COVER JOINT, COUVERCLE DE POMPE	1	1	1			
16	97095–06030	BOLT BOULON	3	3	3			
17	92995–06600	WASHER RONDELLE	3	3	3			
18	93102–18M21	OIL SEAL JOINT SPY	1	1	1			

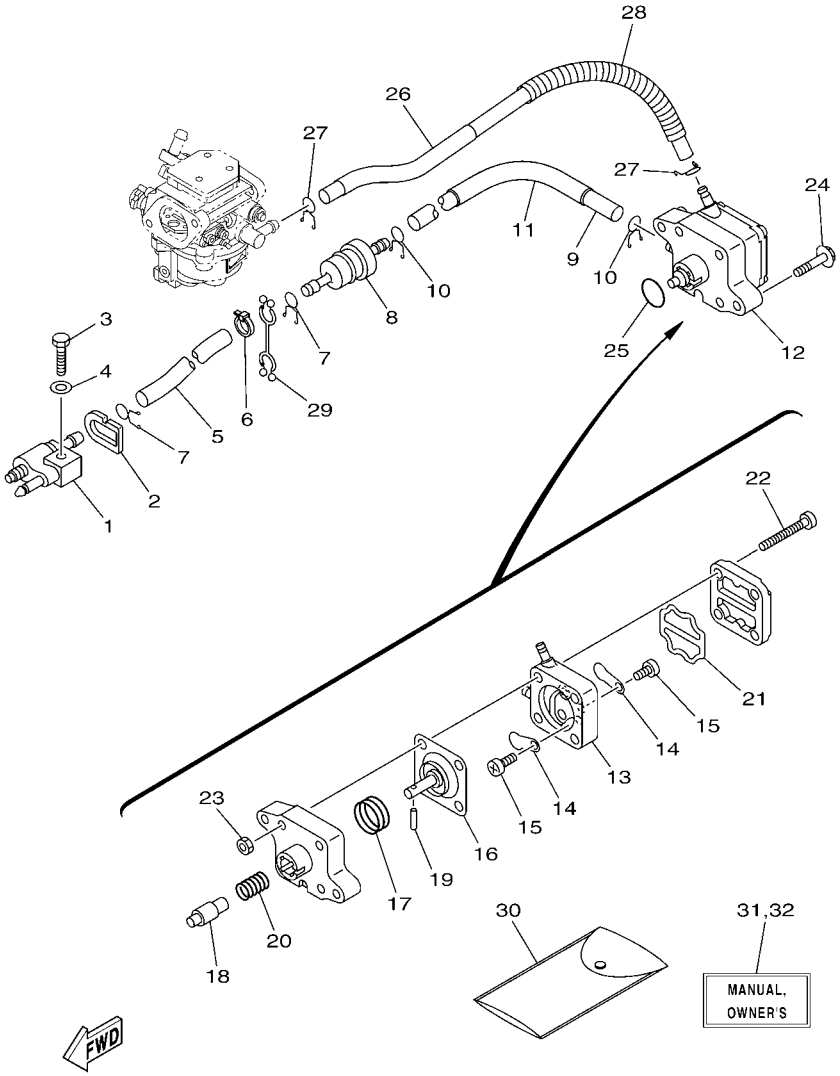

FIG. 10 FUEL CARBURANT

REF. NO.	PART NO. N° PIECES	DESCRIPTION DESCRIPTION	MH	E	EP			REMARKS REMARQUES
1	6G1–24304–02	FUEL PIPE JOINT COMP. 1 DURITE RACCORDEMT. A ESSENCE	1	1	1			
2	61N–24329–00	SEAL JOINT	1	1	1			
3	97095–06025	BOLT BOULON	1	1	1			
4	92995–06600	WASHER RONDELLE	1	1	1			
5	90445–10046	HOSE (L295) DURITE (L295)	1	1	1			
6	90465–11M10	CLAMP BRIDE	1	1	1			
7	90467–09M09	CLIP JONC	2	2	2			
8	68T–24251–01	STRAINER 1 FILTRE 1	1	1	1			
9	90445–10M50	HOSE (L170) DURITE (L170)	1	1	1			
10	90467–09M09	CLIP JONC	2	2	2			
11	90445–16010	HOSE (L140) DURITE (L140)	1	1	1			
12	68T–24410–01	FUEL PUMP ASSY POMPE A ESSENCE	1	1	1			
13	66M–24413–01	.BODY 2 .CORPS 2	1	1	1			
14	6A0–24421–01	.VALVE, CHECK .SOUPAPE, RETENUE	2	2	2			
15	6E7–14325–00	.SCREW, PAN HEAD .VIS TETE CONIQUE	2	2	2			
16	66M–24411–01	.DIAPHRAGM .DIAPHRAGME	1	1	1			
17	66M–24423–00	.SPRING, DIAPHRAGM .RESSORT, DIAPHRAGME	1	1	1			
18	66M–13131–00	.PLUNGER .PLONGEUR	1	1	1			
19	66M–24374–00	.PIN .GOUPILLE	1	1	1			
20	66M–24454–00	.SPRING .RESSORT	1	1	1			
21	66M–24471–01	.DIAPHRAGM .DIAPHRAGME	1	1	1			
22	66M–24444–00	.SCREW .VIS	4	4	4			
23	95380–04600	.NUT .ECROU	4	4	4			
24	97595–06630	BOLT, WITH WASHER VIS HEXAGONAL AVC RONDELLE	2	2	2			
25	93210–20M65	O-RING JOINT TORIQUE	1	1	1			
26	6AU–24311–00	PIPE, FUEL 1 DURITE A ESSENCE	1	1	1			
27	90467–09M09	CLIP JONC	2	2	2			

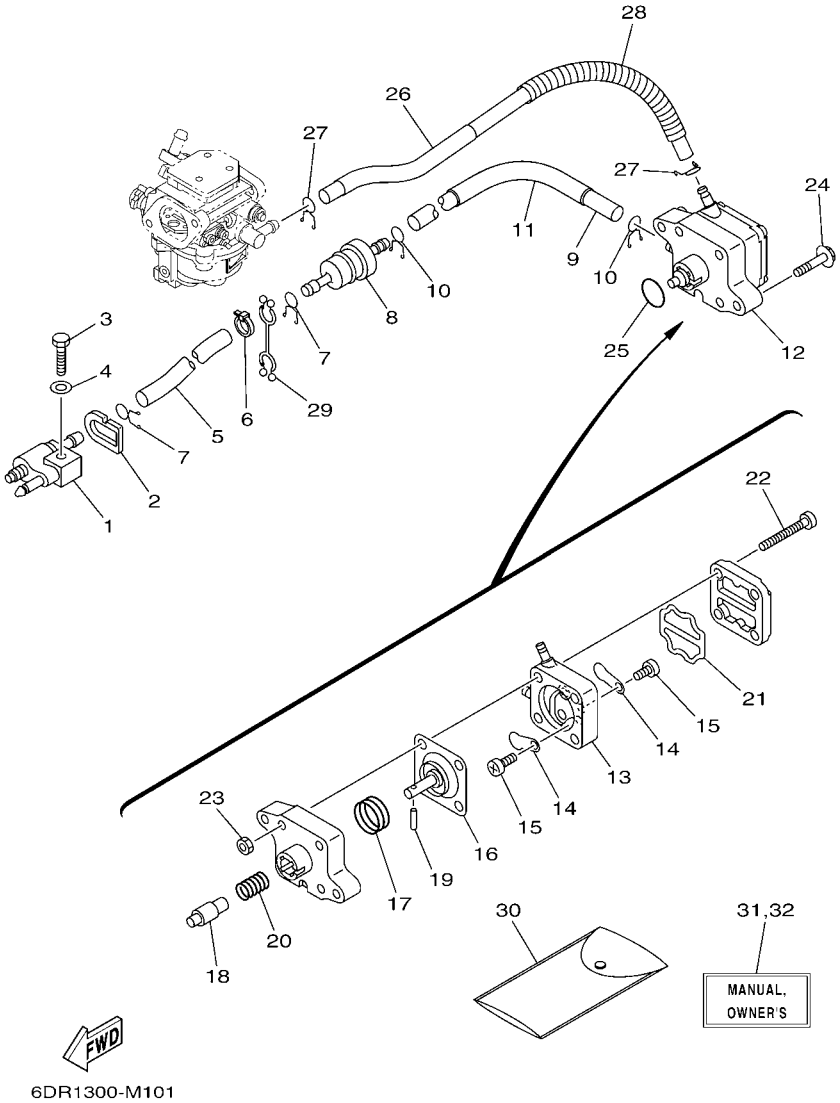

FIG. 10 FUEL CARBURANT

REF. NO.	PART NO. N° PIECES	DESCRIPTION DESCRIPTION	MH	E	EP			REMARKS REMARQUES
28	90447–13014	TUBE DURITE	1	1	1			
29	90464–10M53	CLAMP BRIDE	1	1	1			
30	68T–28100–00	TOOL KIT TROUSSE A OUTILS	1	1	1			AP AP
31	6DR–28199–72–E0	MANUAL,OWNER'S MANUEL D'UTILISATION	1	1	1			UR (E) UR (E)
	6DR–28199–72–F0	MANUAL,OWNER'S MANUEL D'UTILISATION	1	1	1			UR (F) UR (F)
	6DR–28199–72–S0	MANUAL,OWNER'S MANUEL D'UTILISATION	1	1	1			UR (ES) UR (ES)
	6DR–28199–72–G0	MANUAL,OWNER'S MANUEL D'UTILISATION	1	1	1			UR (D) UR (D)
	6DR–28199–72–D0	MANUAL,OWNER'S MANUEL D'UTILISATION	1	1	1			UR (NL) UR (NL)
	6DR–28199–72–H0	MANUAL,OWNER'S MANUEL D'UTILISATION	1	1	1			UR (I) UR (I)
32	6DR–28199–82–K0	MANUAL,OWNER'S MANUEL D'UTILISATION	1	1	1			UR (DK) UR (DK)
	6DR–28199–82–R0	MANUAL,OWNER'S MANUEL D'UTILISATION	1	1	1			UR (GR) UR (GR)
	6DR–28199–82–P0	MANUAL,OWNER'S MANUEL D'UTILISATION	1	1	1			UR (P) UR (P)
	6DR–28199–82–N0	MANUAL,OWNER'S MANUEL D'UTILISATION	1	1	1			UR (N) UR (N)
	6DR–28199–82–M0	MANUAL,OWNER'S MANUEL D'UTILISATION	1	1	1			UR (S) UR (S)
	6DR–28199–82–L0	MANUAL,OWNER'S MANUEL D'UTILISATION	1	1	1			UR (SF) UR (SF)

FIG. 11 STARTER DEMARREUR

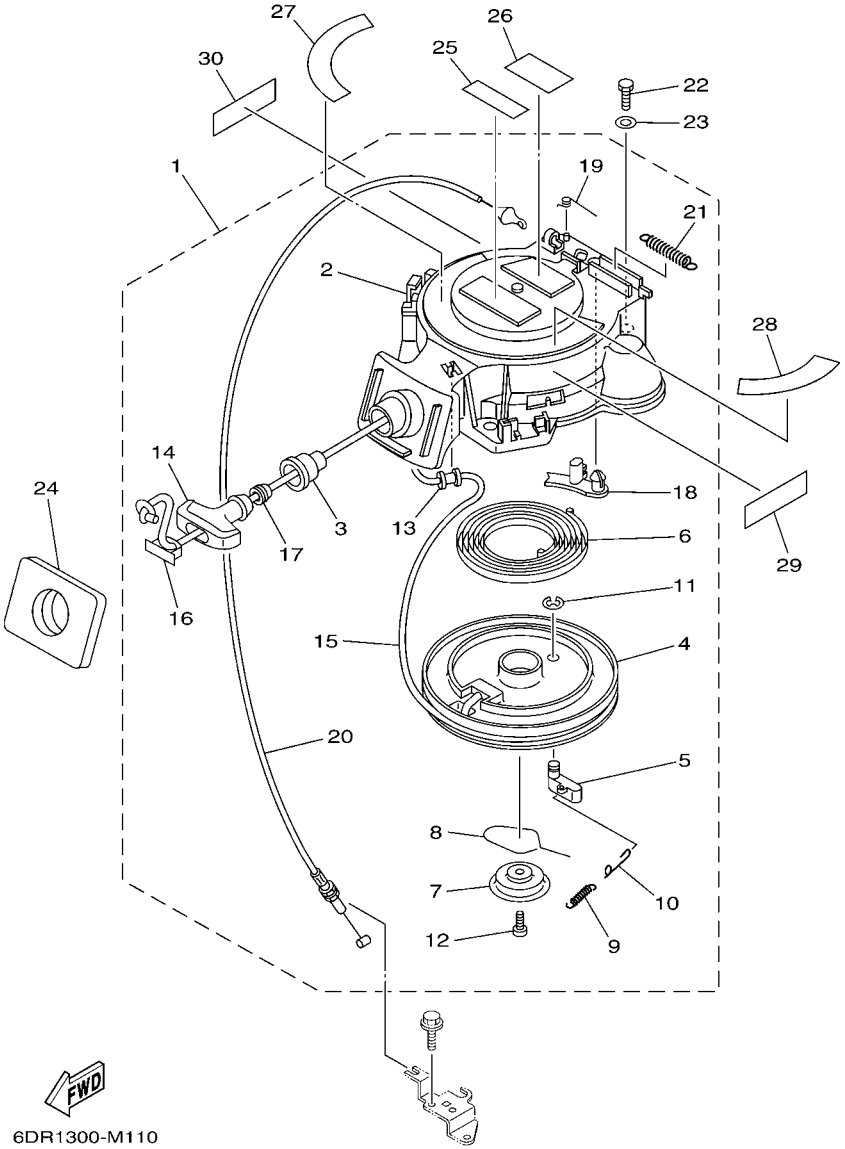

*1:CUT FROM 50M ROLLS,PART NO.90890-44373,CUTTING LENGTH 1.8M

*1:A PRELEVER SUR BOBINE 50M ,REFERENCE 90890-44373,
LONGUEUR DE COUPE 1.8M

REF. NO.	PART NO. N° PIECES	DESCRIPTION DESCRIPTION	MH	E	EP			REMARKS REMARQUES
1	68T–15710–13	STARTER ASSY DEMARREUR COMPLET	1					
2	68T–15711–03	.CASE, STARTER .CARTER DE DEMARREUR	1					
3	68T–15795–00	.GUIDE, ROPE .GUIDE DE CABLE	1					
4	63V–15714–00	.DRUM, SHEAVE .TAMBOUR, POULIE	1					
5	63V–15741–00	.PAWL, DRIVE .CLIQUET, ENTRAINEMENT	1					
6	63V–15713–00	.SPRING, STARTER .RESSORT DE DEMARREUR	1					
7	68T–15716–00	.PLATE, DRIVE .PLAQUE, ENTRAINEMENT	1					
8	63V–15705–01	.SPRING, DRIVE PAWL .RESSORT DE CLIQUET	1					
9	63V–15767–01	.SPRING .RESSORT	1					
10	68T–15784–00	.SPRING, RETURN .RESSORT, RAPPEL	1					
11	63V–15744–00	.CIRCLIP .CIRCLIP	1					
12	68T–15793–00	.SCREW .VIS	1					
13	68T–15764–00	.COLLAR 1 .COLLERETTE 1	1					
14	6G1–15755–00	.HANDLE, STARTER .POIGNEE, DE DEMARREUR	1					
15	*	.WIRE, STARTER (L:1800MM) .CABLE DE DEMARREUR (L:1800MM)	1					*1 *1
16	6G1–15779–00	.COVER .COUVERCLE	1					
17	6A0–15789–00	.DAMPER .AMORTISSEUR	1					
18	68T–15794–00	.STOPPER .BUTEE	1					
19	66T–15734–00	.SPRING, RETURN .RESSORT, RAPPEL	1					
20	68T–15770–00	.CABLE COMP., STARTER STOP .CABLE, BUTEE DE DEMAR	1					
21	66T–15731–00	.SPRING, RETURN .RESSORT, RAPPEL	1					
22	97095–06020	BOLT BOULON	3					
23	92995–06600	WASHER RONDELLE	3					
24	68T–15762–00	SEAL, RUBBER 2 JOINT CAOUTCHOUC 2	1					
25	6EE–81995–40	LABEL, WARNING ETIQUETTE, AVERTISSEMENT	1					
26	6EE–81995–50	LABEL, WARNING ETIQUETTE, AVERTISSEMENT	1					
27	6AU–13437–60	MARK, CAUTION MAKER	1					

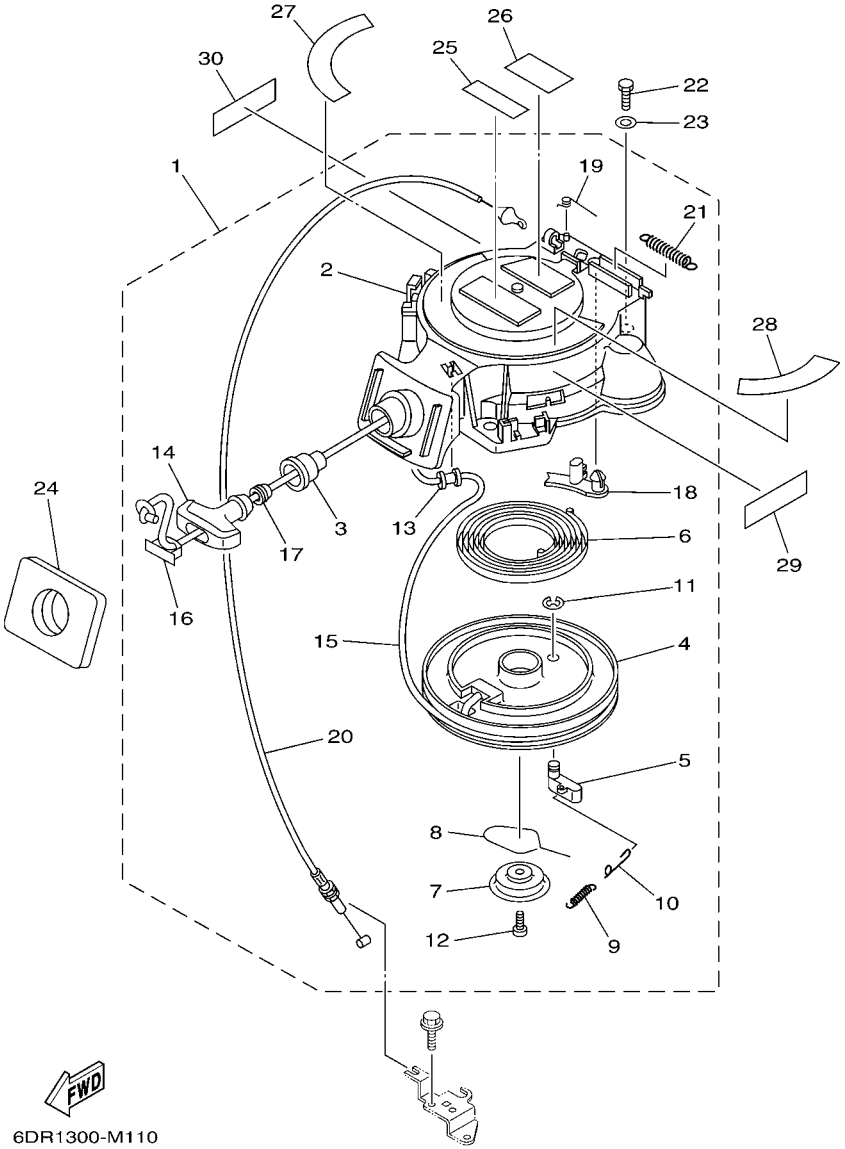

*1:CUT FROM 50M ROLLS,PART NO.90890-44373,CUTTING LENGTH 1.8M

*1:A PRELEVER SUR BOBINE 50M ,REFERENCE 90890-44373,
LONGUEUR DE COUPE 1.8M

FIG. 11 STARTER DEMARREUR

REF. NO.	PART NO. N° PIECES	DESCRIPTION DESCRIPTION	MH	E	EP			REMARKS REMARQUES
28	68T–85711–60	MARK, CAUTION MAKER	1					
29	6EE–81994–40	LABEL, SAFETY ETIQUETTE, SECURITE	1					
30	6EE–81994–50	LABEL, SAFETY ETIQUETTE, SECURITE	1					

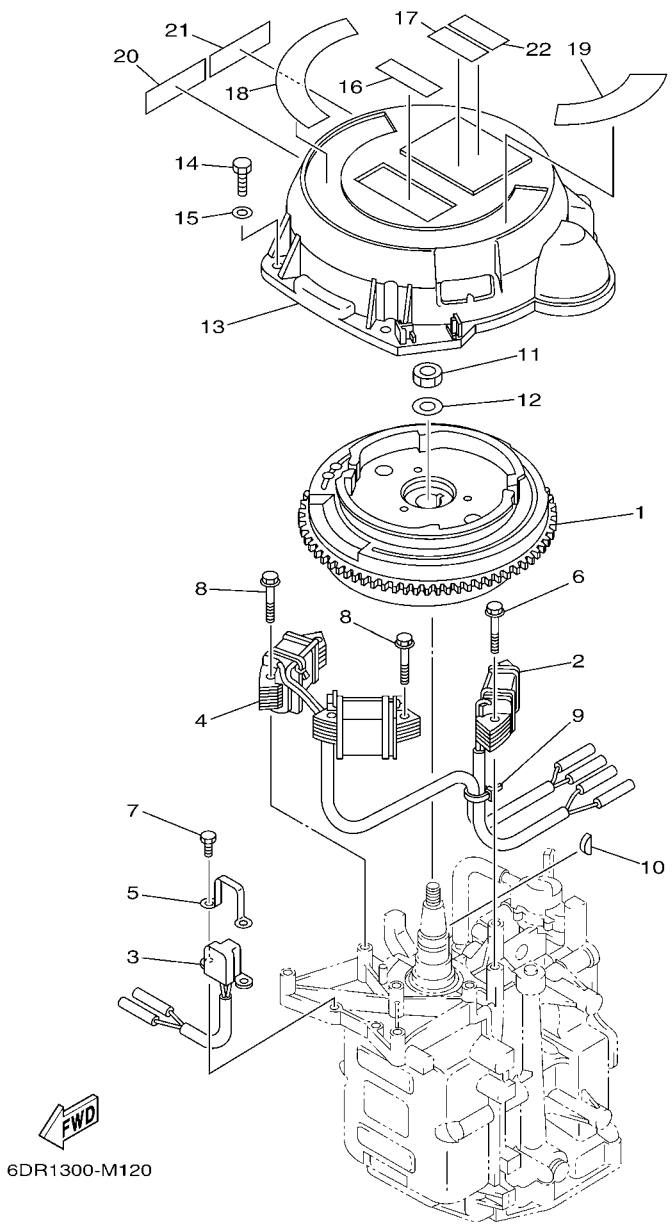

FIG. 12 GENERATOR GENERATRICE

REF. NO.	PART NO. N° PIECES	DESCRIPTION DESCRIPTION	MH	E	EP			REMARKS REMARQUES
1	6DR–85550–10	ROTOR ASSY ROTOR CPLT	1	1	1			
2	68T–85520–00	COIL, CHARGE BOBINE, CHARGE	1	1	1			
3	68T–85580–01	COIL, PULSER BOBINE, PULSEUR	1	1	1			
4	68T–85533–10	COIL, LIGHTING BOBINE, ECLAIRAGE	1	1	1			
5	6H2–85582–00	ATTACHMENT, PULSER SUPPORT, PULSEUR	1	1	1			
6	90119–06014	BOLT, WITH WASHER BOULON, AVEC RONDELLE	2	2	2			
7	97095–05010	BOLT BOULON	2	2	2			
8	90119–06MA1	BOLT, WITH WASHER BOULON, AVEC RONDELLE	4	4	4			
9	90465–11M10	CLAMP BRIDE	1	1	1			
10	90280–04M06	KEY, WOODRUFF CLAVETTE, DEMI-LUNE	1	1	1			
11	90170–12066	NUT ECROU	1	1	1			
12	90201–12472	WASHER, PLATE RONDELLE, PLATE	1	1	1			
13	6AV–81337–00	COVER, FLYWHEEL COUVERCLE, VOLANT		1	1			
14	97095–06020	BOLT BOULON		3	3			
15	92995–06600	WASHER RONDELLE		3	3			
16	6EE–81995–40	LABEL, WARNING ETIQUETTE, AVERTISSEMENT		1	1			
17	6EE–81995–50	LABEL, WARNING ETIQUETTE, AVERTISSEMENT		1	1			
18	6AU–13437–60	MARK, CAUTION MAKER		1	1			
19	68T–85711–60	MARK, CAUTION MAKER		1	1			
20	6EE–81994–40	LABEL, SAFETY ETIQUETTE, SECURITE		1	1			
21	6EE–81994–50	LABEL, SAFETY ETIQUETTE, SECURITE		1	1			
22	6AG–81996–00	MARK MARQUE		1	1			

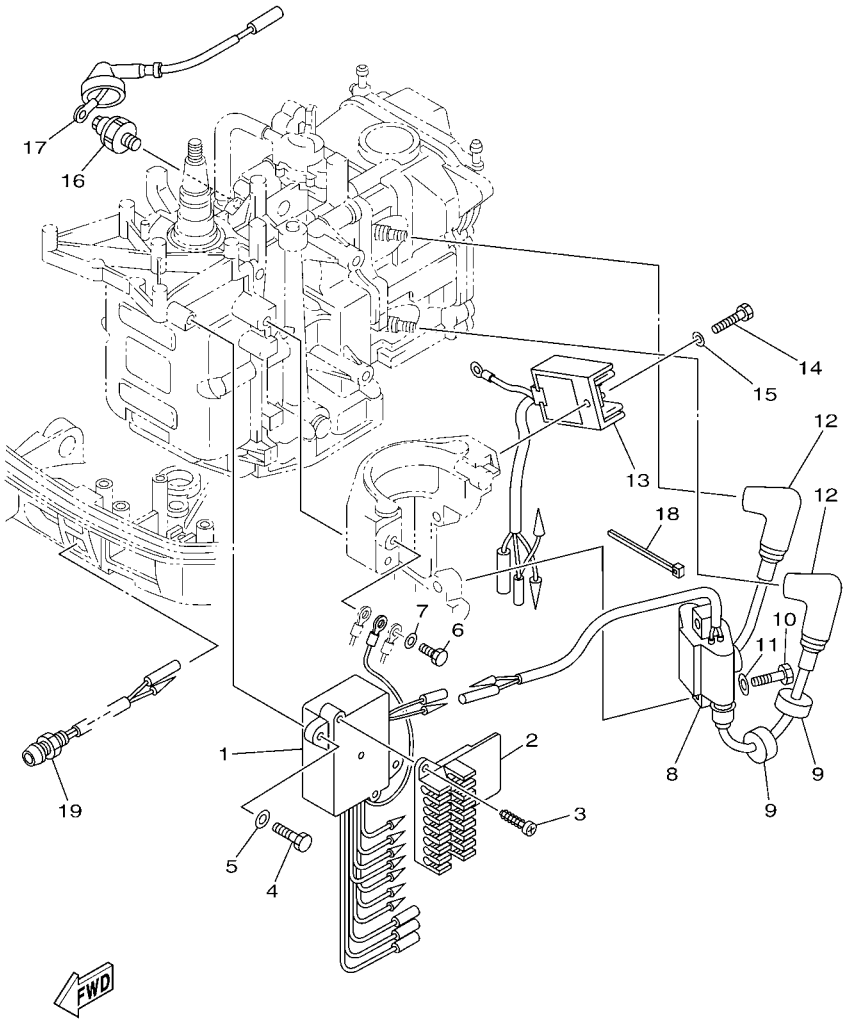

6DR1100-M130

FIG. 13 ELECTRICAL 1 — PARTIE ELECTRIQUE 1

REF. NO.	PART NO. N° PIECES	DESCRIPTION DESCRIPTION	MH	E	EP			REMARKS REMARQUES
1	68T–85540–00	C.D.I. UNIT ASSY BLOC C.D.I.	1	1	1			
2	68T–82522–00	CLAMP, COUPLER BRIDE, DE CONNECTEUR	1	1	1			
3	97780–40512	SCREW, TAPPING VIS, TETE BOMBEE	2	2	2			
4	97095–06020	BOLT BOULON	2	2	2			
5	92995–06600	WASHER RONDELLE	2	2	2			
6	97095–06012	BOLT BOULON	1	1	1			
7	92995–06600	WASHER RONDELLE	1	1	1			
8	680–85570–02	IGNITION COIL ASSY BOBINE D'ALLUMAGE (ENS.)	1	1	1			
9	90480–25003	GROMMET PASSE-FIL	3	3	3			
10	97095–06025	BOLT BOULON	2	2	2			
11	92995–06600	WASHER RONDELLE	2	2	2			
12	6E3–82370–21	PLUG CAP ASSY ANTIPARASITE	2	2	2			
13	68T–81960–00	RECTIFIER & REGULATOR ASSY REDRESSEUR REGULATEUR CPLT		1	1			
14	97095–06012	BOLT BOULON		1	1			
15	92995–06600	WASHER RONDELLE		1	1			
16	67F–82504–00	OIL PRESSURE SWITCH ASSY CONTACTEUR DE PRESSION D'HUILE	1	1	1			
17	68T–82127–10	WIRE, LEAD 2 FIL 2	1	1	1			
18	90465–11M10	CLAMP BRIDE	1	1	1			
19	68T–85410–00	EMERGENCY SIGNAL LIGHT ASSY FEU DE DETRESSE	1	1	1			

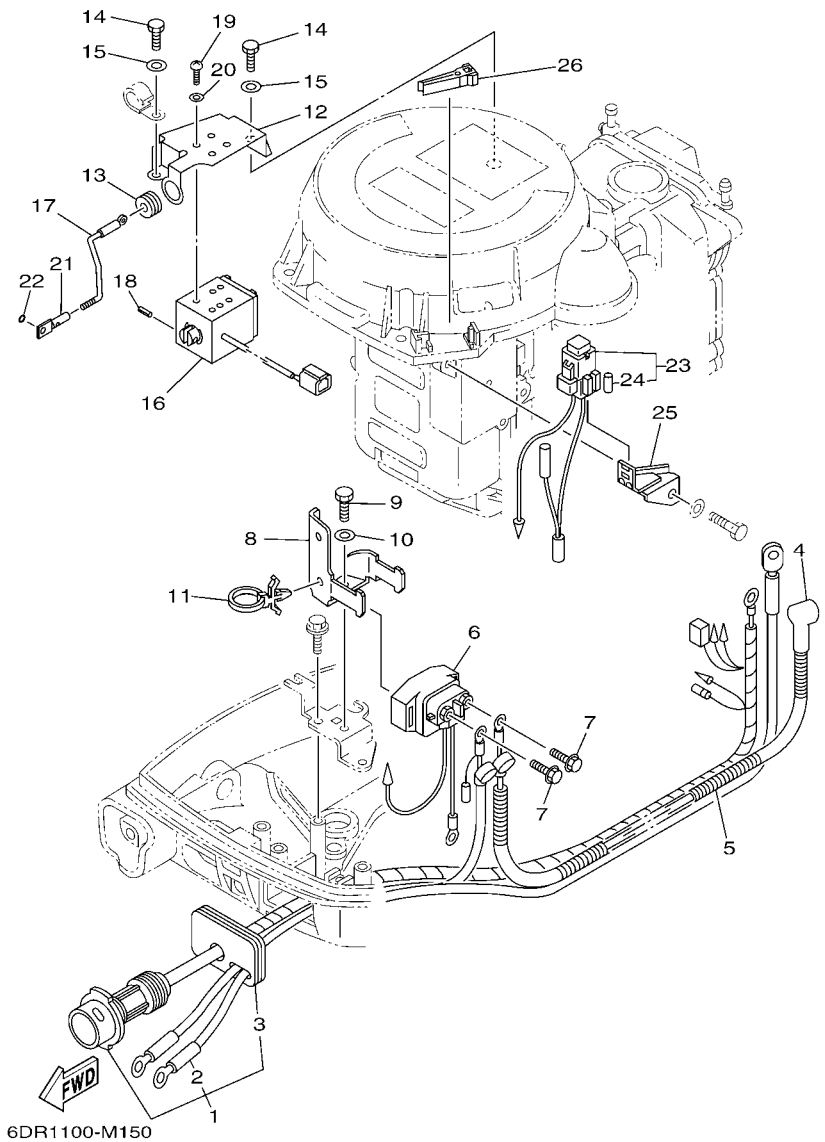

FIG. 14 ELECTRICAL 2 — PARTIE ELECTRIQUE 2

REF. NO.	PART NO. N° PIECES	DESCRIPTION DESCRIPTION	MH	E	EP			REMARKS REMARQUES
1	69G–82580–00	WIRE HARNESS ASSY 2 FAISCEAU DE FILS 2 CPLT		1				
2	69G–82105–01	.BATTERY CABLE (L: 3.0M) .CABLE DE BATTERIE (L: 3.0M)		1				
3	68T–42724–40	.GROMMET .PASSE-FIL		1				
4	6G8–82117–00	WIRE, LEAD FIL		1				
5	90446–10M86	HOSE (L140) DURITE (L140)		1				
6	68T–81940–00	STARTER RELAY ASSY LANCEUR RELAIS (ENS.)		1				
7	97595–06610	BOLT, WITH WASHER VIS HEXAGONAL AVC RONDELLE		2				
8	68T–81945–01	PLATE, SWITCH FITTING PLAQUE, FIXATION DU RELAIS		1				
9	97095–06012	BOLT BOULON		1				
10	92995–06600	WASHER RONDELLE		1				
11	90465–12M56	CLAMP BRIDE		1				
12	68T–86112–00	STAY, SOLENOID SUPPORT, SOLENOIDE		1				
13	90480–13018	GROMMET PASSE-FIL		1				
14	97095–06012	BOLT BOULON		2				
15	92995–06600	WASHER RONDELLE		2				
16	68T–86111–00	COIL, SOLENOID BOBINE		1				
17	68T–41237–00	JOINT, LINK RACCORD		1				
18	91690–30010	PIN, SPRING AGRAFFE		1				
19	97880–04008	SCREW, PAN HEAD VIS, TETE TRONCONIQUE		4				
20	92990–04600	WASHER, PLATE RONDELLE, PLATE		4				
21	68T–86117–00	HOOK, WIRE PULL CROCHET, TENSION DE CABLE		1				
22	93210–03261	O-RING JOINT TORIQUE		1				
23	68T–82150–00	FUSE HOLDER ASSY SUPPORT DE FUSIBLE		1				
24	66V–82151–00	.FUSE (10A-BL) .FUSIBLE (10A-BL)		2				
25	68T–82171–01	STAY, FUSE BOX SUPPORT, BOITE A FUSIBLES		1				
26	67F–2812A–00	PULLER, FUSE TENDEUR, FUSIBLE		1				

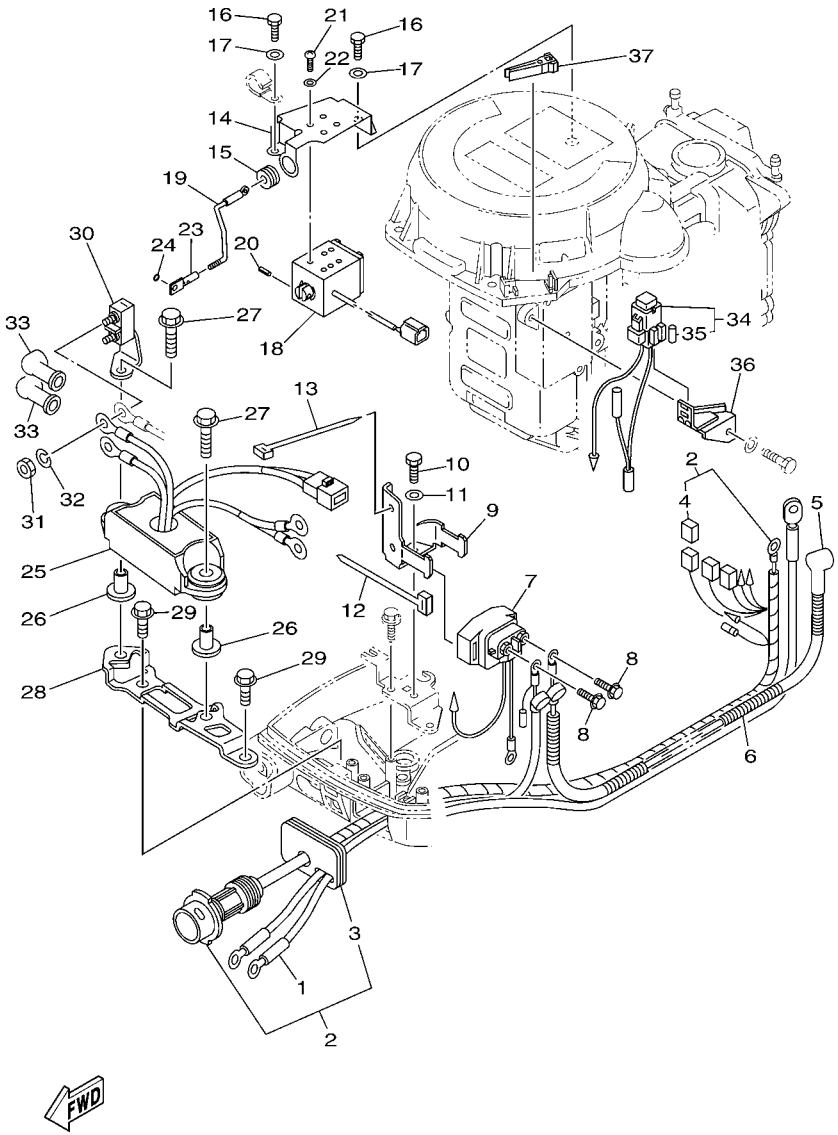

6EA1700-M140

FIG. 15 ELECTRICAL 3 — PARTIE ELECTRIQUE 3

REF. NO.	PART NO. N° PIECES	DESCRIPTION DESCRIPTION	MH	E	EP			REMARKS REMARQUES
1	69G–82105–01	BATTERY CABLE (L: 3.0M) CABLE DE BATTERIE (L: 3.0M)			1			
2	69G–82590–10	WIRE HARNESS ASSY FAISCEAU DE FILS COMPLET			1			
3	68T–42724–40	.GROMMET .PASSE-FIL			1			
4	6N6–82582–00	.COVER, WIRE HARNESS .COUVERCLE, FAISCEAU DE FILS			1			
5	6G8–82117–00	WIRE, LEAD FIL			1			
6	90446–10M86	HOSE (L140) DURITE (L140)			1			
7	68T–81940–00	STARTER RELAY ASSY LANCEUR RELAIS (ENS.)			1			
8	97595–06610	BOLT, WITH WASHER VIS HEXAGONAL AVC RONDELLE			2			
9	68T–81945–01	PLATE, SWITCH FITTING PLAQUE, FIXATION DU RELAIS			1			
10	97095–06012	BOLT BOULON			1			
11	92995–06600	WASHER RONDELLE			1			
12	90465–13M11	CLAMP BRIDE			1			
13	90465–13M11	CLAMP BRIDE			1			
14	68T–86112–00	STAY, SOLENOID SUPPORT, SOLENOIDE			1			
15	90480–13018	GROMMET PASSE-FIL			1			
16	97095–06012	BOLT BOULON			2			
17	92995–06600	WASHER RONDELLE			2			
18	68T–86111–00	COIL, SOLENOID BOBINE			1			
19	68T–41237–00	JOINT, LINK RACCORD			1			
20	91690–30010	PIN, SPRING AGRAFFE			1			
21	97880–04008	SCREW, PAN HEAD VIS, TETE TRONCONIQUE			4			
22	92990–04600	WASHER, PLATE RONDELLE, PLATE			4			
23	68T–86117–00	HOOK, WIRE PULL CROCHET, TENSION DE CABLE			1			
24	93210–03261	O-RING JOINT TORIQUE			1			
25	69G–81950–00	RELAY ASSY RELAIS COMPLET			1			
26	90387–06M03	COLLAR COLLERETTE			2			
27	90119–06M56	BOLT, WITH WASHER BOULON, AVEC RONDELLE			2			

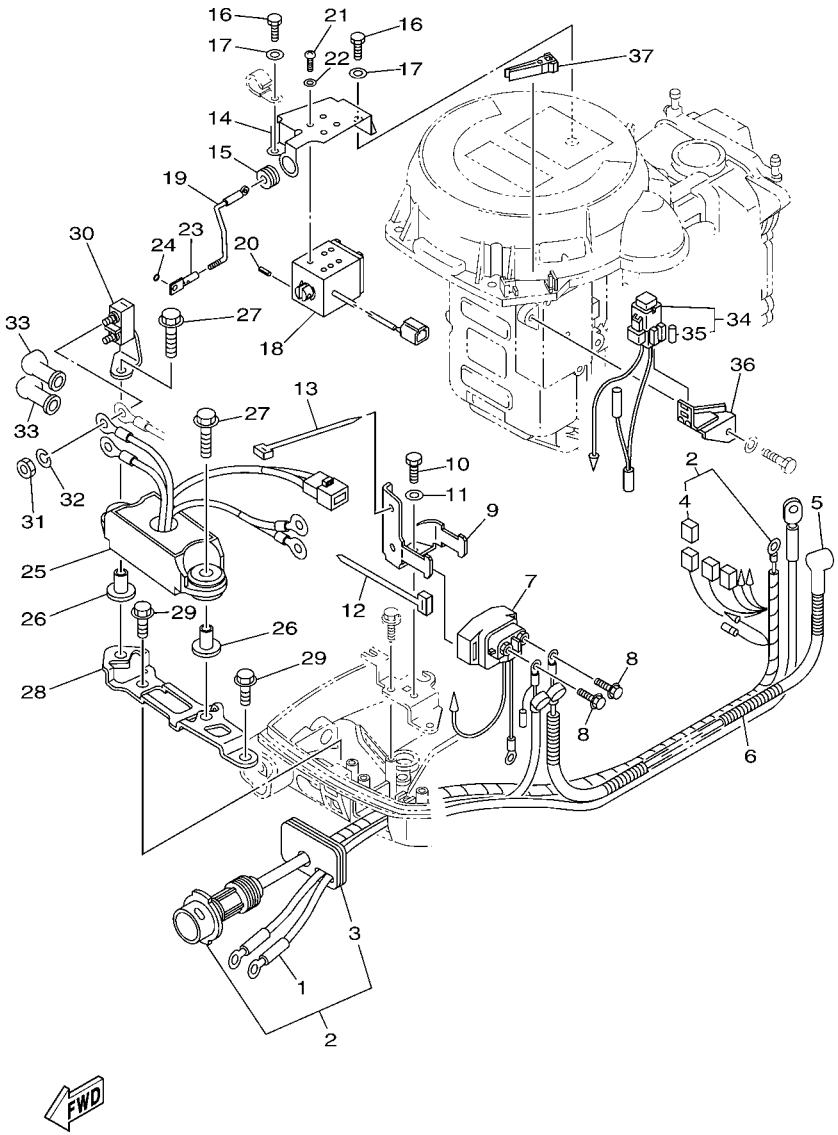

6EA1700-M140

FIG. 15 ELECTRICAL 3 — PARTIE ELECTRIQUE 3

REF. NO.	PART NO. N° PIECES	DESCRIPTION DESCRIPTION	MH	E	EP			REMARKS REMARQUES
28	69G–81948–01	BRACKET SUPPORT			1			
29	90109–06M86	BOLT BOULON			2			
30	69G–81925–00	TERMINAL BORNE			1			
31	90170–06M30	NUT ECROU			2			
32	90204–06M00	WASHER, SPRING RONDELLE, GROWER			2			
33	6G5–82119–00	COVER, LEAD WIRE GARNITURE, FIL			2			
34	68T–82150–00	FUSE HOLDER ASSY SUPPORT DE FUSIBLE			1			
35	66V–82151–00	.FUSE (10A-BL) .FUSIBLE (10A-BL)			2			
36	68T–82171–01	STAY, FUSE BOX SUPPORT, BOITE A FUSIBLES			1			
37	67F–2812A–00	PULLER, FUSE TENDEUR, FUSIBLE			1			

FIG. 16 ELECTRICAL 4 PARTIE ELECTRIQUE 4

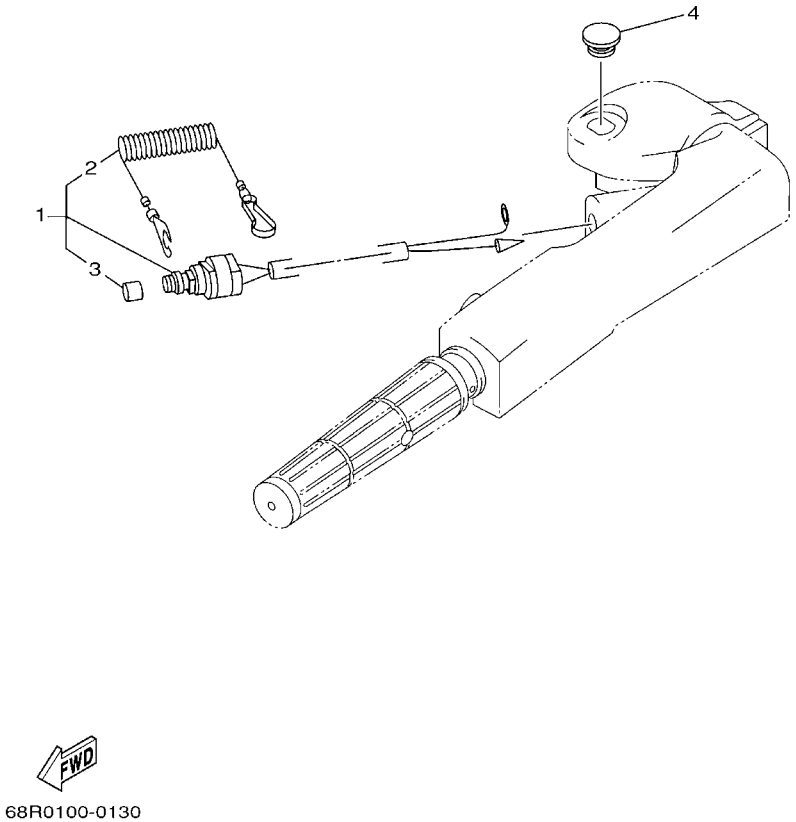

REF. NO.	PART NO. N° PIECES	DESCRIPTION DESCRIPTION	MH	E	EP			REMARKS REMARQUES
1	65W–82575–01	ENGINE STOP SWITCH ASSY COUPE CIRCUIT CPLT	1					
2	682–82556–00	.LANYARD, STOP SWITCH .CORDON DU COUPE CIRCUIT	1					
3	689–8257Y–00	.CAP .COUVERCLE	1					
4	6G1–42725–00	GROMMET PASSE-FIL	1					

FIG. 17 STARTING MOTOR DEMARREUR ELECTRIQUE

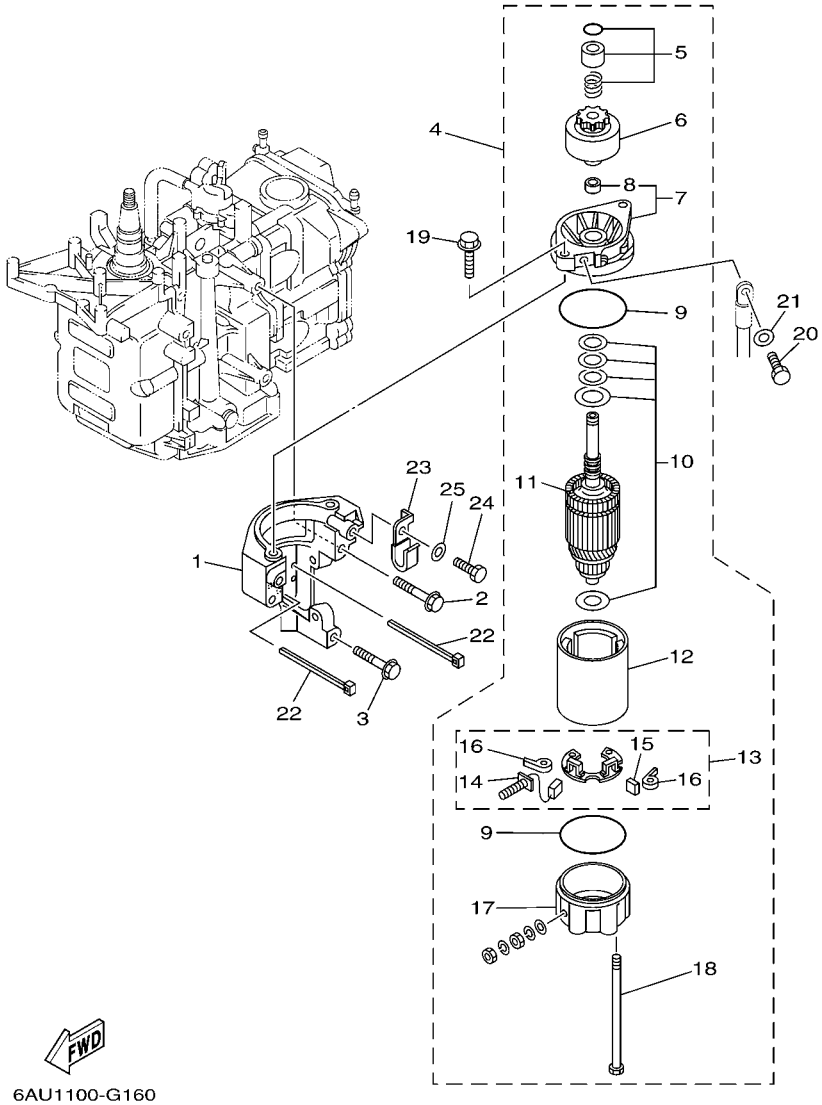

REF. NO.	PART NO. N° PIECES	DESCRIPTION DESCRIPTION	MH	E	EP			REMARKS REMARQUES
1	68T–81822–01	BRACKET, STARTING MOTOR SUPPORT, DEMARREUR ELECTRIQUE	1	1	1			
2	90119–08046	BOLT, WITH WASHER BOULON, AVEC RONDELLE	2	2	2			
3	90119–08020	BOLT, WITH WASHER BOULON, AVEC RONDELLE	1	1	1			
4	68T–81800–00	STARTING MOTOR ASSY DEMARREUR ELECTRIQUE COMPLET		1	1			
5	68T–81857–00	.RETAINER .ARRETOIR		1	1			
6	689–81807–12	.GEAR ASSY, STARTING MOTOR .PIGNON, DEMARREUR ELECTRIQUE		1	1			
7	6F5–81830–10	.FRONT BRACKET ASSY .SUPPORT AVANT		1	1			
8	689–81831–00	..METAL, FRONT ..METAL, AVANT		1	1			
9	689–81847–11	.O-RING .JOINT TORIQUE		2	2			
10	689–81809–11	.WASHER KIT .JEU DE RONDELLES		1	1			
11	689–81850–11	.ARMATURE ASSY .INDUIT		1	1			
12	689–81810–11	.STATOR ASSY .STATOR COMPLET		1	1			
13	689–81840–11	.BRUSH HOLDER ASSY .SUPPORT DE CHARBON		1	1			
14	689–81811–11	..BRUSH 1 ..CHARBON 1		1	1			
15	689–81812–11	..BRUSH 2 ..CHARBON 2		1	1			
16	689–81813–10	..SPRING, BRUSH ..RESSORT, DE CHARBON		2	2			
17	689–81820–11	.REAR BRACKET ASSY .SUPPORT ARRIERE COMPLET		1	1			
18	689–81826–10	.BOLT .BOULON		2	2			
19	90119–08M76	BOLT, WITH WASHER BOULON, AVEC RONDELLE		2	2			
20	97095–08016	BOLT BOULON		1	1			
21	92995–08600	WASHER RONDELLE		1	1			
22	90465–11M10	CLAMP BRIDE		2	2			
23	90465–08M99	CLAMP BRIDE	1	1	1			
24	97095–06012	BOLT BOULON	1	1	1			
25	92995–06600	WASHER RONDELLE	1	1	1			

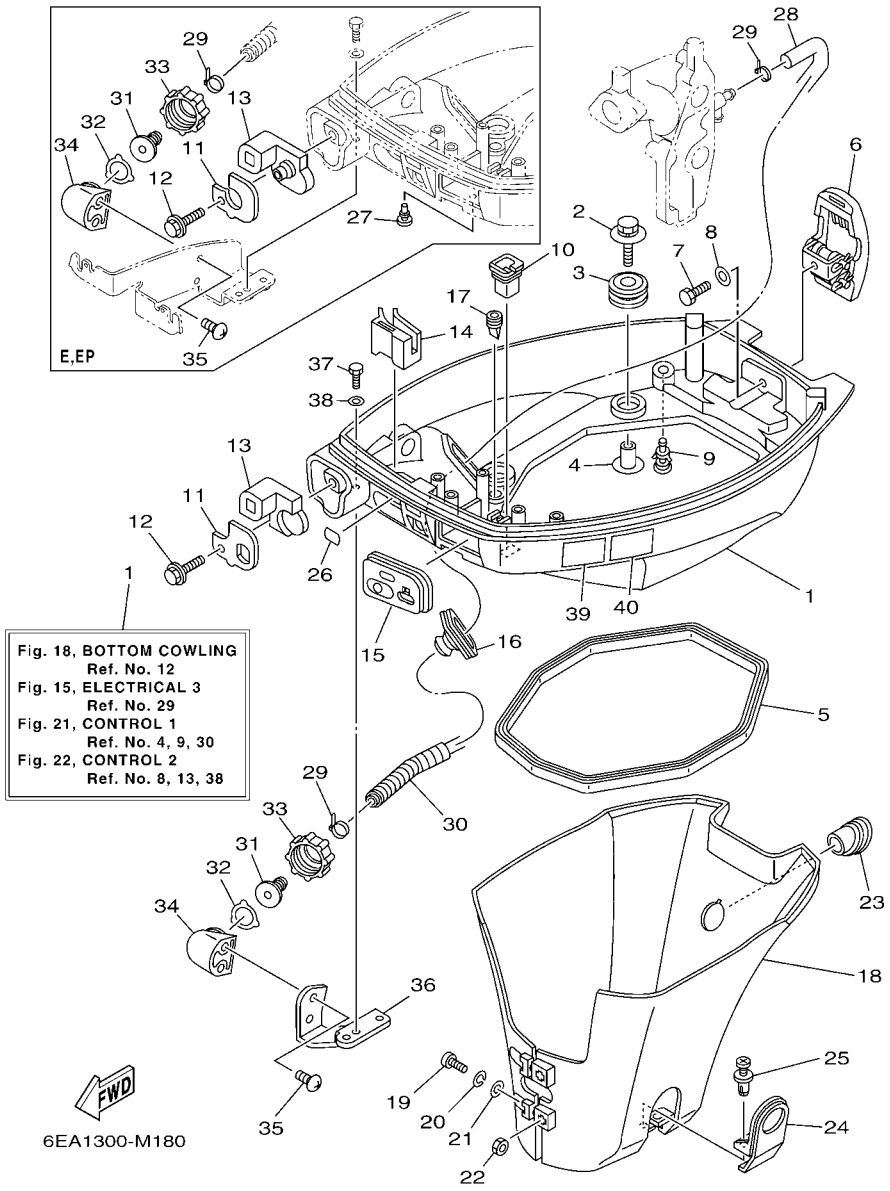

FIG. 18 BOTTOM COWLING CAPOT INFERIEUR

REF. NO.	PART NO. N° PIECES	DESCRIPTION DESCRIPTION	MH	E	EP			REMARKS REMARQUES
1	6DR–42710–00–4D	BOTTOM COWLING ASSY ENS. EMBASE	1	1	1			
2	68F–85119–00	BOLT BOULON	4	4	4			
3	90480–21M82	GROMMET PASSE-FIL	4	4	4			
4	90387–06176	COLLAR COLLERETTE	4	4	4			
5	68T–42716–10	RUBBER, SEAL 1 JOINT EN CAOUTCHOUC 1	1	1	1			
6	6AU–42801–00	COWLING CLAMP COMP. BRIDE DE CAPOT COMP.	1	1	1			
7	97095–06012	BOLT BOULON	1	1	1			
8	92995–06600	WASHER RONDELLE	1	1	1			
9	6BL–44391–00	NIPPLE, HOSE RACCORD D'ESSENCE	1	1	1			
10	682–42727–00	GROMMET PASSE-FIL	1	1	1			
11	6DR–42761–00	STOPPER PLAQUETTE	1					
	6DR–42761–10	STOPPER PLAQUETTE		1	1			
12	90109–06M86	BOLT BOULON	1	1	1			
13	6DR–42725–00	GROMMET PASSE-FIL	1					
	6DR–42725–10	GROMMET PASSE-FIL		1	1			
14	68T–26367–00	PROTECTOR PROTECTEUR	1					
15	68T–42724–20	GROMMET PASSE-FIL	1					
16	688–42726–10	GROMMET PASSE-FIL	1	1				FLUSHING KIT FLUSHING KIT
	69G–42726–00	GROMMET PASSE-FIL			1			FLUSHING KIT FLUSHING KIT
17	65W–42717–00	RUBBER, SEAL 2 JOINT EN CAOUTCHOUC 2	2	2	2			
18	68T–42741–00	APRON CAPOT LATERAL	1	1	1			
19	97885–06030	SCREW, PAN HEAD VIS, A ENCOCHE	2	2	2			
20	92995–06100	WASHER, SPRING RONDELLE, GROWER	2	2	2			
21	92995–06600	WASHER RONDELLE	2	2	2			
22	95380–06600	NUT, HEXAGON ECROU	2	2	2			
23	68T–42717–00	RUBBER, SEAL 2 JOINT EN CAOUTCHOUC 2	1	1	1			
24	68T–42771–00	APRON CAPOT LATERAL	1	1	1			

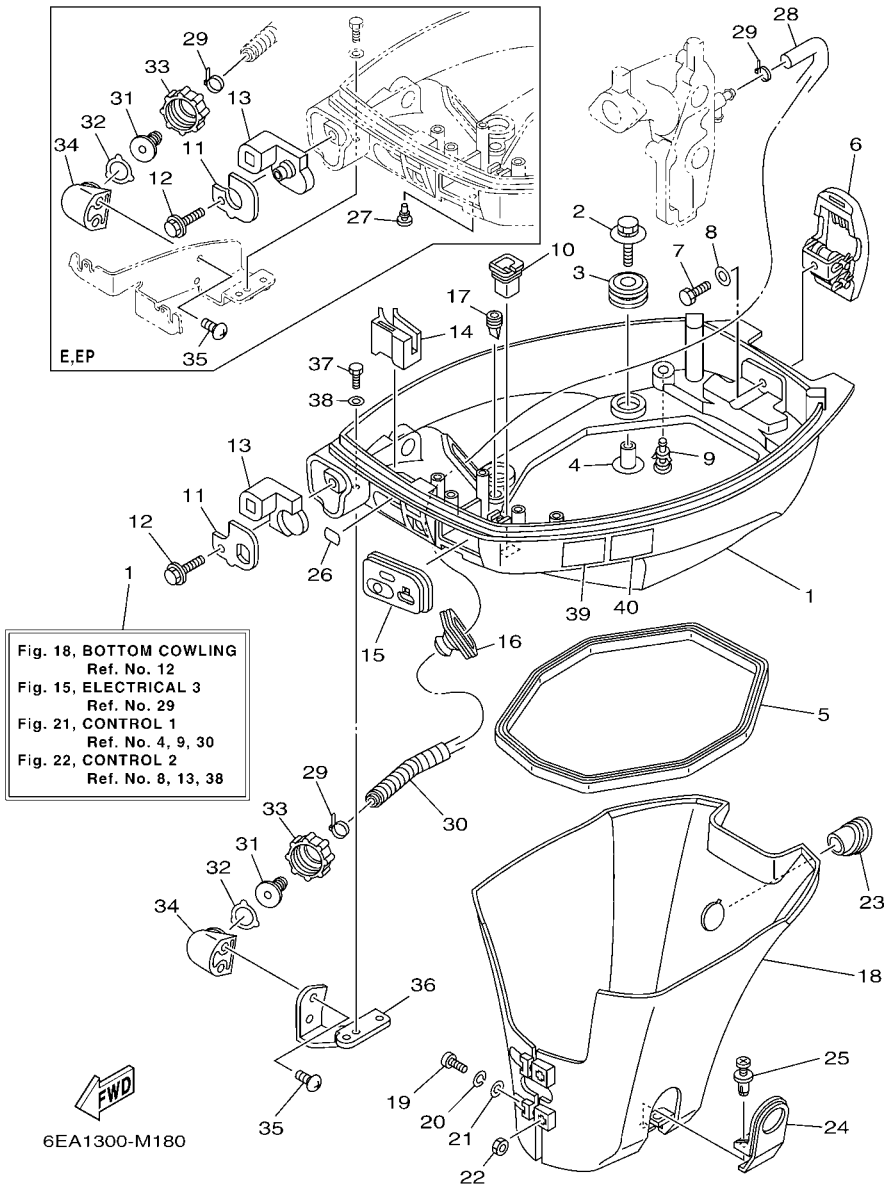

Fig. 18, BOTTOM COWLING
Ref. No. 12
Fig. 15, ELECTRICAL 3
Ref. No. 29
Fig. 21, CONTROL 1
Ref. No. 4, 9, 30
Fig. 22, CONTROL 2
Ref. No. 8, 13, 38

FIG. 18 BOTTOM COWLING — CAPOT INFERIEUR

REF. NO.	PART NO. N° PIECES	DESCRIPTION DESCRIPTION	MH	E	EP			REMARKS REMARQUES
25	90338–06M20	PLUG PLOT	2	2	2			
26	65W–84342–00	SEAT, EMBLEM SIEGE, EMBLEME	1	1	1			
27	90480–06M19	GROMMET PASSE-FIL		1	1			
28	6E5–12481–00	PIPE 1 DURITE 1	1	1	1			FLUSHING KIT FLUSHING KIT
29	90465–11M10	CLAMP BRIDE	2	2	2			FLUSHING KIT FLUSHING KIT
30	90447–13M00	TUBE DURITE	1	1	1			FLUSHING KIT FLUSHING KIT
31	6R3–12582–00	JOINT, HOSE 2 RACCORD DE TUYAU 1	1	1	1			FLUSHING KIT FLUSHING KIT
32	6R3–12583–00	GASKET, HOSE JOINT JOINT	1	1	1			FLUSHING KIT FLUSHING KIT
33	6R3–12581–00	JOINT, HOSE 1 JOINT DE TUYAU	1	1	1			FLUSHING KIT FLUSHING KIT
34	6DR–12572–00	ADAPTER ADAPTATEUR	1	1	1			FLUSHING KIT FLUSHING KIT
35	90167–06002	SCREW, TAPPING VIS, TETE FRAISEE	2	2	2			FLUSHING KIT FLUSHING KIT
36	68T–12535–20	PLATE PLAQUE	1					FLUSHING KIT FLUSHING KIT
37	97095–06012	BOLT BOULON	2					FLUSHING KIT FLUSHING KIT
38	92995–06600	WASHER RONDELLE	2					FLUSHING KIT FLUSHING KIT
39	6EE–42794–40	LABEL, WARNING (GENERAL) ETIQUETTE, AVERTISSEMENT	1	1	1			
40	6EE–42794–50	LABEL, WARNING (GENERAL) ETIQUETTE, AVERTISSEMENT	1	1	1			

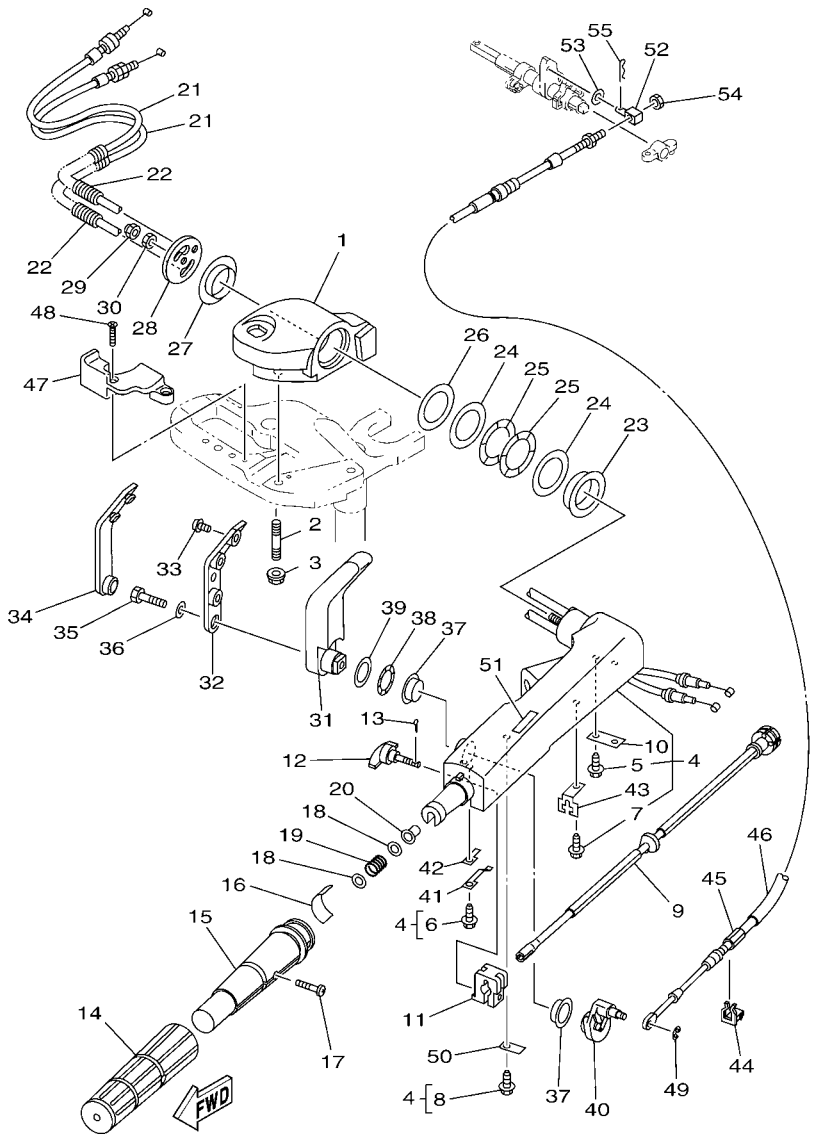

6FX1300-P190

FIG. 19 STEERING DIRECTION

REF. NO.	PART NO. N° PIECES	DESCRIPTION DESCRIPTION	MH	E	EP			REMARKS REMARQUES
1	6AU–42121–10–4D	BRACKET SUPPORT	1					
2	90116–10040	BOLT, STUD GOUJON	2					
3	90179–10M33	NUT ECROU	2					
4	66R–42101–01–4D	HANDLE, STEERING POIGNEE	1					
5	90109–06M86	.BOLT .BOULON	2					
6	90109–06M80	.BOLT .BOULON	1					
7	90109–06M80	.BOLT .BOULON	1					
8	90109–06M80	.BOLT .BOULON	1					
9	68T–42138–01	LEVER, THROTTLE LEVIER, ACCELERATEUR	1					
10	65W–42159–00	STAY SUPPORT	1					
11	6G1–42126–00	FRICTION, STEERING HANDLE GRIP CUVETTE, POIGNEE DE DIRECTION	1					
12	65W–42125–00	BOLT, FRICTION ADJUSTING BOULON	1					
13	91490–16010	PIN. COTTER GOUPILLE	1					
14	67D–42177–00	RUBBER, HANDLE CAOUTCHOUC, POIGNEE	1					
15	67D–42119–01	GRIP, STEERING HANDLE POIGNEE, BARRE FRANCHE	1					
16	6DR–42137–00	INDICATOR, THROTTLE INDICATEUR, ACCELERATION	1					
17	90152–05011	SCREW, COUNTERSUNK VIS, TETE NOYEE	1					
18	90201–10M02	WASHER, PLATE RONDELLE, PLATE	2					
19	90501–23215	SPRING, COMPRESSION RESSORT, COMPRESSION	1					
20	90386–08032	BUSH DOUILLE	1					
21	6DR–26301–00	THROTTLE CABLE ASSY CABLE D'ACCELERATEUR	2					
22	90447–07005	TUBE DURITE	2					
23	66R–42171–00	BUSHING COUSSINET	1					
24	90201–43M00	WASHER, PLATE RONDELLE, PLATE	2					
25	90206–43M22	WASHER, WAVE RONDELLE, ONDULEE	2					
26	90202–43M57	WASHER, PLATE RONDELLE, PLATE	1					
27	90386–40M99	BUSH DOUILLE	1					

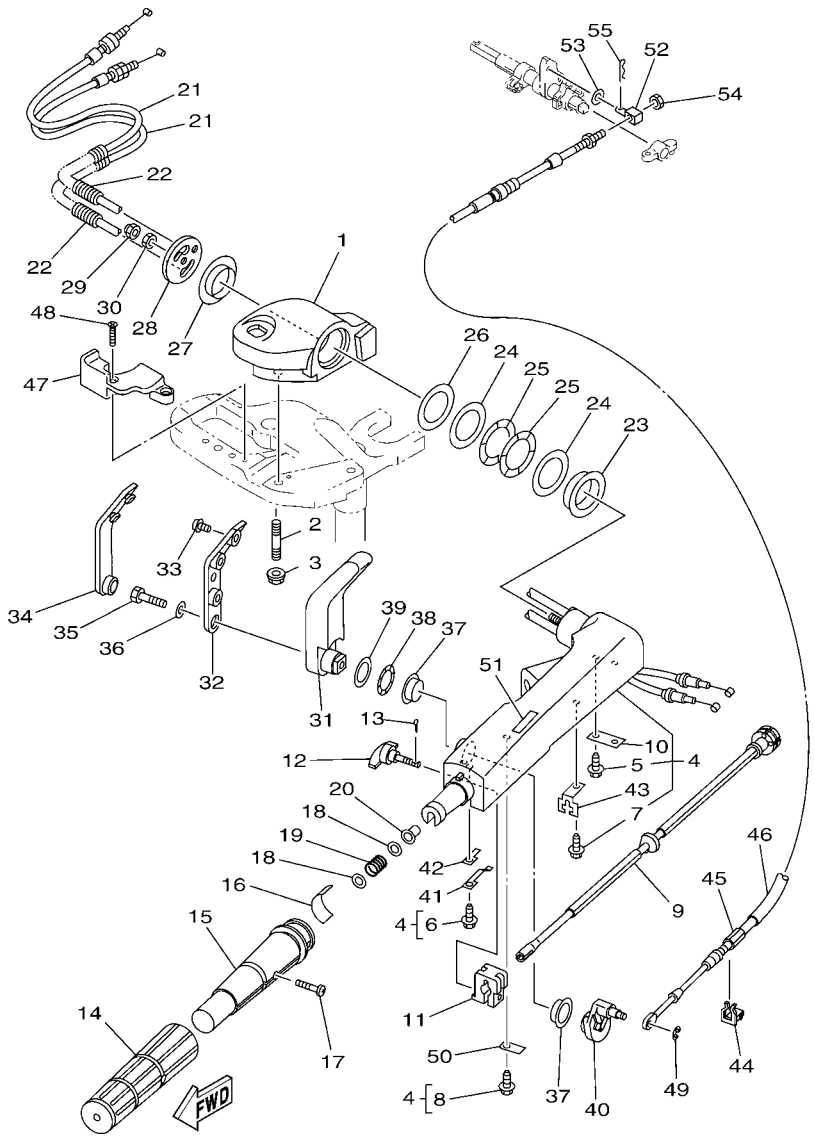

6FX1300-P190

FIG. 19 STEERING DIRECTION

REF. NO.	PART NO. N° PIECES	DESCRIPTION DESCRIPTION	MH	E	EP			REMARKS REMARQUES
28	65W–42131–01	COVER, HANDLE STEERING COUVERCLE	1					
29	95780–10300	NUT, FLANGE ECROU	1					
30	95380–10700	NUT ECROU	1					
31	66R–44111–00–4D	HANDLE, GEAR SHIFT POIGNEE, LEVIER D'EMBRAYAGE	1					
32	66R–44173–00	LEVER, SHIFT CONTROL POIGNEE, INVERSION	1					
33	90159–06M18	SCREW, WITH WASHER VIS, AVEC RONDELLE	3					
34	66R–42129–00	BUSHING, RUBBER DOUILLE, CAOUTCHOUC	1					
35	97095–08030	BOLT BOULON	1					
36	92995–08600	WASHER RONDELLE	1					
37	90386–26MA3	BUSH DOUILLE	2					
38	90206–26M25	WASHER, WAVE RONDELLE, ONDULEE	1					
39	90202–26M59	WASHER, PLATE RONDELLE, PLATE	1					
40	68T–44113–01	CAM PLATE, HANDLE CAME, VERROUILLAGE	1					
41	66R–44116–00	SPRING RESSORT	1					
42	66R–44118–00	BRACKET SUPPORT	1					
43	66R–48538–00	CLAMP, CABLE 1 COLLIER	1					
44	63D–48538–00	CLAMP, CABLE 1 COLLIER	1					
45	68T–48321–01	CABLE CABLE	1					
46	90446–15002	HOSE DURITE	1					
47	6DR–82594–00	CLAMP BRIDE	1					
48	90151–05003	SCREW, COUNTERSUNK VIS, TETE NOYEE	2					
49	99080–04600	CIRCLIP CIRCLIP	1					
50	66R–44114–00	STOPPER PLAQUETTE	1					
51	6X3–44191–00	INDICATOR, SHIFT ETIQUETTE, EMBRAYAGE	1					
52	66R–48344–00	CABLE END, REMOTE CONTROL CHAPE CABLE	1					
53	90201–06M62	WASHER, PLATE RONDELLE, PLATE	1					
54	90170–05M38	NUT ECROU	1					

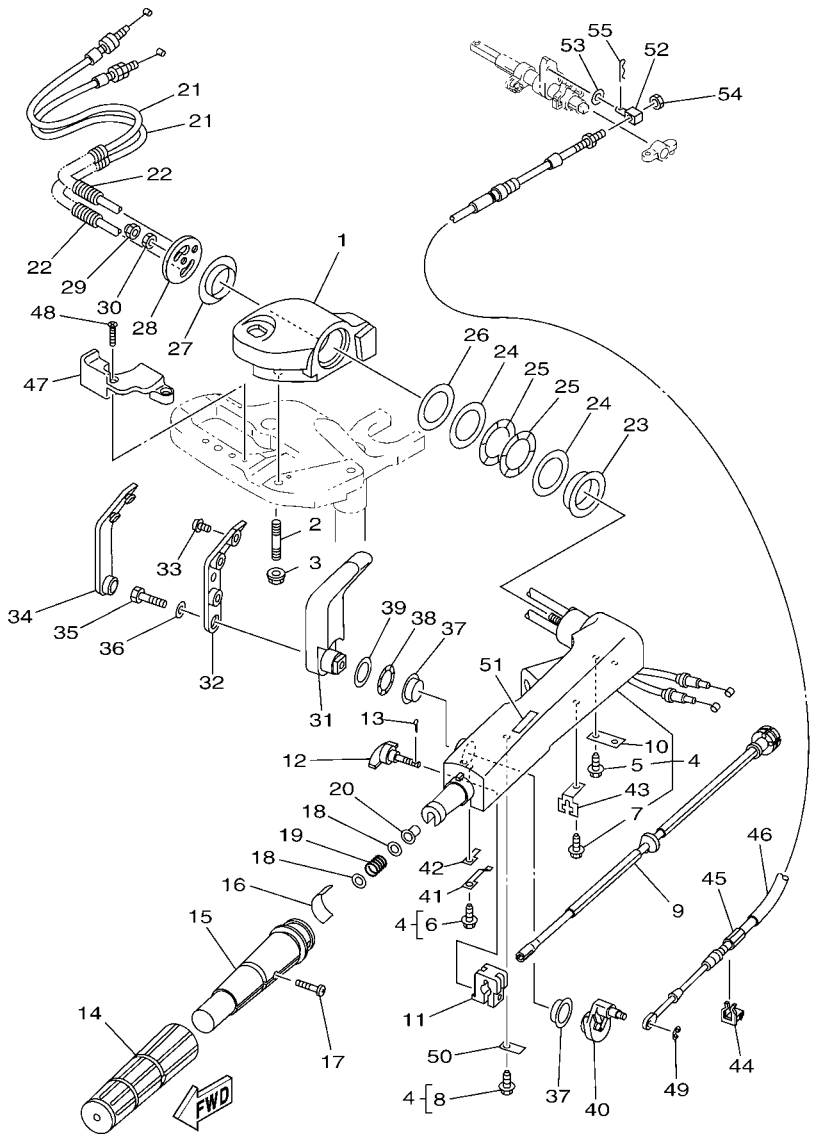

FIG. 19 STEERING DIRECTION

REF. NO.	PART NO. N° PIECES	DESCRIPTION DESCRIPTION	MH	E	EP			REMARKS REMARQUES
55	91490–20012	PIN. COTTER GOUPILLE	1					

FIG. 20 STEERING FRICTION CUVETTE POIGNEE DE DIRECTION

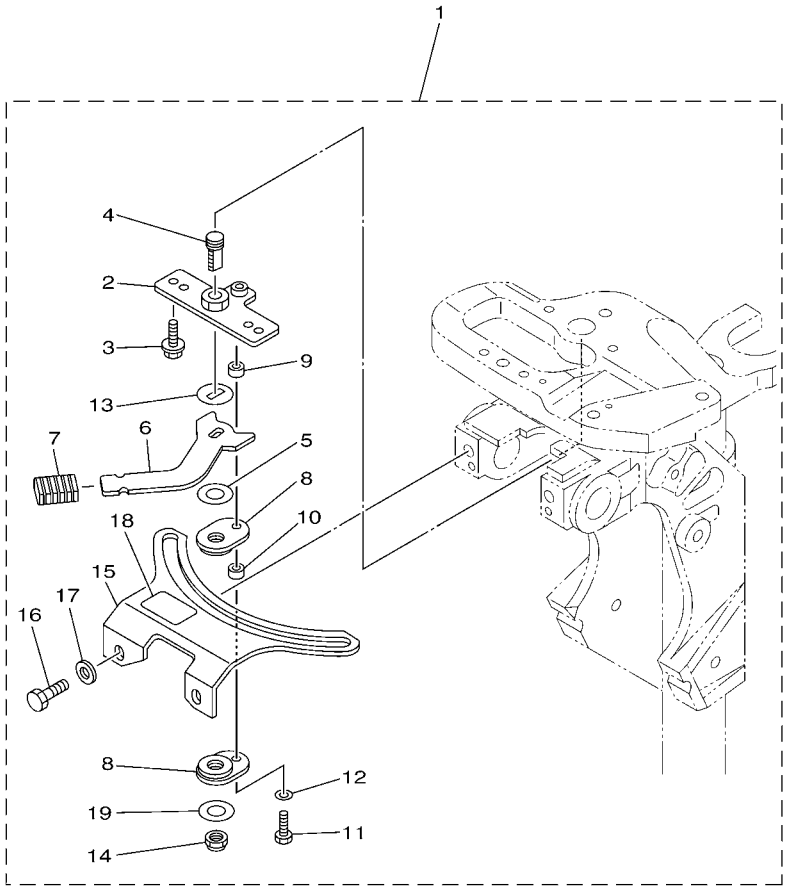

6AU5110-L180

REF. NO.	PART NO. N° PIECES	DESCRIPTION DESCRIPTION	MH	E	EP			REMARKS REMARQUES
1	6AH–42508–01	STEERING FRICTION ASSY DIRECTION FRICTION (ENS.)	1					
2	68T–42525–01	.PLATE, FRICTION .PLAQUE, FRICTION	1					
3	90119–05018	.BOLT, WITH WASHER .BOULON, AVEC RONDELLE	2					
4	67C–42562–00	.SHAFT, STEERING LOCK .ARBRE,ANTIVOL DE DIRECTION	1					
5	90202–10M56	.WASHER, PLATE .RONDELLE, PLATE	1					
6	68T–42561–00	.KNOB, STEERING LOCK .BOUTON	1					
7	689–43633–00	.COVER, TILT LEVER .COUVERCLE	1					
8	65W–42528–00	.PLATE, FRICTION .PLAQUE, FRICTION	2					
9	90387–05053	.COLLAR .COLLERETTE	1					
10	90387–05054	.COLLAR .COLLERETTE	1					
11	97095–05020	.BOLT .BOULON	1					
12	92995–05600	.WASHER .RONDELLE	1					
13	90209–10M26	.WASHER .RONDELLE	1					
14	90185–10M14	.NUT, SELF-LOCKING .ECROU,AUTO-BLOQUANT	1					
15	6AH–42527–00	.PLATE, FRICTION .PLAQUE, FRICTION	1					
16	90101–08022	.BOLT .BOULON	2					
17	90201–08065	.WASHER, PLATE .RONDELLE, PLATE	2					
18	68T–43155–00	.MARK 1 .ETIQUETTE 1	1					
19	90201–106M5	.WASHER, PLATE .RONDELLE, PLATE	1					

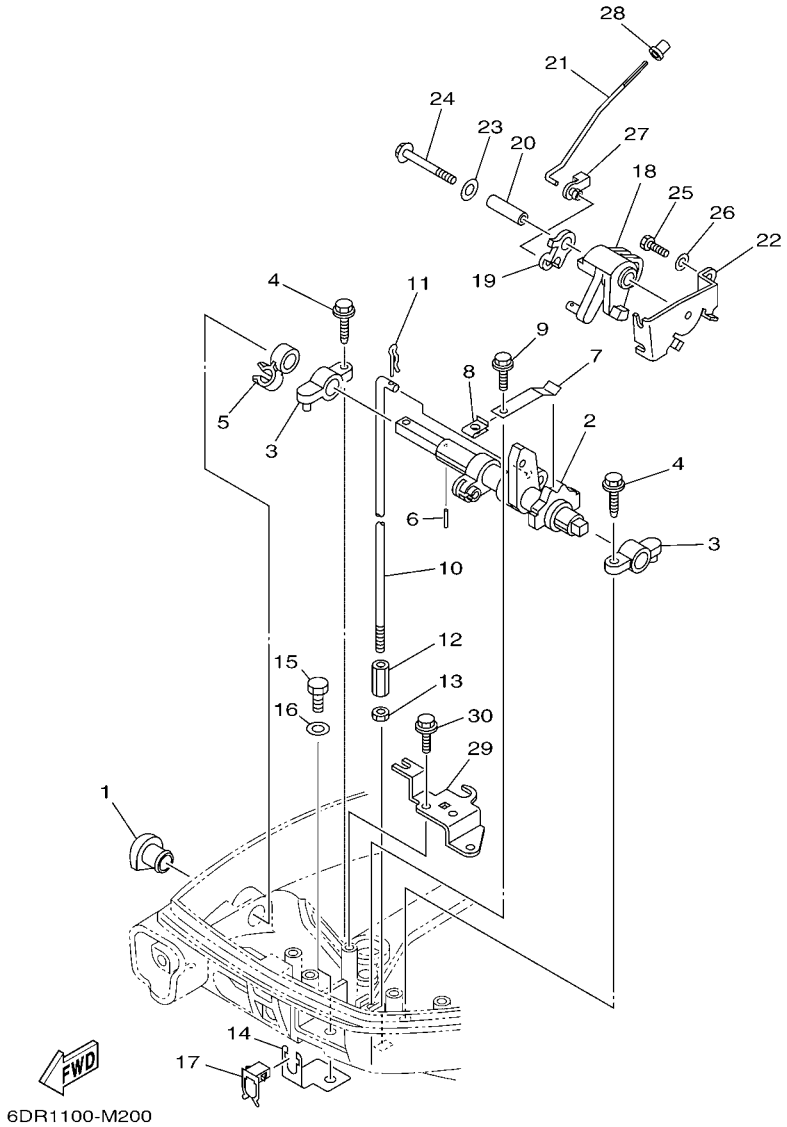

FIG. 21 CONTROL 1 COMMANDE 1

REF. NO.	PART NO. N° PIECES	DESCRIPTION DESCRIPTION	MH	E	EP			REMARKS REMARQUES
1	68T–42726–00	GROMMET PASSE-FIL	1					
2	68T–44121–02	LEVER, SHIFT ROD LEVIER, TIGE D'INVERSION	1					
3	6G1–41662–01–94	BRACKET 2 SUPPORT 2	2					
4	90109–06M81	BOLT BOULON	2					
5	90464–10M60	CLAMP BRIDE	1					
6	91690–30014	PIN, SPRING AGRAFFE	1					
7	65W–44116–00	SPRING RESSORT	1					
8	6DR–44117–00	BRACKET SUPPORT	1					
9	90109–06M86	BOLT BOULON	1					
10	68T–44143–10	ROD, SHIFT TIGE D'EMBRAYAGE	1					
11	90468–18001	CLIP JONC	1					
12	61N–44146–00	CONNECTOR, SHIFT ROD 2 CONNECTEUR, TIGE D'INVERSION 2	1					
13	95380–06700	NUT ECROU	1					
14	68T–48538–00	CLAMP, CABLE 1 COLLIER	1					
15	97095–06012	BOLT BOULON	1					
16	92995–06600	WASHER RONDELLE	1					
17	63D–48538–00	CLAMP, CABLE 1 COLLIER	1					
18	68T–41638–00	PULLEY POULIE	1					
19	68T–41283–00	LEVER, FREE ACCEL. LEVIER	1					
20	90387–06M59	COLLAR COLLERETTE	1					
21	6AU–41211–00	LINK, ACCEL. BIELLETTE, ACCELERATION	1					
22	68T–14497–00	STAY, THROTTLE WIRE SUPPORT DE BOISSEAU	1					
23	90201–06M62	WASHER, PLATE RONDELLE, PLATE	1					
24	97595–06545	BOLT, WITH WASHER VIS HEXAGONAL AVC RONDELLE	1					
25	97095–06012	BOLT BOULON	1					
26	92995–06600	WASHER RONDELLE	1					
27	6J8–41262–00	JOINT, CHOKE LEVER RACCORD, LEVIER DE STARTER	1					

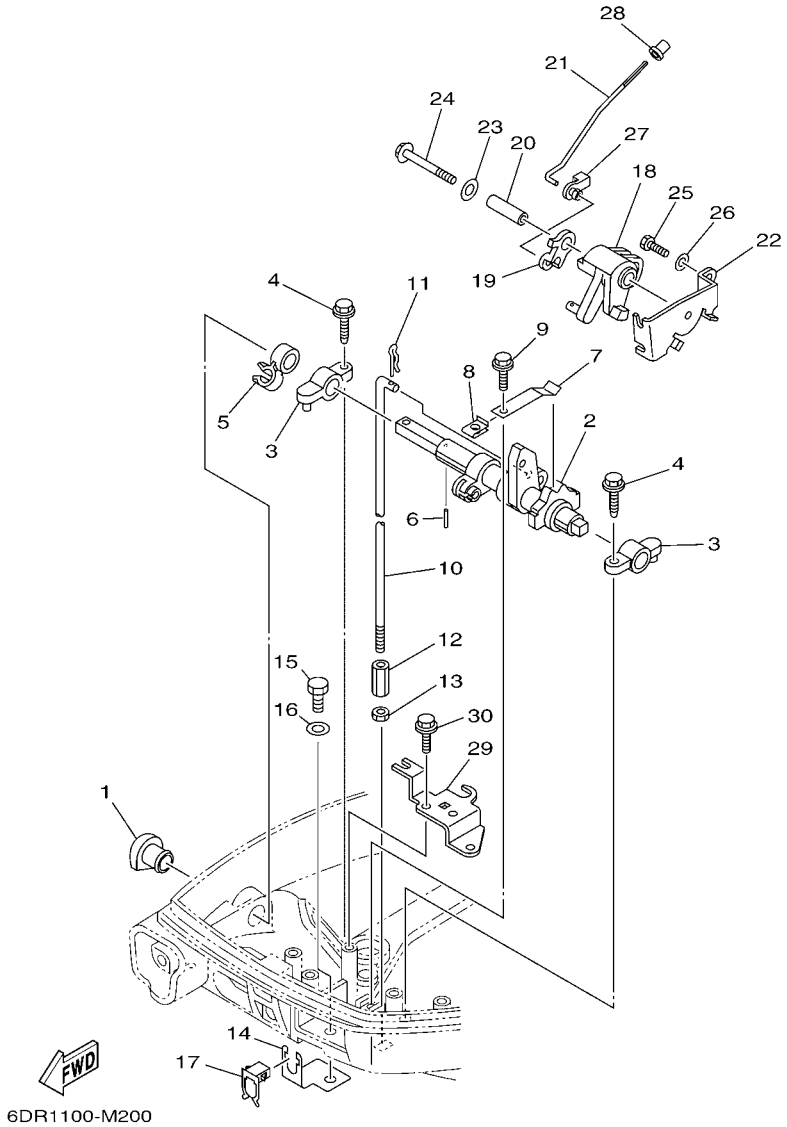

FIG. 21 CONTROL 1 COMMANDE 1

REF. NO.	PART NO. N° PIECES	DESCRIPTION DESCRIPTION	MH	E	EP			REMARKS REMARQUES
28	647–14395–60	CAP, OVERFLOW PIPE COUVRE DE DURITE REFOULEMENT	1					
29	68T–15774–10	STAY 4 SUPPORT 4	1					
30	90109–06M86	BOLT BOULON	2					

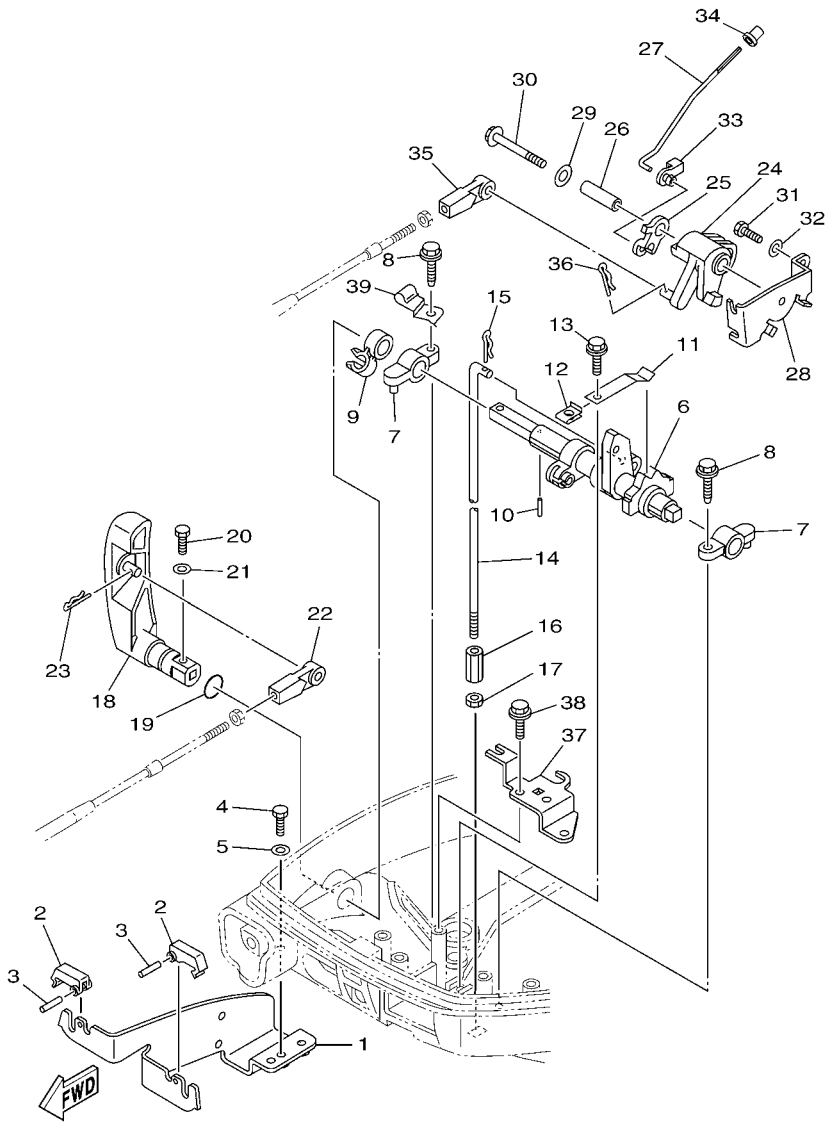

6EA1100-M240

FIG. 22 CONTROL 2 COMMANDE 2

REF. NO.	PART NO. N° PIECES	DESCRIPTION DESCRIPTION	MH	E	EP			REMARKS REMARQUES
1	6DR–48531–00	BRACKET, REMOTE CONTROL 1 ETRIER 1, COMMANDE A DISTANCE		1	1			
2	682–48538–50	CLAMP, CABLE 1 COLLIER		2	2			
3	91690–30012	PIN, SPRING AGRAFFE		2	2			
4	97095–06012	BOLT BOULON		2	2			
5	92995–06600	WASHER RONDELLE		2	2			
6	68T–44121–02	LEVER, SHIFT ROD LEVIER, TIGE D'INVERSION		1	1			
7	6G1–41662–01–94	BRACKET 2 SUPPORT 2		2	2			
8	90109–06M81	BOLT BOULON		2	2			
9	90464–10M60	CLAMP BRIDE		1	1			
10	91690–30014	PIN, SPRING AGRAFFE		1	1			
11	65W–44116–00	SPRING RESSORT		1	1			
12	6DR–44117–00	BRACKET SUPPORT		1	1			
13	90109–06M86	BOLT BOULON		1	1			
14	68T–44143–10	ROD, SHIFT TIGE D'EMBRAYAGE		1	1			
15	90468–18001	CLIP JONC		1	1			
16	61N–44146–00	CONNECTOR, SHIFT ROD 2 CONNECTEUR, TIGE D'INVERSION 2		1	1			
17	95380–06700	NUT ECROU		1	1			
18	6AU–44111–10	HANDLE, GEAR SHIFT POIGNEE, LEVIER D'EMBRAYAGE		1	1			
19	93210–12327	O-RING JOINT TORIQUE		1	1			
20	97095–05016	BOLT BOULON		1	1			
21	92995–05600	WASHER RONDELLE		1	1			
22	663–48344–00	CABLE END, REMOTE CONTROL CHAPE CABLE		1	1			
23	90468–18008	CLIP JONC		1	1			
24	68T–41638–00	PULLEY POULIE		1	1			
25	68T–41283–00	LEVER, FREE ACCEL. LEVIER		1	1			
26	90387–06M59	COLLAR COLLERETTE		1	1			
27	6AU–41211–00	LINK, ACCEL. BIELLETTE, ACCELERATION		1	1			

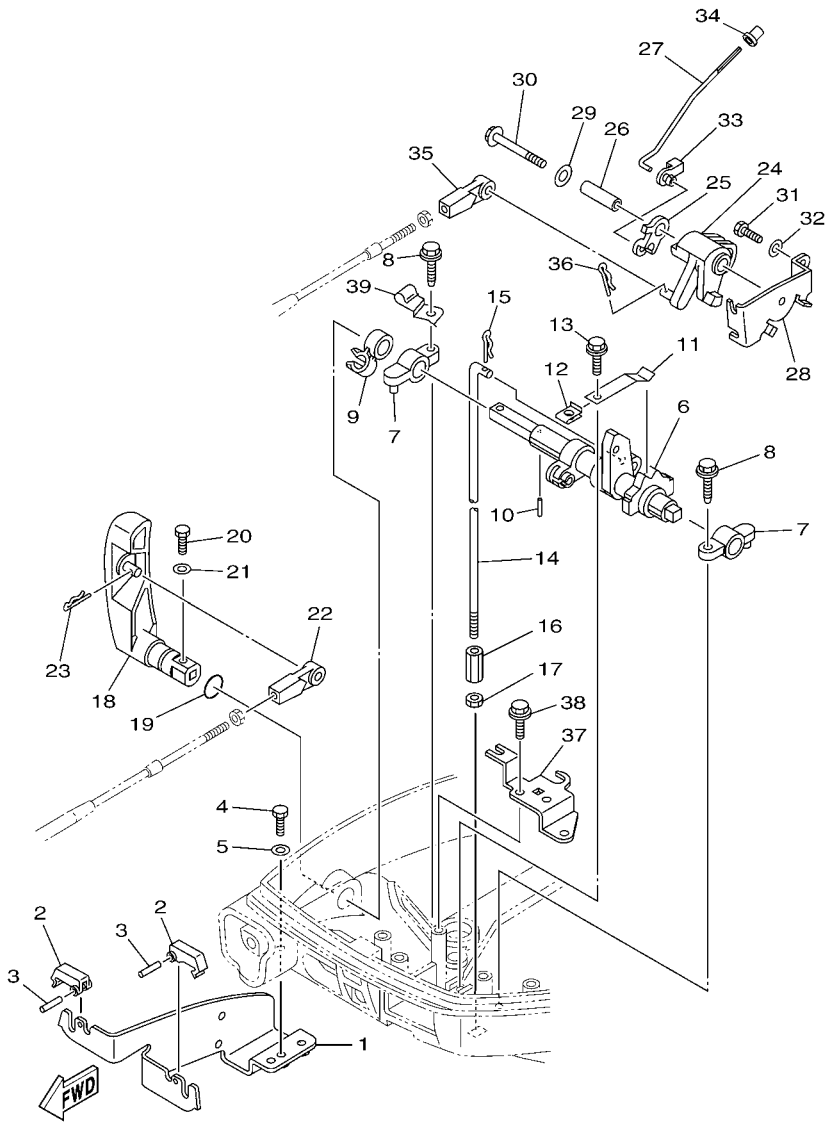

FIG. 22 CONTROL 2 COMMANDE 2

REF. NO.	PART NO. N° PIECES	DESCRIPTION DESCRIPTION	MH	E	EP			REMARKS REMARQUES
28	68T–14497–00	STAY, THROTTLE WIRE SUPPORT DE BOISSEAU		1	1			
29	90201–06M62	WASHER, PLATE RONDELLE, PLATE		1	1			
30	97595–06545	BOLT, WITH WASHER VIS HEXAGONAL AVC RONDELLE		1	1			
31	97095–06012	BOLT BOULON		1	1			
32	92995–06600	WASHER RONDELLE		1	1			
33	6J8–41262–00	JOINT, CHOKE LEVER RACCORD, LEVIER DE STARTER		1	1			
34	647–14395–60	CAP, OVERFLOW PIPE COUVRE DE DURITE REFOULEMENT		1	1			
35	663–48344–00	CABLE END, REMOTE CONTROL CHAPE CABLE		1	1			
36	90468–18008	CLIP JONC		1	1			
37	68T–15774–10	STAY 4 SUPPORT 4		1	1			
38	90109–06M86	BOLT BOULON		2	2			
39	90465–08027	CLAMP BRIDE			1			

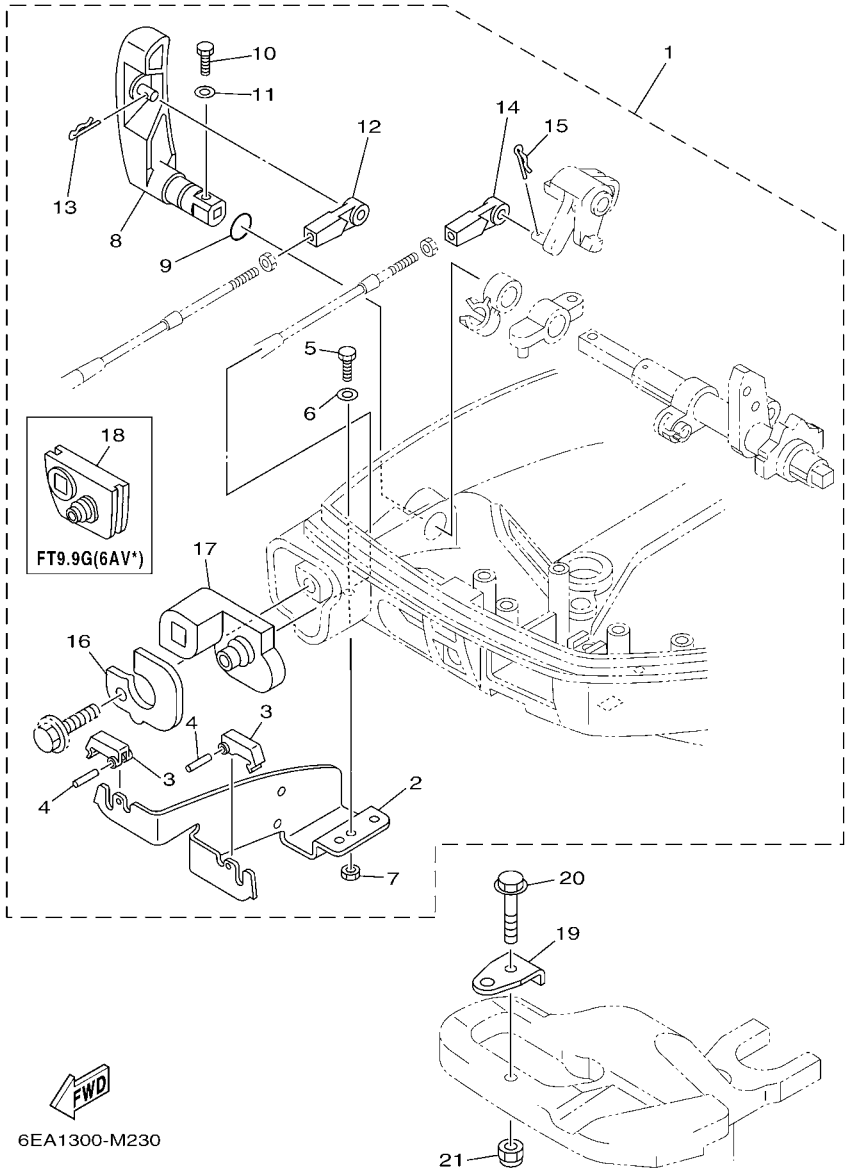

FIG. 23 REMO CON ATTACHMENT COMMANDE A DISTANCE

REF. NO.	PART NO. N° PIECES	DESCRIPTION DESCRIPTION	MH	E	EP			REMARKS REMARQUES
1	6DR–48501–00	REMOTE CONT. ATTACHMENT ASSY. COMMANDE A DISTANCE (KIT)	1					AP AP
2	68T–48531–00	.BRACKET, REMOTE CONTROL 1 .ETRIER 1, COMMANDE A DISTANCE	1					
3	682–48538–50	.CLAMP, CABLE 1 .COLLIER	2					
4	91690–30012	.PIN, SPRING .AGRAFFE	2					
5	97095–06012	.BOLT .BOULON	2					
6	92995–06600	.WASHER .RONDELLE	2					
7	95380–06600	.NUT, HEXAGON .ECROU	2					
8	6AU–44111–10	.HANDLE, GEAR SHIFT .POIGNEE, LEVIER D'EMBRAYAGE	1					
9	93210–12327	.O-RING .JOINT TORIQUE	1					
10	97095–05016	.BOLT .BOULON	1					
11	92995–05600	.WASHER .RONDELLE	1					
12	663–48344–00	.CABLE END, REMOTE CONTROL .CHAPE CABLE	1					
13	90468–18008	.CLIP .JONC	1					
14	663–48344–00	.CABLE END, REMOTE CONTROL .CHAPE CABLE	1					
15	90468–18008	.CLIP .JONC	1					
16	6DR–42761–10	.STOPPER .PLAQUETTE	1					
17	6DR–42725–10	.GROMMET .PASSE-FIL	1					
18	68T–42725–10	.GROMMET .PASSE-FIL	1					
19	63V–48511–01	HOOK, STEERING ATTACHE, DIRECTION	1					AP AP
20	97575–08535	BOLT, WITH WASHER VIS HEXAGONAL AVC RONDELLE	1					AP AP
21	90185–08057	NUT, SELF-LOCKING ECROU,AUTO-BLOQUANT	1					AP AP

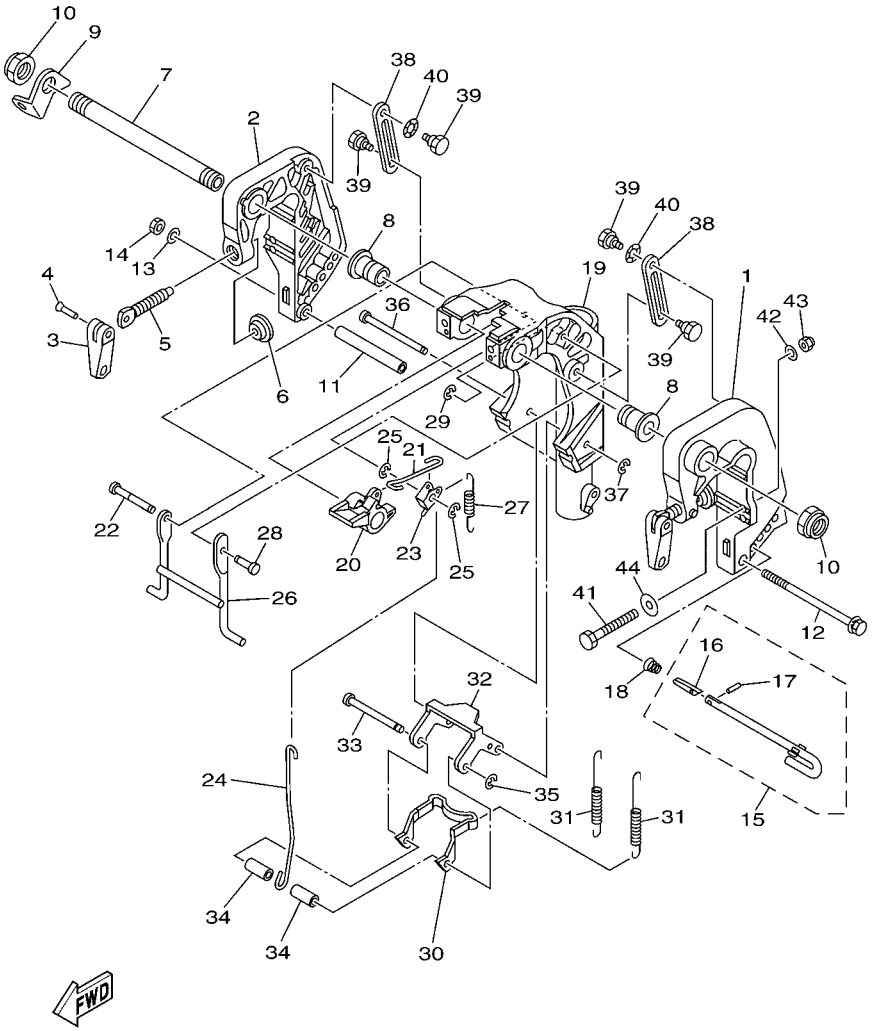

6EA1700-M180

FIG. 24 BRACKET 1 — SUPPORT 1

REF. NO.	PART NO. N° PIECES	DESCRIPTION DESCRIPTION	MH	E	EP			REMARKS REMARQUES
1	6AH–43111–00–4D	BRACKET, CLAMP 1 PRESSE 1	1	1				
2	6AH–43112–00–4D	BRACKET, CLAMP 2 PRESSE 2	1	1				
3	6E0–43118–01	HANDLE, TRANSOM CLAMP POIGNEE DE VIS DE PRESSE	2	2				
4	90243–04M01	PIN GOUPILLE	2	2				
5	6E7–43116–00	SCREW, TRANSOM CLAMP VIS DE PRESSE	2	2				
6	648–43114–01	PAD, TRANSOM CLAMP RONDELLE D'APPUI	2	2				
7	69A–43131–00	BOLT, CLAMP BRACKET BOULON, PRESSE	1	1				FOR RIDE GUIDE FOR RIDE GUIDE
8	90386–22MA4	BUSH DOUILLE	2	2				
9	66R–43113–00	PLATE, CLAMP BRACKET PLAQUETTE, PRESSE	1	1				
10	90185–22043	NUT, SELF-LOCKING ECROU,AUTO-BLOQUANT	2	2				
11	90387–06M13	COLLAR COLLERETTE	1	1				
12	90101–06M18	BOLT BOULON	1	1				
13	92995–06600	WASHER RONDELLE	1	1				
14	95380–06700	NUT ECROU	1	1				
15	6L2–43160–01	TILT ROD ASSY BROCHE D'INCLINAISON (ENS.)	1	1				
16	689–43165–00	.PLATE, TILT LOCK .TAQUET, BROCHE INCLINAISON	1	1				
17	91690–30008	.PIN, SPRING .AGRAFFE	1	1				
18	90502–10M07	SPRING, CONICAL RESSORT, CONIQUE	1	1				
19	6AU–43311–10–4D	BRACKET, SWIVEL 1 SUPPORT, PIVOT 1	1	1				
20	6DR–43631–00	LEVER, TILT LEVIER, INCLINAISON	1	1				
21	6DR–43616–00	ROD, TILT LOCK TIGE	1	1				
22	68T–43646–00	SHAFT, LEVER AXE, LEIVER	1	1				
23	6DR–43641–00	LEVER, TILT LEVIER, INCLINAISON	1	1				
24	6AH–43617–00	ROD, TILT LOCK TIGE	1	1				
25	99080–05600	CIRCLIP CIRCLIP	2	2				
26	6AH–43350–00	RECEIVER ASSY RECEIVER ASSY	1	1				
27	90506–20025	SPRING, TENSION RESSORT, TENSION	1	1				

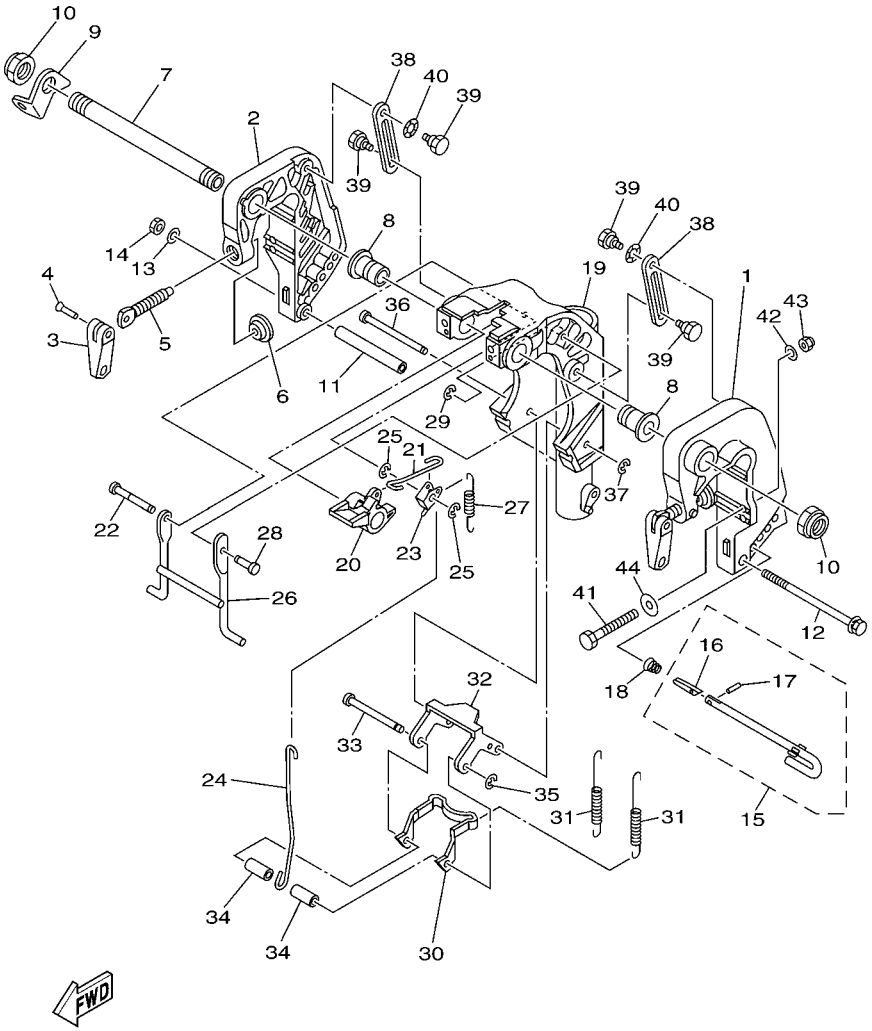

FIG. 24 BRACKET 1 SUPPORT 1

REF. NO.	PART NO. N° PIECES	DESCRIPTION DESCRIPTION	MH	E	EP			REMARKS REMARQUES
28	63V–43191–00	SHAFT, STOPPER AXE, BUTEE	1	1				
29	99080–05600	CIRCLIP CIRCLIP	1	1				
30	6AH–43614–00	PLATE, TILT LOCK ETRIER, VERROUILLAGE MARCHE AR	1	1				
31	90506–23016	SPRING, TENSION RESSORT, TENSION	2	2				
32	6AH–43615–00	PLATE, TILT LOCK ETRIER, VERROUILLAGE MARCHE AR	1	1				
33	68T–43611–00	SHAFT, TILT LOCK AXE, VERROUILLAGE MARCHE AR	1	1				
34	90387–06138	COLLAR COLLERETTE	2	2				
35	93430–04M03	CIRCLIP CLIPS	1	1				
36	68T–43659–00	SHAFT, REVERSE LOCK AXE, VERROUILLAGE MARCHE AR	1	1				
37	99080–05600	CIRCLIP CIRCLIP	1	1				
38	6AH–43627–00	STOPPER PLAQUETTE	2	2				
39	90109–06M84	BOLT BOULON	4	4				
40	90206–10M24	WASHER, WAVE RONDELLE, ONDULEE	2	2				
41	90101–08M88	BOLT BOULON	2	2				
42	92990–08600	WASHER, PLATE RONDELLE, PLATE	2	2				
43	90185–08057	NUT, SELF-LOCKING ECROU,AUTO-BLOQUANT	2	2				
44	90201–08MA4	WASHER, PLATE RONDELLE, PLATE	2	2				

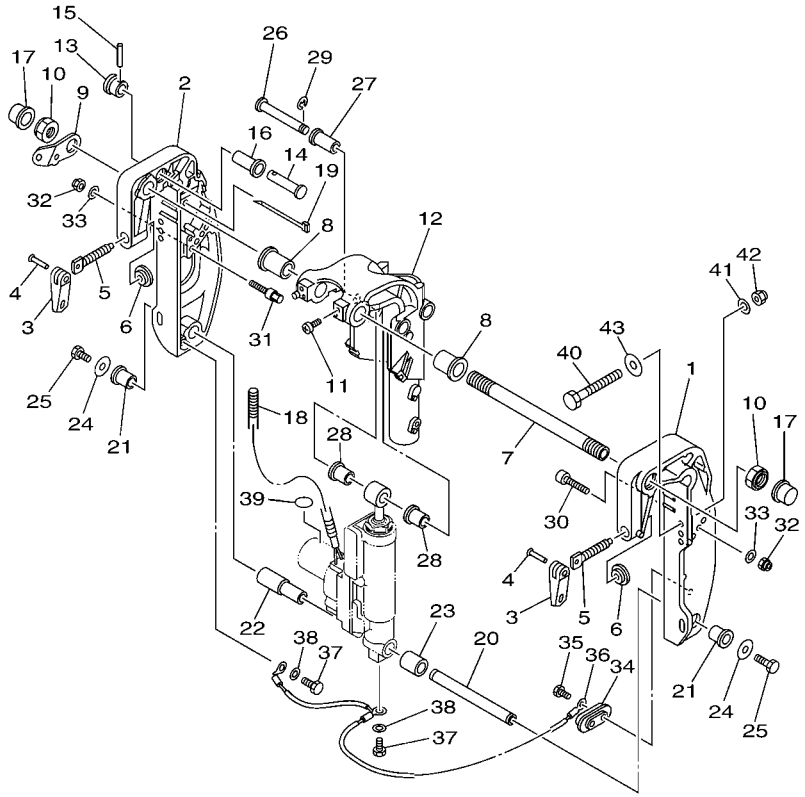

6EA1700-M190

FIG. 25 BRACKET 2 — SUPPORT 2

REF. NO.	PART NO. N° PIECES	DESCRIPTION DESCRIPTION	MH	E	EP			REMARKS REMARQUES
1	69A–43111–01–4D	BRACKET, CLAMP 1 PRESSE 1			1			
2	69A–43112–01–4D	BRACKET, CLAMP 2 PRESSE 2			1			
3	6E0–43118–01	HANDLE, TRANSOM CLAMP POIGNEE DE VIS DE PRESSE			2			
4	90243–04M01	PIN GOUPILLE			2			
5	6E7–43116–00	SCREW, TRANSOM CLAMP VIS DE PRESSE			2			
6	648–43114–01	PAD, TRANSOM CLAMP RONDELLE D'APPUI			2			
7	69A–43131–00	BOLT, CLAMP BRACKET BOULON, PRESSE			1			FOR RIDE GUIDE FOR RIDE GUIDE
8	90386–22MA4	BUSH DOUILLE			2			
9	69A–43113–00	PLATE, CLAMP BRACKET PLAQUETTE, PRESSE			1			
10	90185–22043	NUT, SELF-LOCKING ECROU,AUTO-BLOQUANT			2			
11	97885–08010	SCREW, PAN HEAD VIS, A ENCOCHE			2			
12	69G–43311–11–4D	BRACKET, SWIVEL 1 SUPPORT, PIVOT 1			1			
13	65W–43192–00	KNOB, STOPPER BOUTON, BUTEE DE RELEVAGE			1			
14	65W–43191–00	SHAFT, STOPPER AXE, BUTEE			1			
15	91690–30018	PIN, SPRING AGRAFFE			1			
16	90386–14MA1	BUSH DOUILLE			1			
17	6G5–43145–01	CAP, CLAMP BRACKET CAPUCHON, PRESSE			2			
18	90447–10001	TUBE DURITE			1			
19	90465–13M97	CLAMP BRIDE			1			
20	69G–43818–00	PIN, LOWER SHOCK MOUNT AXE, INFERIEUR AMORTISSEUR			1			
21	90386–16MA7	BUSH DOUILLE			2			
22	90386–16MA8	BUSH DOUILLE			1			
23	90387–16M02	COLLAR COLLERETTE			1			
24	90201–08M00	WASHER, PLATE RONDELLE, PLATE			2			
25	97080–08016	BOLT BOULON			2			
26	90249–12M36	PIN GOUPILLE			1			
27	90381–12M10	BUSH, SOLID DOUILLE, SOLIDE			1			

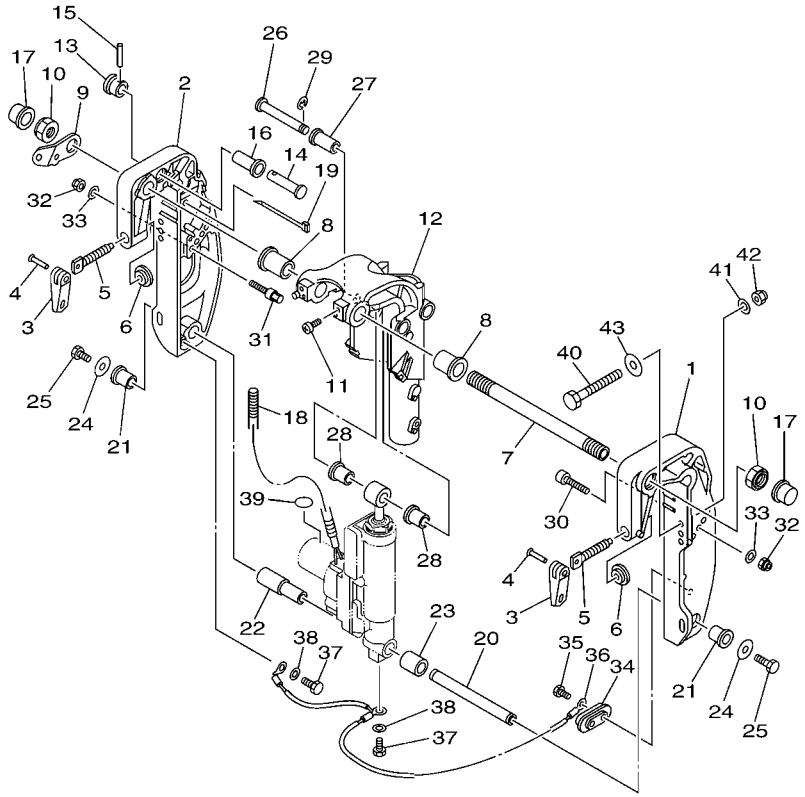

6EA1700-M190

FIG. 25 BRACKET 2 — SUPPORT 2

REF. NO.	PART NO. N° PIECES	DESCRIPTION DESCRIPTION	MH	E	EP			REMARKS REMARQUES
28	90381–12M11	BUSH, SOLID DOUILLE, SOLIDE			2			
29	99080–10600	CIRCLIP CIRCLIP			1			
30	90110–08M05	BOLT, HEXAGON SOCKET HEAD BOULON, TETE HEXAGONALE CREUSE			1			
31	90109–08010	BOLT BOULON			1			
32	90185–08057	NUT, SELF-LOCKING ECROU,AUTO-BLOQUANT			2			
33	92990–08600	WASHER, PLATE RONDELLE, PLATE			2			
34	65W–45251–00	ANODE ANODE			1			
35	90101–06020	BOLT BOULON			2			
36	63V–82127–00	WIRE, LEAD 2 FIL 2			1			
37	97095–06010	BOLT BOULON			2			
38	92995–06600	WASHER RONDELLE			2			
39	69A–43155–00	MARK 1 ETIQUETTE 1			1			
40	90101–08M88	BOLT BOULON			2			
41	92990–08600	WASHER, PLATE RONDELLE, PLATE			2			
42	90185–08057	NUT, SELF-LOCKING ECROU,AUTO-BLOQUANT			2			
43	90201–08MA4	WASHER, PLATE RONDELLE, PLATE			2			

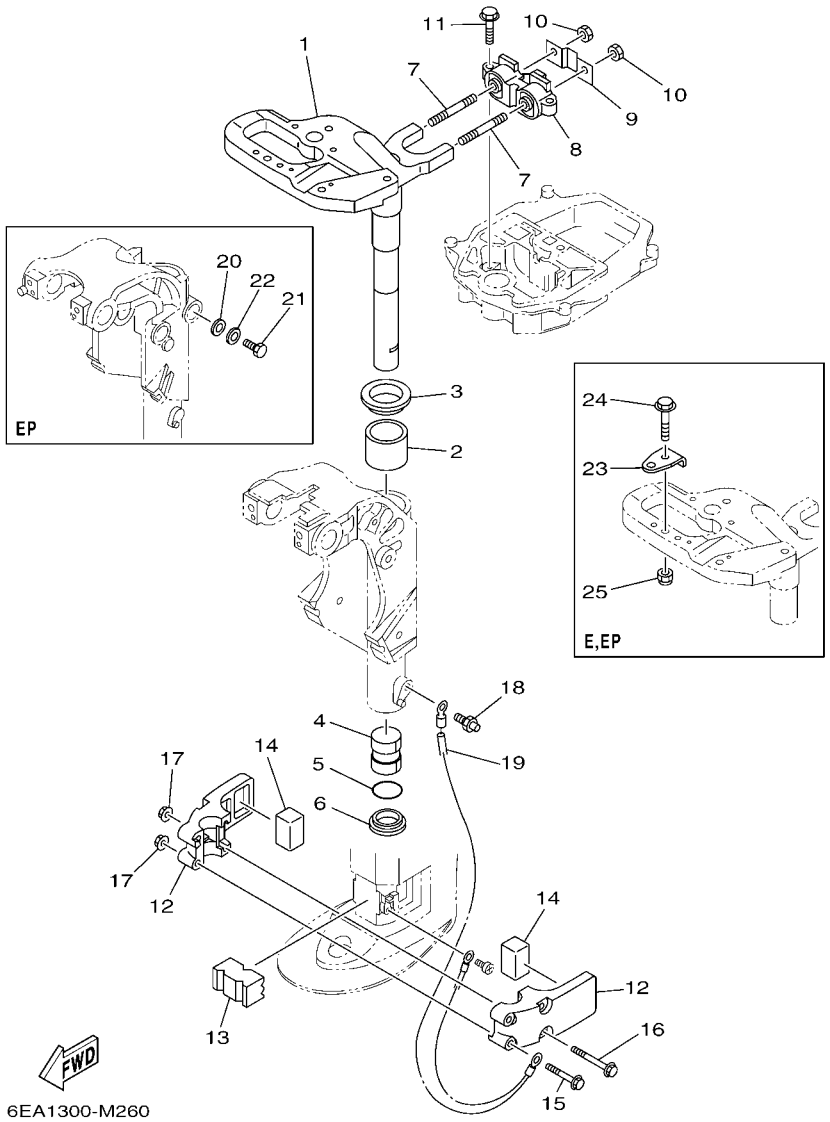

FIG. 26 BRACKET 3 SUPPORT 3

REF. NO.	PART NO. N° PIECES	DESCRIPTION DESCRIPTION	MH	E	EP			REMARKS REMARQUES
1	6AU–42511–10–4D	BRACKET, STEERING CADRE, DIRECTION	1	1	1			
2	90386–40001	BUSH DOUILLE	1	1	1			
3	90209–40008	WASHER RONDELLE	1	1	1			
4	90386–30048	BUSH DOUILLE	1	1	1			
5	93210–29M94	O-RING JOINT TORIQUE	1	1	1			
6	90386–30M60	BUSH DOUILLE	1	1	1			
7	90116–08M54	BOLT, STUD GOUJON	2	2	2			
8	68T–44517–10	MOUNT RUBBER SILENT-BLOC	1	1	1			
9	68T–44526–00	PLATE PLAQUE	1	1	1			
10	95380–08600	NUT ECROU	2	2	2			
11	97575–06525	BOLT, WITH WASHER VIS HEXAGONAL AVC RONDELLE	2	2	2			
12	6AU–44551–00–4D	HOUSING, LOWER MOUNT RUBBER 1 BOITIER, SILENT-BLOC INFERIEUR	2	2	2			
13	6AU–44557–00	MOUNT DAMPER, LOWER FRONT SILENT-BLOC, INFERIEUR AVANT	1	1	1			
14	682–44555–30	MOUNT DAMPER, LOWER SIDE SILENT-BLOC, INFERIEUR LATERAL	2	2	2			
15	90119–06012	BOLT, WITH WASHER BOULON, AVEC RONDELLE	2	2	2			
16	90119–06198	BOLT, WITH WASHER BOULON, AVEC RONDELLE	2	2	2			
17	90179–06M28	NUT ECROU	4	4	4			
18	93700–06M03	NIPPLE, GREASE PION	1	1	1			
19	68T–82127–00	WIRE, LEAD 2 FIL 2	1	1	1			
20	92995–06600	WASHER RONDELLE			1			
21	97095–06014	BOLT BOULON			1			
22	92995–06600	WASHER RONDELLE			1			
23	63V–48511–01	HOOK, STEERING ATTACHE, DIRECTION		1	1			
24	97575–08535	BOLT, WITH WASHER VIS HEXAGONAL AVC RONDELLE		1	1			
25	90185–08057	NUT, SELF-LOCKING ECROU,AUTO-BLOQUANT		1	1			

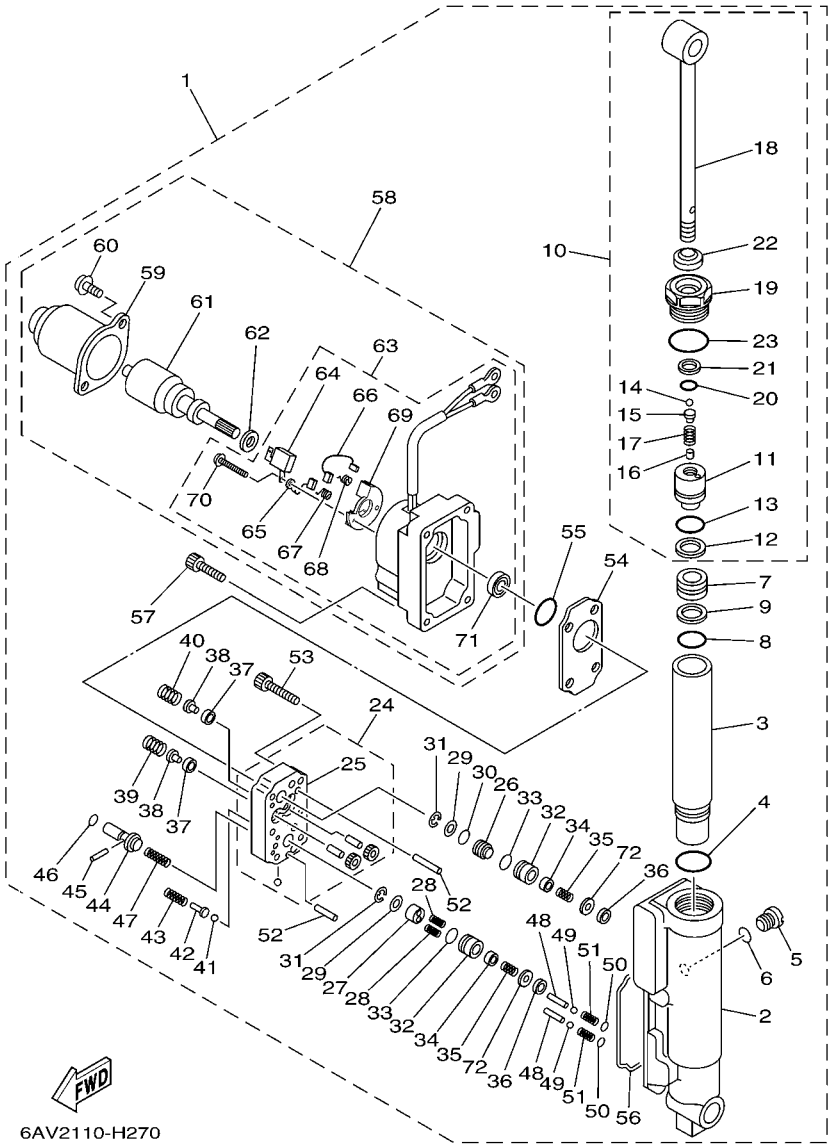

FIG. 27 POWER TILT ASSY — PUISSANCE PARER ET INCLINER

REF. NO.	PART NO. N° PIECES	DESCRIPTION DESCRIPTION	MH	E	EP			REMARKS REMARQUES
1	69G–43840–02–4D	POWER TILT ASSY PUISSANCE INCLINER (ENS.)			1			
2	69A–4380K–00	.CYLINDER, TILT SUB ASSY .CYLINDRE			1			
3	69A–22471–00	.CASE, CYLINDER .BOITIER, CYLINDRE			1			
4	93210–27666	.O-RING .JOINT TORIQUE			1			
5	6H1–4388E–11	.PLUG, TAPER SCREW .BOUCHON			1			
6	93210–07003	.O-RING .JOINT TORIQUE			1			
7	69A–43814–00	.PISTON, FREE .PISTON			1			
8	93210–21276	.O-RING .JOINT TORIQUE			1			
9	69A–43872–00	.RING, BACK UP .RESSORT			1			
10	69A–43810–00	.TILT PISTON SUB ASSY .INCLINER PISTON AUXILIAIRE(ENS			1			
11	69A–4380D–00	..PISTON COMP. ..PISTON COMP.			1			
12	93210–21276	..O-RING ..JOINT TORIQUE			1			
13	69A–43872–00	..RING, BACK UP ..RESSORT			1			
14	93505–32038	..BALL ..BILLE			1			
15	65W–4386A–00	..PIN, ABSORBER VALVE ..GOUPILLE, SOUPAPE			1			
16	93604–06136	..PIN, DOWEL ..CLAVETTE			1			
17	69A–43857–00	..SPRING, ABSORBER VALVE ..RESSORT			1			
18	69A–43801–00	..ROD ..TIGE			1			
19	69A–43811–01	..SCREW, CYLINDER END ..VIS, CYLINDRE RACCORD			1			
20	6H1–43866–01	..O-RING ..JOINT TORIQUE			1			
21	69A–43871–00	..RING, BACK UP ..SEGMENT			1			
22	69A–43812–00	..SEAL, DUST ..JOINT			1			
23	69A–43869–00	..O-RING ..JOINT TORIQUE			1			
24	69A–43830–00	.GEAR PUMP ASSY .POMPE A PIGNON (ENS.)			1			
25	69A–4380C–00	..GEAR HOUSING ASSY ..CARTER COMP,ENGRENAGE			1			
26	69A–43841–00	.PISTON, SHUTTLE .PISTON			1			
27	69A–4384M–00	.PISTON, SHUTTLE 2 .PISTON 2			1			

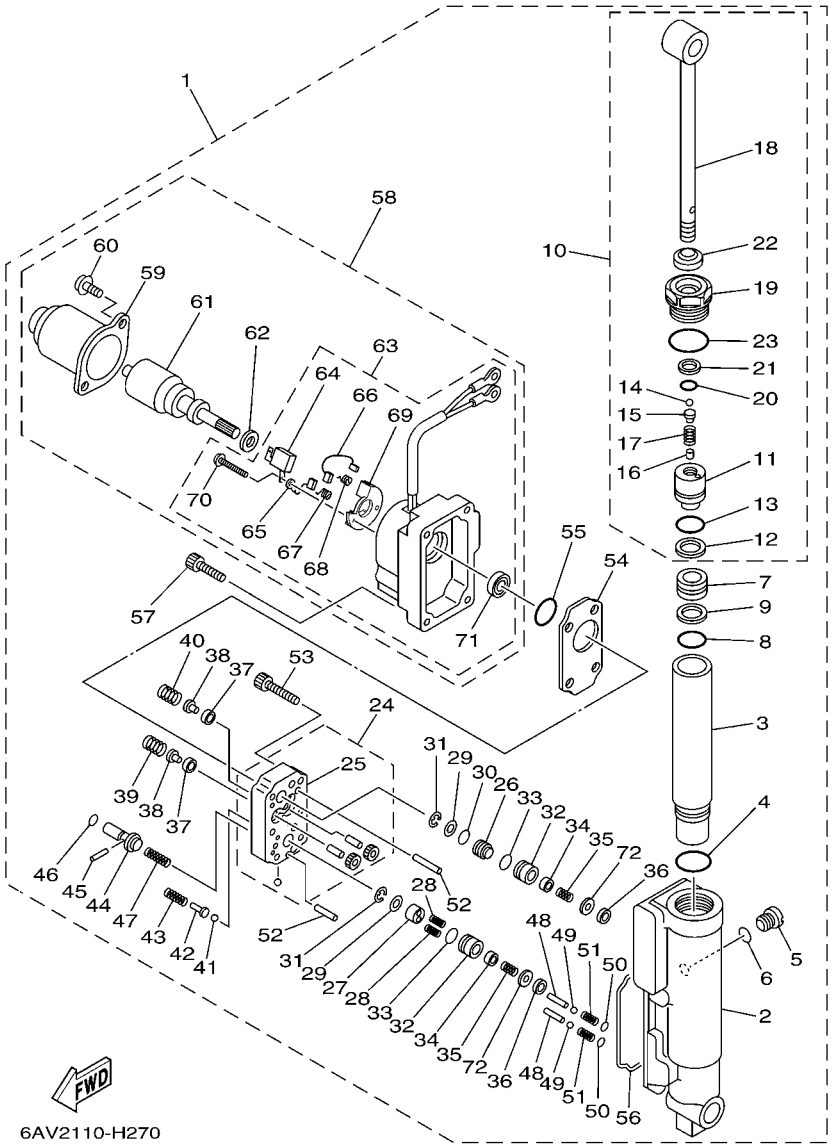

FIG. 27 POWER TILT ASSY — PUISSANCE PARER ET INCLINER

REF. NO.	PART NO. N° PIECES	DESCRIPTION DESCRIPTION	MH	E	EP			REMARKS REMARQUES
28	62Y–43894–00	.SPRING, SHUTTLE RETURN .RESSORT			2			
29	69A–4384F–00	.SEAL, MAIN VALVE .JOINT			2			
30	6H1–43883–00	.O-RING .JOINT TORIQUE			1			
31	99002–03600	.CLIP .CIRCLIP			2			
32	69G–4382G–00	.VALVE SEAT .JEU DE POINTEAUX			2			
33	93210–12N52	.O-RING .JOINT TORIQUE			2			
34	6T4–43808–00	.SEAT VALVE COMP. 1 .SIEGE VALVE COMP. 1			2			
35	69G–43853–00	.SPRING, MAIN VALVE .RESSORT			2			
36	69J–4381C–00	.FILTER 3 .FILTRE 3			2			
37	6H1–4384G–11	.SEAL, RELIEF VALVE .JOINT			2			
38	6H1–43844–10	.PIN, VALVE SUPPORT .GOUPILLE			2			
39	69A–43855–00	.SPRING, UP RELIEF .RESSORT			1			
40	6H1–43856–10	.SPRING, DOWN RELIEF .RESSORT			1			
41	93501–08001	.BALL .BILLE			2			
42	69A–4386A–00	.PIN, ABSORBER VALVE .GOUPILLE, SOUPAPE			2			
43	69A–43824–00	.SPRING, DOWN RELIEF 2 .RESSORT 2			2			
44	69A–43848–00	.ROD, MANUAL RELEASE .TIGE			1			
45	93602–15250	.PIN, DOWEL .GOUJON			1			
46	93210–06001	.O-RING .JOINT TORIQUE			1			
47	69A–43854–00	.SPRING, MANUAL RELEASE .RESSORT			1			
48	69A–4381G–00	.PIN 1 .GOUPILLE 1			2			
49	93501–08001	.BALL .BILLE			2			
50	6H1–43883–00	.O-RING .JOINT TORIQUE			2			
51	69A–4384H–00	.SPRING .RESSORT			2			
52	93606–14081	.PIN, DOWEL .GOUPILLE			2			
53	91318–05025	.BOLT .BOULON			6			
54	69A–43816–01	.FILTER 1 .FILTRE 1			1			

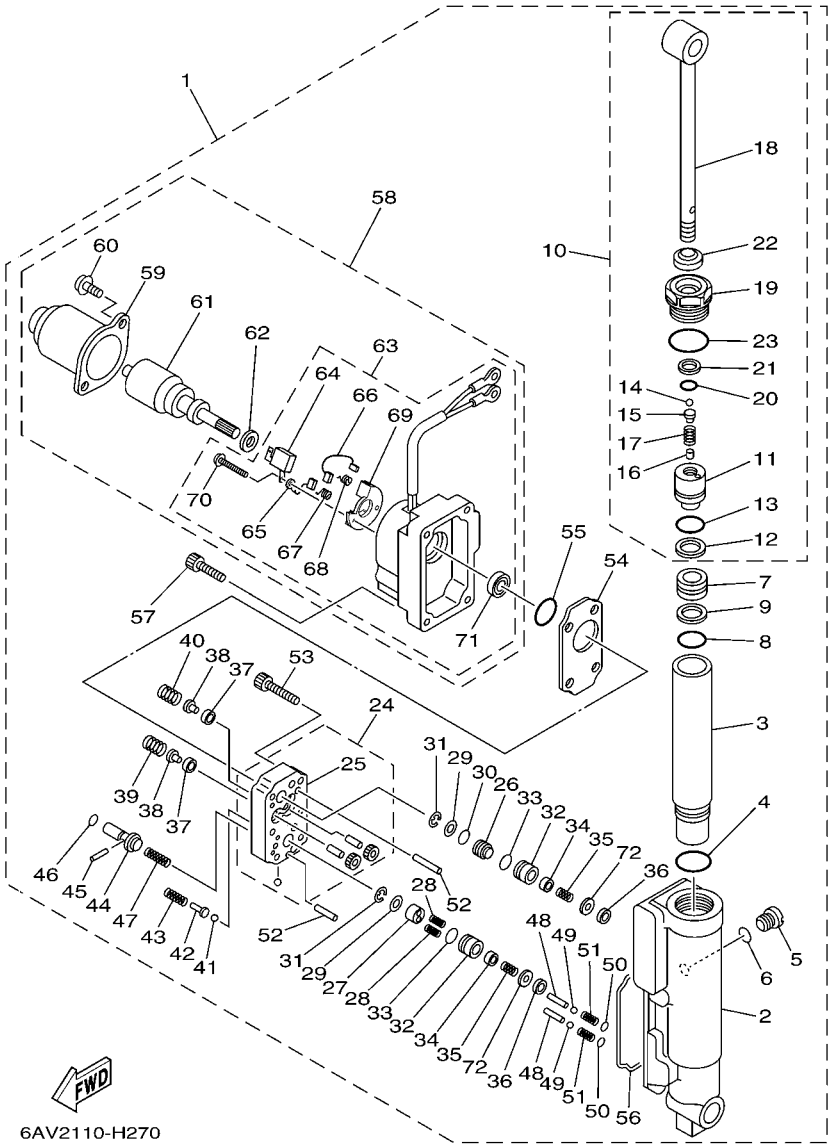

FIG. 27 POWER TILT ASSY — PUISSANCE PARER ET INCLINER

REF. NO.	PART NO. N° PIECES	DESCRIPTION DESCRIPTION	MH	E	EP			REMARKS REMARQUES
55	N35–43862–10	.O-RING .JOINT TORIQUE			1			
56	69A–23129–00	.GASKET, DRAIN PLUG .JOINT, PLOT DE VIDANGE			1			
57	69A–43878–00	.BOLT, SOCKET .BOULON			4			
58	69G–43880–01	.MOTOR ASSY .MOTEUR (ENS.)			1			
59	65W–43804–01	..STATOR ASSY ..STATOR (ENS.)			1			
60	65W–43887–01	..BOLT ..BOULON			2			
61	65W–43805–01	..ARMATURE ASSY ..INDUIT (ENS.)			1			
62	65W–4387G–00	..WASHER ..RONDELLE			1			
63	69G–43881–01	..FRAME, END ..BATI			1			
64	65W–82181–00	...CIRCUIT BREAKER COMP. ...RUPTEUR COMPLET			1			
65	65W–43892–01	...BRUSH 2 ...BALAI 2			1			
66	65W–43891–01	...BRUSH 1 ...BALAI 1			1			
67	65W–4386K–01	...SPRING, BRUSH ...RESSORT, BALAI			1			
68	65W–4386L–00	...SPRING, BRUSH 2 ...RESSORT, BALAI 2			1			
69	65W–4380F–01	...PLATE, BRUSH HOLDER ...PLAQUE			1			
70	65W–43879–01	...SCREW, WITH WASHER ...VIS, AVEC RONDELLE			2			
71	65W–43882–01	...OIL SEAL ...JOINT SPI			1			
72	69G–4388F–00	.SPACER .ENTRETOISE			2			

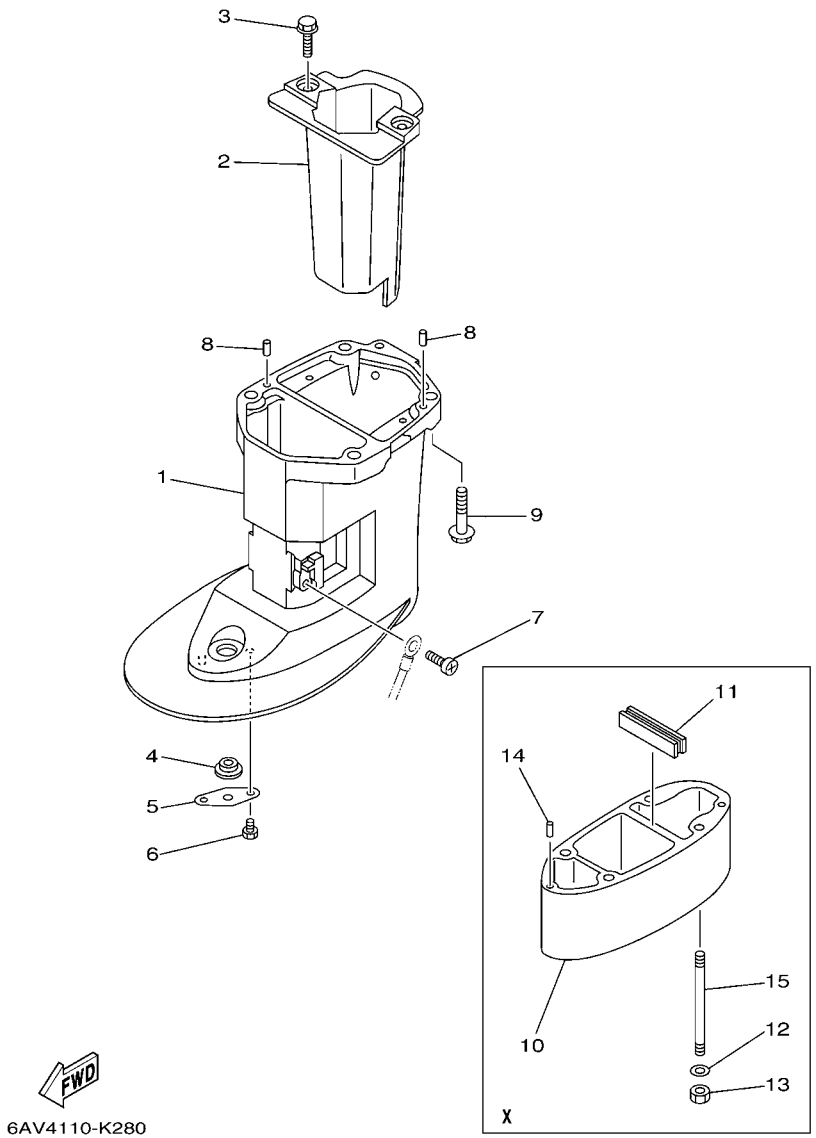

FIG. 28 UPPER CASING FOURREAU

REF. NO.	PART NO. N° PIECES	DESCRIPTION DESCRIPTION	MH	E	EP			REMARKS REMARQUES
1	6AU–45111–10–4D	CASING, UPPER FOURREAU	1	1	1			
2	6AU–14711–00–CA	MUFFLER 1 POT D'ECHAPPEMENT 1	1	1	1			
3	97575–06514	BOLT, WITH WASHER VIS HEXAGONAL AVC RONDELLE	2	2	2			
4	90480–14M54	GROMMET PASSE-FIL	1	1	1			
5	68T–45321–00	PLATE PLAQUETTE	1	1	1			
6	97095–06008	BOLT BOULON	1	1	1			
7	97885–05008	SCREW, PAN HEAD VIS, A ENCOCHE	1	1	1			
8	93604–12M07	PIN, DOWEL CLAVETTE	2	2	2			
9	97575–08535	BOLT, WITH WASHER VIS HEXAGONAL AVC RONDELLE	4	4	4			
10	69G–45211–20–4D	EXTENSION EXTENSION	1	1				X(24.4") X(24.4")
11	63V–45127–00	SEAL JOINT	1	1				X(24.4") X(24.4")
12	92990–08600	WASHER, PLATE RONDELLE, PLATE	4	4				X(24.4") X(24.4")
13	95380–08600	NUT ECROU	4	4				X(24.4") X(24.4")
14	93604–12M07	PIN, DOWEL CLAVETTE	2	2				X(24.4") X(24.4")
15	90116–08M62	BOLT, STUD GOUJON	4	4				X(24.4") X(24.4")

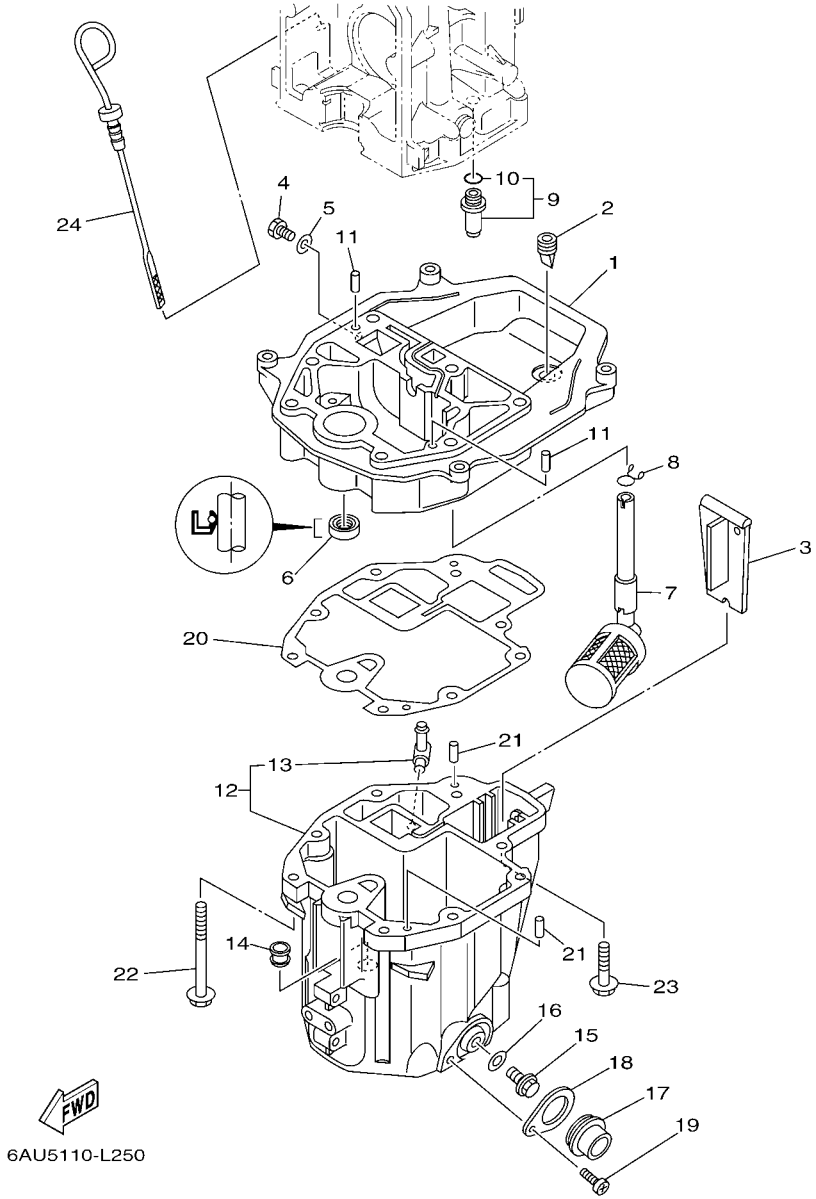

FIG. 29 OIL PAN — VENTILATEUR D'HUILE

REF. NO.	PART NO. N° PIECES	DESCRIPTION DESCRIPTION	MH	E	EP			REMARKS REMARQUES
1	68T–41137–00–CA	GUIDE, EXHAUST COLLECTEUR D'ECHAPPEMENT	1	1	1			
2	65W–42717–00	RUBBER, SEAL 2 JOINT EN CAOUTCHOUC 2	1	1	1			
3	68T–45181–00	PLATE PLAQUETTE	1	1	1			
4	97095–08014	BOLT BOULON	1	1	1			
5	90430–08143	GASKET JOINT	1	1	1			
6	93101–12M70	OIL SEAL JOINT SPY	1	1	1			
7	68T–13421–01	STRAINER 2 FILTRE 2	1	1	1			
8	90467–11M08	CLIP JONC	1	1	1			
9	6G8–11575–00	RELIEF VALVE ASSY SOUPAPE DE RENTREE D'AIR	1	1	1			
10	93210–12M62	.O-RING .JOINT TORIQUE	1	1	1			
11	93606–19M23	PIN, DOWEL GOUPILLE	2	2	2			
12	68T–15311–01–CA	OIL PAN VENTILATEUR D'HUILE	1	1	1			
13	6H1–11372–00	.NIPPLE, HOSE .RACCORD, TUYAU	1	1	1			
14	90480–10M28	GROMMET PASSE-FIL	1	1	1			
15	90340–10M10	PLUG, STRAIGHT SCREW PLOT, FILETE DROIT	1	1	1			
16	90430–10M11	GASKET JOINT	1	1	1			
17	68T–15316–00	DAMPER 1 AMORTISSEUR 1	1	1	1			
18	68T–15317–00	SPACER, ENGINE MOUNT ENTRETOISE DE SUPPORT	1	1	1			
19	97885–05008	SCREW, PAN HEAD VIS, A ENCOCHE	1	1	1			
20	68T–13475–00	GASKET JOINT	1	1	1			
21	93604–12M07	PIN, DOWEL CLAVETTE	2	2	2			
22	90119–08005	BOLT, WITH WASHER BOULON, AVEC RONDELLE	6	6	6			
23	97575–08530	BOLT, WITH WASHER VIS HEXAGONAL AVC RONDELLE	2	2	2			
24	68T–15362–00	PLUG, OIL LEVEL PLOT, NIVEAU D'HUILE	1	1	1			

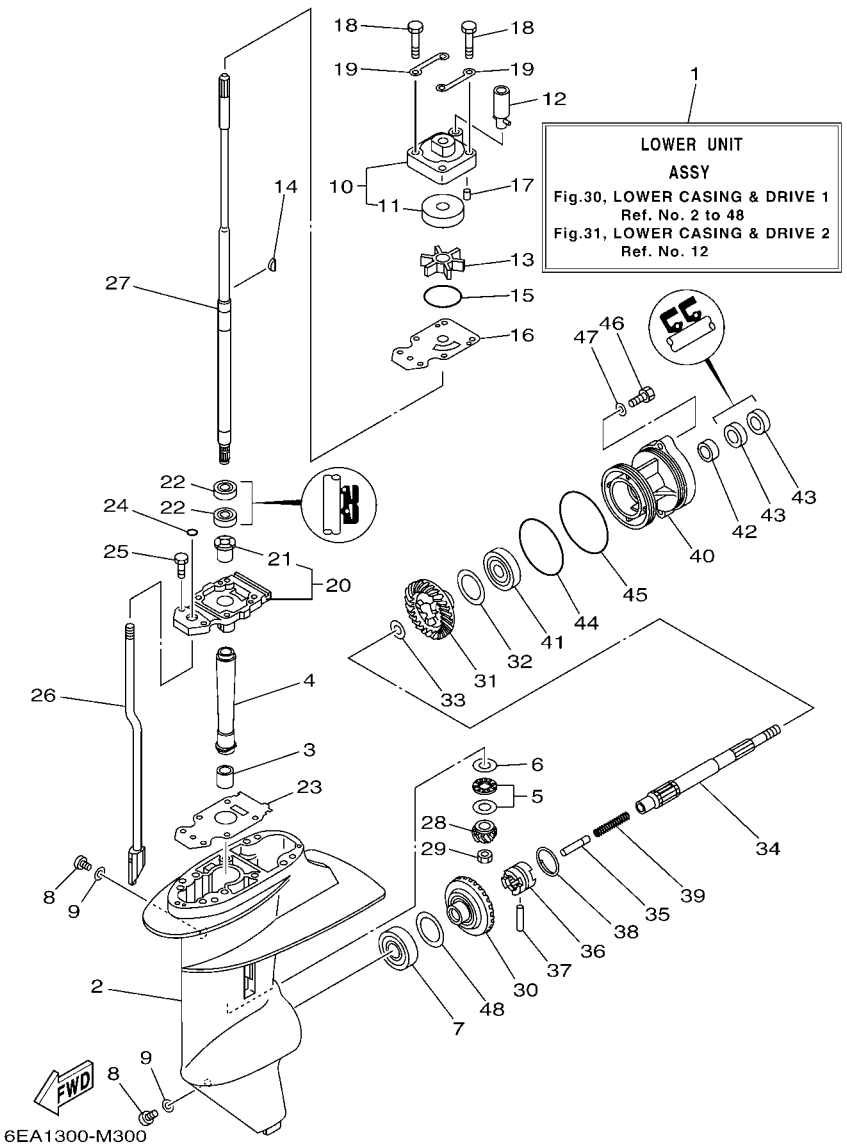

FIG. 30 LOWER CASING & DRIVE 1 BOITIER D'HELICE TRANSMISSION1

REF. NO.	PART NO. N° PIECES	DESCRIPTION DESCRIPTION	MH	E	EP			REMARKS REMARQUES
1	69G–45300–11–4D	LOWER UNIT ASSY UNITE INFERIEURE (ENS.)	1	1	1			L(21.7") L(21.7")
	69G–45300–21–4D	LOWER UNIT ASSY UNITE INFERIEURE (ENS.)	1	1				X(24.4") X(24.4")
2	66R–45311–01–4D	CASING, LOWER BOITIER D'HELICE	1	1	1			
3	93315–314V8	BEARING ROULEMENT	1	1	1			
4	66R–45536–00	SLEEVE, DRIVE SHAFT MANCHON, ARBRE MOTEUR	1	1	1			
5	93341–41416	BEARING CERVEAUX DE DIRECTION	1	1	1			
6	66R–45587–00	SHIM (T:1.13MM) CALE (T:1.13MM)	1	1	1			UR UR
	66R–45587–10	SHIM (T:1.20MM) CALE (T:1.20MM)	1	1	1			UR UR
7	93332–00005	BEARING ROULEMENT	1	1	1			
8	90340–08002	PLUG, STRAIGHT SCREW PLOT, FILETE DROIT	2	2	2			
9	90430–08020	GASKET JOINT	2	2	2			
10	63V–44301–00	WATER PUMP HOUSING COMP. CARTER, POMPE A EAU (ENS)	1	1	1			
11	63V–44322–00	.INSERT, CARTRIDGE .CUVETTE	1	1	1			
12	68T–44366–00	DAMPER, WATER SEAL 2 JOINT, TUBE D'EAU 2	1	1	1			
13	63V–44352–01	IMPELLER TURBINE	1	1	1			
14	664–44338–00	KEY, WOODRUFF CLAVETTE, VOLANT	1	1	1			
15	93210–44398	O-RING JOINT TORIQUE	1	1	1			
16	68T–44323–00	OUTER PLATE, CARTRIDGE PLAQUE EXTERIEURE	1	1	1			
17	93604–12M07	PIN, DOWEL CLAVETTE	2	2	2			
18	97095–08045	BOLT BOULON	4	4	4			
19	63V–44328–01	PLATE PLAQUETTE	2	2	2			
20	69G–45331–01–CA	HOUSING, BEARING FLASQUE, ROULEMENT	1	1	1			
21	626–45316–09	.BUSHING, DRIVE SHAFT .DOUILLE, ARBRE MOTEUR	1	1	1			
22	93101–20048	OIL SEAL JOINT SPY	2	2	2			
23	69G–45315–A0	PACKING, LOWER CASING JOINT, BOITIER D'HELICE	1	1	1			
24	93210–06ME6	O-RING JOINT TORIQUE	1	1	1			
25	97080–08025	BOLT BOULON	2	2	2			

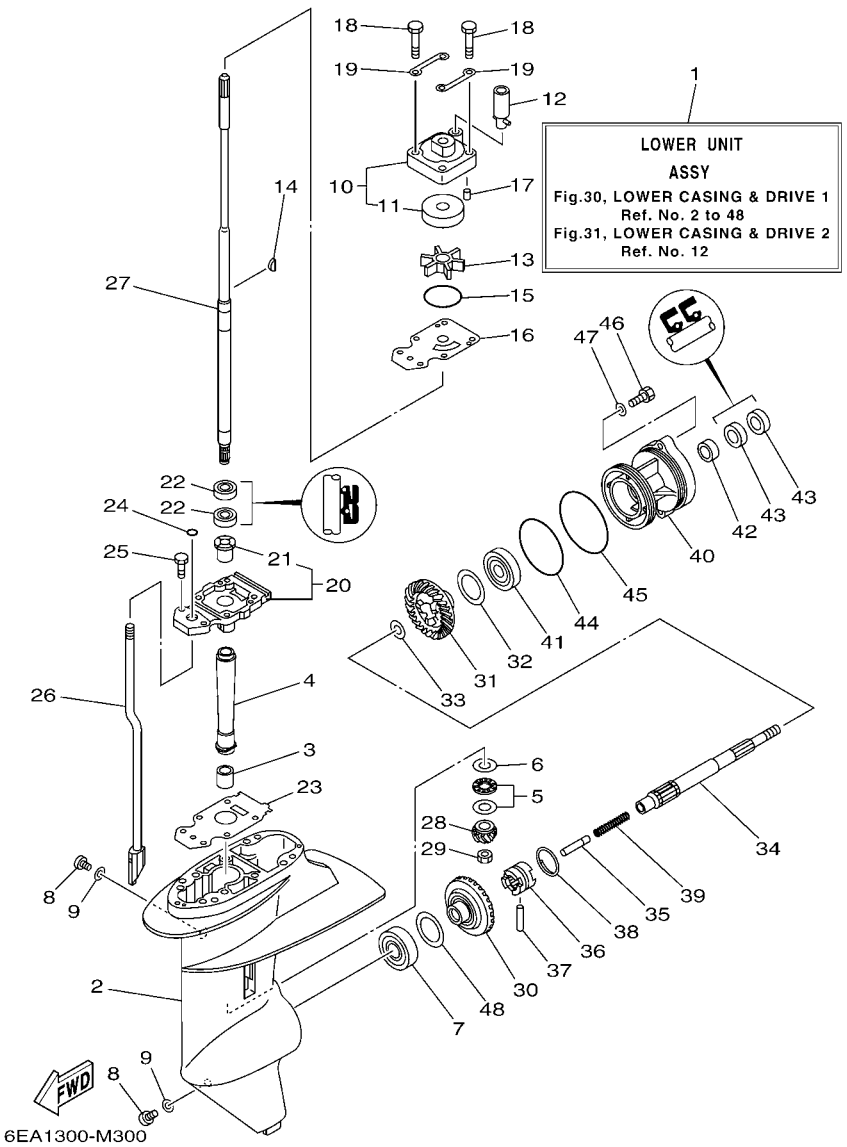

FIG. 30 LOWER CASING & DRIVE 1 BOITIER D'HELICE TRANSMISSION1

REF. NO.	PART NO. N° PIECES	DESCRIPTION DESCRIPTION	MH	E	EP			REMARKS REMARQUES
26	69G–44150–10	SHIFT CAM ASSY CAME D'INVERSION	1	1	1			L(21.7") L(21.7")
	69G–44150–20	SHIFT CAM ASSY CAME D'INVERSION	1	1				X(24.4") X(24.4")
27	69G–45510–10	DRIVE SHAFT ASSY ARBRE MOTEUR (ENS.)	1	1	1			L(21.7") L(21.7")
	69G–45510–20	DRIVE SHAFT ASSY ARBRE MOTEUR (ENS.)	1	1				X(24.4") X(24.4")
28	66R–45551–00	PINION (13T) PIGNON D'ATTAQUE (13D)	1	1	1			
29	90179–08M06	NUT ECROU	1	1	1			
30	66R–45560–01	GEAR 1 (38T) PIGNON 1 (38T)	1	1	1			
31	66R–45571–00	GEAR 2 (38T) PIGNON 2 (38T)	1	1	1			
32	626–45577–00	SHIM (T:0.10MM) CALE (T:0.10MM)	1	1	1			UR UR
	626–45577–10	SHIM (T:0.20MM) CALE (T:0.20MM)	1	1	1			UR UR
	626–45577–20	SHIM (T:0.30MM) CALE (T:0.30MM)	1	1	1			UR UR
	626–45577–30	SHIM (T:0.40MM) CALE (T:0.40MM)	1	1	1			UR UR
	626–45577–40	SHIM (T:0.50MM) CALE (T:0.50MM)	1	1	1			UR UR
33	90201–17682	WASHER, PLATE RONDELLE, PLATE	1	1	1			
34	683–45611–00	SHAFT, PROPELLER ARBRE, HELICE	1	1	1			
35	650–45635–00	PLUNGER, SHIFT POUSSOIR D'EMBRAYAGE	1	1	1			
36	69G–45631–00	CLUTCH, DOG CRABOT	1	1	1			
37	90250–05010	PIN, STRAIGHT GOUPILLE, DROITE	1	1	1			
38	648–45633–00	RING, CROSS PIN JONC, GOUPILLE CRABOT	1	1	1			
39	90501–14M09	SPRING, COMPRESSION RESSORT, COMPRESSION	1	1	1			
40	66R–45361–00–4D	CAP, LOWER CASING COUVERCLE, BOITIER D'HELICE	1	1	1			
41	93306–00501	BEARING ROULEMENT	1	1	1			
42	93315–317U2	BEARING ROULEMENT	1	1	1			
43	93101–17054	OIL SEAL JOINT SPY	2	2	2			
44	93210–74M68	O-RING JOINT TORIQUE	1	1	1			
45	93210–74316	O-RING JOINT TORIQUE	1	1	1			
46	97095–06025	BOLT BOULON	2	2	2			

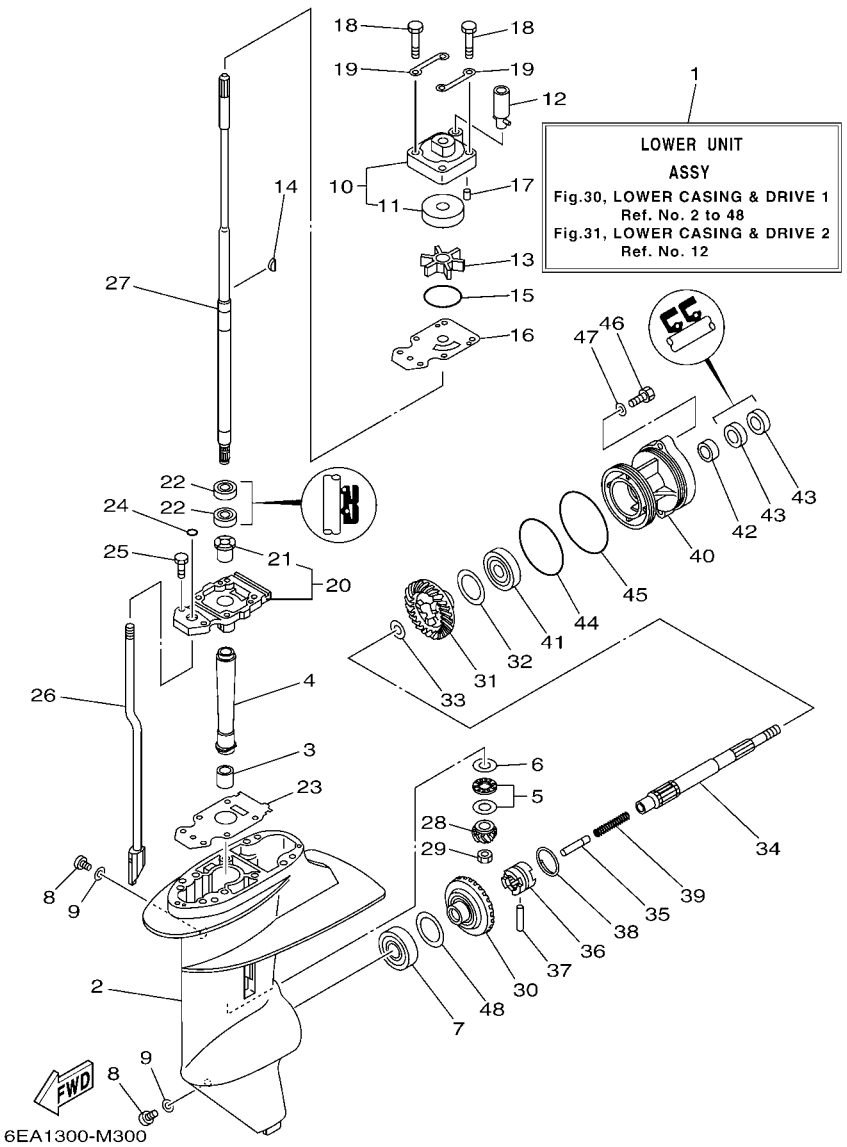

FIG. 30 LOWER CASING & DRIVE 1 BOITIER D'HELICE TRANSMISSION1

REF. NO.	PART NO. N° PIECES	DESCRIPTION DESCRIPTION	MH	E	EP			REMARKS REMARQUES
47	92995–06600	WASHER RONDELLE	2	2	2			
48	626–45577–00	SHIM (T:0.10MM) CALE (T:0.10MM)	1	1	1			UR UR
	626–45577–10	SHIM (T:0.20MM) CALE (T:0.20MM)	1	1	1			UR UR
	626–45577–20	SHIM (T:0.30MM) CALE (T:0.30MM)	1	1	1			UR UR
	626–45577–30	SHIM (T:0.40MM) CALE (T:0.40MM)	1	1	1			UR UR
	626–45577–40	SHIM (T:0.50MM) CALE (T:0.50MM)	1	1	1			UR UR

FIG. 31 LOWER CASING & DRIVE 2 BOITIER D'HELICE TRANSMISSION2

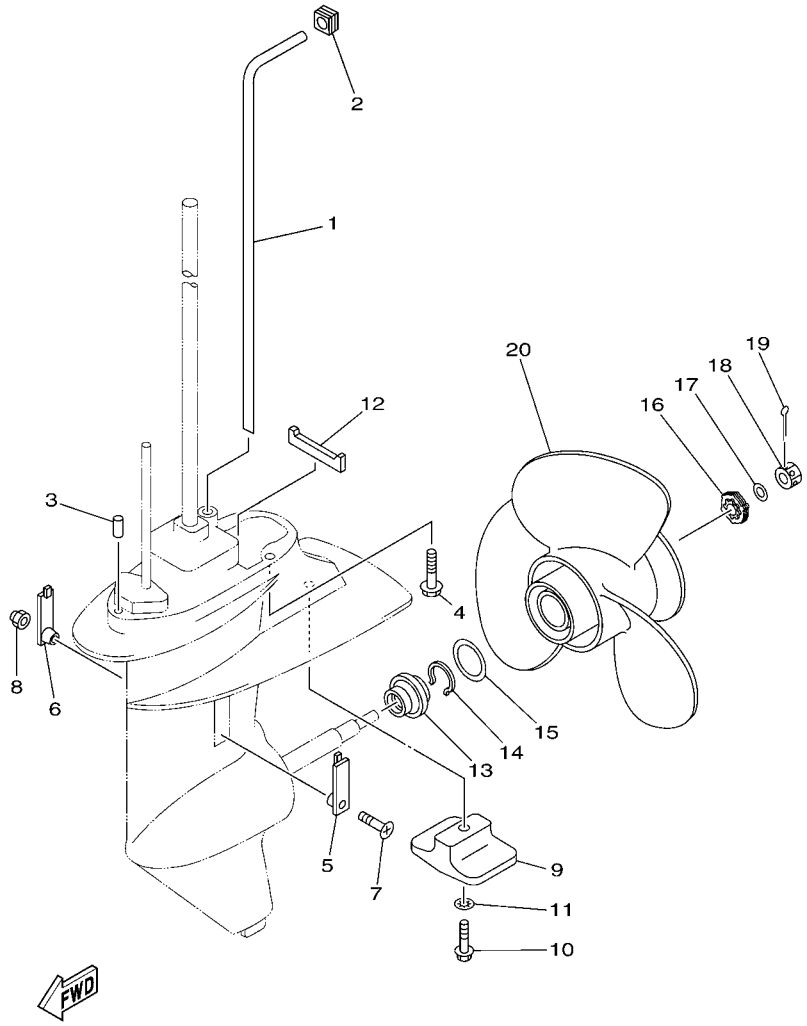

6AV4110-K310

REF. NO.	PART NO. N° PIECES	DESCRIPTION DESCRIPTION	MH	E	EP			REMARKS REMARQUES
1	68T–44361–10	TUBE, WATER 1 TUBE D'EAU 1	1	1	1			L(21.7") L(21.7")
	69G–44361–20	TUBE, WATER 1 TUBE D'EAU 1	1	1				X(24.4") X(24.4")
2	63V–44365–10	DAMPER, WATER SEAL 1 JOINT, TUBE D'EAU 1	1	1	1			
3	93604–12M07	PIN, DOWEL CLAVETTE	2	2	2			
4	97575–08535	BOLT, WITH WASHER VIS HEXAGONAL AVC RONDELLE	4	4	4			L(21.7") L(21.7")
5	6G1–45214–00	COVER, WATER INLET 1 GRILLE, ENTREE D'EAU 1	1	1	1			
6	63V–45215–00	COVER, WATER INLET 2 GRILLE, ENTREE D'EAU 2	1	1	1			
7	90152–05011	SCREW, COUNTERSUNK VIS, TETE NOYEE	1	1	1			
8	90185–05002	NUT, NYLON ECROU,AUTO-BLOQUANT	1	1	1			
9	61N–45251–01	ANODE ANODE	1	1	1			
10	95895–06030	BOLT, FLANGE BOULON	1	1	1			
11	92990–06300	WASHER, INTERNAL TOOTH RONDELLE, DENTURE INTERNE	1	1	1			
12	63V–45375–00	DAMPER, SEAL BOURRELET, CAOUTCHOUC	1	1	1			
13	6G8–45987–02	SPACER 1 ENTRETOISE 1	1	1	1			
14	93450–10M04	CIRCLIP CIRCLIP, TYPE S	1	1	1			
15	90201–31MA3	WASHER, PLATE RONDELLE, PLATE	1	1	1			
16	6G8–45997–00	SPACER 2 ENTRETOISE 2	1	1	1			
17	90201–10M02	WASHER, PLATE RONDELLE, PLATE	1	1	1			
18	90171–10M07	NUT, CASTLE ECROU, CRENELE	1	1	1			
19	91490–30025	PIN. COTTER GOUPILLE	1	1	1			
20	69G–45943–00	PROPELLER (3X11-3/4"X7-R) HELICE (3X11-3/4"X7-R)	1	1	1			

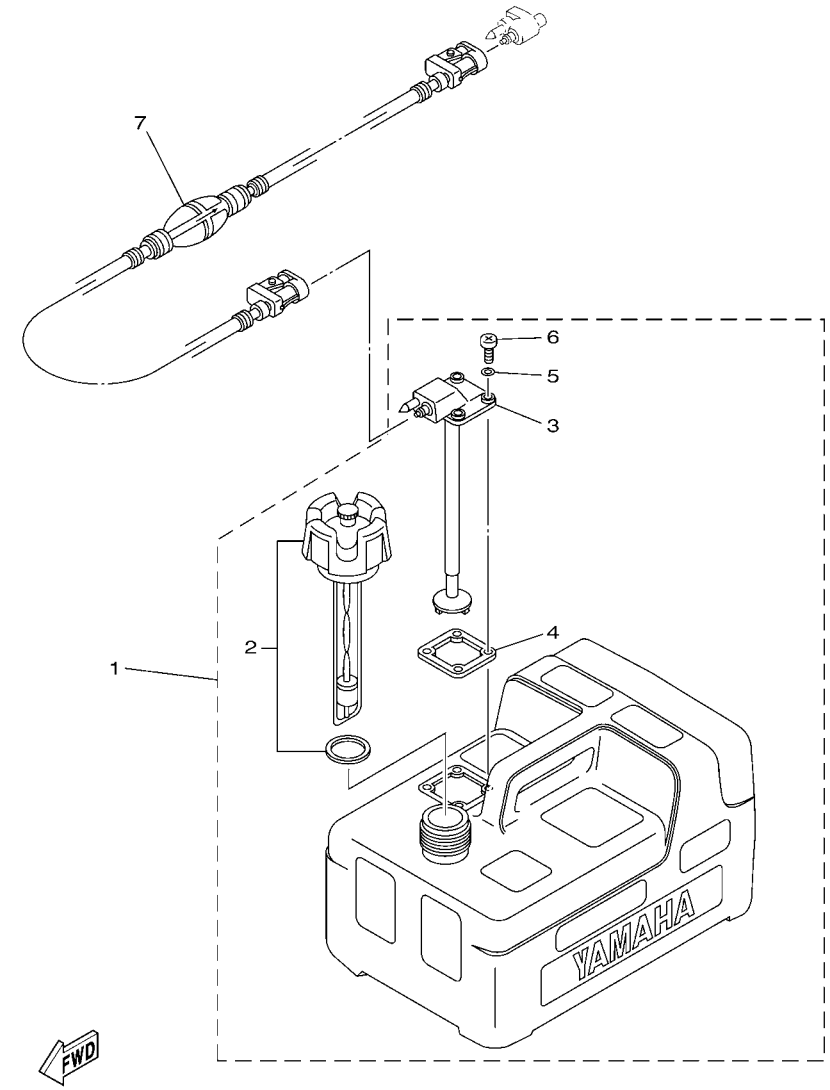

6FW1700-P250

FIG. 32 FUEL TANK — RESERVOIR A CARBURANT

REF. NO.	PART NO. N° PIECES	DESCRIPTION DESCRIPTION	MH	E	EP			REMARKS REMARQUES
1	6YL–24201–06	FUEL TANK ASSY (12L) RESERVOIR A ESSENCE (ENS.) 12L	1	1	1			AP AP
2	6YL–24610–01	.CAP ASSY .BOUCHON	1	1	1			
3	6YL–24260–10	.FUEL METER ASSY .INDICATEUR DE CARBURANT	1	1	1			
4	6YL–24268–01	.GASKET, FUEL METER .JOINT, JAUGE A CARBURANT	1	1	1			
5	6YL–24329–00	.SEAL .JOINT	4	4	4			
6	90157–05M16	.SCREW, PAN HEAD .VIS, TETE TRONCONIQUE	4	4	4			
7	6YL–24306–54	FUEL PIPE COMP. 1 DURITE A ESSENCE 1	1	1	1			AP AP

FIG. 33 STEERING GUIDE FIXATION DE DIRECTION

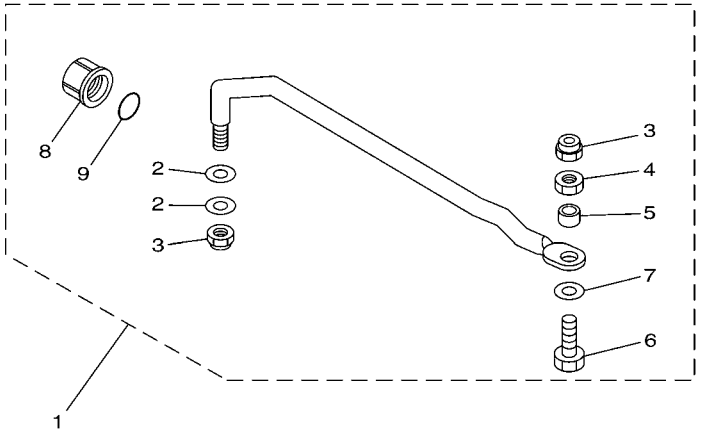

6AU1100-G300

REF. NO.	PART NO. N° PIECES	DESCRIPTION DESCRIPTION	MH	E	EP			REMARKS REMARQUES
1	68T–61350–10	STEERING GUIDE ATTACHMENT KIT FIXATIONS DE DIRECTION	1	1	1			AP AP
2	90201–10M20	.WASHER, PLATE .RONDELLE, PLATE	2	2	2			
3	90185–09M01	.NUT, SELF-LOCKING .ECROU,AUTO-BLOQUANT	2	2	2			
4	90170–09M03	.NUT .ECROU	1	1	1			
5	90387–10M42	.COLLAR .COLLERETTE	1	1	1			
6	6E5–61355–00	.BOLT .BOULON	1	1	1			
7	90201–10M63	.WASHER, PLATE .RONDELLE, PLATE	1	1	1			
8	6E5–43145–01	.CAP, CLAMP BRACKET .CAPUCHON, PRESSE	1	1	1			
9	93210–16275	.O-RING .JOINT TORIQUE	1	1	1			

FIG. 34 REMOTE CONTROL BOX BOITIER DE COMMANDE A DISTANCE

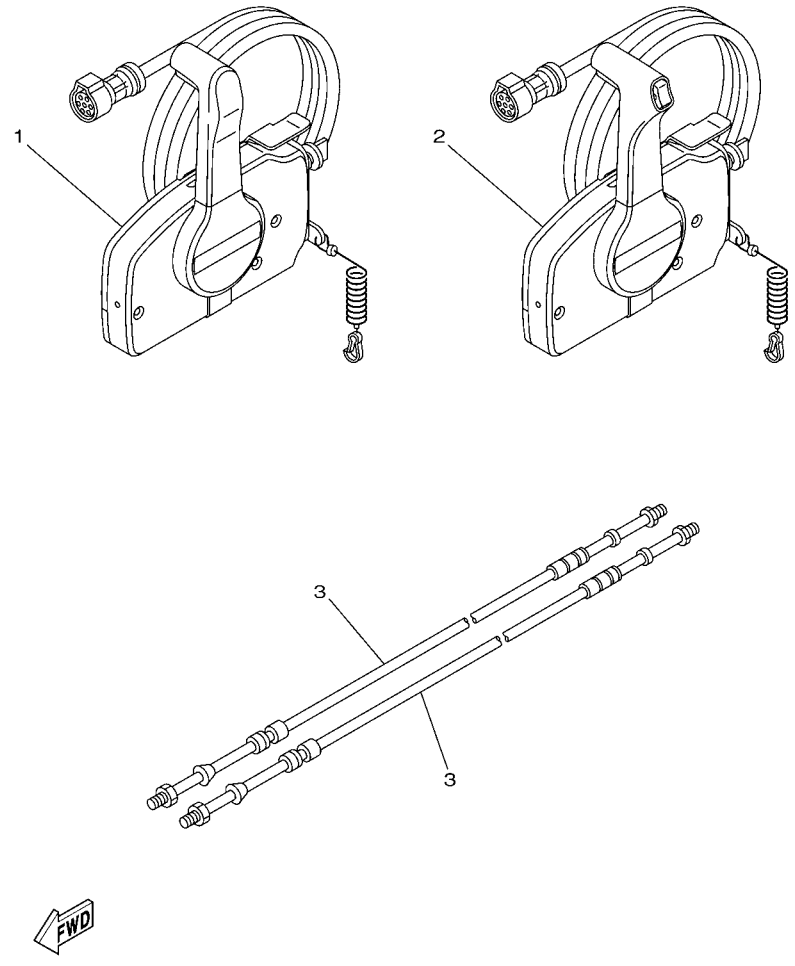

REF. NO.	PART NO. N° PIECES	DESCRIPTION DESCRIPTION	MH	E	EP			REMARKS REMARQUES
1	703–48201–20	REMOTE CONTROL ASSY (10P) BOITIER DE COMMANDE A DISTANCE		1				AP WITHOUT PT/T SW. AP WITHOUT PT/T SW.
2	703–48205–20	REMOTE CONTROL ASSY (10P, PTT) BOITIER DE COMMANDE A DISTANCE			1			AP WITH PT/T SW. AP WITH PT/T SW.
3	701–48310–80	CABLE, REMOTE CONTROL L=10F CABLE, COMMANDE A DISTANCE:10F		2	2			UR UR
	701–48310–90	CABLE, REMOTE CONTROL L=11F CABLE, COMMANDE A DISTANCE:11F		2	2			UR UR
	701–48320–00	CABLE, REMOTE CONTROL L=12F CABLE, COMMANDE A DISTANCE:12F		2	2			UR UR

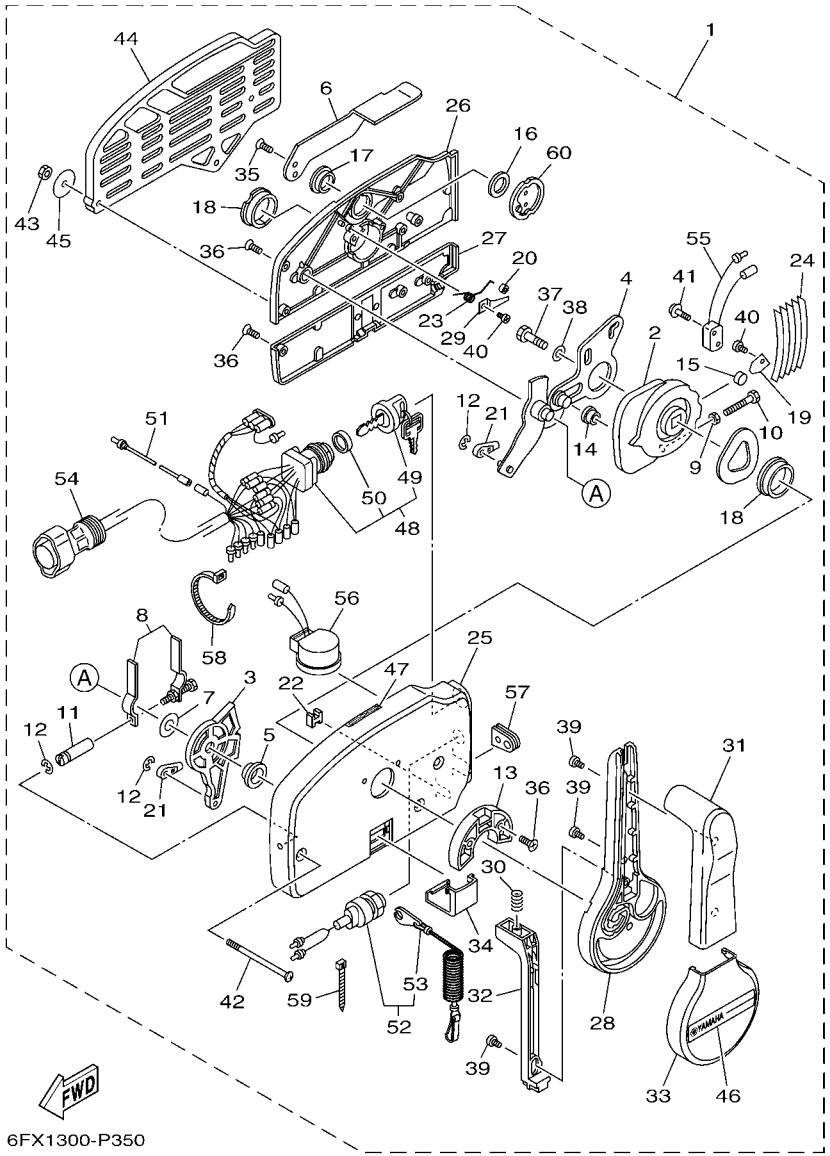

FIG. 35 REMOTE CONTROL ASSY 1 BOITIER DE COMMANDE A DISTANCE

REF. NO.	PART NO. N° PIECES	DESCRIPTION DESCRIPTION	MH	E	EP			REMARKS REMARQUES
1	703–48201–20	REMOTE CONTROL ASSY (10P) BOITIER DE COMMANDE A DISTANCE		1				AP WITHOUT PT/T SW. AP WITHOUT PT/T SW.
2	703–48232–00	.GEAR .PIGNON		1				
3	703–48271–00	.ARM, SHIFT .BRAS		1				
4	703–48261–01	.ARM, THROTTLE .BRAS, ACCELERATION		1				
5	703–48235–00	.BUSHING .COUSSINET		1				
6	703–48152–10	.KNOB, FREE ACCEL. .BOUTON		1				
7	703–48268–00	.SPACER .ENTRETOISE		1				
8	703–48264–00	.FRICTION, THROTTLE .FRICTION, ACCELERATION		1				
9	95380–05600	.NUT .ECROU		1				
10	97380–05025	.BOLT .BOULON, HEXAGONAL		1				
11	703–48265–00	.SHAFT, FRICTION .AXE, COPILOTE		1				
12	93430–06024	.CIRCLIP .CLIPS		3				
13	703–48245–00	.PLATE, LOCK .PLAQUE, VERROU		1				
14	703–48252–00	.ROLLER, CAM .POULIE		1				
15	701–48248–00	.ROLLER, FREE ACCEL. .POULIE		1				
16	703–48198–00	.WASHER, WAVE .RONDELLE, ELASTIQUE ONDULEE		1				
17	703–48243–00	.BUSHING .COUSSINET		1				
18	703–48236–00	.BUSHING 1 .POULIE		2				
19	703–48189–00	.RETAINER .FLASQUE		1				
20	703–48234–00	.ROLLER, DETENT .POULIE		1				
21	703–48345–01	.CABLE END, REMOTE CONTROL 2 .CHAPE CABLE		2				
22	703–48358–00	.ANCHOR, CABLE .COLLIER		1				
23	703–48244–00	.SPRING, FREE ACCEL. .RESSORT		1				
24	703–48238–00	.SPRING, DETENT .RESSORT		5				
25	703–48211–10	.HOUSING,1 .CORPS		1				
26	703–48212–10	.BACK PLATE 1 .PLAQUETTE 1		1				
27	703–48213–10	.BACK PLATE 2 .PLAQUETTE 2		1				

FIG. 35 REMOTE CONTROL ASSY 1 BOITIER DE COMMANDE A DISTANCE

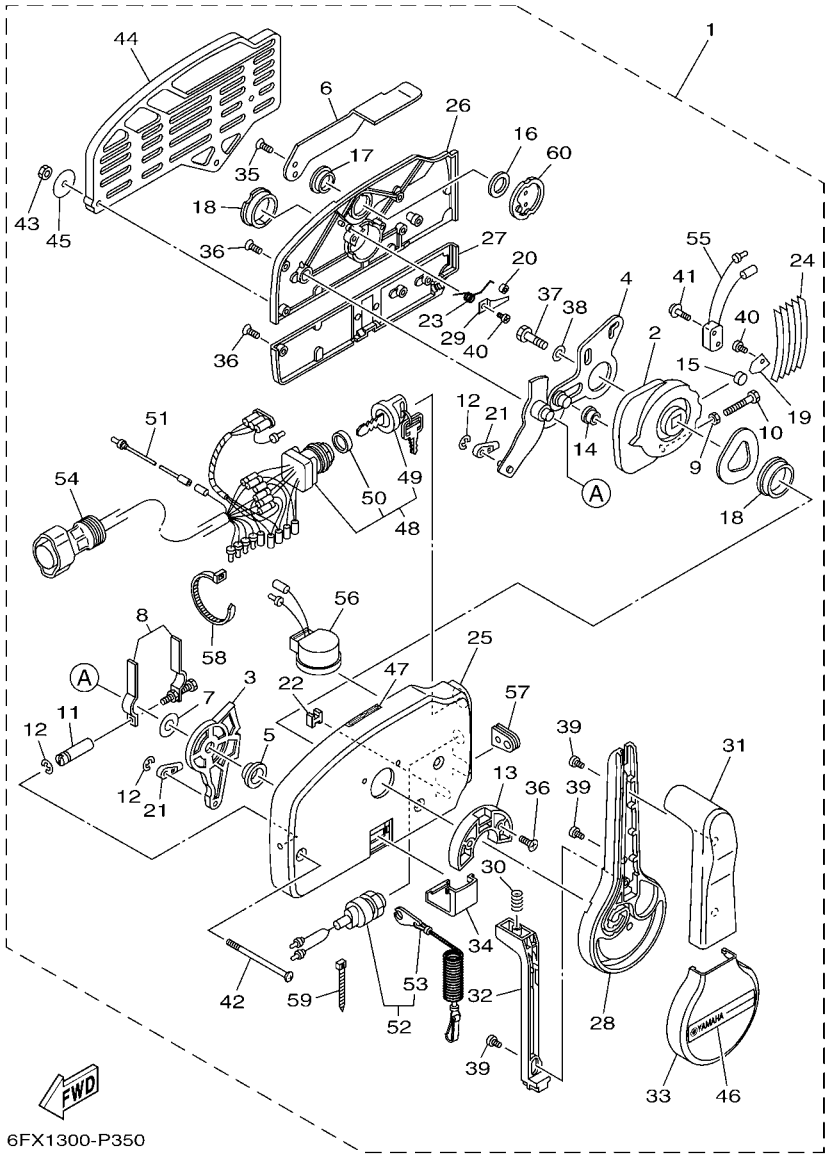

REF. NO.	PART NO. N° PIECES	DESCRIPTION DESCRIPTION	MH	E	EP			REMARKS REMARQUES
28	703–48221–10	.LEVER, CONTROL .LEVIER, COMMANDE		1				
29	703–48246–00	.SPACER .ENTRETOISE		1				
30	703–48227–00	.SPRING, NEUTRAL LOCK .RESSORT		1				
31	703–48222–30	.GRIP, CONTROL LEVER .POIGNEE, COMMANDE LEVIER		1				SINGLE SINGLE
32	703–48223–10	.LOCK, NEUTRAL .VERROU, NEUTRAL		1				
33	703–48225–10	.COVER .COUVERCLE		1				
34	703–48219–10	.COVER, LEAD .COUVERCLE		1				
35	703–48281–00	.SCREW .VIS		2				
36	703–44189–20	.SCREW .VIS		7				
37	97380–08030	.BOLT .BOULON, HEXAGONAL		1				
38	92990–08600	.WASHER, PLATE .RONDELLE, PLATE		1				
39	703–48128–10	.SCREW 2 .VIS 2		3				
40	98580–04006	.SCREW, PAN HEAD .VIS		2				
41	703–48129–00	.SCREW 3 .VIS 3		2				
42	703–44189–30	.SCREW .VIS		3				
43	95380–06600	.NUT, HEXAGON .ECROU		3				
44	703–48293–10	.SPACER, REMOTE CONTROL .ENTRETOISE		1				SINGLE SINGLE
45	701–48287–00	.WASHER .RONDELLE		3				
46	703–48215–10	.GRAPHIC .ADHESIF		1				
47	6X3–44191–00	.INDICATOR, SHIFT .ETIQUETTE, EMBRAYAGE		1				
48	703–82510–44	.MAIN SWITCH ASSY .CONTACTEUR A CLEF COMPLET		1				
49	703–82577–00	..CAP, KEY ..CABOCHON		1				
50	6K1–82532–00	..CAP ..COUVERCLE		1				
51	703–82531–00	.WIRE, LEAD (L70) .FIL (L70)		1				
52	688–82575–01	.ENGINE STOP SWITCH ASSY .COUPE CIRCUIT CPLT		1				
53	682–82556–00	..LANYARD, STOP SWITCH ..CORDON DU COUPE CIRCUIT		1				
54	688–8258A–20	.EXTENSION, WIRE HARNESS (4.9M) .EXTENSION, FAISCEAU DE FILS (4		1				(10P) (10P)

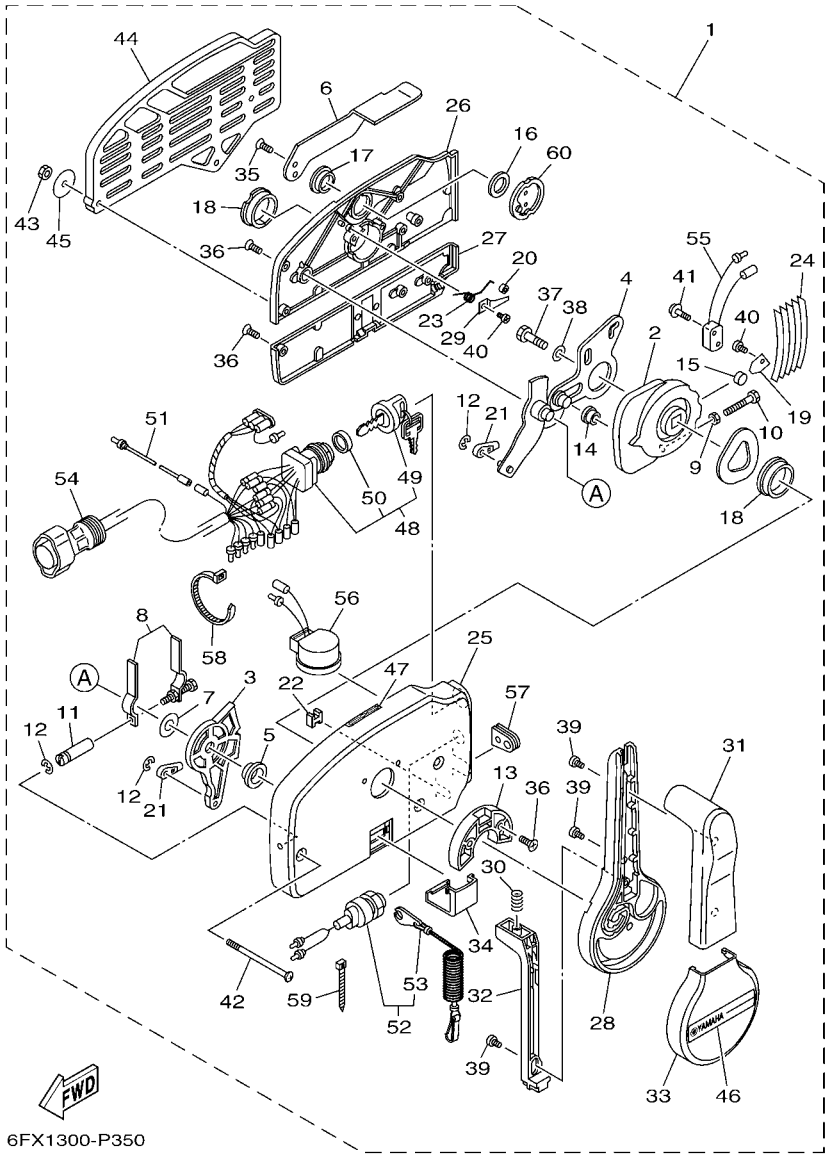

FIG. 35 REMOTE CONTROL ASSY 1 BOITIER DE COMMANDE A DISTANCE

REF. NO.	PART NO. N° PIECES	DESCRIPTION DESCRIPTION	MH	E	EP			REMARKS REMARQUES
55	703–82540–00	.NEUTRAL SWITCH ASSY .CONTACTEUR DE POINT-MORT		1				
56	703–83383–11	.BUZZER .RONFLEUR		1				
57	703–48284–00	.GROMMET .PASSE-FIL		1				
58	703–82591–00	.BAND .COLLIER		1				
59	703–82592–00	.BAND .COLLIER		1				
60	703–48153–00	.SHAFT, FREE ACCEL. .AXE		1				

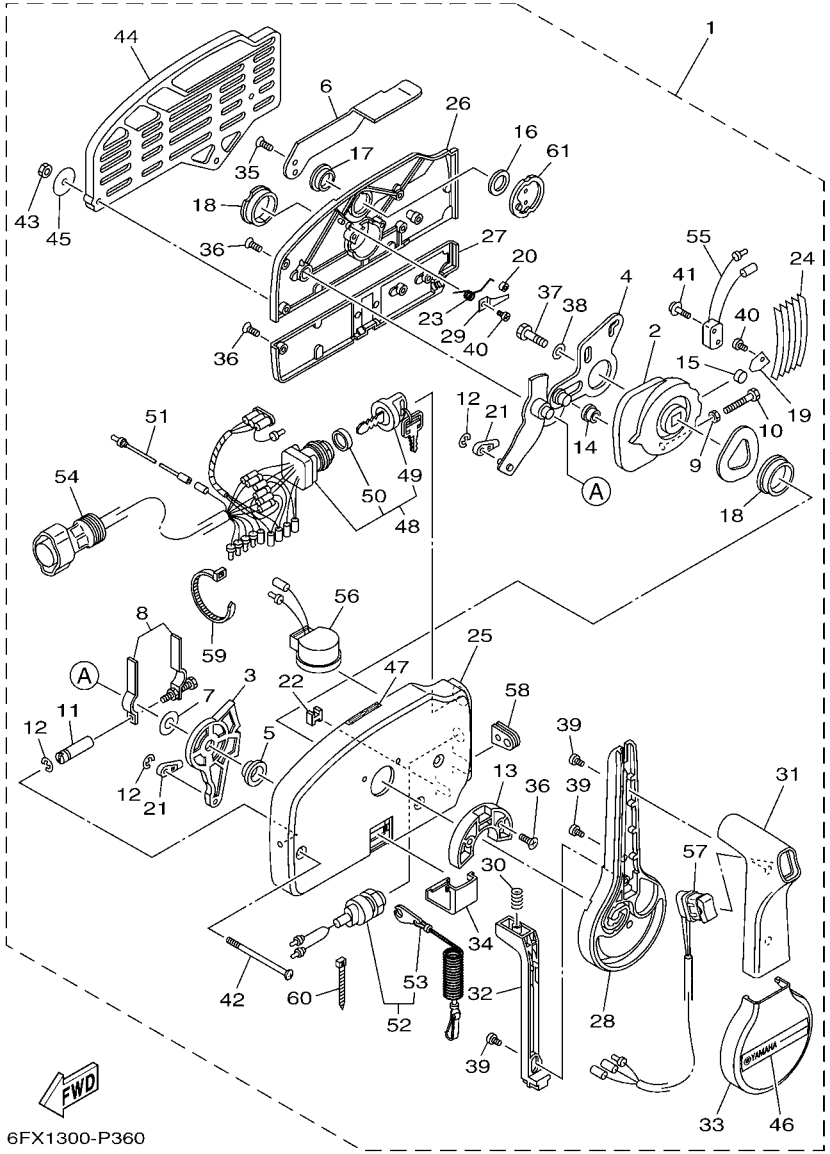

FIG. 36 REMOTE CONTROL ASSY 2 BOITIER DE COMMANDE A DISTANCE

REF. NO.	PART NO. N° PIECES	DESCRIPTION DESCRIPTION	MH	E	EP			REMARKS REMARQUES
1	703–48205–20	REMOTE CONTROL ASSY (10P, PTT) BOITIER DE COMMANDE A DISTANCE			1			AP WITH PT/T SW. AP WITH PT/T SW.
2	703–48232–00	.GEAR .PIGNON			1			
3	703–48271–00	.ARM, SHIFT .BRAS			1			
4	703–48261–01	.ARM, THROTTLE .BRAS, ACCELERATION			1			
5	703–48235–00	.BUSHING .COUSSINET			1			
6	703–48152–10	.KNOB, FREE ACCEL. .BOUTON			1			
7	703–48268–00	.SPACER .ENTRETOISE			1			
8	703–48264–00	.FRICTION, THROTTLE .FRICTION, ACCELERATION			1			
9	95380–05600	.NUT .ECROU			1			
10	97380–05025	.BOLT .BOULON, HEXAGONAL			1			
11	703–48265–00	.SHAFT, FRICTION .AXE, COPILOTE			1			
12	93430–06024	.CIRCLIP .CLIPS			3			
13	703–48245–00	.PLATE, LOCK .PLAQUE, VERROU			1			
14	703–48252–00	.ROLLER, CAM .POULIE			1			
15	701–48248–00	.ROLLER, FREE ACCEL. .POULIE			1			
16	703–48198–00	.WASHER, WAVE .RONDELLE, ELASTIQUE ONDULEE			1			
17	703–48243–00	.BUSHING .COUSSINET			1			
18	703–48236–00	.BUSHING 1 .POULIE			2			
19	703–48189–00	.RETAINER .FLASQUE			1			
20	703–48234–00	.ROLLER, DETENT .POULIE			1			
21	703–48345–01	.CABLE END, REMOTE CONTROL 2 .CHAPE CABLE			2			
22	703–48358–00	.ANCHOR, CABLE .COLLIER			1			
23	703–48244–00	.SPRING, FREE ACCEL. .RESSORT			1			
24	703–48238–00	.SPRING, DETENT .RESSORT			5			
25	703–48211–10	.HOUSING,1 .CORPS			1			
26	703–48212–10	.BACK PLATE 1 .PLAQUETTE 1			1			
27	703–48213–10	.BACK PLATE 2 .PLAQUETTE 2			1			

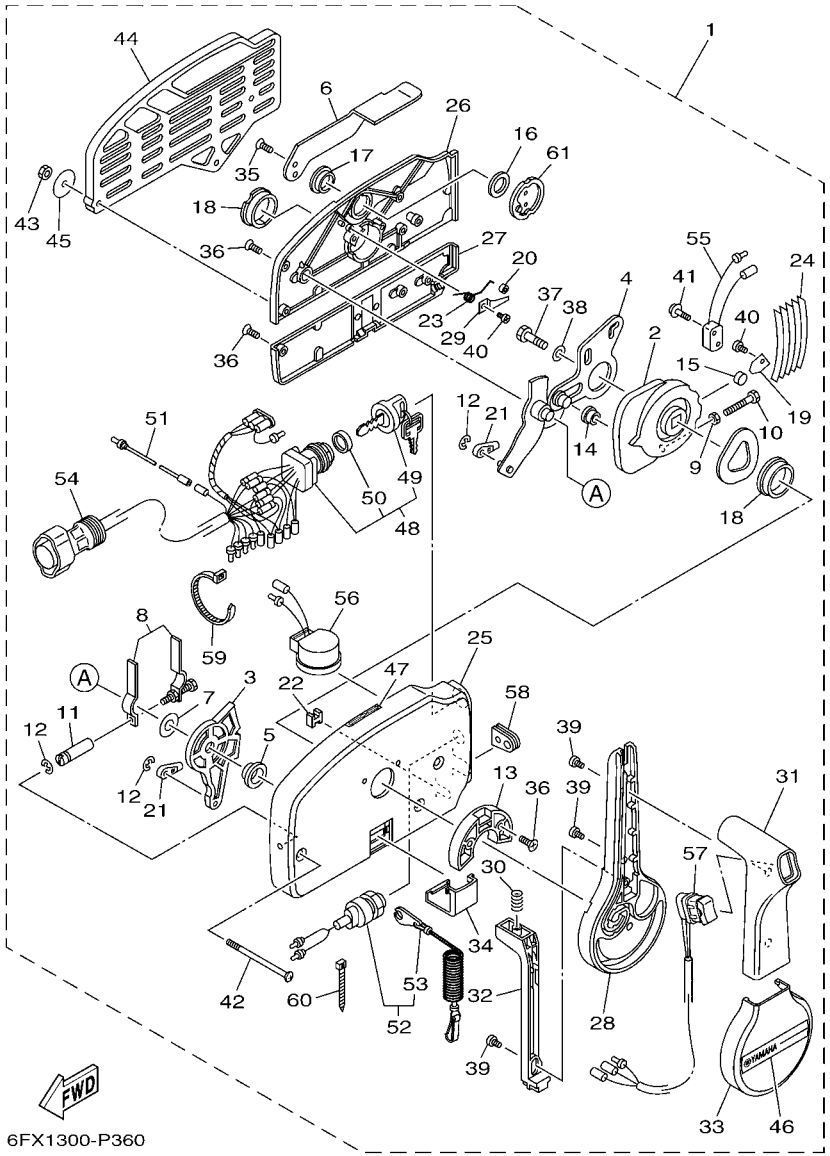

FIG. 36 REMOTE CONTROL ASSY 2 BOITIER DE COMMANDE A DISTANCE

REF. NO.	PART NO. N° PIECES	DESCRIPTION DESCRIPTION	MH	E	EP			REMARKS REMARQUES
28	703–48221–10	.LEVER, CONTROL .LEVIER, COMMANDE			1			
29	703–48246–00	.SPACER .ENTRETOISE			1			
30	703–48227–00	.SPRING, NEUTRAL LOCK .RESSORT			1			
31	703–48222–20	.GRIP, CONTROL LEVER .POIGNEE, COMMANDE LEVIER			1			SINGLE SINGLE
32	703–48223–10	.LOCK, NEUTRAL .VERROU, NEUTRAL			1			
33	703–48225–10	.COVER .COUVERCLE			1			
34	703–48219–10	.COVER, LEAD .COUVERCLE			1			
35	703–48281–00	.SCREW .VIS			2			
36	703–44189–20	.SCREW .VIS			7			
37	97380–08030	.BOLT .BOULON, HEXAGONAL			1			
38	92990–08600	.WASHER, PLATE .RONDELLE, PLATE			1			
39	703–48128–10	.SCREW 2 .VIS 2			3			
40	98580–04006	.SCREW, PAN HEAD .VIS			2			
41	703–48129–00	.SCREW 3 .VIS 3			2			
42	703–44189–30	.SCREW .VIS			3			
43	95380–06600	.NUT, HEXAGON .ECROU			3			
44	703–48293–10	.SPACER, REMOTE CONTROL .ENTRETOISE			1			SINGLE SINGLE
45	701–48287–00	.WASHER .RONDELLE			3			
46	703–48215–10	.GRAPHIC .ADHESIF			1			
47	6X3–44191–00	.INDICATOR, SHIFT .ETIQUETTE, EMBRAYAGE			1			
48	703–82510–44	.MAIN SWITCH ASSY .CONTACTEUR A CLEF COMPLET			1			
49	703–82577–00	..CAP, KEY ..CABOCHON			1			
50	6K1–82532–00	..CAP ..COUVERCLE			1			
51	703–82531–00	.WIRE, LEAD (L70) .FIL (L70)			1			
52	688–82575–01	.ENGINE STOP SWITCH ASSY .COUPE CIRCUIT CPLT			1			
53	682–82556–00	..LANYARD, STOP SWITCH ..CORDON DU COUPE CIRCUIT			1			
54	688–8258A–20	.EXTENSION, WIRE HARNESS (4.9M) .EXTENSION, FAISCEAU DE FILS (4			1			(10P) (10P)

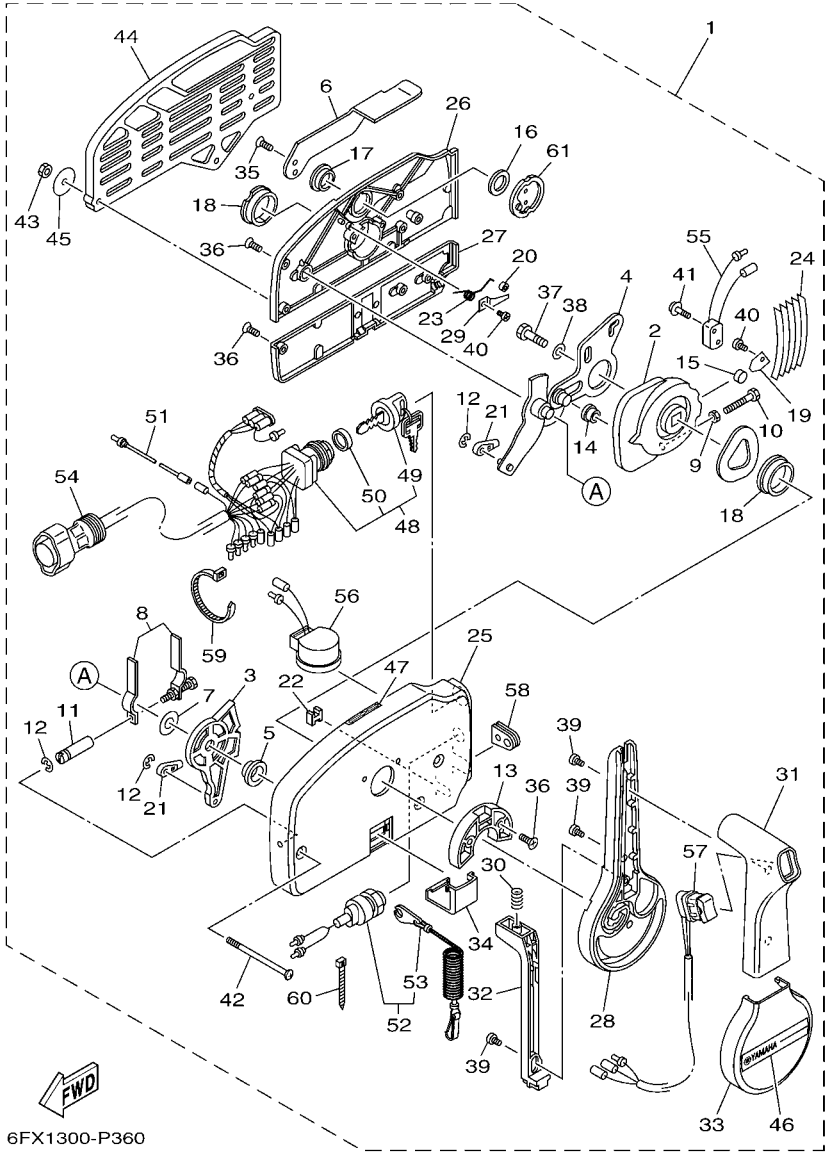

FIG. 36 REMOTE CONTROL ASSY 2 BOITIER DE COMMANDE A DISTANCE

REF. NO.	PART NO. N° PIECES	DESCRIPTION DESCRIPTION	MH	E	EP			REMARKS REMARQUES
55	703–82540–00	.NEUTRAL SWITCH ASSY .CONTACTEUR DE POINT-MORT			1			
56	703–83383–11	.BUZZER .RONFLEUR			1			
57	703–82563–30	.TRIM & TILT SWITCH ASSY .INCLINER ET PARER COMMUTATEUR			1			WITH PT/T SW. WITH PT/T SW.
58	703–48284–00	.GROMMET .PASSE-FIL			1			
59	703–82591–00	.BAND .COLLIER			1			
60	703–82592–00	.BAND .COLLIER			1			
61	703–48153–00	.SHAFT, FREE ACCEL. .AXE			1			

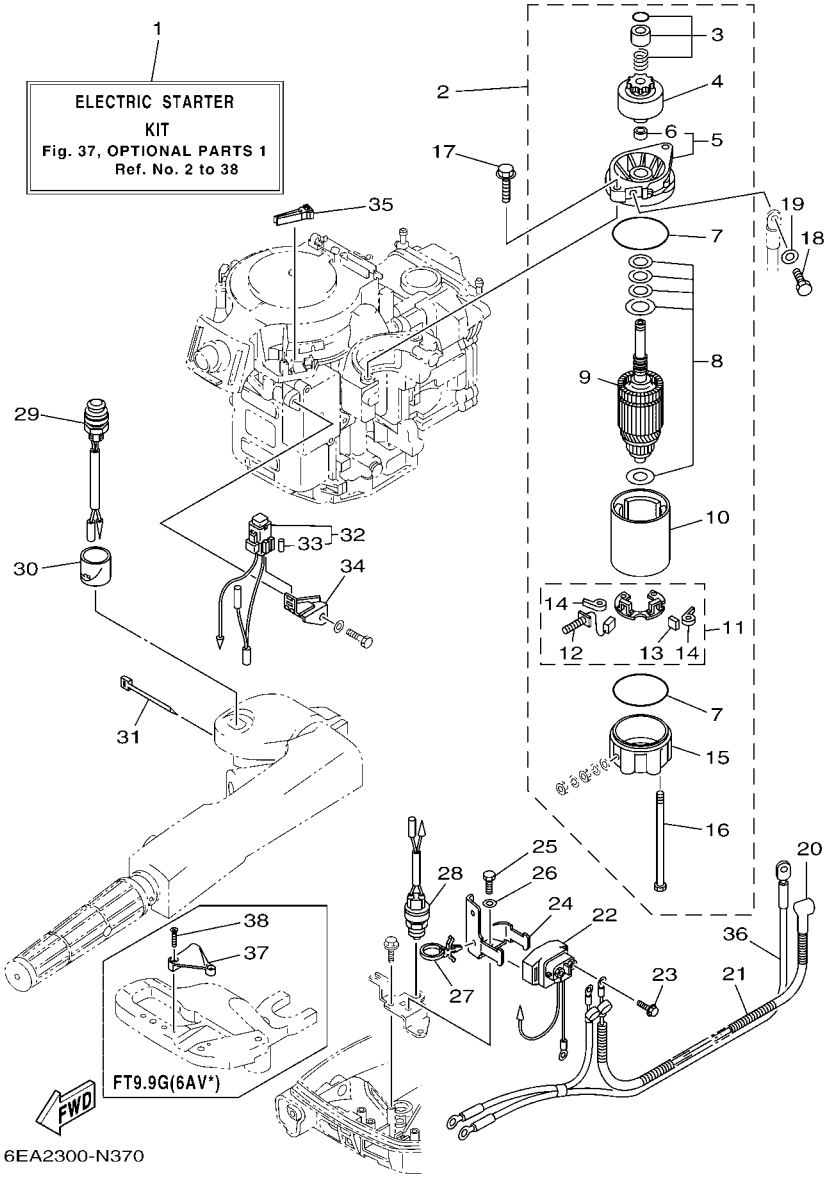

FIG. 37 OPTIONAL PARTS 1 PIECES OPTIONNELLES 1

REF. NO.	PART NO. N° PIECES	DESCRIPTION DESCRIPTION	MH	E	EP			REMARKS REMARQUES
1	6DR–W8180–00	ELECTRIC STARTER KIT KIT DEMARREUR ELECTRIQUE	1					AP AP
2	68T–81800–00	STARTING MOTOR ASSY DEMARREUR ELECTRIQUE COMPLET	1					
3	68T–81857–00	.RETAINER .ARRETOIR	1					
4	689–81807–12	.GEAR ASSY, STARTING MOTOR .PIGNON, DEMARREUR ELECTRIQUE	1					
5	6F5–81830–10	.FRONT BRACKET ASSY .SUPPORT AVANT	1					
6	689–81831–00	..METAL, FRONT ..METAL, AVANT	1					
7	689–81847–11	.O-RING .JOINT TORIQUE	2					
8	689–81809–11	.WASHER KIT .JEU DE RONDELLES	1					
9	689–81850–11	.ARMATURE ASSY .INDUIT	1					
10	689–81810–11	.STATOR ASSY .STATOR COMPLET	1					
11	689–81840–11	.BRUSH HOLDER ASSY .SUPPORT DE CHARBON	1					
12	689–81811–11	..BRUSH 1 ..CHARBON 1	1					
13	689–81812–11	..BRUSH 2 ..CHARBON 2	1					
14	689–81813–10	..SPRING, BRUSH ..RESSORT, DE CHARBON	2					
15	689–81820–11	.REAR BRACKET ASSY .SUPPORT ARRIERE COMPLET	1					
16	689–81826–10	.BOLT .BOULON	2					
17	90119–08M76	BOLT, WITH WASHER BOULON, AVEC RONDELLE	2					
18	97095–08016	BOLT BOULON	1					
19	92995–08600	WASHER RONDELLE	1					
20	6G8–82117–00	WIRE, LEAD FIL	1					
21	90446–10M86	HOSE (L140) DURITE (L140)	1					
22	68T–81940–00	STARTER RELAY ASSY LANCEUR RELAIS (ENS.)	1					
23	97595–06610	BOLT, WITH WASHER VIS HEXAGONAL AVC RONDELLE	2					
24	68T–81945–01	PLATE, SWITCH FITTING PLAQUE, FIXATION DU RELAIS	1					
25	97095–06012	BOLT BOULON	1					
26	92995–06600	WASHER RONDELLE	1					
27	90465–12M56	CLAMP BRIDE	1					

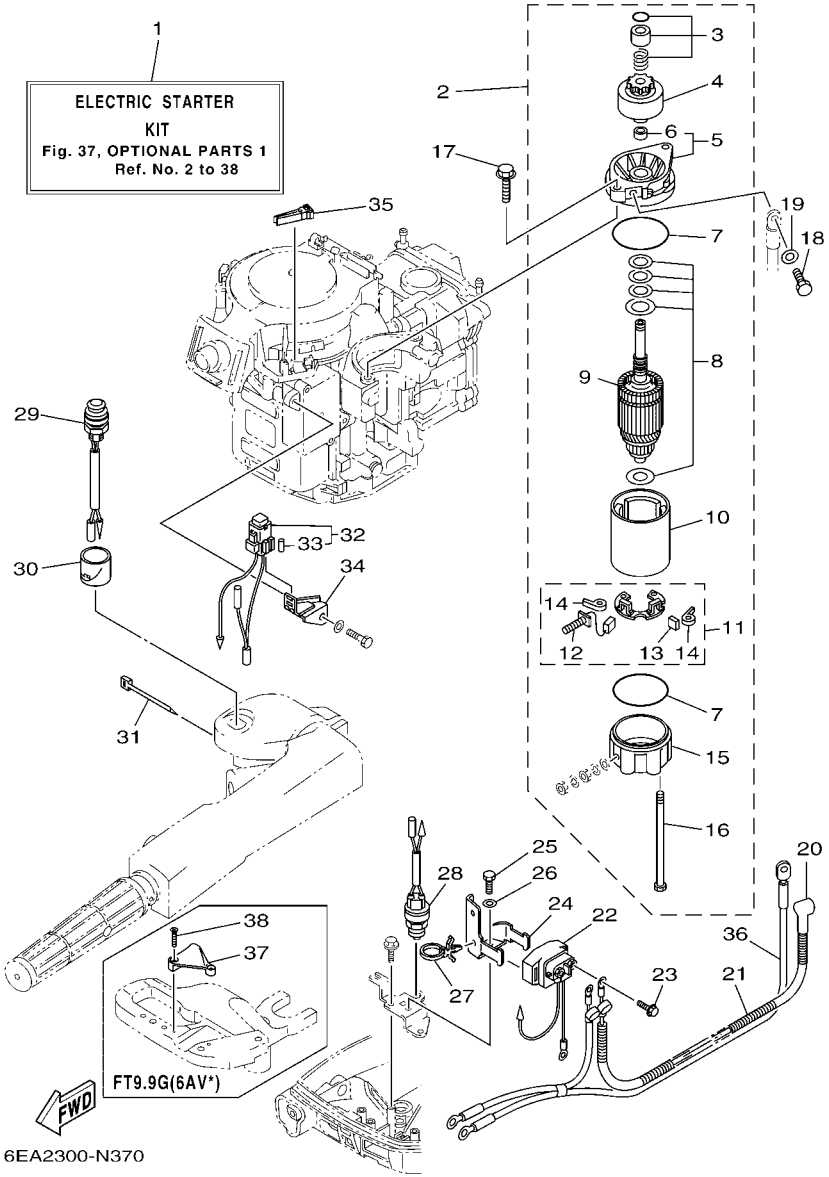

FIG. 37 OPTIONAL PARTS 1 PIECES OPTIONNELLES 1

REF. NO.	PART NO. N° PIECES	DESCRIPTION DESCRIPTION	MH	E	EP			REMARKS REMARQUES
28	6F5–82540–01	NEUTRAL SWITCH ASSY CONTACTEUR DE POINT-MORT	1					
29	68T–81870–00	STARTING SWITCH ASSY CONTACT A CLEF	1					
30	68T–81821–00	COVER, SWITCH COUVERCLE, COMMUTATEUR	1					
31	90465–11M10	CLAMP BRIDE	1					
32	68T–82150–00	FUSE HOLDER ASSY SUPPORT DE FUSIBLE	1					
33	66V–82151–00	.FUSE (10A-BL) .FUSIBLE (10A-BL)	2					
34	68T–82171–01	STAY, FUSE BOX SUPPORT, BOITE A FUSIBLES	1					
35	67F–2812A–00	PULLER, FUSE TENDEUR, FUSIBLE	1					
36	68T–82105–01	BATTERY CABLE (L: 2.1M) CABLE DE BATTERIE (L: 2.1M)	1					
37	68T–82594–00	CLAMP BRIDE	1					
38	90151–05003	SCREW, COUNTERSUNK VIS, TETE NOYEE	2					

FIG. 38 OPTIONAL PARTS 2 PIECES OPTIONNELLES 2

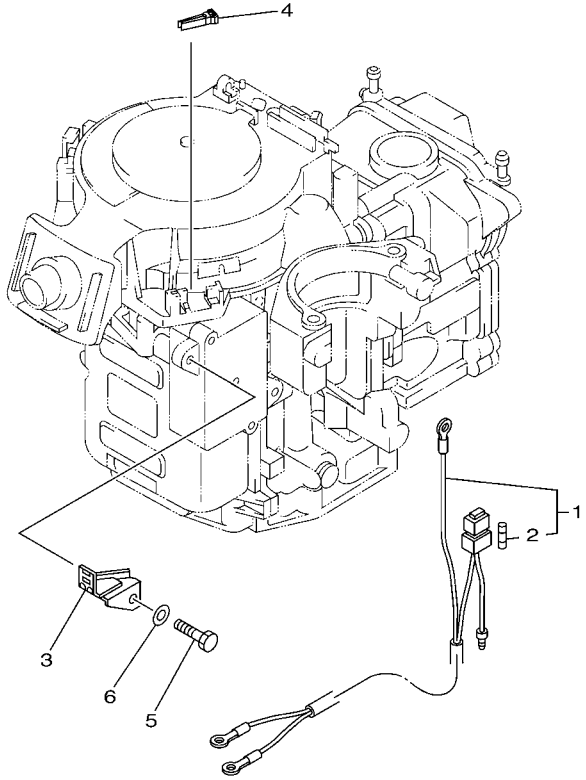

6AU1100-G320

REF. NO.	PART NO. N° PIECES	DESCRIPTION DESCRIPTION	MH	E	EP			REMARKS REMARQUES
1	68T–81949–00	WIRE, LEAD FIL	1					AP AP
2	66V–82151–00	.FUSE (10A-BL) .FUSIBLE (10A-BL)	2					
3	68T–82171–01	STAY, FUSE BOX SUPPORT, BOITE A FUSIBLES	1					AP AP
4	67F–2812A–00	PULLER, FUSE TENDEUR, FUSIBLE	1					AP AP
5	97095–06012	BOLT BOULON	1					AP AP
6	92995–06600	WASHER RONDELLE	1					AP AP

FIG. 39 OPTIONAL PARTS 3 PIECES OPTIONNELLES 3

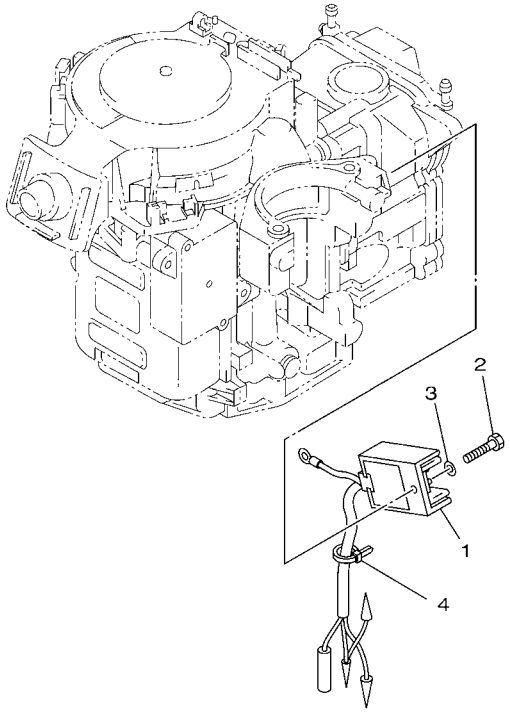

6DR1300-M340

REF. NO.	PART NO. N° PIECES	DESCRIPTION DESCRIPTION	MH	E	EP			REMARKS REMARQUES
1	68T–81960–00	RECTIFIER & REGULATOR ASSY REDRESSEUR REGULATEUR CPLT	1					AP REC/RGE KIT AP REC/RGE KIT
2	97095–06012	BOLT BOULON	1					AP REC/RGE KIT AP REC/RGE KIT
3	92995–06600	WASHER RONDELLE	1					AP REC/RGE KIT AP REC/RGE KIT
4	90465–11M10	CLAMP BRIDE	2					AP REC/RGE KIT AP REC/RGE KIT

FIG. 40 REPAIR KIT 1 — KITS DE REPARATION 1

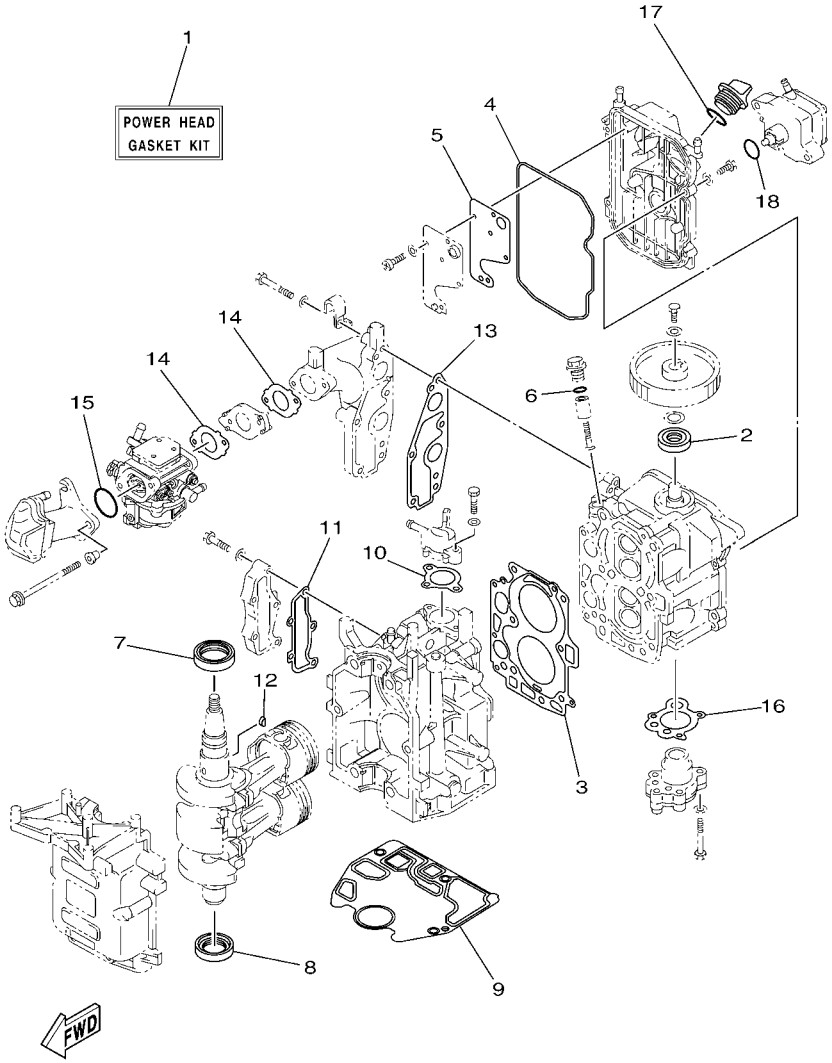

6DR1100-M340

REF. NO.	PART NO. N° PIECES	DESCRIPTION DESCRIPTION	MH	E	EP			REMARKS REMARQUES
1	6AU–W0001–00	POWER HEAD GASKET KIT POCHETTE DE JINTS TETE MOTRICE	1	1	1			
2	93102–18M21	.OIL SEAL .JOINT SPY	1	1	1			
3	68T–11181–00	.GASKET, CYLINDER HEAD 1 .JOINT, DE CULASSE 1	1	1	1			
4	68T–11356–00	.SEAL, CYLINDER 2 .JOINT, SPY CYLINDRE	1	1	1			
5	68T–11169–A0	.GASKET, BREATHER COVER .JOINT, COUVERCLE DE RENIFLARD	1	1	1			
6	93210–13M63	.O-RING .JOINT TORIQUE	1	1	1			
7	93102–30M22	.OIL SEAL .JOINT SPY	1	1	1			
8	93101–25M69	.OIL SEAL .JOINT SPY	1	1	1			
9	68T–11351–00	.GASKET, CYLINDER .JOINT, D'EMBASE	1	1	1			
10	6G8–12414–A0	.GASKET, COVER .JOINT, COUVERCLE	1	1	1			
11	68T–41114–A0	.GASKET, EXHAUST OUTER COVER .JOINT, COUVERCLE D'ECHAPPEMENT	1	1	1			
12	90280–03M01	.KEY, WOODRUFF .CLAVETTE, DEMI-LUNE	1	1	1			
13	68T–13645–00	.GASKET, MANIFOLD 1 .JOINT, TUBULURE 1	1	1	1			
14	68T–13646–A0	.GASKET, MANIFOLD 2 .JOINT, TUBULURE 2	2	2	2			
15	93210–31MJ5	.O-RING .JOINT TORIQUE	1	1	1			
16	68T–13329–00	.GASKET, PUMP COVER .JOINT, COUVERCLE DE POMPE	1	1	1			
17	93210–24M79	.O-RING .JOINT TORIQUE	1	1	1			
18	93210–20M65	.O-RING .JOINT TORIQUE	1	1	1			

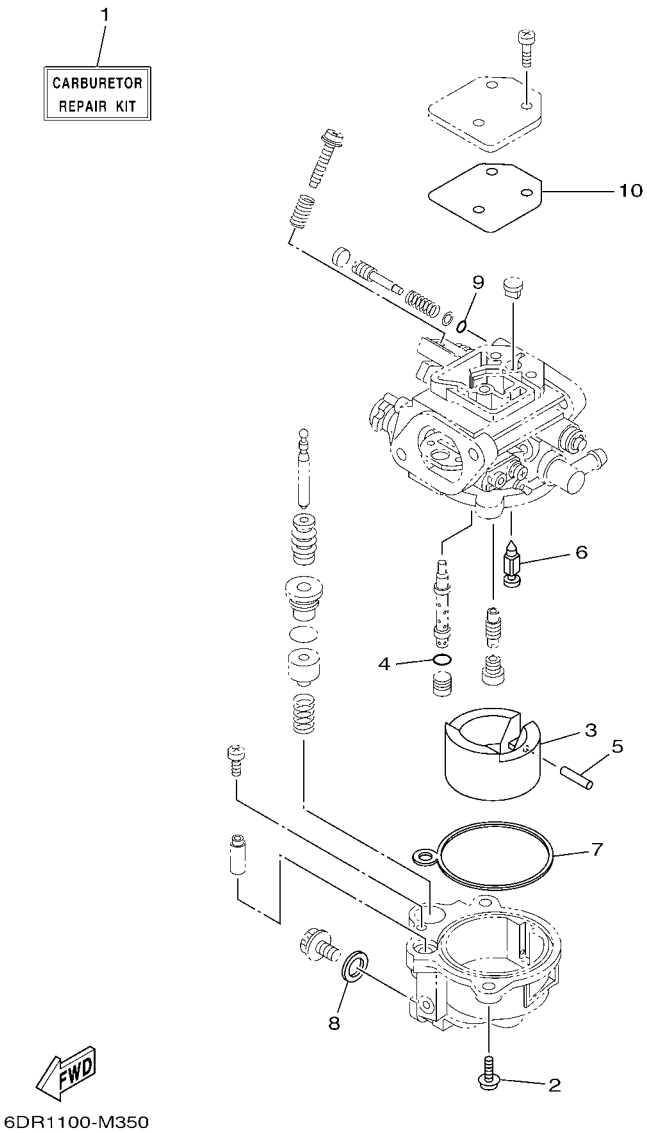

FIG. 41 REPAIR KIT 2 — KITS DE REPARATION 2

REF. NO.	PART NO. N° PIECES	DESCRIPTION DESCRIPTION	MH	E	EP			REMARKS REMARQUES
1	6DR–W0093–00	CARBURETOR REPAIR KIT KIT DE REPARATION CARBURATEUR	1	1	1			
2	62Y–14321–00	.SCREW, THROTTLE .VIS, ACCELERATEUR	2	2	2			
3	6DR–14385–00	.FLOAT .FLOTTEUR	1	1	1			
4	6DR–14561–00	.O-RING .JOINT TORIQUE	1	1	1			
5	4FP–14386–00	.PIN, FLOAT .AXE, FLOTTEUR	1	1	1			
6	6DR–14336–00	.NEEDLE .AIGUILLE	1	1	1			
7	6DR–14984–00	.GASKET, FLOAT CHAMBER .JOINT, CUVE DE FLOTTEUR	1	1	1			
8	652–14397–00	.O-RING .JOINT TORIQUE	1	1	1			
9	6DR–14397–00	.O-RING .JOINT TORIQUE	1	1	1			
10	6DR–14818–00	.COVER GASKET .JOINT DE COURERCLE	1	1	1			

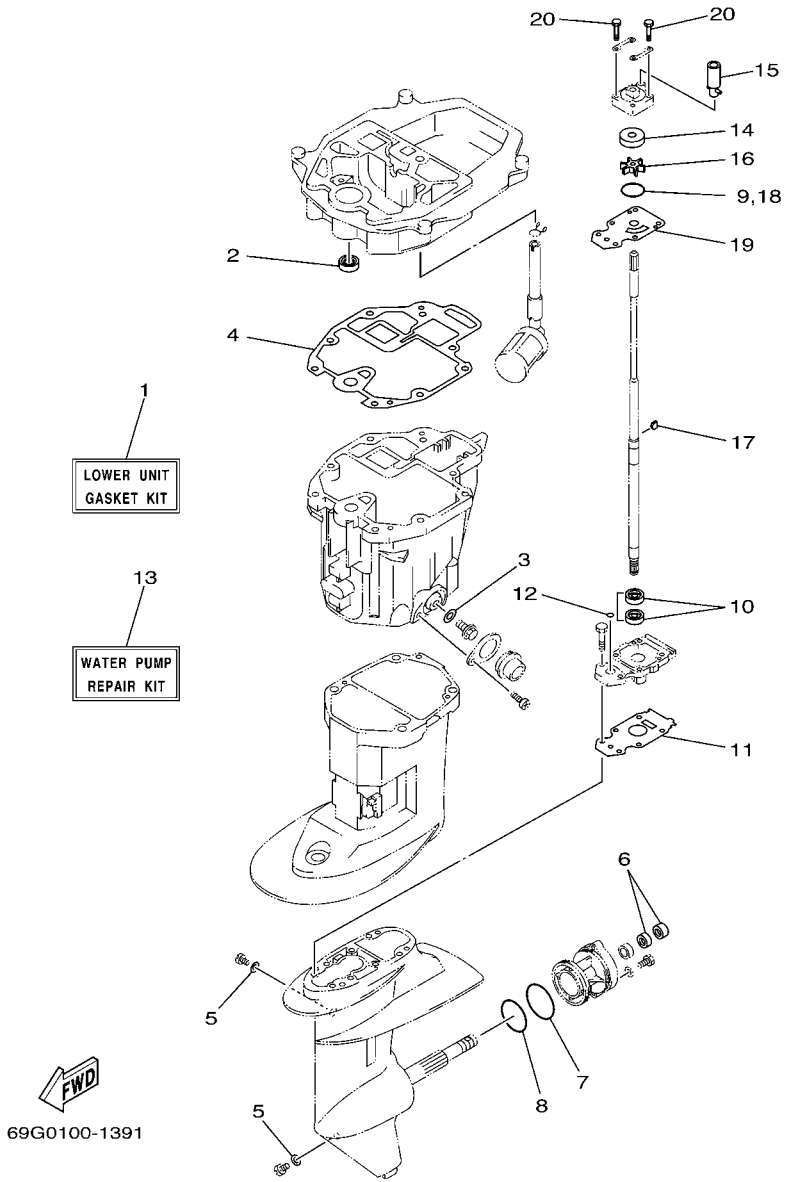

FIG. 42 REPAIR KIT 3 — KITS DE PEPARATION 3

REF. NO.	PART NO. N° PIECES	DESCRIPTION DESCRIPTION	MH	E	EP			REMARKS REMARQUES
1	69G–W0001–20	LOWER UNIT GASKET KIT POCHETTE DE JOINTS EMBASE	1	1	1			
2	93101–12M70	.OIL SEAL .JOINT SPY	1	1	1			
3	90430–10M11	.GASKET .JOINT	1	1	1			
4	68T–13475–00	.GASKET .JOINT	1	1	1			
5	90430–08020	.GASKET .JOINT	2	2	2			
6	93101–17054	.OIL SEAL .JOINT SPY	2	2	2			
7	93210–74316	.O-RING .JOINT TORIQUE	1	1	1			
8	93210–74M68	.O-RING .JOINT TORIQUE	1	1	1			
9	93210–44398	.O-RING .JOINT TORIQUE	1	1	1			
10	93101–20048	.OIL SEAL .JOINT SPY	2	2	2			
11	69G–45315–A0	.PACKING, LOWER CASING .JOINT, BOITIER D'HELICE	1	1	1			
12	93210–06ME6	.O-RING .JOINT TORIQUE	1	1	1			
13	69G–W0078–00	WATER PUMP REPAIR KIT KIT DE REPARATION DE LA POMPE	1	1	1			
14	63V–44322–00	.INSERT, CARTRIDGE .CUVETTE	1	1	1			
15	68T–44366–00	.DAMPER, WATER SEAL 2 .JOINT, TUBE D'EAU 2	1	1	1			
16	63V–44352–01	.IMPELLER .TURBINE	1	1	1			
17	664–44338–00	.KEY, WOODRUFF .CLAVETTE, VOLANT	1	1	1			
18	93210–44398	.O-RING .JOINT TORIQUE	1	1	1			
19	68T–44323–00	.OUTER PLATE, CARTRIDGE .PLAQUE EXTERIEURE	1	1	1			
20	97095–08045	.BOLT .BOULON	4	4	4			

NUMERICAL INDEX
INDEX NUMERIQUE

PART NO. N° PIECES	REF. NO.
6AU–11111–00–1S	5 – 2
6AU–11133–10	5 – 3
68T–11168–00	5 – 14
68T–11169–A0	5 – 15
	40 – 5
68T–11181–00	5 – 4
	40 – 3
68T–11191–00–1S	5 – 9
6G8–11197–A0	5 – 20
6G8–11325–00	1 – 3
	5 – 18
68T–11351–00	3 – 5
	40 – 9
68T–11356–00	5 – 11
	40 – 4
6H1–11372–00	29 – 13
6AU–11411–00	4 – 1
68T–11416–01	4 – 2
68T–11416–11	4 – 2
68T–11416–21	4 – 2
68T–11536–00	9 – 7
66M–11537–00–94	9 – 2
68T–11557–00	9 – 8
6G8–11575–00	29 – 9
6G8–11587–01	9 – 9
68T–11603–01	4 – 6
68T–11604–01	4 – 6
68T–11605–01	4 – 6
6AU–11631–00–96	4 – 5
68T–11633–00	4 – 7
6AU–11635–00	4 – 5
6AU–11636–00	4 – 5
6AU–11650–00	4 – 3
67D–11654–00	4 – 4
6AU–12111–00	6 – 1
60R–12113–00	6 – 4
68T–12116–00	6 – 3
7NJ–12117–00	6 – 5
7NJ–12118–00	6 – 6
51Y–12119–00	6 – 7
6AU–12121–00	6 – 2
68T–12146–00	6 – 8
68T–12151–00	6 – 12
6G8–12158–00	6 – 14
6G8–12159–00	6 – 13
68T–12171–00	9 – 1
66M–12411–01	1 – 1
	3 – 6

PART NO. N° PIECES	REF. NO.
688–12412–00	3 – 7
68T–12413–00–1S	3 – 8
6G8–12414–A0	1 – 2
	3 – 9
	40 – 10
68T–12481–00	3 – 11
6E5–12481–00	18 – 28
67F–12482–00	7 – 2
68T–12482–00	3 – 16
68T–12483–00	7 – 14
68T–12535–20	18 – 36
6DR–12572–00	18 – 34
6R3–12581–00	18 – 33
6R3–12582–00	18 – 31
6R3–12583–00	18 – 32
66M–13131–00	10 – 18
68T–13300–00	9 – 14
68T–13329–00	9 – 15
	40 – 16
68T–13421–01	29 – 7
6AU–13437–60	11 – 27
	12 – 18
68T–13475–00	29 – 20
	42 – 4
68T–13641–20–1S	7 – 1
68T–13645–00	7 – 3
	40 – 13
68T–13646–A0	7 – 8
	40 – 14
6DR–14147–00	8 – 21
6DR–14157–00	8 – 29
62Y–14212–00	8 – 3
6DR–14216–00	8 – 18
68T–14271–00	7 – 9
6DR–14285–00	8 – 26
6DR–14301–20	8 – 1
6DR–14301–50	8 – 1
62Y–14321–00	8 – 5
	41 – 2
69W–14321–00	8 – 2
6DR–14321–00	8 – 4
6DR–14323–10	8 – 24
6E7–14325–00	10 – 15
6DR–1432A–00	8 – 7
6DR–14334–00	8 – 25
6DR–14335–00	8 – 22
6DR–14336–00	8 – 10
	41 – 6

PART NO. N° PIECES	REF. NO.
6DR–14341–00	8 – 13
6DR–14342–71	8 – 12
6DR–14343–45	8 – 11
6DR–14371–00	8 – 23
6DR–14373–00	8 – 32
6DR–14379–00	8 – 31
6DR–14381–00	8 – 14
62Y–14383–30	8 – 16
6DR–14385–00	8 – 6
	41 – 3
4FP–14386–00	8 – 9
	41 – 5
647–14395–60	21 – 28
	22 – 34
652–14397–00	8 – 17
	41 – 8
6DR–14397–00	8 – 27
	41 – 9
6AU–14440–00	7 – 10
68T–14497–00	21 – 22
	22 – 28
6DR–14561–00	8 – 8
	41 – 4
6DR–14680–00	8 – 20
6AU–14711–00–CA	28 – 2
6DR–14818–00	8 – 28
	41 – 10
6DR–14860–00	8 – 19
6DR–14862–00	8 – 30
6DR–14984–00	8 – 15
	41 – 7
6AU–15100–00	3 – 2
68T–15311–01–CA	29 – 12
68T–15316–00	29 – 17
68T–15317–00	29 – 18
68T–15362–00	29 – 24
6G8–15363–00	5 – 22
63V–15705–01	11 – 8
68T–15710–13	11 – 1
68T–15711–03	11 – 2
63V–15713–00	11 – 6
63V–15714–00	11 – 4
68T–15716–00	11 – 7
66T–15731–00	11 – 21
66T–15734–00	11 – 19
63V–15741–00	11 – 5
63V–15744–00	11 – 11
6G1–15755–00	11 – 14

PART NO. N° PIECES	REF. NO.
68T–15762–00	11 – 24
68T–15764–00	11 – 13
63V–15767–01	11 – 9
68T–15770–00	11 – 20
68T–15774–10	21 – 29
	22 – 37
6G1–15779–00	11 – 16
68T–15784–00	11 – 10
6A0–15789–00	11 – 17
68T–15793–00	11 – 12
68T–15794–00	11 – 18
68T–15795–00	11 – 3
69A–22471–00	27 – 3
69A–23129–00	27 – 56
6YL–24201–06	32 – 1
68T–24251–01	1 – 5
	10 – 8
6YL–24260–10	32 – 3
6YL–24268–01	32 – 4
6G1–24304–02	10 – 1
6YL–24306–54	32 – 7
6AU–24311–00	10 – 26
61N–24329–00	10 – 2
6YL–24329–00	32 – 5
66M–24374–00	10 – 19
650–24378–00	5 – 10
68T–24410–01	10 – 12
66M–24411–01	10 – 16
66M–24413–01	10 – 13
6A0–24421–01	10 – 14
66M–24423–00	10 – 17
66M–24444–00	10 – 22
66M–24454–00	10 – 20
66M–24471–01	10 – 21
6YL–24610–01	32 – 2
6DR–26301–00	19 – 21
68T–26367–00	18 – 14
68T–28100–00	10 – 30
67F–2812A–00	14 – 26
	15 – 37
	37 – 35
	38 – 4
6DR–28199–72–D0	10 – 31
6DR–28199–72–E0	10 – 31
6DR–28199–72–F0	10 – 31
6DR–28199–72–G0	10 – 31
6DR–28199–72–H0	10 – 31
6DR–28199–72–S0	10 – 31

PART NO. N° PIECES	REF. NO.
6DR–28199–82–K0	10 – 32
6DR–28199–82–L0	10 – 32
6DR–28199–82–M0	10 – 32
6DR–28199–82–N0	10 – 32
6DR–28199–82–P0	10 – 32
6DR–28199–82–R0	10 – 32
6AU–41113–00–1S	3 – 13
68T–41114–A0	3 – 14
	40 – 11
68T–41137–00–CA	29 – 1
6AU–41211–00	21 – 21
	22 – 27
68T–41237–00	14 – 17
	15 – 19
68T–41256–00	7 – 21
6J8–41262–00	7 – 22
	21 – 27
	22 – 33
6H4–41271–02	7 – 19
689–41273–00	7 – 20
68T–41283–00	21 – 19
	22 – 25
68T–41638–00	21 – 18
	22 – 24
6G1–41662–01–94	21 – 3
	22 – 7
66R–42101–01–4D	19 – 4
67D–42119–01	19 – 15
6AU–42121–10–4D	19 – 1
65W–42125–00	19 – 12
6G1–42126–00	19 – 11
66R–42129–00	19 – 34
65W–42131–01	19 – 28
6DR–42137–00	19 – 16
68T–42138–01	19 – 9
65W–42159–00	19 – 10
66R–42171–00	19 – 23
67D–42177–00	19 – 14
6AH–42508–01	20 – 1
6AU–42511–10–4D	26 – 1
68T–42525–01	20 – 2
6AH–42527–00	20 – 15
65W–42528–00	20 – 8
68T–42561–00	20 – 6
67C–42562–00	20 – 4
6EA–42610–00	2 – 1
6EA–42610–10	2 – 1
6DR–42613–00	2 – 3

PART NO. N° PIECES	REF. NO.
60R–42615–00	2 – 9
6DR–4261A–00	2 – 2
6DR–4261A–10	2 – 2
68T–42649–00	2 – 12
6DR–42649–00	2 – 7
6DR–42651–00	2 – 5
60R–42652–00	2 – 10
6BG–42662–00	2 – 8
60R–42675–00	2 – 16
60R–42676–10	2 – 17
6AU–42678–10	2 – 15
6AV–42678–10	2 – 14
6AH–42697–10	2 – 13
6DR–42710–00–4D	18 – 1
68T–42716–10	18 – 5
65W–42717–00	18 – 17
	29 – 2
68T–42717–00	18 – 23
68T–42724–20	18 – 15
68T–42724–40	14 – 3
	15 – 3
6DR–42725–00	18 – 13
6G1–42725–00	16 – 4
68T–42725–10	23 – 18
6DR–42725–10	18 – 13
	23 – 17
68T–42726–00	21 – 1
69G–42726–00	18 – 16
688–42726–10	18 – 16
682–42727–00	18 – 10
68T–42741–00	18 – 18
6DR–42761–00	18 – 11
6DR–42761–10	18 – 11
	23 – 16
68T–42771–00	18 – 24
6EE–42794–40	18 – 39
6EE–42794–50	18 – 40
6AU–42801–00	18 – 6
6AH–43111–00–4D	24 – 1
69A–43111–01–4D	25 – 1
6AH–43112–00–4D	24 – 2
69A–43112–01–4D	25 – 2
66R–43113–00	24 – 9
69A–43113–00	25 – 9
648–43114–01	24 – 6
	25 – 6
6E7–43116–00	24 – 5
	25 – 5

NUMERICAL INDEX
INDEX NUMERIQUE

PART NO. N° PIECES	REF. NO.
6E0–43118–01	24 – 3
	25 – 3
69A–43131–00	24 – 7
	25 – 7
6E5–43145–01	33 – 8
6G5–43145–01	25 – 17
68T–43155–00	20 – 18
69A–43155–00	25 – 39
6L2–43160–01	24 – 15
689–43165–00	24 – 16
63V–43191–00	24 – 28
65W–43191–00	25 – 14
65W–43192–00	25 – 13
6AU–43311–10–4D	24 – 19
69G–43311–11–4D	25 – 12
6AH–43350–00	24 – 26
68T–43611–00	24 – 33
6AH–43614–00	24 – 30
6AH–43615–00	24 – 32
6DR–43616–00	24 – 21
6AH–43617–00	24 – 24
6AH–43627–00	24 – 38
6DR–43631–00	24 – 20
689–43633–00	20 – 7
6DR–43641–00	24 – 23
68T–43646–00	24 – 22
68T–43659–00	24 – 36
69A–43801–00	27 – 18
65W–43804–01	27 – 59
65W–43805–01	27 – 61
6T4–43808–00	27 – 34
69A–4380C–00	27 – 25
69A–4380D–00	27 – 11
65W–4380F–01	27 – 69
69A–4380K–00	27 – 2
69A–43810–00	27 – 10
69A–43811–01	27 – 19
69A–43812–00	27 – 22
69A–43814–00	27 – 7
69A–43816–01	27 – 54
69G–43818–00	25 – 20
69J–4381C–00	27 – 36
69A–4381G–00	27 – 48
69A–43824–00	27 – 43
69G–4382G–00	27 – 32
69A–43830–00	27 – 24
69G–43840–02–4D	27 – 1
69A–43841–00	27 – 26

PART NO. N° PIECES	REF. NO.
6H1–43844–10	27 – 38
69A–43848–00	27 – 44
69A–4384F–00	27 – 29
6H1–4384G–11	27 – 37
69A–4384H–00	27 – 51
69A–4384M–00	27 – 27
69G–43853–00	27 – 35
69A–43854–00	27 – 47
69A–43855–00	27 – 39
6H1–43856–10	27 – 40
69A–43857–00	27 – 17
N35–43862–10	27 – 55
6H1–43866–01	27 – 20
69A–43869–00	27 – 23
65W–4386A–00	27 – 15
69A–4386A–00	27 – 42
65W–4386K–01	27 – 67
65W–4386L–00	27 – 68
69A–43871–00	27 – 21
69A–43872–00	27 – 9
	27 – 13
69A–43878–00	27 – 57
65W–43879–01	27 – 70
65W–4387G–00	27 – 62
69G–43880–01	27 – 58
69G–43881–01	27 – 63
65W–43882–01	27 – 71
6H1–43883–00	27 – 30
	27 – 50
65W–43887–01	27 – 60
6H1–4388E–11	27 – 5
69G–4388F–00	27 – 72
65W–43891–01	27 – 66
65W–43892–01	27 – 65
62Y–43894–00	27 – 28
66R–44111–00–4D	19 – 31
6AU–44111–10	22 – 18
	23 – 8
68T–44113–01	19 – 40
66R–44114–00	19 – 50
65W–44116–00	21 – 7
	22 – 11
66R–44116–00	19 – 41
6DR–44117–00	21 – 8
	22 – 12
66R–44118–00	19 – 42
68T–44121–02	21 – 2
	22 – 6

PART NO. N° PIECES	REF. NO.
68T–44143–10	21 – 10
	22 – 14
61N–44146–00	21 – 12
	22 – 16
69G–44150–10	30 – 26
69G–44150–20	30 – 26
66R–44173–00	19 – 32
703–44189–20	35 – 36
	36 – 36
703–44189–30	35 – 42
	36 – 42
6X3–44191–00	19 – 51
	35 – 47
	36 – 47
63V–44301–00	30 – 10
63V–44322–00	30 – 11
	42 – 14
68T–44323–00	30 – 16
	42 – 19
63V–44328–01	30 – 19
664–44338–00	30 – 14
	42 – 17
63V–44352–01	30 – 13
	42 – 16
68T–44361–10	31 – 1
69G–44361–20	31 – 1
63V–44365–10	31 – 2
68T–44366–00	30 – 12
	42 – 15
6BL–44391–00	18 – 9
68T–44517–10	26 – 8
68T–44526–00	26 – 9
6AU–44551–00–4D	26 – 12
682–44555–30	26 – 14
6AU–44557–00	26 – 13
6AU–45111–10–4D	28 – 1
63V–45127–00	28 – 11
68T–45181–00	29 – 3
69G–45211–20–4D	28 – 10
6G1–45214–00	31 – 5
63V–45215–00	31 – 6
65W–45251–00	1 – 6
	25 – 34
61N–45251–01	1 – 9
	31 – 9
69G–45300–11–4D	30 – 1
69G–45300–21–4D	30 – 1
66R–45311–01–4D	30 – 2

PART NO. N° PIECES	REF. NO.
69G–45315–A0	30 – 23
	42 – 11
626–45316–09	30 – 21
68T–45321–00	28 – 5
69G–45331–01–CA	30 – 20
66R–45361–00–4D	30 – 40
63V–45375–00	31 – 12
69G–45510–10	30 – 27
69G–45510–20	30 – 27
66R–45536–00	30 – 4
66R–45551–00	30 – 28
66R–45560–01	30 – 30
66R–45571–00	30 – 31
626–45577–00	30 – 32
	30 – 48
626–45577–10	30 – 32
	30 – 48
626–45577–20	30 – 32
	30 – 48
626–45577–30	30 – 32
	30 – 48
626–45577–40	30 – 32
	30 – 48
66R–45587–00	30 – 6
66R–45587–10	30 – 6
683–45611–00	30 – 34
69G–45631–00	30 – 36
648–45633–00	30 – 38
650–45635–00	30 – 35
69G–45943–00	31 – 20
6G8–45987–02	31 – 13
6G8–45997–00	31 – 16
68T–46241–00	9 – 6
6AU–46297–00	9 – 12
703–48128–10	35 – 39
	36 – 39
703–48129–00	35 – 41
	36 – 41
703–48152–10	35 – 6
	36 – 6
703–48153–00	35 – 60
	36 – 61
703–48189–00	35 – 19
	36 – 19
703–48198–00	35 – 16
	36 – 16
703–48201–20	34 – 1
	35 – 1

PART NO. N° PIECES	REF. NO.
703–48205–20	34 – 2
	36 – 1
703–48211–10	35 – 25
	36 – 25
703–48212–10	35 – 26
	36 – 26
703–48213–10	35 – 27
	36 – 27
703–48215–10	35 – 46
	36 – 46
703–48219–10	35 – 34
	36 – 34
703–48221–10	35 – 28
	36 – 28
703–48222–20	36 – 31
703–48222–30	35 – 31
703–48223–10	35 – 32
	36 – 32
703–48225–10	35 – 33
	36 – 33
703–48227–00	35 – 30
	36 – 30
703–48232–00	35 – 2
	36 – 2
703–48234–00	35 – 20
	36 – 20
703–48235–00	35 – 5
	36 – 5
703–48236–00	35 – 18
	36 – 18
703–48238–00	35 – 24
	36 – 24
703–48243–00	35 – 17
	36 – 17
703–48244–00	35 – 23
	36 – 23
703–48245–00	35 – 13
	36 – 13
703–48246–00	35 – 29
	36 – 29
701–48248–00	35 – 15
	36 – 15
703–48252–00	35 – 14
	36 – 14
703–48261–01	35 – 4
	36 – 4
703–48264–00	35 – 8
	36 – 8

PART NO. N° PIECES	REF. NO.
703–48265–00	35 – 11
	36 – 11
703–48268–00	35 – 7
	36 – 7
703–48271–00	35 – 3
	36 – 3
703–48281–00	35 – 35
	36 – 35
703–48284–00	35 – 57
	36 – 58
701–48287–00	35 – 45
	36 – 45
703–48293–10	35 – 44
	36 – 44
701–48310–80	34 – 3
701–48310–90	34 – 3
701–48320–00	34 – 3
68T–48321–01	19 – 45
663–48344–00	22 – 22
	22 – 35
	23 – 12
	23 – 14
66R–48344–00	19 – 52
703–48345–01	35 – 21
	36 – 21
703–48358–00	35 – 22
	36 – 22
6DR–48501–00	23 – 1
63V–48511–01	23 – 19
	26 – 23
68T–48531–00	23 – 2
6DR–48531–00	22 – 1
63D–48538–00	19 – 44
	21 – 17
66R–48538–00	19 – 43
68T–48538–00	21 – 14
682–48538–50	22 – 2
	23 – 3
68T–61350–10	33 – 1
6E5–61355–00	33 – 6
6AV–81337–00	12 – 13
68T–81800–00	17 – 4
	37 – 2
689–81807–12	17 – 6
	37 – 4
689–81809–11	17 – 10
	37 – 8
689–81810–11	17 – 12

NUMERICAL INDEX
INDEX NUMERIQUE

PART NO. N° PIECES	REF. NO.
689–81810–11	37 – 10
689–81811–11	17 – 14
	37 – 12
689–81812–11	17 – 15
	37 – 13
689–81813–10	17 – 16
	37 – 14
689–81820–11	17 – 17
	37 – 15
68T–81821–00	37 – 30
68T–81822–01	17 – 1
689–81826–10	17 – 18
	37 – 16
6F5–81830–10	17 – 7
	37 – 5
689–81831–00	17 – 8
	37 – 6
689–81840–11	17 – 13
	37 – 11
689–81847–11	17 – 9
	37 – 7
689–81850–11	17 – 11
	37 – 9
68T–81857–00	17 – 5
	37 – 3
68T–81870–00	37 – 29
69G–81925–00	15 – 30
68T–81940–00	14 – 6
	15 – 7
	37 – 22
68T–81945–01	14 – 8
	15 – 9
	37 – 24
69G–81948–01	15 – 28
68T–81949–00	38 – 1
69G–81950–00	15 – 25
68T–81960–00	13 – 13
	39 – 1
6EE–81994–40	11 – 29
	12 – 20
6EE–81994–50	11 – 30
	12 – 21
6EE–81995–40	11 – 25
	12 – 16
6EE–81995–50	11 – 26
	12 – 17
6AG–81996–00	12 – 22
68T–82105–01	37 – 36
69G–82105–01	14 – 2
	15 – 1
6G8–82117–00	14 – 4
	15 – 5
	37 – 20
6G5–82119–00	15 – 33
63V–82127–00	25 – 36
68T–82127–00	26 – 19
68T–82127–10	13 – 17
68T–82150–00	14 – 23
	15 – 34
	37 – 32
66V–82151–00	14 – 24
	15 – 35
	37 – 33
	38 – 2
68T–82171–01	14 – 25
	15 – 36
	37 – 34
	38 – 3
65W–82181–00	27 – 64
6E3–82370–21	13 – 12
67F–82504–00	13 – 16
703–82510–44	35 – 48
	36 – 48
68T–82522–00	13 – 2
703–82531–00	35 – 51
	36 – 51
6K1–82532–00	35 – 50
	36 – 50
703–82540–00	35 – 55
	36 – 55
6F5–82540–01	37 – 28
682–82556–00	16 – 2
	35 – 53
	36 – 53
703–82563–30	36 – 57
65W–82575–01	16 – 1
688–82575–01	35 – 52
	36 – 52
703–82577–00	35 – 49
	36 – 49
689–8257Y–00	16 – 3
69G–82580–00	14 – 1
6N6–82582–00	15 – 4
688–8258A–20	35 – 54
	36 – 54
69G–82590–10	15 – 2
703–82591–00	35 – 58
	36 – 59
703–82592–00	35 – 59
	36 – 60
68T–82594–00	37 – 37
6DR–82594–00	19 – 47
703–83383–11	35 – 56
	36 – 56
65W–84342–00	18 – 26
68F–85119–00	18 – 2
68T–85410–00	13 – 19
68T–85520–00	12 – 2
68T–85533–10	12 – 4
68T–85540–00	13 – 1
6DR–85550–10	12 – 1
680–85570–02	13 – 8
68T–85580–01	12 – 3
6H2–85582–00	12 – 5
68T–85711–60	11 – 28
	12 – 19
68T–86111–00	14 – 16
	15 – 18
68T–86112–00	14 – 12
	15 – 14
68T–86117–00	14 – 21
	15 – 23
6AU–W0001–00	40 – 1
69G–W0001–20	42 – 1
69G–W0078–00	1 – 10
	42 – 13
6DR–W0093–00	41 – 1
6AU–W009A–01–1S	5 – 1
6AU–W009B–00–1S	3 – 1
6DR–W8180–00	37 – 1
90101–06020	25 – 35
90101–06M18	24 – 12
90101–08022	20 – 16
90101–08M88	24 – 41
	25 – 40
90105–06188	7 – 13
90105–06M14	9 – 3
90105–08M36	5 – 6
90105–08M78	5 – 7
90109–06M80	19 – 6
	19 – 7
	19 – 8
90109–06M81	21 – 4
	22 – 8
90109–06M84	24 – 39
90109–06M86	15 – 29
	18 – 12
	19 – 5
	21 – 9
	21 – 30
	22 – 13
	22 – 38
90109–08010	25 – 31
90110–08M05	25 – 30
90116–08M54	26 – 7
90116–08M62	28 – 15
90116–10040	19 – 2
90119–05018	20 – 3
90119–06012	26 – 15
90119–06014	12 – 6
90119–06049	5 – 8
90119–06198	26 – 16
90119–06M56	15 – 27
90119–06MA1	12 – 8
90119–06MA2	3 – 10
90119–06MA3	3 – 15
	7 – 5
90119–06MA5	7 – 4
90119–08005	29 – 22
90119–08020	17 – 3
90119–08046	17 – 2
90119–08M29	3 – 4
90119–08M76	17 – 19
	37 – 17
90151–05003	19 – 48
	37 – 38
90152–05011	19 – 17
	31 – 7
90157–05M16	32 – 6
90159–06M18	19 – 33
90167–05017	2 – 4
90167–06002	18 – 35
90170–05M38	19 – 54
90170–06M30	15 – 31
90170–09M03	33 – 4
90170–12066	12 – 11
90170–24M09	9 – 10
90171–10M07	31 – 18
90179–06M28	26 – 17
90179–08M06	30 – 29
90179–10M33	19 – 3
90185–05002	31 – 8
90185–08057	23 – 21
	24 – 43
	25 – 32
	25 – 42
	26 – 25
90185–09M01	33 – 3
90185–10M14	20 – 14
90185–22043	24 – 10
	25 – 10
90201–06M62	19 – 53
	21 – 23
	22 – 29
90201–06M94	9 – 5
90201–08065	20 – 17
90201–08M00	25 – 24
90201–08MA4	24 – 44
	25 – 43
90201–106M5	20 – 19
90201–10M02	19 – 18
	31 – 17
90201–10M20	33 – 2
90201–10M63	33 – 7
90201–12472	12 – 12
90201–13201	9 – 4
90201–17682	30 – 33
90201–31MA3	31 – 15
90201–43M00	19 – 24
90202–10M56	20 – 5
90202–26M59	19 – 39
90202–43M57	19 – 26
90204–06M00	15 – 32
90206–10M24	24 – 40
90206–26M25	19 – 38
90206–43M22	19 – 25
90209–10M26	20 – 13
90209–40008	26 – 3
90243–04M01	24 – 4
	25 – 4
90249–12M36	25 – 26
90250–05010	30 – 37
90266–04005	2 – 6
90280–03M01	9 – 11
	40 – 12
90280–04M06	12 – 10
90338–06M20	18 – 25
90340–08002	30 – 8
90340–10M10	29 – 15
90381–12M10	25 – 27
90381–12M11	25 – 28
90386–08032	19 – 20
90386–14MA1	25 – 16
90386–16MA7	25 – 21
90386–16MA8	25 – 22
90386–22MA4	24 – 8
	25 – 8
90386–26MA3	19 – 37
90386–30048	26 – 4
90386–30M60	26 – 6
90386–40001	26 – 2
90386–40M99	19 – 27
90387–05053	20 – 9
90387–05054	20 – 10
90387–06138	24 – 34
90387–06176	18 – 4
90387–06M03	15 – 26
90387–06M13	24 – 11
90387–06M59	21 – 20
	22 – 26
90387–06M70	7 – 12
90387–10M42	33 – 5
90387–13M56	6 – 9
90387–14M03	6 – 10
90387–16M02	25 – 23
90430–08020	1 – 8
	30 – 9
	42 – 5
90430–08143	29 – 5
90430–10M11	1 – 7
	29 – 16
	42 – 3
90445–09M20	7 – 7
90445–10046	10 – 5
90445–10M50	10 – 9
90445–16010	10 – 11
90446–10M86	14 – 5
	15 – 6
	37 – 21
90446–15002	19 – 46
90447–07005	19 – 22
90447–10001	25 – 18
90447–13014	10 – 28
90447–13M00	18 – 30
90464–10M53	10 – 29
90464–10M60	21 – 5
	22 – 9
90465–08027	22 – 39

NUMERICAL INDEX
INDEX NUMERIQUE

PART NO. N° PIECES	REF. NO.
90465–08M83	7 – 16
90465–08M99	7 – 15
	17 – 23
90465–11M10	3 – 12
	10 – 6
	12 – 9
	13 – 18
	17 – 22
	18 – 29
	37 – 31
	39 – 4
90465–12M56	14 – 11
	37 – 27
90465–13M11	15 – 12
	15 – 13
90465–13M97	25 – 19
90467–09M09	10 – 7
	10 – 10
	10 – 27
90467–11M08	29 – 8
90468–18001	21 – 11
	22 – 15
90468–18008	22 – 23
	22 – 36
	23 – 13
	23 – 15
90480–06M19	18 – 27
90480–10627	9 – 13
90480–10M28	29 – 14
90480–13018	14 – 13
	15 – 15
90480–14M54	28 – 4
90480–21M82	18 – 3
90480–25003	13 – 9
90501–12M40	6 – 11
90501–14M09	30 – 39
90501–23215	19 – 19
90502–10M07	24 – 18
90506–20025	24 – 27
90506–23016	24 – 31
91318–05025	27 – 53
91490–16010	19 – 13
91490–20012	19 – 55
91490–30025	31 – 19
91690–30008	24 – 17
91690–30010	14 – 18
	15 – 20
91690–30012	22 – 3

PART NO. N° PIECES	REF. NO.
91690–30012	23 – 4
91690–30014	21 – 6
	22 – 10
91690–30018	25 – 15
91690–50014	7 – 6
92907–04600	5 – 17
92990–04600	14 – 20
	15 – 22
92990–06300	31 – 11
92990–08600	24 – 42
	25 – 33
	25 – 41
	28 – 12
	35 – 38
	36 – 38
92995–05600	20 – 12
	22 – 21
	23 – 11
92995–06100	18 – 20
92995–06600	5 – 13
	7 – 18
	9 – 17
	10 – 4
	11 – 23
	12 – 15
	13 – 5
	13 – 7
	13 – 11
	13 – 15
	14 – 10
	14 – 15
	15 – 11
	15 – 17
	17 – 25
	18 – 8
	18 – 21
	18 – 38
	21 – 16
	21 – 26
	22 – 5
	22 – 32
	23 – 6
	24 – 13
	25 – 38
	26 – 20
	26 – 22
	30 – 47
	37 – 26

PART NO. N° PIECES	REF. NO.
92995–06600	38 – 6
	39 – 3
92995–08600	17 – 21
	19 – 36
	37 – 19
93101–12M70	29 – 6
	42 – 2
93101–17054	30 – 43
	42 – 6
93101–20048	30 – 22
	42 – 10
93101–25M69	4 – 10
	40 – 8
93102–18M21	9 – 18
	40 – 2
93102–30M22	4 – 9
	40 – 7
93210–03261	14 – 22
	15 – 24
93210–06001	27 – 46
93210–06ME6	30 – 24
	42 – 12
93210–07003	27 – 6
93210–12327	22 – 19
	23 – 9
93210–12M62	29 – 10
93210–12N52	27 – 33
93210–13M63	5 – 21
	40 – 6
93210–16275	33 – 9
93210–20M65	10 – 25
	40 – 18
93210–21276	27 – 8
	27 – 12
93210–24M79	5 – 23
	40 – 17
93210–27666	27 – 4
93210–29M94	26 – 5
93210–31MJ5	7 – 11
	40 – 15
93210–44398	30 – 15
	42 – 9
	42 – 18
93210–74316	30 – 45
	42 – 7
93210–74M68	30 – 44
	42 – 8
93306–00501	30 – 41

PART NO. N° PIECES	REF. NO.
93315–314V8	30 – 3
93315–317U2	30 – 42
93332–00005	30 – 7
93341–41416	30 – 5
93430–04M03	24 – 35
93430–06024	35 – 12
	36 – 12
93450–10M04	31 – 14
93450–15023	4 – 8
93501–08001	27 – 41
	27 – 49
93505–32038	27 – 14
93602–15250	27 – 45
93604–06136	27 – 16
93604–12M07	28 – 8
	28 – 14
	29 – 21
	30 – 17
	31 – 3
93606–14081	27 – 52
93606–19M23	29 – 11
93700–06M03	26 – 18
94702–00274	1 – 4
	5 – 24
95380–04600	10 – 23
95380–05600	35 – 9
	36 – 9
95380–06600	18 – 22
	23 – 7
	35 – 43
	36 – 43
95380–06700	21 – 13
	22 – 17
	24 – 14
95380–08600	26 – 10
	28 – 13
95380–10700	19 – 30
95780–10300	19 – 29
95895–06030	31 – 10
97080–08016	25 – 25
97080–08025	30 – 25
97095–05010	12 – 7
97095–05016	22 – 20
	23 – 10
97095–05020	20 – 11
97095–06008	28 – 6
97095–06010	7 – 17
	25 – 37

PART NO. N° PIECES	REF. NO.
97095–06012	13 – 6
	13 – 14
	14 – 9
	14 – 14
	15 – 10
	15 – 16
	17 – 24
	18 – 7
	18 – 37
	21 – 15
	21 – 25
	22 – 4
	22 – 31
	23 – 5
	37 – 25
	38 – 5
	39 – 2
97095–06014	26 – 21
97095–06020	5 – 12
	11 – 22
	12 – 14
	13 – 4
97095–06025	10 – 3
	13 – 10
	30 – 46
97095–06030	9 – 16
97095–08014	29 – 4
97095–08016	17 – 20
	37 – 18
97095–08030	19 – 35
97095–08045	30 – 18
	42 – 20
97380–05025	35 – 10
	36 – 10
97380–08030	35 – 37
	36 – 37
97575–06514	28 – 3
97575–06525	26 – 11
97575–08530	29 – 23
97575–08535	23 – 20
	26 – 24
	28 – 9
	31 – 4
97595–05514	2 – 11
97595–06545	21 – 24
	22 – 30
97595–06610	14 – 7
	15 – 8

PART NO. N° PIECES	REF. NO.
97595–06610	37 – 23
97595–06630	10 – 24
97780–40512	13 – 3
97880–04008	14 – 19
	15 – 21
97885–05008	28 – 7
	29 – 19
97885–06030	18 – 19
97885–08010	25 – 11
98507–04010	5 – 16
98580–04006	35 – 40
	36 – 40
98980–05025	5 – 19
99002–03600	27 – 31
99080–04600	19 – 49
99080–05600	24 – 25
	24 – 29
	24 – 37
99080–10600	25 – 29
99530–10114	5 – 5
99530–12016	3 – 3