YAMAHA

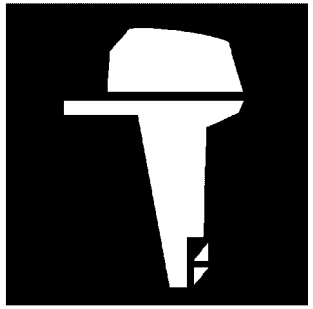

PARTS CATALOGUE
CATALOGUE DE PIECES DETACHEES

F225FET'16 (6CL7)
FL225FET'16 (6CM7)

YAMAHA
GENUINE
Parts & Accessories

1Q6CL-300FA

( )

F225FET/FL225FET
PARTS CATALOGUE
©2025 by Yamaha Motor Co., Ltd.
1st edition, March 2025
All rights reserved.
Any reprinting or unauthorized use
without the written permission of
Yamaha Motor Co., Ltd.
is expressly prohibited.
Printed in Japan.

F225FET/FL225FET
CATALOGUE DE PIECES DETACHEES
©2025 par Yamaha Motor Co., Ltd.
1re édition, mars 2025
Tous droits réservés
Toute réimpression ou utilisation
non autorisée sans la permission écrite
de Yamaha Motor Co., Ltd.
est formellement interdite.
Imprimé au Japon

FOREWORD

This Parts Catalogue is related to the parts for the model(s) on the cover page. When you are ordering replacement parts, please refer to this Parts Catalogue and quote both part numbers and part names correctly.

1. Modifications or additions which have been made after the issue of the Parts Catalogue will be announced in the Parts News.
   It is advisable that you make the necessary corrections to the Parts Catalogue according to the Parts News.

2. Abbreviations
   The following abbreviations are used in this Parts Catalogue.
   "UR" Use specified parts number.
   "UN" Use as many as needed.
   "AP" Alternate Parts
   "LM" Locally Made (Parts need to be ordered locally)
   "F#" Frame No. (Applicable machine No.)
   "O/S" Over Size

3. The number of components for assembly
   - Parts, which are to be supplied in an assembly, are listed with a dot (.) in front of the part name as shown below.
   - The numeral appearing to the right of each component part indicates the quantity of parts for each assembly unit.

PART NO.	DESCRIPTION	Q'TY	REMARKS
2F5–83310–60	FRONT FLASHER LIGHT ASSY	2	
115–83311–60	.BULB (6V–18W)	1	

4. Applicable colours of graphics are represented in the "REMARKS" as shown below.

PART NO.	DESCRIPTION	Q'TY	REMARKS
2N4–24110–00–X5	FUEL TANK COMP.	2	MXR
3J1–24240–10	.GRAPHIC, FUEL TANK	1	FOR MXR

5. Note that the illustrations for reference in finding parts numbers are not to be used for assembling. When assembling, please use the applicable service manual.

6. The asterisk (*) before a reference number indicates modified items after the first edition.

7. Applicable Serial No.
   Engine Serial No.

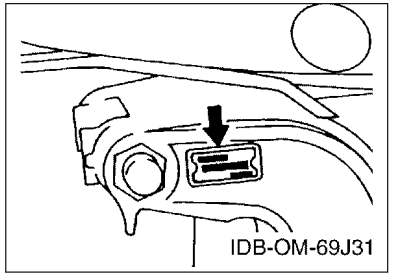

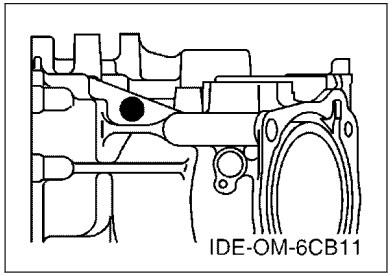

8. Applicable Engine Starting Serial No.

Model	Serial No.	Model	Serial No.
F225F	6CL-1003410	FL225F	6CM-1000777

9. Applicable Colour Code

Abbreviation	Colour Name	Colour Code
DBN1	DARK BLUISH GRAY 1	008D

10. Quantity Column Information

Column No.	Name Of Q'ty Column	Applicable Model
1	6CL7	F225FET
2	6CM7	FL225FET

AVANT–PROPOS

Ce catalogue de pièces détachées concerne les pièces pour le(s) modèle(s) indiqué(s) sur la page de couverture. Lorsque vous commandez des pièces de rechange, veuillez vous référer à ce catalogue de pieces détachées et indiquer clairement les numéros et les noms des pièces détachées.

1. Les modifications ou ajouts ayant été effectués après la parution du catalogue de pièces détachées seront décrits dans les Bulletins d'information concernant les pièces détachées.
   Il est recommandé que vous apportiez les corrections nécessaires au catalogue des pièces détachées en vous référant aux Bulletins d'information.

2. Abréviations
   Dans ce catalogue, les abréviations suivantes sont utilisées:
   "UR" Utiliser le numéro de pièces spécifié.
   "UN" Utiliser autant que nécessaire.
   "AP" Pièces de substitution
   "LM" Fabrication locale (les pièces doivent être commandées localement.)
   "F#" N° de cadre (applicable au N° de série)
   "O/S" Surdimensionné

3. Nombre de pièces d'un assemblage
   - Les pièces fournies comme composants d'un assemblage sont précédées d'un point (.) de la manière indiquée ci–dessous.
   - Le chiffre apparaissant à la droite de chaque composant indique la quantité de pièces pour chaque unité d'assemblage.

N° PIECES	DESCRIPTION	QTE	REMARQUES
2F5–83310–60	ENS. CLIGNOTANT AVANT	2	
115–83311–60	.AMPOULE (6V–18W)	1	

4. Les couleurs concernant les graphiques sont indiquées dans la colonne "REMARQUES", comme indiqué ci–dessous.

N° PIECES	DESCRIPTION	QTE	REMARQUES
2N4–24110–00–X5	RESERVOIR A ESSENCE.	2	MXR
3J1–24240–10	.GRAPHIQUE	1	POUR MXR

5. Veuillez noter que les illustrations sont indiquées à titre de référence pour trouver les numéros de pièces, non pour être utilisées lors de l'assemblage. Lors de l'assemblage, veuillez utiliser le manuel d'entretien adéquat.

6. L'astérisque (*) placé devant un numéro de référence indique des éléments qui ont été modifiés après la première édition.

7. N° de série applicable
   N° de Série du moteur

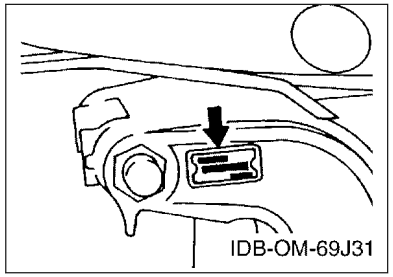

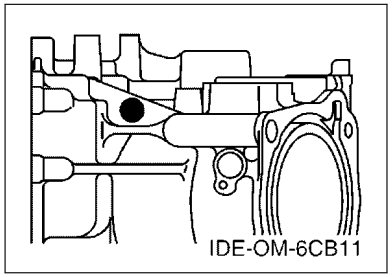

8. N° de série initial du moteur applicable

Modèle	N° de série	Modèle	N° de série
F225F	6CL-1003410	FL225F	6CM-1000777

9. Code couleur applicable

Abréviation	Nom de la couleur	Code couleur
DBN1	DARK BLUISH GRAY 1	008D

10. Informations relatives à la colonne Quantité

N° de la colonne	Nom de la colonne Qté	Modèle applicable
1	6CL7	F225FET
2	6CM7	FL225FET

CONTENTS

SCHEDULED SERVICE PARTS....1
TOP COWLING....2
CYLINDER & CRANKCASE 1....3
CRANKSHAFT & PISTON....5
CYLINDER & CRANKCASE 2....6
CYLINDER & CRANKCASE 3....8
CYLINDER & CRANKCASE 4....9
VALVE....10
INTAKE 1....13
INTAKE 2....14
THROTTLE BODY ASSY 1....16
THROTTLE BODY ASSY 2....17
FUEL INJECTION PUMP 1....18
FUEL INJECTION PUMP 2....20
FUEL 1....21
FUEL 2....23
GENERATOR....24
ELECTRICAL 1....25
ELECTRICAL 2....27
ELECTRICAL 3....28
ELECTRICAL 4....30
ELECTRICAL 5....32
ELECTRICAL 6....33
STARTING MOTOR....34
BOTTOM COWLING 1....35
BOTTOM COWLING 2....37
BOTTOM COWLING 3....39
CONTROL....40
BRACKET 1....42
BRACKET 2....44
POWER TRIM & TILT ASSY 1....46
POWER TRIM & TILT ASSY 2....49
UPPER CASING....50
OIL PAN....52
LOWER CASING & DRIVE 1....53
LOWER CASING & DRIVE 2....58
LOWER CASING & DRIVE 3....60
LOWER CASING & DRIVE 4....64
STEERING GUIDE ATTACHMENT 1....66
STEERING GUIDE ATTACHMENT 2....67
OPTIONAL PARTS 1....68
OPTIONAL PARTS 2....69
REPAIR KIT 1....70
REPAIR KIT 2....71

INDEX

NUMERICAL INDEX....73

TABLE DES MATIERES

PIECES MAINTENANCE PERIODIQUE.....1
CAPOT SUPERIEUR..... 2
CYLINDRE & CARTER 1..... 3
VILEBREQUIN & PISTON.....5
CYLINDRE & CARTER 2..... 6
CYLINDRE & CARTER 3..... 8
CYLINDRE & CARTER 4..... 9
SOUPAPE..... 10
ADMISSION 1.....13
ADMISSION 2.....14
CARTER D'ACCELERATEUR 1.....16
CARTER D'ACCELERATEUR 2.....17
POMPE A INJECTEUR 1..... 18
POMPE A INJECTEUR 2..... 20
CARBURANT 1..... 21
CARBURANT 2..... 23
GENERATRICE.....24
PARTIE ELECTRIQUE 1.....25
PARTIE ELECTRIQUE 2.....27
PARTIE ELECTRIQUE 3.....28
PARTIE ELECTRIQUE 4.....30
PARTIE ELECTRIQUE 5.....32
PARTIE ELECTRIQUE 6.....33
DEMARREUR ELECTRIQUE.....34
CAPOT INFERIEUR 1.....35
CAPOT INFERIEUR 2.....37
CAPOT INFERIEUR 3.....39
COMMANDE..... 40
SUPPORT 1..... 42
SUPPORT 2..... 44
PUISSANCE PARER ET INCLINER 1..... 46
PUISSANCE PARER ET INCLINER 2..... 49
FOURREAU.....50
VENTILATEUR D'HUILE..... 52
BOITIER D'HELICE TRANSMISSION1.....53
BOITIER D'HELICE TRANSMISSION2.....58
BOITIER D'HELICE TRANSMISSION3.....60
BOITIER D'HELICE TRANSMISSION4.....64
DIRECTION GUIDE ACCESSOIRE 1.....66
DIRECTION GUIDE ACCESSOIRE 2.....67
PIECES OPTIONNELLES 1..... 68
PIECES OPTIONNELLES 2..... 69
KITS DE REPARATION 1..... 70
KITS DE REPARATION 2..... 71

INDEX

INDEX NUMERIQUE.....73

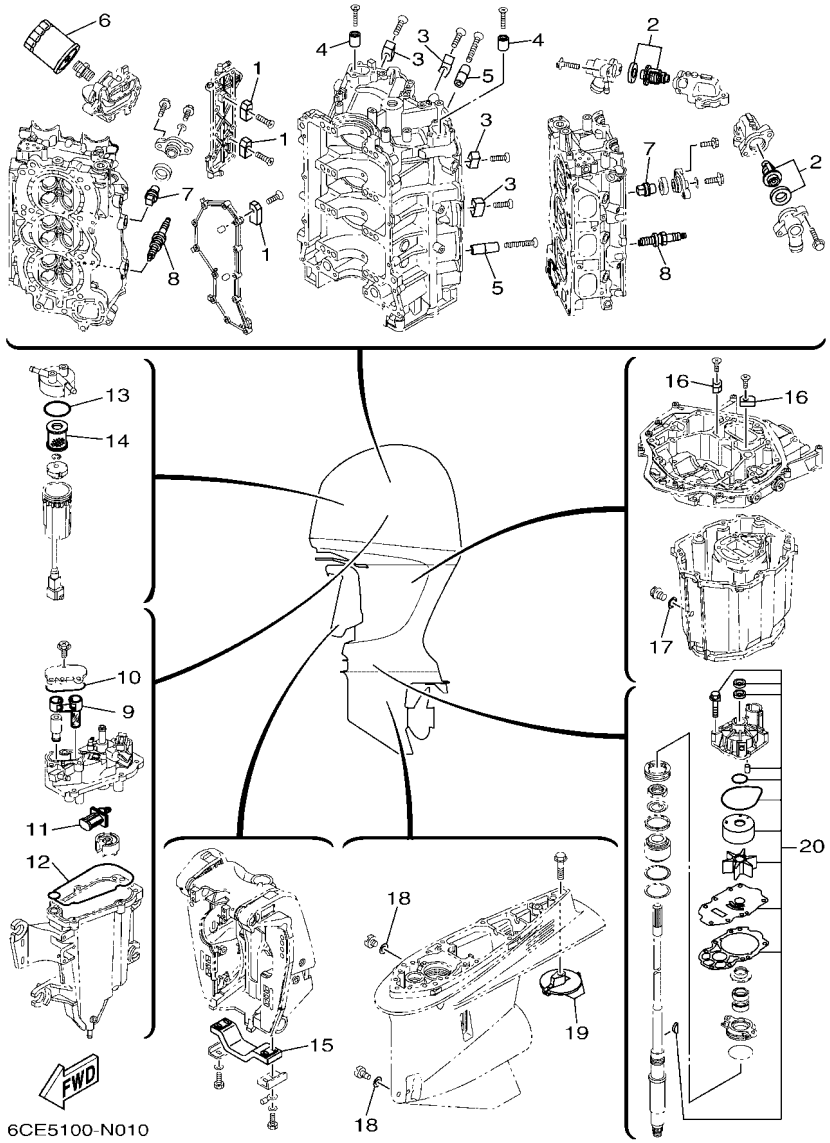

FIG. 1 SCHEDULED SERVICE PARTS — PIECES MAINTENANCE PERIODIQUE

REF. NO.	PART NO. N° PIECES	DESCRIPTION DESCRIPTION	6CL7	6CM7				REMARKS REMARQUES
1	63P–11325–01	ANODE ANODE	4	4				
2	6CE–12411–00	THERMOSTAT THERMOSTAT	2	2				
3	6AW–1132P–00	ANODE 5 ANODE 5	4	4				
4	68T–11325–00	ANODE ANODE	2	2				
5	6AW–1132N–01	ANODE 4 ANODE 4	2	2				
6	N26–13440–02	ELEMENT ASSY, OIL CLEANER ELEMENT, FILTRE A HUILE	1	1				
7	67F–11325–01	ANODE ANODE	8	8				
8	94702–00400	PLUG, SPARK (NGK LFR6A-11) BOUGIE D'ALLUMAGE(NGK LFR6A-11	6	6				
9	6CB–24501–01	FILTER, FUEL FILTRE	1	1				
10	6CB–13016–00	O-RING JOINT TORIQUE	1	1				
11	63P–13915–00	FILTER FILTRE	1	1				
12	6CB–14984–00	GASKET, FLOAT CHAMBER JOINT, CUVE DE FLOTTEUR	1	1				
13	6P3–24564–00	GASKET JOINT	1	1				
14	6P3–24563–01	ELEMENT, FILTER ELEMENT, FILTRE	1	1				
15	6G5–45251–02	ANODE ANODE	1	1				
16	63P–11325–11	ANODE ANODE	2	2				
17	90430–14M09	GASKET JOINT	1	1				
18	90430–08003	GASKET JOINT	2	2				
19	61A–45371–00	TAB-TRIM ANODE DERIVE	1	1				
20	6CE–W0078–01	WATER PUMP REPAIR KIT KIT DE REPARATION DE LA POMPE	1	1				

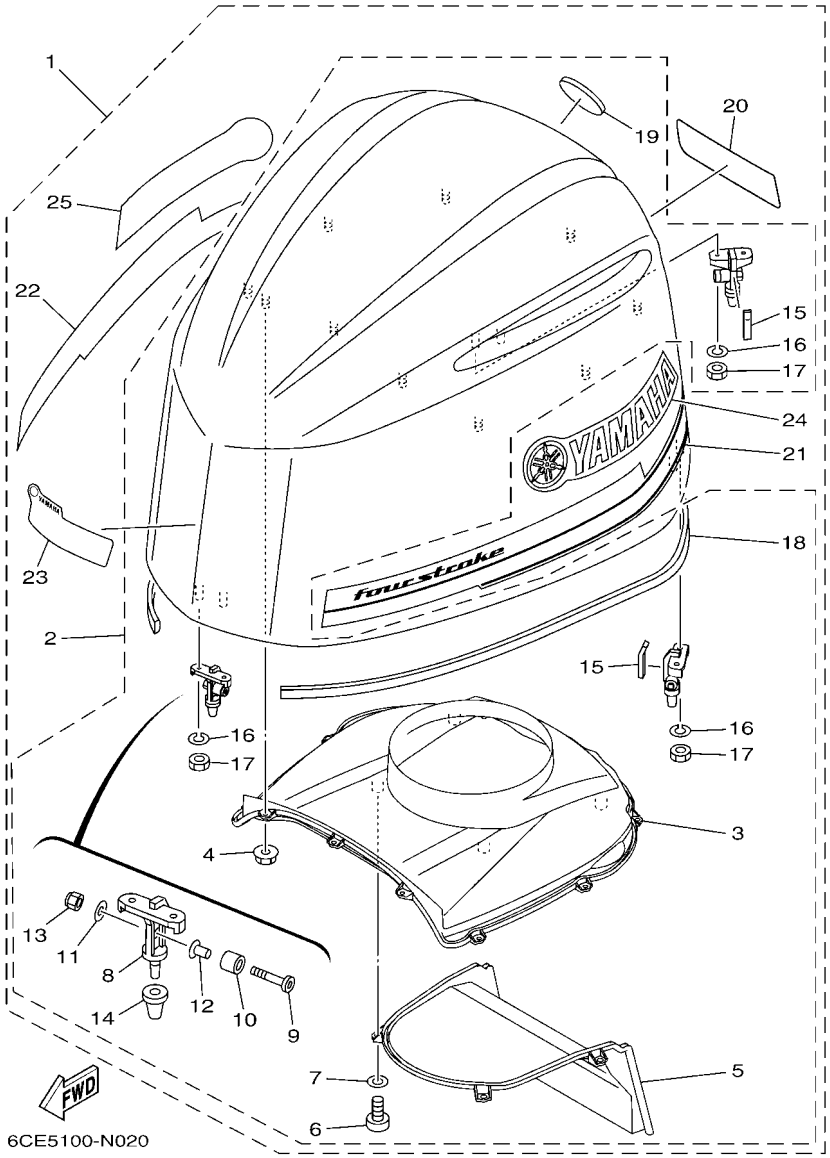

FIG. 2 TOP COWLING — CAPOT SUPERIEUR

REF. NO.	PART NO. N° PIECES	DESCRIPTION DESCRIPTION	6CL7	6CM7				REMARKS REMARQUES
1	6CL–42610–02	TOP COWLING ASSY CAPOT (ENS.)	1	1				
2	6CE–4261A–00	.TOP COWLING W/O GRAPHICS .CAPOT SUPERIEUR SANS GRAPHIQUE	1	1				
3	6CE–42613–00	..MOLDING, AIR DUCT ..MANCHON A AIR	1	1				
4	90179–06M28	..NUT ..ECROU	10	10				
5	6CE–42635–00	..DUCT, WATER SEPARATOR ..CONDUIT, SEPARATEUR DE L'EAU	1	1				
6	97780–60516	..SCREW, TAPPING ..VIS, TETE BOMBEE	4	4				
7	92990–06200	..WASHER, PLAIN ..RONDELLE, PLATE	4	4				
8	6CB–42647–A0	..HOLDER, CLAMP BAND ..SUPPORT, SANDOW DE SERRAGE	3	3				
9	90111–08078	..BOLT,HEX. SOCKET BUTTON ..BOULON	3	3				
10	90387–10094	..COLLAR ..COLLERETTE	3	3				
11	92990–08600	..WASHER, PLATE ..RONDELLE, PLATE	3	3				
12	90387–08M45	..COLLAR ..COLLERETTE	3	3				
13	95780–08300	..NUT, FLANGE ..ECROU	3	3				
14	6AW–42663–00	..DAMPER ..AMORTISSEUR	3	3				
15	6CB–42134–00	..COVER ..CAPOT	2	2				
16	92990–06100	..WASHER, SPRING ..RONDELLE, GROWER	6	6				
17	95380–06600	..NUT, HEXAGON ..ECROU	6	6				
18	6CB–42628–00	..SEAL ..JOINT	1	1				
19	6AW–42697–10	..TUNING FORK MARK ..MARQUE, YAMAHA	1	1				
20	6CL–42678–02	.GRAPHIC, REAR .ADHESIF, ARRIERE	1	1				
21	6CE–42675–02	.GRAPHIC, SIDE 1 .EMBLEME	1	1				
22	6CE–42676–02	.GRAPHIC, SIDE 2 .EMBLEME	1	1				
23	6CL–42677–01	.GRAPHIC, FRONT .ADHESIF, AVANT	1	1				
24	6CE–42681–03	.MARK, COWLING .ADHESIF, CAPOT	1	1				
25	6CE–42682–03	.MARK, COWLING .ADHESIF, CAPOT	1	1				

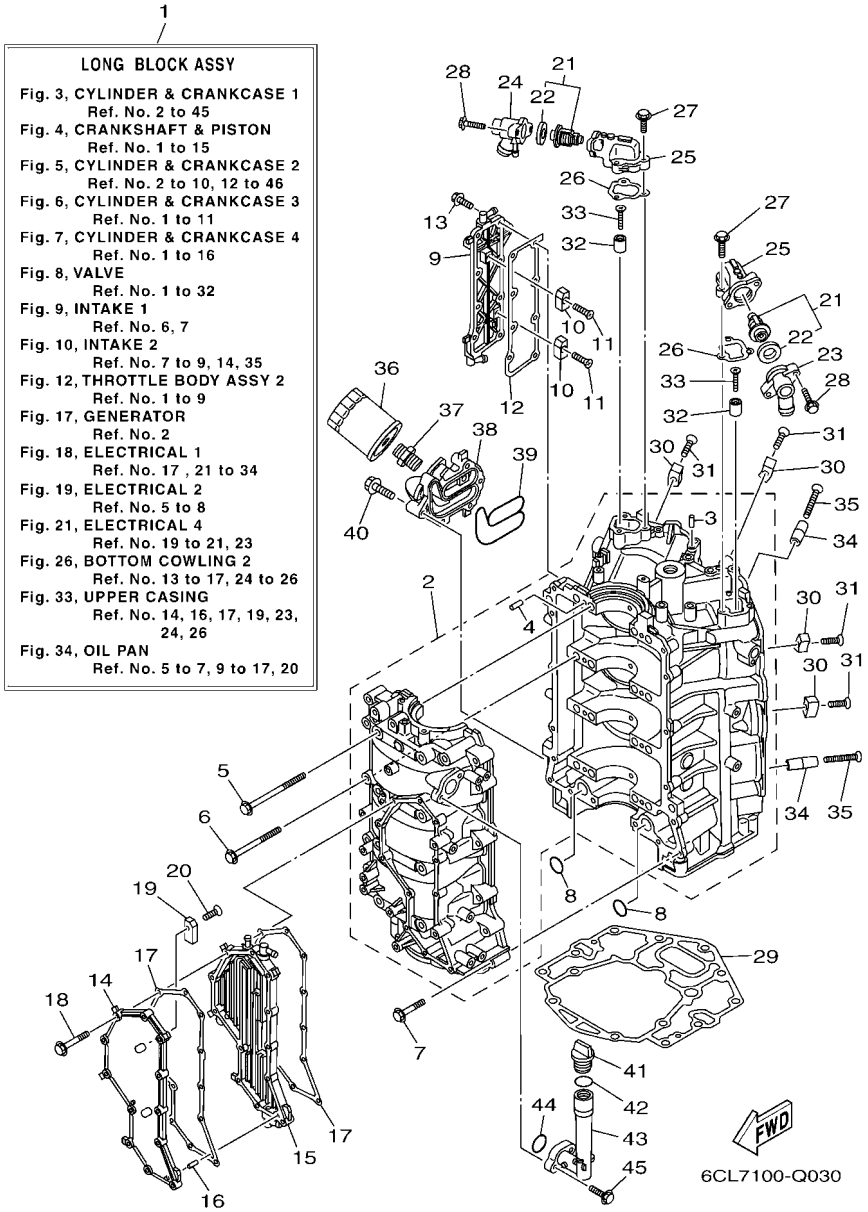

FIG. 3 CYLINDER & CRANKCASE 1 — CYLINDRE & CARTER 1

REF. NO.	PART NO. N° PIECES	DESCRIPTION DESCRIPTION	6CL7	6CM7				REMARKS REMARQUES
1	6CE–11000–01	LONG BLOCK ASSY SOUS-ASSEMBLEE DU MOTEUR	1	1				
2	6CE–15100–10	CRANKCASE ASSY CARTER DE MOTEUR COMPLET	1	1				
3	93606–12019	.PIN, DOWEL .GOUPILLE	3	3				
4	93606–12019	.PIN, DOWEL .GOUPILLE	8	8				
5	6CB–15187–00	BOLT BOULON	8	8				
6	6CB–15481–00	BOLT 1 BOULON 1	8	8				
7	90105–08175	BOLT, FLANGE BOULON	16	16				
8	93210–26658	O-RING JOINT TORIQUE	2	2				
9	6CE–1131C–00–9S	COVER, JOINT COUVERCLE, RACCORDEMENT	1	1				
10	63P–11325–01	ANODE ANODE	2	2				
11	90151–06M02	SCREW, COUNTERSUNK VIS, TETE NOYEE	2	2				
12	6CB–1131B–00	GASKET, COVER JOINT, COUVERCLE	1	1				
13	90105–06M07	BOLT, FLANGE BOULON	8	8				
14	6CE–15411–00–9S	COVER, CRANKCASE 1 COUVERCLE 1, CARTER MOTEUR	1	1				
15	6CE–15421–10–9S	COVER, CRANKCASE 2 COUVERCLE 2, CARTER MOTEUR	1	1				
16	91690–40010	PIN, SPRING AGRAFFE	1	1				
17	6CB–15451–00	GASKET, CRANKCASE COVER 1 JOINT, COUVERCLE DE CARTER 1	2	2				
18	90105–06151	BOLT, FLANGE BOULON	12	12				
19	63P–11325–01	ANODE ANODE	2	2				
20	90151–06M02	SCREW, COUNTERSUNK VIS, TETE NOYEE	2	2				
21	6CE–12411–00	THERMOSTAT THERMOSTAT	2	2				
22	67F–12412–00	.SEAL, THERMOSTAT .JOINT, THERMOSTAT	1	1				
23	6CE–12413–B0–9S	COVER, THERMOSTAT COUVERCLE, THERMOSTAT	1	1				
24	6CE–12413–A0–9S	COVER, THERMOSTAT COUVERCLE, THERMOSTAT	1	1				
25	6CB–12422–10–9S	COVER, HOUSING COUVERCLE DE CARTER DE POMPE	2	2				
26	6CB–12427–10	GASKET, HOUSING COVER 1 JOINT, COUVERCLE DE CARTER 1	2	2				
27	95027–06025	BOLT, FLANGE BOULON, A COLLERETTE	6	6				

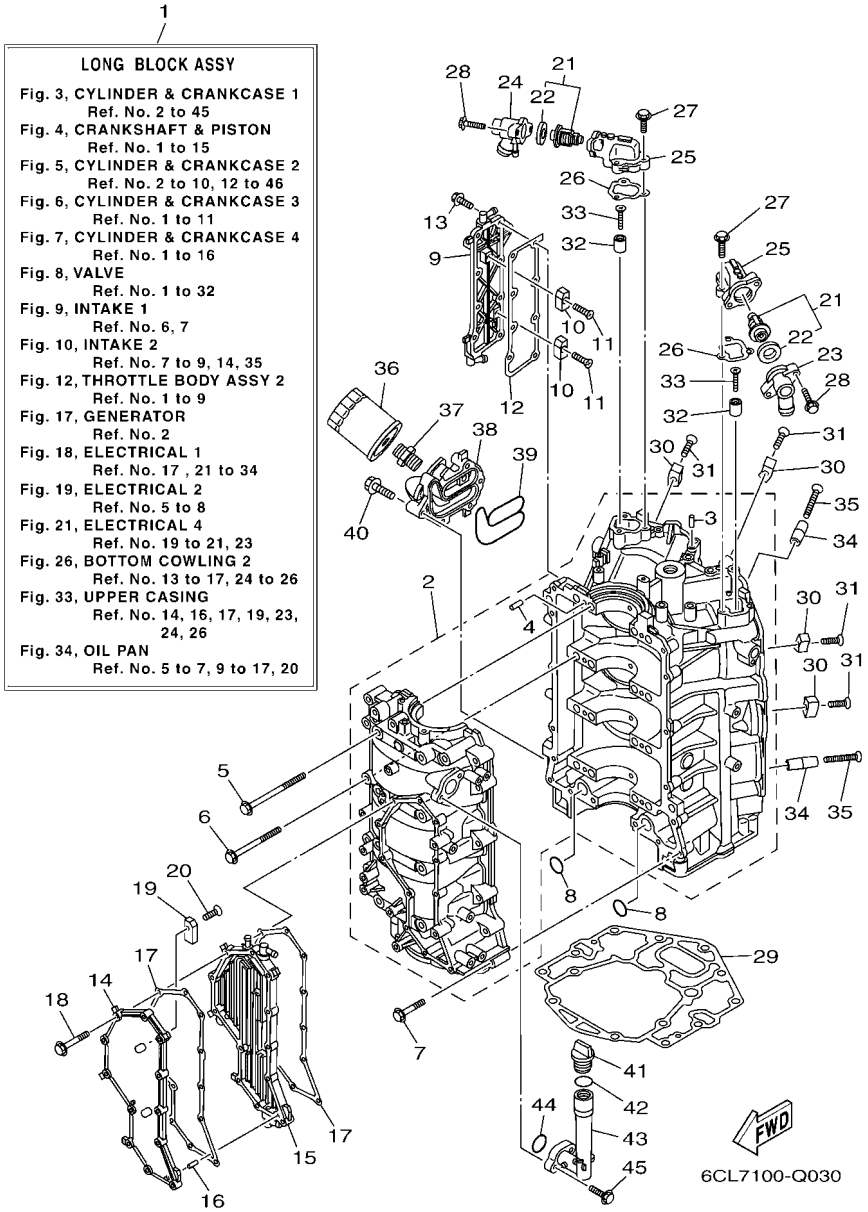

FIG. 3 CYLINDER & CRANKCASE 1 — CYLINDRE & CARTER 1

REF. NO.	PART NO. N° PIECES	DESCRIPTION DESCRIPTION	6CL7	6CM7				REMARKS REMARQUES
28	90105–06037	BOLT, FLANGE BOULON	4	4				
29	6CB–11351–00	GASKET, CYLINDER JOINT, D'EMBASE	1	1				
30	6AW–1132P–00	ANODE 5 ANODE 5	4	4				
31	98780–06530	SCREW, FLAT HEAD VIS A TETE FRAISEE	4	4				
32	68T–11325–00	ANODE ANODE	2	2				
33	90151–05M05	SCREW, COUNTERSUNK VIS, TETE NOYEE	2	2				
34	6AW–1132N–01	ANODE 4 ANODE 4	2	2				
35	98780–06550	SCREW, FLAT HEAD VIS A TETE FRAISEE	2	2				
36	N26–13440–02	ELEMENT ASSY, OIL CLEANER ELEMENT, FILTRE A HUILE	1	1				
37	90401–19001	BOLT, UNION BOULON, RACCORD	1	1				
38	6CE–13446–10–9S	CONNECTOR CONNECTEUR	1	1				
39	6CB–13477–00	GASKET JOINT	1	1				
40	90105–06151	BOLT, FLANGE BOULON	5	5				
41	6G8–15363–00	PLUG, OIL PLOT, HUILE	1	1				
42	93210–24M79	O-RING JOINT TORIQUE	1	1				
43	6CB–15319–00	JOINT JOINT	1	1				
44	93210–27370	O-RING JOINT TORIQUE	1	1				
45	90105–06037	BOLT, FLANGE BOULON	2	2				

FIG. 4 CRANKSHAFT & PISTON — VILEBREQUIN & PISTON

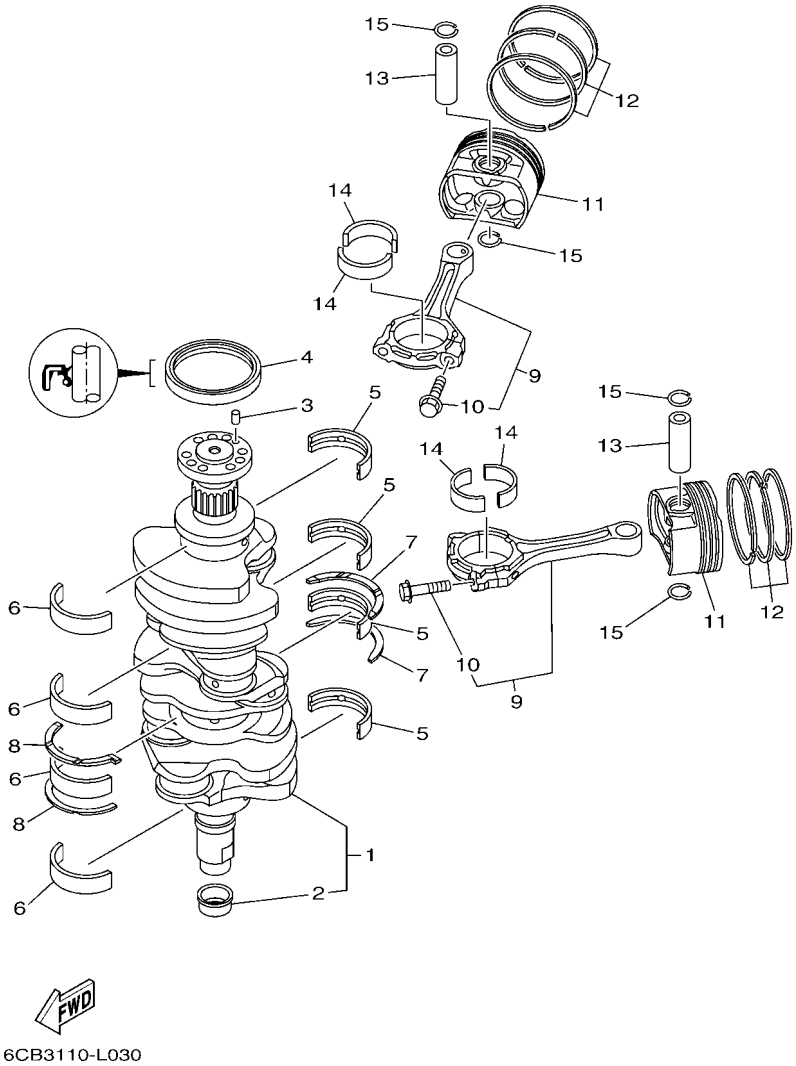

REF. NO.	PART NO. N° PIECES	DESCRIPTION DESCRIPTION	6CL7	6CM7				REMARKS REMARQUES
1	6CB–11410–00	CRANKSHAFT VILEBREQUIN COMPLET	1	1				
2	6CB–11478–00	.COLLAR .COLLERETTE	1	1				
3	93606–12019	PIN, DOWEL GOUPILLE	1	1				
4	93102–85008	OIL SEAL JOINT SPY	1	1				
5	6CB–11416–00	PLANE BEARING, CRANKSHAFT 1 COUSSINET DE VILEBREQUIN 1	4	4				UR PURPLE UR PURPLE
	6CB–11416–10	PLANE BEARING, CRANKSHAFT 1 COUSSINET DE VILEBREQUIN 1	4	4				UR YELLOW UR YELLOW
	6CB–11416–20	PLANE BEARING, CRANKSHAFT 1 COUSSINET DE VILEBREQUIN 1	4	4				UR RED UR RED
	6CB–11416–30	PLANE BEARING, CRANKSHAFT 1 COUSSINET DE VILEBREQUIN 1	4	4				UR GREEN UR GREEN
	6CB–11416–40	PLANE BEARING, CRANKSHAFT 1 COUSSINET DE VILEBREQUIN 1	4	4				UR BROWN UR BROWN
6	6CB–11417–00	PLANE BEARING, CRANKSHAFT 2 COUSSINET DE VILEBREQUIN 2	4	4				UR PURPLE UR PURPLE
	6CB–11417–10	PLANE BEARING, CRANKSHAFT 2 COUSSINET DE VILEBREQUIN 2	4	4				UR YELLOW UR YELLOW
	6CB–11417–20	PLANE BEARING, CRANKSHAFT 2 COUSSINET DE VILEBREQUIN 2	4	4				UR RED UR RED
	6CB–11417–30	PLANE BEARING, CRANKSHAFT 2 COUSSINET DE VILEBREQUIN 2	4	4				UR GREEN UR GREEN
	6CB–11417–40	PLANE BEARING, CRANKSHAFT 2 COUSSINET DE VILEBREQUIN 2	4	4				UR BROWN UR BROWN
7	6CB–11426–03	BEARING, THRUST 1 ROULEMENT DE BUTEE 1	2	2				
8	6CB–11427–03	BEARING, THRUST 2 ROULEMENT DE BUTEE 2	2	2				
9	6CB–W1165–00	CONNECTING ROD ASSY BIELLE COMPLETTE	6	6				
10	6CB–11654–00	.BOLT, CONNECTING ROD .BOULON, BIELLE	2	2				
11	6CE–11631–01	PISTON (STD) PISTON (STD)	6	6				
12	6CB–11603–00	PISTON RING SET (STD) JEU DE SEGMENTS (STD)	6	6				
13	6CB–11633–00	PIN, PISTON AXE, PISTON	6	6				
14	6CB–11656–00	PLANE BEARING, CONNECTING ROD ROULEMENT DE BIELLE	12	12				UR YELLOW UR YELLOW
	6CB–11656–10	PLANE BEARING, CONNECTING ROD ROULEMENT DE BIELLE	12	12				UR GREEN UR GREEN
	6CB–11656–20	PLANE BEARING, CONNECTING ROD ROULEMENT DE BIELLE	12	12				UR BLUE UR BLUE
15	K0F–A3233–00	RING,HOLE SNAP JONC	12	12				

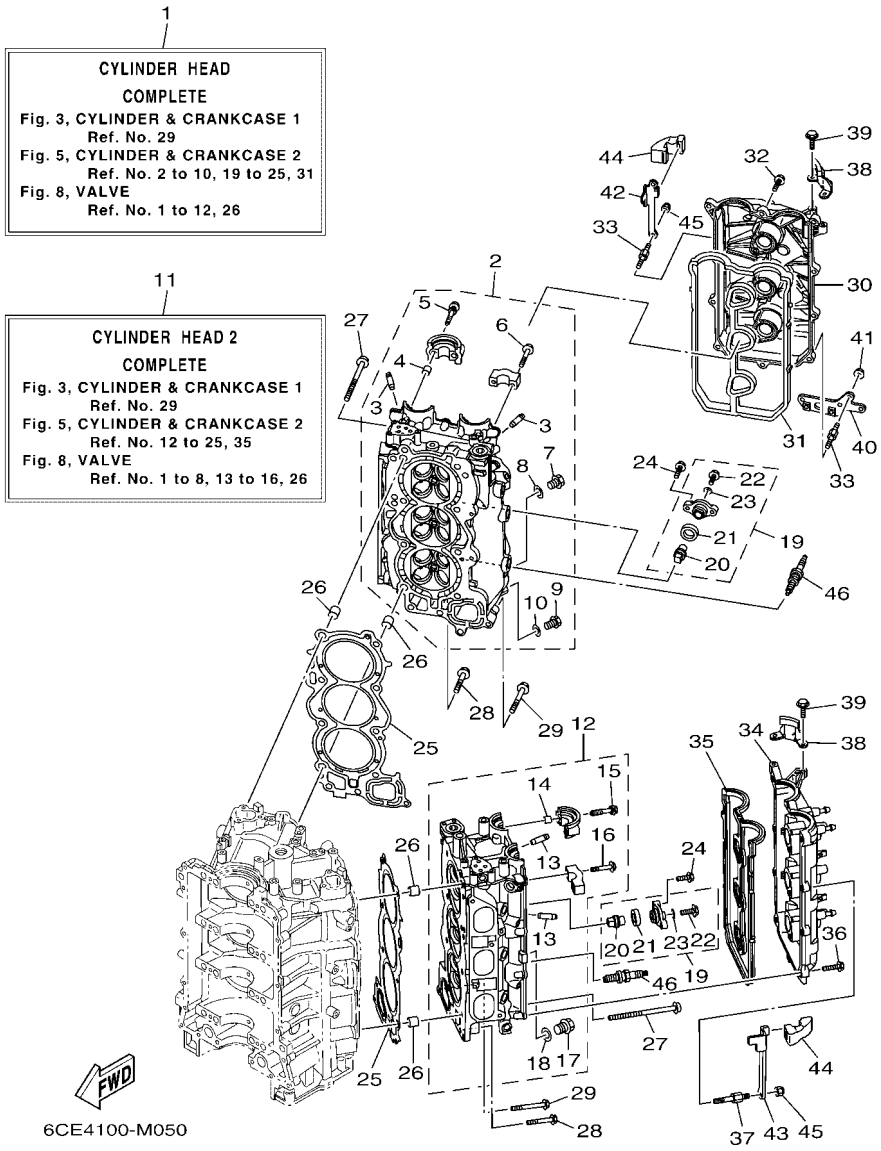

FIG. 5 CYLINDER & CRANKCASE 2 — CYLINDRE & CARTER 2

REF. NO.	PART NO. N° PIECES	DESCRIPTION DESCRIPTION	6CL7	6CM7				REMARKS REMARQUES
1	6CE–W009A–02–9S	CYLINDER HEAD COMPLETE CULASSE (ENS.)	1	1				
2	6CE–11110–11–9S	CYLINDER HEAD ASSY JEU DE CULASSE	1	1				
3	6S5–11133–10	.GUIDE, VALVE 1 .GUIDE, SOUPAPE 1	12	12				
4	91809–08006	.PIN, DOWEL .GOUJON, D'ASSEMBLAGE	4	4				
5	90119–07001	.BOLT, WITH WASHER .BOULON, AVEC RONDELLE	4	4				
6	90119–07234	.BOLT, WITH WASHER .BOULON, AVEC RONDELLE	12	12				
7	90340–18M09	.PLUG, STRAIGHT SCREW .PLOT, FILETE DROIT	1	1				
8	90201–186F1	.WASHER, PLATE .RONDELLE, PLATE	1	1				
9	90340–14M06	.PLUG, STRAIGHT SCREW .PLOT, FILETE DROIT	1	1				
10	90430–14115	.GASKET .JOINT	1	1				
11	6CE–W009C–02–9S	CYLINDER HEAD 2 COMPLETE CULASSE 2	1	1				
12	6CE–11120–11–9S	CYLINDER HEAD ASSY 2 CULASSE 2	1	1				
13	6S5–11133–10	.GUIDE, VALVE 1 .GUIDE, SOUPAPE 1	12	12				
14	91809–08006	.PIN, DOWEL .GOUJON, D'ASSEMBLAGE	4	4				
15	90119–07001	.BOLT, WITH WASHER .BOULON, AVEC RONDELLE	4	4				
16	90119–07234	.BOLT, WITH WASHER .BOULON, AVEC RONDELLE	12	12				
17	90340–18M09	.PLUG, STRAIGHT SCREW .PLOT, FILETE DROIT	1	1				
18	90201–186F1	.WASHER, PLATE .RONDELLE, PLATE	1	1				
19	67F–11301–00	ANODE COVER ASSY COUVERCLE ANODE (ENS.)	8	8				
20	67F–11325–01	.ANODE .ANODE	1	1				
21	67F–11328–00	.GROMMET, ANODE .PASSE-FIL	1	1				
22	90105–06M07	.BOLT, FLANGE .BOULON	1	1				
23	90430–06M03	.GASKET .JOINT	1	1				
24	95895–08025	BOLT, FLANGE BOULON	16	16				
25	6CB–11181–00	GASKET, CYLINDER HEAD 1 JOINT, DE CULASSE 1	2	2				
26	90387–11005	COLLAR COLLERETTE	4	4				
27	90155–11002	SCREW, FLAT FILLISTER VIS, TETE OVALE PLATE	16	16				

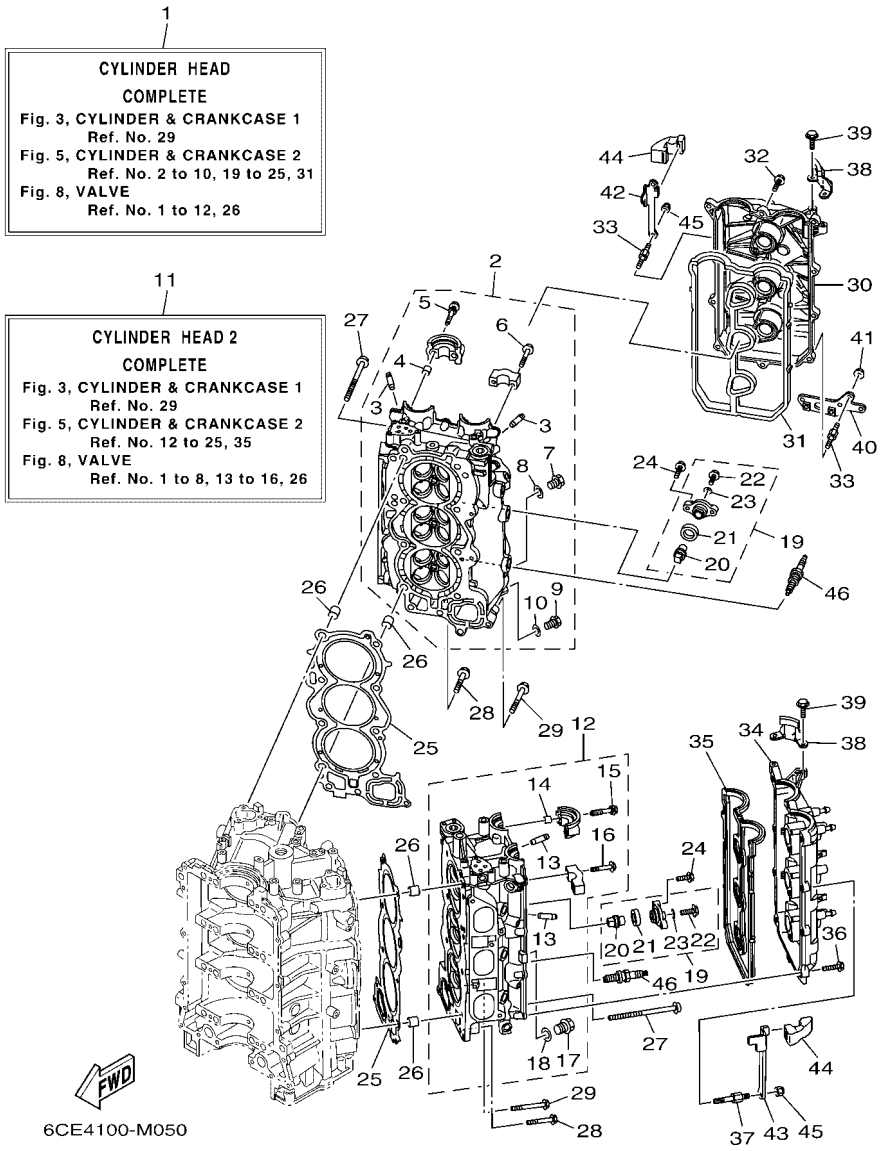

FIG. 5 CYLINDER & CRANKCASE 2 — CYLINDRE & CARTER 2

REF. NO.	PART NO. N° PIECES	DESCRIPTION DESCRIPTION	6CL7	6CM7				REMARKS REMARQUES
28	90105–08175	BOLT, FLANGE BOULON	4	4				
29	90105–08220	BOLT, FLANGE BOULON	2	2				
30	6CB–11191–02	COVER, CYLINDER HEAD 1 COUVERCLE, CULASSE 1	1	1				
31	6CB–11193–00	GASKET, HEAD COVER 1 JOINT, COUVERCLE DE CULASSE 1	1	1				
32	95895–06030	BOLT, FLANGE BOULON	9	9				
33	90109–06277	BOLT BOULON	4	4				
34	6CB–11192–02	COVER, CYLINDER HEAD 2 COUVERCLE, CULASSE 2	1	1				
35	6CB–11194–00	GASKET, HEAD COVER 2 JOINT, COUVERCLE DE CULASSE 2	1	1				
36	95895–06030	BOLT, FLANGE BOULON	11	11				
37	90109–06277	BOLT BOULON	2	2				
38	6AW–15142–00	GUIDE 1 GUIDE 1	2	2				
39	95895–06014	BOLT, FLANGE BOULON	4	4				
40	6CB–2134V–00	BRACKET SUPPORT	1	1				
41	90179–06M28	NUT ECROU	2	2				
42	6CB–11998–00	BRACKET 1 SUPPORT 1	1	1				
43	6CB–11999–00	BRACKET 2 SUPPORT 2	1	1				
44	6CB–42662–00	DAMPER AMORTISSEUR	2	2				
45	90185–06M07	NUT, SELF-LOCKING ECROU,AUTO-BLOQUANT	4	4				
46	94702–00400	PLUG, SPARK (NGK LFR6A-11) BOUGIE D'ALLUMAGE(NGK LFR6A-11	6	6				

FIG. 6 CYLINDER & CRANKCASE 3 — CYLINDRE & CARTER 3

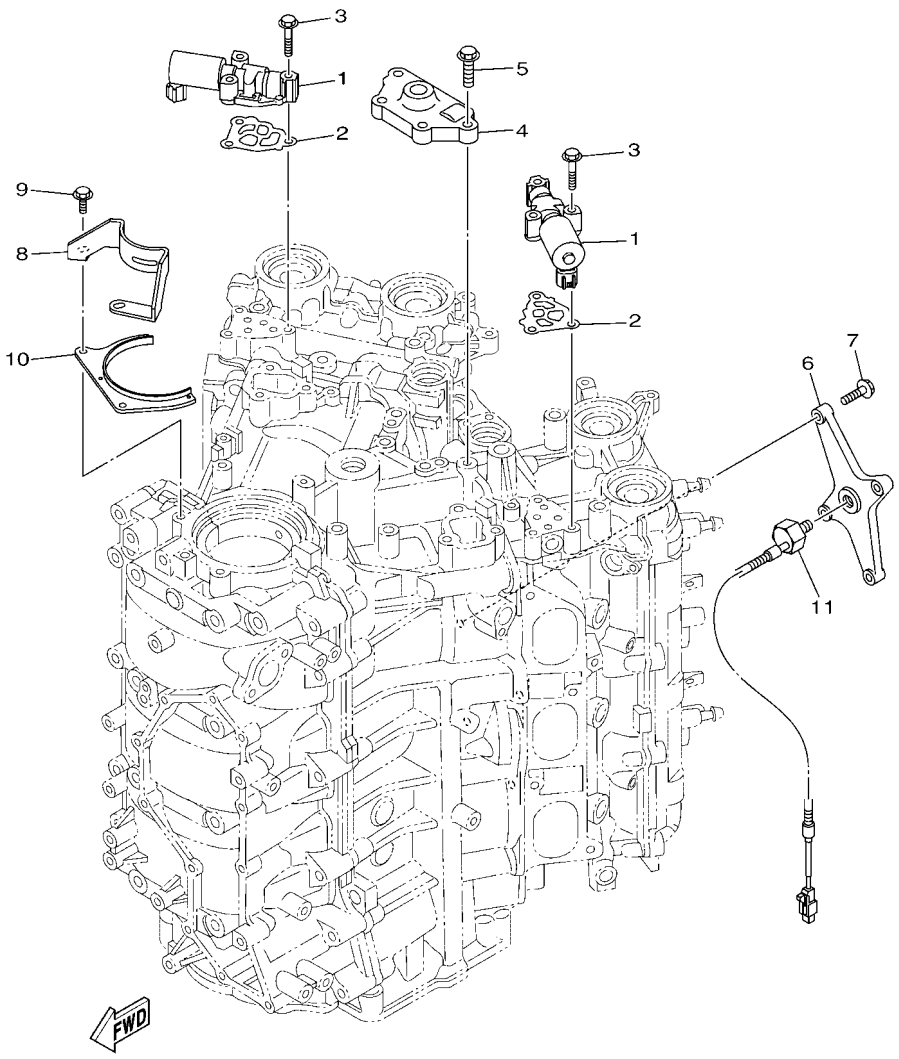

6CD6100-N060

REF. NO.	PART NO. N° PIECES	DESCRIPTION DESCRIPTION	6CL7	6CM7				REMARKS REMARQUES
1	6CB–86120–00	SOLENOID VALVE ASSY SOLENOIDE	2	2				
2	6CB–1242F–00	GASKET, FILTER JOINT, FILTRE	2	2				
3	90105–06035	BOLT, FLANGE BOULON	6	6				
4	6CB–15544–00	STAY 1 SUPPORT 1	1	1				
5	90105–08178	BOLT, FLANGE BOULON	4	4				
6	6CB–1135A–00	BRACKET SUPPORT	1	1				
7	90105–06037	BOLT, FLANGE BOULON	4	4				
8	6CB–15142–00	GUIDE 1 GUIDE 1	1	1				
9	95895–06016	BOLT, FLANGE BOULON	2	2				
10	6CB–1149A–00	PLATE 1 FLAQUE 1	1	1				
11	6P2–85780–00	SENSOR, KNOCK SONDE DE COGNEMENT	1	1				

FIG. 7 CYLINDER & CRANKCASE 4 — CYLINDRE & CARTER 4

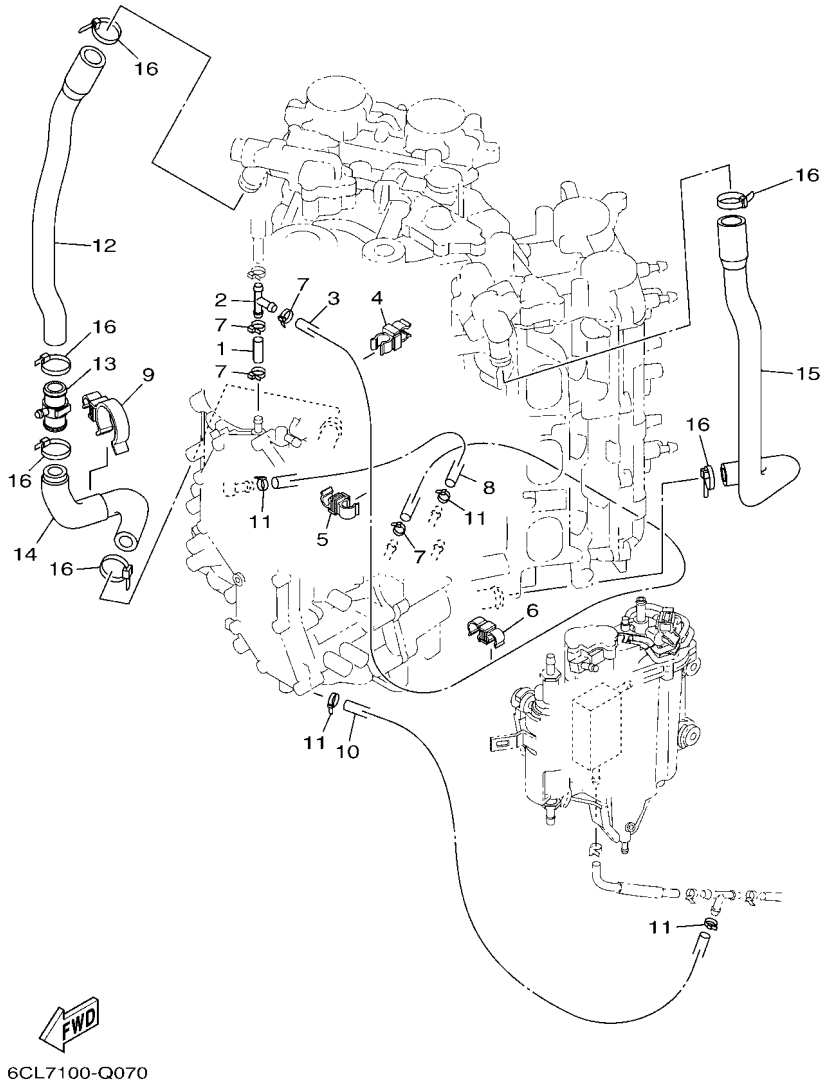

REF. NO.	PART NO. N° PIECES	DESCRIPTION DESCRIPTION	6CL7	6CM7				REMARKS REMARQUES
1	90445–09220	HOSE (L30) DURITE (L30)	1	1				
2	688–24378–00	PIPE, JOINT 3 DURITE RACCORDEMENT 3	1	1				
3	6CB–12576–10	HOSE 1 TUYAU 1	1	1				
4	90464–10M59	CLAMP BRIDE	1	1				
5	90464–09013	CLAMP BRIDE	1	1				
6	90464–12010	CLAMP BRIDE	1	1				
7	90465–11M10	CLAMP BRIDE	4	4				
8	6CB–12577–00	HOSE 2 TUYAU 2	1	1				
9	90464–26002	CLAMP BRIDE	1	1				
10	90445–096H2	HOSE (L280) DURITE (L280)	1	1				
11	90465–11M10	CLAMP BRIDE	4	4				
12	6CE–1244G–00	HOSE, 4 DURITE 4	1	1				
13	6CE–24378–00	PIPE, JOINT 3 DURITE RACCORDEMENT 3	1	1				
14	6CE–1244H–00	HOSE 5 DURITE 5	1	1				
15	6CB–1243E–00	HOSE 2 DURITE 2	1	1				
16	90465–11M59	CLAMP BRIDE	6	6				

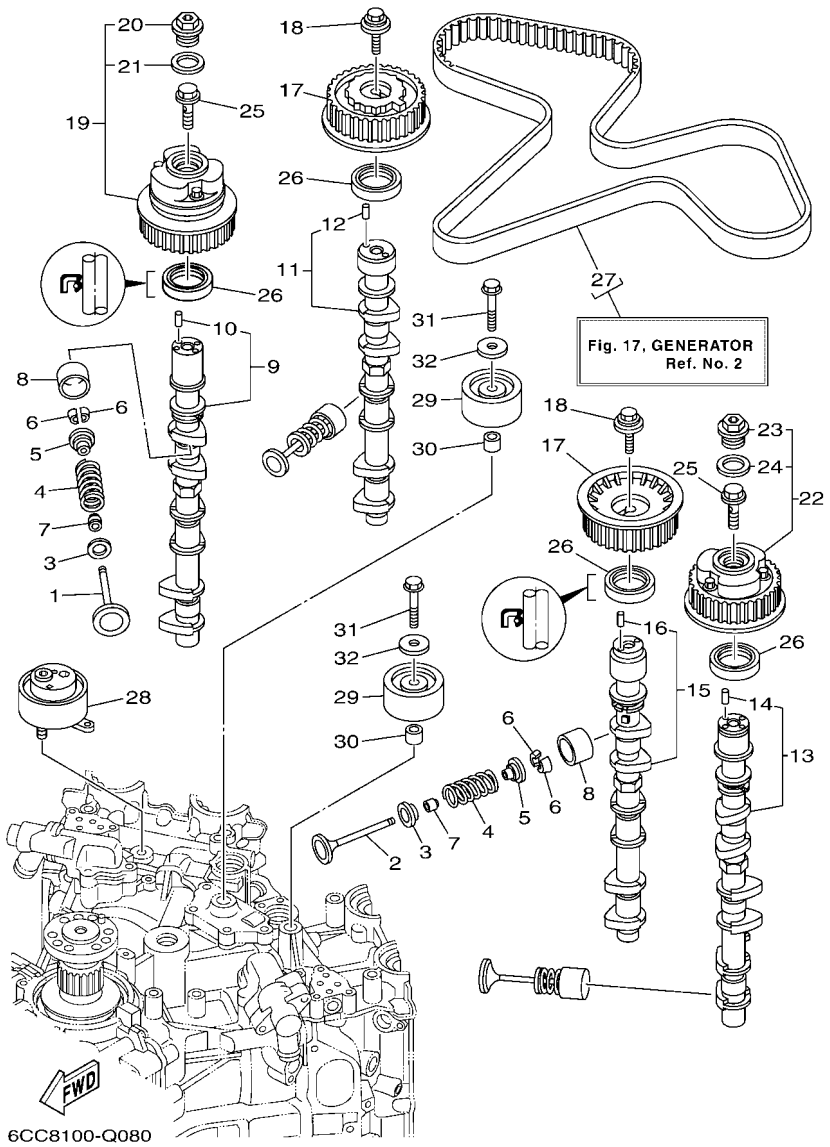

FIG. 8 VALVE — SOUPAPE

REF. NO.	PART NO. N° PIECES	DESCRIPTION DESCRIPTION	6CL7	6CM7				REMARKS REMARQUES
1	6CB–12111–00	VALVE, INTAKE SOUPAPE, ADMISSION	12	12				
2	6DA–12121–00	VALVE, EXHAUST SOUPAPE, ECHAPPEMENT	12	12				
3	K0F–A3743–00	SEAT, VALVE SPRING SIEGE, RESSORT DE SOUPAPE	24	24				
4	6CB–12113–00	SPRING, VALVE INNER RESSORT DE SOUPAPE, INTERNE	24	24				
5	K0F–A3741–00	RETAINER, VALVE SPRING BUTEE DE RESSORT DE SOUPAPA	24	24				
6	K0F–A3742–00	LOCK, VALVE SPRING RETAINER FRAISE, SOUPAPE	48	48				
7	51Y–12119–00	SEAL, VALVE STEM JOINT, QUEUE DE SOUPAPE	24	24				
8	K0F–A3751–00	LIFTER, VALVE (3.000) LEVE-SOUPAPE (3.000)	24	24				UR UR
	K0F–A3751–10	LIFTER, VALVE (3.025) LEVE-SOUPAPE (3.025)	24	24				UR UR
	K0F–A3751–20	LIFTER, VALVE (3.050) LEVE-SOUPAPE (3.050)	24	24				UR UR
	K0F–A3751–30	LIFTER, VALVE (3.075) LEVE-SOUPAPE (3.075)	24	24				UR UR
	K0F–A3751–40	LIFTER, VALVE (3.100) LEVE-SOUPAPE (3.100)	24	24				UR UR
	K0F–A3751–50	LIFTER, VALVE (3.122) LEVE-SOUPAPE (3.122)	24	24				UR UR
	K0F–A3751–60	LIFTER, VALVE (3.142) LEVE-SOUPAPE (3.142)	24	24				UR UR
	K0F–A3751–70	LIFTER, VALVE (3.162) LEVE-SOUPAPE (3.162)	24	24				UR UR
	K0F–A3751–80	LIFTER, VALVE (3.182) LEVE-SOUPAPE (3.182)	24	24				UR UR
	K0F–A3751–90	LIFTER, VALVE (3.202) LEVE-SOUPAPE (3.202)	24	24				UR UR
	K0F–A3751–A0	LIFTER, VALVE (3.222) LEVE-SOUPAPE (3.222)	24	24				UR UR
	K0F–A3751–B0	LIFTER, VALVE (3.242) LEVE-SOUPAPE (3.242)	24	24				UR UR
	K0F–A3751–C0	LIFTER, VALVE (3.262) LEVE-SOUPAPE (3.262)	24	24				UR UR
	K0F–A3751–D0	LIFTER, VALVE (3.282) LEVE-SOUPAPE (3.282)	24	24				UR UR
	K0F–A3751–E0	LIFTER, VALVE (3.302) LEVE-SOUPAPE (3.302)	24	24				UR UR
	K0F–A3751–F0	LIFTER, VALVE (3.322) LEVE-SOUPAPE (3.322)	24	24				UR UR
	K0F–A3751–G0	LIFTER, VALVE (3.342) LEVE-SOUPAPE (3.342)	24	24				UR UR
	K0F–A3751–H0	LIFTER, VALVE (3.362) LEVE-SOUPAPE (3.362)	24	24				UR UR
	K0F–A3751–J0	LIFTER, VALVE (3.382) LEVE-SOUPAPE (3.382)	24	24				UR UR
	K0F–A3751–K0	LIFTER, VALVE (3.402) LEVE-SOUPAPE (3.402)	24	24				UR UR

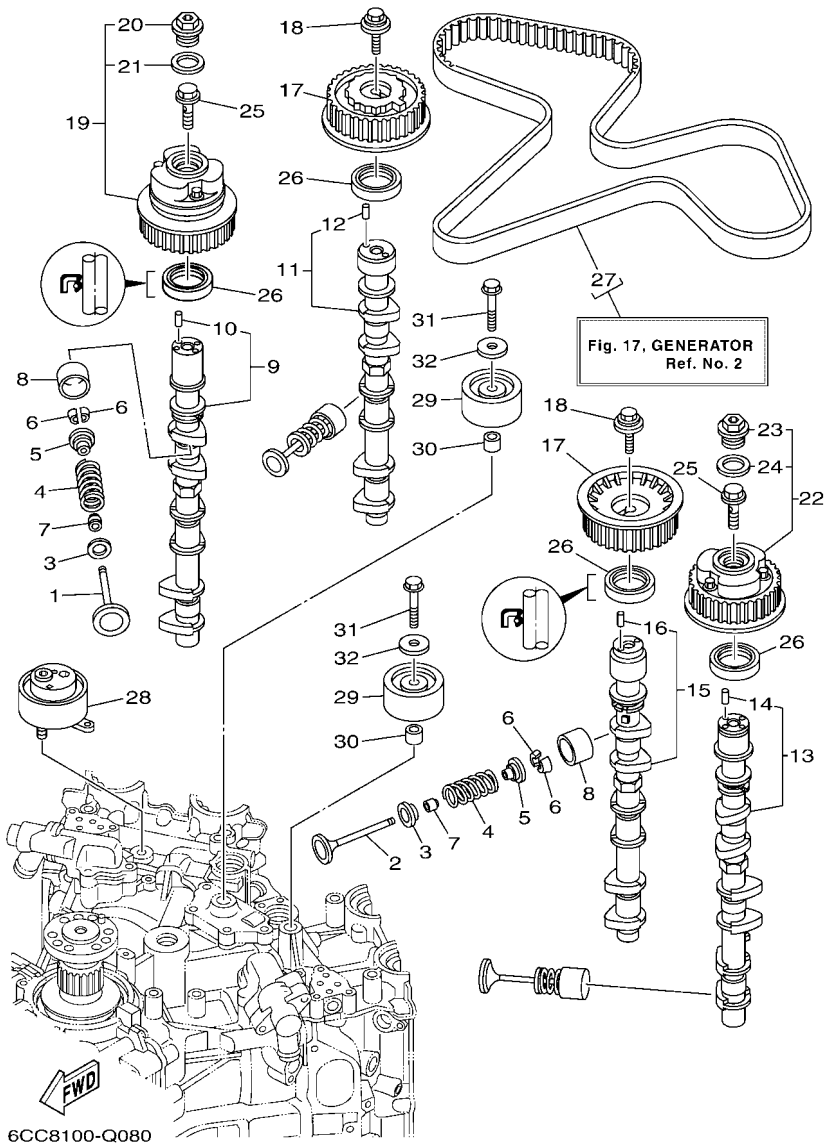

FIG. 8 VALVE SOUPAPE

REF. NO.	PART NO. N° PIECES	DESCRIPTION DESCRIPTION	6CL7	6CM7				REMARKS REMARQUES
8	K0F–A3751–L0	LIFTER, VALVE (3.422) LEVE-SOUPAPE (3.422)	24	24				UR UR
	K0F–A3751–M0	LIFTER, VALVE (3.442) LEVE-SOUPAPE (3.442)	24	24				UR UR
	K0F–A3751–N0	LIFTER, VALVE (3.462) LEVE-SOUPAPE (3.462)	24	24				UR UR
	K0F–A3751–P0	LIFTER, VALVE (3.482) LEVE-SOUPAPE (3.482)	24	24				UR UR
	K0F–A3751–R0	LIFTER, VALVE (3.502) LEVE-SOUPAPE (3.502)	24	24				UR UR
	K0F–A3751–S0	LIFTER, VALVE (3.522) LEVE-SOUPAPE (3.522)	24	24				UR UR
	K0F–A3751–T0	LIFTER, VALVE (3.542) LEVE-SOUPAPE (3.542)	24	24				UR UR
	K0F–A3753–00	LIFTER, VALVE (3.562) LEVE-SOUPAPE (3.562)	24	24				UR UR
	K0F–A3753–10	LIFTER, VALVE (3.582) LEVE-SOUPAPE (3.582)	24	24				UR UR
	K0F–A3753–20	LIFTER, VALVE (3.602) LEVE-SOUPAPE (3.602)	24	24				UR UR
	K0F–A3753–30	LIFTER, VALVE (3.625) LEVE-SOUPAPE (3.625)	24	24				UR UR
	K0F–A3753–40	LIFTER, VALVE (3.650) LEVE-SOUPAPE (3.650)	24	24				UR UR
	K0F–A3753–50	LIFTER, VALVE (3.675) LEVE-SOUPAPE (3.675)	24	24				UR UR
	K0F–A3753–60	LIFTER, VALVE (3.700) LEVE-SOUPAPE (3.700)	24	24				UR UR
	K0F–A3753–70	LIFTER, VALVE (3.725) LEVE-SOUPAPE (3.725)	24	24				UR UR
9	6CB–12171–00	CAMSHAFT 1 ARBRE A CAMES 1	1	1				
10	93605–10108	.PIN, DOWEL .AXE	1	1				
11	6CB–12181–00	CAMSHAFT 2 ARBRE A CAMES 2	1	1				
12	93605–10108	.PIN, DOWEL .AXE	1	1				
13	6CB–12172–00	CAMSHAFT 3 ARBRE A CAMES 3	1	1				
14	93605–10108	.PIN, DOWEL .AXE	1	1				
15	6CB–12182–00	CAMSHAFT 4 ARBRE A CAMES 4	1	1				
16	93605–10108	.PIN, DOWEL .AXE	1	1				
17	6CB–11567–00	GEAR, DRIVEN 2 PIGNON SECONDAIRE 2	2	2				
18	90119–10050	BOLT, WITH WASHER BOULON, AVEC RONDELLE	2	2				
19	6CB–12645–01	PULLEY ASSY 1 POULIE COMPLET 1	1	1				
20	6P2–12623–00	.BOLT .BOULON	1	1				

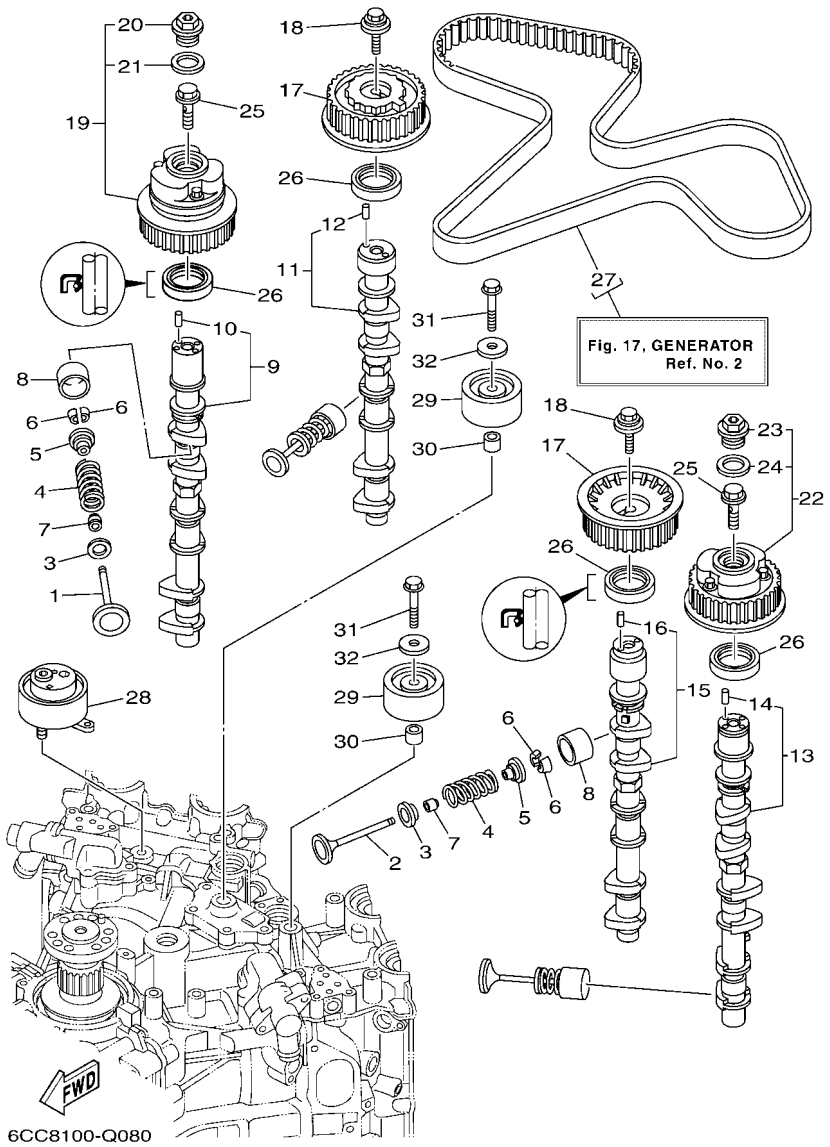

FIG. 8 VALVE SOUPAPE

REF. NO.	PART NO. N° PIECES	DESCRIPTION DESCRIPTION	6CL7	6CM7				REMARKS REMARQUES
21	6P2–12663–00	.GASKET .JOINT	1	1				
22	6CB–1264A–01	PULLEY ASSY 2 POULIE COMPLET 2	1	1				
23	6P2–12623–00	.BOLT .BOULON	1	1				
24	6P2–12663–00	.GASKET .JOINT	1	1				
25	6P2–12615–00	BOLT BOULON	2	2				
26	93102–38008	OIL SEAL JOINT SPY	4	4				
27	6CB–W4624–00	BELT (WITH ROTOR BOLTS) COURROIE (AVEC BOULON)	1	1				
28	6CB–11590–02	TENSIONER ASSY TENDEUR (ENS.)	1	1				
29	6CB–15512–00	GEAR, IDLER 1 PIGNON, INTERMEDIAIRE 1	2	2				
30	99530–14016	PIN, DOWEL GOUJON, D'ASSEMBLAGE	2	2				
31	90119–10M07	BOLT, WITH WASHER BOULON, AVEC RONDELLE	2	2				
32	90201–10M01	WASHER, PLATE RONDELLE, PLATE	2	2				

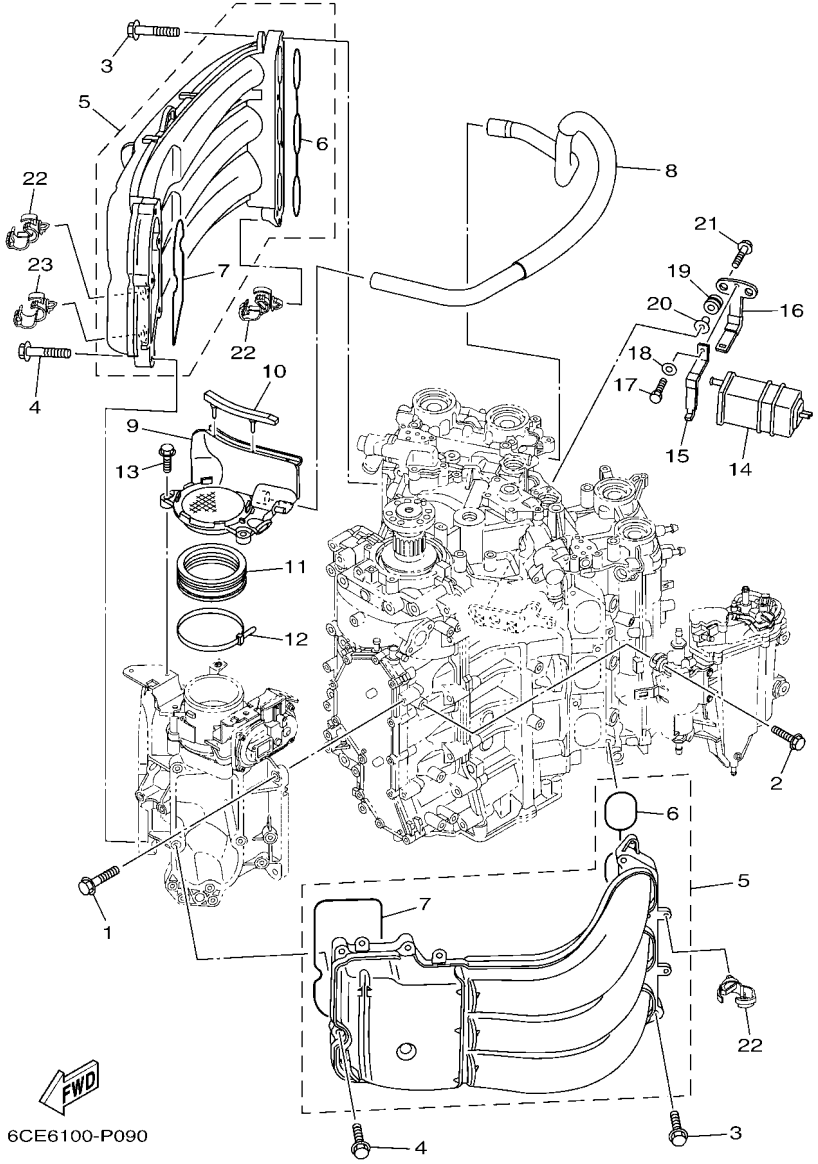

FIG. 9 INTAKE 1 — ADMISSION 1

REF. NO.	PART NO. N° PIECES	DESCRIPTION DESCRIPTION	6CL7	6CM7				REMARKS REMARQUES
1	95875–08030	BOLT, FLANGE BOULON, A COLLERETTE	4	4				
2	90119–06M24	BOLT, WITH WASHER BOULON, AVEC RONDELLE	4	4				
3	90119–08020	BOLT, WITH WASHER BOULON, AVEC RONDELLE	8	8				
4	90105–06035	BOLT, FLANGE BOULON	10	10				
5	6CE–13641–00	MANIFOLD, INTAKE 1 TUBULURE, ADMISSION 1	2	2				
6	6CB–13645–00	.GASKET, MANIFOLD 1 .JOINT, TUBULURE 1	1	1				
7	6CB–13646–00	.GASKET, MANIFOLD 2 .JOINT, TUBULURE 2	1	1				
8	6CB–15373–00	PIPE, BREATHER DURITE DE RENIFLARD	1	1				
9	6CB–14440–01	SILENCER ASSY, INTAKE SIENCIEUX D'ADMISSION	1	1				
10	6CB–85547–00	DAMPER AMORTISSEUR	1	1				
11	6AW–1441J–00	PIPE, SILENCER DURITE, DE SILENCIEUX	1	1				
12	90464–99004	CLAMP BRIDE	1	1				
13	95895–06020	BOLT, FLANGE BOULON	2	2				
14	69J–24170–00	CANISTER ASSY BANDE, RASERVOIR A ESSENCE	1	1				
15	69J–2419A–01	HOLDER SUPPORT	1	1				
16	69J–2134X–00	BRACKET, CANISTER SUPPORT	1	1				
17	97095–06016	BOLT BOULON	1	1				
18	92995–06600	WASHER RONDELLE	1	1				
19	90480–10M23	GROMMET PASSE-FIL	2	2				
20	90387–06289	COLLAR COLLERETTE	2	2				
21	90119–06M17	BOLT, WITH WASHER BOULON, AVEC RONDELLE	2	2				
22	90464–13249	CLAMP BRIDE	8	8				
23	90464–20181	CLAMP BRIDE	1	1				

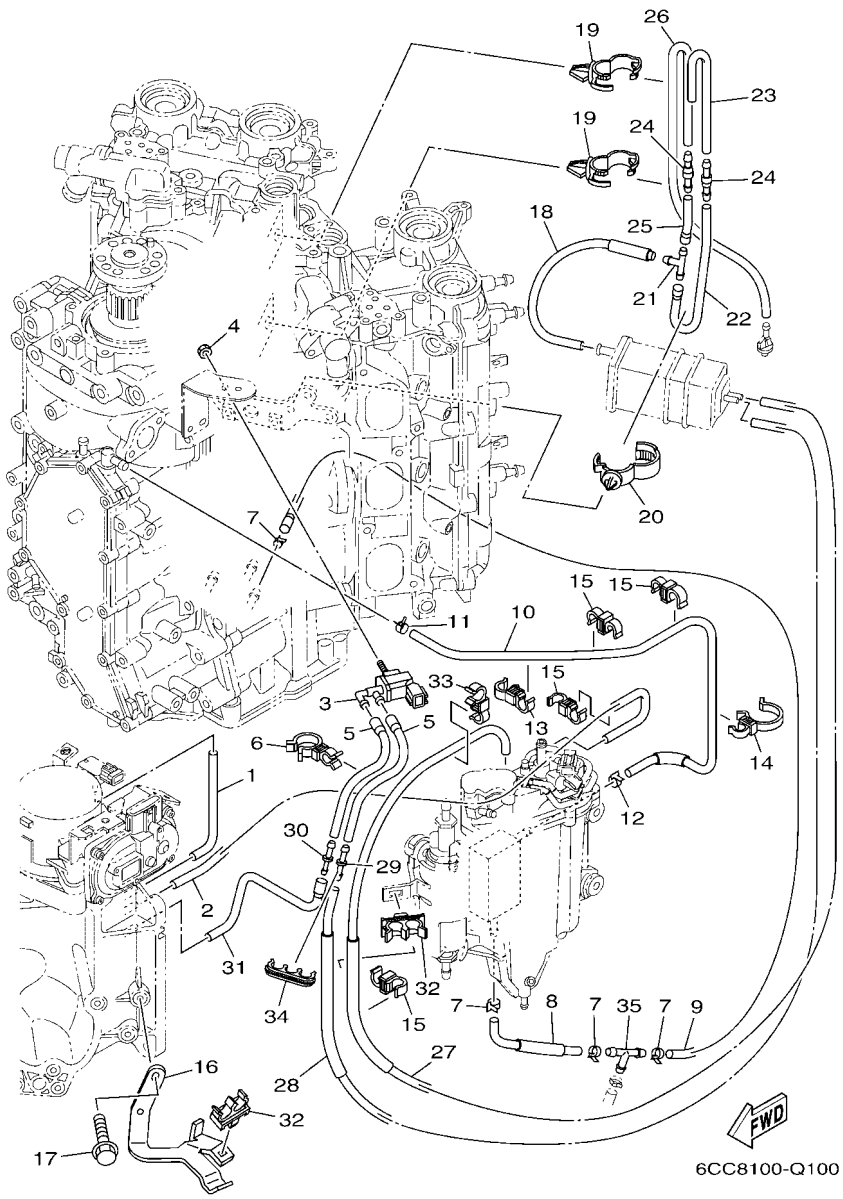

FIG. 10 INTAKE 2 — ADMISSION 2

REF. NO.	PART NO. N° PIECES	DESCRIPTION DESCRIPTION	6CL7	6CM7				REMARKS REMARQUES
1	6CB–13533–00	HOSE, VACUUM SENSING 4 DURITE 4	1	1				
2	6CB–13532–10	HOSE, VACUUM SENSING 3 DURITE 3	1	1				
3	6C5–86120–00	SOLENOID VALVE ASSY SOLENOIDE	1	1				
4	95380–06600	NUT, HEXAGON ECROU	1	1				
5	6CB–2416A–00	HOSE DURITE	2	2				
6	90464–23001	CLAMP BRIDE	2	2				
7	90465–11M10	CLAMP BRIDE	4	4				
8	6CE–12482–10	PIPE 2 DURITE 2	1	1				
9	90445–097F7	HOSE (L780) DURITE (L780)	1	1				
10	6CB–12484–00	PIPE 4 DURITE 4	1	1				
11	90467–090A0	CLIP JONC	1	1				
12	90465–11M10	CLAMP BRIDE	1	1				
13	90464–12010	CLAMP BRIDE	1	1				
14	90464–26002	CLAMP BRIDE	1	1				
15	90464–09013	CLAMP BRIDE	4	4				
16	6CB–13782–00	STAY SUPPORT	1	1				
17	95895–06016	BOLT, FLANGE BOULON	2	2				
18	6CB–13545–00	HOSE 1 DURITE 1	1	1				
19	90464–20181	CLAMP BRIDE	2	2				
20	90464–07209	CLAMP BRIDE	1	1				
21	688–24378–00	PIPE, JOINT 3 DURITE RACCORDEMENT 3	1	1				
22	6CB–13546–00	HOSE 2 DURITE 2	1	1				
23	6CB–13547–00	HOSE 3 DURITE 3	1	1				
24	6E5–21744–00	BREATHER RENIFLARD	2	2				
25	6CB–13548–00	HOSE, AIR 4 DURITE, A AIR 4	1	1				
26	6CB–12483–00	PIPE 3 DURITE 3	1	1				
27	6CB–1475A–00	PIPE 1 DURITE 1	1	1				

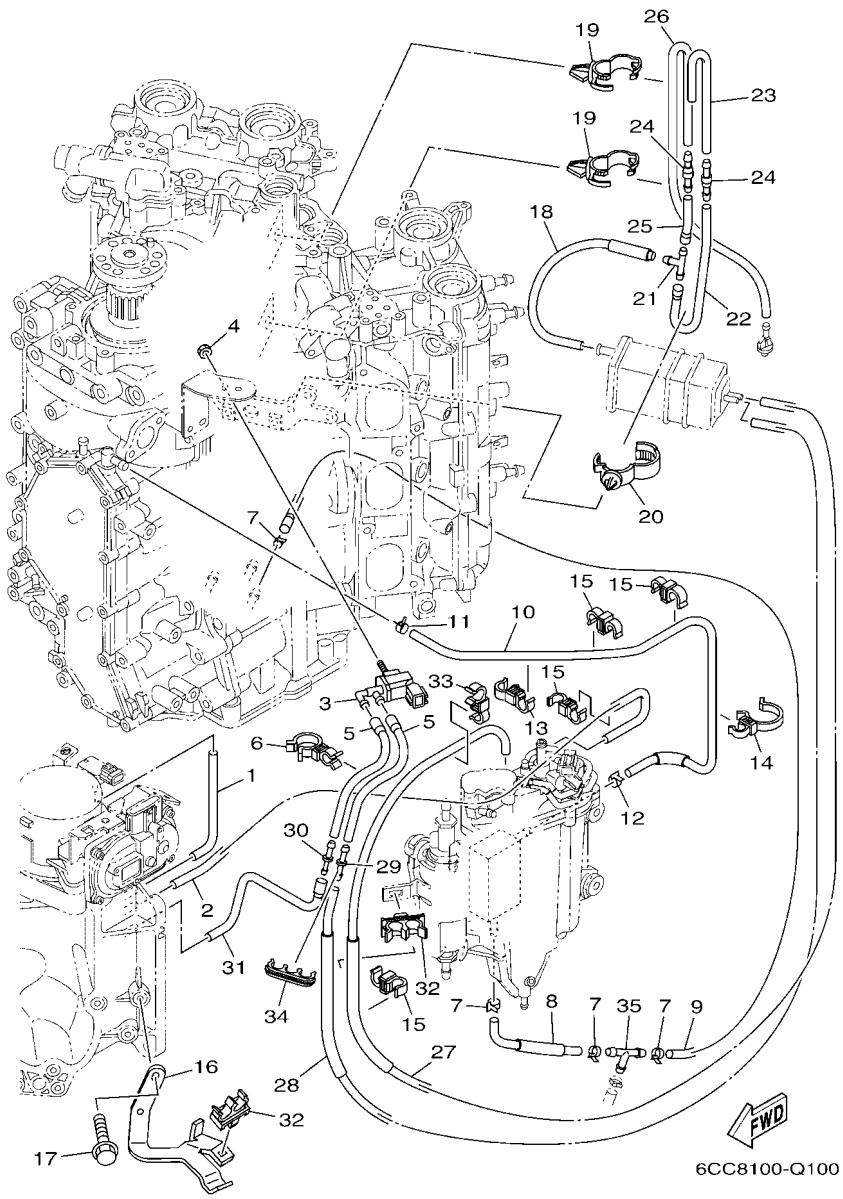

FIG. 10 INTAKE 2 — ADMISSION 2

REF. NO.	PART NO. N° PIECES	DESCRIPTION DESCRIPTION	6CL7	6CM7				REMARKS REMARQUES
28	6CB–1475F–00	PIPE 3 DURITE 3	1	1				
29	6G8–24376–00	PIPE, JOINT 1 DURITE 1, RACCORDEMENT	1	1				
30	6EK–14989–00	ORIFICE, AIR VENT OR1F1CE	1	1				
31	6CB–1475G–10	PIPE 4 DURITE 4	1	1				
32	90464–11012	CLAMP BRIDE	2	2				
33	90464–12010	CLAMP BRIDE	1	1				
34	90464–10011	CLAMP BRIDE	1	1				
35	688–24378–00	PIPE, JOINT 3 DURITE RACCORDEMENT 3	1	1				

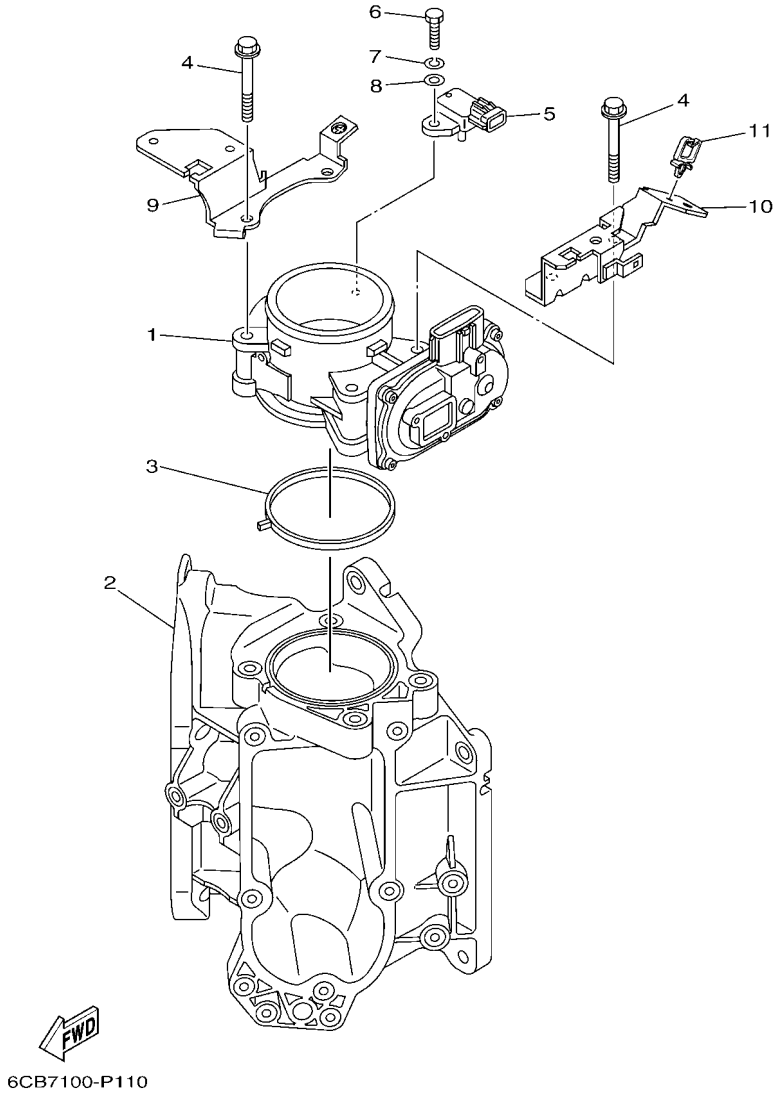

FIG. 11 THROTTLE BODY ASSY 1 — CARTER D'ACCELERATEUR 1

REF. NO.	PART NO. N° PIECES	DESCRIPTION DESCRIPTION	6CL7	6CM7				REMARKS REMARQUES
1	6CB–13751–10	BODY, THROTTLE 1 CARTER 1	1	1				
2	6CB–13711–00	MIXING BODY CHAMBRE DE MELANGE	1	1				
3	6CB–13556–00	GASKET, MANIFOLD JOINT, TUBULURE	1	1				
4	95875–08060	BOLT, FLANGE BOULON, A COLLERETTE	4	4				
5	6P2–82380–00	SENSOR, PRESSURE SONDE DE PRESSION	1	1				
6	97075–06020	BOLT BOULON	1	1				
7	92995–06100	WASHER, SPRING RONDELLE, GROWER	1	1				
8	92995–06600	WASHER RONDELLE	1	1				
9	6CB–13898–20	HOLDER SUPPORT	1	1				
10	6CB–13898–11	HOLDER SUPPORT	1	1				
11	90464–08004	CLAMP BRIDE	1	1				

FIG. 12 THROTTLE BODY ASSY 2 — CARTER D'ACCELERATEUR 2

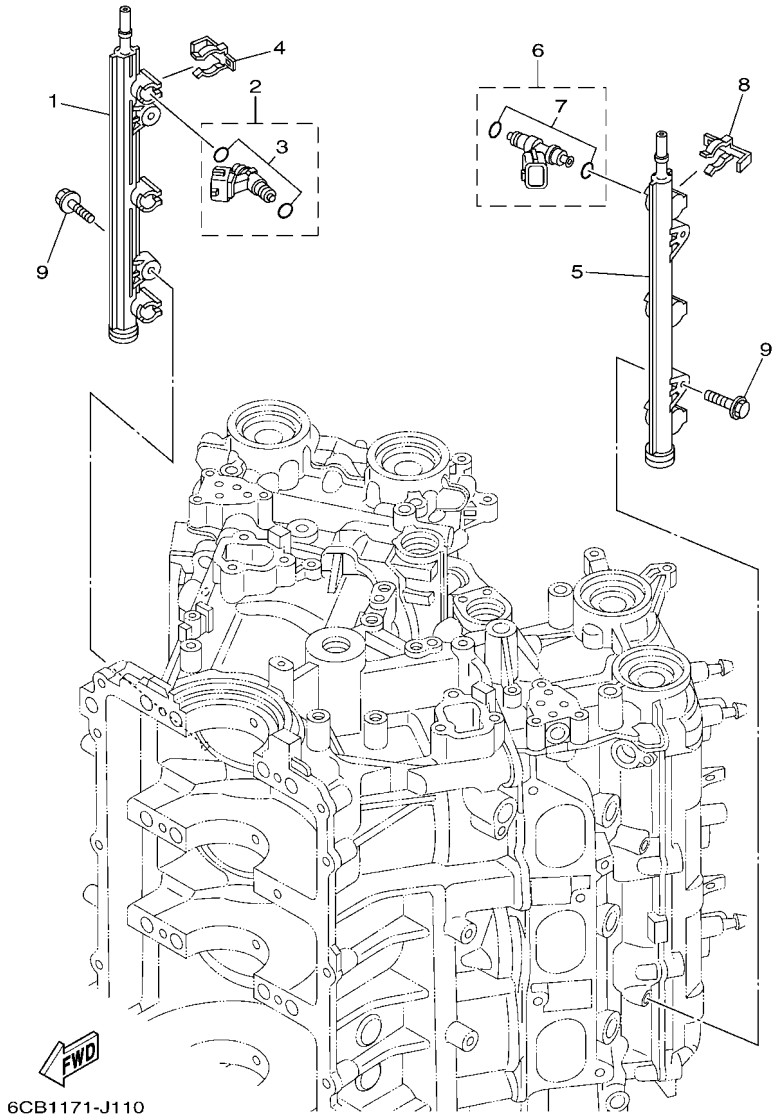

REF. NO.	PART NO. N° PIECES	DESCRIPTION DESCRIPTION	6CL7	6CM7				REMARKS REMARQUES
1	6CB–13161–10	PIPE, DELIVERY 1 DURITE REFOULEMENT 1	1	1				
2	6AW–13761–00	INJECTOR INJECTEUR	3	3				
3	6AW–1410B–00	.PACKING KIT .POCHETTE DE JOINTS	1	1				
4	6CB–13577–00	CLIP AGRAFE	3	3				
5	6CB–13171–10	PIPE, DELIVERY 2 DURITE REFOULEMENT	1	1				
6	6AW–13761–00	INJECTOR INJECTEUR	3	3				
7	6AW–1410B–00	.PACKING KIT .POCHETTE DE JOINTS	1	1				
8	6CB–13577–00	CLIP AGRAFE	3	3				
9	90105–06M08	BOLT, FLANGE BOULON	4	4				

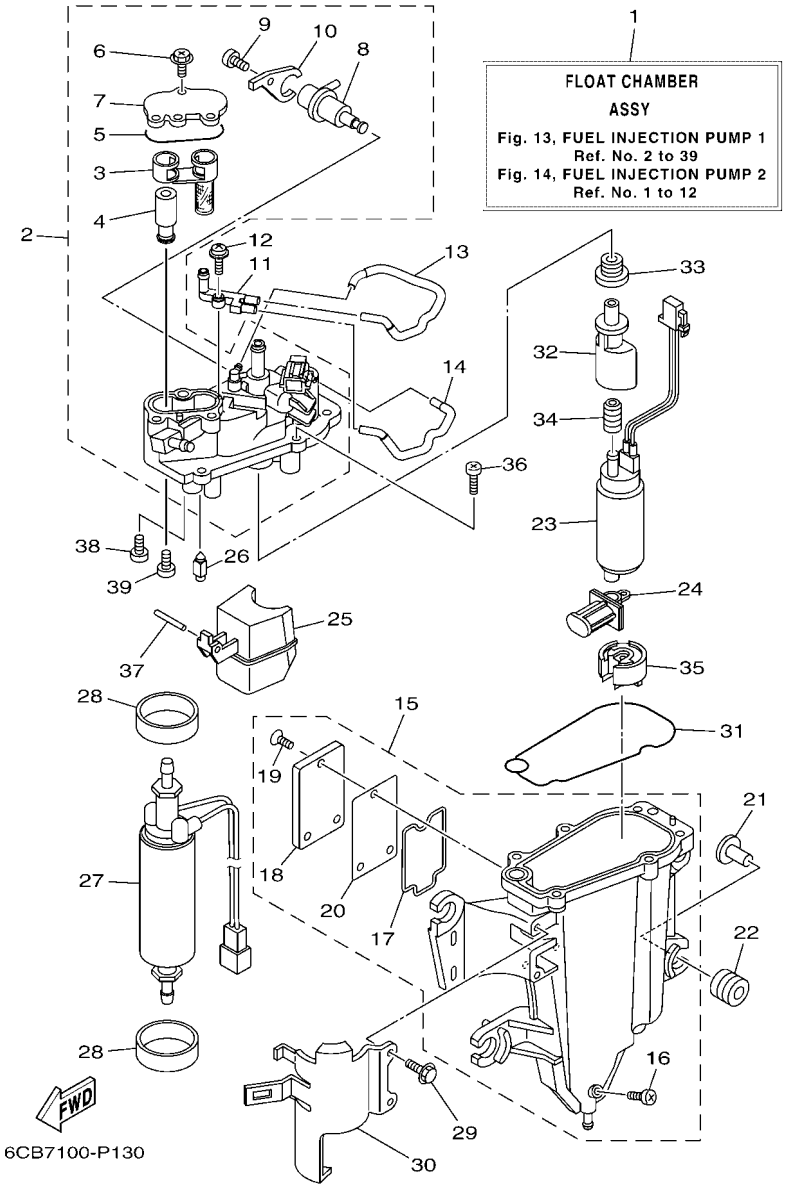

FIG. 13 FUEL INJECTION PUMP 1 POMPE A INJECTEUR 1

REF. NO.	PART NO. N° PIECES	DESCRIPTION DESCRIPTION	6CL7	6CM7				REMARKS REMARQUES
1	6CB–14180–10	FLOAT CHAMBER ASSY CUVE DE FLOTTEUR	1	1				
2	6CB–14182–02	COVER, FLOAT CHAMBER COUVERCLE, CUVE DE FLOTTEUR	1	1				
3	6CB–24501–01	.FILTER, FUEL .FILTRE	1	1				
4	6CB–24460–00	.RELIEF VALVE ASSY .SOUPAPE DE SECURITE COMPLET	1	1				
5	6CB–13016–00	.O-RING .JOINT TORIQUE	1	1				
6	6CB–14216–00	.SCREW .VIS	3	3				
7	6CB–24217–00	.COVER .COUVERCLE	1	1				
8	6CB–13906–01	.REGULATOR, PRESSURE .REGULATEUR DE PRESSION	1	1				
9	6CB–14564–00	.SCREW .VIS	1	1				
10	6CB–14146–00	.PLATE .PLAQUE	1	1				
11	68V–24379–10	PIPE, JOINT 4 DURITE RACCORDEMENT 4	1	1				
12	68V–14216–00	SCREW VIS	1	1				
13	6CB–1475H–00	PIPE 5 DURITE 5	1	1				
14	6CB–1475J–00	PIPE 6 DURITE 6	1	1				
15	6CB–14181–01	BODY, FLOAT CHAMBER 1 CORPS, CUVE DE FLOTTEUR 1	1	1				
16	6P2–14191–00	.PLUG, DRAIN .PLOT, VIDANGE	1	1				
17	6CB–14239–00	.SEAL .JOINT	1	1				
18	6CB–24452–10	.COVER .COUVERCLE	1	1				
19	6CB–14429–01	.SCREW .VIS	3	3				
20	6CB–24482–00	.GASKET 1 .JOINT 1	1	1				
21	63P–13716–00	COLLAR COLLERETTE	4	4				
22	6CB–13593–00	DAMPER AMORTISSEUR	4	4				
23	6CB–13907–10	FUEL PUMP COMP. POMPE A CARBURANT COMP.	1	1				
24	63P–13915–00	FILTER FILTRE	1	1				
25	6CB–14985–00	FLOAT FLOTTEUR	1	1				
26	6CB–14546–00	VALVE, NEEDLE POINTEAU	1	1				
27	6CB–24410–00	FUEL PUMP ASSY POMPE A ESSENCE	1	1				

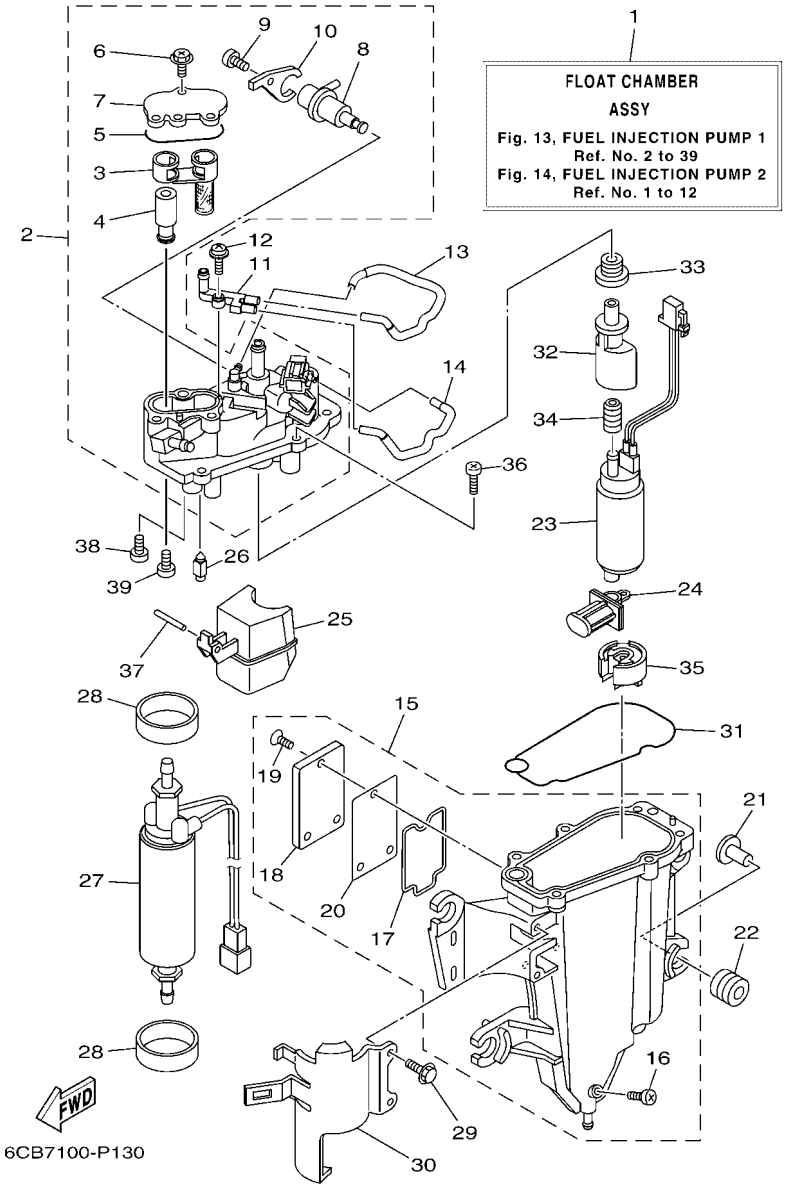

FIG. 13 FUEL INJECTION PUMP 1 — POMPE A INJECTEUR 1

REF. NO.	PART NO. N° PIECES	DESCRIPTION DESCRIPTION	6CL7	6CM7				REMARKS REMARQUES
28	6CB–24492–00	BUSH, FUEL PUMP BAGUE	2	2				
29	6CB–24592–00	BOLT BOLTE	2	2				
30	6CB–24491–00	BRACKET, FUEL PUMP SUPPORT, POMPE A ESSENCE	1	1				
31	6CB–14984–00	GASKET, FLOAT CHAMBER JOINT, CUVE DE FLOTTEUR	1	1				
32	6AW–13132–00	JOINT RACCORD	1	1				
33	6CB–1447B–00	BUSH 1 DOUILLE 1	1	1				
34	6AW–13781–00	DAMPER, PUMP AMORTISSEUR, POMPE	1	1				
35	6AW–13784–00	COVER, PUMP COUVERCLE, POMPE	1	1				
36	63P–14567–00	SCREW VIS	6	6				
37	6P2–14386–00	PIN, FLOAT AXE, FLOTTEUR	1	1				
38	4SV–24453–00	SCREW VIS	1	1				
39	98507–04008	SCREW, PAN HEAD VIS, TETE TRONCONIQUE	1	1				

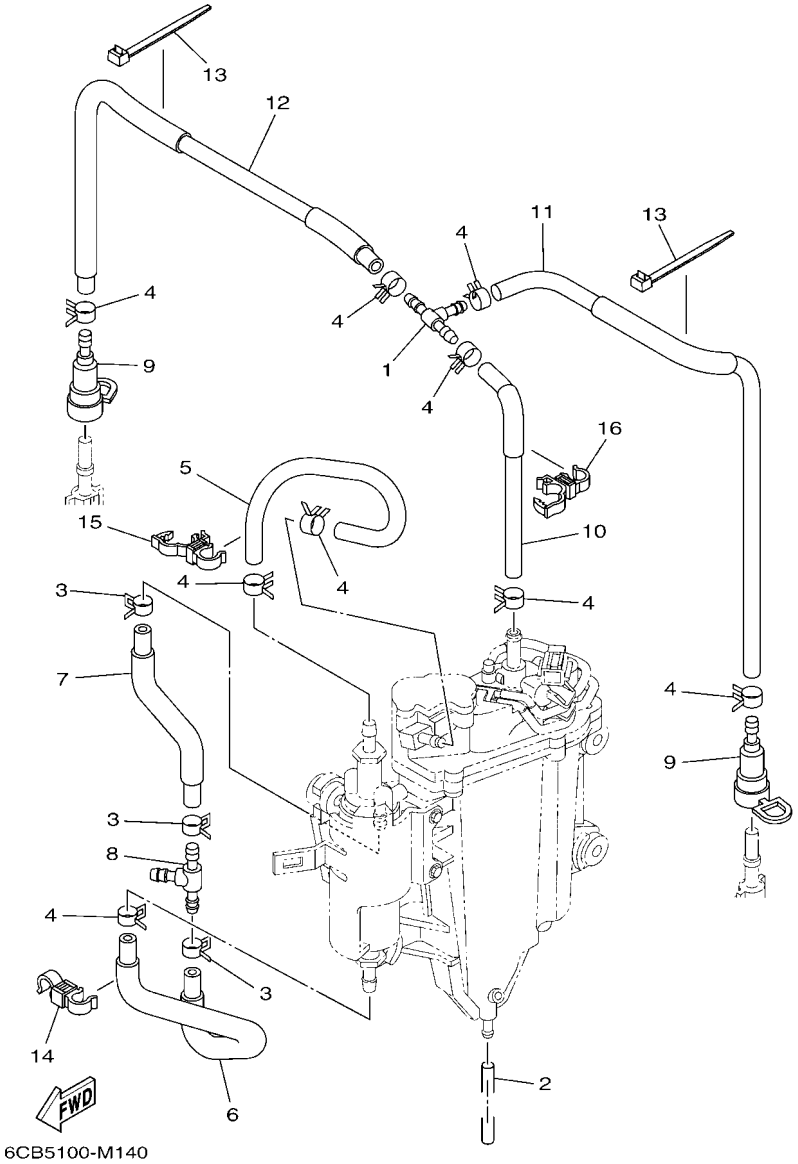

FIG. 14 FUEL INJECTION PUMP 2 — POMPE A INJECTEUR 2

REF. NO.	PART NO. N° PIECES	DESCRIPTION DESCRIPTION	6CL7	6CM7				REMARKS REMARQUES
1	6CB–24461–00	PIPE, JOINT DURITE, RACCORDEMENT	1	1				
2	6P2–14149–00	PIPE DURITE	1	1				
3	69J–14137–00	CLIP JONC	3	3				
4	68V–13577–00	CLIP AGRAFE	9	9				
5	6CB–24324–00	PIPE 13 DURITE 13	1	1				
6	6CB–24317–00	PIPE 7 DURITE 7	1	1				
7	6CB–24323–00	PIPE 12 DURITE 12	1	1				
8	6E5–24378–00	PIPE, JOINT 3 DURITE, RACCORDEMENT 3	1	1				
9	60E–24300–01	FUEL PIPE JOINT DURITE RACCORDEMT. A ESSENCE	2	2				
10	6CB–13971–01	PIPE, FUEL 1 TUBE 1, CARBURANT	1	1				
11	6CB–13974–01	PIPE, FUEL 4 TUBE 4, CARBURANT	1	1				
12	6CB–13972–00	PIPE, FUEL 2 TUBE 2, CARBURANT	1	1				
13	90465–14M66	CLAMP BRIDE	2	2				
14	90464–12009	CLAMP BRIDE	1	1				
15	90464–12012	CLAMP BRIDE	1	1				
16	90464–12012	CLAMP BRIDE	1	1				

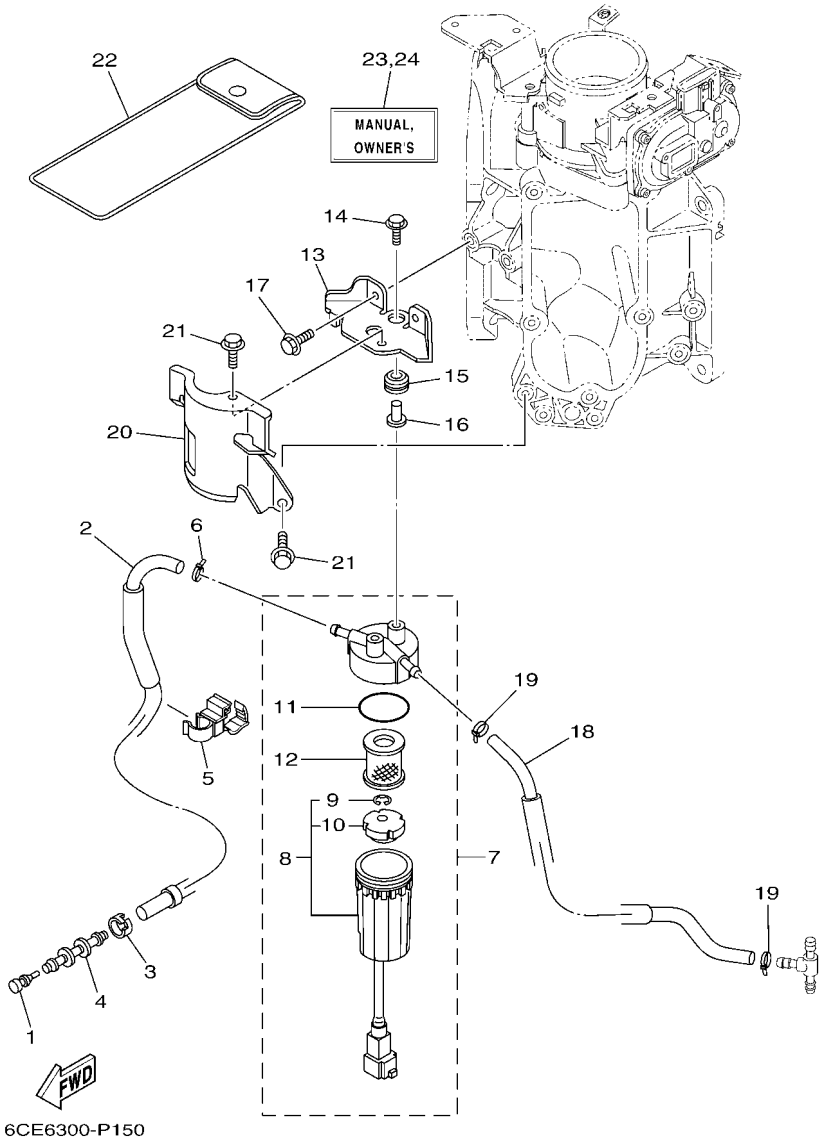

FIG. 15 FUEL 1 — CARBURANT 1

REF. NO.	PART NO. N° PIECES	DESCRIPTION DESCRIPTION	6CL7	6CM7				REMARKS REMARQUES
1	689–85547–00	DAMPER AMORTISSEUR	1	1				
2	6CB–24314–11	PIPE 4 DURITE 4	1	1				
3	6E5–24351–51	BAND 1 COLLIER 1	1	1				
4	6AW–24377–01	PIPE, JOINT 2 DURITE RACCORDEMENT 2	1	1				
5	90464–12012	CLAMP BRIDE	1	1				
6	90465–11M10	CLAMP BRIDE	1	1				
7	6P3–24560–22	FILTER ASSY ENS FILTRE	1	1				
8	6P3–24562–21	.CUP, FILTER .CUVETTE, FILTRE	1	1				
9	6P3–24519–00	..CLIP ..JONC	1	1				
10	6P3–24469–00	..FLOAT, WATER LEVEL ..FLOTTEUR	1	1				
11	6P3–24564–00	.GASKET .JOINT	1	1				
12	6P3–24563–01	.ELEMENT, FILTER .ELEMENT, FILTRE	1	1				
13	6CB–24566–00	BRACKET, FILTER SUPPORT, FILTRE	1	1				
14	90119–06M17	BOLT, WITH WASHER BOULON, AVEC RONDELLE	2	2				
15	90480–10M23	GROMMET PASSE-FIL	2	2				
16	90387–06289	COLLAR COLLERETTE	2	2				
17	95895–06016	BOLT, FLANGE BOULON	2	2				
18	6CB–24313–10	PIPE 3 DURITE 3	1	1				
19	90465–11M10	CLAMP BRIDE	2	2				
20	6CB–24596–01	COVER COUVERCLE	1	1				
21	95895–06014	BOLT, FLANGE BOULON	2	2				
22	69J–28100–01	TOOL KIT TROUSSE A OUTILS	1	1				AP AP
23	6CE–28199–75–E0	MANUAL,OWNER'S MANUEL D'UTILISATION	1	1				UR (E) UR (E)
	6CE–28199–75–F0	MANUAL,OWNER'S MANUEL D'UTILISATION	1	1				UR (F) UR (F)
	6CE–28199–75–S0	MANUAL,OWNER'S MANUEL D'UTILISATION	1	1				UR (ES) UR (ES)
	6CE–28199–75–G0	MANUAL,OWNER'S MANUEL D'UTILISATION	1	1				UR (D) UR (D)
	6CE–28199–75–D0	MANUAL,OWNER'S MANUEL D'UTILISATION	1	1				UR (NL) UR (NL)

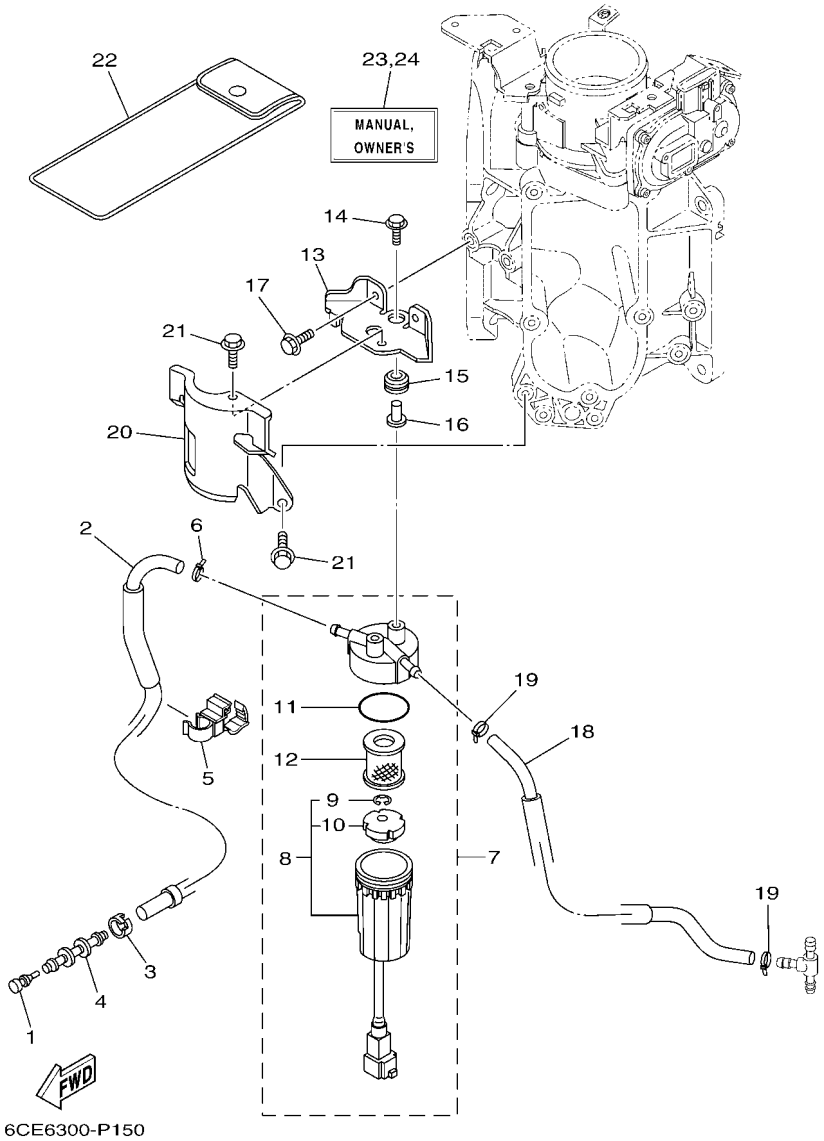

FIG. 15 FUEL 1 — CARBURANT 1

REF. NO.	PART NO. N° PIECES	DESCRIPTION DESCRIPTION	6CL7	6CM7				REMARKS REMARQUES
23	6CE–28199–75–H0	MANUAL,OWNER'S MANUEL D'UTILISATION	1	1				UR (I) UR (I)
24	6CE–28199–85–K0	MANUAL,OWNER'S MANUEL D'UTILISATION	1	1				UR (DK) UR (DK)
	6CE–28199–85–R0	MANUAL,OWNER'S MANUEL D'UTILISATION	1	1				UR (GR) UR (GR)
	6CE–28199–85–P0	MANUAL,OWNER'S MANUEL D'UTILISATION	1	1				UR (P) UR (P)
	6CE–28199–85–N0	MANUAL,OWNER'S MANUEL D'UTILISATION	1	1				UR (N) UR (N)
	6CE–28199–85–M0	MANUAL,OWNER'S MANUEL D'UTILISATION	1	1				UR (S) UR (S)
	6CE–28199–85–L0	MANUAL,OWNER'S MANUEL D'UTILISATION	1	1				UR (SF) UR (SF)

FIG. 16 FUEL 2 — CARBURANT 2

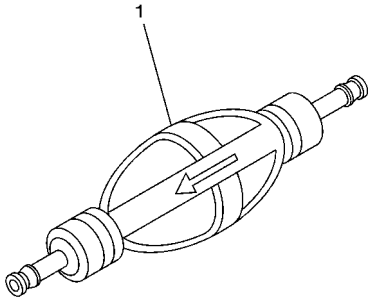

68V9110-J110

REF. NO.	PART NO. N° PIECES	DESCRIPTION DESCRIPTION	6CL7	6CM7				REMARKS REMARQUES
1	6AW–24360–01	PRIMER PUMP ASSY POMPE D'AMORCAGE	1	1				AP AP

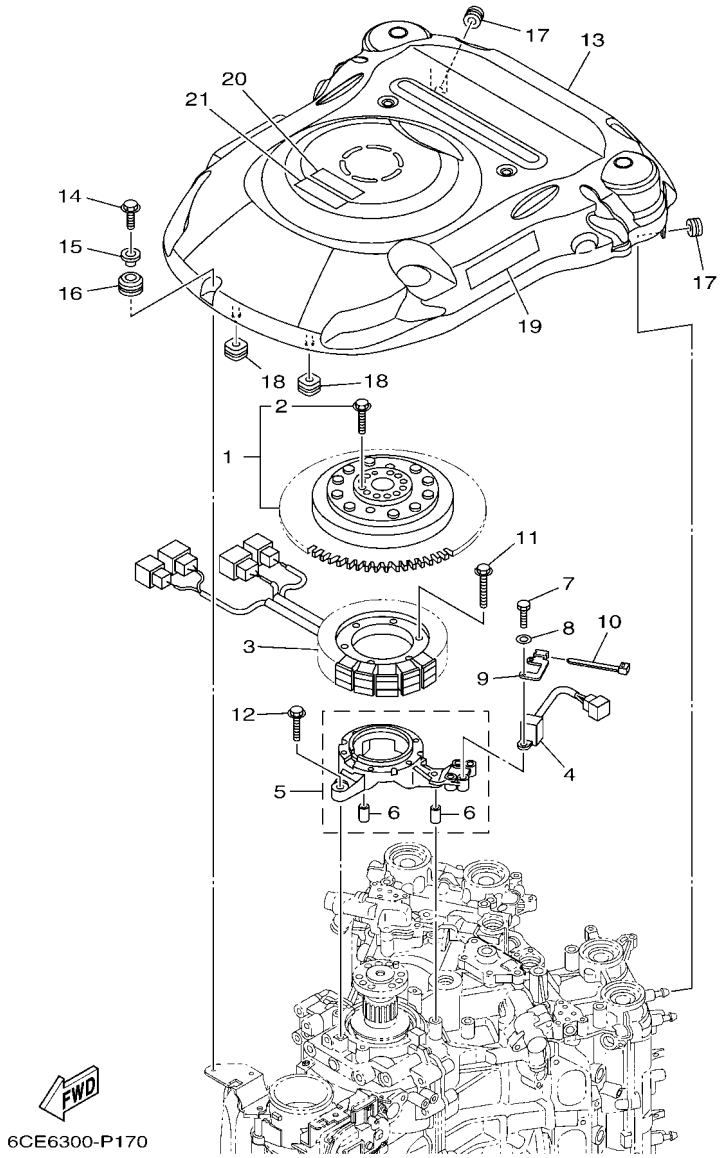

FIG. 17 GENERATOR — GENERATRICE

REF. NO.	PART NO. N° PIECES	DESCRIPTION DESCRIPTION	6CL7	6CM7				REMARKS REMARQUES
1	6CE–W8145–01	ROTOR ASSY WITH BOLTS ROTOR COMPLET AVEC BOULON	1	1				
2	6AW–W9011–00	.BOLT SET (FOR ROTOR ASSY) .BOULON ENS. (POUR ROTOR COMPL)	1	1				
3	6CE–81410–00	STATOR ASSY STATOR COMPLET	1	1				
4	6CB–85580–00	COIL, PULSER BOBINE, PULSEUR	1	1				
5	6CB–85561–00	BASE, MAGNETO BASE, MAGNETO	1	1				
6	99530–08012	.PIN, DOWEL .GOUJON, D'ASSEMBLAGE	2	2				
7	97095–05020	BOLT BOULON	2	2				
8	92995–05600	WASHER RONDELLE	2	2				
9	6CE–85592–00	STAY, PULSER SUPPORT, PULSATION BOBINE	1	1				
10	90465–11M10	CLAMP BRIDE	1	1				
11	95022–06035	BOLT, FLANGE BOULON, A COLLERETTE	6	6				
12	95895–06030	BOLT, FLANGE BOULON	4	4				
13	6CE–81337–01	COVER, FLYWHEEL COUVERCLE, VOLANT	1	1				
14	95895–06020	BOLT, FLANGE BOULON	1	1				
15	90387–06285	COLLAR COLLERETTE	1	1				
16	90480–15M31	GROMMET PASSE-FIL	1	1				
17	90480–12314	GROMMET PASSE-FIL	2	2				
18	6CB–85516–00	SPACER ENTRETOISE	2	2				
19	6CE–13437–60	MARK, CAUTION MAKER	1	1				
20	6EE–81994–40	LABEL, SAFETY ETIQUETTE, SECURITE	1	1				
21	6EE–81994–50	LABEL, SAFETY ETIQUETTE, SECURITE	1	1				

FIG. 18 ELECTRICAL 1 — PARTIE ELECTRIQUE 1

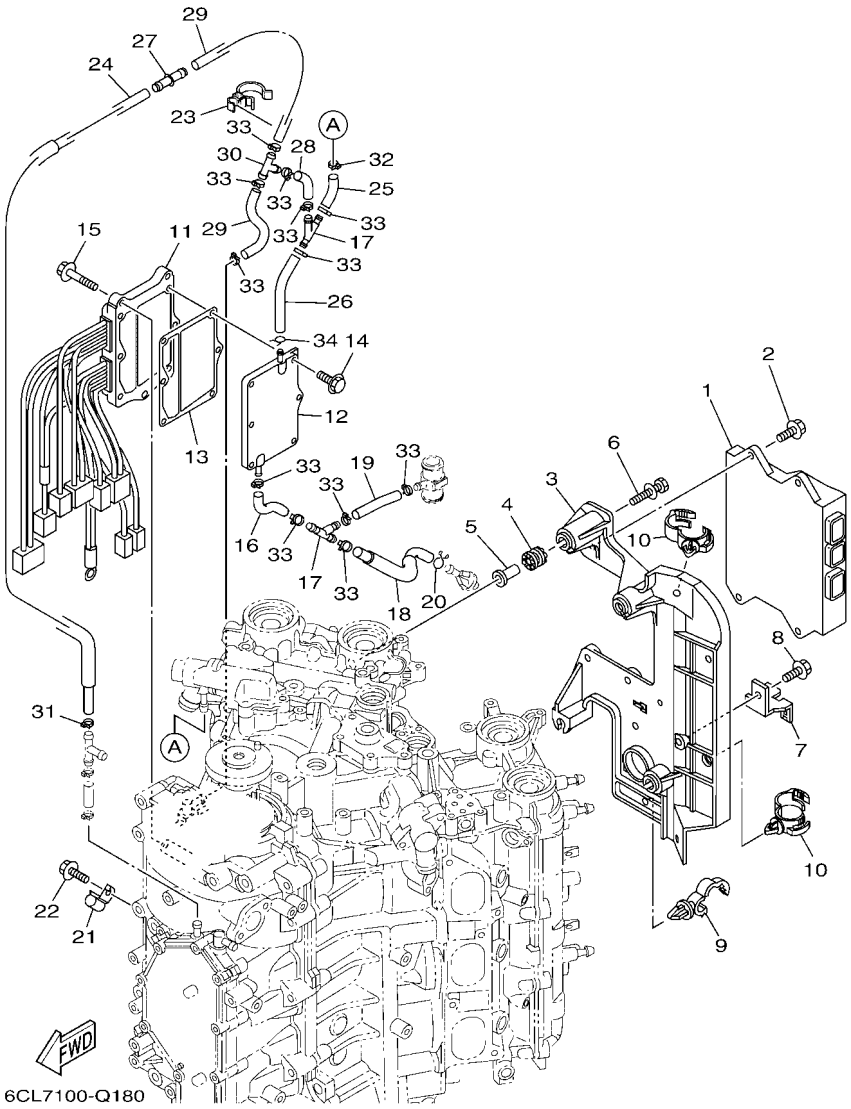

REF. NO.	PART NO. N° PIECES	DESCRIPTION DESCRIPTION	6CL7	6CM7				REMARKS REMARQUES
1	6CL–8591A–21	ENGINE CONTROL UNIT ASSY BLOC DE CONTROL	1	1				
2	95895–06020	BOLT, FLANGE BOULON	4	4				
3	6CB–82316–01	BRACKET, IGNITION COIL SUPPORT, BOBINE D'ALLUMAGE	1	1				
4	64J–85516–00	SPACER ENTRETOISE	4	4				
5	69M–42758–01	COLLAR ENTRETOISE	4	4				
6	90119–06M56	BOLT, WITH WASHER BOULON, AVEC RONDELLE	4	4				
7	6BR–81845–00	PLATE PLAQUE	1	1				
8	95895–06012	BOLT, FLANGE BOULON	1	1				
9	90464–13249	CLAMP BRIDE	1	1				
10	90464–20181	CLAMP BRIDE	2	2				
11	6CE–81960–00	RECTIFIER & REGULATOR ASSY REDRESSEUR REGULATEUR CPLT	1	1				
12	6CE–81972–00–9S	COVER, RECTIFIER COUVERCLE, REDRESSEUR	1	1				
13	6CE–81975–00	PLATE, RECTIFIER FITTING PLAQUE, FIXATION DU REDRESSEUR	1	1				
14	90119–06MA3	BOLT, WITH WASHER BOULON, AVEC RONDELLE	6	6				
15	95895–06025	BOLT, FLANGE BOULON	3	3				
16	6CE–1248A–00	PIPE 8 DURITE 8	1	1				
17	6CE–24377–00	PIPE, JOINT 2 DURITE RACCORDEMENT 2	2	2				
18	6CE–12483–00	PIPE 3 DURITE 3	1	1				
19	90445–107A5	HOSE (L30) DURITE (L30)	1	1				
20	90467–08M18	CLIP JONC	1	1				
21	90462–06013	CLAMP BRIDE	1	1				
22	95023–06012	BOLT BOULON, A COLLERETTE	1	1				
23	90464–26002	CLAMP BRIDE	1	1				
24	6CE–12481–10	PIPE 1 DURITE 1	1	1				
25	6CE–14872–00	PIPE 2 DURITE 2	1	1				
26	6CE–12485–00	PIPE 5 DURITE 5	1	1				
27	6CE–24376–01	PIPE, JOINT 1 DURITE 1, RACCORDEMENT	1	1				

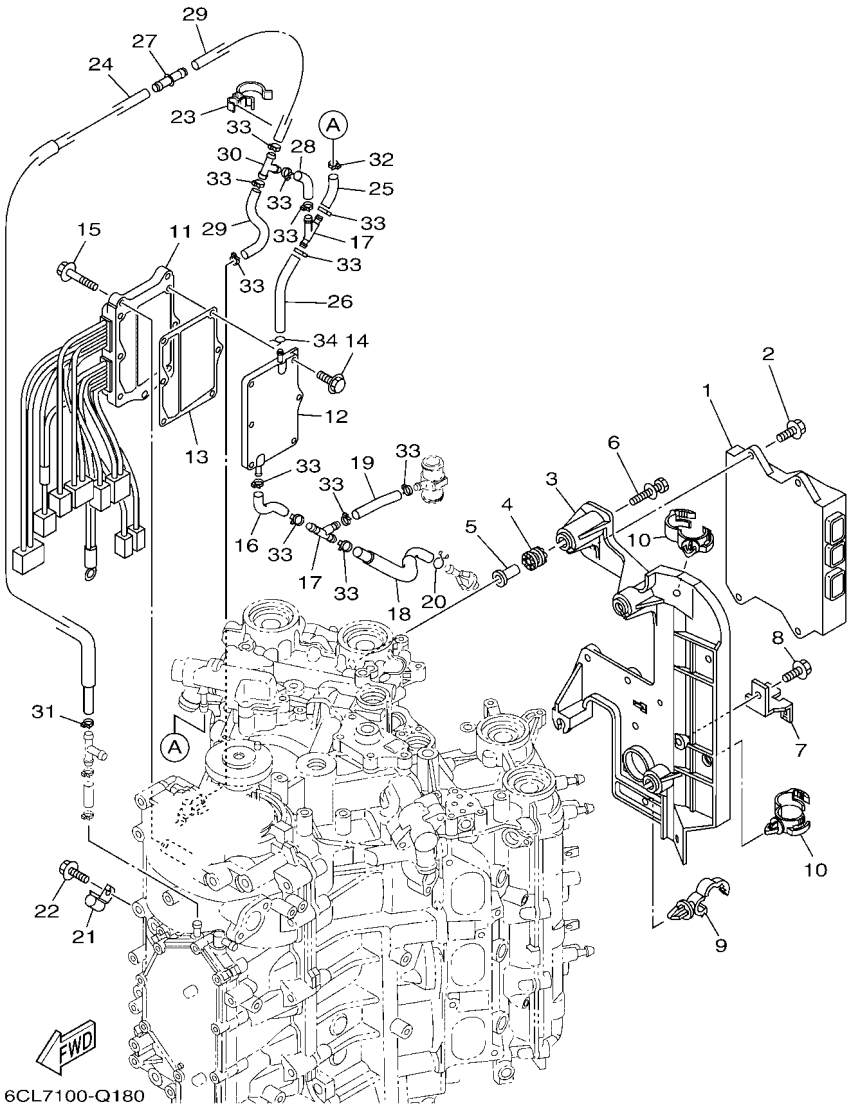

FIG. 18 ELECTRICAL 1 — PARTIE ELECTRIQUE 1

REF. NO.	PART NO. N° PIECES	DESCRIPTION DESCRIPTION	6CL7	6CM7				REMARKS REMARQUES
28	6CE–14872–00	PIPE 2 DURITE 2	1	1				
29	90445–09068	HOSE (L110) DURITE (L110)	2	2				
30	688–24378–00	PIPE, JOINT 3 DURITE RACCORDEMENT 3	1	1				
31	90465–11M10	CLAMP BRIDE	1	1				
32	90465–11M10	CLAMP BRIDE	1	1				
33	90465–11M10	CLAMP BRIDE	12	12				
34	90467–08004	CLIP JONC	1	1				

FIG. 19 ELECTRICAL 2 — PARTIE ELECTRIQUE 2

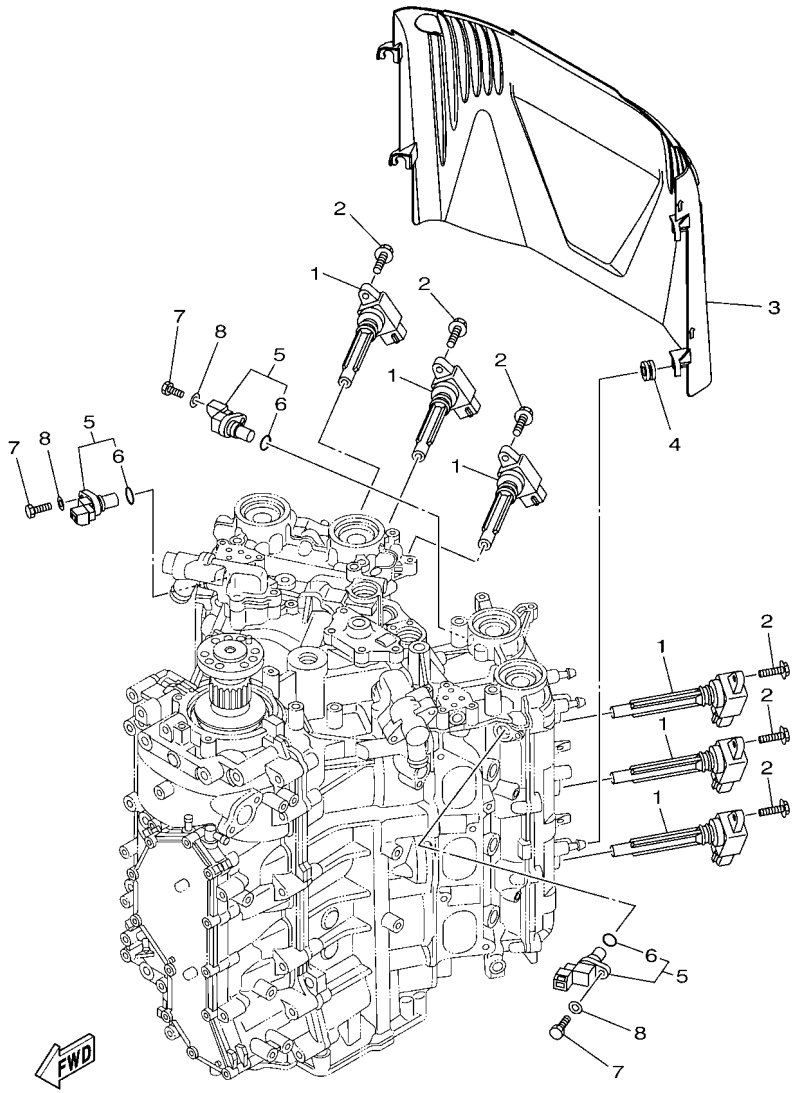

6CB2110-K180

REF. NO.	PART NO. N° PIECES	DESCRIPTION DESCRIPTION	6CL7	6CM7				REMARKS REMARQUES
1	6CB–82310–00	IGNITION COIL ASSY BOBINE D'ALLUMAGE	6	6				
2	95895–06025	BOLT, FLANGE BOULON	6	6				
3	6CB–82314–00	COVER, IGNITION COIL COUVERCLE, BOBINE D'ALLUMAGE	1	1				
4	90480–12314	GROMMET PASSE-FIL	4	4				
5	6P2–85896–00	SENSOR, CAM POSITION SONDE DE CAME	3	3				
6	6P2–85075–00	.O-RING .JOINT TORIQUE	1	1				
7	97095–06020	BOLT BOULON	3	3				
8	92995–06600	WASHER RONDELLE	3	3				

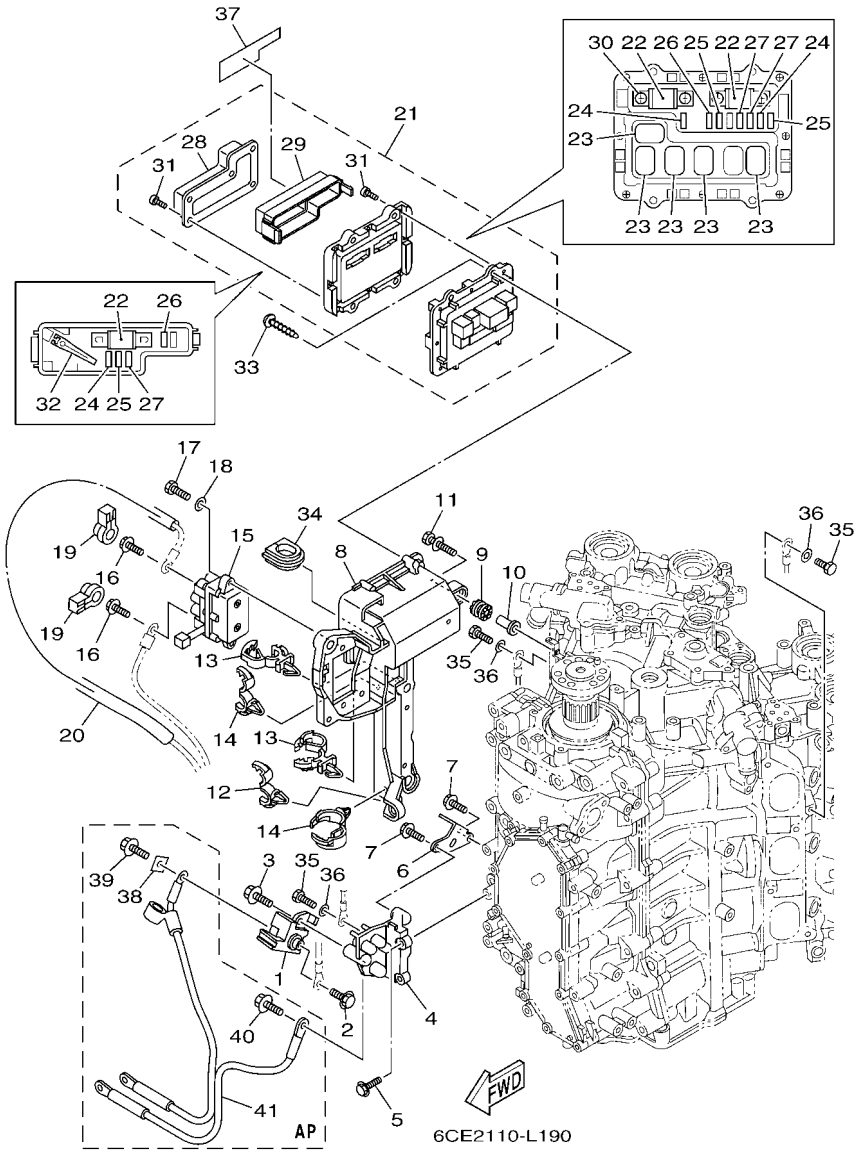

FIG. 20 ELECTRICAL 3 — PARTIE ELECTRIQUE 3

REF. NO.	PART NO. N° PIECES	DESCRIPTION DESCRIPTION	6CL7	6CM7				REMARKS REMARQUES
1	6P2–81925–01	TERMINAL BORNE	1	1				
2	95895–08016	BOLT, FLANGE BOULON	1	1				
3	95814–08020	BOLT, FLANGE BOULON, A COLLERETTE	1	1				
4	6CB–81929–00	BRACKET, TERMINAL SUPPORT	1	1				
5	95895–06020	BOLT, FLANGE BOULON	2	2				
6	6CE–82588–00	PLATE PLAQUE	1	1				
7	95895–06016	BOLT, FLANGE BOULON	2	2				
8	6CB–81948–01	BRACKET SUPPORT	1	1				
9	64J–85516–00	SPACER ENTRETOISE	5	5				
10	69M–42758–01	COLLAR ENTRETOISE	5	5				
11	90119–06M56	BOLT, WITH WASHER BOULON, AVEC RONDELLE	5	5				
12	90464–13249	CLAMP BRIDE	1	1				
13	90464–12183	CLAMP BRIDE	2	2				
14	90464–20181	CLAMP BRIDE	2	2				
15	6AW–81950–00	RELAY ASSY RELAIS COMPLET	1	1				
16	97595–06610	BOLT, WITH WASHER VIS HEXAGONAL AVC RONDELLE	2	2				
17	97013–06020	BOLT BOULON	2	2				
18	92903–06600	WASHER, PLATE RONDELLE, PLATE	2	2				
19	6P2–8183X–00	CAP, TERMINAL COUVERCLE, BORNE	2	2				
20	90446–15003	HOSE (L100) DURITE (L100)	1	1				
21	6CE–82170–11	FUSE BOX ASSY BOITE A FUSIBLES	1	1				
22	6CE–82151–00	.FUSE (100A) .FUSIBLE (100A)	3	3				
23	6AW–8195A–00	.RELAY ASSY .RELAIS COMPLET	5	5				
24	67F–82151–40	.FUSE (10A) .FUSIBLE (10A)	3	3				
25	67F–82151–50	.FUSE (15A) .FUSIBLE (15A)	3	3				
26	67F–82151–00	.FUSE (20A) .FUSIBLE (20A)	2	2				
27	67F–82151–10	.FUSE (30A) .FUSIBLE (30A)	3	3				

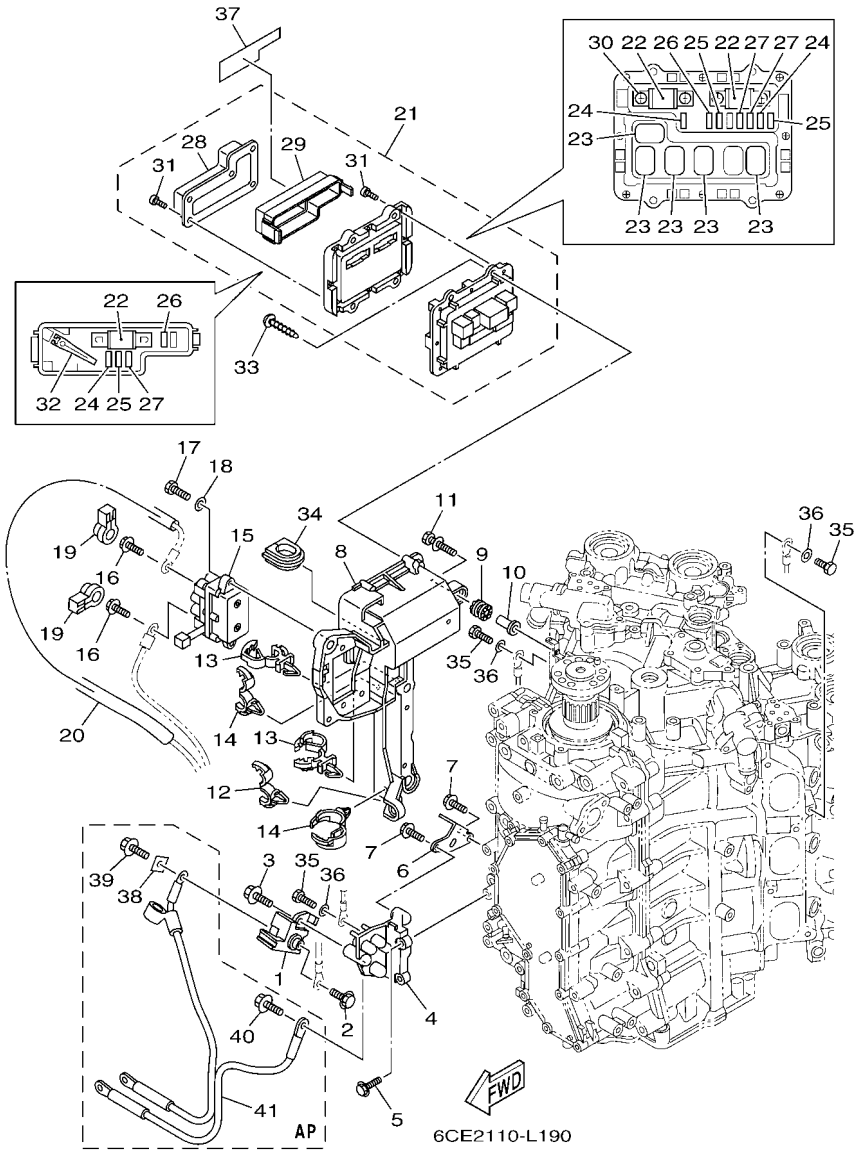

FIG. 20 ELECTRICAL 3 — PARTIE ELECTRIQUE 3

REF. NO.	PART NO. N° PIECES	DESCRIPTION DESCRIPTION	6CL7	6CM7				REMARKS REMARQUES
28	6CB–81639–10	.COVER .COUVERCLE	1	1				
29	6CB–85544–00	.CASE .BOITIER	1	1				
30	68F–82846–00	.SCREW, PAN HEAD (M5) .VIS, TETE TRONCONIQUE (M5)	4	4				
31	6P2–82113–00	.SCREW .VIS	13	13				
32	67F–2812A–00	.PULLER, FUSE .TENDEUR, FUSIBLE	1	1				
33	97780–50620	SCREW, TAPPING VIS, TETE BOMBEE	4	4				
34	6P2–81336–00	GROMMET OEILLET CAOUTCHOUC	1	1				
35	97095–06016	BOLT BOULON	5	5				
36	92995–06600	WASHER RONDELLE	5	5				
37	6CE–81919–20	GRAPHIC, REGULATOR ADHESIF, REGULATEUR	1	1				
38	6CB–81923–00	WASHER RONDELLE	1	1				AP AP
39	95895–08016	BOLT, FLANGE BOULON	1	1				AP AP
40	95895–08016	BOLT, FLANGE BOULON	1	1				AP AP
41	6CB–82105–01	BATTERY CABLE CABLE DE BATTERIE	1	1				AP AP

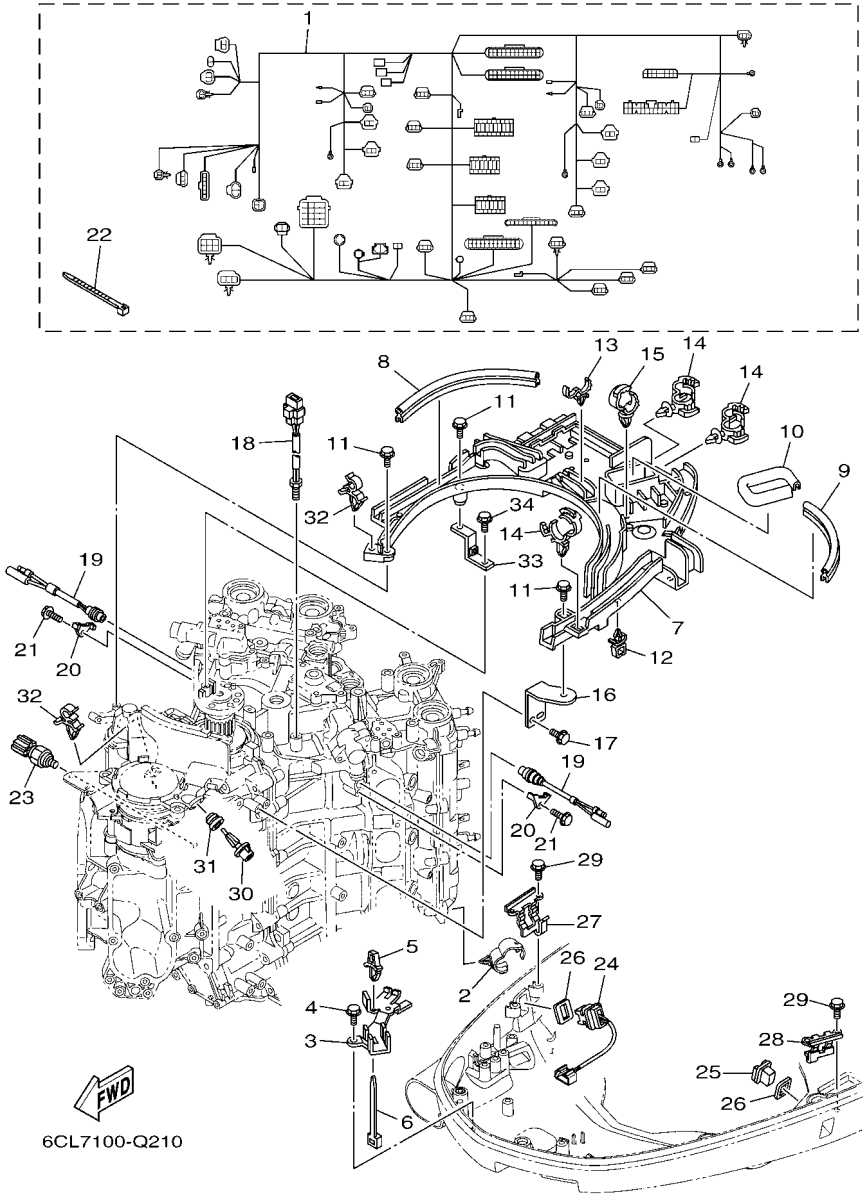

FIG. 21 ELECTRICAL 4 — PARTIE ELECTRIQUE 4

REF. NO.	PART NO. N° PIECES	DESCRIPTION DESCRIPTION	6CL7	6CM7				REMARKS REMARQUES
1	6CE–82590–13	WIRE HARNESS ASSY FAISCEAU DE FILS COMPLET	1	1				FOR TILT LIMIT FOR TILT LIMIT
2	90464–20181	CLAMP BRIDE	4	4				
3	6CB–82594–00	CLAMP BRIDE	1	1				
4	95895–06012	BOLT, FLANGE BOULON	2	2				
5	90464–06001	CLAMP BRIDE	1	1				
6	90465–13M24	CLAMP BRIDE	1	1				
7	6CB–82589–01	PROTECTER, WIRE HARNESS PROTECTEUR, FAISCEAU DE FILS	1	1				
8	6BG–42617–00	DAMPER, FORM BOURRELET, CAOUTCHOUC	1	1				
9	6CB–42617–00	DAMPER, FORM BOURRELET, CAOUTCHOUC	1	1				
10	6CB–42629–00	SEAL JOINT	1	1				
11	95895–06020	BOLT, FLANGE BOULON	5	5				
12	90464–11121	CLAMP BRIDE	1	1				
13	90464–18246	CLAMP BRIDE	1	1				
14	90464–12183	CLAMP BRIDE	4	4				
15	90464–20181	CLAMP BRIDE	2	2				
16	6CB–82388–00	PLATE PLAQUETTE	1	1				
17	95895–06016	BOLT, FLANGE BOULON	2	2				
18	6CB–85790–00	THERMOSENSOR ASSY SENSITOMETRE	1	1				
19	6P2–82560–01	THERMO SWITCH ASSY THERMO-CONTACT COMPLET	2	2				
20	6E9–82588–00	PLATE PLAQUE	2	2				
21	95895–06012	BOLT, FLANGE BOULON	2	2				
22	90465–14M66	CLAMP BRIDE	1	1				
23	6AW–83651–00	SENDER, OIL PRESSURE RACCORD, PRESSION D'HUILE	1	1				
24	6BR–82563–01	TRIM & TILT SWITCH ASSY INCLINER ET PARER COMMUTATEUR	1	1				
25	69J–42723–01	COVER, BOTTOM COUVERCLE	1	1				
26	69J–82587–00	GASKET JOINT	2	2				
27	63P–83614–01	BRACKET SUPPORT	1	1				

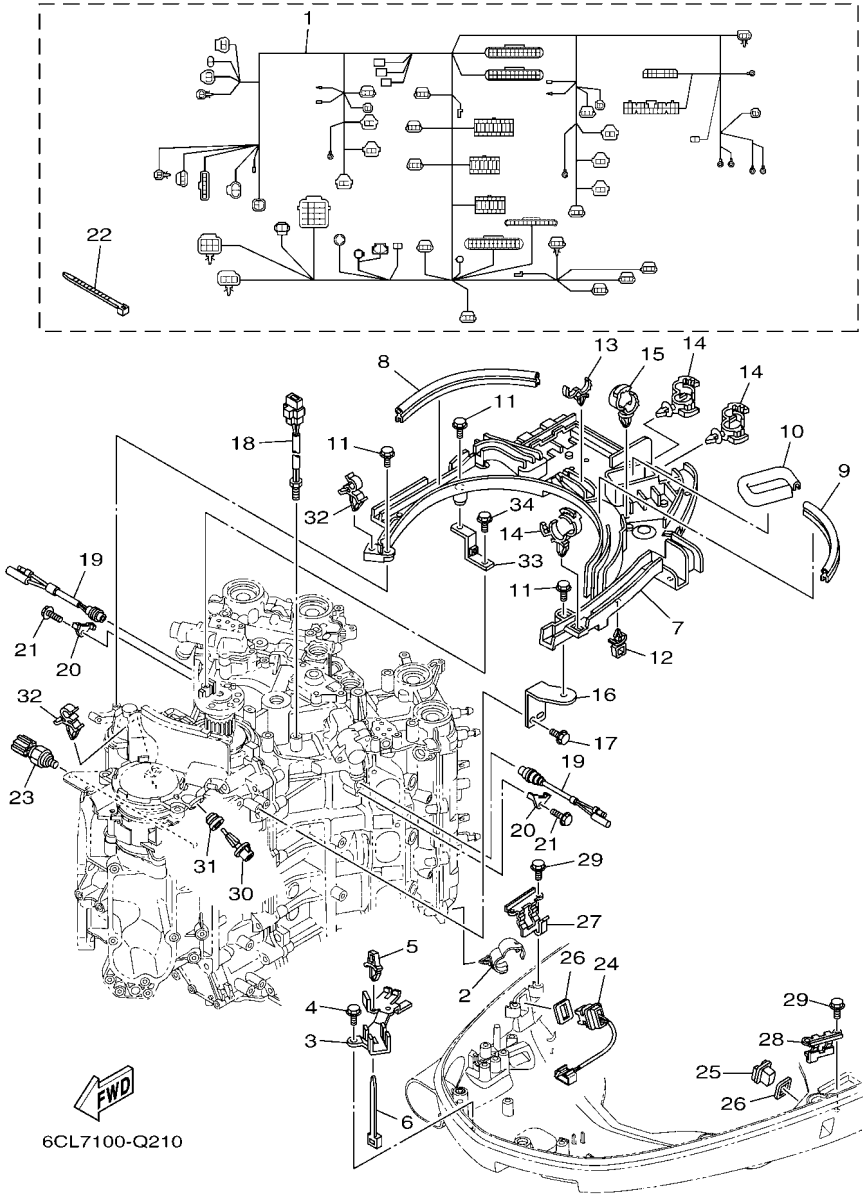

FIG. 21 ELECTRICAL 4 — PARTIE ELECTRIQUE 4

REF. NO.	PART NO. N° PIECES	DESCRIPTION DESCRIPTION	6CL7	6CM7				REMARKS REMARQUES
28	63P–83614–01	BRACKET SUPPORT	1	1				
29	95895–06012	BOLT, FLANGE BOULON	4	4				
30	63P–85886–00	SENSOR, AIR TEMPERATURE SONDE	1	1				
31	63P–14435–00	GROMMET RONDELLE CAOUTCHOUC	1	1				
32	90464–09129	CLAMP BRIDE	2	2				
33	6CB–81952–00	HOLDER, RELAY SUPPORT, RELAIS	1	1				
34	95895–06016	BOLT, FLANGE BOULON	1	1				

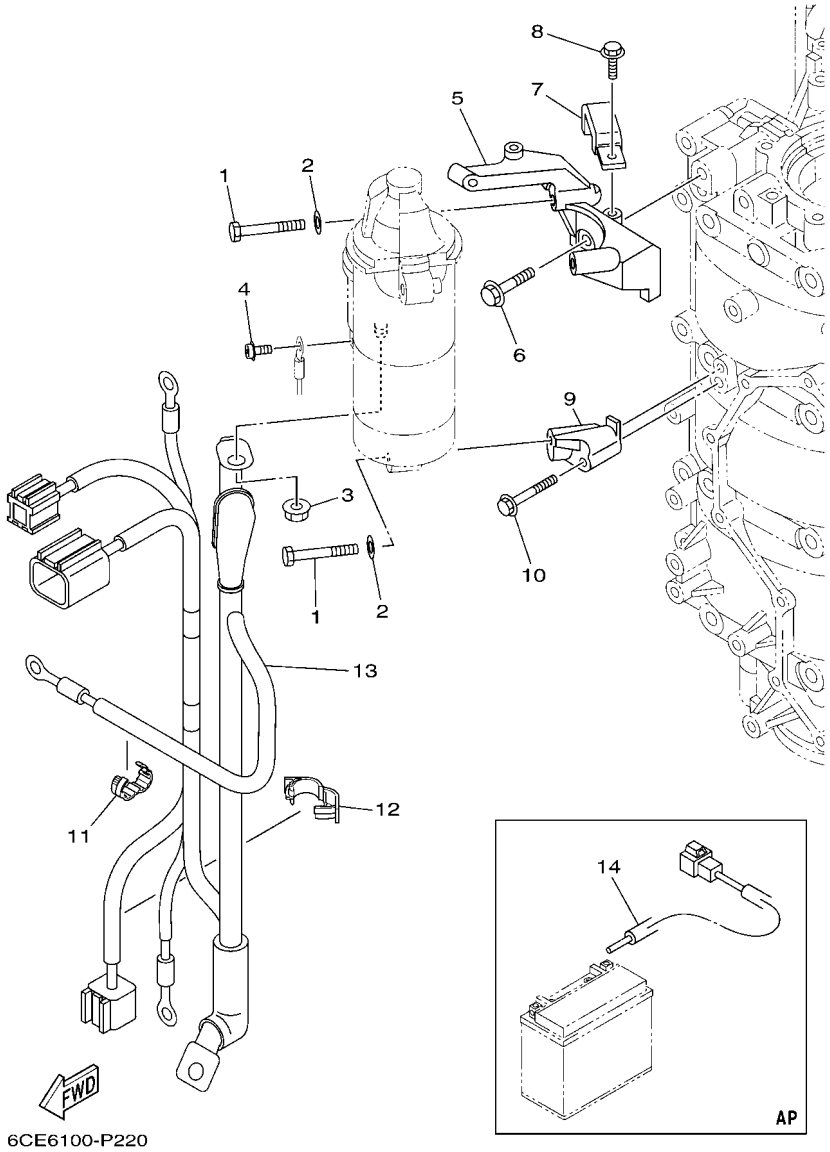

FIG. 22 ELECTRICAL 5 — PARTIE ELECTRIQUE 5

REF. NO.	PART NO. N° PIECES	DESCRIPTION DESCRIPTION	6CL7	6CM7				REMARKS REMARQUES
1	97013–08045	BOLT BOULON	3	3				
2	92903–08600	WASHER, PLATE RONDELLE, PLATE	3	3				
3	90179–08003	NUT ECROU	1	1				
4	97985–04308	SCREW, WITH WASHER VIS, AVEC RONDELLE	1	1				
5	6CB–81822–02	BRACKET, STARTING MOTOR SUPPORT, DEMARREUR ELECTRIQUE	1	1				
6	90105–08M87	BOLT, FLANGE BOULON	2	2				
7	6CB–81443–00	CLAMP, LEAD 1 BRIDE, FIL 1	1	1				
8	95895–06016	BOLT, FLANGE BOULON	1	1				
9	6CB–81823–A0	STAY, STARTING MOTOR SUPPORT	1	1				
10	90105–06151	BOLT, FLANGE BOULON	1	1				
11	90464–13227	CLAMP BRIDE	1	1				
12	90464–18004	CLAMP BRIDE	1	1				
13	6CE–8259M–00	WIRE HARNESS ASSY 2 FAISCEAU DE FILS	1	1				
14	6CE–81949–00	WIRE, LEAD (ISOLATOR CABLE) FIL (ISOLATOR CABLE)	1	1				AP AP

FIG. 23 ELECTRICAL 6 — PARTIE ELECTRIQUE 6

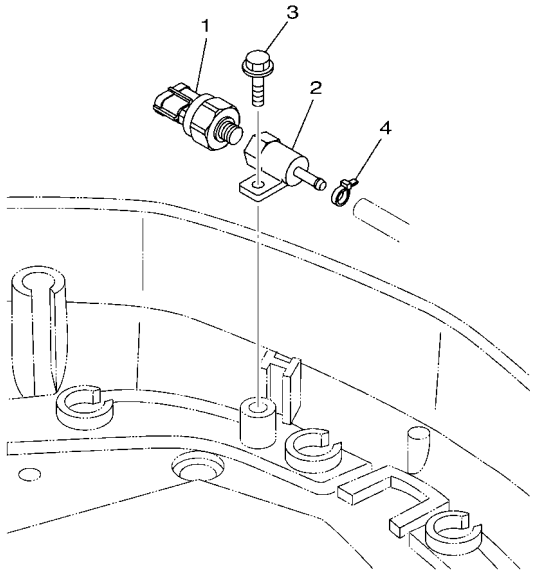

6CE1100-K390

REF. NO.	PART NO. N° PIECES	DESCRIPTION DESCRIPTION	6CL7	6CM7				REMARKS REMARQUES
1	6AW–8366B–01	SENSOR, WATER PRESSURE SONDE DE PRESSION D'EAU	1					FOR LAN SPEED FOR LAN SPEED
2	60V–8366D–00	ADAPTOR, INPUT CONNECTEUR 3	1					FOR LAN SPEED FOR LAN SPEED
3	95895–06016	BOLT, FLANGE BOULON	1					FOR LAN SPEED FOR LAN SPEED
4	90465–11M10	CLAMP BRIDE	1					FOR LAN SPEED FOR LAN SPEED

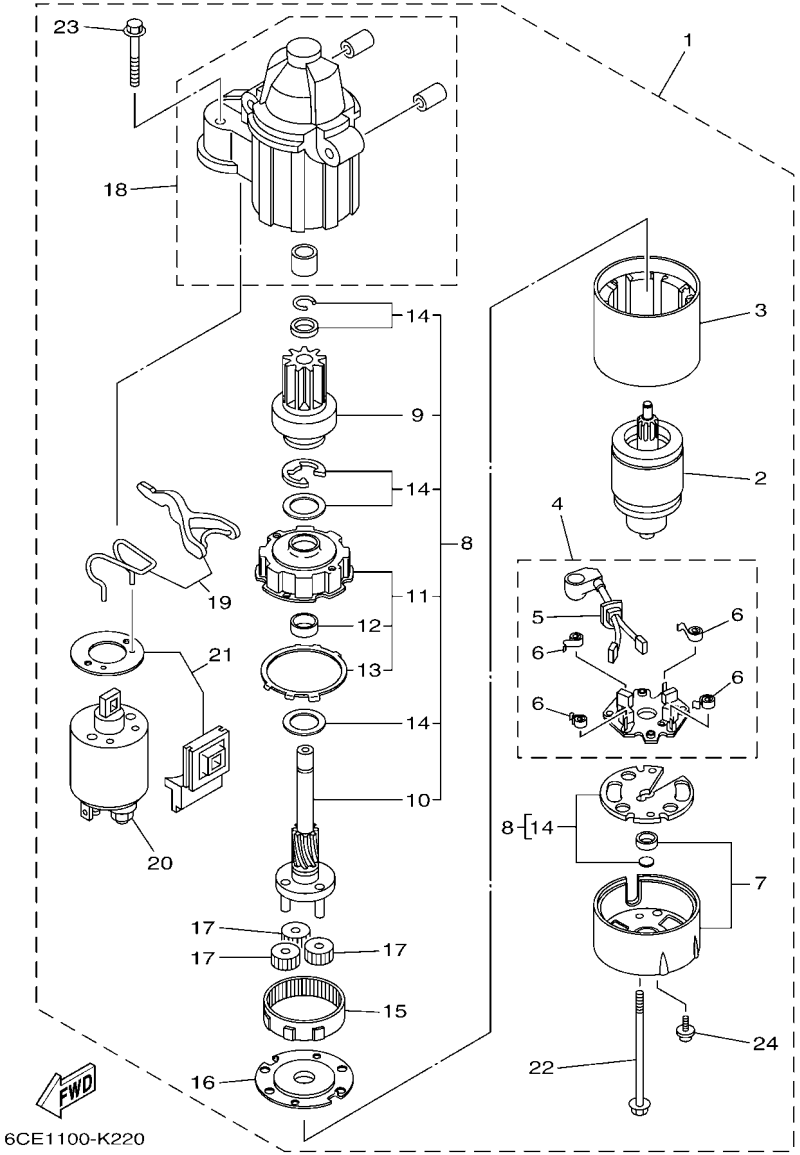

FIG. 24 STARTING MOTOR — DEMARREUR ELECTRIQUE

REF. NO.	PART NO. N° PIECES	DESCRIPTION DESCRIPTION	6CL7	6CM7				REMARKS REMARQUES
1	6CE–81800–00	STARTING MOTOR ASSY DEMARREUR ELECTRIQUE COMPLET	1	1				
2	6CE–81850–00	.ARMATURE ASSY .INDUIT	1	1				
3	6CE–81810–00	.STATOR ASSY .STATOR COMPLET	1	1				
4	6CE–81840–00	.BRUSH HOLDER ASSY .SUPPORT DE CHARBON	1	1				
5	6CE–81801–00	..BRUSH SET ..CHARBON	1	1				
6	67F–81813–00	..SPRING, BRUSH ..RESSORT, DE CHARBON	4	4				
7	6CE–81820–00	.REAR BRACKET ASSY .SUPPORT ARRIERE COMPLET	1	1				
8	6CE–81807–00	.GEAR ASSY, STARTING MOTOR .PIGNON, DEMARREUR ELECTRIQUE	1	1				
9	6CB–81832–00	..CLUTCH, OVER RUN ..EMBRAYAGE, ROUE LIBRE	1	1				
10	6CB–81836–00	..SHAFT, PINION ..AXE, PIGNON	1	1				
11	6CE–81821–00	..BRACKET, CENTER 1 ..SUPPORT, CENTRE 1	1	1				
12	67F–81841–00	...BEARING ...ROULEMENT	1	1				
13	67F–8183R–00	...GASKET ...JOINT	1	1				
14	6CB–81809–00	..WASHER KIT ..JEU DE RONDELLES	1	1				
15	67F–81891–00	.GEAR, RING .ROUE DENTEE	1	1				WITH 67F-8183R-00 WITH 67F-8183R-00
16	6CE–81830–00	.BRACKET, CENTER 2 .SUPPORT, CENTRE 2	1	1				
17	60V–8183T–00	.GEAR, IDLER .PIGNON, INTERMEDIAIRE	3	3				
18	6CE–81842–00	.COVER .COUVERCLE	1	1				
19	6CE–81839–00	.LEVER ASSY .LEVIER COMPLET	1	1				
20	6C5–81941–00	.STARTER RELAY ASSY .LANCEUR RELAIS (ENS.)	1	1				
21	6CE–81869–00	.COVER, DUST .COUVERCLE, POUSSIERE	1	1				
22	6CB–81826–00	.BOLT .BOULON	2	2				
23	69J–81828–00	.SCREW 2 .VIS 2	2	2				
24	67F–81846–00	.SCREW .VIS	2	2				

FIG. 25 BOTTOM COWLING 1 — CAPOT INFERIEUR 1

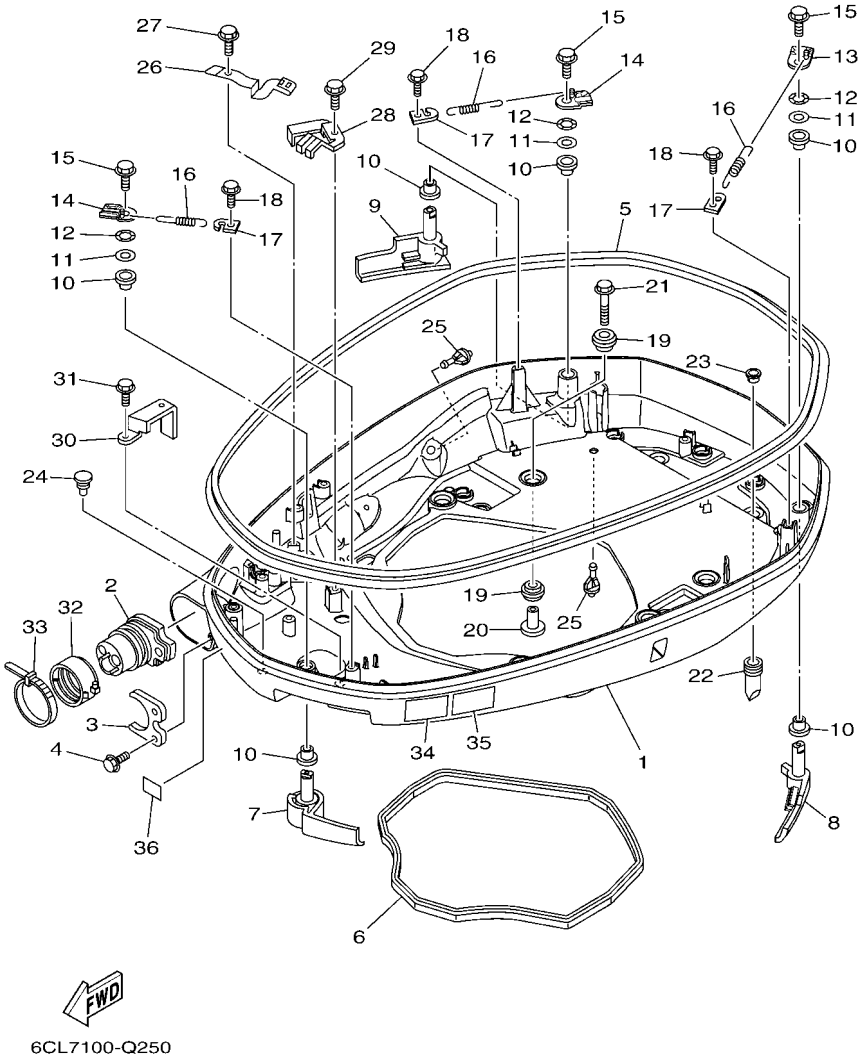

REF. NO.	PART NO. N° PIECES	DESCRIPTION DESCRIPTION	6CL7	6CM7				REMARKS REMARQUES
1	6CB–42710–00–8D	BOTTOM COWLING ASSY ENS. EMBASE	1	1				
2	6CE–42725–02	GROMMET PASSE-FIL	1	1				
3	6CB–42761–00	STOPPER PLAQUETTE	1	1				
4	95895–06014	BOLT, FLANGE BOULON	2	2				
5	6CB–42615–00	SEAL JOINT	1	1				
6	6CB–42716–00	RUBBER, SEAL 1 JOINT EN CAOUTCHOUC 1	1	1				
7	6CB–42815–01–8D	LEVER, CLAMP LEVIER, PRESSE	1	1				
8	6CB–42816–01–8D	LEVER, CLAMP LEVIER, PRESSE	1	1				
9	6CB–42817–01–8D	LEVER, CLAMP LEVIER, PRESSE	1	1				
10	90386–15M73	BUSH DOUILLE	6	6				
11	90201–156J2	WASHER, PLATE RONDELLE, PLATE	3	3				
12	90206–15M18	WASHER, WAVE RONDELLE, ONDULEE	3	3				
13	6CB–42818–00	LEVER, CLAMP LEVIER, PRESSE	1	1				
14	6CB–42819–00	LEVER, CLAMP LEVIER, PRESSE	2	2				
15	95895–08012	BOLT, FLANGE BOULON	3	3				
16	90506–22001	SPRING, TENSION RESSORT, TENSION	3	3				
17	66T–43144–00	HOOK, SPRING CROCHET	3	3				
18	95895–06012	BOLT, FLANGE BOULON	3	3				
19	90480–22M81	GROMMET PASSE-FIL	12	12				
20	90387–08M37	COLLAR COLLERETTE	6	6				
21	90119–08M22	BOLT, WITH WASHER BOULON, AVEC RONDELLE	6	6				
22	6DA–42717–00	RUBBER, SEAL 2 JOINT EN CAOUTCHOUC 2	2	2				
23	6DA–42384–00	SEAL, CAP JOINT, CAPUCHON	2	2				
24	6H4–42748–00	GROMMET PASSE-FIL	1	1				
25	6P2–44391–00	NIPPLE, HOSE RACCORD D'ESSENCE	2	2				
26	6CB–42743–00	BRACKET SUPPORT	1	1				
27	95895–06012	BOLT, FLANGE BOULON	1	1				

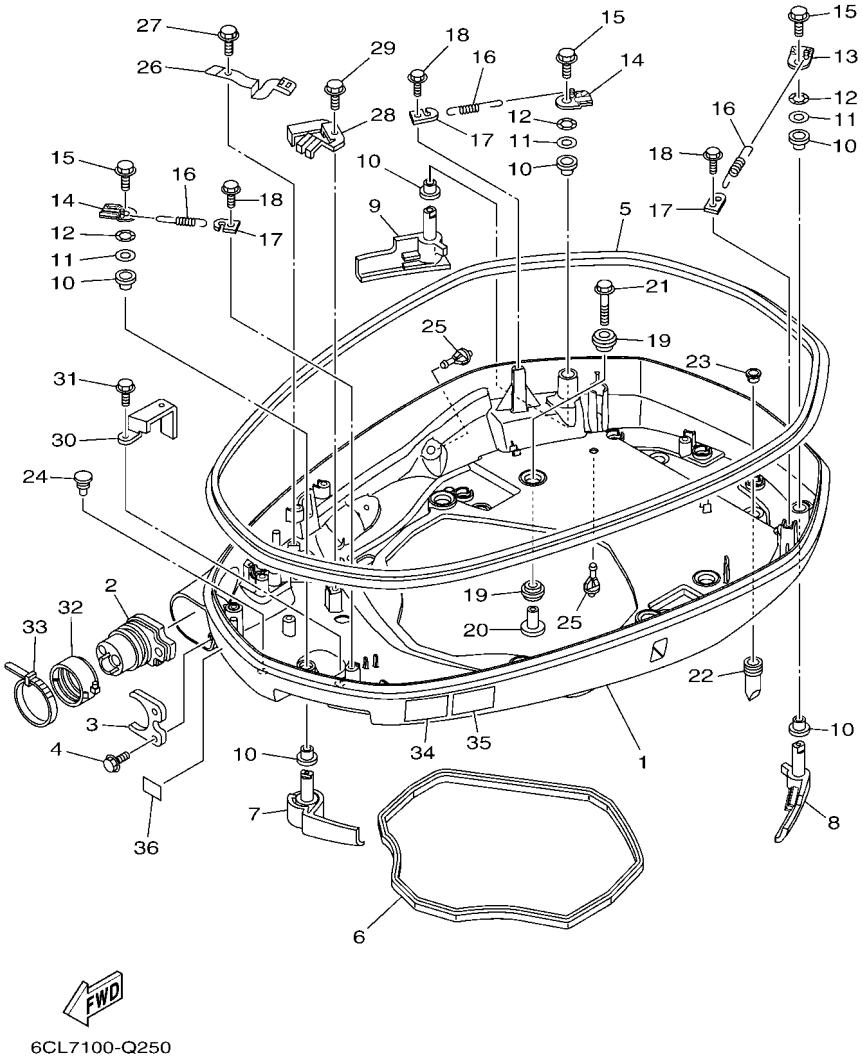

FIG. 25 BOTTOM COWLING 1 — CAPOT INFERIEUR 1

REF. NO.	PART NO. N° PIECES	DESCRIPTION DESCRIPTION	6CL7	6CM7				REMARKS REMARQUES
28	6CB–42766–00	BRACKET 2 SUPPORT 2	1	1				
29	95895–06012	BOLT, FLANGE BOULON	1	1				
30	6CB–42756–00	STAY, CLAMP SUPPORT, COLLIER	1	1				
31	95895–06012	BOLT, FLANGE BOULON	1	1				
32	68F–42753–00	FASTNER ATTACHE	1	1				AP AP
33	90464–20258	CLAMP BRIDE	1	1				AP AP
34	6EE–42794–40	LABEL, WARNING (GENERAL) ETIQUETTE, AVERTISSEMENT	1	1				
35	6EE–42794–50	LABEL, WARNING (GENERAL) ETIQUETTE, AVERTISSEMENT	1	1				
36	6AH–81996–00	MARK MARQUE	1	1				

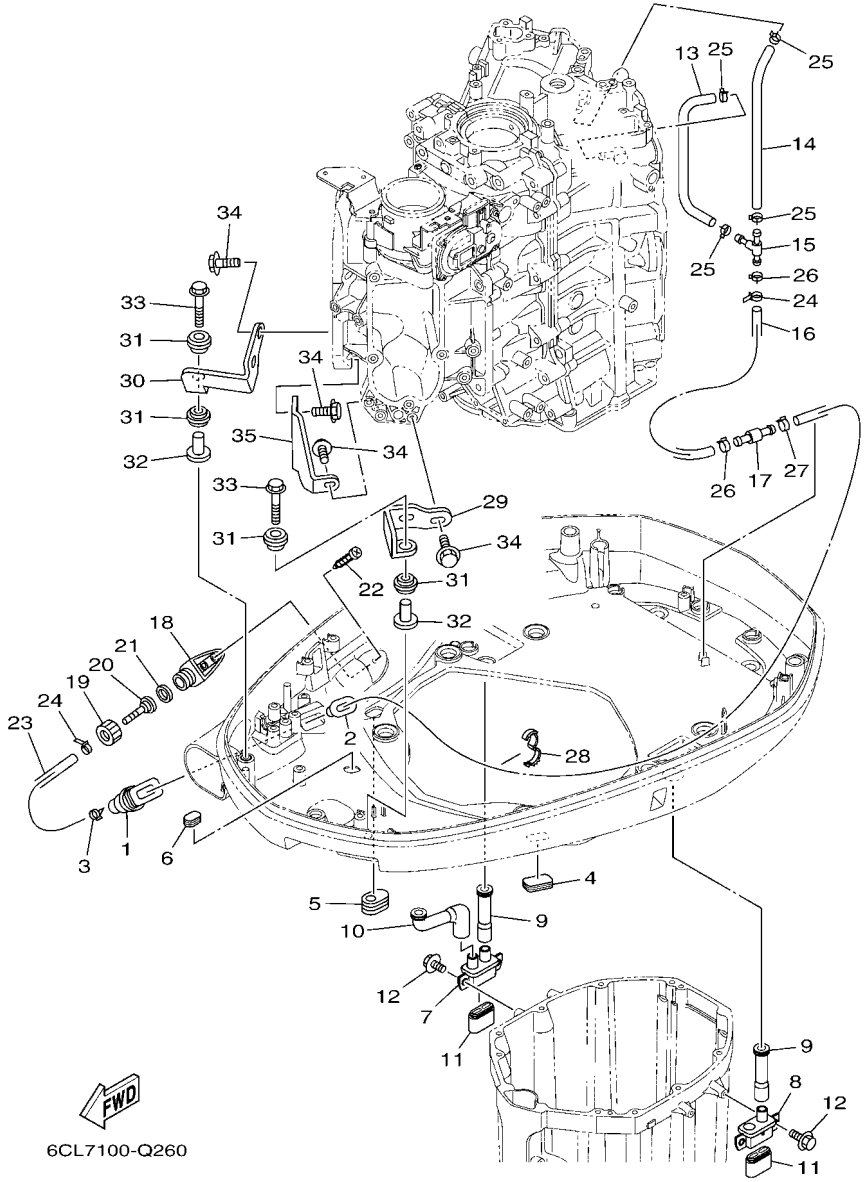

FIG. 26 BOTTOM COWLING 2 — CAPOT INFERIEUR 2

REF. NO.	PART NO. N° PIECES	DESCRIPTION DESCRIPTION	6CL7	6CM7				REMARKS REMARQUES
1	6H1–42726–21	GROMMET PASSE-FIL	1	1				
2	6BG–42384–00	SEAL, CAP JOINT, CAPUCHON	1	1				
3	90465–11M10	CLAMP BRIDE	2	2				
4	6H4–42726–00	GROMMET PASSE-FIL	1	1				
5	61A–42727–00	GROMMET PASSE-FIL	1	1				
6	64G–42727–00	GROMMET PASSE-FIL	1	1				
7	6CE–42733–00	BOX, DRAIN BOITIER, VIDANGE	1	1				
8	6CE–42734–00	BOX, DRAIN 2 BOITIER, VIDANGE 2	1	1				
9	6CE–42786–01	HOSE, DRAIN 1 DURITE, VIDANGE 1	2	2				
10	6CE–42787–01	HOSE, DRAIN 2 DURITE, VIDANGE 2	1	1				
11	69J–42717–00	RUBBER, SEAL 2 JOINT EN CAOUTCHOUC 2	2	2				
12	95895–06016	BOLT, FLANGE BOULON	4	4				
13	6CB–24315–00	PIPE 5 DURITE 5	1	1				
14	90445–14021	HOSE (L185) DURITE (L185)	1	1				
15	6AW–42169–00	JOINT AXE	1	1				
16	90445–16015	HOSE (L300) DURITE (L300)	1	1				
17	6AW–42785–00	PIPE DURITE	1	1				
18	6AW–12572–00	ADAPTER ADAPTATEUR	1	1				
19	6R3–12581–00	JOINT, HOSE 1 JOINT DE TUYAU	1	1				
20	6AW–12582–00	JOINT, HOSE 2 RACCORD DE TUYAU 1	1	1				
21	6R3–12583–00	GASKET, HOSE JOINT JOINT	1	1				
22	97780–60520	SCREW, TAPPING VIS, TETE BOMBEE	2	2				
23	90445–14019	HOSE (L1460) DURITE (L1460)	1	1				
24	90465–11M10	CLAMP BRIDE	2	2				
25	90467–130A5	CLIP JONC	4	4				
26	90467–140A8	CLIP JONC	2	2				
27	90467–140A9	CLIP JONC	1	1				

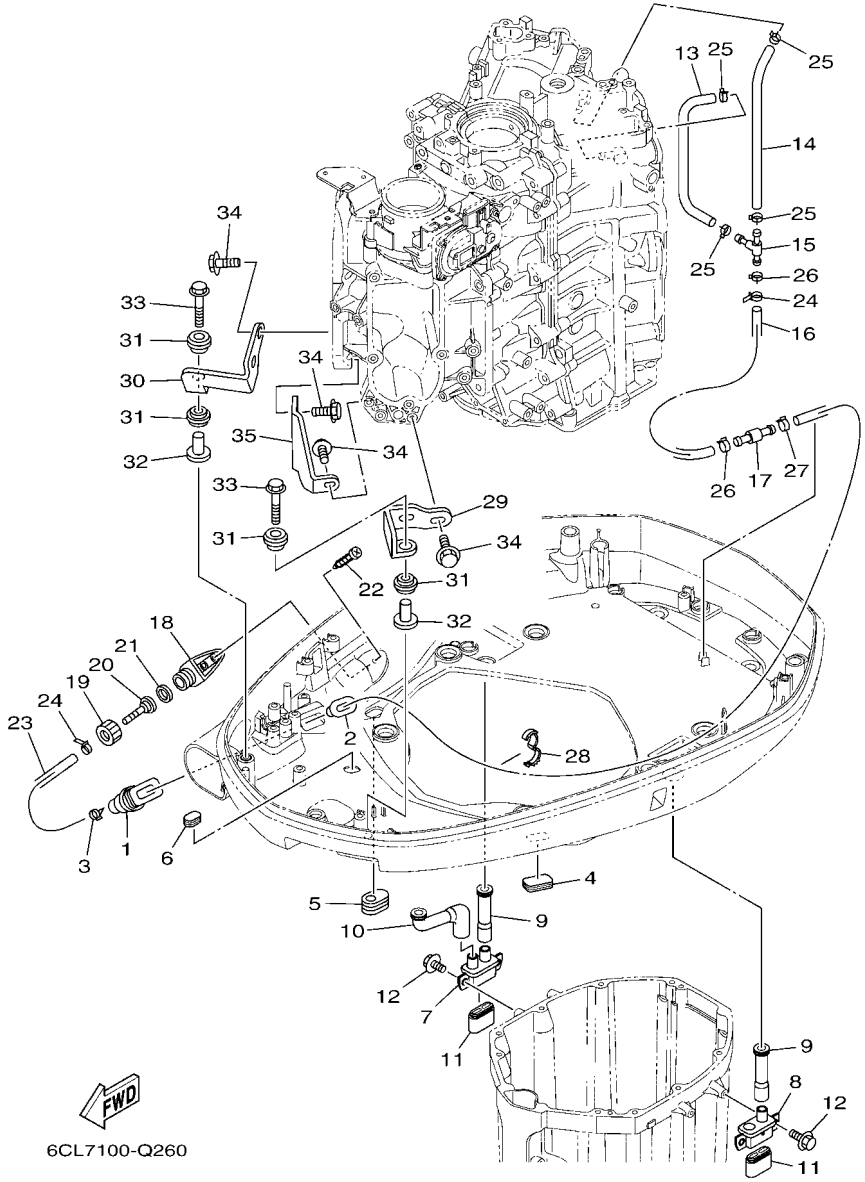

FIG. 26 BOTTOM COWLING 2 — CAPOT INFERIEUR 2

REF. NO.	PART NO. N° PIECES	DESCRIPTION DESCRIPTION	6CL7	6CM7				REMARKS REMARQUES
28	90464–16001	CLAMP BRIDE	1	1				
29	6CB–42643–00	PLATE, CLAMP PLAQUE, PRESSE	1	1				
30	6CB–42644–00	PLATE, CLAMP 2 PLAQUE, PRESSE 2	1	1				
31	90480–14029	GROMMET PASSE-FIL	4	4				
32	90387–06M03	COLLAR COLLERETTE	2	2				
33	90119–06M61	BOLT, WITH WASHER BOULON, AVEC RONDELLE	2	2				
34	90105–06039	BOLT, FLANGE BOULON	6	6				
35	6CB–42744–00	STAY SUPPORT	1	1				

FIG. 27 BOTTOM COWLING 3 — CAPOT INFERIEUR 3

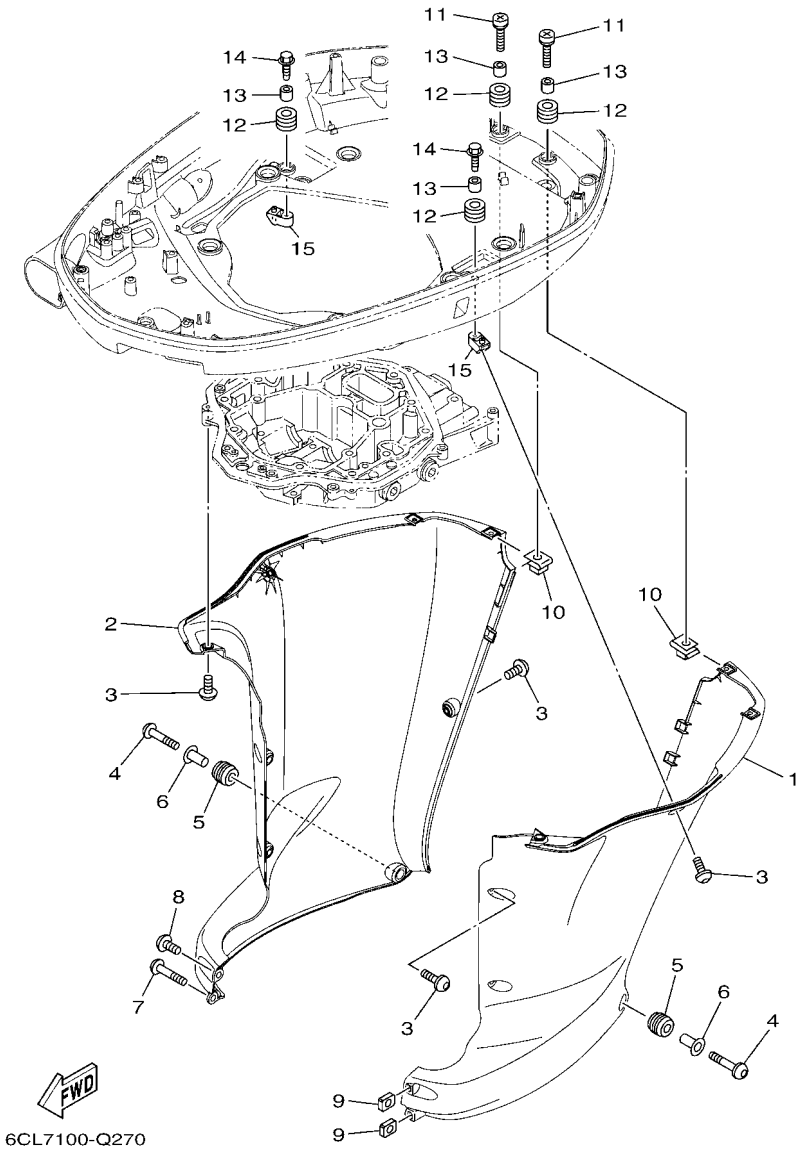

REF. NO.	PART NO. N° PIECES	DESCRIPTION DESCRIPTION	6CL7	6CM7				REMARKS REMARQUES
1	6CE–42741–01–8D	APRON CAPOT LATERAL	1	1				
2	6CE–42771–01–8D	APRON CAPOT LATERAL	1	1				
3	90111–06144	BOLT,HEX. SOCKET BUTTON BOULON	10	10				
4	90111–06142	BOLT,HEX. SOCKET BUTTON BOULON	2	2				
5	90480–16009	GROMMET PASSE-FIL	2	2				
6	90387–07028	COLLAR COLLERETTE	2	2				
7	90111–06142	BOLT,HEX. SOCKET BUTTON BOULON	1	1				
8	90111–06144	BOLT,HEX. SOCKET BUTTON BOULON	1	1				
9	90173–06001	NUT, SQUARE ECROU, CARRE	2	2				
10	90183–061A6	NUT, SPRING ECROU, RESSORT	4	4				
11	90159–06053	SCREW, WITH WASHER VIS, AVEC RONDELLE	4	4				
12	90480–13M24	GROMMET PASSE-FIL	6	6				
13	90387–06M43	COLLAR COLLERETTE	6	6				
14	90109–06M80	BOLT BOULON	2	2				
15	6CE–42774–A0	STAY, APRON 1 COUSSINET	2	2				

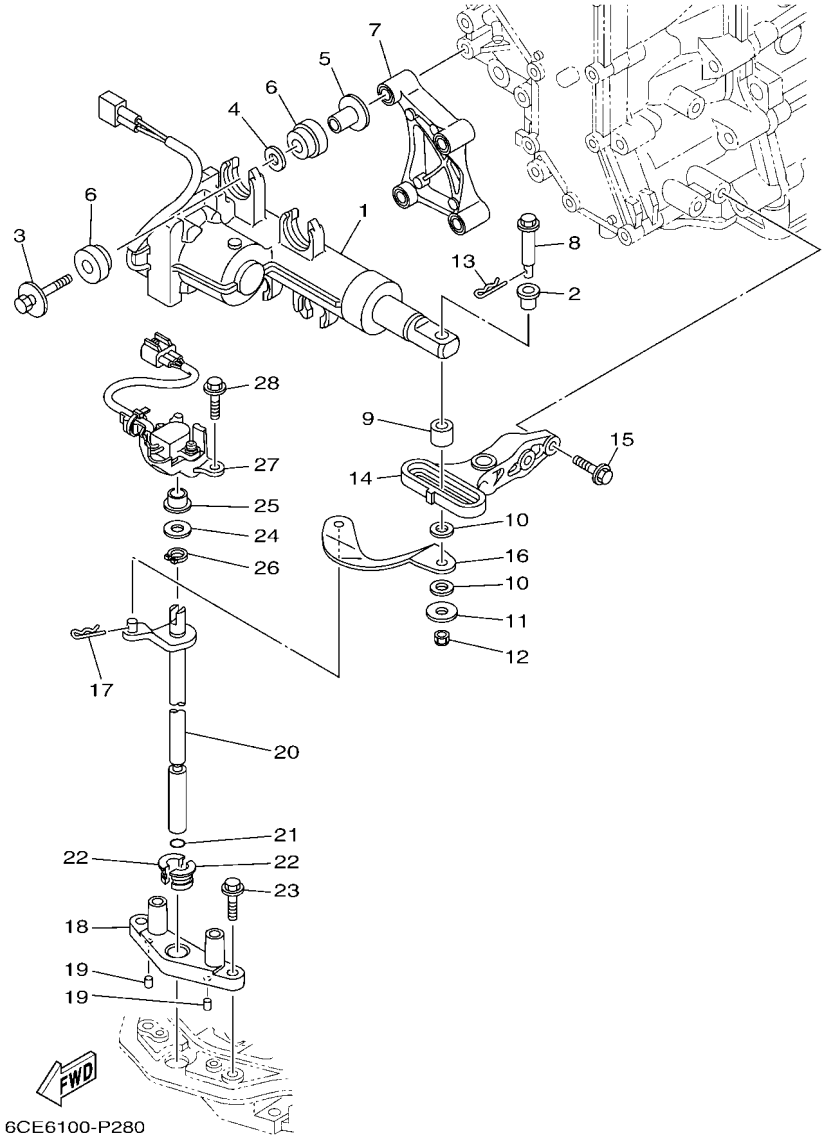

FIG. 28 CONTROL — COMMANDE

REF. NO.	PART NO. N° PIECES	DESCRIPTION DESCRIPTION	6CL7	6CM7				REMARKS REMARQUES
1	6ML–4820A–00	ACTUATOR UNIT ACTUATOR UNIT	1	1				
2	90386–08008	BUSH DOUILLE	1	1				
3	90119–08168	BOLT, WITH WASHER BOULON, AVEC RONDELLE	4	4				
4	90201–12064	WASHER, PLATE RONDELLE, PLATE	4	4				
5	90387–08104	COLLAR COLLERETTE	4	4				
6	6CE–85564–00	GROMMET RONDELLE CAOUTCHOUC	8	8				
7	6CE–44142–20	JOINT AXE	1	1				
8	6CE–42195–10	PIN, JOINT 1 GOUPILLE	1	1				
9	6CE–44122–10	BUSHING, SHIFT ROD LEVER DOUILLE, LEVIER D'EMBRAYAGE	1	1				
10	90202–08M41	WASHER, PLATE RONDELLE, PLATE	2	2				
11	90201–06068	WASHER, PLATE RONDELLE, PLATE	1	1				
12	90185–06M07	NUT, SELF-LOCKING ECROU,AUTO-BLOQUANT	1	1				
13	90468–18008	CLIP JONC	1	1				
14	6CE–44117–10	BRACKET SUPPORT	1	1				
15	97575–06525	BOLT, WITH WASHER VIS HEXAGONAL AVC RONDELLE	2	2				
16	6CE–44121–10	LEVER, SHIFT ROD LEVIER, TIGE D'INVERSION	1	1				
17	90468–18008	CLIP JONC	1	1				
18	6CE–44118–A0	BRACKET SUPPORT	1	1				
19	93604–07M13	PIN, DOWEL CLAVETTE	2	2				
20	6CE–44120–20	HANDLE GEAR SHIFT ASSY LEVIER D'EMBRAYAGE	1	1				
21	93210–09165	O-RING JOINT TORIQUE	1	1				
22	90386–11001	BUSH DOUILLE	2	2				
23	95875–06025	BOLT, FLANGE BOULON, A COLLERETTE	2	2				
24	90201–11008	WASHER, PLATE RONDELLE, PLATE	1	1				
25	90386–10001	BUSH DOUILLE	1	1				
26	93410–10082	CIRCLIP CLIPS	1	1				
27	6CE–68303–00	SENSOR ASSY SONDE (ENS.)	1	1				

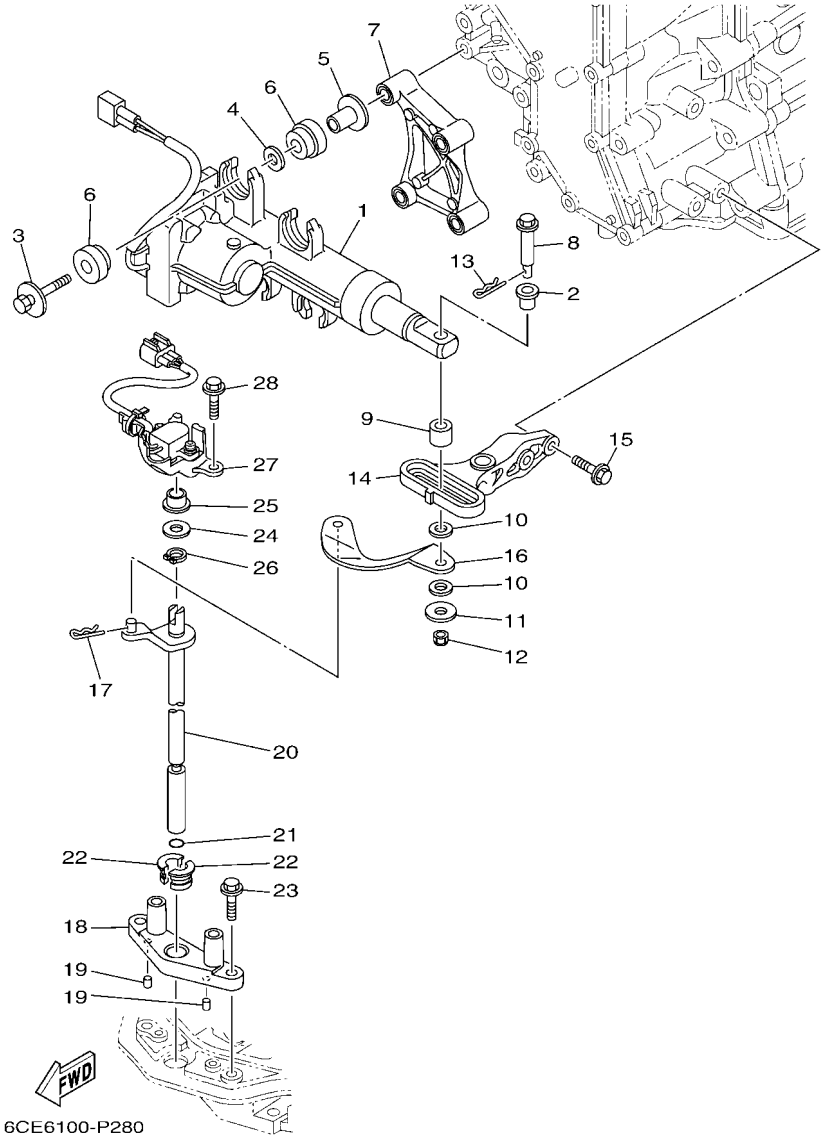

FIG. 28 CONTROL — COMMANDE

REF. NO.	PART NO. N° PIECES	DESCRIPTION DESCRIPTION	6CL7	6CM7				REMARKS REMARQUES
28	95875–06025	BOLT, FLANGE BOULON, A COLLERETTE	2	2				

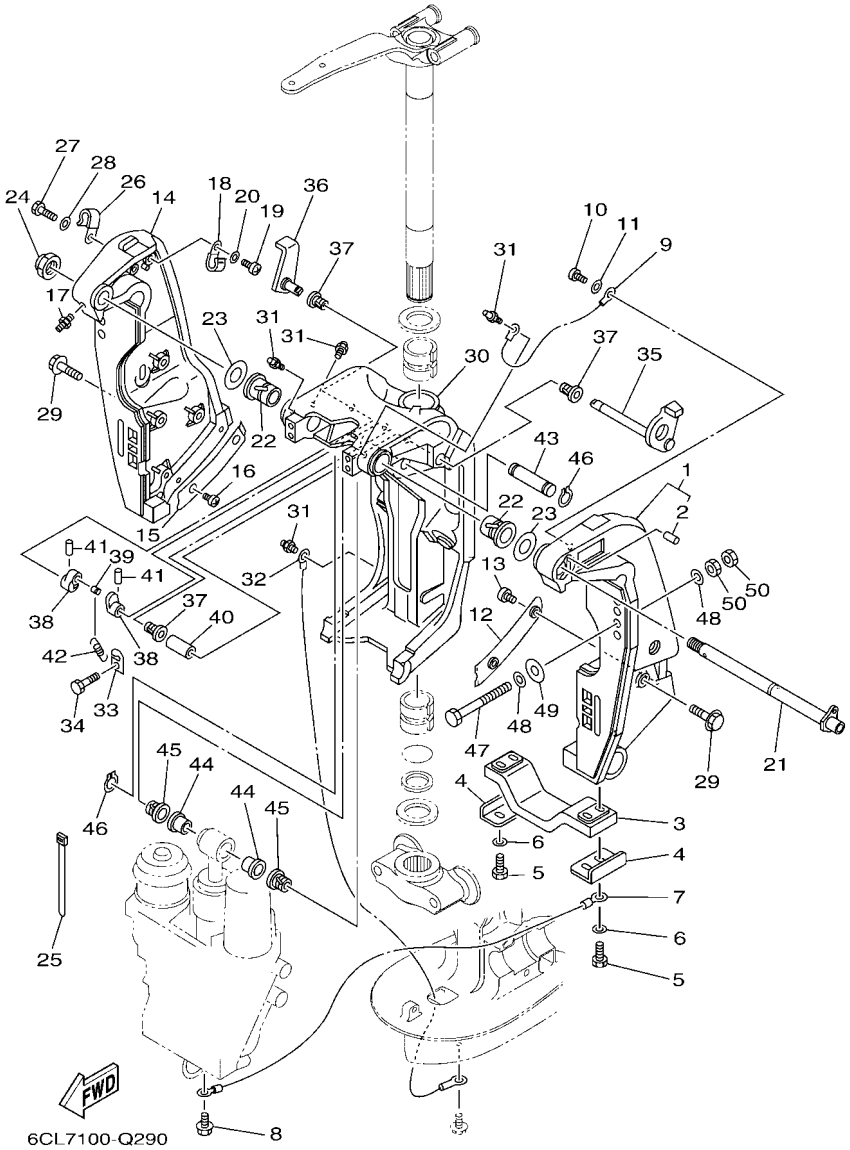

FIG. 29 BRACKET 1 SUPPORT 1

REF. NO.	PART NO. N° PIECES	DESCRIPTION DESCRIPTION	6CL7	6CM7				REMARKS REMARQUES
1	69J–43111–10–8D	BRACKET, CLAMP 1 PRESSE 1	1	1				FOR TILT LIMIT FOR TILT LIMIT
2	93606–19002	.PIN, DOWEL .GOUPILLE	1	1				
3	6G5–45251–02	ANODE ANODE	1	1				
4	6G5–44526–00	PLATE PLAQUE	2	2				
5	97095–06025	BOLT BOULON	4	4				
6	92995–06600	WASHER RONDELLE	4	4				
7	6H1–82148–00	WIRE, LEAD 4 FIL 4	1	1				
8	97595–06510	BOLT, WITH WASHER VIS HEXAGONAL AVC RONDELLE	1	1				
9	6E5–82148–00	WIRE, LEAD 4 FIL 4	1	1				
10	97885–06012	SCREW, PAN HEAD VIS, A ENCOCHE	1	1				
11	92995–06600	WASHER RONDELLE	1	1				
12	61A–43132–00	WASHER, FRICTION RONDELLE, FRICTION	1	1				
13	97885–06010	SCREW, PAN HEAD VIS, A ENCOCHE	2	2				
14	69J–43112–01–8D	BRACKET, CLAMP 2 PRESSE 2	1	1				
15	61A–43133–00	WASHER,FRICTION RONDELLE	1	1				
16	97885–06010	SCREW, PAN HEAD VIS, A ENCOCHE	2	2				
17	93700–06M03	NIPPLE, GREASE PION	1	1				
18	90465–08M83	CLAMP BRIDE	1	1				
19	97885–06012	SCREW, PAN HEAD VIS, A ENCOCHE	1	1				
20	92995–06600	WASHER RONDELLE	1	1				
21	6R3–43131–30	BOLT, CLAMP BRACKET BOULON, PRESSE	1	1				FOR TILT LIMIT FOR TILT LIMIT
22	90386–25M31	BUSH DOUILLE	2	2				
23	90201–26M59	WASHER, PLATE RONDELLE, PLATE	2	2				
24	90185–22M11	NUT, SELF-LOCKING ECROU,AUTO-BLOQUANT	1	1				
25	90465–11M10	CLAMP BRIDE	4	4				
26	90465–08M83	CLAMP BRIDE	1	1				
27	97095–06014	BOLT BOULON	1	1				

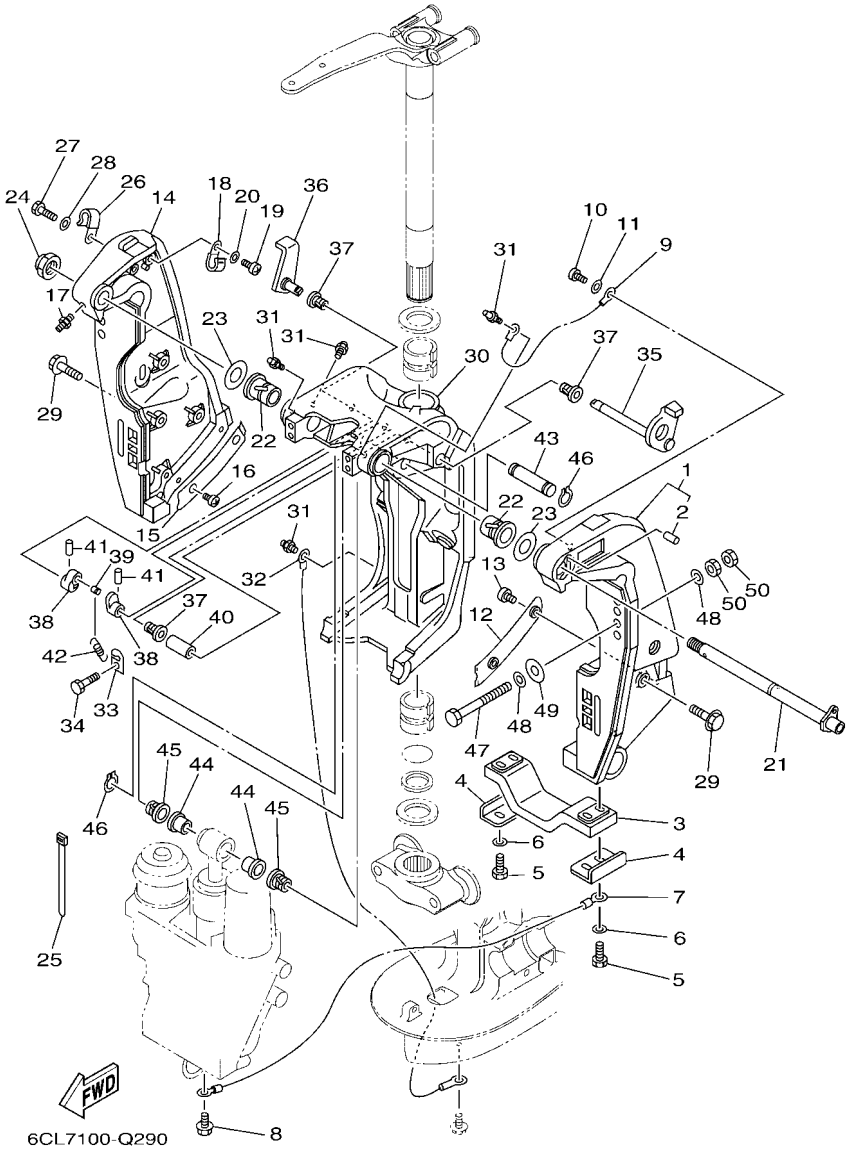

FIG. 29 BRACKET 1 — SUPPORT 1

REF. NO.	PART NO. N° PIECES	DESCRIPTION DESCRIPTION	6CL7	6CM7				REMARKS REMARQUES
28	92995–06600	WASHER RONDELLE	1	1				
29	90119–10024	BOLT, WITH WASHER BOULON, AVEC RONDELLE	8	8				
30	61A–43311–22–8D	BRACKET, SWIVEL 1 SUPPORT, PIVOT 1	1	1				
31	93700–06M03	NIPPLE, GREASE PION	5	5				
32	69J–82147–00	WIRE, LEAD 5 FIL 5	1	1				
33	6G5–43144–00	HOOK, SPRING CROCHET	1	1				
34	97095–06010	BOLT BOULON	1	1				
35	61A–43181–01	LEVER, TILT STOP 1 LEVIER VERROUILLAGE RELEVAGE 1	1	1				
36	6G5–43185–02	LEVER, TILT STOP 2 LEVIER VERROUILLAGE RELEVAGE 2	1	1				
37	90386–10M16	BUSH DOUILLE	3	3				
38	6G5–43148–00	COLLAR, DISTANCE ENTRETOISE	2	2				
39	90249–06M19	PIN GOUPILLE	1	1				
40	90387–10M05	COLLAR COLLERETTE	1	1				
41	91690–30020	PIN, SPRING AGRAFFE	2	2				
42	90506–16003	SPRING, TENSION RESSORT, TENSION	1	1				
43	6E5–43126–10	PIN, UPPER SHOCK MOUNT AXE, SUPERIEUR AMORTISSEUR	1	1				
44	90386–18M63	BUSH DOUILLE	2	2				
45	90386–18M14	BUSH DOUILLE	2	2				
46	93410–18M05	CIRCLIP CLIPS	2	2				
47	90101–12047	BOLT (L:150MM) BOULON (L:150MM)	4	4				
48	90201–13M01	WASHER, PLATE RONDELLE, PLATE	8	8				
49	90201–12426	WASHER, PLATE RONDELLE, PLATE	4	4				
50	95380–12600	NUT ECROU	8	8				

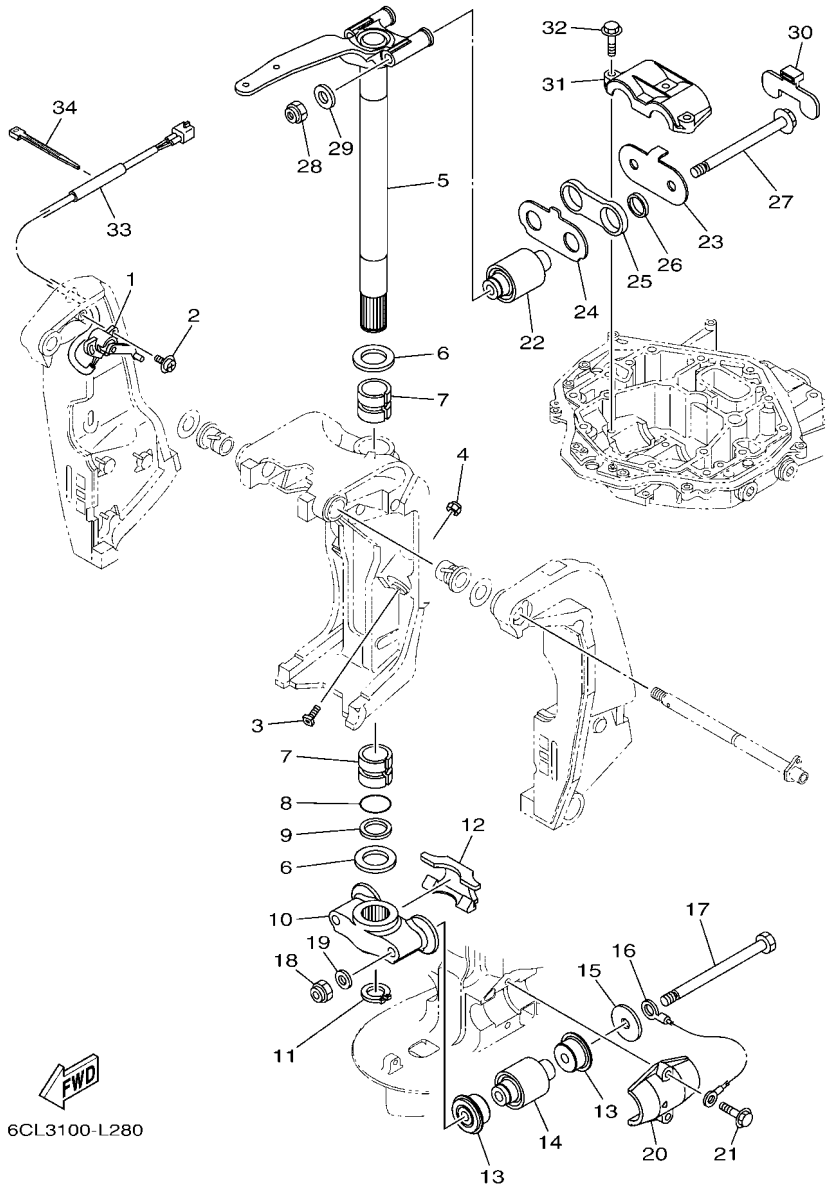

FIG. 30 BRACKET 2 — SUPPORT 2

REF. NO.	PART NO. N° PIECES	DESCRIPTION DESCRIPTION	6CL7	6CM7				REMARKS REMARQUES
1	69J–83672–11	TRIM SENDER INCLINER RACCORD	1	1				
2	97985–06216	SCREW, WITH WASHER VIS, AVEC RONDELLE	2	2				
3	61A–43376–00	BOLT, THRUST RECEIVER BOULON	2	2				
4	95780–10300	NUT, FLANGE ECROU	2	2				
5	6CE–42510–00–8D	STEERING BRACKET ASSY DIRECTION SUPPORT (ENS.)	1	1				
6	90201–40M00	WASHER, PLATE RONDELLE, PLATE	2	2				
7	90386–39M89	BUSH DOUILLE	2	2				
8	93210–35321	O-RING JOINT TORIQUE	1	1				
9	90202–40M47	WASHER, PLATE RONDELLE, PLATE	1	1				
10	6CE–44551–00–CA	HOUSING, LOWER MOUNT RUBBER 1 BOITIER, SILENT-BLOC INFERIEUR	1	1				
11	93410–37M04	CIRCLIP CLIPS	1	1				
12	6CE–44574–00	STOPPER, LOWER MOUNT RUBBER BUTEE	1	1				
13	6CE–44575–00	DAMPER, LOWER MOUNT RUBBER SILENT-BLOC, INFERIEUR	4	4				
14	6CE–44555–00	MOUNT DAMPER, LOWER SIDE SILENT-BLOC, INFERIEUR LATERAL	2	2				
15	90201–16032	WASHER, PLATE RONDELLE, PLATE	2	2				
16	6AW–82149–00	WIRE, LEAD 3 FIL 3	1	1				
17	90101–14004	BOLT BOULON	2	2				
18	90185–14M00	NUT, SELF-LOCKING ECROU,AUTO-BLOQUANT	2	2				
19	92995–14600	WASHER RONDELLE	2	2				
20	6CE–44552–00–CA	HOUSING, LOWER MOUNT RUBBER 2 BOITIER, SILENT-BLOC INFERIEUR	2	2				
21	90119–10024	BOLT, WITH WASHER BOULON, AVEC RONDELLE	4	4				
22	6CE–44514–00	MOUNT DAMPER, UPPER SIDE SILENT-BLOC, SUPERIEUR LATERAL	2	2				
23	6CE–44526–00	PLATE PLAQUE	1	1				
24	6CE–44536–00	PLATE 2 PLAQUETTE 2	1	1				
25	6CE–44532–00	STOPPER, UPPER MOUNT PLAQUETTE	1	1				
26	90387–28013	COLLAR COLLERETTE	2	2				
27	90105–14005	BOLT, FLANGE BOULON	2	2				

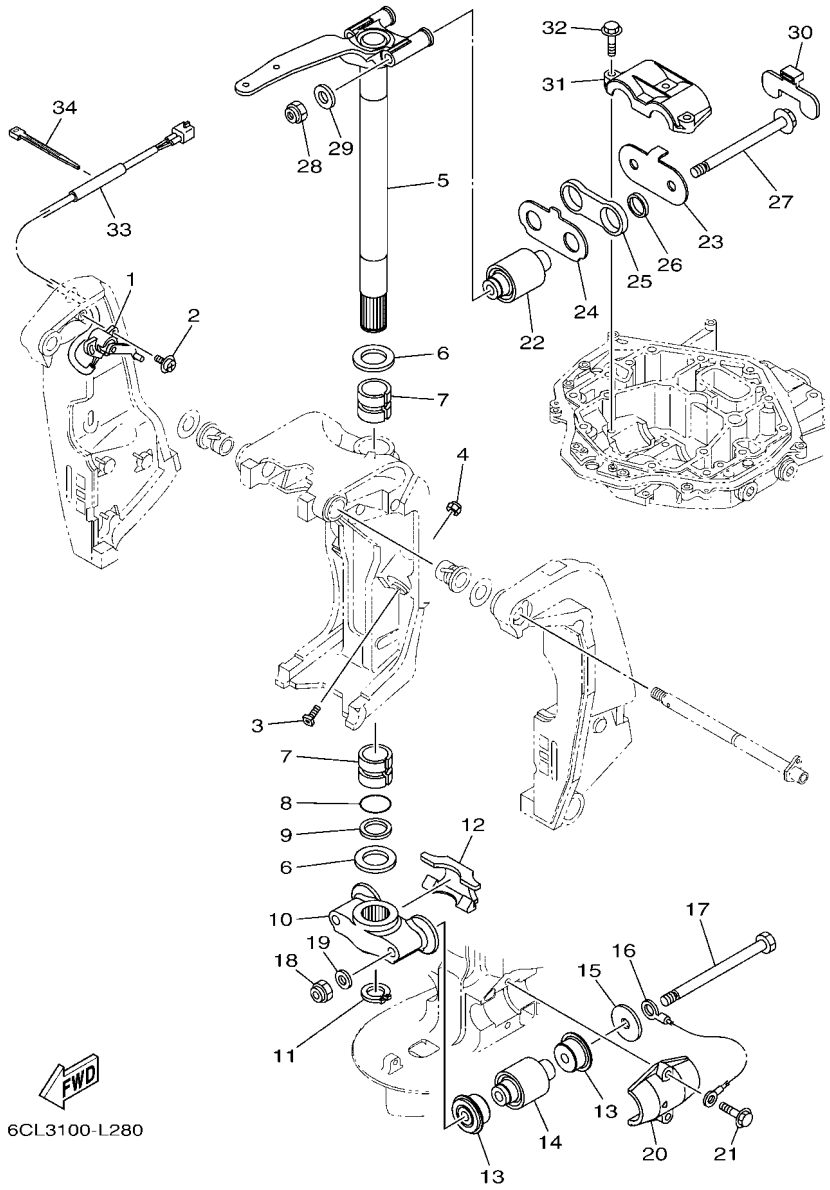

FIG. 30 BRACKET 2 — SUPPORT 2

REF. NO.	PART NO. N° PIECES	DESCRIPTION DESCRIPTION	6CL7	6CM7				REMARKS REMARQUES
28	90185–14M00	NUT, SELF-LOCKING ECROU,AUTO-BLOQUANT	2	2				
29	92995–14600	WASHER RONDELLE	2	2				
30	6CE–44533–00	DAMPER, UPPER MOUNT RUBBER COUVERCLE, SUSPENSION INFERIEU	1	1				
31	6CE–44511–00	COVER, UPPER MOUNT COUVERCLE, SUSPENSION SUPERIEU	1	1				
32	90119–10024	BOLT, WITH WASHER BOULON, AVEC RONDELLE	3	3				
33	90446–15003	HOSE (L100) DURITE (L100)	1	1				
34	90465–11M10	CLAMP BRIDE	1	1				

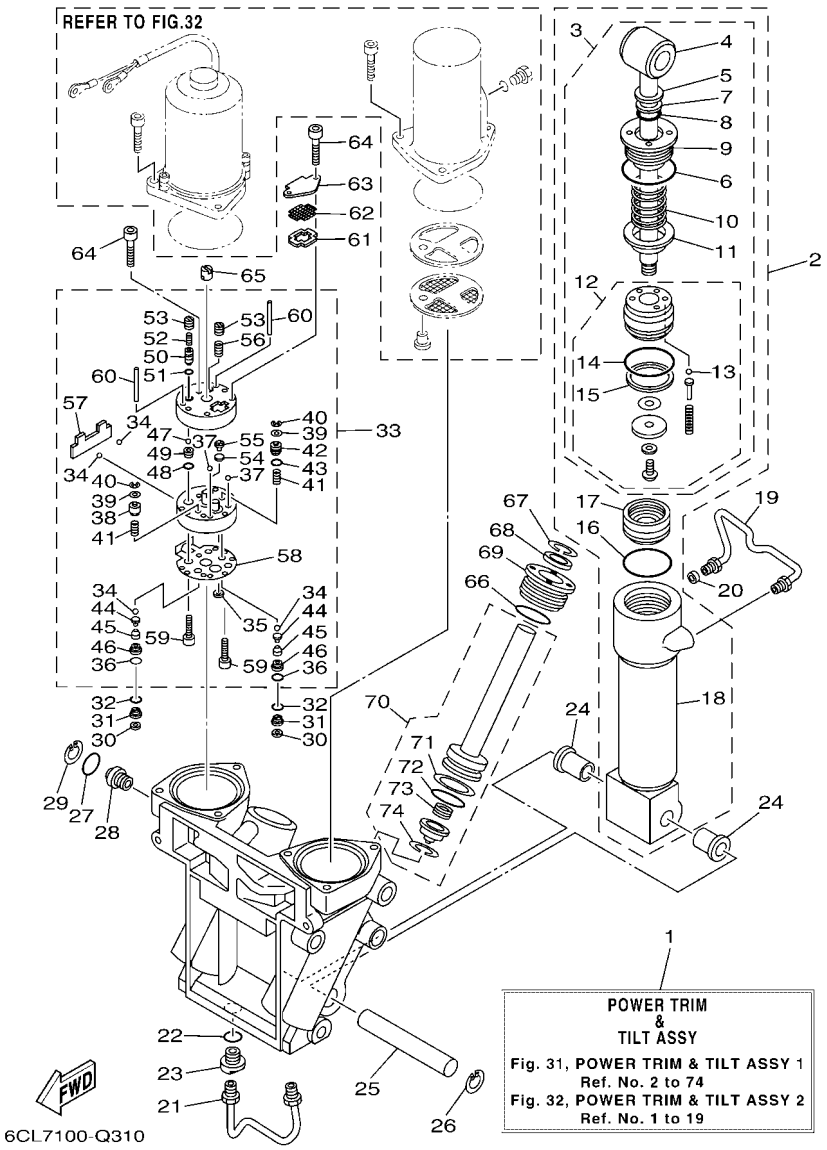

FIG. 31 POWER TRIM & TILT ASSY 1 — PUISSANCE PARER ET INCLINER 1

REF. NO.	PART NO. N° PIECES	DESCRIPTION DESCRIPTION	6CL7	6CM7				REMARKS REMARQUES
1	69J–43800–07–8D	POWER TRIM & TILT ASSY PUISSANCE PARER ET INCLINER (E	1	1				
2	6CE–43840–00	POWER TILT ASSY PUISSANCE INCLINER (ENS.)	1	1				
3	6CE–43810–00	.TILT PISTON SUB ASSY .INCLINER PISTON AUXILIAIRE(ENS	1	1				
4	69J–43801–01	..ROD ..TIGE	1	1				
5	93106–19N50	..OIL SEAL ..JOINT SPY	1	1				
6	6H1–43861–00	..O-RING ..JOINT TORIQUE	1	1				
7	6H1–43872–00	..RING, BACK UP ..RESSORT	1	1				
8	61A–4389H–01	..O-RING ..JOINT TORIQUE	1	1				
9	61A–43811–00	..SCREW, CYLINDER END ..VIS, CYLINDRE RACCORD	1	1				
10	69J–4384H–00	..SPRING ..RESSORT	1	1				
11	69J–4382E–00	..ADAPTOR 2 ..ADAPTEUR 2	1	1				
12	6CE–4380P–00	..PISTON SUB ASSY ..PISTON AUXILIAIRE (ENS.)	1	1				
13	93505–32038	...BALL ...BILLE	5	5				
14	61A–43861–00	...O-RING ...JOINT TORIQUE	1	1				
15	61A–43871–00	...RING, BACK UP ...SEGMENT	1	1				
16	61A–43861–00	.O-RING .JOINT TORIQUE	1	1				
17	6H1–43814–00	.PISTON, FREE .PISTON	1	1				
18	61A–43813–02	.CYLINDER, TILT .CYLINDRE	1	1				
19	61A–43835–01	PIPE TUYAU	1	1				
20	69J–4388J–00	PLUG 2 BOUCHON 2	1	1				
21	69J–43833–02	PIPE TUYAU	1	1				
22	93210–17239	O-RING JOINT TORIQUE	1	1				
23	69J–4388E–01	BOLT ,SCREW VIS	1	1				
24	90386–18M14	BUSH DOUILLE	2	2				
25	61A–43818–00	PIN, LOWER SHOCK MOUNT AXE, INFERIEUR AMORTISSEUR	1	1				
26	61A–43876–00	RING, SNAP RESSORT	1	1				
27	6D8–43863–00	O-RING JOINT TORIQUE	1	1				

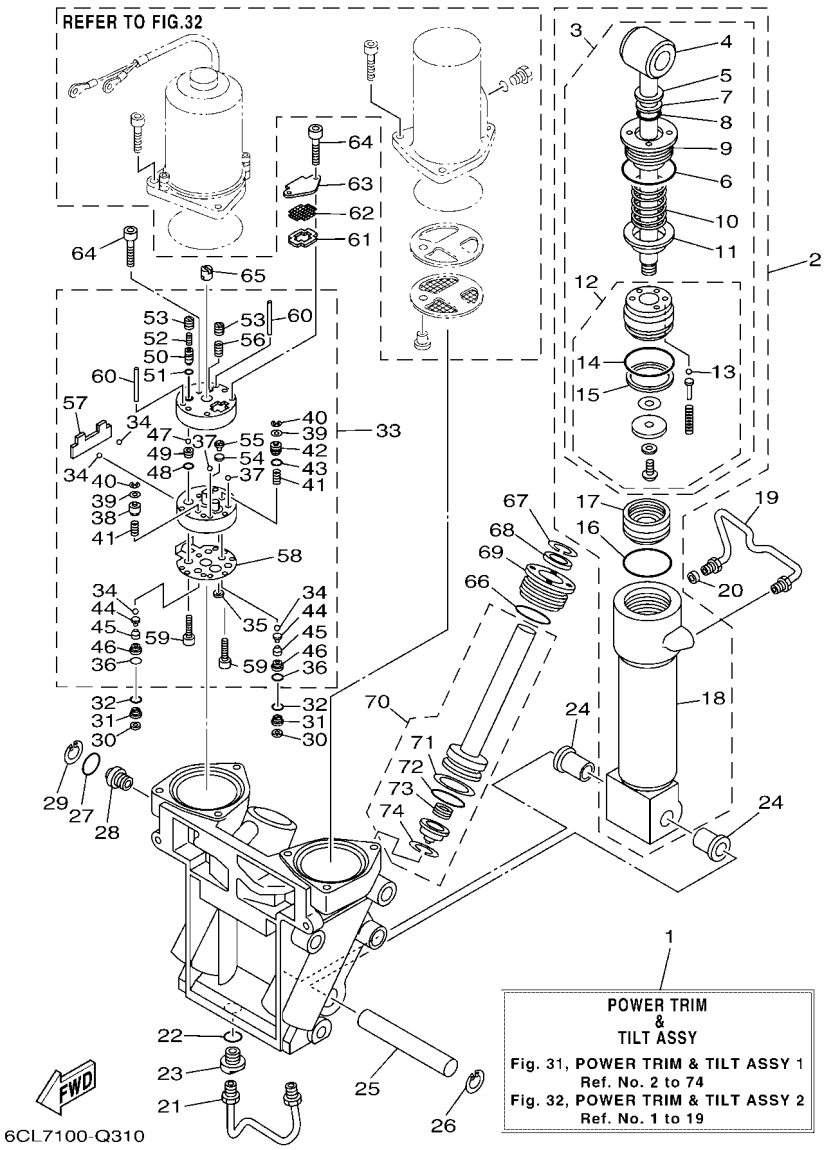

FIG. 31 POWER TRIM & TILT ASSY 1 — PUISSANCE PARER ET INCLINER 1

REF. NO.	PART NO. N° PIECES	DESCRIPTION DESCRIPTION	6CL7	6CM7				REMARKS REMARQUES
28	69J–43845–00	SCREW, MANUAL RELEASE VIS	1	1				
29	6H1–43875–00	RING, SNAP RESSORT	1	1				
30	69J–4381C–00	FILTER 3 FILTRE 3	2	2				
31	69J–43899–01	PLATE STOPPER PLAQUETTE	2	2				
32	69J–4389J–00	O-RING JOINT TORIQUE	2	2				
33	69J–43830–01	GEAR PUMP ASSY POMPE A PIGNON (ENS.)	1	1				
34	93505–32038	.BALL .BILLE	4	4				
35	69J–4381C–00	.FILTER 3 .FILTRE 3	1	1				
36	69J–4389J–00	.O-RING .JOINT TORIQUE	2	2				
37	93503–16003	.BALL .BILLES	2	2				
38	6CJ–4384M–00	.PISTON, SHUTTLE 2 .PISTON 2	1	1				
39	69A–4384F–00	.SEAL, MAIN VALVE .JOINT	2	2				
40	99002–03600	.CIRCLIP .CIRCLIP	2	2				
41	69J–43894–00	.SPRING, SHUTTLE RETURN .RESSORT	2	2				
42	6CJ–43841–00	.PISTON, SHUTTLE .PISTON	1	1				
43	6H1–43883–00	.O-RING .JOINT TORIQUE	1	1				
44	60V–4386A–00	.PIN, ABSORBER VALVE .GOUPILLE, SOUPAPE	2	2				
45	69J–43853–00	.SPRING, MAIN VALVE .RESSORT	2	2				
46	6CJ–43893–00	.WASHER .RONDELLE	2	2				
47	93501–08001	.BALL .BILLE	2	2				
48	93210–08391	.O-RING .JOINT TORIQUE	1	1				
49	69J–43851–00	.SEAT, RELIEF VALVE .SIEGE	1	1				
50	6CJ–43844–00	.PIN, VALVE SUPPORT .GOUPILLE	1	1				
51	93210–064A5	.O-RING .JOINT TORIQUE	1	1				
52	69J–43855–00	.SPRING, UP RELIEF .RESSORT	1	1				
53	6CJ–43843–00	.SCREW, VALVE LOCK .VIS	2	2				
54	6H1–4384G–11	.SEAL, RELIEF VALVE .JOINT	1	1				

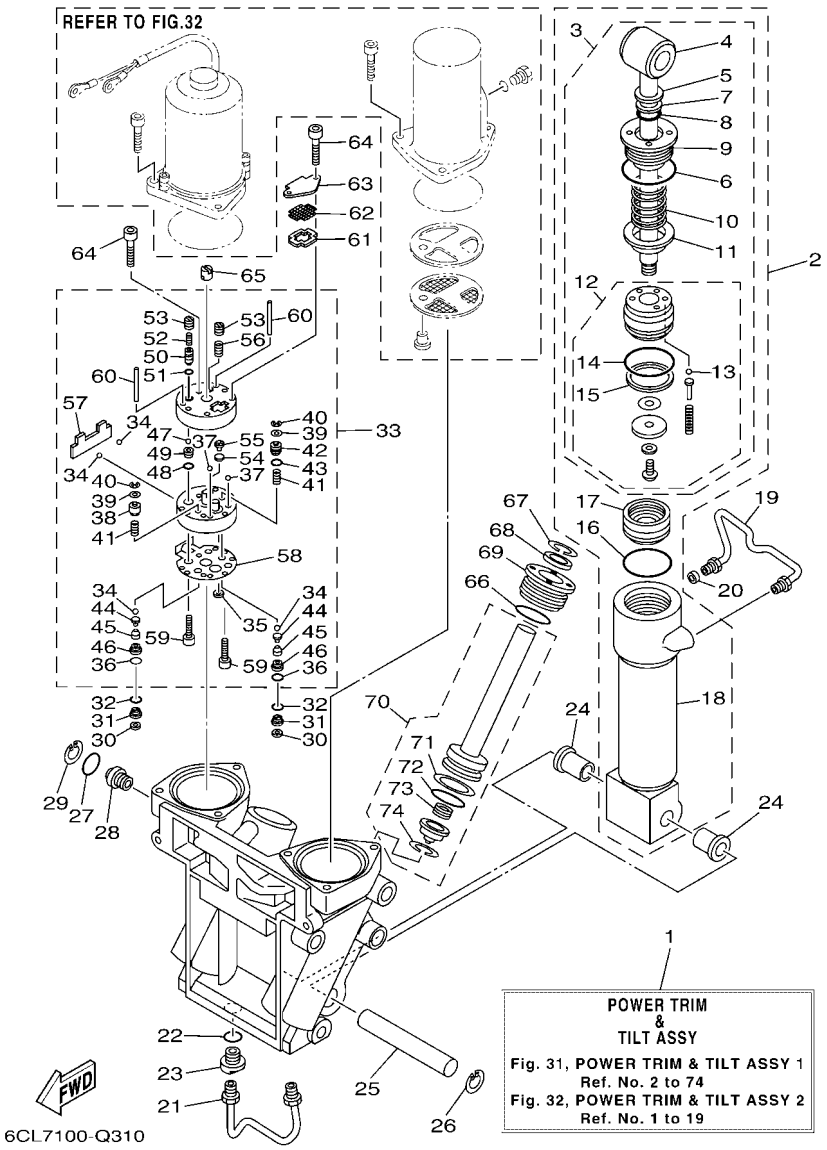

FIG. 31 POWER TRIM & TILT ASSY 1 — PUISSANCE PARER ET INCLINER 1

REF. NO.	PART NO. N° PIECES	DESCRIPTION DESCRIPTION	6CL7	6CM7				REMARKS REMARQUES
55	6H1–43844–10	.PIN, VALVE SUPPORT .GOUPILLE	1	1				
56	6H1–43856–10	.SPRING, DOWN RELIEF .RESSORT	1	1				
57	69J–43854–00	.SPRING, MANUAL RELEASE .RESSORT	1	1				
58	69J–4384G–00	.SEAL, RELIEF VALVE .JOINT	1	1				
59	91318–05025	.BOLT .BOULON	2	2				
60	93604–35236	.PIN, DOWEL .CLAVETTE	2	2				
61	69J–43871–00	RING, BACK UP SEGMENT	1	1				
62	69J–43816–00	FILTER 1 FILTRE 1	1	1				
63	69J–4381J–00	PLATE PLAQUE	1	1				
64	91318–05040	BOLT BOULON	3	3				
65	69J–43831–00	CONNECTOR, SHAFT RACCORD	1	1				
66	61A–43861–00	O-RING JOINT TORIQUE	2	2				
67	6T4–43875–01	RING, SNAP RESSORT	2	2				
68	61A–43822–00	SEAL, TRIM DUST JOINT	2	2				
69	61A–43821–01	SCREW, TRIM CYLINDER END VIS	2	2				
70	69J–43820–01	TRIM PISTON SUB ASSY PARER PISTON AUXILIAIRE (ENS.)	2	2				
71	61A–43874–00	.RING, BACK UP .RESSORT	1	1				
72	61A–43864–00	.O-RING .JOINT TORIQUE	1	1				
73	61A–4384H–10	.SPRING .RESSORT	1	1				
74	61A–43875–10	.RING, SNAP .RESSORT	1	1				

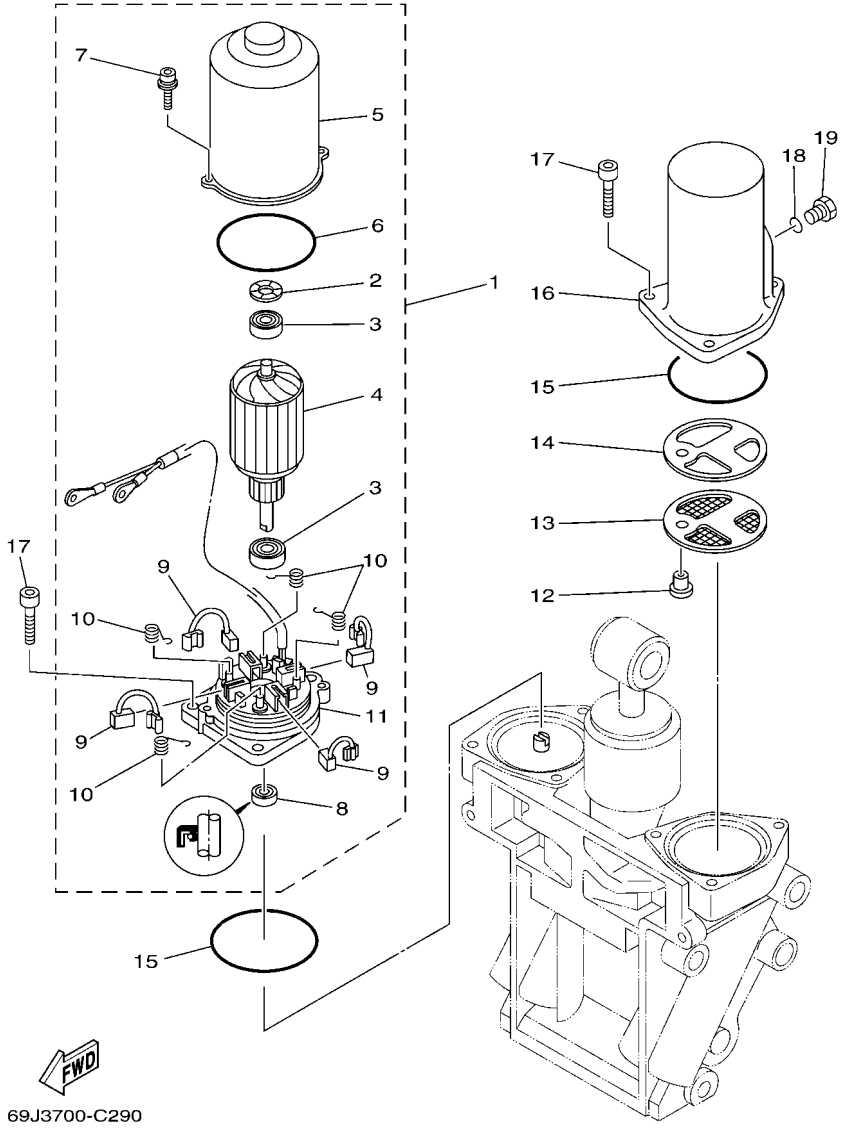

FIG. 32 POWER TRIM & TILT ASSY 2 — PUISSANCE PARER ET INCLINER 2

REF. NO.	PART NO. N° PIECES	DESCRIPTION DESCRIPTION	6CL7	6CM7				REMARKS REMARQUES
1	69J–43880–01	MOTOR ASSY MOTEUR (ENS.)	1	1				
2	90206–14N50	.WASHER, WAVE .RONDELLE, ONDULEE	1	1				
3	93399–999T6	.BEARING .ROULEMENT	2	2				
4	69J–43805–00	.ARMATURE ASSY .INDUIT (ENS.)	1	1				
5	69J–43804–00	.STATOR ASSY .STATOR (ENS.)	1	1				
6	69J–43861–00	.O-RING .JOINT TORIQUE	1	1				
7	69J–43886–00	.BOLT .BOULON	2	2				
8	69J–43882–00	.OIL SEAL .JOINT SPI	1	1				
9	69J–43891–00	.BRUSH 1 .BALAI 1	4	4				
10	69J–4386K–00	.SPRING, BRUSH .RESSORT, BALAI	4	4				
11	69J–43881–01	.FRAME, END .BATI	1	1				
12	69J–4388H–00	PLUG BOUCHON	1	1				
13	69J–43817–00	FILTER 2 FILTRE 2	1	1				
14	69J–4388F–00	SPACER ENTRETOISE	1	1				
15	93210–66001	O-RING JOINT TORIQUE	2	2				
16	69J–43828–00	BODY, RESERVOIR CORPS	1	1				
17	69J–43888–00	BOLT, SOCKET BOULON	6	6				
18	93210–09165	O-RING JOINT TORIQUE	1	1				
19	6H1–43829–00	PLUG, RESERVOIR BOUCHON	1	1				

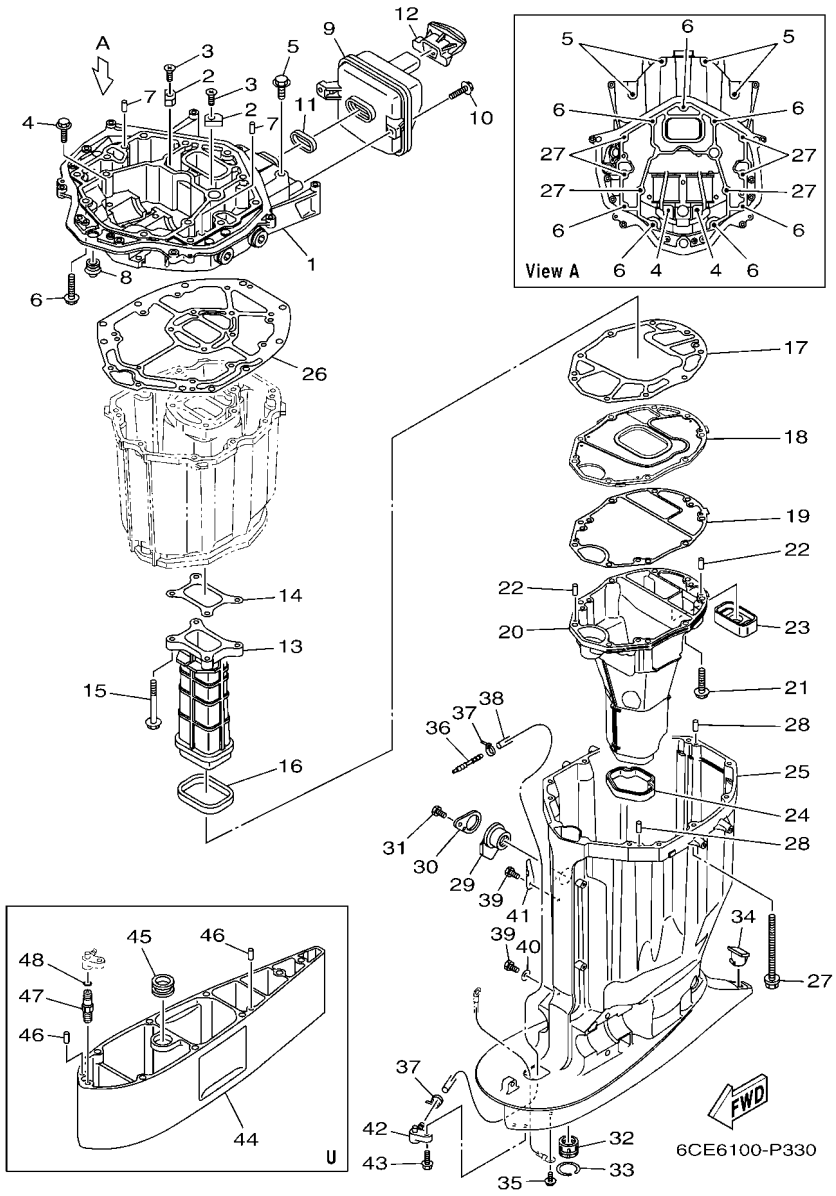

FIG. 33 UPPER CASING FOURREAU

REF. NO.	PART NO. N° PIECES	DESCRIPTION DESCRIPTION	6CL7	6CM7				REMARKS REMARQUES
1	6CE–41137–00–CA	GUIDE, EXHAUST COLLECTEUR D'ECHAPPEMENT	1	1				
2	63P–11325–11	ANODE ANODE	2	2				
3	90151–06M02	SCREW, COUNTERSUNK VIS, TETE NOYEE	2	2				
4	90119–08102	BOLT, WITH WASHER BOULON, AVEC RONDELLE	2	2				
5	97575–10545	BOLT, WITH WASHER VIS HEXAGONAL AVC RONDELLE	4	4				
6	97575–10535	BOLT, WITH WASHER VIS HEXAGONAL AVC RONDELLE	7	7				
7	93608–16M16	PIN, DOWEL AXE	2	2				
8	6E5–42724–00	GROMMET PASSE-FIL	1	1				
9	6CB–14750–A0	SILENCER ASSY SILENCIEUX	1	1				
10	95895–06020	BOLT, FLANGE BOULON	2	2				
11	6CB–14755–00	GASKET, SILENCER JOINT, SILENCIEUX	1	1				
12	6CB–42769–01	SEAL, RUBBER BOURRELET, CAOUTCHOUC	1	1				
13	6CB–41132–00–9S	MANIFOLD, EXHAUST PIPE D'ECHAPPEMENT	1	1				
14	6CB–41134–00	GASKET, EXHAUST MANIFOLD JOINT, PIPE D'ECHAPPEMENT	1	1				
15	97575–08560	BOLT, WITH WASHER VIS HEXAGONAL AVC RONDELLE	4	4				
16	6CB–41138–00	SEAL, EXT. 1 JOINT DE GROUPE 1	1	1				
17	6CB–41135–00	GASKET, EXHAUST MANIFOLD JOINT, PIPE D'ECHAPPEMENT	1	1				
18	6CE–45181–00–9S	PLATE PLAQUETTE	1	1				
19	6CE–41136–00	GASKET, EXHAUST MANIFOLD 4 JOINT, PIPE D'ECHAPPEMENT 4	1	1				
20	6CE–14711–00–9S	MUFFLER 1 POT D'ECHAPPEMENT 1	1	1				
21	97575–08535	BOLT, WITH WASHER VIS HEXAGONAL AVC RONDELLE	9	9				
22	93606–19M23	PIN, DOWEL GOUPILLE	2	2				
23	6CE–45127–00	SEAL JOINT	1	1				
24	6CE–45123–00	GASKET, MUFFLER JOINT, POT DE DETENTE	1	1				
25	6CE–45111–00–8D	CASING, UPPER FOURREAU	1	1				
26	6CB–45113–00	GASKET, UPPER CASING JOINT, TUBE D'ARBRE	1	1				
27	90119–10007	BOLT, WITH WASHER BOULON, AVEC RONDELLE	6	6				

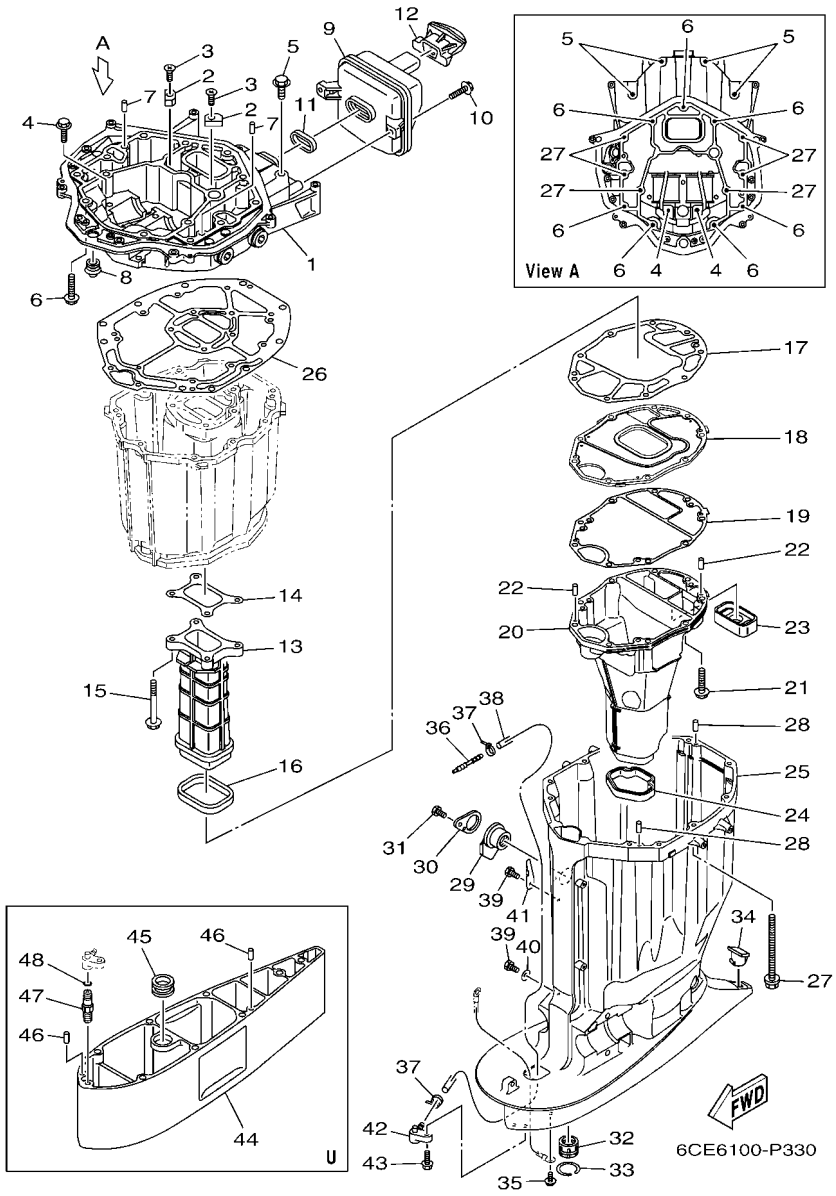

FIG. 33 UPPER CASING — FOURREAU

REF. NO.	PART NO. N° PIECES	DESCRIPTION DESCRIPTION	6CL7	6CM7				REMARKS REMARQUES
28	93608–16M16	PIN, DOWEL AXE	2	2				
29	6BB–15316–00	DAMPER 1 AMORTISSEUR 1	1	1				
30	6BB–45152–01	COVER, UPPER CASING 2 CAPUCHON FOURREAU	1	1				
31	97095–06012	BOLT BOULON	1	1				
32	69J–45318–01	BUSHING, DRIVE SHAFT DOUILLE, ARBRE MOTEUR	1	1				
33	93420–36M01	CIRCLIP CIRCLIP, TYPE S	1	1				
34	61A–45155–00	CAP CAPUCHON	1	1				
35	95895–06010	BOLT, FLANGE BOULON	1	1				
36	6E5–83558–00	END, NIPPLE RACCORD DE NIPPLE		1				EXCEPT LAN SPEED EXCEPT LAN SPEED
37	90465–11M10	CLAMP BRIDE	1					FOR LAN SPEED FOR LAN SPEED
	90465–11M10	CLAMP BRIDE		2				EXCEPT LAN SPEED EXCEPT LAN SPEED
38	90445–07034	HOSE (L2470) DURITE (L2470)	1					FOR LAN SPEED FOR LAN SPEED
	90445–07032	HOSE (L1920) DURITE (L1920)		1				EXCEPT LAN SPEED EXCEPT LAN SPEED
39	97095–06010	BOLT BOULON	2	2				
40	90201–06M02	WASHER, PLATE RONDELLE, PLATE	1	1				
41	90462–10061	CLAMP BRIDE	1	1				
42	63P–45379–00	NIPPLE, HOSE RACCORD D'ESSENCE	1	1				
43	90119–06M18	BOLT, WITH WASHER BOULON, AVEC RONDELLE	1	1				
44	6CE–45211–10–8D	EXTENSION EXTENSION	1					U(30.3") U(30.3")
45	6AW–44366–00	DAMPER, WATER SEAL 2 JOINT, TUBE D'EAU 2	1					U(30.3") U(30.3")
46	93608–16M16	PIN, DOWEL AXE	2					U(30.3") U(30.3")
47	63P–45378–00	NIPPLE, HOSE RACCORD, TUYAU	1					U(30.3") U(30.3")
48	93210–07003	O-RING JOINT TORIQUE	1					U(30.3") U(30.3")

FIG. 34 OIL PAN — VENTILATEUR D'HUILE

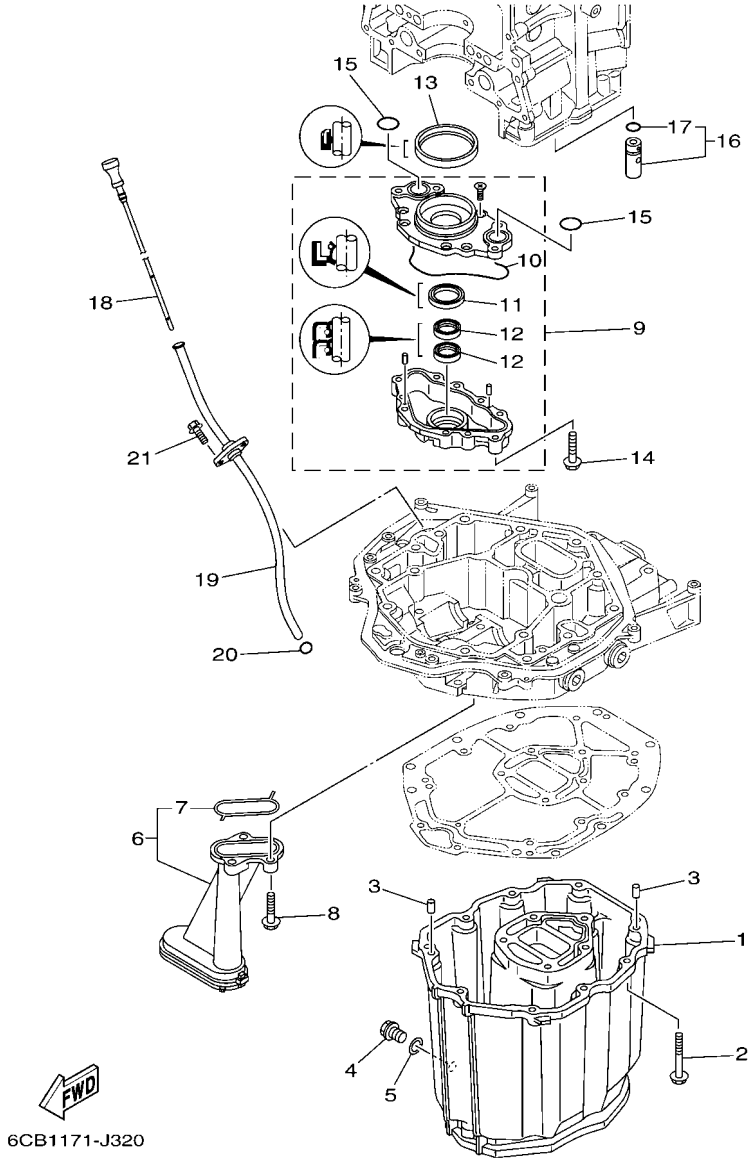

REF. NO.	PART NO. N° PIECES	DESCRIPTION DESCRIPTION	6CL7	6CM7				REMARKS REMARQUES
1	6CB–15311–00–CA	OIL PAN VENTILATEUR D'HUILE	1	1				
2	97575–08535	BOLT, WITH WASHER VIS HEXAGONAL AVC RONDELLE	10	10				
3	93608–16M16	PIN, DOWEL AXE	2	2				
4	90340–14M06	PLUG, STRAIGHT SCREW PLOT, FILETE DROIT	1	1				
5	90430–14M09	GASKET JOINT	1	1				
6	6CB–13411–00	STRAINER, OIL FILTRE, HUILE	1	1				
7	6AW–13415–00	.SEAL, OIL STRAINER .JOINT, FILTRE A HUILE	1	1				
8	95812–06025	BOLT, FLANGE BOULON	3	3				
9	6CB–13300–00	OIL PUMP ASSY POMPE A HUILE COMPLETE	1	1				
10	6CB–13329–00	.GASKET, PUMP COVER .JOINT, COUVERCLE DE POMPE	1	1				
11	6AW–13119–00	.OIL SEAL .JOINT SPY	1	1				
12	69J–13631–00	.OIL SEAL .JOINT SPY	2	2				
13	6CB–11355–00	SEAL, CYLINDER 1 JOINT, SPY CYLINDRE	1	1				
14	95875–06040	BOLT, FLANGE BOULON, A COLLERETTE	4	4				
15	93210–26658	O-RING JOINT TORIQUE	2	2				
16	6CB–13490–00	RELIEF VALVE ASSY SOUPAPE DE SECURITE COMPLET	1	1				
17	6CB–13473–00	.O-RING .JOINT TORIQUE	1	1				
18	6CB–15362–00	PLUG, OIL LEVEL PLOT, NIVEAU D'HUILE	1	1				
19	6CB–15377–00	GUIDE, INLET GUIDE D'ADMISSION	1	1				
20	93210–19MJ3	O-RING JOINT TORIQUE	1	1				
21	95875–06016	BOLT, FLANGE BOULON, A COLLERETTE	2	2				

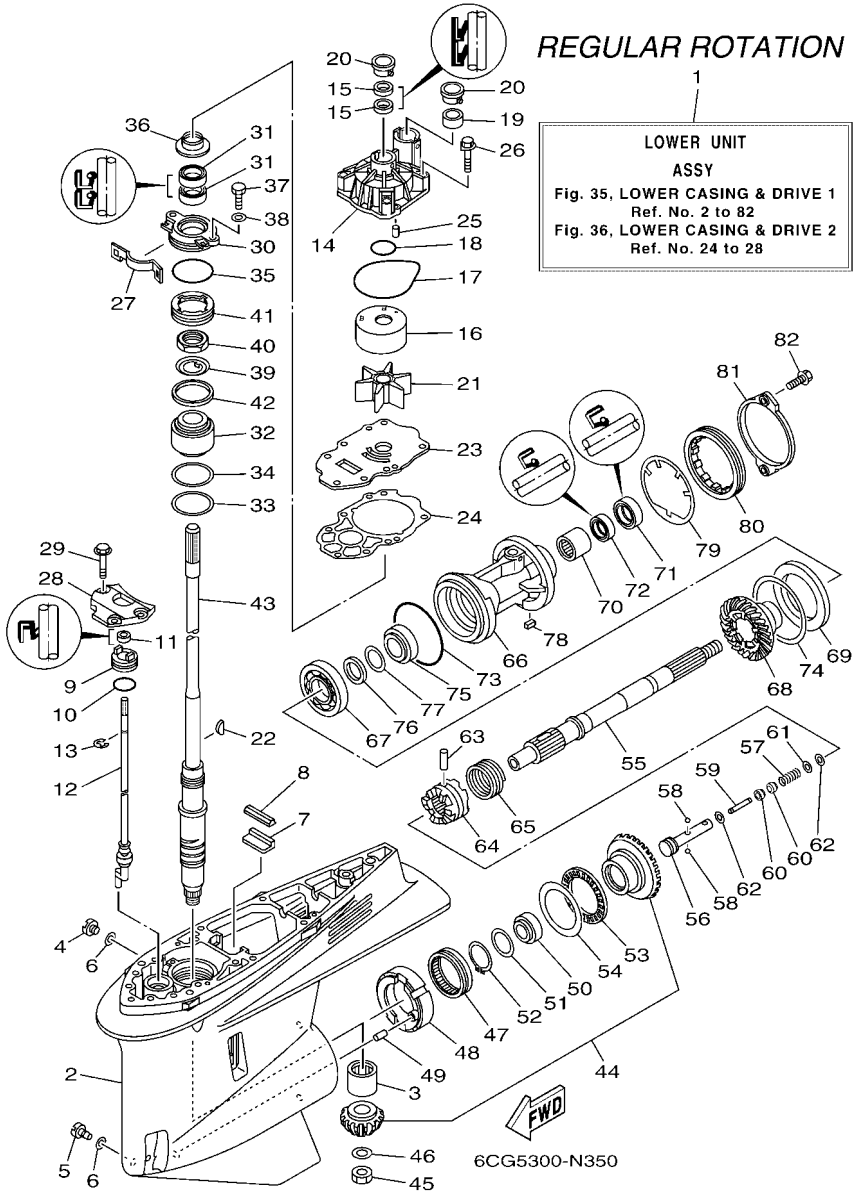

FIG. 35 LOWER CASING & DRIVE 1 — BOITIER D'HELICE TRANSMISSION1

REF. NO.	PART NO. N° PIECES	DESCRIPTION DESCRIPTION	6CL7	6CM7				REMARKS REMARQUES
1	6CE–45300–01–8D	LOWER UNIT ASSY UNITE INFERIEURE (ENS.)	1					X(25.3"),RH X(25.3"),RH
	6CE–45300–11–8D	LOWER UNIT ASSY UNITE INFERIEURE (ENS.)	1					U(30.3"),RH U(30.3"),RH
2	6CE–45301–00–8D	CASING, LOWER BEQUILLE	1					
3	93311–83280	BEARING ROULEMENT	1					
4	90340–08002	PLUG, STRAIGHT SCREW PLOT, FILETE DROIT	1					
5	688–45341–10	PLUG, DRAIN BOUCHON DE VIDANGE	1					
6	90430–08003	GASKET JOINT	2					
7	663–45376–00	GUIDE, SEAL DAMPER BUTEE, JOINT CAOUTCHOUC	1					
8	6CE–45375–00	DAMPER, SEAL BOURRELET, CAOUTCHOUC	1					
9	65N–45321–00	PLATE PLAQUETTE	1					X(25.3") X(25.3")
	6CE–45321–00	PLATE PLAQUETTE	1					U(30.3") U(30.3")
10	93210–33M49	O-RING JOINT TORIQUE	1					
11	93106–09014	OIL SEAL JOINT SPY	1					X(25.3") X(25.3")
	93106–10001	OIL SEAL JOINT SPY	1					U(30.3") U(30.3")
12	6CE–44150–00	SHIFT CAM ASSY CAME D'INVERSION	1					X(25.3"),RH X(25.3"),RH
	6CE–44150–10	SHIFT CAM ASSY CAME D'INVERSION	1					U(30.3"),RH U(30.3"),RH
13	99001–08600	CIRCLIP CIRCLIP	1					X(25.3") X(25.3")
	99001–09600	CIRCLIP CIRCLIP	1					U(30.3") U(30.3")
14	6CE–44311–01	HOUSING, WATER PUMP CORPS, POMPE A EAU	1					
15	93104–22M07	OIL SEAL JOINT SPY	2					
16	6AW–44322–00	INSERT, CARTRIDGE CUVETTE	1					
17	93210–94003	O-RING JOINT TORIQUE	1					
18	93210–37160	O-RING JOINT TORIQUE	1					
19	6AW–44365–00	DAMPER, WATER SEAL 1 JOINT, TUBE D'EAU 1	1					
20	6AW–44312–00	COVER, WATER PUMP HOUSING COUVERCLE	2					
21	6CE–44352–00	IMPELLER TURBINE	1					
22	90280–04002	KEY, WOODRUFF CLAVETTE, DEMI-LUNE	1					

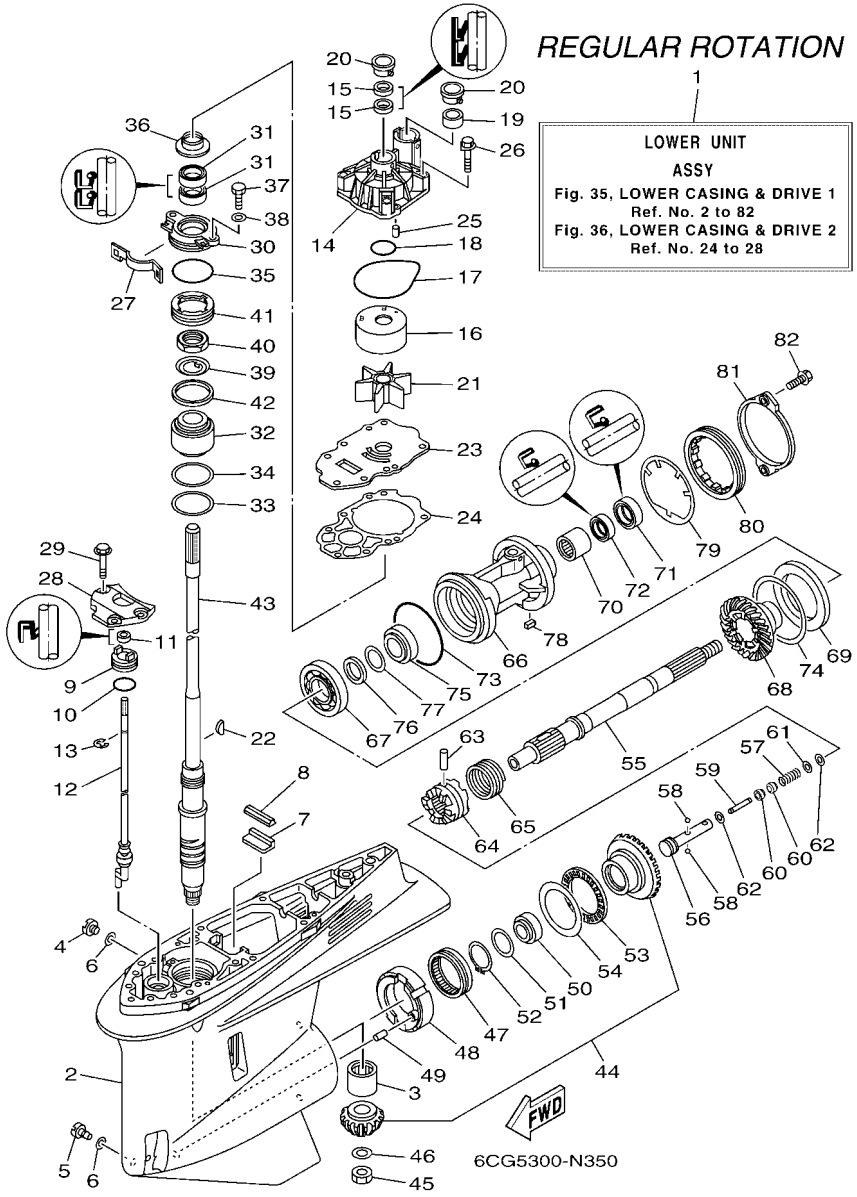

FIG. 35 LOWER CASING & DRIVE 1 — BOITIER D'HELICE TRANSMISSION1

REF. NO.	PART NO. N° PIECES	DESCRIPTION DESCRIPTION	6CL7	6CM7				REMARKS REMARQUES
23	6CE–44323–01	OUTER PLATE, CARTRIDGE PLAQUE EXTERIEURE	1					
24	6CE–44315–00	GASKET, WATER PUMP JOINT, POMPE A EAU	1					
25	93606–12019	PIN, DOWEL GOUPILLE	2					
26	90119–08M14	BOLT, WITH WASHER BOULON, AVEC RONDELLE	4					
27	6AW–45723–00	PLATE, SEAL PLAQUE, JOINT	1					
28	6CB–44312–00	COVER, WATER PUMP HOUSING COUVERCLE	1					
29	90119–08M32	BOLT, WITH WASHER BOULON, AVEC RONDELLE	3					
30	6CE–45335–00–9S	HOUSING, OIL SEAL LOGEMENT DE JOINT SPY	1					
31	93101–28M16	OIL SEAL JOINT SPY	2					
32	93399–99966	BEARING ROULEMENT	1					
33	90201–62008	WASHER, PLATE RONDELLE, PLATE	1					
34	6CE–45587–00	SHIM (T:0.10MM) CALE (T:0.10MM)	1					UR UR
	6CE–45587–10	SHIM (T:0.12MM) CALE (T:0.12MM)	1					UR UR
	6CE–45587–20	SHIM (T:0.15MM) CALE (T:0.15MM)	1					UR UR
	6CE–45587–30	SHIM (T:0.18MM) CALE (T:0.18MM)	1					UR UR
	6CE–45587–40	SHIM (T:0.30MM) CALE (T:0.30MM)	1					UR UR
	6CE–45587–50	SHIM (T:0.40MM) CALE (T:0.40MM)	1					UR UR
	6CE–45587–60	SHIM (T:0.50MM) CALE (T:0.50MM)	1					UR UR
35	93210–64488	O-RING JOINT TORIQUE	1					
36	6AW–45344–00	COVER, OIL SEAL FLASQE, JOINT D'HUILE	1					
37	97095–08020	BOLT BOULON	2					
38	92995–08600	WASHER RONDELLE	2					
39	90214–30003	WASHER, CLAW RONDELLE, A GRIFFES	1					
40	90170–30M18	NUT ECROU	1					
41	6CE–45244–00	NUT ECROU	1					
42	6CE–45539–00	SPACER 2 ENTRETOISE 2	1					
43	6CE–45501–00	DRIVE SHAFT COMP. ARBRE MOTEUR COMP.	1					X(25.3") X(25.3")

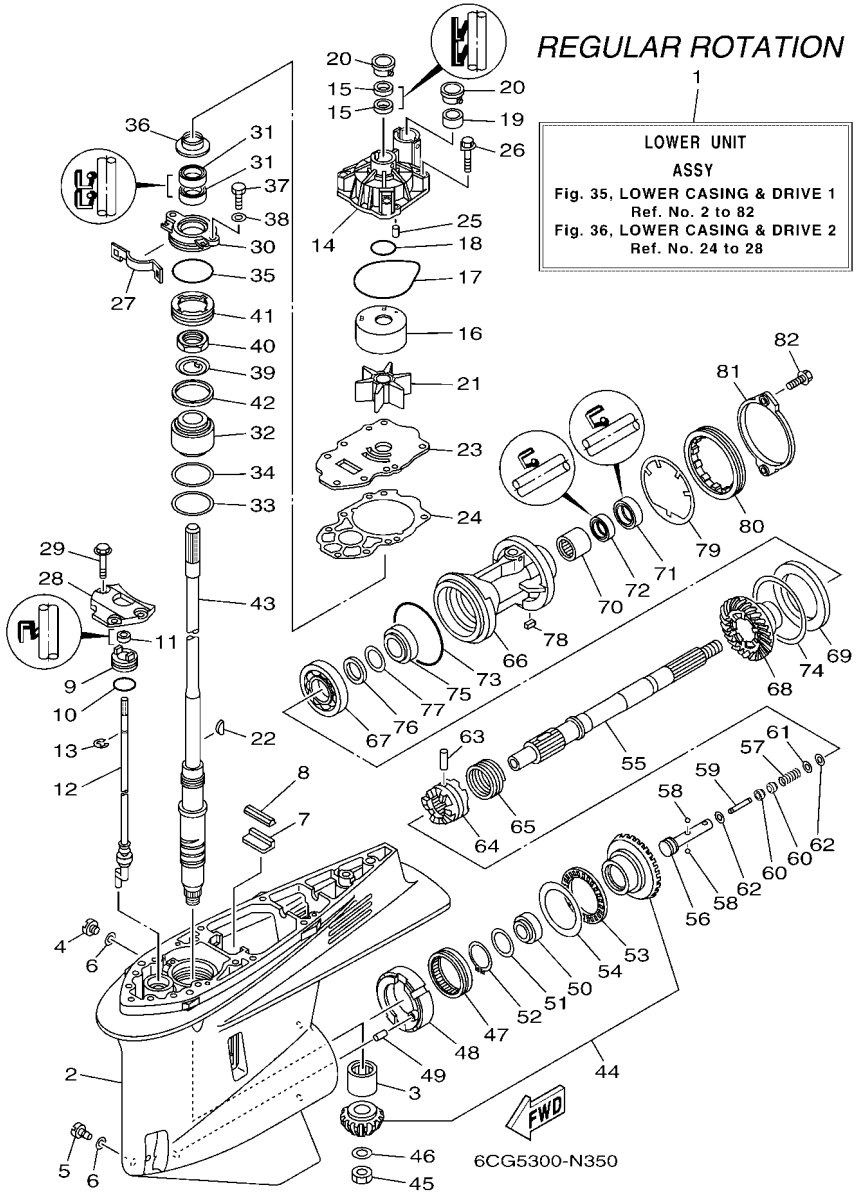

FIG. 35 LOWER CASING & DRIVE 1 — BOITIER D'HELICE TRANSMISSION1

REF. NO.	PART NO. N° PIECES	DESCRIPTION DESCRIPTION	6CL7	6CM7				REMARKS REMARQUES
43	6CE–45501–10	DRIVE SHAFT COMP. ARBRE MOTEUR COMP.	1					U(30.3") U(30.3")
44	6CE–45550–00	GEAR SET KIT, PIGNON	1					
45	90170–16M19	NUT ECROU	1					
46	90201–16M00	WASHER, PLATE RONDELLE, PLATE	1					
47	93311–85894	BEARING ROULEMENT	1					
48	6CB–45824–00	ADAPTER ADAPTATEUR	1					
49	93608–16M16	PIN, DOWEL AXE	1					
50	93332–000A4	BEARING ROULEMENT	1					
51	90201–41008	WASHER, PLATE RONDELLE, PLATE	1					
52	99009–47500	CIRCLIP CIRCLIP	1					
53	93340–67011	BEARING CERVEAUX DE DIRECTION	1					
54	6CB–45567–00	SHIM (T:2.00MM) CALE (T:2.00MM)	1					UR UR
	6CB–45567–10	SHIM (T:2.03MM) CALE (T:2.03MM)	1					UR UR
	6CB–45567–20	SHIM (T:2.06MM) CALE (T:2.06MM)	1					UR UR
	6CB–45567–30	SHIM (T:2.09MM) CALE (T:2.09MM)	1					UR UR
	6CB–45567–40	SHIM (T:2.12MM) CALE (T:2.12MM)	1					UR UR
	6CB–45567–50	SHIM (T:2.15MM) CALE (T:2.15MM)	1					UR UR
55	6CB–45611–00	SHAFT, PROPELLER ARBRE, HELICE	1					
56	6CB–45634–00	SLIDE, SHIFT CONTRE-POUSSOIR	1					
57	90501–10M77	SPRING, COMPRESSION RESSORT, COMPRESSION	1					
58	93501–04011	BALL BILLE	2					
59	6H1–45668–00	SHAFT, FREE 1 AXE 1	1					
60	61A–45635–00	PLUNGER, SHIFT POUSSOIR D'EMBRAYAGE	2					
61	90201–02M00	WASHER, PLATE RONDELLE, PLATE	1					
62	90183–02M03	NUT, SPRING ECROU, RESSORT	2					
63	90250–08M07	PIN, STRAIGHT GOUPILLE, DROITE	1					
64	6CE–45631–00	CLUTCH, DOG CRABOT	1					

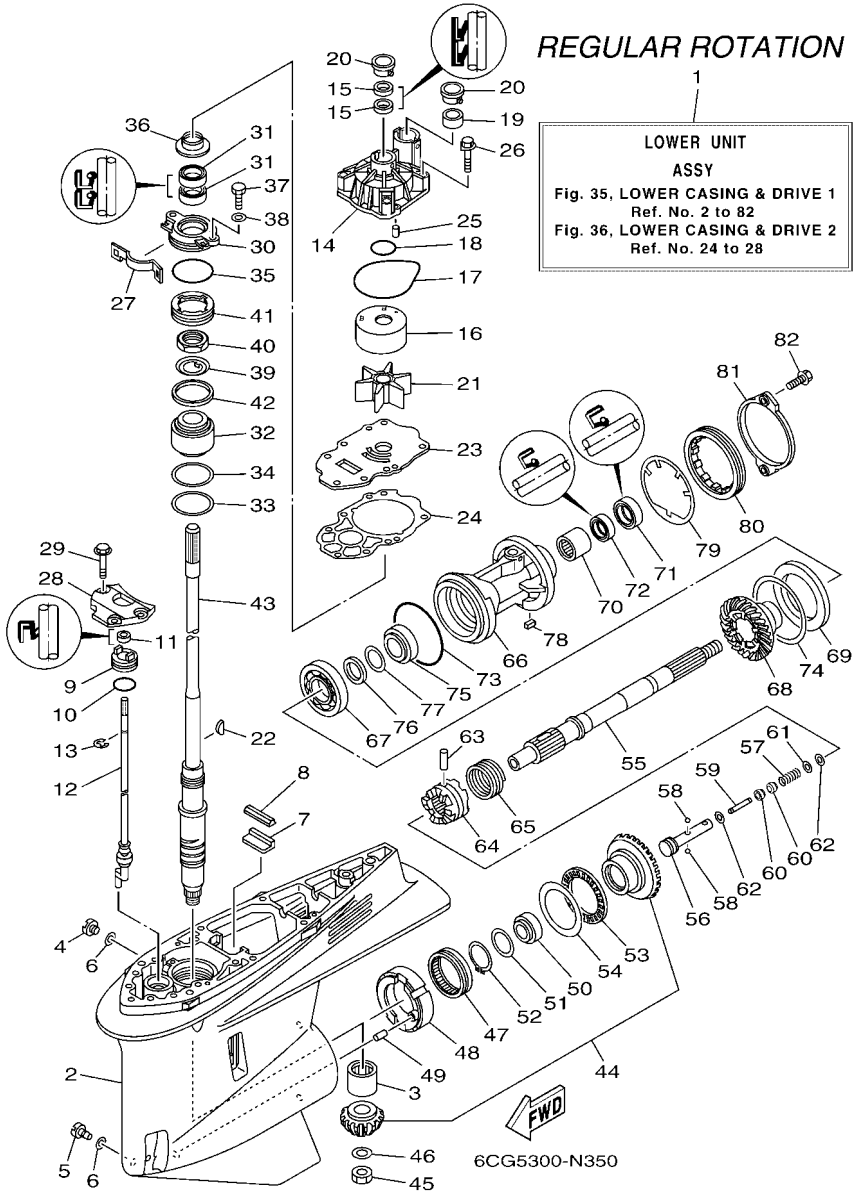

FIG. 35 LOWER CASING & DRIVE 1 — BOITIER D'HELICE TRANSMISSION1

REF. NO.	PART NO. N° PIECES	DESCRIPTION DESCRIPTION	6CL7	6CM7				REMARKS REMARQUES
65	6E5–45633–01	RING, CROSS PIN JONC, GOUPILLE CRABOT	1					
66	6CE–45332–00–CA	HOUSING, BEARING FLASQUE, ROULEMENT	1					
67	93306–209U0	BEARING ROULEMENT	1					
68	6CE–45571–00	GEAR 2 (21T) PIGNON 2 (21T)	1					
69	6CB–45576–00	WASHER, THRUST 2 RONDELLE DE CALAGE 2	1					
70	93315–43061	BEARING ROULEMENT	1					
71	93101–30002	OIL SEAL JOINT SPY	1					
72	93101–30004	OIL SEAL JOINT SPY	1					
73	93211–02001	O-RING JOINT TORIQUE	1					
74	6CB–45577–00	SHIM (T:0.10MM) CALE (T:0.10MM)	1					UR UR
	6CB–45577–10	SHIM (T:0.12MM) CALE (T:0.12MM)	1					UR UR
	6CB–45577–20	SHIM (T:0.15MM) CALE (T:0.15MM)	1					UR UR
	6CB–45577–30	SHIM (T:0.18MM) CALE (T:0.18MM)	1					UR UR
	6CB–45577–40	SHIM (T:0.30MM) CALE (T:0.30MM)	1					UR UR
	6CB–45577–50	SHIM (T:0.40MM) CALE (T:0.40MM)	1					UR UR
	6CB–45577–60	SHIM (T:0.50MM) CALE (T:0.50MM)	1					UR UR
75	93332–000A5	BEARING ROULEMENT	1					
76	90201–32008	WASHER, PLATE RONDELLE, PLATE	1					
77	676–45567–00	SHIM (T:0.7MM) CALE	1					UR UR
	676–45567–10	SHIM (T:0.8MM) CALE	1					UR UR
	676–45567–20	SHIM (T:0.9MM) CALE	1					UR UR
	676–45567–30	SHIM (T:1.0MM) CALE	1					UR UR
	676–45567–40	SHIM (T:1.1MM) CALE	1					UR UR
	676–45567–50	SHIM (T:1.2MM) CALE	1					UR UR
78	90282–05008	KEY, STRAIGHT CLAVETTE, DROITE	1					
79	6CB–45383–00	WASHER, CLAW FREIN D'ECROU	1					
80	6CB–45384–00	NUT ECROU	1					

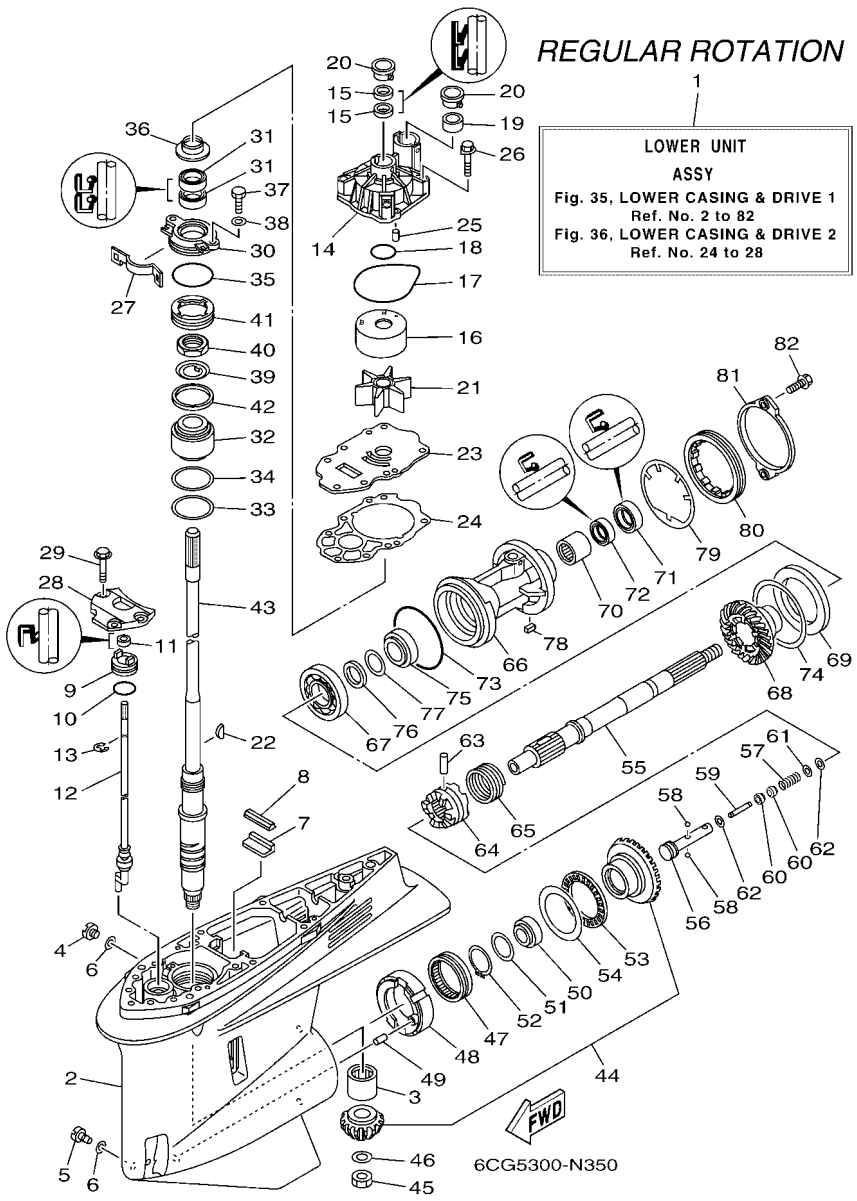

FIG. 35 LOWER CASING & DRIVE 1 — BOITIER D'HELICE TRANSMISSION1

REF. NO.	PART NO. N° PIECES	DESCRIPTION DESCRIPTION	6CL7	6CM7				REMARKS REMARQUES
81	6CE–45361–10	CAP, LOWER CASING COUVERCLE, BOITIER D'HELICE	1					
82	90105–08M61	BOLT, FLANGE BOULON	2					

FIG. 36 LOWER CASING & DRIVE 2 — BOITIER D'HELICE TRANSMISSION2

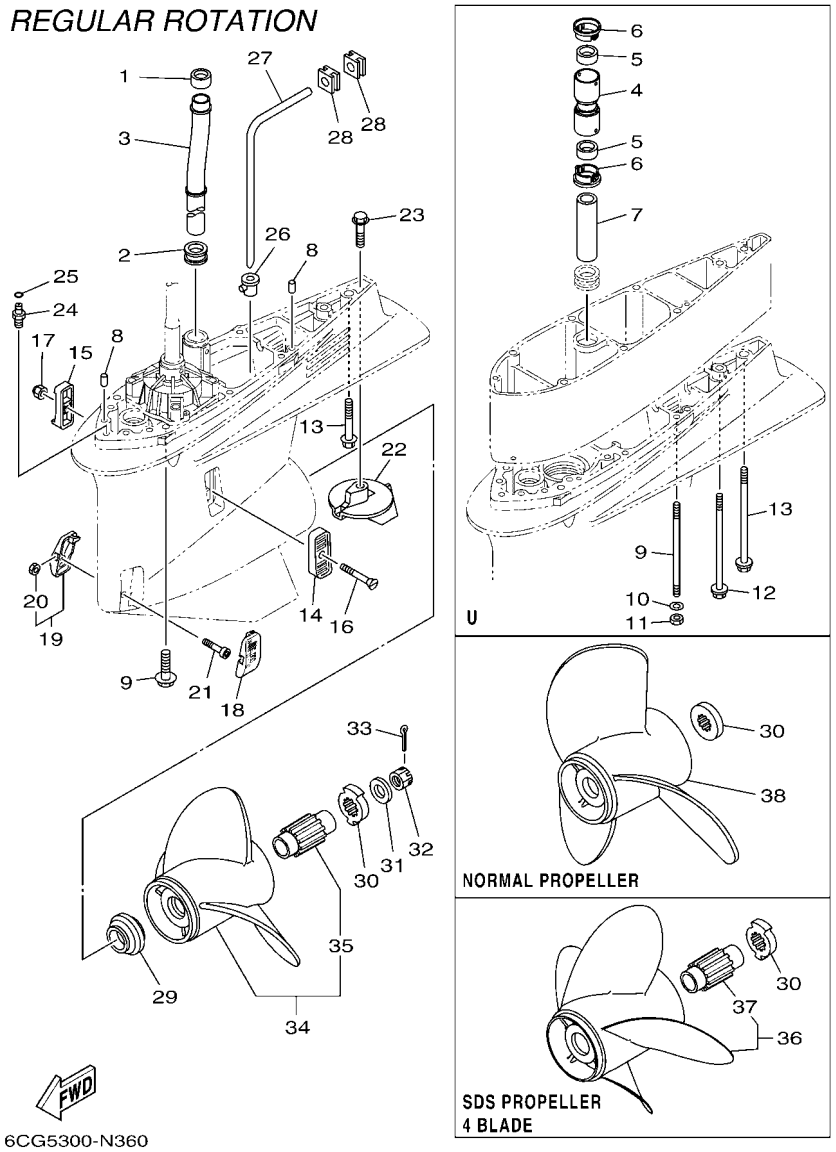

REF. NO.	PART NO. N° PIECES	DESCRIPTION DESCRIPTION	6CL7	6CM7				REMARKS REMARQUES
1	6AW–44365–00	DAMPER, WATER SEAL 1 JOINT, TUBE D'EAU 1	1					
2	6AW–44366–00	DAMPER, WATER SEAL 2 JOINT, TUBE D'EAU 2	1					
3	6CE–44361–00	TUBE, WATER 1 TUBE D'EAU 1	1					
4	6CE–44362–00	TUBE, WATER 2 TUBE D'EAU 2	1					U(30.3") U(30.3")
5	6AW–44365–00	DAMPER, WATER SEAL 1 JOINT, TUBE D'EAU 1	2					U(30.3") U(30.3")
6	6AW–44312–00	COVER, WATER PUMP HOUSING COUVERCLE	2					U(30.3") U(30.3")
7	6AW–44363–00	TUBE, WATER 3 TUBE D'EAU 3	1					U(30.3") U(30.3")
8	93608–16M16	PIN, DOWEL AXE	2					
9	90119–10038	BOLT, WITH WASHER BOULON, AVEC RONDELLE	7					X(25.3") X(25.3")
	90116–10041	BOLT, STUD GOUJON	6					U(30.3") U(30.3")
10	90201–10048	WASHER, PLATE RONDELLE, PLATE	6					U(30.3") U(30.3")
11	90170–10009	NUT ECROU	6					U(30.3") U(30.3")
12	90119–10009	BOLT, WITH WASHER BOULON, AVEC RONDELLE	1					U(30.3") U(30.3")
13	97575–10570	BOLT, WITH WASHER VIS HEXAGONAL AVC RONDELLE	1					X(25.3") X(25.3")
	90119–10008	BOLT, WITH WASHER BOULON, AVEC RONDELLE	1					U(30.3") U(30.3")
14	6P2–45214–00	COVER, WATER INLET 1 GRILLE, ENTREE D'EAU 1	1					
15	6P2–45215–00	COVER, WATER INLET 2 GRILLE, ENTREE D'EAU 2	1					
16	90152–05M08	SCREW, COUNTERSUNK VIS, TETE NOYEE	1					
17	90185–05002	NUT, NYLON ECROU,AUTO-BLOQUANT	1					
18	6CE–45224–00	COVER, WATER INLET 3 GRILLE, ENTREE D'EAU 3	1					
19	6CE–45225–00	COVER, WATER INLET 4 GRILLE, ENTREE D'EAU 4	1					
20	90185–05002	.NUT, NYLON .ECROU,AUTO-BLOQUANT	1					
21	90110–05039	BOLT, HEXAGON SOCKET HEAD BOULON, TETE HEXAGONALE CREUSE	1					
22	61A–45371–00	TAB-TRIM ANODE DERIVE	1					
23	90105–10M00	BOLT, FLANGE BOULON	1					
24	63P–45378–00	NIPPLE, HOSE RACCORD, TUYAU	1					
25	93210–07003	O-RING JOINT TORIQUE	1					

FIG. 36 LOWER CASING & DRIVE 2 — BOITIER D'HELICE TRANSMISSION2

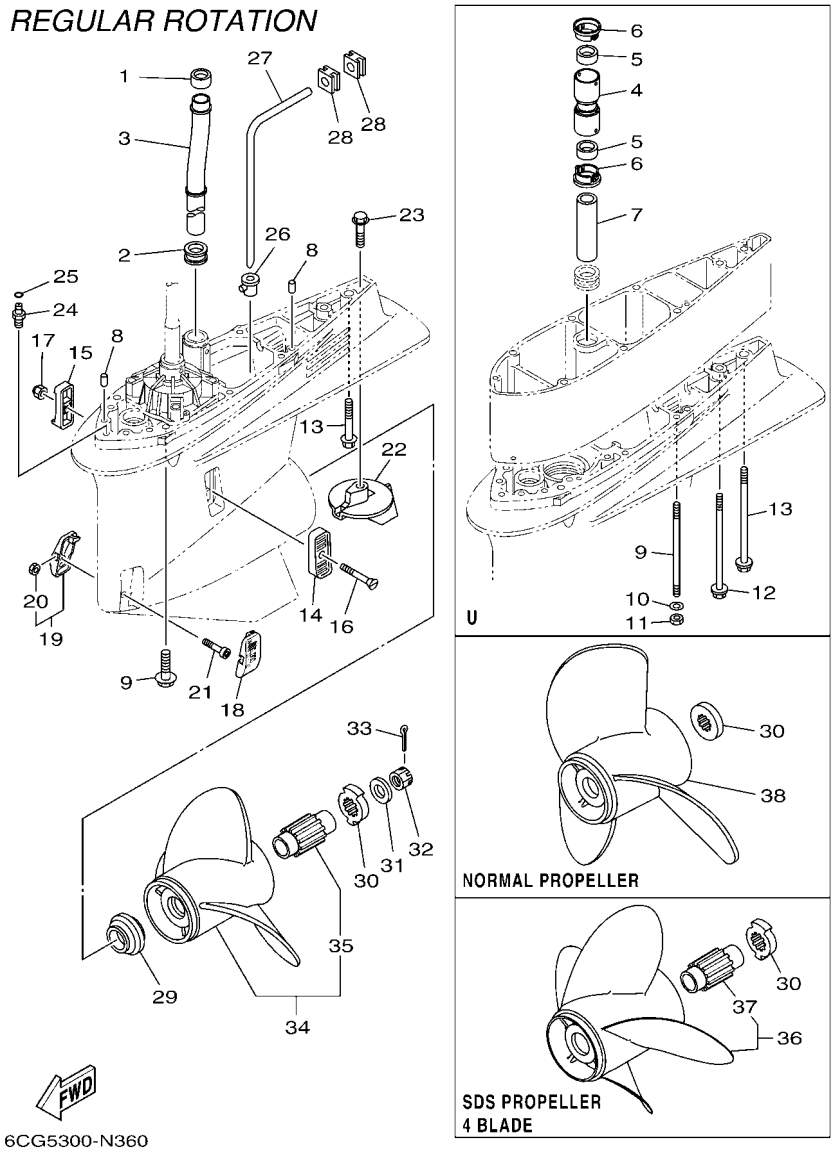

REF. NO.	PART NO. N° PIECES	DESCRIPTION DESCRIPTION	6CL7	6CM7				REMARKS REMARQUES
26	6D0–44367–00	DAMPER, WATER SEAL 3 JOINT TUBE D'EAU 3	1					
27	6D0–44362–01	TUBE, WATER 2 TUBE D'EAU 2	1					
28	6D0–44366–00	DAMPER, WATER SEAL 2 JOINT, TUBE D'EAU 2	2					
29	69J–45987–00	SPACER 1 ENTRETOISE 1	1					
30	6CE–45997–00	SPACER 2 ENTRETOISE 2	1					FOR SDS PROP. FOR SDS PROP.
	688–45997–01	SPACER 2 ENTRETOISE 2	1					AP NORMAL PROP. AP NORMAL PROP.
31	92990–18200	WASHER RONDELLE, PLATE	1					
32	90171–18M04	NUT, CASTLE ECROU, CRENELE	1					
33	91490–40030	PIN. COTTER GOUPILLE	1					
34	6CE–45930–00	PROPELLER (3X15-3/4"X13"-T) HELICE (3X15-3/4"X13"-T)	1					UR SDS 3 BLADE UR SDS 3 BLADE
	6CE–45970–10	PROPELLER (3X15-1/4"X19"-T) HELICE (3X15-1/4"X19"-T)	1					UR SDS 3 BLADE UR SDS 3 BLADE
	6CE–45972–10	PROPELLER (3X15"X21"-T) HELICE (3X15"X21"-T)	1					UR SDS 3 BLADE UR SDS 3 BLADE
	6CE–45974–00	PROPELLER (3X14-3/4"X23"-T) HELICE (3X14-3/4"X23"-T)	1					UR SDS 3 BLADE UR SDS 3 BLADE
	6CE–45976–00	PROPELLER (3X15-3/4"X15"-T) HELICE (3X15-3/4"X15"-T)	1					UR SDS 3 BLADE UR SDS 3 BLADE
	6CE–45978–00	PROPELLER (3X15-1/2"X17"-T) HELICE (3X15-1/2"X17"-T)	1					UR SDS 3 BLADE UR SDS 3 BLADE
35	6CE–45C81–00	.DAMPER RUBBER, PROPELLER 1 .AMORTISSEUR HELICE 1	1					
36	6CE–45B70–00	PROPELLER (4X15"X21"-T) HELICE (4X15"X21"-T)	1					UR SDS 4 BLADE UR SDS 4 BLADE
	6CE–45B72–00	PROPELLER (4X15"X22"-T) HELICE (4X15"X22"-T)	1					UR SDS 4 BLADE UR SDS 4 BLADE
	6CE–45B74–00	PROPELLER (4X15"X23"-T) HELICE (4X15"X23"-T)	1					UR SDS 4 BLADE UR SDS 4 BLADE
37	6CE–45C81–00	.DAMPER RUBBER, PROPELLER 1 .AMORTISSEUR HELICE 1	1					
38	61A–45974–00	PROPELLER (3X14-1/2"X19"-T) HELICE (3X14-1/2"X19"-T)	1					AP NORMAL PROP. AP NORMAL PROP.

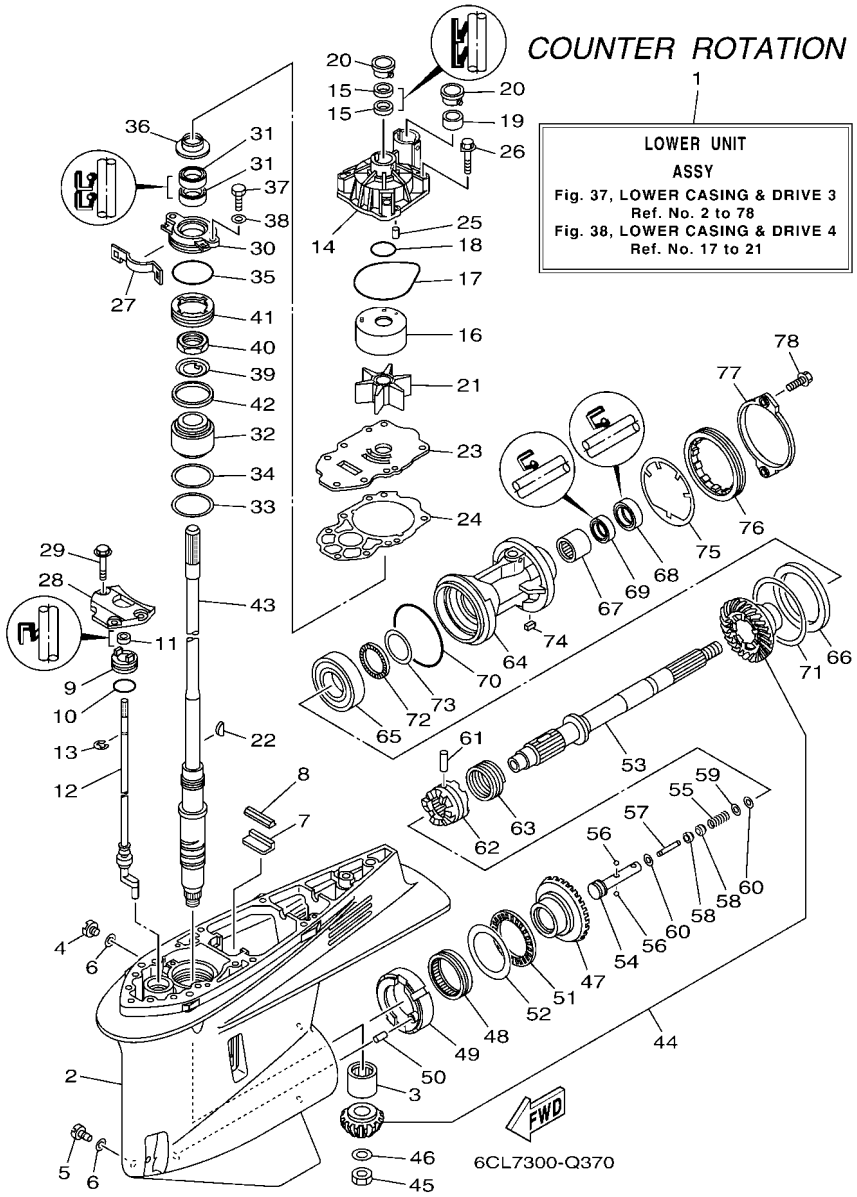

FIG. 37 LOWER CASING & DRIVE 3 — BOITIER D'HELICE TRANSMISSION3

REF. NO.	PART NO. N° PIECES	DESCRIPTION DESCRIPTION	6CL7	6CM7				REMARKS REMARQUES
1	6CF–45300–01–8D	LOWER UNIT ASSY UNITE INFERIEURE (ENS.)		1				X(25.3"),LH X(25.3"),LH
2	6CE–45301–00–8D	CASING, LOWER BEQUILLE		1				
3	93311–83280	BEARING ROULEMENT		1				
4	90340–08002	PLUG, STRAIGHT SCREW PLOT, FILETE DROIT		1				
5	688–45341–10	PLUG, DRAIN BOUCHON DE VIDANGE		1				
6	90430–08003	GASKET JOINT		2				
7	663–45376–00	GUIDE, SEAL DAMPER BUTEE, JOINT CAOUTCHOUC		1				
8	6CE–45375–00	DAMPER, SEAL BOURRELET, CAOUTCHOUC		1				
9	65N–45321–00	PLATE PLAQUETTE		1				X(25.3") X(25.3")
10	93210–33M49	O-RING JOINT TORIQUE		1				
11	93106–09014	OIL SEAL JOINT SPY		1				X(25.3") X(25.3")
12	6CF–44150–00	SHIFT CAM ASSY CAME D'INVERSION		1				X(25.3"),LH X(25.3"),LH
13	99001–08600	CIRCLIP CIRCLIP		1				X(25.3") X(25.3")
14	6CE–44311–01	HOUSING, WATER PUMP CORPS, POMPE A EAU		1				
15	93104–22M07	OIL SEAL JOINT SPY		2				
16	6AW–44322–00	INSERT, CARTRIDGE CUVETTE		1				
17	93210–94003	O-RING JOINT TORIQUE		1				
18	93210–37160	O-RING JOINT TORIQUE		1				
19	6AW–44365–00	DAMPER, WATER SEAL 1 JOINT, TUBE D'EAU 1		1				
20	6AW–44312–00	COVER, WATER PUMP HOUSING COUVERCLE		2				
21	6CE–44352–00	IMPELLER TURBINE		1				
22	90280–04002	KEY, WOODRUFF CLAVETTE, DEMI-LUNE		1				
23	6CE–44323–01	OUTER PLATE, CARTRIDGE PLAQUE EXTERIEURE		1				
24	6CE–44315–00	GASKET, WATER PUMP JOINT, POMPE A EAU		1				
25	93606–12019	PIN, DOWEL GOUPILLE		2				
26	90119–08M14	BOLT, WITH WASHER BOULON, AVEC RONDELLE		4				
27	6AW–45723–00	PLATE, SEAL PLAQUE, JOINT		1				

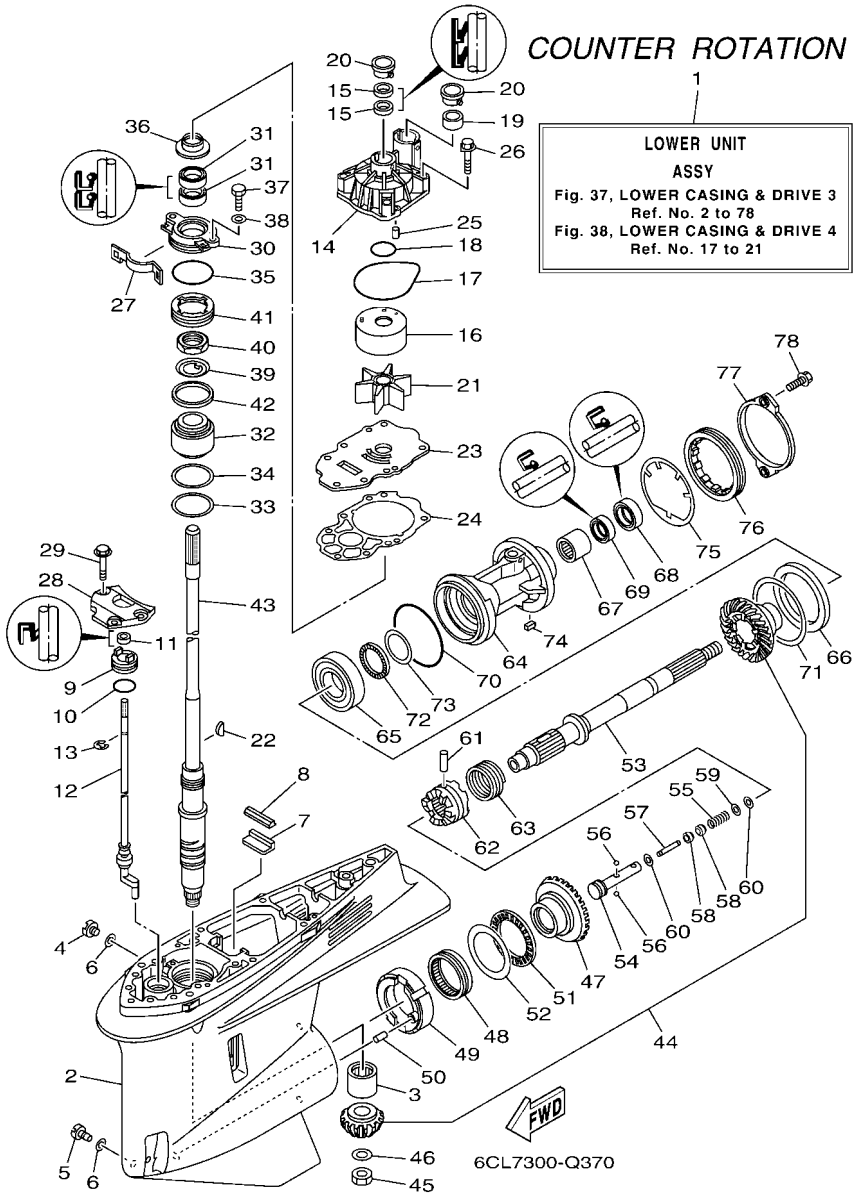

FIG. 37 LOWER CASING & DRIVE 3 — BOITIER D'HELICE TRANSMISSION3

REF. NO.	PART NO. N° PIECES	DESCRIPTION DESCRIPTION	6CL7	6CM7				REMARKS REMARQUES
28	6CB–44312–00	COVER, WATER PUMP HOUSING COUVERCLE		1				
29	90119–08M32	BOLT, WITH WASHER BOULON, AVEC RONDELLE		3				
30	6CE–45335–00–9S	HOUSING, OIL SEAL LOGEMENT DE JOINT SPY		1				
31	93101–28M16	OIL SEAL JOINT SPY		2				
32	93399–99966	BEARING ROULEMENT		1				
33	90201–62008	WASHER, PLATE RONDELLE, PLATE		1				
34	6CE–45587–00	SHIM (T:0.10MM) CALE (T:0.10MM)		1				UR UR
	6CE–45587–10	SHIM (T:0.12MM) CALE (T:0.12MM)		1				UR UR
	6CE–45587–20	SHIM (T:0.15MM) CALE (T:0.15MM)		1				UR UR
	6CE–45587–30	SHIM (T:0.18MM) CALE (T:0.18MM)		1				UR UR
	6CE–45587–40	SHIM (T:0.30MM) CALE (T:0.30MM)		1				UR UR
	6CE–45587–50	SHIM (T:0.40MM) CALE (T:0.40MM)		1				UR UR
	6CE–45587–60	SHIM (T:0.50MM) CALE (T:0.50MM)		1				UR UR
35	93210–64488	O-RING JOINT TORIQUE		1				
36	6AW–45344–00	COVER, OIL SEAL FLASQE, JOINT D'HUILE		1				
37	97095–08020	BOLT BOULON		2				
38	92995–08600	WASHER RONDELLE		2				
39	90214–30003	WASHER, CLAW RONDELLE, A GRIFFES		1				
40	90170–30M18	NUT ECROU		1				
41	6CE–45244–00	NUT ECROU		1				
42	6CE–45539–00	SPACER 2 ENTRETOISE 2		1				
43	6CE–45501–00	DRIVE SHAFT COMP. ARBRE MOTEUR COMP.		1				X(25.3") X(25.3")
44	6CF–45550–00	GEAR SET KIT, PIGNON		1				
45	90170–16M19	NUT ECROU		1				
46	90201–16M00	WASHER, PLATE RONDELLE, PLATE		1				
47	6CF–45560–00	GEAR 1 (21T) PIGNON 1 (21T)		1				
48	93311–85894	BEARING ROULEMENT		1				

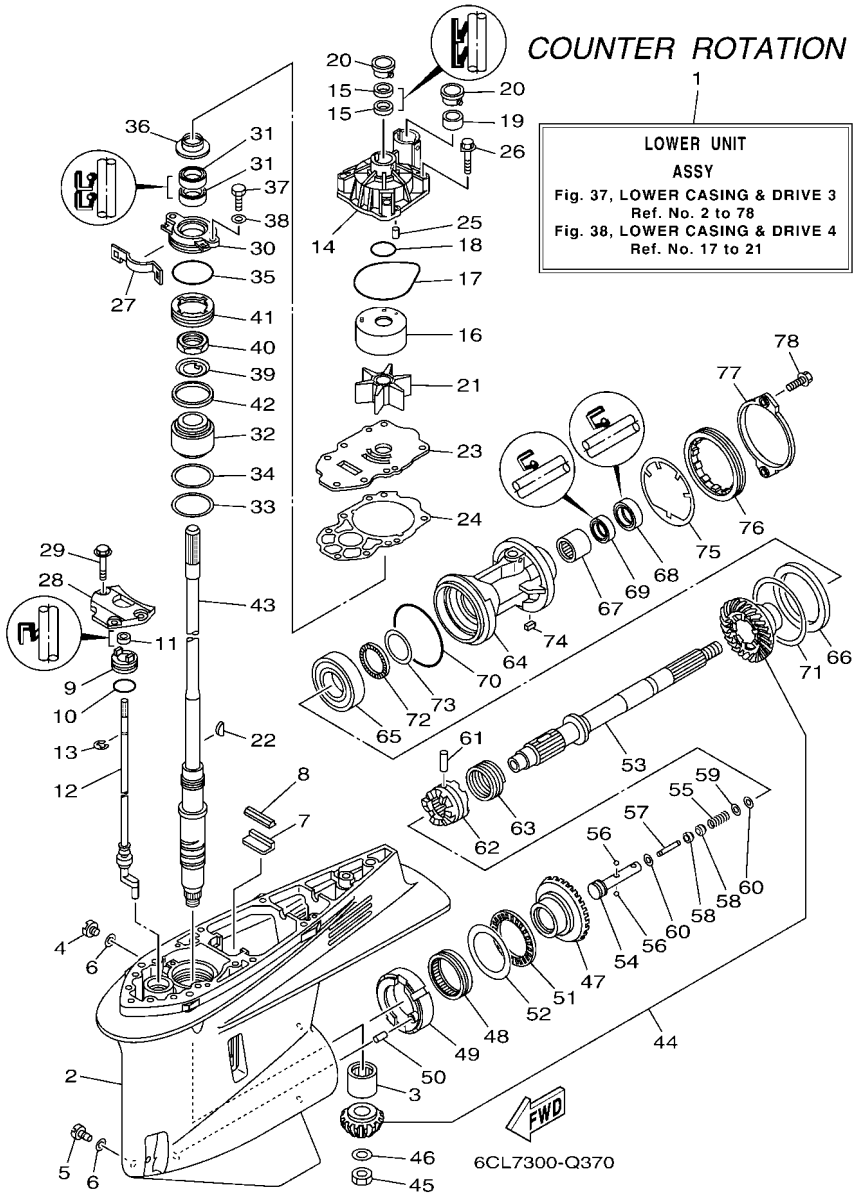

FIG. 37 LOWER CASING & DRIVE 3 — BOITIER D'HELICE TRANSMISSION3

REF. NO.	PART NO. N° PIECES	DESCRIPTION DESCRIPTION	6CL7	6CM7				REMARKS REMARQUES
49	6CB–45824–00	ADAPTER ADAPTATEUR		1				
50	93608–16M16	PIN, DOWEL AXE		1				
51	93340–67011	BEARING CERVEAUX DE DIRECTION		1				
52	6CB–45567–00	SHIM (T:2.00MM) CALE (T:2.00MM)		1				UR UR
	6CB–45567–10	SHIM (T:2.03MM) CALE (T:2.03MM)		1				UR UR
	6CB–45567–20	SHIM (T:2.06MM) CALE (T:2.06MM)		1				UR UR
	6CB–45567–30	SHIM (T:2.09MM) CALE (T:2.09MM)		1				UR UR
	6CB–45567–40	SHIM (T:2.12MM) CALE (T:2.12MM)		1				UR UR
	6CB–45567–50	SHIM (T:2.15MM) CALE (T:2.15MM)		1				UR UR
53	6CF–45611–00	SHAFT, PROPELLER ARBRE, HELICE		1				
54	6CB–45634–00	SLIDE, SHIFT CONTRE-POUSSOIR		1				
55	90501–10M77	SPRING, COMPRESSION RESSORT, COMPRESSION		1				
56	93501–04011	BALL BILLE		2				
57	6H1–45668–00	SHAFT, FREE 1 AXE 1		1				
58	61A–45635–00	PLUNGER, SHIFT POUSSOIR D'EMBRAYAGE		2				
59	90201–02M00	WASHER, PLATE RONDELLE, PLATE		1				
60	90183–02M03	NUT, SPRING ECROU, RESSORT		2				
61	90250–08M07	PIN, STRAIGHT GOUPILLE, DROITE		1				
62	6CE–45631–00	CLUTCH, DOG CRABOT		1				
63	6E5–45633–01	RING, CROSS PIN JONC, GOUPILLE CRABOT		1				
64	6CF–45332–01–CA	HOUSING, BEARING FLASQUE, ROULEMENT		1				
65	93332–00048	BEARING ROULEMENT		1				
66	6CF–45576–00	WASHER, THRUST 2 RONDELLE DE CALAGE 2		1				
67	93315–43061	BEARING ROULEMENT		1				
68	93101–30002	OIL SEAL JOINT SPY		1				
69	93101–30004	OIL SEAL JOINT SPY		1				
70	93211–02001	O-RING JOINT TORIQUE		1				

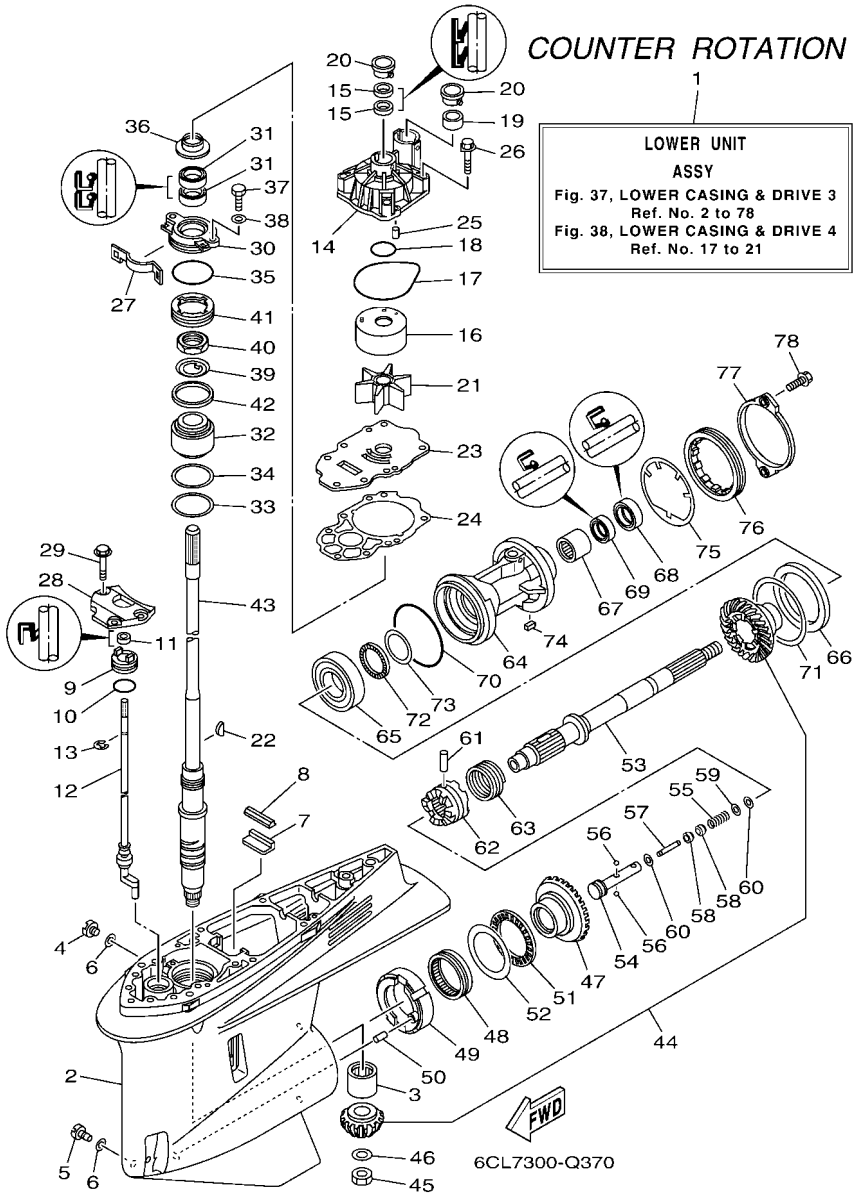

FIG. 37 LOWER CASING & DRIVE 3 — BOITIER D'HELICE TRANSMISSION3

REF. NO.	PART NO. N° PIECES	DESCRIPTION DESCRIPTION	6CL7	6CM7				REMARKS REMARQUES
71	6CB–45577–00	SHIM (T:0.10MM) CALE (T:0.10MM)		1				UR UR
	6CB–45577–10	SHIM (T:0.12MM) CALE (T:0.12MM)		1				UR UR
	6CB–45577–20	SHIM (T:0.15MM) CALE (T:0.15MM)		1				UR UR
	6CB–45577–30	SHIM (T:0.18MM) CALE (T:0.18MM)		1				UR UR
	6CB–45577–40	SHIM (T:0.30MM) CALE (T:0.30MM)		1				UR UR
	6CB–45577–50	SHIM (T:0.40MM) CALE (T:0.40MM)		1				UR UR
	6CB–45577–60	SHIM (T:0.50MM) CALE (T:0.50MM)		1				UR UR
72	93341–440U5	BEARING CERVEAUX DE DIRECTION		1				
73	6K1–45578–01	SHIM (T:0.10MM) CALE (T:0.10MM)		1				UR UR
	6K1–45578–10	SHIM (T:0.12MM) CALE (T:0.12MM)		1				UR UR
	6K1–45578–20	SHIM (T:0.15MM) CALE (T:0.15MM)		1				UR UR
	6K1–45578–30	SHIM (T:0.18MM) CALE (T:0.18MM)		1				UR UR
	6K1–45578–40	SHIM (T:0.30MM) CALE (T:0.30MM)		1				UR UR
	6K1–45578–50	SHIM (T:0.40MM) CALE (T:0.40MM)		1				UR UR
	6K1–45578–60	SHIM (T:0.50MM) CALE (T:0.50MM)		1				UR UR
74	90282–05008	KEY, STRAIGHT CLAVETTE, DROITE		1				
75	6CB–45383–00	WASHER, CLAW FREIN D'ECROU		1				
76	6CB–45384–00	NUT ECROU		1				
77	6CE–45361–10	CAP, LOWER CASING COUVERCLE, BOITIER D'HELICE		1				
78	90105–08M61	BOLT, FLANGE BOULON		2				

FIG. 38 LOWER CASING & DRIVE 4 — BOITIER D'HELICE TRANSMISSION4

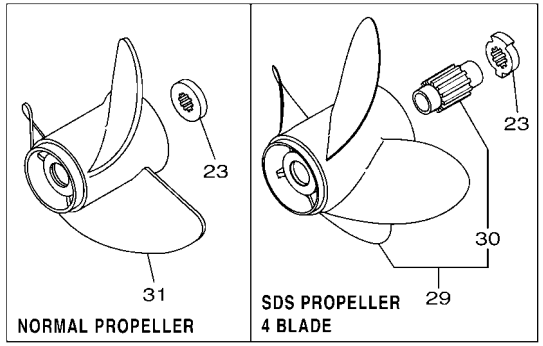

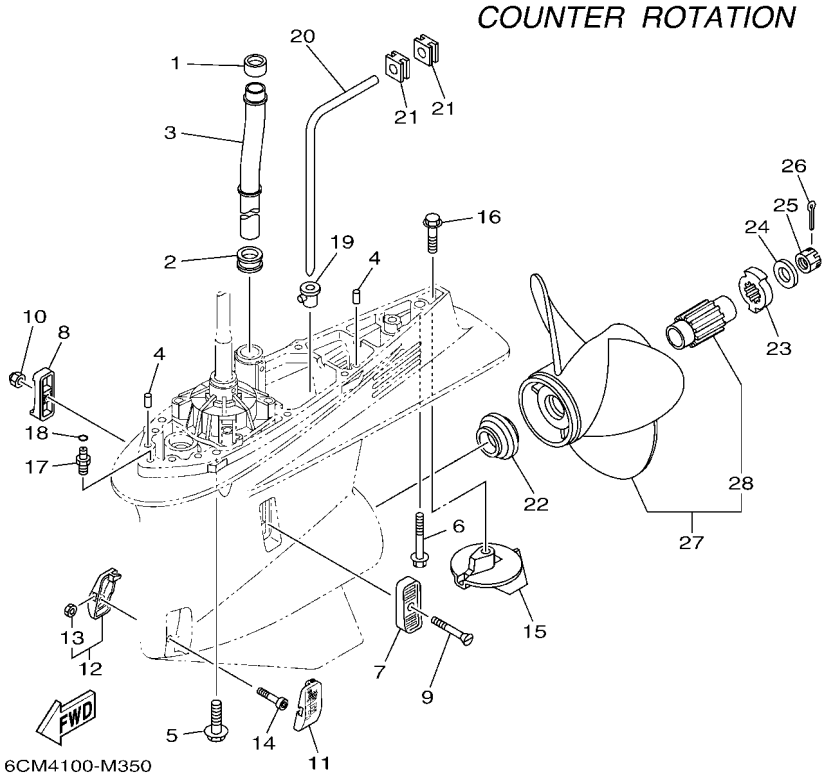

REF. NO.	PART NO. N° PIECES	DESCRIPTION DESCRIPTION	6CL7	6CM7				REMARKS REMARQUES
1	6AW–44365–00	DAMPER, WATER SEAL 1 JOINT, TUBE D'EAU 1		1				
2	6AW–44366–00	DAMPER, WATER SEAL 2 JOINT, TUBE D'EAU 2		1				
3	6CE–44361–00	TUBE, WATER 1 TUBE D'EAU 1		1				
4	93608–16M16	PIN, DOWEL AXE		2				
5	90119–10038	BOLT, WITH WASHER BOULON, AVEC RONDELLE		7				X(25.3") X(25.3")
6	97575–10570	BOLT, WITH WASHER VIS HEXAGONAL AVC RONDELLE		1				X(25.3") X(25.3")
7	6P2–45214–00	COVER, WATER INLET 1 GRILLE, ENTREE D'EAU 1		1				
8	6P2–45215–00	COVER, WATER INLET 2 GRILLE, ENTREE D'EAU 2		1				
9	90152–05M08	SCREW, COUNTERSUNK VIS, TETE NOYEE		1				
10	90185–05002	NUT, NYLON ECROU,AUTO-BLOQUANT		1				
11	6CE–45224–00	COVER, WATER INLET 3 GRILLE, ENTREE D'EAU 3		1				
12	6CE–45225–00	COVER, WATER INLET 4 GRILLE, ENTREE D'EAU 4		1				
13	90185–05002	.NUT, NYLON .ECROU,AUTO-BLOQUANT		1				
14	90110–05039	BOLT, HEXAGON SOCKET HEAD BOULON, TETE HEXAGONALE CREUSE		1				
15	61A–45371–00	TAB-TRIM ANODE DERIVE		1				
16	90105–10M00	BOLT, FLANGE BOULON		1				
17	63P–45378–00	NIPPLE, HOSE RACCORD, TUYAU		1				
18	93210–07003	O-RING JOINT TORIQUE		1				
19	6D0–44367–00	DAMPER, WATER SEAL 3 JOINT TUBE D'EAU 3		1				
20	6D0–44362–01	TUBE, WATER 2 TUBE D'EAU 2		1				
21	6D0–44366–00	DAMPER, WATER SEAL 2 JOINT, TUBE D'EAU 2		2				
22	69J–45987–00	SPACER 1 ENTRETOISE 1		1				
23	6CE–45997–00	SPACER 2 ENTRETOISE 2		1				FOR SDS PROP. FOR SDS PROP.
	688–45997–01	SPACER 2 ENTRETOISE 2		1				AP NORMAL PROP. AP NORMAL PROP.
24	92990–18200	WASHER RONDELLE, PLATE		1				
25	90171–18M04	NUT, CASTLE ECROU, CRENELE		1				
26	91490–40030	PIN. COTTER GOUPILLE		1				

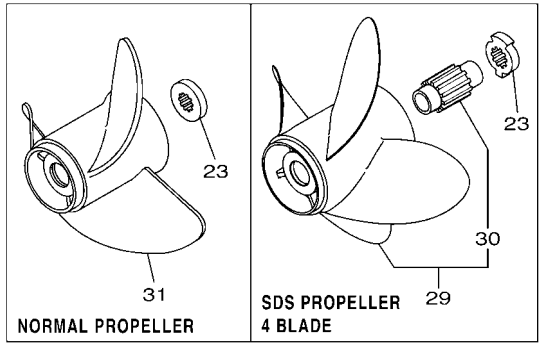

COUNTER ROTATION

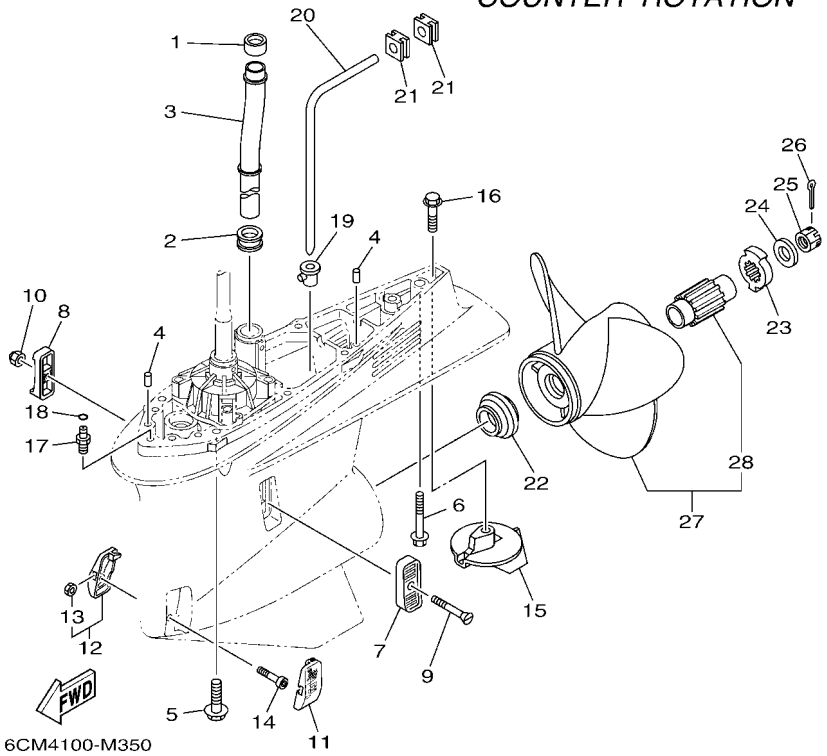

REF. NO.	PART NO. N° PIECES	DESCRIPTION DESCRIPTION	6CL7	6CM7				REMARKS REMARQUES
27	6CF–45930–00	PROPELLER (3X15-3/4"X13"-TL) HELICE (3X15-3/4"X13"-TL)		1				UR SDS 3 BLADE UR SDS 3 BLADE
	6CF–45970–10	PROPELLER (3X15-1/4"X19"-TL) HELICE (3X15-1/4"X19"-TL)		1				UR SDS 3 BLADE UR SDS 3 BLADE
	6CF–45972–10	PROPELLER (3X15"X21"-TL) HELICE (3X15"X21"-TL)		1				UR SDS 3 BLADE UR SDS 3 BLADE
	6CF–45974–00	PROPELLER (3X14-3/4"X23"-TL) HELICE (3X14-3/4"X23"-TL)		1				UR SDS 3 BLADE UR SDS 3 BLADE
	6CF–45976–00	PROPELLER (3X15-3/4"X15"-TL) HELICE (3X15-3/4"X15"-TL)		1				UR SDS 3 BLADE UR SDS 3 BLADE
	6CF–45978–00	PROPELLER (3X15-1/2"X17"-TL) HELICE (3X15-1/2"X17"-TL)		1				UR SDS 3 BLADE UR SDS 3 BLADE
28	6CE–45C81–00	.DAMPER RUBBER, PROPELLER 1 .AMORTISSEUR HELICE 1		1				
29	6CF–45B70–00	PROPELLER (4X15"X21"-TL) HELICE (4X15"X21"-TL)		1				UR SDS 4 BLADE UR SDS 4 BLADE
	6CF–45B72–00	PROPELLER (4X15"X22"-TL) HELICE (4X15"X22"-TL)		1				UR SDS 4 BLADE UR SDS 4 BLADE
	6CF–45B74–00	PROPELLER (4X15"X23"-TL) HELICE (4X15"X23"-TL)		1				UR SDS 4 BLADE UR SDS 4 BLADE
30	6CE–45C81–00	.DAMPER RUBBER, PROPELLER 1 .AMORTISSEUR HELICE 1		1				
31	61B–45974–00	PROPELLER (3X14-1/2"X19"-TL) HELICE (3X14-1/2"X19"-TL)		1				AP NORMAL PROP. AP NORMAL PROP.

FIG. 39 STEERING GUIDE ATTACHMENT 1 DIRECTION GUIDE ACCESSOIRE 1

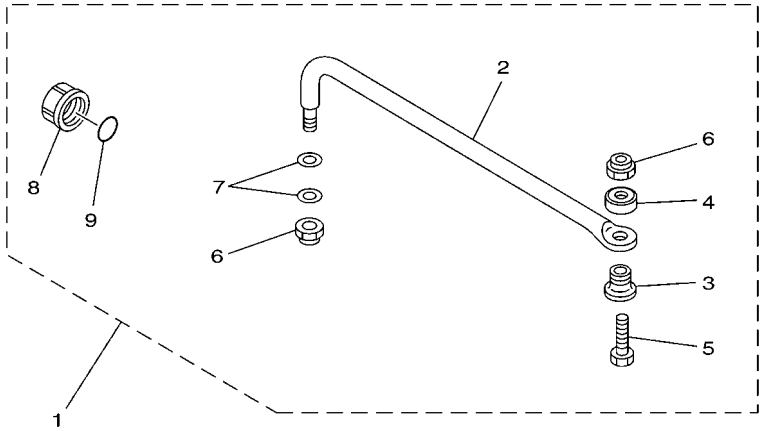

67H0100-9290

REF. NO.	PART NO. N° PIECES	DESCRIPTION DESCRIPTION	6CL7	6CM7				REMARKS REMARQUES
1	6E5–61350–02	STEERING GUIDE ATTACHMENT KIT FIXATIONS DE DIRECTION	1					AP AP
2	6E5–61351–01	.ROD, STEERING LINK .RENVOI DE DIRECTION	1					
3	90387–10M61	.COLLAR .COLLERETTE	1					
4	90560–12M01	.SPACER .ENTRETOISE	1					
5	6E5–61355–00	.BOLT .BOULON	1					
6	90185–09M01	.NUT, SELF-LOCKING .ECROU,AUTO-BLOQUANT	2					
7	90201–10M20	.WASHER, PLATE .RONDELLE, PLATE	2					
8	6E5–43145–01	.CAP, CLAMP BRACKET .CAPUCHON, PRESSE	1					
9	93210–16275	.O-RING .JOINT TORIQUE	1					

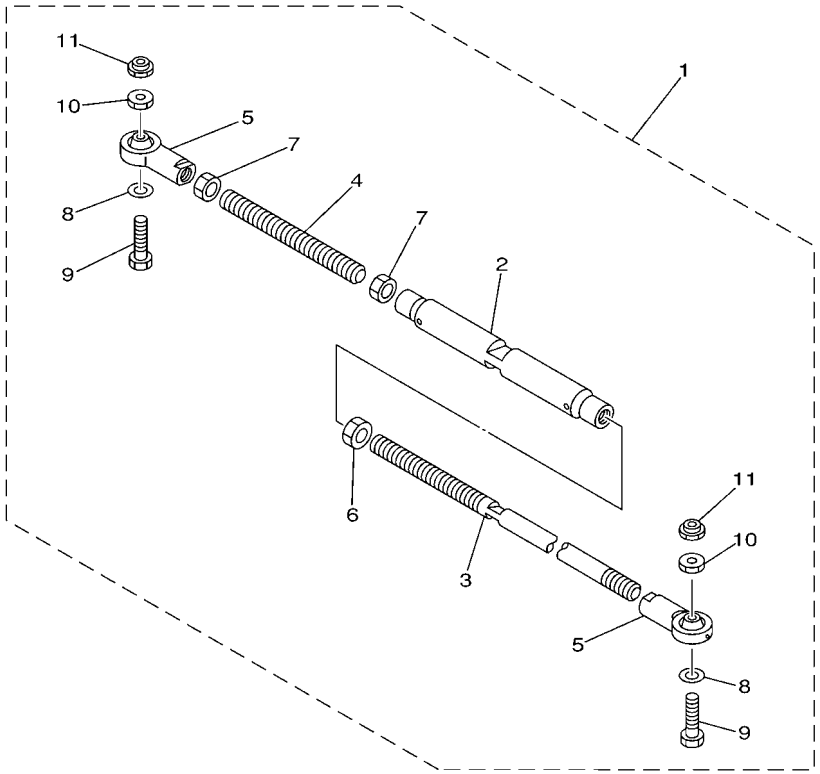

67H0100-0300

FIG. 40 STEERING GUIDE ATTACHMENT 2 — DIRECTION GUIDE ACCESSOIRE 2

REF. NO.	PART NO. N° PIECES	DESCRIPTION DESCRIPTION	6CL7	6CM7				REMARKS REMARQUES
1	6E5–61301–01	TWIN KIT (L:600-800MM) JUMELE KIT (L:600-800MM)		1				AP AP
2	6E5–61313–00	.ADJUSTER .TENDEUR		1				
3	6E5–61311–11	.TIE BAR .BARRE D'ACCOUPLEMENT		1				
4	6E5–61315–00	.TIE BAR .BARRE D'ACCOUPLEMENT		1				
5	6E5–61303–00	.STEERING AXLE COMP. .AXLE COMP.		2				
6	90170–14M06	.NUT .ECROU		1				
7	95380–14700	.NUT .ECROU		2				
8	90201–10M76	.WASHER, PLATE .RONDELLE, PLATE		2				
9	90101–09M70	.BOLT .BOULON		2				
10	90170–09M05	.NUT .ECROU		2				
11	90185–09M01	.NUT, SELF-LOCKING .ECROU,AUTO-BLOQUANT		2				

FIG. 41 OPTIONAL PARTS 1 — PIECES OPTIONNELLES 1

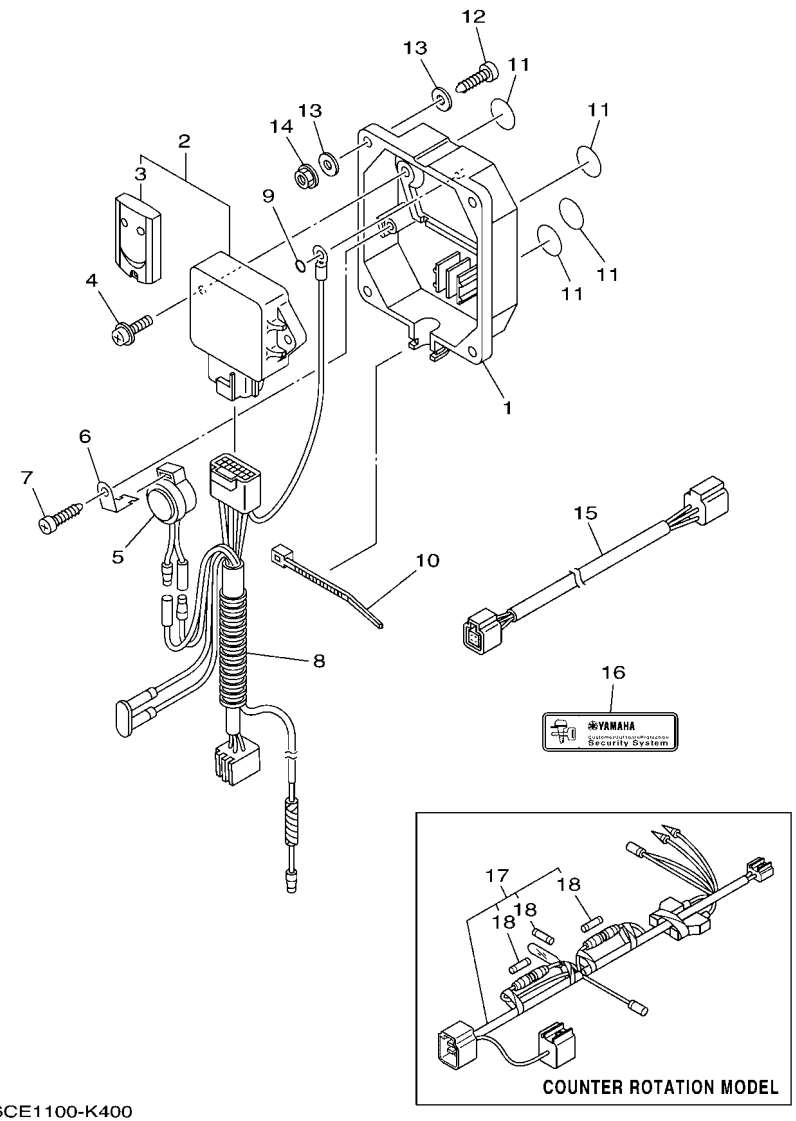

6CE1100-K400

REF. NO.	PART NO. N° PIECES	DESCRIPTION DESCRIPTION	6CL7	6CM7				REMARKS REMARQUES
1	6Y8–86267–00	CASE COMPLETE 1 CARTER (ENS.) 1	1					
2	6Y8–86260–02	REMOTE CONTROL UNIT ASSY UNITE DE TELECOMMANDE (ENS.)	1					
3	6AA–86261–00	.XMTR. COMP. .XMTR. COMP.	2					
4	97980–06216	SCREW, WITH WASHER VIS, AVEC RONDELLE	2					
5	6X4–83383–00	BUZZER RONFLEUR	1					
6	6X4–83386–00	STAY, BUZZER SUPPOR, RONFLEUR	1					
7	97780–60620	SCREW, TAPPING VIS, TETE BOMBEE	1					
8	6Y8–82509–10	WIRE, SUB LEAD FIL, SECONDAIRE	1					
9	93210–04279	O-RING JOINT TORIQUE	1					
10	90465–11M10	CLAMP BRIDE	1					
11	6Y8–8454G–00	PATCH 1 TAMPON 1	4					
12	90167–06M00	SCREW, TAPPING VIS, TETE FRAISEE	4					UR UR
	97880–06035	SCREW, PAN HEAD VIS, TETE TRONCONIQUE	4					UR UR
13	90201–06M30	WASHER, PLATE RONDELLE, PLATE	8					
14	95780–06300	NUT, FLANGE ECROU	4					
15	6Y8–82521–11	2FT PIGTAIL BUS FAISCEAU (L: 2FT.)	1					
16	6Y8–48277–00	STICKER 1 ETIQUETTE 1	4					
17	6Y8–81315–01	LEAD WIRE ASSY FIL		1				AP AP
18	6TA–82151–00	.FUSE(5A) .FUSIBLE (5A)		3				

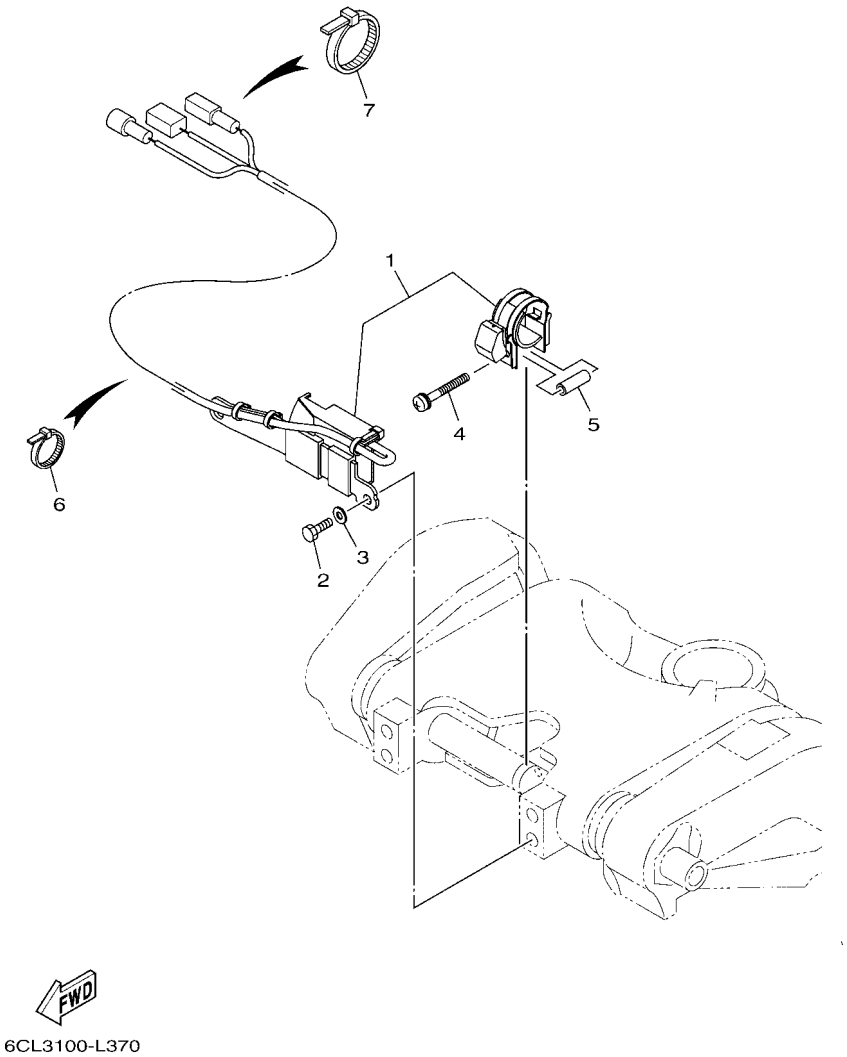

FIG. 42 OPTIONAL PARTS 2 — PIECES OPTIONNELLES 2

REF. NO.	PART NO. N° PIECES	DESCRIPTION DESCRIPTION	6CL7	6CM7				REMARKS REMARQUES
1	6CE–825E0–00	TILT LIMIT SWITCH ASSY COMMUTATEUR, LIMIT INCLINAISON	1	1				
2	97095–06016	BOLT BOULON	2	2				
3	92995–06600	WASHER RONDELLE	2	2				
4	90159–05059	SCREW, WITH WASHER VIS, AVEC RONDELLE	1	1				
5	90387–05004	COLLAR COLLERETTE	1	1				
6	90465–11M10	CLAMP BRIDE	8	8				
7	90465–13M18	CLAMP BRIDE	1	1				

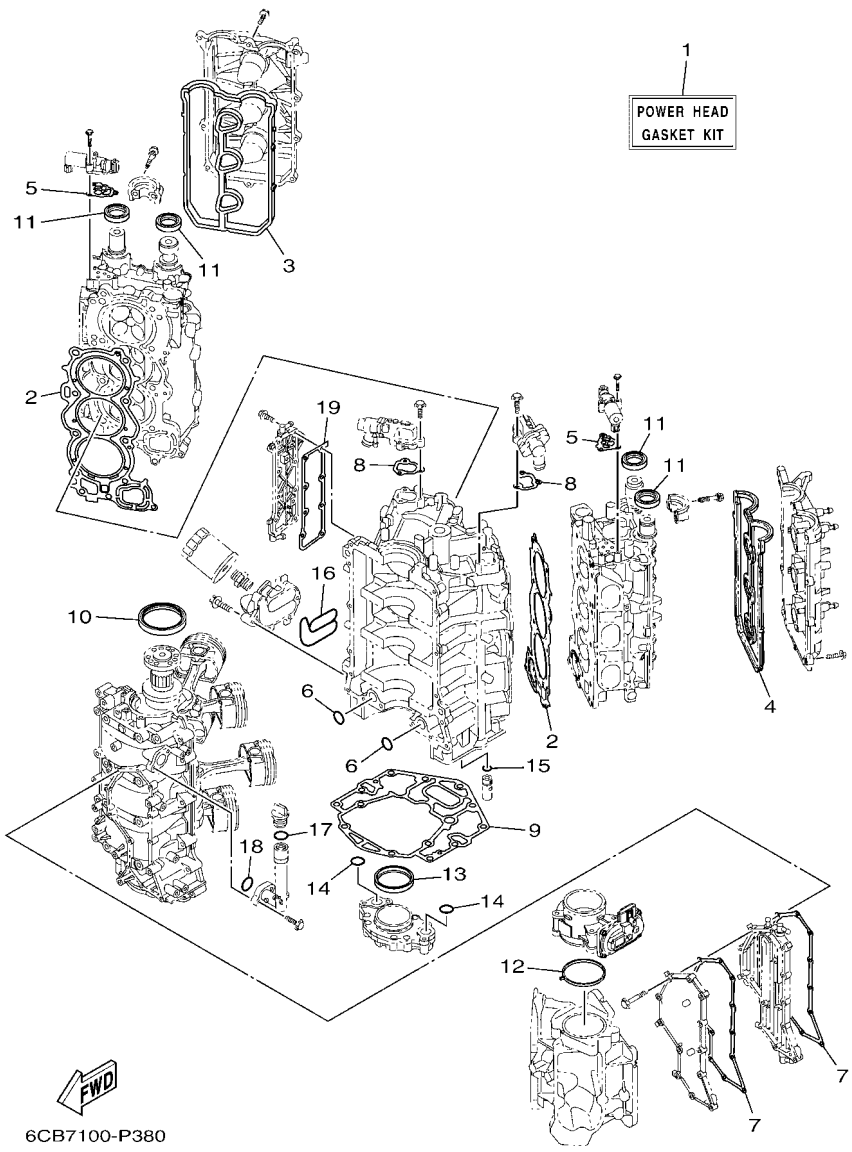

FIG. 43 REPAIR KIT 1 — KITS DE REPARATION 1

REF. NO.	PART NO. N° PIECES	DESCRIPTION DESCRIPTION	6CL7	6CM7				REMARKS REMARQUES
1	6CB–W0001–02	POWER HEAD GASKET KIT POCHETTE DE JINTS TETE MOTRICE	1	1				
2	6CB–11181–00	.GASKET, CYLINDER HEAD 1 .JOINT, DE CULASSE 1	2	2				
3	6CB–11193–00	.GASKET, HEAD COVER 1 .JOINT, COUVERCLE DE CULASSE 1	1	1				
4	6CB–11194–00	.GASKET, HEAD COVER 2 .JOINT, COUVERCLE DE CULASSE 2	1	1				
5	6CB–1242F–00	.GASKET, FILTER .JOINT, FILTRE	2	2				
6	93210–26658	.O-RING .JOINT TORIQUE	2	2				
7	6CB–15451–00	.GASKET, CRANKCASE COVER 1 .JOINT, COUVERCLE DE CARTER 1	2	2				
8	6CB–12427–10	.GASKET, HOUSING COVER 1 .JOINT, COUVERCLE DE CARTER 1	2	2				
9	6CB–11351–00	.GASKET, CYLINDER .JOINT, D'EMBASE	1	1				
10	93102–85008	.OIL SEAL .JOINT SPY	1	1				
11	93102–38008	.OIL SEAL .JOINT SPY	4	4				
12	6CB–13556–00	.GASKET, MANIFOLD .JOINT, TUBULURE	1	1				
13	6CB–11355–00	.SEAL, CYLINDER 1 .JOINT, SPY CYLINDRE	1	1				
14	93210–26658	.O-RING .JOINT TORIQUE	2	2				
15	6CB–13473–00	.O-RING .JOINT TORIQUE	1	1				
16	6CB–13477–00	.GASKET .JOINT	1	1				
17	93210–24M79	.O-RING .JOINT TORIQUE	1	1				
18	93210–27370	.O-RING .JOINT TORIQUE	1	1				
19	6CB–1131B–00	.GASKET, COVER .JOINT, COUVERCLE	1	1				

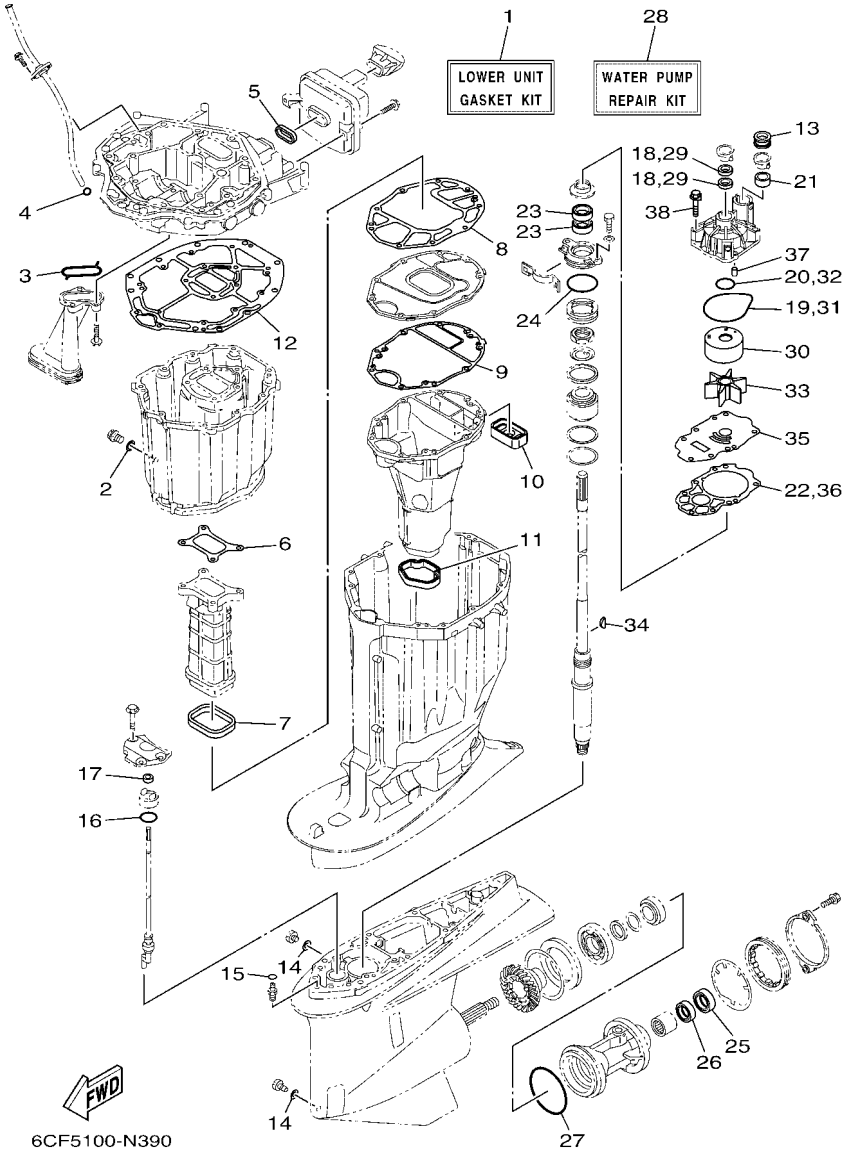

FIG. 44 REPAIR KIT 2 — KITS DE REPARATION 2

REF. NO.	PART NO. N° PIECES	DESCRIPTION DESCRIPTION	6CL7	6CM7				REMARKS REMARQUES
1	6CE–W0001–21	LOWER UNIT GASKET KIT POCHETTE DE JOINTS EMBASE	1	1				
2	90430–14M09	.GASKET .JOINT	1	1				
3	6AW–13415–00	.SEAL, OIL STRAINER .JOINT, FILTRE A HUILE	1	1				
4	93210–19MJ3	.O-RING .JOINT TORIQUE	1	1				
5	6CB–14755–00	.GASKET, SILENCER .JOINT, SILENCIEUX	1	1				
6	6CB–41134–00	.GASKET, EXHAUST MANIFOLD .JOINT, PIPE D'ECHAPPEMENT	1	1				
7	6CB–41138–00	.SEAL, EXT. 1 .JOINT DE GROUPE 1	1	1				
8	6CB–41135–00	.GASKET, EXHAUST MANIFOLD .JOINT, PIPE D'ECHAPPEMENT	1	1				
9	6CE–41136–00	.GASKET, EXHAUST MANIFOLD 4 .JOINT, PIPE D'ECHAPPEMENT 4	1	1				
10	6CE–45127–00	.SEAL .JOINT	1	1				
11	6CE–45123–00	.GASKET, MUFFLER .JOINT, POT DE DETENTE	1	1				
12	6CB–45113–00	.GASKET, UPPER CASING .JOINT, TUBE D'ARBRE	1	1				
13	6AW–44366–00	.DAMPER, WATER SEAL 2 .JOINT, TUBE D'EAU 2	1	1				
14	90430–08003	.GASKET .JOINT	2	2				
15	93210–07003	.O-RING .JOINT TORIQUE	1	1				
16	93210–33M49	.O-RING .JOINT TORIQUE	1	1				
17	93106–09014	.OIL SEAL .JOINT SPY	1	1				FOR X(25.3") FOR X(25.3")
	93106–10001	.OIL SEAL .JOINT SPY	1	1				FOR U(30.3") FOR U(30.3")
18	93104–22M07	.OIL SEAL .JOINT SPY	2	2				
19	93210–94003	.O-RING .JOINT TORIQUE	1	1				
20	93210–37160	.O-RING .JOINT TORIQUE	1	1				
21	6AW–44365–00	.DAMPER, WATER SEAL 1 .JOINT, TUBE D'EAU 1	1	1				
22	6CE–44315–00	.GASKET, WATER PUMP .JOINT, POMPE A EAU	1	1				
23	93101–28M16	.OIL SEAL .JOINT SPY	2	2				
24	93210–64488	.O-RING .JOINT TORIQUE	1	1				
25	93101–30002	.OIL SEAL .JOINT SPY	1	1				
26	93101–30004	.OIL SEAL .JOINT SPY	1	1				

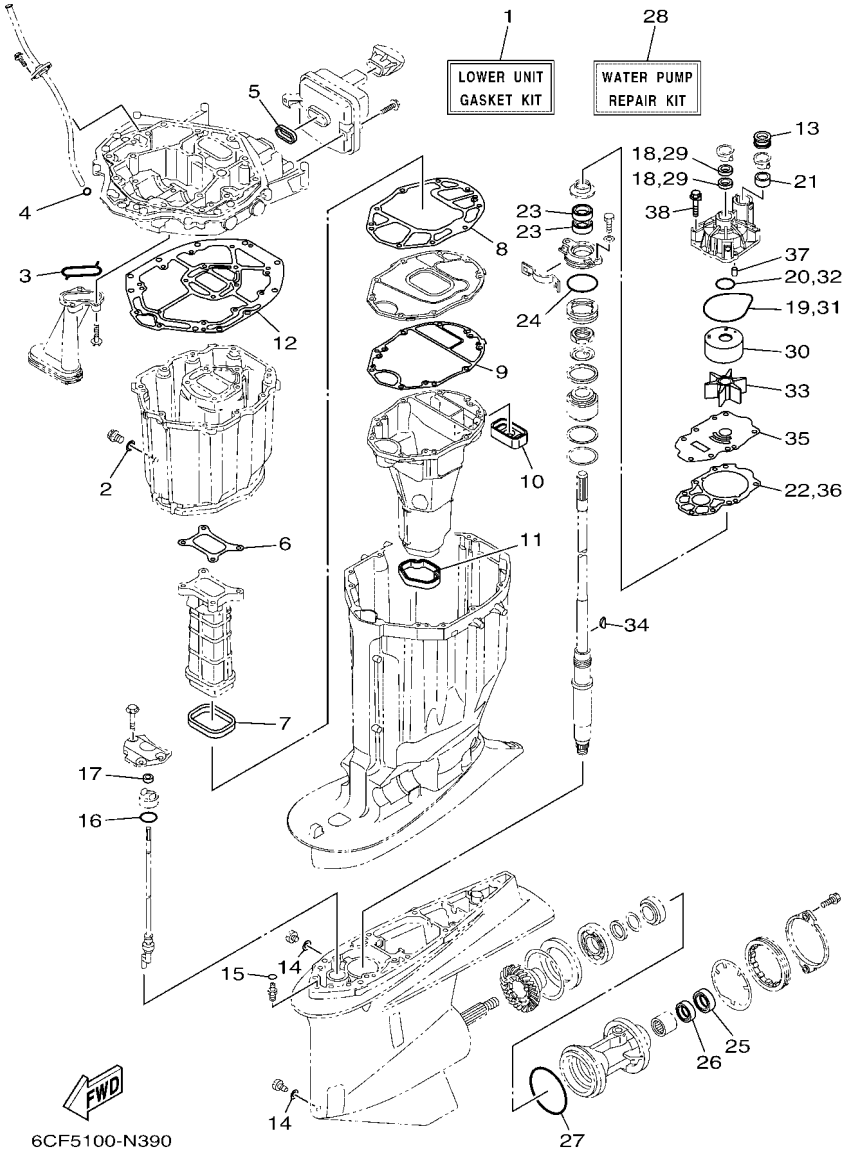

FIG. 44 REPAIR KIT 2 — KITS DE REPARATION 2

REF. NO.	PART NO. N° PIECES	DESCRIPTION DESCRIPTION	6CL7	6CM7				REMARKS REMARQUES
27	93211–02001	.O-RING .JOINT TORIQUE	1	1				
28	6CE–W0078–01	WATER PUMP REPAIR KIT KIT DE REPARATION DE LA POMPE	1	1				
29	93104–22M07	.OIL SEAL .JOINT SPY	2	2				
30	6AW–44322–00	.INSERT, CARTRIDGE .CUVETTE	1	1				
31	93210–94003	.O-RING .JOINT TORIQUE	1	1				
32	93210–37160	.O-RING .JOINT TORIQUE	1	1				
33	6CE–44352–00	.IMPELLER .TURBINE	1	1				
34	90280–04002	.KEY, WOODRUFF .CLAVETTE, DEMI-LUNE	1	1				
35	6CE–44323–01	.OUTER PLATE, CARTRIDGE .PLAQUE EXTERIEURE	1	1				
36	6CE–44315–00	.GASKET, WATER PUMP .JOINT, POMPE A EAU	1	1				
37	93606–12019	.PIN, DOWEL .GOUPILLE	2	2				
38	90119–08M14	.BOLT, WITH WASHER .BOULON, AVEC RONDELLE	4	4				

NUMERICAL INDEX
INDEX NUMERIQUE

PART NO. N° PIECES	REF. NO.
6CE–11000–01	3 – 1
6CE–11110–11–9S	5 – 2
6CE–11120–11–9S	5 – 12
6S5–11133–10	5 – 3
	5 – 13
6CB–11181–00	5 – 25
	43 – 2
6CB–11191–02	5 – 30
6CB–11192–02	5 – 34
6CB–11193–00	5 – 31
	43 – 3
6CB–11194–00	5 – 35
	43 – 4
67F–11301–00	5 – 19
6CB–1131B–00	3 – 12
	43 – 19
6CE–1131C–00–9S	3 – 9
68T–11325–00	1 – 4
	3 – 32
63P–11325–01	1 – 1
	3 – 10
	3 – 19
67F–11325–01	1 – 7
	5 – 20
63P–11325–11	1 – 16
	33 – 2
67F–11328–00	5 – 21
6AW–1132N–01	1 – 5
	3 – 34
6AW–1132P–00	1 – 3
	3 – 30
6CB–11351–00	3 – 29
	43 – 9
6CB–11355–00	34 – 13
	43 – 13
6CB–1135A–00	6 – 6
6CB–11410–00	4 – 1
6CB–11416–00	4 – 5
6CB–11416–10	4 – 5
6CB–11416–20	4 – 5
6CB–11416–30	4 – 5
6CB–11416–40	4 – 5
6CB–11417–00	4 – 6
6CB–11417–10	4 – 6
6CB–11417–20	4 – 6
6CB–11417–30	4 – 6
6CB–11417–40	4 – 6
6CB–11426–03	4 – 7

PART NO. N° PIECES	REF. NO.
6CB–11427–03	4 – 8
6CB–11478–00	4 – 2
6CB–1149A–00	6 – 10
6CB–11567–00	8 – 17
6CB–11590–02	8 – 28
6CB–11603–00	4 – 12
6CE–11631–01	4 – 11
6CB–11633–00	4 – 13
6CB–11654–00	4 – 10
6CB–11656–00	4 – 14
6CB–11656–10	4 – 14
6CB–11656–20	4 – 14
6CB–11998–00	5 – 42
6CB–11999–00	5 – 43
6CB–12111–00	8 – 1
6CB–12113–00	8 – 4
51Y–12119–00	8 – 7
6DA–12121–00	8 – 2
6CB–12171–00	8 – 9
6CB–12172–00	8 – 13
6CB–12181–00	8 – 11
6CB–12182–00	8 – 15
6CE–12411–00	1 – 2
	3 – 21
67F–12412–00	3 – 22
6CE–12413–A0–9S	3 – 24
6CE–12413–B0–9S	3 – 23
6CB–12422–10–9S	3 – 25
6CB–12427–10	3 – 26
	43 – 8
6CB–1242F–00	6 – 2
	43 – 5
6CB–1243E–00	7 – 15
6CE–1244G–00	7 – 12
6CE–1244H–00	7 – 14
6CE–12481–10	18 – 24
6CE–12482–10	10 – 8
6CB–12483–00	10 – 26
6CE–12483–00	18 – 18
6CB–12484–00	10 – 10
6CE–12485–00	18 – 26
6CE–1248A–00	18 – 16
6AW–12572–00	26 – 18
6CB–12576–10	7 – 3
6CB–12577–00	7 – 8
6R3–12581–00	26 – 19
6AW–12582–00	26 – 20
6R3–12583–00	26 – 21

PART NO. N° PIECES	REF. NO.
6P2–12615–00	8 – 25
6P2–12623–00	8 – 20
	8 – 23
6CB–12645–01	8 – 19
6CB–1264A–01	8 – 22
6P2–12663–00	8 – 21
	8 – 24
6CB–13016–00	1 – 10
	13 – 5
6AW–13119–00	34 – 11
6AW–13132–00	13 – 32
6CB–13161–10	12 – 1
6CB–13171–10	12 – 5
6CB–13300–00	34 – 9
6CB–13329–00	34 – 10
6CB–13411–00	34 – 6
6AW–13415–00	34 – 7
	44 – 3
6CE–13437–60	17 – 19
N26–13440–02	1 – 6
	3 – 36
6CE–13446–10–9S	3 – 38
6CB–13473–00	34 – 17
	43 – 15
6CB–13477–00	3 – 39
	43 – 16
6CB–13490–00	34 – 16
6CB–13532–10	10 – 2
6CB–13533–00	10 – 1
6CB–13545–00	10 – 18
6CB–13546–00	10 – 22
6CB–13547–00	10 – 23
6CB–13548–00	10 – 25
6CB–13556–00	11 – 3
	43 – 12
68V–13577–00	14 – 4
6CB–13577–00	12 – 4
	12 – 8
6CB–13593–00	13 – 22
69J–13631–00	34 – 12
6CE–13641–00	9 – 5
6CB–13645–00	9 – 6
6CB–13646–00	9 – 7
6CB–13711–00	11 – 2
63P–13716–00	13 – 21
6CB–13751–10	11 – 1
6AW–13761–00	12 – 2
	12 – 6

PART NO. N° PIECES	REF. NO.
6AW–13781–00	13 – 34
6CB–13782–00	10 – 16
6AW–13784–00	13 – 35
6CB–13898–11	11 – 10
6CB–13898–20	11 – 9
6CB–13906–01	13 – 8
6CB–13907–10	13 – 23
63P–13915–00	1 – 11
	13 – 24
6CB–13971–01	14 – 10
6CB–13972–00	14 – 12
6CB–13974–01	14 – 11
6AW–1410B–00	12 – 3
	12 – 7
69J–14137–00	14 – 3
6CB–14146–00	13 – 10
6P2–14149–00	14 – 2
6CB–14180–10	13 – 1
6CB–14181–01	13 – 15
6CB–14182–02	13 – 2
6P2–14191–00	13 – 16
68V–14216–00	13 – 12
6CB–14216–00	13 – 6
6CB–14239–00	13 – 17
6P2–14386–00	13 – 37
6AW–1441J–00	9 – 11
6CB–14429–01	13 – 19
63P–14435–00	21 – 31
6CB–14440–01	9 – 9
6CB–1447B–00	13 – 33
6CB–14546–00	13 – 26
6CB–14564–00	13 – 9
63P–14567–00	13 – 36
6CE–14711–00–9S	33 – 20
6CB–14750–A0	33 – 9
6CB–14755–00	33 – 11
	44 – 5
6CB–1475A–00	10 – 27
6CB–1475F–00	10 – 28
6CB–1475G–10	10 – 31
6CB–1475H–00	13 – 13
6CB–1475J–00	13 – 14
6CE–14872–00	18 – 25
	18 – 28
6CB–14984–00	1 – 12
	13 – 31
6CB–14985–00	13 – 25
6EK–14989–00	10 – 30

PART NO. N° PIECES	REF. NO.
6CE–15100–10	3 – 2
6AW–15142–00	5 – 38
6CB–15142–00	6 – 8
6CB–15187–00	3 – 5
6CB–15311–00–CA	34 – 1
6BB–15316–00	33 – 29
6CB–15319–00	3 – 43
6CB–15362–00	34 – 18
6G8–15363–00	3 – 41
6CB–15373–00	9 – 8
6CB–15377–00	34 – 19
6CE–15411–00–9S	3 – 14
6CE–15421–10–9S	3 – 15
6CB–15451–00	3 – 17
	43 – 7
6CB–15481–00	3 – 6
6CB–15512–00	8 – 29
6CB–15544–00	6 – 4
6CB–2134V–00	5 – 40
69J–2134X–00	9 – 16
6E5–21744–00	10 – 24
6CB–2416A–00	10 – 5
69J–24170–00	9 – 14
69J–2419A–01	9 – 15
6CB–24217–00	13 – 7
60E–24300–01	14 – 9
6CB–24313–10	15 – 18
6CB–24314–11	15 – 2
6CB–24315–00	26 – 13
6CB–24317–00	14 – 6
6CB–24323–00	14 – 7
6CB–24324–00	14 – 5
6E5–24351–51	15 – 3
6AW–24360–01	16 – 1
6G8–24376–00	10 – 29
6CE–24376–01	18 – 27
6CE–24377–00	18 – 17
6AW–24377–01	15 – 4
688–24378–00	7 – 2
	10 – 21
	10 – 35
	18 – 30
6CE–24378–00	7 – 13
6E5–24378–00	14 – 8
68V–24379–10	13 – 11
6CB–24410–00	13 – 27
6CB–24452–10	13 – 18
4SV–24453–00	13 – 38

PART NO. N° PIECES	REF. NO.
6CB–24460–00	13 – 4
6CB–24461–00	14 – 1
6P3–24469–00	15 – 10
6CB–24482–00	13 – 20
6CB–24491–00	13 – 30
6CB–24492–00	13 – 28
6CB–24501–01	1 – 9
	13 – 3
6P3–24519–00	15 – 9
6P3–24560–22	15 – 7
6P3–24562–21	15 – 8
6P3–24563–01	1 – 14
	15 – 12
6P3–24564–00	1 – 13
	15 – 11
6CB–24566–00	15 – 13
6CB–24592–00	13 – 29
6CB–24596–01	15 – 20
69J–28100–01	15 – 22
67F–2812A–00	20 – 32
6CE–28199–75–D0	15 – 23
6CE–28199–75–E0	15 – 23
6CE–28199–75–F0	15 – 23
6CE–28199–75–G0	15 – 23
6CE–28199–75–H0	15 – 23
6CE–28199–75–S0	15 – 23
6CE–28199–85–K0	15 – 24
6CE–28199–85–L0	15 – 24
6CE–28199–85–M0	15 – 24
6CE–28199–85–N0	15 – 24
6CE–28199–85–P0	15 – 24
6CE–28199–85–R0	15 – 24
6CB–41132–00–9S	33 – 13
6CB–41134–00	33 – 14
	44 – 6
6CB–41135–00	33 – 17
	44 – 8
6CE–41136–00	33 – 19
	44 – 9
6CE–41137–00–CA	33 – 1
6CB–41138–00	33 – 16
	44 – 7
6CB–42134–00	2 – 15
6AW–42169–00	26 – 15
6CE–42195–10	28 – 8
6BG–42384–00	26 – 2
6DA–42384–00	25 – 23
6CE–42510–00–8D	30 – 5

PART NO. N° PIECES	REF. NO.
6CL–42610–02	2 – 1
6CE–42613–00	2 – 3
6CB–42615–00	25 – 5
6BG–42617–00	21 – 8
6CB–42617–00	21 – 9
6CE–4261A–00	2 – 2
6CB–42628–00	2 – 18
6CB–42629–00	21 – 10
6CE–42635–00	2 – 5
6CB–42643–00	26 – 29
6CB–42644–00	26 – 30
6CB–42647–A0	2 – 8
6CB–42662–00	5 – 44
6AW–42663–00	2 – 14
6CE–42675–02	2 – 21
6CE–42676–02	2 – 22
6CL–42677–01	2 – 23
6CL–42678–02	2 – 20
6CE–42681–03	2 – 24
6CE–42682–03	2 – 25
6AW–42697–10	2 – 19
6CB–42710–00–8D	25 – 1
6CB–42716–00	25 – 6
69J–42717–00	26 – 11
6DA–42717–00	25 – 22
69J–42723–01	21 – 25
6E5–42724–00	33 – 8
6CE–42725–02	25 – 2
6H4–42726–00	26 – 4
6H1–42726–21	26 – 1
61A–42727–00	26 – 5
64G–42727–00	26 – 6
6CE–42733–00	26 – 7
6CE–42734–00	26 – 8
6CE–42741–01–8D	27 – 1
6CB–42743–00	25 – 26
6CB–42744–00	26 – 35
6H4–42748–00	25 – 24
68F–42753–00	25 – 32
6CB–42756–00	25 – 30
69M–42758–01	18 – 5
	20 – 10
6CB–42761–00	25 – 3
6CB–42766–00	25 – 28
6CB–42769–01	33 – 12
6CE–42771–01–8D	27 – 2
6CE–42774–A0	27 – 15
6AW–42785–00	26 – 17

PART NO. N° PIECES	REF. NO.
6CE–42786–01	26 – 9
6CE–42787–01	26 – 10
6EE–42794–40	25 – 34
6EE–42794–50	25 – 35
6CB–42815–01–8D	25 – 7
6CB–42816–01–8D	25 – 8
6CB–42817–01–8D	25 – 9
6CB–42818–00	25 – 13
6CB–42819–00	25 – 14
69J–43111–10–8D	29 – 1
69J–43112–01–8D	29 – 14
6E5–43126–10	29 – 43
6R3–43131–30	29 – 21
61A–43132–00	29 – 12
61A–43133–00	29 – 15
66T–43144–00	25 – 17
6G5–43144–00	29 – 33
6E5–43145–01	39 – 8
6G5–43148–00	29 – 38
61A–43181–01	29 – 35
6G5–43185–02	29 – 36
61A–43311–22–8D	29 – 30
61A–43376–00	30 – 3
69J–43800–07–8D	31 – 1
69J–43801–01	31 – 4
69J–43804–00	32 – 5
69J–43805–00	32 – 4
6CE–4380P–00	31 – 12
6CE–43810–00	31 – 3
61A–43811–00	31 – 9
61A–43813–02	31 – 18
6H1–43814–00	31 – 17
69J–43816–00	31 – 62
69J–43817–00	32 – 13
61A–43818–00	31 – 25
69J–4381C–00	31 – 30
	31 – 35
69J–4381J–00	31 – 63
69J–43820–01	31 – 70
61A–43821–01	31 – 69
61A–43822–00	31 – 68
69J–43828–00	32 – 16
6H1–43829–00	32 – 19
69J–4382E–00	31 – 11
69J–43830–01	31 – 33
69J–43831–00	31 – 65
69J–43833–02	31 – 21
61A–43835–01	31 – 19

PART NO. N° PIECES	REF. NO.
6CE–43840–00	31 – 2
6CJ–43841–00	31 – 42
6CJ–43843–00	31 – 53
6CJ–43844–00	31 – 50
6H1–43844–10	31 – 55
69J–43845–00	31 – 28
69A–4384F–00	31 – 39
69J–4384G–00	31 – 58
6H1–4384G–11	31 – 54
69J–4384H–00	31 – 10
61A–4384H–10	31 – 73
6CJ–4384M–00	31 – 38
69J–43851–00	31 – 49
69J–43853–00	31 – 45
69J–43854–00	31 – 57
69J–43855–00	31 – 52
6H1–43856–10	31 – 56
61A–43861–00	31 – 14
	31 – 16
	31 – 66
69J–43861–00	32 – 6
6H1–43861–00	31 – 6
6D8–43863–00	31 – 27
61A–43864–00	31 – 72
60V–4386A–00	31 – 44
69J–4386K–00	32 – 10
61A–43871–00	31 – 15
69J–43871–00	31 – 61
6H1–43872–00	31 – 7
61A–43874–00	31 – 71
6H1–43875–00	31 – 29
6T4–43875–01	31 – 67
61A–43875–10	31 – 74
61A–43876–00	31 – 26
69J–43880–01	32 – 1
69J–43881–01	32 – 11
69J–43882–00	32 – 8
6H1–43883–00	31 – 43
69J–43886–00	32 – 7
69J–43888–00	32 – 17
69J–4388E–01	31 – 23
69J–4388F–00	32 – 14
69J–4388H–00	32 – 12
69J–4388J–00	31 – 20
69J–43891–00	32 – 9
6CJ–43893–00	31 – 46
69J–43894–00	31 – 41
69J–43899–01	31 – 31

PART NO. N° PIECES	REF. NO.
61A–4389H–01	31 – 8
69J–4389J–00	31 – 32
	31 – 36
6CE–44117–10	28 – 14
6CE–44118–A0	28 – 18
6CE–44120–20	28 – 20
6CE–44121–10	28 – 16
6CE–44122–10	28 – 9
6CE–44142–20	28 – 7
6CE–44150–00	35 – 12
6CF–44150–00	37 – 12
6CE–44150–10	35 – 12
6CE–44311–01	35 – 14
	37 – 14
6AW–44312–00	35 – 20
	36 – 6
	37 – 20
6CB–44312–00	35 – 28
	37 – 28
6CE–44315–00	35 – 24
	37 – 24
	44 – 22
	44 – 36
6AW–44322–00	35 – 16
	37 – 16
	44 – 30
6CE–44323–01	35 – 23
	37 – 23
	44 – 35
6CE–44352–00	35 – 21
	37 – 21
	44 – 33
6CE–44361–00	36 – 3
	38 – 3
6CE–44362–00	36 – 4
6D0–44362–01	36 – 27
	38 – 20
6AW–44363–00	36 – 7
6AW–44365–00	35 – 19
	36 – 1
	36 – 5
	37 – 19
	38 – 1
	44 – 21
6AW–44366–00	33 – 45
	36 – 2
	38 – 2
	44 – 13

PART NO. N° PIECES	REF. NO.
6D0–44366–00	36 – 28
	38 – 21
6D0–44367–00	36 – 26
	38 – 19
6P2–44391–00	25 – 25
6CE–44511–00	30 – 31
6CE–44514–00	30 – 22
6CE–44526–00	30 – 23
6G5–44526–00	29 – 4
6CE–44532–00	30 – 25
6CE–44533–00	30 – 30
6CE–44536–00	30 – 24
6CE–44551–00–CA	30 – 10
6CE–44552–00–CA	30 – 20
6CE–44555–00	30 – 14
6CE–44574–00	30 – 12
6CE–44575–00	30 – 13
6CE–45111–00–8D	33 – 25
6CB–45113–00	33 – 26
	44 – 12
6CE–45123–00	33 – 24
	44 – 11
6CE–45127–00	33 – 23
	44 – 10
6BB–45152–01	33 – 30
61A–45155–00	33 – 34
6CE–45181–00–9S	33 – 18
6CE–45211–10–8D	33 – 44
6P2–45214–00	36 – 14
	38 – 7
6P2–45215–00	36 – 15
	38 – 8
6CE–45224–00	36 – 18
	38 – 11
6CE–45225–00	36 – 19
	38 – 12
6CE–45244–00	35 – 41
	37 – 41
6G5–45251–02	1 – 15
	29 – 3
6CE–45300–01–8D	35 – 1
6CF–45300–01–8D	37 – 1
6CE–45300–11–8D	35 – 1
6CE–45301–00–8D	35 – 2
	37 – 2
69J–45318–01	33 – 32
65N–45321–00	35 – 9
	37 – 9

PART NO. N° PIECES	REF. NO.
6CE–45321–00	35 – 9
6CE–45332–00–CA	35 – 66
6CF–45332–01–CA	37 – 64
6CE–45335–00–9S	35 – 30
	37 – 30
688–45341–10	35 – 5
	37 – 5
6AW–45344–00	35 – 36
	37 – 36
6CE–45361–10	35 – 81
	37 – 77
61A–45371–00	1 – 19
	36 – 22
	38 – 15
6CE–45375–00	35 – 8
	37 – 8
663–45376–00	35 – 7
	37 – 7
63P–45378–00	33 – 47
	36 – 24
	38 – 17
63P–45379–00	33 – 42
6CB–45383–00	35 – 79
	37 – 75
6CB–45384–00	35 – 80
	37 – 76
6CE–45501–00	35 – 43
	37 – 43
6CE–45501–10	35 – 43
6CE–45539–00	35 – 42
	37 – 42
6CE–45550–00	35 – 44
6CF–45550–00	37 – 44
6CF–45560–00	37 – 47
676–45567–00	35 – 77
6CB–45567–00	35 – 54
	37 – 52
676–45567–10	35 – 77
6CB–45567–10	35 – 54
	37 – 52
676–45567–20	35 – 77
6CB–45567–20	35 – 54
	37 – 52
676–45567–30	35 – 77
6CB–45567–30	35 – 54
	37 – 52
676–45567–40	35 – 77
6CB–45567–40	35 – 54

NUMERICAL INDEX
INDEX NUMERIQUE

PART NO. N° PIECES	REF. NO.
6CB–45567–40	37 – 52
676–45567–50	35 – 77
6CB–45567–50	35 – 54
	37 – 52
6CE–45571–00	35 – 68
6CB–45576–00	35 – 69
6CF–45576–00	37 – 66
6CB–45577–00	35 – 74
	37 – 71
6CB–45577–10	35 – 74
	37 – 71
6CB–45577–20	35 – 74
	37 – 71
6CB–45577–30	35 – 74
	37 – 71
6CB–45577–40	35 – 74
	37 – 71
6CB–45577–50	35 – 74
	37 – 71
6CB–45577–60	35 – 74
	37 – 71
6K1–45578–01	37 – 73
6K1–45578–10	37 – 73
6K1–45578–20	37 – 73
6K1–45578–30	37 – 73
6K1–45578–40	37 – 73
6K1–45578–50	37 – 73
6K1–45578–60	37 – 73
6CE–45587–00	35 – 34
	37 – 34
6CE–45587–10	35 – 34
	37 – 34
6CE–45587–20	35 – 34
	37 – 34
6CE–45587–30	35 – 34
	37 – 34
6CE–45587–40	35 – 34
	37 – 34
6CE–45587–50	35 – 34
	37 – 34
6CE–45587–60	35 – 34
	37 – 34
6CB–45611–00	35 – 55
6CF–45611–00	37 – 53
6CE–45631–00	35 – 64
	37 – 62
6E5–45633–01	35 – 65
	37 – 63

PART NO. N° PIECES	REF. NO.
6CB–45634–00	35 – 56
	37 – 54
61A–45635–00	35 – 60
	37 – 58
6H1–45668–00	35 – 59
	37 – 57
6AW–45723–00	35 – 27
	37 – 27
6CB–45824–00	35 – 48
	37 – 49
6CE–45930–00	36 – 34
6CF–45930–00	38 – 27
6CE–45970–10	36 – 34
6CF–45970–10	38 – 27
6CE–45972–10	36 – 34
6CF–45972–10	38 – 27
61A–45974–00	36 – 38
61B–45974–00	38 – 31
6CE–45974–00	36 – 34
6CF–45974–00	38 – 27
6CE–45976–00	36 – 34
6CF–45976–00	38 – 27
6CE–45978–00	36 – 34
6CF–45978–00	38 – 27
69J–45987–00	36 – 29
	38 – 22
6CE–45997–00	36 – 30
	38 – 23
688–45997–01	36 – 30
	38 – 23
6CE–45B70–00	36 – 36
6CF–45B70–00	38 – 29
6CE–45B72–00	36 – 36
6CF–45B72–00	38 – 29
6CE–45B74–00	36 – 36
6CF–45B74–00	38 – 29
6CE–45C81–00	36 – 35
	36 – 37
	38 – 28
	38 – 30
6ML–4820A–00	28 – 1
6Y8–48277–00	41 – 16
6E5–61301–01	40 – 1
6E5–61303–00	40 – 5
6E5–61311–11	40 – 3
6E5–61313–00	40 – 2
6E5–61315–00	40 – 4
6E5–61350–02	39 – 1

PART NO. N° PIECES	REF. NO.
6E5–61351–01	39 – 2
6E5–61355–00	39 – 5
6CE–68303–00	28 – 27
6Y8–81315–01	41 – 17
6P2–81336–00	20 – 34
6CE–81337–01	17 – 13
6CE–81410–00	17 – 3
6CB–81443–00	22 – 7
6CB–81639–10	20 – 28
6CE–81800–00	24 – 1
6CE–81801–00	24 – 5
6CE–81807–00	24 – 8
6CB–81809–00	24 – 14
6CE–81810–00	24 – 3
67F–81813–00	24 – 6
6CE–81820–00	24 – 7
6CE–81821–00	24 – 11
6CB–81822–02	22 – 5
6CB–81823–A0	22 – 9
6CB–81826–00	24 – 22
69J–81828–00	24 – 23
6CE–81830–00	24 – 16
6CB–81832–00	24 – 9
6CB–81836–00	24 – 10
6CE–81839–00	24 – 19
67F–8183R–00	24 – 13
60V–8183T–00	24 – 17
6P2–8183X–00	20 – 19
6CE–81840–00	24 – 4
67F–81841–00	24 – 12
6CE–81842–00	24 – 18
6BR–81845–00	18 – 7
67F–81846–00	24 – 24
6CE–81850–00	24 – 2
6CE–81869–00	24 – 21
67F–81891–00	24 – 15
6CE–81919–20	20 – 37
6CB–81923–00	20 – 38
6P2–81925–01	20 – 1
6CB–81929–00	20 – 4
6C5–81941–00	24 – 20
6CB–81948–01	20 – 8
6CE–81949–00	22 – 14
6AW–81950–00	20 – 15
6CB–81952–00	21 – 33
6AW–8195A–00	20 – 23
6CE–81960–00	18 – 11
6CE–81972–00–9S	18 – 12

PART NO. N° PIECES	REF. NO.
6CE–81975–00	18 – 13
6EE–81994–40	17 – 20
6EE–81994–50	17 – 21
6AH–81996–00	25 – 36
6CB–82105–01	20 – 41
6P2–82113–00	20 – 31
69J–82147–00	29 – 32
6E5–82148–00	29 – 9
6H1–82148–00	29 – 7
6AW–82149–00	30 – 16
67F–82151–00	20 – 26
6CE–82151–00	20 – 22
6TA–82151–00	41 – 18
67F–82151–10	20 – 27
67F–82151–40	20 – 24
67F–82151–50	20 – 25
6CE–82170–11	20 – 21
6CB–82310–00	19 – 1
6CB–82314–00	19 – 3
6CB–82316–01	18 – 3
6P2–82380–00	11 – 5
6CB–82388–00	21 – 16
6Y8–82509–10	41 – 8
6Y8–82521–11	41 – 15
6P2–82560–01	21 – 19
6BR–82563–01	21 – 24
69J–82587–00	21 – 26
6CE–82588–00	20 – 6
6E9–82588–00	21 – 20
6CB–82589–01	21 – 7
6CE–82590–13	21 – 1
6CB–82594–00	21 – 3
6CE–8259M–00	22 – 13
6CE–825E0–00	42 – 1
68F–82846–00	20 – 30
6X4–83383–00	41 – 5
6X4–83386–00	41 – 6
6E5–83558–00	33 – 36
63P–83614–01	21 – 27
	21 – 28
6AW–83651–00	21 – 23
6AW–8366B–01	23 – 1
60V–8366D–00	23 – 2
69J–83672–11	30 – 1
6Y8–8454G–00	41 – 11
6P2–85075–00	19 – 6
64J–85516–00	18 – 4
	20 – 9

PART NO. N° PIECES	REF. NO.
6CB–85516–00	17 – 18
6CB–85544–00	20 – 29
689–85547–00	15 – 1
6CB–85547–00	9 – 10
6CB–85561–00	17 – 5
6CE–85564–00	28 – 6
6CB–85580–00	17 – 4
6CE–85592–00	17 – 9
6P2–85780–00	6 – 11
6CB–85790–00	21 – 18
63P–85886–00	21 – 30
6P2–85896–00	19 – 5
6CL–8591A–21	18 – 1
6C5–86120–00	10 – 3
6CB–86120–00	6 – 1
6Y8–86260–02	41 – 2
6AA–86261–00	41 – 3
6Y8–86267–00	41 – 1
K0F–A3233–00	4 – 15
K0F–A3741–00	8 – 5
K0F–A3742–00	8 – 6
K0F–A3743–00	8 – 3
K0F–A3751–00	8 – 8
K0F–A3751–10	8 – 8
K0F–A3751–20	8 – 8
K0F–A3751–30	8 – 8
K0F–A3751–40	8 – 8
K0F–A3751–50	8 – 8
K0F–A3751–60	8 – 8
K0F–A3751–70	8 – 8
K0F–A3751–80	8 – 8
K0F–A3751–90	8 – 8
K0F–A3751–A0	8 – 8
K0F–A3751–B0	8 – 8
K0F–A3751–C0	8 – 8
K0F–A3751–D0	8 – 8
K0F–A3751–E0	8 – 8
K0F–A3751–F0	8 – 8
K0F–A3751–G0	8 – 8
K0F–A3751–H0	8 – 8
K0F–A3751–J0	8 – 8
K0F–A3751–K0	8 – 8
K0F–A3751–L0	8 – 8
K0F–A3751–M0	8 – 8
K0F–A3751–N0	8 – 8
K0F–A3751–P0	8 – 8
K0F–A3751–R0	8 – 8
K0F–A3751–S0	8 – 8

PART NO. N° PIECES	REF. NO.
K0F–A3751–T0	8 – 8
K0F–A3753–00	8 – 8
K0F–A3753–10	8 – 8
K0F–A3753–20	8 – 8
K0F–A3753–30	8 – 8
K0F–A3753–40	8 – 8
K0F–A3753–50	8 – 8
K0F–A3753–60	8 – 8
K0F–A3753–70	8 – 8
6CB–W0001–02	43 – 1
6CE–W0001–21	44 – 1
6CE–W0078–01	1 – 20
	44 – 28
6CE–W009A–02–9S	5 – 1
6CE–W009C–02–9S	5 – 11
6CB–W1165–00	4 – 9
6CB–W4624–00	8 – 27
6CE–W8145–01	17 – 1
6AW–W9011–00	17 – 2
90101–09M70	40 – 9
90101–12047	29 – 47
90101–14004	30 – 17
90105–06035	6 – 3
	9 – 4
90105–06037	3 – 28
	3 – 45
	6 – 7
90105–06039	26 – 34
90105–06151	3 – 18
	3 – 40
	22 – 10
90105–06M07	3 – 13
	5 – 22
90105–06M08	12 – 9
90105–08175	3 – 7
	5 – 28
90105–08178	6 – 5
90105–08220	5 – 29
90105–08M61	35 – 82
	37 – 78
90105–08M87	22 – 6
90105–10M00	36 – 23
	38 – 16
90105–14005	30 – 27
90109–06277	5 – 33
	5 – 37
90109–06M80	27 – 14
90110–05039	36 – 21

PART NO. N° PIECES	REF. NO.
90110–05039	38 – 14
90111–06142	27 – 4
	27 – 7
90111–06144	27 – 3
	27 – 8
90111–08078	2 – 9
90116–10041	36 – 9
90119–06M17	9 – 21
	15 – 14
90119–06M18	33 – 43
90119–06M24	9 – 2
90119–06M56	18 – 6
	20 – 11
90119–06M61	26 – 33
90119–06MA3	18 – 14
90119–07001	5 – 5
	5 – 15
90119–07234	5 – 6
	5 – 16
90119–08020	9 – 3
90119–08102	33 – 4
90119–08168	28 – 3
90119–08M14	35 – 26
	37 – 26
	44 – 38
90119–08M22	25 – 21
90119–08M32	35 – 29
	37 – 29
90119–10007	33 – 27
90119–10008	36 – 13
90119–10009	36 – 12
90119–10024	29 – 29
	30 – 21
	30 – 32
90119–10038	36 – 9
	38 – 5
90119–10050	8 – 18
90119–10M07	8 – 31
90151–05M05	3 – 33
90151–06M02	3 – 11
	3 – 20
	33 – 3
90152–05M08	36 – 16
	38 – 9
90155–11002	5 – 27
90159–05059	42 – 4
90159–06053	27 – 11
90167–06M00	41 – 12

PART NO. N° PIECES	REF. NO.
90170–09M05	40 – 10
90170–10009	36 – 11
90170–14M06	40 – 6
90170–16M19	35 – 45
	37 – 45
90170–30M18	35 – 40
	37 – 40
90171–18M04	36 – 32
	38 – 25
90173–06001	27 – 9
90179–06M28	2 – 4
	5 – 41
90179–08003	22 – 3
90183–02M03	35 – 62
	37 – 60
90183–061A6	27 – 10
90185–05002	36 – 17
	36 – 20
	38 – 10
	38 – 13
90185–06M07	5 – 45
	28 – 12
90185–09M01	39 – 6
	40 – 11
90185–14M00	30 – 18
	30 – 28
90185–22M11	29 – 24
90201–02M00	35 – 61
	37 – 59
90201–06068	28 – 11
90201–06M02	33 – 40
90201–06M30	41 – 13
90201–10048	36 – 10
90201–10M01	8 – 32
90201–10M20	39 – 7
90201–10M76	40 – 8
90201–11008	28 – 24
90201–12064	28 – 4
90201–12426	29 – 49
90201–13M01	29 – 48
90201–156J2	25 – 11
90201–16032	30 – 15
90201–16M00	35 – 46
	37 – 46
90201–186F1	5 – 8
	5 – 18
90201–26M59	29 – 23
90201–32008	35 – 76

PART NO. N° PIECES	REF. NO.
90201–40M00	30 – 6
90201–41008	35 – 51
90201–62008	35 – 33
	37 – 33
90202–08M41	28 – 10
90202–40M47	30 – 9
90206–14N50	32 – 2
90206–15M18	25 – 12
90214–30003	35 – 39
	37 – 39
90249–06M19	29 – 39
90250–08M07	35 – 63
	37 – 61
90280–04002	35 – 22
	37 – 22
	44 – 34
90282–05008	35 – 78
	37 – 74
90340–08002	35 – 4
	37 – 4
90340–14M06	5 – 9
	34 – 4
90340–18M09	5 – 7
	5 – 17
90386–08008	28 – 2
90386–10001	28 – 25
90386–10M16	29 – 37
90386–11001	28 – 22
90386–15M73	25 – 10
90386–18M14	29 – 45
	31 – 24
90386–18M63	29 – 44
90386–25M31	29 – 22
90386–39M89	30 – 7
90387–05004	42 – 5
90387–06285	17 – 15
90387–06289	9 – 20
	15 – 16
90387–06M03	26 – 32
90387–06M43	27 – 13
90387–07028	27 – 6
90387–08104	28 – 5
90387–08M37	25 – 20
90387–08M45	2 – 12
90387–10094	2 – 10
90387–10M05	29 – 40
90387–10M61	39 – 3
90387–11005	5 – 26

PART NO. N° PIECES	REF. NO.
90387–28013	30 – 26
90401–19001	3 – 37
90430–06M03	5 – 23
90430–08003	1 – 18
	35 – 6
	37 – 6
	44 – 14
90430–14115	5 – 10
90430–14M09	1 – 17
	34 – 5
	44 – 2
90445–07032	33 – 38
90445–07034	33 – 38
90445–09068	18 – 29
90445–09220	7 – 1
90445–096H2	7 – 10
90445–097F7	10 – 9
90445–107A5	18 – 19
90445–14019	26 – 23
90445–14021	26 – 14
90445–16015	26 – 16
90446–15003	20 – 20
	30 – 33
90462–06013	18 – 21
90462–10061	33 – 41
90464–06001	21 – 5
90464–07209	10 – 20
90464–08004	11 – 11
90464–09013	7 – 5
	10 – 15
90464–09129	21 – 32
90464–10011	10 – 34
90464–10M59	7 – 4
90464–11012	10 – 32
90464–11121	21 – 12
90464–12009	14 – 14
90464–12010	7 – 6
	10 – 13
	10 – 33
90464–12012	14 – 15
	14 – 16
	15 – 5
90464–12183	20 – 13
	21 – 14
90464–13227	22 – 11
90464–13249	9 – 22
	18 – 9
	20 – 12

PART NO. N° PIECES	REF. NO.
90464–16001	26 – 28
90464–18004	22 – 12
90464–18246	21 – 13
90464–20181	9 – 23
	10 – 19
	18 – 10
	20 – 14
	21 – 2
	21 – 15
90464–20258	25 – 33
90464–23001	10 – 6
90464–26002	7 – 9
	10 – 14
	18 – 23
90464–99004	9 – 12
90465–08M83	29 – 18
	29 – 26
90465–11M10	7 – 7
	7 – 11
	10 – 7
	10 – 12
	15 – 6
	15 – 19
	17 – 10
	18 – 31
	18 – 32
	18 – 33
	23 – 4
	26 – 3
	26 – 24
	29 – 25
	30 – 34
	33 – 37
	33 – 37
	41 – 10
	42 – 6
90465–11M59	7 – 16
90465–13M18	42 – 7
90465–13M24	21 – 6
90465–14M66	14 – 13
	21 – 22
90467–08004	18 – 34
90467–08M18	18 – 20
90467–090A0	10 – 11
90467–130A5	26 – 25
90467–140A8	26 – 26
90467–140A9	26 – 27
90468–18008	28 – 13

PART NO. N° PIECES	REF. NO.
90468–18008	28 – 17
90480–10M23	9 – 19
	15 – 15
90480–12314	17 – 17
	19 – 4
90480–13M24	27 – 12
90480–14029	26 – 31
90480–15M31	17 – 16
90480–16009	27 – 5
90480–22M81	25 – 19
90501–10M77	35 – 57
	37 – 55
90506–16003	29 – 42
90506–22001	25 – 16
90560–12M01	39 – 4
91318–05025	31 – 59
91318–05040	31 – 64
91490–40030	36 – 33
	38 – 26
91690–30020	29 – 41
91690–40010	3 – 16
91809–08006	5 – 4
	5 – 14
92903–06600	20 – 18
92903–08600	22 – 2
92990–06100	2 – 16
92990–06200	2 – 7
92990–08600	2 – 11
92990–18200	36 – 31
	38 – 24
92995–05600	17 – 8
92995–06100	11 – 7
92995–06600	9 – 18
	11 – 8
	19 – 8
	20 – 36
	29 – 6
	29 – 11
	29 – 20
	29 – 28
	42 – 3
92995–08600	35 – 38
	37 – 38
92995–14600	30 – 19
	30 – 29
93101–28M16	35 – 31
	37 – 31
	44 – 23

NUMERICAL INDEX
INDEX NUMERIQUE

PART NO. N° PIECES	REF. NO.
93101–30002	35 – 71
	37 – 68
	44 – 25
93101–30004	35 – 72
	37 – 69
	44 – 26
93102–38008	8 – 26
	43 – 11
93102–85008	4 – 4
	43 – 10
93104–22M07	35 – 15
	37 – 15
	44 – 18
	44 – 29
93106–09014	35 – 11
	37 – 11
	44 – 17
93106–10001	35 – 11
	44 – 17
93106–19N50	31 – 5
93210–04279	41 – 9
93210–064A5	31 – 51
93210–07003	33 – 48
	36 – 25
	38 – 18
	44 – 15
93210–08391	31 – 48
93210–09165	28 – 21
	32 – 18
93210–16275	39 – 9
93210–17239	31 – 22
93210–19MJ3	34 – 20
	44 – 4
93210–24M79	3 – 42
	43 – 17
93210–26658	3 – 8
	34 – 15
	43 – 6
	43 – 14
93210–27370	3 – 44
	43 – 18
93210–33M49	35 – 10
	37 – 10
	44 – 16
93210–35321	30 – 8
93210–37160	35 – 18
	37 – 18
	44 – 20

PART NO. N° PIECES	REF. NO.
93210–37160	44 – 32
93210–64488	35 – 35
	37 – 35
	44 – 24
93210–66001	32 – 15
93210–94003	35 – 17
	37 – 17
	44 – 19
	44 – 31
93211–02001	35 – 73
	37 – 70
	44 – 27
93306–209U0	35 – 67
93311–83280	35 – 3
	37 – 3
93311–85894	35 – 47
	37 – 48
93315–43061	35 – 70
	37 – 67
93332–00048	37 – 65
93332–000A4	35 – 50
93332–000A5	35 – 75
93340–67011	35 – 53
	37 – 51
93341–440U5	37 – 72
93399–99966	35 – 32
	37 – 32
93399–999T6	32 – 3
93410–10082	28 – 26
93410–18M05	29 – 46
93410–37M04	30 – 11
93420–36M01	33 – 33
93501–04011	35 – 58
	37 – 56
93501–08001	31 – 47
93503–16003	31 – 37
93505–32038	31 – 13
	31 – 34
93604–07M13	28 – 19
93604–35236	31 – 60
93605–10108	8 – 10
	8 – 12
	8 – 14
	8 – 16
93606–12019	3 – 3
	3 – 4
	4 – 3
	35 – 25

PART NO. N° PIECES	REF. NO.
93606–12019	37 – 25
	44 – 37
93606–19002	29 – 2
93606–19M23	33 – 22
93608–16M16	33 – 7
	33 – 28
	33 – 46
	34 – 3
	35 – 49
	36 – 8
	37 – 50
	38 – 4
93700–06M03	29 – 17
	29 – 31
94702–00400	1 – 8
	5 – 46
95022–06035	17 – 11
95023–06012	18 – 22
95027–06025	3 – 27
95380–06600	2 – 17
	10 – 4
95380–12600	29 – 50
95380–14700	40 – 7
95780–06300	41 – 14
95780–08300	2 – 13
95780–10300	30 – 4
95812–06025	34 – 8
95814–08020	20 – 3
95875–06016	34 – 21
95875–06025	28 – 23
	28 – 28
95875–06040	34 – 14
95875–08030	9 – 1
95875–08060	11 – 4
95895–06010	33 – 35
95895–06012	18 – 8
	21 – 4
	21 – 21
	21 – 29
	25 – 18
	25 – 27
	25 – 29
	25 – 31
95895–06014	5 – 39
	15 – 21
	25 – 4
95895–06016	6 – 9
	10 – 17

PART NO. N° PIECES	REF. NO.
95895–06016	15 – 17
	20 – 7
	21 – 17
	21 – 34
	22 – 8
	23 – 3
	26 – 12
95895–06020	9 – 13
	17 – 14
	18 – 2
	20 – 5
	21 – 11
	33 – 10
95895–06025	18 – 15
	19 – 2
95895–06030	5 – 32
	5 – 36
	17 – 12
95895–08012	25 – 15
95895–08016	20 – 2
	20 – 39
	20 – 40
95895–08025	5 – 24
97013–06020	20 – 17
97013–08045	22 – 1
97075–06020	11 – 6
97095–05020	17 – 7
97095–06010	29 – 34
	33 – 39
97095–06012	33 – 31
97095–06014	29 – 27
97095–06016	9 – 17
	20 – 35
	42 – 2
97095–06020	19 – 7
97095–06025	29 – 5
97095–08020	35 – 37
	37 – 37
97575–06525	28 – 15
97575–08535	33 – 21
	34 – 2
97575–08560	33 – 15
97575–10535	33 – 6
97575–10545	33 – 5
97575–10570	36 – 13
	38 – 6
97595–06510	29 – 8
97595–06610	20 – 16

PART NO. N° PIECES	REF. NO.
97780–50620	20 – 33
97780–60516	2 – 6
97780–60520	26 – 22
97780–60620	41 – 7
97880–06035	41 – 12
97885–06010	29 – 13
	29 – 16
97885–06012	29 – 10
	29 – 19
97980–06216	41 – 4
97985–04308	22 – 4
97985–06216	30 – 2
98507–04008	13 – 39
98780–06530	3 – 31
98780–06550	3 – 35
99001–08600	35 – 13
	37 – 13
99001–09600	35 – 13
99002–03600	31 – 40
99009–47500	35 – 52
99530–08012	17 – 6
99530–14016	8 – 30

PART NO. N° PIECES	REF. NO.