YAMAHA

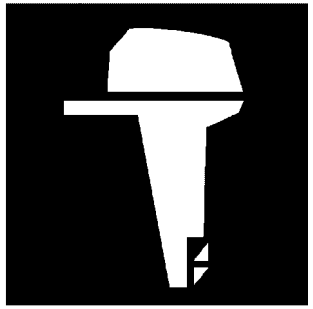

PARTS CATALOGUE
CATALOGUE DE PIECES DETACHEES

F25D'16 (6BP9)

YAMAHA
GENUINE
Parts & Accessories

1Q6BP-300FA

( )

F25D
PARTS CATALOGUE
©2024 by Yamaha Motor Co., Ltd.
1st edition, November 2024
All rights reserved.
Any reprinting or unauthorized use
without the written permission of
Yamaha Motor Co., Ltd.
is expressly prohibited.
Printed in Japan.

F25D
CATALOGUE DE PIECES DETACHEES
©2024 par Yamaha Motor Co., Ltd.
1re édition, novembre 2024
Tous droits réservés
Toute réimpression ou utilisation
non autorisée sans la permission écrite
de Yamaha Motor Co., Ltd.
est formellement interdite.
Imprimé au Japon

FOREWORD

This Parts Catalogue is related to the parts for the model(s) on the cover page. When you are ordering replacement parts, please refer to this Parts Catalogue and quote both part numbers and part names correctly.

1. Modifications or additions which have been made after the issue of the Parts Catalogue will be announced in the Parts News.
   It is advisable that you make the necessary corrections to the Parts Catalogue according to the Parts News.

2. Abbreviations
   The following abbreviations are used in this Parts Catalogue.
   "UR" Use specified parts number.
   "UN" Use as many as needed.
   "AP" Alternate Parts
   "LM" Locally Made (Parts need to be ordered locally)
   "F#" Frame No. (Applicable machine No.)
   "O/S" Over Size

3. The number of components for assembly
   - Parts, which are to be supplied in an assembly, are listed with a dot (.) in front of the part name as shown below.
   - The numeral appearing to the right of each component part indicates the quantity of parts for each assembly unit.

PART NO.	DESCRIPTION	Q'TY	REMARKS
2F5–83310–60	FRONT FLASHER LIGHT ASSY	2	
115–83311–60	.BULB (6V–18W)	1	

4. Applicable colours of graphics are represented in the "REMARKS" as shown below.

PART NO.	DESCRIPTION	Q'TY	REMARKS
2N4–24110–00–X5	FUEL TANK COMP.	2	MXR
3J1–24240–10	.GRAPHIC, FUEL TANK	1	FOR MXR

5. Note that the illustrations for reference in finding parts numbers are not to be used for assembling. When assembling, please use the applicable service manual.

6. The asterisk (*) before a reference number indicates modified items after the first edition.

7. Applicable Serial No.
   Engine Serial No.

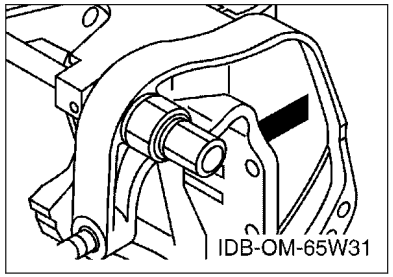

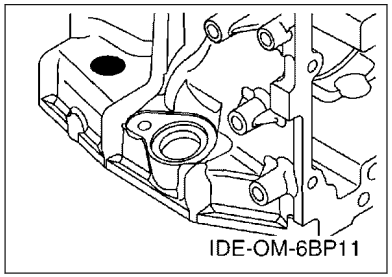

8. Applicable Engine Starting Serial No.

Model	Serial No.	Model	Serial No.
F25D	6BPK-1036107		

9. Applicable Colour Code

Abbreviation	Colour Name	Colour Code
DBN1	DARK BLUISH GRAY 1	008D

10. Quantity Column Information

Column No.	Name Of Q'ty Column	Applicable Model
1	ET	F25DET
2	E	F25DE
3	MH	F25DMH

AVANT–PROPOS

Ce catalogue de pièces détachées concerne les pièces pour le(s) modèle(s) indiqué(s) sur la page de couverture. Lorsque vous commandez des pièces de rechange, veuillez vous référer à ce catalogue de pieces détachées et indiquer clairement les numéros et les noms des pièces détachées.

1. Les modifications ou ajouts ayant été effectués après la parution du catalogue de pièces détachées seront décrits dans les Bulletins d'information concernant les pièces détachées.
   Il est recommandé que vous apportiez les corrections nécessaires au catalogue des pièces détachées en vous référant aux Bulletins d'information.

2. Abréviations
   Dans ce catalogue, les abréviations suivantes sont utilisées:
   "UR" Utiliser le numéro de pièces spécifié.
   "UN" Utiliser autant que nécessaire.
   "AP" Pièces de substitution
   "LM" Fabrication locale (les pièces doivent être commandées localement.)
   "F#" N° de cadre (applicable au N° de série)
   "O/S" Surdimensionné

3. Nombre de pièces d'un assemblage
   - Les pièces fournies comme composants d'un assemblage sont précédées d'un point (.) de la manière indiquée ci–dessous.
   - Le chiffre apparaissant à la droite de chaque composant indique la quantité de pièces pour chaque unité d'assemblage.

N° PIECES	DESCRIPTION	QTE	REMARQUES
2F5–83310–60	ENS. CLIGNOTANT AVANT	2	
115–83311–60	.AMPOULE (6V–18W)	1	

4. Les couleurs concernant les graphiques sont indiquées dans la colonne "REMARQUES", comme indiqué ci–dessous.

N° PIECES	DESCRIPTION	QTE	REMARQUES
2N4–24110–00–X5	RESERVOIR A ESSENCE.	2	MXR
3J1–24240–10	.GRAPHIQUE	1	POUR MXR

5. Veuillez noter que les illustrations sont indiquées à titre de référence pour trouver les numéros de pièces, non pour être utilisées lors de l'assemblage. Lors de l'assemblage, veuillez utiliser le manuel d'entretien adéquat.

6. L'astérisque (*) placé devant un numéro de référence indique des éléments qui ont été modifiés après la première édition.

7. N° de série applicable
   N° de Série du moteur

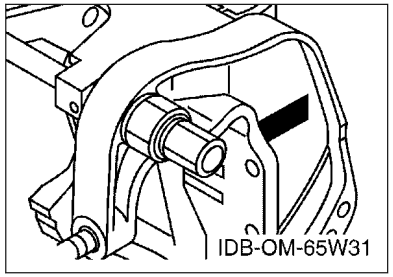

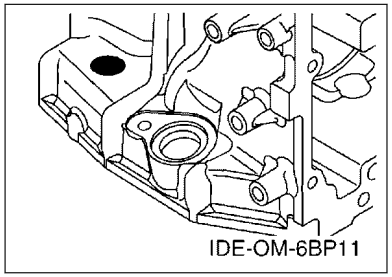

8. N° de série initial du moteur applicable

Modèle	N° de série	Modèle	N° de série
F25D	6BPK-1036107		

9. Code couleur applicable

Abréviation	Nom de la couleur	Code couleur
DBN1	DARK BLUISH GRAY 1	008D

10. Informations relatives à la colonne Quantité

N° de la colonne	Nom de la colonne Qté	Modèle applicable
1	ET	F25DET
2	E	F25DE
3	MH	F25DMH

CONTENTS

SCHEDULED SERVICE PARTS....1
TOP COWLING....2
CYLINDER & CRANKCASE 1....3
CRANKSHAFT & PISTON....5
CYLINDER & CRANKCASE 2....6
VALVE....8
INTAKE....9
CARBURETOR....10
OIL PUMP....12
FUEL....13
STARTER....15
GENERATOR....17
ELECTRICAL 1....18
ELECTRICAL 2....19
ELECTRICAL 3....20
ELECTRICAL 4....21
ELECTRICAL 5....22
STARTING MOTOR....23
BOTTOM COWLING 1....24
BOTTOM COWLING 2....26
STEERING....27
STEERING FRICTION....29
CONTROL 1....30
CONTROL 2....32
REMO CON ATTACHMENT....34
BRACKET 1....36
BRACKET 2....38
BRACKET 3....40
POWER TRIM & TILT ASSY....42
UPPER CASING....45
OIL PAN....46
LOWER CASING & DRIVE 1....47
LOWER CASING & DRIVE 2....50
FUEL TANK 1....51
FUEL TANK 2....52
STEERING GUIDE....53
REMOTE CONTROL BOX....54
REMOTE CONTROL ASSY 1....55
REMOTE CONTROL ASSY 2....58
REPAIR KIT 1....61
REPAIR KIT 2....62
REPAIR KIT 3....63

INDEX

NUMERICAL INDEX....65

TABLE DES MATIERES

PIECES MAINTENANCE PERIODIQUE.....1
CAPOT SUPERIEUR..... 2
CYLINDRE & CARTER 1..... 3
VILEBREQUIN & PISTON.....5
CYLINDRE & CARTER 2..... 6
SOUPAPE..... 8
ADMISSION.....9
CARBURATEUR..... 10
POMPE A HUILE.....12
CARBURANT..... 13
DEMARREUR.....15
GENERATRICE.....17
PARTIE ELECTRIQUE 1.....18
PARTIE ELECTRIQUE 2.....19
PARTIE ELECTRIQUE 3.....20
PARTIE ELECTRIQUE 4.....21
PARTIE ELECTRIQUE 5.....22
DEMARREUR ELECTRIQUE.....23
CAPOT INFERIEUR 1.....24
CAPOT INFERIEUR 2.....26
DIRECTION.....27
CUVETTE POIGNEE DE DIRECTION.....29
COMMANDE 1..... 30
COMMANDE 2..... 32
COMMANDE A DISTANCE.....34
SUPPORT 1..... 36
SUPPORT 2..... 38
SUPPORT 3..... 40
PUISSANCE PARER ET INCLINER..... 42
FOURREAU.....45
VENTILATEUR D'HUILE..... 46
BOITIER D'HELICE TRANSMISSION1.....47
BOITIER D'HELICE TRANSMISSION2.....50
RESERVOIR A CARBURANT 1.....51
RESERVOIR A CARBURANT 2.....52
FIXATION DE DIRECTION..... 53
BOITIER DE COMMANDE A DISTANCE..... 54
BOITIER DE COMMANDE A DISTANCE..... 55
BOITIER DE COMMANDE A DISTANCE..... 58
KITS DE REPARATION 1..... 61
KITS DE REPARATION 2..... 62
KITS DE PEPARATION 3.....63

INDEX

INDEX NUMERIQUE.....65

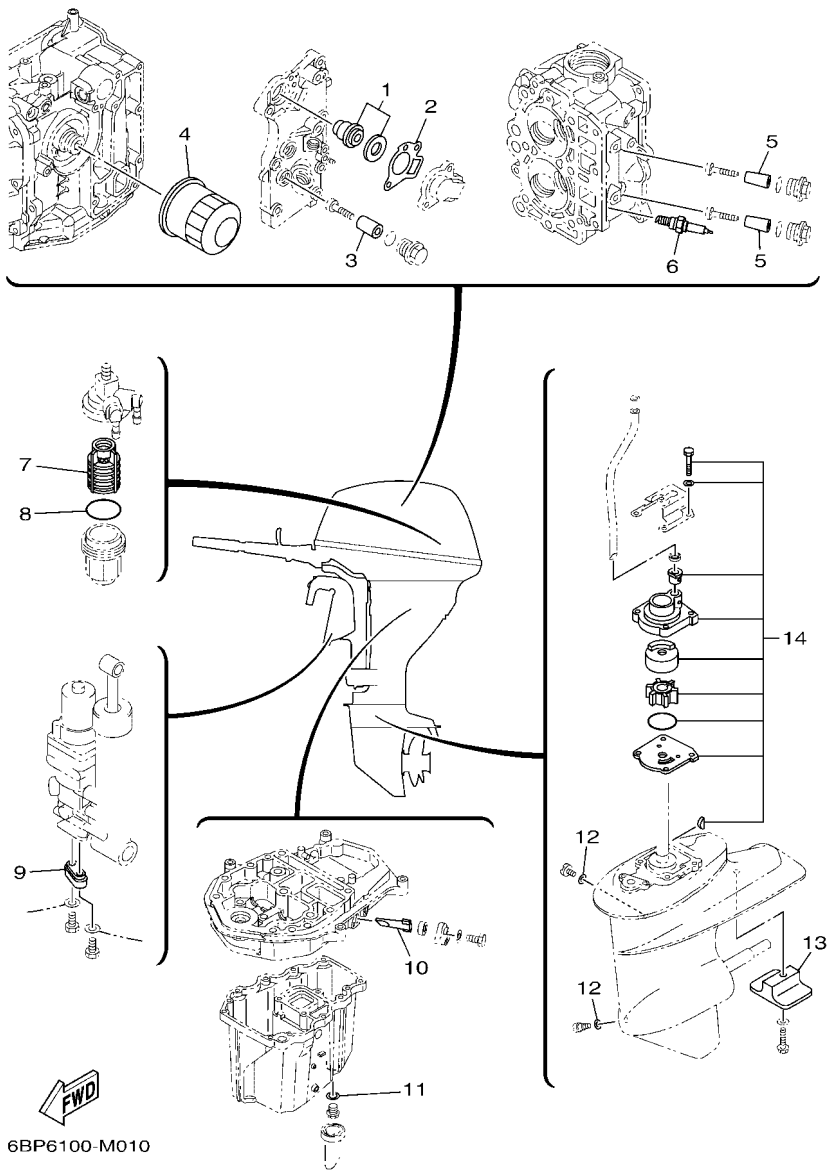

FIG. 1 SCHEDULED SERVICE PARTS — PIECES MAINTENANCE PERIODIQUE

REF. NO.	PART NO. N° PIECES	DESCRIPTION DESCRIPTION	ET	E	MH			REMARKS REMARQUES
1	6G8–12411–03	THERMOSTAT THERMOSTAT	1	1	1			
2	62Y–12414–00	GASKET, COVER JOINT, COUVERCLE	1	1	1			
3	6G8–11325–00	ANODE ANODE	1	1	1			
4	5GH–13440–50	ELEMENT ASSY, OIL CLEANER ELEMENT, FILTRE A HUILE	1	1	1			
5	6BL–11325–00	ANODE ANODE	2	2	2			
6	94702–00418	PLUG, SPARK (NGK DPR6EB-9) BOUGIE D,ALLUMAGE (NGK DPR6EB-	2	2	2			
7	61N–24563–10	ELEMENT, FILTER ELEMENT, FILTRE	1	1	1			
8	93210–32738	O-RING JOINT TORIQUE	1	1	1			
9	65W–45251–00	ANODE ANODE	1					
10	62Y–11325–00	ANODE ANODE	1	1	1			
11	90430–14M09	GASKET JOINT	1	1	1			
12	90430–08003	GASKET JOINT	2	2	2			
13	61N–45251–01	ANODE ANODE	1	1	1			
14	61N–W0078–11	WATER PUMP REPAIR KIT KIT DE REPARATION DE LA POMPE	1	1	1			

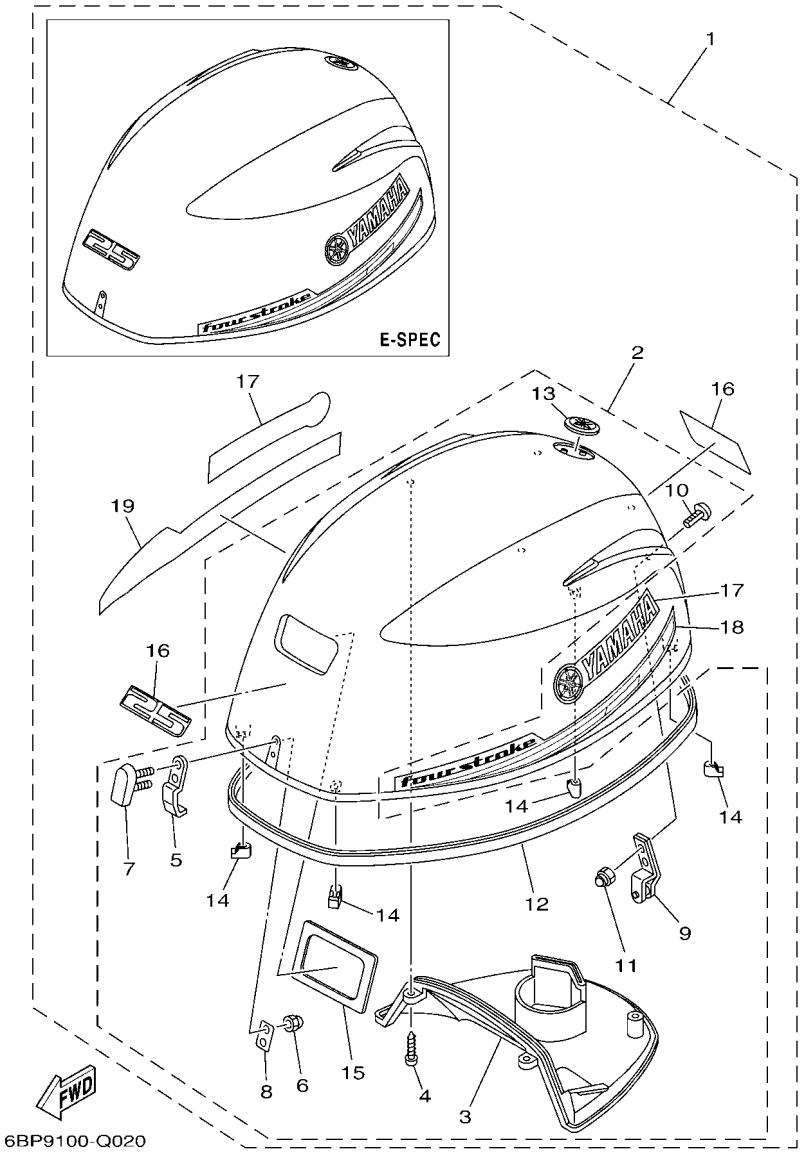

FIG. 2 TOP COWLING — CAPOT SUPERIEUR

REF. NO.	PART NO. N° PIECES	DESCRIPTION DESCRIPTION	ET	E	MH			REMARKS REMARQUES
1	6BP–42610–51	TOP COWLING ASSY CAPOT (ENS.)	1	1				
	6BP–42610–42	TOP COWLING ASSY CAPOT (ENS.)			1			
2	6BL–4261A–10	.TOP COWLING W/O GRAPHICS .CAPOT SUPERIEUR SANS GRAPHIQUE	1	1				
	6BL–4261A–01	.TOP COWLING W/O GRAPHICS .CAPOT SUPERIEUR SANS GRAPHIQUE			1			
3	6BL–42613–00	..MOLDING, AIR DUCT ..MANCHON A AIR	1	1	1			
4	90167–05017	..SCREW, TAPPING ..VIS, TETE FRAISEE	4	4	4			
5	6BL–42651–00	..HOOK ..CROCHET	1	1	1			
6	95380–05800	..NUT ..ECROU	2	2	2			
7	6BG–42851–00	..COVER, CLAMP ..COUVERCLE, BRIDE	1	1	1			
8	6BG–42649–00	..HOLDER, CLAMP BAND ..SUPPORT, SANDOW DE SERRAGE	1	1	1			
9	6BL–42652–00	..HOOK ..CROCHET	1	1	1			
10	90109–06047	..BOLT ..BOULON	2	2	2			
11	90185–06M05	..NUT, SELF-LOCKING ..ECROU,AUTO-BLOQUANT	2	2	2			
12	6CJ–42615–00	..SEAL ..JOINT	1	1	1			
13	6AH–42697–10	..TUNING FORK MARK ..MARQUE, YAMAHA	1	1	1			
14	6BG–42662–00	..DAMPER ..AMORTISSEUR	4	4	4			
15	6BL–42656–00	..PROTECTOR, RUBBER SEAL ..PROTECTEUR, JOINT CAOUTCHOUC			1			
16	6BP–42677–10	.GRAPHIC, FRONT .ADHESIF, AVANT	2	2	2			
17	6BP–42681–00	.MARK, COWLING .ADHESIF, CAPOT	2	2	2			
18	6BP–42675–10	.GRAPHIC, SIDE 1 .EMBLEME	1	1	1			
19	6BP–42676–10	.GRAPHIC, SIDE 2 .EMBLEME	1	1	1			

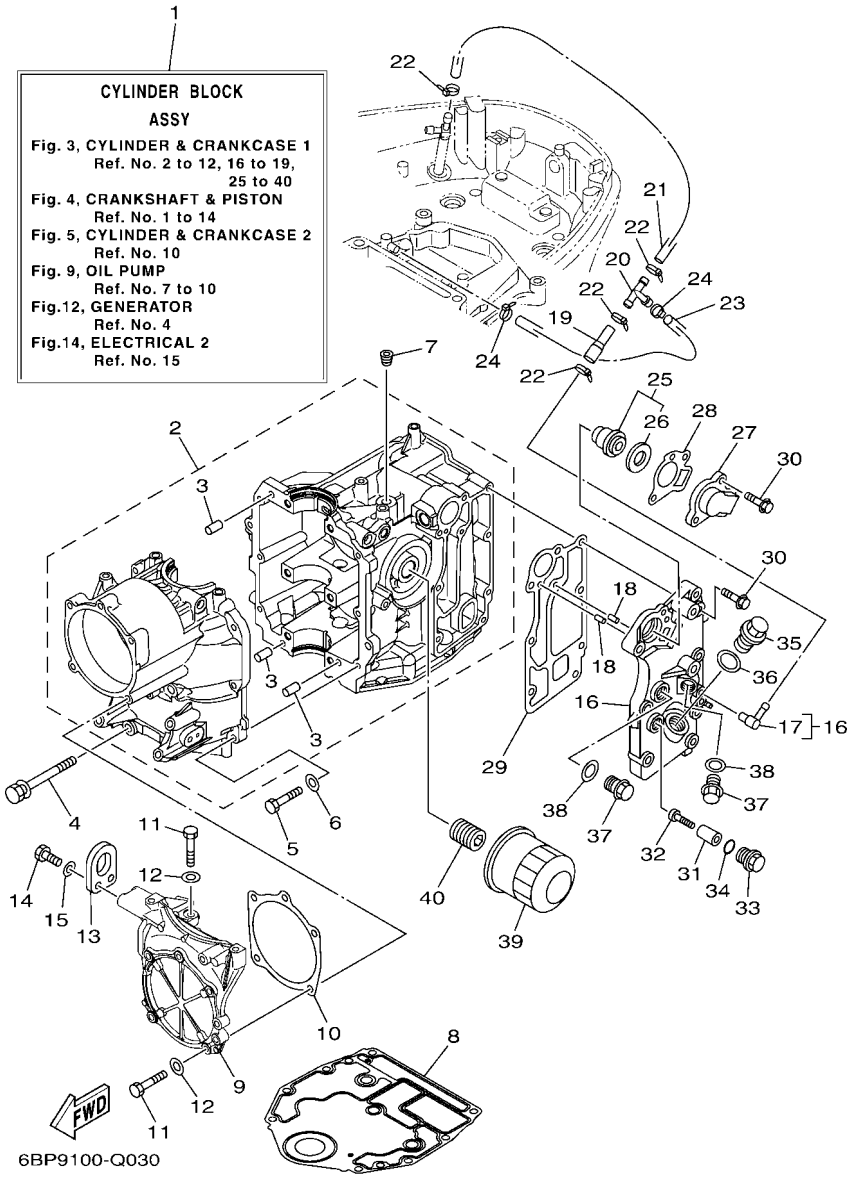

FIG. 3 CYLINDER & CRANKCASE 1 — CYLINDRE & CARTER 1

REF. NO.	PART NO. N° PIECES	DESCRIPTION DESCRIPTION	ET	E	MH			REMARKS REMARQUES
1	6BL–W009B–02–1S	CYLINDER BLOCK ASSY CYLINDRE GROUPE (ENS.)	1	1	1			
2	6BL–15100–02	CRANKCASE ASSY CARTER DE MOTEUR COMPLET	1	1	1			
3	93606–12019	.PIN, DOWEL .GOUPILLE	3	3	3			
4	90119–08M01	BOLT, WITH WASHER BOULON, AVEC RONDELLE	6	6	6			
5	97013–06025	BOLT BOULON	7	7	7			
6	92903–06600	WASHER, PLATE RONDELLE, PLATE	7	7	7			
7	90344–51003	PLUG, TAPER SCREW PLOT, FILETE CONIQUE	1	1	1			
8	6BG–11351–00	GASKET, CYLINDER JOINT, D'EMBASE	1	1	1			
9	6BL–15121–00–1S	CRANKCASE 2 CARTER DE MOTEUR	1	1	1			
10	6BL–15663–00	SEAL JOINT	1	1	1			
11	97013–06025	BOLT BOULON	6	6	6			
12	92903–06600	WASHER, PLATE RONDELLE, PLATE	6	6	6			
13	62Y–11119–00	HANGER, ENGINE ANNEAU, LEVAGE	1	1	1			
14	97095–06020	BOLT BOULON	2	2	2			
15	92995–06600	WASHER RONDELLE	2	2	2			
16	6BL–41113–01–1S	OUTER COVER, EXHAUST COUVERCLE, ECHAPPEMENT	1	1	1			
17	6H1–11372–00	.NIPPLE, HOSE .RACCORD, TUYAU	1	1	1			
18	93604–10M03	PIN, DOWEL CLAVETTE	2	2	2			
19	6BP–12481–00	PIPE 1 DURITE 1	1	1	1			
20	688–24378–00	PIPE, JOINT 3 DURITE RACCORDEMENT 3	1	1	1			
21	90445–09251	HOSE (L350) DURITE (L350)	1	1	1			
22	90465–11M10	CLAMP BRIDE	4	4	4			
23	90445–09104	HOSE (L300) DURITE (L300)	1	1	1			
24	90465–11M10	CLAMP BRIDE	2	2	2			
25	6G8–12411–03	THERMOSTAT THERMOSTAT	1	1	1			
26	688–12412–00	.SEAL, THERMOSTAT .JOINT, THERMOSTAT	1	1	1			
27	6C5–12413–00–9S	COVER, THERMOSTAT COUVERCLE, THERMOSTAT	1	1	1			

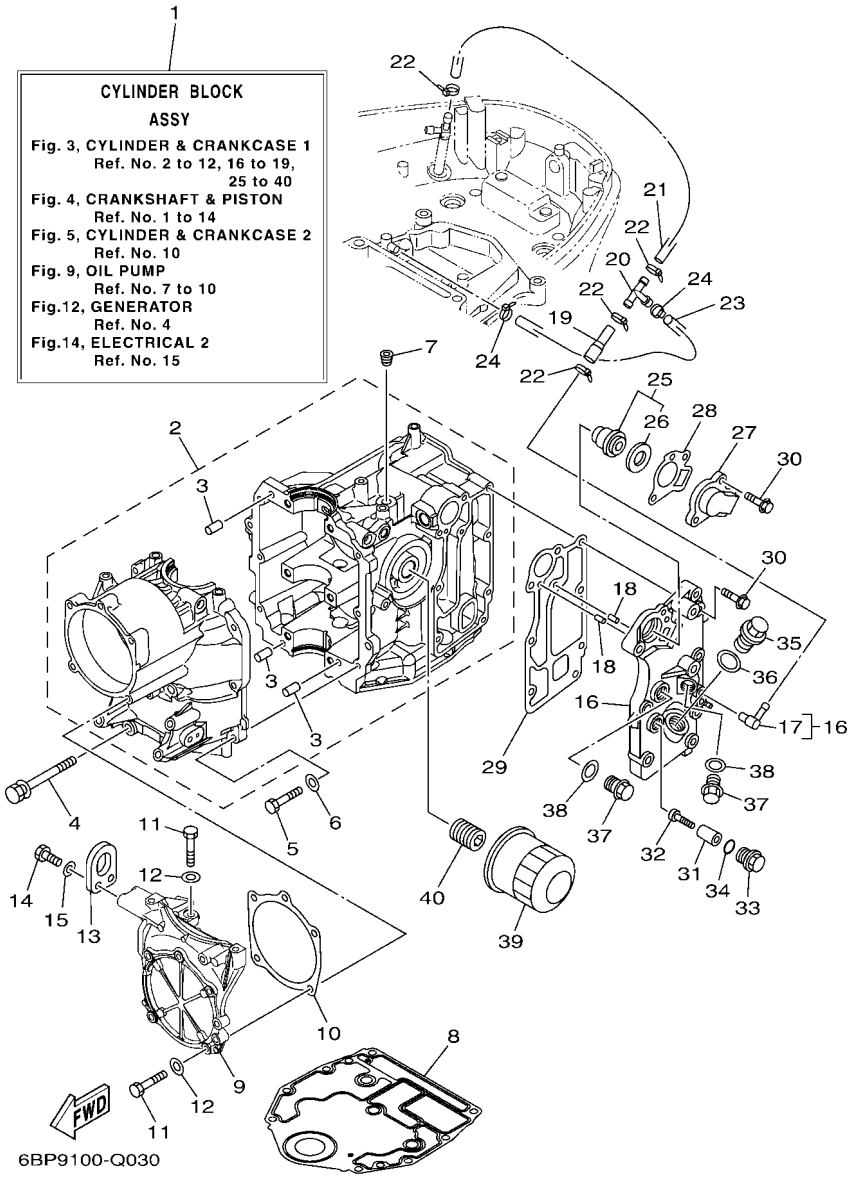

FIG. 3 CYLINDER & CRANKCASE 1 — CYLINDRE & CARTER 1

REF. NO.	PART NO. N° PIECES	DESCRIPTION DESCRIPTION	ET	E	MH			REMARKS REMARQUES
28	62Y–12414–00	GASKET, COVER JOINT, COUVERCLE	1	1	1			
29	6BL–41114–00	GASKET, EXHAUST OUTER COVER JOINT, COUVERCLE D'ECHAPPEMENT	1	1	1			
30	90119–06MA5	BOLT, WITH WASHER BOULON, AVEC RONDELLE	8	8	8			
31	6G8–11325–00	ANODE ANODE	1	1	1			
32	98980–05025	SCREW, BIND VIS, DE PRESSION	1	1	1			
33	6G8–11197–A0	PLUG, BLIND PLOT, BORGNE	1	1	1			
34	93210–13M63	O-RING JOINT TORIQUE	1	1	1			
35	90340–18M09	PLUG, STRAIGHT SCREW PLOT, FILETE DROIT	1	1	1			
36	90201–186F1	WASHER, PLATE RONDELLE, PLATE	1	1	1			
37	90340–14M06	PLUG, STRAIGHT SCREW PLOT, FILETE DROIT	2	2	2			
38	90430–14115	GASKET JOINT	2	2	2			
39	5GH–13440–50	ELEMENT ASSY, OIL CLEANER ELEMENT, FILTRE A HUILE	1	1	1			
40	6C5–12858–00	BOLT, UNION BOULON, RACCORD	1	1	1			

FIG. 4 CRANKSHAFT & PISTON — VILEBREQUIN & PISTON

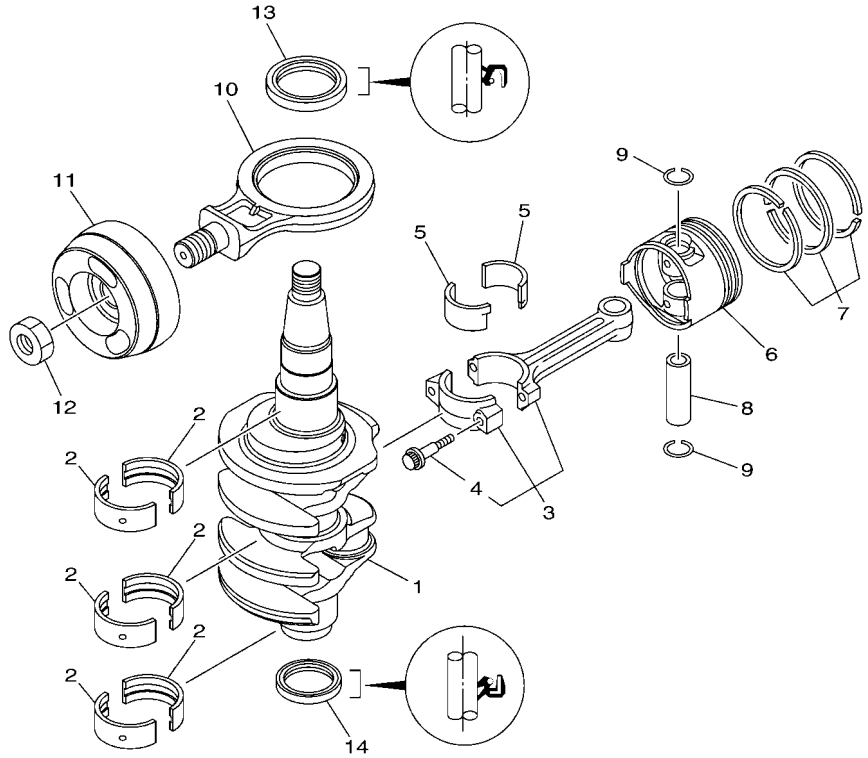

6BP1100-H030

REF. NO.	PART NO. N° PIECES	DESCRIPTION DESCRIPTION	ET	E	MH			REMARKS REMARQUES
1	6BL–11411–00	CRANKSHAFT VILEBREQUIN COMPLET	1	1	1			
2	6BG–11416–10	PLANE BEARING, CRANKSHAFT 1 COUSSINET DE VILEBREQUIN 1	6	6	6			UR RED UR RED
	6BG–11416–20	PLANE BEARING, CRANKSHAFT 1 COUSSINET DE VILEBREQUIN 1	6	6	6			UR PINK UR PINK
	6BG–11416–30	PLANE BEARING, CRANKSHAFT 1 COUSSINET DE VILEBREQUIN 1	6	6	6			UR GREEN UR GREEN
3	6C5–11650–10	CONNECTING ROD ASSY BIELLE COMPLETTE	2	2	2			
4	6C5–11654–00	.BOLT, CONNECTING ROD .BOULON, BIELLE	2	2	2			
5	6CJ–11656–20	PLANE BEARING, CONNECTING ROD ROULEMENT DE BIELLE	4	4	4			UR PINK UR PINK
	6CJ–11656–30	PLANE BEARING, CONNECTING ROD ROULEMENT DE BIELLE	4	4	4			UR GREEN UR GREEN
	6CJ–11656–10	PLANE BEARING, CONNECTING ROD ROULEMENT DE BIELLE	4	4	4			UR RED UR RED
6	69W–11631–01–97	PISTON (STD) PISTON (STD)	2	2	2			
	69W–11635–01	PISTON (0.25MM O/S) PISTON (0.25MM O/S)	2	2	2			AP AP
	69W–11636–01	PISTON (0.50MM O/S) PISTON (0.50MM O/S)	2	2	2			AP AP
7	67C–11603–00	PISTON RING SET (STD) JEU DE SEGMENTS (STD)	2	2	2			
	67C–11604–00	PISTON RING SET (0.25MM O/S) JEU DE SEGMENTS (0.25MM O/S)	2	2	2			AP AP
	67C–11605–00	PISTON RING SET (0.50MM O/S) JEU DE SEGMENTS (0.50MM O/S)	2	2	2			AP AP
8	62Y–11633–00	PIN, PISTON AXE, PISTON	2	2	2			
9	93450–17129	CIRCLIP CIRCLIP, TYPE S	4	4	4			
10	6BL–11665–00	CONNECTING ROD ASSY 3 BIELLE COMPLETE	1	1	1			
11	6BL–11642–00	PISTON 2 (STD) PISTON 2 (STD)	1	1	1			
12	90170–20137	NUT ECROU	1	1	1			
13	93102–43M42	OIL SEAL JOINT SPY	1	1	1			
14	93101–35002	OIL SEAL JOINT SPY	1	1	1			

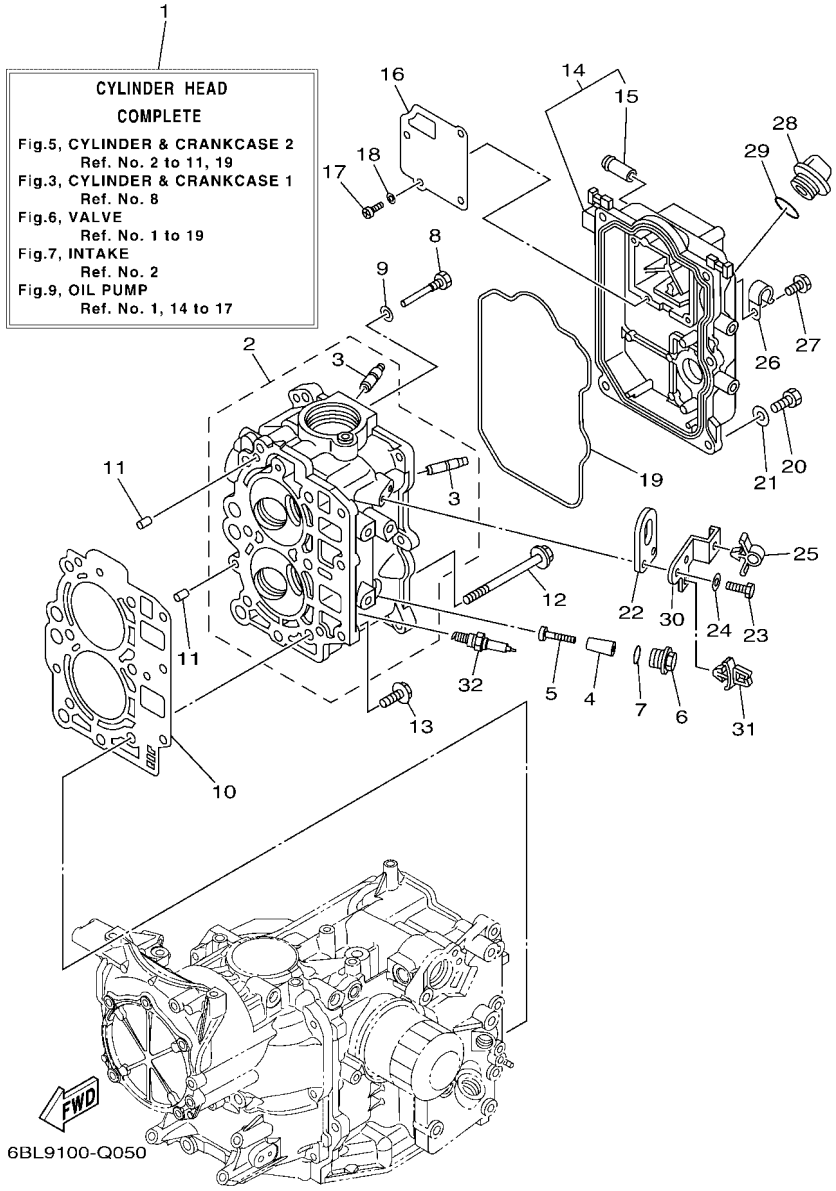

FIG. 5 CYLINDER & CRANKCASE 2 — CYLINDRE & CARTER 2

REF. NO.	PART NO. N° PIECES	DESCRIPTION DESCRIPTION	ET	E	MH			REMARKS REMARQUES
1	6BL–W009A–10–1S	CYLINDER HEAD COMPLETE CULASSE (ENS.)	1	1	1			
2	6BL–11111–10–1S	HEAD, CYLINDER 1 CULASSE	1	1	1			
3	62Y–11133–30	.GUIDE, VALVE 1 .GUIDE, SOUPAPE 1	4	4	4			
4	6BL–11325–00	ANODE ANODE	2	2	2			
5	98980–05035	SCREW, BIND VIS, DE PRESSION	2	2	2			
6	6G8–11197–A0	PLUG, BLIND PLOT, BORGNE	2	2	2			
7	93210–13M63	O-RING JOINT TORIQUE	2	2	2			
8	90109–06M65	BOLT BOULON	1	1	1			
9	90430–06014	GASKET JOINT	1	1	1			
10	6BL–11181–00	GASKET, CYLINDER HEAD 1 JOINT, DE CULASSE 1	1	1	1			
11	93606–12019	PIN, DOWEL GOUPILLE	2	2	2			
12	90105–09009	BOLT, FLANGE BOULON	6	6	6			
13	90119–06MA3	BOLT, WITH WASHER BOULON, AVEC RONDELLE	3	3	3			
14	6BL–11191–00–1S	COVER, CYLINDER HEAD 1 COUVERCLE, CULASSE 1	1	1	1			
15	62Y–14485–00	.PIPE, JOINT .DURITE	1	1	1			
16	6BG–11168–00	COVER, BREATHER COUVERCLE, RENIFLARD	1	1	1			
17	98507–04010	SCREW, PAN HEAD VIS, TETE TRONCONIQUE	4	4	4			
18	92907–04600	WASHER RONDELLE	4	4	4			
19	6BL–11356–00	SEAL, CYLINDER 2 JOINT, SPY CYLINDRE	1	1	1			
20	97095–06020	BOLT BOULON	5	5	5			
21	92995–06600	WASHER RONDELLE	5	5	5			
22	62Y–11119–00	HANGER, ENGINE ANNEAU, LEVAGE	1	1	1			
23	97095–06020	BOLT BOULON	2	2	2			
24	92995–06600	WASHER RONDELLE	2	2	2			
25	90464–09023	CLAMP BRIDE	1	1	1			
26	90465–08M83	CLAMP BRIDE	1	1	1			
27	97595–06512	BOLT, WITH WASHER VIS HEXAGONAL AVC RONDELLE	1	1	1			

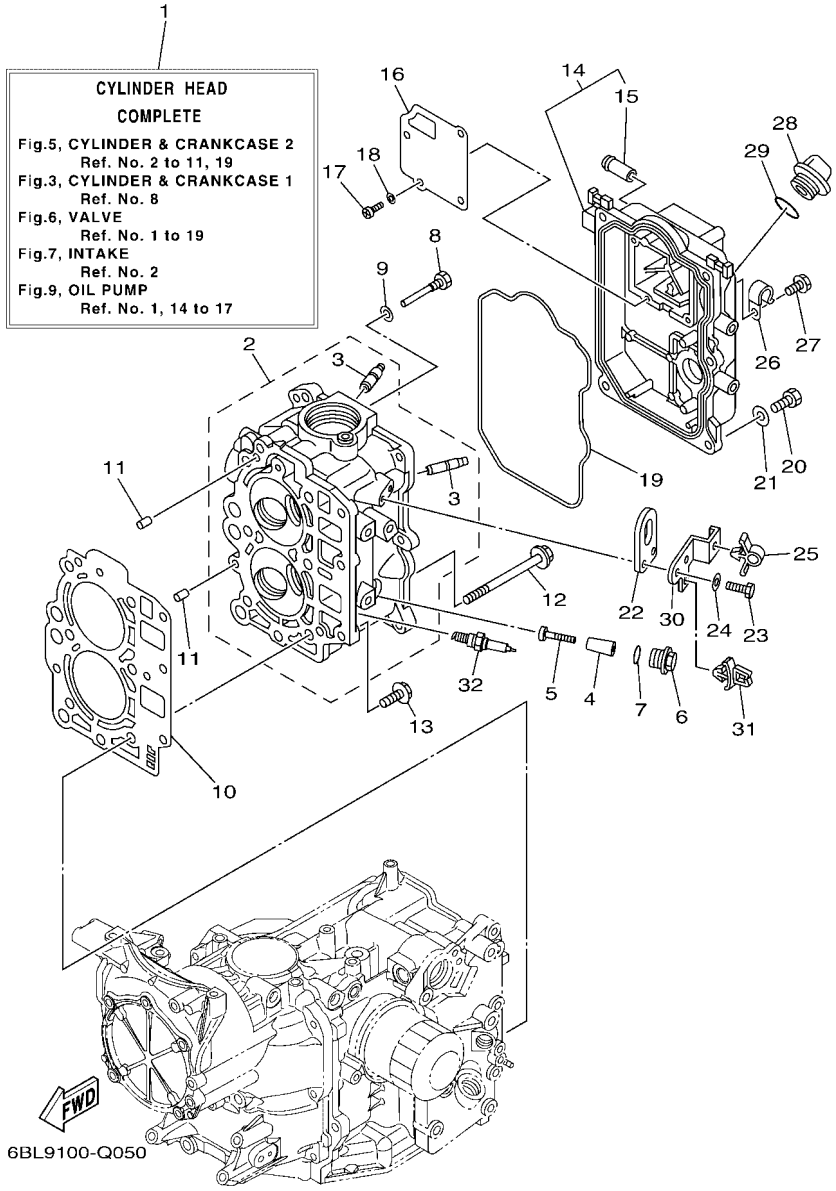

FIG. 5 CYLINDER & CRANKCASE 2 — CYLINDRE & CARTER 2

REF. NO.	PART NO. N° PIECES	DESCRIPTION DESCRIPTION	ET	E	MH			REMARKS REMARQUES
28	6G8–15363–00	PLUG, OIL PLOT, HUILE	1	1	1			
29	93210–24M79	O-RING JOINT TORIQUE	1	1	1			
30	6BL–82398–00	PLATE 3 PLAQUETTE 3	1	1	1			
31	90464–06001	CLAMP BRIDE	1	1	1			
32	94702–00418	PLUG, SPARK (NGK DPR6EB-9) BOUGIE D,ALLUMAGE (NGK DPR6EB-	2	2	2			

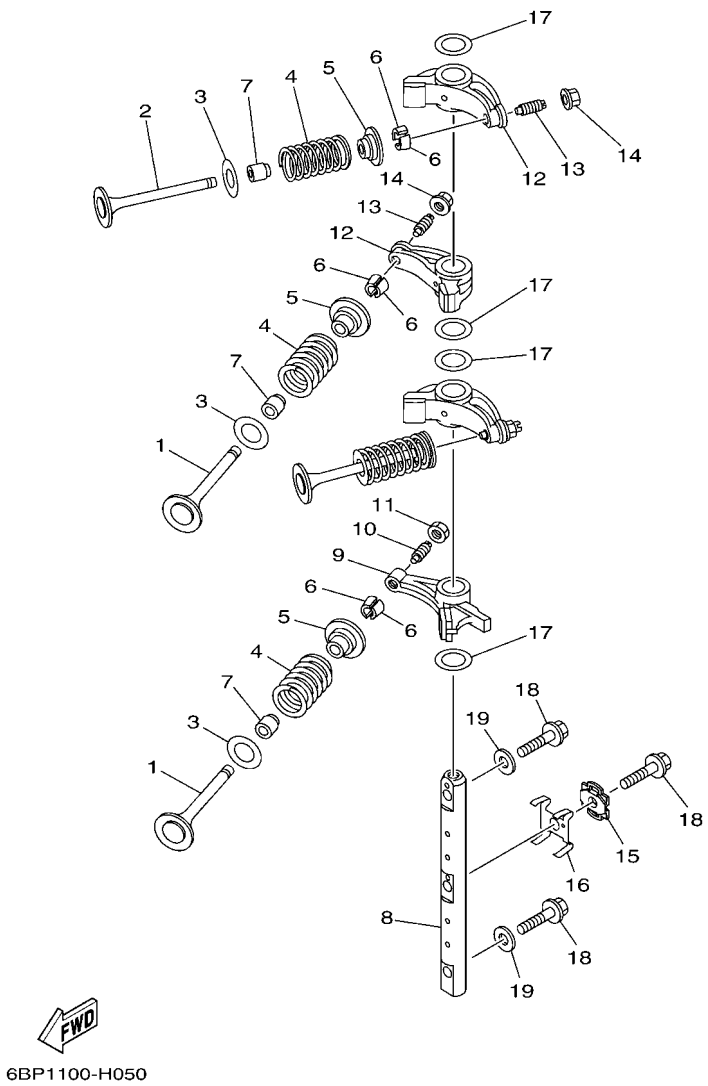

FIG. 6 VALVE — SOUPAPE

REF. NO.	PART NO. N° PIECES	DESCRIPTION DESCRIPTION	ET	E	MH			REMARKS REMARQUES
1	69W–12111–00	VALVE, INTAKE SOUPAPE, ADMISSION	2	2	2			
2	69W–12121–10	VALVE, EXHAUST SOUPAPE, ECHAPPEMENT	2	2	2			
3	62Y–12116–00	SEAT, VALVE SPRING SIEGE, RESSORT DE SOUPAPE	4	4	4			
4	51Y–12114–00	SPRING, VALVE OUTER RESSORT DE SOUPAPE, EXTERNE	4	4	4			
5	30X–12117–00	RETAINER, VALVE SPRING BUTEE DE RESSORT DE SOUPAPE	4	4	4			
6	30X–12118–00	LOCK, VALVE SPRING RETAINER FRAISE, SOUPAPE	8	8	8			
7	51Y–12119–00	SEAL, VALVE STEM JOINT, QUEUE DE SOUPAPE	4	4	4			
8	6BL–12146–00	SHAFT, ROCKER AXE, CULBUTEUR	1	1	1			
9	62Y–12151–00	ARM, VALVE ROCKER CULBUTEUR	1	1	1			
10	64J–12159–00	SCREW, VALVE ADJUSTING VIS, REGLAGE DE SOUPAPE	1	1	1			
11	62Y–12158–00	NUT, LOCK CONTRE-ECROU	1	1	1			
12	6C5–12151–00	ARM, VALVE ROCKER CULBUTEUR	3	3	3			
13	6C5–12159–00	SCREW, VALVE ADJUSTING VIS, REGLAGE DE SOUPAPE	3	3	3			
14	6C5–12158–00	NUT, LOCK CONTRE-ECROU	3	3	3			
15	6BL–12231–00	GUIDE, STOPPER 1 GUIDE, BUTEE 1	1	1	1			
16	6BL–12233–00	PLATE, GUIDE STOPPER 1 PLAQUE, GUIDE BUTEE 1	1	1	1			
17	90201–16014	WASHER, PLATE RONDELLE, PLATE	4	4	4			
18	90105–08060	BOLT, FLANGE BOULON	3	3	3			
19	92990–08200	WASHER, PLAIN RONDELLE, PLATE	2	2	2			

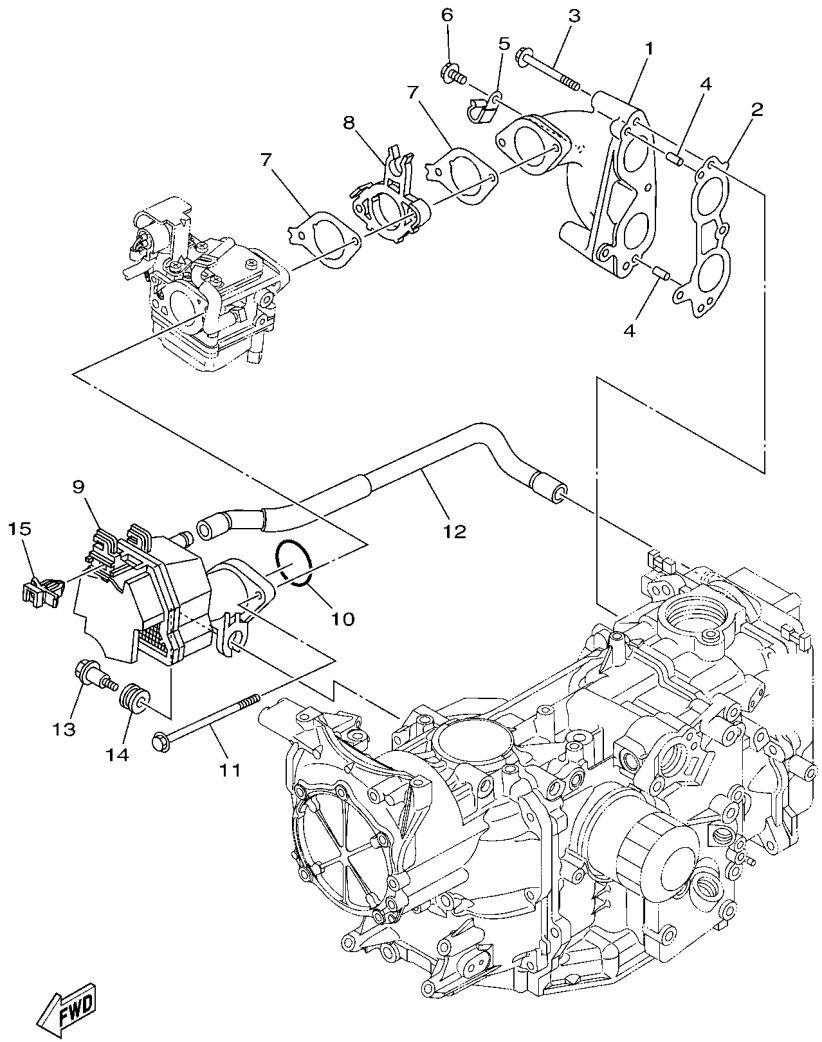

6BP7100-N070

FIG. 7 INTAKE — ADMISSION

REF. NO.	PART NO. N° PIECES	DESCRIPTION DESCRIPTION	ET	E	MH			REMARKS REMARQUES
1	6BL–13641–00–94	MANIFOLD, INTAKE 1 TUBULURE, ADMISSION 1	1	1	1			
2	6BL–13645–00	GASKET, MANIFOLD 1 JOINT, TUBULURE 1	1	1	1			
3	97595–06555	BOLT, WITH WASHER VIS HEXAGONAL AVC RONDELLE	4	4	4			
4	91690–50014	PIN, SPRING AGRAFFE	2	2	2			
5	90465–08M83	CLAMP BRIDE	1	1	1			
6	97595–06512	BOLT, WITH WASHER VIS HEXAGONAL AVC RONDELLE	1	1	1			
7	6BL–13646–00	GASKET, MANIFOLD 2 JOINT, TUBULURE 2	2	2	2			
8	6BL–14271–00	INSULATOR ISOLATEUR	1	1	1			
9	6BL–14440–00	SILENCER ASSY, INTAKE SIENCIEUX D'ADMISSION	1	1	1			
10	93210–39ME4	O-RING JOINT TORIQUE	1	1	1			
11	95895–06100	BOLT, FLANGE BOULON	2	2	2			
12	6BL–15373–00	PIPE, BREATHER DURITE DE RENIFLARD	1	1	1			
13	90109–06MA1	BOLT BOULON	1	1	1			
14	90480–16616	GROMMET PASSE-FIL	1	1	1			
15	90464–09M47	CLAMP BRIDE	1	1	1			

FIG. 8 CARBURETOR CARBURATEUR

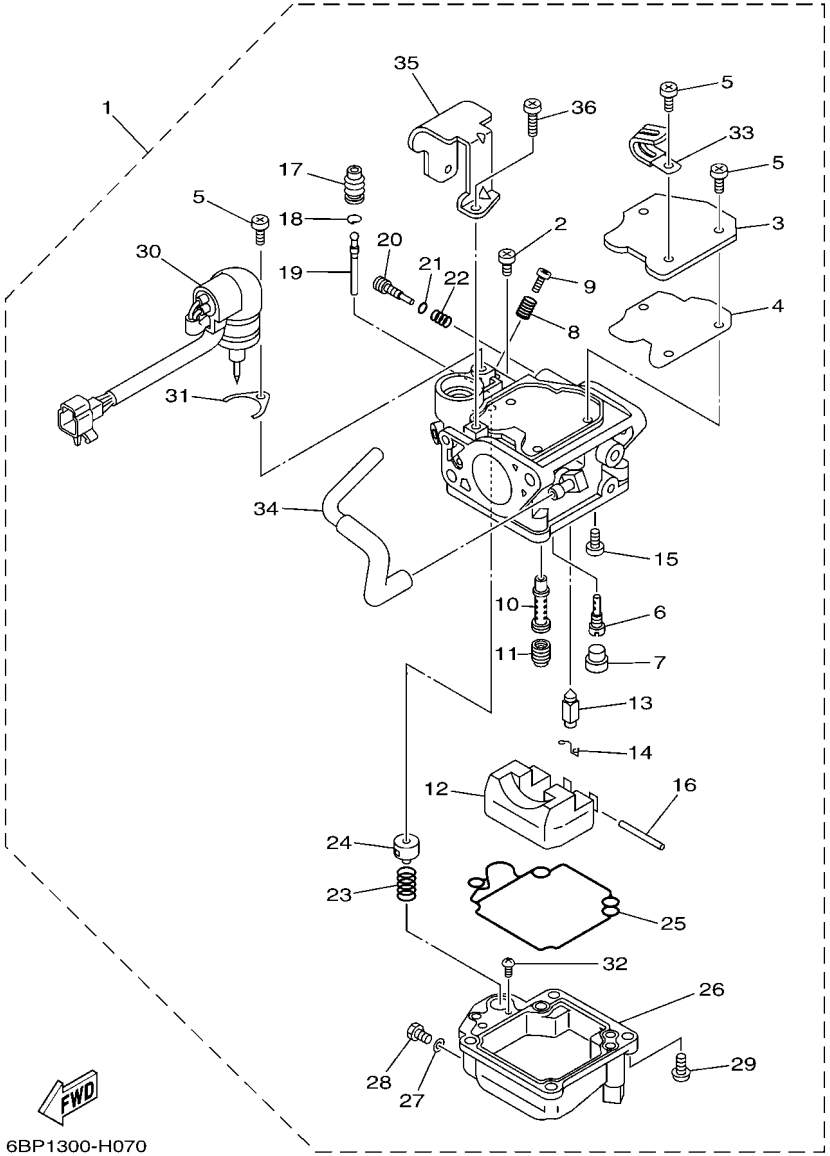

6BP1300-H070

REF. NO.	PART NO. N° PIECES	DESCRIPTION DESCRIPTION	ET	E	MH			REMARKS REMARQUES
1	6BL–14301–11	CARBURETOR ASSY 1 CARBURATEUR COMPLET 1	1	1	1			
2	98580–04006	.SCREW, PAN HEAD .VIS	1	1	1			
3	65W–14572–00	.PLATE .PLAQUE	1	1	1			
4	65W–14126–10	.GASKET .JOINT	1	1	1			
5	97803–04010	.SCREW, PAN HEAD .VIS, CRUCIFORME	4	4	4			
6	676–14948–05	.JET (#45) .GICLEUR (#45)	1	1	1			
7	679–14966–00	.RUBBER CAP .CAPUCHON	1	1	1			
8	90501–10326	.SPRING, COMPRESSION .RESSORT, COMPRESSION	1	1	1			
9	63V–14523–00	.SCREW, STOP .VIS, BUTEE	1	1	1			
10	65W–14947–90	.JET, NEEDLE .GICLEUR DE STARTER	1	1	1			
11	65W–14943–79	.JET, MAIN (#108) .GICLEUR, PRINCIPAL (#108)	1	1	1			
12	63V–14985–00	.FLOAT .FLOTTEUR	1	1	1			
13	6AH–14546–00	.VALVE, NEEDLE .POINTEAU	1	1	1			
14	633–14159–00	.CLIP .JONC	1	1	1			
15	98580–04008	.SCREW, PAN HEAD .VIS	1	1	1			
16	6H4–14548–00	.PIN, FLOAT ARM .AXE, BRAS DE FLOTTEUR	1	1	1			
17	65W–14373–02	.COVER, PLUNGER CAP .COUVERCLE DE PLONGEUR	1	1	1			
18	65W–1439G–00	.CLIP 1 .JONC 1	1	1	1			
19	65W–14379–00	.ROD, STARTER .TRINGLE, STARTER	1	1	1			
20	6AH–14923–20	.SCREW, PILOT .VIS, RALENTI	1	1	1			
21	67F–14398–10	.O-RING .JOINT TORIQUE	1	1	1			
22	67C–14555–00	.SPRING .RESSORT	1	1	1			
23	65W–14335–00	.SPRING, PLUNGER .RESSORT, PLONGEUR	1	1	1			
24	65W–14371–00	.PLUNGER, STARTER .PLONGEUR, STARTER	1	1	1			
25	65W–14384–00	.GASKET, FLOAT CHAMBER .JOINT, CUVE DE FLOTTEUR	1	1	1			
26	65W–14980–20	.BODY, FLOAT CHAMBER .CORPS, CUVE DE FLOTTEUR	1	1	1			
27	65W–14398–00	.GASKET .JOINT	1	1	1			

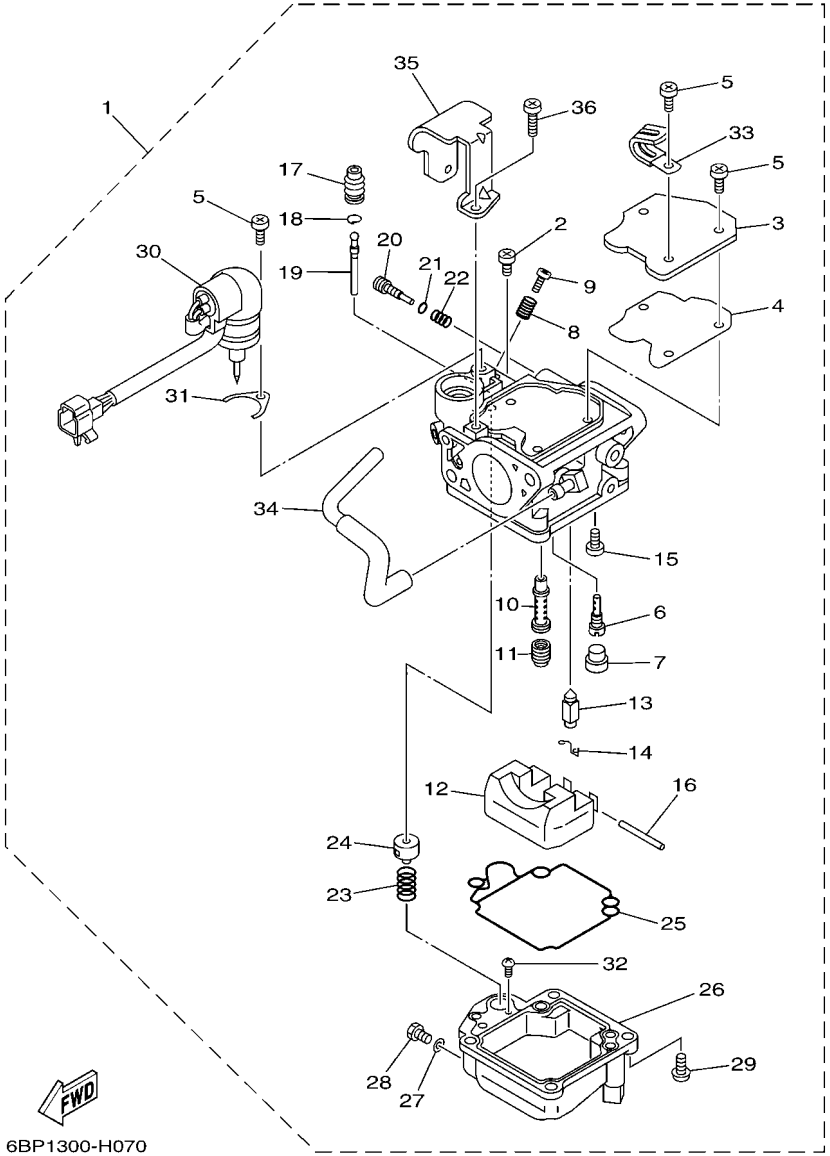

FIG. 8 CARBURETOR — CARBURATEUR

REF. NO.	PART NO. N° PIECES	DESCRIPTION DESCRIPTION	ET	E	MH			REMARKS REMARQUES
28	65W–14992–00	.SCREW, DRAIN .BOUCHON, PURGE	1	1	1			
29	97980–04114	.SCREW, WITH WASHER .VIS, AVEC RONDELLE	4	4	4			
30	6BL–14380–00	.PRIME STARTER ASSY .STARTER AUTOMATIQUE	1	1	1			
31	65W–14346–00	.PLATE .PLAQUE	1	1	1			
32	67C–14567–00	.SCREW .VIS	1	1	1			
33	67F–14255–00	.PLATE .PLAQUE	1	1	1			
34	65W–14807–00	.HOSE COMP. .DURITE (ENS.)	1	1	1			
35	6BL–14346–00	.PLATE .PLAQUE	1	1	1			
36	97980–04108	.SCREW, WITH WASHER .VIS, AVEC RONDELLE	2	2	2			

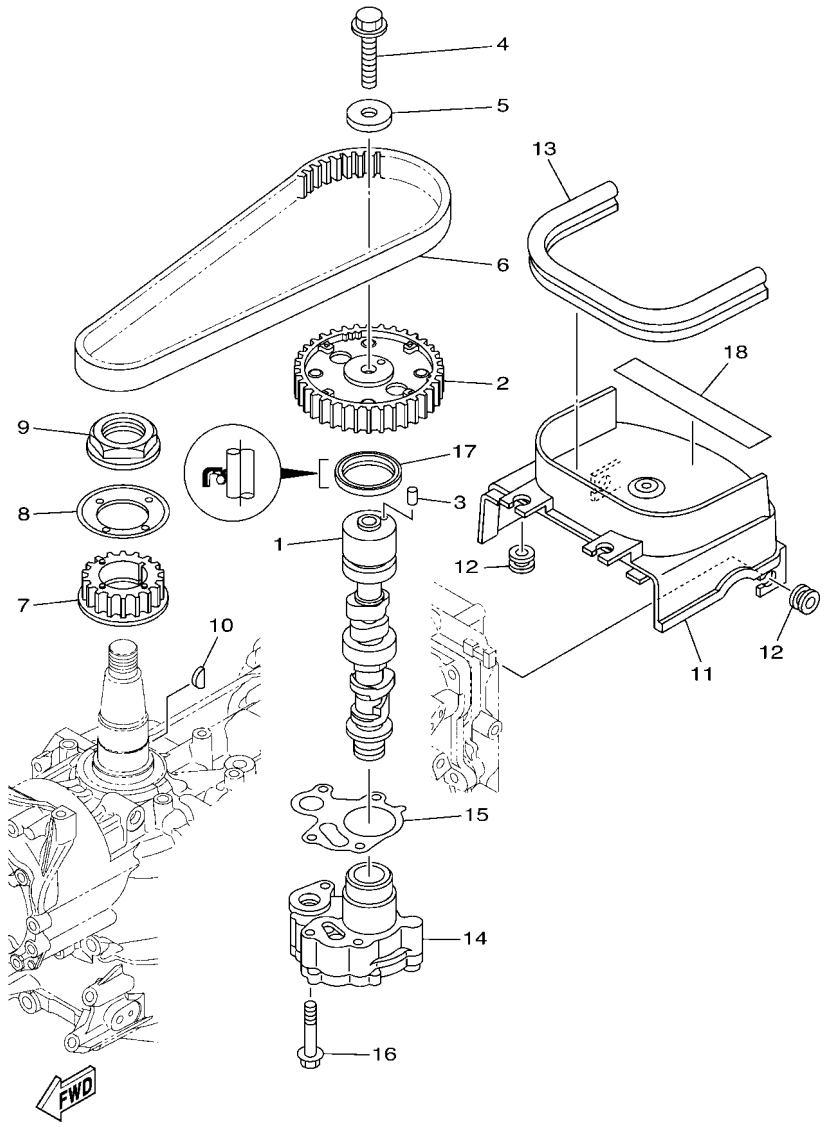

FIG. 9 OIL PUMP — POMPE A HUILE

REF. NO.	PART NO. N° PIECES	DESCRIPTION DESCRIPTION	ET	E	MH			REMARKS REMARQUES
1	6BL–12171–00	CAMSHAFT 1 ARBRE A CAMES 1	1	1				
	6BL–12170–00	CAMSHAFT ASSY 1 ENS ARBRE A CAMES 1			1			
2	6C5–11537–10	GEAR, DRIVEN PIGNON SECONDAIRE	1	1	1			
3	93605–17002	PIN, DOWEL AXE	1	1	1			
4	95817–10035	BOLT, FLANGE BOULON, A COLLERETTE	1	1	1			
5	90201–10144	WASHER, PLATE RONDELLE, PLATE	1	1	1			
6	6C5–46241–00	BELT COURROIE TRAPEZOIDALE	1	1	1			
7	6C5–11536–00	GEAR, DRIVE ENGRENAGE, MENANT	1	1	1			
8	62Y–11557–00	WASHER 1 RONDELLE 1	1	1	1			
9	90179–35001	NUT ECROU	1	1	1			
10	90280–03017	KEY, WOODRUFF CLAVETTE, DEMI-LUNE	1	1	1			
11	6BL–46297–00	COVER, DUST COUVERCLE, POUSSIERE	1	1	1			
12	90480–12314	GROMMET PASSE-FIL	4	4	4			
13	6BL–42617–00	DAMPER, FORM BOURRELET, CAOUTCHOUC	1	1	1			
14	6BL–13300–00	OIL PUMP ASSY POMPE A HUILE COMPLETE	1	1	1			
15	6C5–13329–00	GASKET, PUMP COVER JOINT, COUVERCLE DE POMPE	1	1	1			
16	90119–06025	BOLT, WITH WASHER BOULON, AVEC RONDELLE	4	4	4			
17	93102–37M40	OIL SEAL JOINT SPY	1	1	1			
18	6BP–13437–60	MARK, CAUTION MAKER	1	1	1			

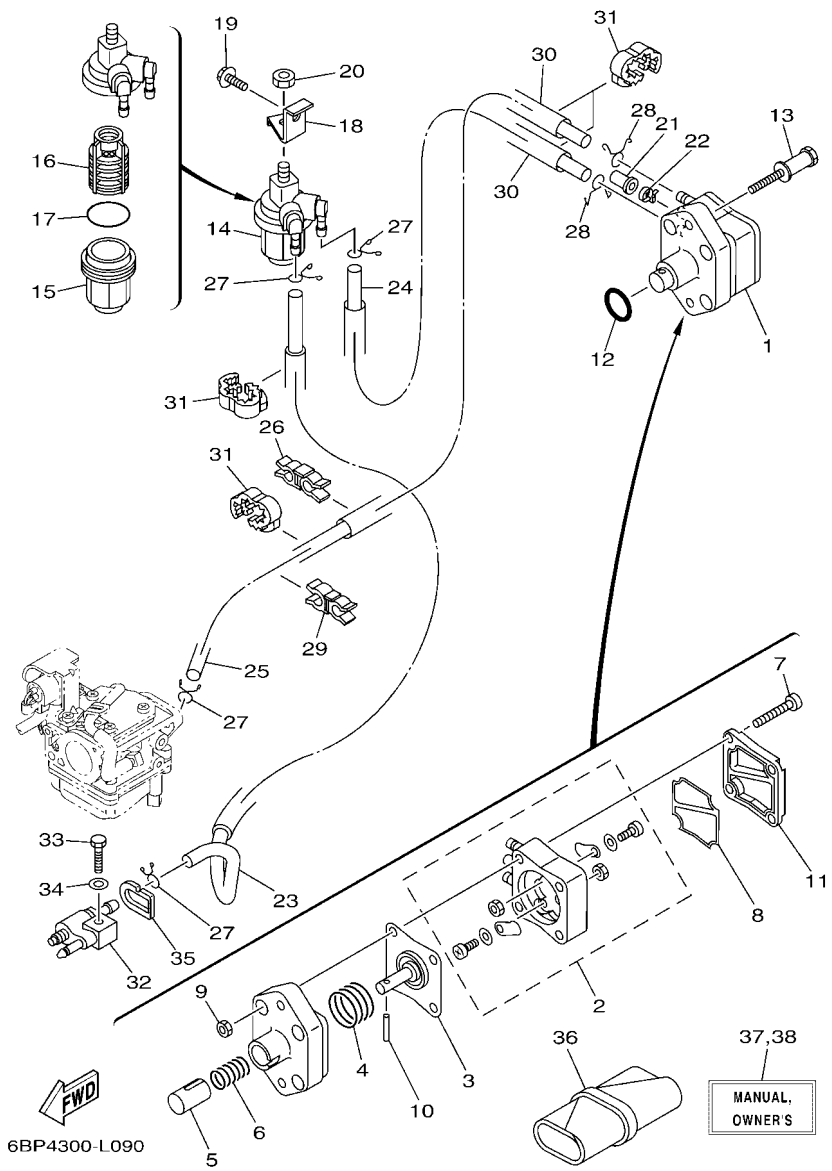

FIG. 10 FUEL — CARBURANT

REF. NO.	PART NO. N° PIECES	DESCRIPTION DESCRIPTION	ET	E	MH			REMARKS REMARQUES
1	62Y–24410–04	FUEL PUMP ASSY POMPE A ESSENCE	1	1	1			
2	62Y–24415–01	.BODY 4 .CORPS 4	1	1	1			
3	62Y–24411–02	.DIAPHRAGM .DIAPHRAGME	1	1	1			
4	62Y–24423–00	.SPRING, DIAPHRAGM .RESSORT, DIAPHRAGME	1	1	1			
5	62Y–13131–01	.PLUNGER .PLONGEUR	1	1	1			
6	62Y–24454–00	.SPRING .RESSORT	1	1	1			
7	62Y–24444–01	.SCREW .VIS	4	4	4			
8	6C5–24471–00	.DIAPHRAGM .DIAPHRAGME	1	1	1			
9	95380–05600	.NUT .ECROU	4	4	4			
10	62Y–24374–01	.PIN .PIN	1	1	1			
11	6C5–24414–00	.BODY 3 .CORPS 3	1	1	1			
12	93210–24M79	O-RING JOINT TORIQUE	1	1	1			
13	90109–06266	BOLT BOULON	2	2	2			
14	61N–24560–10	FILTER ASSY ENS FILTRE	1	1	1			
15	61N–24521–00	.CUP, FILTER .CUVETTE, FILTRE	1	1	1			
16	61N–24563–10	.ELEMENT, FILTER .ELEMENT, FILTRE	1	1	1			
17	93210–32738	.O-RING .JOINT TORIQUE	1	1	1			
18	6D5–24566–00	BRACKET, FILTER SUPPORT, FILTRE	1	1	1			
19	95895–08016	BOLT, FLANGE BOULON	1	1	1			
20	95380–08600	NUT ECROU	1	1	1			
21	6BL–24481–00	PLUG COUVERCLE	1	1	1			
22	90465–11M10	CLAMP BRIDE	1	1	1			
23	6BL–24311–00	PIPE, FUEL 1 DURITE A ESSENCE	1	1	1			
24	90445–10M20	HOSE (L150) DURITE (L150)	1	1	1			
25	90445–10MG7	HOSE (L350) DURITE (L350)	1	1	1			
26	90464–10M59	CLAMP BRIDE	1	1	1			
27	90467–09M17	CLIP JONC	4	4	4			

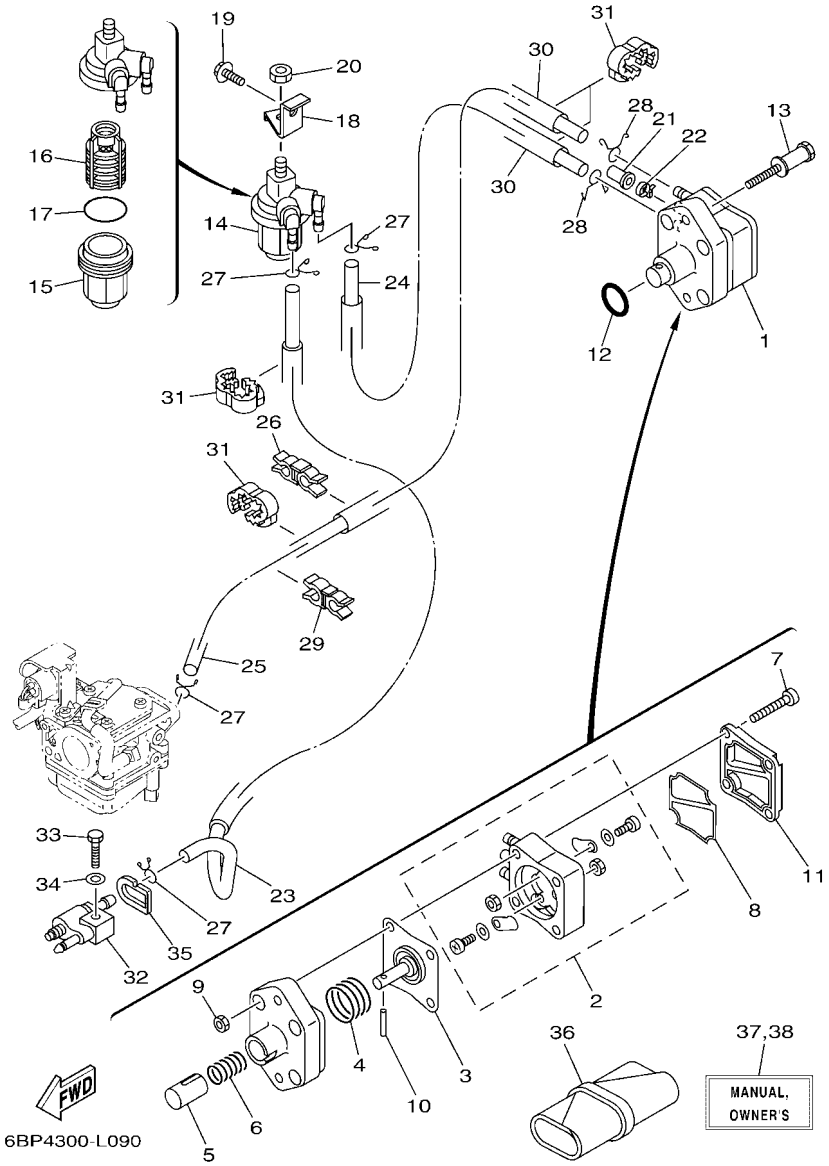

FIG. 10 FUEL — CARBURANT

REF. NO.	PART NO. N° PIECES	DESCRIPTION DESCRIPTION	ET	E	MH			REMARKS REMARQUES
28	90467–10M04	CLIP JONC	2	2	2			
29	90464–11009	CLAMP BRIDE	1	1	1			
30	90446–15003	HOSE (L100) DURITE (L100)	2	2	2			
31	90464–13227	CLAMP BRIDE	4	4	4			
32	6G1–24304–10	FUEL PIPE JOINT COMP. 1 DURITE RACCORDEMT. A ESSENCE	1	1	1			
33	97095–06025	BOLT BOULON	1	1	1			
34	92995–06600	WASHER RONDELLE	1	1	1			
35	61N–24329–00	SEAL JOINT	1	1	1			
36	62Y–28100–00	TOOL KIT TROUSSE A OUTILS	1	1	1			AP AP
37	6BP–28199–78–E0	MANUAL,OWNER'S MANUEL D'UTILISATION	1	1	1			UR (E) UR (E)
	6BP–28199–78–F0	MANUAL,OWNER'S MANUEL D'UTILISATION	1	1	1			UR (F) UR (F)
	6BP–28199–78–S0	MANUAL,OWNER'S MANUEL D'UTILISATION	1	1	1			UR (ES) UR (ES)
	6BP–28199–78–G0	MANUAL,OWNER'S MANUEL D'UTILISATION	1	1	1			UR (D) UR (D)
	6BP–28199–78–D0	MANUAL,OWNER'S MANUEL D'UTILISATION	1	1	1			UR (NL) UR (NL)
	6BP–28199–78–H0	MANUAL,OWNER'S MANUEL D'UTILISATION	1	1	1			UR (I) UR (I)
38	6BP–28199–88–K0	MANUAL,OWNER'S MANUEL D'UTILISATION	1	1	1			UR (DK) UR (DK)
	6BP–28199–88–R0	MANUAL,OWNER'S MANUEL D'UTILISATION	1	1	1			UR (GR) UR (GR)
	6BP–28199–88–P0	MANUAL,OWNER'S MANUEL D'UTILISATION	1	1	1			UR (P) UR (P)
	6BP–28199–88–N0	MANUAL,OWNER'S MANUEL D'UTILISATION	1	1	1			UR (N) UR (N)
	6BP–28199–88–M0	MANUAL,OWNER'S MANUEL D'UTILISATION	1	1	1			UR (S) UR (S)
	6BP–28199–88–L0	MANUAL,OWNER'S MANUEL D'UTILISATION	1	1	1			UR (SF) UR (SF)

FIG. 11 STARTER DEMARREUR

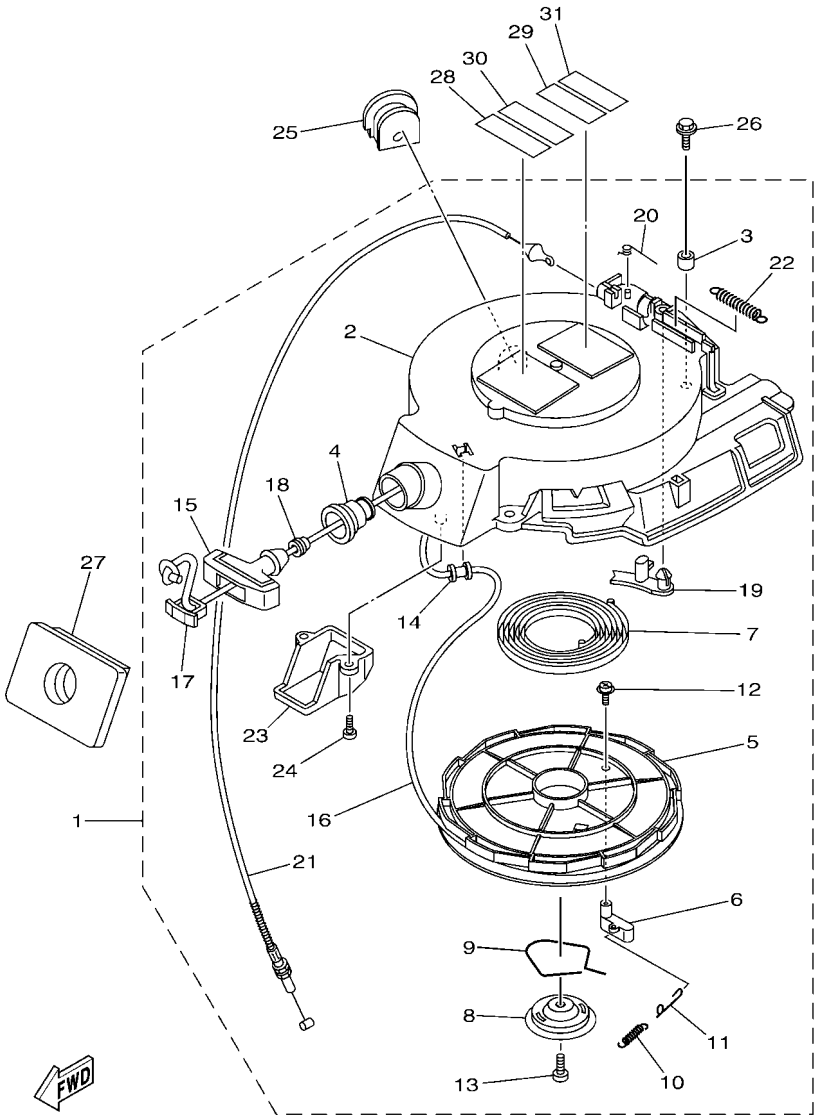

*1:CUT FROM 50M ROLLS,PART NO.90790-48194,CUTTING LENGTH 2.1M

*1:A PRELEVER SUR BOBINE 50M ,REFERENCE 90790-48194, LONGUEUR DE COUPE 2.1M

REF. NO.	PART NO. N° PIECES	DESCRIPTION DESCRIPTION	ET	E	MH			REMARKS REMARQUES
1	6BL–15710–01	STARTER ASSY DEMARREUR COMPLET			1			
2	6BL–15711–01	.CASE, STARTER .CARTER DE DEMARREUR			1			
3	6AH–15764–00	.COLLAR 1 .COLLERETTE 1			3			
4	6AH–15795–00	.GUIDE, ROPE .GUIDE DE CABLE			1			
5	6BL–15714–00	.DRUM, SHEAVE .TAMBOUR, POULIE			1			
6	6AH–15741–10	.PAWL, DRIVE .CLIQUET, ENTRAINEMENT			1			
7	66T–15713–00	.SPRING, STARTER .RESSORT DE DEMARREUR			1			
8	66T–15716–00	.PLATE, DRIVE .PLAQUE, ENTRAINEMENT			1			
9	66T–15705–00	.SPRING, DRIVE PAWL .RESSORT DE CLIQUET			1			
10	66T–15767–00	.SPRING .RESSORT			1			
11	66T–15784–00	.SPRING, RETURN .RESSORT, RAPPEL			1			
12	6BL–15793–00	.SCREW .VIS			1			
13	68T–15793–00	.SCREW .VIS			1			
14	6BL–15764–00	.COLLAR 1 .COLLERETTE 1			1			
15	689–15755–01	.HANDLE, STARTER .POIGNEE, DE DEMARREUR			1			
16	*	.WIRE, STARTER (L:2100MM) .CABLE DE DEMARREUR (L:2100MM)			1			*1 *1
17	6F5–15779–02	.COVER .COUVERCLE			1			
18	6A0–15789–00	.DAMPER .AMORTISSEUR			1			
19	68T–15794–00	.STOPPER .BUTEE			1			
20	66T–15734–00	.SPRING, RETURN .RESSORT, RAPPEL			1			
21	6BL–15770–00	.CABLE COMP., STARTER STOP .CABLE, BUTEE DE DEMAR			1			
22	66T–15731–00	.SPRING, RETURN .RESSORT, RAPPEL			1			
23	6BL–15782–00	.COVER, SHEAVE .COUVERCLE, POULIE			1			
24	6AH–15793–00	.SCREW .VIS			2			
25	6BL–15357–00	GROMMET RONDELLE CAOUTCHOUC			1			
26	95875–06020	BOLT, FLANGE BOULON, A COLLERETTE			3			
27	6BL–15762–01	SEAL, RUBBER 2 JOINT CAOUTCHOUC 2			1			

FIG. 11 STARTER DEMARREUR

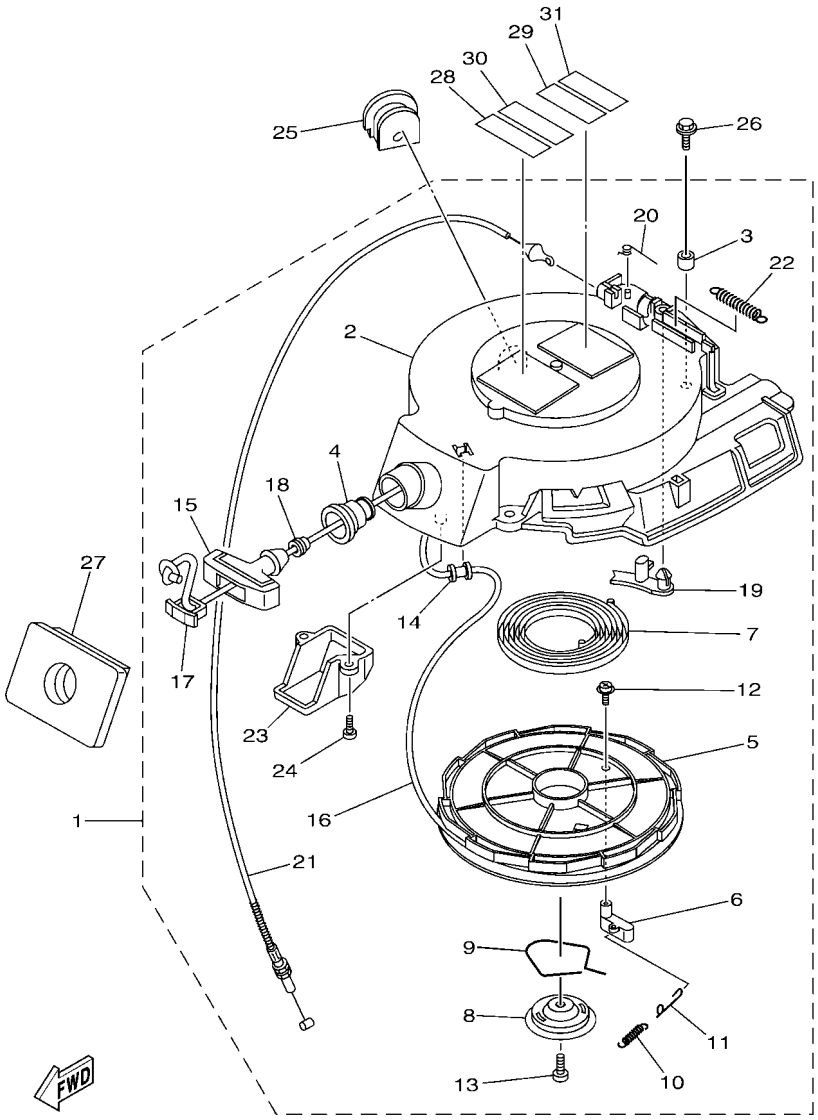

6BP9300-Q110

*1:CUT FROM 50M ROLLS,PART NO.90790-48194,CUTTING LENGTH 2.1M

*1:A PRELEVER SUR BOBINE 50M ,REFERENCE 90790-48194,
LONGUEUR DE COUPE 2.1M

REF. NO.	PART NO. N° PIECES	DESCRIPTION DESCRIPTION	ET	E	MH			REMARKS REMARQUES
28	6EE–81994–40	LABEL, SAFETY ETIQUETTE, SECURITE			1			
29	6EE–81995–40	LABEL, WARNING ETIQUETTE, AVERTISSEMENT			1			
30	6EE–81994–50	LABEL, SAFETY ETIQUETTE, SECURITE			1			
31	6EE–81995–50	LABEL, WARNING ETIQUETTE, AVERTISSEMENT			1			

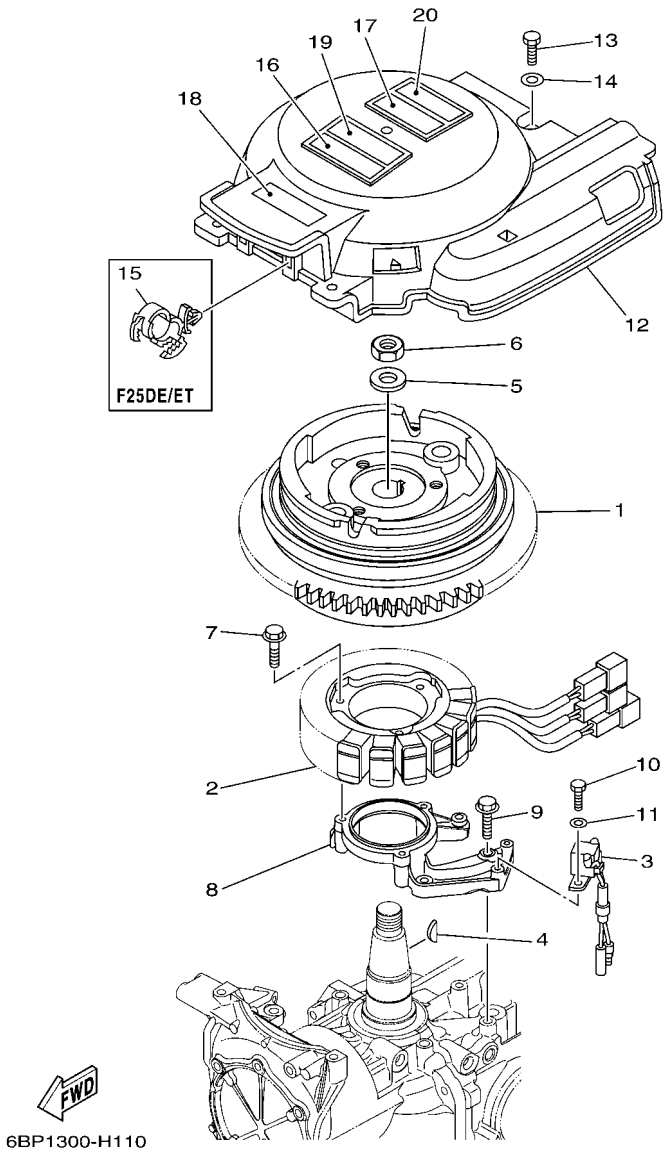

FIG. 12 GENERATOR — GENERATRICE

REF. NO.	PART NO. N° PIECES	DESCRIPTION DESCRIPTION	ET	E	MH			REMARKS REMARQUES
1	6BL–85550–00	ROTOR ASSY ROTOR CPLT	1	1				
	6BL–85550–10	ROTOR ASSY ROTOR CPLT			1			
2	6BL–85510–00	STATOR ASSY STATOR CPLT	1	1				
	6BL–85510–10	STATOR ASSY STATOR CPLT			1			
3	6AH–85580–00	COIL, PULSER BOBINE, PULSEUR	1	1	1			
4	6H4–11545–00	KEY, WOODRUFF CLAVETTE, DEMI-LUNE	1	1	1			
5	90201–21M18	WASHER, PLATE RONDELLE, PLATE	1	1	1			
6	90170–20137	NUT ECROU	1	1	1			
7	95023–06030	BOLT BOULON, A COLLERETTE	3	3	3			
8	6BG–85561–00–94	BASE, MAGNETO BASE, MAGNETO	1	1	1			
9	95023–06025	BOLT BOULON, A COLLERETTE	4	4	4			
10	97095–05016	BOLT BOULON	2	2	2			
11	92995–05600	WASHER RONDELLE	2	2	2			
12	6BL–81337–00	COVER, FLYWHEEL COUVERCLE, VOLANT	1	1				
13	97095–06020	BOLT BOULON	3	3				
14	92995–06600	WASHER RONDELLE	3	3				
15	90464–12183	CLAMP BRIDE	2	2				
16	6EE–81994–40	LABEL, SAFETY ETIQUETTE, SECURITE	1	1				
17	6EE–81995–40	LABEL, WARNING ETIQUETTE, AVERTISSEMENT	1	1				
18	6AG–81996–00	MARK MARQUE	1	1				
19	6EE–81994–50	LABEL, SAFETY ETIQUETTE, SECURITE	1	1				
20	6EE–81995–50	LABEL, WARNING ETIQUETTE, AVERTISSEMENT	1	1				

FIG. 13 ELECTRICAL 1 — PARTIE ELECTRIQUE 1

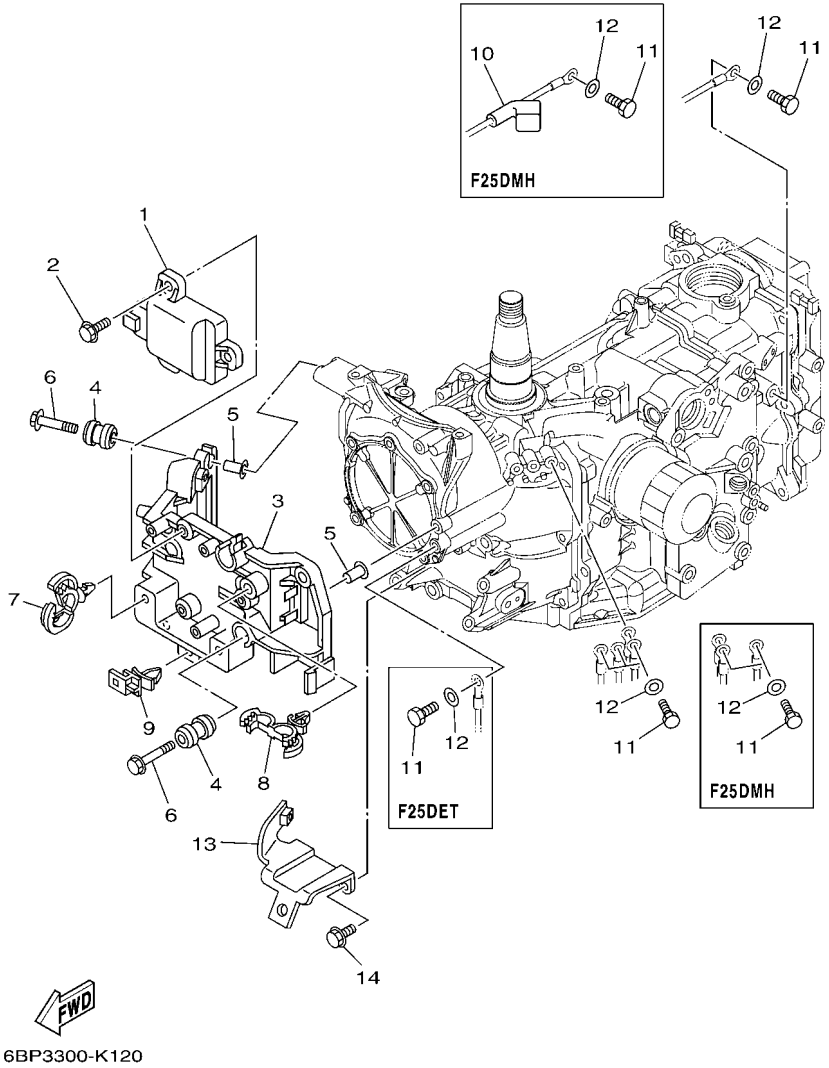

REF. NO.	PART NO. N° PIECES	DESCRIPTION DESCRIPTION	ET	E	MH			REMARKS REMARQUES
1	6BL–85540–00	C.D.I. UNIT ASSY BLOC C.D.I.	1	1	1			
2	97575–06520	BOLT, WITH WASHER VIS HEXAGONAL AVC RONDELLE	3	3	3			
3	6BL–81948–00	BRACKET SUPPORT	1	1	1			
4	6A0–82317–00	DAMPER, IGNITION COIL AMORTISSEUR, BOBINE D'ALLUM	4	4	4			
5	90387–06119	COLLAR COLLERETTE	4	4	4			
6	95895–06030	BOLT, FLANGE BOULON	4	4	4			
7	90464–12183	CLAMP BRIDE	2					
	90464–13249	CLAMP BRIDE		2	2			
8	90464–18246	CLAMP BRIDE	2	2				
9	90464–12002	CLAMP BRIDE	1	1	1			
10	6BL–82119–00	COVER, LEAD WIRE GARNITURE, FIL			1			
11	97095–06016	BOLT BOULON	5					
	97095–06016	BOLT BOULON		4				
	97095–06016	BOLT BOULON			3			
12	92995–06600	WASHER RONDELLE	5					
	92995–06600	WASHER RONDELLE		4				
	92995–06600	WASHER RONDELLE			3			
13	6BL–82554–00	STAY, NEUTRAL SWITCH SUPPORT, CONT DE POINT-MORT	1	1	1			
14	95895–06014	BOLT, FLANGE BOULON	2	2	2			

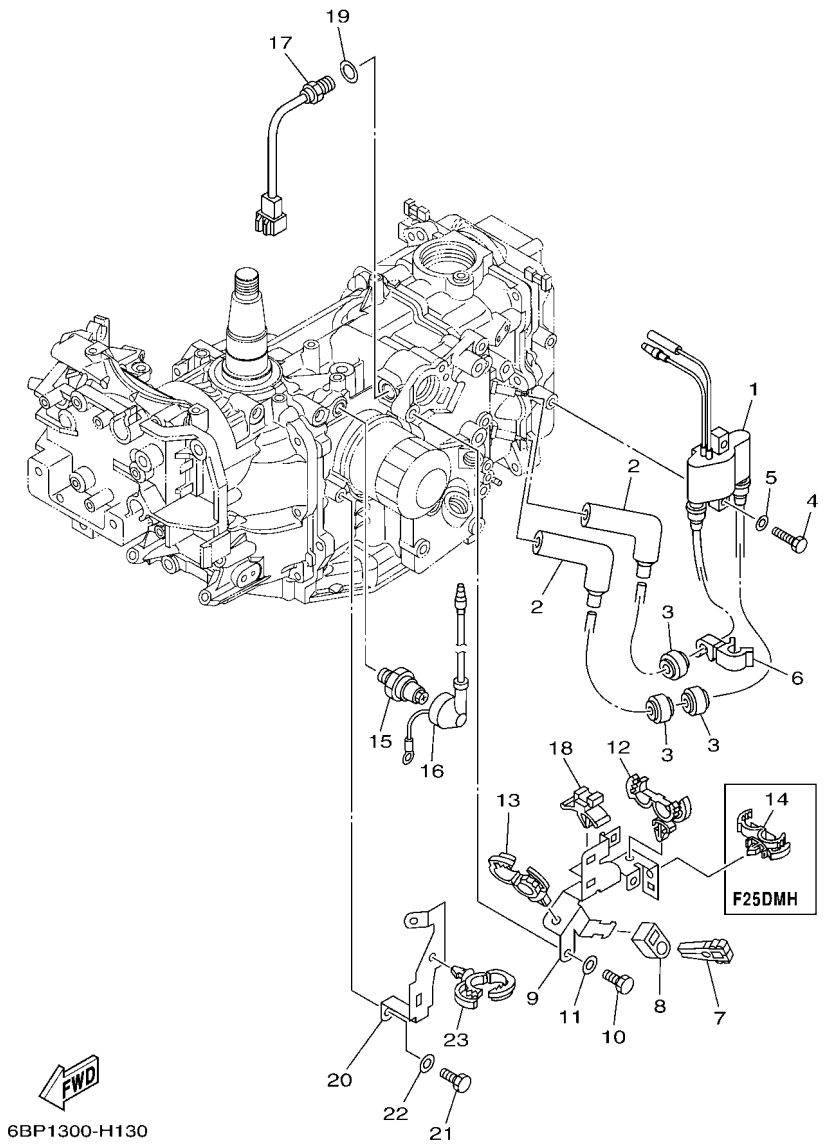

FIG. 14 ELECTRICAL 2 — PARTIE ELECTRIQUE 2

REF. NO.	PART NO. N° PIECES	DESCRIPTION DESCRIPTION	ET	E	MH			REMARKS REMARQUES
1	6F5–85570–13	IGNITION COIL ASSY BOBINE D'ALLUMAGE (ENS.)	1	1	1			
2	6AH–82370–00	PLUG CAP ASSY ANTIPARASITE	2	2	2			
3	90480–25003	GROMMET PASSE-FIL	3	3	3			
4	97095–06025	BOLT BOULON	2	2	2			
5	92995–06600	WASHER RONDELLE	2	2	2			
6	90464–09018	CLAMP BRIDE	1	1	1			
7	67F–2812A–00	PULLER, FUSE TENDEUR, FUSIBLE	1	1				
8	67C–82155–00	BAND COLLIER	1	1				
9	6BL–8339X–00	CLAMP, CORD COLLIER, CORDON	1	1	1			
10	97095–06016	BOLT BOULON	2	2	2			
11	92995–06600	WASHER RONDELLE	2	2	2			
12	90464–18246	CLAMP BRIDE	1	1	1			
13	90464–20181	CLAMP BRIDE	1	1	1			
14	90464–18246	CLAMP BRIDE			1			
15	64J–82504–00	OIL PRESSURE SWITCH ASSY CONTACTEUR DE PRESSION D'HUILE	1	1	1			
16	68V–81315–00	LEAD WIRE ASSY FIL	1	1	1			
17	6CJ–85790–00	THERMOSENSOR ASSY SENSITOMETRE	1	1	1			
18	90464–09M47	CLAMP BRIDE	1	1	1			
19	90430–14115	GASKET JOINT	1	1	1			
20	6BL–82389–00	PLATE 2 PLAQUETTE 2	1	1	1			
21	97095–06016	BOLT BOULON	2	2	2			
22	92995–06600	WASHER RONDELLE	2	2	2			
23	90464–20181	CLAMP BRIDE	1	1	1			

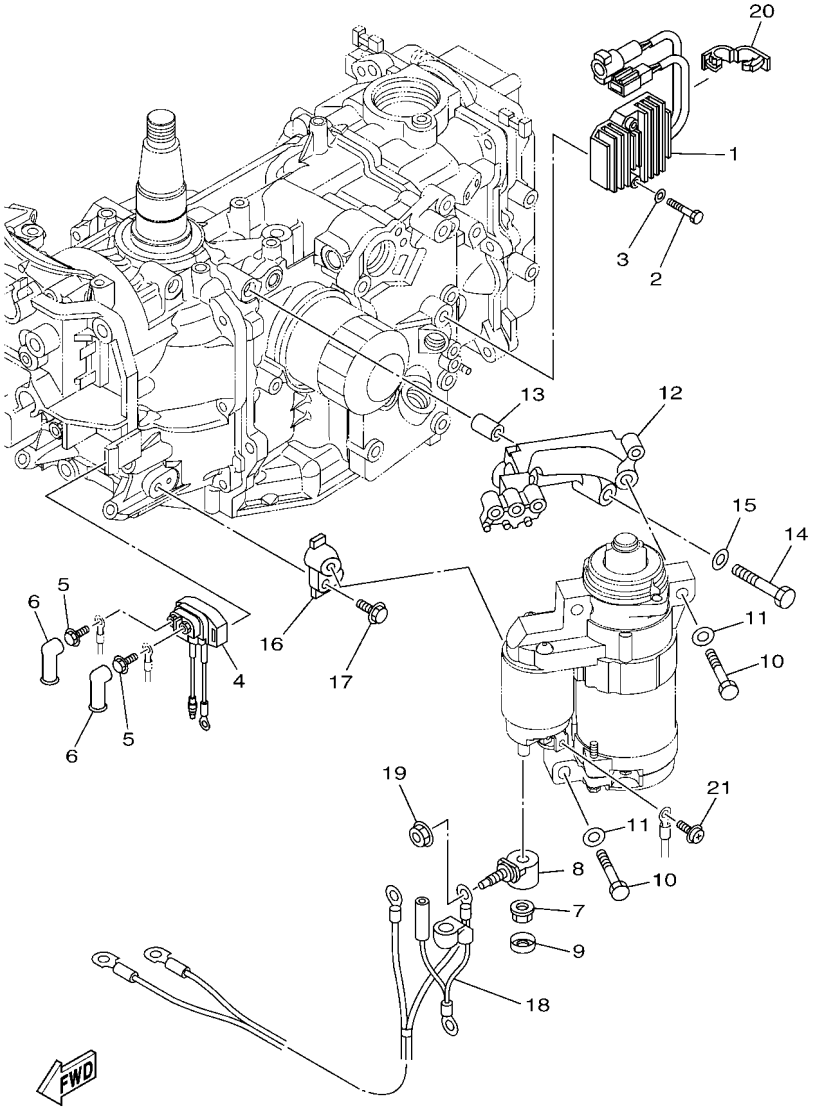

FIG. 15 ELECTRICAL 3 — PARTIE ELECTRIQUE 3

REF. NO.	PART NO. N° PIECES	DESCRIPTION DESCRIPTION	ET	E	MH			REMARKS REMARQUES
1	6BL–81960–00	RECTIFIER & REGULATOR ASSY REDRESSEUR REGULATEUR CPLT	1	1				
2	97095–06040	BOLT BOULON	2	2				
3	92995–06600	WASHER RONDELLE	2	2				
4	68T–81940–00	STARTER RELAY ASSY LANCEUR RELAIS (ENS.)	1	1				
5	97595–06610	BOLT, WITH WASHER VIS HEXAGONAL AVC RONDELLE	2	2				
6	6G5–82119–10	COVER, LEAD WIRE GARNITURE, FIL	2	2				
7	6BL–8182A–00	NUT ECROU	1	1				
8	6BL–81925–00	TERMINAL BORNE	1	1				
9	6BL–8183X–00	CAP, TERMINAL COUVERCLE, BORNE	1	1				
10	97013–08045	BOLT BOULON	3	3				
11	92903–08600	WASHER, PLATE RONDELLE, PLATE	3	3				
12	6BL–81822–00	BRACKET, STARTING MOTOR SUPPORT, DEMARREUR ELECTRIQUE	1	1	1			
13	99530–10114	PIN, DOWEL GOUJON, D'ASSEMBLAGE	2	2	2			
14	97013–08045	BOLT BOULON	2	2	2			
15	92903–08600	WASHER, PLATE RONDELLE, PLATE	2	2	2			
16	6BL–81823–00	STAY, STARTING MOTOR SUPPORT	1	1				
17	97575–06520	BOLT, WITH WASHER VIS HEXAGONAL AVC RONDELLE	1	1				
18	6BL–82105–01	BATTERY CABLE CABLE DE BATTERIE	1	1				
19	90179–08003	NUT ECROU	1	1				
20	90464–18004	CLAMP BRIDE	1	1				
21	90159–05M12	SCREW, WITH WASHER VIS, AVEC RONDELLE	1	1				

FIG. 16 ELECTRICAL 4 — PARTIE ELECTRIQUE 4

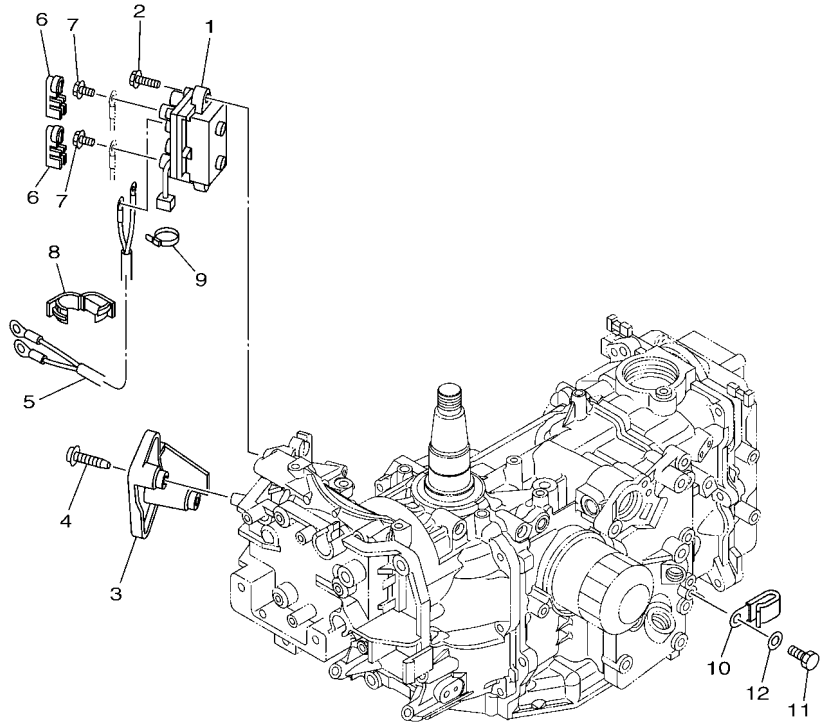

6BP3110-K160

REF. NO.	PART NO. N° PIECES	DESCRIPTION DESCRIPTION	ET	E	MH			REMARKS REMARQUES
1	63P–81950–00	RELAY ASSY RELAIS COMPLET	1					
2	97575–06520	BOLT, WITH WASHER VIS HEXAGONAL AVC RONDELLE	2					
3	6BL–81942–00	COVER COUVERCLE	1					
4	90167–05009	SCREW, TAPPING VIS, TETE FRAISEE	2					
5	6BL–81949–00	WIRE, LEAD FIL	1					
6	6P2–8183X–00	CAP, TERMINAL COUVERCLE, BORNE	2					
7	97595–06610	BOLT, WITH WASHER VIS HEXAGONAL AVC RONDELLE	2					
8	90464–18004	CLAMP BRIDE	1					
9	90465–11M10	CLAMP BRIDE	1					
10	90465–06M90	CLAMP BRIDE	1					
11	97095–06016	BOLT BOULON	1					
12	92995–06600	WASHER RONDELLE	1					

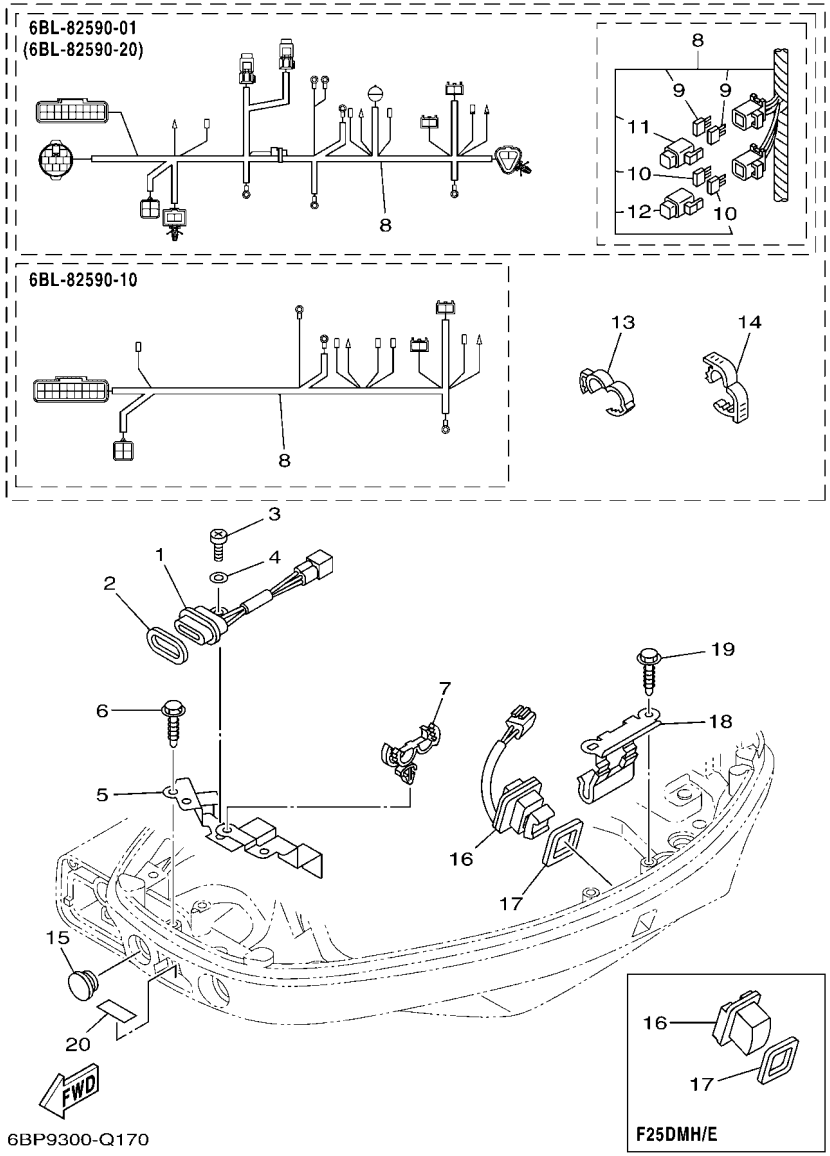

FIG. 17 ELECTRICAL 5 — PARTIE ELECTRIQUE 5

REF. NO.	PART NO. N° PIECES	DESCRIPTION DESCRIPTION	ET	E	MH			REMARKS REMARQUES
1	62Y–84301–00	PILOT LIGHT ASSY 1 LAMPE-TEMOIN 1	1	1	1			
2	6H4–83589–00	GASKET GARNITURE	1	1	1			
3	97885–06012	SCREW, PAN HEAD VIS, A ENCOCHE	1	1	1			
4	92995–06600	WASHER RONDELLE	1	1	1			
5	6BL–82388–00	PLATE PLAQUETTE	1	1	1			
6	90109–06M86	BOLT BOULON	2	2	2			
7	90464–18246	CLAMP BRIDE	1	1				
8	6BL–82590–01	WIRE HARNESS ASSY FAISCEAU DE FILS COMPLET	1					
	6BL–82590–20	WIRE HARNESS ASSY FAISCEAU DE FILS COMPLET		1				
	6BL–82590–10	WIRE HARNESS ASSY FAISCEAU DE FILS COMPLET			1			
9	67F–82151–00	.FUSE (20A) .FUSIBLE (20A)	2	2				
10	67F–82151–10	.FUSE (30A) .FUSIBLE (30A)	2	2				
11	67F–8215B–10	.CAP (YELLOW) .BOUCHON (YELLOW)	1	1				
12	67F–8215B–20	.CAP (GREEN) .BOUCHON (GREEN)	1	1				
13	90464–16001	CLAMP BRIDE	1					
	90464–18004	CLAMP BRIDE		1	1			
14	90464–18004	CLAMP BRIDE	1	1				
	90464–09010	CLAMP BRIDE			1			
15	6G1–42725–00	GROMMET PASSE-FIL	1	1	1			
16	69J–82563–01	TRIM & TILT SWITCH ASSY INCLINER ET PARER COMMUTATEUR	1					
	69J–42723–01	COVER, BOTTOM COUVERCLE		1	1			
17	69J–82587–00	GASKET JOINT	1	1	1			
18	63P–83614–01	BRACKET SUPPORT	1	1	1			
19	90109–06M86	BOLT BOULON	2	2	2			
20	67C–85415–00	MARK, SIGNAL LAMP ETIQUETTE	1	1	1			

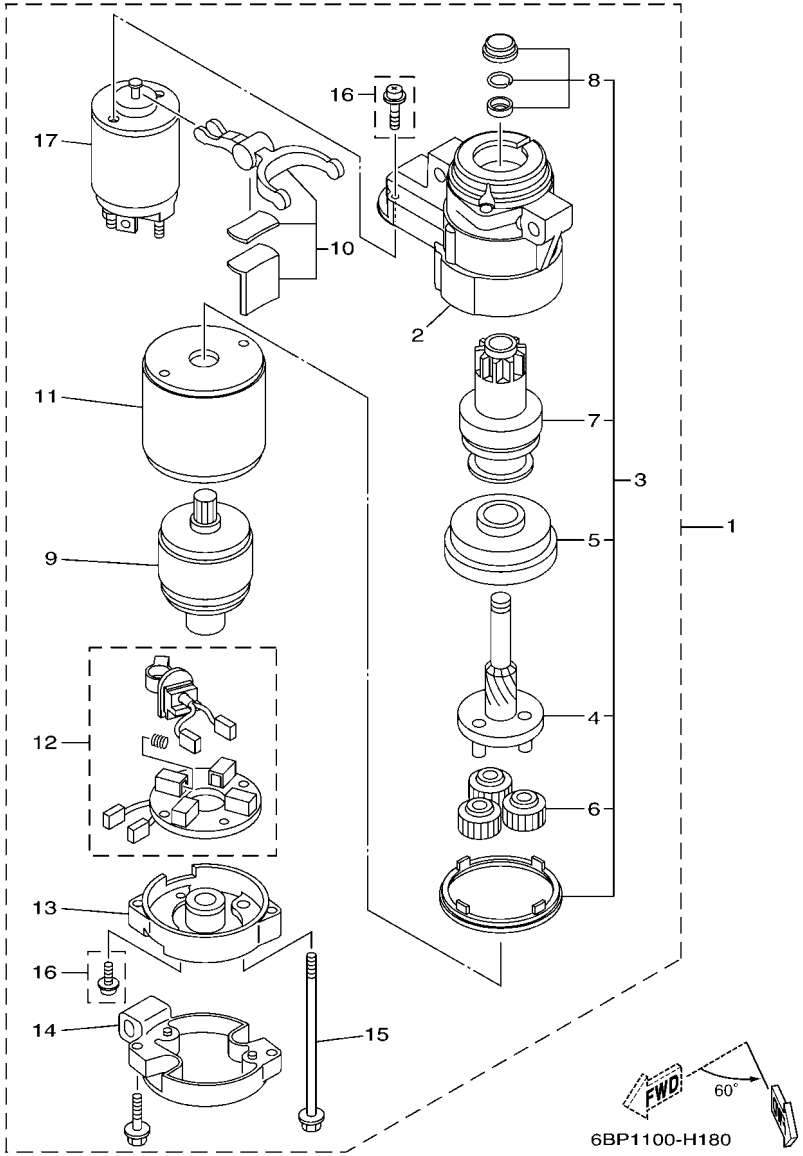

FIG. 18 STARTING MOTOR — DEMARREUR ELECTRIQUE

REF. NO.	PART NO. N° PIECES	DESCRIPTION DESCRIPTION	ET	E	MH			REMARKS REMARQUES
1	6BG–81800–00	STARTING MOTOR ASSY DEMARREUR ELECTRIQUE COMPLET	1	1				
2	6BG–81830–00	.FRONT BRACKET ASSY .SUPPORT AVANT	1	1				
3	6BG–81807–00	.GEAR ASSY, STARTING MOTOR .PIGNON, DEMARREUR ELECTRIQUE	1	1				
4	6BG–81836–00	..SPRING, LEVER ..RESSORT, LEVIER	1	1				
5	6BG–81891–00	..GEAR, RING ..ROUE DENTEE	1	1				
6	6AW–8183T–00	..GEAR, IDLER ..PIGNON, INTERMEDIAIRE	3	3				
7	6BG–81832–00	..CLUTCH, OVER RUN ..EMBRAYAGE, ROUE LIBRE	1	1				
8	6BG–81857–00	..PINION STOPPER SET ..BUTEE PIGNON	1	1				
9	6BG–81850–00	.ARMATURE ASSY .INDUIT	1	1				
10	6BG–81839–00	.LEVER ASSY .LEVIER COMPLET	1	1				
11	6BG–81810–00	.STATOR ASSY .STATOR COMPLET	1	1				
12	6BG–81840–00	.BRUSH HOLDER ASSY .SUPPORT DE CHARBON	1	1				
13	6BG–81820–00	.REAR BRACKET ASSY .SUPPORT ARRIERE COMPLET	1	1				
14	6BG–8182J–00	.BRACKET COMPLETE .SUPPORTE COMPLETE	1	1				
15	6BG–81826–00	.BOLT .BOULON	2	2				
16	6BG–81846–00	.SCREW SET .VIS	1	1				
17	6BG–81941–00	.STARTER RELAY ASSY .LANCEUR RELAIS (ENS.)	1	1				

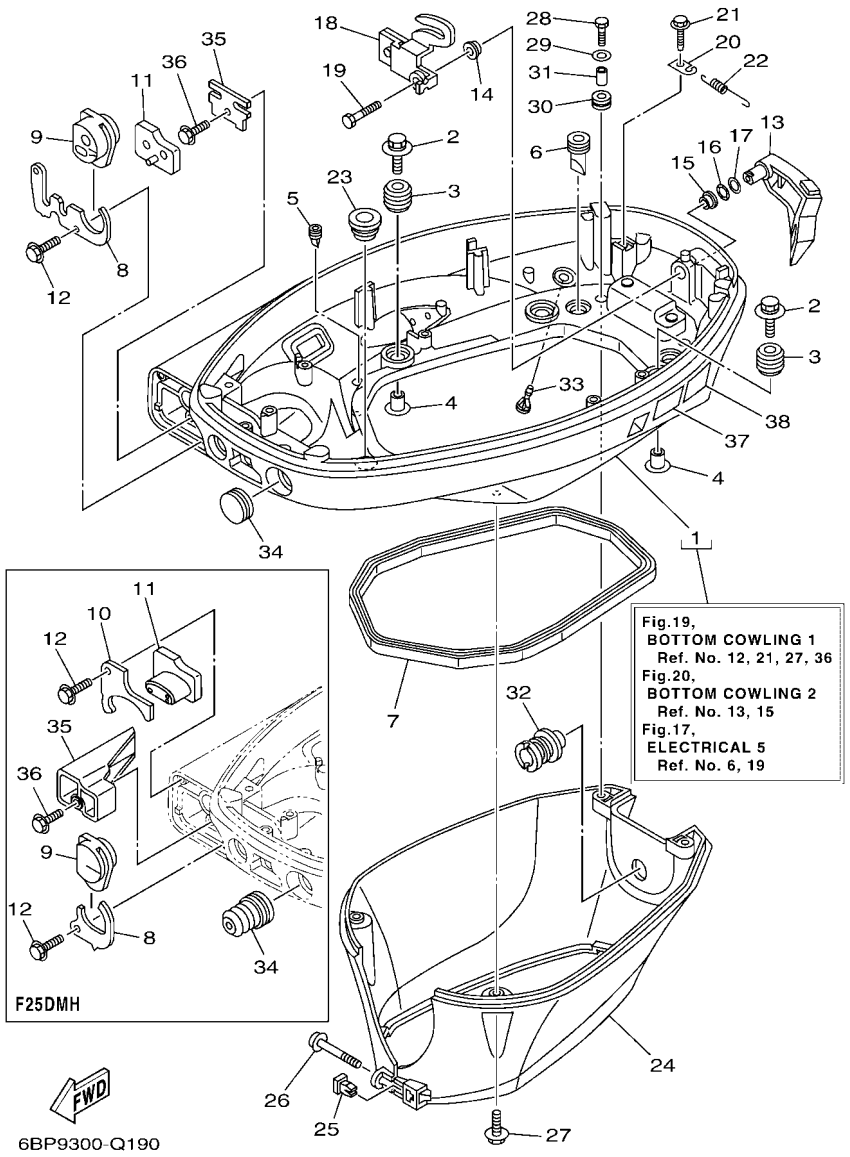

FIG. 19 BOTTOM COWLING 1 — CAPOT INFERIEUR 1

REF. NO.	PART NO. N° PIECES	DESCRIPTION DESCRIPTION	ET	E	MH			REMARKS REMARQUES
1	6BP–42710–00–8D	BOTTOM COWLING ASSY ENS. EMBASE	1	1	1			
2	90119–06M61	BOLT, WITH WASHER BOULON, AVEC RONDELLE	4	4	4			
3	6BG–42748–00	GROMMET PASSE-FIL	4	4	4			
4	90387–06M69	COLLAR COLLERETTE	4	4	4			
5	65W–42717–00	RUBBER, SEAL 2 JOINT EN CAOUTCHOUC 2	2	2	2			
6	61A–42717–00	RUBBER, SEAL 2 JOINT EN CAOUTCHOUC 2	2	2	2			
7	62Y–42716–00	RUBBER, SEAL 1 JOINT EN CAOUTCHOUC 1	1	1	1			
8	6BL–42761–00	STOPPER PLAQUETTE	1	1				
	6BL–42761–10	STOPPER PLAQUETTE			1			
9	6BL–42725–01	GROMMET PASSE-FIL	1	1				
	6BL–42725–10	GROMMET PASSE-FIL			1			
10	6BL–42762–10	STOPPER PLAQUETTE			1			
11	6BL–42727–00	GROMMET PASSE-FIL	1	1				
	6BL–42727–10	GROMMET PASSE-FIL			1			
12	90109–06M86	BOLT BOULON	2	2	2			
13	6BL–42815–00–8D	LEVER, CLAMP LEVIER, PRESSE	1	1	1			
14	90386–12M37	BUSH DOUILLE	1	1	1			
15	90386–12MA2	BUSH DOUILLE	1	1	1			
16	90206–12052	WASHER, WAVE RONDELLE, ONDULEE	1	1	1			
17	90201–12M07	WASHER, PLATE RONDELLE, PLATE	1	1	1			
18	6BG–42816–00	LEVER, CLAMP LEVIER, PRESSE	1	1	1			
19	97095–06012	BOLT BOULON	1	1	1			
20	66T–43144–00	HOOK, SPRING CROCHET	1	1	1			
21	90109–06M86	BOLT BOULON	1	1	1			
22	90506–18023	SPRING, TENSION RESSORT, TENSION	1	1	1			
23	68U–42727–00	GROMMET PASSE-FIL	1	1	1			
24	6BP–42741–00	APRON CAPOT LATERAL	1	1	1			

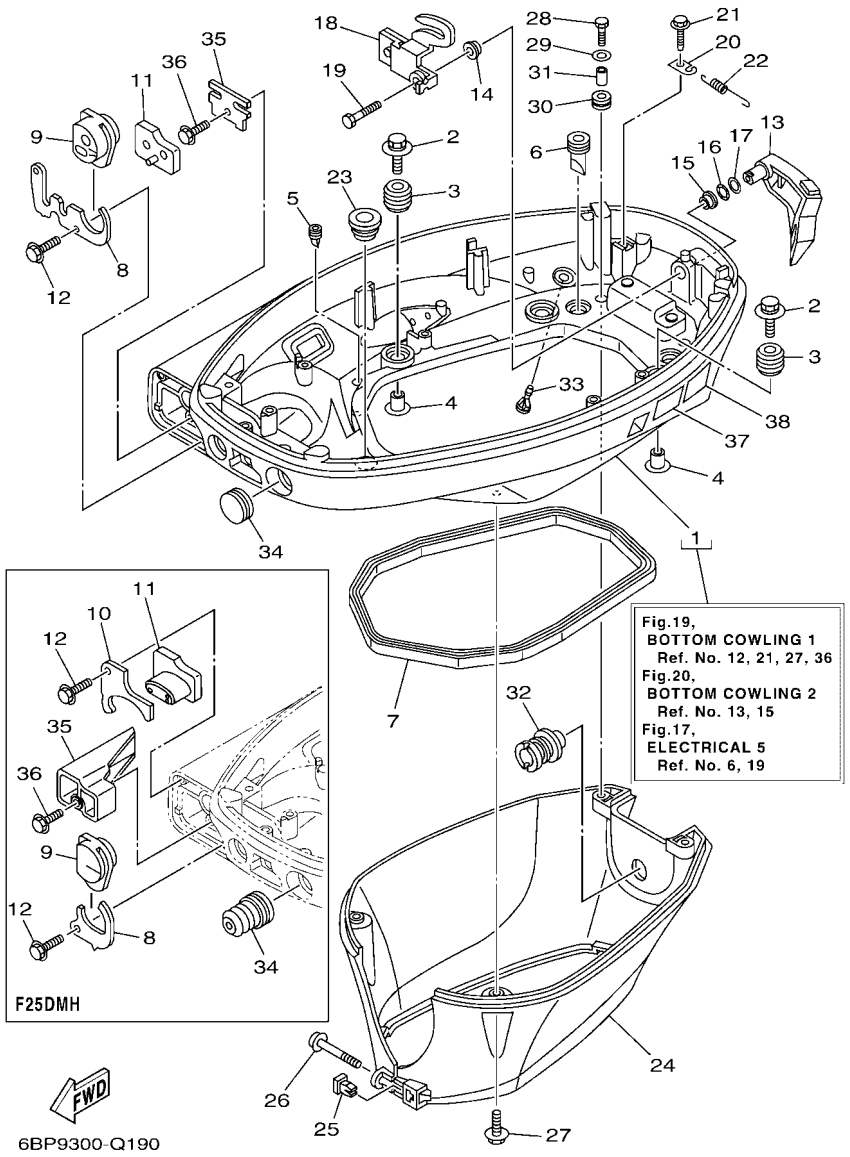

FIG. 19 BOTTOM COWLING 1 — CAPOT INFERIEUR 1

REF. NO.	PART NO. N° PIECES	DESCRIPTION DESCRIPTION	ET	E	MH			REMARKS REMARQUES
25	60V–42756–00	STAY, CLAMP SUPPORT, COLLIER	1	1	1			
26	97980–04245	SCREW, WITH WASHER VIS, AVEC RONDELLE	1	1	1			
27	90109–06M86	BOLT BOULON	2	2	2			
28	97095–06014	BOLT BOULON	2	2	2			
29	92995–06600	WASHER RONDELLE	2	2	2			
30	90480–13M24	GROMMET PASSE-FIL	2	2	2			
31	90387–06M43	COLLAR COLLERETTE	2	2	2			
32	6BP–42769–00	SEAL, RUBBER BOURRELET, CAOUTCHOUC	1	1	1			L(21.7") L(21.7")
33	6BL–44391–00	NIPPLE, HOSE RACCORD D'ESSENCE	1	1	1			
34	65W–42726–10	GROMMET PASSE-FIL	1	1				
	65W–42726–00	GROMMET PASSE-FIL			1			
35	6BL–48538–00	CLAMP, CABLE 1 COLLIER	1	1				
	6BL–42735–00	PROTECTOR PROTECTEUR			1			
36	90109–06M86	BOLT BOULON	1	1	1			
37	6EE–42794–40	LABEL, WARNING (GENERAL) ETIQUETTE, AVERTISSEMENT	1	1	1			
38	6EE–42794–50	LABEL, WARNING (GENERAL) ETIQUETTE, AVERTISSEMENT	1	1	1			

FIG. 20 BOTTOM COWLING 2 — CAPOT INFERIEUR 2

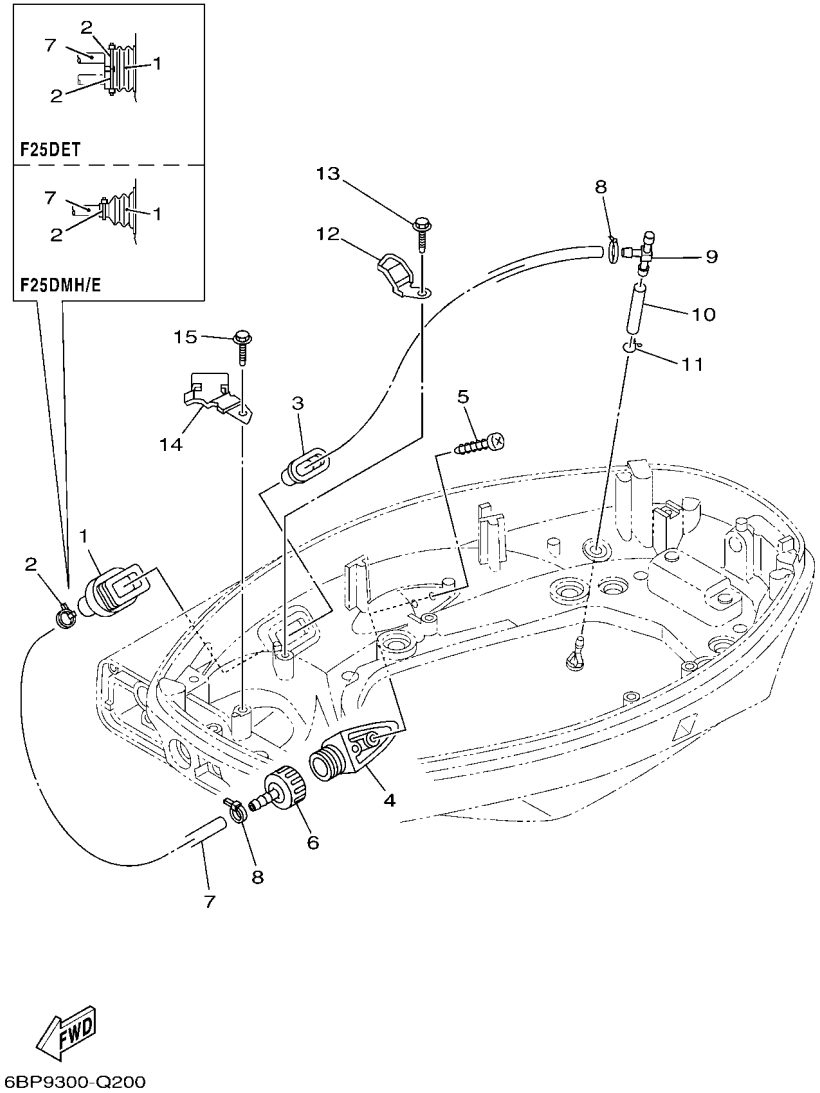

REF. NO.	PART NO. N° PIECES	DESCRIPTION DESCRIPTION	ET	E	MH			REMARKS REMARQUES
1	6H1–42726–21	GROMMET PASSE-FIL	1					
	6BG–42724–00	GROMMET PASSE-FIL		1	1			
2	90465–11M10	CLAMP BRIDE	2					
	90465–11M10	CLAMP BRIDE		1	1			
3	6BG–42384–00	SEAL, CAP JOINT, CAPUCHON	1	1	1			
4	6AW–12572–00	ADAPTER ADAPTATEUR	1	1	1			
5	97780–60520	SCREW, TAPPING VIS, TETE BOMBEE	2	2	2			
6	6R3–12580–00	JOINT ASSY ARTICULER (ENS.)	1	1	1			
7	90445–11153	HOSE (L460) DURITE (L460)	1	1	1			
8	90465–11M10	CLAMP BRIDE	2	2	2			
9	6C5–24378–00	PIPE, JOINT 3 DURITE RACCORDEMENT 3	1	1	1			
10	90445–09057	HOSE (L43) DURITE (L43)	1	1	1			
11	90467–08M18	CLIP JONC	1	1	1			
12	6BL–24396–00	PLATE PLAQUE	1	1	1			
13	90109–06M86	BOLT BOULON	1	1	1			
14	6BL–24364–00	STAY SUPPORT	1	1	1			
15	90109–06M86	BOLT BOULON	1	1	1			

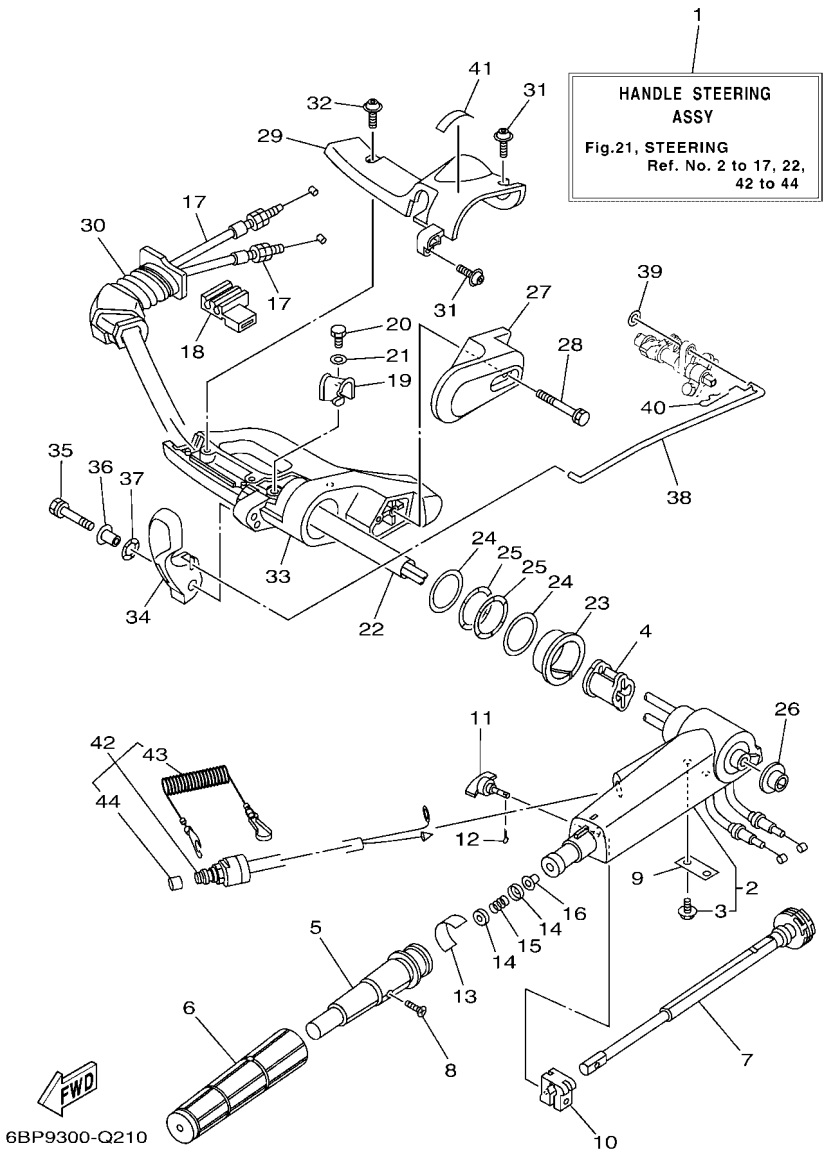

FIG. 21 STEERING — DIRECTION

REF. NO.	PART NO. N° PIECES	DESCRIPTION DESCRIPTION	ET	E	MH			REMARKS REMARQUES
1	6BP–W0084–00–8D	HANDLE STEERING ASSY BARRE FRANCHE (ENS.)			1			
2	6AH–42101–02–8D	HANDLE, STEERING POIGNEE			1			
3	90109–06M86	.BOLT .BOULON			2			
4	6AH–26288–00	GROMMET, CABLE OEILLET DE CABLE			1			
5	66M–42119–01	GRIP, STEERING HANDLE POIGNEE, BARRE FRANCHE			1			
6	67D–42177–00	RUBBER, HANDLE CAOUTCHOUC, POIGNEE			1			
7	65W–42138–00	LEVER, THROTTLE LEVIER, ACCELERATEUR			1			
8	90152–05011	SCREW, COUNTERSUNK VIS, TETE NOYEE			1			
9	65W–42159–00	STAY SUPPORT			1			
10	6G1–42126–00	FRICTION, STEERING HANDLE GRIP CUVETTE, POIGNEE DE DIRECTION			1			
11	65W–42125–00	BOLT, FRICTION ADJUSTING BOULON			1			
12	91490–16010	PIN. COTTER GOUPILLE			1			
13	6J0–42137–10	INDICATOR, THROTTLE INDICATEUR, ACCELERATION			1			
14	6X4–44188–00	WASHER RONDELLE			2			
15	90501–23215	SPRING, COMPRESSION RESSORT, COMPRESSION			1			
16	90386–08004	BUSH DOUILLE			1			
17	6BP–26311–00	CABLE, THROTTLE 1 CABLE 1, ACCELERATEUR			2			
18	6BP–26316–00	BOOT, THROTTLE CABLE SOUFFLET, CABLE D'ACCELERATEUR			1			
19	6AH–44554–00	PLATE PLAQUETTE			1			
20	97095–06014	BOLT BOULON			1			
21	92995–06600	WASHER RONDELLE			1			
22	6AH–2634E–00	PROTECTOR 1 PROTECTEUR 1			1			
23	90386–45001	BUSH DOUILLE			1			
24	90201–39008	WASHER, PLATE RONDELLE, PLATE			2			
25	90206–39001	WASHER, WAVE RONDELLE, ONDULEE			2			
26	90381–20001	BUSH, SOLID DOUILLE, SOLIDE			1			
27	6AH–42131–00–8D	COVER, HANDLE STEERING COUVERCLE			1			

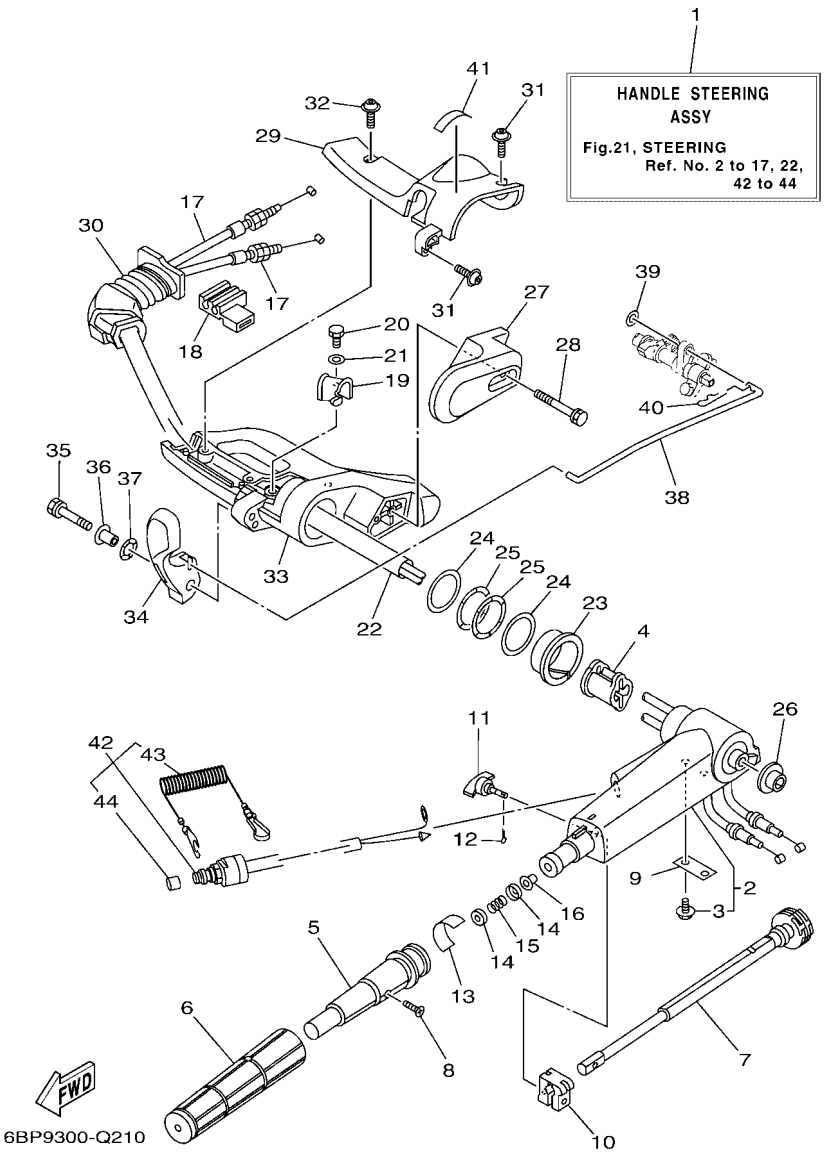

FIG. 21 STEERING

DIRECTION

REF. NO.	PART NO. N° PIECES	DESCRIPTION DESCRIPTION	ET	E	MH			REMARKS REMARQUES
28	97595–06555	BOLT, WITH WASHER VIS HEXAGONAL AVC RONDELLE			2			
29	6BL–42532–00	COVER COUVERCLE			1			
30	6BL–42131–00	COVER, HANDLE STEERING COUVERCLE			1			
31	90111–06072	BOLT,HEX. SOCKET BUTTON BOULON			3			
32	90111–06072	BOLT,HEX. SOCKET BUTTON BOULON			1			
33	6BL–42121–00–8D	BRACKET SUPPORT			1			
34	6AH–44111–00	HANDLE, GEAR SHIFT POIGNEE, LEVIER D'EMBRAYAGE			1			
35	90119–06M05	BOLT, WITH WASHER BOULON, AVEC RONDELLE			1			
36	90387–06M86	COLLAR COLLERETTE			1			
37	90206–15M18	WASHER, WAVE RONDELLE, ONDULEE			1			
38	6BL–44124–00	LINK, SHIFT ROD BIELLETTE			1			
39	92990–06200	WASHER, PLAIN RONDELLE, PLATE			1			
40	90468–18008	CLIP JONC			1			
41	6G8–44191–00	INDICATOR, SHIFT ETIQUETTE, EMBRAYAGE			1			
42	6BL–82575–00	ENGINE STOP SWITCH ASSY COUPE CIRCUIT CPLT			1			
43	682–82556–00	.LANYARD, STOP SWITCH .CORDON DU COUPE CIRCUIT			1			
44	689–8257Y–00	.CAP .COUVERCLE			1			

FIG. 22 STEERING FRICTION — CUVETTE POIGNEE DE DIRECTION

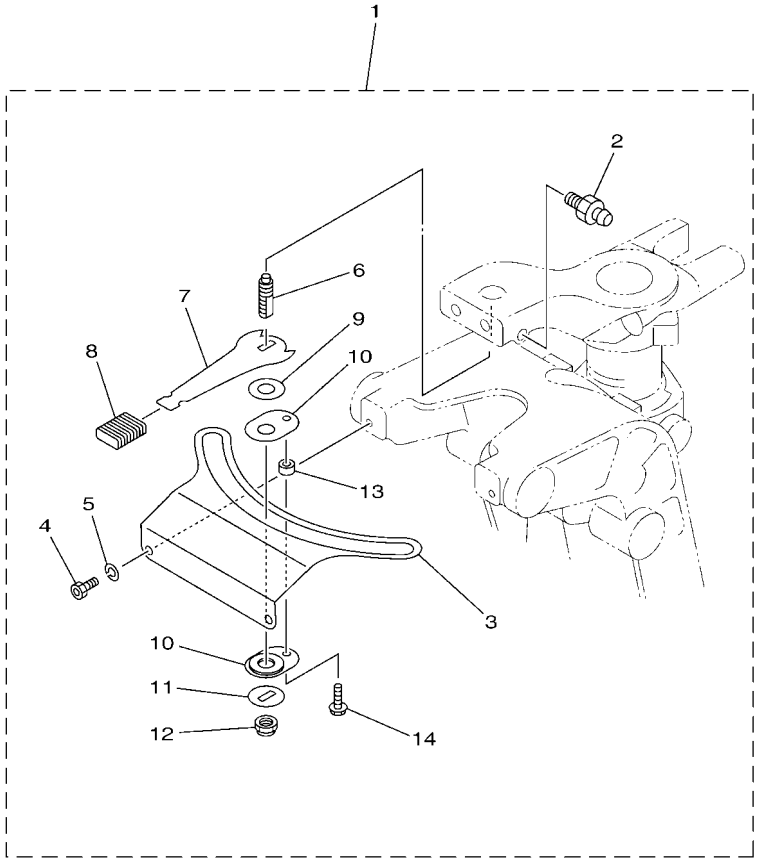

65W1010-2181

REF. NO.	PART NO. N° PIECES	DESCRIPTION DESCRIPTION	ET	E	MH			REMARKS REMARQUES
1	65W–42508–00	STEERING FRICTION ASSY DIRECTION FRICTION (ENS.)			1			
2	93700–06M03	.NIPPLE, GREASE .PION			1			
3	65W–42527–00	.PLATE, FRICTION .PLAQUE, FRICTION			1			
4	90109–06M88	.BOLT .BOULON			2			
5	92990–06100	.WASHER, SPRING .RONDELLE, GROWER			2			
6	65W–42562–00	.SHAFT, STEERING LOCK .ARBRE,ANTIVOL DE DIRECTION			1			
7	65W–42561–00	.KNOB, STEERING LOCK .BOUTON			1			
8	689–43633–00	.COVER, TILT LEVER .COUVERCLE			1			
9	90202–10M56	.WASHER, PLATE .RONDELLE, PLATE			1			
10	65W–42528–00	.PLATE, FRICTION .PLAQUE, FRICTION			2			
11	90209–10M26	.WASHER .RONDELLE			1			
12	90185–10M14	.NUT, SELF-LOCKING .ECROU,AUTO-BLOQUANT			1			
13	90387–05054	.COLLAR .COLLERETTE			1			
14	90109–05M89	.BOLT .BOULON			1			

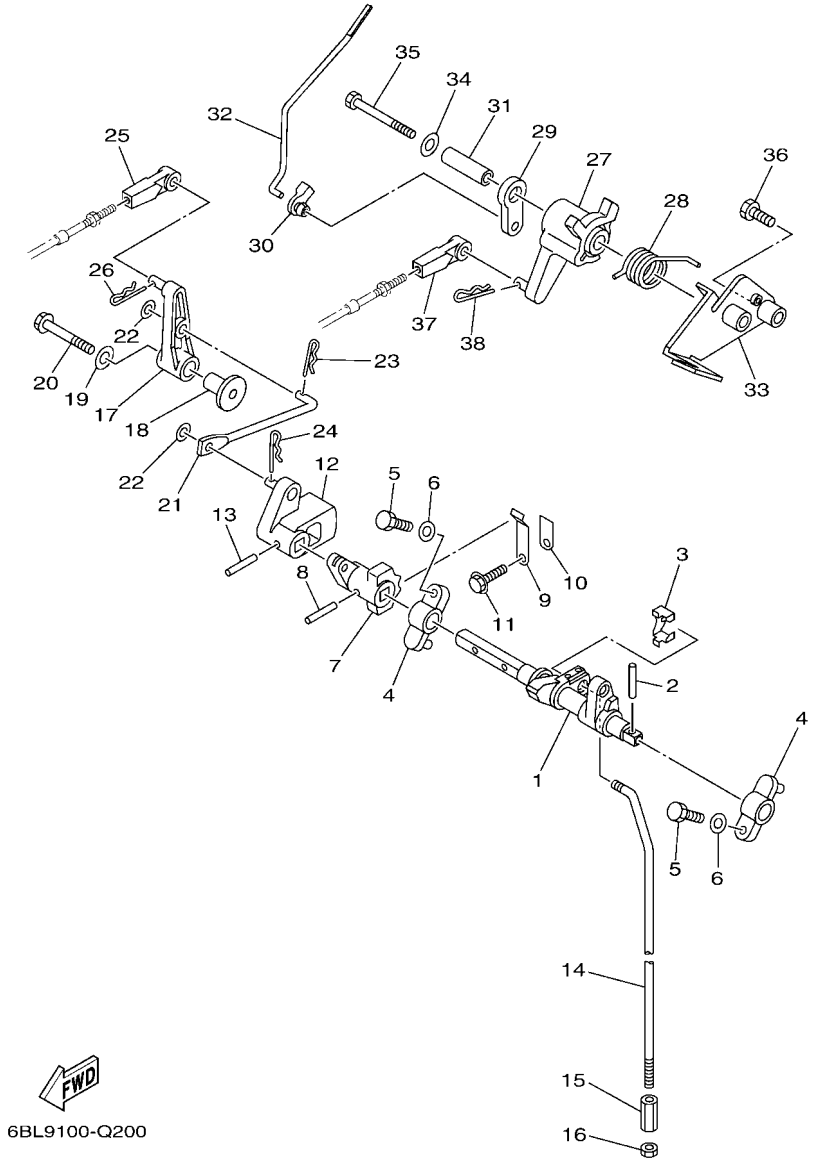

FIG. 23 CONTROL 1 — COMMANDE 1

REF. NO.	PART NO. N° PIECES	DESCRIPTION DESCRIPTION	ET	E	MH			REMARKS REMARQUES
1	6BL–44121–01	LEVER, SHIFT ROD LEVIER, TIGE D'INVERSION	1	1				
2	90254–03M05	PIN, SPRING RIVET, TETE TRONCONIQUE	1	1				
3	6AH–26364–00	END, CABLE 2 EMBOUT, DE CABLE	1	1				
4	6G1–41662–01–94	BRACKET 2 SUPPORT 2	2	2				
5	97095–06020	BOLT BOULON	2	2				
6	92995–06600	WASHER RONDELLE	2	2				
7	6BL–44173–00	LEVER, SHIFT CONTROL POIGNEE, INVERSION	1	1				
8	90254–03M05	PIN, SPRING RIVET, TETE TRONCONIQUE	1	1				
9	65W–44116–00	SPRING RESSORT	1	1				
10	66R–44114–00	STOPPER PLAQUETTE	1	1				
11	95895–06014	BOLT, FLANGE BOULON	1	1				
12	6BL–44142–00	JOINT AXE	1	1				
13	90254–03M05	PIN, SPRING RIVET, TETE TRONCONIQUE	1	1				
14	6BP–44143–00	ROD, SHIFT TIGE D'EMBRAYAGE		1				S(16.7") S(16.7")
	6BP–44143–10	ROD, SHIFT TIGE D'EMBRAYAGE	1	1				L(21.7") L(21.7")
15	90170–06015	NUT ECROU	1	1				
16	95380–06700	NUT ECROU	1	1				
17	6BL–44125–00	LEVER, SHIFT ROD LEVIER, TIGE D'INVERSION	1	1				
18	90387–06M86	COLLAR COLLERETTE	1	1				
19	90201–06M31	WASHER, PLATE RONDELLE, PLATE	1	1				
20	97595–06535	BOLT, WITH WASHER VIS HEXAGONAL AVC RONDELLE	1	1				
21	6BL–44192–00	LINK, SHIFT ROD BIELLETTE	1	1				
22	90201–05M06	WASHER, PLATE RONDELLE, PLATE	2	2				
23	90468–10005	CLIP JONC	1	1				
24	90468–18001	CLIP JONC	1	1				
25	663–48344–00	CABLE END, REMOTE CONTROL CHAPE CABLE	1	1				
26	90468–18008	CLIP JONC	1	1				

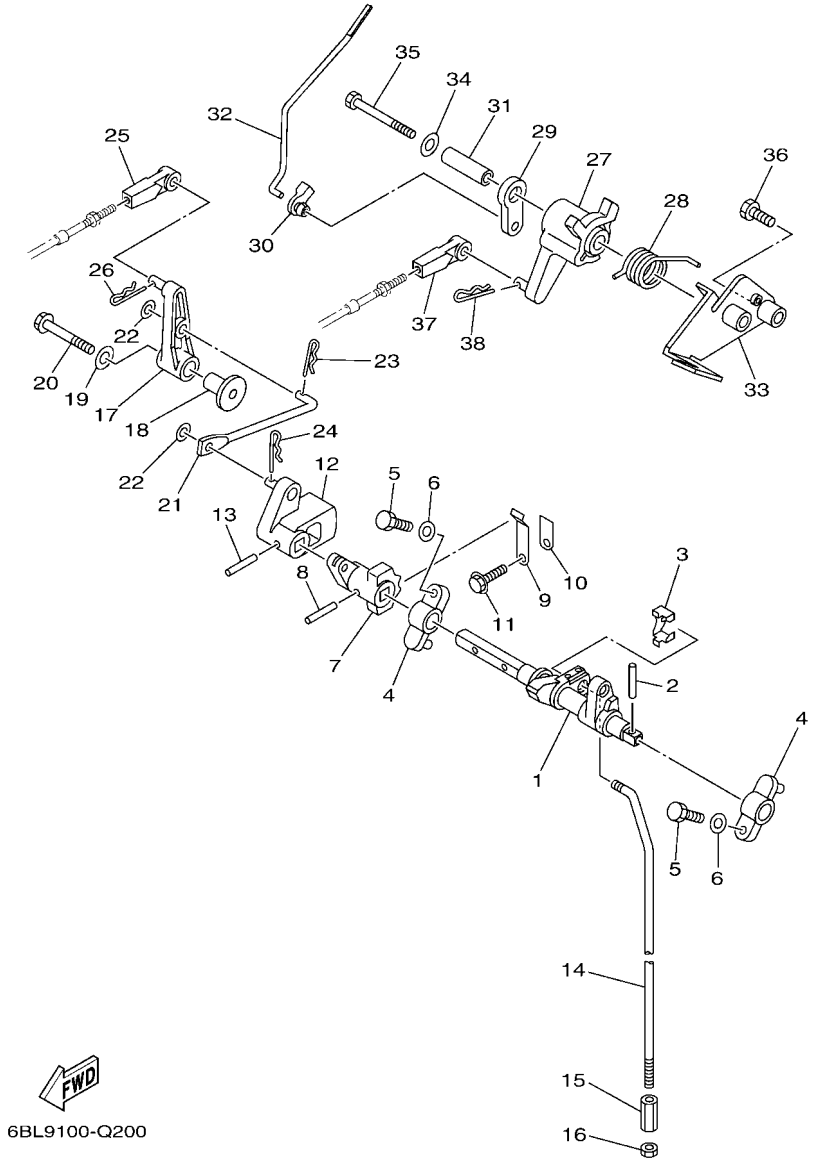

FIG. 23 CONTROL 1 — COMMANDE 1

REF. NO.	PART NO. N° PIECES	DESCRIPTION DESCRIPTION	ET	E	MH			REMARKS REMARQUES
27	6BL–41638–00	PULLEY POULIE	1	1				
28	90508–20040	SPRING, TORSION RESSORT, TORSION	1	1				
29	65W–41283–00	LEVER, FREE ACCEL. LEVIER	1	1				
30	6J8–41262–00	JOINT, CHOKE LEVER RACCORD, LEVIER DE STARTER	1	1				
31	90387–06139	COLLAR COLLERETTE	1	1				
32	6BL–41211–00	LINK, ACCEL. BIELLETTE, ACCELERATION	1	1				
33	6BL–14571–10	BRACKET, THROTTLE SUPPORT, ACCELERATEUR	1	1				
34	90201–06M31	WASHER, PLATE RONDELLE, PLATE	1	1				
35	97095–06065	BOLT BOULON	1	1				
36	97095–06025	BOLT BOULON	1	1				
37	663–48344–00	CABLE END, REMOTE CONTROL CHAPE CABLE	1	1				
38	90468–18008	CLIP JONC	1	1				

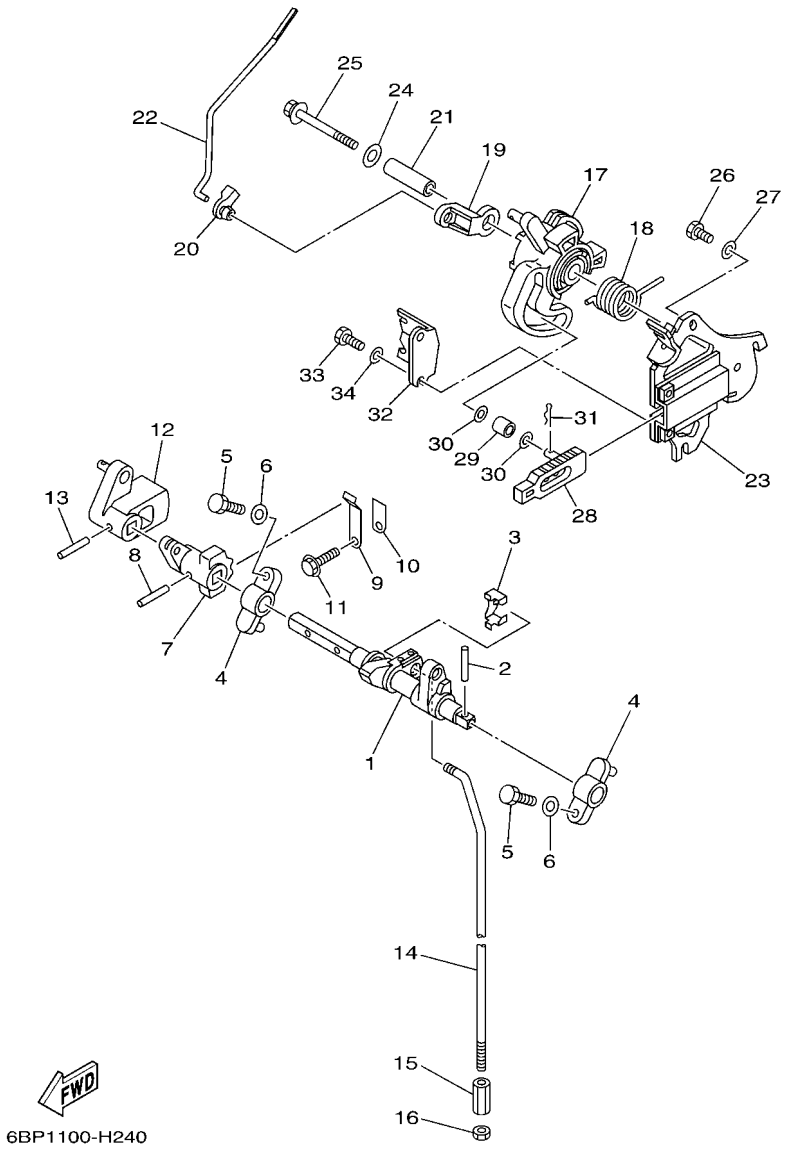

FIG. 24 CONTROL 2 — COMMANDE 2

REF. NO.	PART NO. N° PIECES	DESCRIPTION DESCRIPTION	ET	E	MH			REMARKS REMARQUES
1	6BL–44121–01	LEVER, SHIFT ROD LEVIER, TIGE D'INVERSION			1			
2	90254–03M05	PIN, SPRING RIVET, TETE TRONCONIQUE			1			
3	6AH–26364–00	END, CABLE 2 EMBOUT, DE CABLE			1			
4	6G1–41662–01–94	BRACKET 2 SUPPORT 2			2			
5	97095–06020	BOLT BOULON			2			
6	92995–06600	WASHER RONDELLE			2			
7	6BL–44173–00	LEVER, SHIFT CONTROL POIGNEE, INVERSION			1			
8	90254–03M05	PIN, SPRING RIVET, TETE TRONCONIQUE			1			
9	65W–44116–00	SPRING RESSORT			1			
10	66R–44114–00	STOPPER PLAQUETTE			1			
11	95895–06014	BOLT, FLANGE BOULON			1			
12	6BL–44142–00	JOINT AXE			1			
13	90254–03M05	PIN, SPRING RIVET, TETE TRONCONIQUE			1			
14	6BP–44143–00	ROD, SHIFT TIGE D'EMBRAYAGE			1			S(16.7") S(16.7")
	6BP–44143–10	ROD, SHIFT TIGE D'EMBRAYAGE			1			L(21.7") L(21.7")
15	90170–06015	NUT ECROU			1			
16	95380–06700	NUT ECROU			1			
17	6AH–41638–00	PULLEY POULIE			1			
18	90508–20M44	SPRING, TORSION RESSORT, TORSION			1			
19	6BL–41283–00	LEVER, FREE ACCEL. LEVIER			1			
20	6J8–41262–00	JOINT, CHOKE LEVER RACCORD, LEVIER DE STARTER			1			
21	90387–06139	COLLAR COLLERETTE			1			
22	6BP–41211–00	LINK, ACCEL. BIELLETTE, ACCELERATION			1			
23	6BL–14571–00	BRACKET, THROTTLE SUPPORT, ACCELERATEUR			1			
24	90201–06M31	WASHER, PLATE RONDELLE, PLATE			1			
25	97595–06555	BOLT, WITH WASHER VIS HEXAGONAL AVC RONDELLE			1			
26	97095–06014	BOLT BOULON			2			

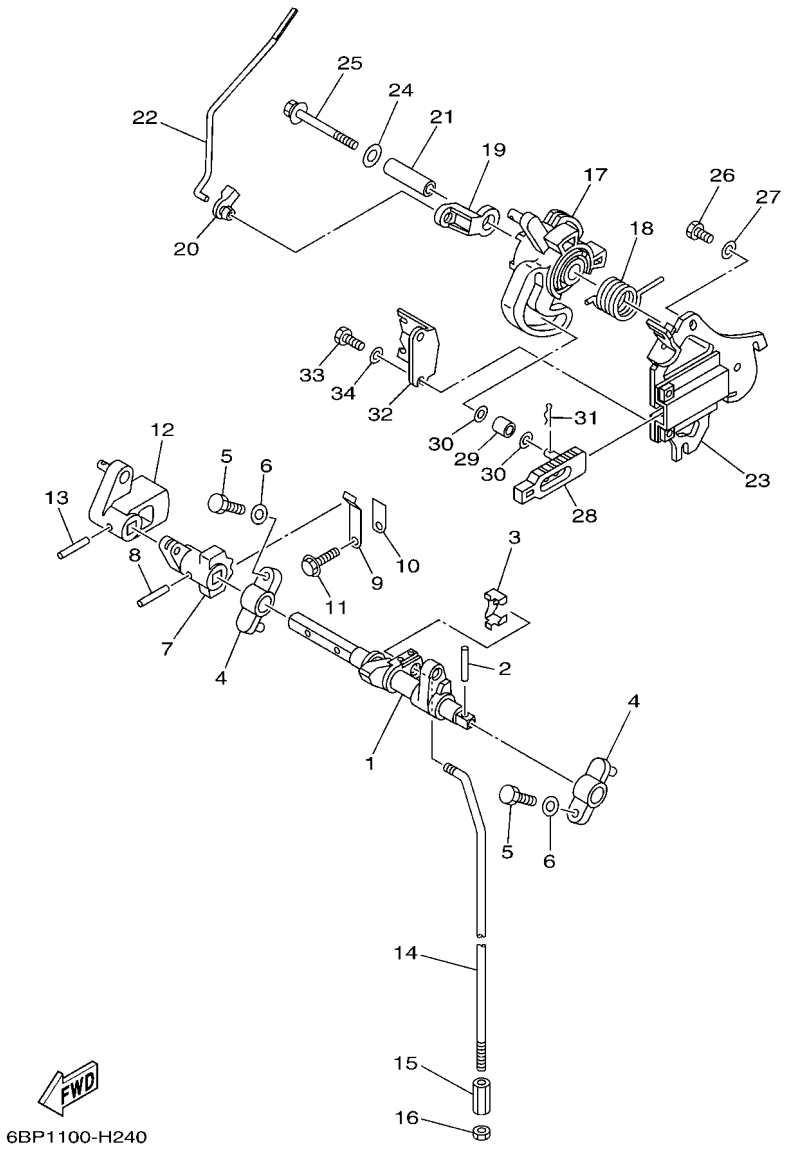

FIG. 24 CONTROL 2 — COMMANDE 2

REF. NO.	PART NO. N° PIECES	DESCRIPTION DESCRIPTION	ET	E	MH			REMARKS REMARQUES
27	92995–06600	WASHER RONDELLE			2			
28	6AH–44167–10	PLUNGER, SHIFT CAM POUSSOIR D'EMBRAYAGE			1			
29	62Y–42171–00	BUSHING COUSSINET			1			
30	90201–05M04	WASHER, PLATE RONDELLE, PLATE			2			
31	90468–10005	CLIP JONC			1			
32	6AH–14497–00	STAY, THROTTLE WIRE SUPPORT DE BOISSEAU			1			
33	97095–06014	BOLT BOULON			2			
34	92995–06600	WASHER RONDELLE			2			

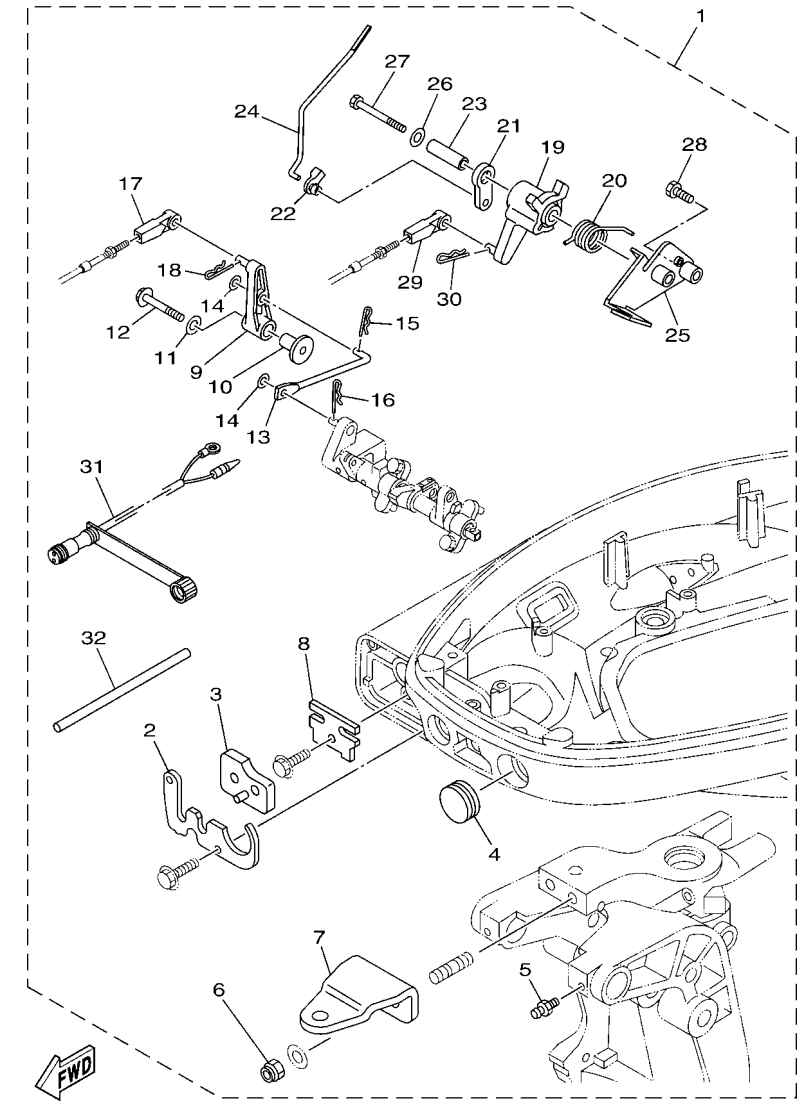

6BP1100-H250

FIG. 25 REMO CON ATTACHMENT — COMMANDE A DISTANCE

REF. NO.	PART NO. N° PIECES	DESCRIPTION DESCRIPTION	ET	E	MH			REMARKS REMARQUES
1	6BL–48501–00	REMOTE CONT. ATTACHMENT ASSY. COMMANDE A DISTANCE (KIT)			1			AP AP
2	6BL–42761–00	.STOPPER .PLAQUETTE			1			
3	6BL–42727–00	.GROMMET .PASSE-FIL			1			
4	65W–42726–10	.GROMMET .PASSE-FIL			1			
5	93700–06M03	.NIPPLE, GREASE .PION			2			
6	90185–10027	.NUT, SELF-LOCKING .ECROU,AUTO-BLOQUANT			2			
7	65W–48511–01	.HOOK, STEERING .ATTACHE, DIRECTION			1			
8	6BL–48538–00	.CLAMP, CABLE 1 .COLLIER			1			
9	6BL–44125–00	.LEVER, SHIFT ROD .LEVIER, TIGE D'INVERSION			1			
10	90387–06M86	.COLLAR .COLLERETTE			1			
11	90201–06M31	.WASHER, PLATE .RONDELLE, PLATE			1			
12	97595–06535	.BOLT, WITH WASHER .VIS HEXAGONAL AVC RONDELLE			1			
13	6BL–44192–00	.LINK, SHIFT ROD .BIELLETTE			1			
14	90201–05M06	.WASHER, PLATE .RONDELLE, PLATE			2			
15	90468–10005	.CLIP .JONC			1			
16	90468–18001	.CLIP .JONC			1			
17	663–48344–00	.CABLE END, REMOTE CONTROL .CHAPE CABLE			1			
18	90468–18008	.CLIP .JONC			1			
19	6BL–41638–00	.PULLEY .POULIE			1			
20	90508–20040	.SPRING, TORSION .RESSORT, TORSION			1			
21	65W–41283–00	.LEVER, FREE ACCEL. .LEVIER			1			
22	6J8–41262–00	.JOINT, CHOKE LEVER .RACCORD, LEVIER DE STARTER			1			
23	90387–06139	.COLLAR .COLLERETTE			1			
24	6BL–41211–00	.LINK, ACCEL. .BIELLETTE, ACCELERATION			1			
25	6BL–14571–10	.BRACKET, THROTTLE .SUPPORT, ACCELERATEUR			1			
26	90201–06M31	.WASHER, PLATE .RONDELLE, PLATE			1			
27	97095–06065	.BOLT .BOULON			1			

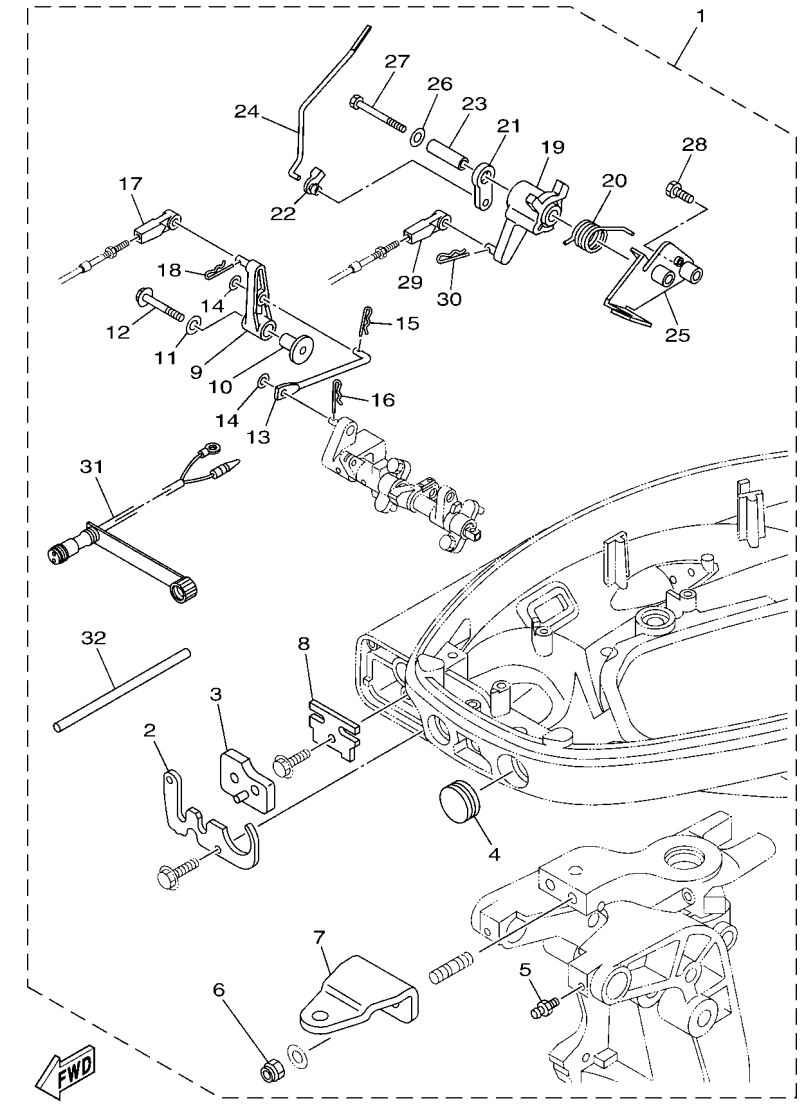

6BP1100-H250

FIG. 25 REMO CON ATTACHMENT — COMMANDE A DISTANCE

REF. NO.	PART NO. N° PIECES	DESCRIPTION DESCRIPTION	ET	E	MH			REMARKS REMARQUES
28	97095–06025	.BOLT .BOULON			1			
29	663–48344–00	.CABLE END, REMOTE CONTROL .CHAPE CABLE			1			
30	90468–18008	.CLIP .JONC			1			
31	6D5–84340–00	.SOCKET CORD ASSY 1 .DOUILLE			1			
32	90446–09M42	.HOSE (L160) .DURITE (L160)			2			

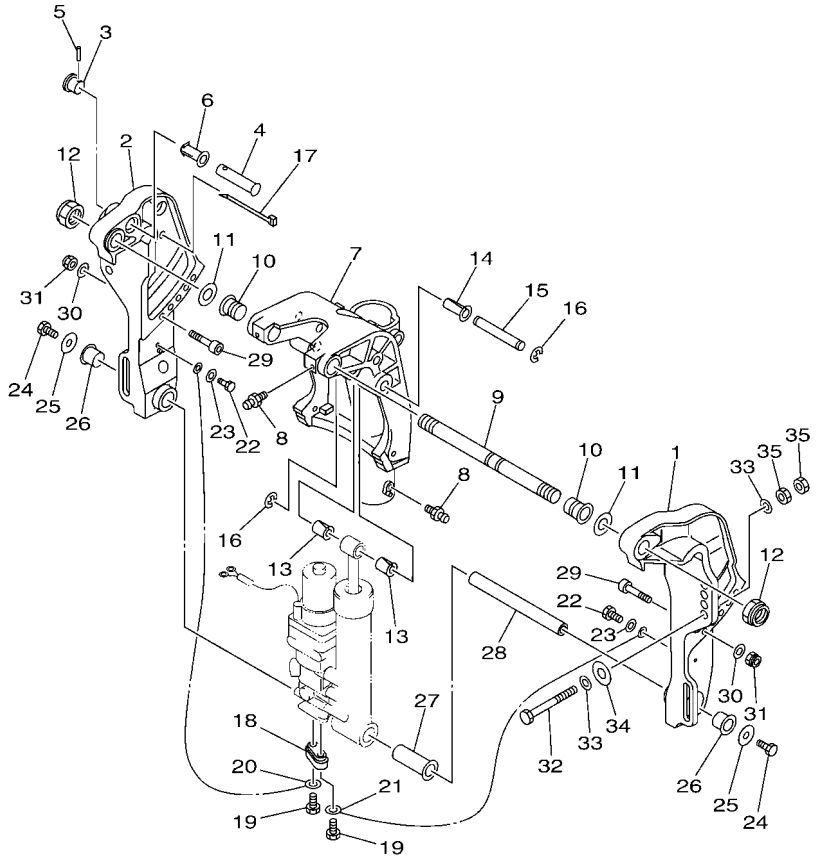

6BP3110-K260

FIG. 26 BRACKET 1 — SUPPORT 1

REF. NO.	PART NO. N° PIECES	DESCRIPTION DESCRIPTION	ET	E	MH			REMARKS REMARQUES
1	65W–43111–10–8D	BRACKET, CLAMP 1 PRESSE 1	1					
2	65W–43112–10–8D	BRACKET, CLAMP 2 PRESSE 2	1					
3	65W–43192–00	KNOB, STOPPER BOUTON, BUTEE DE RELEVAGE	1					
4	65W–43191–00	SHAFT, STOPPER AXE, BUTEE	1					
5	91690–30018	PIN, SPRING AGRAFFE	1					
6	90386–14MA1	BUSH DOUILLE	1					
7	65W–43311–10–8D	BRACKET, SWIVEL 1 SUPPORT, PIVOT 1	1					L(21.7") L(21.7")
8	93700–06M03	NIPPLE, GREASE PION	3					
9	63D–43131–01	BOLT, CLAMP BRACKET BOULON, PRESSE	1					
10	90386–22M15	BUSH DOUILLE	2					
11	90201–22M03	WASHER, PLATE RONDELLE, PLATE	2					
12	90185–22043	NUT, SELF-LOCKING ECROU,AUTO-BLOQUANT	2					
13	90386–12MA0	BUSH DOUILLE	2					
14	90386–12M98	BUSH DOUILLE	1					
15	90249–12M38	PIN GOUPILLE	1					
16	99080–10600	CIRCLIP CIRCLIP	2					
17	90465–13M11	CLAMP BRIDE	2					
18	65W–45251–00	ANODE ANODE	1					
19	90101–06020	BOLT BOULON	2					
20	6H1–82148–00	WIRE, LEAD 4 FIL 4	1					
21	6U0–82127–00	WIRE, LEAD 2 FIL 2	1					
22	97095–06014	BOLT BOULON	2					
23	92995–06600	WASHER RONDELLE	2					
24	97080–08016	BOLT BOULON	2					
25	90201–08M00	WASHER, PLATE RONDELLE, PLATE	2					
26	90386–18M44	BUSH DOUILLE	2					
27	90386–18MA0	BUSH DOUILLE	1					

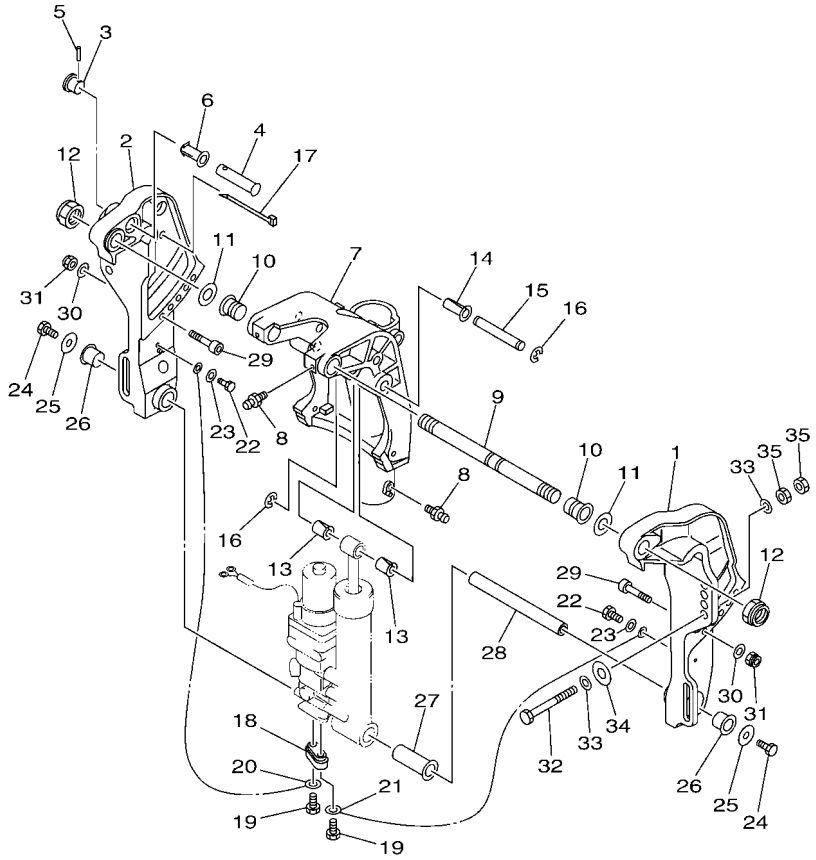

6BP3110-K260

FIG. 26 BRACKET 1 — SUPPORT 1

REF. NO.	PART NO. N° PIECES	DESCRIPTION DESCRIPTION	ET	E	MH			REMARKS REMARQUES
28	90249–18M35	PIN GOUPILLE	1					
29	90110–10M02	BOLT, HEXAGON SOCKET HEAD BOULON, TETE HEXAGONALE CREUSE	2					
30	92995–10600	WASHER RONDELLE	2					
31	90185–10M13	NUT, SELF-LOCKING ECROU,AUTO-BLOQUANT	2					
32	90101–12M65	BOLT BOULON	4					
33	90201–12062	WASHER, PLATE RONDELLE, PLATE	8					
34	90201–12426	WASHER, PLATE RONDELLE, PLATE	4					
35	95380–12600	NUT ECROU	8					

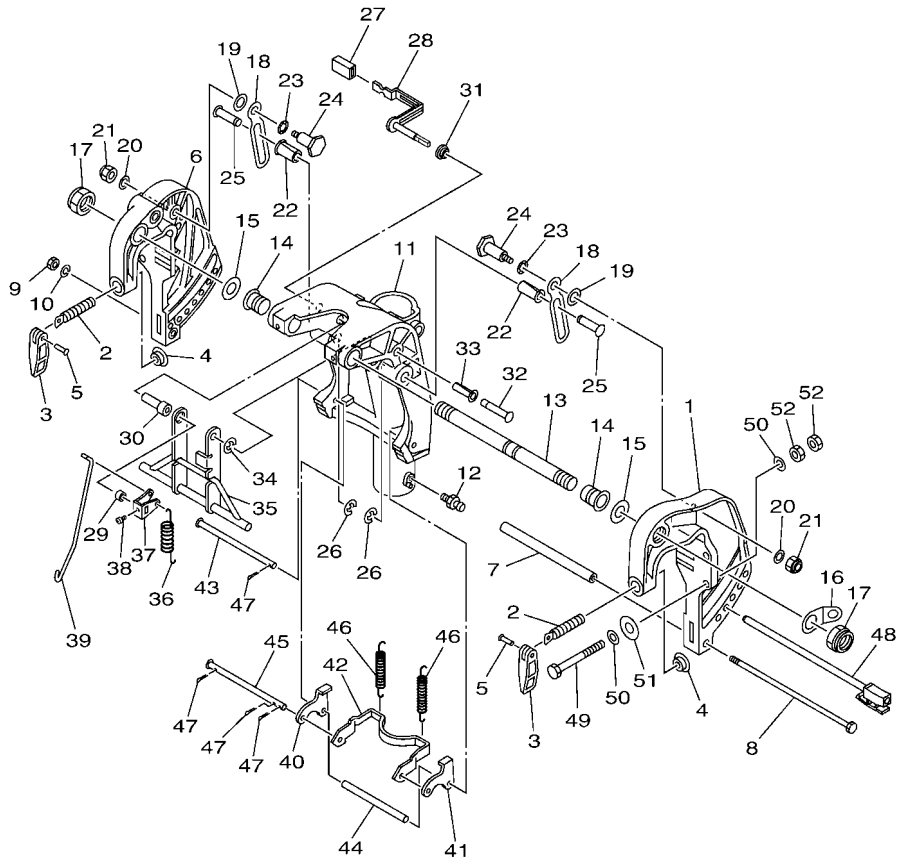

6BP9300-Q270

FIG. 27 BRACKET 2 — SUPPORT 2

REF. NO.	PART NO. N° PIECES	DESCRIPTION DESCRIPTION	ET	E	MH			REMARKS REMARQUES
1	66T–43111–01–8D	BRACKET, CLAMP 1 PRESSE 1		1	1			
2	90149–14M12	SCREW VIS		2	2			
3	663–43118–01–8D	HANDLE, TRANSOM CLAMP POIGNEE DE VIS DE PRESSE		2	2			
4	648–43114–01	PAD, TRANSOM CLAMP RONDELLE D'APPUI		2	2			
5	90243–04007	PIN GOUPILLE		2	2			
6	66T–43112–01–8D	BRACKET, CLAMP 2 PRESSE 2		1	1			
7	90387–10108	COLLAR COLLERETTE		1	1			
8	90101–08M76	BOLT BOULON		1	1			
9	95380–08600	NUT ECROU		1	1			
10	92990–08100	WASHER, SPRING RONDELLE, GROWER		1	1			
11	65W–43311–00–8D	BRACKET, SWIVEL 1 SUPPORT, PIVOT 1		1	1			S(16.7") S(16.7")
	65W–43311–10–8D	BRACKET, SWIVEL 1 SUPPORT, PIVOT 1		1	1			L(21.7") L(21.7")
12	93700–06M03	NIPPLE, GREASE PION		3				
	93700–06M03	NIPPLE, GREASE PION			1			
13	63D–43131–01	BOLT, CLAMP BRACKET BOULON, PRESSE		1	1			
14	90386–22M15	BUSH DOUILLE		2	2			
15	90201–22M03	WASHER, PLATE RONDELLE, PLATE		2	2			
16	6J8–43113–01	PLATE, CLAMP BRACKET PLAQUETTE, PRESSE		1	1			
17	90185–22043	NUT, SELF-LOCKING ECROU,AUTO-BLOQUANT		2	2			
18	66T–43627–00	STOPPER PLAQUETTE		2	2			
19	90202–12031	WASHER, PLATE RONDELLE, PLATE		2	2			
20	90201–08M07	WASHER, PLATE RONDELLE, PLATE		2	2			
21	90185–08057	NUT, SELF-LOCKING ECROU,AUTO-BLOQUANT		2	2			
22	90386–12M98	BUSH DOUILLE		2	2			
23	90206–12M00	WASHER, WAVE RONDELLE, ONDULEE		2	2			
24	90109–08M90	BOLT BOULON		2	2			
25	90249–12M34	PIN GOUPILLE		2	2			

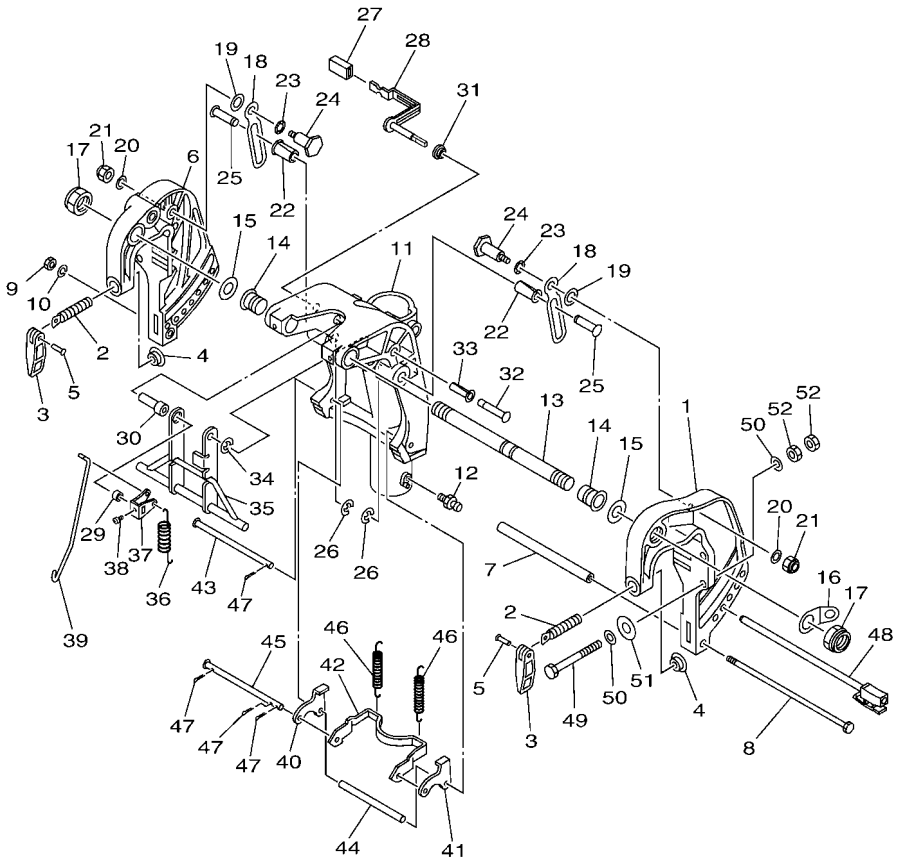

6BP9300-Q270

FIG. 27 BRACKET 2 — SUPPORT 2

REF. NO.	PART NO. N° PIECES	DESCRIPTION DESCRIPTION	ET	E	MH			REMARKS REMARQUES
26	99080–10600	CIRCLIP CIRCLIP		2	2			
27	682–43318–01	COVER CAPUCHON		1	1			
28	65W–43630–11	TILT LEVER ASSY LEVIER D'INCLINAISON		1	1			
29	90387–07048	COLLAR COLLERETTE		1	1			
30	90387–07049	COLLAR COLLERETTE		1	1			
31	90386–07MA2	BUSH DOUILLE		1	1			
32	90249–10M31	PIN GOUPILLE		1	1			
33	90386–10M99	BUSH DOUILLE		1	1			
34	99080–08600	CIRCLIP CIRCLIP		1	1			
35	66T–43350–10	RECEIVER ASSY RECEIVER ASSY		1	1			
36	90506–20M37	SPRING, TENSION RESSORT, TENSION		1	1			
37	66T–43631–11	LEVER, TILT LEVIER, INCLINAISON		1	1			
38	90157–05014	SCREW, PAN HEAD VIS, TETE TRONCONIQUE		1	1			
39	65W–43616–00	ROD, TILT LOCK TIGE		1	1			
40	65W–43614–01	PLATE, TILT LOCK ETRIER, VERROUILLAGE MARCHE AR		1	1			
41	65W–43615–01	PLATE, TILT LOCK ETRIER, VERROUILLAGE MARCHE AR		1	1			
42	65W–43613–00	ARM, TILT LOCK GUIDE		1	1			
43	90249–07M32	PIN GOUPILLE		1	1			
44	90387–07M29	COLLAR COLLERETTE		1	1			
45	90249–07M33	PIN GOUPILLE		1	1			
46	90506–30M00	SPRING, TENSION RESSORT, TENSION		2	2			
47	91490–20012	PIN. COTTER GOUPILLE		4	4			
48	65W–43160–00	TILT ROD ASSY BROCHE D'INCLINAISON (ENS.)		1	1			
49	90101–10M58	BOLT BOULON		4				
50	92995–10600	WASHER RONDELLE		8				
51	90201–12426	WASHER, PLATE RONDELLE, PLATE		4				
52	95380–10600	NUT ECROU		8				

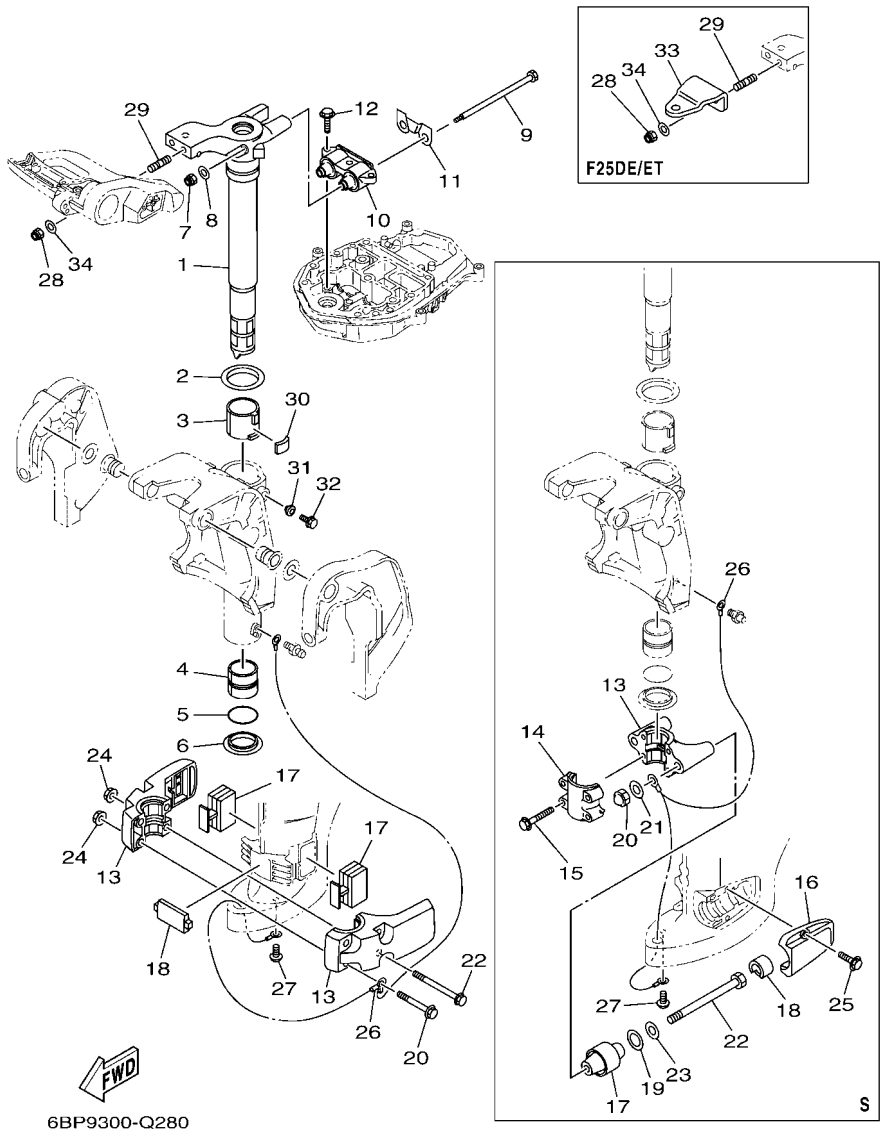

FIG. 28 BRACKET 3 — SUPPORT 3

REF. NO.	PART NO. N° PIECES	DESCRIPTION DESCRIPTION	ET	E	MH			REMARKS REMARQUES
1	65W–42511–01–8D	BRACKET, STEERING CADRE, DIRECTION		1	1			S(16.7") S(16.7")
	65W–42511–11–8D	BRACKET, STEERING CADRE, DIRECTION	1	1	1			L(21.7") L(21.7")
2	90209–52M00	WASHER RONDELLE	1	1	1			
3	90386–52M02	BUSH DOUILLE	1	1	1			
4	90386–44M03	BUSH DOUILLE	1	1	1			
5	93210–43MJ0	O-RING JOINT TORIQUE	1	1	1			
6	90386–44M99	BUSH DOUILLE	1	1	1			
7	90185–08018	NUT, SELF-LOCKING ECROU,AUTO-BLOQUANT	2	2	2			
8	92995–08200	WASHER RONDELLE	2	2	2			
9	90101–08M86	BOLT BOULON	2	2	2			
10	67C–44514–20	MOUNT DAMPER, UPPER SIDE SILENT-BLOC, SUPERIEUR LATERAL	1	1	1			
11	66T–44526–30	PLATE PLAQUE	1	1	1			
12	97575–08530	BOLT, WITH WASHER VIS HEXAGONAL AVC RONDELLE	3	3	3			
13	6BP–44551–00–8D	HOUSING, LOWER MOUNT RUBBER 1 BOITIER, SILENT-BLOC INFERIEUR		1	1			S(16.7") S(16.7")
	65W–44551–11–8D	HOUSING, LOWER MOUNT RUBBER 1 BOITIER, SILENT-BLOC INFERIEUR	2	2	2			L(21.7") L(21.7")
14	6BP–44552–00–8D	HOUSING, LOWER MOUNT RUBBER 2 BOITIER, SILENT-BLOC INFERIEUR		1	1			S(16.7") S(16.7")
15	97595–08545	BOLT, WITH WASHER VIS HEXAGONAL AVC RONDELLE		4	4			S(16.7") S(16.7")
16	63D–44552–01–8D	HOUSING, LOWER MOUNT RUBBER 2 BOITIER, SILENT-BLOC INFERIEUR		2	2			S(16.7") S(16.7")
17	6BP–44555–00	MOUNT DAMPER, LOWER SIDE SILENT-BLOC, INFERIEUR LATERAL		2	2			S(16.7") S(16.7")
	65W–44555–00	MOUNT DAMPER, LOWER SIDE SILENT-BLOC, INFERIEUR LATERAL	2	2	2			L(21.7") L(21.7")
18	64J–44575–00	DAMPER, LOWER MOUNT RUBBER SILENT-BLOC, INFERIEUR		2	2			S(16.7") S(16.7")
	65W–44575–01	DAMPER, LOWER MOUNT RUBBER SILENT-BLOC, INFERIEUR	1	1	1			L(21.7") L(21.7")
19	90202–25M04	WASHER, PLATE RONDELLE, PLATE		2	2			S(16.7") S(16.7")
20	95380–12800	NUT, CROWN ECROU, BORGNE		2	2			S(16.7") S(16.7")
	97575–10580	BOLT, WITH WASHER VIS HEXAGONAL AVC RONDELLE	2	2	2			L(21.7") L(21.7")
21	90201–12M16	WASHER, PLATE RONDELLE, PLATE		2	2			S(16.7") S(16.7")
22	90109–12MA3	BOLT BOULON		2	2			S(16.7") S(16.7")

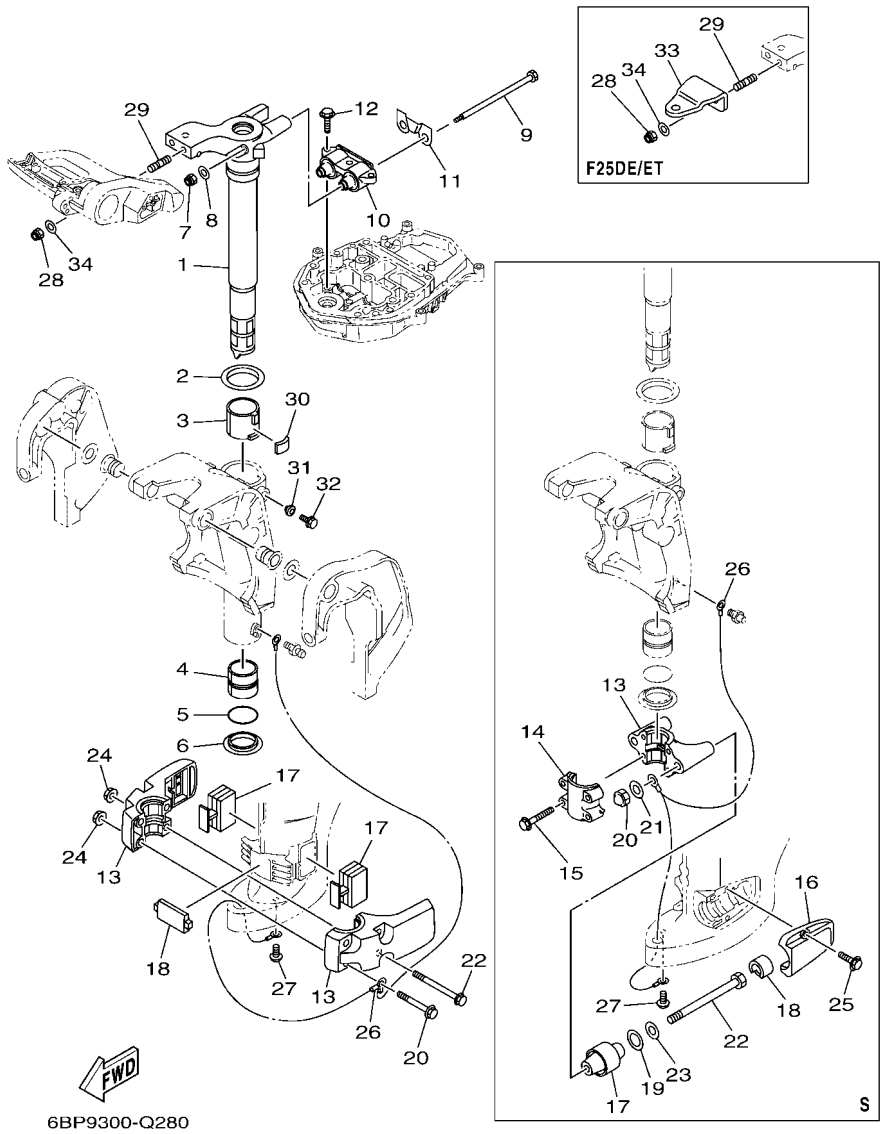

FIG. 28 BRACKET 3 SUPPORT 3

REF. NO.	PART NO. N° PIECES	DESCRIPTION DESCRIPTION	ET	E	MH			REMARKS REMARQUES
22	90119–10M14	BOLT, WITH WASHER BOULON, AVEC RONDELLE	2	2	2			L(21.7") L(21.7")
23	90201–13M19	WASHER, PLATE RONDELLE, PLATE		2	2			S(16.7") S(16.7")
24	90179–10M33	NUT ECROU	4	4	4			L(21.7") L(21.7")
25	97575–08530	BOLT, WITH WASHER VIS HEXAGONAL AVC RONDELLE		4	4			S(16.7") S(16.7")
26	63D–82127–00	WIRE, LEAD 2 FIL 2		1	1			S(16.7") S(16.7")
	65W–82127–10	WIRE, LEAD 2 FIL 2	1	1	1			L(21.7") L(21.7")
27	97885–06008	SCREW, PAN HEAD VIS, A ENCOCHE	1	1	1			
28	90185–10027	NUT, SELF-LOCKING ECROU,AUTO-BLOQUANT	2	2	2			
29	90116–10064	BOLT, STUD GOUJON	2	2	2			
30	648–42528–00	PLATE, FRICTION PLAQUE, FRICTION	1	1	1			
31	65W–43373–00	SEAL, DAMPER JOINT	1	1	1			
32	90105–08M76	BOLT, FLANGE BOULON	1	1	1			
33	65W–48511–01	HOOK, STEERING ATTACHE, DIRECTION	1	1				
34	90201–10049	WASHER, PLATE RONDELLE, PLATE	2	2				
	92995–10600	WASHER RONDELLE			2			

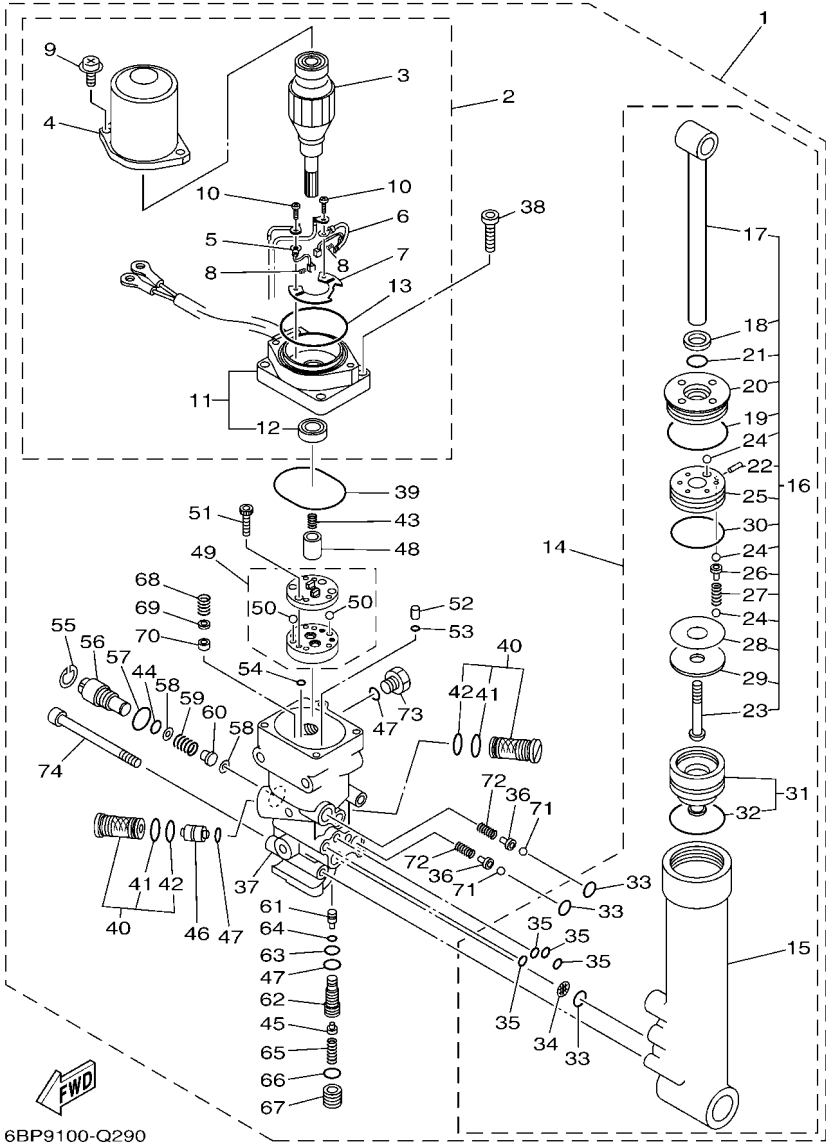

FIG. 29 POWER TRIM & TILT ASSY — PUISSANCE PARER ET INCLINER

REF. NO.	PART NO. N° PIECES	DESCRIPTION DESCRIPTION	ET	E	MH			REMARKS REMARQUES
1	65W–43800–22–8D	POWER TRIM & TILT ASSY PUISSANCE PARER ET INCLINER (E	1					
2	65W–43880–20	.MOTOR ASSY .MOTEUR (ENS.)	1					
3	67C–43805–10	..ARMATURE ASSY ..INDUIT (ENS.)	1					
4	67C–43804–10	..STATOR ASSY ..STATOR (ENS.)	1					
5	67C–43892–10	..BRUSH 2 ..BALAI 2	1					
6	67C–82181–10	..CIRCUIT BREAKER COMP. ..RUPTEUR COMPLET	1					
7	67C–4380F–10	..PLATE, BRUSH HOLDER ..PLAQUE	1					
8	67C–4386K–10	..SPRING, BRUSH ..RESSORT, BALAI	2					
9	67C–43879–10	..SCREW, WITH WASHER ..VIS, AVEC RONDELLE	2					
10	97602–04316	..SCREW, PAN HEAD WITH WASHER ..VIS	2					
11	65W–43881–20	..FRAME, END ..BATI	1					
12	67C–43882–10	...OIL SEAL ...JOINT SPI	1					
13	67C–43862–10	..O-RING ..JOINT TORIQUE	1					
14	65W–43840–01	.POWER TILT ASSY .PUISSANCE INCLINER (ENS.)	1					
15	65W–4380K–00	..CYLINDER, TILT SUB ASSY ..CYLINDRE	1					
16	65W–43810–01	..TILT PISTON SUB ASSY ..INCLINER PISTON AUXILIAIRE(ENS	1					
17	65W–43801–01	...ROD ...TIGE	1					
18	65W–43812–00	...SEAL, DUST ...JOINT	1					
19	65W–43865–00	...O-RING ...JOINT TORIQUE	1					
20	65W–43811–01	...SCREW, CYLINDER END ...VIS, CYLINDRE RACCORD	1					
21	67C–43867–00	...O-RING ...JOINT TORIQUE	1					
22	91609–16012	...PIN, SPRING ...AXE DE RESSORT	1					
23	92012–10040	...BOLT, BUTTON HEAD ...BOULON	1					
24	93505–32038	...BALL ...BILLE	11					
25	65W–4385A–01	...PISTON, TILT ...PISTON	1					
26	65W–4386A–00	...PIN, ABSORBER VALVE ...GOUPILLE, SOUPAPE	5					
27	65W–43857–00	...SPRING, ABSORBER VALVE ...RESSORT	5					

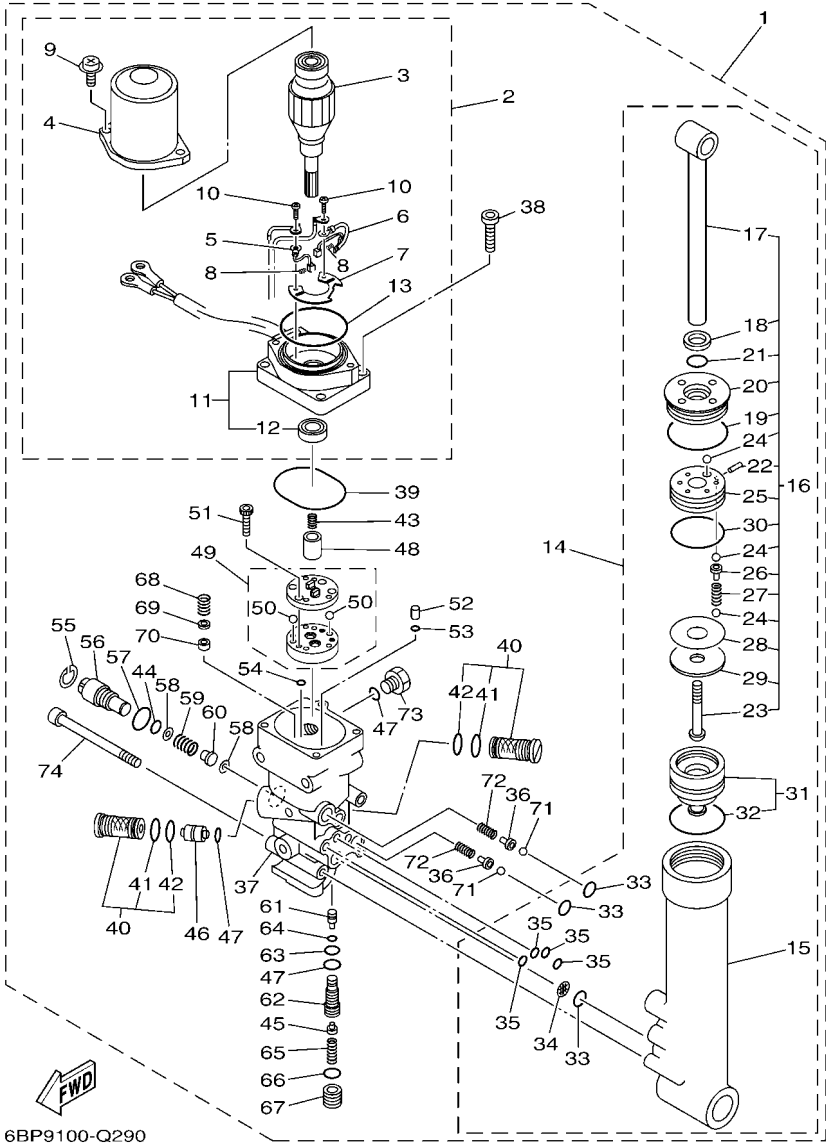

FIG. 29 POWER TRIM & TILT ASSY — PUISSANCE PARER ET INCLINER

REF. NO.	PART NO. N° PIECES	DESCRIPTION DESCRIPTION	ET	E	MH			REMARKS REMARQUES
28	15A–22442–00	...SHIM ...CALE	1					UN UN
29	90201–10038	...WASHER, PLATE ...RONDELLE, PLATE	1					
30	6H1–43862–00	...O-RING ...JOINT TORIQUE	1					
31	65W–4381B–00	..FREE PISTON SUB ASSY ..PISTON AUXILIAIRE (ENS.)	1					
32	6H1–43861–10	...O-RING ...JOINT TORIQUE	1					
33	93210–11368	..O-RING ..JOINT TORIQUE	3					
34	69J–4381C–00	..FILTER 3 ..FILTRE 3	1					
35	93210–064A5	..O-RING ..JOINT TORIQUE	4					
36	65W–4386A–00	.PIN, ABSORBER VALVE .GOUPILLE, SOUPAPE	2					
37	65W–4380L–03	.HOUSING, TRIM & TILT SUB ASSY .CARTER	1					
38	91380–06020	.BOLT .BOULON	4					
39	93210–50768	.O-RING .JOINT TORIQUE	1					
40	67F–43802–00	.VALVE SUB ASSY .CLAPET AUXILIAIRE (ENS.)	2					
41	6H1–43866–01	..O-RING ..JOINT TORIQUE	1					
42	93210–12N52	..O-RING ..JOINT TORIQUE	1					
43	6T4–43853–00	.SPRING, MAIN VALVE .RESSORT	1					
44	93210–10M74	.O-RING .JOINT TORIQUE	1					
45	6T4–43808–00	.SEAT VALVE COMP. 1 .SIEGE VALVE COMP. 1	1					
46	62X–43841–00	.PISTON, SHUTTLE .PISTON	1					
47	93210–09165	.O-RING .JOINT TORIQUE	3					
48	65W–43831–00	.CONNECTOR, SHAFT .RACCORD	1					
49	65W–43830–00	.GEAR PUMP ASSY .POMPE A PIGNON (ENS.)	1					
50	93505–32038	..BALL ..BILLE	2					
51	91318–04025	.BOLT .BOULON	4					
52	65W–43817–00	.FILTER 2 .FILTRE 2	2					
53	93210–04N50	.O-RING .JOINT TORIQUE	2					
54	93210–04N51	.O-RING .JOINT TORIQUE	2					

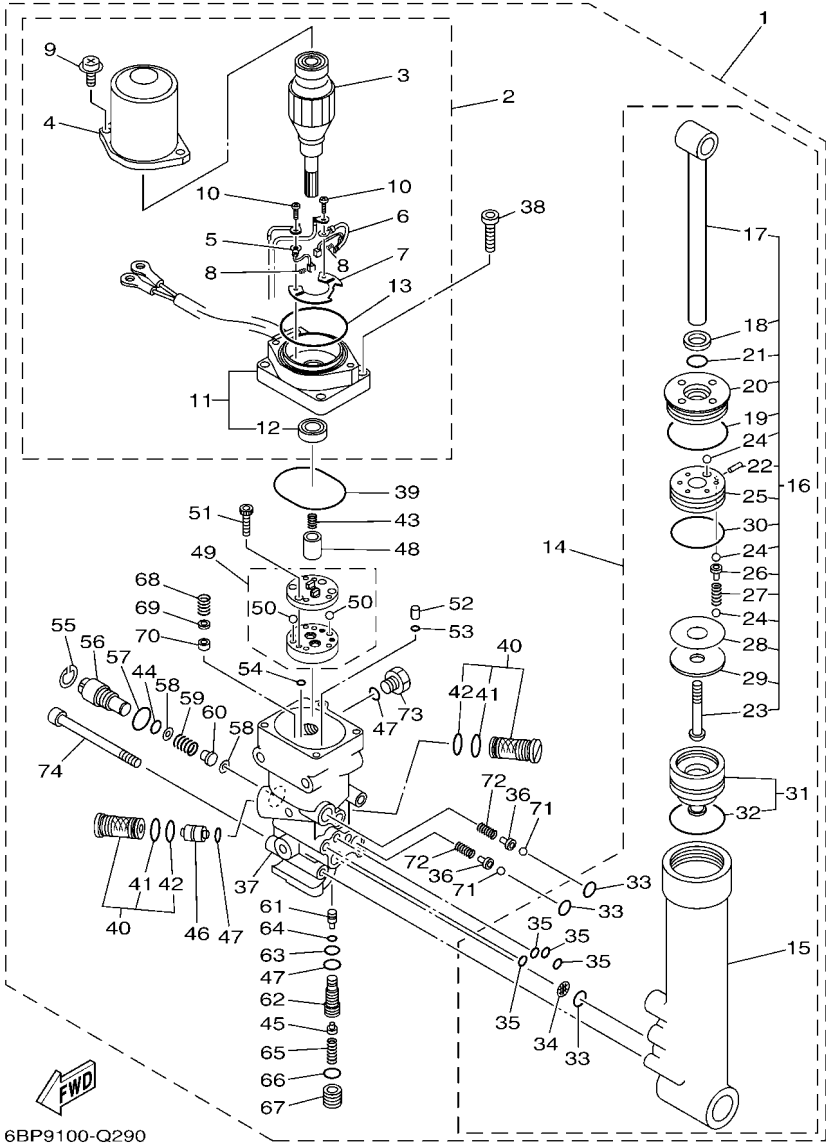

FIG. 29 POWER TRIM & TILT ASSY — PUISSANCE PARER ET INCLINER

REF. NO.	PART NO. N° PIECES	DESCRIPTION DESCRIPTION	ET	E	MH			REMARKS REMARQUES
55	6H1–43875–00	.RING, SNAP .RESSORT	1					
56	6H1–43845–00	.SCREW, MANUAL RELEASE .VIS	1					
57	6D8–43863–00	.O-RING .JOINT TORIQUE	1					
58	6H1–43847–00	.SEAT, MANUAL VALVE .SIEGE	2					
59	65W–43854–00	.SPRING, MANUAL RELEASE .RESSORT	1					
60	65W–4382A–00	.ADAPTOR 1 .ADAPTEUR 1	1					
61	65W–43844–00	.PIN, VALVE SUPPORT .GOUPILLE	1					
62	65W–43851–00	.SEAT, RELIEF VALVE .SIEGE	1					
63	93210–08006	.O-RING .JOINT TORIQUE	1					
64	93210–03478	.O-RING .JOINT TORIQUE	1					
65	65W–43855–00	.SPRING, UP RELIEF .RESSORT	1					
66	93210–11073	.O-RING .JOINT TORIQUE	1					
67	65W–43843–00	.SCREW, VALVE LOCK .VIS	1					
68	6H1–43856–10	.SPRING, DOWN RELIEF .RESSORT	1					
69	6H1–43844–10	.PIN, VALVE SUPPORT .GOUPILLE	1					
70	6H1–4384F–10	.SEAL, MAIN VALVE .JOINT	1					
71	93501–08001	.BALL .BILLE	2					
72	65W–43853–00	.SPRING, MAIN VALVE .RESSORT	2					
73	6H1–43829–00	.PLUG, RESERVOIR .BOUCHON	1					
74	62X–43878–01	.BOLT, SOCKET .BOULON	3					

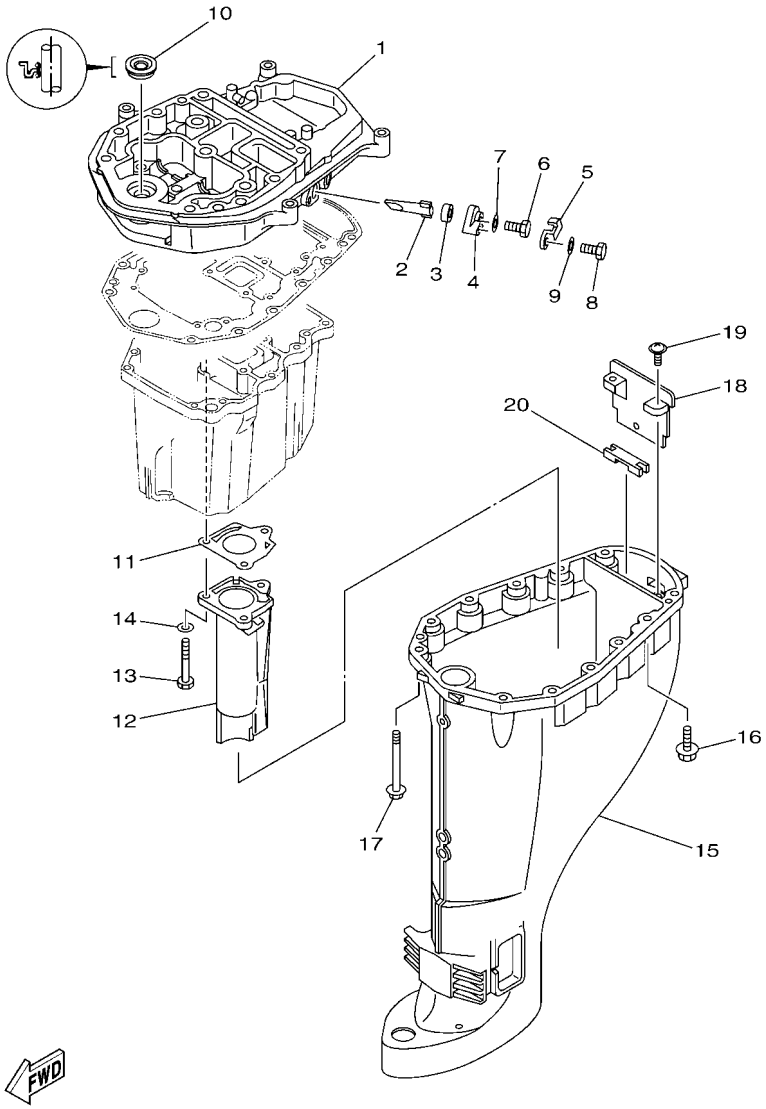

6BP3110K3001

FIG. 30 UPPER CASING FOURREAU

REF. NO.	PART NO. N° PIECES	DESCRIPTION DESCRIPTION	ET	E	MH			REMARKS REMARQUES
1	67C–41137–20–CA	GUIDE, EXHAUST COLLECTEUR D'ECHAPPEMENT	1	1	1			
2	62Y–11325–00	ANODE ANODE	1	1	1			
3	66M–11328–00	GROMMET, ANODE PASSE-FIL	1	1	1			
4	66M–11327–00–94	COVER, ANODE COUVERCLE ANODE	1	1	1			
5	66M–12535–00	PLATE PLAQUE	1	1	1			
6	97095–05012	BOLT BOULON	1	1	1			
7	92995–05600	WASHER RONDELLE	1	1	1			
8	97013–06020	BOLT BOULON	1	1	1			
9	92903–06600	WASHER, PLATE RONDELLE, PLATE	1	1	1			
10	93103–16011	OIL SEAL JOINT SPY	1	1	1			
11	67C–41133–00	GASKET, EXHAUST MANIFOLD 1 JOINT, PIPE D'ECHAPPEMENT	1	1	1			
12	68U–41131–00–CA	MANIFOLD, EXT. 1 PIPE D'ECHAPPEMENT	1	1	1			
13	97075–06050	BOLT BOULON	3	3	3			
14	92995–06600	WASHER RONDELLE	3	3	3			
15	6BP–45111–00–8D	CASING, UPPER FOURREAU		1	1			S(16.7") S(16.7")
	6D5–45111–10–8D	CASING, UPPER FOURREAU	1	1	1			L(21.7") L(21.7")
16	97575–08530	BOLT, WITH WASHER VIS HEXAGONAL AVC RONDELLE	4	4	4			
17	90119–08132	BOLT, WITH WASHER BOULON, AVEC RONDELLE	8	8	8			
18	65W–45151–00	COVER, UPPER CASING CAPUCHON, FOURREAU	1	1	1			
19	97980–05216	SCREW, WITH WASHER VIS, AVEC RONDELLE	2	2	2			
20	65W–45128–00	SEAL 2 JOINT 2	1	1	1			

FIG. 31 OIL PAN — VENTILATEUR D'HUILE

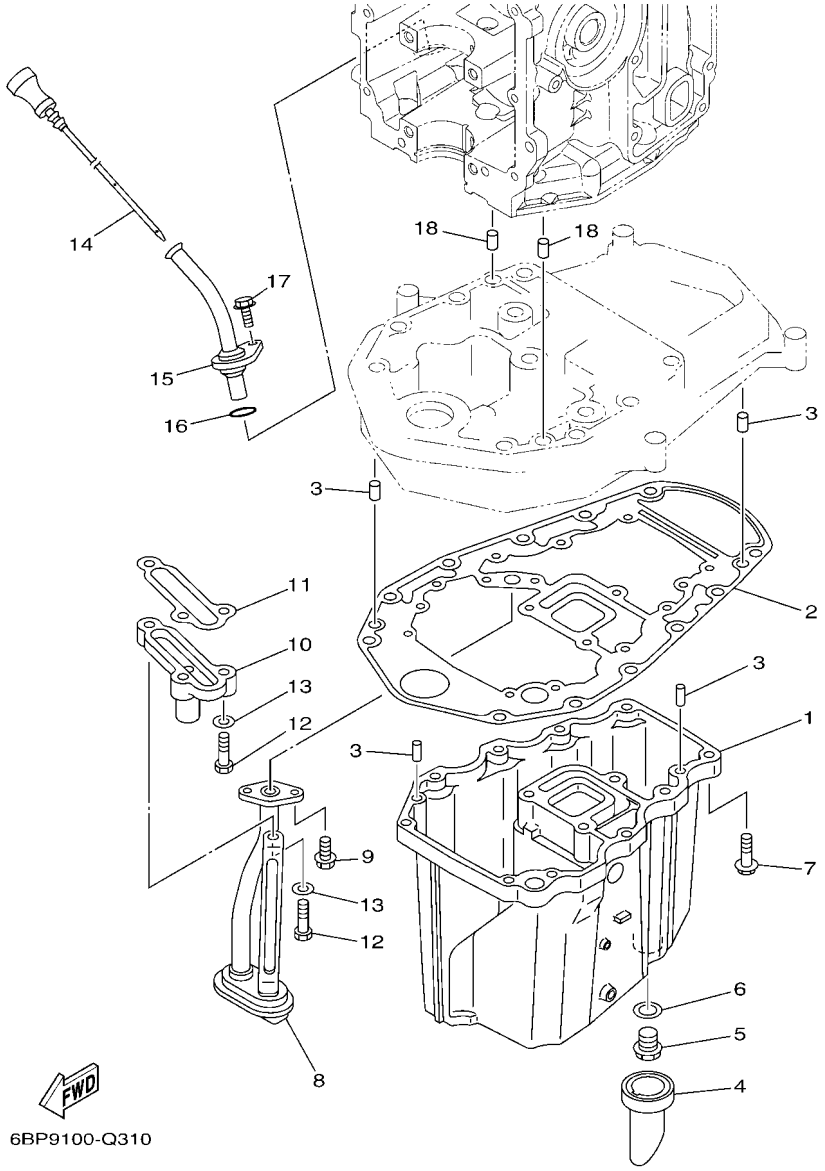

REF. NO.	PART NO. N° PIECES	DESCRIPTION DESCRIPTION	ET	E	MH			REMARKS REMARQUES
1	65W–15311–03–CA	OIL PAN VENTILATEUR D'HUILE	1	1	1			
2	69W–15312–00	GASKET, OIL PAN JOINT DE VENTILATEUR D'HUILE	1	1	1			
3	93606–12019	PIN, DOWEL GOUPILLE	4	4	4			
4	65W–15316–00	DAMPER 1 AMORTISSEUR 1	1	1	1			
5	90340–14M06	PLUG, STRAIGHT SCREW PLOT, FILETE DROIT	1	1	1			
6	90430–14M09	GASKET JOINT	1	1	1			
7	97575–06525	BOLT, WITH WASHER VIS HEXAGONAL AVC RONDELLE	10	10	10			
8	65W–13411–00	STRAINER, OIL FILTRE, HUILE	1	1	1			
9	97513–06516	BOLT, WITH WASHER VIS HEXAGONAL AVC RONDELLE	2	2	2			
10	6BG–11576–00–94	BODY, RELIEF CORPS DE SECURITE	1	1	1			
11	62Y–13475–00	GASKET JOINT	1	1	1			
12	97013–06025	BOLT BOULON	3	3	3			
13	92903–06600	WASHER, PLATE RONDELLE, PLATE	3	3	3			
14	6BL–15362–00	PLUG, OIL LEVEL PLOT, NIVEAU D'HUILE	1	1	1			
15	6BL–15377–00	GUIDE, INLET GUIDE D'ADMISSION	1	1	1			
16	93210–19MJ3	O-RING JOINT TORIQUE	1	1	1			
17	95895–06016	BOLT, FLANGE BOULON	1	1	1			
18	93608–12M05	PIN, DOWEL AXE	2	2	2			

FIG. 32 LOWER CASING & DRIVE 1 — BOITIER D'HELICE TRANSMISSION1

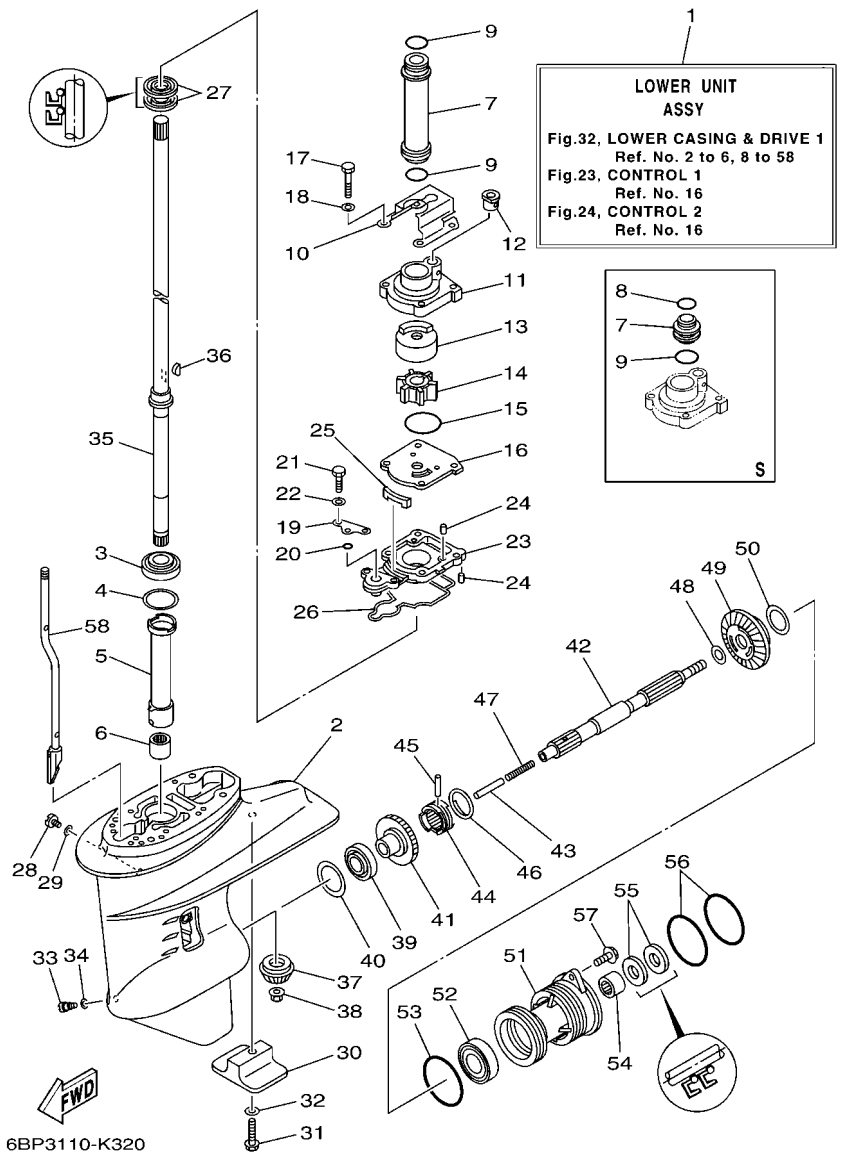

REF. NO.	PART NO. N° PIECES	DESCRIPTION DESCRIPTION	ET	E	MH			REMARKS REMARQUES
1	65W–45300–01–8D	LOWER UNIT ASSY UNITE INFERIEURE (ENS.)		1	1			S(16.7") S(16.7")
	65W–45300–11–8D	LOWER UNIT ASSY UNITE INFERIEURE (ENS.)	1	1	1			L(21.7") L(21.7")
2	61N–45311–02–8D	CASING, LOWER BOITIER D'HELICE	1	1	1			
3	93332–000W5	BEARING ROULEMENT	1	1	1			
4	61N–45587–00	SHIM (T:0.7MM) CALE (T:0.7MM)	1	1	1			UR UR
	61N–45587–10	SHIM (T:1.0MM) CALE (T:1.0MM)	1	1	1			UR UR
	61N–45587–20	SHIM (T:1.1MM) CALE (T:1.1MM)	1	1	1			UR UR
	61N–45587–30	SHIM (T:1.2MM) CALE (T:1.2MM)	1	1	1			UR UR
	61N–45587–40	SHIM (T:1.3MM) CALE (T:1.3MM)	1	1	1			UR UR
	61N–45587–50	SHIM (T:1.4MM) CALE (T:1.4MM)	1	1	1			UR UR
	61N–45587–60	SHIM (T:1.5MM) CALE (T:1.5MM)	1	1	1			UR UR
	61N–45587–70	SHIM (T:1.6MM) CALE (T:1.6MM)	1	1	1			UR UR
5	61N–45536–00	SLEEVE, DRIVE SHAFT MANCHON, ARBRE MOTEUR	1	1	1			
6	93315–220V7	BEARING ROULEMENT	1	1	1			
7	61N–44362–00	TUBE, WATER 2 TUBE D'EAU 2		1	1			S(16.7") S(16.7")
	61N–44362–10	TUBE, WATER 2 TUBE D'EAU 2	1	1	1			L(21.7") L(21.7")
8	93210–22164	O-RING JOINT TORIQUE		1	1			S(16.7") S(16.7")
9	93210–26130	O-RING JOINT TORIQUE		1	1			S(16.7") S(16.7")
	93210–26130	O-RING JOINT TORIQUE	2	2	2			L(21.7") L(21.7")
10	65W–44328–11	PLATE PLAQUETTE	1	1	1			L(21.7") L(21.7")
11	61N–44311–01	HOUSING, WATER PUMP CORPS, POMPE A EAU	1	1	1			
12	6L2–44367–00	DAMPER, WATER SEAL 3 JOINT TUBE D'EAU 3	1	1	1			
13	61N–44322–01	INSERT, CARTRIDGE CUVETTE	1	1	1			
14	6H4–44352–02	IMPELLER TURBINE	1	1	1			
15	93210–45161	O-RING JOINT TORIQUE	1	1	1			
16	61N–44323–00	OUTER PLATE, CARTRIDGE PLAQUE EXTERIEURE	1	1	1			
17	97095–06040	BOLT BOULON	4	4	4			

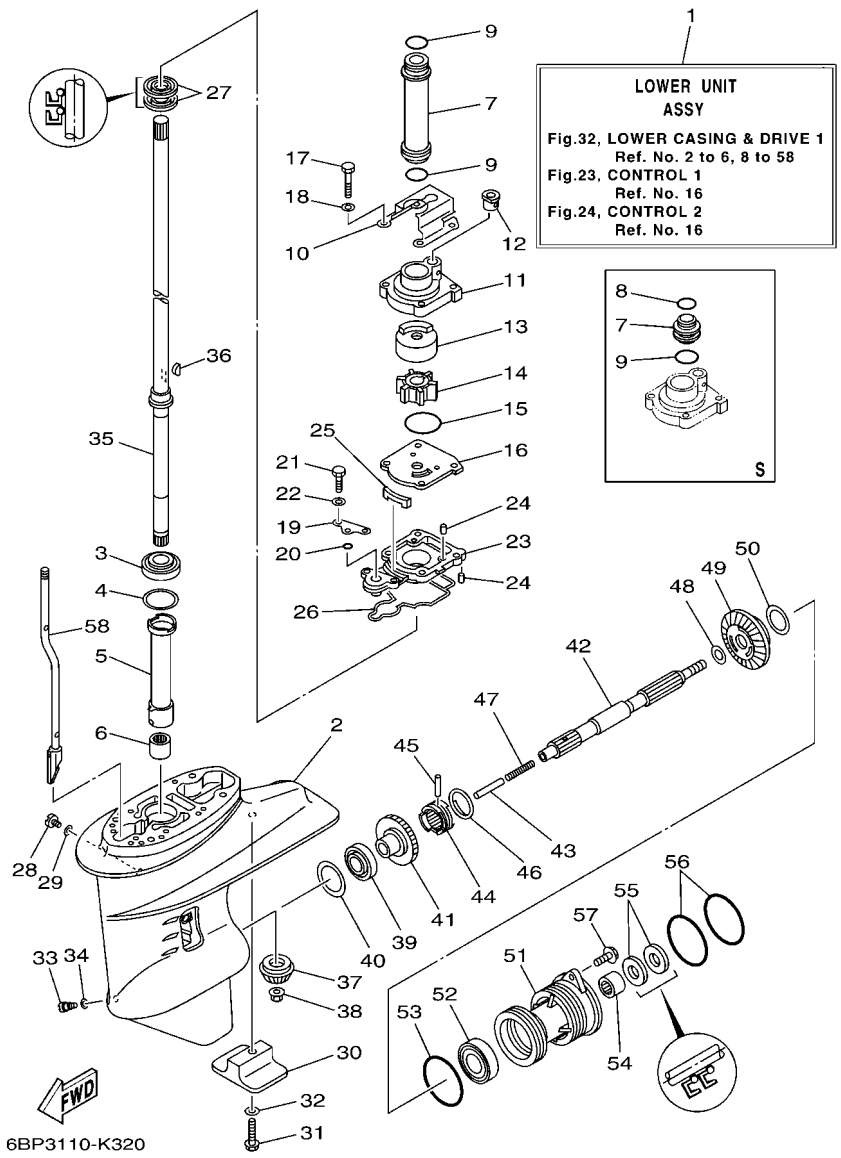

FIG. 32 LOWER CASING & DRIVE 1 — BOITIER D'HELICE TRANSMISSION1

REF. NO.	PART NO. N° PIECES	DESCRIPTION DESCRIPTION	ET	E	MH			REMARKS REMARQUES
18	92995–06600	WASHER RONDELLE	4	4	4			
19	65W–44176–00	BRACKET SUPPORT	1	1	1			
20	93210–06ME6	O-RING JOINT TORIQUE	1	1	1			
21	97095–06025	BOLT BOULON	2	2	2			
22	92995–06600	WASHER RONDELLE	2	2	2			
23	65W–45331–00–CA	HOUSING, BEARING FLASQUE, ROULEMENT	1	1	1			
24	93604–10M03	PIN, DOWEL CLAVETTE	3	3	3			
25	61N–45127–00	SEAL JOINT	1	1	1			
26	61N–45315–00	PACKING, LOWER CASING JOINT, BOITIER D'HELICE	1	1	1			
27	93101–22067	OIL SEAL JOINT SPY	2	2	2			
28	90340–08002	PLUG, STRAIGHT SCREW PLOT, FILETE DROIT	1	1	1			
29	90430–08003	GASKET JOINT	1	1	1			
30	61N–45251–01	ANODE ANODE	1	1	1			
31	95895–06035	BOLT, FLANGE BOULON	1	1	1			
32	92990–06300	WASHER, INTERNAL TOOTH RONDELLE, DENTURE INTERNE	1	1	1			
33	688–45341–10	PLUG, DRAIN BOUCHON DE VIDANGE	1	1	1			
34	90430–08003	GASKET JOINT	1	1	1			
35	61N–45510–00	DRIVE SHAFT ASSY ARBRE MOTEUR (ENS.)		1	1			S(16.7") S(16.7")
	61N–45510–10	DRIVE SHAFT ASSY ARBRE MOTEUR (ENS.)	1	1	1			L(21.7") L(21.7")
36	90280–03024	KEY, WOODRUFF CLAVETTE, DEMI-LUNE	1	1	1			
37	61N–45551–00	PINION (13T) PIGNON D'ATTAQUE (13D)	1	1	1			
38	90179–10M14	NUT ECROU	1	1	1			
39	93332–00005	BEARING ROULEMENT	1	1	1			
40	6L2–45567–00	SHIM (T:1.0MM) CALE (T;1.0MM)	1	1	1			UR UR
	6L2–45567–10	SHIM (T:1.1MM) CALE (T:1.1MM)	1	1	1			UR UR
	6L2–45567–20	SHIM (T:1.2MM) CALE (T:1.2MM)	1	1	1			UR UR
	6L2–45567–30	SHIM (T:1.3MM) CALE (T:1.3MM)	1	1	1			UR UR

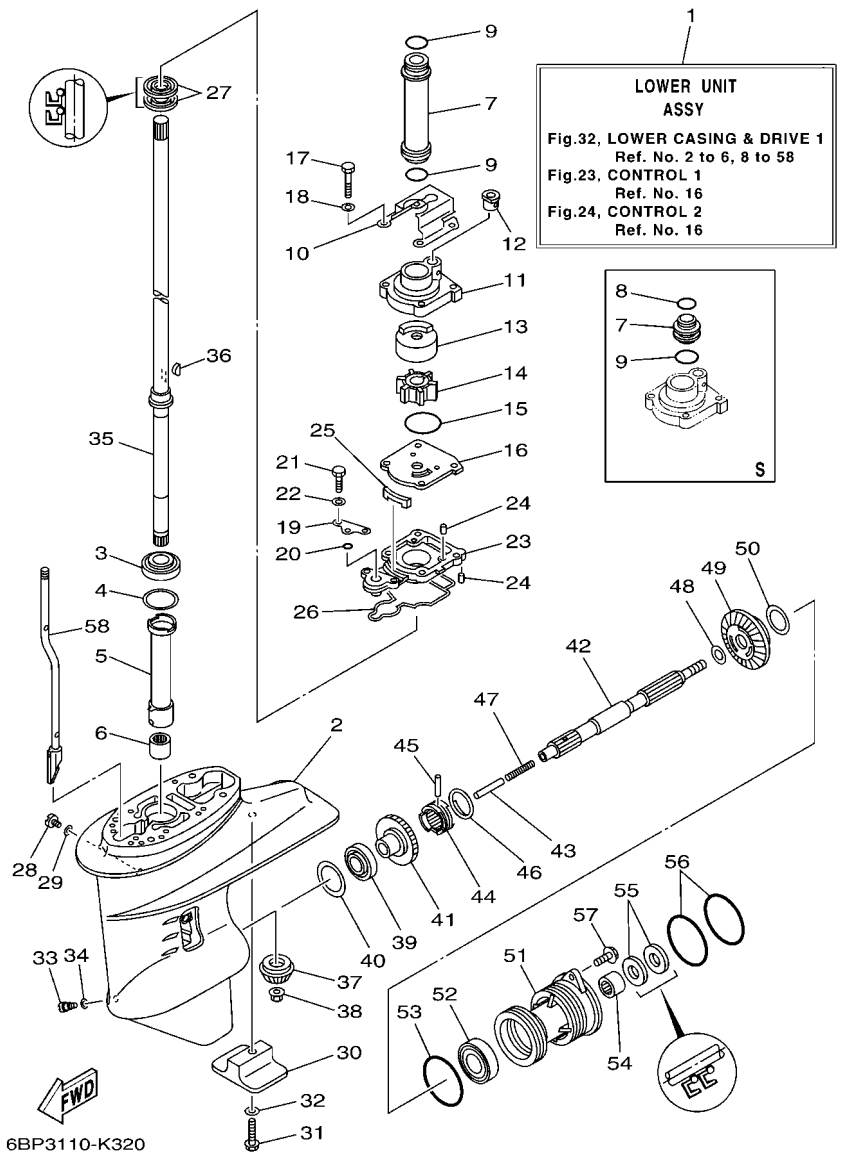

FIG. 32 LOWER CASING & DRIVE 1 — BOITIER D'HELICE TRANSMISSION1

REF. NO.	PART NO. N° PIECES	DESCRIPTION DESCRIPTION	ET	E	MH			REMARKS REMARQUES
40	6L2–45567–40	SHIM (T:1.4MM) CALE (T:1.4MM)	1	1	1			UR UR
41	61N–45560–10	GEAR 1 (27T) PIGNON 1 (27T)	1	1	1			
42	65W–45611–00	SHAFT, PROPELLER ARBRE, HELICE	1	1	1			
43	648–45635–00	PLUNGER, SHIFT POUSSOIR D'EMBRAYAGE	1	1	1			
44	664–45631–03	CLUTCH, DOG CRABOT	1	1	1			
45	90250–05010	PIN, STRAIGHT GOUPILLE, DROITE	1	1	1			
46	648–45633–00	RING, CROSS PIN JONC, GOUPILLE CRABOT	1	1	1			
47	90501–10065	SPRING, COMPRESSION RESSORT, COMPRESSION	1	1	1			
48	90201–20417	WASHER, PLATE RONDELLE, PLATE	1	1	1			
49	61N–45571–00	GEAR 2 (27T) PIGNON 2 (27T)	1	1	1			
50	6L2–45577–00	SHIM (T:1.0MM) CALE (T:1.0MM)	1	1	1			UR UR
	6L2–45577–10	SHIM (T:1.1MM) CALE (T:1.1MM)	1	1	1			UR UR
	6L2–45577–20	SHIM (T:1.2MM) CALE (T:1.2MM)	1	1	1			UR UR
	6L2–45577–30	SHIM (T:1.3MM) CALE (T:1.3MM)	1	1	1			UR UR
51	61N–45361–01–8D	CAP, LOWER CASING COUVERCLE, BOITIER D'HELICE	1	1	1			
52	93306–00612	BEARING ROULEMENT	1	1	1			
53	93210–64ME7	O-RING JOINT TORIQUE	1	1	1			
54	93315–22004	BEARING ROULEMENT	1	1	1			
55	93101–20M07	OIL SEAL JOINT SPY	2	2	2			
56	93210–65M50	O-RING JOINT TORIQUE	2	2	2			
57	97575–06520	BOLT, WITH WASHER VIS HEXAGONAL AVC RONDELLE	2	2	2			
58	65W–44150–01	SHIFT CAM ASSY CAME D'INVERSION		1	1			S(16.7") S(16.7")
	65W–44150–11	SHIFT CAM ASSY CAME D'INVERSION	1	1	1			L(21.7") L(21.7")

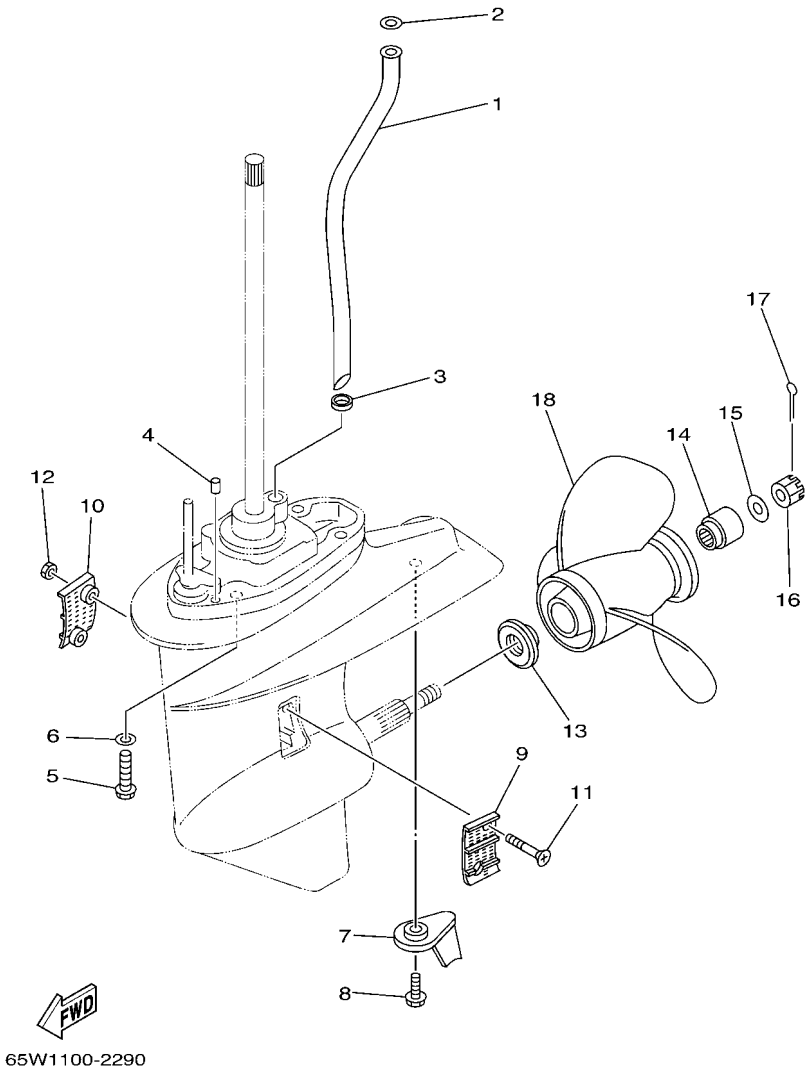

FIG. 33 LOWER CASING & DRIVE 2 — BOITIER D'HELICE TRANSMISSION2

REF. NO.	PART NO. N° PIECES	DESCRIPTION DESCRIPTION	ET	E	MH			REMARKS REMARQUES
1	65W–44361–02	TUBE, WATER 1 TUBE D'EAU 1		1	1			S(16.7") S(16.7")
	65W–44361–12	TUBE, WATER 1 TUBE D'EAU 1	1	1	1			L(21.7") L(21.7")
2	90202–12060	WASHER, PLATE RONDELLE, PLATE	1	1	1			
3	90430–10002	GASKET JOINT	1	1	1			
4	93606–11M24	PIN, DOWEL GOUPILLE	2	2	2			
5	90105–10M12	BOLT, FLANGE BOULON	4	4	4			
6	92995–10600	WASHER RONDELLE	4	4	4			
7	61N–45371–00	TAB-TRIM ANODE DERIVE	1	1	1			
8	90119–06M48	BOLT, WITH WASHER BOULON, AVEC RONDELLE	1	1	1			
9	6L2–45214–00	COVER, WATER INLET 1 GRILLE, ENTREE D'EAU 1	1	1	1			
10	6L2–45215–00	COVER, WATER INLET 2 GRILLE, ENTREE D'EAU 2	1	1	1			
11	90151–05M05	SCREW, COUNTERSUNK VIS, TETE NOYEE	2	2	2			
12	90185–05002	NUT, NYLON ECROU,AUTO-BLOQUANT	2	2	2			
13	6L2–45987–01	SPACER 1 ENTRETOISE 1	1	1	1			
14	689–45997–00	SPACER 2 ENTRETOISE 2	1	1	1			
15	92990–14200	WASHER, PLAIN RONDELLE, PLATE	1	1	1			
16	90171–14013	NUT, CASTLE ECROU, CRENELE	1	1	1			
17	91490–30022	PIN. COTTER GOUPILLE	1	1	1			
18	664–45941–01	PROPELLER (3X9-7/8"X9"-F) HELICE (3X9-7/8"X9"-F)	1	1	1			UR UR
	664–45943–01	PROPELLER (3X9-7/8"X8"-F) HELICE (3X9-7/8"X8"-F)	1	1	1			UR UR
	664–45945–00	PROPELLER (3X9-7/8"X10-1/2"-F) HELICE (3X9-7/8"X10-1/2"-F)	1	1	1			UR UR
	664–45947–01	PROPELLER (3X9-7/8"X11-1/4"-F) HELICE (3X9-7/8"X11-1/4"-F)	1	1	1			UR UR
	664–45949–02	PROPELLER (3X9-7/8"X13"-F) HELICE (3X9-7/8"X13"-F)	1	1	1			UR UR
	664–45952–00	PROPELLER (3X9-7/8"X14"-F) HELICE (3X9-7/8"X14"-F)	1	1	1			UR UR
	664–45954–01	PROPELLER (3X9-7/8"X12"-F) HELICE (3X9-7/8"X12"-F)	1	1	1			UR UR
	664–45970–00	PROPELLER (3X9-1/8"X13"-F) HELICE (3X9-1/8"X13"-F)	1	1	1			UR UR
	664–45972–00	PROPELLER (3X9-1/8"X12"-F) HELICE (3X9-1/8"X12"-F)	1	1	1			UR UR

FIG. 34 FUEL TANK 1 — RESERVOIR A CARBURANT 1

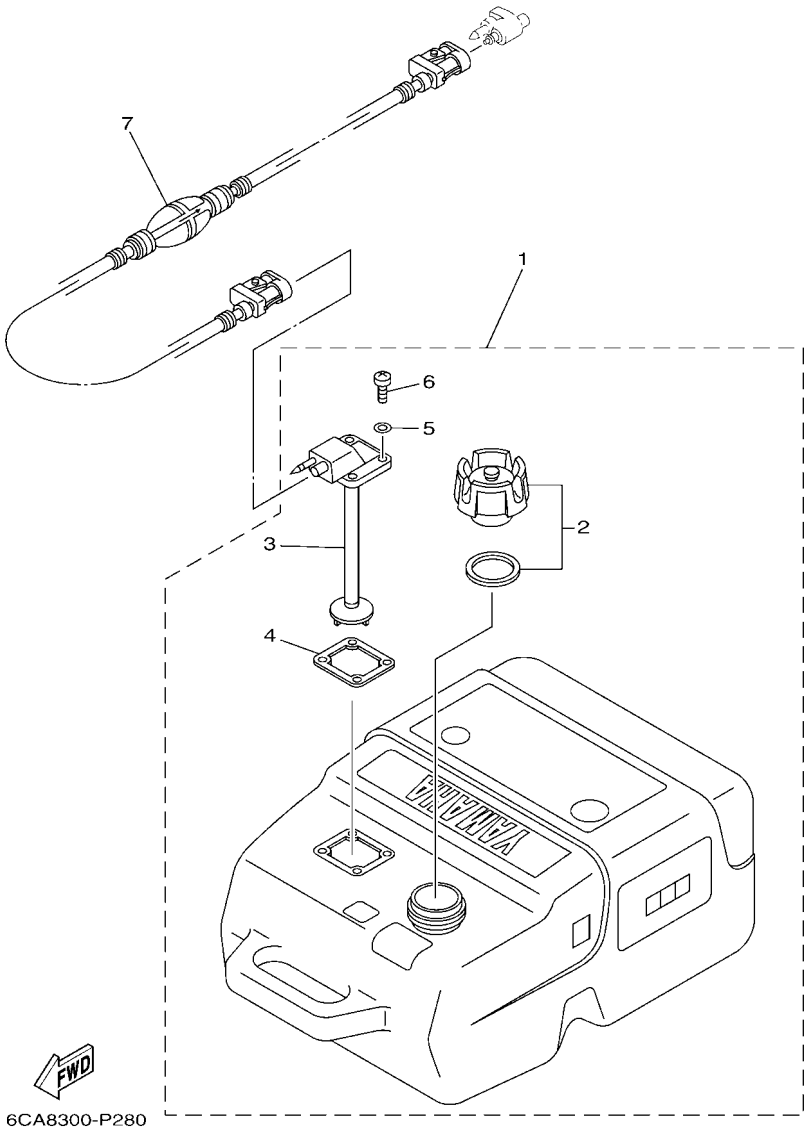

REF. NO.	PART NO. N° PIECES	DESCRIPTION DESCRIPTION	ET	E	MH			REMARKS REMARQUES
1	6YK–24201–04	FUEL TANK ASSY (25L) RESERVOIR A ESSENCE (ENS.) 25L	1	1	1			AP EXCEPT FOR RUS AP EXCEPT FOR RUS
2	6YK–24610–01	.CAP ASSY .BOUCHON	1	1	1			
3	6YK–24260–10	.FUEL METER ASSY .INDICATEUR DE CARBURANT	1	1	1			
4	6YL–24268–01	.GASKET, FUEL METER .JOINT, JAUGE A CARBURANT	1	1	1			
5	6YL–24329–00	.SEAL .JOINT	4	4	4			
6	90157–05M16	.SCREW, PAN HEAD .VIS, TETE TRONCONIQUE	4	4	4			
7	6YL–24306–54	FUEL PIPE COMP. 1 DURITE A ESSENCE 1	1	1	1			AP EXCEPT FOR RUS AP EXCEPT FOR RUS

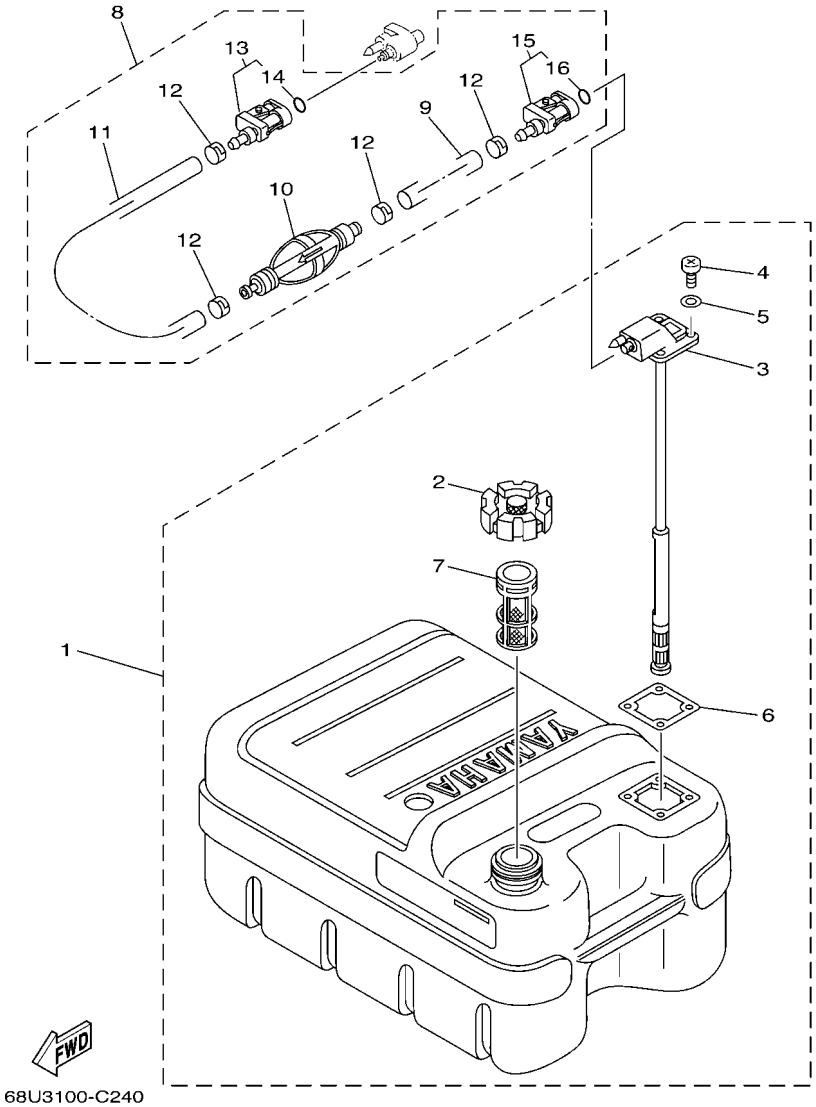

FIG. 35 FUEL TANK 2 — RESERVOIR A CARBURANT 2

REF. NO.	PART NO. N° PIECES	DESCRIPTION DESCRIPTION	ET	E	MH			REMARKS REMARQUES
1	6YJ–24201–20	FUEL TANK ASSY (24L) RESERVOIR A ESSENCE (ENS.):24L		1	1			AP FOR RUS AP FOR RUS
2	6YJ–24610–01	.CAP ASSY .BOUCHON		1	1			
3	6YJ–24260–10	.FUEL METER ASSY .INDICATEUR DE CARBURANT		1	1			
4	90157–05M19	.SCREW, PAN HEAD .VIS, TETE TRONCONIQUE		4	4			
5	6Y1–24329–00	.SEAL .JOINT		4	4			
6	6Y1–24268–00	.GASKET, FUEL METER .JOINT, JAUGE A CARBURANT		1	1			
7	6YJ–24167–00	.STRAINER .FILTRE		1	1			
8	61J–24306–04	FUEL PIPE COMP. 1 DURITE A ESSENCE 1		1	1			AP FOR RUS AP FOR RUS
9	90445–11M06	.HOSE (L2050) .DURITE (L2050)		1	1			
10	61J–24360–00	.PRIMER PUMP ASSY .POMPE D'AMORCAGE		1	1			
11	90445–11M05	.HOSE (L850) .DURITE (L850)		1	1			
12	650–24351–51	.BAND 1 .COLLIER 1		4	4			
13	6G1–24305–05	.FUEL PIPE JOINT COMP. 2 .DURITE RACCORDEMT. A ESSENCE		1	1			
14	93210–08287	..O-RING ..JOINT TORIQUE		1	1			
15	6Y1–24305–06	.FUEL PIPE JOINT COMP. 2 .DURITE RACCORDEMT. A ESSENCE		1	1			
16	93210–08287	..O-RING ..JOINT TORIQUE		1	1			

FIG. 36 STEERING GUIDE — FIXATION DE DIRECTION

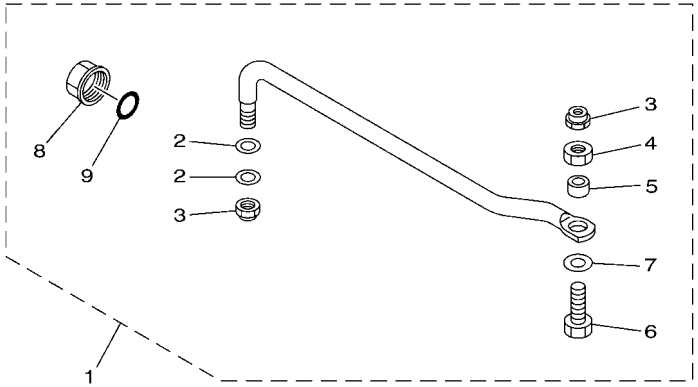

6BG1100-H340

REF. NO.	PART NO. N° PIECES	DESCRIPTION DESCRIPTION	ET	E	MH			REMARKS REMARQUES
1	6BG–61350–00	STEERING GUIDE ATTACHMENT KIT FIXATIONS DE DIRECTION	1	1	1			AP AP
2	90201–10M20	.WASHER, PLATE .RONDELLE, PLATE	2	2	2			
3	90185–09M01	.NUT, SELF-LOCKING .ECROU,AUTO-BLOQUANT	2	2	2			
4	90170–09M03	.NUT .ECROU	1	1	1			
5	90387–10M42	.COLLAR .COLLERETTE	1	1	1			
6	90101–09M01	.BOLT .BOULON	1	1	1			
7	90201–10M63	.WASHER, PLATE .RONDELLE, PLATE	1	1	1			
8	6E5–43145–01	.CAP, CLAMP BRACKET .CAPUCHON, PRESSE	1	1	1			
9	93210–16275	.O-RING .JOINT TORIQUE	1	1	1			

FIG. 37 REMOTE CONTROL BOX — BOITIER DE COMMANDE A DISTANCE

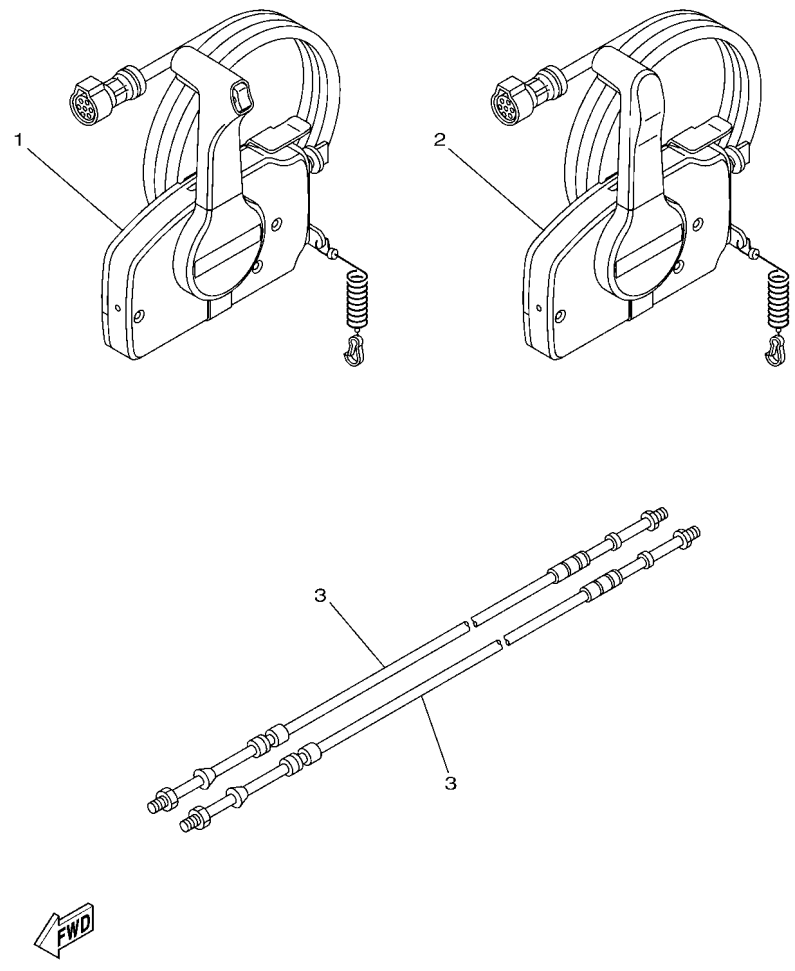

REF. NO.	PART NO. N° PIECES	DESCRIPTION DESCRIPTION	ET	E	MH			REMARKS REMARQUES
1	703–48205–B1	REMOTE CONTROL ASSY (10P, PTT) BOITIER DE COMMANDE A DISTANCE	1					AP WITH PT/T SW. AP WITH PT/T SW.
2	703–48201–B1	REMOTE CONTROL ASSY (10P) BOITIER DE COMMANDE A DISTANCE		1				AP WITHOUT PT/T SW. AP WITHOUT PT/T SW.
3	701–48310–90	CABLE, REMOTE CONTROL L=11F CABLE, COMMANDE A DISTANCE:11F	2	2				UR UR
	701–48320–00	CABLE, REMOTE CONTROL L=12F CABLE, COMMANDE A DISTANCE:12F	2	2				UR UR
	701–48320–20	CABLE, REMOTE CONTROL L=13F CABLE, COMMANDE A DISTANCE:13F	2	2				UR UR
	701–48320–50	CABLE, REMOTE CONTROL L=15F CABLE, COMMANDE A DISTANCE:15F	2	2				UR UR

FIG. 38 REMOTE CONTROL ASSY 1 — BOITIER DE COMMANDE A DISTANCE

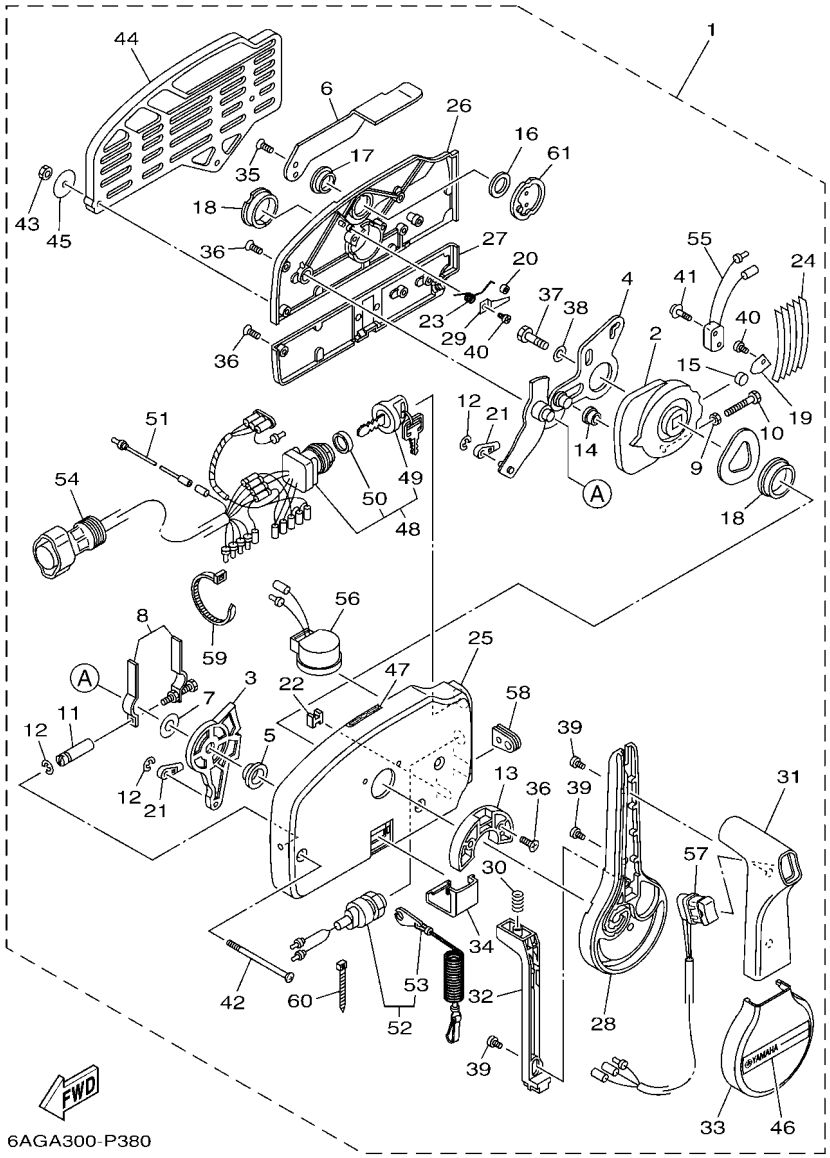

REF. NO.	PART NO. N° PIECES	DESCRIPTION DESCRIPTION	ET	E	MH			REMARKS REMARQUES
1	703–48205–B1	REMOTE CONTROL ASSY (10P, PTT) BOITIER DE COMMANDE A DISTANCE	1					AP WITH PT/T SW. AP WITH PT/T SW.
2	703–48232–00	.GEAR .PIGNON	1					
3	703–48271–00	.ARM, SHIFT .BRAS	1					
4	703–48261–01	.ARM, THROTTLE .BRAS, ACCELERATION	1					
5	703–48235–00	.BUSHING .COUSSINET	1					
6	703–48152–10	.KNOB, FREE ACCEL. .BOUTON	1					
7	703–48268–00	.SPACER .ENTRETOISE	1					
8	703–48264–00	.FRICTION, THROTTLE .FRICTION, ACCELERATION	1					
9	95380–05600	.NUT .ECROU	1					
10	97380–05025	.BOLT .BOULON, HEXAGONAL	1					
11	703–48265–10	.SHAFT, FRICTION .AXE, COPILOTE	1					
12	93430–06024	.CIRCLIP .CLIPS	3					
13	703–48245–00	.PLATE, LOCK .PLAQUE, VERROU	1					
14	703–48252–00	.ROLLER, CAM .POULIE	1					
15	701–48248–00	.ROLLER, FREE ACCEL. .POULIE	1					
16	703–48198–00	.WASHER, WAVE .RONDELLE, ELASTIQUE ONDULEE	1					
17	703–48243–00	.BUSHING .COUSSINET	1					
18	703–48236–00	.BUSHING 1 .POULIE	2					
19	703–48189–00	.RETAINER .FLASQUE	1					
20	703–48234–00	.ROLLER, DETENT .POULIE	1					
21	703–48345–01	.CABLE END, REMOTE CONTROL 2 .CHAPE CABLE	2					
22	703–48358–00	.ANCHOR, CABLE .COLLIER	1					
23	703–48244–00	.SPRING, FREE ACCEL. .RESSORT	1					
24	703–48238–00	.SPRING, DETENT .RESSORT	5					
25	703–48211–10	.HOUSING,1 .CORPS	1					
26	703–48212–10	.BACK PLATE 1 .PLAQUETTE 1	1					
27	703–48213–10	.BACK PLATE 2 .PLAQUETTE 2	1					

FIG. 38 REMOTE CONTROL ASSY 1 — BOITIER DE COMMANDE A DISTANCE

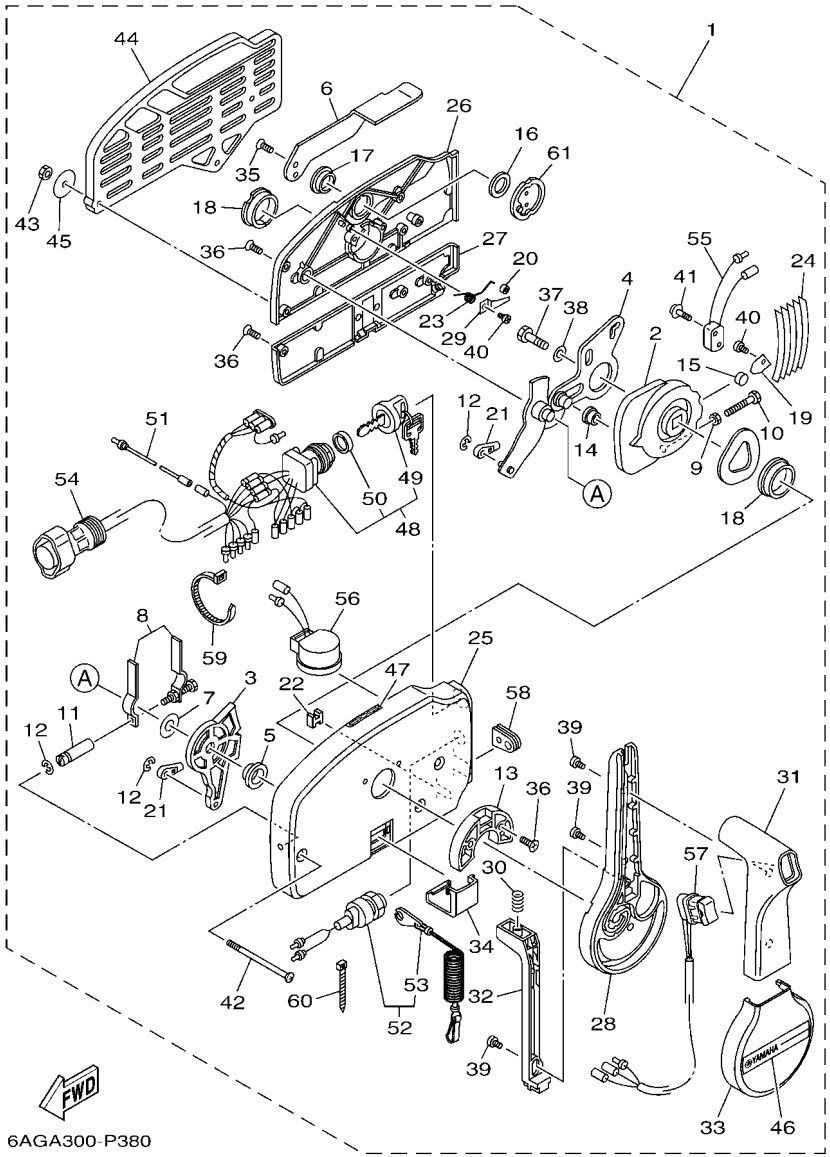

REF. NO.	PART NO. N° PIECES	DESCRIPTION DESCRIPTION	ET	E	MH			REMARKS REMARQUES
28	703–48221–10	.LEVER, CONTROL .LEVIER, COMMANDE	1					
29	703–48246–00	.SPACER .ENTRETOISE	1					
30	703–48227–00	.SPRING, NEUTRAL LOCK .RESSORT	1					
31	703–48222–20	.GRIP, CONTROL LEVER .POIGNEE, COMMANDE LEVIER	1					SINGLE SINGLE
32	703–48223–10	.LOCK, NEUTRAL .VERROU, NEUTRAL	1					
33	703–48225–10	.COVER .COUVERCLE	1					
34	703–48219–10	.COVER, LEAD .COUVERCLE	1					
35	703–48281–00	.SCREW .VIS	2					
36	703–44189–20	.SCREW .VIS	7					
37	97380–08030	.BOLT .BOULON, HEXAGONAL	1					
38	92990–08600	.WASHER, PLATE .RONDELLE, PLATE	1					
39	703–48128–10	.SCREW 2 .VIS 2	3					
40	98580–04006	.SCREW, PAN HEAD .VIS	2					
41	703–48129–00	.SCREW 3 .VIS 3	2					
42	703–44189–30	.SCREW .VIS	3					
43	95380–06600	.NUT, HEXAGON .ECROU	3					
44	703–48293–10	.SPACER, REMOTE CONTROL .ENTRETOISE	1					SINGLE SINGLE
45	701–48287–00	.WASHER .RONDELLE	3					
46	703–48215–10	.GRAPHIC .ADHESIF	1					
47	6X3–44191–00	.INDICATOR, SHIFT .ETIQUETTE, EMBRAYAGE	1					
48	703–82510–13	.MAIN SWITCH ASSY .CONTACTEUR A CLEF COMPLET	1					PRIME START PRIME START
49	676–82577–01	..CAP, KEY ..CABOCHON	1					
50	703–82532–00	..CAP ..COUVERCLE	1					
51	703–82531–00	.WIRE, LEAD (L70) .FIL (L70)	1					
52	688–82575–02	.ENGINE STOP SWITCH ASSY .COUPE CIRCUIT CPLT	1					
53	682–82556–00	..LANYARD, STOP SWITCH ..CORDON DU COUPE CIRCUIT	1					
54	688–8258A–20	.EXTENSION, WIRE HARNESS (4.9M) .EXTENSION, FAISCEAU DE FILS (4	1					(10P) (10P)

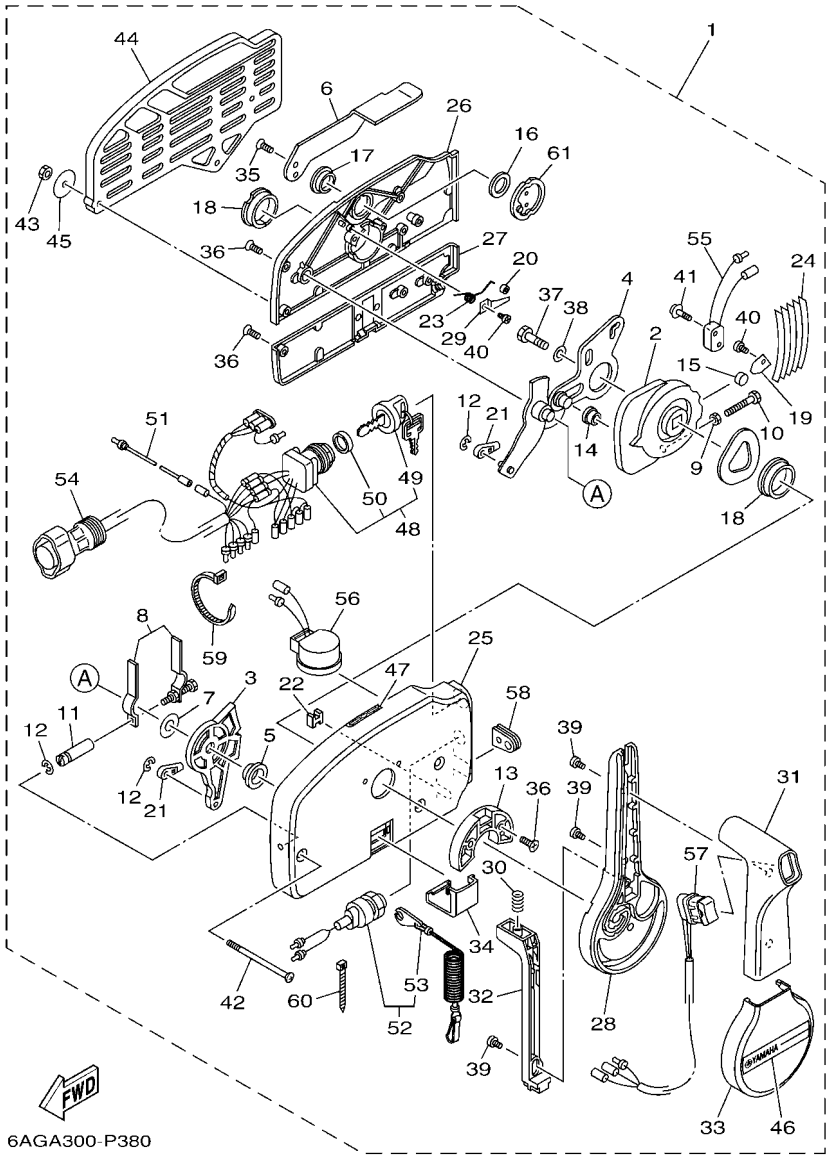

FIG. 38 REMOTE CONTROL ASSY 1 — BOITIER DE COMMANDE A DISTANCE

REF. NO.	PART NO. N° PIECES	DESCRIPTION DESCRIPTION	ET	E	MH			REMARKS REMARQUES
55	703–82540–00	.NEUTRAL SWITCH ASSY .CONTACTEUR DE POINT-MORT	1					
56	703–83383–11	.BUZZER .RONFLEUR	1					
57	703–82563–30	.TRIM & TILT SWITCH ASSY .INCLINER ET PARER COMMUTATEUR	1					WITH PT/T SW. WITH PT/T SW.
58	703–48284–00	.GROMMET .PASSE-FIL	1					
59	703–82591–00	.BAND .COLLIER	1					
60	703–82592–00	.BAND .COLLIER	1					
61	703–48153–00	.SHAFT, FREE ACCEL. .AXE	1					

FIG. 39 REMOTE CONTROL ASSY 2 — BOITIER DE COMMANDE A DISTANCE

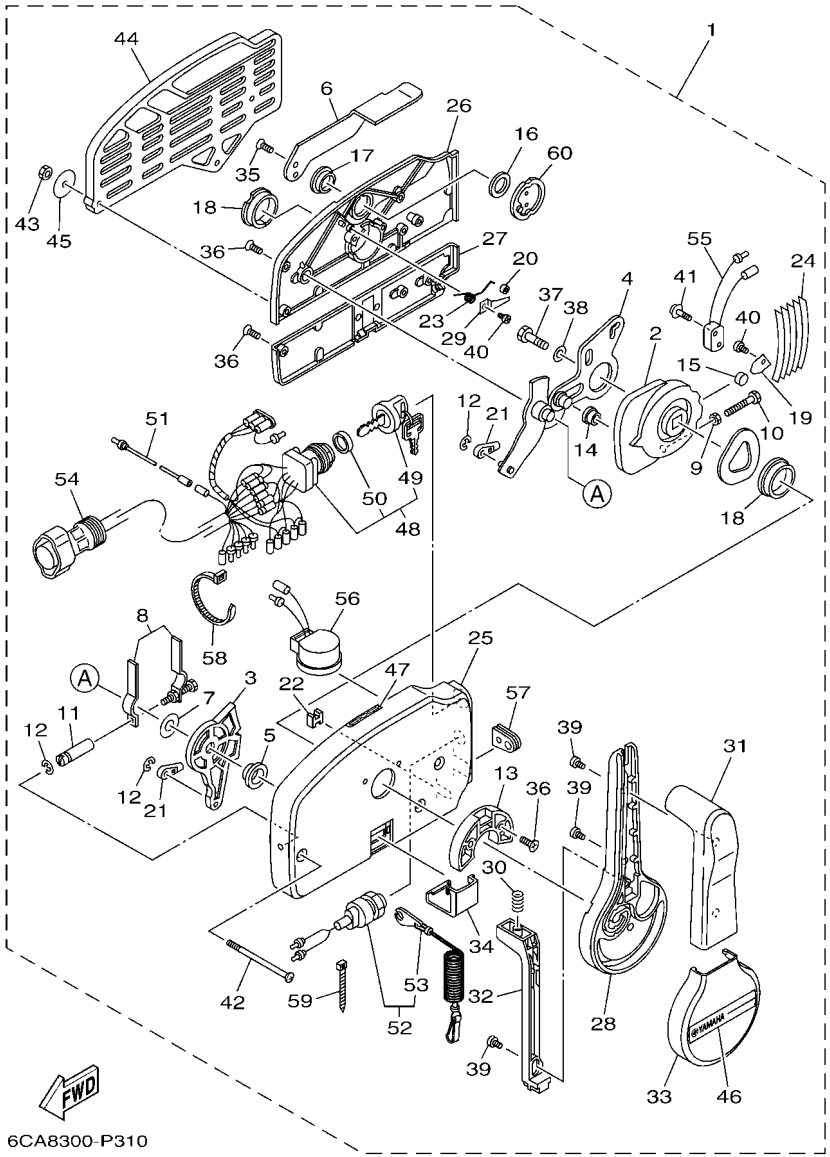

REF. NO.	PART NO. N° PIECES	DESCRIPTION DESCRIPTION	ET	E	MH			REMARKS REMARQUES
1	703–48201–B1	REMOTE CONTROL ASSY (10P) BOITIER DE COMMANDE A DISTANCE		1				AP WITHOUT PT/T SW. AP WITHOUT PT/T SW.
2	703–48232–00	.GEAR .PIGNON		1				
3	703–48271–00	.ARM, SHIFT .BRAS		1				
4	703–48261–01	.ARM, THROTTLE .BRAS, ACCELERATION		1				
5	703–48235–00	.BUSHING .COUSSINET		1				
6	703–48152–10	.KNOB, FREE ACCEL. .BOUTON		1				
7	703–48268–00	.SPACER .ENTRETOISE		1				
8	703–48264–00	.FRICTION, THROTTLE .FRICTION, ACCELERATION		1				
9	95380–05600	.NUT .ECROU		1				
10	97380–05025	.BOLT .BOULON, HEXAGONAL		1				
11	703–48265–10	.SHAFT, FRICTION .AXE, COPILOTE		1				
12	93430–06024	.CIRCLIP .CLIPS		3				
13	703–48245–00	.PLATE, LOCK .PLAQUE, VERROU		1				
14	703–48252–00	.ROLLER, CAM .POULIE		1				
15	701–48248–00	.ROLLER, FREE ACCEL. .POULIE		1				
16	703–48198–00	.WASHER, WAVE .RONDELLE, ELASTIQUE ONDULEE		1				
17	703–48243–00	.BUSHING .COUSSINET		1				
18	703–48236–00	.BUSHING 1 .POULIE		2				
19	703–48189–00	.RETAINER .FLASQUE		1				
20	703–48234–00	.ROLLER, DETENT .POULIE		1				
21	703–48345–01	.CABLE END, REMOTE CONTROL 2 .CHAPE CABLE		2				
22	703–48358–00	.ANCHOR, CABLE .COLLIER		1				
23	703–48244–00	.SPRING, FREE ACCEL. .RESSORT		1				
24	703–48238–00	.SPRING, DETENT .RESSORT		5				
25	703–48211–10	.HOUSING,1 .CORPS		1				
26	703–48212–10	.BACK PLATE 1 .PLAQUETTE 1		1				
27	703–48213–10	.BACK PLATE 2 .PLAQUETTE 2		1				

FIG. 39 REMOTE CONTROL ASSY 2 — BOITIER DE COMMANDE A DISTANCE

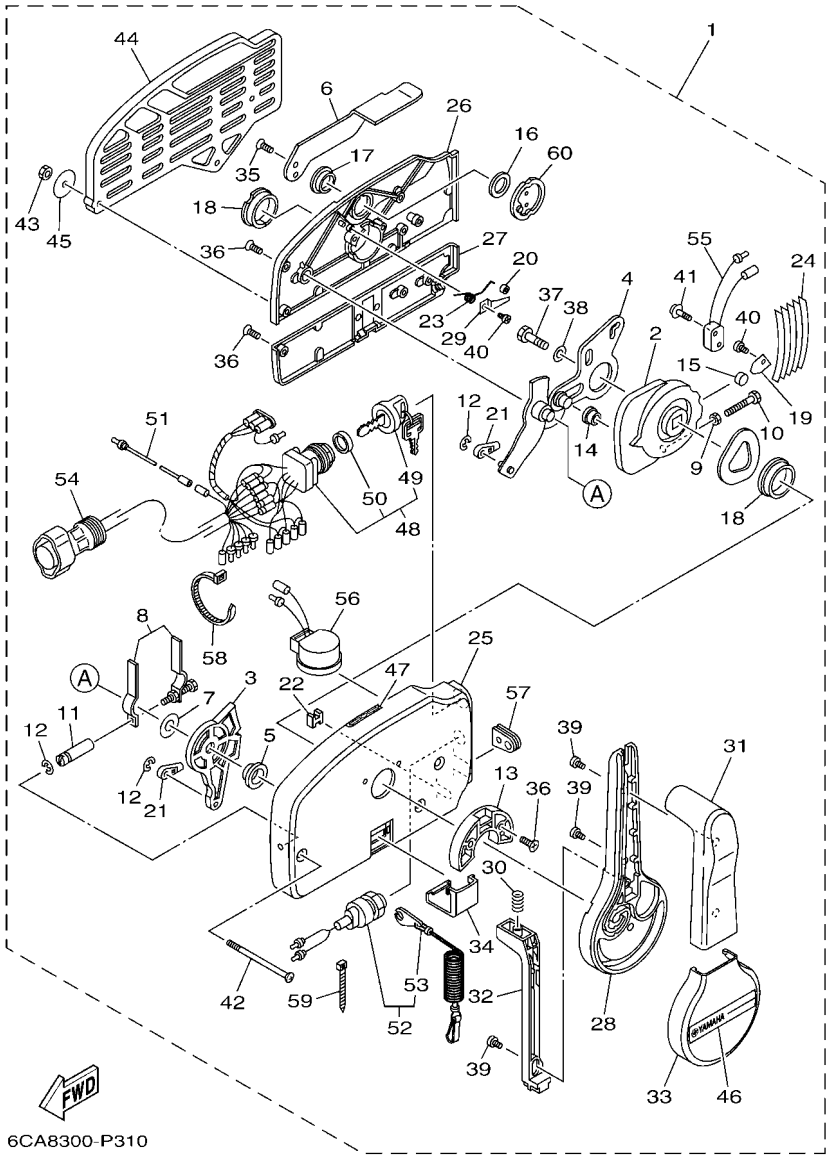

REF. NO.	PART NO. N° PIECES	DESCRIPTION DESCRIPTION	ET	E	MH			REMARKS REMARQUES
28	703–48221–10	.LEVER, CONTROL .LEVIER, COMMANDE		1				
29	703–48246–00	.SPACER .ENTRETOISE		1				
30	703–48227–00	.SPRING, NEUTRAL LOCK .RESSORT		1				
31	703–48222–30	.GRIP, CONTROL LEVER .POIGNEE, COMMANDE LEVIER		1				SINGLE SINGLE
32	703–48223–10	.LOCK, NEUTRAL .VERROU, NEUTRAL		1				
33	703–48225–10	.COVER .COUVERCLE		1				
34	703–48219–10	.COVER, LEAD .COUVERCLE		1				
35	703–48281–00	.SCREW .VIS		2				
36	703–44189–20	.SCREW .VIS		7				
37	97380–08030	.BOLT .BOULON, HEXAGONAL		1				
38	92990–08600	.WASHER, PLATE .RONDELLE, PLATE		1				
39	703–48128–10	.SCREW 2 .VIS 2		3				
40	98580–04006	.SCREW, PAN HEAD .VIS		2				
41	703–48129–00	.SCREW 3 .VIS 3		2				
42	703–44189–30	.SCREW .VIS		3				
43	95380–06600	.NUT, HEXAGON .ECROU		3				
44	703–48293–10	.SPACER, REMOTE CONTROL .ENTRETOISE		1				SINGLE SINGLE
45	701–48287–00	.WASHER .RONDELLE		3				
46	703–48215–10	.GRAPHIC .ADHESIF		1				
47	6X3–44191–00	.INDICATOR, SHIFT .ETIQUETTE, EMBRAYAGE		1				
48	703–82510–13	.MAIN SWITCH ASSY .CONTACTEUR A CLEF COMPLET		1				PRIME START PRIME START
49	676–82577–01	..CAP, KEY ..CABOCHON		1				
50	703–82532–00	..CAP ..COUVERCLE		1				
51	703–82531–00	.WIRE, LEAD (L70) .FIL (L70)		1				
52	688–82575–02	.ENGINE STOP SWITCH ASSY .COUPE CIRCUIT CPLT		1				
53	682–82556–00	..LANYARD, STOP SWITCH ..CORDON DU COUPE CIRCUIT		1				
54	688–8258A–20	.EXTENSION, WIRE HARNESS (4.9M) .EXTENSION, FAISCEAU DE FILS (4		1				(10P) (10P)

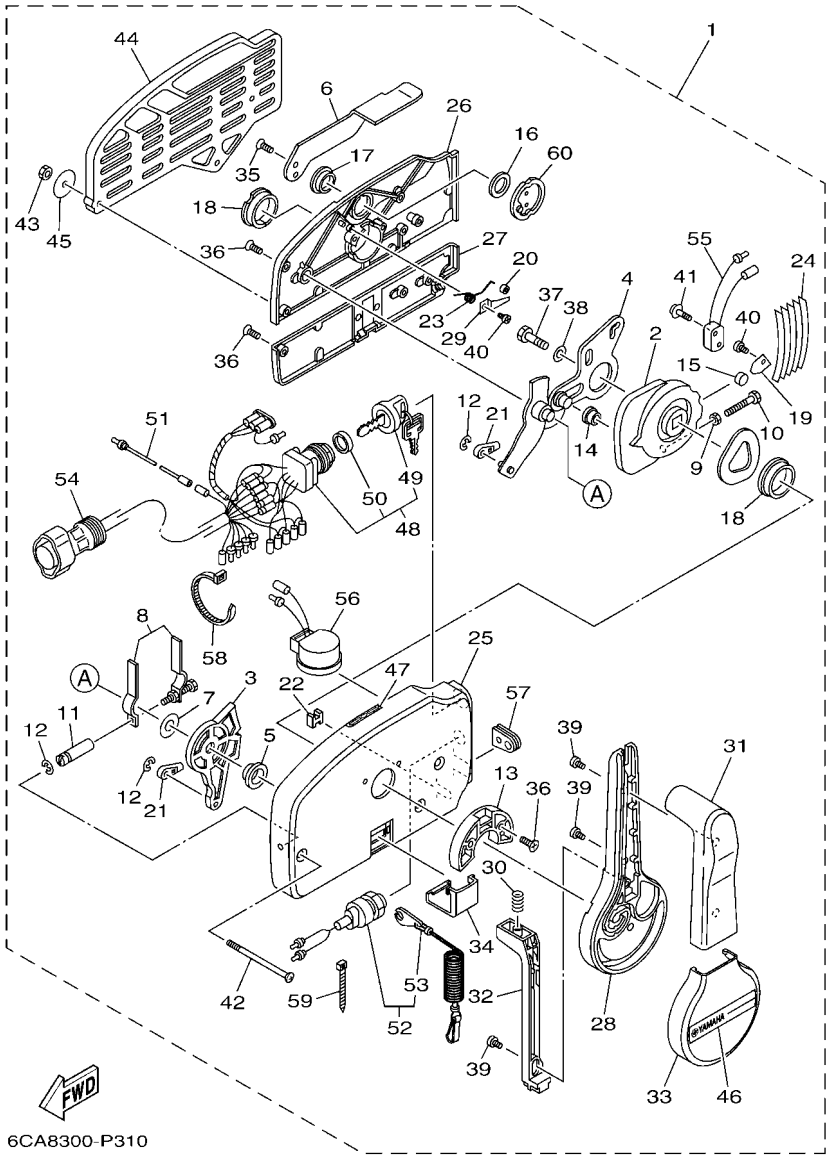

FIG. 39 REMOTE CONTROL ASSY 2 — BOITIER DE COMMANDE A DISTANCE

REF. NO.	PART NO. N° PIECES	DESCRIPTION DESCRIPTION	ET	E	MH			REMARKS REMARQUES
55	703–82540–00	.NEUTRAL SWITCH ASSY .CONTACTEUR DE POINT-MORT		1				
56	703–83383–11	.BUZZER .RONFLEUR		1				
57	703–48284–00	.GROMMET .PASSE-FIL		1				
58	703–82591–00	.BAND .COLLIER		1				
59	703–82592–00	.BAND .COLLIER		1				
60	703–48153–00	.SHAFT, FREE ACCEL. .AXE		1				

FIG. 40 REPAIR KIT 1 — KITS DE REPARATION 1

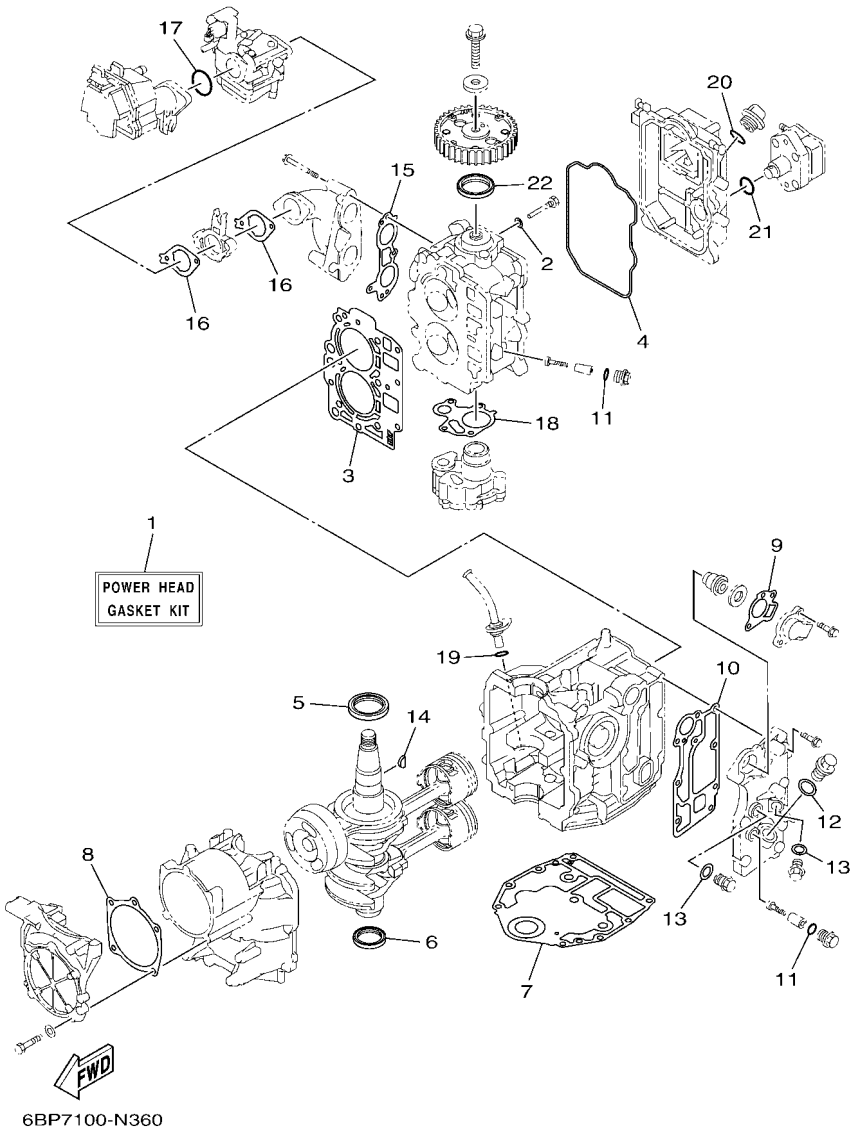

REF. NO.	PART NO. N° PIECES	DESCRIPTION DESCRIPTION	ET	E	MH			REMARKS REMARQUES
1	6BL–W0001–01	POWER HEAD GASKET KIT POCHETTE DE JINTS TETE MOTRICE	1	1	1			
2	90430–06014	.GASKET .JOINT	1	1	1			
3	6BL–11181–00	.GASKET, CYLINDER HEAD 1 .JOINT, DE CULASSE 1	1	1	1			
4	6BL–11356–00	.SEAL, CYLINDER 2 .JOINT, SPY CYLINDRE	1	1	1			
5	93102–43M42	.OIL SEAL .JOINT SPY	1	1	1			
6	93101–35002	.OIL SEAL .JOINT SPY	1	1	1			
7	6BG–11351–00	.GASKET, CYLINDER .JOINT, D'EMBASE	1	1	1			
8	6BL–15663–00	.SEAL .JOINT	1	1	1			
9	62Y–12414–00	.GASKET, COVER .JOINT, COUVERCLE	1	1	1			
10	6BL–41114–00	.GASKET, EXHAUST OUTER COVER .JOINT, COUVERCLE D'ECHAPPEMENT	1	1	1			
11	93210–13M63	.O-RING .JOINT TORIQUE	3	3	3			
12	90201–186F1	.WASHER, PLATE .RONDELLE, PLATE	1	1	1			
13	90430–14115	.GASKET .JOINT	2	2	2			
14	90280–03017	.KEY, WOODRUFF .CLAVETTE, DEMI-LUNE	1	1	1			
15	6BL–13645–00	.GASKET, MANIFOLD 1 .JOINT, TUBULURE 1	1	1	1			
16	6BL–13646–00	.GASKET, MANIFOLD 2 .JOINT, TUBULURE 2	2	2	2			
17	93210–39ME4	.O-RING .JOINT TORIQUE	1	1	1			
18	6C5–13329–00	.GASKET, PUMP COVER .JOINT, COUVERCLE DE POMPE	1	1	1			
19	93210–19MJ3	.O-RING .JOINT TORIQUE	1	1	1			
20	93210–24M79	.O-RING .JOINT TORIQUE	1	1	1			
21	93210–24M79	.O-RING .JOINT TORIQUE	1	1	1			
22	93102–37M40	.OIL SEAL .JOINT SPY	1	1	1			

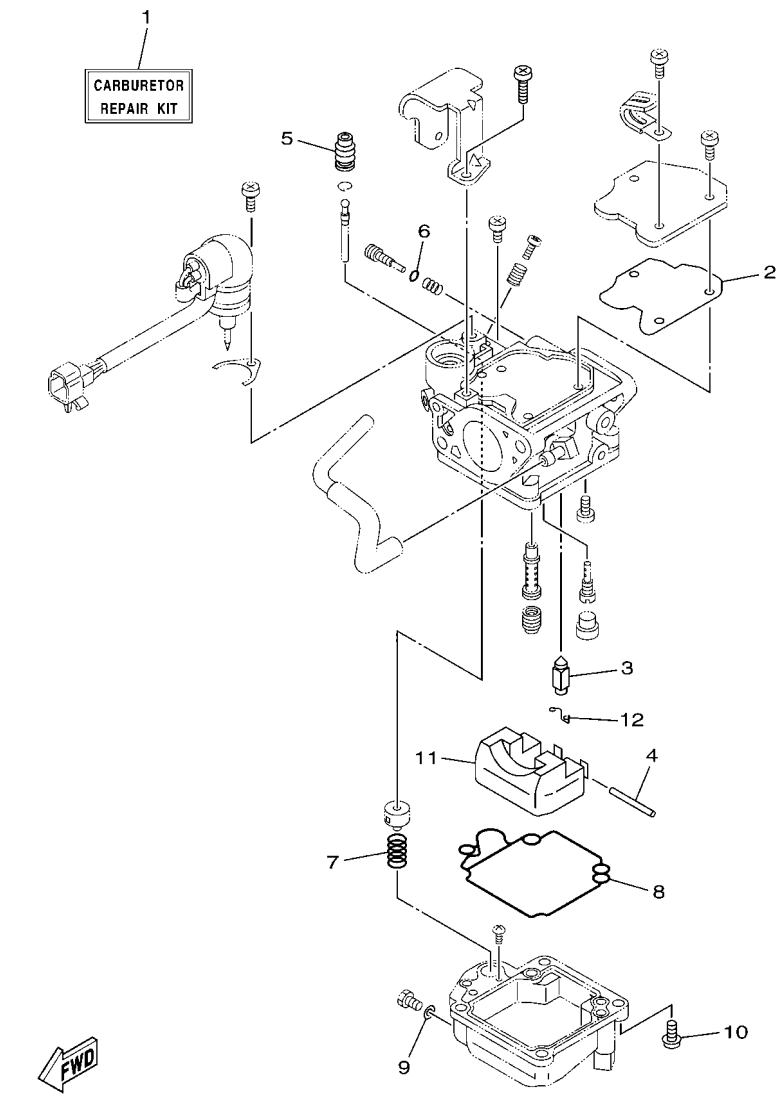

6BP1100-H390

FIG. 41 REPAIR KIT 2 — KITS DE REPARATION 2

REF. NO.	PART NO. N° PIECES	DESCRIPTION DESCRIPTION	ET	E	MH			REMARKS REMARQUES
1	6BL–W0093–00	CARBURETOR REPAIR KIT KIT DE REPARATION CARBURATEUR	1	1	1			
2	65W–14126–10	.GASKET .JOINT	1	1	1			
3	6AH–14546–00	.VALVE, NEEDLE .POINTEAU	1	1	1			
4	6H4–14548–00	.PIN, FLOAT ARM .AXE, BRAS DE FLOTTEUR	1	1	1			
5	65W–14373–02	.COVER, PLUNGER CAP .COUVERCLE DE PLONGEUR	1	1	1			
6	67C–14397–00	.O-RING .JOINT TORIQUE	1	1	1			
7	65W–14335–00	.SPRING, PLUNGER .RESSORT, PLONGEUR	1	1	1			
8	65W–14384–00	.GASKET, FLOAT CHAMBER .JOINT, CUVE DE FLOTTEUR	1	1	1			
9	65W–14398–00	.GASKET .JOINT	1	1	1			
10	97980–04114	.SCREW, WITH WASHER .VIS, AVEC RONDELLE	4	4	4			
11	63V–14985–00	.FLOAT .FLOTTEUR	1	1	1			
12	663–14159–00	.CLIP .JONC	1	1	1			

FIG. 42 REPAIR KIT 3 — KITS DE PEPARATION 3

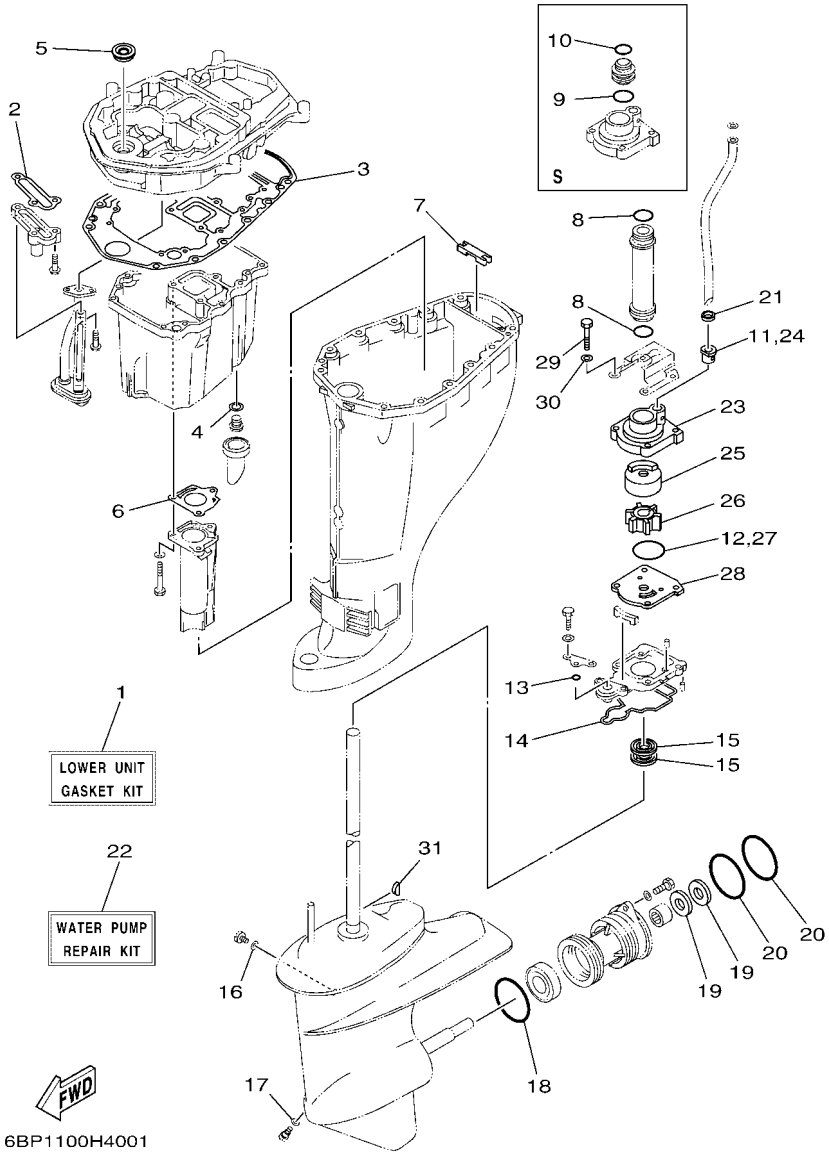

REF. NO.	PART NO. N° PIECES	DESCRIPTION DESCRIPTION	ET	E	MH			REMARKS REMARQUES
1	65W–W0001–24	LOWER UNIT GASKET KIT POCHETTE DE JOINTS EMBASE	1	1	1			
2	62Y–13475–00	.GASKET .JOINT	1	1	1			
3	69W–15312–00	.GASKET, OIL PAN .JOINT DE VENTILATEUR D'HUILE	1	1	1			
4	90430–14M09	.GASKET .JOINT	1	1	1			
5	93103–16011	.OIL SEAL .JOINT SPY	1	1	1			
6	67C–41133–00	.GASKET, EXHAUST MANIFOLD 1 .JOINT, PIPE D'ECHAPPEMENT	1	1	1			
7	65W–45128–00	.SEAL 2 .JOINT 2	1	1	1			
8	93210–26130	.O-RING .JOINT TORIQUE	2	2	2			L(21.7") L(21.7")
9	93210–26130	.O-RING .JOINT TORIQUE	1	1	1			S(16.7") S(16.7")
10	93210–22164	.O-RING .JOINT TORIQUE	1	1	1			S(16.7") S(16.7")
11	6L2–44367–00	.DAMPER, WATER SEAL 3 .JOINT TUBE D'EAU 3	1	1	1			
12	93210–45161	.O-RING .JOINT TORIQUE	1	1	1			
13	93210–06ME6	.O-RING .JOINT TORIQUE	1	1	1			
14	61N–45315–00	.PACKING, LOWER CASING .JOINT, BOITIER D'HELICE	1	1	1			
15	93101–22067	.OIL SEAL .JOINT SPY	2	2	2			
16	90430–08003	.GASKET .JOINT	1	1	1			
17	90430–08003	.GASKET .JOINT	1	1	1			
18	93210–64ME7	.O-RING .JOINT TORIQUE	1	1	1			
19	93101–20M07	.OIL SEAL .JOINT SPY	2	2	2			
20	93210–65M50	.O-RING .JOINT TORIQUE	2	2	2			
21	90430–10002	.GASKET .JOINT	1	1	1			
22	61N–W0078–11	WATER PUMP REPAIR KIT KIT DE REPARATION DE LA POMPE	1	1	1			
23	61N–44311–01	.HOUSING, WATER PUMP .CORPS, POMPE A EAU	1	1	1			
24	6L2–44367–00	.DAMPER, WATER SEAL 3 .JOINT TUBE D'EAU 3	1	1	1			
25	61N–44322–01	.INSERT, CARTRIDGE .CUVETTE	1	1	1			
26	6H4–44352–02	.IMPELLER .TURBINE	1	1	1			
27	93210–45161	.O-RING .JOINT TORIQUE	1	1	1			

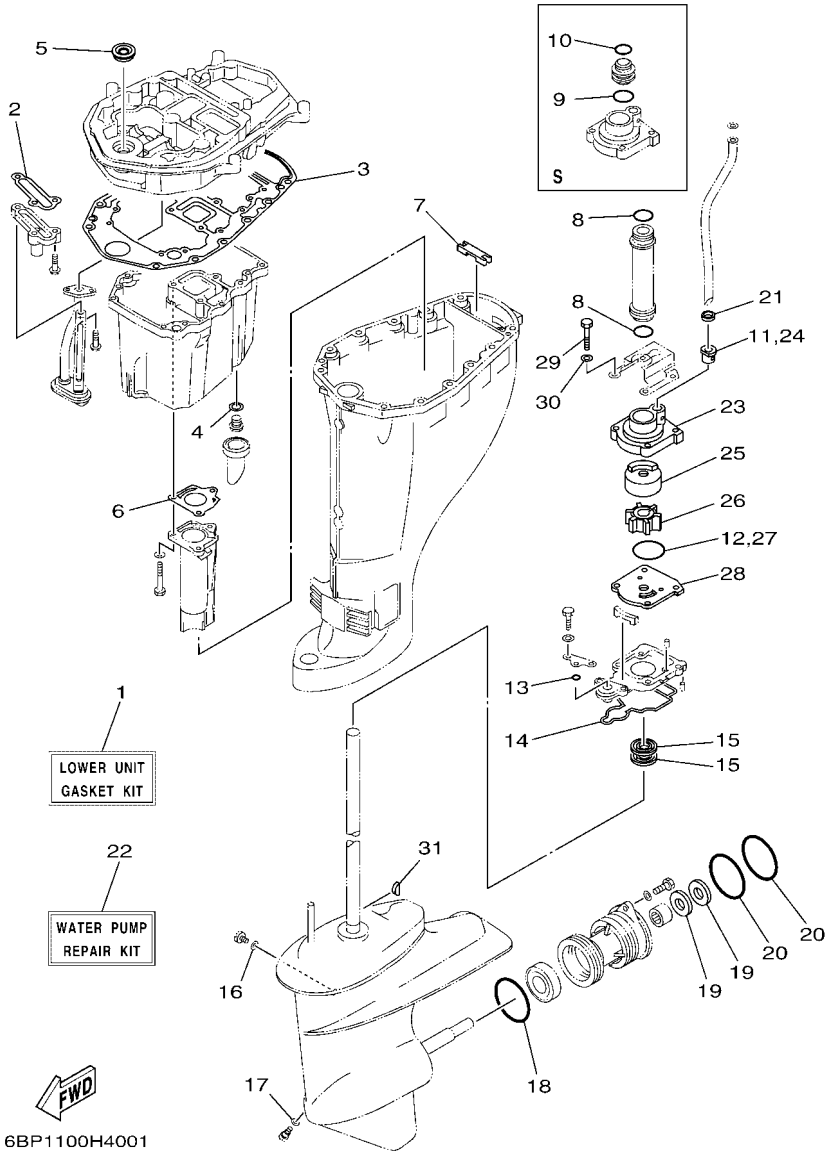

FIG. 42 REPAIR KIT 3 — KITS DE PEPARATION 3

REF. NO.	PART NO. N° PIECES	DESCRIPTION DESCRIPTION	ET	E	MH			REMARKS REMARQUES
28	61N–44323–00	.OUTER PLATE, CARTRIDGE .PLAQUE EXTERIEURE	1	1	1			
29	97095–06040	.BOLT .BOULON	4	4	4			
30	92995–06600	.WASHER .RONDELLE	4	4	4			
31	90280–03024	.KEY, WOODRUFF .CLAVETTE, DEMI-LUNE	1	1	1			

NUMERICAL INDEX
INDEX NUMERIQUE

PART NO. N° PIECES	REF. NO.
6BL–11111–10–1S	5 – 2
62Y–11119–00	3 – 13
	5 – 22
62Y–11133–30	5 – 3
6BG–11168–00	5 – 16
6BL–11181–00	5 – 10
	40 – 3
6BL–11191–00–1S	5 – 14
6G8–11197–A0	3 – 33
	5 – 6
62Y–11325–00	1 – 10
	30 – 2
6BL–11325–00	1 – 5
	5 – 4
6G8–11325–00	1 – 3
	3 – 31
66M–11327–00–94	30 – 4
66M–11328–00	30 – 3
6BG–11351–00	3 – 8
	40 – 7
6BL–11356–00	5 – 19
	40 – 4
6H1–11372–00	3 – 17
6BL–11411–00	4 – 1
6BG–11416–10	4 – 2
6BG–11416–20	4 – 2
6BG–11416–30	4 – 2
6C5–11536–00	9 – 7
6C5–11537–10	9 – 2
6H4–11545–00	12 – 4
62Y–11557–00	9 – 8
6BG–11576–00–94	31 – 10
67C–11603–00	4 – 7
67C–11604–00	4 – 7
67C–11605–00	4 – 7
69W–11631–01–97	4 – 6
62Y–11633–00	4 – 8
69W–11635–01	4 – 6
69W–11636–01	4 – 6
6BL–11642–00	4 – 11
6C5–11650–10	4 – 3
6C5–11654–00	4 – 4
6CJ–11656–10	4 – 5
6CJ–11656–20	4 – 5
6CJ–11656–30	4 – 5
6BL–11665–00	4 – 10
69W–12111–00	6 – 1
51Y–12114–00	6 – 4

PART NO. N° PIECES	REF. NO.
62Y–12116–00	6 – 3
30X–12117–00	6 – 5
30X–12118–00	6 – 6
51Y–12119–00	6 – 7
69W–12121–10	6 – 2
6BL–12146–00	6 – 8
62Y–12151–00	6 – 9
6C5–12151–00	6 – 12
62Y–12158–00	6 – 11
6C5–12158–00	6 – 14
64J–12159–00	6 – 10
6C5–12159–00	6 – 13
6BL–12170–00	9 – 1
6BL–12171–00	9 – 1
6BL–12231–00	6 – 15
6BL–12233–00	6 – 16
6G8–12411–03	1 – 1
	3 – 25
688–12412–00	3 – 26
6C5–12413–00–9S	3 – 27
62Y–12414–00	1 – 2
	3 – 28
	40 – 9
6BP–12481–00	3 – 19
66M–12535–00	30 – 5
6AW–12572–00	20 – 4
6R3–12580–00	20 – 6
6C5–12858–00	3 – 40
62Y–13131–01	10 – 5
6BL–13300–00	9 – 14
6C5–13329–00	9 – 15
	40 – 18
65W–13411–00	31 – 8
6BP–13437–60	9 – 18
5GH–13440–50	1 – 4
	3 – 39
62Y–13475–00	31 – 11
	42 – 2
6BL–13641–00–94	7 – 1
6BL–13645–00	7 – 2
	40 – 15
6BL–13646–00	7 – 7
	40 – 16
65W–14126–10	8 – 4
	41 – 2
633–14159–00	8 – 14
663–14159–00	41 – 12
67F–14255–00	8 – 33

PART NO. N° PIECES	REF. NO.
6BL–14271–00	7 – 8
6BL–14301–11	8 – 1
65W–14335–00	8 – 23
	41 – 7
65W–14346–00	8 – 31
6BL–14346–00	8 – 35
65W–14371–00	8 – 24
65W–14373–02	8 – 17
	41 – 5
65W–14379–00	8 – 19
6BL–14380–00	8 – 30
65W–14384–00	8 – 25
	41 – 8
67C–14397–00	41 – 6
65W–14398–00	8 – 27
	41 – 9
67F–14398–10	8 – 21
65W–1439G–00	8 – 18
6BL–14440–00	7 – 9
62Y–14485–00	5 – 15
6AH–14497–00	24 – 32
63V–14523–00	8 – 9
6AH–14546–00	8 – 13
	41 – 3
6H4–14548–00	8 – 16
	41 – 4
67C–14555–00	8 – 22
67C–14567–00	8 – 32
6BL–14571–00	24 – 23
6BL–14571–10	23 – 33
	25 – 25
65W–14572–00	8 – 3
65W–14807–00	8 – 34
6AH–14923–20	8 – 20
65W–14943–79	8 – 11
65W–14947–90	8 – 10
676–14948–05	8 – 6
679–14966–00	8 – 7
65W–14980–20	8 – 26
63V–14985–00	8 – 12
	41 – 11
65W–14992–00	8 – 28
6BL–15100–02	3 – 2
6BL–15121–00–1S	3 – 9
65W–15311–03–CA	31 – 1
69W–15312–00	31 – 2
	42 – 3
65W–15316–00	31 – 4

PART NO. N° PIECES	REF. NO.
6BL–15357–00	11 – 25
6BL–15362–00	31 – 14
6G8–15363–00	5 – 28
6BL–15373–00	7 – 12
6BL–15377–00	31 – 15
6BL–15663–00	3 – 10
	40 – 8
66T–15705–00	11 – 9
6BL–15710–01	11 – 1
6BL–15711–01	11 – 2
66T–15713–00	11 – 7
6BL–15714–00	11 – 5
66T–15716–00	11 – 8
66T–15731–00	11 – 22
66T–15734–00	11 – 20
6AH–15741–10	11 – 6
689–15755–01	11 – 15
6BL–15762–01	11 – 27
6AH–15764–00	11 – 3
6BL–15764–00	11 – 14
66T–15767–00	11 – 10
6BL–15770–00	11 – 21
6F5–15779–02	11 – 17
6BL–15782–00	11 – 23
66T–15784–00	11 – 11
6A0–15789–00	11 – 18
68T–15793–00	11 – 13
6AH–15793–00	11 – 24
6BL–15793–00	11 – 12
68T–15794–00	11 – 19
6AH–15795–00	11 – 4
15A–22442–00	29 – 28
6YJ–24167–00	35 – 7
6YK–24201–04	34 – 1
6YJ–24201–20	35 – 1
6YJ–24260–10	35 – 3
6YK–24260–10	34 – 3
6Y1–24268–00	35 – 6
6YL–24268–01	34 – 4
6G1–24304–10	10 – 32
6G1–24305–05	35 – 13
6Y1–24305–06	35 – 15
61J–24306–04	35 – 8
6YL–24306–54	34 – 7
6BL–24311–00	10 – 23
61N–24329–00	10 – 35
6Y1–24329–00	35 – 5
6YL–24329–00	34 – 5

PART NO. N° PIECES	REF. NO.
650–24351–51	35 – 12
61J–24360–00	35 – 10
6BL–24364–00	20 – 14
62Y–24374–01	10 – 10
688–24378–00	3 – 20
6C5–24378–00	20 – 9
6BL–24396–00	20 – 12
62Y–24410–04	10 – 1
62Y–24411–02	10 – 3
6C5–24414–00	10 – 11
62Y–24415–01	10 – 2
62Y–24423–00	10 – 4
62Y–24444–01	10 – 7
62Y–24454–00	10 – 6
6C5–24471–00	10 – 8
6BL–24481–00	10 – 21
61N–24521–00	10 – 15
61N–24560–10	10 – 14
61N–24563–10	1 – 7
	10 – 16
6D5–24566–00	10 – 18
6YJ–24610–01	35 – 2
6YK–24610–01	34 – 2
6AH–26288–00	21 – 4
6BP–26311–00	21 – 17
6BP–26316–00	21 – 18
6AH–2634E–00	21 – 22
6AH–26364–00	23 – 3
	24 – 3
62Y–28100–00	10 – 36
67F–2812A–00	14 – 7
6BP–28199–78–D0	10 – 37
6BP–28199–78–E0	10 – 37
6BP–28199–78–F0	10 – 37
6BP–28199–78–G0	10 – 37
6BP–28199–78–H0	10 – 37
6BP–28199–78–S0	10 – 37
6BP–28199–88–K0	10 – 38
6BP–28199–88–L0	10 – 38
6BP–28199–88–M0	10 – 38
6BP–28199–88–N0	10 – 38
6BP–28199–88–P0	10 – 38
6BP–28199–88–R0	10 – 38
6BL–41113–01–1S	3 – 16
6BL–41114–00	3 – 29
	40 – 10
68U–41131–00–CA	30 – 12
67C–41133–00	30 – 11

PART NO. N° PIECES	REF. NO.
67C–41133–00	42 – 6
67C–41137–20–CA	30 – 1
6BL–41211–00	23 – 32
	25 – 24
6BP–41211–00	24 – 22
6J8–41262–00	23 – 30
	24 – 20
	25 – 22
65W–41283–00	23 – 29
	25 – 21
6BL–41283–00	24 – 19
6AH–41638–00	24 – 17
6BL–41638–00	23 – 27
	25 – 19
6G1–41662–01–94	23 – 4
	24 – 4
6AH–42101–02–8D	21 – 2
66M–42119–01	21 – 5
6BL–42121–00–8D	21 – 33
65W–42125–00	21 – 11
6G1–42126–00	21 – 10
6BL–42131–00	21 – 30
6AH–42131–00–8D	21 – 27
6J0–42137–10	21 – 13
65W–42138–00	21 – 7
65W–42159–00	21 – 9
62Y–42171–00	24 – 29
67D–42177–00	21 – 6
6BG–42384–00	20 – 3
65W–42508–00	22 – 1
65W–42511–01–8D	28 – 1
65W–42511–11–8D	28 – 1
65W–42527–00	22 – 3
648–42528–00	28 – 30
65W–42528–00	22 – 10
6BL–42532–00	21 – 29
65W–42561–00	22 – 7
65W–42562–00	22 – 6
6BP–42610–42	2 – 1
6BP–42610–51	2 – 1
6BL–42613–00	2 – 3
6CJ–42615–00	2 – 12
6BL–42617–00	9 – 13
6BL–4261A–01	2 – 2
6BL–4261A–10	2 – 2
6BG–42649–00	2 – 8
6BL–42651–00	2 – 5
6BL–42652–00	2 – 9

PART NO. N° PIECES	REF. NO.
6BL–42656–00	2 – 15
6BG–42662–00	2 – 14
6BP–42675–10	2 – 18
6BP–42676–10	2 – 19
6BP–42677–10	2 – 16
6BP–42681–00	2 – 17
6AH–42697–10	2 – 13
6BP–42710–00–8D	19 – 1
62Y–42716–00	19 – 7
61A–42717–00	19 – 6
65W–42717–00	19 – 5
69J–42723–01	17 – 16
6BG–42724–00	20 – 1
6G1–42725–00	17 – 15
6BL–42725–01	19 – 9
6BL–42725–10	19 – 9
65W–42726–00	19 – 34
65W–42726–10	19 – 34
	25 – 4
6H1–42726–21	20 – 1
68U–42727–00	19 – 23
6BL–42727–00	19 – 11
	25 – 3
6BL–42727–10	19 – 11
6BL–42735–00	19 – 35
6BP–42741–00	19 – 24
6BG–42748–00	19 – 3
60V–42756–00	19 – 25
6BL–42761–00	19 – 8
	25 – 2
6BL–42761–10	19 – 8
6BL–42762–10	19 – 10
6BP–42769–00	19 – 32
6EE–42794–40	19 – 37
6EE–42794–50	19 – 38
6BL–42815–00–8D	19 – 13
6BG–42816–00	19 – 18
6BG–42851–00	2 – 7
66T–43111–01–8D	27 – 1
65W–43111–10–8D	26 – 1
66T–43112–01–8D	27 – 6
65W–43112–10–8D	26 – 2
6J8–43113–01	27 – 16
648–43114–01	27 – 4
663–43118–01–8D	27 – 3
63D–43131–01	26 – 9
	27 – 13
66T–43144–00	19 – 20

PART NO. N° PIECES	REF. NO.
6E5–43145–01	36 – 8
65W–43160–00	27 – 48
65W–43191–00	26 – 4
65W–43192–00	26 – 3
65W–43311–00–8D	27 – 11
65W–43311–10–8D	26 – 7
	27 – 11
682–43318–01	27 – 27
66T–43350–10	27 – 35
65W–43373–00	28 – 31
65W–43613–00	27 – 42
65W–43614–01	27 – 40
65W–43615–01	27 – 41
65W–43616–00	27 – 39
66T–43627–00	27 – 18
65W–43630–11	27 – 28
66T–43631–11	27 – 37
689–43633–00	22 – 8
65W–43800–22–8D	29 – 1
65W–43801–01	29 – 17
67F–43802–00	29 – 40
67C–43804–10	29 – 4
67C–43805–10	29 – 3
6T4–43808–00	29 – 45
67C–4380F–10	29 – 7
65W–4380K–00	29 – 15
65W–4380L–03	29 – 37
65W–43810–01	29 – 16
65W–43811–01	29 – 20
65W–43812–00	29 – 18
65W–43817–00	29 – 52
65W–4381B–00	29 – 31
69J–4381C–00	29 – 34
6H1–43829–00	29 – 73
65W–4382A–00	29 – 60
65W–43830–00	29 – 49
65W–43831–00	29 – 48
65W–43840–01	29 – 14
62X–43841–00	29 – 46
65W–43843–00	29 – 67
65W–43844–00	29 – 61
6H1–43844–10	29 – 69
6H1–43845–00	29 – 56
6H1–43847–00	29 – 58
6H1–4384F–10	29 – 70
65W–43851–00	29 – 62
65W–43853–00	29 – 72
6T4–43853–00	29 – 43

PART NO. N° PIECES	REF. NO.
65W–43854–00	29 – 59
65W–43855–00	29 – 65
6H1–43856–10	29 – 68
65W–43857–00	29 – 27
65W–4385A–01	29 – 25
6H1–43861–10	29 – 32
6H1–43862–00	29 – 30
67C–43862–10	29 – 13
6D8–43863–00	29 – 57
65W–43865–00	29 – 19
6H1–43866–01	29 – 41
67C–43867–00	29 – 21
65W–4386A–00	29 – 26
	29 – 36
67C–4386K–10	29 – 8
6H1–43875–00	29 – 55
62X–43878–01	29 – 74
67C–43879–10	29 – 9
65W–43880–20	29 – 2
65W–43881–20	29 – 11
67C–43882–10	29 – 12
67C–43892–10	29 – 5
6AH–44111–00	21 – 34
66R–44114–00	23 – 10
	24 – 10
65W–44116–00	23 – 9
	24 – 9
6BL–44121–01	23 – 1
	24 – 1
6BL–44124–00	21 – 38
6BL–44125–00	23 – 17
	25 – 9
6BL–44142–00	23 – 12
	24 – 12
6BP–44143–00	23 – 14
	24 – 14
6BP–44143–10	23 – 14
	24 – 14
65W–44150–01	32 – 58
65W–44150–11	32 – 58
6AH–44167–10	24 – 28
6BL–44173–00	23 – 7
	24 – 7
65W–44176–00	32 – 19
6X4–44188–00	21 – 14
703–44189–20	38 – 36
	39 – 36
703–44189–30	38 – 42

PART NO. N° PIECES	REF. NO.
703–44189–30	39 – 42
6G8–44191–00	21 – 41
6X3–44191–00	38 – 47
	39 – 47
6BL–44192–00	23 – 21
	25 – 13
61N–44311–01	32 – 11
	42 – 23
61N–44322–01	32 – 13
	42 – 25
61N–44323–00	32 – 16
	42 – 28
65W–44328–11	32 – 10
6H4–44352–02	32 – 14
	42 – 26
65W–44361–02	33 – 1
65W–44361–12	33 – 1
61N–44362–00	32 – 7
61N–44362–10	32 – 7
6L2–44367–00	32 – 12
	42 – 11
	42 – 24
6BL–44391–00	19 – 33
67C–44514–20	28 – 10
66T–44526–30	28 – 11
6BP–44551–00–8D	28 – 13
65W–44551–11–8D	28 – 13
6BP–44552–00–8D	28 – 14
63D–44552–01–8D	28 – 16
6AH–44554–00	21 – 19
65W–44555–00	28 – 17
6BP–44555–00	28 – 17
64J–44575–00	28 – 18
65W–44575–01	28 – 18
6BP–45111–00–8D	30 – 15
6D5–45111–10–8D	30 – 15
61N–45127–00	32 – 25
65W–45128–00	30 – 20
	42 – 7
65W–45151–00	30 – 18
6L2–45214–00	33 – 9
6L2–45215–00	33 – 10
65W–45251–00	1 – 9
	26 – 18
61N–45251–01	1 – 13
	32 – 30
65W–45300–01–8D	32 – 1
65W–45300–11–8D	32 – 1

PART NO. N° PIECES	REF. NO.
61N–45311–02–8D	32 – 2
61N–45315–00	32 – 26
	42 – 14
65W–45331–00–CA	32 – 23
688–45341–10	32 – 33
61N–45361–01–8D	32 – 51
61N–45371–00	33 – 7
61N–45510–00	32 – 35
61N–45510–10	32 – 35
61N–45536–00	32 – 5
61N–45551–00	32 – 37
61N–45560–10	32 – 41
6L2–45567–00	32 – 40
6L2–45567–10	32 – 40
6L2–45567–20	32 – 40
6L2–45567–30	32 – 40
6L2–45567–40	32 – 40
61N–45571–00	32 – 49
6L2–45577–00	32 – 50
6L2–45577–10	32 – 50
6L2–45577–20	32 – 50
6L2–45577–30	32 – 50
61N–45587–00	32 – 4
61N–45587–10	32 – 4
61N–45587–20	32 – 4
61N–45587–30	32 – 4
61N–45587–40	32 – 4
61N–45587–50	32 – 4
61N–45587–60	32 – 4
61N–45587–70	32 – 4
65W–45611–00	32 – 42
664–45631–03	32 – 44
648–45633–00	32 – 46
648–45635–00	32 – 43
664–45941–01	33 – 18
664–45943–01	33 – 18
664–45945–00	33 – 18
664–45947–01	33 – 18
664–45949–02	33 – 18
664–45952–00	33 – 18
664–45954–01	33 – 18
664–45970–00	33 – 18
664–45972–00	33 – 18
6L2–45987–01	33 – 13
689–45997–00	33 – 14
6C5–46241–00	9 – 6
6BL–46297–00	9 – 11
703–48128–10	38 – 39

PART NO. N° PIECES	REF. NO.
703–48128–10	39 – 39
703–48129–00	38 – 41
	39 – 41
703–48152–10	38 – 6
	39 – 6
703–48153–00	38 – 61
	39 – 60
703–48189–00	38 – 19
	39 – 19
703–48198–00	38 – 16
	39 – 16
703–48201–B1	37 – 2
	39 – 1
703–48205–B1	37 – 1
	38 – 1
703–48211–10	38 – 25
	39 – 25
703–48212–10	38 – 26
	39 – 26
703–48213–10	38 – 27
	39 – 27
703–48215–10	38 – 46
	39 – 46
703–48219–10	38 – 34
	39 – 34
703–48221–10	38 – 28
	39 – 28
703–48222–20	38 – 31
703–48222–30	39 – 31
703–48223–10	38 – 32
	39 – 32
703–48225–10	38 – 33
	39 – 33
703–48227–00	38 – 30
	39 – 30
703–48232–00	38 – 2
	39 – 2
703–48234–00	38 – 20
	39 – 20
703–48235–00	38 – 5
	39 – 5
703–48236–00	38 – 18
	39 – 18
703–48238–00	38 – 24
	39 – 24
703–48243–00	38 – 17
	39 – 17
703–48244–00	38 – 23

NUMERICAL INDEX
INDEX NUMERIQUE

PART NO. N° PIECES	REF. NO.
703–48244–00	39 – 23
703–48245–00	38 – 13
	39 – 13
703–48246–00	38 – 29
	39 – 29
701–48248–00	38 – 15
	39 – 15
703–48252–00	38 – 14
	39 – 14
703–48261–01	38 – 4
	39 – 4
703–48264–00	38 – 8
	39 – 8
703–48265–10	38 – 11
	39 – 11
703–48268–00	38 – 7
	39 – 7
703–48271–00	38 – 3
	39 – 3
703–48281–00	38 – 35
	39 – 35
703–48284–00	38 – 58
	39 – 57
701–48287–00	38 – 45
	39 – 45
703–48293–10	38 – 44
	39 – 44
701–48310–90	37 – 3
701–48320–00	37 – 3
701–48320–20	37 – 3
701–48320–50	37 – 3
663–48344–00	23 – 25
	23 – 37
	25 – 17
	25 – 29
703–48345–01	38 – 21
	39 – 21
703–48358–00	38 – 22
	39 – 22
6BL–48501–00	25 – 1
65W–48511–01	25 – 7
	28 – 33
6BL–48538–00	19 – 35
	25 – 8
6BG–61350–00	36 – 1
68V–81315–00	14 – 16
6BL–81337–00	12 – 12
6BG–81800–00	18 – 1

PART NO. N° PIECES	REF. NO.
6BG–81807–00	18 – 3
6BG–81810–00	18 – 11
6BG–81820–00	18 – 13
6BL–81822–00	15 – 12
6BL–81823–00	15 – 16
6BG–81826–00	18 – 15
6BL–8182A–00	15 – 7
6BG–8182J–00	18 – 14
6BG–81830–00	18 – 2
6BG–81832–00	18 – 7
6BG–81836–00	18 – 4
6BG–81839–00	18 – 10
6AW–8183T–00	18 – 6
6BL–8183X–00	15 – 9
6P2–8183X–00	16 – 6
6BG–81840–00	18 – 12
6BG–81846–00	18 – 16
6BG–81850–00	18 – 9
6BG–81857–00	18 – 8
6BG–81891–00	18 – 5
6BL–81925–00	15 – 8
68T–81940–00	15 – 4
6BG–81941–00	18 – 17
6BL–81942–00	16 – 3
6BL–81948–00	13 – 3
6BL–81949–00	16 – 5
63P–81950–00	16 – 1
6BL–81960–00	15 – 1
6EE–81994–40	11 – 28
	12 – 16
6EE–81994–50	11 – 30
	12 – 19
6EE–81995–40	11 – 29
	12 – 17
6EE–81995–50	11 – 31
	12 – 20
6AG–81996–00	12 – 18
6BL–82105–01	15 – 18
6BL–82119–00	13 – 10
6G5–82119–10	15 – 6
63D–82127–00	28 – 26
6U0–82127–00	26 – 21
65W–82127–10	28 – 26
6H1–82148–00	26 – 20
67F–82151–00	17 – 9
67F–82151–10	17 – 10
67C–82155–00	14 – 8
67F–8215B–10	17 – 11

PART NO. N° PIECES	REF. NO.
67F–8215B–20	17 – 12
67C–82181–10	29 – 6
6A0–82317–00	13 – 4
6AH–82370–00	14 – 2
6BL–82388–00	17 – 5
6BL–82389–00	14 – 20
6BL–82398–00	5 – 30
64J–82504–00	14 – 15
703–82510–13	38 – 48
	39 – 48
703–82531–00	38 – 51
	39 – 51
703–82532–00	38 – 50
	39 – 50
703–82540–00	38 – 55
	39 – 55
6BL–82554–00	13 – 13
682–82556–00	21 – 43
	38 – 53
	39 – 53
69J–82563–01	17 – 16
703–82563–30	38 – 57
6BL–82575–00	21 – 42
688–82575–02	38 – 52
	39 – 52
676–82577–01	38 – 49
	39 – 49
689–8257Y–00	21 – 44
69J–82587–00	17 – 17
688–8258A–20	38 – 54
	39 – 54
6BL–82590–01	17 – 8
6BL–82590–10	17 – 8
6BL–82590–20	17 – 8
703–82591–00	38 – 59
	39 – 58
703–82592–00	38 – 60
	39 – 59
703–83383–11	38 – 56
	39 – 56
6BL–8339X–00	14 – 9
6H4–83589–00	17 – 2
63P–83614–01	17 – 18
62Y–84301–00	17 – 1
6D5–84340–00	25 – 31
67C–85415–00	17 – 20
6BL–85510–00	12 – 2
6BL–85510–10	12 – 2

PART NO. N° PIECES	REF. NO.
6BL–85540–00	13 – 1
6BL–85550–00	12 – 1
6BL–85550–10	12 – 1
6BG–85561–00–94	12 – 8
6F5–85570–13	14 – 1
6AH–85580–00	12 – 3
6CJ–85790–00	14 – 17
6BL–W0001–01	40 – 1
65W–W0001–24	42 – 1
61N–W0078–11	1 – 14
	42 – 22
6BP–W0084–00–8D	21 – 1
6BL–W0093–00	41 – 1
6BL–W009A–10–1S	5 – 1
6BL–W009B–02–1S	3 – 1
90101–06020	26 – 19
90101–08M76	27 – 8
90101–08M86	28 – 9
90101–09M01	36 – 6
90101–10M58	27 – 49
90101–12M65	26 – 32
90105–08060	6 – 18
90105–08M76	28 – 32
90105–09009	5 – 12
90105–10M12	33 – 5
90109–05M89	22 – 14
90109–06047	2 – 10
90109–06266	10 – 13
90109–06M65	5 – 8
90109–06M86	17 – 6
	17 – 19
	19 – 12
	19 – 21
	19 – 27
	19 – 36
	20 – 13
	20 – 15
	21 – 3
90109–06M88	22 – 4
90109–06MA1	7 – 13
90109–08M90	27 – 24
90109–12MA3	28 – 22
90110–10M02	26 – 29
90111–06072	21 – 31
	21 – 32
90116–10064	28 – 29
90119–06025	9 – 16
90119–06M05	21 – 35

PART NO. N° PIECES	REF. NO.
90119–06M48	33 – 8
90119–06M61	19 – 2
90119–06MA3	5 – 13
90119–06MA5	3 – 30
90119–08132	30 – 17
90119–08M01	3 – 4
90119–10M14	28 – 22
90149–14M12	27 – 2
90151–05M05	33 – 11
90152–05011	21 – 8
90157–05014	27 – 38
90157–05M16	34 – 6
90157–05M19	35 – 4
90159–05M12	15 – 21
90167–05009	16 – 4
90167–05017	2 – 4
90170–06015	23 – 15
	24 – 15
90170–09M03	36 – 4
90170–20137	4 – 12
	12 – 6
90171–14013	33 – 16
90179–08003	15 – 19
90179–10M14	32 – 38
90179–10M33	28 – 24
90179–35001	9 – 9
90185–05002	33 – 12
90185–06M05	2 – 11
90185–08018	28 – 7
90185–08057	27 – 21
90185–09M01	36 – 3
90185–10027	25 – 6
	28 – 28
90185–10M13	26 – 31
90185–10M14	22 – 12
90185–22043	26 – 12
	27 – 17
90201–05M04	24 – 30
90201–05M06	23 – 22
	25 – 14
90201–06M31	23 – 19
	23 – 34
	24 – 24
	25 – 11
	25 – 26
90201–08M00	26 – 25
90201–08M07	27 – 20
90201–10038	29 – 29

PART NO. N° PIECES	REF. NO.
90201–10049	28 – 34
90201–10144	9 – 5
90201–10M20	36 – 2
90201–10M63	36 – 7
90201–12062	26 – 33
90201–12426	26 – 34
	27 – 51
90201–12M07	19 – 17
90201–12M16	28 – 21
90201–13M19	28 – 23
90201–16014	6 – 17
90201–186F1	3 – 36
	40 – 12
90201–20417	32 – 48
90201–21M18	12 – 5
90201–22M03	26 – 11
	27 – 15
90201–39008	21 – 24
90202–10M56	22 – 9
90202–12031	27 – 19
90202–12060	33 – 2
90202–25M04	28 – 19
90206–12052	19 – 16
90206–12M00	27 – 23
90206–15M18	21 – 37
90206–39001	21 – 25
90209–10M26	22 – 11
90209–52M00	28 – 2
90243–04007	27 – 5
90249–07M32	27 – 43
90249–07M33	27 – 45
90249–10M31	27 – 32
90249–12M34	27 – 25
90249–12M38	26 – 15
90249–18M35	26 – 28
90250–05010	32 – 45
90254–03M05	23 – 2
	23 – 8
	23 – 13
	24 – 2
	24 – 8
	24 – 13
90280–03017	9 – 10
	40 – 14
90280–03024	32 – 36
	42 – 31
90340–08002	32 – 28
90340–14M06	3 – 37

NUMERICAL INDEX
INDEX NUMERIQUE

PART NO. N° PIECES	REF. NO.
90340–14M06	31 – 5
90340–18M09	3 – 35
90344–51003	3 – 7
90381–20001	21 – 26
90386–07MA2	27 – 31
90386–08004	21 – 16
90386–10M99	27 – 33
90386–12M37	19 – 14
90386–12M98	26 – 14
	27 – 22
90386–12MA0	26 – 13
90386–12MA2	19 – 15
90386–14MA1	26 – 6
90386–18M44	26 – 26
90386–18MA0	26 – 27
90386–22M15	26 – 10
	27 – 14
90386–44M03	28 – 4
90386–44M99	28 – 6
90386–45001	21 – 23
90386–52M02	28 – 3
90387–05054	22 – 13
90387–06119	13 – 5
90387–06139	23 – 31
	24 – 21
	25 – 23
90387–06M43	19 – 31
90387–06M69	19 – 4
90387–06M86	21 – 36
	23 – 18
	25 – 10
90387–07048	27 – 29
90387–07049	27 – 30
90387–07M29	27 – 44
90387–10108	27 – 7
90387–10M42	36 – 5
90430–06014	5 – 9
	40 – 2
90430–08003	1 – 12
	32 – 29
	32 – 34
	42 – 16
	42 – 17
90430–10002	33 – 3
	42 – 21
90430–14115	3 – 38
	14 – 19
	40 – 13

PART NO. N° PIECES	REF. NO.
90430–14M09	1 – 11
	31 – 6
	42 – 4
90445–09057	20 – 10
90445–09104	3 – 23
90445–09251	3 – 21
90445–10M20	10 – 24
90445–10MG7	10 – 25
90445–11153	20 – 7
90445–11M05	35 – 11
90445–11M06	35 – 9
90446–09M42	25 – 32
90446–15003	10 – 30
90464–06001	5 – 31
90464–09010	17 – 14
90464–09018	14 – 6
90464–09023	5 – 25
90464–09M47	7 – 15
	14 – 18
90464–10M59	10 – 26
90464–11009	10 – 29
90464–12002	13 – 9
90464–12183	12 – 15
	13 – 7
90464–13227	10 – 31
90464–13249	13 – 7
90464–16001	17 – 13
90464–18004	15 – 20
	16 – 8
	17 – 13
	17 – 14
90464–18246	13 – 8
	14 – 12
	14 – 14
	17 – 7
90464–20181	14 – 13
	14 – 23
90465–06M90	16 – 10
90465–08M83	5 – 26
	7 – 5
90465–11M10	3 – 22
	3 – 24
	10 – 22
	16 – 9
	20 – 2
	20 – 2
	20 – 8
90465–13M11	26 – 17

PART NO. N° PIECES	REF. NO.
90467–08M18	20 – 11
90467–09M17	10 – 27
90467–10M04	10 – 28
90468–10005	23 – 23
	24 – 31
	25 – 15
90468–18001	23 – 24
	25 – 16
90468–18008	21 – 40
	23 – 26
	23 – 38
	25 – 18
	25 – 30
90480–12314	9 – 12
90480–13M24	19 – 30
90480–16616	7 – 14
90480–25003	14 – 3
90501–10065	32 – 47
90501–10326	8 – 8
90501–23215	21 – 15
90506–18023	19 – 22
90506–20M37	27 – 36
90506–30M00	27 – 46
90508–20040	23 – 28
	25 – 20
90508–20M44	24 – 18
91318–04025	29 – 51
91380–06020	29 – 38
91490–16010	21 – 12
91490–20012	27 – 47
91490–30022	33 – 17
91609–16012	29 – 22
91690–30018	26 – 5
91690–50014	7 – 4
92012–10040	29 – 23
92903–06600	3 – 6
	3 – 12
	30 – 9
	31 – 13
92903–08600	15 – 11
	15 – 15
92907–04600	5 – 18
92990–06100	22 – 5
92990–06200	21 – 39
92990–06300	32 – 32
92990–08100	27 – 10
92990–08200	6 – 19
92990–08600	38 – 38

PART NO. N° PIECES	REF. NO.
92990–08600	39 – 38
92990–14200	33 – 15
92995–05600	12 – 11
	30 – 7
92995–06600	3 – 15
	5 – 21
	5 – 24
	10 – 34
	12 – 14
	13 – 12
	13 – 12
	13 – 12
	14 – 5
	14 – 11
	14 – 22
	15 – 3
	16 – 12
	17 – 4
	19 – 29
	21 – 21
	23 – 6
	24 – 6
	24 – 27
	24 – 34
	26 – 23
	30 – 14
	32 – 18
	32 – 22
	42 – 30
92995–08200	28 – 8
92995–10600	26 – 30
	27 – 50
	28 – 34
	33 – 6
93101–20M07	32 – 55
	42 – 19
93101–22067	32 – 27
	42 – 15
93101–35002	4 – 14
	40 – 6
93102–37M40	9 – 17
	40 – 22
93102–43M42	4 – 13
	40 – 5
93103–16011	30 – 10
	42 – 5
93210–03478	29 – 64
93210–04N50	29 – 53

PART NO. N° PIECES	REF. NO.
93210–04N51	29 – 54
93210–064A5	29 – 35
93210–06ME6	32 – 20
	42 – 13
93210–08006	29 – 63
93210–08287	35 – 14
	35 – 16
93210–09165	29 – 47
93210–10M74	29 – 44
93210–11073	29 – 66
93210–11368	29 – 33
93210–12N52	29 – 42
93210–13M63	3 – 34
	5 – 7
	40 – 11
93210–16275	36 – 9
93210–19MJ3	31 – 16
	40 – 19
93210–22164	32 – 8
	42 – 10
93210–24M79	5 – 29
	10 – 12
	40 – 20
	40 – 21
93210–26130	32 – 9
	32 – 9
	42 – 8
	42 – 9
93210–32738	1 – 8
	10 – 17
93210–39ME4	7 – 10
	40 – 17
93210–43MJ0	28 – 5
93210–45161	32 – 15
	42 – 12
	42 – 27
93210–50768	29 – 39
93210–64ME7	32 – 53
	42 – 18
93210–65M50	32 – 56
	42 – 20
93306–00612	32 – 52
93315–22004	32 – 54
93315–220V7	32 – 6
93332–00005	32 – 39
93332–000W5	32 – 3
93430–06024	38 – 12
	39 – 12

PART NO. N° PIECES	REF. NO.
93450–17129	4 – 9
93501–08001	29 – 71
93505–32038	29 – 24
	29 – 50
93604–10M03	3 – 18
	32 – 24
93605–17002	9 – 3
93606–11M24	33 – 4
93606–12019	3 – 3
	5 – 11
	31 – 3
93608–12M05	31 – 18
93700–06M03	22 – 2
	25 – 5
	26 – 8
	27 – 12
	27 – 12
94702–00418	1 – 6
	5 – 32
95023–06025	12 – 9
95023–06030	12 – 7
95380–05600	10 – 9
	38 – 9
	39 – 9
95380–05800	2 – 6
95380–06600	38 – 43
	39 – 43
95380–06700	23 – 16
	24 – 16
95380–08600	10 – 20
	27 – 9
95380–10600	27 – 52
95380–12600	26 – 35
95380–12800	28 – 20
95817–10035	9 – 4
95875–06020	11 – 26
95895–06014	13 – 14
	23 – 11
	24 – 11
95895–06016	31 – 17
95895–06030	13 – 6
95895–06035	32 – 31
95895–06100	7 – 11
95895–08016	10 – 19
97013–06020	30 – 8
97013–06025	3 – 5
	3 – 11
	31 – 12

PART NO. N° PIECES	REF. NO.
97013–08045	15 – 10
	15 – 14
97075–06050	30 – 13
97080–08016	26 – 24
97095–05012	30 – 6
97095–05016	12 – 10
97095–06012	19 – 19
97095–06014	19 – 28
	21 – 20
	24 – 26
	24 – 33
	26 – 22
97095–06016	13 – 11
	13 – 11
	13 – 11
	14 – 10
	14 – 21
	16 – 11
97095–06020	3 – 14
	5 – 20
	5 – 23
	12 – 13
	23 – 5
	24 – 5
97095–06025	10 – 33
	14 – 4
	23 – 36
	25 – 28
	32 – 21
97095–06040	15 – 2
	32 – 17
	42 – 29
97095–06065	23 – 35
	25 – 27
97380–05025	38 – 10
	39 – 10
97380–08030	38 – 37
	39 – 37
97513–06516	31 – 9
97575–06520	13 – 2
	15 – 17
	16 – 2
	32 – 57
97575–06525	31 – 7
97575–08530	28 – 12
	28 – 25
	30 – 16
97575–10580	28 – 20

PART NO. N° PIECES	REF. NO.
97595–06512	5 – 27
	7 – 6
97595–06535	23 – 20
	25 – 12
97595–06555	7 – 3
	21 – 28
	24 – 25
97595–06610	15 – 5
	16 – 7
97595–08545	28 – 15
97602–04316	29 – 10
97780–60520	20 – 5
97803–04010	8 – 5
97885–06008	28 – 27
97885–06012	17 – 3
97980–04108	8 – 36
97980–04114	8 – 29
	41 – 10
97980–04245	19 – 26
97980–05216	30 – 19
98507–04010	5 – 17
98580–04006	8 – 2
	38 – 40
	39 – 40
98580–04008	8 – 15
98980–05025	3 – 32
98980–05035	5 – 5
99080–08600	27 – 34
99080–10600	26 – 16
	27 – 26
99530–10114	15 – 13

PART NO. N° PIECES	REF. NO.

PART NO. N° PIECES	REF. NO.

PART NO. N° PIECES	REF. NO.

PART NO. N° PIECES	REF. NO.