YAMAHA

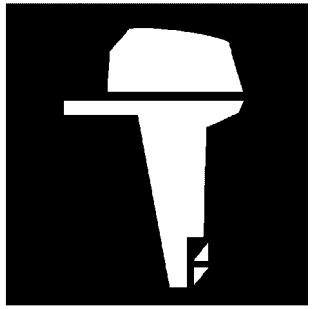

PARTS CATALOGUE
CATALOGUE DE PIECES DETACHEES

F20DET'17 (6DN8)

YAMAHA
GENUINE
Parts & Accessories

1R6DN-300FA

( )

F20DET
PARTS CATALOGUE
©2017 by Yamaha Motor Co., Ltd.
1st edition, April 2017
All rights reserved.
Any reprinting or unauthorized use
without the written permission of
Yamaha Motor Co., Ltd.
is expressly prohibited.
Printed in Japan.

F20DET
CATALOGUE DE PIECES DETACHEES
©2017 par Yamaha Motor Co., Ltd.
1re édition, avril 2017
Tous droits réservés
Toute réimpression ou utilisation
non autorisée sans la permission écrite
de la Yamaha Motor Co., Ltd.
est formellement interdite.
Imprimé au Japon

FOREWORD

This Parts Catalogue is related to the parts for the model(s) on the cover page. When you are ordering replacement parts, please refer to this Parts Catalogue and quote both part numbers and part names correctly.

1. Modifications or additions which have been made after the issue of the Parts Catalogue will be announced in the Parts News.
   It is advisable that you make the necessary corrections to the Parts Catalogue according to the Parts News.

2. Abbreviations
   The following abbreviations are used in this Parts Catalogue.
   "UR" Use specified parts number.
   "UN" Use as many as needed.
   "AP" Alternate Parts
   "LM" Locally Made (Parts need to be ordered locally)
   "F#" Frame No. (Applicable machine No.)
   "O/S" Over Size

3. The number of components for assembly
   - Parts, which are to be supplied in an assembly, are listed with a dot (.) in front of the part name as shown below.
   - The numeral appearing to the right of each component part indicates the quantity of parts for each assembly unit.

PART NO.	DESCRIPTION	Q'TY	REMARKS
2F5–83310–60	FRONT FLASHER LIGHT ASSY	2	
115–83311–60	.BULB (6V–18W)	1	

4. Applicable colours of graphics are represented in the "REMARKS" as shown below.

PART NO.	DESCRIPTION	Q'TY	REMARKS
2N4–24110–00–X5	FUEL TANK COMP.	2	MXR
3J1–24240–10	.GRAPHIC, FUEL TANK	1	FOR MXR

5. Note that the illustrations for reference in finding parts numbers are not to be used for assembling. When assembling, please use the applicable service manual.

6. The asterisk (*) before a reference number indicates modified items after the first edition.

7. Applicable Serial No.
   Engine Serial No.

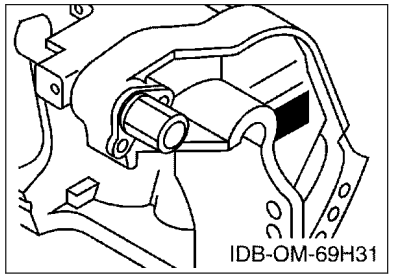

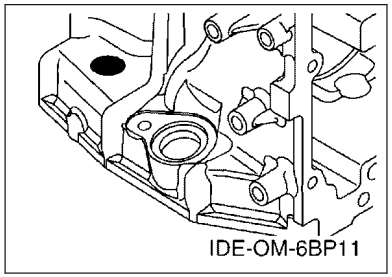

8. Applicable Engine Starting Serial No.

Model	Serial No.	Model	Serial No.
F20D	6DNK-1000581		

9. Applicable Colour Code

Abbreviation	Colour Name	Colour Code
DBN1	DARK BLUISH GRAY 1	008D

10. Quantity Column Information

Column No.	Name Of Q'ty Column	Applicable Model
1	6DN8	F20DET

AVANT–PROPOS

Ce catalogue de pièces détachées concerne les pièces pour le(s) modèle(s) indiqué(s) sur la page de couverture. Lorsque vous commandez des pièces de rechange, veuillez vous référer à ce catalogue de pieces détachées et indiquer clairement les numéros et les noms des pièces détachées.

1. Les modifications ou ajouts ayant été effectués après la parution du catalogue de pièces détachées seront décrits dans les Bulletins d'information concernant les pièces détachées.
   Il est recommandé que vous apportiez les corrections nécessaires au catalogue des pièces détachées en vous référant aux Bulletins d'information.

2. Abréviations
   Dans ce catalogue, les abréviations suivantes sont utilisées:
   "UR" Utiliser le numéro de pièces spécifié.
   "UN" Utiliser autant que nécessaire.
   "AP" Pièces de substitution
   "LM" Fabrication locale (les pièces doivent être commandées localement.)
   "F#" N° de cadre (applicable au N° de série)
   "O/S" Surdimensionné

3. Nombre de pièces d'un assemblage
   - Les pièces fournies comme composants d'un assemblage sont précédées d'un point (.) de la manière indiquée ci–dessous.
   - Le chiffre apparaissant à la droite de chaque composant indique la quantité de pièces pour chaque unité d'assemblage.

N° PIECES	DESCRIPTION	QTE	REMARQUES
2F5–83310–60	ENS. CLIGNOTANT AVANT	2	
115–83311–60	.AMPOULE (6V–18W)	1	

4. Les couleurs concernant les graphiques sont indiquées dans la colonne "REMARQUES", comme indiqué ci–dessous.

N° PIECES	DESCRIPTION	QTE	REMARQUES
2N4–24110–00–X5	RESERVOIR A ESSENCE.	2	MXR
3J1–24240–10	.GRAPHIQUE	1	POUR MXR

5. Veuillez noter que les illustrations sont indiquées à titre de référence pour trouver les numéros de pièces, non pour être utilisées lors de l'assemblage. Lors de l'assemblage, veuillez utiliser le manuel d'entretien adéquat.

6. L'astérisque (*) placé devant un numéro de référence indique des éléments qui ont été modifiés après la première édition.

7. N° de série applicable
   N° de Série du moteur

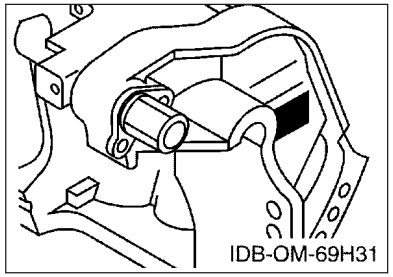

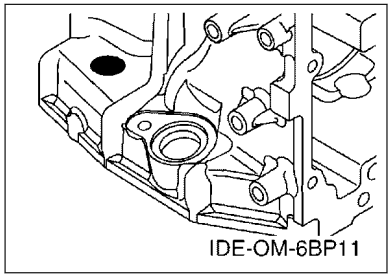

8. N° de série initial du moteur applicable

Modèle	N° de série	Modèle	N° de série
F20D	6DNK-1000581		

9. Code couleur applicable

Abréviation	Nom de la couleur	Code couleur
DBN1	DARK BLUISH GRAY 1	008D

10. Informations relatives à la colonne Quantité

N° de la colonne	Nom de la colonne Qté	Modèle applicable
1	6DN8	F20DET

CONTENTS

SCHEDULED SERVICE PARTS.....1
TOP COWLING.....2
CYLINDER & CRANKCASE 1.....3
CRANKSHAFT & PISTON.....5
CYLINDER & CRANKCASE 2.....6
VALVE.....8
INTAKE.....9
CARBURETOR.....10
OIL PUMP.....12
FUEL.....13
GENERATOR.....15
ELECTRICAL 1.....16
ELECTRICAL 2.....17
ELECTRICAL 3.....18
ELECTRICAL 4.....19
ELECTRICAL 5.....20
STARTING MOTOR.....21
BOTTOM COWLING 1.....22
BOTTOM COWLING 2.....24
CONTROL.....25
BRACKET 1.....27
BRACKET 2.....29
POWER TRIM & TILT ASSY.....30
UPPER CASING.....33
OIL PAN.....34
LOWER CASING & DRIVE 1.....35
LOWER CASING & DRIVE 2.....38
FUEL TANK.....39
STEERING GUIDE.....40
REMOTE CONTROL BOX.....41
REMOTE CONTROL ASSY.....42
REPAIR KIT 1.....45
REPAIR KIT 2.....46
REPAIR KIT 3.....47

INDEX

NUMERICAL INDEX.....49

TABLE DES MATIERES

PIECES MAINTENANCE PERIODIQUE.....1
CAPOT SUPERIEUR..... 2
CYLINDRE & CARTER 1..... 3
VILEBREQUIN & PISTON.....5
CYLINDRE & CARTER 2..... 6
SOUPAPE..... 8
ADMISSION.....9
CARBURATEUR..... 10
POMPE A HUILE.....12
CARBURANT..... 13
GENERATRICE.....15
PARTIE ELECTRIQUE 1.....16
PARTIE ELECTRIQUE 2.....17
PARTIE ELECTRIQUE 3.....18
PARTIE ELECTRIQUE 4.....19
PARTIE ELECTRIQUE 5.....20
DEMARREUR ELECTRIQUE.....21
CAPOT INFERIEUR 1.....22
CAPOT INFERIEUR 2.....24
COMMANDE..... 25
SUPPORT 1..... 27
SUPPORT 2..... 29
PUISSANCE PARER ET INCLINER..... 30
FOURREAU.....33
VENTILATEUR D'HUILE..... 34
BOITIER D'HELICE TRANSMISSION1.....35
BOITIER D'HELICE TRANSMISSION2.....38
RESERVOIR A CARBURANT.....39
FIXATION DE DIRECTION..... 40
BOITIER DE COMMANDE A DISTANCE..... 41
BOITIER DE COMMANDE A DISTANCE..... 42
KITS DE REPARATION 1..... 45
KITS DE REPARATION 2..... 46
KITS DE PEPARATION 3.....47

INDEX

INDEX NUMERIQUE.....49

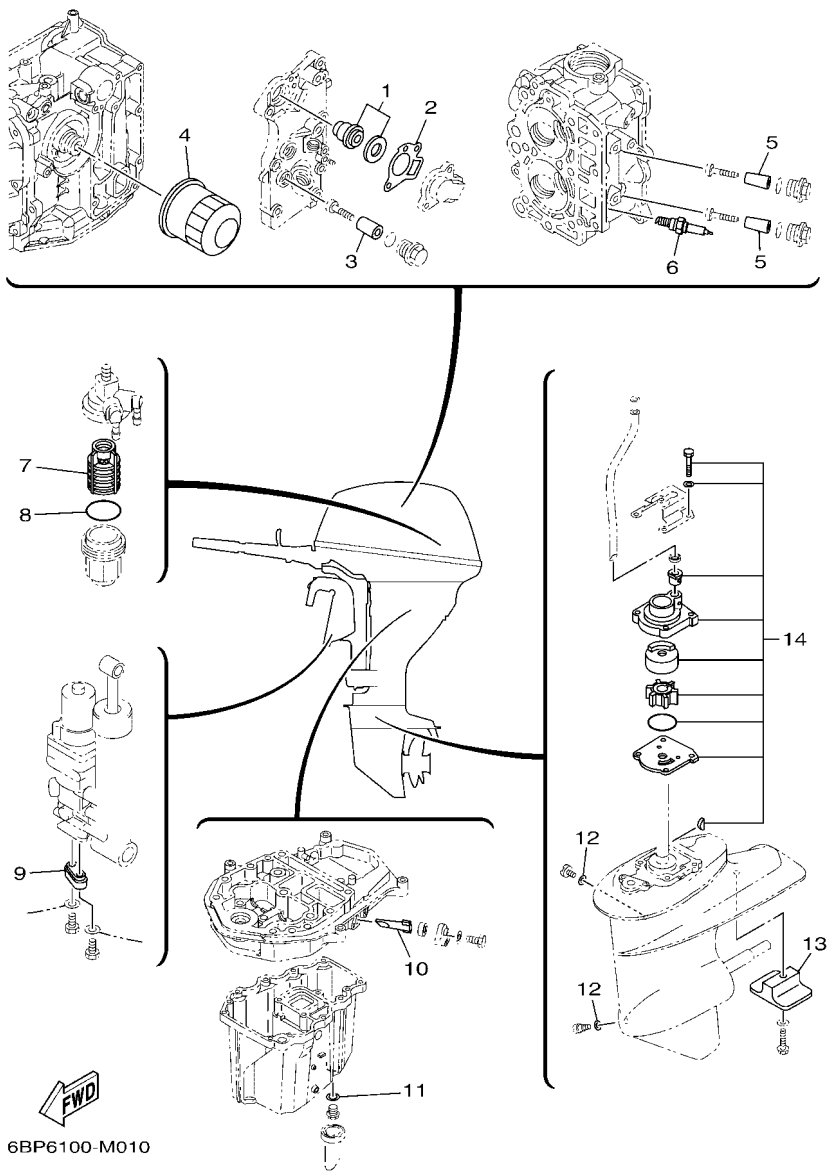

FIG. 1 SCHEDULED SERVICE PARTS — PIECES MAINTENANCE PERIODIQUE

REF. NO.	PART NO. N° PIECES	DESCRIPTION DESCRIPTION	6DN8					REMARKS REMARQUES
1	6G8–12411–03	THERMOSTAT THERMOSTAT	1					
2	62Y–12414–00	GASKET, COVER JOINT, COUVERCLE	1					
3	6G8–11325–00	ANODE ANODE	1					
4	5GH–13440–60	ELEMENT ASSY, OIL CLEANER ELEMENT, FILTRE A HUILE	1					
5	6BL–11325–00	ANODE ANODE	2					
6	94702–00418	PLUG, SPARK (NGK DPR6EB-9) BOUGIE D,ALLUMAGE (NGK DPR6EB-	2					
7	61N–24563–10	ELEMENT, FILTER ELEMENT, FILTRE	1					
8	93210–32738	O-RING JOINT TORIQUE	1					
9	65W–45251–00	ANODE ANODE	1					
10	62Y–11325–00	ANODE ANODE	1					
11	90430–14M09	GASKET JOINT	1					
12	90430–08003	GASKET JOINT	2					
13	61N–45251–01	ANODE ANODE	1					
14	61N–W0078–11	WATER PUMP REPAIR KIT KIT DE REPARATION DE LA POMPE	1					

FIG. 2 TOP COWLING — CAPOT SUPERIEUR

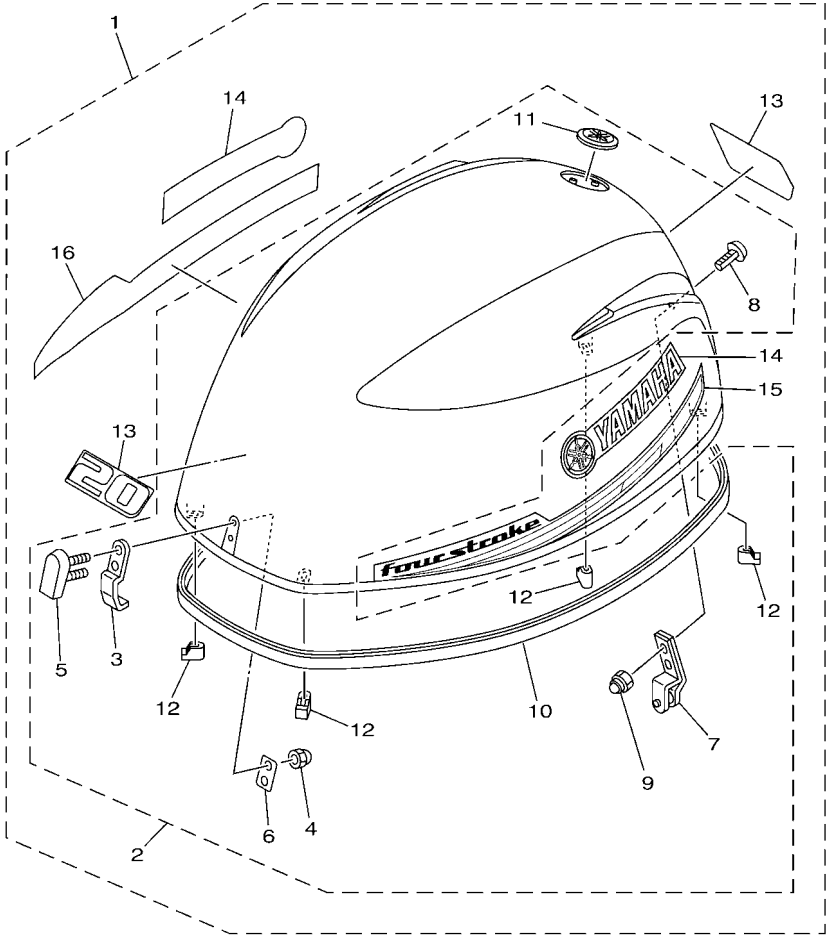

6DN8300-R020

REF. NO.	PART NO. N° PIECES	DESCRIPTION DESCRIPTION	6DN8					REMARKS REMARQUES
1	6DN–42610–11	TOP COWLING ASSY CAPOT (ENS.)	1					
2	6BL–4261A–10	.TOP COWLING W/O GRAPHICS .CAPOT SUPERIEUR SANS GRAPHIQUE	1					
3	6BL–42651–00	..HOOK ..CROCHET	1					
4	95380–05800	..NUT ..ECROU	2					
5	6BG–42851–00	..COVER, CLAMP ..COUVERCLE, BRIDE	1					
6	6BG–42649–00	..HOLDER, CLAMP BAND ..SUPPORT, SANDOW DE SERRAGE	1					
7	6BL–42652–00	..HOOK ..CROCHET	1					
8	90109–06047	..BOLT ..BOULON	2					
9	90185–06M05	..NUT, SELF-LOCKING ..ECROU,AUTO-BLOQUANT	2					
10	6CJ–42615–00	..SEAL ..JOINT	1					
11	6AH–42697–10	..TUNING FORK MARK ..MARQUE, YAMAHA	1					
12	6BG–42662–00	..DAMPER ..AMORTISSEUR	4					
13	6DN–42677–10	.GRAPHIC, FRONT .ADHESIF, AVANT	2					
14	6BP–42681–00	.MARK, COWLING .ADHESIF, CAPOT	2					
15	6FM–42675–00	.GRAPHIC, SIDE 1 .EMBLEME	1					
16	6FM–42676–00	.GRAPHIC, SIDE 2 .EMBLEME	1					

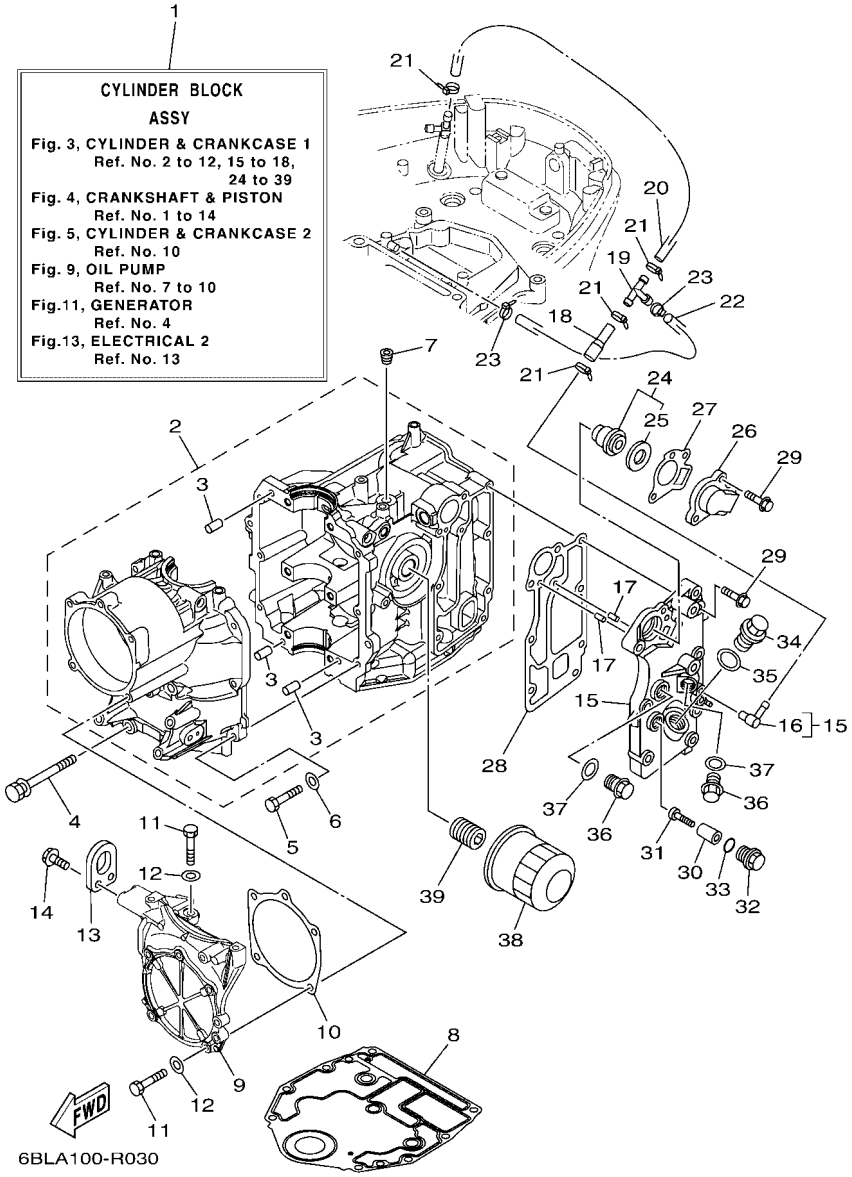

FIG. 3 CYLINDER & CRANKCASE 1 — CYLINDRE & CARTER 1

REF. NO.	PART NO. N° PIECES	DESCRIPTION DESCRIPTION	6DN8					REMARKS REMARQUES
1	6BL–W009B–02–1S	CYLINDER BLOCK ASSY CYLINDRE GROUPE (ENS.)	1					
2	6BL–15100–02	CRANKCASE ASSY CARTER DE MOTEUR COMPLET	1					
3	93606–12019	.PIN, DOWEL .GOUPILLE	3					
4	90119–08M01	BOLT, WITH WASHER BOULON, AVEC RONDELLE	6					
5	97013–06025	BOLT BOULON	7					
6	92903–06600	WASHER, PLATE RONDELLE, PLATE	7					
7	90344–51003	PLUG, TAPER SCREW PLOT, FILETE CONIQUE	1					
8	6BG–11351–00	GASKET, CYLINDER JOINT, D'EMBASE	1					
9	6BL–15121–00–1S	CRANKCASE 2 CARTER DE MOTEUR	1					
10	6BL–15663–00	SEAL JOINT	1					
11	97013–06025	BOLT BOULON	6					
12	92903–06600	WASHER, PLATE RONDELLE, PLATE	6					
13	62Y–11119–00	HANGER, ENGINE ANNEAU, LEVAGE	1					
14	97595–06520	BOLT, WITH WASHER VIS HEXAGONAL AVC RONDELLE	2					
15	6BL–41113–01–1S	OUTER COVER, EXHAUST COUVERCLE, ECHAPPEMENT	1					
16	6H1–11372–00	.NIPPLE, HOSE .RACCORD, TUYAU	1					
17	93604–10M03	PIN, DOWEL CLAVETTE	2					
18	6BP–12481–00	PIPE 1 DURITE 1	1					
19	688–24378–00	PIPE, JOINT 3 DURITE RACCORDEMENT 3	1					
20	90445–09251	HOSE (L350) DURITE (L350)	1					
21	90465–11M10	CLAMP BRIDE	4					
22	90445–09104	HOSE (L300) DURITE (L300)	1					
23	90465–11M10	CLAMP BRIDE	2					
24	6G8–12411–03	THERMOSTAT THERMOSTAT	1					
25	688–12412–00	.SEAL, THERMOSTAT .JOINT, THERMOSTAT	1					
26	6C5–12413–00–9S	COVER, THERMOSTAT COUVERCLE, THERMOSTAT	1					
27	62Y–12414–00	GASKET, COVER JOINT, COUVERCLE	1					

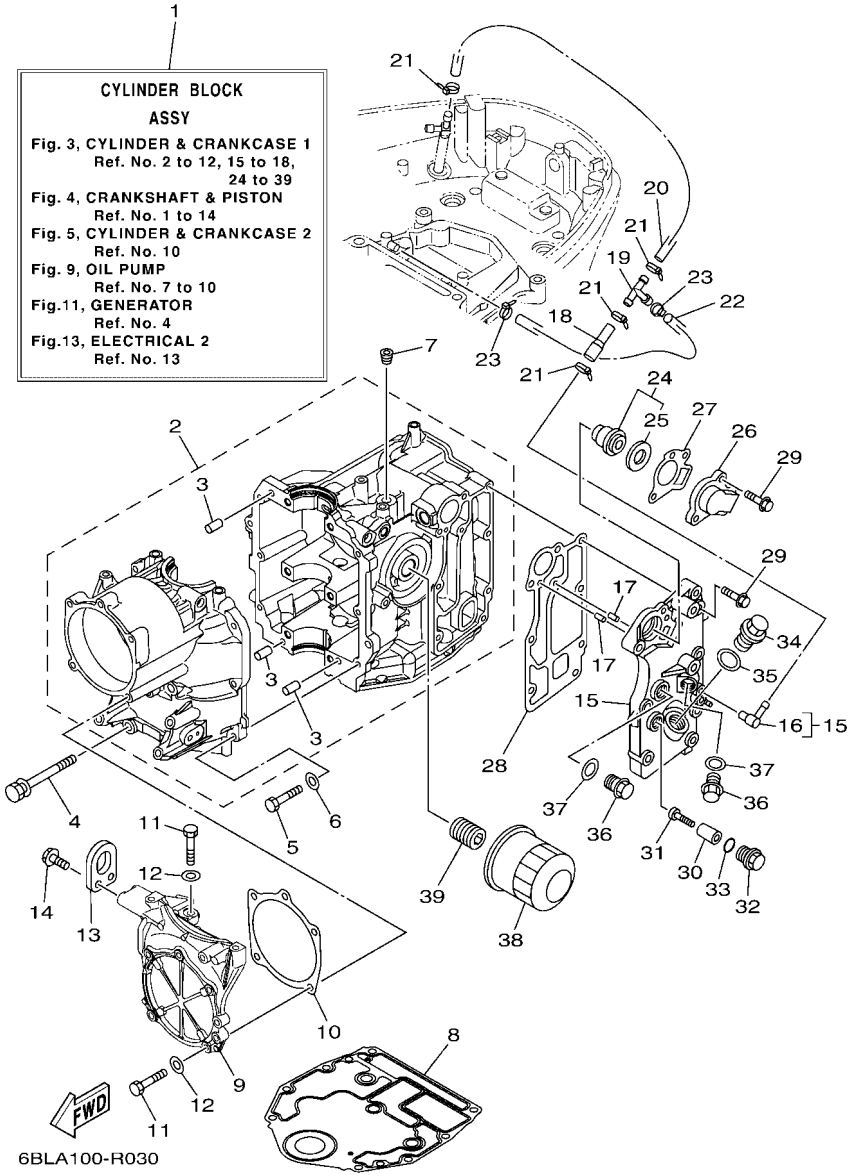

FIG. 3 CYLINDER & CRANKCASE 1 — CYLINDRE & CARTER 1

REF. NO.	PART NO. N° PIECES	DESCRIPTION DESCRIPTION	6DN8					REMARKS REMARQUES
28	6BL–41114–00	GASKET, EXHAUST OUTER COVER JOINT, COUVERCLE D'ECHAPPEMENT	1					
29	90119–06MA5	BOLT, WITH WASHER BOULON, AVEC RONDELLE	8					
30	6G8–11325–00	ANODE ANODE	1					
31	98980–05025	SCREW, BIND VIS, DE PRESSION	1					
32	6G8–11197–A0	PLUG, BLIND PLOT, BORGNE	1					
33	93210–13M63	O-RING JOINT TORIQUE	1					
34	90340–18M09	PLUG, STRAIGHT SCREW PLOT, FILETE DROIT	1					
35	90201–186F1	WASHER, PLATE RONDELLE, PLATE	1					
36	90340–14M06	PLUG, STRAIGHT SCREW PLOT, FILETE DROIT	2					
37	90430–14115	GASKET JOINT	2					
38	5GH–13440–60	ELEMENT ASSY, OIL CLEANER ELEMENT, FILTRE A HUILE	1					
39	6C5–12858–00	BOLT, UNION BOULON, RACCORD	1					

FIG. 4 CRANKSHAFT & PISTON — VILEBREQUIN & PISTON

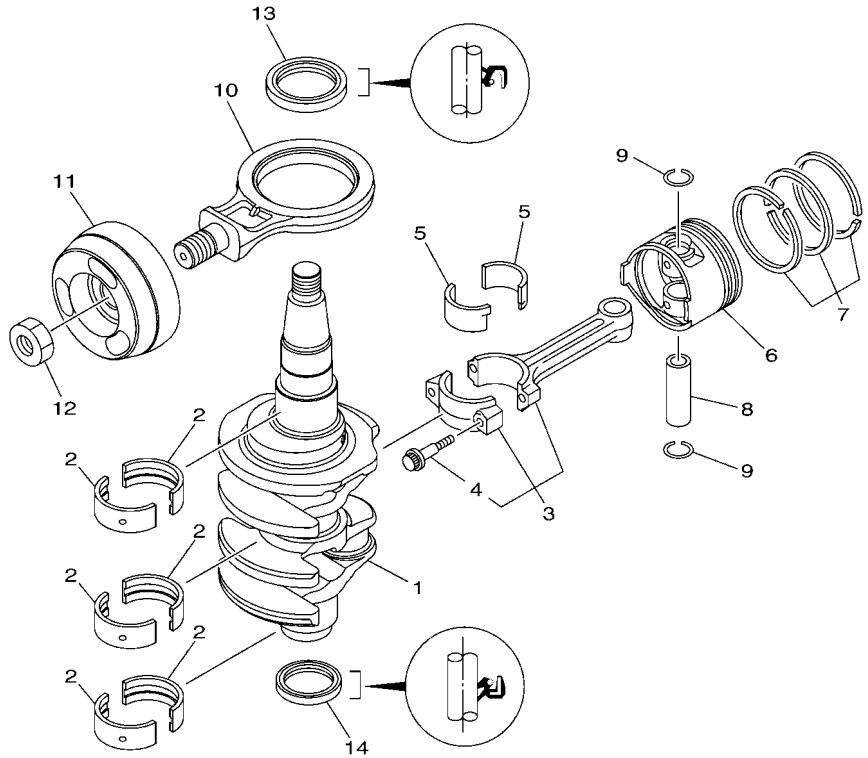

6BP1100-H030

REF. NO.	PART NO. N° PIECES	DESCRIPTION DESCRIPTION	6DN8					REMARKS REMARQUES
1	6BL–11411–00	CRANKSHAFT VILEBREQUIN COMPLET	1					
2	6BG–11416–10	PLANE BEARING, CRANKSHAFT 1 COUSSINET DE VILEBREQUIN 1	6					UR RED UR RED
	6BG–11416–20	PLANE BEARING, CRANKSHAFT 1 COUSSINET DE VILEBREQUIN 1	6					UR PINK UR PINK
	6BG–11416–30	PLANE BEARING, CRANKSHAFT 1 COUSSINET DE VILEBREQUIN 1	6					UR GREEN UR GREEN
3	6C5–11650–10	CONNECTING ROD ASSY BIELLE COMPLETTE	2					
4	6C5–11654–00	.BOLT, CONNECTING ROD .BOULON, BIELLE	2					
5	6CJ–11656–20	PLANE BEARING, CONNECTING ROD ROULEMENT DE BIELLE	4					UR PINK UR PINK
	6CJ–11656–30	PLANE BEARING, CONNECTING ROD ROULEMENT DE BIELLE	4					UR GREEN UR GREEN
	6CJ–11656–10	PLANE BEARING, CONNECTING ROD ROULEMENT DE BIELLE	4					UR RED UR RED
6	69W–11631–01–97	PISTON (STD) PISTON (STD)	2					
	69W–11635–01	PISTON (0.25MM O/S) PISTON (0.25MM O/S)	2					AP AP
	69W–11636–01	PISTON (0.50MM O/S) PISTON (0.50MM O/S)	2					AP AP
7	67C–11603–00	PISTON RING SET (STD) JEU DE SEGMENTS (STD)	2					
	67C–11604–00	PISTON RING SET (0.25MM O/S) JEU DE SEGMENTS (0.25MM O/S)	2					AP AP
	67C–11605–00	PISTON RING SET (0.50MM O/S) JEU DE SEGMENTS (0.50MM O/S)	2					AP AP
8	62Y–11633–00	PIN, PISTON AXE, PISTON	2					
9	93450–17129	CIRCLIP CIRCLIP, TYPE S	4					
10	6BL–11665–00	CONNECTING ROD ASSY 3 BIELLE COMPLETE	1					
11	6BL–11642–00	PISTON 2 (STD) PISTON 2 (STD)	1					
12	90170–20137	NUT ECROU	1					
13	93102–43M42	OIL SEAL JOINT SPY	1					
14	93101–35002	OIL SEAL JOINT SPY	1					

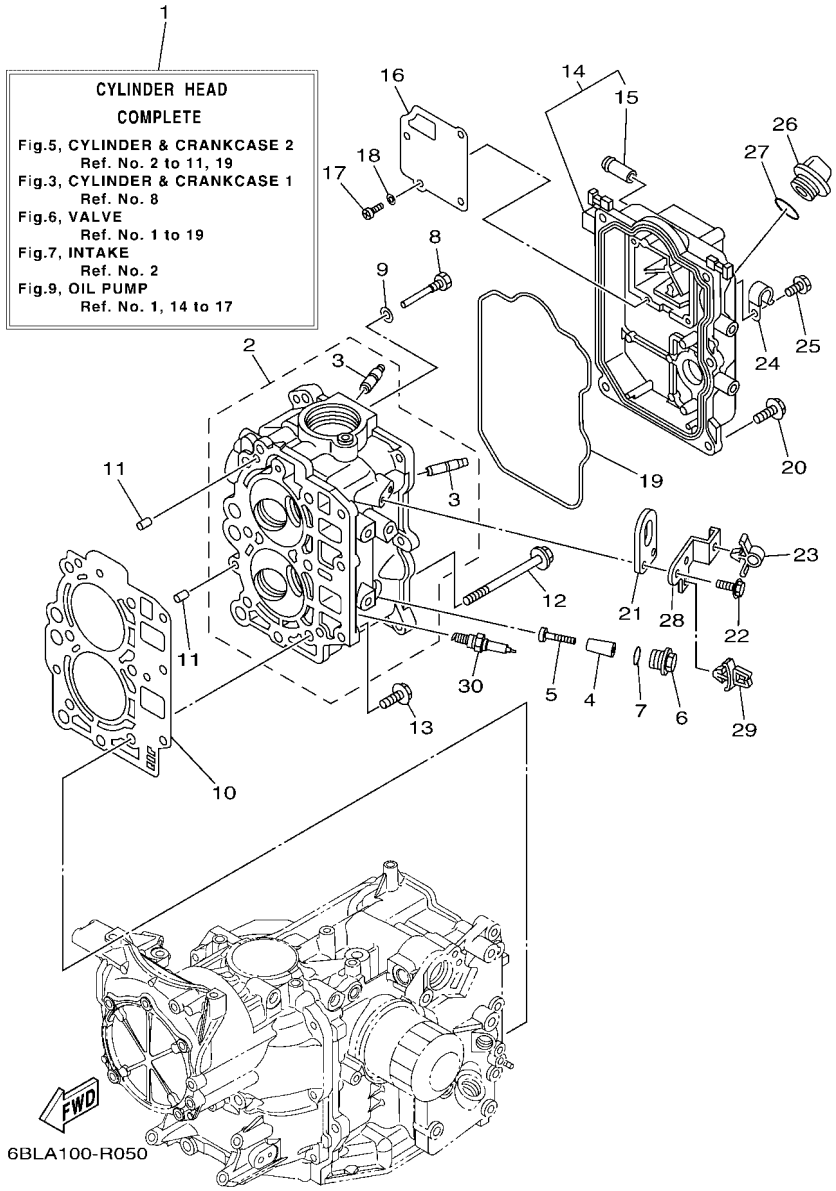

FIG. 5 CYLINDER & CRANKCASE 2 — CYLINDRE & CARTER 2

REF. NO.	PART NO. N° PIECES	DESCRIPTION DESCRIPTION	6DN8					REMARKS REMARQUES
1	6BL–W009A–10–1S	CYLINDER HEAD COMPLETE CULASSE (ENS.)	1					
2	6BL–11111–10–1S	HEAD, CYLINDER 1 CULASSE	1					
3	62Y–11133–30	.GUIDE, VALVE 1 .GUIDE, SOUPAPE 1	4					
4	6BL–11325–00	ANODE ANODE	2					
5	98980–05035	SCREW, BIND VIS, DE PRESSION	2					
6	6G8–11197–A0	PLUG, BLIND PLOT, BORGNE	2					
7	93210–13M63	O-RING JOINT TORIQUE	2					
8	90109–06M65	BOLT BOULON	1					
9	90430–06014	GASKET JOINT	1					
10	6BL–11181–00	GASKET, CYLINDER HEAD 1 JOINT, DE CULASSE 1	1					
11	93606–12019	PIN, DOWEL GOUPILLE	2					
12	90105–09009	BOLT, FLANGE BOULON	6					
13	90119–06MA3	BOLT, WITH WASHER BOULON, AVEC RONDELLE	3					
14	6BL–11191–00–1S	COVER, CYLINDER HEAD 1 COUVERCLE, CULASSE 1	1					
15	62Y–14485–00	.PIPE, JOINT .DURITE	1					
16	6BG–11168–00	COVER, BREATHER COUVERCLE, RENIFLARD	1					
17	98507–04010	SCREW, PAN HEAD VIS, TETE TRONCONIQUE	4					
18	92907–04600	WASHER RONDELLE	4					
19	6BL–11356–00	SEAL, CYLINDER 2 JOINT, SPY CYLINDRE	1					
20	97595–06520	BOLT, WITH WASHER VIS HEXAGONAL AVC RONDELLE	5					
21	62Y–11119–00	HANGER, ENGINE ANNEAU, LEVAGE	1					
22	97595–06520	BOLT, WITH WASHER VIS HEXAGONAL AVC RONDELLE	2					
23	90464–09023	CLAMP BRIDE	1					
24	90465–08M83	CLAMP BRIDE	1					
25	97595–06512	BOLT, WITH WASHER VIS HEXAGONAL AVC RONDELLE	1					
26	6G8–15363–00	PLUG, OIL PLOT, HUILE	1					
27	93210–24M79	O-RING JOINT TORIQUE	1					

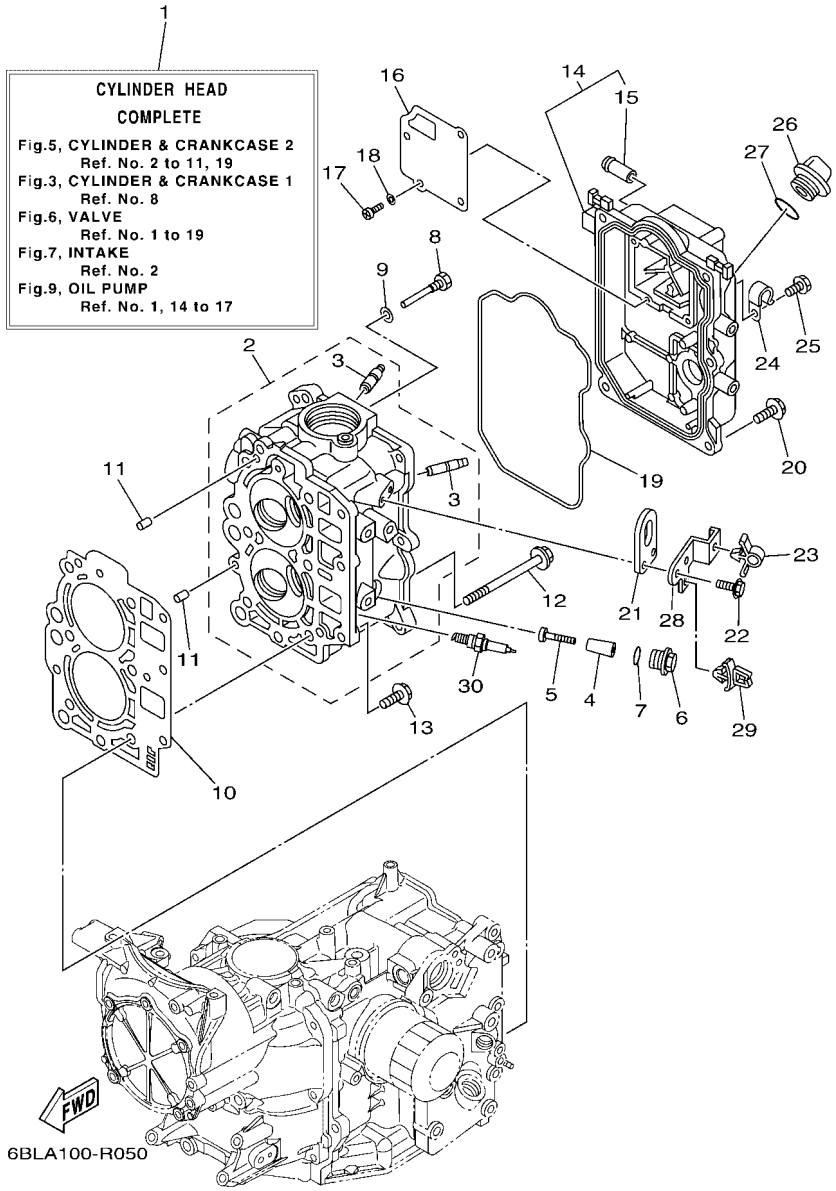

FIG. 5 CYLINDER & CRANKCASE 2 — CYLINDRE & CARTER 2

REF. NO.	PART NO. N° PIECES	DESCRIPTION DESCRIPTION	6DN8					REMARKS REMARQUES
28	6BL–82398–00	PLATE 3 PLAQUETTE 3	1					
29	90464–06001	CLAMP BRIDE	1					
30	94702–00418	PLUG, SPARK (NGK DPR6EB-9) BOUGIE D,ALLUMAGE (NGK DPR6EB-	2					

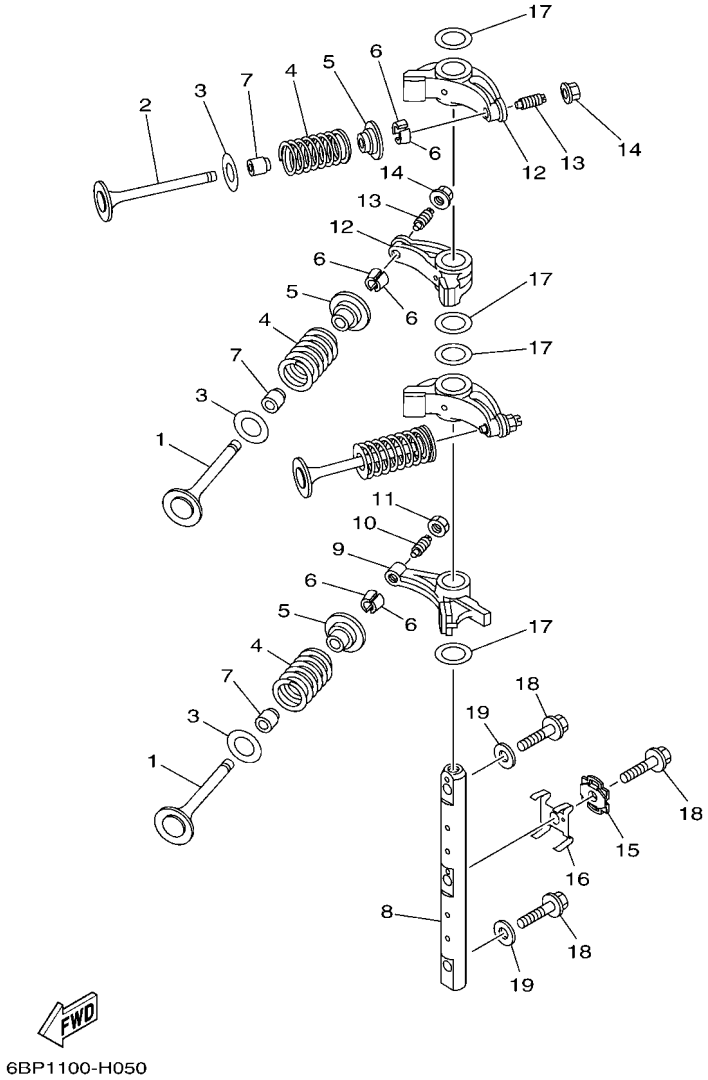

FIG. 6 VALVE SOUPAPE

REF. NO.	PART NO. N° PIECES	DESCRIPTION DESCRIPTION	6DN8					REMARKS REMARQUES
1	69W–12111–00	VALVE, INTAKE SOUPAPE, ADMISSION	2					
2	69W–12121–10	VALVE, EXHAUST SOUPAPE, ECHAPPEMENT	2					
3	62Y–12116–00	SEAT, VALVE SPRING SIEGE, RESSORT DE SOUPAPE	4					
4	51Y–12114–00	SPRING, VALVE OUTER RESSORT DE SOUPAPE, EXTERNE	4					
5	30X–12117–00	RETAINER, VALVE SPRING BUTEE DE RESSORT DE SOUPAPE	4					
6	30X–12118–00	LOCK, VALVE SPRING RETAINER FRAISE, SOUPAPE	8					
7	51Y–12119–00	SEAL, VALVE STEM JOINT, QUEUE DE SOUPAPE	4					
8	6BL–12146–00	SHAFT, ROCKER AXE, CULBUTEUR	1					
9	62Y–12151–00	ARM, VALVE ROCKER CULBUTEUR	1					
10	64J–12159–00	SCREW, VALVE ADJUSTING VIS, REGLAGE DE SOUPAPE	1					
11	62Y–12158–00	NUT, LOCK CONTRE-ECROU	1					
12	6C5–12151–00	ARM, VALVE ROCKER CULBUTEUR	3					
13	6C5–12159–00	SCREW, VALVE ADJUSTING VIS, REGLAGE DE SOUPAPE	3					
14	6C5–12158–00	NUT, LOCK CONTRE-ECROU	3					
15	6BL–12231–00	GUIDE, STOPPER 1 GUIDE, BUTEE 1	1					
16	6BL–12233–00	PLATE, GUIDE STOPPER 1 PLAQUE, GUIDE BUTEE 1	1					
17	90201–16014	WASHER, PLATE RONDELLE, PLATE	4					
18	90105–08060	BOLT, FLANGE BOULON	3					
19	92990–08200	WASHER, PLAIN RONDELLE, PLATE	2					

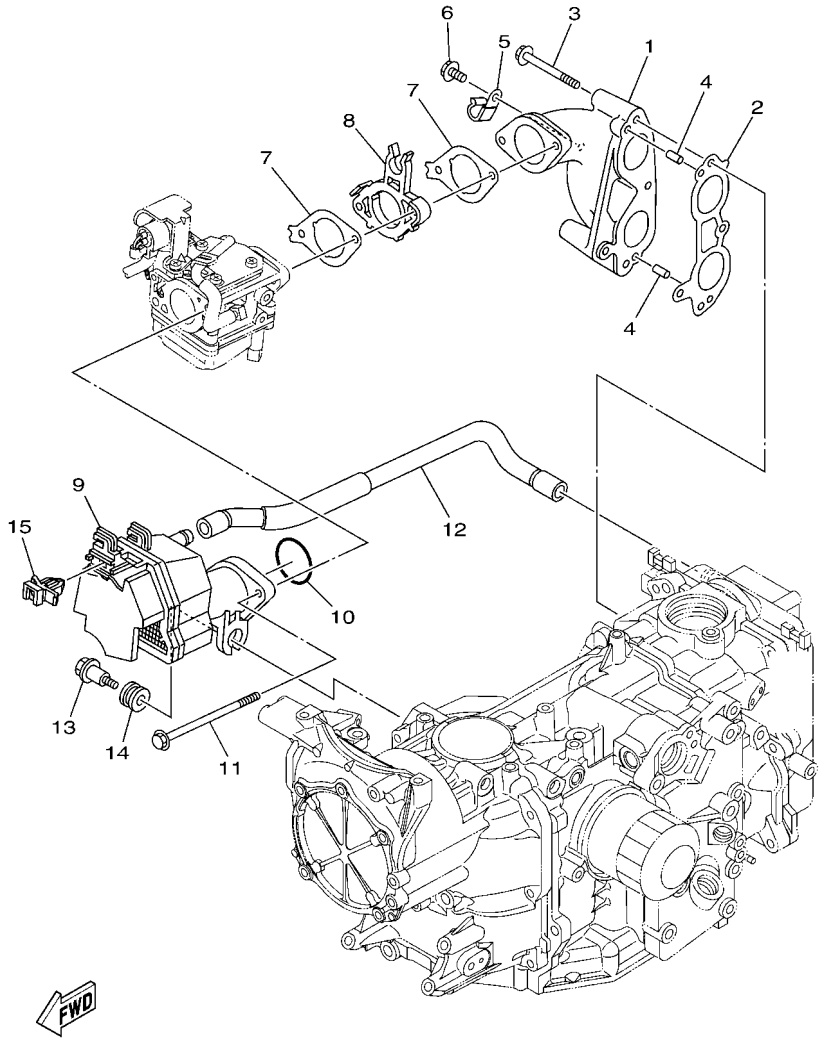

6BP7100-N070

FIG. 7 INTAKE — ADMISSION

REF. NO.	PART NO. N° PIECES	DESCRIPTION DESCRIPTION	6DN8					REMARKS REMARQUES
1	6BL–13641–00–94	MANIFOLD, INTAKE 1 TUBULURE, ADMISSION 1	1					
2	6BL–13645–00	GASKET, MANIFOLD 1 JOINT, TUBULURE 1	1					
3	97595–06555	BOLT, WITH WASHER VIS HEXAGONAL AVC RONDELLE	4					
4	91690–50014	PIN, SPRING AGRAFFE	2					
5	90465–08M83	CLAMP BRIDE	1					
6	97595–06512	BOLT, WITH WASHER VIS HEXAGONAL AVC RONDELLE	1					
7	6BL–13646–00	GASKET, MANIFOLD 2 JOINT, TUBULURE 2	2					
8	6BL–14271–00	INSULATOR ISOLATEUR	1					
9	6BL–14440–00	SILENCER ASSY, INTAKE SIENCIEUX D'ADMISSION	1					
10	93210–39ME4	O-RING JOINT TORIQUE	1					
11	95895–06100	BOLT, FLANGE BOULON	2					
12	6BL–15373–00	PIPE, BREATHER DURITE DE RENIFLARD	1					
13	90109–06MA1	BOLT BOULON	1					
14	90480–16616	GROMMET PASSE-FIL	1					
15	90464–09M47	CLAMP BRIDE	1					

FIG. 8 CARBURETOR CARBURATEUR

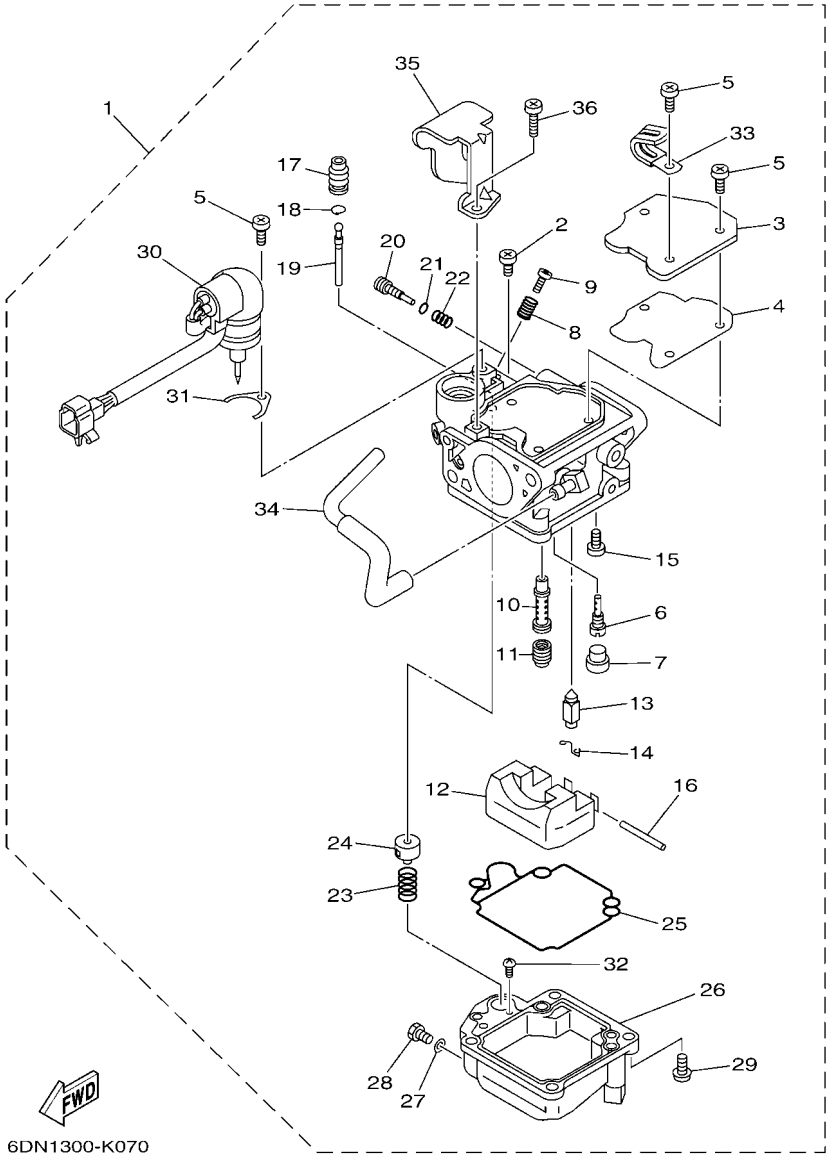

REF. NO.	PART NO. N° PIECES	DESCRIPTION DESCRIPTION	6DN8					REMARKS REMARQUES
1	6DN–14301–00	CARBURETOR ASSY 1 CARBURATEUR COMPLET 1	1					
2	98580–04006	.SCREW, PAN HEAD .VIS	1					
3	65W–14572–00	.PLATE .PLAQUE	1					
4	65W–14126–10	.GASKET .JOINT	1					
5	97803–04010	.SCREW, PAN HEAD .VIS, CRUCIFORME	4					
6	676–14948–05	.JET (#45) .GICLEUR (#45)	1					
7	679–14966–00	.RUBBER CAP .CAPUCHON	1					
8	90501–10326	.SPRING, COMPRESSION .RESSORT, COMPRESSION	1					
9	63V–14523–00	.SCREW, STOP .VIS, BUTEE	1					
10	65W–14947–90	.JET, NEEDLE .GICLEUR DE STARTER	1					
11	6BL–14943–28	.JET, MAIN (#105) .GICLEUR, PRINCIPAL (#105)	1					
12	63V–14985–00	.FLOAT .FLOTTEUR	1					
13	6AH–14546–00	.VALVE, NEEDLE .POINTEAU	1					
14	663–14159–00	.CLIP .JONC	1					
15	98580–04008	.SCREW, PAN HEAD .VIS	1					
16	6H4–14548–00	.PIN, FLOAT ARM .AXE, BRAS DE FLOTTEUR	1					
17	65W–14373–02	.COVER, PLUNGER CAP .COUVERCLE DE PLONGEUR	1					
18	65W–1439G–00	.CLIP 1 .JONC 1	1					
19	65W–14379–00	.ROD, STARTER .TRINGLE, STARTER	1					
20	67C–14923–20	.SCREW, PILOT .VIS, RALENTI	1					
21	67C–14397–00	.O-RING .JOINT TORIQUE	1					
22	67C–14555–00	.SPRING .RESSORT	1					
23	65W–14335–00	.SPRING, PLUNGER .RESSORT, PLONGEUR	1					
24	65W–14371–00	.PLUNGER, STARTER .PLONGEUR, STARTER	1					
25	65W–14384–00	.GASKET, FLOAT CHAMBER .JOINT, CUVE DE FLOTTEUR	1					
26	65W–14980–20	.BODY, FLOAT CHAMBER .CORPS, CUVE DE FLOTTEUR	1					
27	65W–14398–00	.GASKET .JOINT	1					

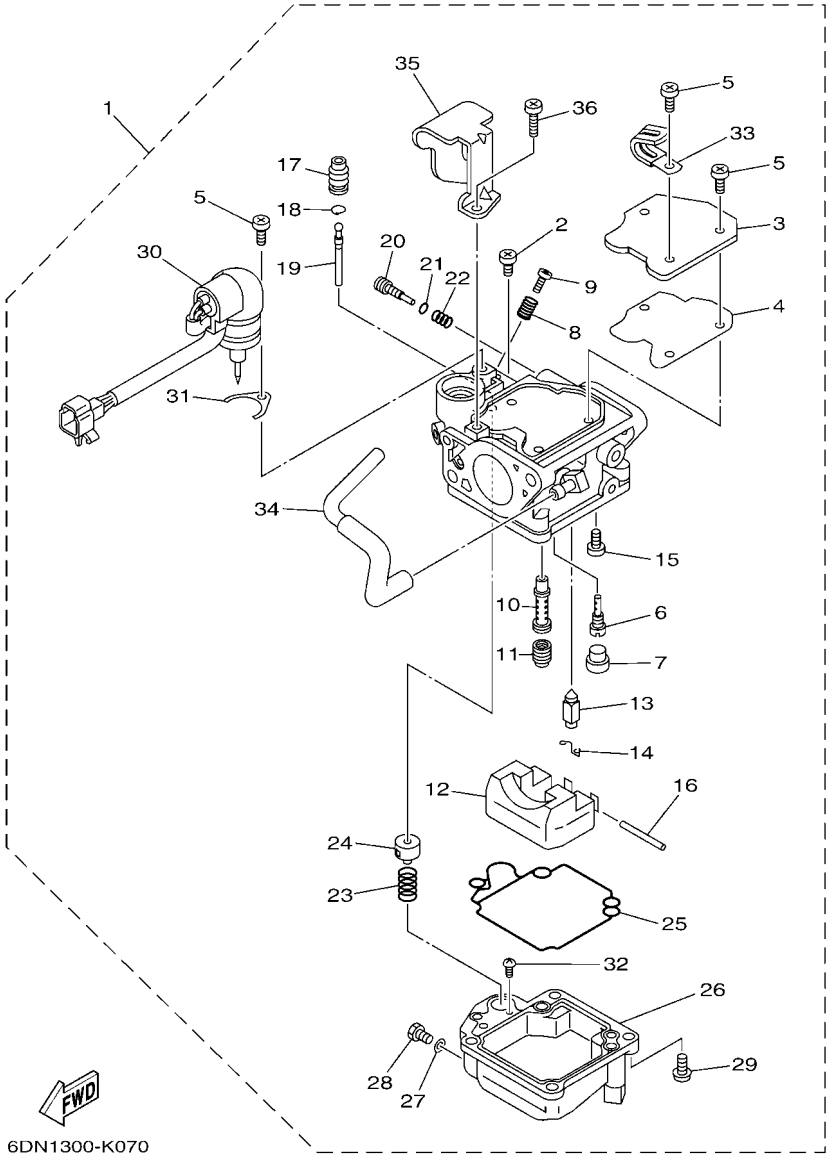

FIG. 8 CARBURETOR — CARBURATEUR

REF. NO.	PART NO. N° PIECES	DESCRIPTION DESCRIPTION	6DN8					REMARKS REMARQUES
28	65W–14992–00	.SCREW, DRAIN .BOUCHON, PURGE	1					
29	97980–04114	.SCREW, WITH WASHER .VIS, AVEC RONDELLE	4					
30	6BL–14380–00	.PRIME STARTER ASSY .STARTER AUTOMATIQUE	1					
31	65W–14346–00	.PLATE .PLAQUE	1					
32	67C–14567–00	.SCREW .VIS	1					
33	67F–14255–00	.PLATE .PLAQUE	1					
34	65W–14807–00	.HOSE COMP. .DURITE (ENS.)	1					
35	6DN–14346–00	.PLATE .PLAQUE	1					
36	97980–04108	.SCREW, WITH WASHER .VIS, AVEC RONDELLE	2					

FIG. 9 OIL PUMP — POMPE A HUILE

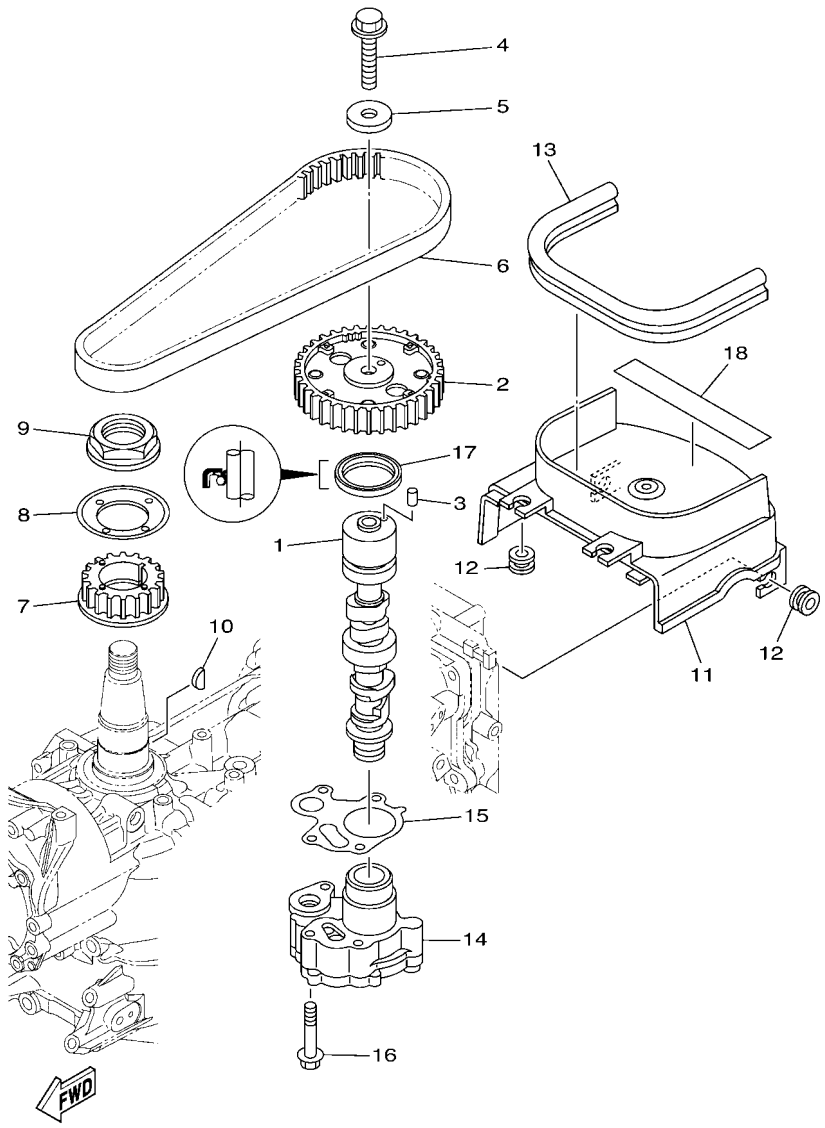

6DN5300-N090

REF. NO.	PART NO. N° PIECES	DESCRIPTION DESCRIPTION	6DN8					REMARKS REMARQUES
1	6BL–12171–00	CAMSHAFT 1 ARBRE A CAMES 1	1					
2	6C5–11537–10	GEAR, DRIVEN PIGNON SECONDAIRE	1					
3	93605–17002	PIN, DOWEL AXE	1					
4	95817–10035	BOLT, FLANGE BOULON, A COLLERETTE	1					
5	90201–10144	WASHER, PLATE RONDELLE, PLATE	1					
6	6C5–46241–00	BELT COURROIE TRAPEZOIDALE	1					
7	6C5–11536–00	GEAR, DRIVE ENGRENAGE, MENANT	1					
8	62Y–11557–00	WASHER 1 RONDELLE 1	1					
9	90179–35001	NUT ECROU	1					
10	90280–03017	KEY, WOODRUFF CLAVETTE, DEMI-LUNE	1					
11	6BL–46297–00	COVER, DUST COUVERCLE, POUSSIERE	1					
12	90480–12314	GROMMET PASSE-FIL	4					
13	6BL–42617–00	DAMPER, FORM BOURRELET, CAOUTCHOUC	1					
14	6BL–13300–00	OIL PUMP ASSY POMPE A HUILE COMPLETE	1					
15	6C5–13329–00	GASKET, PUMP COVER JOINT, COUVERCLE DE POMPE	1					
16	90119–06025	BOLT, WITH WASHER BOULON, AVEC RONDELLE	4					
17	93102–37M40	OIL SEAL JOINT SPY	1					
18	6BP–13437–61	MARK, CAUTION MAKER	1					

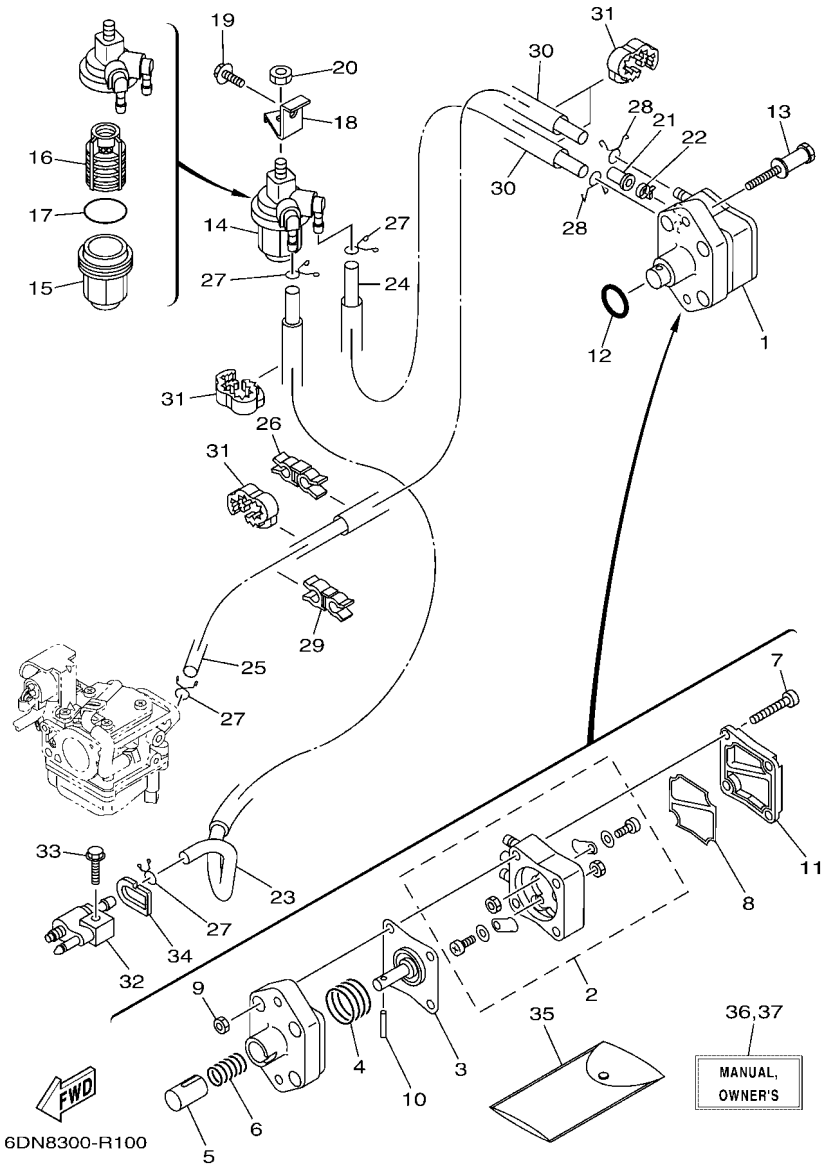

FIG. 10 FUEL — CARBURANT

REF. NO.	PART NO. N° PIECES	DESCRIPTION DESCRIPTION	6DN8					REMARKS REMARQUES
1	62Y–24410–04	FUEL PUMP ASSY POMPE A ESSENCE	1					
2	62Y–24415–01	.BODY 4 .CORPS 4	1					
3	62Y–24411–02	.DIAPHRAGM .DIAPHRAGME	1					
4	62Y–24423–00	.SPRING, DIAPHRAGM .RESSORT, DIAPHRAGME	1					
5	62Y–13131–01	.PLUNGER .PLONGEUR	1					
6	62Y–24454–00	.SPRING .RESSORT	1					
7	62Y–24444–01	.SCREW .VIS	4					
8	6C5–24471–00	.DIAPHRAGM .DIAPHRAGME	1					
9	95380–05600	.NUT .ECROU	4					
10	62Y–24374–01	.PIN .PIN	1					
11	6C5–24414–00	.BODY 3 .CORPS 3	1					
12	93210–24M79	O-RING JOINT TORIQUE	1					
13	90109–06266	BOLT BOULON	2					
14	61N–24560–10	FILTER ASSY ENS FILTRE	1					
15	61N–24521–00	.CUP, FILTER .CUVETTE, FILTRE	1					
16	61N–24563–10	.ELEMENT, FILTER .ELEMENT, FILTRE	1					
17	93210–32738	.O-RING .JOINT TORIQUE	1					
18	6D5–24566–00	BRACKET, FILTER SUPPORT, FILTRE	1					
19	95895–08016	BOLT, FLANGE BOULON	1					
20	95380–08600	NUT ECROU	1					
21	6BL–24481–00	PLUG COUVERCLE	1					
22	90465–11M10	CLAMP BRIDE	1					
23	6BL–24311–00	PIPE, FUEL 1 DURITE A ESSENCE	1					
24	90445–10M20	HOSE (L150) DURITE (L150)	1					
25	90445–10MG7	HOSE (L350) DURITE (L350)	1					
26	90464–10M59	CLAMP BRIDE	1					
27	90467–09M17	CLIP JONC	4					

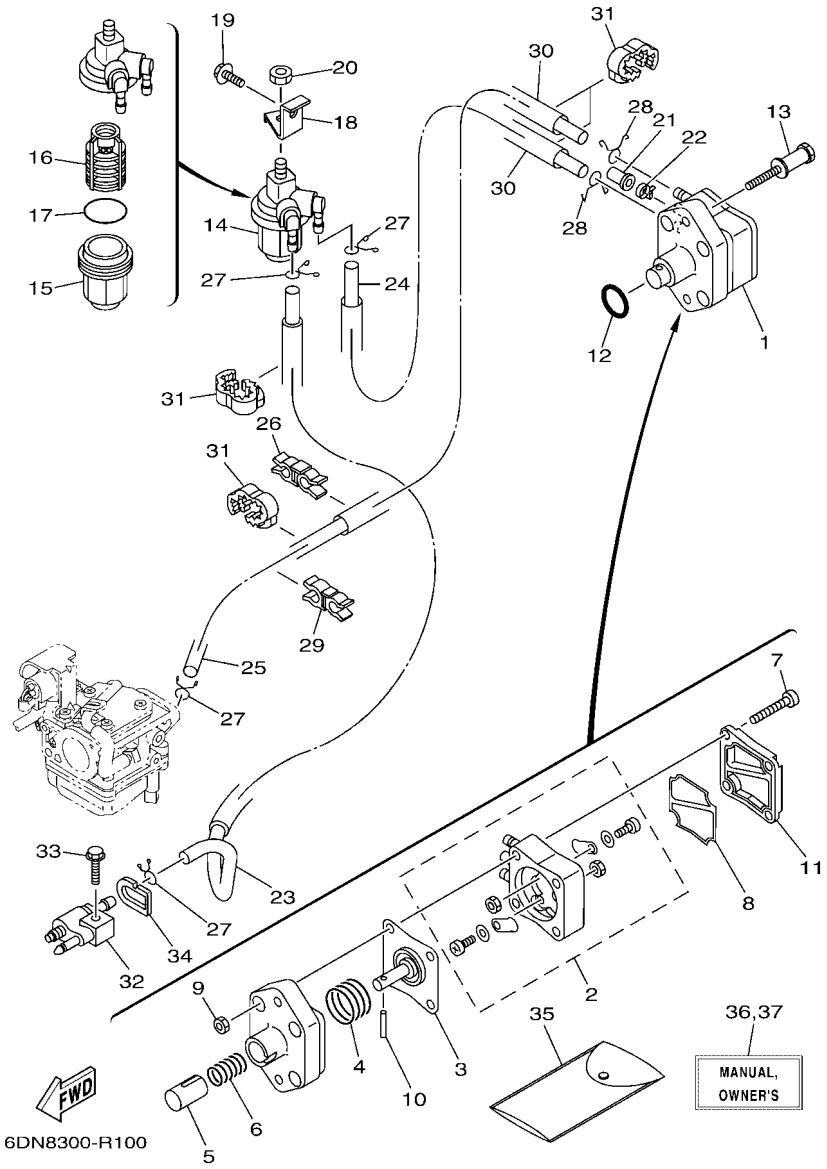

FIG. 10 FUEL — CARBURANT

REF. NO.	PART NO. N° PIECES	DESCRIPTION DESCRIPTION	6DN8					REMARKS REMARQUES
28	90467–10M04	CLIP JONC	2					
29	90464–11009	CLAMP BRIDE	1					
30	90446–15003	HOSE (L100) DURITE (L100)	2					
31	90464–13227	CLAMP BRIDE	4					
32	6G1–24304–10	FUEL PIPE JOINT COMP. 1 DURITE RACCORDEMT. A ESSENCE	1					
33	97595–06525	BOLT, WITH WASHER VIS HEXAGONAL AVC RONDELLE	1					
34	61N–24329–00	SEAL JOINT	1					
35	62Y–28100–00	TOOL KIT TROUSSE A OUTILS	1					AP AP
36	6BP–28199–78–E0	MANUAL,OWNER'S MANUEL D'UTILISATION	1					UR (E) UR (E)
	6BP–28199–78–F0	MANUAL,OWNER'S MANUEL D'UTILISATION	1					UR (F) UR (F)
	6BP–28199–78–S0	MANUAL,OWNER'S MANUEL D'UTILISATION	1					UR (ES) UR (ES)
	6BP–28199–78–G0	MANUAL,OWNER'S MANUEL D'UTILISATION	1					UR (D) UR (D)
	6BP–28199–78–D0	MANUAL,OWNER'S MANUEL D'UTILISATION	1					UR (NL) UR (NL)
	6BP–28199–78–H0	MANUAL,OWNER'S MANUEL D'UTILISATION	1					UR (I) UR (I)
37	6BP–28199–88–K0	MANUAL,OWNER'S MANUEL D'UTILISATION	1					UR (DK) UR (DK)
	6BP–28199–88–R0	MANUAL,OWNER'S MANUEL D'UTILISATION	1					UR (GR) UR (GR)
	6BP–28199–88–P0	MANUAL,OWNER'S MANUEL D'UTILISATION	1					UR (P) UR (P)
	6BP–28199–88–N0	MANUAL,OWNER'S MANUEL D'UTILISATION	1					UR (N) UR (N)
	6BP–28199–88–M0	MANUAL,OWNER'S MANUEL D'UTILISATION	1					UR (S) UR (S)
	6BP–28199–88–L0	MANUAL,OWNER'S MANUEL D'UTILISATION	1					UR (SF) UR (SF)

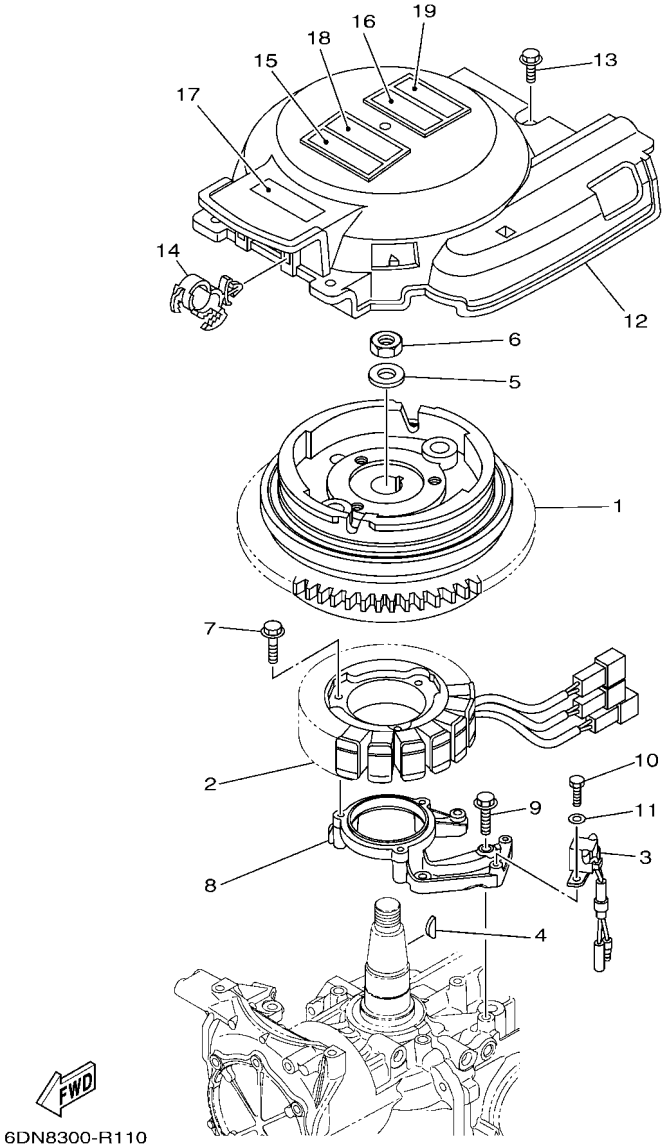

FIG. 11 GENERATOR GENERATRICE

REF. NO.	PART NO. N° PIECES	DESCRIPTION DESCRIPTION	6DN8					REMARKS REMARQUES
1	6BL–85550–00	ROTOR ASSY ROTOR CPLT	1					
2	6BL–85510–00	STATOR ASSY STATOR CPLT	1					
3	6AH–85580–00	COIL, PULSER BOBINE, PULSEUR	1					
4	6H4–11545–00	KEY, WOODRUFF CLAVETTE, DEMI-LUNE	1					
5	90201–21M18	WASHER, PLATE RONDELLE, PLATE	1					
6	90170–20137	NUT ECROU	1					
7	95023–06030	BOLT BOULON, A COLLERETTE	3					
8	6BG–85561–00–94	BASE, MAGNETO BASE, MAGNETO	1					
9	95023–06025	BOLT BOULON, A COLLERETTE	4					
10	97095–05016	BOLT BOULON	2					
11	92995–05600	WASHER RONDELLE	2					
12	6BL–81337–00	COVER, FLYWHEEL COUVERCLE, VOLANT	1					
13	97595–06520	BOLT, WITH WASHER VIS HEXAGONAL AVC RONDELLE	3					
14	90464–12183	CLAMP BRIDE	2					
15	6EE–81994–40	LABEL, SAFETY ETIQUETTE, SECURITE	1					
16	6EE–81995–40	LABEL, WARNING ETIQUETTE, AVERTISSEMENT	1					
17	6AG–81996–00	MARK MARQUE	1					
18	6EE–81994–50	LABEL, SAFETY ETIQUETTE, SECURITE	1					
19	6EE–81995–50	LABEL, WARNING ETIQUETTE, AVERTISSEMENT	1					

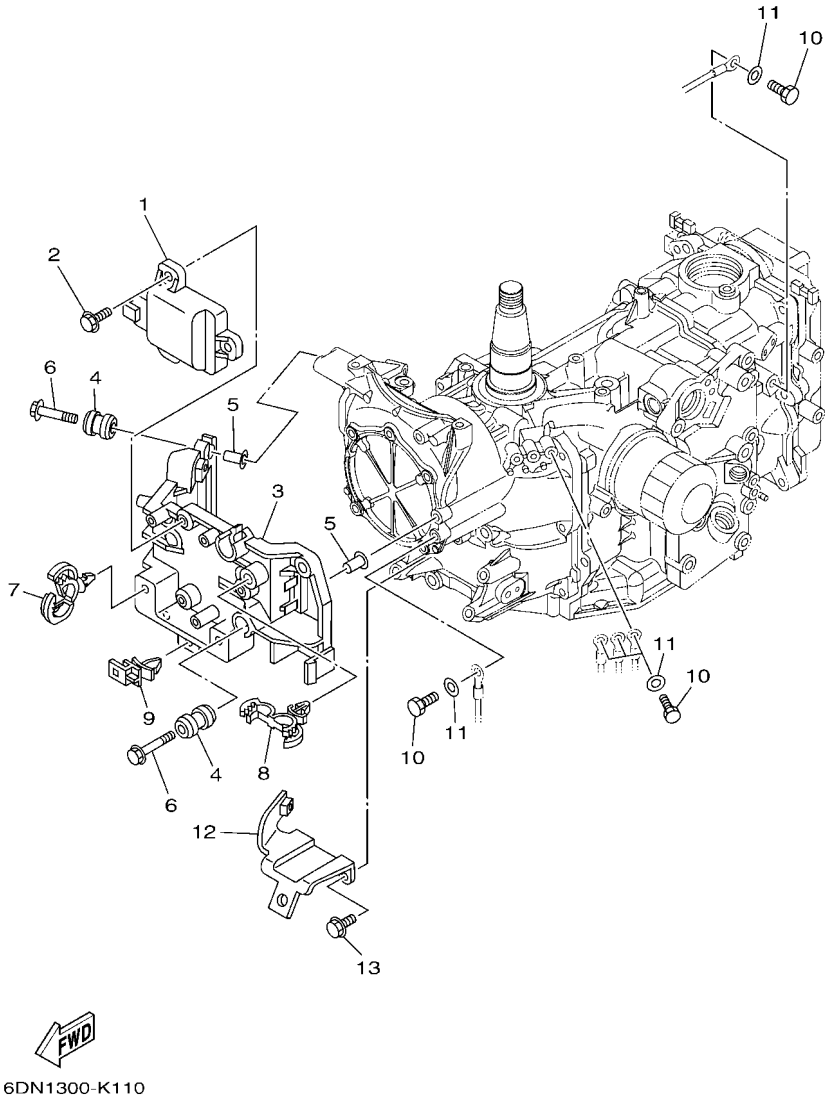

FIG. 12 ELECTRICAL 1 — PARTIE ELECTRIQUE 1

REF. NO.	PART NO. N° PIECES	DESCRIPTION DESCRIPTION	6DN8					REMARKS REMARQUES
1	6BL–85540–00	C.D.I. UNIT ASSY BLOC C.D.I.	1					
2	97575–06520	BOLT, WITH WASHER VIS HEXAGONAL AVC RONDELLE	3					
3	6BL–81948–00	BRACKET SUPPORT	1					
4	6A0–82317–00	DAMPER, IGNITION COIL AMORTISSEUR, BOBINE D'ALLUM	4					
5	90387–06119	COLLAR COLLERETTE	4					
6	95895–06030	BOLT, FLANGE BOULON	4					
7	90464–12183	CLAMP BRIDE	2					
8	90464–18246	CLAMP BRIDE	2					
9	90464–12002	CLAMP BRIDE	1					
10	97095–06016	BOLT BOULON	5					
11	92995–06600	WASHER RONDELLE	5					
12	6BL–82554–00	STAY, NEUTRAL SWITCH SUPPORT, CONT DE POINT-MORT	1					
13	95895–06014	BOLT, FLANGE BOULON	2					

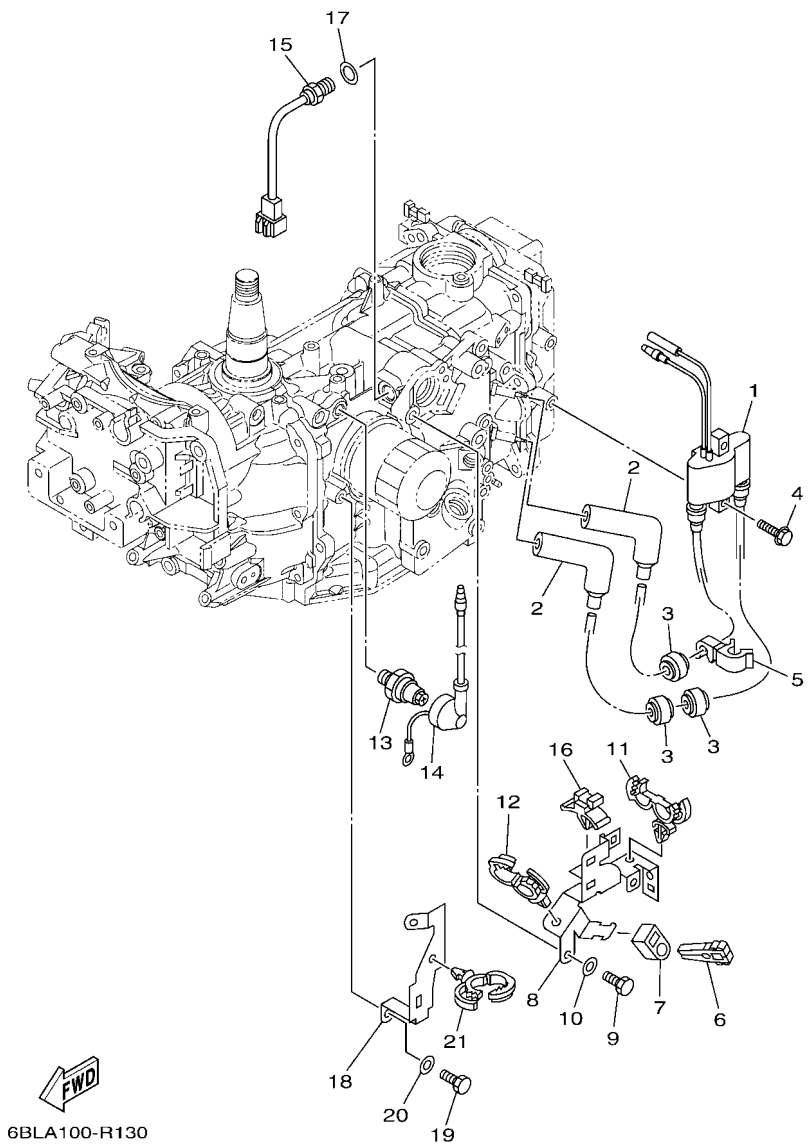

FIG. 13 ELECTRICAL 2 — PARTIE ELECTRIQUE 2

REF. NO.	PART NO. N° PIECES	DESCRIPTION DESCRIPTION	6DN8					REMARKS REMARQUES
1	6F5–85570–13	IGNITION COIL ASSY BOBINE D'ALLUMAGE (ENS.)	1					
2	6AH–82370–00	PLUG CAP ASSY ANTIPARASITE	2					
3	90480–25003	GROMMET PASSE-FIL	3					
4	97595–06525	BOLT, WITH WASHER VIS HEXAGONAL AVC RONDELLE	2					
5	90464–09018	CLAMP BRIDE	1					
6	67F–2812A–00	PULLER, FUSE TENDEUR, FUSIBLE	1					
7	67C–82155–00	BAND COLLIER	1					
8	6BL–8339X–00	CLAMP, CORD COLLIER, CORDON	1					
9	97095–06016	BOLT BOULON	2					
10	92995–06600	WASHER RONDELLE	2					
11	90464–18246	CLAMP BRIDE	1					
12	90464–20181	CLAMP BRIDE	1					
13	64J–82504–00	OIL PRESSURE SWITCH ASSY CONTACTEUR DE PRESSION D'HUILE	1					
14	68V–81315–00	LEAD WIRE ASSY FIL	1					
15	6CJ–85790–00	THERMOSENSOR ASSY SENSITOMETRE	1					
16	90464–09M47	CLAMP BRIDE	1					
17	90430–14115	GASKET JOINT	1					
18	6BL–82389–00	PLATE 2 PLAQUETTE 2	1					
19	97095–06016	BOLT BOULON	2					
20	92995–06600	WASHER RONDELLE	2					
21	90464–20181	CLAMP BRIDE	1					

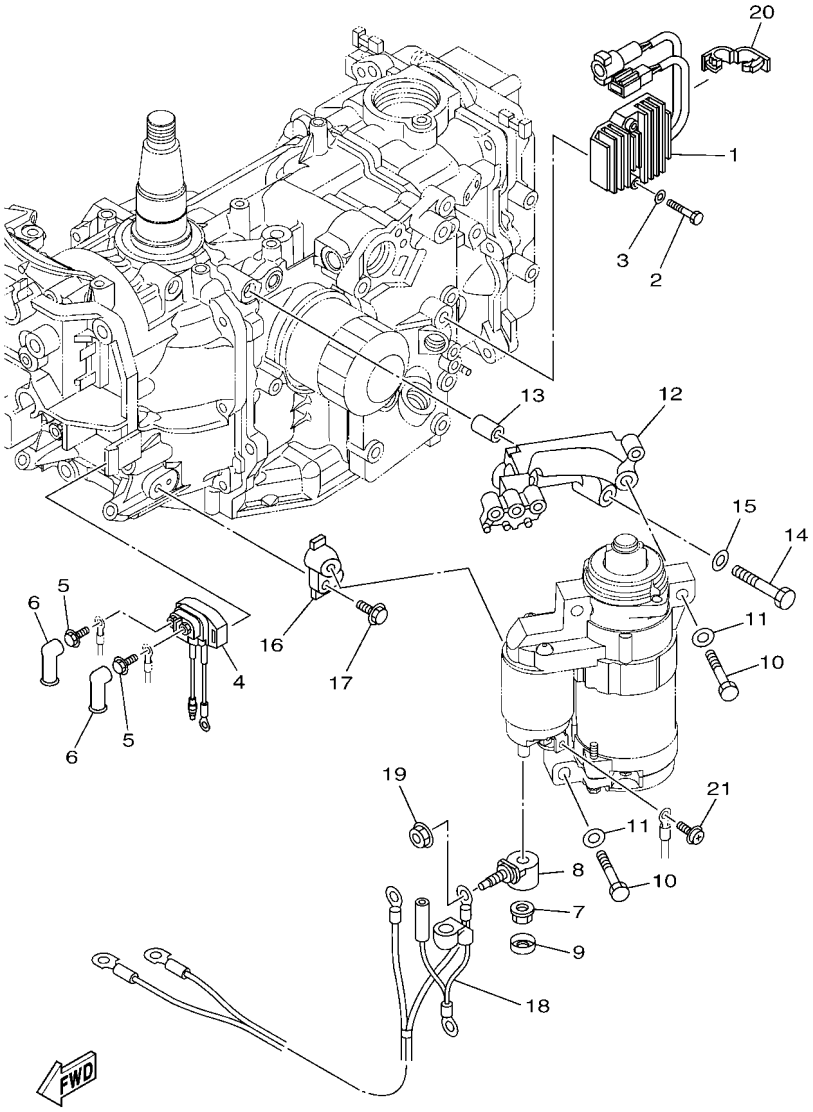

FIG. 14 ELECTRICAL 3 — PARTIE ELECTRIQUE 3

REF. NO.	PART NO. N° PIECES	DESCRIPTION DESCRIPTION	6DN8					REMARKS REMARQUES
1	6BL–81960–00	RECTIFIER & REGULATOR ASSY REDRESSEUR REGULATEUR CPLT	1					
2	97095–06040	BOLT BOULON	2					
3	92995–06600	WASHER RONDELLE	2					
4	68T–81940–00	STARTER RELAY ASSY LANCEUR RELAIS (ENS.)	1					
5	97595–06610	BOLT, WITH WASHER VIS HEXAGONAL AVC RONDELLE	2					
6	6G5–82119–10	COVER, LEAD WIRE GARNITURE, FIL	2					
7	6BL–8182A–00	NUT ECROU	1					
8	6BL–81925–00	TERMINAL BORNE	1					
9	6BL–8183X–00	CAP, TERMINAL COUVERCLE, BORNE	1					
10	97013–08045	BOLT BOULON	3					
11	92903–08600	WASHER, PLATE RONDELLE, PLATE	3					
12	6BL–81822–00	BRACKET, STARTING MOTOR SUPPORT, DEMARREUR ELECTRIQUE	1					
13	99530–10114	PIN, DOWEL GOUJON, D'ASSEMBLAGE	2					
14	97013–08045	BOLT BOULON	2					
15	92903–08600	WASHER, PLATE RONDELLE, PLATE	2					
16	6BL–81823–00	STAY, STARTING MOTOR SUPPORT	1					
17	97575–06520	BOLT, WITH WASHER VIS HEXAGONAL AVC RONDELLE	1					
18	6BL–82105–01	BATTERY CABLE CABLE DE BATTERIE	1					
19	90179–08003	NUT ECROU	1					
20	90464–18004	CLAMP BRIDE	1					
21	90159–05M12	SCREW, WITH WASHER VIS, AVEC RONDELLE	1					

FIG. 15 ELECTRICAL 4 — PARTIE ELECTRIQUE 4

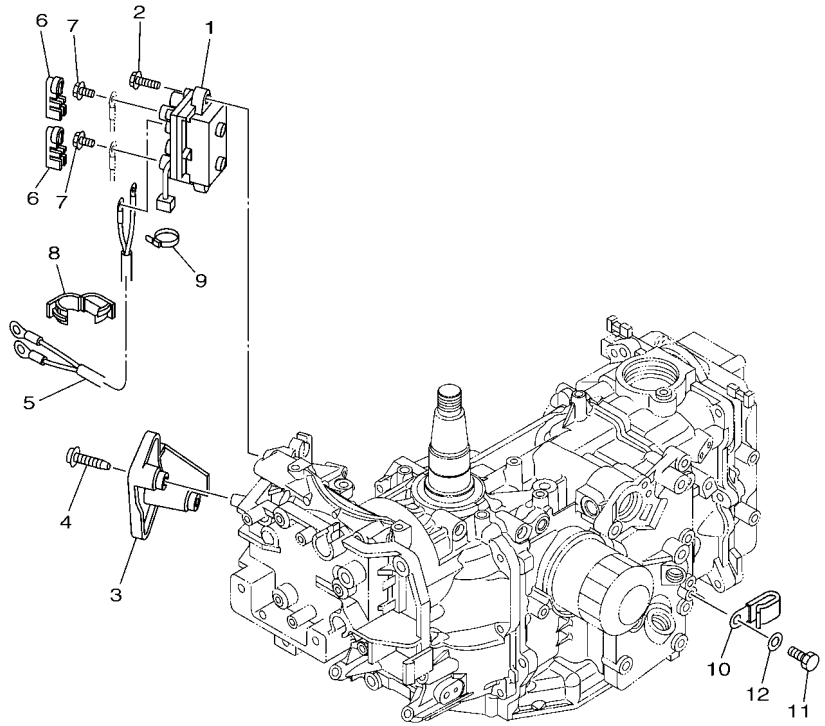

6BP3110-K160

REF. NO.	PART NO. N° PIECES	DESCRIPTION DESCRIPTION	6DN8					REMARKS REMARQUES
1	63P–81950–00	RELAY ASSY RELAIS COMPLET	1					
2	97575–06520	BOLT, WITH WASHER VIS HEXAGONAL AVC RONDELLE	2					
3	6BL–81942–00	COVER COUVERCLE	1					
4	90167–05009	SCREW, TAPPING VIS, TETE FRAISEE	2					
5	6BL–81949–00	WIRE, LEAD FIL	1					
6	6P2–8183X–00	CAP, TERMINAL COUVERCLE, BORNE	2					
7	97595–06610	BOLT, WITH WASHER VIS HEXAGONAL AVC RONDELLE	2					
8	90464–18004	CLAMP BRIDE	1					
9	90465–11M10	CLAMP BRIDE	1					
10	90465–06M90	CLAMP BRIDE	1					
11	97095–06016	BOLT BOULON	1					
12	92995–06600	WASHER RONDELLE	1					

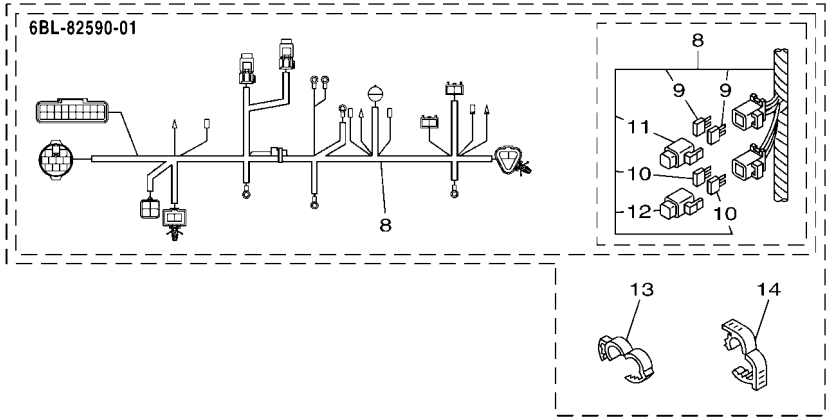

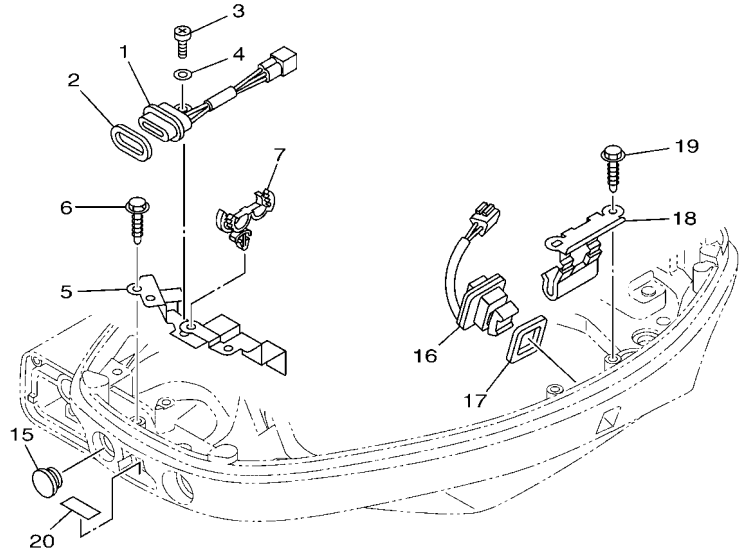

6BL9100-Q160

FIG. 16 ELECTRICAL 5 — PARTIE ELECTRIQUE 5

REF. NO.	PART NO. N° PIECES	DESCRIPTION DESCRIPTION	6DN8					REMARKS REMARQUES
1	62Y–84301–00	PILOT LIGHT ASSY 1 LAMPE-TEMOIN 1	1					
2	6H4–83589–00	GASKET GARNITURE	1					
3	97885–06012	SCREW, PAN HEAD VIS, A ENCOCHE	1					
4	92995–06600	WASHER RONDELLE	1					
5	6BL–82388–00	PLATE PLAQUETTE	1					
6	90109–06M86	BOLT BOULON	2					
7	90464–18246	CLAMP BRIDE	1					
8	6BL–82590–01	WIRE HARNESS ASSY FAISCEAU DE FILS COMPLET	1					
9	67F–82151–00	.FUSE (20A) .FUSIBLE (20A)	2					
10	67F–82151–10	.FUSE (30A) .FUSIBLE (30A)	2					
11	67F–8215B–10	.CAP (YELLOW) .BOUCHON (YELLOW)	1					
12	67F–8215B–20	.CAP (GREEN) .BOUCHON (GREEN)	1					
13	90464–16001	CLAMP BRIDE	1					
14	90464–18004	CLAMP BRIDE	1					
15	6G1–42725–00	GROMMET PASSE-FIL	1					
16	69J–82563–01	TRIM & TILT SWITCH ASSY INCLINER ET PARER COMMUTATEUR	1					
17	69J–82587–00	GASKET JOINT	1					
18	63P–83614–01	BRACKET SUPPORT	1					
19	90109–06M86	BOLT BOULON	2					
20	67C–85415–00	MARK, SIGNAL LAMP ETIQUETTE	1					

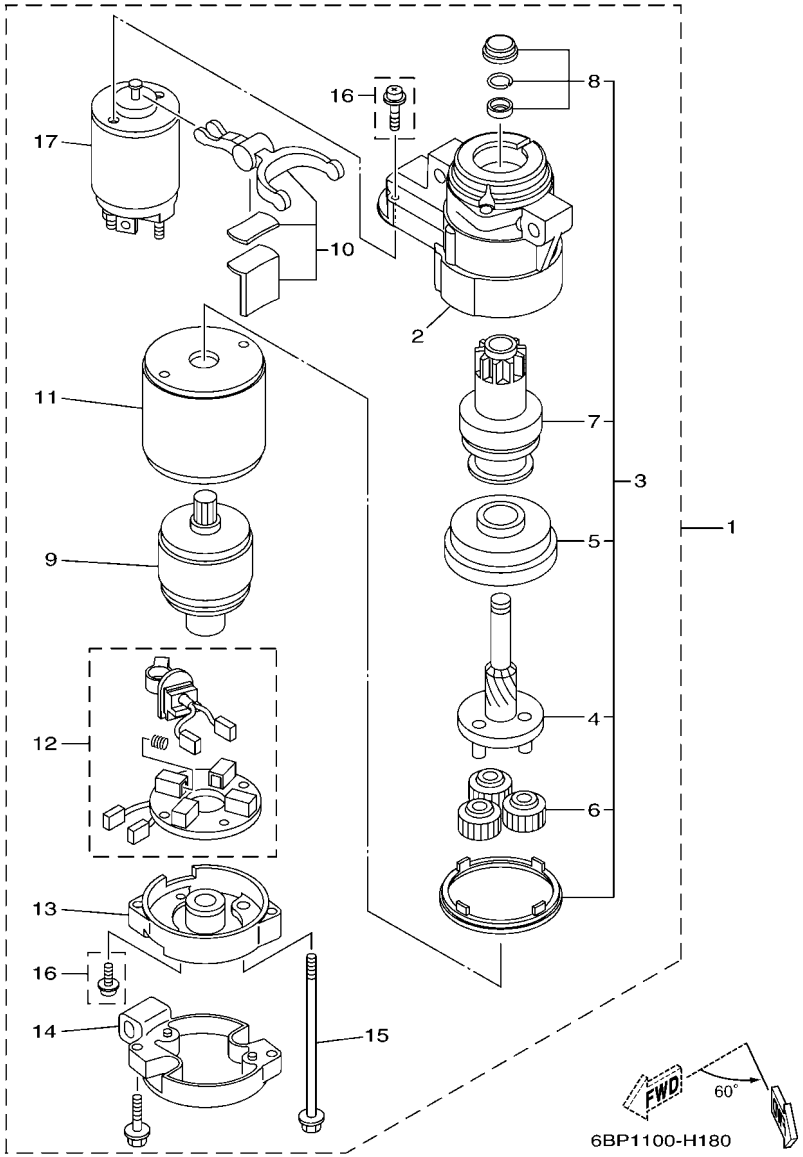

FIG. 17 STARTING MOTOR — DEMARREUR ELECTRIQUE

REF. NO.	PART NO. N° PIECES	DESCRIPTION DESCRIPTION	6DN8					REMARKS REMARQUES
1	6BG–81800–00	STARTING MOTOR ASSY DEMARREUR ELECTRIQUE COMPLET	1					
2	6BG–81830–00	.FRONT BRACKET ASSY .SUPPORT AVANT	1					
3	6BG–81807–00	.GEAR ASSY, STARTING MOTOR .PIGNON, DEMARREUR ELECTRIQUE	1					
4	6BG–81836–00	..SPRING, LEVER ..RESSORT, LEVIER	1					
5	6BG–81891–00	..GEAR, RING ..ROUE DENTEE	1					
6	6AW–8183T–00	..GEAR, IDLER ..PIGNON, INTERMEDIAIRE	3					
7	6BG–81832–00	..CLUTCH, OVER RUN ..EMBRAYAGE, ROUE LIBRE	1					
8	6BG–81857–00	..PINION STOPPER SET ..BUTEE PIGNON	1					
9	6BG–81850–00	.ARMATURE ASSY .INDUIT	1					
10	6BG–81839–00	.LEVER ASSY .LEVIER COMPLET	1					
11	6BG–81810–00	.STATOR ASSY .STATOR COMPLET	1					
12	6BG–81840–00	.BRUSH HOLDER ASSY .SUPPORT DE CHARBON	1					
13	6BG–81820–00	.REAR BRACKET ASSY .SUPPORT ARRIERE COMPLET	1					
14	6BG–8182J–00	.BRACKET COMPLETE .SUPPORTE COMPLETE	1					
15	6BG–81826–00	.BOLT .BOULON	2					
16	6BG–81846–00	.SCREW SET .VIS	1					
17	6BG–81941–00	.STARTER RELAY ASSY .LANCEUR RELAIS (ENS.)	1					

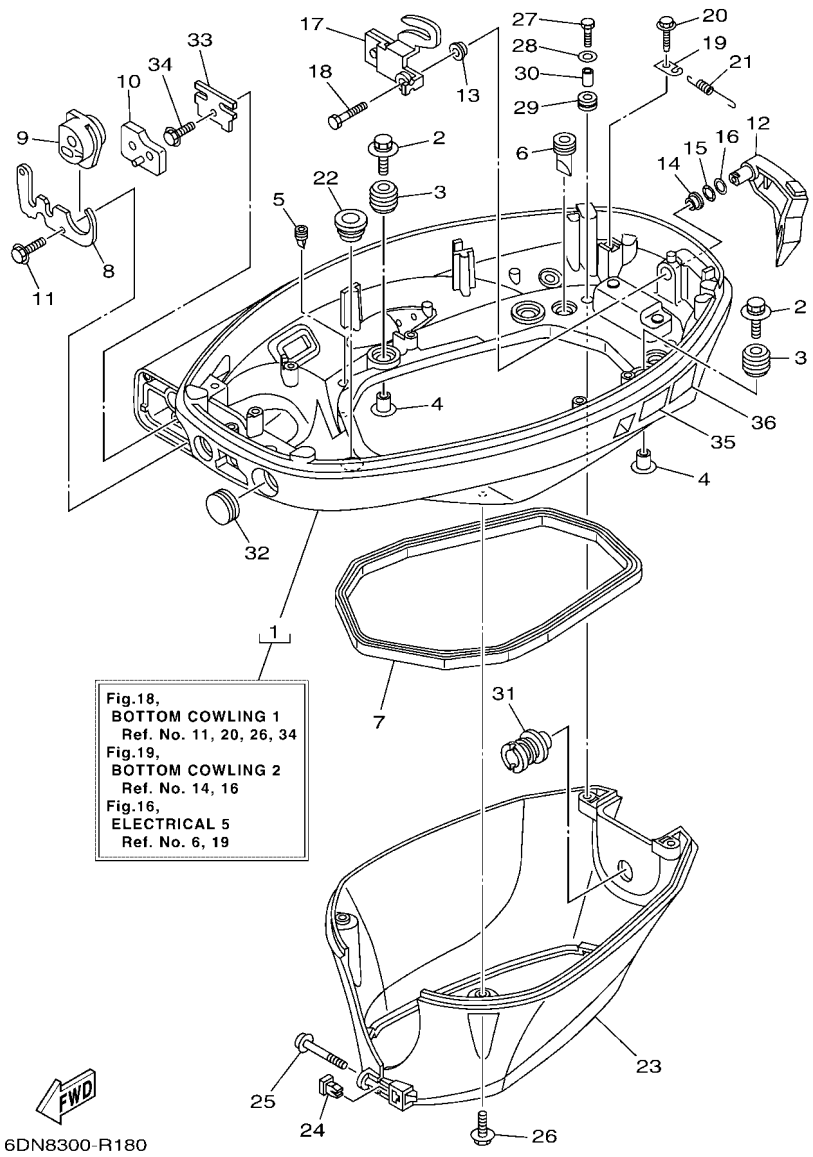

FIG. 18 BOTTOM COWLING 1 — CAPOT INFERIEUR 1

REF. NO.	PART NO. N° PIECES	DESCRIPTION DESCRIPTION	6DN8					REMARKS REMARQUES
1	6BP–42710–00–8D	BOTTOM COWLING ASSY ENS. EMBASE	1					
2	90119–06M61	BOLT, WITH WASHER BOULON, AVEC RONDELLE	4					
3	6BG–42748–00	GROMMET PASSE-FIL	4					
4	90387–06M69	COLLAR COLLERETTE	4					
5	65W–42717–00	RUBBER, SEAL 2 JOINT EN CAOUTCHOUC 2	2					
6	61A–42717–00	RUBBER, SEAL 2 JOINT EN CAOUTCHOUC 2	2					
7	62Y–42716–00	RUBBER SEAL 1 JOINT EN CAOUTCHOUC 1	1					
8	6BL–42761–00	STOPPER PLAQUETTE	1					
9	6BL–42725–01	GROMMET PASSE-FIL	1					
10	6BL–42727–00	GROMMET PASSE-FIL	1					
11	90109–06M86	BOLT BOULON	2					
12	6BL–42815–00–8D	LEVER, CLAMP 1 LEVIER, PRESSE 1	1					
13	90386–12M37	BUSH DOUILLE	1					
14	90386–12MA2	BUSH DOUILLE	1					
15	90206–12052	WASHER, WAVE RONDELLE, ONDULEE	1					
16	90201–12M07	WASHER, PLATE RONDELLE, PLATE	1					
17	6BG–42816–00	LEVER, CLAMP 2 LEVIER, PRESSE 2	1					
18	97095–06012	BOLT BOULON	1					
19	66T–43144–00	HOOK, SPRING CROCHET	1					
20	90109–06M86	BOLT BOULON	1					
21	90506–18023	SPRING, TENSION RESSORT, TENSION	1					
22	68U–42727–00	GROMMET PASSE-FIL	1					
23	6BP–42741–00	APRON CAPOT LATERAL	1					
24	60V–42756–00	STAY, CLAMP SUPPORT, COLLIER	1					
25	97980–04245	SCREW, WITH WASHER VIS, AVEC RONDELLE	1					
26	90109–06M86	BOLT BOULON	2					
27	97095–06014	BOLT BOULON	2					

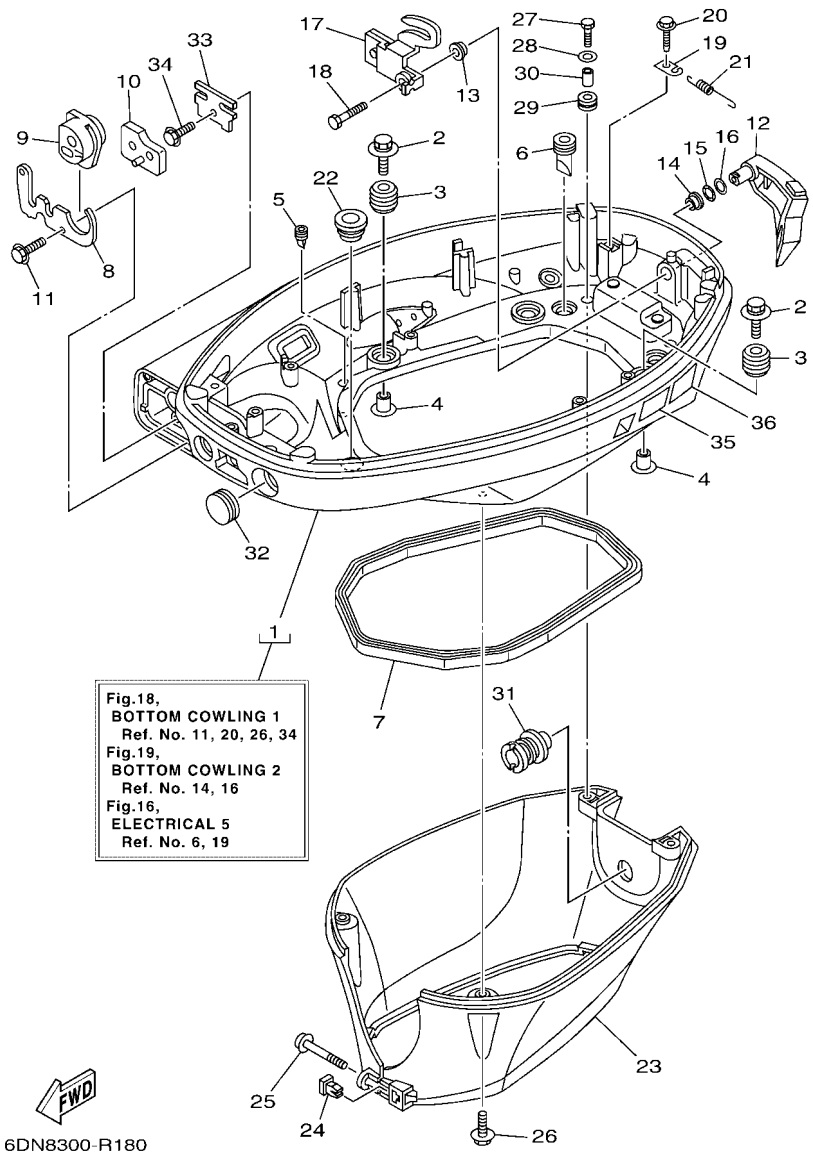

FIG. 18 BOTTOM COWLING 1 — CAPOT INFERIEUR 1

REF. NO.	PART NO. N° PIECES	DESCRIPTION DESCRIPTION	6DN8					REMARKS REMARQUES
28	92995–06600	WASHER RONDELLE	2					
29	90480–13M24	GROMMET PASSE-FIL	2					
30	90387–06M43	COLLAR COLLERETTE	2					
31	6BP–42769–00	SEAL, RUBBER BOURRELET, CAOUTCHOUC	1					
32	65W–42726–10	GROMMET PASSE-FIL	1					
33	6BL–48538–00	CLAMP, CABLE 1 COLLIER	1					
34	90109–06M86	BOLT BOULON	1					
35	6EE–42794–40	LABEL, WARNING (GENERAL) ETIQUETTE, AVERTISSEMENT	1					
36	6EE–42794–50	LABEL, WARNING (GENERAL) ETIQUETTE, AVERTISSEMENT	1					

FIG. 19 BOTTOM COWLING 2 — CAPOT INFERIEUR 2

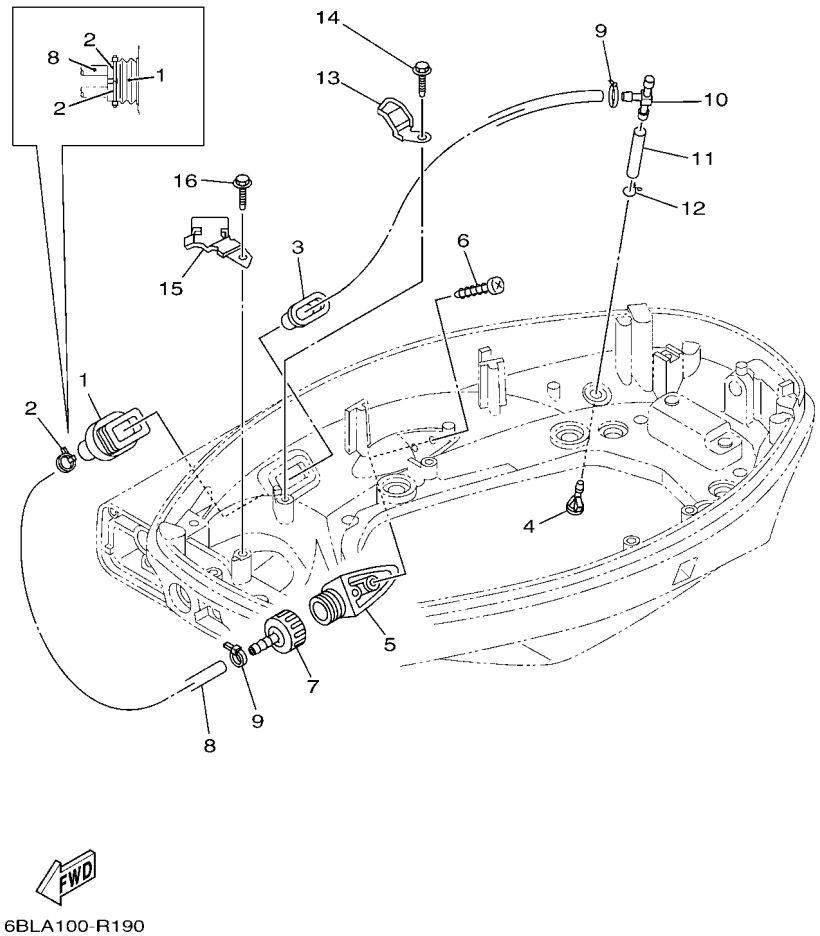

REF. NO.	PART NO. N° PIECES	DESCRIPTION DESCRIPTION	6DN8					REMARKS REMARQUES
1	6H1–42726–21	GROMMET PASSE-FIL	1					
2	90465–11M10	CLAMP BRIDE	2					
3	6BG–42384–00	SEAL, CAP JOINT, CAPUCHON	1					
4	6BL–44391–00	NIPPLE, HOSE RACCORD D'ESSENCE	1					
5	6AW–12572–00	ADAPTER ADAPTATEUR	1					
6	97780–60520	SCREW, TAPPING VIS, TETE BOMBEE	2					
7	6R3–12580–00	JOINT ASSY ARTICULER (ENS.)	1					
8	90445–11153	HOSE (L460) DURITE (L460)	1					
9	90465–11M10	CLAMP BRIDE	2					
10	6C5–24378–00	PIPE, JOINT 3 DURITE RACCORDEMENT 3	1					
11	90445–09057	HOSE (L43) DURITE (L43)	1					
12	90467–08M18	CLIP JONC	1					
13	6BL–24396–00	PLATE PLAQUE	1					
14	90109–06M86	BOLT BOULON	1					
15	6BL–24364–00	STAY SUPPORT	1					
16	90109–06M86	BOLT BOULON	1					

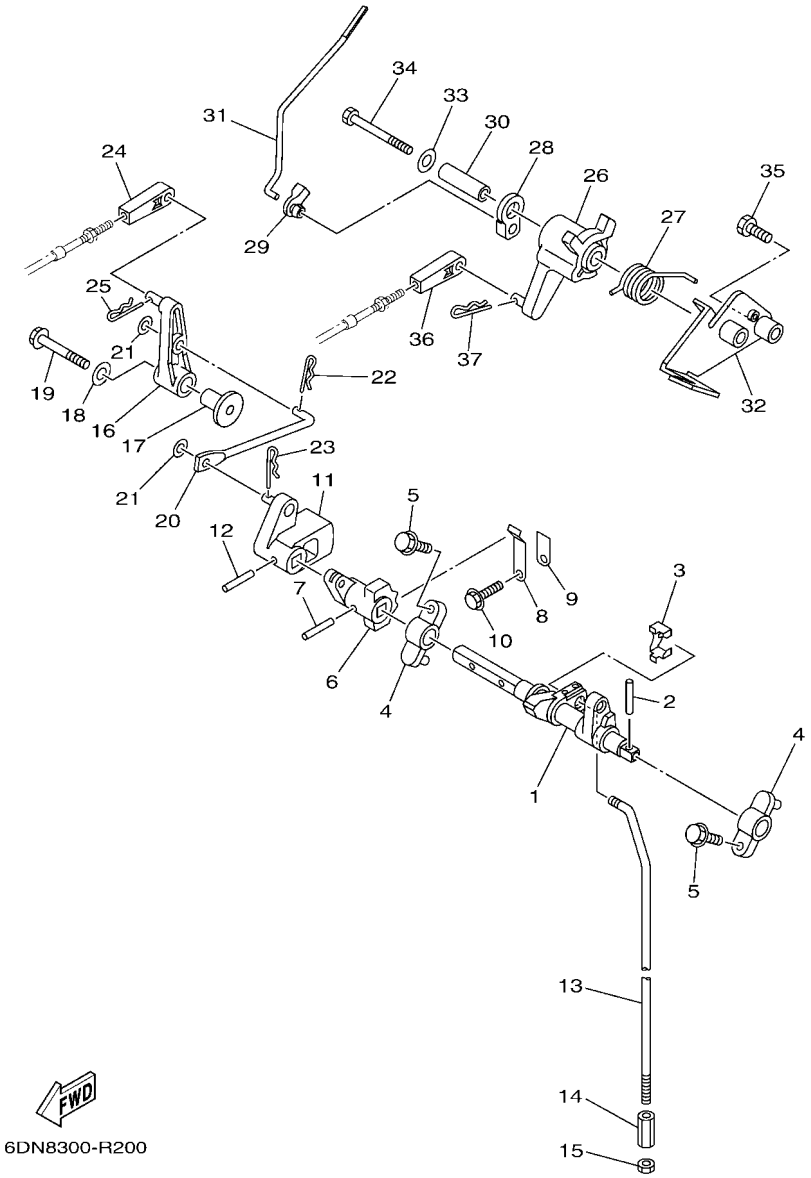

FIG. 20 CONTROL — COMMANDE

REF. NO.	PART NO. N° PIECES	DESCRIPTION DESCRIPTION	6DN8					REMARKS REMARQUES
1	6BL–44121–01	LEVER, SHIFT ROD LEVIER, TIGE D'INVERSION	1					
2	90254–03M05	PIN, SPRING RIVET, TETE TRONCONIQUE	1					
3	6AH–26364–00	END, CABLE 2 EMBOUT, DE CABLE	1					
4	6G1–41662–01–94	BRACKET 2 SUPPORT 2	2					
5	97595–06520	BOLT, WITH WASHER VIS HEXAGONAL AVC RONDELLE	2					
6	6BL–44173–00	LEVER, SHIFT CONTROL POIGNEE, INVERSION	1					
7	90254–03M05	PIN, SPRING RIVET, TETE TRONCONIQUE	1					
8	65W–44116–00	SPRING RESSORT	1					
9	66R–44114–00	STOPPER PLAQUETTE	1					
10	95895–06014	BOLT, FLANGE BOULON	1					
11	6BL–44142–00	JOINT AXE	1					
12	90254–03M05	PIN, SPRING RIVET, TETE TRONCONIQUE	1					
13	6BP–44143–10	ROD, SHIFT 1 TIGE D'EMBRAYAGE 1	1					
14	90170–06015	NUT ECROU	1					
15	95380–06700	NUT ECROU	1					
16	6BL–44125–00	LEVER, SHIFT ROD LEVIER, TIGE D'INVERSION	1					
17	90387–06M86	COLLAR COLLERETTE	1					
18	90201–06M31	WASHER, PLATE RONDELLE, PLATE	1					
19	97595–06535	BOLT, WITH WASHER VIS HEXAGONAL AVC RONDELLE	1					
20	6BL–44192–00	LINK, SHIFT ROD BIELLETTE	1					
21	90201–05M06	WASHER, PLATE RONDELLE, PLATE	2					
22	90468–10005	CLIP JONC	1					
23	90468–18001	CLIP JONC	1					
24	6FM–48344–00	CABLE END, REMOTE CONTROL CHAPE CABLE	1					
25	90468–18008	CLIP JONC	1					
26	6BL–41638–00	PULLEY POULIE	1					
27	90508–20040	SPRING, TORSION RESSORT, TORSION	1					

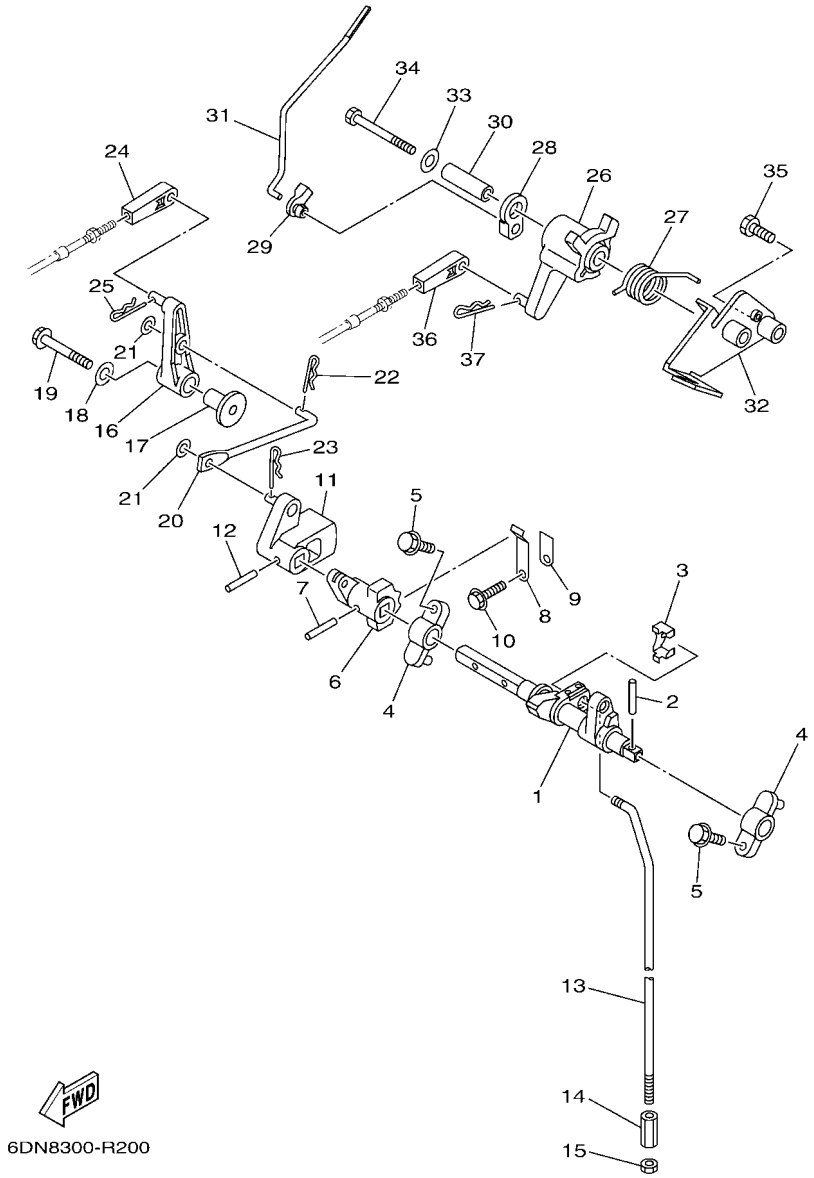

FIG. 20 CONTROL — COMMANDE

REF. NO.	PART NO. N° PIECES	DESCRIPTION DESCRIPTION	6DN8					REMARKS REMARQUES
28	6DN–41283–00	LEVER, FREE ACCEL. LEVIER	1					
29	6J8–41262–00	JOINT, CHOKE LEVER RACCORD, LEVIER DE STARTER	1					
30	90387–06139	COLLAR COLLERETTE	1					
31	6DN–41211–00	LINK, ACCEL. BIELLETTE, ACCELERATION	1					
32	6BL–14571–10	BRACKET, THROTTLE SUPPORT, ACCELERATEUR	1					
33	90201–06M31	WASHER, PLATE RONDELLE, PLATE	1					
34	97095–06065	BOLT BOULON	1					
35	97095–06025	BOLT BOULON	1					
36	6FM–48344–00	CABLE END, REMOTE CONTROL CHAPE CABLE	1					
37	90468–18008	CLIP JONC	1					

FIG. 21 BRACKET 1 SUPPORT 1

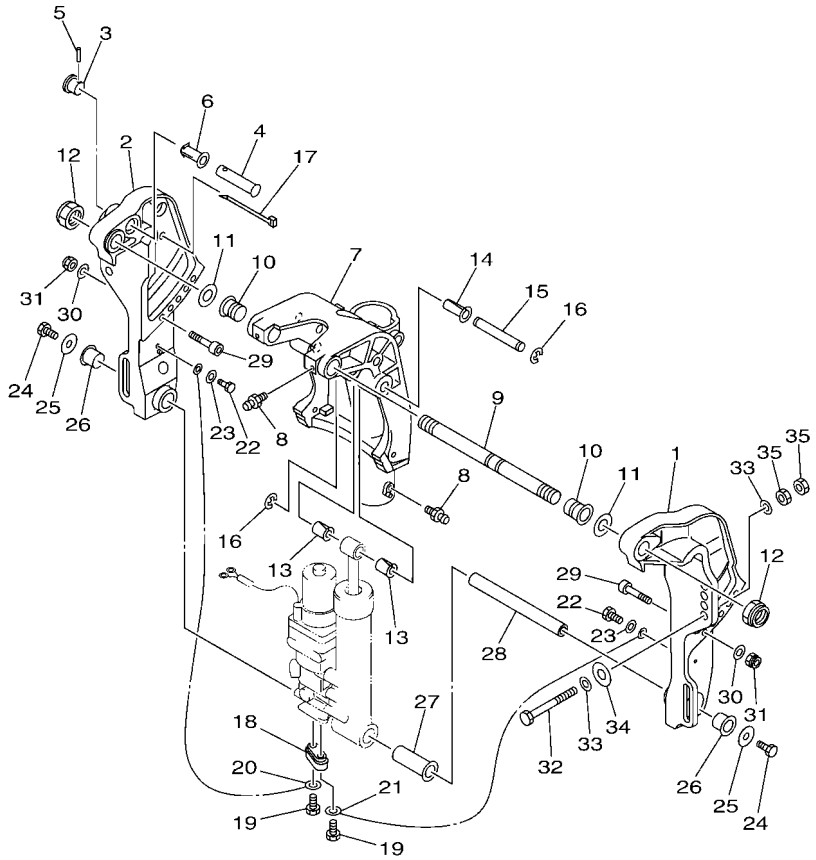

6BP3110-K260

REF. NO.	PART NO. N° PIECES	DESCRIPTION DESCRIPTION	6DN8					REMARKS REMARQUES
1	65W–43111–10–8D	BRACKET, CLAMP 1 PRESSE 1	1					
2	65W–43112–10–8D	BRACKET, CLAMP 2 PRESSE 2	1					
3	65W–43192–00	KNOB, STOPPER BOUTON, BUTEE DE RELEVAGE	1					
4	65W–43191–00	SHAFT, STOPPER AXE, BUTEE	1					
5	91690–30018	PIN, SPRING AGRAFFE	1					
6	90386–14MA1	BUSH DOUILLE	1					
7	65W–43311–11–8D	BRACKET, SWIVEL 1 SUPPORT, PIVOT 1	1					
8	93700–06M03	NIPPLE, GREASE PION	3					
9	63D–43131–01	BOLT, CLAMP BRACKET BOULON, PRESSE	1					
10	90386–22M15	BUSH DOUILLE	2					
11	90201–22M03	WASHER, PLATE RONDELLE, PLATE	2					
12	90185–22043	NUT, SELF-LOCKING ECROU,AUTO-BLOQUANT	2					
13	90386–12MA0	BUSH DOUILLE	2					
14	90386–12M98	BUSH DOUILLE	1					
15	90249–12M38	PIN GOUPILLE	1					
16	99080–10600	CIRCLIP CIRCLIP	2					
17	90465–13M11	CLAMP BRIDE	2					
18	65W–45251–00	ANODE ANODE	1					
19	90101–06020	BOLT BOULON	2					
20	6H1–82148–00	WIRE, LEAD 4 FIL 4	1					
21	6U0–82127–00	WIRE, LEAD 2 FIL 2	1					
22	97095–06014	BOLT BOULON	2					
23	92995–06600	WASHER RONDELLE	2					
24	97080–08016	BOLT BOULON	2					
25	90201–08M00	WASHER, PLATE RONDELLE, PLATE	2					
26	90386–18M44	BUSH DOUILLE	2					
27	90386–18MA0	BUSH DOUILLE	1					

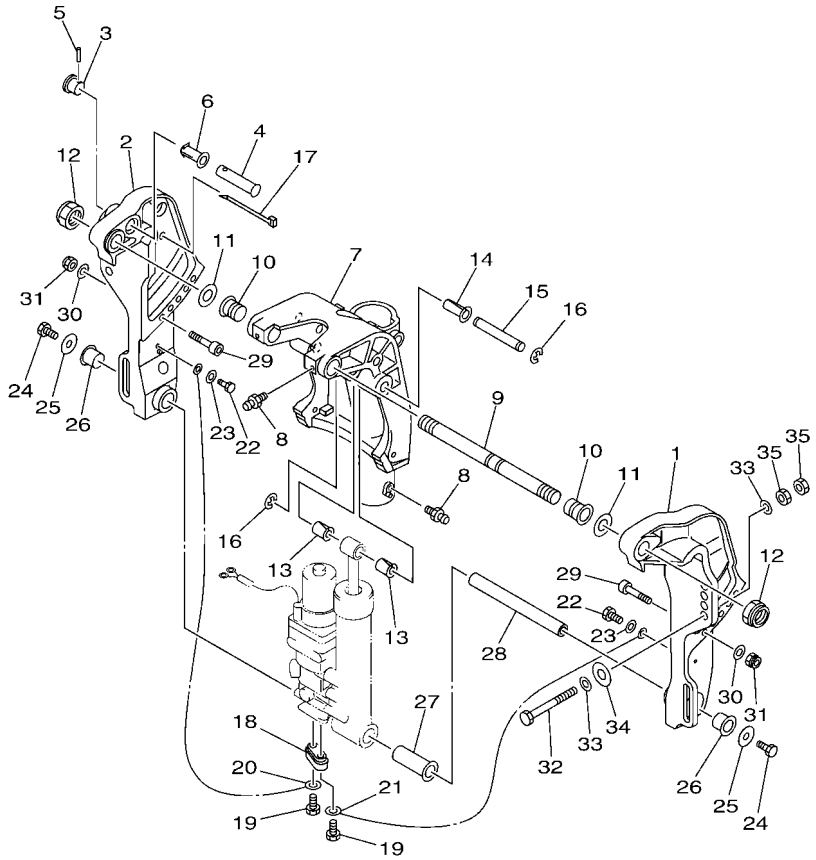

6BP3110-K260

FIG. 21 BRACKET 1 — SUPPORT 1

REF. NO.	PART NO. N° PIECES	DESCRIPTION DESCRIPTION	6DN8					REMARKS REMARQUES
28	90249–18M35	PIN GOUPILLE	1					
29	90110–10M02	BOLT, HEXAGON SOCKET HEAD BOULON, TETE HEXAGONALE CREUSE	2					
30	92995–10600	WASHER RONDELLE	2					
31	90185–10M13	NUT, SELF-LOCKING ECROU,AUTO-BLOQUANT	2					
32	90101–12M65	BOLT BOULON	4					
33	90201–12062	WASHER, PLATE RONDELLE, PLATE	8					
34	90201–12426	WASHER, PLATE RONDELLE, PLATE	4					
35	95380–12600	NUT ECROU	8					

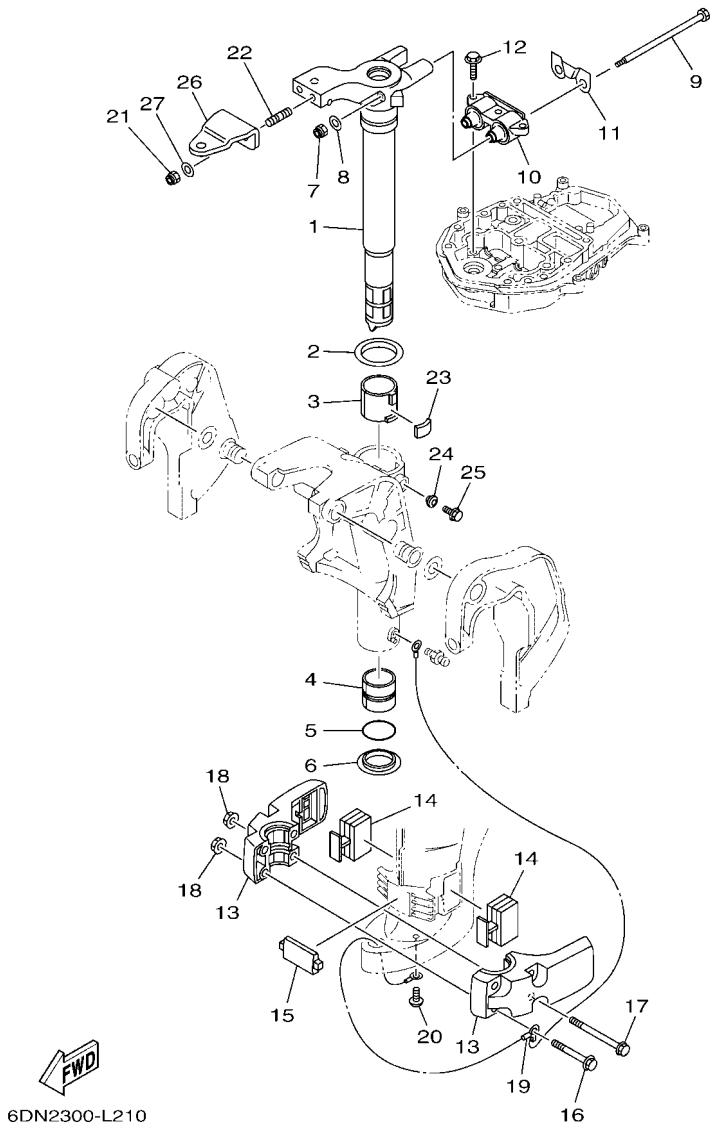

FIG. 22 BRACKET 2 — SUPPORT 2

REF. NO.	PART NO. N° PIECES	DESCRIPTION DESCRIPTION	6DN8					REMARKS REMARQUES
1	65W–42511–11–8D	BRACKET, STEERING CADRE, DIRECTION	1					
2	90209–52M00	WASHER RONDELLE	1					
3	90386–52M02	BUSH DOUILLE	1					
4	90386–44M03	BUSH DOUILLE	1					
5	93210–43MJ0	O-RING JOINT TORIQUE	1					
6	90386–44M99	BUSH DOUILLE	1					
7	90185–08018	NUT, SELF-LOCKING ECROU,AUTO-BLOQUANT	2					
8	92995–08200	WASHER RONDELLE	2					
9	90101–08M86	BOLT BOULON	2					
10	67C–44514–20	MOUNT DAMPER, UPPER SIDE SILENT-BLOC, SUPERIEUR LATERAL	1					
11	66T–44526–30	PLATE PLAQUE	1					
12	97575–08530	BOLT, WITH WASHER VIS HEXAGONAL AVC RONDELLE	3					
13	65W–44551–11–8D	HOUSING, LOWER MOUNT RUBBER 1 BOITIER, SILENT-BLOC INFERIEUR	2					
14	65W–44555–00	MOUNT DAMPER, LOWER SIDE SILENT-BLOC, INFERIEUR LATERAL	2					
15	65W–44575–01	DAMPER, LOWER MOUNT RUBBER SILENT-BLOC, INFERIEUR	1					
16	97575–10580	BOLT, WITH WASHER VIS HEXAGONAL AVC RONDELLE	2					
17	90119–10M14	BOLT, WITH WASHER BOULON, AVEC RONDELLE	2					
18	90179–10M33	NUT ECROU	4					
19	65W–82127–10	WIRE, LEAD 2 FIL 2	1					
20	97885–06008	SCREW, PAN HEAD VIS, A ENCOCHE	1					
21	90185–10027	NUT, SELF-LOCKING ECROU,AUTO-BLOQUANT	2					
22	90116–10064	BOLT, STUD GOUJON	2					
23	648–42528–00	PLATE, FRICTION PLAQUE, FRICTION	1					
24	65W–43373–00	SEAL, DAMPER JOINT	1					
25	90105–08M76	BOLT, FLANGE BOULON	1					
26	65W–48511–01	HOOK, STEERING ATTACHE, DIRECTION	1					
27	90201–10049	WASHER, PLATE RONDELLE, PLATE	2					

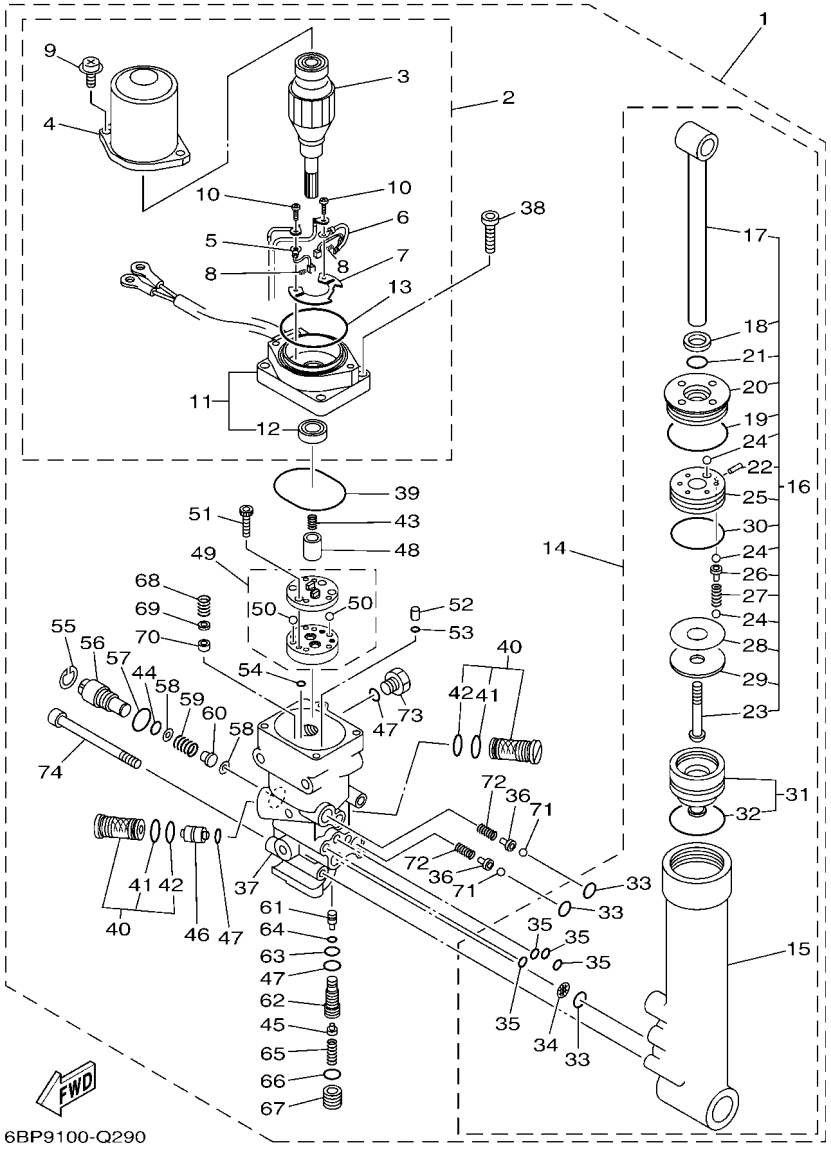

FIG. 23 POWER TRIM & TILT ASSY — PUISSANCE PARER ET INCLINER

REF. NO.	PART NO. N° PIECES	DESCRIPTION DESCRIPTION	6DN8					REMARKS REMARQUES
1	65W–43800–23–8D	POWER TRIM & TILT ASSY PUISSANCE PARER ET INCLINER (E	1					
2	65W–43880–21	.MOTOR ASSY .MOTEUR (ENS.)	1					
3	67C–43805–10	..ARMATURE ASSY ..INDUIT (ENS.)	1					
4	67C–43804–10	..STATOR ASSY ..STATOR (ENS.)	1					
5	67C–43892–10	..BRUSH 2 ..BALAI 2	1					
6	67C–82181–10	..CIRCUIT BREAKER COMP. ..RUPTEUR COMPLET	1					
7	67C–4380F–10	..PLATE, BRUSH HOLDER ..PLAQUE	1					
8	67C–4386K–10	..SPRING, BRUSH ..RESSORT, BALAI	2					
9	67C–43879–10	..SCREW, WITH WASHER ..VIS, AVEC RONDELLE	2					
10	97602–04316	..SCREW, PAN HEAD WITH WASHER ..VIS	2					
11	65W–43881–21	..FRAME, END ..BATI	1					
12	67C–43882–10	...OIL SEAL ...JOINT SPI	1					
13	67C–43862–10	..O-RING ..JOINT TORIQUE	1					
14	65W–43840–01	.POWER TILT ASSY .PUISSANCE INCLINER (ENS.)	1					
15	65W–4380K–00	..CYLINDER, TILT SUB ASSY ..CYLINDRE	1					
16	65W–43810–01	..TILT PISTON SUB ASSY ..INCLINER PISTON AUXILIAIRE(ENS	1					
17	65W–43801–01	...ROD ...TIGE	1					
18	65W–43812–00	...SEAL, DUST ...JOINT	1					
19	65W–43865–00	...O-RING ...JOINT TORIQUE	1					
20	65W–43811–01	...SCREW, CYLINDER END ...VIS, CYLINDRE RACCORD	1					
21	67C–43867–00	...O-RING ...JOINT TORIQUE	1					
22	91609–16012	...PIN, SPRING ...AXE DE RESSORT	1					
23	92012–10040	...BOLT, BUTTON HEAD ...BOULON	1					
24	93505–32038	...BALL ...BILLE	11					
25	65W–4385A–01	...PISTON, TILT ...PISTON	1					
26	65W–4386A–00	...PIN, ABSORBER VALVE ...GOUPILLE, SOUPAPE	5					
27	65W–43857–00	...SPRING, ABSORBER VALVE ...RESSORT	5					

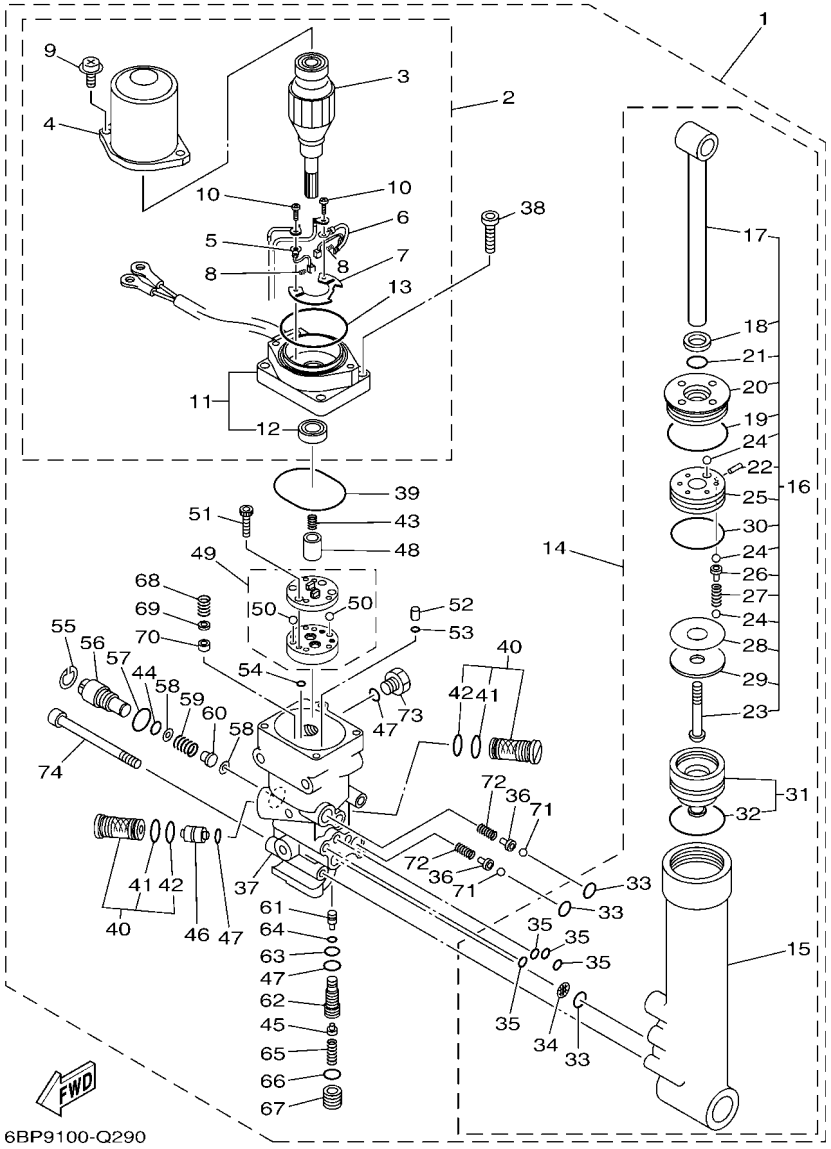

FIG. 23 POWER TRIM & TILT ASSY — PUISSANCE PARER ET INCLINER

REF. NO.	PART NO. N° PIECES	DESCRIPTION DESCRIPTION	6DN8					REMARKS REMARQUES
28	15A–22442–00	...SHIM ...CALE	1					UN UN
29	90201–10038	...WASHER, PLATE ...RONDELLE, PLATE	1					
30	6H1–43862–00	...O-RING ...JOINT TORIQUE	1					
31	65W–4381B–00	..FREE PISTON SUB ASSY ..PISTON AUXILIAIRE (ENS.)	1					
32	6H1–43861–10	...O-RING ...JOINT TORIQUE	1					
33	93210–11368	..O-RING ..JOINT TORIQUE	3					
34	69J–4381C–00	..FILTER 3 ..FILTRE 3	1					
35	93210–064A5	..O-RING ..JOINT TORIQUE	4					
36	65W–4386A–00	.PIN, ABSORBER VALVE .GOUPILLE, SOUPAPE	2					
37	65W–4380L–04	.HOUSING, TRIM & TILT SUB ASSY .CARTER	1					
38	91380–06020	.BOLT .BOULON	4					
39	93210–50768	.O-RING .JOINT TORIQUE	1					
40	67F–43802–00	.VALVE SUB ASSY .CLAPET AUXILIAIRE (ENS.)	2					
41	6H1–43866–01	..O-RING ..JOINT TORIQUE	1					
42	93210–12N52	..O-RING ..JOINT TORIQUE	1					
43	6T4–43853–00	.SPRING, MAIN VALVE .RESSORT	1					
44	93210–10M74	.O-RING .JOINT TORIQUE	1					
45	6T4–43808–00	.SEAT VALVE COMP. 1 .SIEGE VALVE COMP. 1	1					
46	62X–43841–00	.PISTON, SHUTTLE .PISTON	1					
47	93210–09165	.O-RING .JOINT TORIQUE	3					
48	65W–43831–00	.CONNECTOR, SHAFT .RACCORD	1					
49	65W–43830–00	.GEAR PUMP ASSY .POMPE A PIGNON (ENS.)	1					
50	93505–32038	..BALL ..BILLE	2					
51	91318–04025	.BOLT .BOULON	4					
52	65W–43817–00	.FILTER 2 .FILTRE 2	2					
53	93210–04N50	.O-RING .JOINT TORIQUE	2					
54	93210–04N51	.O-RING .JOINT TORIQUE	2					

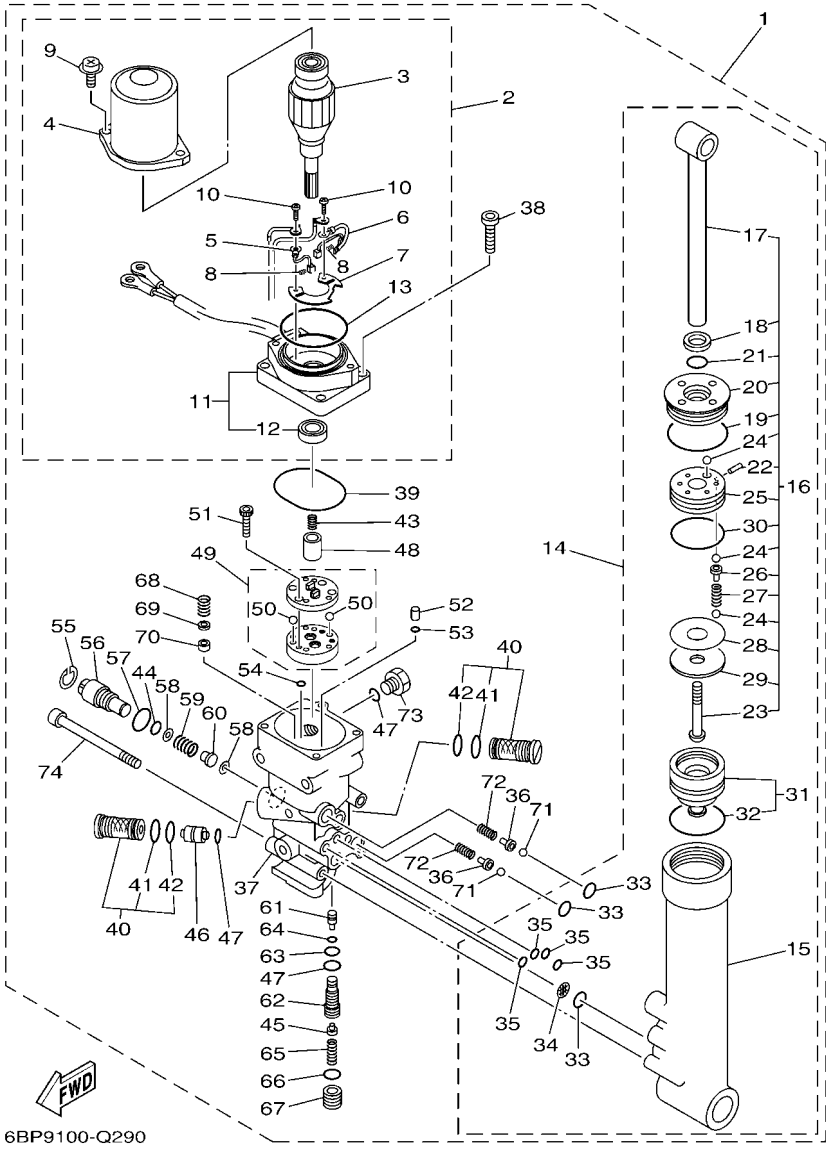

FIG. 23 POWER TRIM & TILT ASSY — PUISSANCE PARER ET INCLINER

REF. NO.	PART NO. N° PIECES	DESCRIPTION DESCRIPTION	6DN8					REMARKS REMARQUES
55	6H1–43875–00	.RING, SNAP .RESSORT	1					
56	6H1–43845–00	.SCREW, MANUAL RELEASE .VIS	1					
57	6D8–43863–00	.O-RING .JOINT TORIQUE	1					
58	6H1–43847–00	.SEAT, MANUAL VALVE .SIEGE	2					
59	65W–43854–00	.SPRING, MANUAL RELEASE .RESSORT	1					
60	65W–4382A–00	.ADAPTOR 1 .ADAPTEUR 1	1					
61	65W–43844–00	.PIN, VALVE SUPPORT .GOUPILLE	1					
62	65W–43851–00	.SEAT, RELIEF VALVE .SIEGE	1					
63	93210–08006	.O-RING .JOINT TORIQUE	1					
64	93210–03478	.O-RING .JOINT TORIQUE	1					
65	65W–43855–00	.SPRING, UP RELIEF .RESSORT	1					
66	93210–11073	.O-RING .JOINT TORIQUE	1					
67	65W–43843–00	.SCREW, VALVE LOCK .VIS	1					
68	6H1–43856–10	.SPRING, DOWN RELIEF .RESSORT	1					
69	6H1–43844–10	.PIN, VALVE SUPPORT .GOUPILLE	1					
70	6H1–4384F–10	.SEAL, MAIN VALVE .JOINT	1					
71	93501–08001	.BALL .BILLE	2					
72	65W–43853–00	.SPRING, MAIN VALVE .RESSORT	2					
73	6H1–43829–00	.PLUG, RESERVOIR .BOUCHON	1					
74	62X–43878–01	.BOLT, SOCKET .BOULON	3					

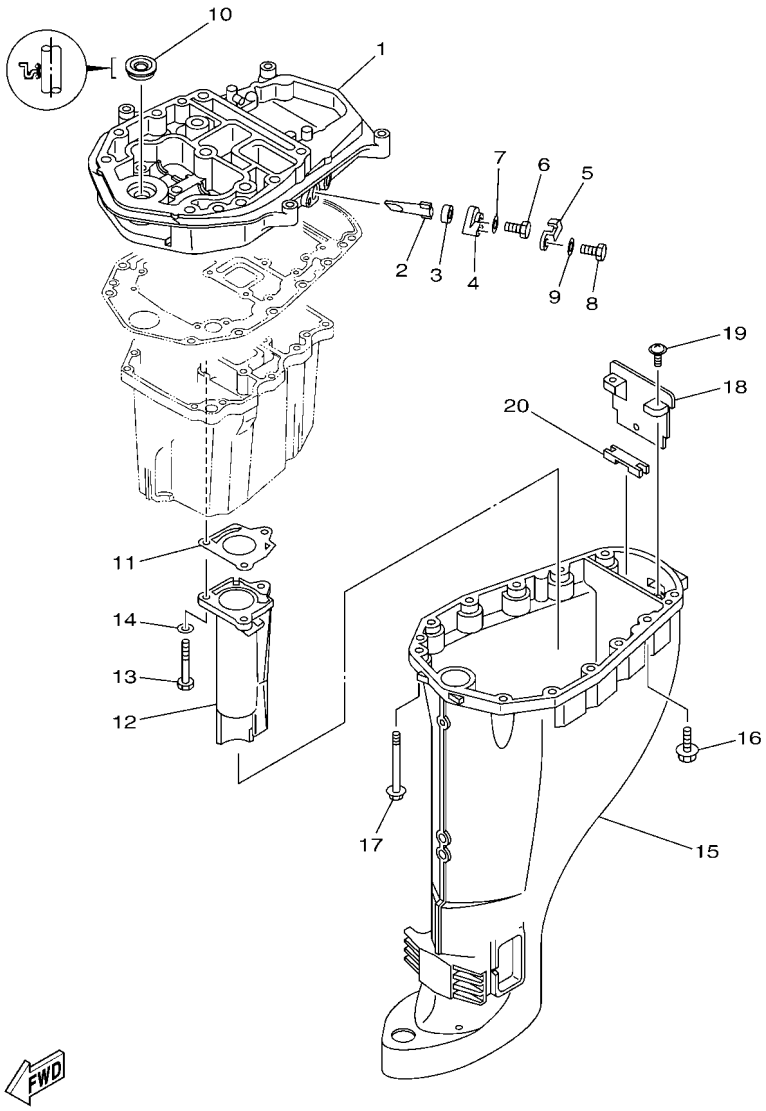

6BP3110K3001

FIG. 24 UPPER CASING FOURREAU

REF. NO.	PART NO. N° PIECES	DESCRIPTION DESCRIPTION	6DN8					REMARKS REMARQUES
1	67C–41137–20–CA	GUIDE, EXHAUST COLLECTEUR D'ECHAPPEMENT	1					
2	62Y–11325–00	ANODE ANODE	1					
3	66M–11328–00	GROMMET, ANODE PASSE-FIL	1					
4	66M–11327–00–94	COVER, ANODE COUVERCLE ANODE	1					
5	66M–12535–00	PLATE PLAQUE	1					
6	97095–05012	BOLT BOULON	1					
7	92995–05600	WASHER RONDELLE	1					
8	97013–06020	BOLT BOULON	1					
9	92903–06600	WASHER, PLATE RONDELLE, PLATE	1					
10	93103–16011	OIL SEAL JOINT SPY	1					
11	67C–41133–00	GASKET, EXHAUST MANIFOLD 1 JOINT, PIPE D'ECHAPPEMENT	1					
12	68U–41131–00–CA	MANIFOLD, EXT. 1 PIPE D'ECHAPPEMENT	1					
13	97075–06050	BOLT BOULON	3					
14	92995–06600	WASHER RONDELLE	3					
15	6D5–45111–10–8D	CASING, UPPER FOURREAU	1					
16	97575–08530	BOLT, WITH WASHER VIS HEXAGONAL AVC RONDELLE	4					
17	90119–08132	BOLT, WITH WASHER BOULON, AVEC RONDELLE	8					
18	65W–45151–00	COVER, UPPER CASING CAPUCHON, FOURREAU	1					
19	97980–05216	SCREW, WITH WASHER VIS, AVEC RONDELLE	2					
20	65W–45128–00	SEAL 2 JOINT 2	1					

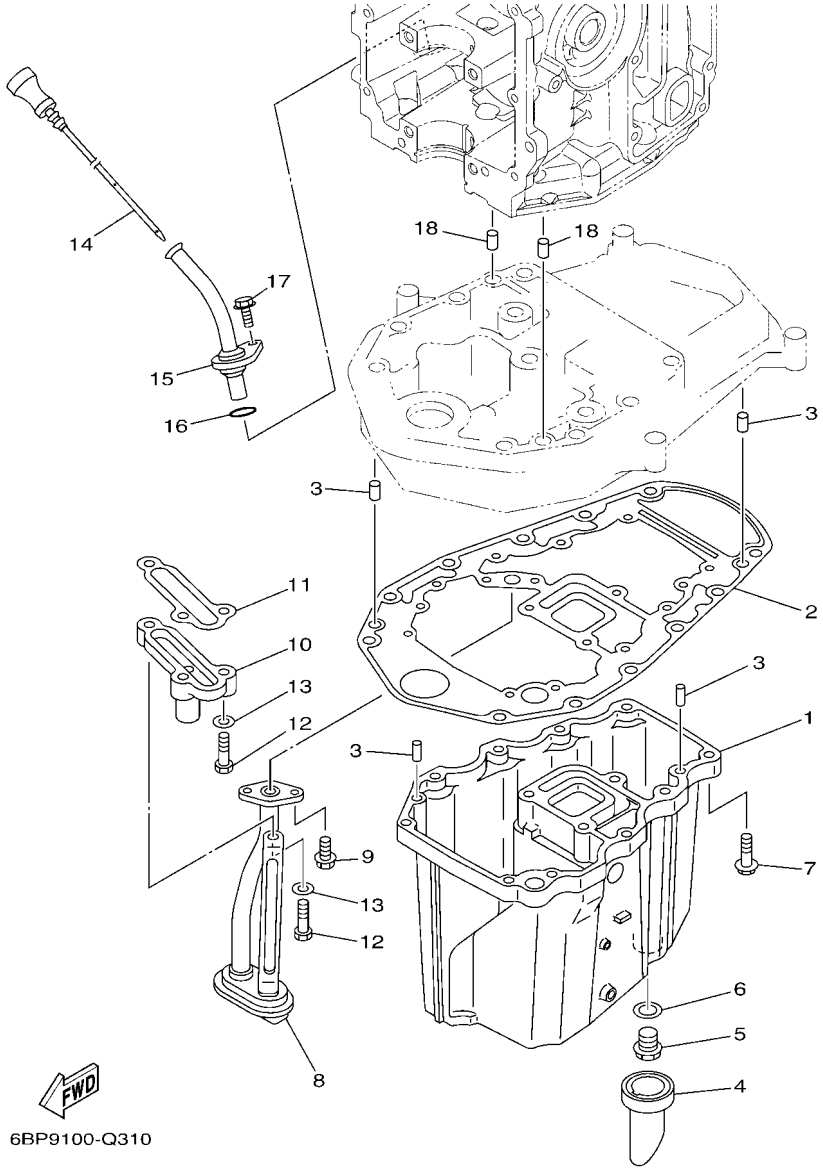

FIG. 25 OIL PAN — VENTILATEUR D'HUILE

REF. NO.	PART NO. N° PIECES	DESCRIPTION DESCRIPTION	6DN8					REMARKS REMARQUES
1	65W–15311–03–CA	OIL PAN VENTILATEUR D'HUILE	1					
2	69W–15312–00	GASKET, OIL PAN JOINT DE VENTILATEUR D'HUILE	1					
3	93606–12019	PIN, DOWEL GOUPILLE	4					
4	65W–15316–00	DAMPER 1 AMORTISSEUR 1	1					
5	90340–14M06	PLUG, STRAIGHT SCREW PLOT, FILETE DROIT	1					
6	90430–14M09	GASKET JOINT	1					
7	97575–06525	BOLT, WITH WASHER VIS HEXAGONAL AVC RONDELLE	10					
8	65W–13411–00	STRAINER, OIL FILTRE, HUILE	1					
9	97513–06516	BOLT, WITH WASHER VIS HEXAGONAL AVC RONDELLE	2					
10	6BG–11576–00–94	BODY, RELIEF CORPS DE SECURITE	1					
11	62Y–13475–00	GASKET JOINT	1					
12	97013–06025	BOLT BOULON	3					
13	92903–06600	WASHER, PLATE RONDELLE, PLATE	3					
14	6BL–15362–00	PLUG, OIL LEVEL PLOT, NIVEAU D'HUILE	1					
15	6BL–15377–00	GUIDE, INLET GUIDE D'ADMISSION	1					
16	93210–19MJ3	O-RING JOINT TORIQUE	1					
17	95895–06016	BOLT, FLANGE BOULON	1					
18	93608–12M05	PIN, DOWEL AXE	2					

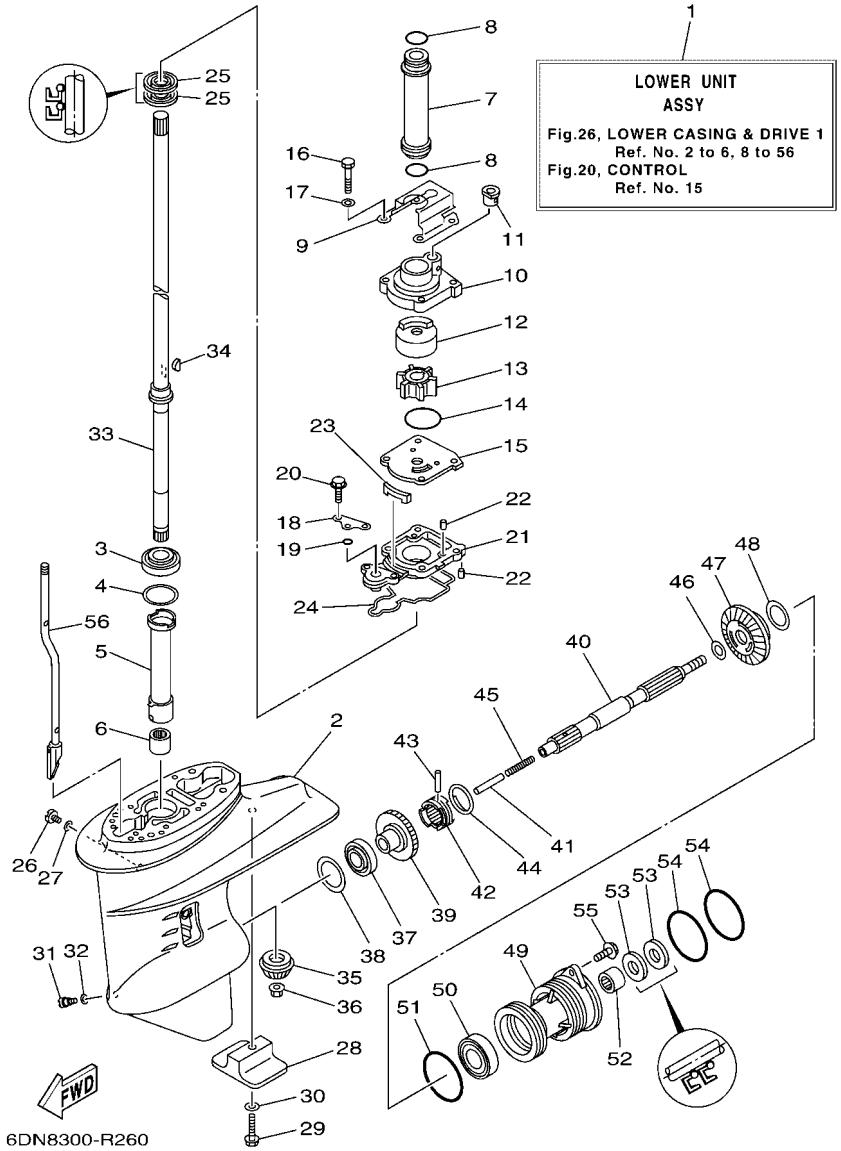

FIG. 26 LOWER CASING & DRIVE 1 — BOITIER D'HELICE TRANSMISSION1

REF. NO.	PART NO. N° PIECES	DESCRIPTION DESCRIPTION	6DN8					REMARKS REMARQUES
1	65W–45300–12–8D	LOWER UNIT ASSY UNITE INFERIEURE (ENS.)	1					
2	61N–45311–02–8D	CASING, LOWER BOITIER D'HELICE	1					
3	93332–000W5	BEARING ROULEMENT	1					
4	61N–45587–00	SHIM (T:0.7MM) CALE (T:0.7MM)	1					UR UR
	61N–45587–10	SHIM (T:1.0MM) CALE (T:1.0MM)	1					UR UR
	61N–45587–20	SHIM (T:1.1MM) CALE (T:1.1MM)	1					UR UR
	61N–45587–30	SHIM (T:1.2MM) CALE (T:1.2MM)	1					UR UR
	61N–45587–40	SHIM (T:1.3MM) CALE (T:1.3MM)	1					UR UR
	61N–45587–50	SHIM (T:1.4MM) CALE (T:1.4MM)	1					UR UR
	61N–45587–60	SHIM (T:1.5MM) CALE (T:1.5MM)	1					UR UR
	61N–45587–70	SHIM (T:1.6MM) CALE (T:1.6MM)	1					UR UR
5	61N–45536–00	SLEEVE, DRIVE SHAFT MANCHON, ARBRE MOTEUR	1					
6	93315–220V7	BEARING ROULEMENT	1					
7	61N–44362–10	TUBE, WATER 2 TUBE D'EAU 2	1					
8	93210–26130	O-RING JOINT TORIQUE	2					
9	65W–44328–11	PLATE PLAQUETTE	1					
10	61N–44311–01	HOUSING, WATER PUMP CORPS, POMPE A EAU	1					
11	6L2–44367–00	DAMPER, WATER SEAL 3 JOINT TUBE D'EAU 3	1					
12	61N–44322–01	INSERT, CARTRIDGE CUVETTE	1					
13	6H4–44352–02	IMPELLER TURBINE	1					
14	93210–45161	O-RING JOINT TORIQUE	1					
15	61N–44323–00	OUTER PLATE, CARTRIDGE PLAQUE EXTERIEURE	1					
16	97095–06040	BOLT BOULON	4					
17	92995–06600	WASHER RONDELLE	4					
18	65W–44176–00	BRACKET SUPPORT	1					
19	93210–06ME6	O-RING JOINT TORIQUE	1					
20	97595–06525	BOLT, WITH WASHER VIS HEXAGONAL AVC RONDELLE	2					

FIG. 26 LOWER CASING & DRIVE 1 — BOITIER D'HELICE TRANSMISSION1

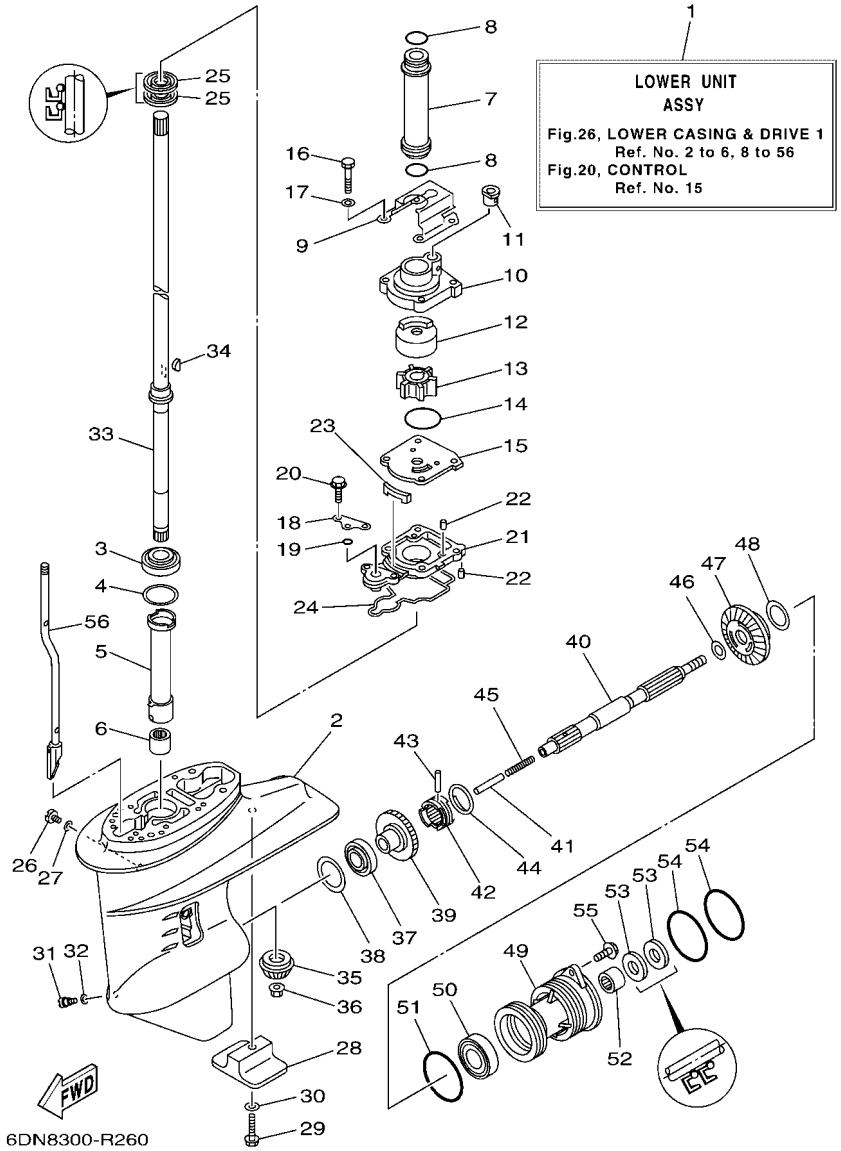

REF. NO.	PART NO. N° PIECES	DESCRIPTION DESCRIPTION	6DN8					REMARKS REMARQUES
21	65W–45331–00–CA	HOUSING, BEARING FLASQUE, ROULEMENT	1					
22	93604–10M03	PIN, DOWEL CLAVETTE	3					
23	61N–45127–00	SEAL JOINT	1					
24	61N–45315–00	PACKING, LOWER CASING JOINT, BOITIER D'HELICE	1					
25	93101–22067	OIL SEAL JOINT SPY	2					
26	90340–08002	PLUG, STRAIGHT SCREW PLOT, FILETE DROIT	1					
27	90430–08003	GASKET JOINT	1					
28	61N–45251–01	ANODE ANODE	1					
29	95895–06035	BOLT, FLANGE BOULON	1					
30	92990–06300	WASHER, INTERNAL TOOTH RONDELLE, DENTURE INTERNE	1					
31	688–45341–10	PLUG, DRAIN BOUCHON DE VIDANGE	1					
32	90430–08003	GASKET JOINT	1					
33	61N–45510–10	DRIVE SHAFT ASSY ARBRE MOTEUR (ENS.)	1					
34	90280–03024	KEY, WOODRUFF CLAVETTE, DEMI-LUNE	1					
35	61N–45551–00	PINION (13T) PIGNON D'ATTAQUE (13D)	1					
36	90179–10M14	NUT ECROU	1					
37	93332–00005	BEARING ROULEMENT	1					
38	6L2–45567–00	SHIM (T:1.0MM) CALE (T;1.0MM)	1					UR UR
	6L2–45567–10	SHIM (T:1.1MM) CALE (T:1.1MM)	1					UR UR
	6L2–45567–20	SHIM (T:1.2MM) CALE (T:1.2MM)	1					UR UR
	6L2–45567–30	SHIM (T:1.3MM) CALE (T:1.3MM)	1					UR UR
	6L2–45567–40	SHIM (T:1.4MM) CALE (T:1.4MM)	1					UR UR
39	61N–45560–10	GEAR 1 (27T) PIGNON 1 (27T)	1					
40	65W–45611–00	SHAFT, PROPELLER ARBRE, HELICE	1					
41	648–45635–00	PLUNGER, SHIFT POUSSOIR D'EMBRAYAGE	1					
42	6FM–45631–00	CLUTCH, DOG CRABOT	1					
43	90250–05010	PIN, STRAIGHT GOUPILLE, DROITE	1					

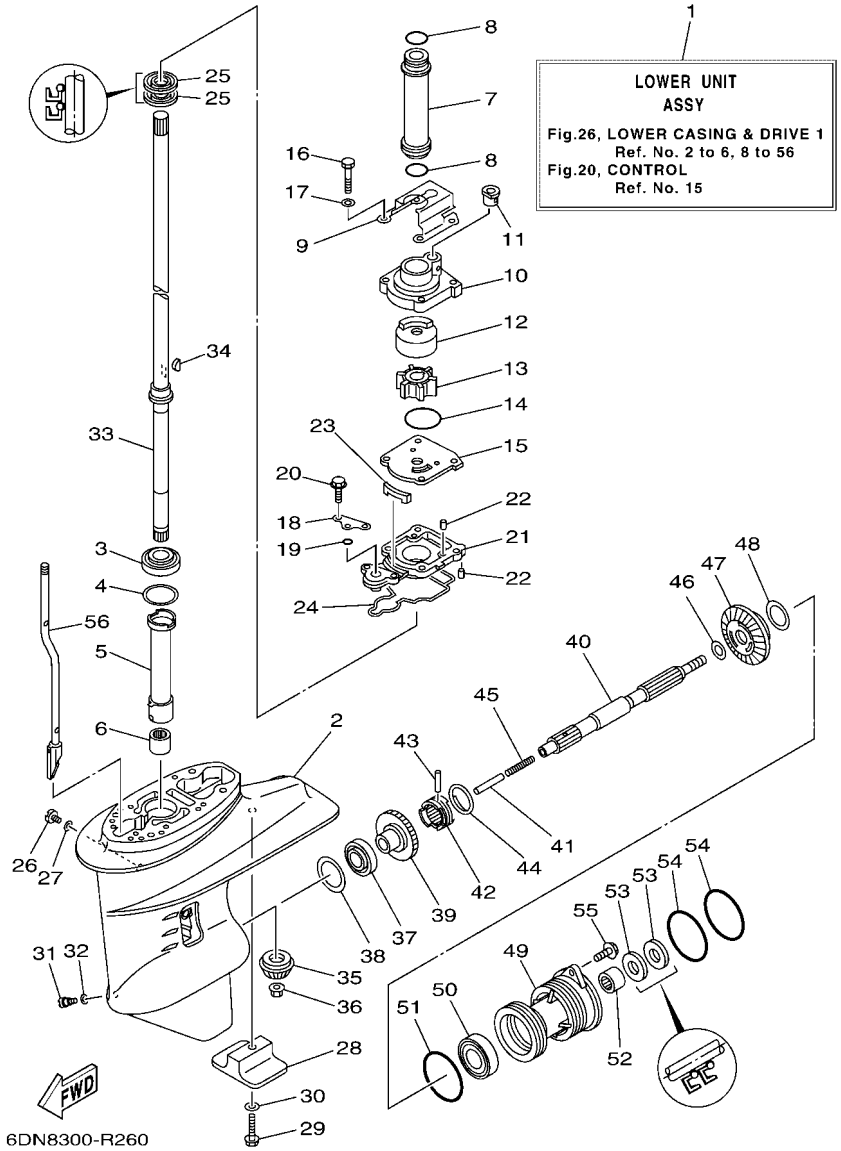

FIG. 26 LOWER CASING & DRIVE 1 — BOITIER D'HELICE TRANSMISSION1

REF. NO.	PART NO. N° PIECES	DESCRIPTION DESCRIPTION	6DN8					REMARKS REMARQUES
44	648–45633–11	RING, CROSS PIN JONC, GOUPILLE CRABOT	1					
45	90501–10065	SPRING, COMPRESSION RESSORT, COMPRESSION	1					
46	90201–20417	WASHER, PLATE RONDELLE, PLATE	1					
47	61N–45571–00	GEAR 2 (27T) PIGNON 2 (27T)	1					
48	6L2–45577–00	SHIM (T:1.0MM) CALE (T:1.0MM)	1					UR UR
	6L2–45577–10	SHIM (T:1.1MM) CALE (T:1.1MM)	1					UR UR
	6L2–45577–20	SHIM (T:1.2MM) CALE (T:1.2MM)	1					UR UR
	6L2–45577–30	SHIM (T:1.3MM) CALE (T:1.3MM)	1					UR UR
49	61N–45361–01–8D	CAP, LOWER CASING COUVERCLE, BOITIER D'HELICE	1					
50	93306–00612	BEARING ROULEMENT	1					
51	93210–64ME7	O-RING JOINT TORIQUE	1					
52	93315–22004	BEARING ROULEMENT	1					
53	93101–20M07	OIL SEAL JOINT SPY	2					
54	93210–65M50	O-RING JOINT TORIQUE	2					
55	97575–06520	BOLT, WITH WASHER VIS HEXAGONAL AVC RONDELLE	2					
56	65W–44150–11	SHIFT CAM ASSY CAME D'INVERSION	1					

FIG. 27 LOWER CASING & DRIVE 2 — BOITIER D'HELICE TRANSMISSION2

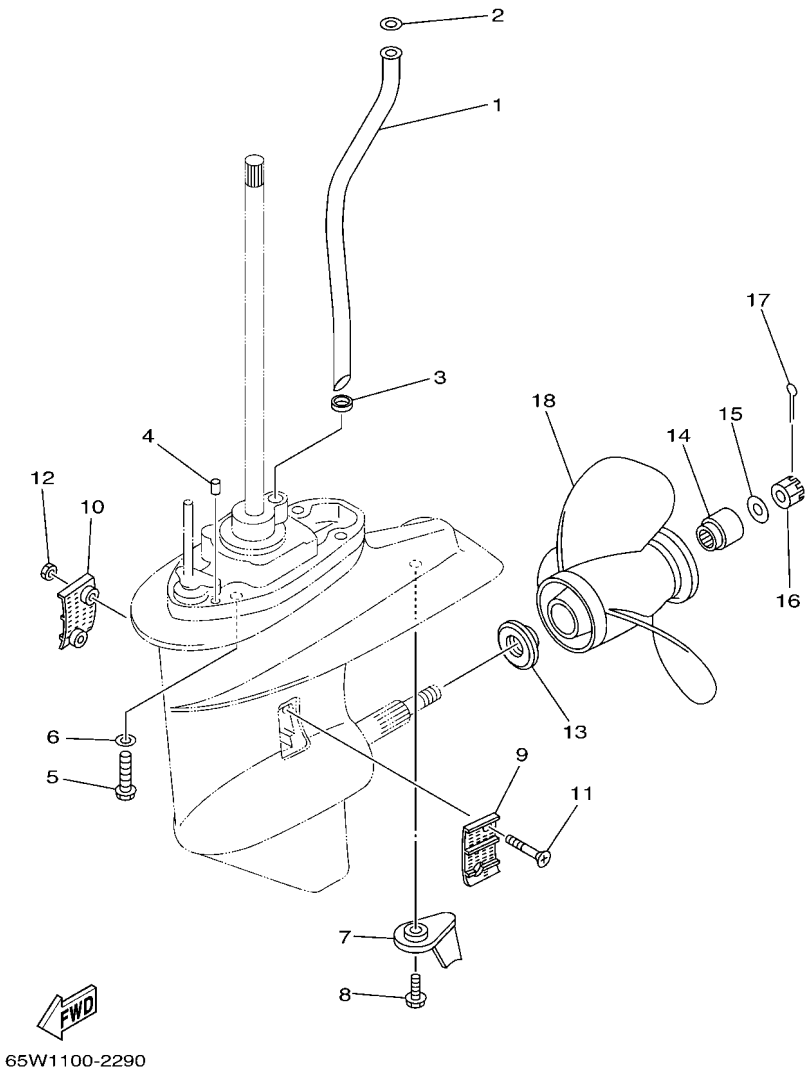

REF. NO.	PART NO. N° PIECES	DESCRIPTION DESCRIPTION	6DN8					REMARKS REMARQUES
1	65W–44361–12	TUBE, WATER 1 TUBE D'EAU 1	1					
2	90202–12060	WASHER, PLATE RONDELLE, PLATE	1					
3	90430–10002	GASKET JOINT	1					
4	93606–11M24	PIN, DOWEL GOUPILLE	2					
5	90105–10M12	BOLT, FLANGE BOULON	4					
6	92995–10600	WASHER RONDELLE	4					
7	61N–45371–00	TAB-TRIM ANODE DERIVE	1					
8	90119–06M48	BOLT, WITH WASHER BOULON, AVEC RONDELLE	1					
9	6L2–45214–00	COVER, WATER INLET 1 GRILLE, ENTREE D'EAU 1	1					
10	6L2–45215–00	COVER, WATER INLET 2 GRILLE, ENTREE D'EAU 2	1					
11	90151–05M05	SCREW, COUNTERSUNK VIS, TETE NOYEE	2					
12	90185–05002	NUT, NYLON ECROU,AUTO-BLOQUANT	2					
13	6L2–45987–01	SPACER 1 ENTRETOISE 1	1					
14	689–45997–00	SPACER 2 ENTRETOISE 2	1					
15	92990–14200	WASHER, PLAIN RONDELLE, PLATE	1					
16	90171–14013	NUT, CASTLE ECROU, CRENELE	1					
17	91490–30022	PIN. COTTER GOUPILLE	1					
18	664–45943–01	PROPELLER (3X9-7/8"X8"-F) HELICE (3X9-7/8"X8"-F)	1					UR UR
	664–45941–01	PROPELLER (3X9-7/8"X9"-F) HELICE (3X9-7/8"X9"-F)	1					UR UR
	664–45945–00	PROPELLER (3X9-7/8"X10-1/2"-F) HELICE (3X9-7/8"X10-1/2"-F)	1					UR UR
	664–45947–01	PROPELLER (3X9-7/8"X11-1/4"-F) HELICE (3X9-7/8"X11-1/4"-F)	1					UR UR
	664–45954–01	PROPELLER (3X9-7/8"X12"-F) HELICE (3X9-7/8"X12"-F)	1					UR UR
	664–45972–00	PROPELLER (3X9-1/8"X12"-F) HELICE (3X9-1/8"X12"-F)	1					UR UR
	664–45949–02	PROPELLER (3X9-7/8"X13"-F) HELICE (3X9-7/8"X13"-F)	1					UR UR
	664–45970–00	PROPELLER (3X9-1/8"X13"-F) HELICE (3X9-1/8"X13"-F)	1					UR UR
	664–45952–00	PROPELLER (3X9-7/8"X14"-F) HELICE (3X9-7/8"X14"-F)	1					UR UR

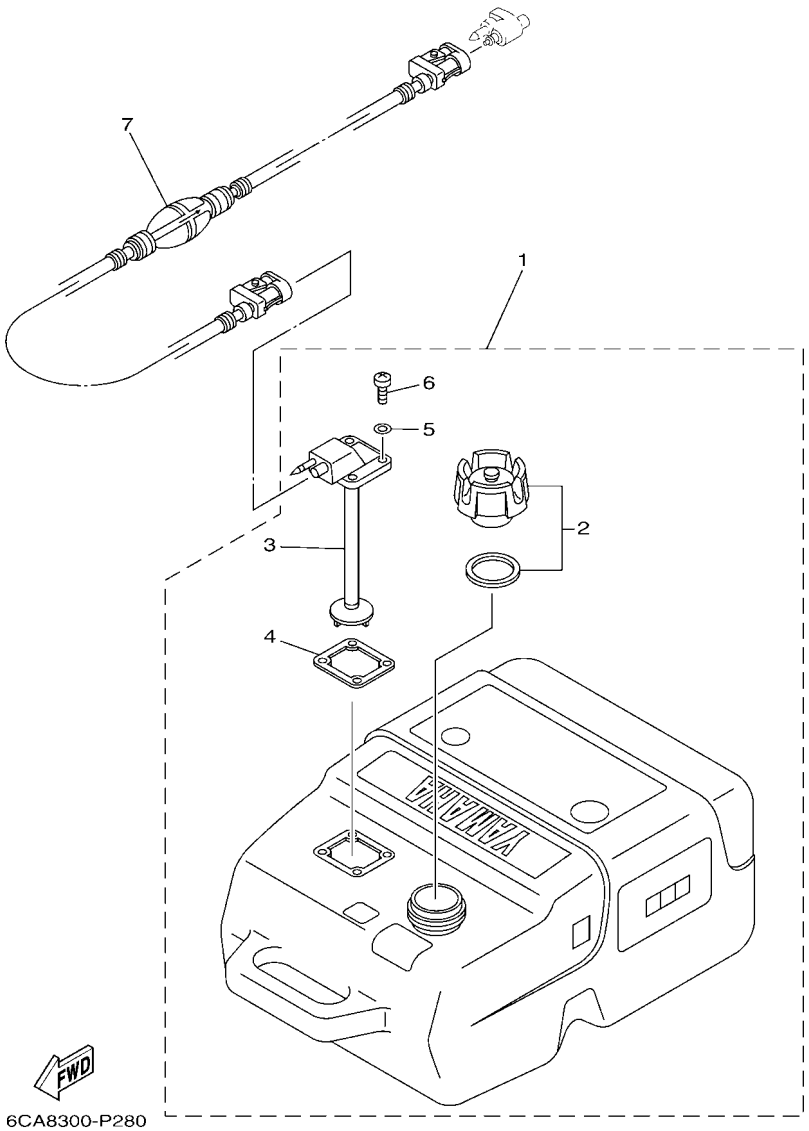

FIG. 28 FUEL TANK — RESERVOIR A CARBURANT

REF. NO.	PART NO. N° PIECES	DESCRIPTION DESCRIPTION	6DN8					REMARKS REMARQUES
1	6YK–24201–04	FUEL TANK ASSY (25L) RESERVOIR A ESSENCE (ENS.) 25L	1					AP AP
2	6YK–24610–01	.CAP ASSY .BOUCHON	1					
3	6YK–24260–10	.FUEL METER ASSY .INDICATEUR DE CARBURANT	1					
4	6YL–24268–01	.GASKET, FUEL METER .JOINT, JAUGE A CARBURANT	1					
5	6YL–24329–00	.SEAL .JOINT	4					
6	90157–05M16	.SCREW, PAN HEAD .VIS, TETE TRONCONIQUE	4					
7	6YL–24306–54	FUEL PIPE COMP. 1 DURITE A ESSENCE 1	1					AP AP

FIG. 29 STEERING GUIDE — FIXATION DE DIRECTION

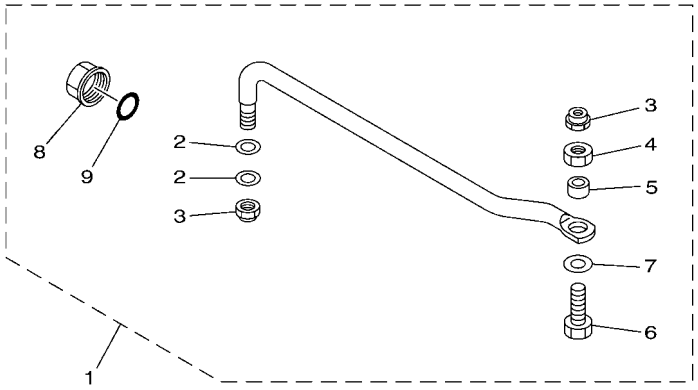

6BG1100-H340

REF. NO.	PART NO. N° PIECES	DESCRIPTION DESCRIPTION	6DN8					REMARKS REMARQUES
1	6BG–61350–00	STEERING GUIDE ATTACHMENT KIT FIXATIONS DE DIRECTION	1					AP AP
2	90201–10M20	.WASHER, PLATE .RONDELLE, PLATE	2					
3	90185–09M01	.NUT, SELF-LOCKING .ECROU,AUTO-BLOQUANT	2					
4	90170–09M03	.NUT .ECROU	1					
5	90387–10M42	.COLLAR .COLLERETTE	1					
6	90101–09M01	.BOLT .BOULON	1					
7	90201–10M63	.WASHER, PLATE .RONDELLE, PLATE	1					
8	6E5–43145–01	.CAP, CLAMP BRACKET .CAPUCHON, PRESSE	1					
9	93210–16275	.O-RING .JOINT TORIQUE	1					

FIG. 30 REMOTE CONTROL BOX — BOITIER DE COMMANDE A DISTANCE

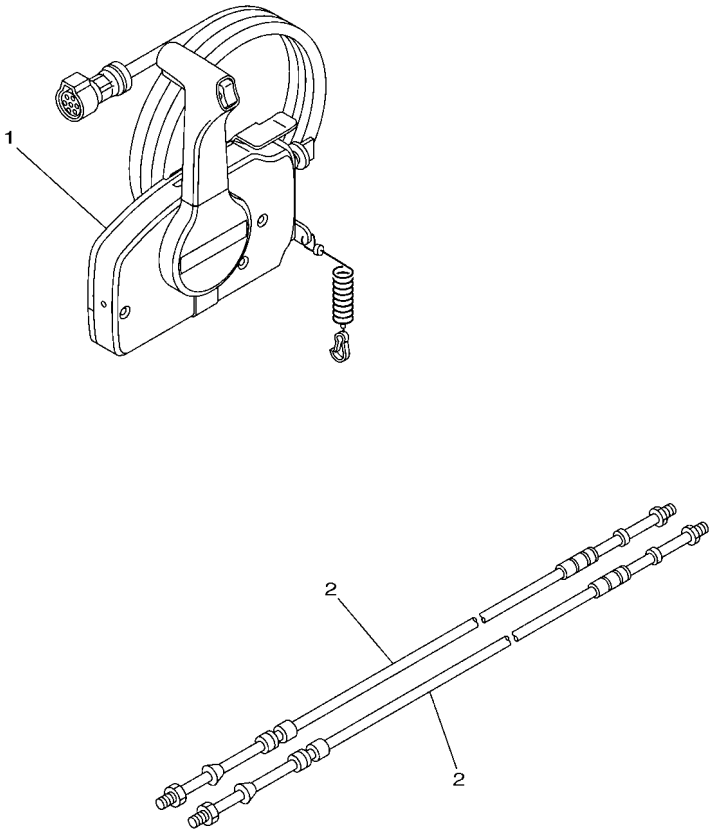

63PD370-P320

REF. NO.	PART NO. N° PIECES	DESCRIPTION DESCRIPTION	6DN8					REMARKS REMARQUES
1	703–48205–B2	REMOTE CONTROL ASSY (10P, PTT) BOITIER DE COMMANDE A DISTANCE	1					AP WITH PT/T SW. AP WITH PT/T SW.
2	701–48310–90	CABLE, REMOTE CONTROL L=11F CABLE, COMMANDE A DISTANCE:11F	2					UR UR
	701–48320–00	CABLE, REMOTE CONTROL L=12F CABLE, COMMANDE A DISTANCE:12F	2					UR UR
	701–48320–20	CABLE, REMOTE CONTROL L=13F CABLE, COMMANDE A DISTANCE:13F	2					UR UR
	701–48320–50	CABLE, REMOTE CONTROL L=15F CABLE, COMMANDE A DISTANCE:15F	2					UR UR

FIG. 31 REMOTE CONTROL ASSY — BOITIER DE COMMANDE A DISTANCE

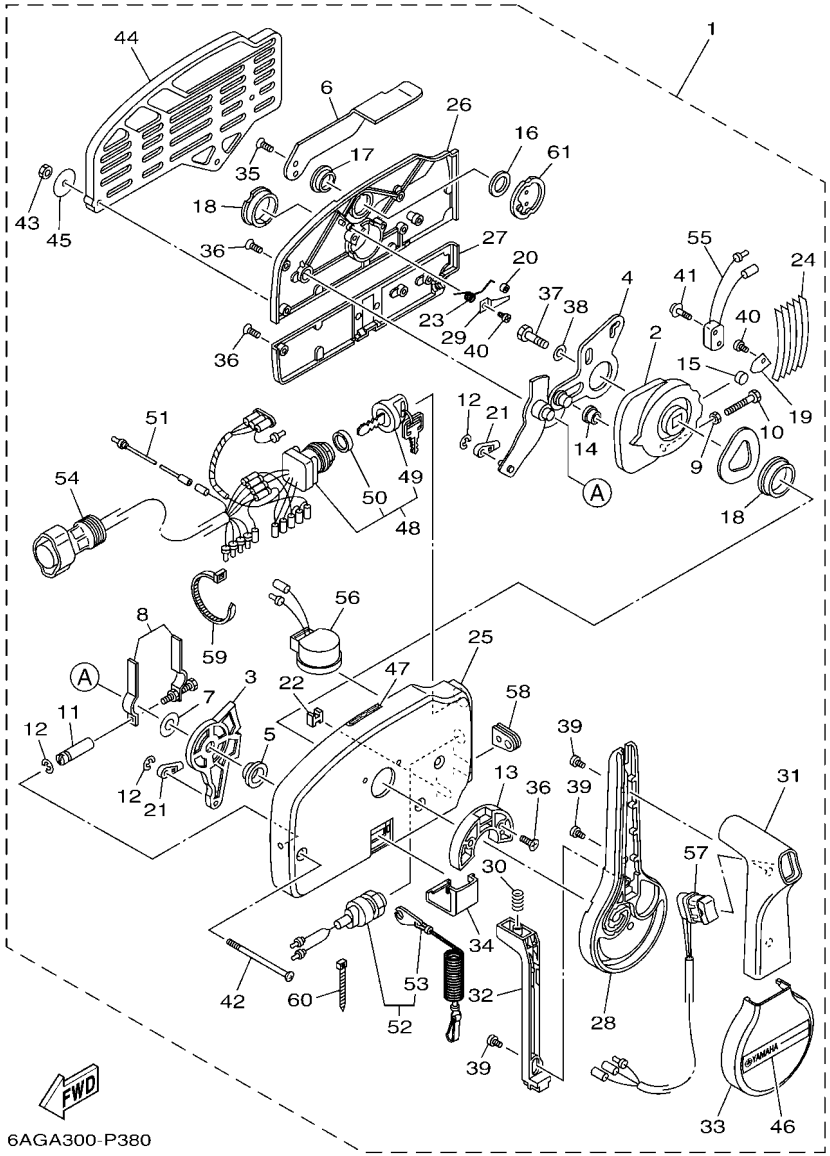

REF. NO.	PART NO. N° PIECES	DESCRIPTION DESCRIPTION	6DN8					REMARKS REMARQUES
1	703–48205–B2	REMOTE CONTROL ASSY (10P, PTT) BOITIER DE COMMANDE A DISTANCE	1					AP WITH PT/T SW. AP WITH PT/T SW.
2	703–48232–00	.GEAR .PIGNON	1					
3	703–48271–00	.ARM, SHIFT .BRAS	1					
4	703–48261–01	.ARM, THROTTLE .BRAS, ACCELERATION	1					
5	703–48235–00	.BUSHING .COUSSINET	1					
6	703–48152–10	.KNOB, FREE ACCEL. .BOUTON	1					
7	703–48268–00	.SPACER .ENTRETOISE	1					
8	703–48264–00	.FRICTION, THROTTLE .FRICTION, ACCELERATION	1					
9	95380–05600	.NUT .ECROU	1					
10	97380–05025	.BOLT .BOULON, HEXAGONAL	1					
11	703–48265–10	.SHAFT, FRICTION .AXE, COPILOTE	1					
12	93430–06024	.CIRCLIP .CLIPS	3					
13	703–48245–00	.PLATE, LOCK .PLAQUE, VERROU	1					
14	703–48252–00	.ROLLER, CAM .POULIE	1					
15	701–48248–00	.ROLLER, FREE ACCEL. .POULIE	1					
16	703–48198–00	.WASHER, WAVE .RONDELLE, ELASTIQUE ONDULEE	1					
17	703–48243–00	.BUSHING .COUSSINET	1					
18	703–48236–00	.BUSHING 1 .POULIE	2					
19	703–48189–00	.RETAINER .FLASQUE	1					
20	703–48234–00	.ROLLER, DETENT .POULIE	1					
21	703–48345–01	.CABLE END, REMOTE CONTROL 2 .CHAPE CABLE	2					
22	703–48358–00	.ANCHOR, CABLE .COLLIER	1					
23	703–48244–00	.SPRING, FREE ACCEL. .RESSORT	1					
24	703–48238–00	.SPRING, DETENT .RESSORT	5					
25	703–48211–10	.HOUSING,1 .CORPS	1					
26	703–48212–10	.BACK PLATE 1 .PLAQUETTE 1	1					
27	703–48213–10	.BACK PLATE 2 .PLAQUETTE 2	1					

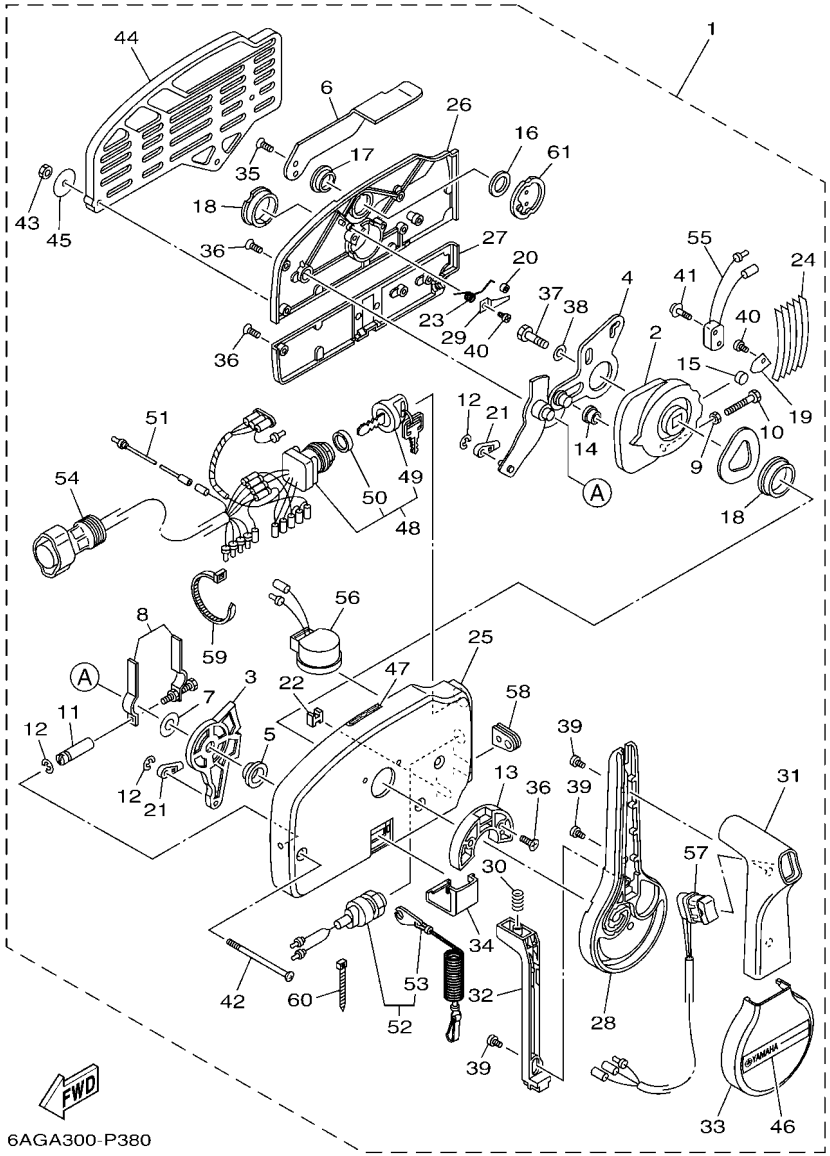

FIG. 31 REMOTE CONTROL ASSY — BOITIER DE COMMANDE A DISTANCE

REF. NO.	PART NO. N° PIECES	DESCRIPTION DESCRIPTION	6DN8					REMARKS REMARQUES
28	703–48221–10	.LEVER, CONTROL .LEVIER, COMMANDE	1					
29	703–48246–00	.SPACER .ENTRETOISE	1					
30	703–48227–00	.SPRING, NEUTRAL LOCK .RESSORT	1					
31	703–48222–20	.GRIP, CONTROL LEVER .POIGNEE, COMMANDE LEVIER	1					SINGLE SINGLE
32	703–48223–10	.LOCK, NEUTRAL .VERROU, NEUTRAL	1					
33	703–48225–10	.COVER .COUVERCLE	1					
34	703–48219–10	.COVER, LEAD .COUVERCLE	1					
35	703–48281–00	.SCREW .VIS	2					
36	703–44189–20	.SCREW .VIS	7					
37	97380–08030	.BOLT .BOULON, HEXAGONAL	1					
38	92990–08600	.WASHER, PLATE .RONDELLE, PLATE	1					
39	703–48128–10	.SCREW 2 .VIS 2	3					
40	98580–04006	.SCREW, PAN HEAD .VIS	2					
41	703–48129–00	.SCREW 3 .VIS 3	2					
42	703–44189–30	.SCREW .VIS	3					
43	95380–06600	.NUT, HEXAGON .ECROU	3					
44	703–48293–10	.SPACER, REMOTE CONTROL .ENTRETOISE	1					SINGLE SINGLE
45	701–48287–00	.WASHER .RONDELLE	3					
46	703–48215–10	.GRAPHIC .ADHESIF	1					
47	6X3–44191–00	.INDICATOR, SHIFT .ETIQUETTE, EMBRAYAGE	1					
48	703–82510–13	.MAIN SWITCH ASSY .CONTACTEUR A CLEF COMPLET	1					PRIME START PRIME START
49	676–82577–01	..CAP, KEY ..CABOCHON	1					
50	703–82532–00	..CAP ..COUVERCLE	1					
51	703–82531–00	.WIRE, LEAD (L70) .FIL (L70)	1					
52	688–82575–02	.ENGINE STOP SWITCH ASSY .COUPE CIRCUIT CPLT	1					
53	682–82556–00	..LANYARD, STOP SWITCH ..CORDON DU COUPE CIRCUIT	1					
54	688–8258A–20	.EXTENSION, WIRE HARNESS (4.9M) .EXTENSION, FAISCEAU DE FILS (4	1					(10P) (10P)

FIG. 31 REMOTE CONTROL ASSY — BOITIER DE COMMANDE A DISTANCE

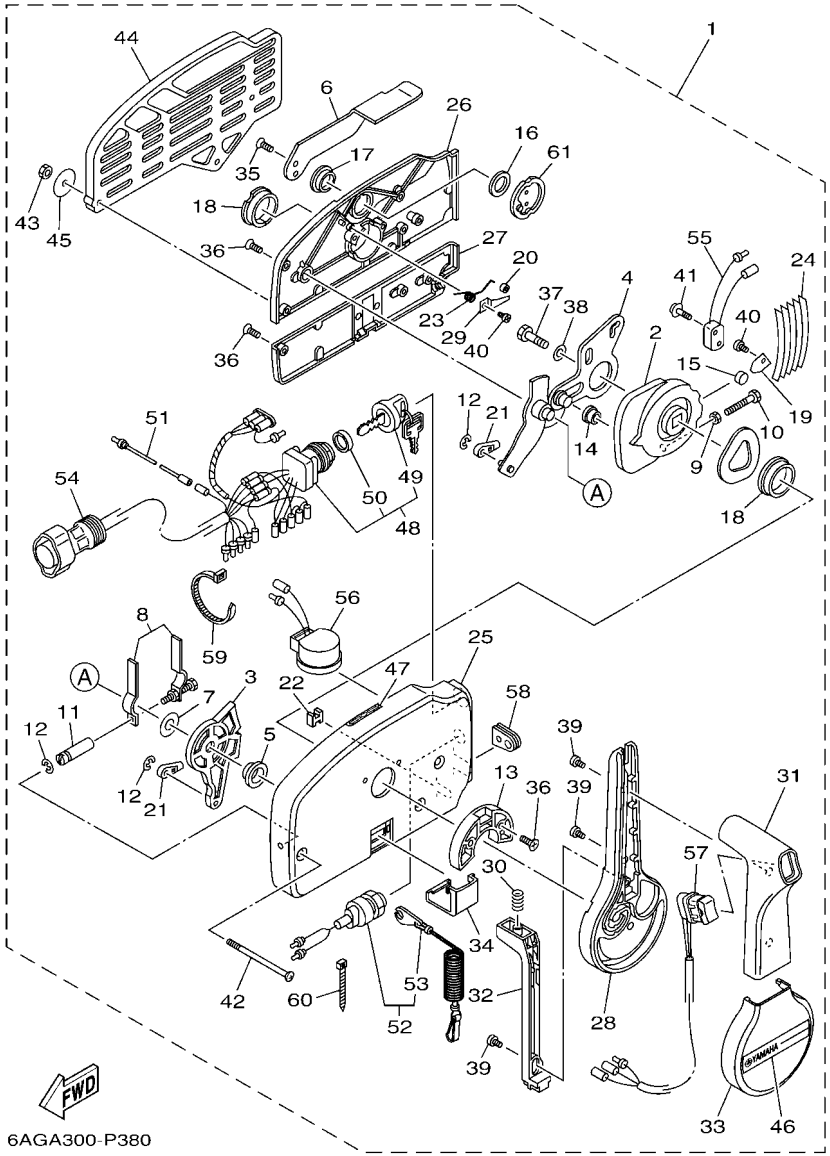

REF. NO.	PART NO. N° PIECES	DESCRIPTION DESCRIPTION	6DN8					REMARKS REMARQUES
55	703–82540–00	.NEUTRAL SWITCH ASSY .CONTACTEUR DE POINT-MORT	1					
56	703–83383–11	.BUZZER .RONFLEUR	1					
57	703–82563–31	.TRIM & TILT SWITCH ASSY .INCLINER ET PARER COMMUTATEUR	1					
58	703–48284–00	.GROMMET .PASSE-FIL	1					
59	703–82591–00	.BAND .COLLIER	1					
60	703–82592–00	.BAND .COLLIER	1					
61	703–48153–00	.SHAFT, FREE ACCEL. .AXE	1					

FIG. 32 REPAIR KIT 1 — KITS DE REPARATION 1

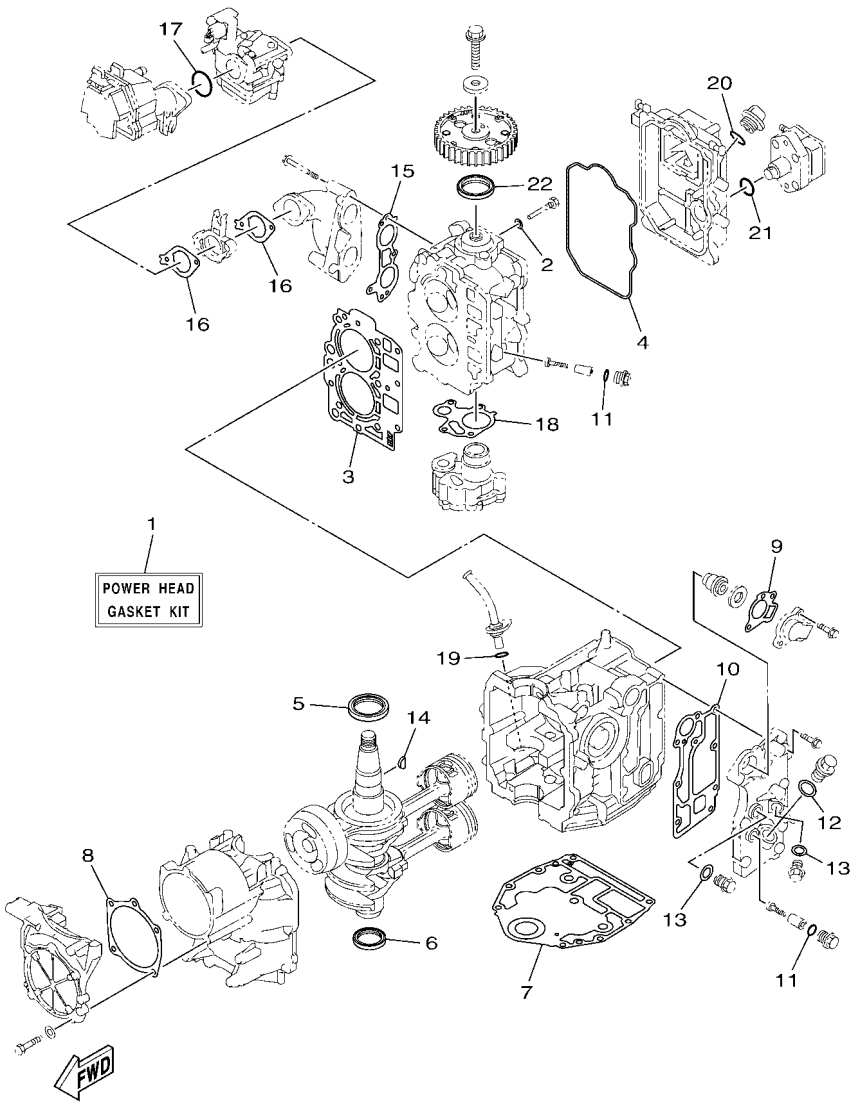

REF. NO.	PART NO. N° PIECES	DESCRIPTION DESCRIPTION	6DN8					REMARKS REMARQUES
1	6BL–W0001–01	POWER HEAD GASKET KIT POCHETTE DE JINTS TETE MOTRICE	1					
2	90430–06014	.GASKET .JOINT	1					
3	6BL–11181–00	.GASKET, CYLINDER HEAD 1 .JOINT, DE CULASSE 1	1					
4	6BL–11356–00	.SEAL, CYLINDER 2 .JOINT, SPY CYLINDRE	1					
5	93102–43M42	.OIL SEAL .JOINT SPY	1					
6	93101–35002	.OIL SEAL .JOINT SPY	1					
7	6BG–11351–00	.GASKET, CYLINDER .JOINT, D'EMBASE	1					
8	6BL–15663–00	.SEAL .JOINT	1					
9	62Y–12414–00	.GASKET, COVER .JOINT, COUVERCLE	1					
10	6BL–41114–00	.GASKET, EXHAUST OUTER COVER .JOINT, COUVERCLE D'ECHAPPEMENT	1					
11	93210–13M63	.O-RING .JOINT TORIQUE	3					
12	90201–186F1	.WASHER, PLATE .RONDELLE, PLATE	1					
13	90430–14115	.GASKET .JOINT	2					
14	90280–03017	.KEY, WOODRUFF .CLAVETTE, DEMI-LUNE	1					
15	6BL–13645–00	.GASKET, MANIFOLD 1 .JOINT, TUBULURE 1	1					
16	6BL–13646–00	.GASKET, MANIFOLD 2 .JOINT, TUBULURE 2	2					
17	93210–39ME4	.O-RING .JOINT TORIQUE	1					
18	6C5–13329–00	.GASKET, PUMP COVER .JOINT, COUVERCLE DE POMPE	1					
19	93210–19MJ3	.O-RING .JOINT TORIQUE	1					
20	93210–24M79	.O-RING .JOINT TORIQUE	1					
21	93210–24M79	.O-RING .JOINT TORIQUE	1					
22	93102–37M40	.OIL SEAL .JOINT SPY	1					

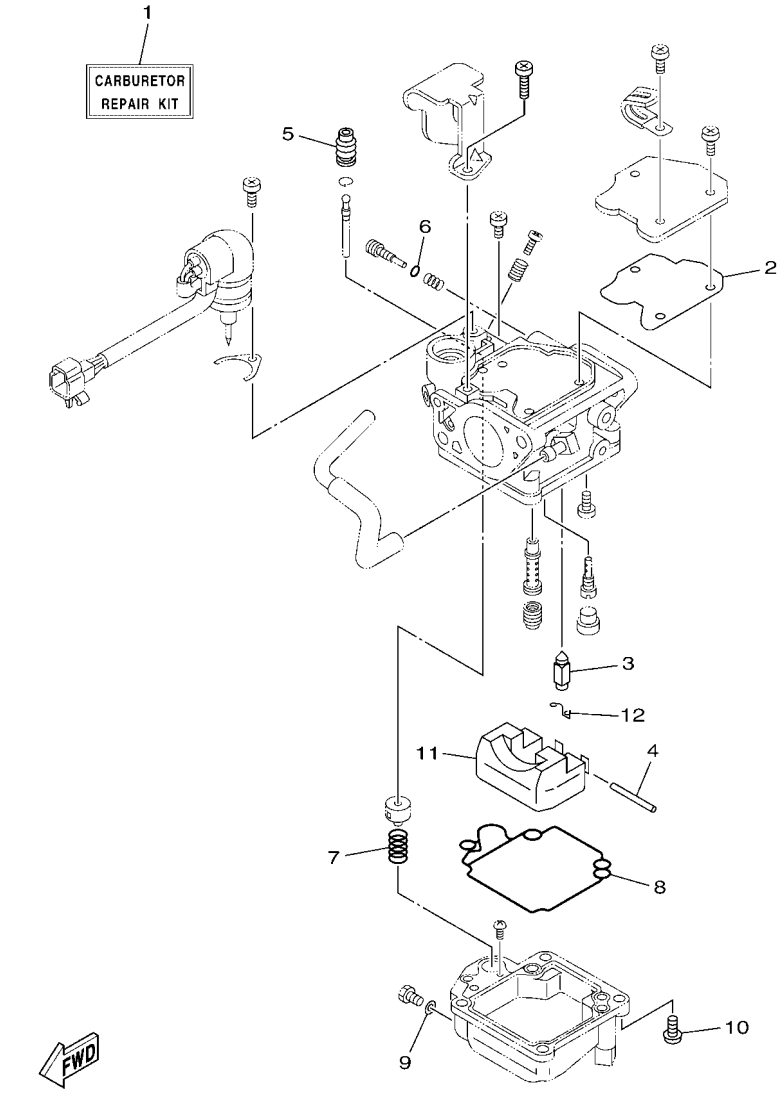

FIG. 33 REPAIR KIT 2 — KITS DE REPARATION 2

REF. NO.	PART NO. N° PIECES	DESCRIPTION DESCRIPTION	6DN8					REMARKS REMARQUES
1	6BL–W0093–00	CARBURETOR REPAIR KIT KIT DE REPARATION CARBURATEUR	1					
2	65W–14126–10	.GASKET .JOINT	1					
3	6AH–14546–00	.VALVE, NEEDLE .POINTEAU	1					
4	6H4–14548–00	.PIN, FLOAT ARM .AXE, BRAS DE FLOTTEUR	1					
5	65W–14373–02	.COVER, PLUNGER CAP .COUVERCLE DE PLONGEUR	1					
6	67C–14397–00	.O-RING .JOINT TORIQUE	1					
7	65W–14335–00	.SPRING, PLUNGER .RESSORT, PLONGEUR	1					
8	65W–14384–00	.GASKET, FLOAT CHAMBER .JOINT, CUVE DE FLOTTEUR	1					
9	65W–14398–00	.GASKET .JOINT	1					
10	97980–04114	.SCREW, WITH WASHER .VIS, AVEC RONDELLE	4					
11	63V–14985–00	.FLOAT .FLOTTEUR	1					
12	663–14159–00	.CLIP .JONC	1					

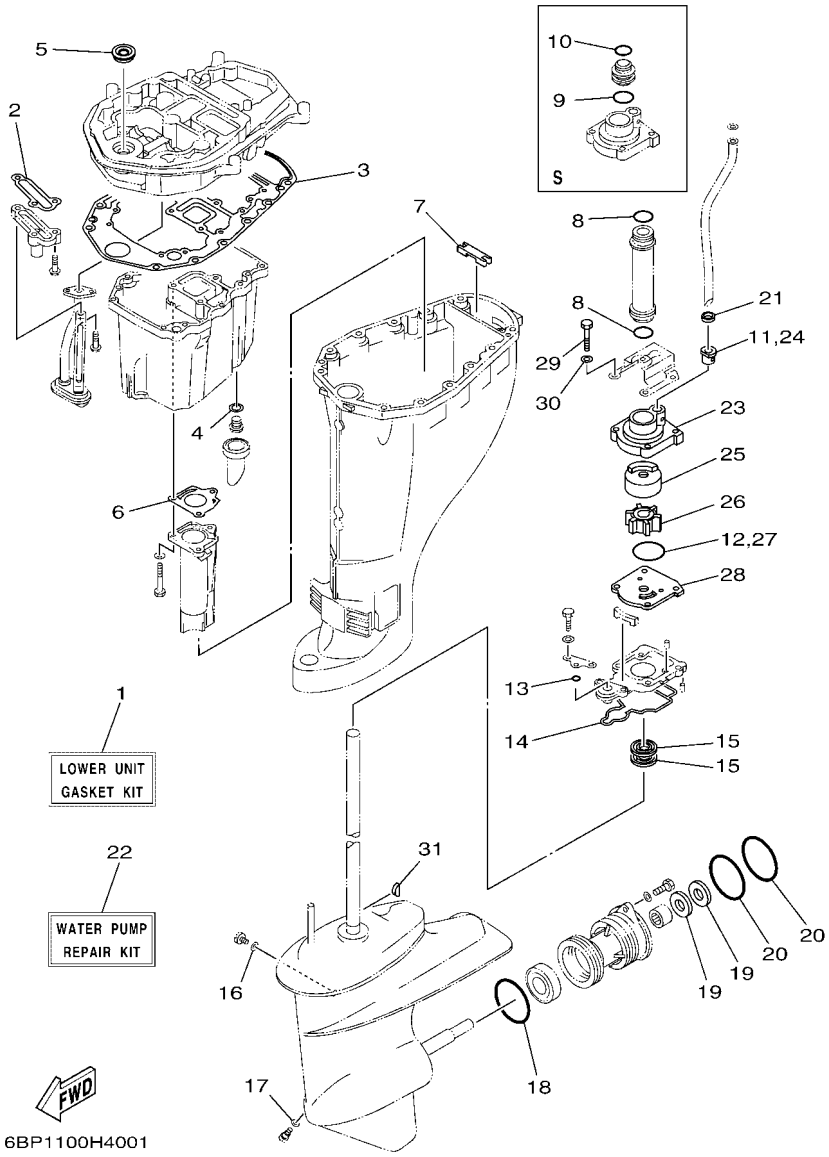

FIG. 34 REPAIR KIT 3 — KITS DE PEPARATION 3

REF. NO.	PART NO. N° PIECES	DESCRIPTION DESCRIPTION	6DN8					REMARKS REMARQUES
1	65W–W0001–24	LOWER UNIT GASKET KIT POCHETTE DE JOINTS EMBASE	1					
2	62Y–13475–00	.GASKET .JOINT	1					
3	69W–15312–00	.GASKET, OIL PAN .JOINT DE VENTILATEUR D'HUILE	1					
4	90430–14M09	.GASKET .JOINT	1					
5	93103–16011	.OIL SEAL .JOINT SPY	1					
6	67C–41133–00	.GASKET, EXHAUST MANIFOLD 1 .JOINT, PIPE D'ECHAPPEMENT	1					
7	65W–45128–00	.SEAL 2 .JOINT 2	1					
8	93210–26130	.O-RING .JOINT TORIQUE	2					L(21.7") L(21.7")
9	93210–26130	.O-RING .JOINT TORIQUE	1					S(16.7") S(16.7")
10	93210–22164	.O-RING .JOINT TORIQUE	1					S(16.7") S(16.7")
11	6L2–44367–00	.DAMPER, WATER SEAL 3 .JOINT TUBE D'EAU 3	1					
12	93210–45161	.O-RING .JOINT TORIQUE	1					
13	93210–06ME6	.O-RING .JOINT TORIQUE	1					
14	61N–45315–00	.PACKING, LOWER CASING .JOINT, BOITIER D'HELICE	1					
15	93101–22067	.OIL SEAL .JOINT SPY	2					
16	90430–08003	.GASKET .JOINT	1					
17	90430–08003	.GASKET .JOINT	1					
18	93210–64ME7	.O-RING .JOINT TORIQUE	1					
19	93101–20M07	.OIL SEAL .JOINT SPY	2					
20	93210–65M50	.O-RING .JOINT TORIQUE	2					
21	90430–10002	.GASKET .JOINT	1					
22	61N–W0078–11	WATER PUMP REPAIR KIT KIT DE REPARATION DE LA POMPE	1					
23	61N–44311–01	.HOUSING, WATER PUMP .CORPS, POMPE A EAU	1					
24	6L2–44367–00	.DAMPER, WATER SEAL 3 .JOINT TUBE D'EAU 3	1					
25	61N–44322–01	.INSERT, CARTRIDGE .CUVETTE	1					
26	6H4–44352–02	.IMPELLER .TURBINE	1					
27	93210–45161	.O-RING .JOINT TORIQUE	1					

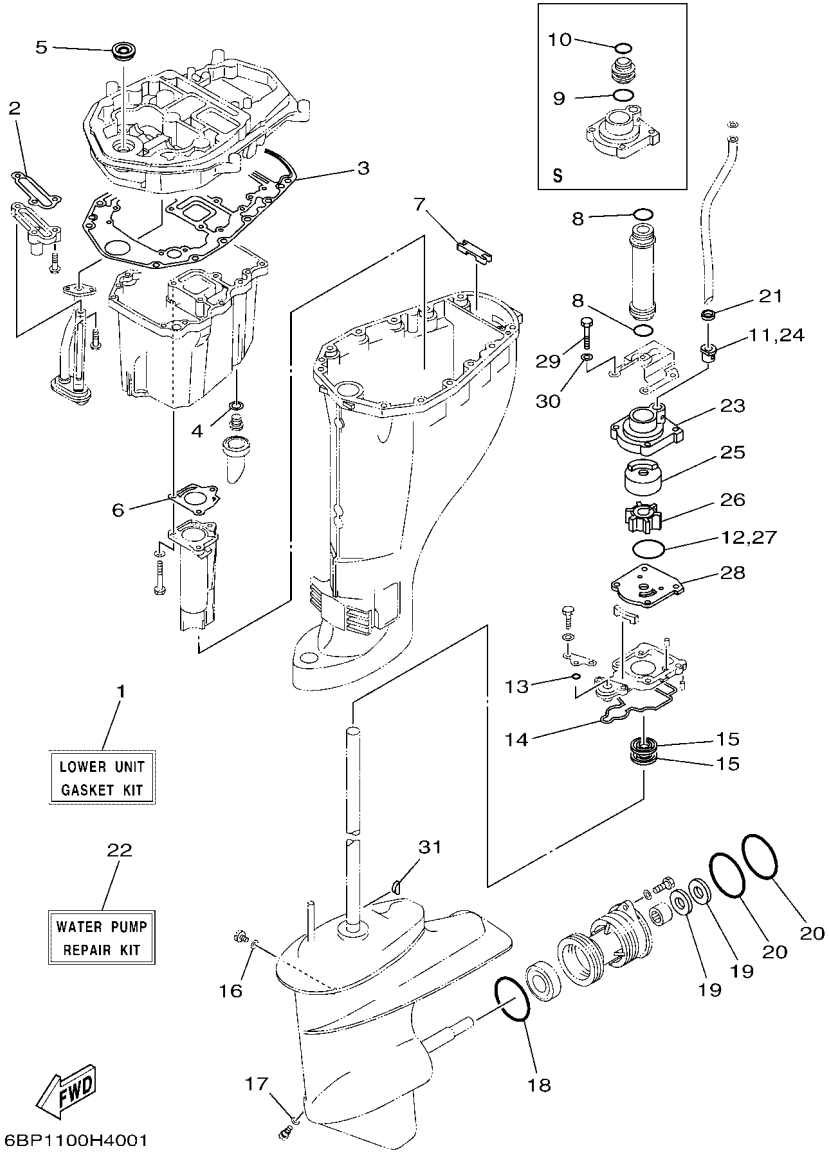

FIG. 34 REPAIR KIT 3 — KITS DE PEPARATION 3

REF. NO.	PART NO. N° PIECES	DESCRIPTION DESCRIPTION	6DN8					REMARKS REMARQUES
28	61N–44323–00	.OUTER PLATE, CARTRIDGE .PLAQUE EXTERIEURE	1					
29	97095–06040	.BOLT .BOULON	4					
30	92995–06600	.WASHER .RONDELLE	4					
31	90280–03024	.KEY, WOODRUFF .CLAVETTE, DEMI-LUNE	1					

NUMERICAL INDEX
INDEX NUMERIQUE

PART NO. N° PIECES	REF. NO.
6BL–11111–10–1S	5 – 2
62Y–11119–00	3 – 13
	5 – 21
62Y–11133–30	5 – 3
6BG–11168–00	5 – 16
6BL–11181–00	5 – 10
	32 – 3
6BL–11191–00–1S	5 – 14
6G8–11197–A0	3 – 32
	5 – 6
62Y–11325–00	1 – 10
	24 – 2
6BL–11325–00	1 – 5
	5 – 4
6G8–11325–00	1 – 3
	3 – 30
66M–11327–00–94	24 – 4
66M–11328–00	24 – 3
6BG–11351–00	3 – 8
	32 – 7
6BL–11356–00	5 – 19
	32 – 4
6H1–11372–00	3 – 16
6BL–11411–00	4 – 1
6BG–11416–10	4 – 2
6BG–11416–20	4 – 2
6BG–11416–30	4 – 2
6C5–11536–00	9 – 7
6C5–11537–10	9 – 2
6H4–11545–00	11 – 4
62Y–11557–00	9 – 8
6BG–11576–00–94	25 – 10
67C–11603–00	4 – 7
67C–11604–00	4 – 7
67C–11605–00	4 – 7
69W–11631–01–97	4 – 6
62Y–11633–00	4 – 8
69W–11635–01	4 – 6
69W–11636–01	4 – 6
6BL–11642–00	4 – 11
6C5–11650–10	4 – 3
6C5–11654–00	4 – 4
6CJ–11656–10	4 – 5
6CJ–11656–20	4 – 5
6CJ–11656–30	4 – 5
6BL–11665–00	4 – 10
69W–12111–00	6 – 1
51Y–12114–00	6 – 4

PART NO. N° PIECES	REF. NO.
62Y–12116–00	6 – 3
30X–12117–00	6 – 5
30X–12118–00	6 – 6
51Y–12119–00	6 – 7
69W–12121–10	6 – 2
6BL–12146–00	6 – 8
62Y–12151–00	6 – 9
6C5–12151–00	6 – 12
62Y–12158–00	6 – 11
6C5–12158–00	6 – 14
64J–12159–00	6 – 10
6C5–12159–00	6 – 13
6BL–12171–00	9 – 1
6BL–12231–00	6 – 15
6BL–12233–00	6 – 16
6G8–12411–03	1 – 1
	3 – 24
688–12412–00	3 – 25
6C5–12413–00–9S	3 – 26
62Y–12414–00	1 – 2
	3 – 27
	32 – 9
6BP–12481–00	3 – 18
66M–12535–00	24 – 5
6AW–12572–00	19 – 5
6R3–12580–00	19 – 7
6C5–12858–00	3 – 39
62Y–13131–01	10 – 5
6BL–13300–00	9 – 14
6C5–13329–00	9 – 15
	32 – 18
65W–13411–00	25 – 8
6BP–13437–61	9 – 18
5GH–13440–60	1 – 4
	3 – 38
62Y–13475–00	25 – 11
	34 – 2
6BL–13641–00–94	7 – 1
6BL–13645–00	7 – 2
	32 – 15
6BL–13646–00	7 – 7
	32 – 16
65W–14126–10	8 – 4
	33 – 2
663–14159–00	8 – 14
	33 – 12
67F–14255–00	8 – 33
6BL–14271–00	7 – 8

PART NO. N° PIECES	REF. NO.
6DN–14301–00	8 – 1
65W–14335–00	8 – 23
	33 – 7
65W–14346–00	8 – 31
6DN–14346–00	8 – 35
65W–14371–00	8 – 24
65W–14373–02	8 – 17
	33 – 5
65W–14379–00	8 – 19
6BL–14380–00	8 – 30
65W–14384–00	8 – 25
	33 – 8
67C–14397–00	8 – 21
	33 – 6
65W–14398–00	8 – 27
	33 – 9
65W–1439G–00	8 – 18
6BL–14440–00	7 – 9
62Y–14485–00	5 – 15
63V–14523–00	8 – 9
6AH–14546–00	8 – 13
	33 – 3
6H4–14548–00	8 – 16
	33 – 4
67C–14555–00	8 – 22
67C–14567–00	8 – 32
6BL–14571–10	20 – 32
65W–14572–00	8 – 3
65W–14807–00	8 – 34
67C–14923–20	8 – 20
6BL–14943–28	8 – 11
65W–14947–90	8 – 10
676–14948–05	8 – 6
679–14966–00	8 – 7
65W–14980–20	8 – 26
63V–14985–00	8 – 12
	33 – 11
65W–14992–00	8 – 28
6BL–15100–02	3 – 2
6BL–15121–00–1S	3 – 9
65W–15311–03–CA	25 – 1
69W–15312–00	25 – 2
	34 – 3
65W–15316–00	25 – 4
6BL–15362–00	25 – 14
6G8–15363–00	5 – 26
6BL–15373–00	7 – 12
6BL–15377–00	25 – 15

PART NO. N° PIECES	REF. NO.
6BL–15663–00	3 – 10
	32 – 8
15A–22442–00	23 – 28
6YK–24201–04	28 – 1
6YK–24260–10	28 – 3
6YL–24268–01	28 – 4
6G1–24304–10	10 – 32
6YL–24306–54	28 – 7
6BL–24311–00	10 – 23
61N–24329–00	10 – 34
6YL–24329–00	28 – 5
6BL–24364–00	19 – 15
62Y–24374–01	10 – 10
688–24378–00	3 – 19
6C5–24378–00	19 – 10
6BL–24396–00	19 – 13
62Y–24410–04	10 – 1
62Y–24411–02	10 – 3
6C5–24414–00	10 – 11
62Y–24415–01	10 – 2
62Y–24423–00	10 – 4
62Y–24444–01	10 – 7
62Y–24454–00	10 – 6
6C5–24471–00	10 – 8
6BL–24481–00	10 – 21
61N–24521–00	10 – 15
61N–24560–10	10 – 14
61N–24563–10	1 – 7
	10 – 16
6D5–24566–00	10 – 18
6YK–24610–01	28 – 2
6AH–26364–00	20 – 3
62Y–28100–00	10 – 35
67F–2812A–00	13 – 6
6BP–28199–78–D0	10 – 36
6BP–28199–78–E0	10 – 36
6BP–28199–78–F0	10 – 36
6BP–28199–78–G0	10 – 36
6BP–28199–78–H0	10 – 36
6BP–28199–78–S0	10 – 36
6BP–28199–88–K0	10 – 37
6BP–28199–88–L0	10 – 37
6BP–28199–88–M0	10 – 37
6BP–28199–88–N0	10 – 37
6BP–28199–88–P0	10 – 37
6BP–28199–88–R0	10 – 37
6BL–41113–01–1S	3 – 15
6BL–41114–00	3 – 28

PART NO. N° PIECES	REF. NO.
6BL–41114–00	32 – 10
68U–41131–00–CA	24 – 12
67C–41133–00	24 – 11
	34 – 6
67C–41137–20–CA	24 – 1
6DN–41211–00	20 – 31
6J8–41262–00	20 – 29
6DN–41283–00	20 – 28
6BL–41638–00	20 – 26
6G1–41662–01–94	20 – 4
6BG–42384–00	19 – 3
65W–42511–11–8D	22 – 1
648–42528–00	22 – 23
6DN–42610–11	2 – 1
6CJ–42615–00	2 – 10
6BL–42617–00	9 – 13
6BL–4261A–10	2 – 2
6BG–42649–00	2 – 6
6BL–42651–00	2 – 3
6BL–42652–00	2 – 7
6BG–42662–00	2 – 12
6FM–42675–00	2 – 15
6FM–42676–00	2 – 16
6DN–42677–10	2 – 13
6BP–42681–00	2 – 14
6AH–42697–10	2 – 11
6BP–42710–00–8D	18 – 1
62Y–42716–00	18 – 7
61A–42717–00	18 – 6
65W–42717–00	18 – 5
6G1–42725–00	16 – 15
6BL–42725–01	18 – 9
65W–42726–10	18 – 32
6H1–42726–21	19 – 1
68U–42727–00	18 – 22
6BL–42727–00	18 – 10
6BP–42741–00	18 – 23
6BG–42748–00	18 – 3
60V–42756–00	18 – 24
6BL–42761–00	18 – 8
6BP–42769–00	18 – 31
6EE–42794–40	18 – 35
6EE–42794–50	18 – 36
6BL–42815–00–8D	18 – 12
6BG–42816–00	18 – 17
6BG–42851–00	2 – 5
65W–43111–10–8D	21 – 1
65W–43112–10–8D	21 – 2

PART NO. N° PIECES	REF. NO.
63D–43131–01	21 – 9
66T–43144–00	18 – 19
6E5–43145–01	29 – 8
65W–43191–00	21 – 4
65W–43192–00	21 – 3
65W–43311–11–8D	21 – 7
65W–43373–00	22 – 24
65W–43800–23–8D	23 – 1
65W–43801–01	23 – 17
67F–43802–00	23 – 40
67C–43804–10	23 – 4
67C–43805–10	23 – 3
6T4–43808–00	23 – 45
67C–4380F–10	23 – 7
65W–4380K–00	23 – 15
65W–4380L–04	23 – 37
65W–43810–01	23 – 16
65W–43811–01	23 – 20
65W–43812–00	23 – 18
65W–43817–00	23 – 52
65W–4381B–00	23 – 31
69J–4381C–00	23 – 34
6H1–43829–00	23 – 73
65W–4382A–00	23 – 60
65W–43830–00	23 – 49
65W–43831–00	23 – 48
65W–43840–01	23 – 14
62X–43841–00	23 – 46
65W–43843–00	23 – 67
65W–43844–00	23 – 61
6H1–43844–10	23 – 69
6H1–43845–00	23 – 56
6H1–43847–00	23 – 58
6H1–4384F–10	23 – 70
65W–43851–00	23 – 62
65W–43853–00	23 – 72
6T4–43853–00	23 – 43
65W–43854–00	23 – 59
65W–43855–00	23 – 65
6H1–43856–10	23 – 68
65W–43857–00	23 – 27
65W–4385A–01	23 – 25
6H1–43861–10	23 – 32
6H1–43862–00	23 – 30
67C–43862–10	23 – 13
6D8–43863–00	23 – 57
65W–43865–00	23 – 19
6H1–43866–01	23 – 41

NUMERICAL INDEX
INDEX NUMERIQUE

PART NO. N° PIECES	REF. NO.
67C–43867–00	23 – 21
65W–4386A–00	23 – 26
	23 – 36
67C–4386K–10	23 – 8
6H1–43875–00	23 – 55
62X–43878–01	23 – 74
67C–43879–10	23 – 9
65W–43880–21	23 – 2
65W–43881–21	23 – 11
67C–43882–10	23 – 12
67C–43892–10	23 – 5
66R–44114–00	20 – 9
65W–44116–00	20 – 8
6BL–44121–01	20 – 1
6BL–44125–00	20 – 16
6BL–44142–00	20 – 11
6BP–44143–10	20 – 13
65W–44150–11	26 – 56
6BL–44173–00	20 – 6
65W–44176–00	26 – 18
703–44189–20	31 – 36
703–44189–30	31 – 42
6X3–44191–00	31 – 47
6BL–44192–00	20 – 20
61N–44311–01	26 – 10
	34 – 23
61N–44322–01	26 – 12
	34 – 25
61N–44323–00	26 – 15
	34 – 28
65W–44328–11	26 – 9
6H4–44352–02	26 – 13
	34 – 26
65W–44361–12	27 – 1
61N–44362–10	26 – 7
6L2–44367–00	26 – 11
	34 – 11
	34 – 24
6BL–44391–00	19 – 4
67C–44514–20	22 – 10
66T–44526–30	22 – 11
65W–44551–11–8D	22 – 13
65W–44555–00	22 – 14
65W–44575–01	22 – 15
6D5–45111–10–8D	24 – 15
61N–45127–00	26 – 23
65W–45128–00	24 – 20
	34 – 7

PART NO. N° PIECES	REF. NO.
65W–45151–00	24 – 18
6L2–45214–00	27 – 9
6L2–45215–00	27 – 10
65W–45251–00	1 – 9
	21 – 18
61N–45251–01	1 – 13
	26 – 28
65W–45300–12–8D	26 – 1
61N–45311–02–8D	26 – 2
61N–45315–00	26 – 24
	34 – 14
65W–45331–00–CA	26 – 21
688–45341–10	26 – 31
61N–45361–01–8D	26 – 49
61N–45371–00	27 – 7
61N–45510–10	26 – 33
61N–45536–00	26 – 5
61N–45551–00	26 – 35
61N–45560–10	26 – 39
6L2–45567–00	26 – 38
6L2–45567–10	26 – 38
6L2–45567–20	26 – 38
6L2–45567–30	26 – 38
6L2–45567–40	26 – 38
61N–45571–00	26 – 47
6L2–45577–00	26 – 48
6L2–45577–10	26 – 48
6L2–45577–20	26 – 48
6L2–45577–30	26 – 48
61N–45587–00	26 – 4
61N–45587–10	26 – 4
61N–45587–20	26 – 4
61N–45587–30	26 – 4
61N–45587–40	26 – 4
61N–45587–50	26 – 4
61N–45587–60	26 – 4
61N–45587–70	26 – 4
65W–45611–00	26 – 40
6FM–45631–00	26 – 42
648–45633–11	26 – 44
648–45635–00	26 – 41
664–45941–01	27 – 18
664–45943–01	27 – 18
664–45945–00	27 – 18
664–45947–01	27 – 18
664–45949–02	27 – 18
664–45952–00	27 – 18
664–45954–01	27 – 18

PART NO. N° PIECES	REF. NO.
664–45970–00	27 – 18
664–45972–00	27 – 18
664–45972–00	27 – 13
689–45997–00	27 – 14
6C5–46241–00	9 – 6
6BL–46297–00	9 – 11
703–48128–10	31 – 39
703–48129–00	31 – 41
703–48152–10	31 – 6
703–48153–00	31 – 61
703–48189–00	31 – 19
703–48198–00	31 – 16
703–48205–B2	30 – 1
	31 – 1
703–48211–10	31 – 25
703–48212–10	31 – 26
703–48213–10	31 – 27
703–48215–10	31 – 46
703–48219–10	31 – 34
703–48221–10	31 – 28
703–48222–20	31 – 31
703–48223–10	31 – 32
703–48225–10	31 – 33
703–48227–00	31 – 30
703–48232–00	31 – 2
703–48234–00	31 – 20
703–48235–00	31 – 5
703–48236–00	31 – 18
703–48238–00	31 – 24
703–48243–00	31 – 17
703–48244–00	31 – 23
703–48245–00	31 – 13
703–48246–00	31 – 29
701–48248–00	31 – 15
703–48252–00	31 – 14
703–48261–01	31 – 4
703–48264–00	31 – 8
703–48265–10	31 – 11
703–48268–00	31 – 7
703–48271–00	31 – 3
703–48281–00	31 – 35
703–48284–00	31 – 58
701–48287–00	31 – 45
703–48293–10	31 – 44
701–48310–90	30 – 2
701–48320–00	30 – 2
701–48320–20	30 – 2
701–48320–50	30 – 2

PART NO. N° PIECES	REF. NO.
6FM–48344–00	20 – 24
	20 – 36
703–48345–01	31 – 21
703–48358–00	31 – 22
65W–48511–01	22 – 26
6BL–48538–00	18 – 33
6BG–61350–00	29 – 1
68V–81315–00	13 – 14
6BL–81337–00	11 – 12
6BG–81800–00	17 – 1
6BG–81807–00	17 – 3
6BG–81810–00	17 – 11
6BG–81820–00	17 – 13
6BL–81822–00	14 – 12
6BL–81823–00	14 – 16
6BG–81826–00	17 – 15
6BL–8182A–00	14 – 7
6BG–8182J–00	17 – 14
6BG–81830–00	17 – 2
6BG–81832–00	17 – 7
6BG–81836–00	17 – 4
6BG–81839–00	17 – 10
6AW–8183T–00	17 – 6
6BL–8183X–00	14 – 9
6P2–8183X–00	15 – 6
6BG–81840–00	17 – 12
6BG–81846–00	17 – 16
6BG–81850–00	17 – 9
6BG–81857–00	17 – 8
6BG–81891–00	17 – 5
6BL–81925–00	14 – 8
68T–81940–00	14 – 4
6BG–81941–00	17 – 17
6BL–81942–00	15 – 3
6BL–81948–00	12 – 3
6BL–81949–00	15 – 5
63P–81950–00	15 – 1
6BL–81960–00	14 – 1
6EE–81994–40	11 – 15
6EE–81994–50	11 – 18
6EE–81995–40	11 – 16
6EE–81995–50	11 – 19
6AG–81996–00	11 – 17
6BL–82105–01	14 – 18
6G5–82119–10	14 – 6
6U0–82127–00	21 – 21
65W–82127–10	22 – 19
6H1–82148–00	21 – 20

PART NO. N° PIECES	REF. NO.
67F–82151–00	16 – 9
67F–82151–10	16 – 10
67C–82155–00	13 – 7
67F–8215B–10	16 – 11
67F–8215B–20	16 – 12
67C–82181–10	23 – 6
6A0–82317–00	12 – 4
6AH–82370–00	13 – 2
6BL–82388–00	16 – 5
6BL–82389–00	13 – 18
6BL–82398–00	5 – 28
64J–82504–00	13 – 13
703–82510–13	31 – 48
703–82531–00	31 – 51
703–82532–00	31 – 50
703–82540–00	31 – 55
6BL–82554–00	12 – 12
682–82556–00	31 – 53
69J–82563–01	16 – 16
703–82563–31	31 – 57
688–82575–02	31 – 52
676–82577–01	31 – 49
69J–82587–00	16 – 17
688–8258A–20	31 – 54
6BL–82590–01	16 – 8
703–82591–00	31 – 59
703–82592–00	31 – 60
703–83383–11	31 – 56
6BL–8339X–00	13 – 8
6H4–83589–00	16 – 2
63P–83614–01	16 – 18
62Y–84301–00	16 – 1
67C–85415–00	16 – 20
6BL–85510–00	11 – 2
6BL–85540–00	12 – 1
6BL–85550–00	11 – 1
6BG–85561–00–94	11 – 8
6F5–85570–13	13 – 1
6AH–85580–00	11 – 3
6CJ–85790–00	13 – 15
6BL–W0001–01	32 – 1
65W–W0001–24	34 – 1
61N–W0078–11	1 – 14
	34 – 22
6BL–W0093–00	33 – 1
6BL–W009A–10–1S	5 – 1
6BL–W009B–02–1S	3 – 1
90101–06020	21 – 19

PART NO. N° PIECES	REF. NO.
90101–08M86	22 – 9
90101–09M01	29 – 6
90101–12M65	21 – 32
90105–08060	6 – 18
90105–08M76	22 – 25
90105–09009	5 – 12
90105–10M12	27 – 5
90109–06047	2 – 8
90109–06266	10 – 13
90109–06M65	5 – 8
90109–06M86	16 – 6
	16 – 19
	18 – 11
	18 – 20
	18 – 26
	18 – 34
	19 – 14
	19 – 16
90109–06MA1	7 – 13
90110–10M02	21 – 29
90116–10064	22 – 22
90119–06025	9 – 16
90119–06M48	27 – 8
90119–06M61	18 – 2
90119–06MA3	5 – 13
90119–06MA5	3 – 29
90119–08132	24 – 17
90119–08M01	3 – 4
90119–10M14	22 – 17
90151–05M05	27 – 11
90157–05M16	28 – 6
90159–05M12	14 – 21
90167–05009	15 – 4
90170–06015	20 – 14
90170–09M03	29 – 4
90170–20137	4 – 12
	11 – 6
90171–14013	27 – 16
90179–08003	14 – 19
90179–10M14	26 – 36
90179–10M33	22 – 18
90179–35001	9 – 9
90185–05002	27 – 12
90185–06M05	2 – 9
90185–08018	22 – 7
90185–09M01	29 – 3
90185–10027	22 – 21
90185–10M13	21 – 31

NUMERICAL INDEX
INDEX NUMERIQUE

PART NO. N° PIECES	REF. NO.
90185–22043	21 – 12
90201–05M06	20 – 21
90201–06M31	20 – 18
	20 – 33
90201–08M00	21 – 25
90201–10038	23 – 29
90201–10049	22 – 27
90201–10144	9 – 5
90201–10M20	29 – 2
90201–10M63	29 – 7
90201–12062	21 – 33
90201–12426	21 – 34
90201–12M07	18 – 16
90201–16014	6 – 17
90201–186F1	3 – 35
	32 – 12
90201–20417	26 – 46
90201–21M18	11 – 5
90201–22M03	21 – 11
90202–12060	27 – 2
90206–12052	18 – 15
90209–52M00	22 – 2
90249–12M38	21 – 15
90249–18M35	21 – 28
90250–05010	26 – 43
90254–03M05	20 – 2
	20 – 7
	20 – 12
90280–03017	9 – 10
	32 – 14
90280–03024	26 – 34
	34 – 31
90340–08002	26 – 26
90340–14M06	3 – 36
	25 – 5
90340–18M09	3 – 34
90344–51003	3 – 7
90386–12M37	18 – 13
90386–12M98	21 – 14
90386–12MA0	21 – 13
90386–12MA2	18 – 14
90386–14MA1	21 – 6
90386–18M44	21 – 26
90386–18MA0	21 – 27
90386–22M15	21 – 10
90386–44M03	22 – 4
90386–44M99	22 – 6
90386–52M02	22 – 3

PART NO. N° PIECES	REF. NO.
90387–06119	12 – 5
90387–06139	20 – 30
90387–06M43	18 – 30
90387–06M69	18 – 4
90387–06M86	20 – 17
90387–10M42	29 – 5
90430–06014	5 – 9
	32 – 2
90430–08003	1 – 12
	26 – 27
	26 – 32
	34 – 16
	34 – 17
90430–10002	27 – 3
	34 – 21
90430–14115	3 – 37
	13 – 17
	32 – 13
90430–14M09	1 – 11
	25 – 6
	34 – 4
90445–09057	19 – 11
90445–09104	3 – 22
90445–09251	3 – 20
90445–10M20	10 – 24
90445–10MG7	10 – 25
90445–11153	19 – 8
90446–15003	10 – 30
90464–06001	5 – 29
90464–09018	13 – 5
90464–09023	5 – 23
90464–09M47	7 – 15
	13 – 16
90464–10M59	10 – 26
90464–11009	10 – 29
90464–12002	12 – 9
90464–12183	11 – 14
	12 – 7
90464–13227	10 – 31
90464–16001	16 – 13
90464–18004	14 – 20
	15 – 8
	16 – 14
90464–18246	12 – 8
	13 – 11
	16 – 7
90464–20181	13 – 12
	13 – 21

PART NO. N° PIECES	REF. NO.
90465–06M90	15 – 10
90465–08M83	5 – 24
	7 – 5
90465–11M10	3 – 21
	3 – 23
	10 – 22
	15 – 9
	19 – 2
	19 – 9
90465–13M11	21 – 17
90467–08M18	19 – 12
90467–09M17	10 – 27
90467–10M04	10 – 28
90468–10005	20 – 22
90468–18001	20 – 23
90468–18008	20 – 25
	20 – 37
90480–12314	9 – 12
90480–13M24	18 – 29
90480–16616	7 – 14
90480–25003	13 – 3
90501–10065	26 – 45
90501–10326	8 – 8
90506–18023	18 – 21
90508–20040	20 – 27
91318–04025	23 – 51
91380–06020	23 – 38
91490–30022	27 – 17
91609–16012	23 – 22
91690–30018	21 – 5
91690–50014	7 – 4
92012–10040	23 – 23
92903–06600	3 – 6
	3 – 12
	24 – 9
	25 – 13
92903–08600	14 – 11
	14 – 15
92907–04600	5 – 18
92990–06300	26 – 30
92990–08200	6 – 19
92990–08600	31 – 38
92990–14200	27 – 15
92995–05600	11 – 11
	24 – 7
92995–06600	12 – 11
	13 – 10
	13 – 20

PART NO. N° PIECES	REF. NO.
92995–06600	14 – 3
	15 – 12
	16 – 4
	18 – 28
	21 – 23
	24 – 14
	26 – 17
	34 – 30
92995–08200	22 – 8
92995–10600	21 – 30
	27 – 6
93101–20M07	26 – 53
	34 – 19
93101–22067	26 – 25
	34 – 15
93101–35002	4 – 14
	32 – 6
93102–37M40	9 – 17
	32 – 22
93102–43M42	4 – 13
	32 – 5
93103–16011	24 – 10
	34 – 5
93210–03478	23 – 64
93210–04N50	23 – 53
93210–04N51	23 – 54
93210–064A5	23 – 35
93210–06ME6	26 – 19
	34 – 13
93210–08006	23 – 63
93210–09165	23 – 47
93210–10M74	23 – 44
93210–11073	23 – 66
93210–11368	23 – 33
93210–12N52	23 – 42
93210–13M63	3 – 33
	5 – 7
	32 – 11
93210–16275	29 – 9
93210–19MJ3	25 – 16
	32 – 19
93210–22164	34 – 10
93210–24M79	5 – 27
	10 – 12
	32 – 20
	32 – 21
93210–26130	26 – 8
	34 – 8

PART NO. N° PIECES	REF. NO.
93210–26130	34 – 9
93210–32738	1 – 8
	10 – 17
93210–39ME4	7 – 10
	32 – 17
93210–43MJ0	22 – 5
93210–45161	26 – 14
	34 – 12
	34 – 27
93210–50768	23 – 39
93210–64ME7	26 – 51
	34 – 18
93210–65M50	26 – 54
	34 – 20
93306–00612	26 – 50
93315–22004	26 – 52
93315–220V7	26 – 6
93332–00005	26 – 37
93332–000W5	26 – 3
93430–06024	31 – 12
93450–17129	4 – 9
93501–08001	23 – 71
93505–32038	23 – 24
	23 – 50
93604–10M03	3 – 17
	26 – 22
93605–17002	9 – 3
93606–11M24	27 – 4
93606–12019	3 – 3
	5 – 11
	25 – 3
93608–12M05	25 – 18
93700–06M03	21 – 8
94702–00418	1 – 6
	5 – 30
95023–06025	11 – 9
95023–06030	11 – 7
95380–05600	10 – 9
	31 – 9
95380–05800	2 – 4
95380–06600	31 – 43
95380–06700	20 – 15
95380–08600	10 – 20
95380–12600	21 – 35
95817–10035	9 – 4
95895–06014	12 – 13
	20 – 10
95895–06016	25 – 17

PART NO. N° PIECES	REF. NO.
95895–06030	12 – 6
95895–06035	26 – 29
95895–06100	7 – 11
95895–08016	10 – 19
97013–06020	24 – 8
97013–06025	3 – 5
	3 – 11
	25 – 12
97013–08045	14 – 10
	14 – 14
97075–06050	24 – 13
97080–08016	21 – 24
97095–05012	24 – 6
97095–05016	11 – 10
97095–06012	18 – 18
97095–06014	18 – 27
	21 – 22
97095–06016	12 – 10
	13 – 9
	13 – 19
	15 – 11
97095–06025	20 – 35
97095–06040	14 – 2
	26 – 16
	34 – 29
97095–06065	20 – 34
97380–05025	31 – 10
97380–08030	31 – 37
97513–06516	25 – 9
97575–06520	12 – 2
	14 – 17
	15 – 2
	26 – 55
97575–06525	25 – 7
97575–08530	22 – 12
	24 – 16
97575–10580	22 – 16
97595–06512	5 – 25
	7 – 6
97595–06520	3 – 14
	5 – 20
	5 – 22
	11 – 13
	20 – 5
97595–06525	10 – 33
	13 – 4
	26 – 20
97595–06535	20 – 19

PART NO. N° PIECES	REF. NO.
97595–06555	7 – 3
97595–06610	14 – 5
	15 – 7
97602–04316	23 – 10
97780–60520	19 – 6
97803–04010	8 – 5
97885–06008	22 – 20
97885–06012	16 – 3
97980–04108	8 – 36
97980–04114	8 – 29
	33 – 10
97980–04245	18 – 25
97980–05216	24 – 19
98507–04010	5 – 17
98580–04006	8 – 2
	31 – 40
98580–04008	8 – 15
98980–05025	3 – 31
98980–05035	5 – 5
99080–10600	21 – 16
99530–10114	14 – 13