YAMAHA

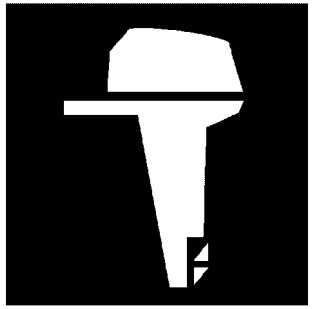

PARTS CATALOGUE
CATALOGUE DE PIECES DETACHEES

F80DET'17 (6HV1)

1R6HV-300FA

( )

YAMAHA GENUINE Parts & Accessories

2019/9/9

NEWS NO.	DATE	COMMENT
PE0-OM-170045	Nov.,28,2017	COR:F75B(6HW1)/F80D(6HV1) PTT ASSY 1 LIST/ILLUSTRATION CORRECTION
PE0-OM-180021	Aug.,9,2018	MOD:FIG.30 LOWER CASING & DRIVE 2 LIST/ILLUSTRATION REVISION
PE0-OM-190033	Aug.,28,2019	MOD:FIG.18 ELECTRICAL 5 LIST/ILLUSTRATION REVISION

F80DET
PARTS CATALOGUE
©2017 by Yamaha Motor Co., Ltd.
1st edition, March 2017
All rights reserved.
Any reprinting or unauthorized use
without the written permission of
Yamaha Motor Co., Ltd.
is expressly prohibited.
Printed in Japan.

F80DET
CATALOGUE DE PIECES DETACHEES
©2017 par Yamaha Motor Co., Ltd.
1re édition, mars 2017
Tous droits réservés
Toute réimpression ou utilisation
non autorisée sans la permission écrite
de la Yamaha Motor Co., Ltd.
est formellement interdite.
Imprimé au Japon

FOREWORD

This Parts Catalogue is related to the parts for the model(s) on the cover page. When you are ordering replacement parts, please refer to this Parts Catalogue and quote both part numbers and part names correctly.

1. Modifications or additions which have been made after the issue of the Parts Catalogue will be announced in the Parts News.
   It is advisable that you make the necessary corrections to the Parts Catalogue according to the Parts News.

2. Abbreviations
   The following abbreviations are used in this Parts Catalogue.
   "UR" Use specified parts number.
   "UN" Use as many as needed.
   "AP" Alternate Parts
   "LM" Locally Made (Parts need to be ordered locally)
   "F#" Frame No. (Applicable machine No.)
   "O/S" Over Size

3. The number of components for assembly
   - Parts, which are to be supplied in an assembly, are listed with a dot (.) in front of the part name as shown below.
   - The numeral appearing to the right of each component part indicates the quantity of parts for each assembly unit.

PART NO.	DESCRIPTION	Q'TY	REMARKS
2F5–83310–60	FRONT FLASHER LIGHT ASSY	2	
115–83311–60	.BULB (6V–18W)	1	

4. Applicable colours of graphics are represented in the "REMARKS" as shown below.

PART NO.	DESCRIPTION	Q'TY	REMARKS
2N4–24110–00–X5	FUEL TANK COMP.	2	MXR
3J1–24240–10	.GRAPHIC, FUEL TANK	1	FOR MXR

5. Note that the illustrations for reference in finding parts numbers are not to be used for assembling. When assembling, please use the applicable service manual.

6. The asterisk (*) before a reference number indicates modified items after the first edition.

7. Applicable Serial No.
   Engine Serial No.

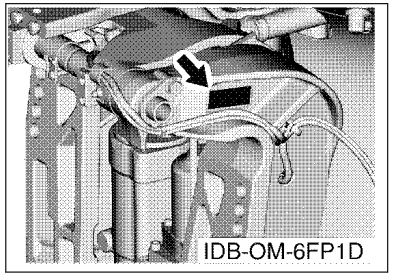

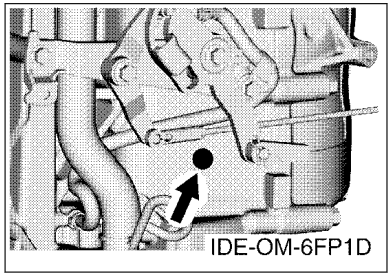

8. Applicable Engine Starting Serial No.

Model	Serial No.	Model	Serial No.
F80D	6HV-1000001		

9. Applicable Colour Code

Abbreviation	Colour Name	Colour Code
DBN1	DARK BLUISH GRAY 1	008D

10. Quantity Column Information

Column No.	Name Of Q'ty Column	Applicable Model
1	6HV1	F80DET

AVANT–PROPOS

Ce catalogue de pièces détachées concerne les pièces pour le(s) modèle(s) indiqué(s) sur la page de couverture. Lorsque vous commandez des pièces de rechange, veuillez vous référer à ce catalogue de pieces détachées et indiquer clairement les numéros et les noms des pièces détachées.

1. Les modifications ou ajouts ayant été effectués après la parution du catalogue de pièces détachées seront décrits dans les Bulletins d'information concernant les pièces détachées.
   Il est recommandé que vous apportiez les corrections nécessaires au catalogue des pièces détachées en vous référant aux Bulletins d'information.

2. Abréviations
   Dans ce catalogue, les abréviations suivantes sont utilisées:
   "UR" Utiliser le numéro de pièces spécifié.
   "UN" Utiliser autant que nécessaire.
   "AP" Pièces de substitution
   "LM" Fabrication locale (les pièces doivent être commandées localement.)
   "F#" N° de cadre (applicable au N° de série)
   "O/S" Surdimensionné

3. Nombre de pièces d'un assemblage
   - Les pièces fournies comme composants d'un assemblage sont précédées d'un point (.) de la manière indiquée ci–dessous.
   - Le chiffre apparaissant à la droite de chaque composant indique la quantité de pièces pour chaque unité d'assemblage.

N° PIECES	DESCRIPTION	QTE	REMARQUES
2F5–83310–60	ENS. CLIGNOTANT AVANT	2	
115–83311–60	.AMPOULE (6V–18W)	1	

4. Les couleurs concernant les graphiques sont indiquées dans la colonne "REMARQUES", comme indiqué ci–dessous.

N° PIECES	DESCRIPTION	QTE	REMARQUES
2N4–24110–00–X5	RESERVOIR A ESSENCE.	2	MXR
3J1–24240–10	.GRAPHIQUE	1	POUR MXR

5. Veuillez noter que les illustrations sont indiquées à titre de référence pour trouver les numéros de pièces, non pour être utilisées lors de l'assemblage. Lors de l'assemblage, veuillez utiliser le manuel d'entretien adéquat.

6. L'astérisque (*) placé devant un numéro de référence indique des éléments qui ont été modifiés après la première édition.

7. N° de série applicable
   N° de Série du moteur

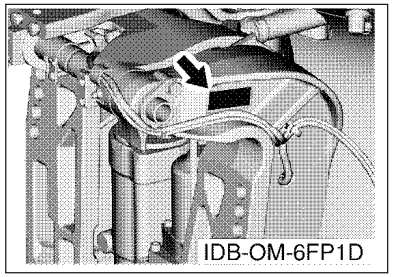

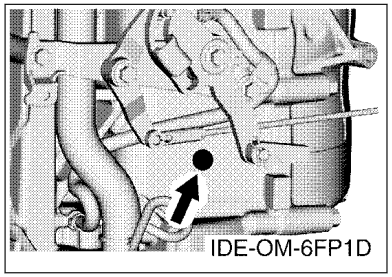

8. N° de série initial du moteur applicable

Modèle	N° de série	Modèle	N° de série
F80D	6HV-1000001		

9. Code couleur applicable

Abréviation	Nom de la couleur	Code couleur
DBN1	DARK BLUISH GRAY 1	008D

10. Informations relatives à la colonne Quantité

N° de la colonne	Nom de la colonne Qté	Modèle applicable
1	6HV1	F80DET

CONTENTS

SCHEDULED SERVICE PARTS....1
TOP COWLING....2
CYLINDER & CRANKCASE 1....3
CRANKSHAFT & PISTON....5
CYLINDER & CRANKCASE 2....7
VALVE....9
INTAKE 1....11
INTAKE 2....13
INTAKE 3....14
VAPOR SEPARATOR 1....15
VAPOR SEPARATOR 2....16
FUEL....17
GENERATOR....19
ELECTRICAL 1....20
ELECTRICAL 2....21
ELECTRICAL 3....22
ELECTRICAL 4....23
ELECTRICAL 5....24
STARTING MOTOR....25
BOTTOM COWLING 1....26
BOTTOM COWLING 2....28
CONTROL....29
BRACKET 1....31
BRACKET 2....33
POWER TRIM & TILT ASSY 1....35
POWER TRIM & TILT ASSY 2....38
UPPER CASING....39
OIL PAN....41
LOWER CASING & DRIVE 1....42
LOWER CASING & DRIVE 2....46
FUEL TANK....47
STEERING GUIDE....48
REMOTE CONTROL BOX....49
REMOTE CONTROL ASSY....50
OPTIONAL PARTS 1....53
OPTIONAL PARTS 2....56
OPTIONAL PARTS 3....57
OPTIONAL PARTS 4....58
OPTIONAL PARTS 5....59
OPTIONAL PARTS 6....60
OPTIONAL PARTS 7....61
REPAIR KIT 1....62
REPAIR KIT 2....63

INDEX

NUMERICAL INDEX....65

TABLE DES MATIERES

PIECES MAINTENANCE PERIODIQUE.....1
CAPOT SUPERIEUR..... 2
CYLINDRE & CARTER 1..... 3
VILEBREQUIN & PISTON.....5
CYLINDRE & CARTER 2..... 7
SOUPAPE..... 9
ADMISSION 1.....11
ADMISSION 2.....13
ADMISSION 3.....14
VAPEUR SEPARATEUR 1.....15
VAPEUR SEPARATEUR 2.....16
CARBURANT..... 17
GENERATRICE.....19
PARTIE ELECTRIQUE 1.....20
PARTIE ELECTRIQUE 2.....21
PARTIE ELECTRIQUE 3.....22
PARTIE ELECTRIQUE 4.....23
PARTIE ELECTRIQUE 5.....24
DEMARREUR ELECTRIQUE.....25
CAPOT INFERIEUR 1.....26
CAPOT INFERIEUR 2.....28
COMMANDE..... 29
SUPPORT 1..... 31
SUPPORT 2..... 33
PUISSANCE PARER ET INCLINER 1..... 35
PUISSANCE PARER ET INCLINER 2..... 38
FOURREAU.....39
VENTILATEUR D'HUILE..... 41
BOITIER D'HELICE TRANSMISSION1.....42
BOITIER D'HELICE TRANSMISSION2.....46
RESERVOIR A CARBURANT.....47
FIXATION DE DIRECTION..... 48
BOITIER DE COMMANDE A DISTANCE..... 49
BOITIER DE COMMANDE A DISTANCE..... 50
PIECES OPTIONNELLES 1.....53
PIECES OPTIONNELLES 2.....56
PIECES OPTIONNELLES 3.....57
PIECES OPTIONNELLES 4.....58
PIECES OPTIONNELLES 5.....59
PIECES OPTIONNELLES 6.....60
PIECES OPTIONNELLES 7.....61
KITS DE REPARATION 1..... 62
KITS DE REPARATION 2..... 63

INDEX

INDEX NUMERIQUE.....65

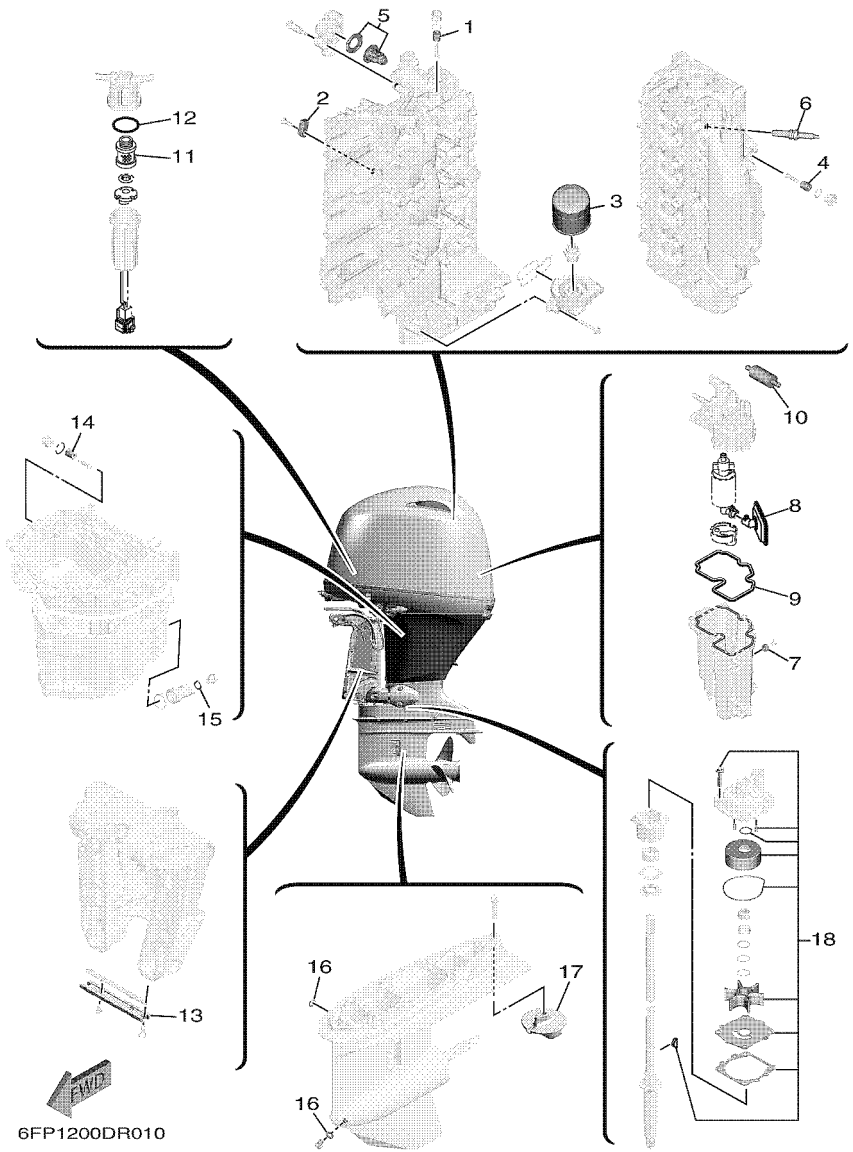

FIG. 1 SCHEDULED SERVICE PARTS — PIECES MAINTENANCE PERIODIQUE

REF. NO.	PART NO. N° PIECES	DESCRIPTION DESCRIPTION	6HV1					REMARKS REMARQUES
1	6G8–11325–00	ANODE ANODE	1					
2	63P–11325–01	ANODE ANODE	1					
3	5GH–13440–70	ELEMENT ASSY, OIL CLEANER ELEMENT, FILTRE A HUILE	1					
4	6G8–11325–00	ANODE ANODE	2					
5	6FP–12411–00	THERMOSTAT THERMOSTAT	1					
6	94702–00440	PLUG, SPARK (NGK LKR6E 9N) BOUGIE D,ALLUMAGE NGK LKR6E 9N	4					
7	63P–11325–21	ANODE ANODE	1					
8	6FP–13915–00	FILTER FILTRE	1					
9	6FP–14984–00	GASKET, FLOAT CHAMBER JOINT, CUVE DE FLOTTEUR	1					
10	6C5–24251–00	STRAINER 1 FILTRE 1	1					
11	6D8–24563–00	ELEMENT, FILTER ELEMENT, FILTRE	1					
12	6D8–24564–00	GASKET JOINT	1					
13	6H1–45251–03	ANODE ANODE	1					
14	6G8–11325–00	ANODE ANODE	1					
15	90430–14M09	GASKET JOINT	1					
16	90430–08003	GASKET JOINT	2					
17	6E5–45371–01	TAB-TRIM ANODE DERIVE	1					
18	68V–W0078–00	WATER PUMP REPAIR KIT KIT DE REPARATION DE LA POMPE	1					

FIG. 2 TOP COWLING — CAPOT SUPERIEUR

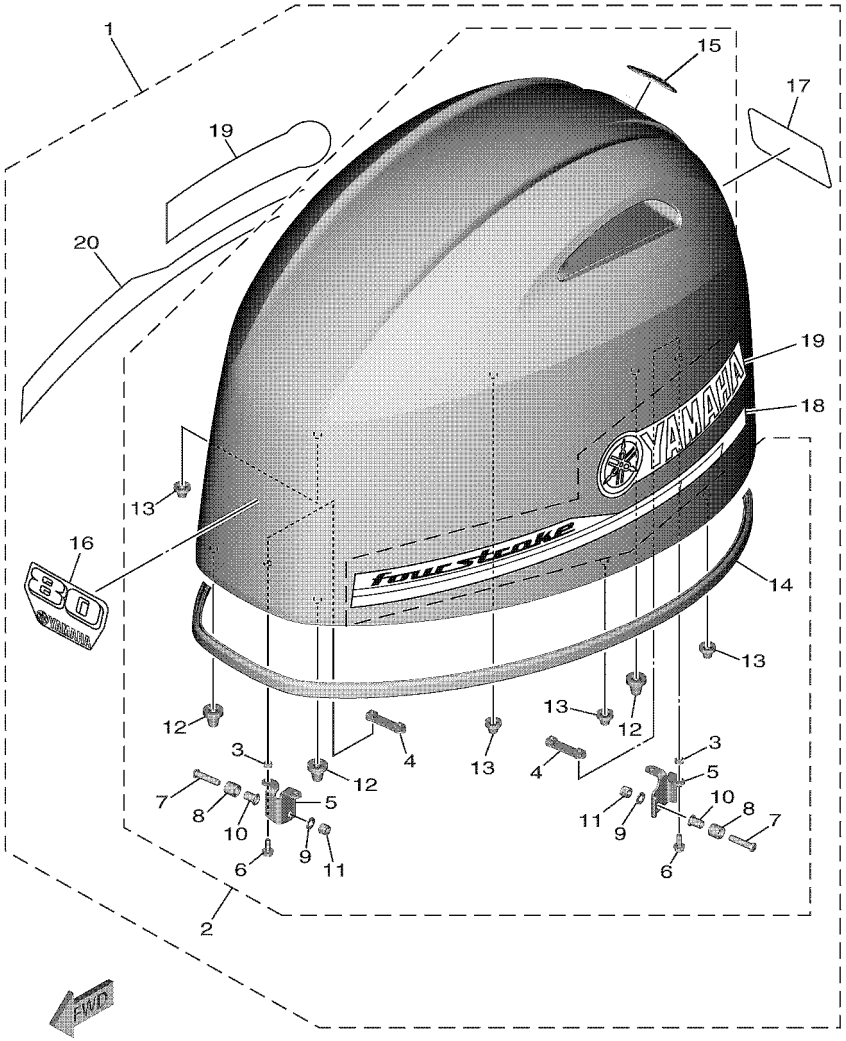

6HV1300DR020

REF. NO.	PART NO. N° PIECES	DESCRIPTION DESCRIPTION	6HV1					REMARKS REMARQUES
1	6HV–42610–00	TOP COWLING ASSY CAPOT (ENS.)	1					
2	6FP–4261A–00	.TOP COWLING W/O GRAPHICS .CAPOT SUPERIEUR SANS GRAPHIQUE	1					
3	90387–07046	..COLLAR ..COLLERETTE	4					
4	6EK–42646–00	..PLATE, CLAMP ..PLAQUE, PRESSE	2					
5	6FP–42647–00	..HOLDER, CLAMP BAND ..SUPPORT, SANDOW DE SERRAGE	2					
6	90105–06039	..BOLT, FLANGE ..BOULON	4					
7	90111–08078	..BOLT,HEX. SOCKET BUTTON ..BOULON	2					
8	90387–10094	..COLLAR ..COLLERETTE	2					
9	92990–08600	..WASHER, PLATE ..RONDELLE, PLATE	2					
10	90387–08M45	..COLLAR ..COLLERETTE	2					
11	95780–08300	..NUT, FLANGE ..ECROU	2					
12	68F–42663–00	..DAMPER 2 ..AMORTISSEUR 2	3					
13	663–42662–00	..DAMPER ..AMORTISSEUR	4					
14	6FP–42615–00	..SEAL ..JOINT	1					
15	6DA–42697–00	..TUNING FORK MARK ..MARQUE, YAMAHA	1					
16	6D7–42677–10	.GRAPHIC, FRONT .ADHESIF, AVANT	1					
17	6D7–42678–21	.GRAPHIC, REAR .ADHESIF, ARRIERE	1					
18	6EK–42675–00	.GRAPHIC, SIDE 1 .EMBLEME	1					
19	6D6–42681–00	.MARK, COWLING .ADHESIF, CAPOT	2					
20	6EK–42676–00	.GRAPHIC, SIDE 2 .EMBLEME	1					

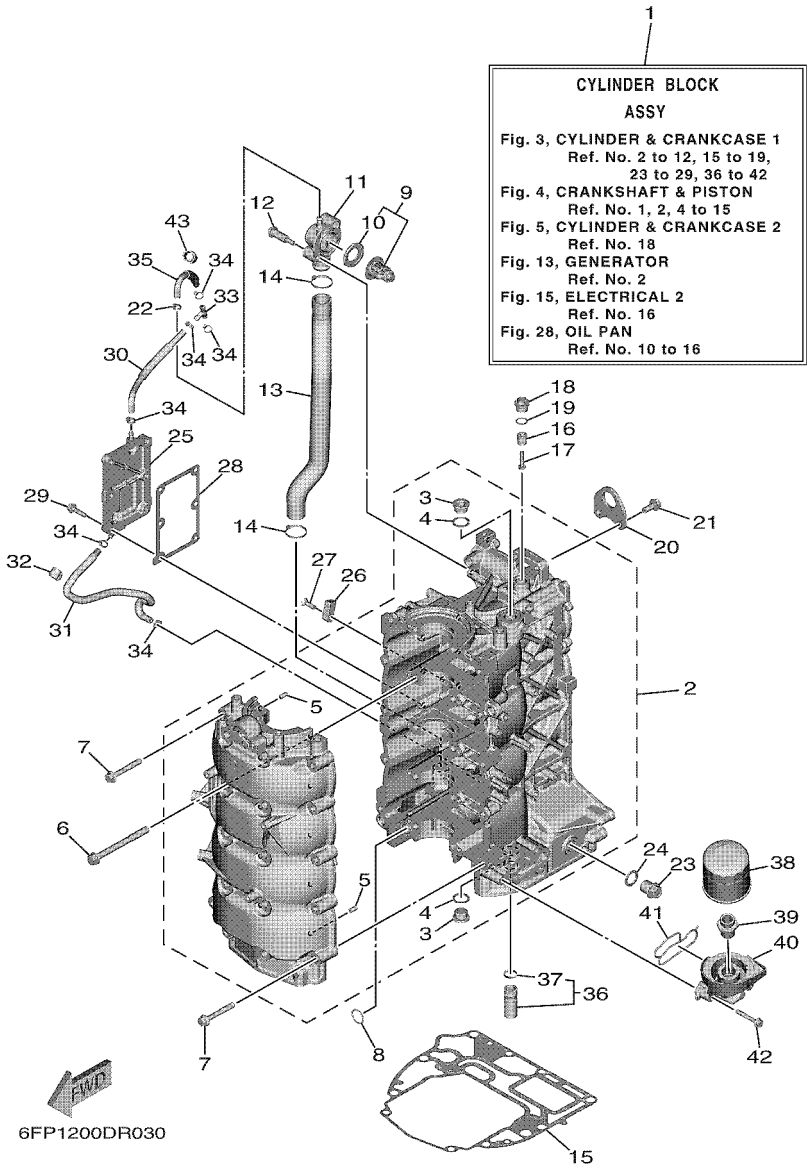

FIG. 3 CYLINDER & CRANKCASE 1 — CYLINDRE & CARTER 1

REF. NO.	PART NO. N° PIECES	DESCRIPTION DESCRIPTION	6HV1					REMARKS REMARQUES
1	6FP–W009B–00–9S	CYLINDER BLOCK ASSY CYLINDRE GROUPE (ENS.)	1					
2	6FP–15109–00–9S	CRANKCASE ASSY CARTER DE MOTEUR COMPLET	1					
3	90340–18101	.PLUG, STRAIGHT SCREW .PLOT, FILETE DROIT	2					
4	90430–18236	.GASKET .JOINT	2					
5	93606–12019	.PIN, DOWEL .GOUPILLE	10					
6	90119–10057	BOLT, WITH WASHER BOULON, AVEC RONDELLE	10					
7	90105–08170	BOLT, FLANGE BOULON	10					
8	93210–19MJ1	O-RING JOINT TORIQUE	1					
9	6FP–12411–00	THERMOSTAT THERMOSTAT	1					
10	6EK–12412–00	.SEAL, THERMOSTAT .JOINT, THERMOSTAT	1					
11	6EK–12413–00	COVER, THERMOSTAT COUVERCLE, THERMOSTAT	1					
12	90109–06286	BOLT BOULON	2					
13	6EK–1243A–00	HOSE 1 DURITE 1	1					
14	90465–11M59	CLAMP BRIDE	2					
15	6EK–11351–00	GASKET, CYLINDER JOINT, D'EMBASE	1					
16	6G8–11325–00	ANODE ANODE	1					
17	98980–05025	SCREW, BIND VIS, DE PRESSION	1					
18	6G8–11197–A0	PLUG, BLIND PLOT, BORGNE	1					
19	93210–13M63	O-RING JOINT TORIQUE	1					
20	6FP–11119–00	HANGER, ENGINE ANNEAU, LEVAGE	1					
21	95895–08020	BOLT, FLANGE BOULON	2					
22	90465–11M10	CLAMP BRIDE	1					
23	90340–18M09	PLUG, STRAIGHT SCREW PLOT, FILETE DROIT	1					
24	90201–186F1	WASHER, PLATE RONDELLE, PLATE	1					
25	6FP–15414–00–9S	COVER, AIR CLEANER COUVERCLE, FILTRE A AIR	1					
26	63P–11325–01	ANODE ANODE	1					
27	90151–06M02	SCREW, COUNTERSUNK VIS, TETE NOYEE	1					

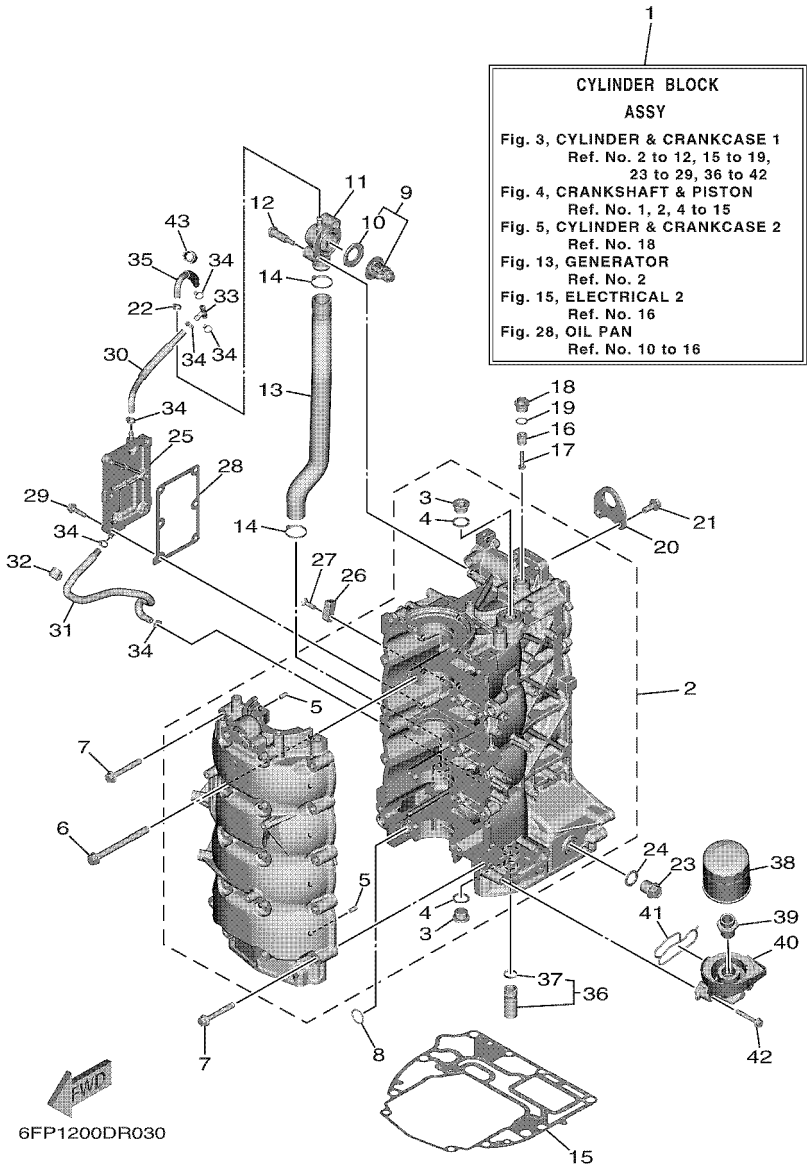

FIG. 3 CYLINDER & CRANKCASE 1 — CYLINDRE & CARTER 1

REF. NO.	PART NO. N° PIECES	DESCRIPTION DESCRIPTION	6HV1					REMARKS REMARQUES
28	6FP–15353–00	GASKET, DRAIN JOINT, PLOT DE VIDANGE	1					
29	90105–06037	BOLT, FLANGE BOULON	6					
30	6FP–12483–00	PIPE 3 DURITE 3	1					
31	6FP–12484–00	PIPE 4 DURITE 4	1					
32	90465–08M83	CLAMP BRIDE	1					
33	688–24378–00	PIPE, JOINT 3 DURITE RACCORDEMENT 3	1					
34	90465–11M10	CLAMP BRIDE	6					
35	6FP–12485–00	PIPE 5 DURITE 5	1					
36	6EK–13490–00	RELIEF VALVE ASSY SOUPAPE DE SECURITE COMPLET	1					
37	6CB–13473–00	.O-RING .JOINT TORIQUE	1					
38	5GH–13440–70	ELEMENT ASSY, OIL CLEANER ELEMENT, FILTRE A HUILE	1					
39	90401–20007	BOLT, UNION BOULON, RACCORD	1					
40	6FP–13446–00	CONNECTOR CONNECTEUR	1					
41	6FP–13475–00	GASKET JOINT	1					
42	90105–06151	BOLT, FLANGE BOULON	3					
43	90464–13227	CLAMP BRIDE	1					

FIG. 4 CRANKSHAFT & PISTON — VILEBREQUIN & PISTON

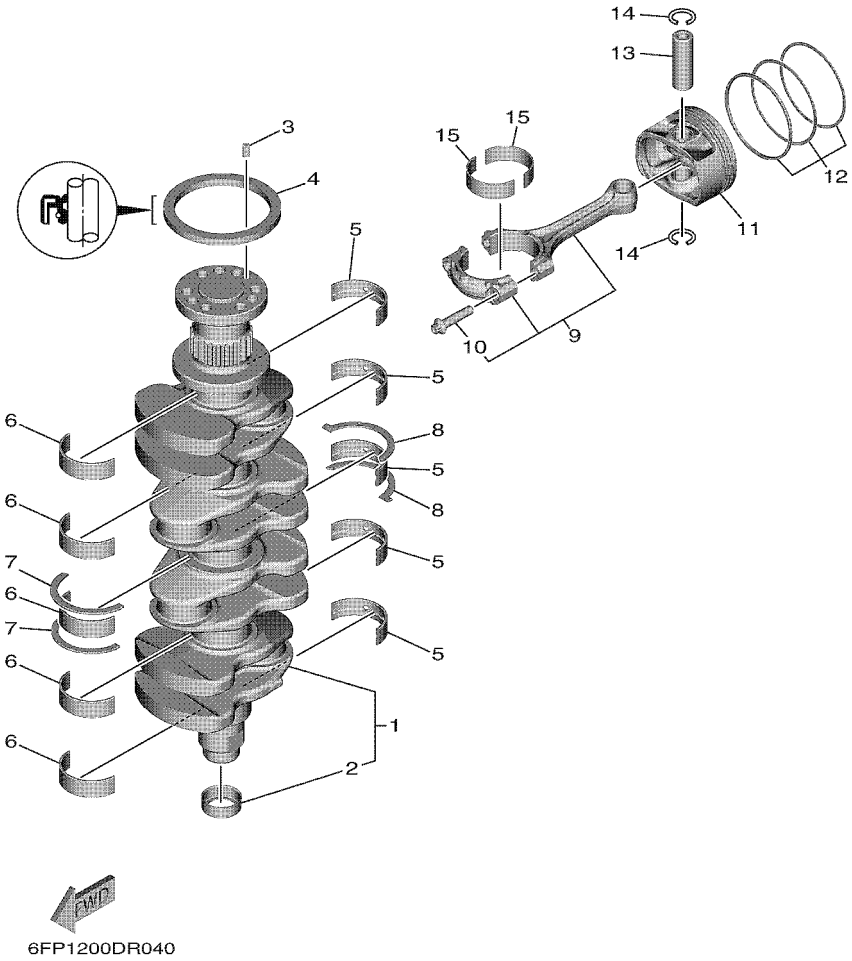

6FP1200DR040

REF. NO.	PART NO. N° PIECES	DESCRIPTION DESCRIPTION	6HV1					REMARKS REMARQUES
1	6EK–11410–01	CRANKSHAFT VILEBREQUIN COMPLET	1					
2	6CB–11478–00	.COLLAR .COLLERETTE	1					
3	93606–12019	PIN, DOWEL GOUPILLE	1					
4	93102–85008	OIL SEAL JOINT SPY	1					
5	6EK–11416–00	PLANE BEARING, CRANKSHAFT 1 COUSSINET DE VILEBREQUIN 1	5					UR YELLOW UR YELLOW
	6EK–11416–10	PLANE BEARING, CRANKSHAFT 1 COUSSINET DE VILEBREQUIN 1	5					UR GREEN UR GREEN
	6EK–11416–20	PLANE BEARING, CRANKSHAFT 1 COUSSINET DE VILEBREQUIN 1	5					UR BLUE UR BLUE
	6EK–11416–30	PLANE BEARING, CRANKSHAFT 1 COUSSINET DE VILEBREQUIN 1	5					UR RED UR RED
	6EK–11416–40	PLANE BEARING, CRANKSHAFT 1 COUSSINET DE VILEBREQUIN 1	5					UR BLACK UR BLACK
6	6EK–11417–00	PLANE BEARING, CRANKSHAFT 2 COUSSINET DE VILEBREQUIN 2	5					UR YELLOW UR YELLOW
	6EK–11417–10	PLANE BEARING, CRANKSHAFT 2 COUSSINET DE VILEBREQUIN 2	5					UR GREEN UR GREEN
	6EK–11417–20	PLANE BEARING, CRANKSHAFT 2 COUSSINET DE VILEBREQUIN 2	5					UR BLUE UR BLUE
	6EK–11417–30	PLANE BEARING, CRANKSHAFT 2 COUSSINET DE VILEBREQUIN 2	5					UR RED UR RED
	6EK–11417–40	PLANE BEARING, CRANKSHAFT 2 COUSSINET DE VILEBREQUIN 2	5					UR BLACK UR BLACK
7	6EK–11426–01	BEARING, THRUST 1 ROULEMENT DE BUTEE 1	2					
8	6EK–11427–00	BEARING, THRUST 2 ROULEMENT DE BUTEE 2	2					
9	6EK–W1165–00	CONNECTING ROD ASSY BIELLE COMPLETTE	4					
10	K1C–A3275–00	.BOLT, CONNECTING ROD .BOULON, BIELLE	2					
11	6FP–11631–00	PISTON (STD) PISTON (STD)	4					
	6FP–11635–00	PISTON (0.25MM O/S) PISTON (0.25MM O/S)	4					AP AP
12	6EK–11603–00	PISTON RING SET (STD) JEU DE SEGMENTS (STD)	4					
	6EK–11604–00	PISTON RING SET (0.25MM O/S) JEU DE SEGMENTS (0.25MM O/S)	4					AP AP
13	6EK–11633–00	PIN, PISTON AXE, PISTON	4					
14	93450–19052	CIRCLIP CIRCLIP, TYPE S	8					
15	6EK–11656–00	PLANE BEARING, CONNECTING ROD ROULEMENT DE BIELLE	8					UR YELLOW UR YELLOW
	6EK–11656–10	PLANE BEARING, CONNECTING ROD ROULEMENT DE BIELLE	8					UR GREEN UR GREEN
	6EK–11656–20	PLANE BEARING, CONNECTING ROD ROULEMENT DE BIELLE	8					UR BLUE UR BLUE

FIG. 4 CRANKSHAFT & PISTON — VILEBREQUIN & PISTON

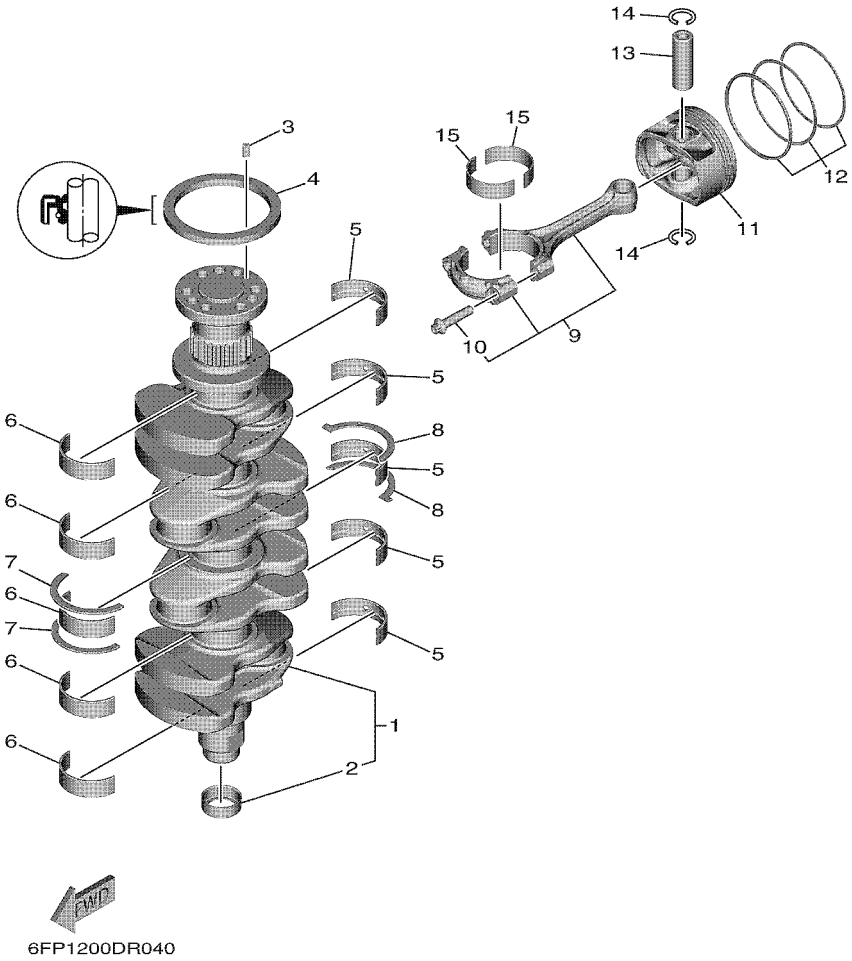

6FP1200DR040

REF. NO.	PART NO. N° PIECES	DESCRIPTION DESCRIPTION	6HV1					REMARKS REMARQUES
15	6EK–11656–30	PLANE BEARING, CONNECTING ROD ROULEMENT DE BIELLE	8					UR RED UR RED
	6EK–11656–40	PLANE BEARING, CONNECTING ROD ROULEMENT DE BIELLE	8					UR BLACK UR BLACK

FIG. 5 CYLINDER & CRANKCASE 2 — CYLINDRE & CARTER 2

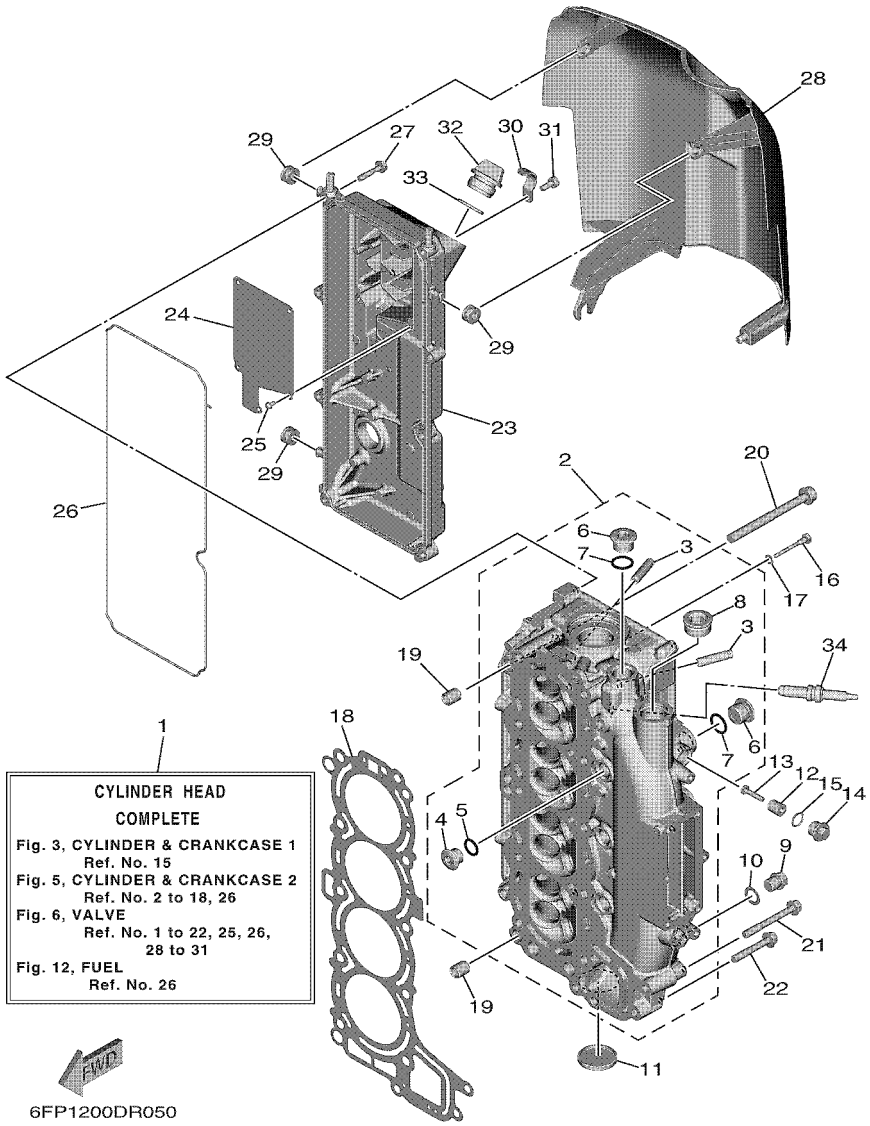

REF. NO.	PART NO. N° PIECES	DESCRIPTION DESCRIPTION	6HV1					REMARKS REMARQUES
1	6FP–W009A–00–9S	CYLINDER HEAD COMPLETE CULASSE (ENS.)	1					
2	6FP–11111–00–9S	HEAD, CYLINDER 1 CULASSE	1					
3	6DA–11133–10	.GUIDE, VALVE 1 .GUIDE, SOUPAPE 1	16					
4	90340–99001	.PLUG, STRAIGHT SCREW .PLOT, FILETE DROIT	3					
5	93210–14579	.O-RING .JOINT TORIQUE	3					
6	90340–97002	.PLUG, STRAIGHT SCREW .PLOT, FILETE DROIT	4					
7	93210–18322	.O-RING .JOINT TORIQUE	4					
8	90340–27001	.PLUG, STRAIGHT SCREW .PLOT, FILETE DROIT	1					
9	90340–14M06	PLUG, STRAIGHT SCREW PLOT, FILETE DROIT	1					
10	90430–14115	GASKET JOINT	1					
11	90338–41106	PLUG PLOT	1					
12	6G8–11325–00	ANODE ANODE	2					
13	98980–05025	SCREW, BIND VIS, DE PRESSION	2					
14	6G8–11197–A0	PLUG, BLIND PLOT, BORGNE	2					
15	93210–13M63	O-RING JOINT TORIQUE	2					
16	90109–06M65	BOLT BOULON	1					
17	90430–06014	GASKET JOINT	1					
18	6FP–11181–00	GASKET, CYLINDER HEAD 1 JOINT, DE CULASSE 1	1					
19	99530–14016	PIN, DOWEL GOUJON, D'ASSEMBLAGE	2					
20	90155–10008	SCREW, FLAT FILLISTER VIS, TETE OVALE PLATE	10					
21	90105–08220	BOLT, FLANGE BOULON	1					
22	90105–08175	BOLT, FLANGE BOULON	2					
23	6FP–11191–00	COVER, CYLINDER HEAD 1 COUVERCLE, CULASSE 1	1					
24	6FP–11168–00	COVER, BREATHER COUVERCLE, RENIFLARD	1					
25	97607–04208	SCREW, WITH WASHER VIS HEXAGONAL	5					
26	6FP–11193–00	GASKET, HEAD COVER 1 JOINT, COUVERCLE DE CULASSE 1	1					
27	95895–06030	BOLT, FLANGE BOULON	8					

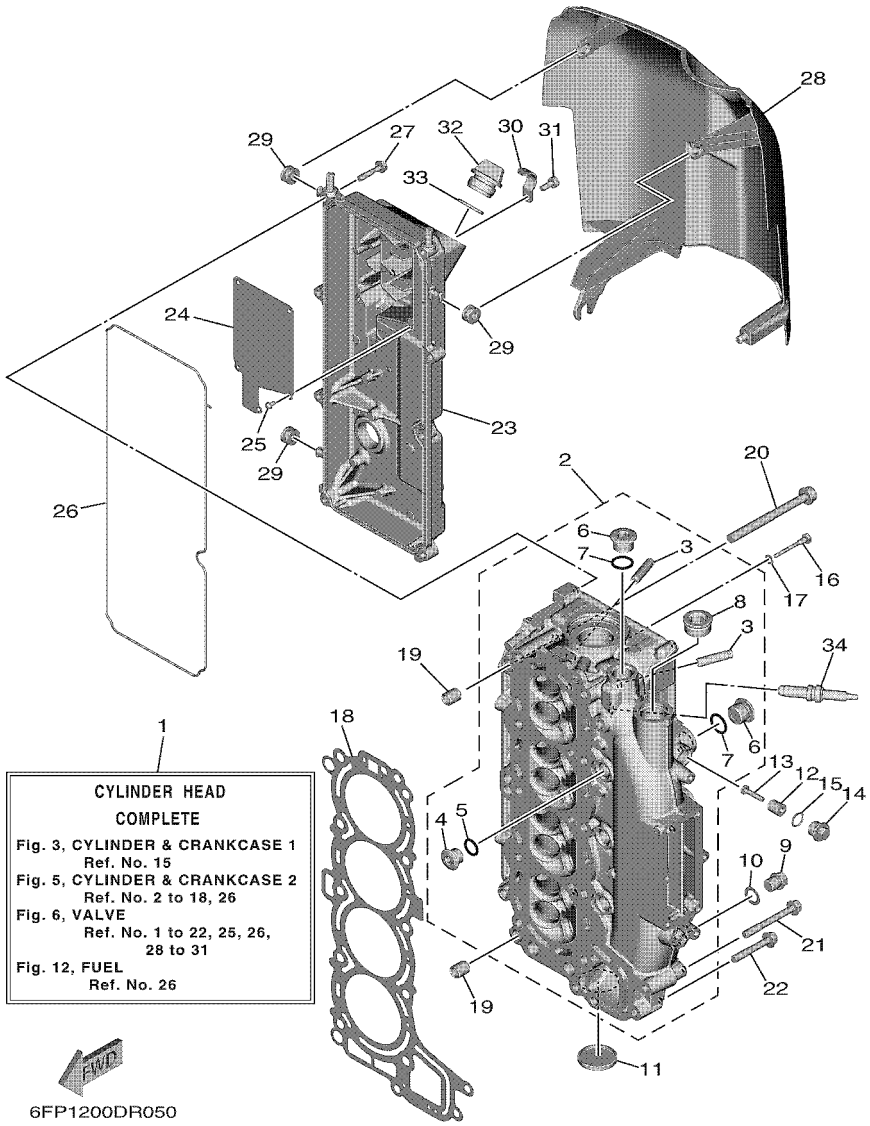

FIG. 5 CYLINDER & CRANKCASE 2 — CYLINDRE & CARTER 2

REF. NO.	PART NO. N° PIECES	DESCRIPTION DESCRIPTION	6HV1					REMARKS REMARQUES
28	6FP–11192–00	COVER, CYLINDER HEAD 2 COUVERCLE, CULASSE 2	1					
29	90480–12314	GROMMET PASSE-FIL	3					
30	6CJ–13428–00	BRACKET, STRAINER 1 SUPPORT, FILTRE 1	1					
31	97595–06516	BOLT, WITH WASHER VIS HEXAGONAL AVC RONDELLE	1					
32	6G8–15363–00	PLUG, OIL PLOT, HUILE	1					
33	93210–24M79	O-RING JOINT TORIQUE	1					
34	94702–00440	PLUG, SPARK (NGK LKR6E 9N) BOUGIE D,ALLUMAGE NGK LKR6E 9N	4					

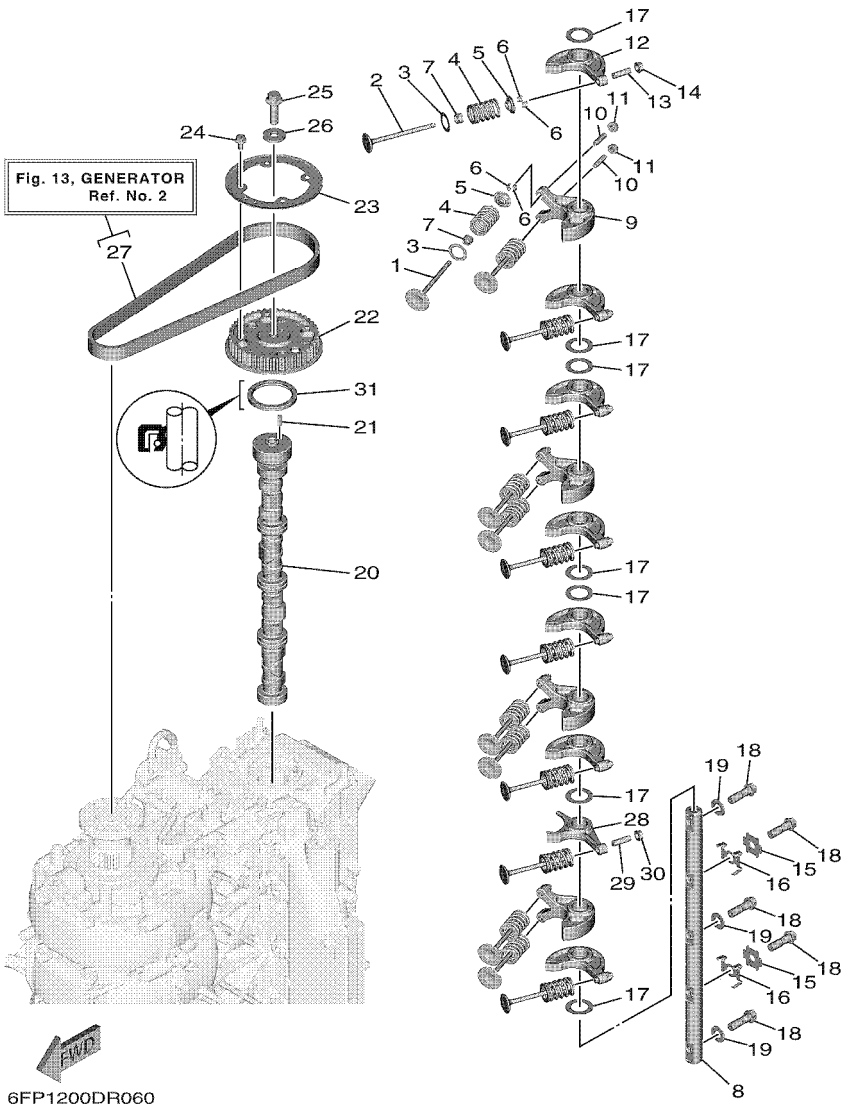

FIG. 6 VALVE SOUPAPE

REF. NO.	PART NO. N° PIECES	DESCRIPTION DESCRIPTION	6HV1					REMARKS REMARQUES
1	6FP–12111–00	VALVE, INTAKE SOUPAPE, ADMISSION	8					
2	6FP–12121–00	VALVE, EXHAUST SOUPAPE, ECHAPPEMENT	8					
3	62Y–12116–00	SEAT, VALVE SPRING SIEGE, RESSORT DE SOUPAPE	16					
4	6FP–12113–00	SPRING, VALVE INNER RESSORT DE SOUPAPE, INTERNE	16					
5	30X–12117–00	RETAINER, VALVE SPRING BUTEE DE RESSORT DE SOUPAPE	16					
6	30X–12118–00	LOCK, VALVE SPRING RETAINER FRAISE, SOUPAPE	32					
7	51Y–12119–00	SEAL, VALVE STEM JOINT, QUEUE DE SOUPAPE	16					
8	6FP–12146–00	SHAFT, ROCKER AXE, CULBUTEUR	1					
9	6FP–12151–00	ARM, VALVE ROCKER CULBUTEUR	4					
10	6C5–12159–00	SCREW, VALVE ADJUSTING VIS, REGLAGE DE SOUPAPE	8					
11	6C5–12158–00	NUT, LOCK CONTRE-ECROU	8					
12	6FP–12161–00	ARM, VALVE ROCKER 2 CULBUTEUR 2	7					
13	6C5–12159–10	SCREW, VALVE ADJUSTING VIS, REGLAGE DE SOUPAPE	7					
14	6C5–12158–10	NUT, LOCK CONTRE-ECROU	7					
15	6FP–12231–00	GUIDE, STOPPER 1 GUIDE, BUTEE 1	2					
16	6FP–12233–00	PLATE, GUIDE STOPPER 1 PLAQUE, GUIDE BUTEE 1	2					
17	90201–21016	WASHER, PLATE RONDELLE, PLATE	7					
18	90401–10050	BOLT, UNION BOULON, RACCORD	5					
19	92990–10200	WASHER, PLAIN RONDELLE, PLATE	3					
20	6FP–12171–00	CAMSHAFT 1 ARBRE A CAMES 1	1					
21	93605–14143	PIN, DOWEL AXE	1					
22	6FP–11537–00	GEAR, DRIVEN PIGNON SECONDAIRE	1					
23	6DA–11557–00	WASHER 1 RONDELLE 1	1					
24	95895–06012	BOLT, FLANGE BOULON	4					
25	95817–10035	BOLT, FLANGE BOULON, A COLLERETTE	1					
26	90201–10144	WASHER, PLATE RONDELLE, PLATE	1					
27	6FP–W4624–00	BELT (WITH ROTOR BOLTS) COURROIE (AVEC BOULON)	1					

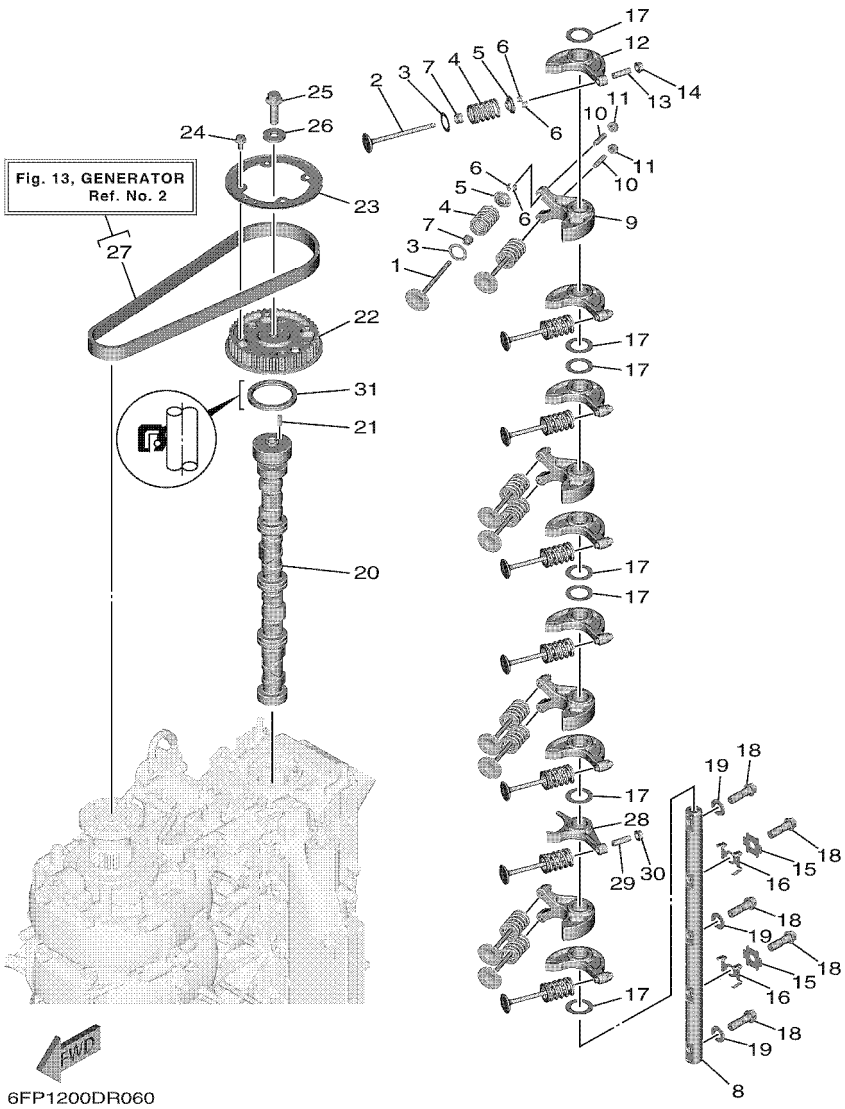

FIG. 6 VALVE — SOUPAPE

REF. NO.	PART NO. N° PIECES	DESCRIPTION DESCRIPTION	6HV1					REMARKS REMARQUES
28	6FP–12162–00	ARM, VALVE ROCKER 3 CULBUTEUR 3	1					
29	6C5–12159–10	SCREW, VALVE ADJUSTING VIS, REGLAGE DE SOUPAPE	1					
30	6C5–12158–10	NUT, LOCK CONTRE-ECROU	1					
31	93102–48017	OIL SEAL JOINT SPY	1					

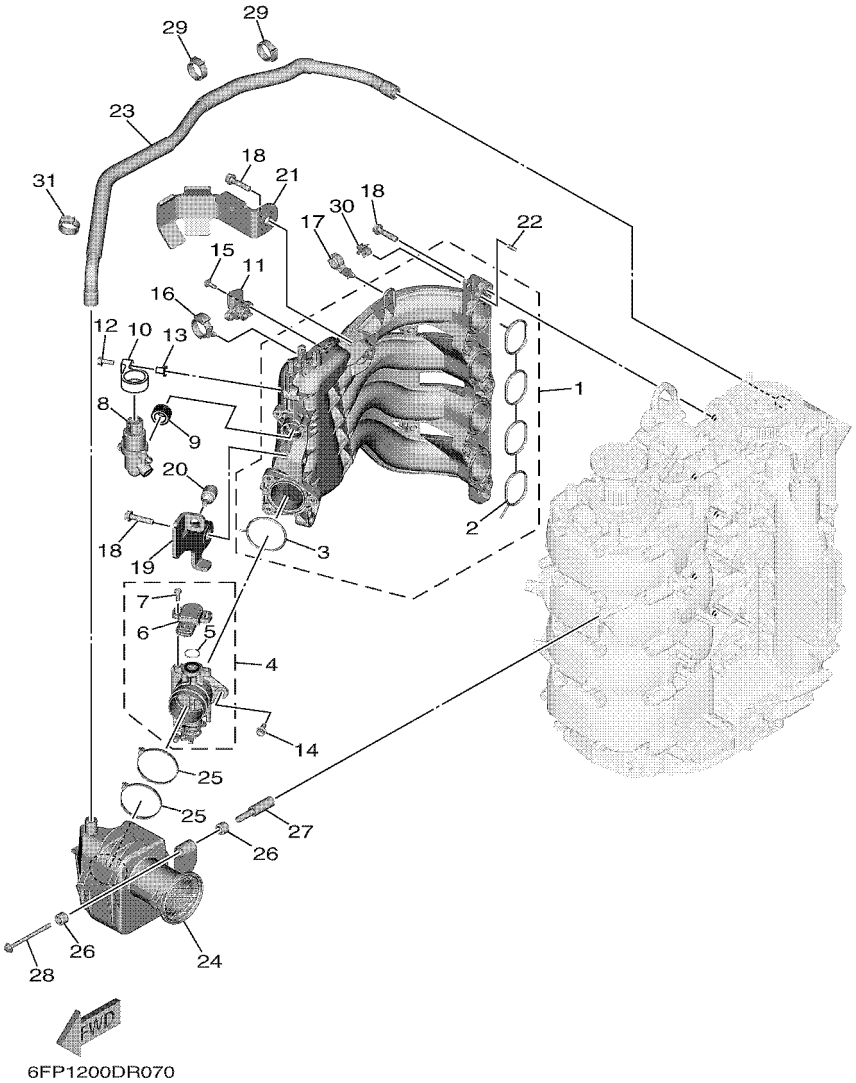

FIG. 7 INTAKE 1 — ADMISSION 1

REF. NO.	PART NO. N° PIECES	DESCRIPTION DESCRIPTION	6HV1					REMARKS REMARQUES
1	6FP–13641–00	MANIFOLD, INTAKE 1 TUBULURE, ADMISSION 1	1					
2	6FP–13645–00	.GASKET, MANIFOLD 1 .JOINT, TUBULURE 1	1					
3	6FP–13646–00	.GASKET, MANIFOLD 2 .JOINT, TUBULURE 2	1					
4	6FP–13751–00	BODY, THROTTLE 1 CARTER 1	1					
5	93210–17014	.O-RING .JOINT TORIQUE	1					
6	8GL–85885–00	.THROTTLE SENSOR ASSY .SENSITOMETRE (ENS.)	1					
7	90149–05041	.SCREW .VIS	2					
8	6C5–13713–00	VALVE, IDLE SPEED CONTROL SOUPAPE, AJUSTEMENT DE VITESSE	1					
9	6FP–13476–00	GASKET JOINT	1					
10	6FP–13381–00	DAMPER AMORTISSEUR	1					
11	68F–83688–10	SENSOR ASSY SONDE (ENS.)	1					
12	90119–06M17	BOLT, WITH WASHER BOULON, AVEC RONDELLE	1					
13	90387–06289	COLLAR COLLERETTE	1					
14	6C5–14496–00	BOLT BOULON	3					
15	6C5–81146–10	SCREW 2 VIS 2	2					
16	90464–12183	CLAMP BRIDE	1					
17	90464–17006	CLAMP BRIDE	1					
18	90119–08020	BOLT, WITH WASHER BOULON, AVEC RONDELLE	8					
19	6FP–13371–00	PLATE PLAQUE	1					
20	6FP–14435–00	GROMMET RONDELLE CAOUTCHOUC	1					
21	6FP–13881–01	COVER 1 COUVERCLE 1	1					
22	91690–50014	PIN, SPRING AGRAFFE	2					
23	6FP–15373–00	PIPE, BREATHER DURITE DE RENIFLARD	1					
24	6HV–14440–00	SILENCER ASSY, INTAKE SIENCIEUX D'ADMISSION	1					
25	90464–65001	CLAMP BRIDE	2					
26	90386–08001	BUSH DOUILLE	2					
27	90387–07013	COLLAR COLLERETTE	1					

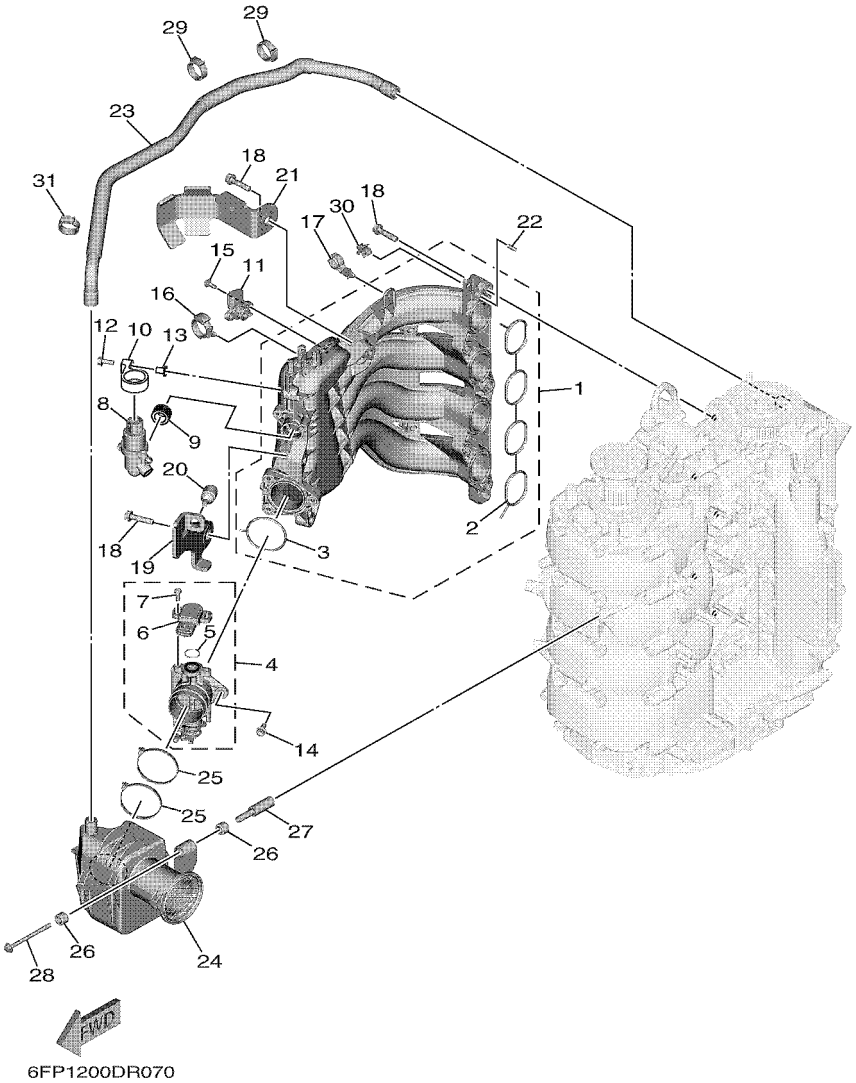

FIG. 7 INTAKE 1 — ADMISSION 1

REF. NO.	PART NO. N° PIECES	DESCRIPTION DESCRIPTION	6HV1					REMARKS REMARQUES
28	90119–06113	BOLT, WITH WASHER BOULON, AVEC RONDELLE	1					
29	90464–26001	CLAMP BRIDE	2					
30	90464–09M47	CLAMP BRIDE	1					
31	90464–26001	CLAMP BRIDE	1					

FIG. 8 INTAKE 2 — ADMISSION 2

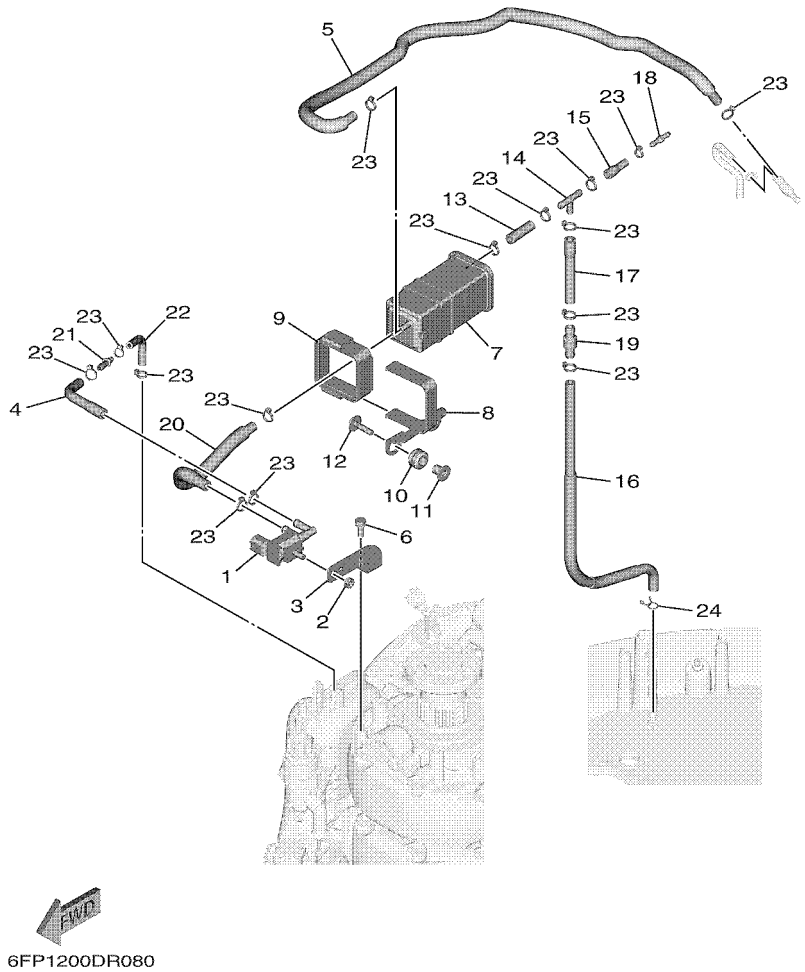

REF. NO.	PART NO. N° PIECES	DESCRIPTION DESCRIPTION	6HV1					REMARKS REMARQUES
1	6C5–86120–00	SOLENOID VALVE ASSY SOLENOIDE	1					
2	95380–06600	NUT, HEXAGON ECROU	1					
3	6FP–86112–00	STAY, SOLENOID SUPPORT, SOLENOIDE	1					
4	6FP–2416A–00	HOSE DURITE	1					
5	6FP–1475A–00	PIPE 1 DURITE 1	1					
6	97595–06516	BOLT, WITH WASHER VIS HEXAGONAL AVC RONDELLE	1					
7	69J–24170–00	CANISTER ASSY BANDE, RASERVOIR A ESSENCE	1					
8	6FP–2134X–00	BRACKET, CANISTER SUPPORT	1					
9	6FP–2419E–00	COVER, CANISTER COUVERCLE	1					
10	90480–10M23	GROMMET PASSE-FIL	2					
11	90387–06289	COLLAR COLLERETTE	2					
12	90119–06M17	BOLT, WITH WASHER BOULON, AVEC RONDELLE	2					
13	6AW–13545–10	HOSE 1 DURITE 1	1					
14	688–24378–00	PIPE, JOINT 3 DURITE RACCORDEMENT 3	1					
15	6FP–13546–00	HOSE 2 DURITE 2	1					
16	6FP–13547–00	HOSE 3 DURITE 3	1					
17	6FP–13548–00	HOSE, AIR 4 DURITE, A AIR 4	1					
18	6E5–21744–00	BREATHER RENIFLARD	1					
19	63D–21744–00	BREATHER RENIFLARD	1					
20	6FP–1475F–00	PIPE 3 DURITE 3	1					
21	6EK–14989–00	ORIFICE, AIR VENT OR1F1CE	1					
22	6FP–1475G–00	PIPE 4 DURITE 4	1					
23	90465–11M10	CLAMP BRIDE	15					
24	90467–09M17	CLIP JONC	1					

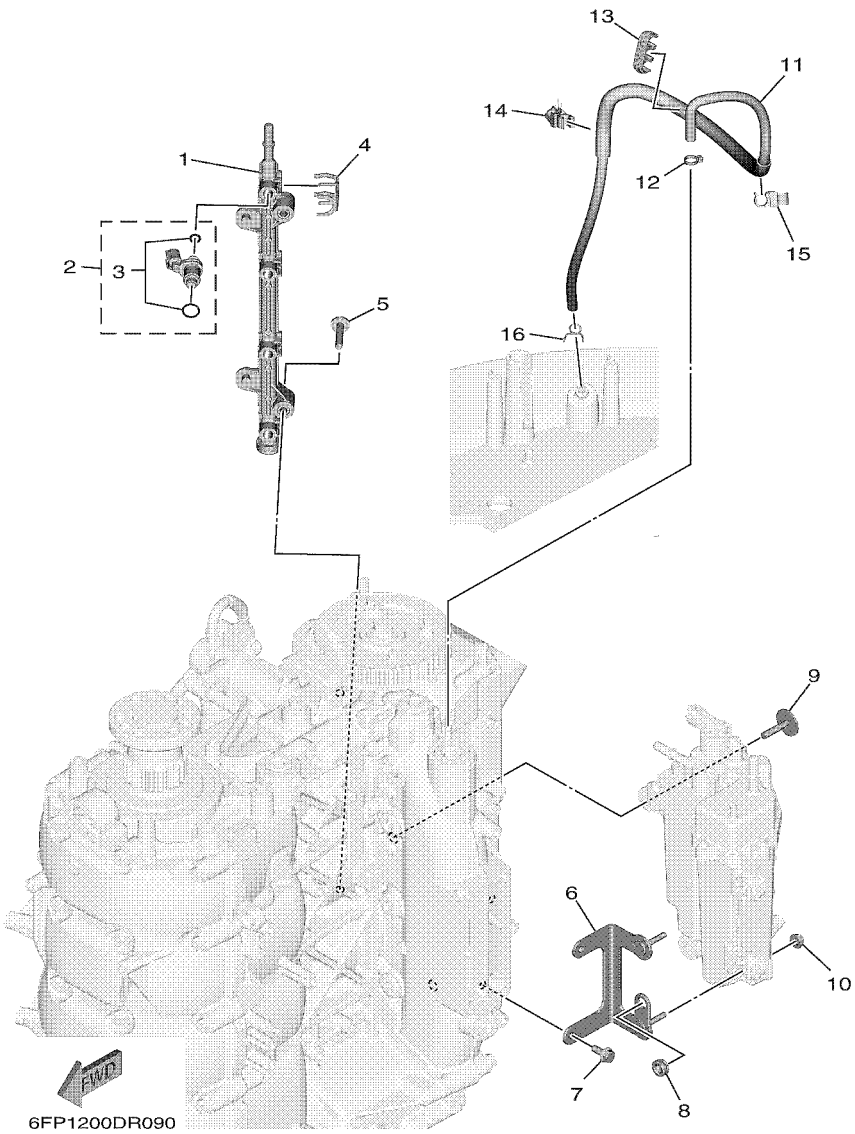

FIG. 9 INTAKE 3 — ADMISSION 3

REF. NO.	PART NO. N° PIECES	DESCRIPTION DESCRIPTION	6HV1					REMARKS REMARQUES
1	6FP–13161–00	PIPE, DELIVERY 1 DURITE REFOULEMENT 1	1					
2	6FP–13761–00	INJECTOR INJECTEUR	4					
3	6C5–1410B–00	.PACKING KIT .POCHETTE DE JOINTS	1					
4	6FP–13577–00	CLIP AGRAFE	4					
5	90119–06122	BOLT, WITH WASHER BOULON, AVEC RONDELLE	2					
6	6FP–24422–00	PLATE PLAQUETTE	1					
7	95895–06014	BOLT, FLANGE BOULON	2					
8	90480–11006	GROMMET PASSE-FIL	1					
9	90119–06M61	BOLT, WITH WASHER BOULON, AVEC RONDELLE	2					
10	90179–06M28	NUT ECROU	2					
11	6FP–42542–00	PIPE TUYAU	1					
12	90465–11M10	CLAMP BRIDE	1					
13	90464–10011	CLAMP BRIDE	1					
14	90464–09021	CLAMP BRIDE	1					
15	90464–09013	CLAMP BRIDE	1					
16	90467–08M18	CLIP JONC	1					

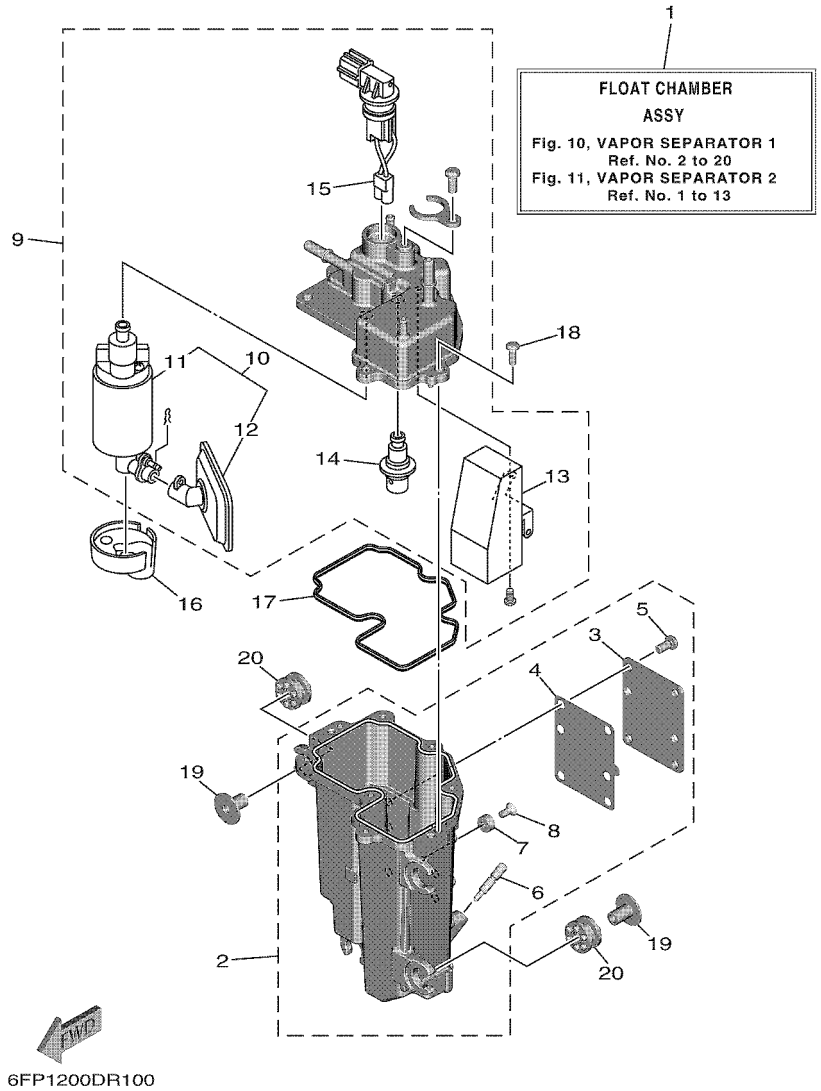

FIG. 10 VAPOR SEPARATOR 1 — VAPEUR SEPARATEUR 1

REF. NO.	PART NO. N° PIECES	DESCRIPTION DESCRIPTION	6HV1					REMARKS REMARQUES
1	6FP–14180–00	FLOAT CHAMBER ASSY CUVE DE FLOTTEUR	1					
2	6FP–14960–00	BODY ASSY CARTER (ENS.)	1					
3	6FP–24452–00	.COVER, COOLER .COUVERCLE DE RADIATEUR	1					
4	6FP–24462–00	.GASKET, COOLER .JOINT DE RADIATEUR	1					
5	6FP–14591–00	.SCREW .VIS	6					
6	6C5–14191–00	.PLUG, DRAIN .PLOT, VIDANGE	1					
7	63P–11325–21	.ANODE .ANODE	1					
8	6FP–24444–00	.SCREW .VIS	1					
9	6FP–14182–00	COVER, FLOAT CHAMBER COUVERCLE, CUVE DE FLOTTEUR	1					
10	6FP–13910–00	.FUEL PUMP ASSY .POMPE A ESSENCE COMPLET	1					
11	6FP–13907–00	..FUEL PUMP COMP. ..POMPE A CARBURANT COMP.	1					
12	6FP–13915–00	..FILTER ..FILTRE	1					
13	6FP–14985–00	.FLOAT .FLOTTEUR	1					
14	6FP–13906–00	.REGULATOR, PRESSURE .REGULATEUR DE PRESSION	1					
15	6FP–87226–00	.WIRE HARNESS ASSY .ENS. FAISCEAU ELECTRIQUE	1					
16	6FP–13593–00	DAMPER AMORTISSEUR	1					
17	6FP–14984–00	GASKET, FLOAT CHAMBER JOINT, CUVE DE FLOTTEUR	1					
18	6C5–14567–00	SCREW VIS	8					
19	90387–06M03	COLLAR COLLERETTE	4					
20	69L–85516–00	SPACER ENTRETOISE	4					

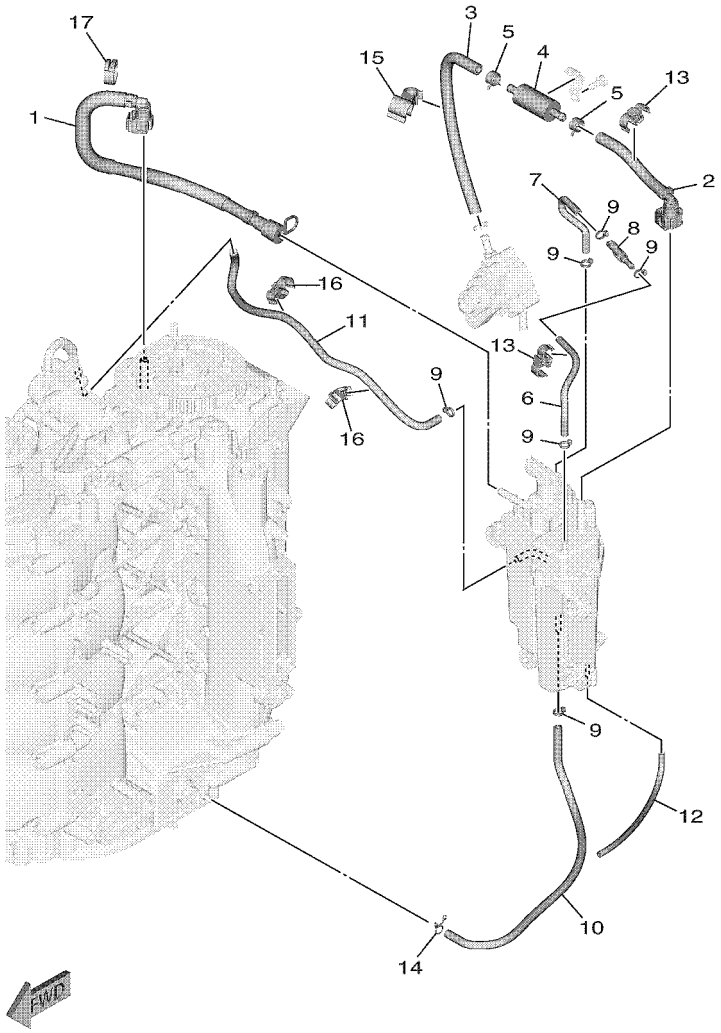

6FP1200DR110

FIG. 11 VAPOR SEPARATOR 2 — VAPEUR SEPARATEUR 2

REF. NO.	PART NO. N° PIECES	DESCRIPTION DESCRIPTION	6HV1					REMARKS REMARQUES
1	6FP–13974–00	PIPE, FUEL 4 TUBE 4, CARBURANT	1					
2	6FP–24330–00	FUEL PIPE ASSY DURITE A ESSENCE	1					
3	6FP–13972–00	PIPE, FUEL 2 TUBE 2, CARBURANT	1					
4	6C5–24251–00	STRAINER 1 FILTRE 1	1					
5	6BG–24387–00	CLIP SANDOW	2					
6	6FP–13545–00	HOSE 1 DURITE 1	1					
7	6FP–13546–00	HOSE 2 DURITE 2	1					
8	6FP–24379–00	PIPE, JOINT 4 DURITE RACCORDEMENT 4	1					
9	90465–11M10	CLAMP BRIDE	6					
10	6FP–24324–00	PIPE 13 DURITE 13	1					
11	6FP–24325–00	PIPE 14 DURITE 14	1					
12	6BG–14149–00	PIPE DURITE	1					
13	6FP–21337–00	CLAMP, CABLE COLLIER, CABLE	2					
14	90467–08M18	CLIP JONC	1					
15	90464–15007	CLAMP BRIDE	1					
16	90464–12010	CLAMP BRIDE	2					
17	90464–16001	CLAMP BRIDE	1					

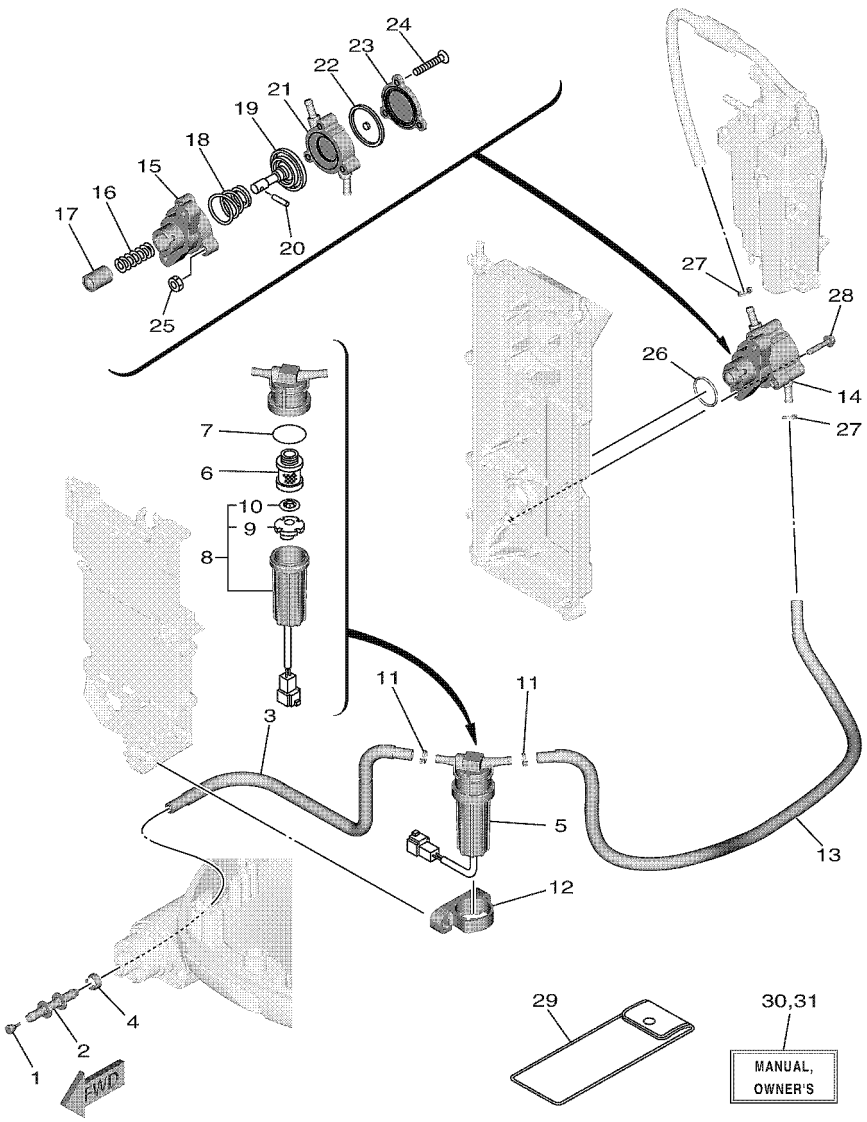

FIG. 12 FUEL — CARBURANT

REF. NO.	PART NO. N° PIECES	DESCRIPTION DESCRIPTION	6HV1					REMARKS REMARQUES
1	689–85547–00	DAMPER AMORTISSEUR	1					
2	6AW–24377–01	PIPE, JOINT 2 DURITE RACCORDEMENT 2	1					
3	6FP–24314–00	PIPE 4 DURITE 4	1					
4	6E5–24351–51	BAND 1 COLLIER 1	1					
5	6EK–24560–00	FILTER ASSY ENS FILTRE	1					
6	6D8–24563–00	.ELEMENT, FILTER .ELEMENT, FILTRE	1					
7	6D8–24564–00	.GASKET .JOINT	1					
8	6D8–24562–00	.CUP, FILTER .CUVETTE, FILTRE	1					
9	6D8–24469–00	..FLOAT, WATER LEVEL ..FLOTTEUR	1					
10	6D8–24519–00	..CLIP ..JONC	1					
11	90465–11M10	CLAMP BRIDE	2					
12	6FP–24568–00	BAND, FILTER COLLIER, FILTRE	1					
13	6FP–24311–00	PIPE, FUEL 1 DURITE A ESSENCE	1					
14	6FP–24410–00	FUEL PUMP ASSY POMPE A ESSENCE	1					
15	68V–24412–00	.BODY 1 .CORPS 1	1					
16	68V–24454–00	.SPRING .RESSORT	1					
17	68V–13131–00	.PLUNGER .PLONGEUR	1					
18	63P–24423–00	.SPRING, DIAPHRAGM .RESSORT, DIAPHRAGME	1					
19	68V–24411–00	.DIAPHRAGM .DIAPHRAGME	1					
20	68V–24374–00	.PIN .GOUPILLE	1					
21	6FP–24413–00	.BODY 2 .CORPS 2	1					
22	68V–24471–10	.DIAPHRAGM .DIAPHRAGME	1					
23	6FP–24414–00	.BODY 3 .CORPS 3	1					
24	68V–24444–00	.SCREW .VIS	3					
25	68V–24149–00	.NUT .ECROU	3					
26	93210–30682	O-RING JOINT TORIQUE	1					
27	90465–11M10	CLAMP BRIDE	2					

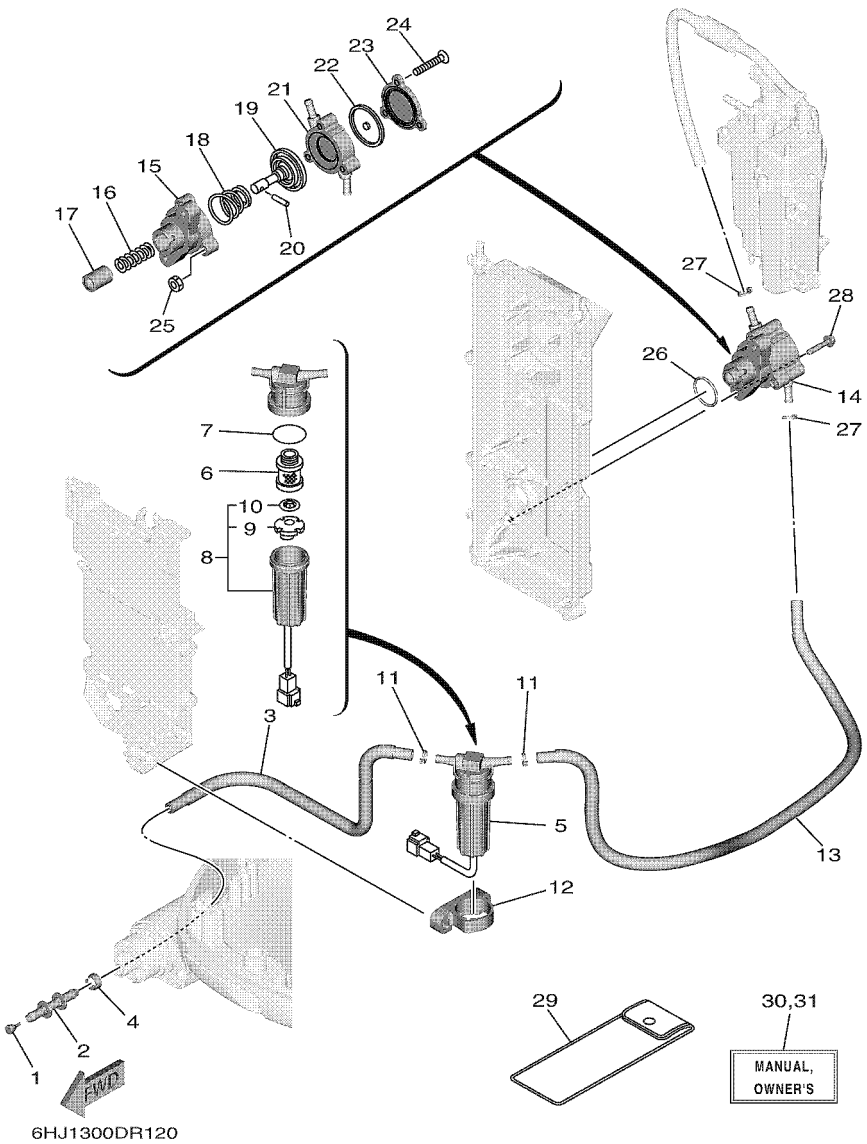

FIG. 12 FUEL CARBURANT

REF. NO.	PART NO. N° PIECES	DESCRIPTION DESCRIPTION	6HV1					REMARKS REMARQUES
28	90105–06208	BOLT, FLANGE BOULON	2					
29	67F–28100–01	TOOL KIT TROUSSE A OUTILS	1					AP AP
30	6FP–28199–71–E0	MANUAL,OWNER'S MANUEL D'UTILISATION	1					UR (E) UR (E)
	6FP–28199–71–F0	MANUAL,OWNER'S MANUEL D'UTILISATION	1					UR (F) UR (F)
	6FP–28199–71–S0	MANUAL,OWNER'S MANUEL D'UTILISATION	1					UR (ES) UR (ES)
	6FP–28199–71–G0	MANUAL,OWNER'S MANUEL D'UTILISATION	1					UR (D) UR (D)
	6FP–28199–71–D0	MANUAL,OWNER'S MANUEL D'UTILISATION	1					UR (NL) UR (NL)
	6FP–28199–71–H0	MANUAL,OWNER'S MANUEL D'UTILISATION	1					UR (I) UR (I)
31	6FP–28199–81–K0	MANUAL,OWNER'S MANUEL D'UTILISATION	1					UR (DK) UR (DK)
	6FP–28199–81–R0	MANUAL,OWNER'S MANUEL D'UTILISATION	1					UR (GR) UR (GR)
	6FP–28199–81–P0	MANUAL,OWNER'S MANUEL D'UTILISATION	1					UR (P) UR (P)
	6FP–28199–81–N0	MANUAL,OWNER'S MANUEL D'UTILISATION	1					UR (N) UR (N)
	6FP–28199–81–M0	MANUAL,OWNER'S MANUEL D'UTILISATION	1					UR (S) UR (S)
	6FP–28199–81–L0	MANUAL,OWNER'S MANUEL D'UTILISATION	1					UR (SF) UR (SF)

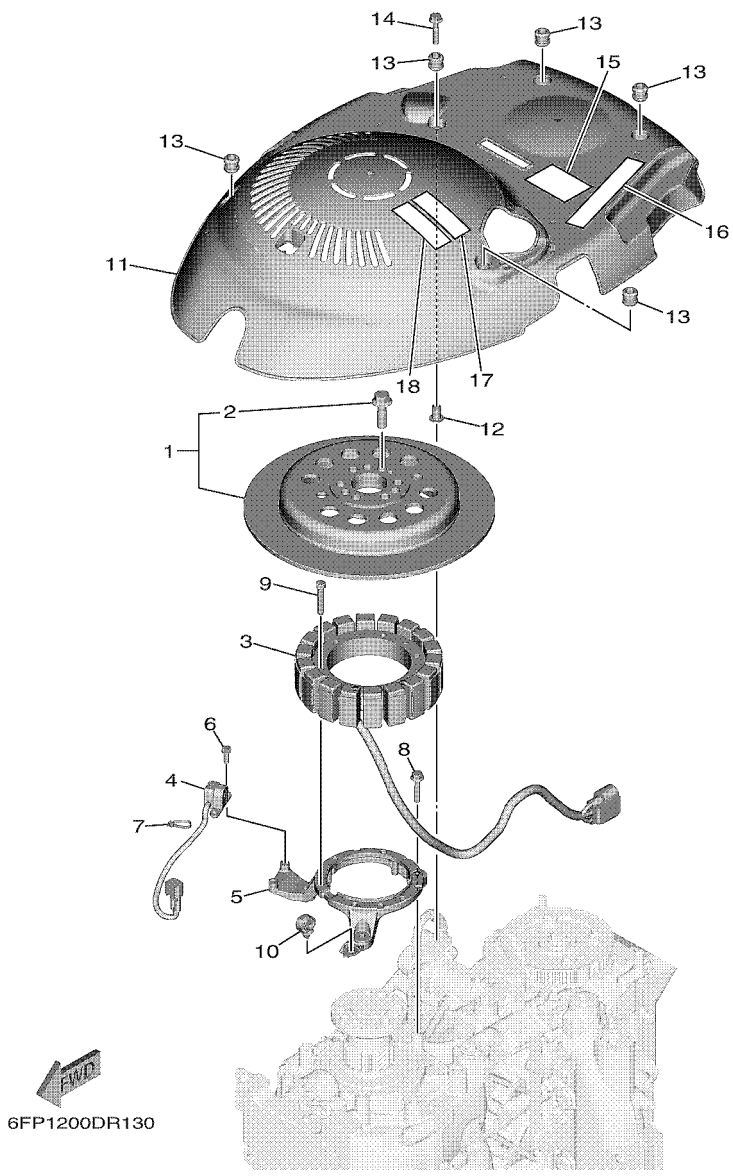

FIG. 13 GENERATOR — GENERATRICE

REF. NO.	PART NO. N° PIECES	DESCRIPTION DESCRIPTION	6HV1					REMARKS REMARQUES
1	6FP–W8145–01	ROTOR ASSY WITH BOLTS ROTOR COMPLET AVEC BOULON	1					
2	6FP–W9010–00	.BOLT SET .BOULON ENS.	1					
3	6FP–81410–00	STATOR ASSY STATOR COMPLET	1					
4	6CB–85580–00	COIL, PULSER BOBINE, PULSEUR	1					
5	6FP–85561–00	BASE, MAGNETO BASE, MAGNETO	1					
6	90109–05M89	BOLT BOULON	2					
7	90465–11M10	CLAMP BRIDE	1					
8	95895–06030	BOLT, FLANGE BOULON	3					
9	91312–06035	BOLT BOULON	6					
10	90464–13249	CLAMP BRIDE	1					
11	6FP–81337–00	COVER, FLYWHEEL COUVERCLE, VOLANT	1					
12	90387–06119	COLLAR COLLERETTE	1					
13	6A0–82317–00	DAMPER, IGNITION COIL AMORTISSEUR, BOBINE D'ALLUM	5					
14	95895–06030	BOLT, FLANGE BOULON	1					
15	6FP–83626–00	MARK 6 MARK 6	1					
16	6EK–13437–61	MARK, CAUTION MAKER	1					
17	6EE–81994–40	LABEL, SAFETY ETIQUETTE, SECURITE	1					
18	6EE–81994–50	LABEL, SAFETY ETIQUETTE, SECURITE	1					

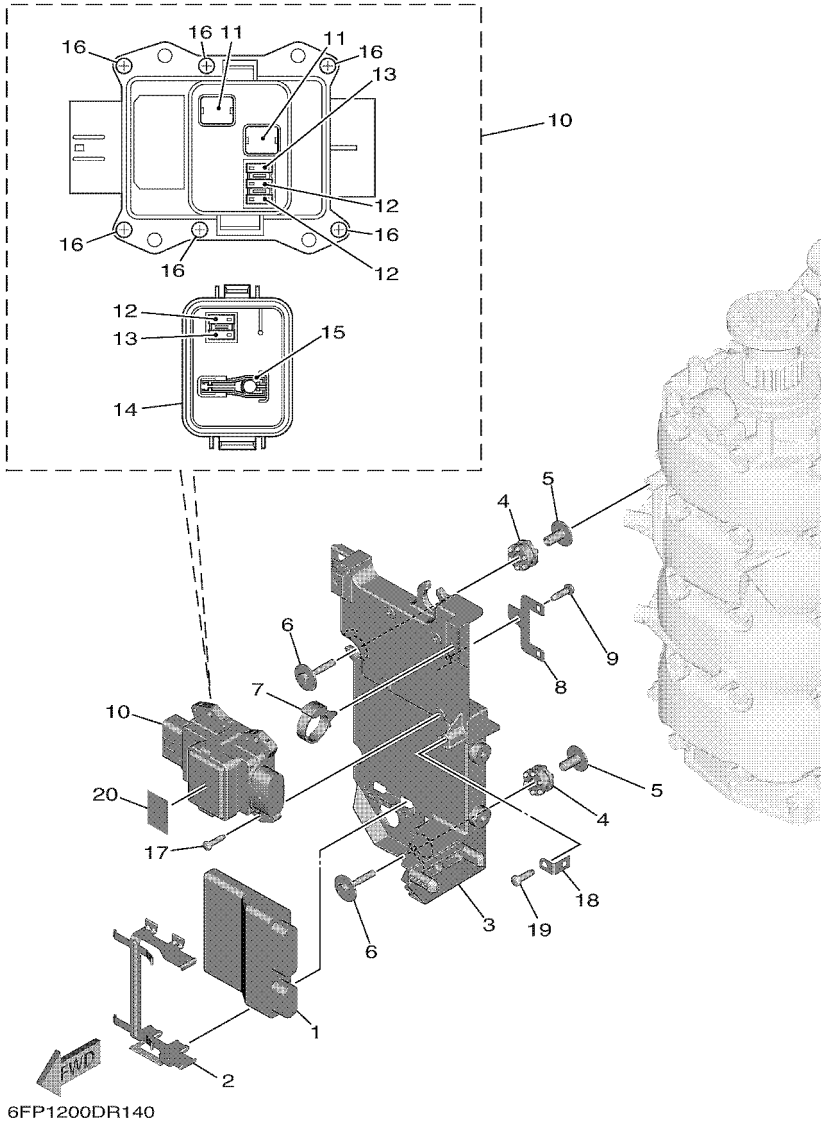

FIG. 14 ELECTRICAL 1 — PARTIE ELECTRIQUE 1

REF. NO.	PART NO. N° PIECES	DESCRIPTION DESCRIPTION	6HV1					REMARKS REMARQUES
1	6HV–8591A–00	ENGINE CONTROL UNIT ASSY BLOC DE CONTROL	1					
2	6FP–8253C–00	SPRING, PLATE LOCK RESSORT, PLAQUE BUTEE	1					
3	6FP–81948–00	BRACKET SUPPORT	1					
4	60V–85564–00	GROMMET RONDELLE CAOUTCHOUC	3					
5	90387–06176	COLLAR COLLERETTE	3					
6	68F–85119–00	BOLT BOULON	3					
7	90464–12183	CLAMP BRIDE	1					
8	6C5–8257V–00	PLATE, CONNECTOR PLAQUE, CONNECTEUR	1					
9	97780–60620	SCREW, TAPPING VIS, TETE BOMBEE	1					
10	6FP–82170–00	FUSE BOX ASSY BOITE A FUSIBLES	1					
11	6FP–82151–00	.FUSE (50A) .FUSIBLE (50A)	2					
12	6CB–82151–20	.FUSE (20A) .FUSIBLE (20A)	3					
13	6CB–82151–30	.FUSE (30A) .FUSIBLE (30A)	2					
14	6FP–85544–00	.COVER .COUVERCLE	1					
15	6CB–2812A–00	.PULLER, FUSE .TENDEUR, FUSIBLE	1					
16	6P2–82113–00	.SCREW (M3) .VIS (M3)	6					
17	97780–50620	SCREW, TAPPING VIS, TETE BOMBEE	4					
18	68V–85548–01	HOLDER SUPPORT	1					
19	97780–60620	SCREW, TAPPING VIS, TETE BOMBEE	1					
20	6FP–81919–00	GRAPHIC, REGULATOR ADHESIF, REGULATEUR	1					

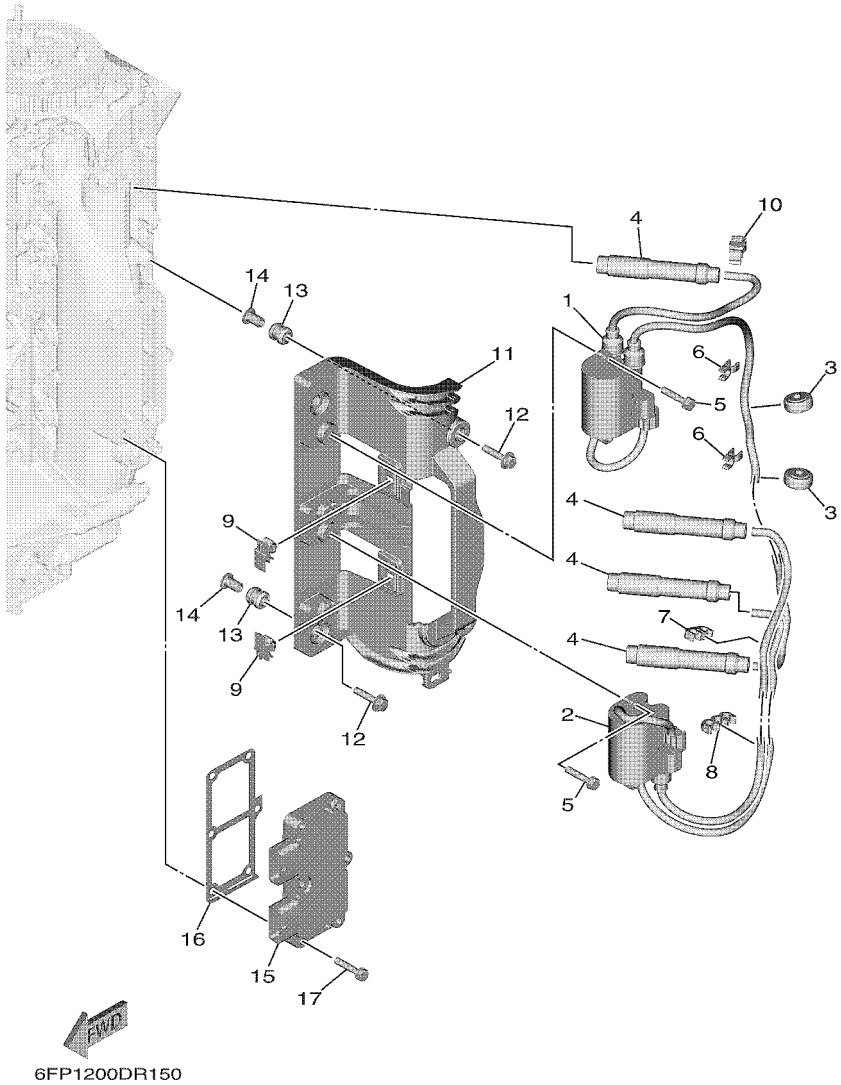

FIG. 15 ELECTRICAL 2 — PARTIE ELECTRIQUE 2

REF. NO.	PART NO. N° PIECES	DESCRIPTION DESCRIPTION	6HV1					REMARKS REMARQUES
1	6FP–82310–00	IGNITION COIL ASSY BOBINE D'ALLUMAGE	1					
2	6FP–82310–10	IGNITION COIL ASSY BOBINE D'ALLUMAGE	1					
3	90480–25003	GROMMET PASSE-FIL	2					
4	6FP–82370–00	PLUG CAP ASSY ANTIPARASITE	4					
5	97595–06525	BOLT, WITH WASHER VIS HEXAGONAL AVC RONDELLE	4					
6	90464–07M41	CLAMP BRIDE	2					
7	67F–82361–00	CLAMP, CORD COLLIER, CORDON	1					
8	90464–07M05	CLAMP BRIDE	1					
9	90464–12002	CLAMP BRIDE	2					
10	90464–09013	CLAMP BRIDE	1					
11	6FP–82316–00	BRACKET, IGNITION COIL SUPPORT, BOBINE D'ALLUMAGE	1					
12	90119–06M95	BOLT, WITH WASHER BOULON, AVEC RONDELLE	4					
13	6A0–82317–00	DAMPER, IGNITION COIL AMORTISSEUR, BOBINE D'ALLUM	4					
14	90387–06119	COLLAR COLLERETTE	4					
15	6EK–81960–02	RECTIFIER & REGULATOR ASSY REDRESSEUR REGULATEUR CPLT	1					
16	6FP–81975–00	PLATE, RECTIFIER FITTING PLAQUE, FIXATION DU REDRESSEUR	1					
17	90119–06MA4	BOLT, WITH WASHER BOULON, AVEC RONDELLE	6					

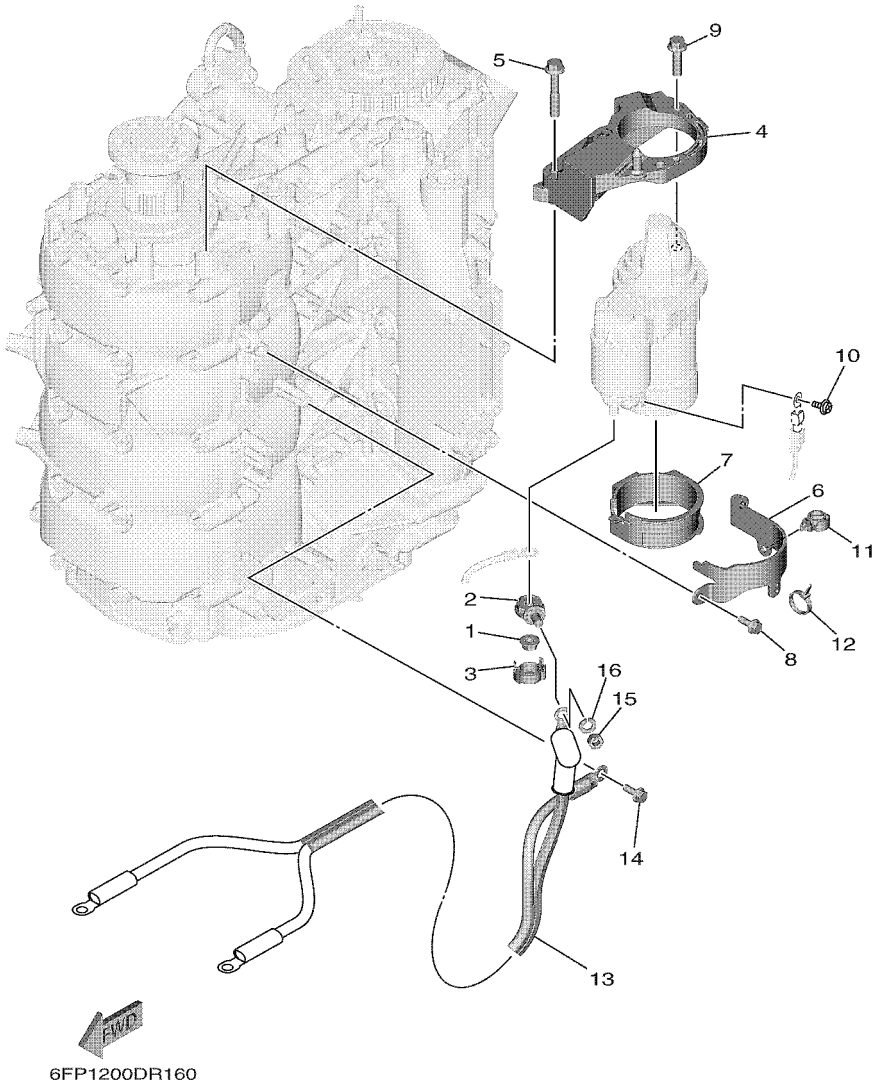

FIG. 16 ELECTRICAL 3 — PARTIE ELECTRIQUE 3

REF. NO.	PART NO. N° PIECES	DESCRIPTION DESCRIPTION	6HV1					REMARKS REMARQUES
1	90179–08003	NUT ECROU	1					
2	60V–81925–00	TERMINAL BORNE	1					
3	68F–82582–00	COVER, WIRE HARNESS COUVERCLE, FAISCEAU DE FILS	1					
4	6FP–81822–00	BRACKET, STARTING MOTOR SUPPORT, DEMARREUR ELECTRIQUE	1					
5	95812–08050	BOLT, FLANGE BOULON	2					
6	6FP–81823–00	STAY, STARTING MOTOR SUPPORT	1					
7	6FP–81897–00	GASKET, MOTOR JOINT DE MOTEUR	1					
8	95895–06016	BOLT, FLANGE BOULON	2					
9	95812–08030	BOLT, FLANGE BOULON	2					
10	97985–04308	SCREW, WITH WASHER VIS, AVEC RONDELLE	1					
11	90464–13249	CLAMP BRIDE	1					
12	90465–13M11	CLAMP BRIDE	1					
13	68V–82105–01	BATTERY CABLE CABLE DE BATTERIE	1					AP AP
14	90105–06M14	BOLT FLANGE BOULON	1					AP AP
15	95333–08600	NUT ECROU	1					AP AP
16	92903–08100	WASHER, SPRING RONDELLE, GROWER	1					AP AP

FIG. 17 ELECTRICAL 4 — PARTIE ELECTRIQUE 4

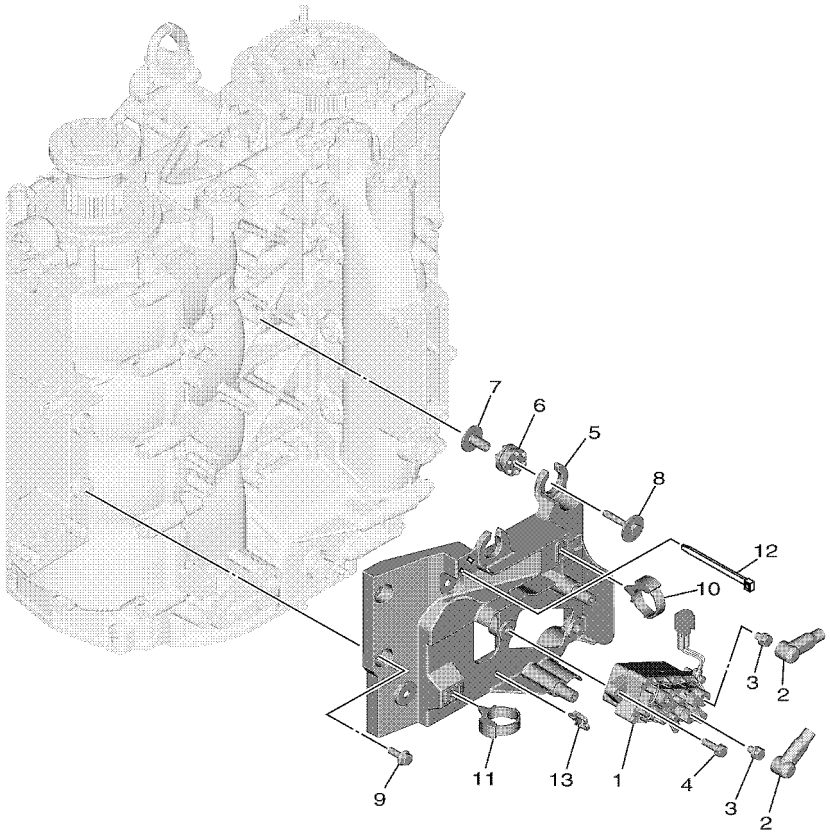

6FP1200DR170

REF. NO.	PART NO. N° PIECES	DESCRIPTION DESCRIPTION	6HV1					REMARKS REMARQUES
1	63P–81950–00	RELAY ASSY RELAIS COMPLET	1					
2	682–82119–01	COVER, LEAD WIRE GARNITURE, FIL	2					
3	97595–06610	BOLT, WITH WASHER VIS HEXAGONAL AVC RONDELLE	2					
4	97595–06520	BOLT, WITH WASHER VIS HEXAGONAL AVC RONDELLE	2					
5	6FP–81952–00	HOLDER, RELAY SUPPORT, RELAIS	1					
6	68F–85516–01	SPACER ENTRETOISE	3					
7	90387–06176	COLLAR COLLERETTE	3					
8	68F–85119–00	BOLT BOULON	3					
9	95895–06016	BOLT, FLANGE BOULON	2					
10	90464–12183	CLAMP BRIDE	1					
11	90464–12183	CLAMP BRIDE	1					
12	90465–13M11	CLAMP BRIDE	1					
13	90464–11121	CLAMP BRIDE	1					

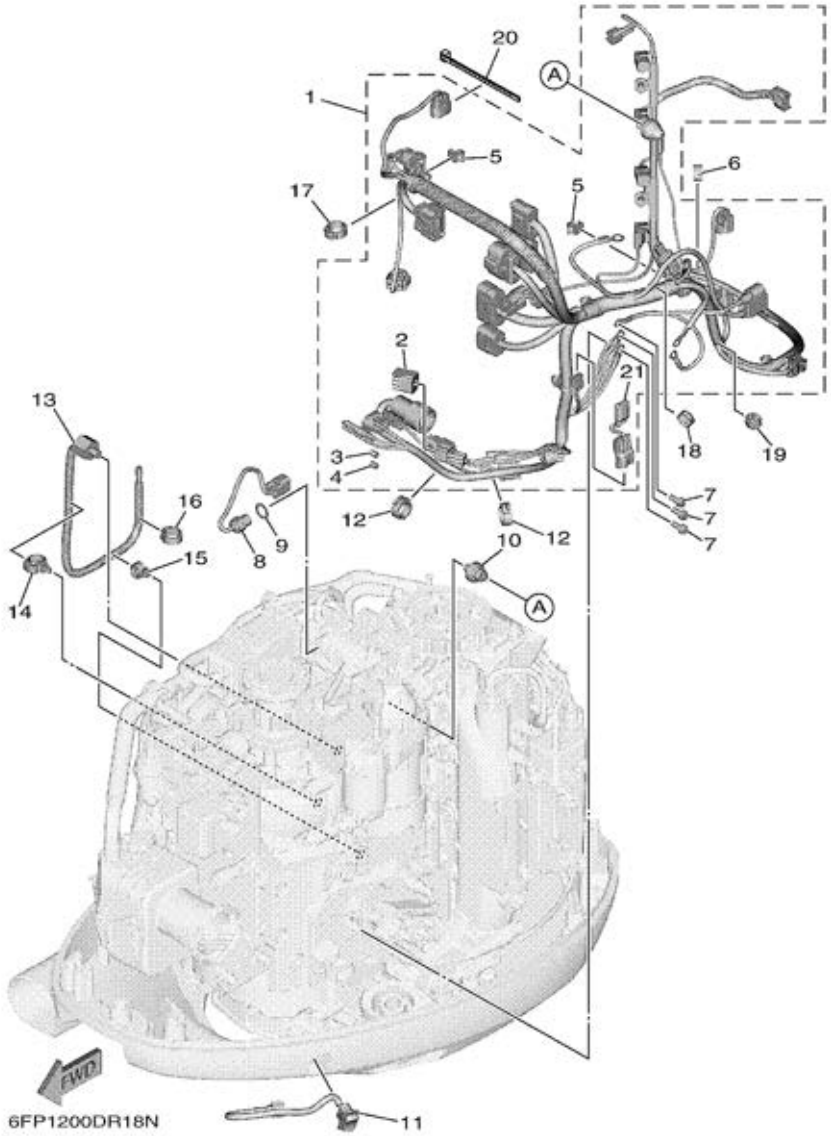

FIG. 18 ELECTRICAL 5 — PARTIE ELECTRIQUE 5

REF. NO.	PART NO. N° PIECES	DESCRIPTION DESCRIPTION	6HV1					REMARKS REMARQUES
1	6FP–82590–01	WIRE HARNESS ASSY FAISCEAU DE FILS COMPLET	1					
2	6Y8–82582–11	.CAP 1 (4PIN) .COUVERCLE, FAISCEAU DE FILS	1					
3	6DA–82582–00	.CAP 1 (FEMALE) .BOUCHON 1 (FEMME)	1					
4	6DA–82582–10	.CAP 1 (MALE) .BOUCHON 1 (MALE)	1					
5	90464–09M47	.CLAMP .BRIDE	2					
6	90464–13227	CLAMP BRIDE	1					
7	97595–06516	BOLT, WITH WASHER VIS HEXAGONAL AVC RONDELLE	3					
8	6CJ–85790–00	THERMOSENSOR ASSY SENSITOMETRE	1					
9	90430–14115	GASKET JOINT	1					
10	68V–82504–00	OIL PRESSURE SWITCH ASSY CONTACTEUR DE PRESSION D'HUILE	1					
11	6FM–82563–00	TRIM & TILT SWITCH ASSY INCLINER ET PARER COMMUTATEUR	1					
12	90464–16001	CLAMP BRIDE	2					
13	6CJ–85780–00	SENSOR, KNOCK SONDE DE COGNEMENT	1					
14	90464–20181	CLAMP BRIDE	1					
15	90464–13249	CLAMP BRIDE	1					
16	90464–16001	CLAMP BRIDE	1					
17	90464–16001	CLAMP BRIDE	1					
18	90464–13227	CLAMP BRIDE	1					
19	90464–13227	CLAMP BRIDE	1					
20	90465–13M97	CLAMP BRIDE	1					
21	6FM–81980–00	.DIODE ASSY .REDRESSEUR 2	1					

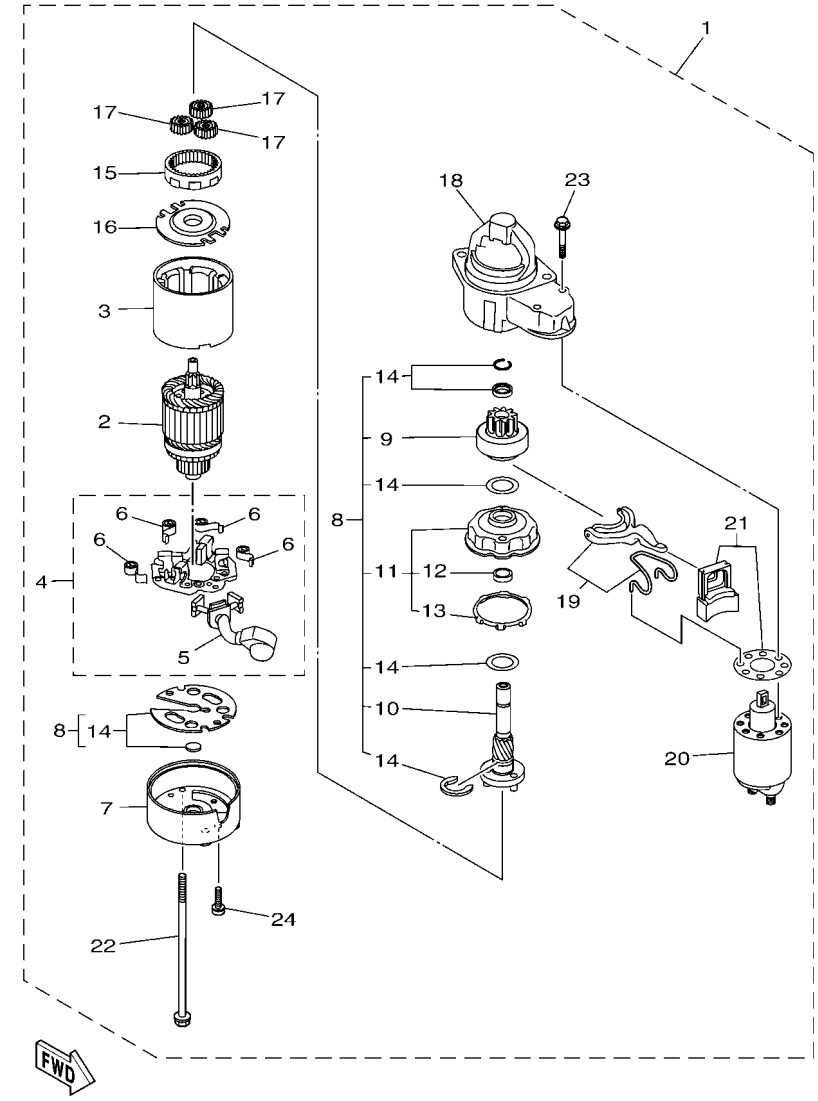

6FP1200-R190

FIG. 19 STARTING MOTOR — DEMARREUR ELECTRIQUE

REF. NO.	PART NO. N° PIECES	DESCRIPTION DESCRIPTION	6HV1					REMARKS REMARQUES
1	6FP–81800–00	STARTING MOTOR ASSY DEMARREUR ELECTRIQUE COMPLET	1					
2	67F–81850–00	.ARMATURE ASSY .INDUIT	1					
3	67F–81810–00	.STATOR ASSY .STATOR COMPLET	1					
4	69J–81840–10	.BRUSH HOLDER ASSY .SUPPORT DE CHARBON	1					
5	69J–81801–10	..BRUSH SET ..CHARBON	1					
6	67F–81813–00	..SPRING, BRUSH ..RESSORT, DE CHARBON	4					
7	6FP–81820–00	.REAR BRACKET ASSY .SUPPORT ARRIERE COMPLET	1					
8	6FP–81807–00	.GEAR ASSY, STARTING MOTOR .PIGNON, DEMARREUR ELECTRIQUE	1					
9	6FP–81832–00	..CLUTCH, OVER RUN ..EMBRAYAGE, ROUE LIBRE	1					
10	6FP–81836–00	..SPRING, LEVER ..RESSORT, LEVIER	1					
11	67F–81821–00	..BRACKET, CENTER 1 ..SUPPORT, CENTRE 1	1					
12	67F–81841–00	...BEARING ...ROULEMENT	1					
13	67F–8183R–00	...GASKET ...JOINT	1					
14	6CB–81809–00	..WASHER KIT ..JEU DE RONDELLES	1					
15	67F–81891–00	.GEAR, RING .ROUE DENTEE	1					WITH 67F-8183R-00 WITH 67F-8183R-00
16	67F–81830–00	.BRACKET, CENTER 2 .SUPPORT, CENTRE 2	1					
17	60V–8183T–00	.GEAR, IDLER .PIGNON, INTERMEDIAIRE	3					
18	6FP–81842–00	.COVER .COUVERCLE	1					
19	6FP–81839–00	.LEVER ASSY .LEVIER COMPLET	1					
20	6EM–81941–00	.STARTER RELAY ASSY .LANCEUR RELAIS (ENS.)	1					
21	6C5–81869–00	.COVER, DUST .COUVERCLE, POUSSIERE	1					
22	6CB–81826–00	.BOLT .BOULON	2					
23	69J–81828–00	.SCREW 2 .VIS 2	2					
24	67F–81846–00	.SCREW .VIS	2					

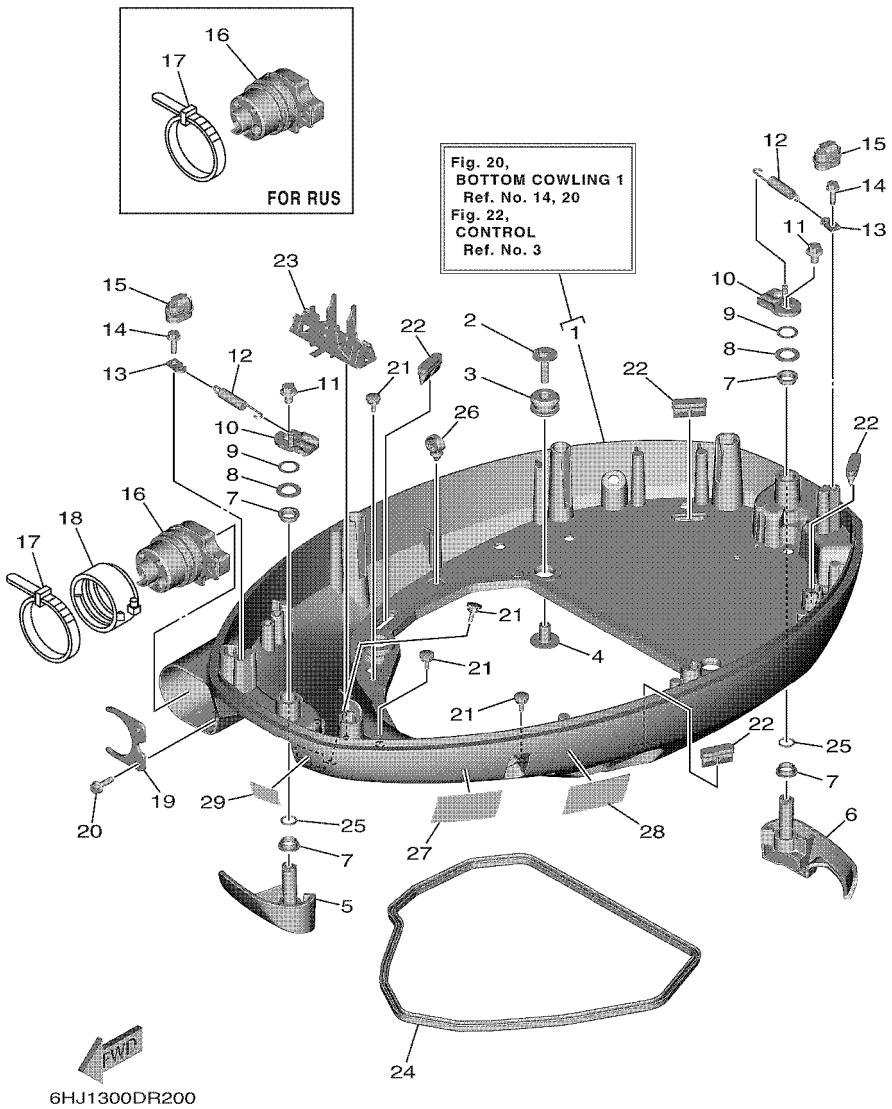

FIG. 20 BOTTOM COWLING 1 — CAPOT INFERIEUR 1

REF. NO.	PART NO. N° PIECES	DESCRIPTION DESCRIPTION	6HV1					REMARKS REMARQUES
1	6FP–42710–00–8D	BOTTOM COWLING ASSY ENS. EMBASE	1					
2	90119–08M22	BOLT, WITH WASHER BOULON, AVEC RONDELLE	4					
3	90480–22M15	GROMMET PASSE-FIL	4					
4	90387–08M37	COLLAR COLLERETTE	4					
5	6FP–42815–00–8D	LEVER, CLAMP 1 LEVIER, PRESSE 1	1					
6	6FP–42816–00–8D	LEVER, CLAMP 2 LEVIER, PRESSE 2	1					
7	90386–15M73	BUSH DOUILLE	4					
8	90201–156J2	WASHER, PLATE RONDELLE, PLATE	2					
9	90206–15M18	WASHER, WAVE RONDELLE, ONDULEE	2					
10	6CB–42818–00	LEVER, CLAMP 4 LEVIER, PRESSE 4	2					
11	95895–08012	BOLT, FLANGE BOULON	2					
12	90506–22001	SPRING, TENSION RESSORT, TENSION	2					
13	66T–43144–00	HOOK, SPRING CROCHET	2					
14	90109–06M86	BOLT BOULON	2					
15	6EK–42728–00	CAP CAPUCHON	2					
16	6EK–42725–00	GROMMET PASSE-FIL	1					
17	90464–20258	CLAMP BRIDE	1					AP EXCEPT FOR RUS AP EXCEPT FOR RUS
	90465–13M30	CLAMP BRIDE	1					FOR RUS FOR RUS
18	68F–42753–00	FASTNER ATTACHE	1					AP EXCEPT FOR RUS AP EXCEPT FOR RUS
19	6CB–42761–00	STOPPER PLAQUETTE	1					
20	90109–06M86	BOLT BOULON	2					
21	6H4–42748–00	GROMMET PASSE-FIL	4					
22	67F–42717–00	RUBBER, SEAL 2 JOINT EN CAOUTCHOUC 2	4					
23	68V–82594–00	CLAMP BRIDE	1					
24	6EK–42716–00	RUBBER SEAL 1 JOINT EN CAOUTCHOUC 1	1					
25	93210–13M63	O-RING JOINT TORIQUE	2					
26	90464–13249	CLAMP BRIDE	1					

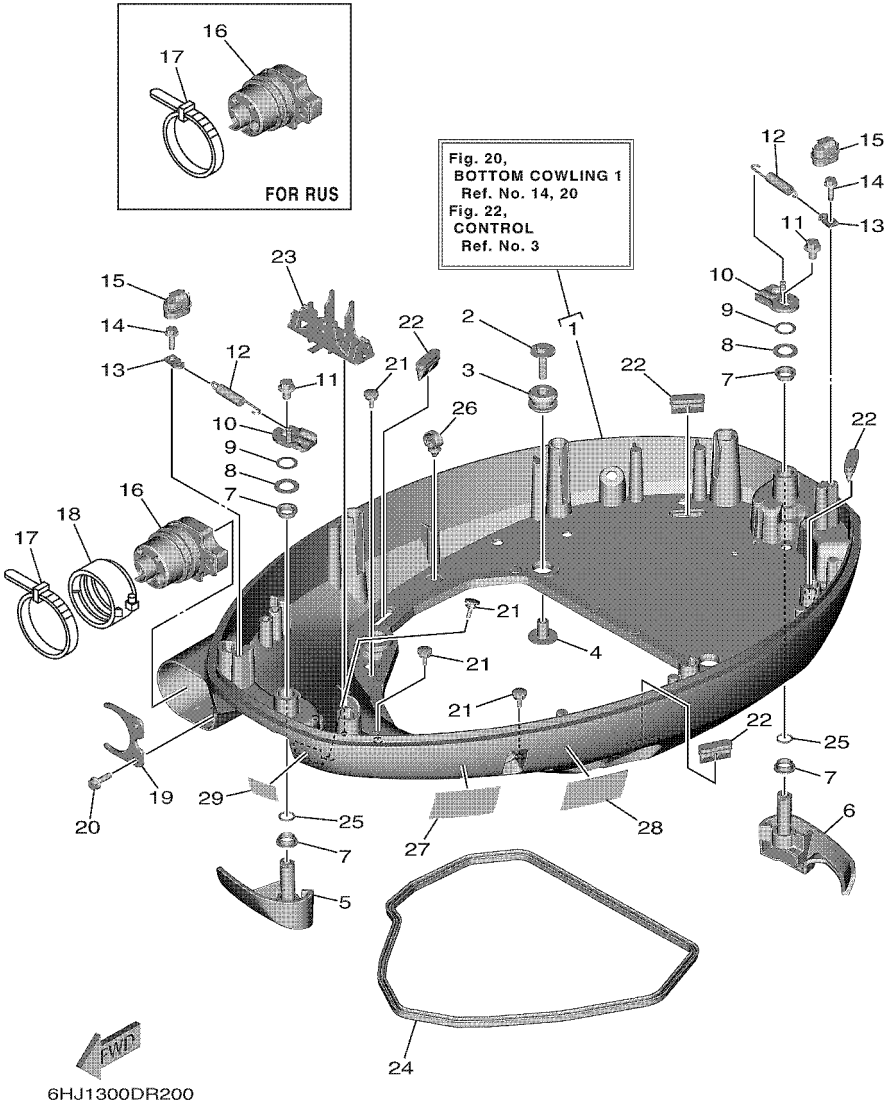

FIG. 20 BOTTOM COWLING 1 — CAPOT INFERIEUR 1

REF. NO.	PART NO. N° PIECES	DESCRIPTION DESCRIPTION	6HV1					REMARKS REMARQUES
27	6EE–42794–40	LABEL, WARNING (GENERAL) ETIQUETTE, AVERTISSEMENT	1					
28	6EE–42794–50	LABEL, WARNING (GENERAL) ETIQUETTE, AVERTISSEMENT	1					
29	6AH–81996–00	MARK MARQUE	1					

FIG. 21 BOTTOM COWLING 2 — CAPOT INFERIEUR 2

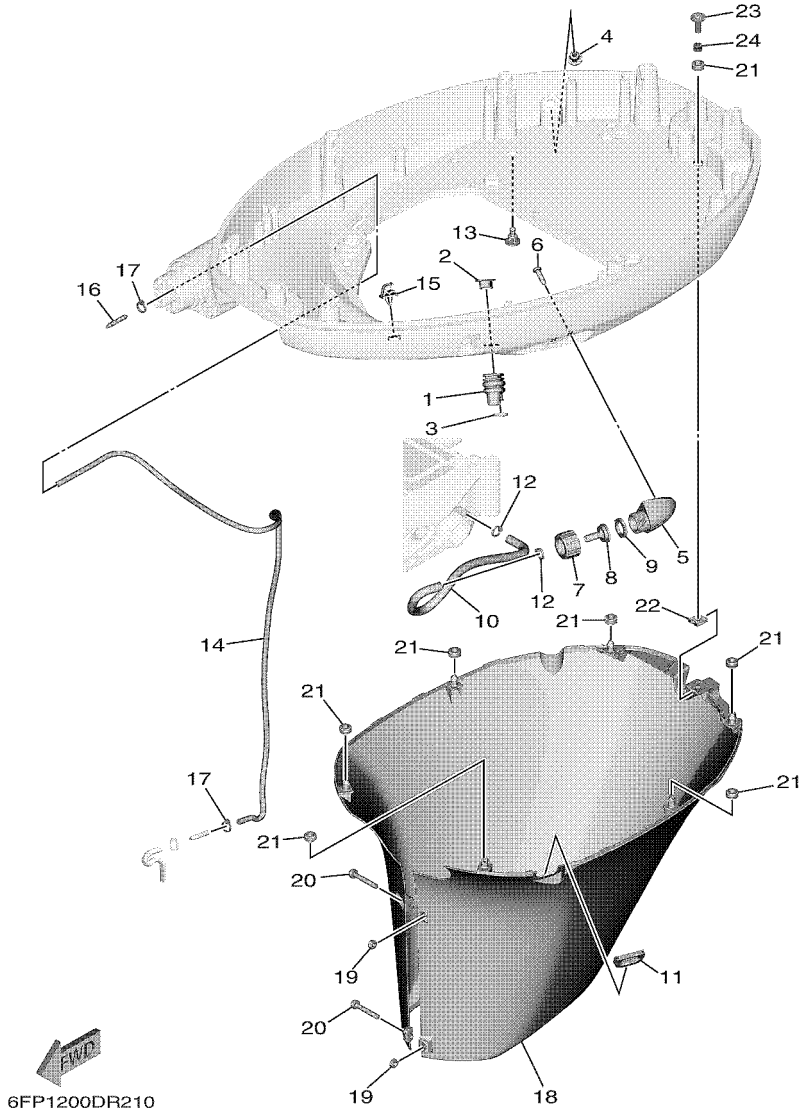

REF. NO.	PART NO. N° PIECES	DESCRIPTION DESCRIPTION	6HV1					REMARKS REMARQUES
1	6H1–42726–30	GROMMET PASSE-FIL	1					
2	6BG–42384–00	SEAL, CAP JOINT, CAPUCHON	1					
3	90465–11M10	CLAMP BRIDE	1					
4	6P2–44391–00	NIPPLE, HOSE RACCORD D'ESSENCE	1					
5	6AW–12572–00	ADAPTER ADAPTATEUR	1					
6	97780–60520	SCREW, TAPPING VIS, TETE BOMBEE	2					
7	6R3–12581–00	JOINT, HOSE 1 JOINT DE TUYAU	1					
8	6R3–12582–00	JOINT, HOSE 2 RACCORD DE TUYAU 1	1					
9	6R3–12583–00	GASKET, HOSE JOINT JOINT	1					
10	6EK–42541–00	PIPE 1 TUYAU 1	1					
11	6AH–42726–00	GROMMET PASSE-FIL	1					
12	90465–11M10	CLAMP BRIDE	2					
13	6P2–44391–00	NIPPLE, HOSE RACCORD D'ESSENCE	1					
14	90445–073F9	HOSE (L1200) DURITE (L1200)	1					
15	90464–07259	CLAMP BRIDE	1					
16	6E5–83558–00	END, NIPPLE RACCORD DE NIPPLE	1					
17	90465–11M10	CLAMP BRIDE	2					
18	6FP–42741–00–8D	APRON CAPOT LATERAL	1					
19	95380–06600	NUT, HEXAGON ECROU	2					
20	90159–06M28	SCREW, WITH WASHER VIS, AVEC RONDELLE	2					
21	90480–13M24	GROMMET PASSE-FIL	7					
22	90183–061A8	NUT, SPRING ECROU, RESSORT	1					
23	90159–06053	SCREW, WITH WASHER VIS, AVEC RONDELLE	1					
24	90387–06M43	COLLAR COLLERETTE	1					

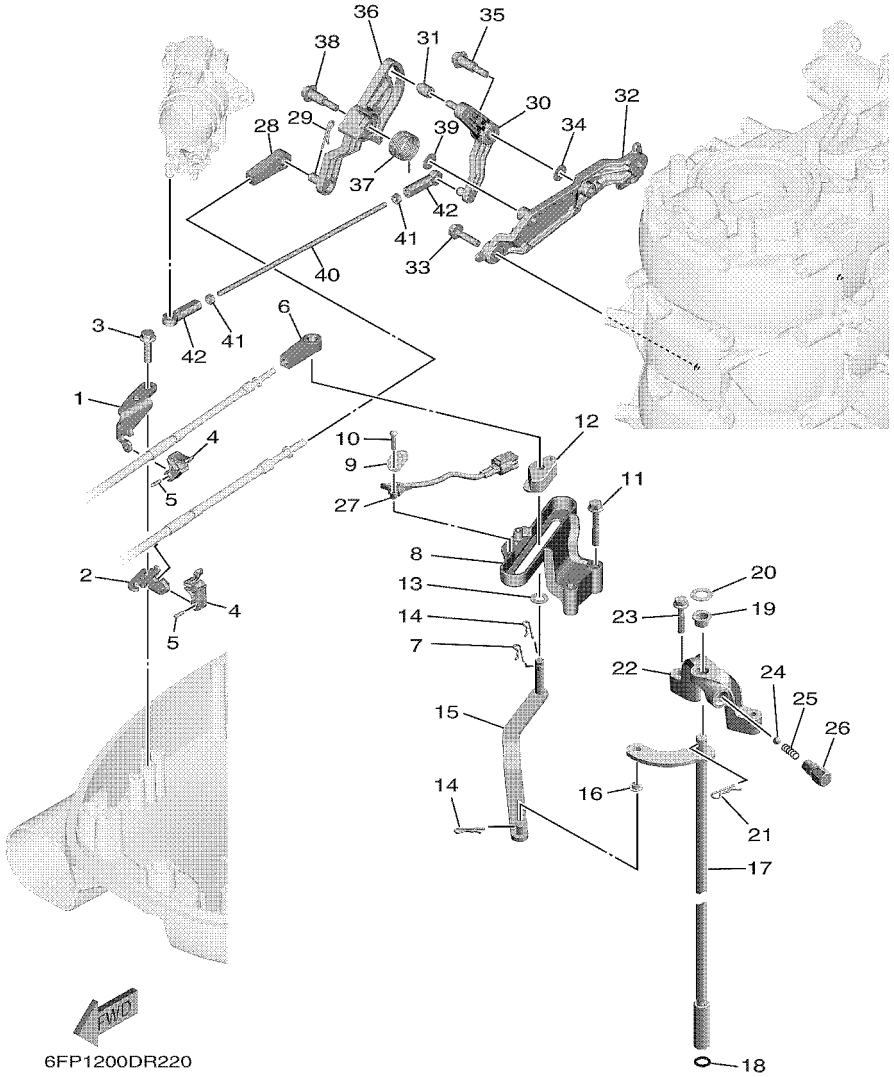

FIG. 22 CONTROL — COMMANDE

REF. NO.	PART NO. N° PIECES	DESCRIPTION DESCRIPTION	6HV1					REMARKS REMARQUES
1	6EK–48531–01	BRACKET, REMOTE CONTROL 1 ETRIER 1, COMMANDE A DISTANCE	1					
2	6FP–48532–00	BRACKET, REMOTE CONTROL 2 ETRIER 2, COMMANDE A DISTANCE	1					
3	90109–06M81	BOLT BOULON	2					
4	6EK–48538–00	CLAMP, CABLE 1 COLLIER	2					
5	91690–30010	PIN, SPRING AGRAFFE	2					
6	6E5–48344–00	CABLE END, REMOTE CONTROL CHAPE CABLE	1					
7	90468–18008	CLIP JONC	1					
8	6EK–44117–01	BRACKET SUPPORT	1					
9	61A–82588–01	PLATE PLAQUE	1					
10	97985–04116	SCREW, WITH WASHER VIS, AVEC RONDELLE	2					
11	95875–06040	BOLT, FLANGE BOULON, A COLLERETTE	2					
12	63P–44122–00	BUSHING, SHIFT ROD LEVER DOUILLE, LEVIER D'EMBRAYAGE	1					
13	90202–08M20	WASHER, PLATE RONDELLE, PLATE	1					
14	90468–18008	CLIP JONC	2					
15	6EK–44121–00	LEVER, SHIFT ROD LEVIER, TIGE D'INVERSION	1					
16	90386–06M12	BUSH DOUILLE	1					
17	6EK–44120–00	HANDLE GEAR SHIFT ASSY LEVIER D'EMBRAYAGE	1					L(20.3") L(20.3")
	6EK–44120–10	HANDLE GEAR SHIFT ASSY LEVIER D'EMBRAYAGE	1					X(25.3") X(25.3")
18	93210–09165	O-RING JOINT TORIQUE	1					
19	90386–10001	BUSH DOUILLE	1					
20	90201–11008	WASHER, PLATE RONDELLE, PLATE	1					
21	90468–180A0	CLIP JONC	1					
22	6EK–44118–00	BRACKET SUPPORT	1					
23	95895–06030	BOLT, FLANGE BOULON	2					
24	93501–04M02	BALL BILLE	1					
25	90501–12082	SPRING, COMPRESSION RESSORT, COMPRESSION	1					
26	648–42715–00	BUSHING COUSSINET	1					

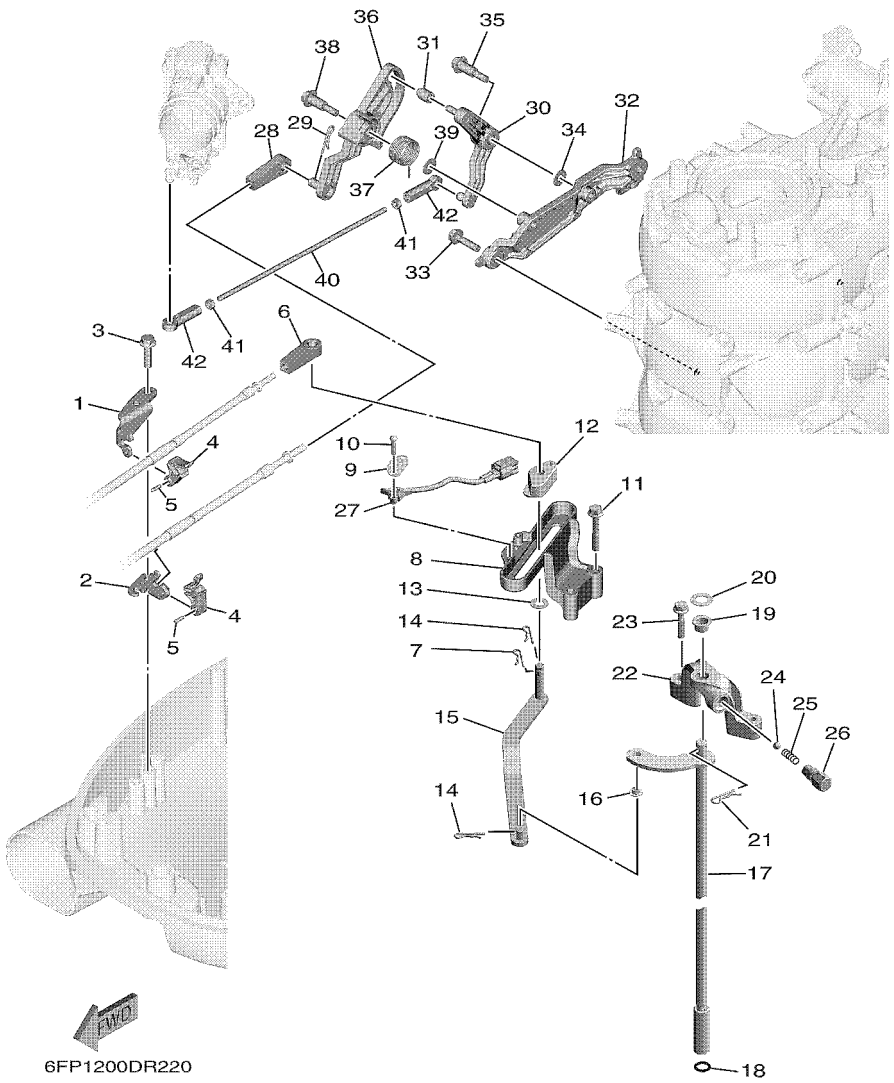

FIG. 22 CONTROL — COMMANDE

REF. NO.	PART NO. N° PIECES	DESCRIPTION DESCRIPTION	6HV1					REMARKS REMARQUES
27	60V–8259F–00	SWITCH ASSY COMMUTATEUR	1					
28	6E5–48344–00	CABLE END, REMOTE CONTROL CHAPE CABLE	1					
29	90468–18008	CLIP JONC	1					
30	6FP–42154–00	LEVER, THROTTLE CONTROL LEVIER DE COMMANDE D'AVANCE	1					
31	68V–42171–00	BUSHING COUSSINET	1					
32	6FP–41662–00	BRACKET 2 SUPPORT 2	1					
33	95895–06025	BOLT, FLANGE BOULON	2					
34	90201–06M05	WASHER, PLATE RONDELLE, PLATE	1					
35	90109–06288	BOLT BOULON	1					
36	6FP–41213–00	CAM, ACCEL. CAME, ACCELERATION	1					
37	6EK–44135–00	SPRING RESSORT	1					
38	90109–06288	BOLT BOULON	1					
39	90201–06M05	WASHER, PLATE RONDELLE, PLATE	1					
40	6FP–41211–00	LINK, ACCEL. BIELLETTE, ACCELERATION	1					
41	95380–05600	NUT ECROU	2					
42	682–41237–00	JOINT, LINK RACCORD	2					

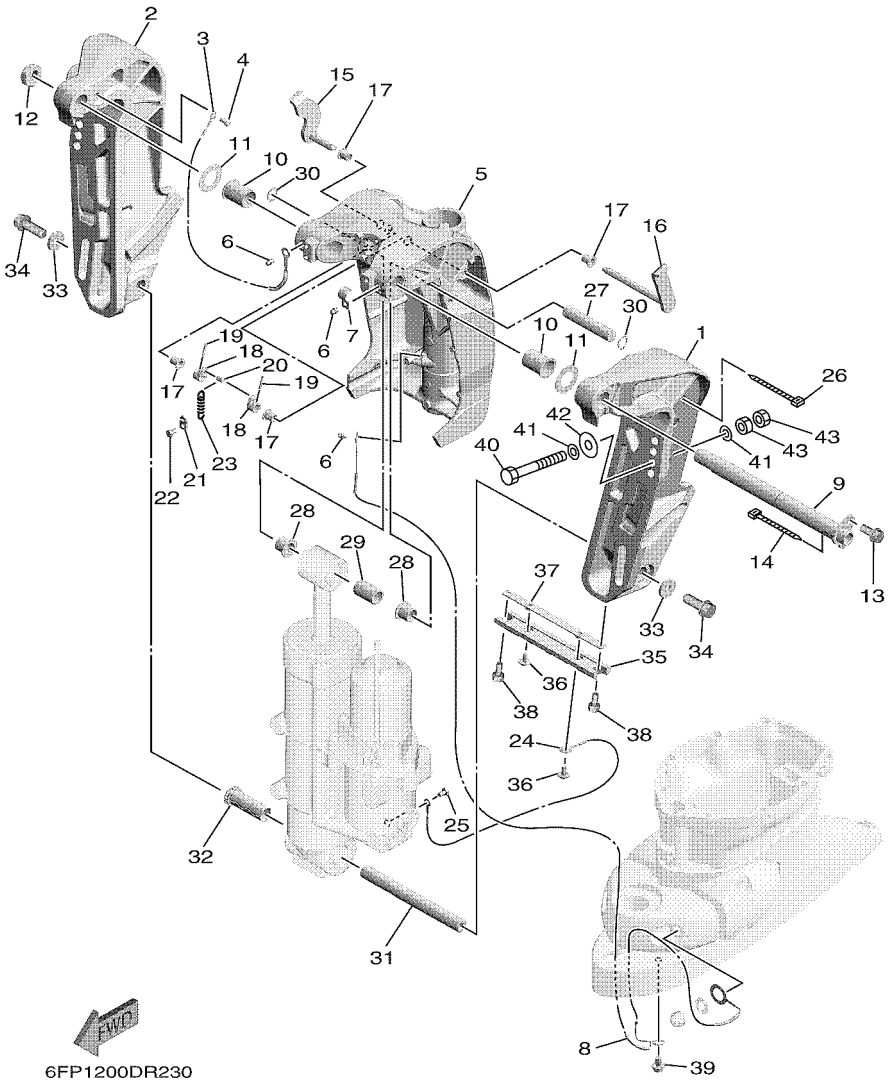

FIG. 23 BRACKET 1 — SUPPORT 1

REF. NO.	PART NO. N° PIECES	DESCRIPTION DESCRIPTION	6HV1					REMARKS REMARQUES
1	6EK–43111–00–8D	BRACKET, CLAMP 1 PRESSE 1	1					
2	6EK–43112–00–8D	BRACKET, CLAMP 2 PRESSE 2	1					
3	6E5–82148–00	WIRE, LEAD 4 FIL 4	1					
4	97880–06012	SCREW, PAN HEAD VIS, TETE TRONCONIQUE	1					
5	6EK–43311–00–8D	BRACKET, SWIVEL 1 SUPPORT, PIVOT 1	1					L(20.3") L(20.3")
	6EK–43311–10–8D	BRACKET, SWIVEL 1 SUPPORT, PIVOT 1	1					X(25.3") X(25.3")
6	93700–06M03	NIPPLE, GREASE PION	3					
7	90465–08M63	CLAMP BRIDE	1					
8	66K–82149–00	WIRE, LEAD 3 FIL 3	1					L(20.3") L(20.3")
	68V–82149–30	WIRE, LEAD 3 FIL 3	1					X(25.3") X(25.3")
9	64E–43131–30	BOLT, CLAMP BRACKET BOULON, PRESSE	1					
10	90386–25M31	BUSH DOUILLE	2					
11	90201–26M59	WASHER, PLATE RONDELLE, PLATE	2					
12	90185–22M11	NUT, SELF-LOCKING ECROU,AUTO-BLOQUANT	1					
13	97595–08520	BOLT, WITH WASHER VIS HEXAGONAL AVC RONDELLE	1					
14	90465–11M10	CLAMP BRIDE	1					
15	6EK–43181–00	LEVER, TILT STOP 1 LEVIER VERROUILLAGE RELEVAGE 1	1					
16	6EK–43185–00	LEVER, TILT STOP 2 LEVIER VERROUILLAGE RELEVAGE 2	1					
17	90386–10M16	BUSH DOUILLE	4					
18	6G5–43148–00	COLLAR, DISTANCE ENTRETOISE	2					
19	91690–30020	PIN, SPRING AGRAFFE	2					
20	90249–06M19	PIN GOUPILLE	1					
21	66T–43144–00	HOOK, SPRING CROCHET	1					
22	97095–06010	BOLT BOULON	1					
23	90506–14M24	SPRING, TENSION RESSORT, TENSION	1					
24	6D8–82148–00	WIRE, LEAD 4 FIL 4	1					
25	97595–06510	BOLT, WITH WASHER VIS HEXAGONAL AVC RONDELLE	1					

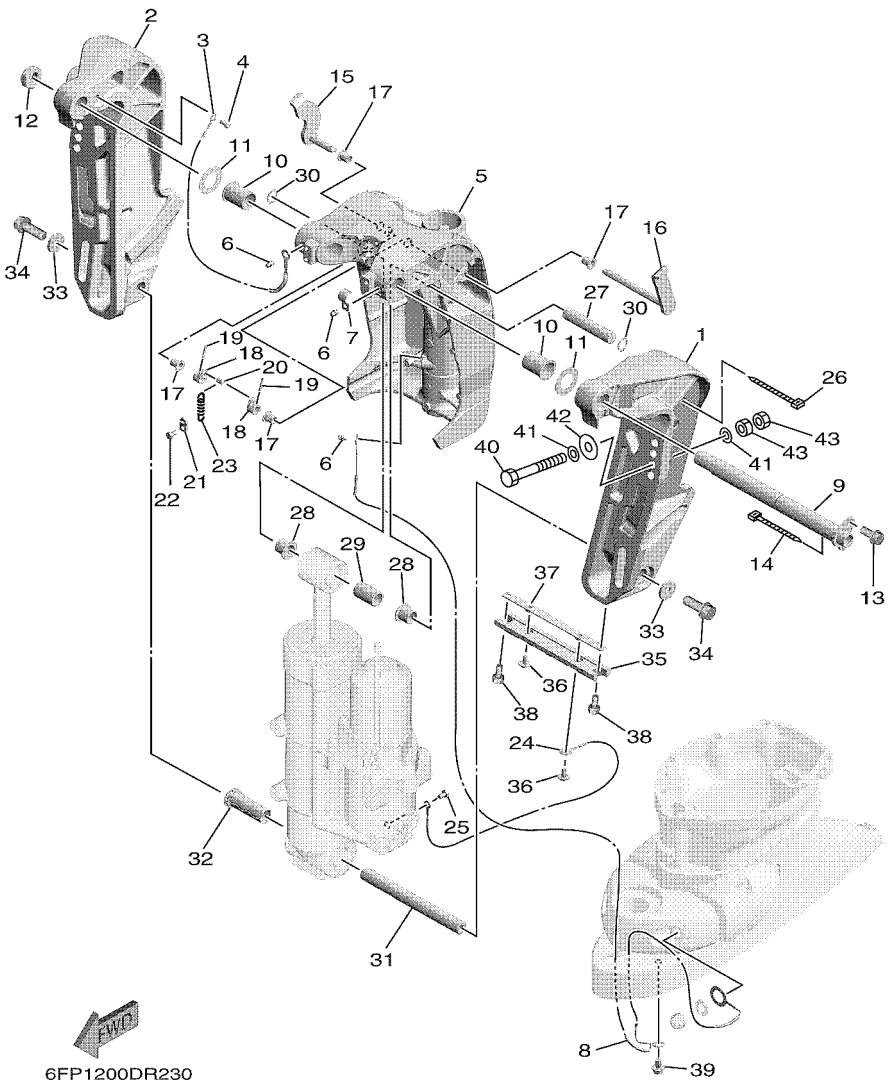

FIG. 23 BRACKET 1 — SUPPORT 1

REF. NO.	PART NO. N° PIECES	DESCRIPTION DESCRIPTION	6HV1					REMARKS REMARQUES
26	90465–13M18	CLAMP BRIDE	1					
27	6EK–43126–00	PIN, UPPER SHOCK MOUNT AXE, SUPERIEUR AMORTISSEUR	1					
28	90386–18M35	BUSH DOUILLE	2					
29	90386–18001	BUSH DOUILLE	1					
30	93410–18M05	CIRCLIP CLIPS	2					
31	6EK–43818–00	PIN, LOWER SHOCK MOUNT AXE, INFERIEUR AMORTISSEUR	1					
32	90383–20001	BUSH, FORMED DOUILLE, MISE EN FORME	1					
33	90201–10060	WASHER, PLATE RONDELLE, PLATE	2					
34	90119–10054	BOLT, WITH WASHER BOULON, AVEC RONDELLE	2					
35	6H1–45251–03	ANODE ANODE	1					
36	90119–06M81	BOLT, WITH WASHER BOULON, AVEC RONDELLE	2					
37	6EK–44536–00	PLATE 2 PLAQUETTE 2	1					
38	97595–06616	BOLT, WITH WASHER VIS HEXAGONAL AVC RONDELLE	2					
39	95895–06010	BOLT, FLANGE BOULON	1					
40	90101–12M05	BOLT (L:130MM) BOULON (L:130MM)	4					EXCEPT FOR RUS EXCEPT FOR RUS
	90101–12M03	BOLT (L:115MM) BOULON (L:115MM)	4					FOR RUS FOR RUS
41	90201–13M01	WASHER, PLATE RONDELLE, PLATE	8					
42	90201–12426	WASHER, PLATE RONDELLE, PLATE	4					
43	95380–12600	NUT ECROU	8					

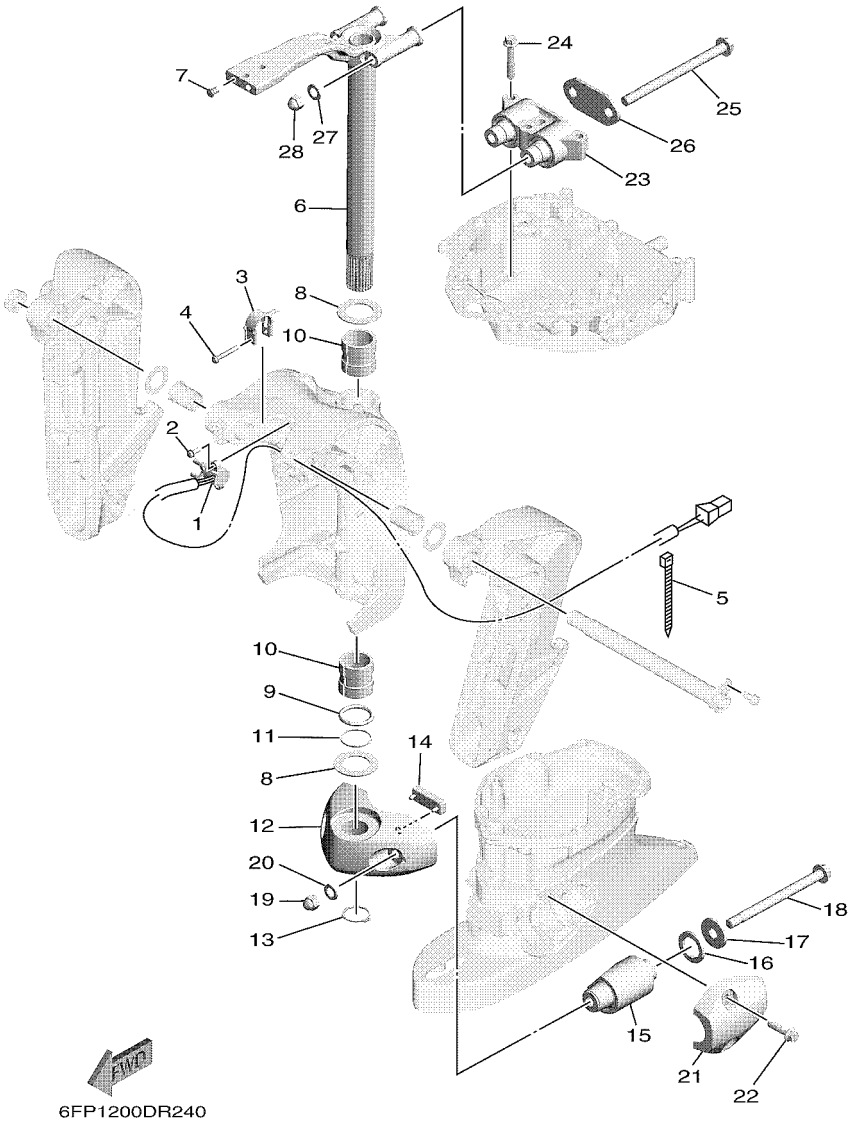

FIG. 24 BRACKET 2 — SUPPORT 2

REF. NO.	PART NO. N° PIECES	DESCRIPTION DESCRIPTION	6HV1					REMARKS REMARQUES
1	67H–83672–01	TRIM SENDER INCLINER RACCORD	1					
2	97985–06216	SCREW, WITH WASHER VIS, AVEC RONDELLE	2					
3	64E–43139–10	CAM, TRIM SENDER VILEBREQUIN TRUM	1					
4	90159–05059	SCREW, WITH WASHER VIS, AVEC RONDELLE	1					
5	90465–11M10	CLAMP BRIDE	2					
6	6EK–42510–00–8D	STEERING BRACKET ASSY DIRECTION SUPPORT (ENS.)	1					L(20.3") L(20.3")
	6EK–42510–10–8D	STEERING BRACKET ASSY DIRECTION SUPPORT (ENS.)	1					X(25.3") X(25.3")
7	90338–08174	PLUG PLOT	2					
8	90201–38M60	WASHER, PLATE RONDELLE, PLATE	2					
9	93210–37MH7	O-RING JOINT TORIQUE	1					
10	90386–38M32	BUSH DOUILLE	2					
11	90202–40M47	WASHER, PLATE RONDELLE, PLATE	1					
12	6EK–44551–00–8D	HOUSING, LOWER MOUNT RUBBER 1 BOITIER, SILENT-BLOC INFERIEUR	1					
13	93410–37M04	CIRCLIP CLIPS	1					
14	61A–44575–00	DAMPER, LOWER MOUNT RUBBER SILENT-BLOC, INFERIEUR	1					
15	63P–44555–00	MOUNT DAMPER, LOWER SIDE SILENT-BLOC, INFERIEUR LATERAL	2					
16	90202–32M19	WASHER, PLATE RONDELLE, PLATE	2					
17	90201–16M55	WASHER, PLATE RONDELLE, PLATE	2					
18	90105–14013	BOLT, FLANGE BOULON	2					
19	90176–14002	NUT, CROWN ECROU BORGNE	2					
20	92995–14600	WASHER RONDELLE	2					
21	6EK–44553–00–8D	COVER, LOWER MOUNT COUVERCLE, SUSPENSION INFERIEU	2					
22	90119–10058	BOLT, WITH WASHER BOULON, AVEC RONDELLE	4					
23	6FP–44514–00	MOUNT DAMPER, UPPER SIDE SILENT-BLOC, SUPERIEUR LATERAL	1					
24	95875–10060	BOLT, FLANGE BOULON, A COLLERETTE	3					
25	90105–14007	BOLT, FLANGE BOULON	2					
26	6EK–44526–00	PLATE PLAQUE	1					

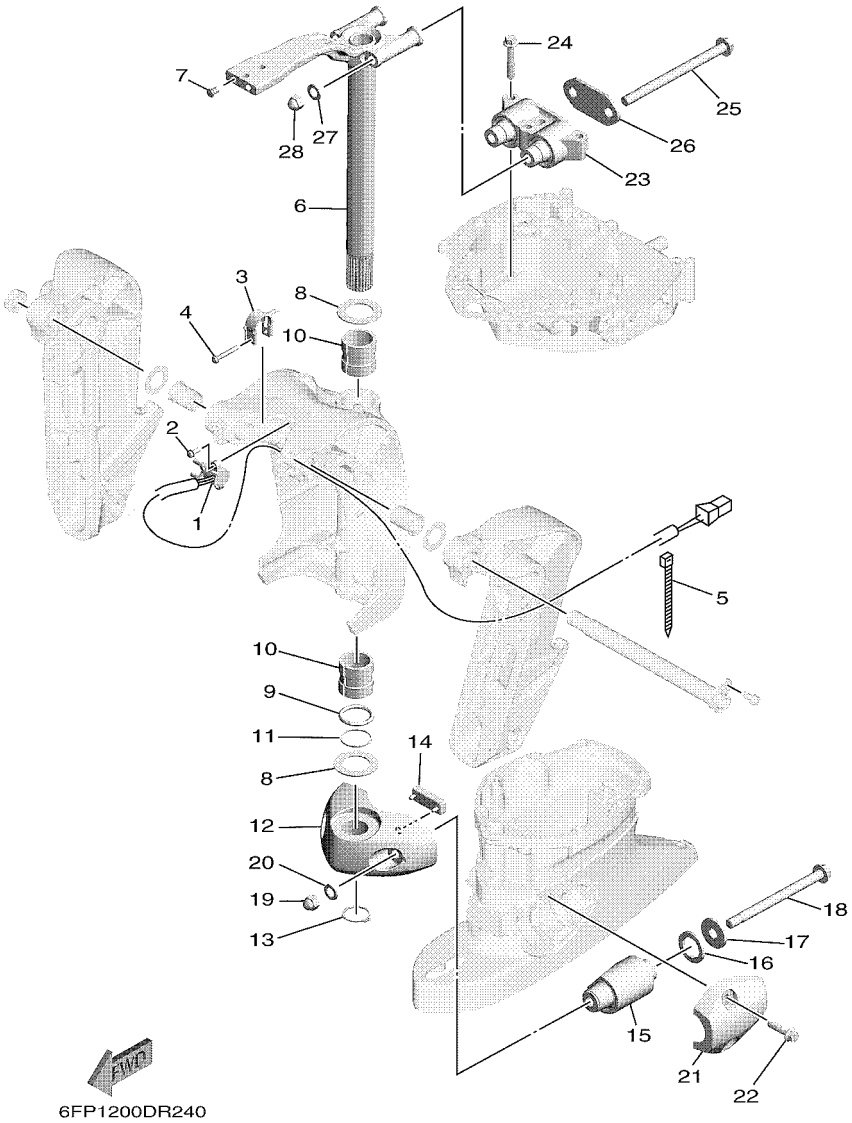

FIG. 24 BRACKET 2 — SUPPORT 2

REF. NO.	PART NO. N° PIECES	DESCRIPTION DESCRIPTION	6HV1					REMARKS REMARQUES
27	92995–14600	WASHER RONDELLE	2					
28	90176–14002	NUT, CROWN ECROU BORGNE	2					

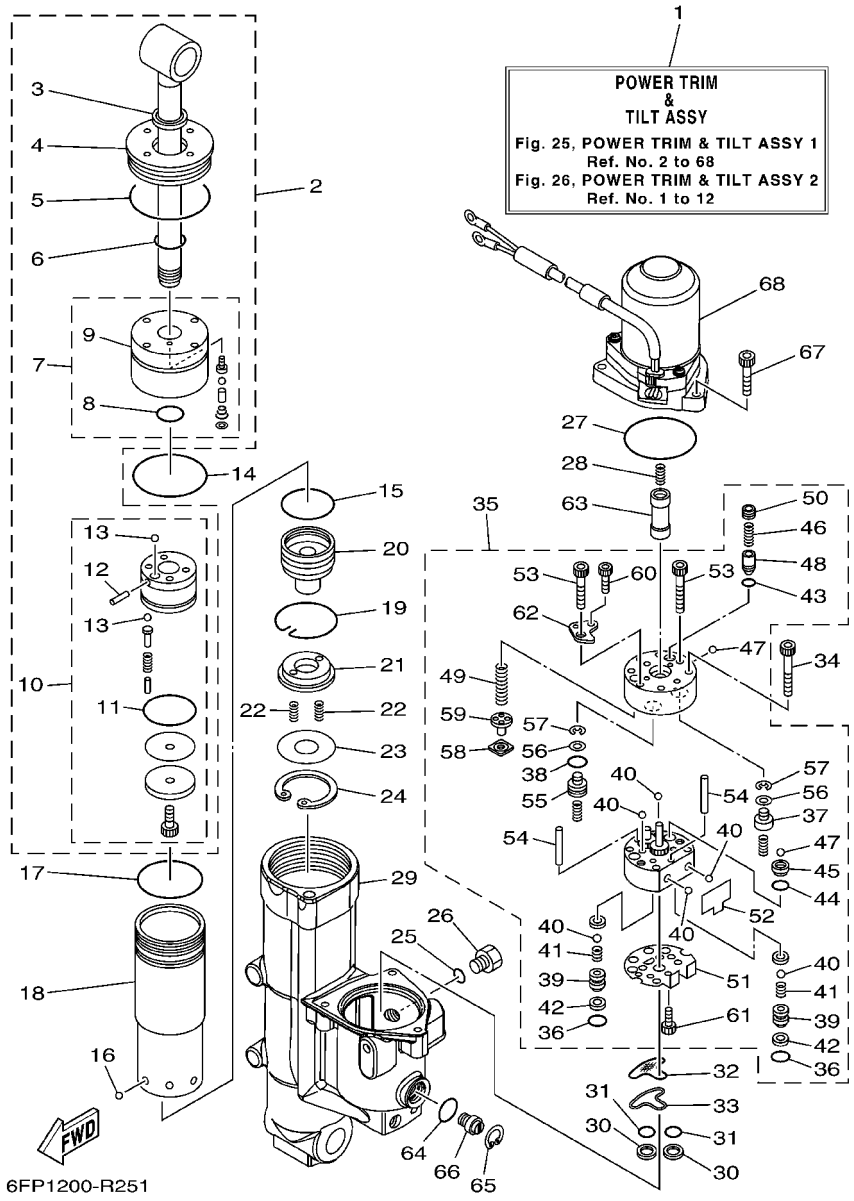

FIG. 25 POWER TRIM & TILT ASSY 1 — PUISSANCE PARER ET INCLINER 1

REF. NO.	PART NO. N° PIECES	DESCRIPTION DESCRIPTION	6HV1					REMARKS REMARQUES
1	6FP–43800–00	POWER TRIM & TILT ASSY PUISSANCE PARER ET INCLINER (E	1					
2	6EK–43810–00	TILT PISTON SUB ASSY INCLINER PISTON AUXILIAIRE(ENS	1					
3	6H1–43812–00	.SEAL, DUST .JOINT	1					
4	6EK–43821–00	.SCREW, TRIM CYLINDER END .VIS	1					
5	6EK–43861–00	.O-RING .JOINT TORIQUE	1					
6	6D8–43861–00	.O-RING .JOINT TORIQUE	1					
7	6EK–4380R–00	.CYLINDER END SUB ASSY .CYLINDRE RACCORD (ENS.)	1					
8	6D8–43861–00	..O-RING ..JOINT TORIQUE	1					
9	6EK–43811–00	..SCREW, CYLINDER END ..VIS, CYLINDRE RACCORD	1					
10	6EK–4380P–00	.PISTON SUB ASSY .PISTON AUXILIAIRE (ENS.)	1					
11	6H1–43862–00	..O-RING ..JOINT TORIQUE	1					
12	91609–16012	..PIN, SPRING ..AXE DE RESSORT	1					
13	93505–32038	..BALL ..BILLE	5					
14	67F–43865–00	O-RING JOINT TORIQUE	1					
15	6H1–43862–00	O-RING JOINT TORIQUE	1					
16	93503–16003	BALL BILLES	6					
17	7BB–G3861–00	O-RING JOINT TORIQUE	1					
18	6EK–22471–01	CYLINDER, SHOCK ABSORBER CYLINDRE, AMORTISSEUR	1					
19	6EK–43875–00	RING, SNAP RESSORT	1					
20	6EK–4381B–00	FREE PISTON SUB ASSY PISTON AUXILIAIRE (ENS.)	1					
21	6EK–43899–00	PLATE STOPPER PLAQUETTE	1					
22	62X–4384H–00	SPRING RESSORT	2					
23	6EK–22434–00	PLATE, VALVE 1 PLATEAU, SOUPAPE 1	1					
24	99009–47500	CIRCLIP CIRCLIP	1					
25	93210–09165	O-RING JOINT TORIQUE	1					
26	6EK–43829–00	PLUG, RESERVOIR BOUCHON	1					
27	93210–68N50	O-RING JOINT TORIQUE	1					

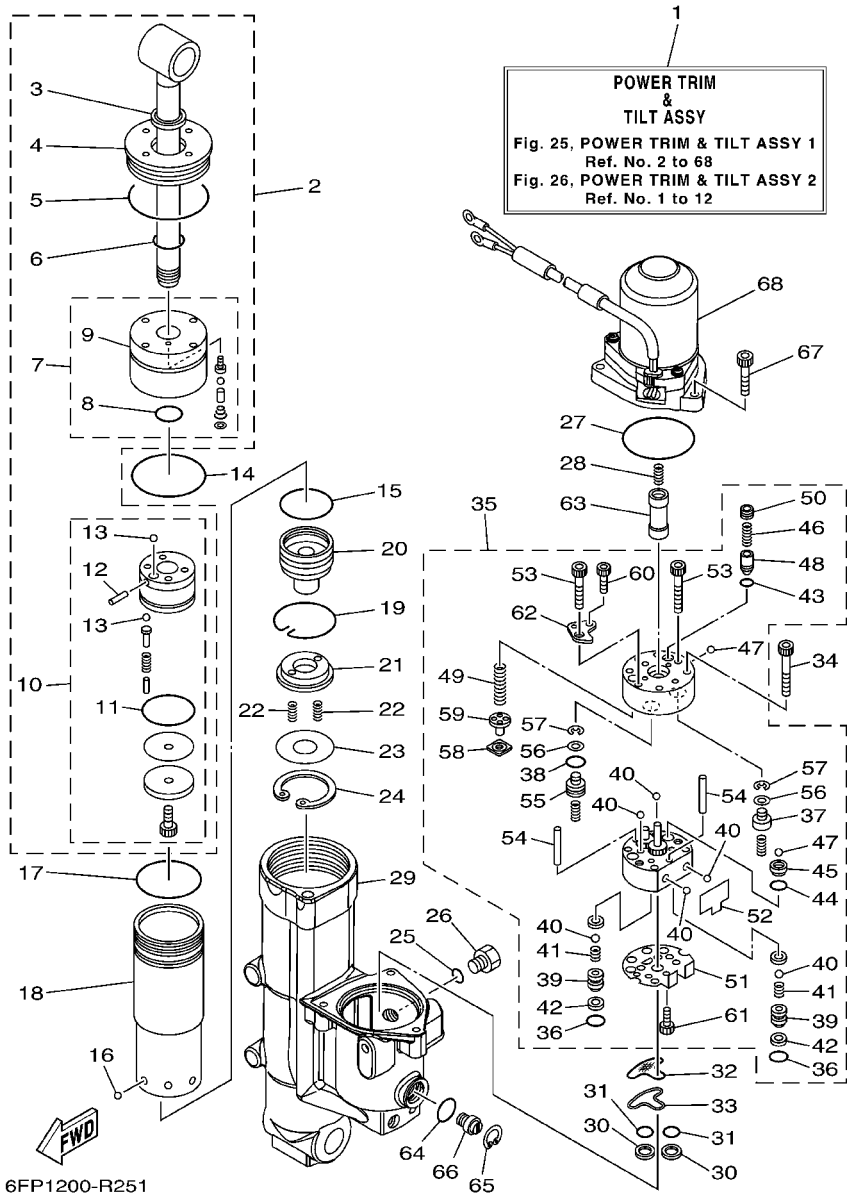

FIG. 25 POWER TRIM & TILT ASSY 1 — PUISSANCE PARER ET INCLINER 1

REF. NO.	PART NO. N° PIECES	DESCRIPTION DESCRIPTION	6HV1					REMARKS REMARQUES
28	62X–4384H–00	SPRING RESSORT	1					
29	6FP–4380K–00	CYLINDER, TILT SUB ASSY CYLINDRE	1					
30	6C6–43817–00	FILTER 2 FILTRE 2	2					
31	69J–4389J–00	O-RING JOINT TORIQUE	2					
32	6C5–43816–00	FILTER 1 FILTRE 1	1					
33	6C5–4380G–00	PLATE PLAQUE	1					
34	91318–05045	BOLT BOULON	4					
35	6FP–43830–00	GEAR PUMP ASSY POMPE A PIGNON (ENS.)	1					
36	69J–4389J–00	.O-RING .JOINT TORIQUE	2					
37	6D8–4384M–00	.PISTON, SHUTTLE 2 .PISTON 2	1					
38	6H1–43883–00	.O-RING .JOINT TORIQUE	1					
39	6EK–4382E–00	.ADAPTOR 2 .ADAPTEUR 2	2					
40	93505–32038	.BALL .BILLE	6					
41	6C6–43853–00	.SPRING, MAIN VALVE .RESSORT	2					
42	6C6–4387G–00	.WASHER .RONDELLE	2					
43	93210–04N51	.O-RING .JOINT TORIQUE	1					
44	93210–064A5	.O-RING .JOINT TORIQUE	1					
45	6D8–43851–00	.SEAT, RELIEF VALVE .SIEGE	1					
46	6C5–43855–10	.SPRING, UP RELIEF .RESSORT	1					
47	93501–08001	.BALL .BILLE	2					
48	6D8–43844–00	.PIN, VALVE SUPPORT .GOUPILLE	1					
49	6EK–43856–00	.SPRING, DOWN RELIEF .RESSORT	1					
50	6D8–43843–00	.SCREW, VALVE LOCK .VIS	1					
51	6C5–43895–00	.SEAT, RELIEF VALVE .SIEGE	1					
52	6C5–43854–00	.SPRING, MANUAL RELEASE .RESSORT	1					
53	91318–05030	.BOLT .BOULON	2					
54	93604–26256	.PIN, DOWEL .CLAVETTE	2					

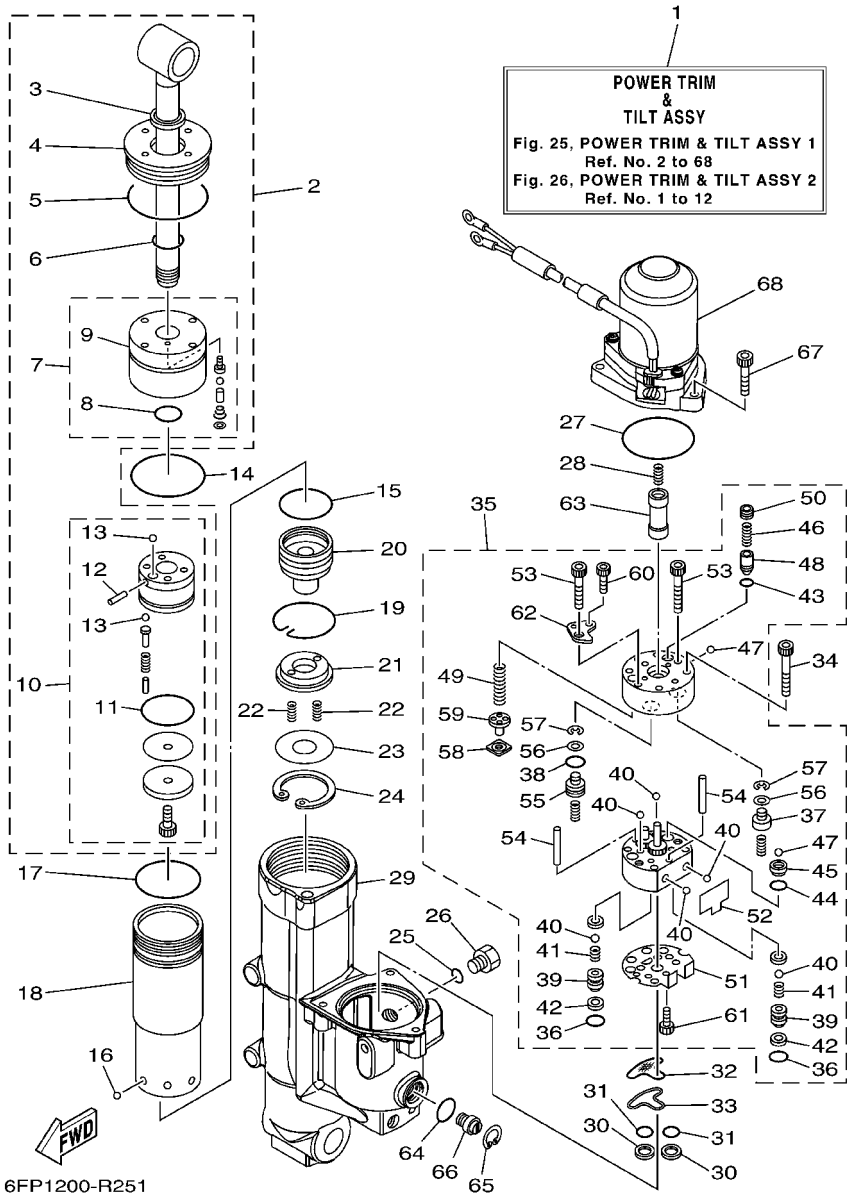

FIG. 25 POWER TRIM & TILT ASSY 1 — PUISSANCE PARER ET INCLINER 1

REF. NO.	PART NO. N° PIECES	DESCRIPTION DESCRIPTION	6HV1					REMARKS REMARQUES
55	6D8–43841–00	.PISTON, SHUTTLE .PISTON	1					
56	69A–4384F–00	.SEAL, MAIN VALVE .JOINT	2					
57	99002–03600	.CIRCLIP .CIRCLIP	2					
58	6H1–4384G–11	.SEAL, RELIEF VALVE .JOINT	1					
59	6H1–43844–10	.PIN, VALVE SUPPORT .GOUPILLE	1					
60	91318–03025	.BOLT .BOULON	2					
61	91318–03005	.BOLT .BOULON	1					
62	6D8–4382L–00	.CAP, RELIEF VALVE .CAPUCHON	1					
63	6EK–43831–00	CONNECTOR, SHAFT RACCORD	1					
64	6D8–43863–00	O-RING JOINT TORIQUE	1					
65	6H1–43875–00	RING, SNAP RESSORT	1					
66	6EK–43845–00	SCREW, MANUAL RELEASE VIS	1					
67	91380–06025	BOLT BOULON	3					
68	6EK–43880–11	MOTOR ASSY MOTEUR (ENS.)	1					REFER TO FIG.26 REFER TO FIG.26

FIG. 26 POWER TRIM & TILT ASSY 2 — PUISSANCE PARER ET INCLINER 2

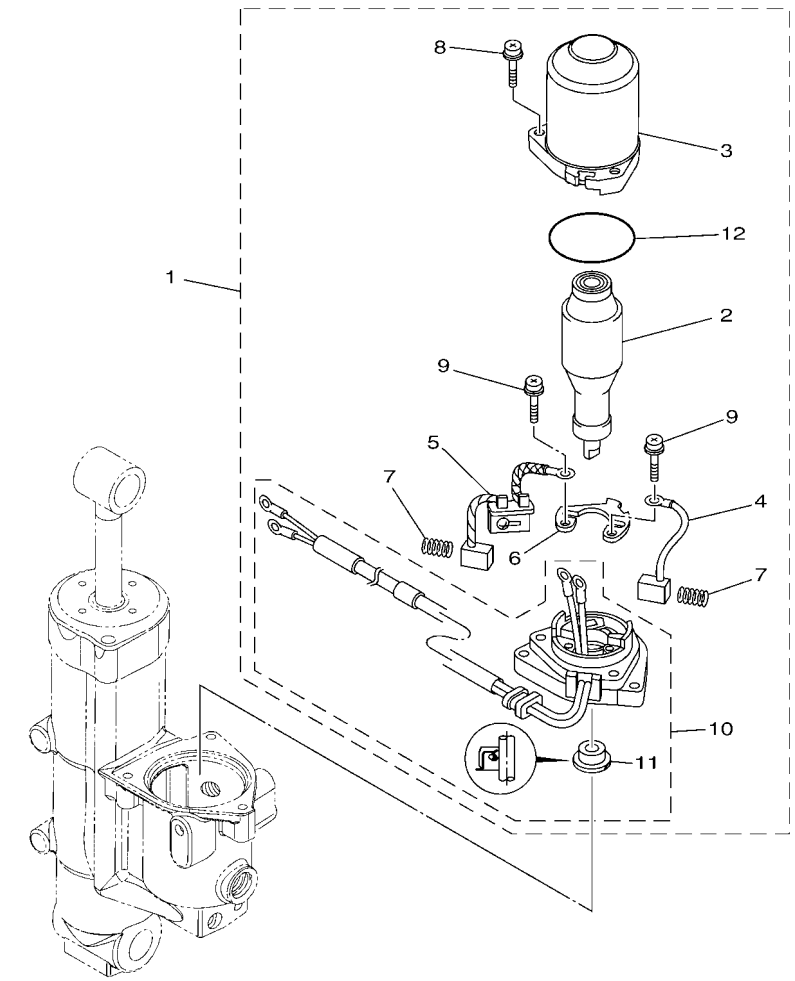

6EK1100-N281

REF. NO.	PART NO. N° PIECES	DESCRIPTION DESCRIPTION	6HV1					REMARKS REMARQUES
1	6EK–43880–11	MOTOR ASSY MOTEUR (ENS.)	1					
2	6EK–43805–00	.ARMATURE ASSY .INDUIT (ENS.)	1					
3	6EK–43804–11	.STATOR ASSY .STATOR (ENS.)	1					
4	6EK–43892–00	.BRUSH 2 .BALAI 2	1					
5	6EK–82181–00	.CIRCUIT BREAKER COMP. .RUPTEUR COMPLET	1					
6	6EK–4380F–00	.PLATE, BRUSH HOLDER .PLAQUE	1					
7	62X–4386K–00	.SPRING, BRUSH .RESSORT, BALAI	2					
8	63P–43879–10	.SCREW, WITH WASHER .VIS, AVEC RONDELLE	3					
9	97602–04316	.SCREW, PAN HEAD WITH WASHER .VIS	2					
10	6EK–43881–11	.FRAME, END .BATI	1					
11	6EK–43882–00	..OIL SEAL ..JOINT SPI	1					
12	93210–554A9	.O-RING .JOINT TORIQUE	1					

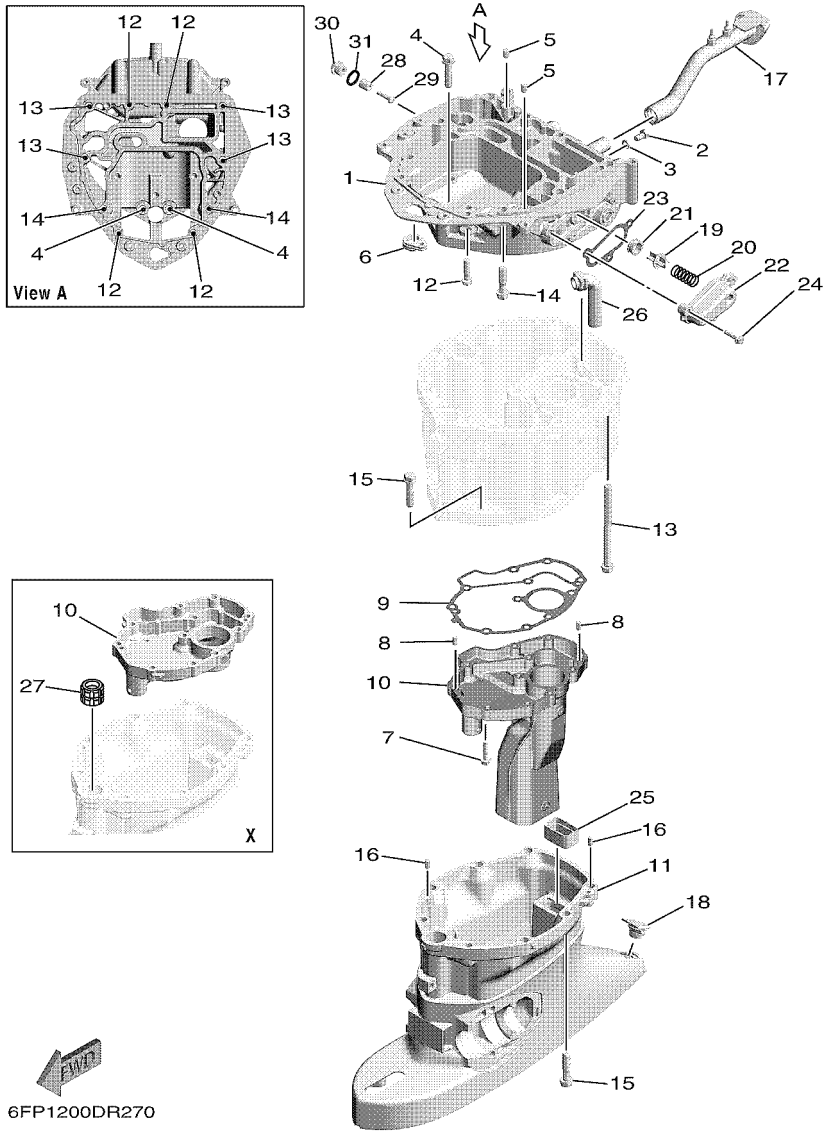

FIG. 27 UPPER CASING FOURREAU

REF. NO.	PART NO. N° PIECES	DESCRIPTION DESCRIPTION	6HV1					REMARKS REMARQUES
1	6EK–41137–01	GUIDE, EXHAUST COLLECTEUR D'ECHAPPEMENT	1					
2	97095–08014	BOLT BOULON	1					
3	90430–08143	GASKET JOINT	1					
4	97575–10545	BOLT, WITH WASHER VIS HEXAGONAL AVC RONDELLE	2					
5	93608–12M05	PIN, DOWEL AXE	2					
6	6EK–42727–00	GROMMET PASSE-FIL	1					
7	95895–06030	BOLT, FLANGE BOULON	11					
8	93606–12019	PIN, DOWEL GOUPILLE	2					
9	6EK–41134–00	GASKET, EXHAUST MANIFOLD JOINT, PIPE D'ECHAPPEMENT	1					
10	6FP–14711–00–CA	MUFFLER 1 POT D'ECHAPPEMENT 1	1					L(20.3") L(20.3")
	6EK–45181–01	PLATE PLAQUETTE	1					X(25.3") X(25.3")
11	6EK–45111–00–8D	CASING, UPPER FOURREAU	1					L(20.3") L(20.3")
	6EK–45111–10–8D	CASING, UPPER FOURREAU	1					X(25.3") X(25.3")
12	97575–08535	BOLT, WITH WASHER VIS HEXAGONAL AVC RONDELLE	4					
13	90119–10007	BOLT, WITH WASHER BOULON, AVEC RONDELLE	4					
14	97575–10545	BOLT, WITH WASHER VIS HEXAGONAL AVC RONDELLE	2					
15	97575–10545	BOLT, WITH WASHER VIS HEXAGONAL AVC RONDELLE	8					
16	93606–12019	PIN, DOWEL GOUPILLE	2					
17	6EK–42769–00	SEAL, RUBBER BOURRELET, CAOUTCHOUC	1					
18	6C5–45155–00	CAP CAPUCHON	1					
19	6G5–12416–00	VALVE, PRESSURE CONTROL SOUPAPE DE CONTROLEUR PRESS	1					
20	90501–200A2	SPRING, COMPRESSION RESSORT, COMPRESSION	1					
21	90480–20M05	GROMMET PASSE-FIL	1					
22	6EK–1246A–00–9S	COVER 1 COUVERCLE 1	1					
23	6EK–12435–A0	GASKET JOINT	1					
24	95895–06025	BOLT, FLANGE BOULON	3					
25	67F–45127–00	SEAL JOINT	1					

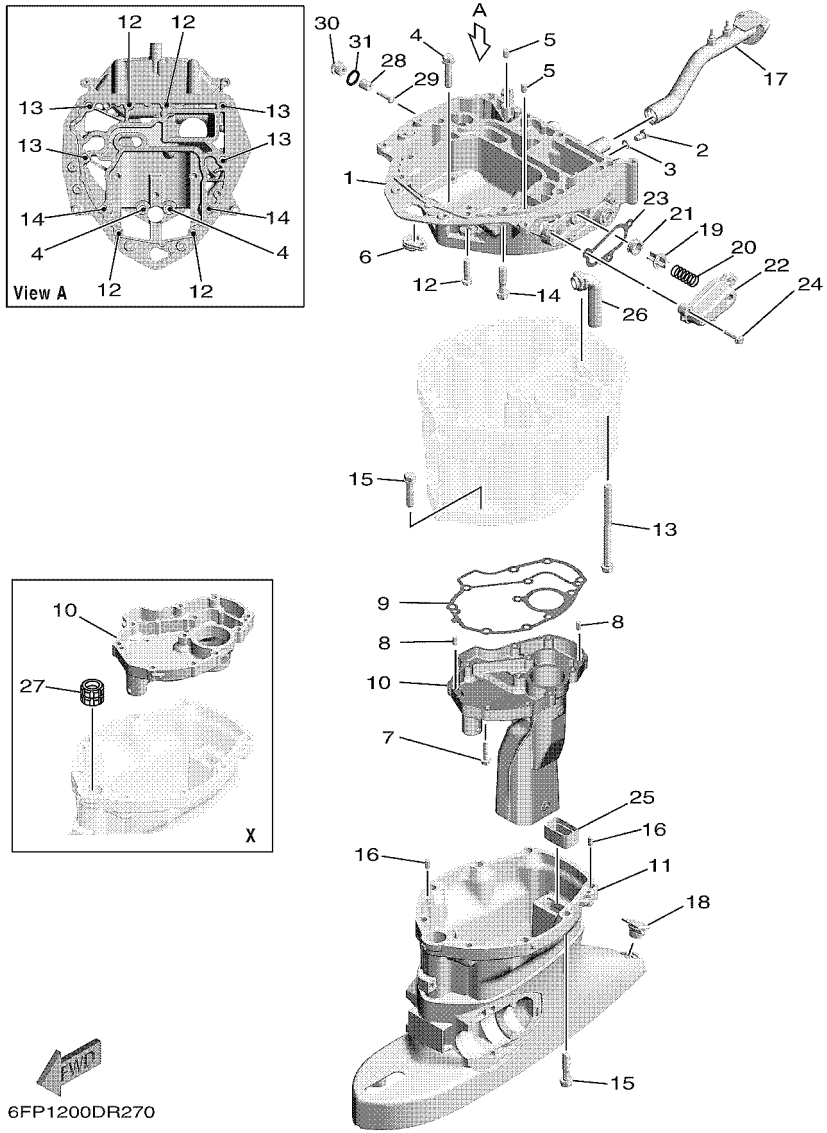

FIG. 27 UPPER CASING FOURREAU

REF. NO.	PART NO. N° PIECES	DESCRIPTION DESCRIPTION	6HV1					REMARKS REMARQUES
26	6EK–45135–00	PIPE TUYAU	1					
27	6EK–45318–00	BUSHING, DRIVE SHAFT DOUILLE, ARBRE MOTEUR	1					X(25.3") X(25.3")
28	6G8–11325–00	ANODE ANODE	1					
29	98980–05025	SCREW, BIND VIS, DE PRESSION	1					
30	6G8–11197–A0	PLUG, BLIND PLOT, BORGNE	1					
31	93210–13M63	O-RING JOINT TORIQUE	1					

FIG. 28 OIL PAN — VENTILATEUR D'HUILE

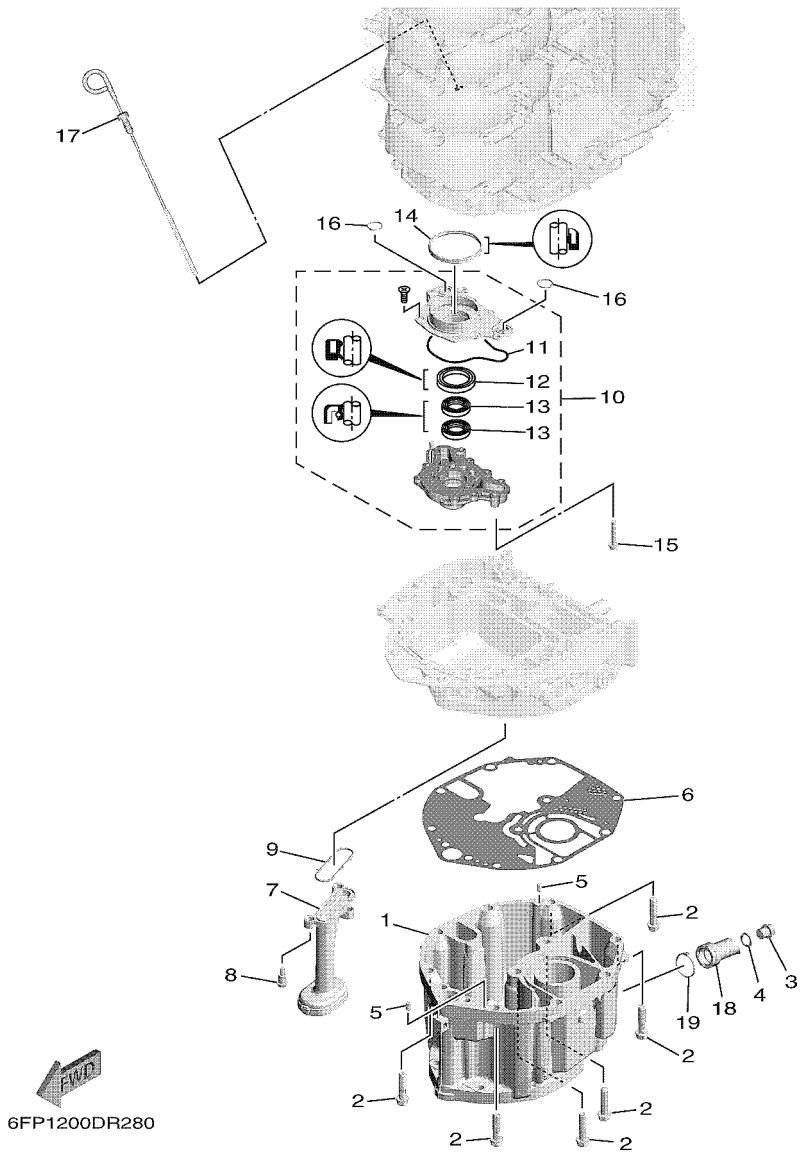

REF. NO.	PART NO. N° PIECES	DESCRIPTION DESCRIPTION	6HV1					REMARKS REMARQUES
1	6EK–15311–01	OIL PAN VENTILATEUR D'HUILE	1					
2	97575–10545	BOLT, WITH WASHER VIS HEXAGONAL AVC RONDELLE	6					
3	90340–14M06	PLUG, STRAIGHT SCREW PLOT, FILETE DROIT	1					
4	90430–14M09	GASKET JOINT	1					
5	93606–12019	PIN, DOWEL GOUPILLE	2					
6	6EK–15312–00	GASKET, OIL PAN JOINT DE VENTILATEUR D'HUILE	1					
7	67F–13411–00	STRAINER, OIL FILTRE, HUILE	1					
8	90109–06292	BOLT BOULON	3					
9	67F–13415–00	SEAL, OIL STRAINER JOINT, FILTRE A HUILE	1					
10	6EK–13300–00	OIL PUMP ASSY POMPE A HUILE COMPLETE	1					
11	6EK–13329–00	.GASKET, PUMP COVER .JOINT, COUVERCLE DE POMPE	1					
12	6AW–13119–00	.OIL SEAL .JOINT SPY	1					
13	69J–13631–00	.OIL SEAL .JOINT SPY	2					
14	69J–11355–00	SEAL, CYLINDER 1 JOINT, SPY CYLINDRE	1					
15	90105–06151	BOLT, FLANGE BOULON	4					
16	93210–19MJ1	O-RING JOINT TORIQUE	2					
17	6FP–15362–00	PLUG, OIL LEVEL PLOT, NIVEAU D'HUILE	1					
18	6EK–15316–00	DAMPER 1 AMORTISSEUR 1	1					
19	90465–11M59	CLAMP BRIDE	1					

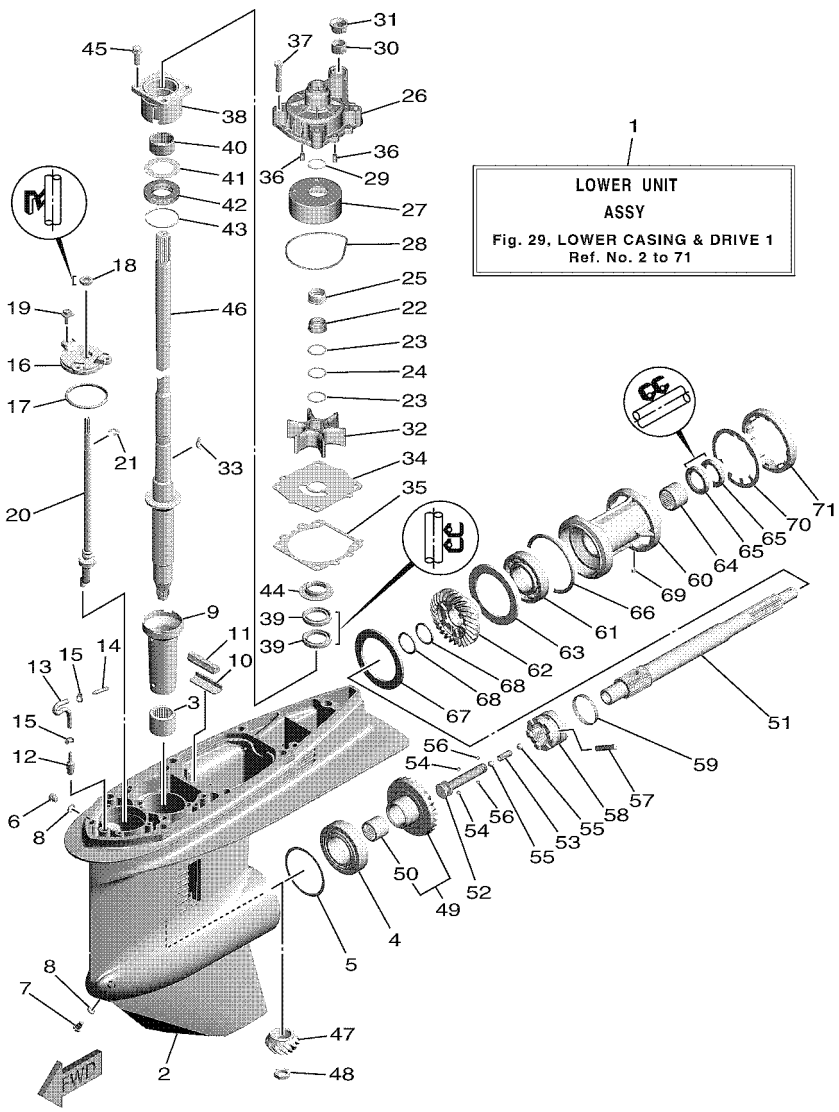

FIG. 29 LOWER CASING & DRIVE 1 — BOITIER D'HELICE TRANSMISSION1

REF. NO.	PART NO. N° PIECES	DESCRIPTION DESCRIPTION	6HV1					REMARKS REMARQUES
1	6EK–45300–00–8D	LOWER UNIT ASSY UNITE INFERIEURE (ENS.)	1					L(20.3") L(20.3")
	6EK–45300–10–8D	LOWER UNIT ASSY UNITE INFERIEURE (ENS.)	1					X(25.3") X(25.3")
2	6E5–45301–07–8D	CASING, LOWER BEQUILLE	1					
3	93315–628U9	BEARING ROULEMENT	1					
4	93332–000U7	BEARING ROULEMENT	1					
5	6E5–45567–01	SHIM (T:0.10MM) CALE (T:0.10MM)	1					UR UR
	6E5–45567–10	SHIM (T:0.12MM) CALE (T:0.12MM)	1					UR UR
	6E5–45567–20	SHIM (T:0.15MM) CALE (T:0.15MM)	1					UR UR
	6E5–45567–30	SHIM (T:0.18MM) CALE (T:0.18MM)	1					UR UR
	6E5–45567–40	SHIM (T:0.30MM) CALE (T:0.30MM)	1					UR UR
	6E5–45567–50	SHIM (T:0.40MM) CALE (T:0.40MM)	1					UR UR
	6E5–45567–60	SHIM (T:0.50MM) CALE (T:0.50MM)	1					UR UR
6	90340–08002	PLUG, STRAIGHT SCREW PLOT, FILETE DROIT	1					
7	688–45341–10	PLUG, DRAIN BOUCHON DE VIDANGE	1					
8	90430–08003	GASKET JOINT	2					
9	6E5–45536–00	SLEEVE, DRIVE SHAFT MANCHON, ARBRE MOTEUR	1					
10	663–45376–00	GUIDE, SEAL DAMPER BUTEE, JOINT CAOUTCHOUC	1					
11	688–45375–00	DAMPER, SEAL BOURRELET, CAOUTCHOUC	1					
12	6E5–45378–00	NIPPLE, HOSE RACCORD, TUYAU	1					
13	90445–07ME8	HOSE (L80) DURITE (L80)	1					L(20.3") L(20.3")
	90445–07ME9	HOSE (L120) DURITE (L120)	1					X(25.3") X(25.3")
14	6E5–83558–10	END, NIPPLE RACCORD DE NIPPLE	1					
15	90465–11M10	CLAMP BRIDE	2					
16	6E5–45321–00	PLATE PLAQUETTE	1					
17	93210–58144	O-RING JOINT TORIQUE	1					
18	93106–09014	OIL SEAL JOINT SPY	1					
19	90119–06M10	BOLT, WITH WASHER BOULON, AVEC RONDELLE	3					

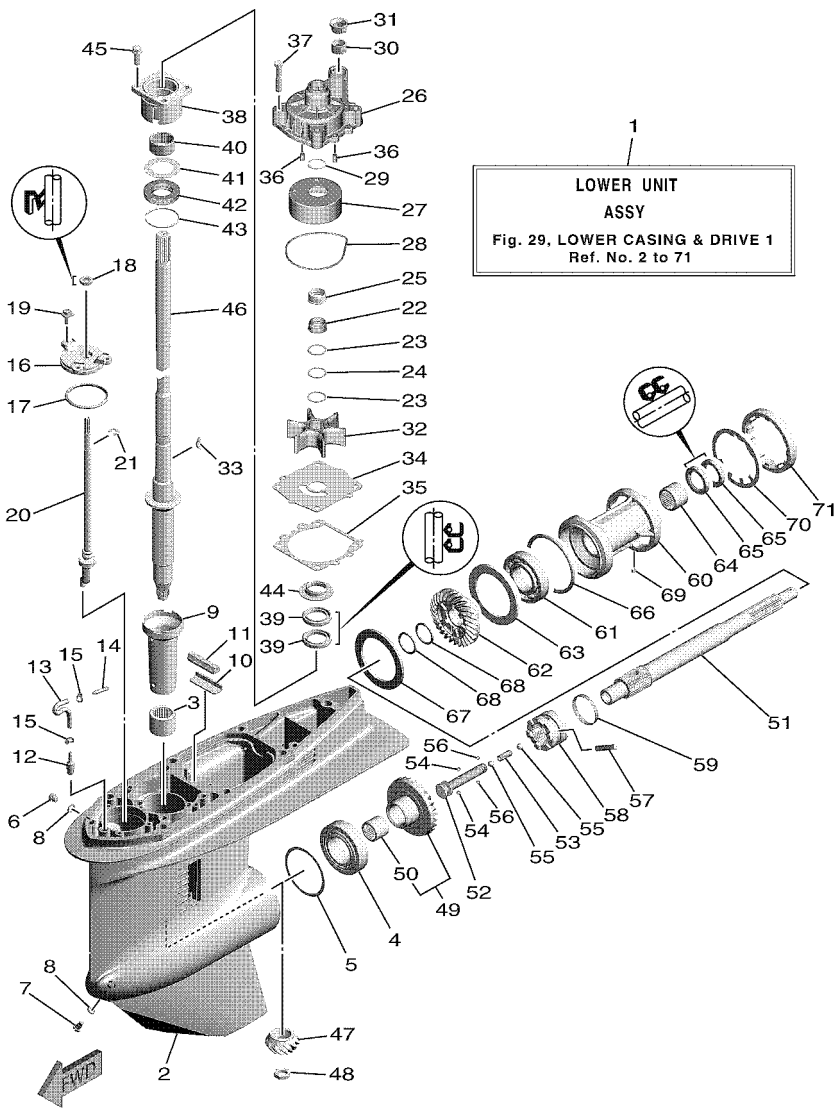

FIG. 29 LOWER CASING & DRIVE 1 — BOITIER D'HELICE TRANSMISSION1

REF. NO.	PART NO. N° PIECES	DESCRIPTION DESCRIPTION	6HV1					REMARKS REMARQUES
20	6E5–44150–03	SHIFT CAM ASSY CAME D'INVERSION	1					
21	99001–08600	CIRCLIP CIRCLIP	1					
22	61A–45538–00	SPACER 1 ENTRETOISE	1					
23	90201–22M01	WASHER, PLATE RONDELLE, PLATE	2					
24	90206–22M19	WASHER, WAVE RONDELLE, ONDULEE	1					
25	61A–45527–00	COLLAR, DRIVE SHAFT ENTRETOISE	1					
26	61A–44311–01	HOUSING, WATER PUMP CORPS, POMPE A EAU	1					
27	61A–44322–02	INSERT, CARTRIDGE CUVETTE	1					
28	93210–86M38	O-RING JOINT TORIQUE	1					
29	93210–37160	O-RING JOINT TORIQUE	1					
30	6E5–44365–00	DAMPER, WATER SEAL 1 JOINT, TUBE D'EAU 1	1					
31	6E5–44312–00	COVER, WATER PUMP HOUSING COUVERCLE	1					
32	6E5–44352–01	IMPELLER TURBINE	1					
33	90280–04M05	KEY, WOODRUFF CLAVETTE, DEMI-LUNE	1					
34	6EK–44323–00	OUTER PLATE, CARTRIDGE PLAQUE EXTERIEURE	1					
35	6E5–44315–A0	GASKET, WATER PUMP JOINT, POMPE A EAU	1					
36	93606–12019	PIN, DOWEL GOUPILLE	2					
37	90119–08M14	BOLT, WITH WASHER BOULON, AVEC RONDELLE	4					
38	6E5–45331–00–9S	HOUSING, BEARING FLASQUE, ROULEMENT	1					
39	93101–28M16	OIL SEAL JOINT SPY	2					
40	93317–330U2	BEARING ROULEMENT	1					
41	6E5–45587–01	SHIM (T:0.10MM) CALE (T:0.10MM)	1					UR UR
	6E5–45587–10	SHIM (T:0.12MM) CALE (T:0.12MM)	1					UR UR
	6E5–45587–20	SHIM (T:0.15MM) CALE (T:0.15MM)	1					UR UR
	6E5–45587–30	SHIM (T:0.18MM) CALE (T:0.18MM)	1					UR UR
	6E5–45587–40	SHIM (T:0.30MM) CALE (T:0.30MM)	1					UR UR
	6E5–45587–50	SHIM (T:0.40MM) CALE (T:0.40MM)	1					UR UR

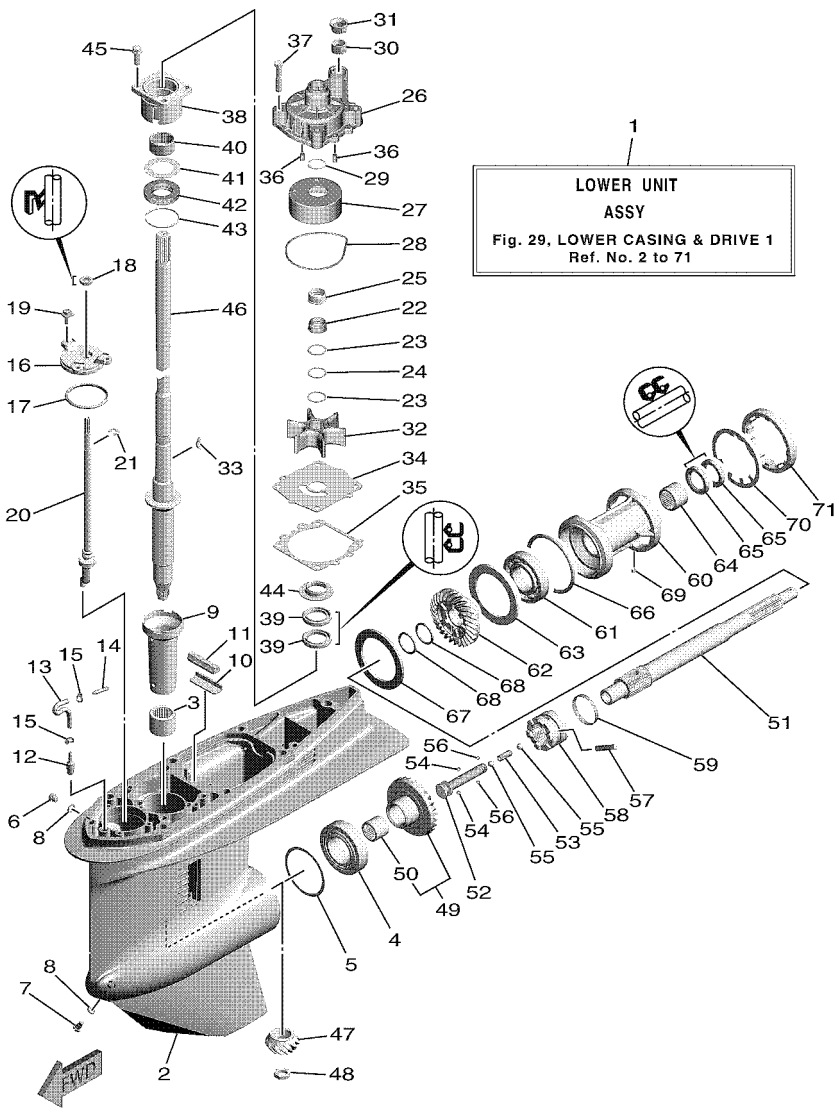

FIG. 29 LOWER CASING & DRIVE 1 — BOITIER D'HELICE TRANSMISSION1

REF. NO.	PART NO. N° PIECES	DESCRIPTION DESCRIPTION	6HV1					REMARKS REMARQUES
41	6E5–45587–60	SHIM (T:0.50MM) CALE (T:0.50MM)	1					UR UR
42	93341–930V2	BEARING CERVEAUX DE DIRECTION	1					
43	93210–55M14	O-RING JOINT TORIQUE	1					
44	6E5–45344–00	COVER, OIL SEAL FLASQE, JOINT D'HUILE	1					
45	97595–08525	BOLT, WITH WASHER VIS HEXAGONAL AVC RONDELLE	4					
46	6EK–45501–00	DRIVE SHAFT COMP. ARBRE MOTEUR COMP.	1					L(20.3") L(20.3")
	6EK–45501–10	DRIVE SHAFT COMP. ARBRE MOTEUR COMP.	1					X(25.3") X(25.3")
47	68V–45551–00	PINION (13T) PIGNON D'ATTAQUE (13D)	1					
48	90170–16M01	NUT ECROU	1					
49	68V–45560–00	GEAR 1 (28T) PIGNON 1 (28T)	1					
50	93315–425U7	.BEARING .ROULEMENT	1					
51	6E5–45611–01	SHAFT, PROPELLER ARBRE, HELICE	1					
52	6E5–45634–02	SLIDE, SHIFT CONTRE-POUSSOIR	1					
53	90501–16M37	SPRING, COMPRESSION RESSORT, COMPRESSION	1					
54	93507–32009	BALL BILLE	2					
55	93511–32017	BALL BILLES	2					
56	93503–16003	BALL BILLES	2					
57	90250–08M07	PIN, STRAIGHT GOUPILLE, DROITE	1					
58	68V–45631–01	CLUTCH, DOG CRABOT	1					
59	6E5–45633–01	RING, CROSS PIN JONC, GOUPILLE CRABOT	1					
60	6E5–45332–00–CA	HOUSING, BEARING FLASQUE, ROULEMENT	1					
61	93306–208U0	BEARING ROULEMENT	1					
62	68V–45571–00	GEAR 2 (28T) PIGNON 2 (28T)	1					
63	6E5–45576–00	WASHER, THRUST 2 RONDELLE DE CALAGE 2	1					
64	93315–430U8	BEARING ROULEMENT	1					
65	93101–30M17	OIL SEAL JOINT SPY	2					
66	93210–86M39	O-RING JOINT TORIQUE	1					

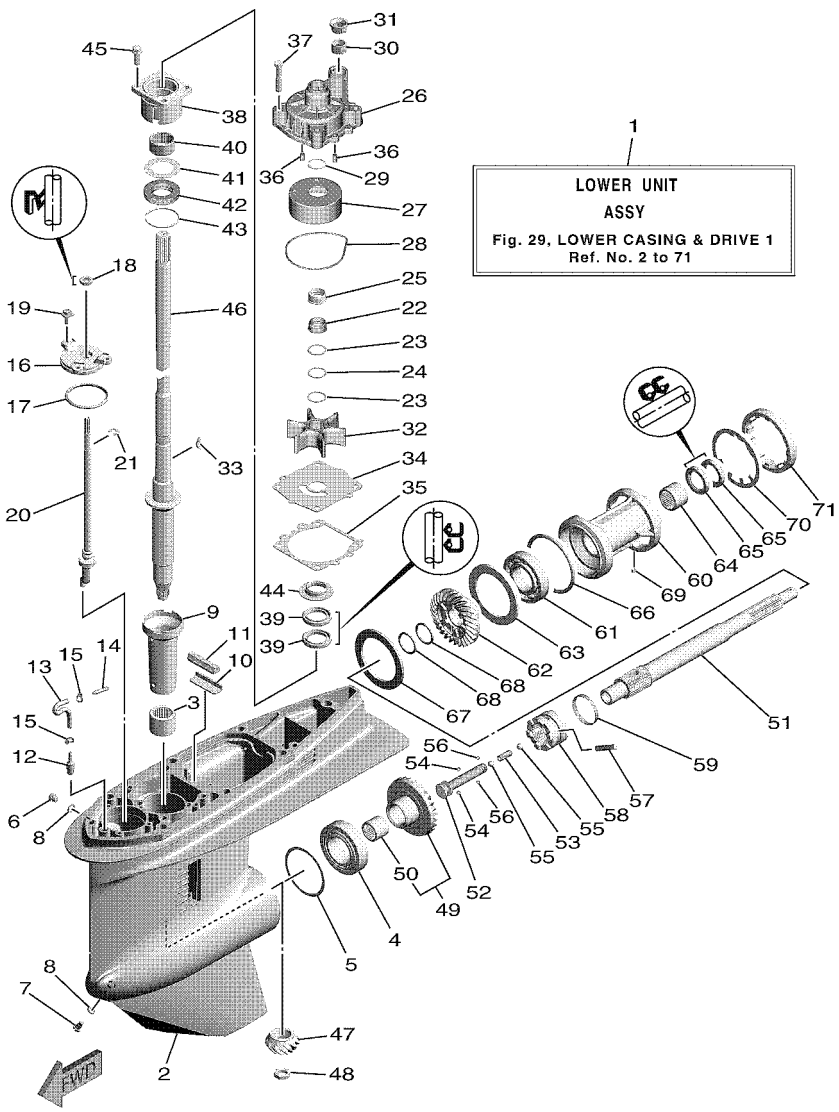

FIG. 29 LOWER CASING & DRIVE 1 — BOITIER D'HELICE TRANSMISSION1

REF. NO.	PART NO. N° PIECES	DESCRIPTION DESCRIPTION	6HV1					REMARKS REMARQUES
67	6L6–45577–00	SHIM (T:0.10MM) CALE (T:0.10MM)	1					UR UR
	6L6–45577–10	SHIM (T:0.12MM) CALE (T:0.12MM)	1					UR UR
	6L6–45577–20	SHIM (T:0.15MM) CALE (T:0.15MM)	1					UR UR
	6L6–45577–30	SHIM (T:0.18MM) CALE (T:0.18MM)	1					UR UR
	6L6–45577–40	SHIM (T:0.30MM) CALE (T:0.30MM)	1					UR UR
	6L6–45577–50	SHIM (T:0.40MM) CALE (T:0.40MM)	1					UR UR
	6L6–45577–60	SHIM (T:0.50MM) CALE (T:0.50MM)	1					UR UR
68	90201–30M92	WASHER, PLATE RONDELLE, PLATE	2					
69	90282–04010	KEY, STRAIGHT CLAVETTE, DROITE	1					
70	688–45383–02	WASHER, CLAW FREIN D'ECROU	1					
71	688–45384–02	NUT ECROU	1					

FIG. 30 LOWER CASING & DRIVE 2 — BOITIER D'HELICE TRANSMISSION2

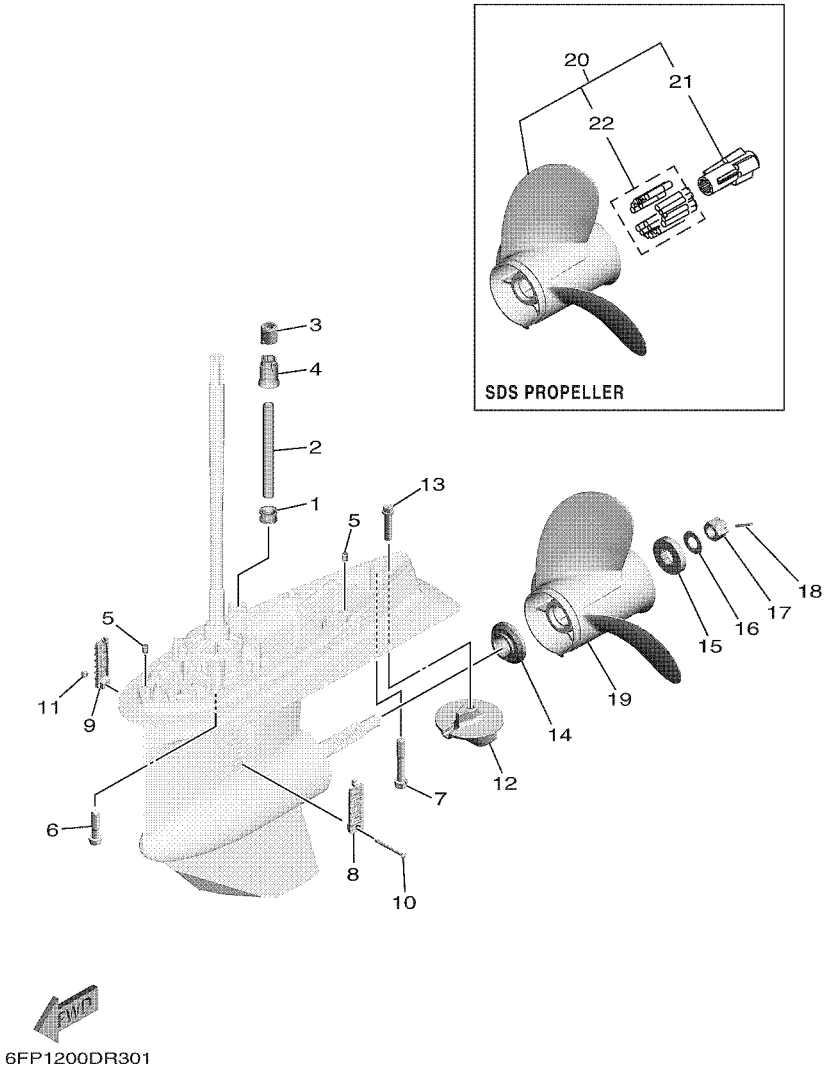

REF. NO.	PART NO. N° PIECES	DESCRIPTION DESCRIPTION	6HV1					REMARKS REMARQUES
1	6E5–44366–00	DAMPER, WATER SEAL 2 JOINT, TUBE D'EAU 2	1					
2	90440–16001	PIPE (L167) DURITE (L167)	1					L(20.3") L(20.3")
	90440–16002	PIPE (L294) DURITE (L294)	1					X(25.3") X(25.3")
3	6EK–44365–01	DAMPER, WATER SEAL 1 JOINT, TUBE D'EAU 1	1					
4	6EK–44379–00	GUIDE, WATER TUBE GUIDE DE TUBE D'EAU	1					
5	93608–12M05	PIN, DOWEL AXE	2					
6	97595–10545	BOLT, WITH WASHER VIS HEXAGONAL AVC RONDELLE	6					
7	90119–10M89	BOLT, WITH WASHER BOULON, AVEC RONDELLE	1					
8	688–45214–02	COVER, WATER INLET 1 GRILLE, ENTREE D'EAU 1	1					
9	688–45215–02	COVER, WATER INLET 2 GRILLE, ENTREE D'EAU 2	1					
10	90152–05M07	SCREW, COUNTERSUNK VIS, TETE NOYEE	1					
11	90185–05002	NUT, NYLON ECROU,AUTO-BLOQUANT	1					
12	6E5–45371–01	TAB-TRIM ANODE DERIVE	1					
13	90105–10M00	BOLT, FLANGE BOULON	1					
14	63P–45987–00	SPACER 1 ENTRETOISE 1	1					
15	688–45997–01	SPACER 2 ENTRETOISE 2	1					
16	92990–18200	WASHER RONDELLE, PLATE	1					
17	90171–18M04	NUT, CASTLE ECROU, CRENELE	1					
18	91490–40030	PIN. COTTER GOUPILLE	1					
19	6E5–45945–01	PROPELLER (3X13-1/4"X17"-K) HELICE (3X13-1/4"X17"-K)	1					
20	6FP–45941–00	PROPELLER (AL 3X13-5/8"X14"-K) HELICE (AL 3X13-5/8"X14"-K)	1					UR SDS PROP. UR SDS PROP.
	6FP–45943–00	PROPELLER (AL 3X13-1/2"X15"-K) HELICE (AL 3X13-1/2"X15"-K)	1					UR SDS PROP. UR SDS PROP.
	6FP–45945–00	PROPELLER (AL 3X13-1/4"X16"-K) HELICE (AL 3X13-1/4"X16"-K)	1					UR SDS PROP. UR SDS PROP.
	6FP–45947–00	PROPELLER (AL 3X13-1/8"X17"-K) HELICE (AL 3X13-1/8"X17"-K)	1					UR SDS PROP. UR SDS PROP.
	6FP–45949–00	PROPELLER (AL 3X13"X18"-K) HELICE (AL 3X13"X18"-K)	1					UR SDS PROP. UR SDS PROP.
21	6EK–45982–00	.BUSH, PROPELLER .DOUILLE DE HELICE	1					
22	6EK–45C82–09	.DAMPER RUBBER, PROPELLER 2 .AMORTISSEUR HELICE 2	1					

FIG. 31 FUEL TANK — RESERVOIR A CARBURANT

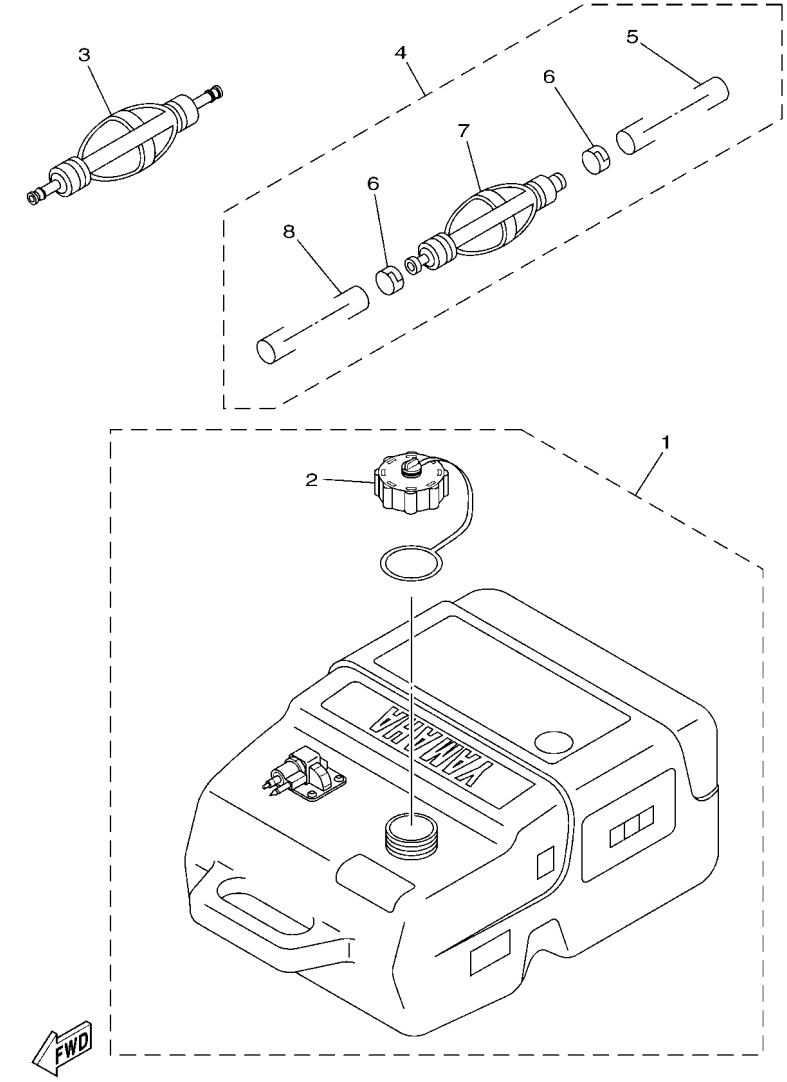

6HJ1300-R310

REF. NO.	PART NO. N° PIECES	DESCRIPTION DESCRIPTION	6HV1					REMARKS REMARQUES
1	6YK–24201–44	FUEL TANK ASSY (25L) RESERVOIR A ESSENCE (ENS.) 25L	1					AP EXCEPT FOR RUS AP EXCEPT FOR RUS
2	6YL–24610–10	.CAP ASSY .BOUCHON	1					
3	6YK–24360–73	PRIMER PUMP ASSY POMPE D'AMORCAGE	1					AP EXCEPT FOR RUS AP EXCEPT FOR RUS
4	6Y2–24307–60	FUEL PIPE COMP. 2 DURITE A ESSENCE 2	1					AP FOR RUS AP FOR RUS
5	90445–13M01	.HOSE (L2050) .DURITE (L2050)	1					
6	6E5–24351–51	.BAND 1 .COLLIER 1	2					
7	6Y2–24360–60	.PRIMER PUMP ASSY .POMPE D'AMORCAGE	1					
8	90445–13M06	.HOSE (L1500) .DURITE (L1500)	1					

FIG. 32 STEERING GUIDE — FIXATION DE DIRECTION

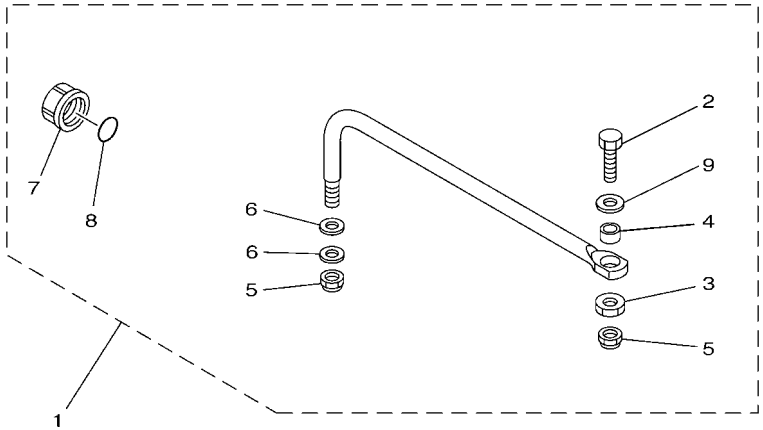

6EK1100-N330

REF. NO.	PART NO. N° PIECES	DESCRIPTION DESCRIPTION	6HV1					REMARKS REMARQUES
1	6EK–61350–00	STEERING GUIDE ATTACHMENT KIT FIXATIONS DE DIRECTION	1					AP AP
2	6E5–61355–00	.BOLT .BOULON	1					
3	90170–09M03	.NUT .ECROU	1					
4	90387–10M42	.COLLAR .COLLERETTE	1					
5	90185–09M01	.NUT, SELF-LOCKING .ECROU,AUTO-BLOQUANT	2					
6	90201–10M20	.WASHER, PLATE .RONDELLE, PLATE	2					
7	6E5–43145–01	.CAP, CLAMP BRACKET .CAPUCHON, PRESSE	1					
8	93210–16275	.O-RING .JOINT TORIQUE	1					
9	90201–10M63	.WASHER, PLATE .RONDELLE, PLATE	1					

FIG. 33 REMOTE CONTROL BOX — BOITIER DE COMMANDE A DISTANCE

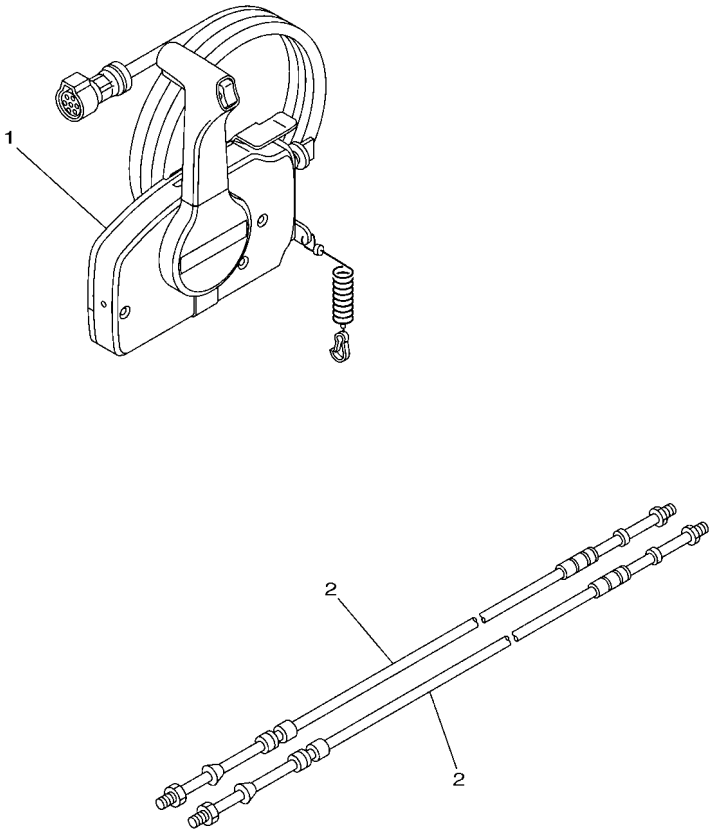

REF. NO.	PART NO. N° PIECES	DESCRIPTION DESCRIPTION	6HV1					REMARKS REMARQUES
1	703–48205–B2	REMOTE CONTROL ASSY (10P, PTT) BOITIER DE COMMANDE A DISTANCE	1					AP FOR RUS WITH PT/T SW. AP FOR RUS WITH PT/T SW.
2	701–48320–50	CABLE, REMOTE CONTROL L=15F CABLE, COMMANDE A DISTANCE:15F	2					UR UR
	701–48320–60	CABLE, REMOTE CONTROL L=16F CABLE, COMMANDE A DISTANCE:16F	2					UR UR
	701–48320–80	CABLE, REMOTE CONTROL L=17F CABLE, COMMANDE A DISTANCE:17F	2					UR UR
	701–48350–00	CABLE, REMOTE CONTROL L=21F CABLE, COMMANDE A DISTANCE:21F	2					UR UR
	701–48350–20	CABLE, REMOTE CONTROL L=23F CABLE, COMMANDE A DISTANCE:23F	2					UR UR
	701–48350–30	CABLE, REMOTE CONTROL L=24F CABLE, COMMANDE A DISTANCE	2					UR UR

FIG. 34 REMOTE CONTROL ASSY — BOITIER DE COMMANDE A DISTANCE

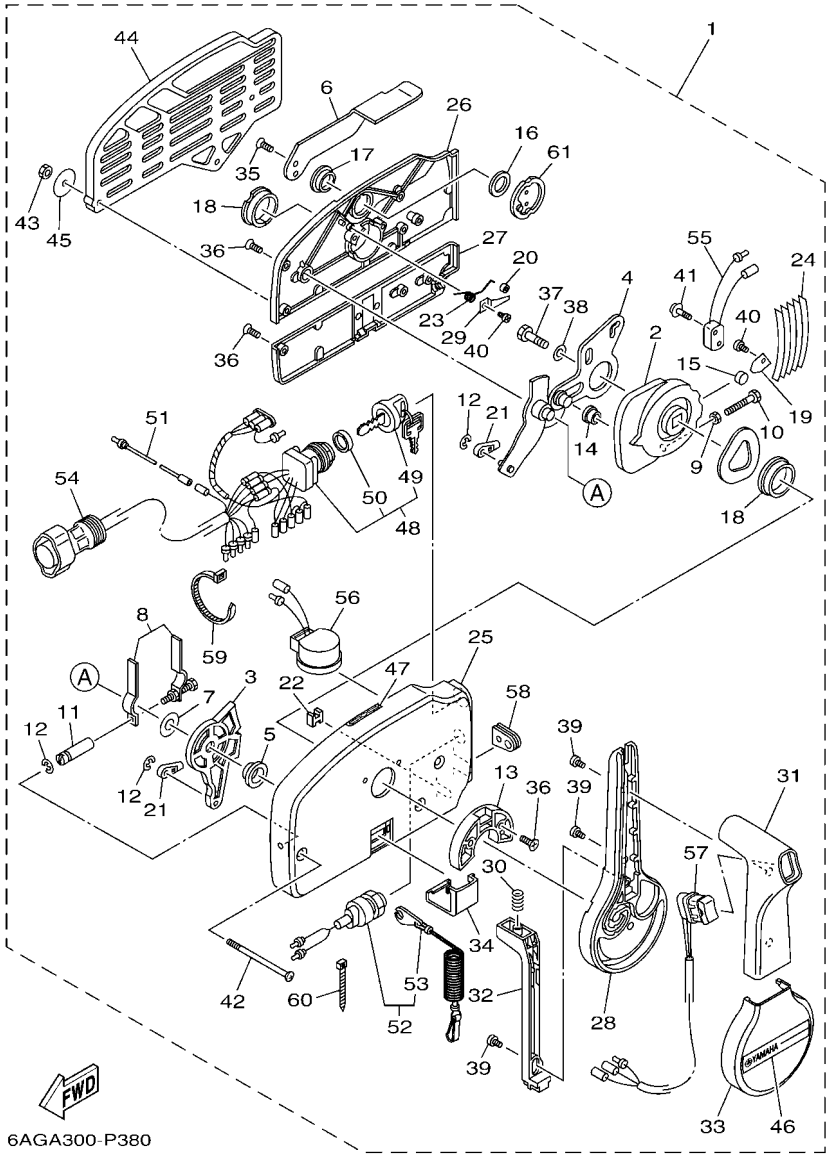

REF. NO.	PART NO. N° PIECES	DESCRIPTION DESCRIPTION	6HV1					REMARKS REMARQUES
1	703–48205–B2	REMOTE CONTROL ASSY (10P, PTT) BOITIER DE COMMANDE A DISTANCE	1					AP FOR RUS WITH PT/T SW. AP FOR RUS WITH PT/T SW.
2	703–48232–00	.GEAR .PIGNON	1					
3	703–48271–00	.ARM, SHIFT .BRAS	1					
4	703–48261–01	.ARM, THROTTLE .BRAS, ACCELERATION	1					
5	703–48235–00	.BUSHING .COUSSINET	1					
6	703–48152–10	.KNOB, FREE ACCEL. .BOUTON	1					
7	703–48268–00	.SPACER .ENTRETOISE	1					
8	703–48264–00	.FRICTION, THROTTLE .FRICTION, ACCELERATION	1					
9	95380–05600	.NUT .ECROU	1					
10	97380–05025	.BOLT .BOULON, HEXAGONAL	1					
11	703–48265–10	.SHAFT, FRICTION .AXE, COPILOTE	1					
12	93430–06024	.CIRCLIP .CLIPS	3					
13	703–48245–00	.PLATE, LOCK .PLAQUE, VERROU	1					
14	703–48252–00	.ROLLER, CAM .POULIE	1					
15	701–48248–00	.ROLLER, FREE ACCEL. .POULIE	1					
16	703–48198–00	.WASHER, WAVE .RONDELLE, ELASTIQUE ONDULEE	1					
17	703–48243–00	.BUSHING .COUSSINET	1					
18	703–48236–00	.BUSHING 1 .POULIE	2					
19	703–48189–00	.RETAINER .FLASQUE	1					
20	703–48234–00	.ROLLER, DETENT .POULIE	1					
21	703–48345–01	.CABLE END, REMOTE CONTROL 2 .CHAPE CABLE	2					
22	703–48358–00	.ANCHOR, CABLE .COLLIER	1					
23	703–48244–00	.SPRING, FREE ACCEL. .RESSORT	1					
24	703–48238–00	.SPRING, DETENT .RESSORT	5					
25	703–48211–10	.HOUSING,1 .CORPS	1					
26	703–48212–10	.BACK PLATE 1 .PLAQUETTE 1	1					
27	703–48213–10	.BACK PLATE 2 .PLAQUETTE 2	1					

FIG. 34 REMOTE CONTROL ASSY — BOITIER DE COMMANDE A DISTANCE

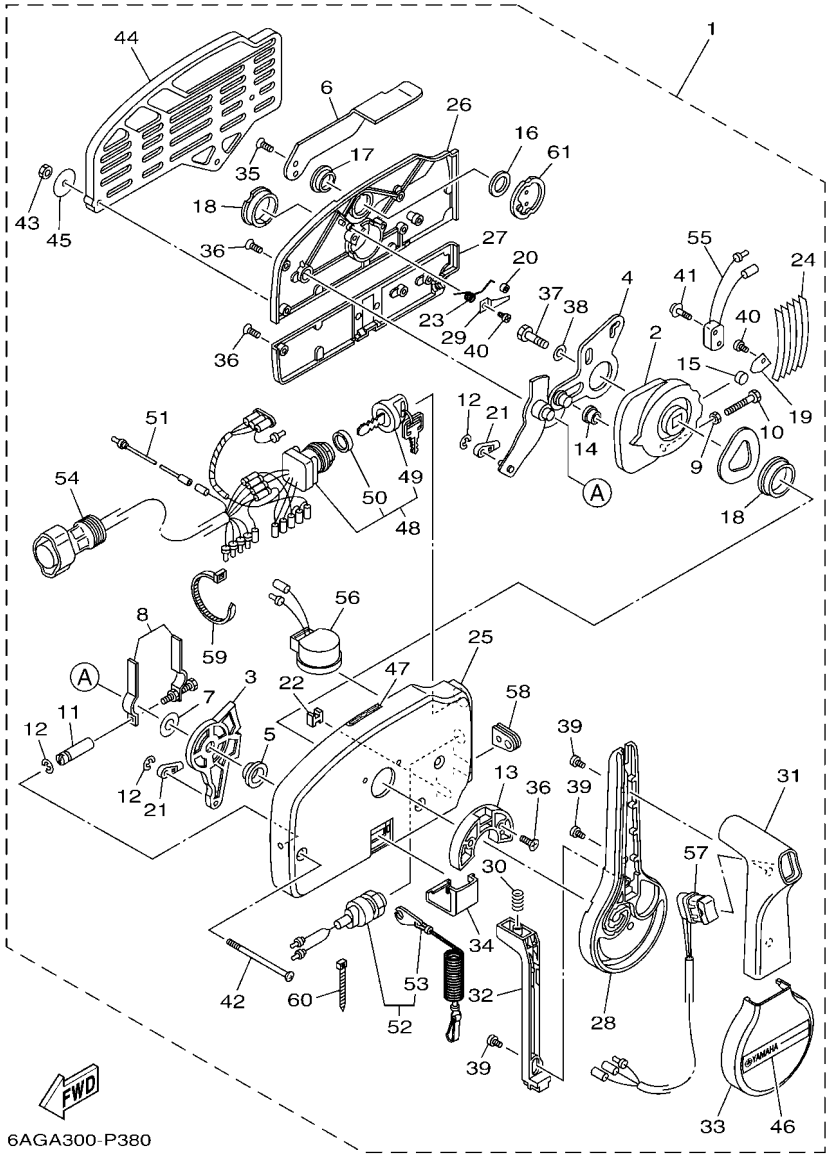

REF. NO.	PART NO. N° PIECES	DESCRIPTION DESCRIPTION	6HV1					REMARKS REMARQUES
28	703–48221–10	.LEVER, CONTROL .LEVIER, COMMANDE	1					
29	703–48246–00	.SPACER .ENTRETOISE	1					
30	703–48227–00	.SPRING, NEUTRAL LOCK .RESSORT	1					
31	703–48222–20	.GRIP, CONTROL LEVER .POIGNEE, COMMANDE LEVIER	1					SINGLE SINGLE
32	703–48223–10	.LOCK, NEUTRAL .VERROU, NEUTRAL	1					
33	703–48225–10	.COVER .COUVERCLE	1					
34	703–48219–10	.COVER, LEAD .COUVERCLE	1					
35	703–48281–00	.SCREW .VIS	2					
36	703–44189–20	.SCREW .VIS	7					
37	97380–08030	.BOLT .BOULON, HEXAGONAL	1					
38	92990–08600	.WASHER, PLATE .RONDELLE, PLATE	1					
39	703–48128–10	.SCREW 2 .VIS 2	3					
40	98580–04006	.SCREW, PAN HEAD .VIS	2					
41	703–48129–00	.SCREW 3 .VIS 3	2					
42	703–44189–30	.SCREW .VIS	3					
43	95380–06600	.NUT, HEXAGON .ECROU	3					
44	703–48293–10	.SPACER, REMOTE CONTROL .ENTRETOISE	1					SINGLE SINGLE
45	701–48287–00	.WASHER .RONDELLE	3					
46	703–48215–10	.GRAPHIC .ADHESIF	1					
47	6X3–44191–00	.INDICATOR, SHIFT .ETIQUETTE, EMBRAYAGE	1					
48	703–82510–13	.MAIN SWITCH ASSY .CONTACTEUR A CLEF COMPLET	1					PRIME START PRIME START
49	676–82577–01	..CAP, KEY ..CABOCHON	1					
50	703–82532–00	..CAP ..COUVERCLE	1					
51	703–82531–00	.WIRE, LEAD (L70) .FIL (L70)	1					
52	688–82575–02	.ENGINE STOP SWITCH ASSY .COUPE CIRCUIT CPLT	1					
53	682–82556–00	..LANYARD, STOP SWITCH ..CORDON DU COUPE CIRCUIT	1					
54	688–8258A–20	.EXTENSION, WIRE HARNESS (4.9M) .EXTENSION, FAISCEAU DE FILS (4	1					(10P) (10P)

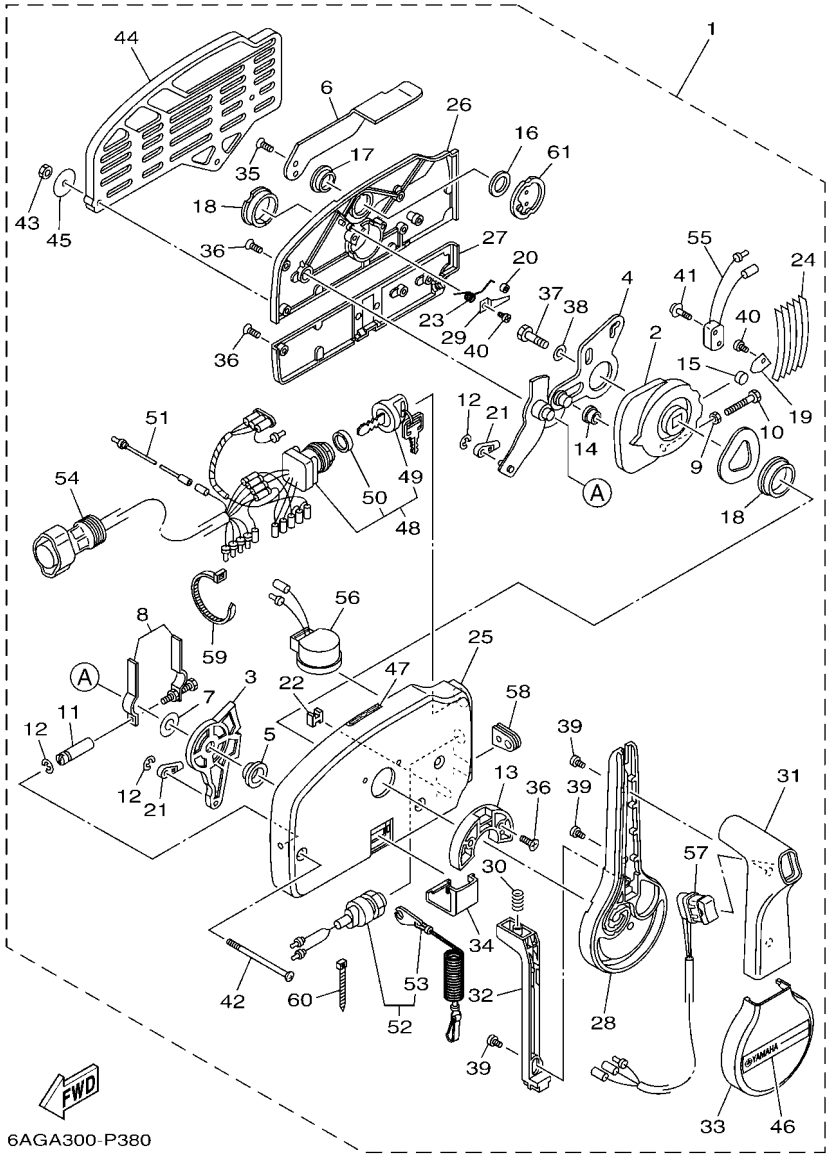

FIG. 34 REMOTE CONTROL ASSY — BOITIER DE COMMANDE A DISTANCE

REF. NO.	PART NO. N° PIECES	DESCRIPTION DESCRIPTION	6HV1					REMARKS REMARQUES
55	703–82540–00	.NEUTRAL SWITCH ASSY .CONTACTEUR DE POINT-MORT	1					
56	703–83383–11	.BUZZER .RONFLEUR	1					
57	703–82563–31	.TRIM & TILT SWITCH ASSY .INCLINER ET PARER COMMUTATEUR	1					
58	703–48284–00	.GROMMET .PASSE-FIL	1					
59	703–82591–00	.BAND .COLLIER	1					
60	703–82592–00	.BAND .COLLIER	1					
61	703–48153–00	.SHAFT, FREE ACCEL. .AXE	1					

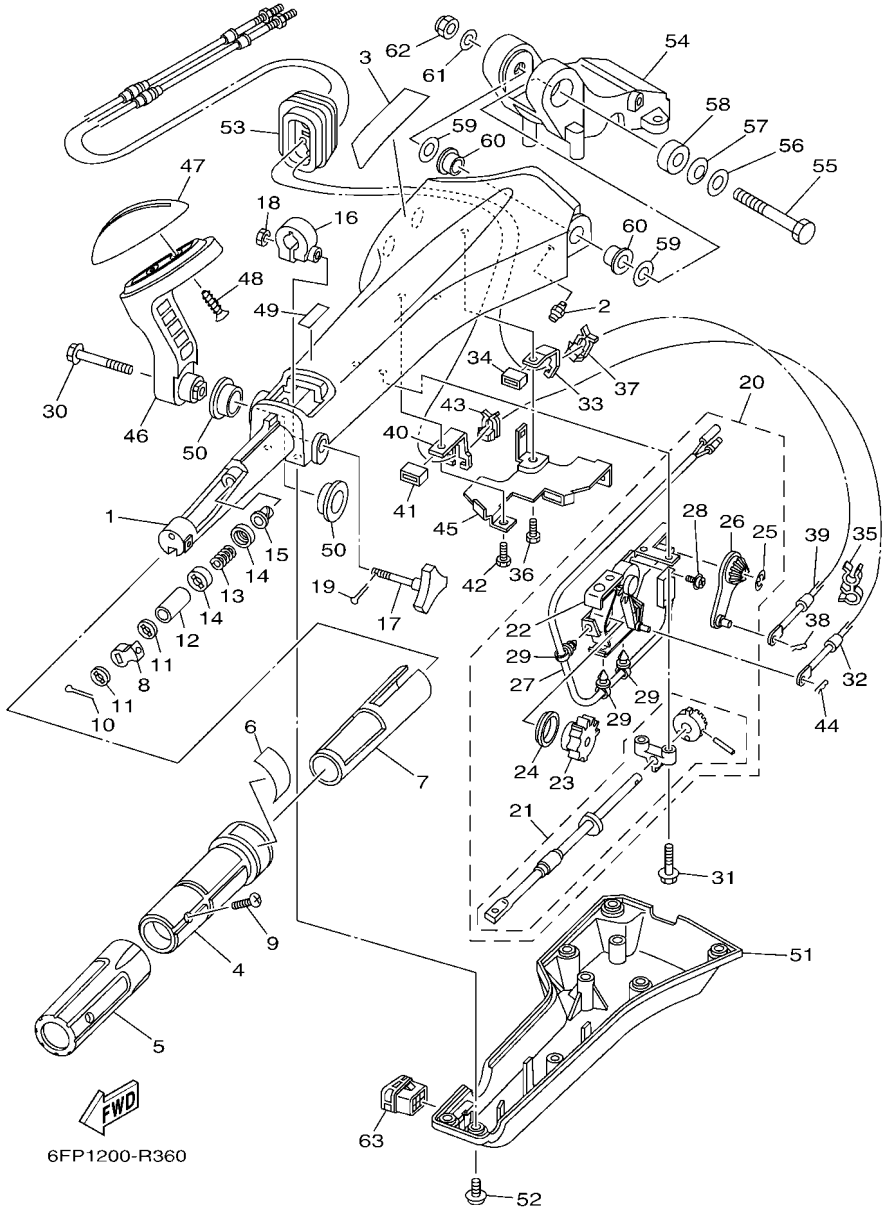

FIG. 35 OPTIONAL PARTS 1 — PIECES OPTIONNELLES 1

REF. NO.	PART NO. N° PIECES	DESCRIPTION DESCRIPTION	6HV1					REMARKS REMARQUES
1	6X4–42111–02–8D	HANDLE, STEERING POIGNEE	1					
2	93700–06M03	NIPPLE, GREASE PION	1					
3	6X4–48215–00	GRAPHIC ADHESIF	1					
4	6X4–42119–01	GRIP, STEERING HANDLE POIGNEE, BARRE FRANCHE	1					
5	6X4–42177–00	RUBBER, HANDLE CAOUTCHOUC, POIGNEE	1					
6	6X4–42137–00	INDICATOR, THROTTLE INDICATEUR, ACCELERATION	1					
7	6X4–41291–00	BUSHING COUSSINET	1					
8	6X4–44139–01	COLLAR COLLIER	1					
9	90152–05007	SCREW, COUNTERSUNK VIS, TETE NOYEE	1					
10	91490–20010	PIN. COTTER GOUPILLE	1					
11	6X4–44177–00	WASHER RONDELLE	2					
12	6X4–42128–00	COLLAR, DISTANCE 1 COLLIER, D'ENTRETOISE 1	1					
13	90501–23215	SPRING, COMPRESSION RESSORT, COMPRESSION	1					
14	6X4–44188–00	WASHER RONDELLE	2					
15	90386–08032	BUSH DOUILLE	1					
16	63D–42126–00	FRICTION, STEERING HANDLE GRIP CUVETTE, POIGNEE DE DIRECTION	1					
17	6X4–48154–00	KNOB, THROTTLE BOUTON, ACCELERATEUR	1					
18	95380–06600	NUT, HEXAGON ECROU	1					
19	91490–20010	PIN. COTTER GOUPILLE	1					
20	6X4–44100–01	SHIFT LINK ASSY MAILLON DE SELECTEUR	1					
21	6X4–42115–00	.SHAFT, STEERING HANDLE .AXE, BARRE FRANCHE	1					
22	6X4–44102–00	.SHIFT ASSIST ASSY. .SELECTEUR DE MAINTIEN	1					
23	6X4–47731–01	.GEAR, DRIVE .PIGNON D'ENTRAINEMENT	1					
24	6X4–44132–00	.BUSHING .COUSSINET	1					
25	6X4–14137–00	.CLIP .JONC	1					
26	6X4–48261–00	.ARM, THROTTLE .BRAS, ACCELERATION	1					
27	6X4–82540–00	.NEUTRAL SWITCH ASSY .CONTACTEUR DE POINT-MORT	1					

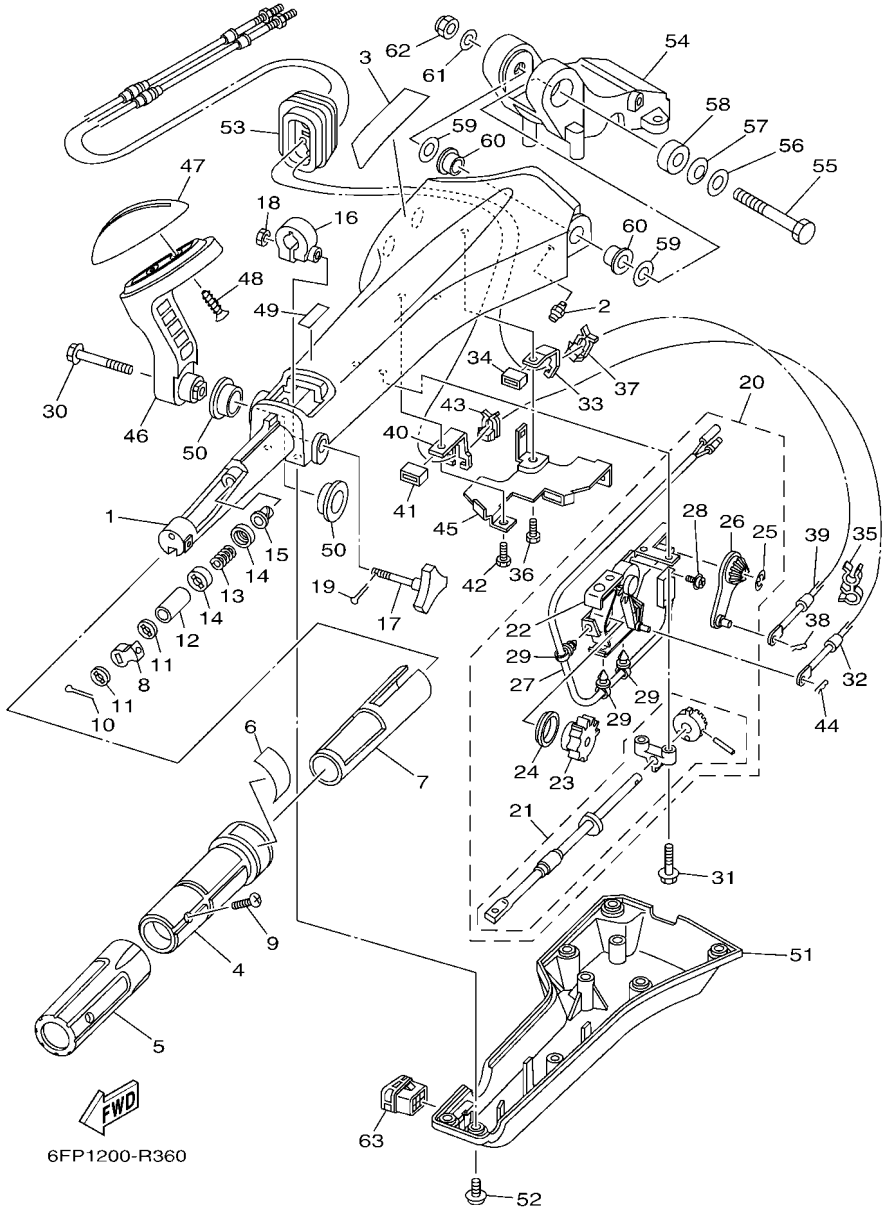

FIG. 35 OPTIONAL PARTS 1 — PIECES OPTIONNELLES 1

REF. NO.	PART NO. N° PIECES	DESCRIPTION DESCRIPTION	6HV1					REMARKS REMARQUES
28	703–48129–00	.SCREW 3 .VIS 3	2					
29	6X4–42821–00	.BAND, CLAMP .BRIDE, COLLIER	3					
30	97595–08540	BOLT, WITH WASHER VIS HEXAGONAL AVC RONDELLE	1					
31	97595–06530	BOLT, WITH WASHER VIS HEXAGONAL AVC RONDELLE	2					
32	6EK–48321–00	CABLE CABLE	1					
33	6X4–48538–00	CLAMP, CABLE 1 COLLIER	1					
34	6X4–26367–00	PROTECTOR PROTECTEUR	1					
35	90464–09M42	CLAMP BRIDE	1					
36	97095–06014	BOLT BOULON	1					
37	63D–48538–00	CLAMP, CABLE 1 COLLIER	1					
38	90468–10005	CLIP JONC	1					
39	6FP–26301–00	THROTTLE CABLE ASSY CABLE D'ACCELERATEUR	1					
40	6X4–48538–10	CLAMP, CABLE 1 COLLIER	1					
41	6X4–26367–00	PROTECTOR PROTECTEUR	1					
42	97095–06014	BOLT BOULON	1					
43	63D–48538–00	CLAMP, CABLE 1 COLLIER	1					
44	90468–10005	CLIP JONC	1					
45	6X4–42159–00	STAY SUPPORT	1					
46	6X4–44159–00–8D	HANDLE, GEAR SHIFT POIGNEE, LEVIER D'EMBRAYAGE	1					
47	6X4–44173–00	LEVER, SHIFT CONTROL POIGNEE, INVERSION	1					
48	97780–60920	SCREW, TAPPING VIS, TETE BOMBEE	2					
49	6X3–44191–00	INDICATOR, SHIFT ETIQUETTE, EMBRAYAGE	1					
50	90386–26MA3	BUSH DOUILLE	2					
51	6X4–42131–11	COVER, HANDLE STEERING COUVERCLE	1					
52	97985–06216	SCREW, WITH WASHER VIS, AVEC RONDELLE	6					
53	6X4–42725–01	GROMMET PASSE-FIL	1					
54	63D–42121–22–8D	BRACKET SUPPORT	1					

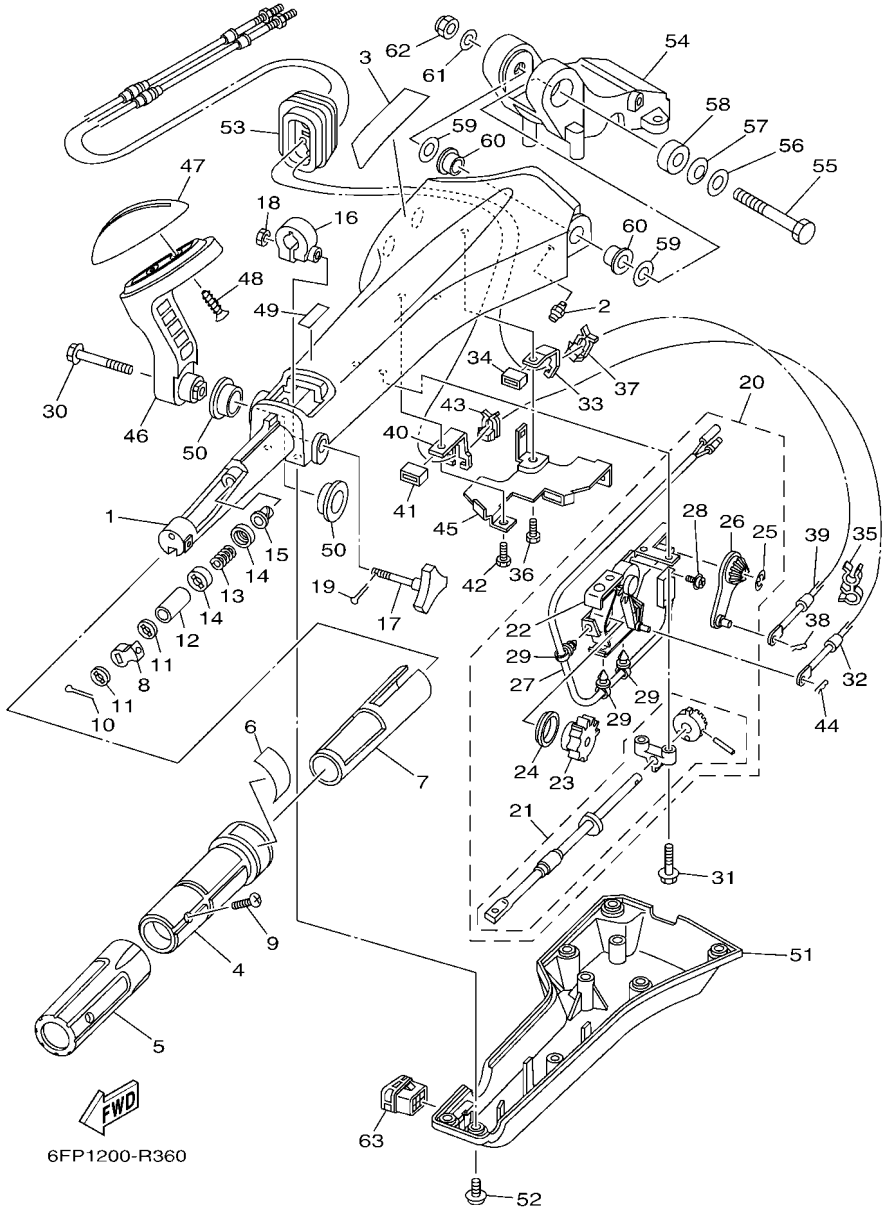

FIG. 35 OPTIONAL PARTS 1 — PIECES OPTIONNELLES 1

REF. NO.	PART NO. N° PIECES	DESCRIPTION DESCRIPTION	6HV1					REMARKS REMARQUES
55	90101–12014	BOLT BOULON	1					
56	92990–12200	WASHER, PLAIN RONDELLE, PLATE	1					
57	90206–12M22	WASHER, WAVE RONDELLE, ONDULEE	1					
58	90387–12M02	COLLAR COLLERETTE	1					
59	90201–12035	WASHER, PLATE RONDELLE, PLATE	2					
60	90386–12003	BUSH DOUILLE	2					
61	92990–12600	WASHER, PLATE RONDELLE, PLATE	1					
62	90185–12M12	NUT, SELF-LOCKING ECROU,AUTO-BLOQUANT	1					
63	6X4–42728–10	CAP CAPUCHON	1					

FIG. 36 OPTIONAL PARTS 2 — PIECES OPTIONNELLES 2

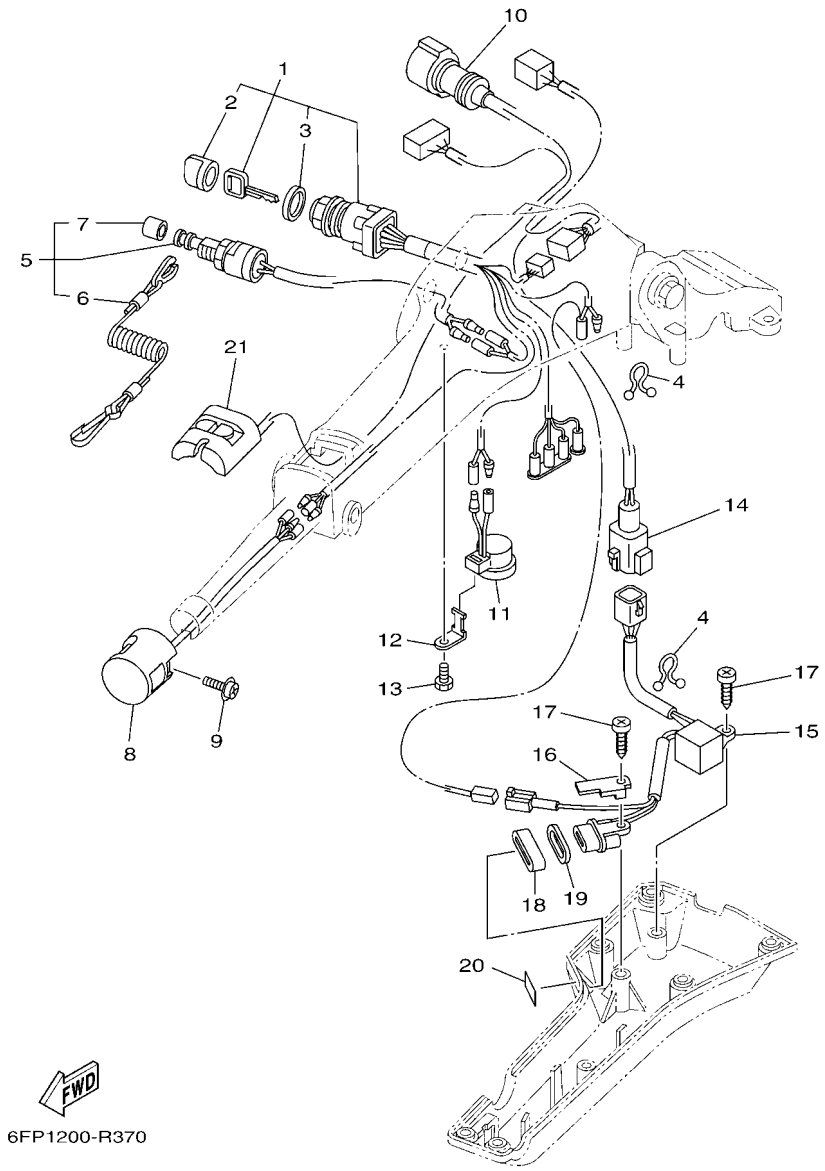

REF. NO.	PART NO. N° PIECES	DESCRIPTION DESCRIPTION	6HV1					REMARKS REMARQUES
1	6X4–82510–41	MAIN SWITCH ASSY CONTACTEUR A CLEF COMPLET	1					
2	676–82577–01	.CAP, KEY .CABOCHON	1					
3	703–82532–00	.CAP .COUVERCLE	1					
4	90464–08M07	CLAMP BRIDE	2					
5	69W–82575–00	ENGINE STOP SWITCH ASSY COUPE CIRCUIT CPLT	1					
6	682–82556–00	.LANYARD, STOP SWITCH .CORDON DU COUPE CIRCUIT	1					
7	689–8257Y–00	.CAP .COUVERCLE	1					
8	6X4–82563–01	TRIM & TILT SWITCH ASSY INCLINER ET PARER COMMUTATEUR	1					
9	97980–06216	SCREW, WITH WASHER VIS, AVEC RONDELLE	1					
10	6X4–82586–10	EXT., WIRE HARNESS (L:950MM) EXT, FAISCEAU DE FILS (L:950MM	1					
11	6X4–83383–00	BUZZER RONFLEUR	1					
12	6X4–83386–00	STAY, BUZZER SUPPOR, RONFLEUR	1					
13	97095–06014	BOLT BOULON	1					
14	6X4–83653–20	WIRE, LEAD (L:700MM) FIL (L:700MM)	1					
15	6C5–84301–00	PILOT LIGHT ASSY 1 LAMPE-TEMOIN 1	1					
16	6X4–44114–00	STOPPER PLAQUETTE	1					
17	97780–60620	SCREW, TAPPING VIS, TETE BOMBEE	2					
18	6X4–42727–00	GROMMET PASSE-FIL	1					
19	6H4–83589–00	GASKET GARNITURE	1					
20	6X4–85415–00	MARK, SIGNAL LAMP ETIQUETTE	1					
21	6X4–81860–00	SWITCH ASSY COMMUTATEUR COMPLET	1					

FIG. 37 OPTIONAL PARTS 3 — PIECES OPTIONNELLES 3

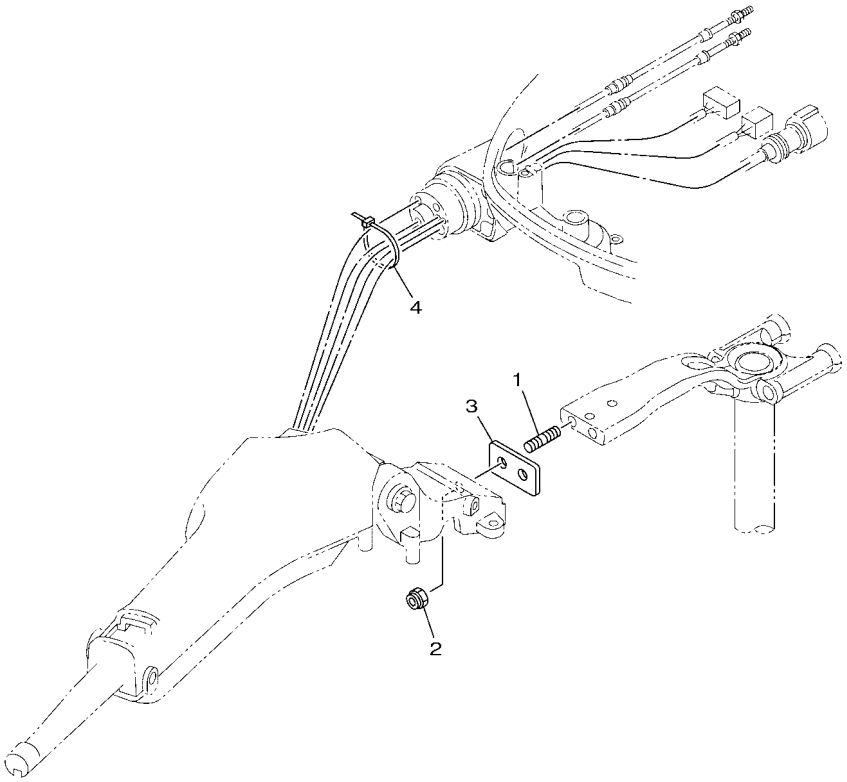

REF. NO.	PART NO. N° PIECES	DESCRIPTION DESCRIPTION	6HV1					REMARKS REMARQUES
1	90116–10063	BOLT, STUD GOUJON	2					
2	90185–10027	NUT, SELF-LOCKING ECROU,AUTO-BLOQUANT	2					
3	6EK–42121–00	BRACKET SUPPORT	1					
4	90465–13M24	CLAMP BRIDE	1					

FIG. 38 OPTIONAL PARTS 4 — PIECES OPTIONNELLES 4

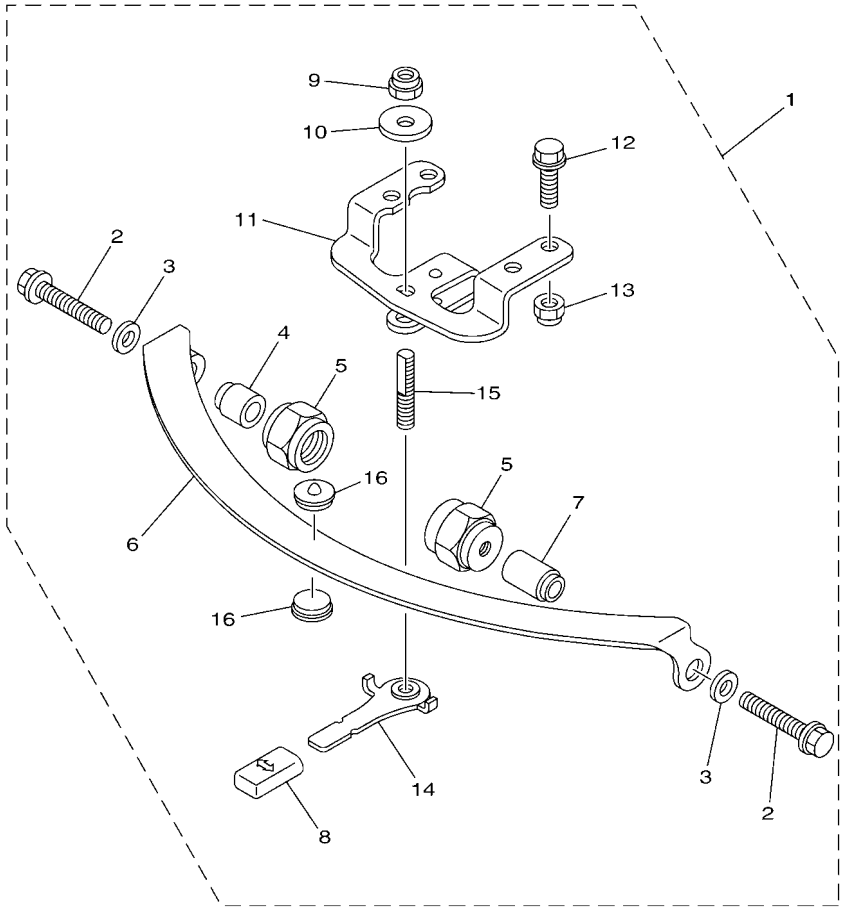

6FP1200-R390

REF. NO.	PART NO. N° PIECES	DESCRIPTION DESCRIPTION	6HV1					REMARKS REMARQUES
1	67G–42508–10	STEERING FRICTION ASSY DIRECTION FRICTION (ENS.)	1					
2	90119–08M74	.BOLT, WITH WASHER .BOULON, AVEC RONDELLE	2					
3	90201–08M01	.WASHER, PLATE .RONDELLE, PLATE	2					
4	67G–42541–00	.PIPE 1 .TUYAU 1	1					
5	67G–42546–00	.NUT .ECROU	2					
6	63D–42527–00	.PLATE, FRICTION .PLAQUE, FRICTION	1					
7	67G–42541–10	.PIPE 1 .TUYAU 1	1					
8	682–43318–01	.COVER .CAPUCHON	1					
9	90185–10M14	.NUT, SELF-LOCKING .ECROU,AUTO-BLOQUANT	1					
10	90201–10M76	.WASHER, PLATE .RONDELLE, PLATE	1					
11	6X4–42526–00	.PLATE, FRICTION .PLAQUE, FRICTION	1					
12	97595–08525	.BOLT, WITH WASHER .VIS HEXAGONAL AVC RONDELLE	2					
13	90185–08057	.NUT, SELF-LOCKING .ECROU,AUTO-BLOQUANT	2					
14	67G–42561–00	.KNOB, STEERING LOCK .BOUTON	1					
15	67G–42562–00	.SHAFT, STEERING LOCK .ARBRE,ANTIVOL DE DIRECTION	1					
16	63D–42528–00	.PLATE, FRICTION .PLAQUE, FRICTION	2					

FIG. 39 OPTIONAL PARTS 5 — PIECES OPTIONNELLES 5

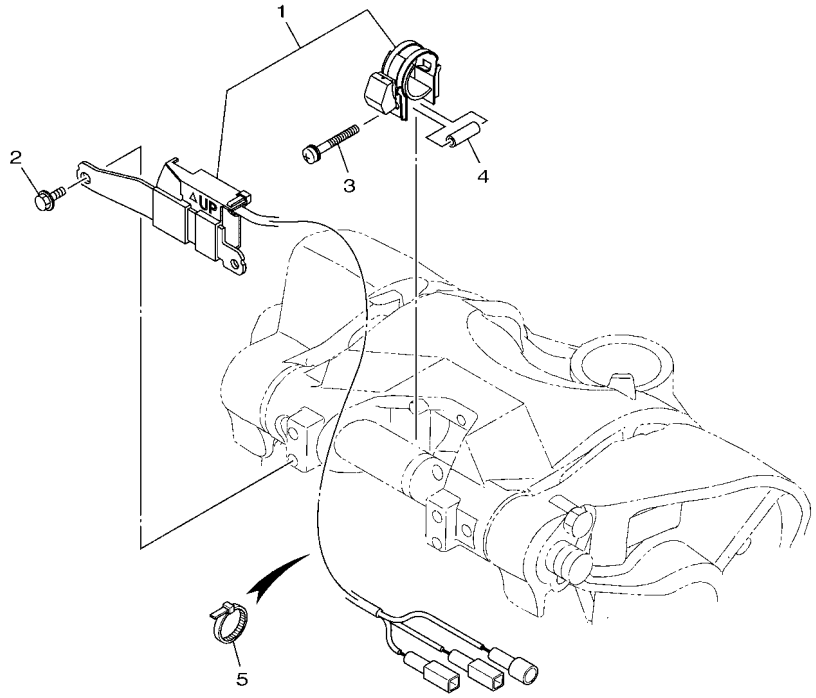

6EK3100-Q390

REF. NO.	PART NO. N° PIECES	DESCRIPTION DESCRIPTION	6HV1					REMARKS REMARQUES
1	63P–825E0–01	TILT LIMIT SWITCH ASSY COMMUTATEUR, LIMIT INCLINAISON	1					
2	97595–06516	BOLT, WITH WASHER VIS HEXAGONAL AVC RONDELLE	2					
3	90159–05059	SCREW, WITH WASHER VIS, AVEC RONDELLE	1					
4	90387–05004	COLLAR COLLERETTE	1					
5	90465–11M10	CLAMP BRIDE	5					

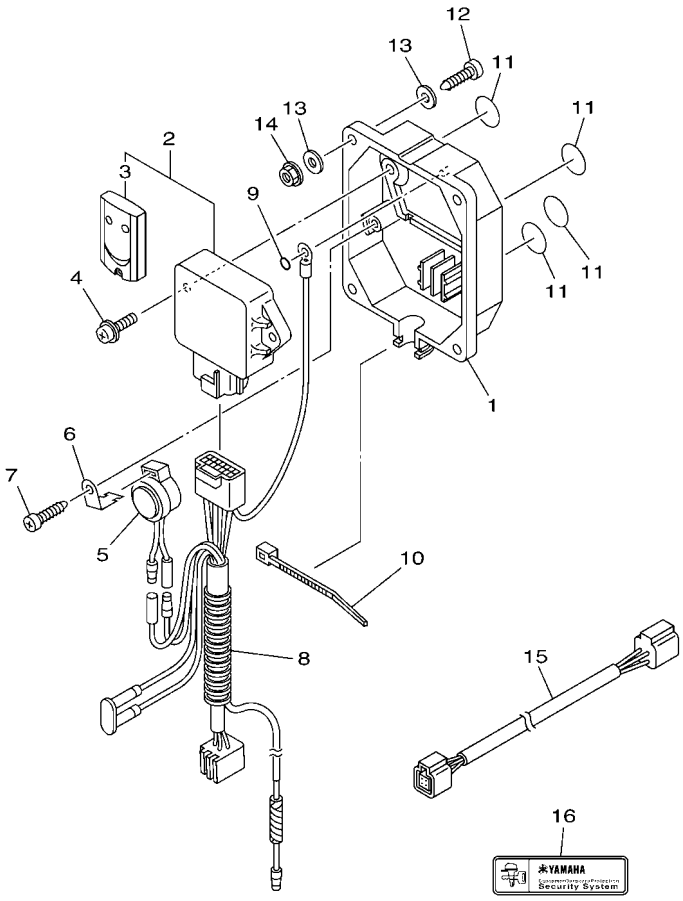

6CJ1100-K370

FIG. 40 OPTIONAL PARTS 6 — PIECES OPTIONNELLES 6

REF. NO.	PART NO. N° PIECES	DESCRIPTION DESCRIPTION	6HV1					REMARKS REMARQUES
1	6Y8–86267–00	CASE COMPLETE 1 CARTER (ENS.) 1	1					EXCEPT FOR RUS EXCEPT FOR RUS
2	6Y8–86260–03	REMOTE CONTROL UNIT ASSY UNITE DE TELECOMMANDE (ENS.)	1					EXCEPT FOR RUS EXCEPT FOR RUS
3	6AA–86261–01	.XMTR. COMP. .XMTR. COMP.	2					
4	97980–06216	SCREW, WITH WASHER VIS, AVEC RONDELLE	2					EXCEPT FOR RUS EXCEPT FOR RUS
5	6X4–83383–00	BUZZER RONFLEUR	1					EXCEPT FOR RUS EXCEPT FOR RUS
6	6X4–83386–00	STAY, BUZZER SUPPOR, RONFLEUR	1					EXCEPT FOR RUS EXCEPT FOR RUS
7	97780–60620	SCREW, TAPPING VIS, TETE BOMBEE	1					EXCEPT FOR RUS EXCEPT FOR RUS
8	6Y8–82509–10	WIRE, SUB LEAD FIL, SECONDAIRE	1					EXCEPT FOR RUS EXCEPT FOR RUS
9	93210–04279	O-RING JOINT TORIQUE	1					EXCEPT FOR RUS EXCEPT FOR RUS
10	90465–11M10	CLAMP BRIDE	1					EXCEPT FOR RUS EXCEPT FOR RUS
11	6Y8–8454G–00	PATCH 1 TAMPON 1	4					EXCEPT FOR RUS EXCEPT FOR RUS
12	90167–06M00	SCREW, TAPPING VIS, TETE FRAISEE	4					UR EXCEPT FOR RUS UR EXCEPT FOR RUS
	97880–06035	SCREW, PAN HEAD VIS, TETE TRONCONIQUE	4					UR EXCEPT FOR RUS UR EXCEPT FOR RUS
13	90201–06M30	WASHER, PLATE RONDELLE, PLATE	8					EXCEPT FOR RUS EXCEPT FOR RUS
14	95780–06300	NUT, FLANGE ECROU	4					EXCEPT FOR RUS EXCEPT FOR RUS
15	6Y8–82521–11	2FT PIGTAIL BUS FAISCEAU (L: 2FT.)	1					EXCEPT FOR RUS EXCEPT FOR RUS
16	6Y8–48277–00	STICKER 1 ETIQUETTE 1	4					EXCEPT FOR RUS EXCEPT FOR RUS

FIG. 41 OPTIONAL PARTS 7 — PIECES OPTIONNELLES 7

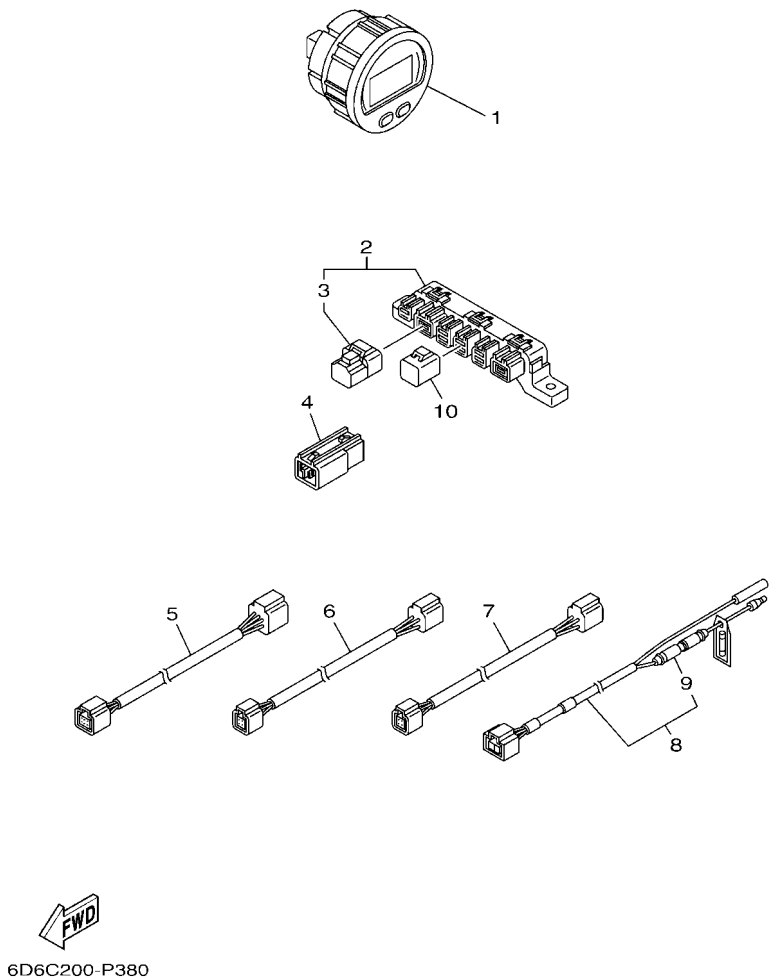

REF. NO.	PART NO. N° PIECES	DESCRIPTION DESCRIPTION	6HV1					REMARKS REMARQUES
1	6Y8–8350T–20	TACHOMETER, RD COMPTE-TOURS CPLT	1					FOR RUS FOR RUS
2	6Y8–81920–01	MULTI HUB ASSY BORNE	1					FOR RUS FOR RUS
3	6Y8–85371–01	.END OF LINE RESISTER .RESISTANCE COMP.	1					
4	6Y8–81920–11	IN-LINE HUB ASSY BORNE	1					FOR RUS FOR RUS
5	6Y8–82553–11	15FT MAIN BUS EXTENSION, FAISCEAU	1					FOR RUS FOR RUS
6	6Y8–82521–11	2FT PIGTAIL BUS FAISCEAU (L: 2FT.)	1					FOR RUS FOR RUS
7	6Y8–82521–41	9FT PIGTAIL BUS FAISCEAU (L: 9FT.)	1					FOR RUS FOR RUS
8	6Y8–83553–01	8FT POWER WIRE FIL	1					FOR RUS FOR RUS
9	6G1–82151–00	.FUSE (10A) .FUSIBLE (10A)	1					
10	6Y8–82582–11	CAP 1 (4PIN) COUVERCLE, FAISCEAU DE FILS	2					FOR RUS FOR RUS

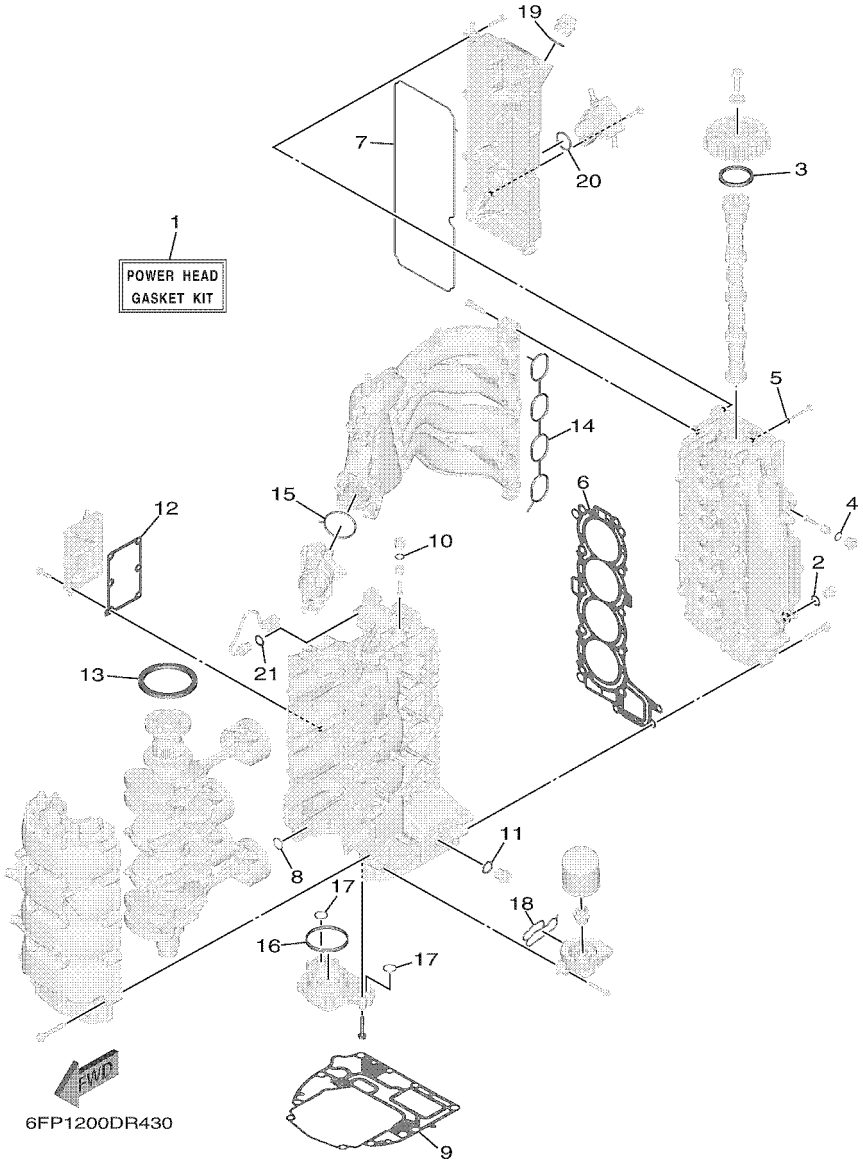

FIG. 42 REPAIR KIT 1 — KITS DE REPARATION 1

REF. NO.	PART NO. N° PIECES	DESCRIPTION DESCRIPTION	6HV1					REMARKS REMARQUES
1	6FP–W0001–00	POWER HEAD GASKET KIT POCHETTE DE JINTS TETE MOTRICE	1					
2	90430–14115	.GASKET .JOINT	1					
3	93102–48017	.OIL SEAL .JOINT SPY	1					
4	93210–13M63	.O-RING .JOINT TORIQUE	2					
5	90430–06014	.GASKET .JOINT	1					
6	6FP–11181–00	.GASKET, CYLINDER HEAD 1 .JOINT, DE CULASSE 1	1					
7	6FP–11193–00	.GASKET, HEAD COVER 1 .JOINT, COUVERCLE DE CULASSE 1	1					
8	93210–19MJ1	.O-RING .JOINT TORIQUE	1					
9	6EK–11351–00	.GASKET, CYLINDER .JOINT, D'EMBASE	1					
10	93210–13M63	.O-RING .JOINT TORIQUE	1					
11	90201–186F1	.WASHER, PLATE .RONDELLE, PLATE	1					
12	6FP–15353–00	.GASKET, DRAIN .JOINT, PLOT DE VIDANGE	1					
13	93102–85008	.OIL SEAL .JOINT SPY	1					
14	6FP–13645–00	.GASKET, MANIFOLD 1 .JOINT, TUBULURE 1	1					
15	6FP–13646–00	.GASKET, MANIFOLD 2 .JOINT, TUBULURE 2	1					
16	69J–11355–00	.SEAL, CYLINDER 1 .JOINT, SPY CYLINDRE	1					
17	93210–19MJ1	.O-RING .JOINT TORIQUE	2					
18	6FP–13475–00	.GASKET .JOINT	1					
19	93210–24M79	.O-RING .JOINT TORIQUE	1					
20	93210–30682	.O-RING .JOINT TORIQUE	1					
21	90430–14115	.GASKET .JOINT	1					

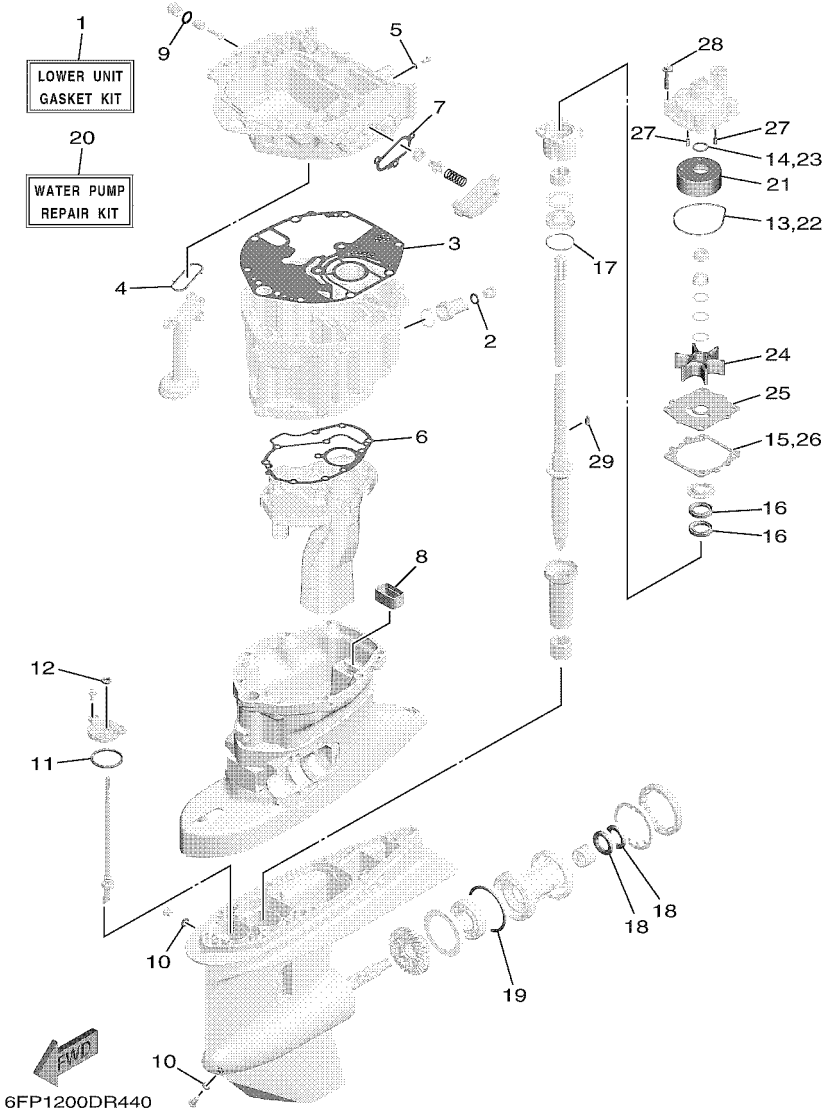

FIG. 43 REPAIR KIT 2 — KITS DE REPARATION 2

REF. NO.	PART NO. N° PIECES	DESCRIPTION DESCRIPTION	6HV1					REMARKS REMARQUES
1	6EK–W0001–20	LOWER UNIT GASKET KIT POCHETTE DE JOINTS EMBASE	1					
2	90430–14M09	.GASKET .JOINT	1					
3	6EK–15312–00	.GASKET, OIL PAN .JOINT DE VENTILATEUR D'HUILE	1					
4	67F–13415–00	.SEAL, OIL STRAINER .JOINT, FILTRE A HUILE	1					
5	90430–08143	.GASKET .JOINT	1					
6	6EK–41134–00	.GASKET, EXHAUST MANIFOLD .JOINT, PIPE D'ECHAPPEMENT	1					
7	6EK–12435–A0	.GASKET .JOINT	1					
8	67F–45127–00	.SEAL .JOINT	1					
9	93210–13M63	.O-RING .JOINT TORIQUE	1					
10	90430–08003	.GASKET .JOINT	2					
11	93210–58144	.O-RING .JOINT TORIQUE	1					
12	93106–09014	.OIL SEAL .JOINT SPY	1					
13	93210–86M38	.O-RING .JOINT TORIQUE	1					
14	93210–37160	.O-RING .JOINT TORIQUE	1					
15	6E5–44315–A0	.GASKET, WATER PUMP .JOINT, POMPE A EAU	1					
16	93101–28M16	.OIL SEAL .JOINT SPY	2					
17	93210–55M14	.O-RING .JOINT TORIQUE	1					
18	93101–30M17	.OIL SEAL .JOINT SPY	2					
19	93210–86M39	.O-RING .JOINT TORIQUE	1					
20	68V–W0078–00	WATER PUMP REPAIR KIT KIT DE REPARATION DE LA POMPE	1					
21	61A–44322–02	.INSERT, CARTRIDGE .CUVETTE	1					
22	93210–86M38	.O-RING .JOINT TORIQUE	1					
23	93210–37160	.O-RING .JOINT TORIQUE	1					
24	6E5–44352–01	.IMPELLER .TURBINE	1					
25	6EK–44323–00	.OUTER PLATE, CARTRIDGE .PLAQUE EXTERIEURE	1					
26	6E5–44315–A0	.GASKET, WATER PUMP .JOINT, POMPE A EAU	1					
27	93606–12019	.PIN, DOWEL .GOUPILLE	2					

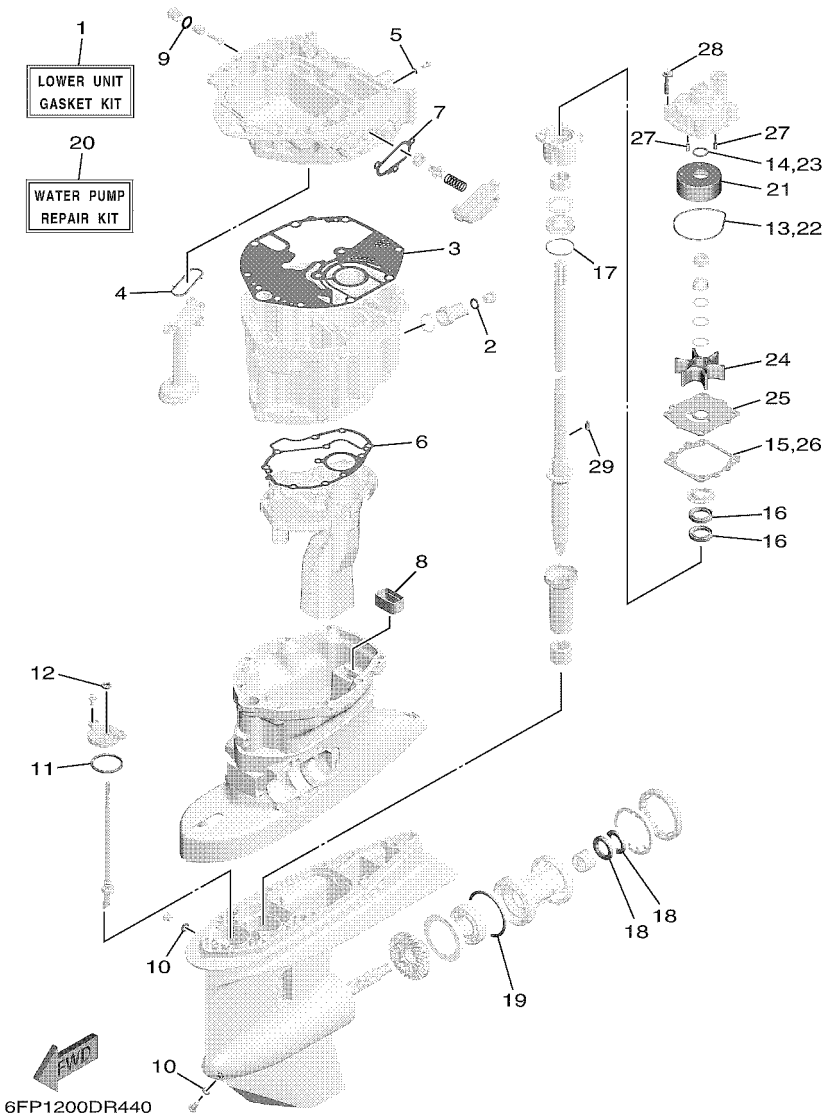

FIG. 43 REPAIR KIT 2 — KITS DE REPARATION 2

REF. NO.	PART NO. N° PIECES	DESCRIPTION DESCRIPTION	6HV1					REMARKS REMARQUES
28	90119–08M14	.BOLT, WITH WASHER .BOULON, AVEC RONDELLE	4					
29	90280–04M05	.KEY, WOODRUFF .CLAVETTE, DEMI-LUNE	1					

NUMERICAL INDEX
INDEX NUMERIQUE

PART NO. N° PIECES	REF. NO.
6FP–11111–00–9S	5 – 2
6FP–11119–00	3 – 20
6DA–11133–10	5 – 3
6FP–11168–00	5 – 24
6FP–11181–00	5 – 18
	42 – 6
6FP–11191–00	5 – 23
6FP–11192–00	5 – 28
6FP–11193–00	5 – 26
	42 – 7
6G8–11197–A0	3 – 18
	5 – 14
	27 – 30
6G8–11325–00	1 – 1
	1 – 4
	1 – 14
	3 – 16
	5 – 12
	27 – 28
63P–11325–01	1 – 2
	3 – 26
63P–11325–21	1 – 7
	10 – 7
6EK–11351–00	3 – 15
	42 – 9
69J–11355–00	28 – 14
	42 – 16
6EK–11410–01	4 – 1
6EK–11416–00	4 – 5
6EK–11416–10	4 – 5
6EK–11416–20	4 – 5
6EK–11416–30	4 – 5
6EK–11416–40	4 – 5
6EK–11417–00	4 – 6
6EK–11417–10	4 – 6
6EK–11417–20	4 – 6
6EK–11417–30	4 – 6
6EK–11417–40	4 – 6
6EK–11426–01	4 – 7
6EK–11427–00	4 – 8
6CB–11478–00	4 – 2
6FP–11537–00	6 – 22
6DA–11557–00	6 – 23
6EK–11603–00	4 – 12
6EK–11604–00	4 – 12
6FP–11631–00	4 – 11
6EK–11633–00	4 – 13
6FP–11635–00	4 – 11

PART NO. N° PIECES	REF. NO.
6EK–11656–00	4 – 15
6EK–11656–10	4 – 15
6EK–11656–20	4 – 15
6EK–11656–30	4 – 15
6EK–11656–40	4 – 15
6FP–12111–00	6 – 1
6FP–12113–00	6 – 4
62Y–12116–00	6 – 3
30X–12117–00	6 – 5
30X–12118–00	6 – 6
51Y–12119–00	6 – 7
6FP–12121–00	6 – 2
6FP–12146–00	6 – 8
6FP–12151–00	6 – 9
6C5–12158–00	6 – 11
6C5–12158–10	6 – 14
	6 – 30
6C5–12159–00	6 – 10
6C5–12159–10	6 – 13
	6 – 29
6FP–12161–00	6 – 12
6FP–12162–00	6 – 28
6FP–12171–00	6 – 20
6FP–12231–00	6 – 15
6FP–12233–00	6 – 16
6FP–12411–00	1 – 5
	3 – 9
6EK–12412–00	3 – 10
6EK–12413–00	3 – 11
6G5–12416–00	27 – 19
6EK–12435–A0	27 – 23
	43 – 7
6EK–1243A–00	3 – 13
6EK–1246A–00–9S	27 – 22
6FP–12483–00	3 – 30
6FP–12484–00	3 – 31
6FP–12485–00	3 – 35
6AW–12572–00	21 – 5
6R3–12581–00	21 – 7
6R3–12582–00	21 – 8
6R3–12583–00	21 – 9
6AW–13119–00	28 – 12
68V–13131–00	12 – 17
6FP–13161–00	9 – 1
6EK–13300–00	28 – 10
6EK–13329–00	28 – 11
6FP–13371–00	7 – 19
6FP–13381–00	7 – 10

PART NO. N° PIECES	REF. NO.
67F–13411–00	28 – 7
67F–13415–00	28 – 9
	43 – 4
6CJ–13428–00	5 – 30
6EK–13437–61	13 – 16
5GH–13440–70	1 – 3
	3 – 38
6FP–13446–00	3 – 40
6CB–13473–00	3 – 37
6FP–13475–00	3 – 41
	42 – 18
6FP–13476–00	7 – 9
6EK–13490–00	3 – 36
6FP–13545–00	11 – 6
6AW–13545–10	8 – 13
6FP–13546–00	8 – 15
	11 – 7
6FP–13547–00	8 – 16
6FP–13548–00	8 – 17
6FP–13577–00	9 – 4
6FP–13593–00	10 – 16
69J–13631–00	28 – 13
6FP–13641–00	7 – 1
6FP–13645–00	7 – 2
	42 – 14
6FP–13646–00	7 – 3
	42 – 15
6C5–13713–00	7 – 8
6FP–13751–00	7 – 4
6FP–13761–00	9 – 2
6FP–13881–01	7 – 21
6FP–13906–00	10 – 14
6FP–13907–00	10 – 11
6FP–13910–00	10 – 10
6FP–13915–00	1 – 8
	10 – 12
6FP–13972–00	11 – 3
6FP–13974–00	11 – 1
6C5–1410B–00	9 – 3
6X4–14137–00	35 – 25
6BG–14149–00	11 – 12
6FP–14180–00	10 – 1
6FP–14182–00	10 – 9
6C5–14191–00	10 – 6
6FP–14435–00	7 – 20
6HV–14440–00	7 – 24
6C5–14496–00	7 – 14
6C5–14567–00	10 – 18

PART NO. N° PIECES	REF. NO.
6FP–14591–00	10 – 5
6FP–14711–00–CA	27 – 10
6FP–1475A–00	8 – 5
6FP–1475F–00	8 – 20
6FP–1475G–00	8 – 22
6FP–14960–00	10 – 2
6FP–14984–00	1 – 9
	10 – 17
6FP–14985–00	10 – 13
6EK–14989–00	8 – 21
6FP–15109–00–9S	3 – 2
6EK–15311–01	28 – 1
6EK–15312–00	28 – 6
	43 – 3
6EK–15316–00	28 – 18
6FP–15353–00	3 – 28
	42 – 12
6FP–15362–00	28 – 17
6G8–15363–00	5 – 32
6FP–15373–00	7 – 23
6FP–15414–00–9S	3 – 25
6FP–21337–00	11 – 13
6FP–2134X–00	8 – 8
63D–21744–00	8 – 19
6E5–21744–00	8 – 18
6EK–22434–00	25 – 23
6EK–22471–01	25 – 18
68V–24149–00	12 – 25
6FP–2416A–00	8 – 4
69J–24170–00	8 – 7
6FP–2419E–00	8 – 9
6YK–24201–44	31 – 1
6C5–24251–00	1 – 10
	11 – 4
6Y2–24307–60	31 – 4
6FP–24311–00	12 – 13
6FP–24314–00	12 – 3
6FP–24324–00	11 – 10
6FP–24325–00	11 – 11
6FP–24330–00	11 – 2
6E5–24351–51	12 – 4
	31 – 6
6Y2–24360–60	31 – 7
6YK–24360–73	31 – 3
68V–24374–00	12 – 20
6AW–24377–01	12 – 2
688–24378–00	3 – 33
	8 – 14

PART NO. N° PIECES	REF. NO.
6FP–24379–00	11 – 8
6BG–24387–00	11 – 5
6FP–24410–00	12 – 14
68V–24411–00	12 – 19
68V–24412–00	12 – 15
6FP–24413–00	12 – 21
6FP–24414–00	12 – 23
6FP–24422–00	9 – 6
63P–24423–00	12 – 18
68V–24444–00	12 – 24
6FP–24444–00	10 – 8
6FP–24452–00	10 – 3
68V–24454–00	12 – 16
6FP–24462–00	10 – 4
6D8–24469–00	12 – 9
68V–24471–10	12 – 22
6D8–24519–00	12 – 10
6EK–24560–00	12 – 5
6D8–24562–00	12 – 8
6D8–24563–00	1 – 11
	12 – 6
6D8–24564–00	1 – 12
	12 – 7
6FP–24568–00	12 – 12
6YL–24610–10	31 – 2
6FP–26301–00	35 – 39
6X4–26367–00	35 – 34
	35 – 41
67F–28100–01	12 – 29
6CB–2812A–00	14 – 15
6FP–28199–71–D0	12 – 30
6FP–28199–71–E0	12 – 30
6FP–28199–71–F0	12 – 30
6FP–28199–71–G0	12 – 30
6FP–28199–71–H0	12 – 30
6FP–28199–71–S0	12 – 30
6FP–28199–81–K0	12 – 31
6FP–28199–81–L0	12 – 31
6FP–28199–81–M0	12 – 31
6FP–28199–81–N0	12 – 31
6FP–28199–81–P0	12 – 31
6FP–28199–81–R0	12 – 31
6EK–41134–00	27 – 9
	43 – 6
6EK–41137–01	27 – 1
6FP–41211–00	22 – 40
6FP–41213–00	22 – 36
682–41237–00	22 – 42

PART NO. N° PIECES	REF. NO.
6X4–41291–00	35 – 7
6FP–41662–00	22 – 32
6X4–42111–02–8D	35 – 1
6X4–42115–00	35 – 21
6X4–42119–01	35 – 4
6EK–42121–00	37 – 3
63D–42121–22–8D	35 – 54
63D–42126–00	35 – 16
6X4–42128–00	35 – 12
6X4–42131–11	35 – 51
6X4–42137–00	35 – 6
6FP–42154–00	22 – 30
6X4–42159–00	35 – 45
68V–42171–00	22 – 31
6X4–42177–00	35 – 5
6BG–42384–00	21 – 2
67G–42508–10	38 – 1
6EK–42510–00–8D	24 – 6
6EK–42510–10–8D	24 – 6
6X4–42526–00	38 – 11
63D–42527–00	38 – 6
63D–42528–00	38 – 16
67G–42541–00	38 – 4
6EK–42541–00	21 – 10
67G–42541–10	38 – 7
6FP–42542–00	9 – 11
67G–42546–00	38 – 5
67G–42561–00	38 – 14
67G–42562–00	38 – 15
6HV–42610–00	2 – 1
6FP–42615–00	2 – 14
6FP–4261A–00	2 – 2
6EK–42646–00	2 – 4
6FP–42647–00	2 – 5
663–42662–00	2 – 13
68F–42663–00	2 – 12
6EK–42675–00	2 – 18
6EK–42676–00	2 – 20
6D7–42677–10	2 – 16
6D7–42678–21	2 – 17
6D6–42681–00	2 – 19
6DA–42697–00	2 – 15
6FP–42710–00–8D	20 – 1
648–42715–00	22 – 26
6EK–42716–00	20 – 24
67F–42717–00	20 – 22
6EK–42725–00	20 – 16
6X4–42725–01	35 – 53

PART NO. N° PIECES	REF. NO.
6AH–42726–00	21 – 11
6H1–42726–30	21 – 1
6EK–42727–00	27 – 6
6X4–42727–00	36 – 18
6EK–42728–00	20 – 15
6X4–42728–10	35 – 63
6FP–42741–00–8D	21 – 18
6H4–42748–00	20 – 21
68F–42753–00	20 – 18
6CB–42761–00	20 – 19
6EK–42769–00	27 – 17
6EE–42794–40	20 – 27
6EE–42794–50	20 – 28
6FP–42815–00–8D	20 – 5
6FP–42816–00–8D	20 – 6
6CB–42818–00	20 – 10
6X4–42821–00	35 – 29
6EK–43111–00–8D	23 – 1
6EK–43112–00–8D	23 – 2
6EK–43126–00	23 – 27
64E–43131–30	23 – 9
64E–43139–10	24 – 3
66T–43144–00	20 – 13
	23 – 21
6E5–43145–01	32 – 7
6G5–43148–00	23 – 18
6EK–43181–00	23 – 15
6EK–43185–00	23 – 16
6EK–43311–00–8D	23 – 5
6EK–43311–10–8D	23 – 5
682–43318–01	38 – 8
6FP–43800–00	25 – 1
6EK–43804–11	26 – 3
6EK–43805–00	26 – 2
6EK–4380F–00	26 – 6
6C5–4380G–00	25 – 33
6FP–4380K–00	25 – 29
6EK–4380P–00	25 – 10
6EK–4380R–00	25 – 7
6EK–43810–00	25 – 2
6EK–43811–00	25 – 9
6H1–43812–00	25 – 3
6C5–43816–00	25 – 32
6C6–43817–00	25 – 30
6EK–43818–00	23 – 31
6EK–4381B–00	25 – 20
6EK–43821–00	25 – 4
6EK–43829–00	25 – 26

PART NO. N° PIECES	REF. NO.
6EK–4382E–00	25 – 39
6D8–4382L–00	25 – 62
6FP–43830–00	25 – 35
6EK–43831–00	25 – 63
6D8–43841–00	25 – 55
6D8–43843–00	25 – 50
6D8–43844–00	25 – 48
6H1–43844–10	25 – 59
6EK–43845–00	25 – 66
69A–4384F–00	25 – 56
6H1–4384G–11	25 – 58
62X–4384H–00	25 – 22
	25 – 28
6D8–4384M–00	25 – 37
6D8–43851–00	25 – 45
6C6–43853–00	25 – 41
6C5–43854–00	25 – 52
6C5–43855–10	25 – 46
6EK–43856–00	25 – 49
6D8–43861–00	25 – 6
	25 – 8
6EK–43861–00	25 – 5
6H1–43862–00	25 – 11
	25 – 15
6D8–43863–00	25 – 64
67F–43865–00	25 – 14
62X–4386K–00	26 – 7
6EK–43875–00	25 – 19
6H1–43875–00	25 – 65
63P–43879–10	26 – 8
6C6–4387G–00	25 – 42
6EK–43880–11	25 – 68
	26 – 1
6EK–43881–11	26 – 10
6EK–43882–00	26 – 11
6H1–43883–00	25 – 38
6EK–43892–00	26 – 4
6C5–43895–00	25 – 51
6EK–43899–00	25 – 21
69J–4389J–00	25 – 31
	25 – 36
6X4–44100–01	35 – 20
6X4–44102–00	35 – 22
6X4–44114–00	36 – 16
6EK–44117–01	22 – 8
6EK–44118–00	22 – 22
6EK–44120–00	22 – 17
6EK–44120–10	22 – 17

PART NO. N° PIECES	REF. NO.
6EK–44121–00	22 – 15
63P–44122–00	22 – 12
63P–44122–00	35 – 24
6EK–44135–00	22 – 37
6X4–44139–01	35 – 8
6E5–44150–03	29 – 20
6X4–44159–00–8D	35 – 46
6X4–44173–00	35 – 47
6X4–44177–00	35 – 11
6X4–44188–00	35 – 14
703–44189–20	34 – 36
703–44189–30	34 – 42
6X3–44191–00	34 – 47
	35 – 49
61A–44311–01	29 – 26
6E5–44312–00	29 – 31
6E5–44315–A0	29 – 35
	43 – 15
	43 – 26
61A–44322–02	29 – 27
	43 – 21
6EK–44323–00	29 – 34
	43 – 25
6E5–44352–01	29 – 32
	43 – 24
6E5–44365–00	29 – 30
6EK–44365–01	30 – 3
6E5–44366–00	30 – 1
6EK–44379–00	30 – 4
6P2–44391–00	21 – 4
	21 – 13
6FP–44514–00	24 – 23
6EK–44526–00	24 – 26
6EK–44536–00	23 – 37
6EK–44551–00–8D	24 – 12
6EK–44553–00–8D	24 – 21
63P–44555–00	24 – 15
61A–44575–00	24 – 14
6EK–45111–00–8D	27 – 11
6EK–45111–10–8D	27 – 11
67F–45127–00	27 – 25
	43 – 8
6EK–45135–00	27 – 26
6C5–45155–00	27 – 18
6EK–45181–01	27 – 10
688–45214–02	30 – 8
688–45215–02	30 – 9
6H1–45251–03	1 – 13

PART NO. N° PIECES	REF. NO.
6H1–45251–03	23 – 35
6EK–45300–00–8D	29 – 1
6EK–45300–10–8D	29 – 1
6E5–45301–07–8D	29 – 2
6EK–45318–00	27 – 27
6E5–45321–00	29 – 16
6E5–45331–00–9S	29 – 38
6E5–45332–00–CA	29 – 60
688–45341–10	29 – 7
6E5–45344–00	29 – 44
6E5–45371–01	1 – 17
	30 – 12
688–45375–00	29 – 11
663–45376–00	29 – 10
6E5–45378–00	29 – 12
688–45383–02	29 – 70
688–45384–02	29 – 71
6EK–45501–00	29 – 46
6EK–45501–10	29 – 46
61A–45527–00	29 – 25
6E5–45536–00	29 – 9
61A–45538–00	29 – 22
68V–45551–00	29 – 47
68V–45560–00	29 – 49
6E5–45567–01	29 – 5
6E5–45567–10	29 – 5
6E5–45567–20	29 – 5
6E5–45567–30	29 – 5
6E5–45567–40	29 – 5
6E5–45567–50	29 – 5
6E5–45567–60	29 – 5
68V–45571–00	29 – 62
6E5–45576–00	29 – 63
6L6–45577–00	29 – 67
6L6–45577–10	29 – 67
6L6–45577–20	29 – 67
6L6–45577–30	29 – 67
6L6–45577–40	29 – 67
6L6–45577–50	29 – 67
6L6–45577–60	29 – 67
6E5–45587–01	29 – 41
6E5–45587–10	29 – 41
6E5–45587–20	29 – 41
6E5–45587–30	29 – 41
6E5–45587–40	29 – 41
6E5–45587–50	29 – 41
6E5–45587–60	29 – 41
6E5–45611–01	29 – 51

PART NO. N° PIECES	REF. NO.
68V–45631–01	29 – 58
6E5–45633–01	29 – 59
6E5–45634–02	29 – 52
6FP–45941–00	30 – 20
6FP–45943–00	30 – 20
6FP–45945–00	30 – 20
6E5–45945–01	30 – 19
6FP–45947–00	30 – 20
6FP–45949–00	30 – 20
6EK–45982–00	30 – 21
63P–45987–00	30 – 14
688–45997–01	30 – 15
6EK–45C82–09	30 – 22
6X4–47731–01	35 – 23
703–48128–10	34 – 39
703–48129–00	34 – 41
	35 – 28
703–48152–10	34 – 6
703–48153–00	34 – 61
6X4–48154–00	35 – 17
703–48189–00	34 – 19
703–48198–00	34 – 16
703–48205–B2	33 – 1
	34 – 1
703–48211–10	34 – 25
703–48212–10	34 – 26
703–48213–10	34 – 27
6X4–48215–00	35 – 3
703–48215–10	34 – 46
703–48219–10	34 – 34
703–48221–10	34 – 28
703–48222–20	34 – 31
703–48223–10	34 – 32
703–48225–10	34 – 33
703–48227–00	34 – 30
703–48232–00	34 – 2
703–48234–00	34 – 20
703–48235–00	34 – 5
703–48236–00	34 – 18
703–48238–00	34 – 24
703–48243–00	34 – 17
703–48244–00	34 – 23
703–48245–00	34 – 13
703–48246–00	34 – 29
701–48248–00	34 – 15
703–48252–00	34 – 14
6X4–48261–00	35 – 26
703–48261–01	34 – 4

PART NO. N° PIECES	REF. NO.
703–48264–00	34 – 8
703–48265–10	34 – 11
703–48268–00	34 – 7
703–48271–00	34 – 3
6Y8–48277–00	40 – 16
703–48281–00	34 – 35
703–48284–00	34 – 58
701–48287–00	34 – 45
703–48293–10	34 – 44
701–48320–50	33 – 2
701–48320–60	33 – 2
701–48320–80	33 – 2
6EK–48321–00	35 – 32
6E5–48344–00	22 – 6
	22 – 28
703–48345–01	34 – 21
701–48350–00	33 – 2
701–48350–20	33 – 2
701–48350–30	33 – 2
703–48358–00	34 – 22
6EK–48531–01	22 – 1
6FP–48532–00	22 – 2
63D–48538–00	35 – 37
	35 – 43
6EK–48538–00	22 – 4
6X4–48538–00	35 – 33
6X4–48538–10	35 – 40
6EK–61350–00	32 – 1
6E5–61355–00	32 – 2
6C5–81146–10	7 – 15
6FP–81337–00	13 – 11
6FP–81410–00	13 – 3
6FP–81800–00	19 – 1
69J–81801–10	19 – 5
6FP–81807–00	19 – 8
6CB–81809–00	19 – 14
67F–81810–00	19 – 3
67F–81813–00	19 – 6
6FP–81820–00	19 – 7
67F–81821–00	19 – 11
6FP–81822–00	16 – 4
6FP–81823–00	16 – 6
6CB–81826–00	19 – 22
69J–81828–00	19 – 23
67F–81830–00	19 – 16
6FP–81832–00	19 – 9
6FP–81836–00	19 – 10
6FP–81839–00	19 – 19

NUMERICAL INDEX
INDEX NUMERIQUE

PART NO. N° PIECES	REF. NO.
67F–8183R–00	19 – 13
60V–8183T–00	19 – 17
69J–81840–10	19 – 4
67F–81841–00	19 – 12
6FP–81842–00	19 – 18
67F–81846–00	19 – 24
67F–81850–00	19 – 2
6X4–81860–00	36 – 21
6C5–81869–00	19 – 21
67F–81891–00	19 – 15
6FP–81897–00	16 – 7
6FP–81919–00	14 – 20
6Y8–81920–01	41 – 2
6Y8–81920–11	41 – 4
60V–81925–00	16 – 2
6EM–81941–00	19 – 20
6FP–81948–00	14 – 3
63P–81950–00	17 – 1
6FP–81952–00	17 – 5
6EK–81960–02	15 – 15
6FP–81975–00	15 – 16
6EE–81994–40	13 – 17
6EE–81994–50	13 – 18
6AH–81996–00	20 – 29
68V–82105–01	16 – 13
6P2–82113–00	14 – 16
682–82119–01	17 – 2
6D8–82148–00	23 – 24
6E5–82148–00	23 – 3
66K–82149–00	23 – 8
68V–82149–30	23 – 8
6FP–82151–00	14 – 11
6G1–82151–00	41 – 9
6CB–82151–20	14 – 12
6CB–82151–30	14 – 13
6FP–82170–00	14 – 10
6EK–82181–00	26 – 5
6FP–82310–00	15 – 1
6FP–82310–10	15 – 2
6FP–82316–00	15 – 11
6A0–82317–00	13 – 13
	15 – 13
67F–82361–00	15 – 7
6FP–82370–00	15 – 4
68V–82504–00	18 – 10
6Y8–82509–10	40 – 8
703–82510–13	34 – 48
6X4–82510–41	36 – 1
6Y8–82521–11	40 – 15
	41 – 6
6Y8–82521–41	41 – 7
703–82531–00	34 – 51
703–82532–00	34 – 50
	36 – 3
6FP–8253C–00	14 – 2
6X4–82540–00	35 – 27
703–82540–00	34 – 55
6Y8–82553–11	41 – 5
682–82556–00	34 – 53
	36 – 6
6FM–82563–00	18 – 11
6X4–82563–01	36 – 8
703–82563–31	34 – 57
69W–82575–00	36 – 5
688–82575–02	34 – 52
676–82577–01	34 – 49
	36 – 2
6C5–8257V–00	14 – 8
689–8257Y–00	36 – 7
68F–82582–00	16 – 3
6DA–82582–00	18 – 3
6DA–82582–10	18 – 4
6Y8–82582–11	18 – 2
	41 – 10
6X4–82586–10	36 – 10
61A–82588–01	22 – 9
688–8258A–20	34 – 54
6FP–82590–01	18 – 1
703–82591–00	34 – 59
703–82592–00	34 – 60
68V–82594–00	20 – 23
60V–8259F–00	22 – 27
63P–825E0–01	39 – 1
6X4–83383–00	36 – 11
	40 – 5
703–83383–11	34 – 56
6X4–83386–00	36 – 12
	40 – 6
6Y8–8350T–20	41 – 1
6Y8–83553–01	41 – 8
6E5–83558–00	21 – 16
6E5–83558–10	29 – 14
6H4–83589–00	36 – 19
6FP–83626–00	13 – 15
6X4–83653–20	36 – 14
67H–83672–01	24 – 1
68F–83688–10	7 – 11
6C5–84301–00	36 – 15
6C5–84301–00	40 – 11
68F–85119–00	14 – 6
	17 – 8
6Y8–85371–01	41 – 3
6X4–85415–00	36 – 20
69L–85516–00	10 – 20
68F–85516–01	17 – 6
6FP–85544–00	14 – 14
689–85547–00	12 – 1
68V–85548–01	14 – 18
6FP–85561–00	13 – 5
60V–85564–00	14 – 4
6CB–85580–00	13 – 4
6CJ–85780–00	18 – 13
6CJ–85790–00	18 – 8
8GL–85885–00	7 – 6
6HV–8591A–00	14 – 1
6FP–86112–00	8 – 3
6C5–86120–00	8 – 1
6Y8–86260–03	40 – 2
6AA–86261–01	40 – 3
6Y8–86267–00	40 – 1
6FP–87226–00	10 – 15
K1C–A3275–00	4 – 10
7BB–G3861–00	25 – 17
6FP–W0001–00	42 – 1
6EK–W0001–20	43 – 1
68V–W0078–00	1 – 18
	43 – 20
6FP–W009A–00–9S	5 – 1
6FP–W009B–00–9S	3 – 1
6EK–W1165–00	4 – 9
6FP–W4624–00	6 – 27
6FP–W8145–01	13 – 1
6FP–W9010–00	13 – 2
90101–12014	35 – 55
90101–12M03	23 – 40
90101–12M05	23 – 40
90105–06037	3 – 29
90105–06039	2 – 6
90105–06151	3 – 42
	28 – 15
90105–06208	12 – 28
90105–06M14	16 – 14
90105–08170	3 – 7
90105–08175	5 – 22
90105–08220	5 – 21
90105–10M00	30 – 13
90105–14007	24 – 25
90105–14013	24 – 18
90109–05M89	13 – 6
90109–06286	3 – 12
90109–06288	22 – 35
	22 – 38
90109–06292	28 – 8
90109–06M65	5 – 16
90109–06M81	22 – 3
90109–06M86	20 – 14
	20 – 20
90111–08078	2 – 7
90116–10063	37 – 1
90119–06113	7 – 28
90119–06122	9 – 5
90119–06M10	29 – 19
90119–06M17	7 – 12
	8 – 12
90119–06M61	9 – 9
90119–06M81	23 – 36
90119–06M95	15 – 12
90119–06MA4	15 – 17
90119–08020	7 – 18
90119–08M14	29 – 37
	43 – 28
90119–08M22	20 – 2
90119–08M74	38 – 2
90119–10007	27 – 13
90119–10054	23 – 34
90119–10057	3 – 6
90119–10058	24 – 22
90119–10M89	30 – 7
90149–05041	7 – 7
90151–06M02	3 – 27
90152–05007	35 – 9
90152–05M07	30 – 10
90155–10008	5 – 20
90159–05059	24 – 4
	39 – 3
90159–06053	21 – 23
90159–06M28	21 – 20
90167–06M00	40 – 12
90170–09M03	32 – 3
90170–16M01	29 – 48
90171–18M04	30 – 17
90176–14002	24 – 19
90176–14002	24 – 28
90179–06M28	9 – 10
90179–08003	16 – 1
90183–061A8	21 – 22
90185–05002	30 – 11
90185–08057	38 – 13
90185–09M01	32 – 5
90185–10027	37 – 2
90185–10M14	38 – 9
90185–12M12	35 – 62
90185–22M11	23 – 12
90201–06M05	22 – 34
	22 – 39
90201–06M30	40 – 13
90201–08M01	38 – 3
90201–10060	23 – 33
90201–10144	6 – 26
90201–10M20	32 – 6
90201–10M63	32 – 9
90201–10M76	38 – 10
90201–11008	22 – 20
90201–12035	35 – 59
90201–12426	23 – 42
90201–13M01	23 – 41
90201–156J2	20 – 8
90201–16M55	24 – 17
90201–186F1	3 – 24
	42 – 11
90201–21016	6 – 17
90201–22M01	29 – 23
90201–26M59	23 – 11
90201–30M92	29 – 68
90201–38M60	24 – 8
90202–08M20	22 – 13
90202–32M19	24 – 16
90202–40M47	24 – 11
90206–12M22	35 – 57
90206–15M18	20 – 9
90206–22M19	29 – 24
90249–06M19	23 – 20
90250–08M07	29 – 57
90280–04M05	29 – 33
	43 – 29
90282–04010	29 – 69
90338–08174	24 – 7
90338–41106	5 – 11
90340–08002	29 – 6
90340–14M06	5 – 9
90340–14M06	28 – 3
90340–18101	3 – 3
90340–18M09	3 – 23
90340–27001	5 – 8
90340–97002	5 – 6
90340–99001	5 – 4
90383–20001	23 – 32
90386–06M12	22 – 16
90386–08001	7 – 26
90386–08032	35 – 15
90386–10001	22 – 19
90386–10M16	23 – 17
90386–12003	35 – 60
90386–15M73	20 – 7
90386–18001	23 – 29
90386–18M35	23 – 28
90386–25M31	23 – 10
90386–26MA3	35 – 50
90386–38M32	24 – 10
90387–05004	39 – 4
90387–06119	13 – 12
	15 – 14
90387–06176	14 – 5
	17 – 7
90387–06289	7 – 13
	8 – 11
90387–06M03	10 – 19
90387–06M43	21 – 24
90387–07013	7 – 27
90387–07046	2 – 3
90387–08M37	20 – 4
90387–08M45	2 – 10
90387–10094	2 – 8
90387–10M42	32 – 4
90387–12M02	35 – 58
90401–10050	6 – 18
90401–20007	3 – 39
90430–06014	5 – 17
	42 – 5
90430–08003	1 – 16
	29 – 8
	43 – 10
90430–08143	27 – 3
	43 – 5
90430–14115	5 – 10
	18 – 9
	42 – 2
	42 – 21

NUMERICAL INDEX
INDEX NUMERIQUE

PART NO. N° PIECES	REF. NO.
90430–14M09	1 – 15
	28 – 4
	43 – 2
90430–18236	3 – 4
90440–16001	30 – 2
90440–16002	30 – 2
90445–073F9	21 – 14
90445–07ME8	29 – 13
90445–07ME9	29 – 13
90445–13M01	31 – 5
90445–13M06	31 – 8
90464–07259	21 – 15
90464–07M05	15 – 8
90464–07M41	15 – 6
90464–08M07	36 – 4
90464–09013	9 – 15
	15 – 10
90464–09021	9 – 14
90464–09M42	35 – 35
90464–09M47	7 – 30
	18 – 5
90464–10011	9 – 13
90464–11121	17 – 13
90464–12002	15 – 9
90464–12010	11 – 16
90464–12183	7 – 16
	14 – 7
	17 – 10
	17 – 11
90464–13227	3 – 43
	18 – 6
	18 – 18
	18 – 19
90464–13249	13 – 10
	16 – 11
	18 – 15
	20 – 26
90464–15007	11 – 15
90464–16001	11 – 17
	18 – 12
	18 – 16
	18 – 17
90464–17006	7 – 17
90464–20181	18 – 14
90464–20258	20 – 17
90464–26001	7 – 29
	7 – 31
90464–65001	7 – 25

PART NO. N° PIECES	REF. NO.
90465–08M63	23 – 7
90465–08M83	3 – 32
90465–11M10	3 – 22
	3 – 34
	8 – 23
	9 – 12
	11 – 9
	12 – 11
	12 – 27
	13 – 7
	21 – 3
	21 – 12
	21 – 17
	23 – 14
	24 – 5
	29 – 15
	39 – 5
	40 – 10
90465–11M59	3 – 14
	28 – 19
90465–13M11	16 – 12
	17 – 12
90465–13M18	23 – 26
90465–13M24	37 – 4
90465–13M30	20 – 17
90465–13M97	18 – 20
90467–08M18	9 – 16
	11 – 14
90467–09M17	8 – 24
90468–10005	35 – 38
	35 – 44
90468–18008	22 – 7
	22 – 14
	22 – 29
90468–180A0	22 – 21
90480–10M23	8 – 10
90480–11006	9 – 8
90480–12314	5 – 29
90480–13M24	21 – 21
90480–20M05	27 – 21
90480–22M15	20 – 3
90480–25003	15 – 3
90501–12082	22 – 25
90501–16M37	29 – 53
90501–200A2	27 – 20
90501–23215	35 – 13
90506–14M24	23 – 23
90506–22001	20 – 12

PART NO. N° PIECES	REF. NO.
91312–06035	13 – 9
91318–03005	25 – 61
91318–03005	25 – 60
91318–05030	25 – 53
91318–05045	25 – 34
91380–06025	25 – 67
91490–20010	35 – 10
	35 – 19
91490–40030	30 – 18
91609–16012	25 – 12
91690–30010	22 – 5
91690–30020	23 – 19
91690–50014	7 – 22
92903–08100	16 – 16
92990–08600	2 – 9
	34 – 38
92990–10200	6 – 19
92990–12200	35 – 56
92990–12600	35 – 61
92990–18200	30 – 16
92995–14600	24 – 20
	24 – 27
93101–28M16	29 – 39
	43 – 16
93101–30M17	29 – 65
	43 – 18
93102–48017	6 – 31
	42 – 3
93102–85008	4 – 4
	42 – 13
93106–09014	29 – 18
	43 – 12
93210–04279	40 – 9
93210–04N51	25 – 43
93210–064A5	25 – 44
93210–09165	22 – 18
	25 – 25
93210–13M63	3 – 19
	5 – 15
	20 – 25
	27 – 31
	42 – 4
	42 – 10
	43 – 9
93210–14579	5 – 5
93210–16275	32 – 8
93210–17014	7 – 5
93210–18322	5 – 7

PART NO. N° PIECES	REF. NO.
93210–19MJ1	3 – 8
	28 – 16
	42 – 8
	42 – 17
93210–24M79	5 – 33
	42 – 19
93210–30682	12 – 26
	42 – 20
93210–37160	29 – 29
	43 – 14
	43 – 23
93210–37MH7	24 – 9
93210–554A9	26 – 12
93210–55M14	29 – 43
	43 – 17
93210–58144	29 – 17
	43 – 11
93210–68N50	25 – 27
93210–86M38	29 – 28
	43 – 13
	43 – 22
93210–86M39	29 – 66
	43 – 19
93306–208U0	29 – 61
93315–425U7	29 – 50
93315–430U8	29 – 64
93315–628U9	29 – 3
93317–330U2	29 – 40
93332–000U7	29 – 4
93341–930V2	29 – 42
93410–18M05	23 – 30
93410–37M04	24 – 13
93430–06024	34 – 12
93450–19052	4 – 14
93501–04M02	22 – 24
93501–08001	25 – 47
93503–16003	25 – 16
	29 – 56
93505–32038	25 – 13
	25 – 40
93507–32009	29 – 54
93511–32017	29 – 55
93604–26256	25 – 54
93605–14143	6 – 21
93606–12019	3 – 5
	4 – 3
	27 – 8
	27 – 16

PART NO. N° PIECES	REF. NO.
93606–12019	28 – 5
	29 – 36
	43 – 27
93608–12M05	27 – 5
	30 – 5
93700–06M03	23 – 6
	35 – 2
94702–00440	1 – 6
	5 – 34
95333–08600	16 – 15
95380–05600	22 – 41
	34 – 9
95380–06600	8 – 2
	21 – 19
	34 – 43
	35 – 18
95380–12600	23 – 43
95780–06300	40 – 14
95780–08300	2 – 11
95812–08030	16 – 9
95812–08050	16 – 5
95817–10035	6 – 25
95875–06040	22 – 11
95875–10060	24 – 24
95895–06010	23 – 39
95895–06012	6 – 24
95895–06014	9 – 7
95895–06016	16 – 8
	17 – 9
95895–06025	22 – 33
	27 – 24
95895–06030	5 – 27
	13 – 8
	13 – 14
	22 – 23
	27 – 7
95895–08012	20 – 11
95895–08020	3 – 21
97095–06010	23 – 22
97095–06014	35 – 36
	35 – 42
	36 – 13
97095–08014	27 – 2
97380–05025	34 – 10
97380–08030	34 – 37
97575–08535	27 – 12
97575–10545	27 – 4
	27 – 14

PART NO. N° PIECES	REF. NO.
97575–10545	27 – 15
	28 – 2
97595–06510	23 – 25
97595–06516	5 – 31
	8 – 6
	18 – 7
	39 – 2
97595–06520	17 – 4
97595–06525	15 – 5
97595–06530	35 – 31
97595–06610	17 – 3
97595–06616	23 – 38
97595–08520	23 – 13
97595–08525	29 – 45
	38 – 12
97595–08540	35 – 30
97595–10545	30 – 6
97602–04316	26 – 9
97607–04208	5 – 25
97780–50620	14 – 17
97780–60520	21 – 6
97780–60620	14 – 9
	14 – 19
	36 – 17
	40 – 7
97780–60920	35 – 48
97880–06012	23 – 4
97880–06035	40 – 12
97980–06216	36 – 9
	40 – 4
97985–04116	22 – 10
97985–04308	16 – 10
97985–06216	24 – 2
	35 – 52
98580–04006	34 – 40
98980–05025	3 – 17
	5 – 13
	27 – 29
99001–08600	29 – 21
99002–03600	25 – 57
99009–47500	25 – 24
99530–14016	5 – 19