YAMAHA

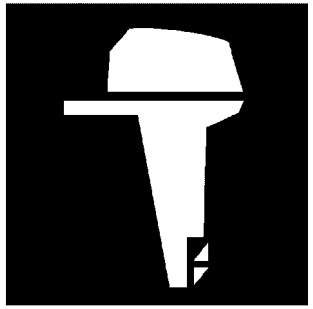

PARTS CATALOGUE
CATALOGUE DE PIECES DETACHEES

F9.9HMH1’17 (6CAA)
F9.9HWH1’17 (6CAA)
F9.9HE1’17 (6CAA)

1R6CA-300FA

( )

YAMAHA GENUINE Parts & Accessories

2020/2/3

NEWS NO.	DATE	COMMENT
PE0-OM-170016	May,25,2017	MOD:FIG.11 STARTER LIST REVISION
PE0-OM-200001	Jan.,28,2020	MOD:F9.9H(6CA) CRANKSHAFT & PISTON LIST REVISION

F9.9HMH1
F9.9HWH1/F9.9HE1
PARTS CATALOGUE
©2017 by Yamaha Motor Co., Ltd.
1st edition, April 2017
All rights reserved.
Any reprinting or unauthorized use
without the written permission of
Yamaha Motor Co., Ltd.
is expressly prohibited.
Printed in Japan.

F9.9HMH1
F9.9HWH1/F9.9HE1
CATALOGUE DE PIECES DETACHEES
©2017 par Yamaha Motor Co., Ltd.
1re édition, avril 2017
Tous droits réservés
Toute réimpression ou utilisation
non autorisée sans la permission écrite
de la Yamaha Motor Co., Ltd.
est formellement interdite.
Imprimé au Japon

FOREWORD

This Parts Catalogue is related to the parts for the model(s) on the cover page. When you are ordering replacement parts, please refer to this Parts Catalogue and quote both part numbers and part names correctly.

1. Modifications or additions which have been made after the issue of the Parts Catalogue will be announced in the Parts News.
   It is advisable that you make the necessary corrections to the Parts Catalogue according to the Parts News.

2. Abbreviations
   The following abbreviations are used in this Parts Catalogue.
   "UR" Use specified parts number.
   "UN" Use as many as needed.
   "AP" Alternate Parts
   "LM" Locally Made (Parts need to be ordered locally)
   "F#" Frame No. (Applicable machine No.)
   "O/S" Over Size

3. The number of components for assembly
   - Parts, which are to be supplied in an assembly, are listed with a dot (.) in front of the part name as shown below.
   - The numeral appearing to the right of each component part indicates the quantity of parts for each assembly unit.

PART NO.	DESCRIPTION	Q'TY	REMARKS
2F5–83310–60	FRONT FLASHER LIGHT ASSY	2	
115–83311–60	.BULB (6V–18W)	1	

4. Applicable colours of graphics are represented in the "REMARKS" as shown below.

PART NO.	DESCRIPTION	Q'TY	REMARKS
2N4–24110–00–X5	FUEL TANK COMP.	2	MXR
3J1–24240–10	.GRAPHIC, FUEL TANK	1	FOR MXR

5. Note that the illustrations for reference in finding parts numbers are not to be used for assembling. When assembling, please use the applicable service manual.

6. The asterisk (*) before a reference number indicates modified items after the first edition.

7. Applicable Serial No.
   Engine Serial No.

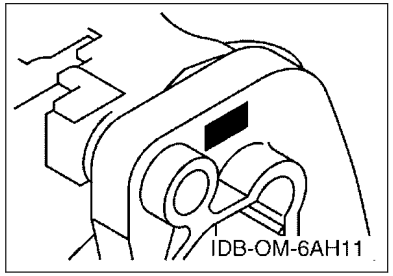

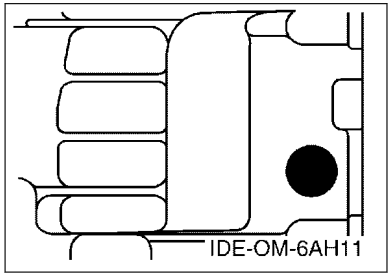

8. Applicable Engine Starting Serial No.

Model	Serial No.	Model	Serial No.
F9.9H	6CAK-1011001		

9. Applicable Colour Code

Abbreviation	Colour Name	Colour Code
SBL	SHINY BLACK	00NA

10. Quantity Column Information

Column No.	Name Of Q'ty Column	Applicable Model
1	MH	F9.9HMH1
2	WH	F9.9HWH1
3	E	F9.9HE1

AVANT–PROPOS

Ce catalogue de pièces détachées concerne les pièces pour le(s) modèle(s) indiqué(s) sur la page de couverture. Lorsque vous commandez des pièces de rechange, veuillez vous référer à ce catalogue de pieces détachées et indiquer clairement les numéros et les noms des pièces détachées.

1. Les modifications ou ajouts ayant été effectués après la parution du catalogue de pièces détachées seront décrits dans les Bulletins d'information concernant les pièces détachées.
   Il est recommandé que vous apportiez les corrections nécessaires au catalogue des pièces détachées en vous référant aux Bulletins d'information.

2. Abréviations
   Dans ce catalogue, les abréviations suivantes sont utilisées:
   "UR" Utiliser le numéro de pièces spécifié.
   "UN" Utiliser autant que nécessaire.
   "AP" Pièces de substitution
   "LM" Fabrication locale (les pièces doivent être commandées localement.)
   "F#" N° de cadre (applicable au N° de série)
   "O/S" Surdimensionné

3. Nombre de pièces d'un assemblage
   - Les pièces fournies comme composants d'un assemblage sont précédées d'un point (.) de la manière indiquée ci–dessous.
   - Le chiffre apparaissant à la droite de chaque composant indique la quantité de pièces pour chaque unité d'assemblage.

N° PIECES	DESCRIPTION	QTE	REMARQUES
2F5–83310–60	ENS. CLIGNOTANT AVANT	2	
115–83311–60	.AMPOULE (6V–18W)	1	

4. Les couleurs concernant les graphiques sont indiquées dans la colonne "REMARQUES", comme indiqué ci–dessous.

N° PIECES	DESCRIPTION	QTE	REMARQUES
2N4–24110–00–X5	RESERVOIR A ESSENCE.	2	MXR
3J1–24240–10	.GRAPHIQUE	1	POUR MXR

5. Veuillez noter que les illustrations sont indiquées à titre de référence pour trouver les numéros de pièces, non pour être utilisées lors de l'assemblage. Lors de l'assemblage, veuillez utiliser le manuel d'entretien adéquat.

6. L'astérisque (*) placé devant un numéro de référence indique des éléments qui ont été modifiés après la première édition.

7. N° de série applicable
   N° de Série du moteur

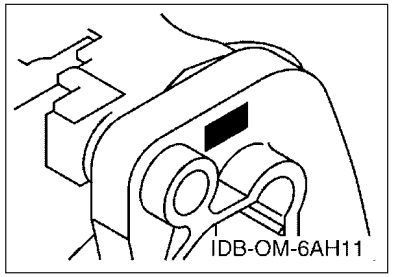

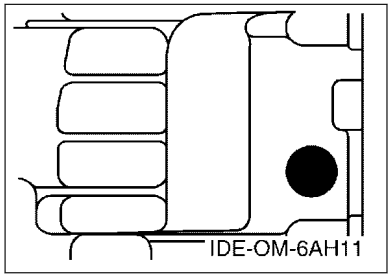

8. N° de série initial du moteur applicable

Modèle	N° de série	Modèle	N° de série
F9.9H	6CAK-1011001		

9. Code couleur applicable

Abréviation	Nom de la couleur	Code couleur
SBL	SHINY BLACK	00NA

10. Informations relatives à la colonne Quantité

N° de la colonne	Nom de la colonne Qté	Modèle applicable
1	MH	F9.9HMH1
2	WH	F9.9HWH1
3	E	F9.9HE1

CONTENTS

SCHEDULED SERVICE PARTS.....1
TOP COWLING.....2
CYLINDER & CRANKCASE 1.....3
CRANKSHAFT & PISTON.....5
CYLINDER & CRANKCASE 2.....6
VALVE.....7
INTAKE.....8
CARBURETOR.....9
OIL PUMP.....11
FUEL.....12
STARTER.....14
GENERATOR.....16
ELECTRICAL 1.....17
ELECTRICAL 2.....19
ELECTRICAL 3.....21
STARTING MOTOR.....22
BOTTOM COWLING.....23
STEERING.....25
STEERING FRICTION.....27
CONTROL 1.....28
CONTROL 2.....30
BRACKET 1.....32
BRACKET 2.....34
UPPER CASING.....36
OIL PAN.....37
LOWER CASING & DRIVE 1.....38
LOWER CASING & DRIVE 2.....41
FUEL TANK.....43
STEERING GUIDE.....44
REMOTE CONTROL BOX.....45
REMOTE CONTROL ASSY.....46
REPAIR KIT 1.....49
REPAIR KIT 2.....50
REPAIR KIT 3.....51

INDEX

NUMERICAL INDEX.....53

TABLE DES MATIERES

PIECES MAINTENANCE PERIODIQUE.....1
CAPOT SUPERIEUR..... 2
CYLINDRE & CARTER 1..... 3
VILEBREQUIN & PISTON.....5
CYLINDRE & CARTER 2..... 6
SOUPAPE..... 7
ADMISSION.....8
CARBURATEUR..... 9
POMPE A HUILE.....11
CARBURANT..... 12
DEMARREUR.....14
GENERATRICE.....16
PARTIE ELECTRIQUE 1.....17
PARTIE ELECTRIQUE 2.....19
PARTIE ELECTRIQUE 3.....21
DEMARREUR ELECTRIQUE.....22
CAPOT INFERIEUR.....23
DIRECTION.....25
CUVETTE POIGNEE DE DIRECTION.....27
COMMANDE 1..... 28
COMMANDE 2..... 30
SUPPORT 1..... 32
SUPPORT 2..... 34
FOURREAU.....36
VENTILATEUR D'HUILE..... 37
BOITIER D'HELICE TRANSMISSION1.....38
BOITIER D'HELICE TRANSMISSION2.....41
RESERVOIR A CARBURANT.....43
FIXATION DE DIRECTION..... 44
BOITIER DE COMMANDE A DISTANCE..... 45
BOITIER DE COMMANDE A DISTANCE..... 46
KITS DE REPARATION 1..... 49
KITS DE REPARATION 2..... 50
KITS DE PEPARATION 3.....51

INDEX

INDEX NUMERIQUE.....53

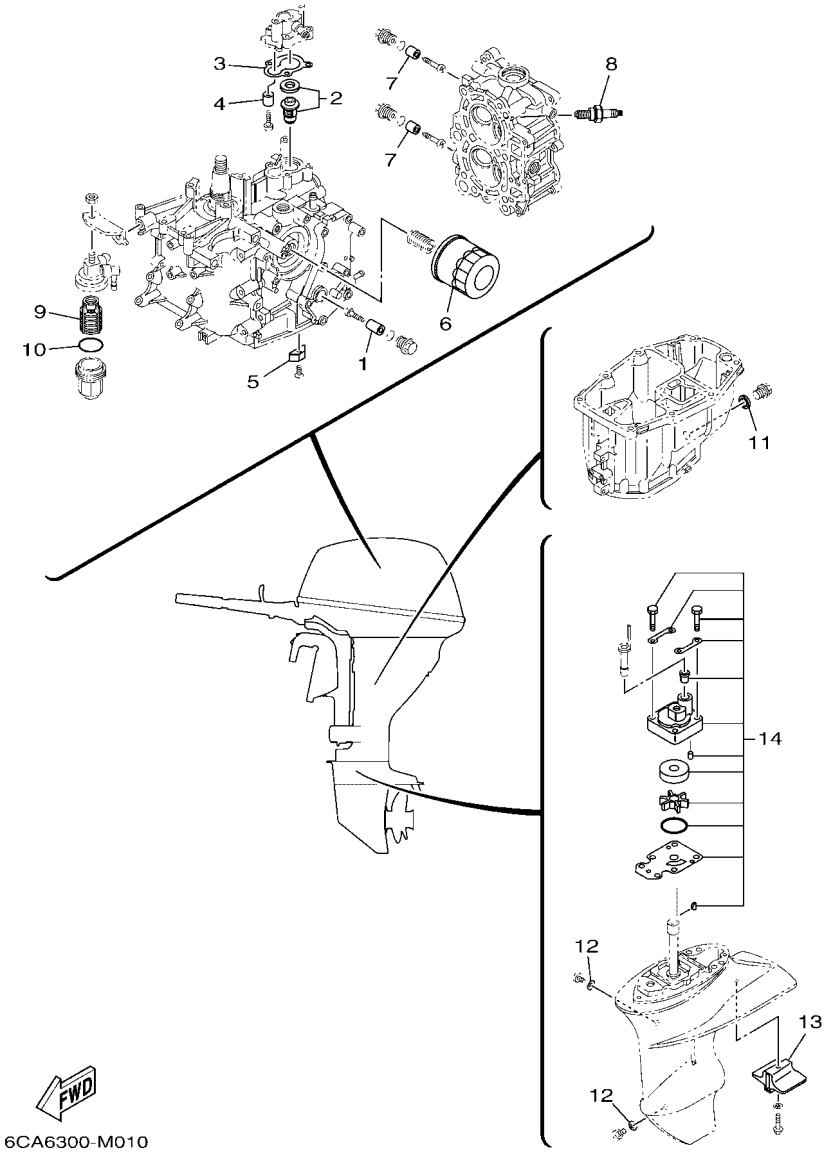

FIG. 1 SCHEDULED SERVICE PARTS — PIECES MAINTENANCE PERIODIQUE

REF. NO.	PART NO. N° PIECES	DESCRIPTION DESCRIPTION	MH	WH	E			REMARKS REMARQUES
1	6G8–11325–00	ANODE ANODE	1	1	1			
2	6AH–12411–00	THERMOSTAT THERMOSTAT	1	1	1			
3	6AH–12414–00	GASKET, COVER JOINT, COUVERCLE	1	1	1			
4	6G8–11325–00	ANODE ANODE	1	1	1			
5	6E5–11325–00	ANODE ANODE	1	1	1			
6	5GH–13440–60	ELEMENT ASSY, OIL CLEANER ELEMENT, FILTRE A HUILE	1	1	1			
7	6G8–11325–00	ANODE ANODE	2	2	2			
8	94702–00418	PLUG, SPARK (NGK DPR6EB-9) BOUGIE D,ALLUMAGE (NGK DPR6EB-	2	2	2			
9	61N–24563–10	ELEMENT, FILTER ELEMENT, FILTRE	1	1	1			
10	93210–32738	O-RING JOINT TORIQUE	1	1	1			
11	90430–14M09	GASKET JOINT	1	1	1			
12	90430–08003	GASKET JOINT	2	2	2			
13	6AH–45251–00	ANODE ANODE	1	1	1			
14	6AH–W0078–00	WATER PUMP REPAIR KIT KIT DE REPARATION DE LA POMPE	1	1	1			

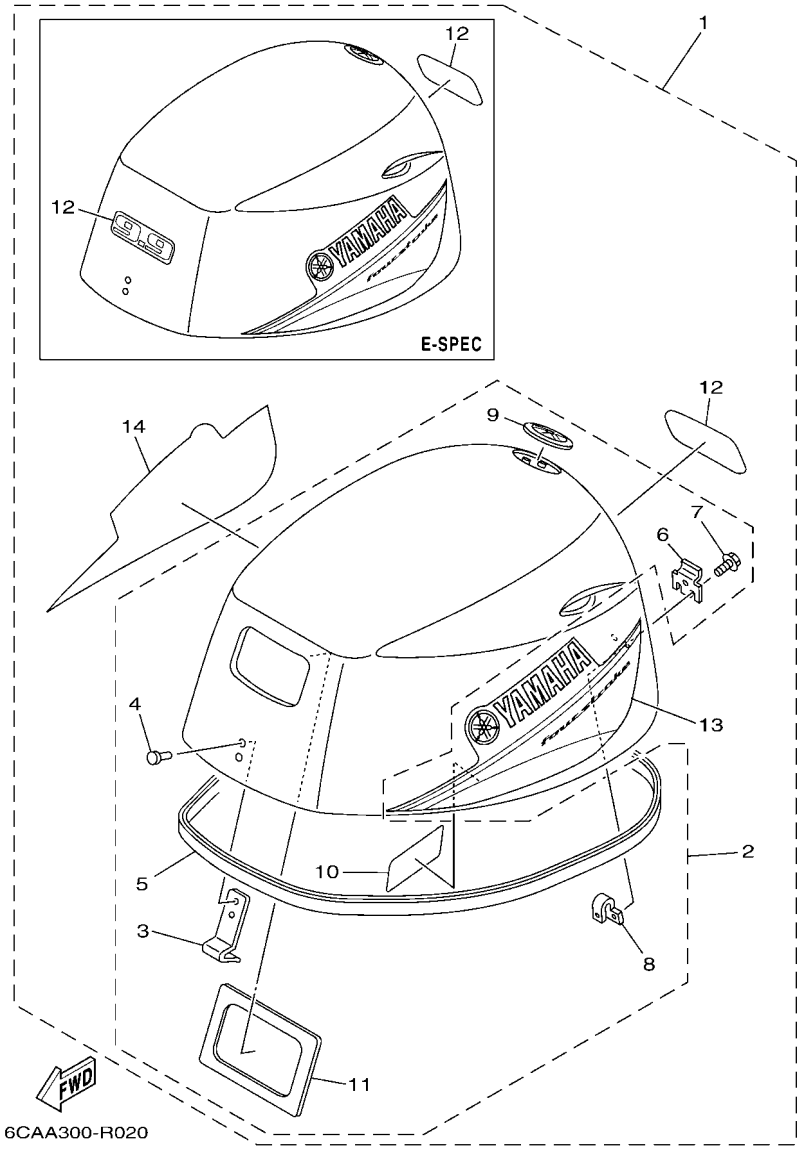

FIG. 2 TOP COWLING — CAPOT SUPERIEUR

REF. NO.	PART NO. N° PIECES	DESCRIPTION DESCRIPTION	MH	WH	E			REMARKS REMARQUES
1	6CA–42610–20	TOP COWLING ASSY CAPOT (ENS.)	1	1				
	6CA–42610–30	TOP COWLING ASSY CAPOT (ENS.)			1			
2	6CA–4261A–00	.TOP COWLING W/O GRAPHICS .CAPOT SUPERIEUR SANS GRAPHIQUE	1	1				
	6CA–4261A–10	.TOP COWLING W/O GRAPHICS .CAPOT SUPERIEUR SANS GRAPHIQUE			1			
3	6AH–42651–00	..HOOK ..CROCHET	1	1	1			
4	90266–06M02	..RIVET ..RIVET	2	2	2			
5	6AH–42615–00	..SEAL ..JOINT	1	1	1			
6	60R–42652–00	..HOOK ..CROCHET	1	1	1			
7	97595–05514	..BOLT, WITH WASHER ..VIS HEXAGONAL AVC RONDELLE	2	2	2			
8	6AH–42649–00	..HOLDER, CLAMP BAND ..SUPPORT, SANDOW DE SERRAGE	1	1	1			
9	6AH–42697–10	..TUNING FORK MARK ..MARQUE, YAMAHA	1	1	1			
10	6AH–42735–00	..PROTECTOR ..PROTECTEUR	1	1	1			
11	6AH–42656–00	..PROTECTOR, RUBBER SEAL ..PROTECTEUR, JOINT CAOUTCHOUC	1	1				
12	6EA–42677–V0	.GRAPHIC, FRONT .ADHESIF, AVANT	1	1				
	6EA–42677–V0	.GRAPHIC, FRONT .ADHESIF, AVANT			2			
13	6CA–42675–V0	.GRAPHIC, SIDE 1 .EMBLEME	1	1	1			
14	6CA–42676–V0	.GRAPHIC, SIDE 2 .EMBLEME	1	1	1			

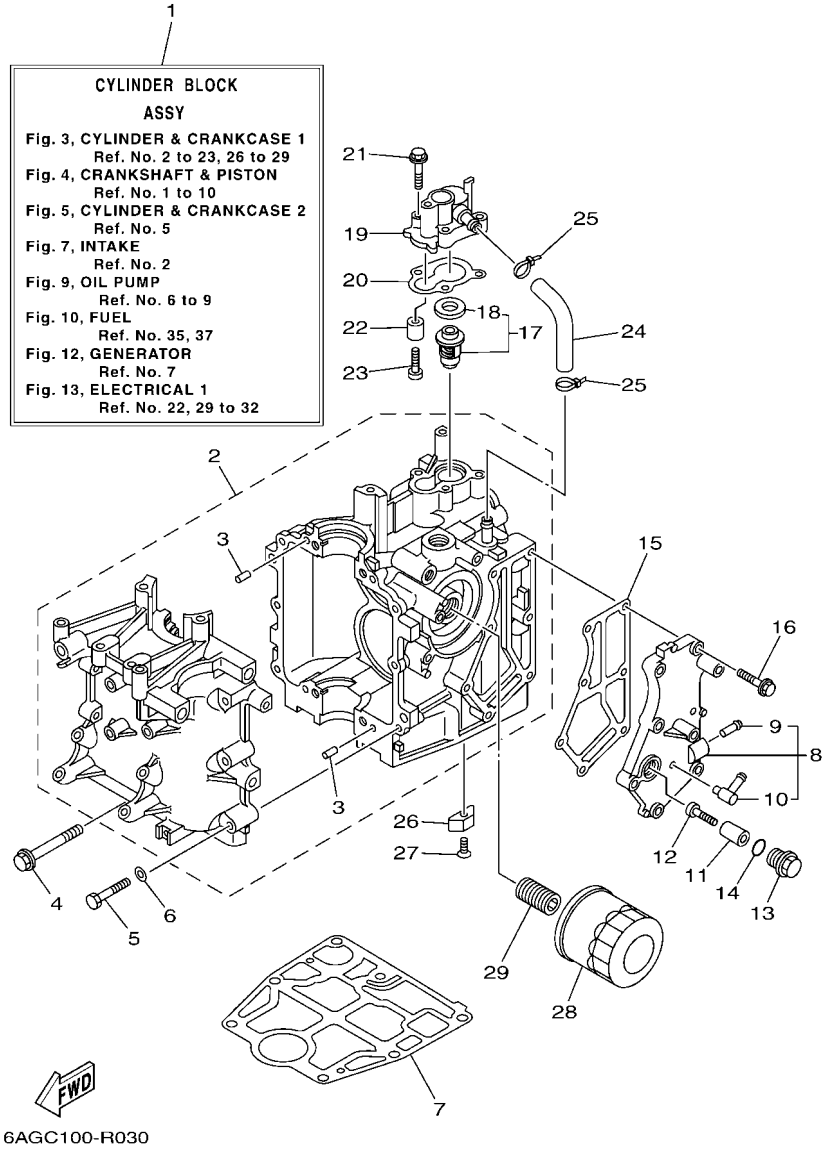

FIG. 3 CYLINDER & CRANKCASE 1 — CYLINDRE & CARTER 1

REF. NO.	PART NO. N° PIECES	DESCRIPTION DESCRIPTION	MH	WH	E			REMARKS REMARQUES
1	6AH–W009B–02–1S	CYLINDER BLOCK ASSY CYLINDRE GROUPE (ENS.)	1	1	1			
2	6AH–15100–00	CRANKCASE ASSY CARTER DE MOTEUR COMPLET	1	1	1			
3	93606–12019	.PIN, DOWEL .GOUPILLE	4	4	4			
4	90119–08093	BOLT, WITH WASHER BOULON, AVEC RONDELLE	4	4	4			
5	97013–06040	BOLT BOULON	6	6	6			
6	92903–06600	WASHER, PLATE RONDELLE, PLATE	6	6	6			
7	6AH–11351–10	GASKET, CYLINDER JOINT, D'EMBASE	1	1	1			
8	6AH–41113–01–1S	OUTER COVER, EXHAUST COUVERCLE, ECHAPPEMENT	1	1	1			
9	6E9–24378–00	.PIPE, JOINT 3 .DURITE RACCORDEMENT 3	1	1	1			
10	6H1–11372–00	.NIPPLE, HOSE .RACCORD, TUYAU	1	1	1			
11	6G8–11325–00	ANODE ANODE	1	1	1			
12	98980–05025	SCREW, BIND VIS, DE PRESSION	1	1	1			
13	6G8–11197–A0	PLUG, BLIND PLOT, BORGNE	1	1	1			
14	93210–13M63	O-RING JOINT TORIQUE	1	1	1			
15	6AH–41114–00	GASKET, EXHAUST OUTER COVER JOINT, COUVERCLE D'ECHAPPEMENT	1	1	1			
16	90119–06MA3	BOLT, WITH WASHER BOULON, AVEC RONDELLE	7	7	7			
17	6AH–12411–00	THERMOSTAT THERMOSTAT	1	1	1			
18	688–12412–00	.SEAL, THERMOSTAT .JOINT, THERMOSTAT	1	1	1			
19	6AH–12413–00–1S	COVER, THERMOSTAT COUVERCLE, THERMOSTAT	1	1	1			
20	6AH–12414–00	GASKET, COVER JOINT, COUVERCLE	1	1	1			
21	90119–06MA3	BOLT, WITH WASHER BOULON, AVEC RONDELLE	3	3	3			
22	6G8–11325–00	ANODE ANODE	1	1	1			
23	98980–05025	SCREW, BIND VIS, DE PRESSION	1	1	1			
24	6AH–12481–00	PIPE 1 DURITE 1	1	1	1			
25	90465–11M10	CLAMP BRIDE	2	2	2			
26	6E5–11325–00	ANODE ANODE	1	1	1			
27	98780–04016	SCREW, FLAT HEAD VIS A TETE FRAISEE	1	1	1			

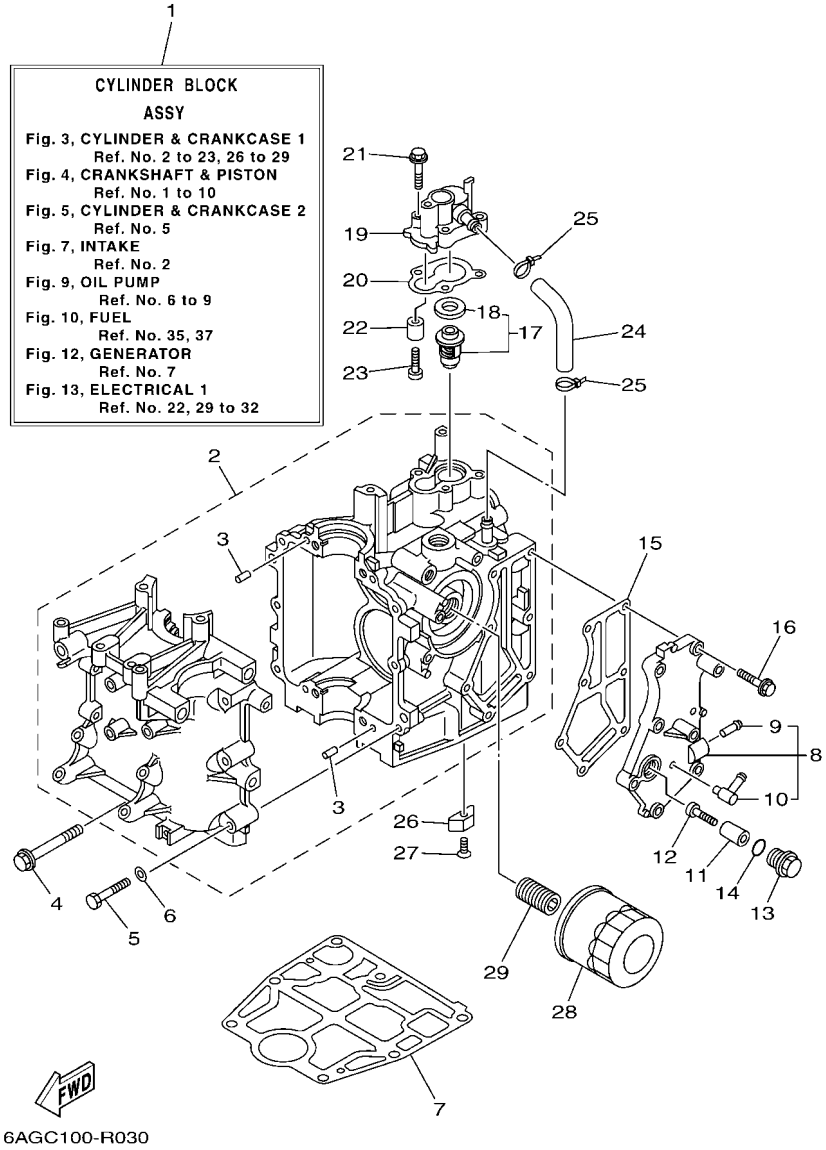

FIG. 3 CYLINDER & CRANKCASE 1 — CYLINDRE & CARTER 1

REF. NO.	PART NO. N° PIECES	DESCRIPTION DESCRIPTION	MH	WH	E			REMARKS REMARQUES
28	5GH–13440–60	ELEMENT ASSY, OIL CLEANER ELEMENT, FILTRE A HUILE	1	1	1			
29	6C5–12858–00	BOLT, UNION BOULON, RACCORD	1	1	1			

FIG. 4 CRANKSHAFT & PISTON — VILEBREQUIN & PISTON

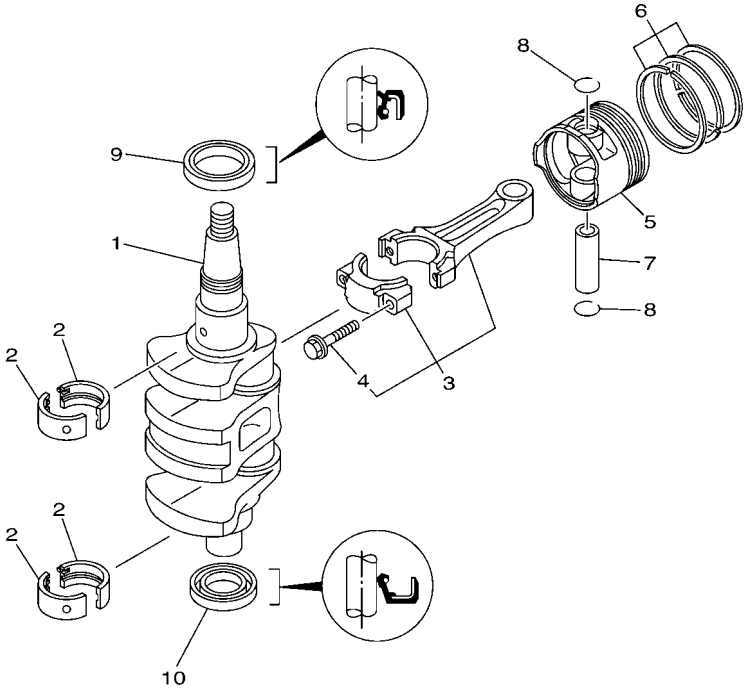

6AH1100-F030

REF. NO.	PART NO. N° PIECES	DESCRIPTION DESCRIPTION	MH	WH	E			REMARKS REMARQUES
1	6AH–11411–00	CRANKSHAFT VILEBREQUIN COMPLET	1	1	1			
2	6AH–11416–00	PLANE BEARING, CRANKSHAFT 1 COUSSINET DE VILEBREQUIN 1	4	4	4			UR BROWN UR BROWN
	6AH–11416–10	PLANE BEARING, CRANKSHAFT 1 COUSSINET DE VILEBREQUIN 1	4	4	4			UR BLACK UR BLACK
	6AH–11416–20	PLANE BEARING, CRANKSHAFT 1 COUSSINET DE VILEBREQUIN 1	4	4	4			UR BLUE UR BLUE
3	6AH–11650–10	CONNECTING ROD ASSY BIELLE COMPLETTE	2	2	2			
4	6AH–11654–00	.BOLT, CONNECTING ROD .BOULON, BIELLE	2	2	2			
5	6AH–11631–00	PISTON (STD) PISTON (STD)	2	2	2			
	6AH–11635–00	PISTON (0.25MM O/S) PISTON (0.25MM O/S)	2	2	2			AP AP
	6AH–11636–00	PISTON (0.50MM O/S) PISTON (0.50MM O/S)	2	2	2			AP AP
6	6AH–11603–00	PISTON RING SET (STD) JEU DE SEGMENTS (STD)	2	2	2			
	6AH–11604–00	PISTON RING SET (0.25MM O/S) JEU DE SEGMENTS (0.25MM O/S)	2	2	2			AP AP
	6AH–11605–00	PISTON RING SET (0.50MM O/S) JEU DE SEGMENTS (0.50MM O/S)	2	2	2			AP AP
7	137–11633–10	PIN, PISTON AXE, PISTON	2	2	2			
8	93450–17129	CIRCLIP CIRCLIP, TYPE S	4	4	4			
9	93102–37004	OIL SEAL JOINT SPY	1	1	1			
10	93102–25014	OIL SEAL JOINT SPY	1	1	1			

FIG. 5 CYLINDER & CRANKCASE 2 — CYLINDRE & CARTER 2

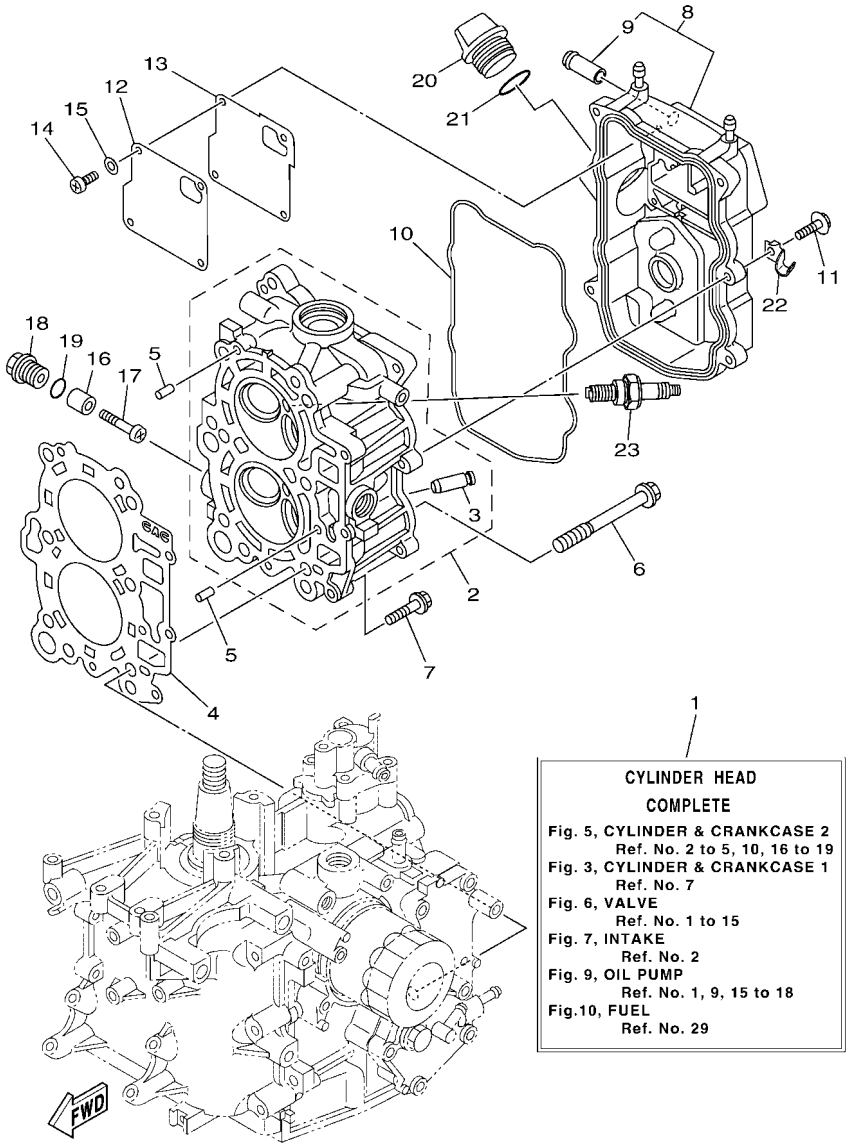

REF. NO.	PART NO. N° PIECES	DESCRIPTION DESCRIPTION	MH	WH	E			REMARKS REMARQUES
1	6AG–W009A–01–1S	CYLINDER HEAD COMPLETE CULASSE (ENS.)	1	1	1			
2	6AH–11111–10–1S	HEAD, CYLINDER 1 CULASSE	1	1	1			
3	6AH–11133–10	.GUIDE, VALVE 1 .GUIDE, SOUPAPE 1	4	4	4			
4	6AG–11181–10	GASKET, CYLINDER HEAD 1 JOINT, DE CULASSE 1	1	1	1			
5	93606–12019	PIN, DOWEL GOUPILLE	2	2	2			
6	90105–09006	BOLT, FLANGE BOULON	6	6	6			
7	90119–06MA3	BOLT, WITH WASHER BOULON, AVEC RONDELLE	3	3	3			
8	6AH–11191–00–1S	COVER, CYLINDER HEAD 1 COUVERCLE, CULASSE 1	1	1	1			
9	6AH–11372–00	.NIPPLE, HOSE .RACCORD, TUYAU	1	1	1			
10	6AH–11356–00	SEAL, CYLINDER 2 JOINT, SPY CYLINDRE	1	1	1			
11	97595–06520	BOLT, WITH WASHER VIS HEXAGONAL AVC RONDELLE	5	5	5			
12	6AH–11168–00	COVER, BREATHER COUVERCLE, RENIFLARD	1	1	1			
13	6AH–11169–00	GASKET, BREATHER COVER JOINT, COUVERCLE DE RENIFLARD	1	1	1			
14	98507–04010	SCREW, PAN HEAD VIS, TETE TRONCONIQUE	4	4	4			
15	92907–04600	WASHER RONDELLE	4	4	4			
16	6G8–11325–00	ANODE ANODE	2	2	2			
17	98980–05025	SCREW, BIND VIS, DE PRESSION	2	2	2			
18	6G8–11197–A0	PLUG, BLIND PLOT, BORGNE	2	2	2			
19	93210–13M63	O-RING JOINT TORIQUE	2	2	2			
20	6G8–15363–00	PLUG, OIL PLOT, HUILE	1	1	1			
21	93210–24M79	O-RING JOINT TORIQUE	1	1	1			
22	90465–08059	CLAMP BRIDE	1	1	1			
23	94702–00418	PLUG, SPARK (NGK DPR6EB-9) BOUGIE D,ALLUMAGE (NGK DPR6EB-	2	2	2			

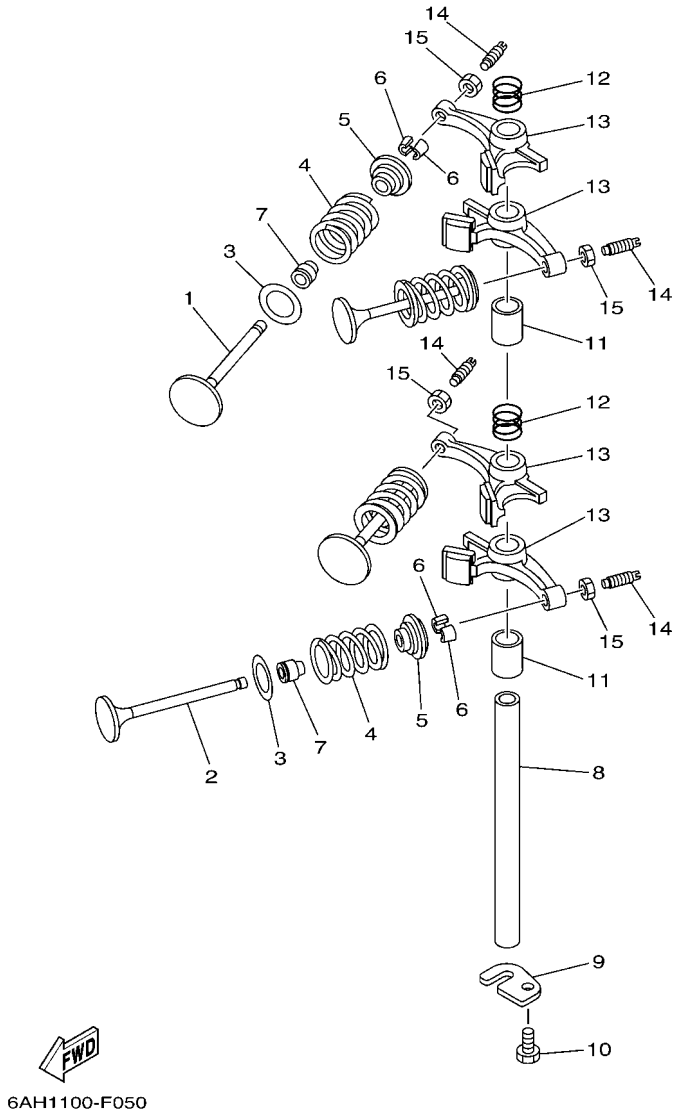

FIG. 6 VALVE SOUPAPE

REF. NO.	PART NO. N° PIECES	DESCRIPTION DESCRIPTION	MH	WH	E			REMARKS REMARQUES
1	6AH–12111–00	VALVE, INTAKE SOUPAPE, ADMISSION	2	2	2			
2	6AH–12121–10	VALVE, EXHAUST SOUPAPE, ECHAPPEMENT	2	2	2			
3	62Y–12116–00	SEAT, VALVE SPRING SIEGE, RESSORT DE SOUPAPE	4	4	4			
4	3YF–12113–00	SPRING, VALVE INNER RESSORT DE SOUPAPE, INTERNE	4	4	4			
5	30X–12117–00	RETAINER, VALVE SPRING BUTEE DE RESSORT DE SOUPAPE	4	4	4			
6	30X–12118–00	LOCK, VALVE SPRING RETAINER FRAISE, SOUPAPE	8	8	8			
7	51Y–12119–00	SEAL, VALVE STEM JOINT, QUEUE DE SOUPAPE	4	4	4			
8	66M–12146–00	SHAFT, ROCKER AXE, CULBUTEUR	1	1	1			
9	6AH–12279–00	PLATE PLAQUE	1	1	1			
10	97013–06012	BOLT BOULON	1	1	1			
11	90387–13006	COLLAR COLLERETTE	2	2	2			
12	90501–120A5	SPRING, COMPRESSION RESSORT, COMPRESSION	2	2	2			
13	6AH–12151–00	ARM, VALVE ROCKER CULBUTEUR	4	4	4			
14	64J–12159–00	SCREW, VALVE ADJUSTING VIS, REGLAGE DE SOUPAPE	4	4	4			
15	62Y–12158–00	NUT, LOCK CONTRE-ECROU	4	4	4			

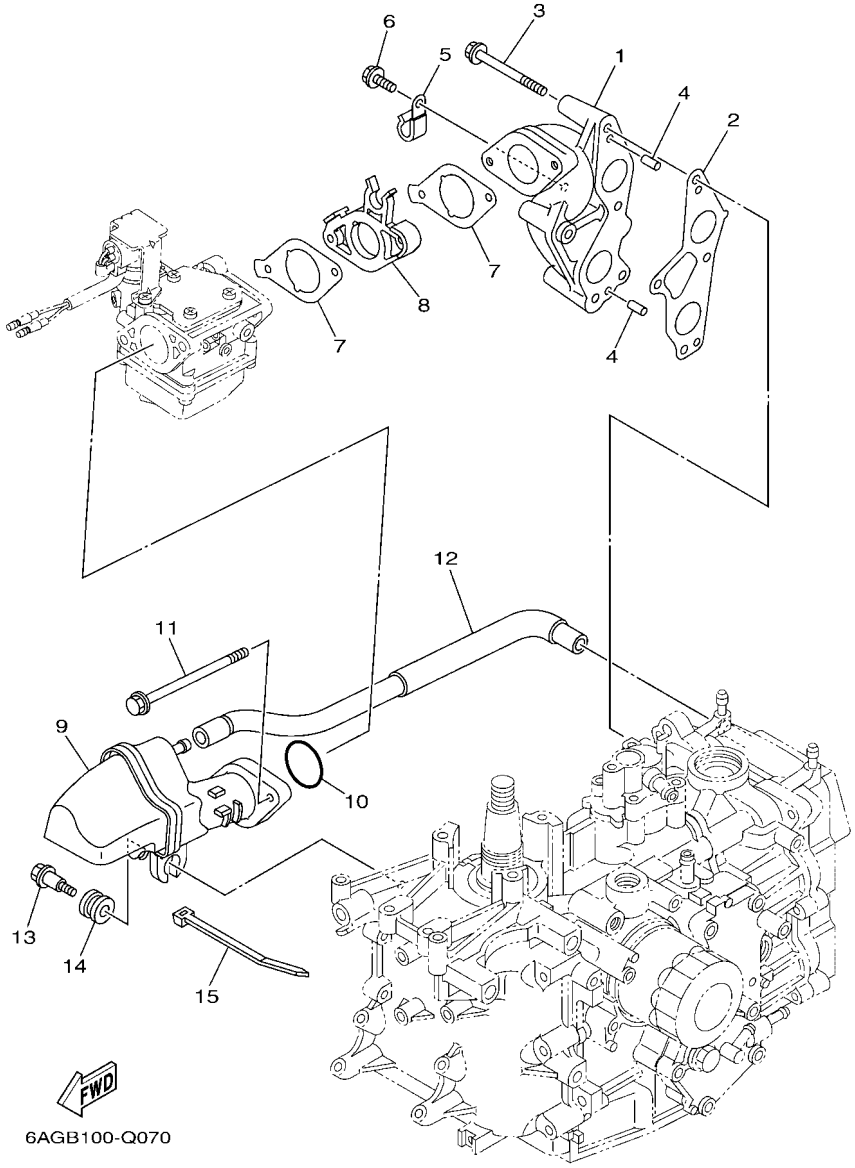

FIG. 7 INTAKE — ADMISSION

REF. NO.	PART NO. N° PIECES	DESCRIPTION DESCRIPTION	MH	WH	E			REMARKS REMARQUES
1	6AH–13641–00–94	MANIFOLD, INTAKE 1 TUBULURE, ADMISSION 1	1	1	1			
2	6AH–13645–00	GASKET, MANIFOLD 1 JOINT, TUBULURE 1	1	1	1			
3	97595–06555	BOLT, WITH WASHER VIS HEXAGONAL AVC RONDELLE	4	4	4			
4	91690–50014	PIN, SPRING AGRAFFE	2	2	2			
5	90465–08M83	CLAMP BRIDE	2	2	2			
6	97595–06512	BOLT, WITH WASHER VIS HEXAGONAL AVC RONDELLE	2	2	2			
7	6AH–13646–00	GASKET, MANIFOLD 2 JOINT, TUBULURE 2	2	2	2			
8	6AH–14271–00	INSULATOR ISOLATEUR	1	1	1			
9	6AH–14440–00	SILENCER ASSY, INTAKE SIENCIEUX D'ADMISSION	1	1	1			
10	93210–35M86	O-RING JOINT TORIQUE	1	1	1			
11	95895–06100	BOLT, FLANGE BOULON	2	2	2			
12	6AH–15373–00	PIPE, BREATHER DURITE DE RENIFLARD	1	1	1			
13	90109–06MA1	BOLT BOULON	1	1	1			
14	90480–16616	GROMMET PASSE-FIL	1	1	1			
15	90465–13M18	CLAMP BRIDE	1	1	1			

FIG. 8 CARBURETOR CARBURATEUR

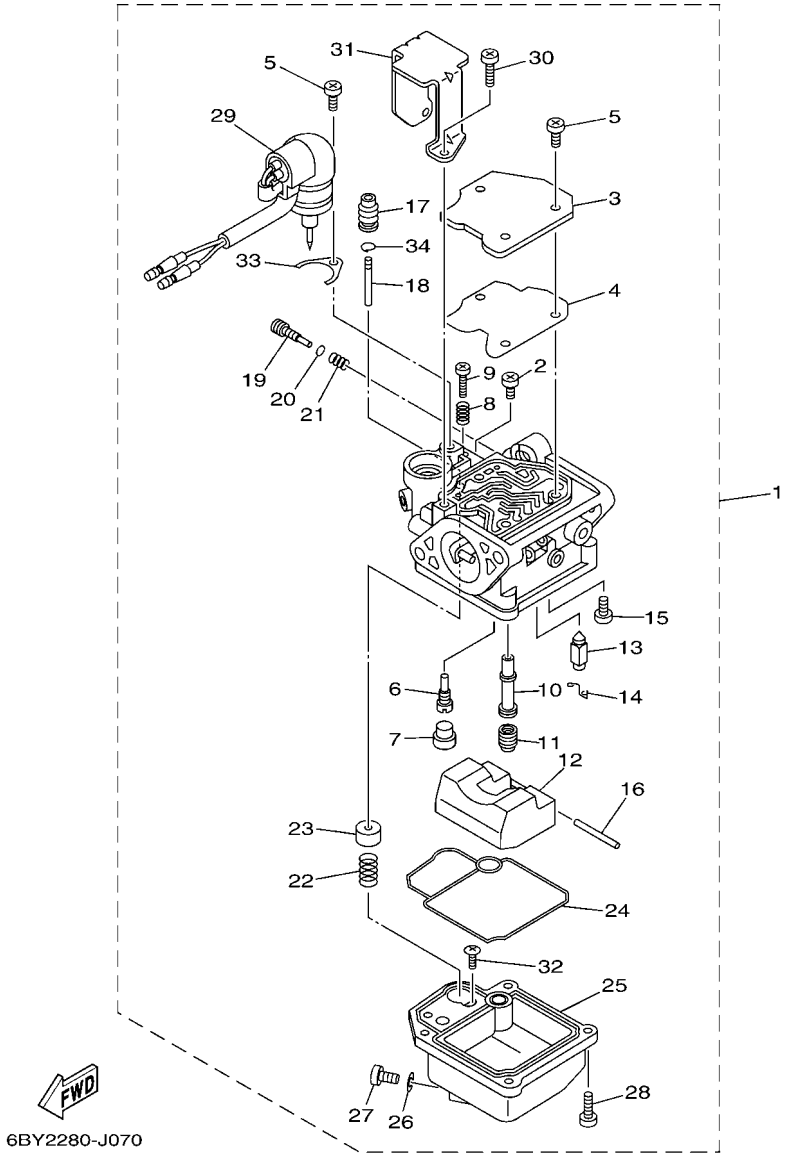

REF. NO.	PART NO. N° PIECES	DESCRIPTION DESCRIPTION	MH	WH	E			REMARKS REMARQUES
1	6AG–14301–B0	CARBURETOR ASSY 1 CARBURATEUR COMPLET 1	1					
	6AG–14301–F0	CARBURETOR ASSY 1 CARBURATEUR COMPLET 1		1	1			
2	98580–04006	.SCREW, PAN HEAD .VIS	1	1	1			
3	65W–14572–00	.PLATE .PLAQUE	1	1	1			
4	65W–14126–10	.GASKET .JOINT	1	1	1			
5	97980–04110	.SCREW, WITH WASHER .VIS, AVEC RONDELLE	4	4	4			
6	6AG–14948–02	.JET (#38) .GICLEUR (#38)	1					FOR 6AG-14301-B0 FOR 6AG-14301-B0
	6AH–14948–02	.JET (#38) .GICLEUR (#38)		1	1			FOR 6AG-14301-F0 FOR 6AG-14301-F0
7	679–14966–00	.RUBBER CAP .CAPUCHON	1	1	1			
8	90501–10326	.SPRING, COMPRESSION .RESSORT, COMPRESSION	1	1	1			
9	63V–14523–00	.SCREW, STOP .VIS, BUTEE	1	1	1			
10	6AH–14947–20	.JET, NEEDLE .GICLEUR DE STARTER	1	1	1			
11	676–14943–19	.JET, MAIN (#80) .GICLEUR, PRINCIPAL (#80)	1	1	1			
12	6AH–14985–00	.FLOAT .FLOTTEUR	1	1	1			
13	6AH–14546–00	.VALVE, NEEDLE .POINTEAU	1	1	1			
14	633–14159–00	.CLIP .JONC	1	1	1			
15	98580–04008	.SCREW, PAN HEAD .VIS	1	1	1			
16	6H4–14548–00	.PIN, FLOAT ARM .AXE, BRAS DE FLOTTEUR	1	1	1			
17	65W–14373–02	.COVER, PLUNGER CAP .COUVERCLE DE PLONGEUR	1	1	1			
18	6AH–14379–00	.ROD, STARTER .TRINGLE, STARTER	1	1	1			
19	6AH–14923–20	.SCREW, PILOT .VIS, RALENTI	1	1	1			
20	67F–14398–10	.O-RING .JOINT TORIQUE	1	1	1			
21	67C–14555–00	.SPRING .RESSORT	1	1	1			
22	65W–14335–00	.SPRING, PLUNGER .RESSORT, PLONGEUR	1	1	1			
23	6AH–14371–00	.PLUNGER, STARTER .PLONGEUR, STARTER	1	1	1			
24	6AH–14384–00	.GASKET, FLOAT CHAMBER .JOINT, CUVE DE FLOTTEUR	1	1	1			
25	6AH–14980–00	.BODY, FLOAT CHAMBER .CORPS, CUVE DE FLOTTEUR	1	1	1			

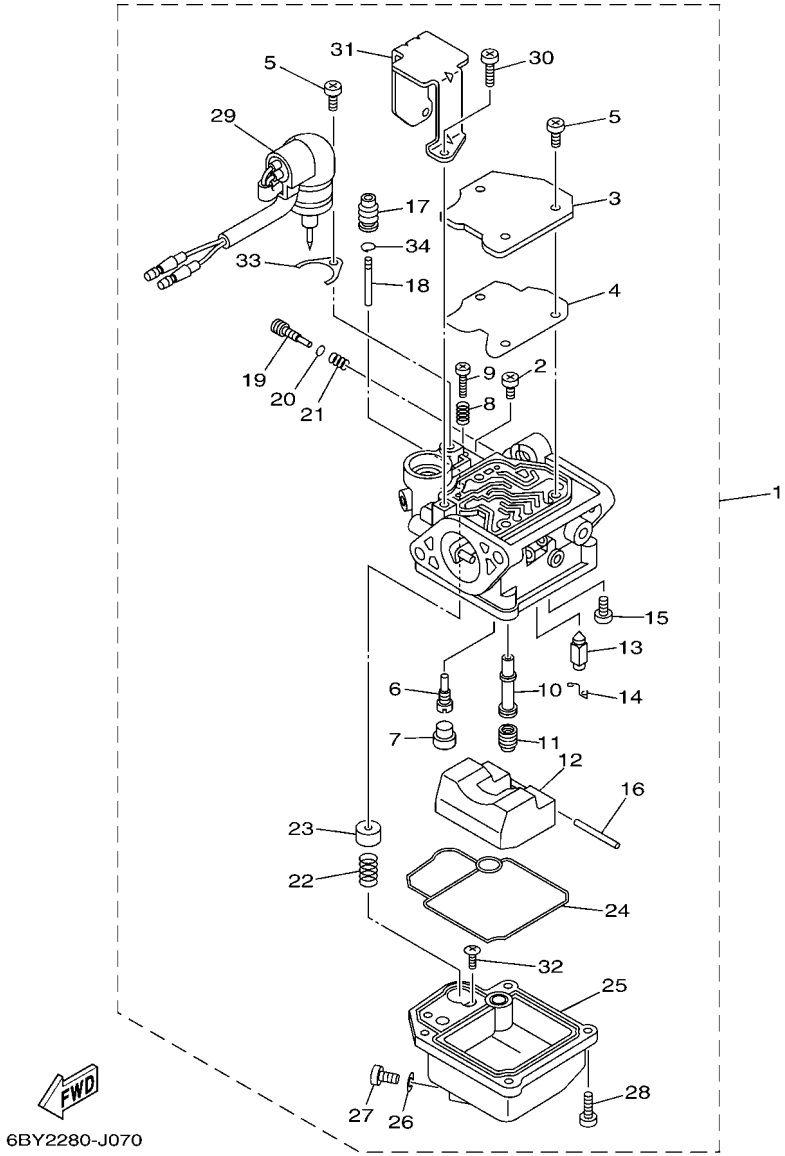

FIG. 8 CARBURETOR — CARBURATEUR

REF. NO.	PART NO. N° PIECES	DESCRIPTION DESCRIPTION	MH	WH	E			REMARKS REMARQUES
26	65W–14398–00	.GASKET .JOINT	1	1	1			
27	65W–14992–00	.SCREW, DRAIN .BOUCHON, PURGE	1	1	1			
28	97980–04114	.SCREW, WITH WASHER .VIS, AVEC RONDELLE	4	4	4			
29	6AH–14380–01	.PRIME STARTER ASSY .STARTER AUTOMATIQUE	1					FOR 6AG-14301-B0 FOR 6AG-14301-B0
	6AH–14380–11	.PRIME STARTER ASSY .STARTER AUTOMATIQUE		1	1			FOR 6AG-14301-F0 FOR 6AG-14301-F0
30	97980–04108	.SCREW, WITH WASHER .VIS, AVEC RONDELLE	2	2	2			
31	6AH–14346–00	.PLATE .PLAQUE	1	1	1			
32	67C–14567–00	.SCREW .VIS	1	1	1			
33	65W–14346–00	.PLATE .PLAQUE	1	1	1			
34	65W–1439G–00	.CLIP 1 .JONC 1	1	1	1			

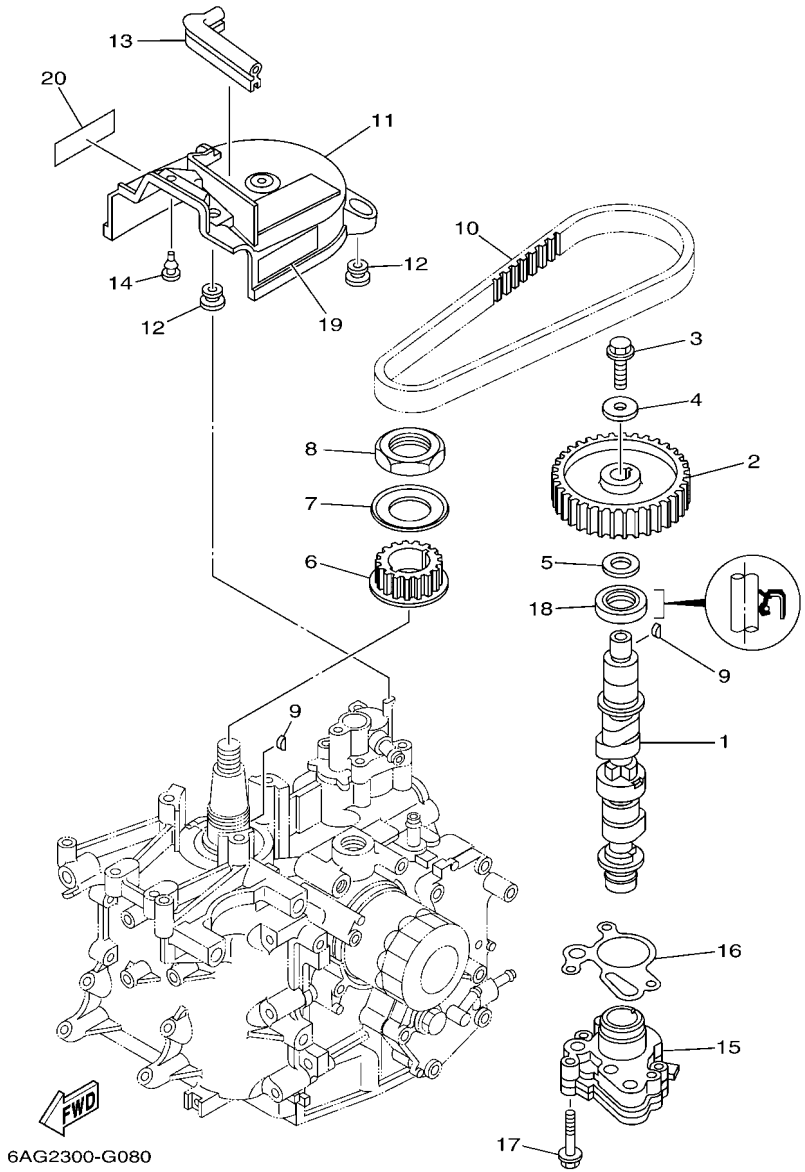

FIG. 9 OIL PUMP — POMPE A HUILE

REF. NO.	PART NO. N° PIECES	DESCRIPTION DESCRIPTION	MH	WH	E			REMARKS REMARQUES
1	6AG–12170–00	CAMSHAFT ASSY 1 ENS ARBRE A CAMES 1	1	1	1			
2	6AH–11537–00	GEAR, DRIVEN PIGNON SECONDAIRE	1	1	1			
3	90105–081A7	BOLT, FLANGE BOULON	1	1	1			
4	90201–08784	WASHER, PLATE RONDELLE, PLATE	1	1	1			
5	90201–15423	WASHER, PLATE RONDELLE, PLATE	1	1	1			
6	6AH–11536–00	GEAR, DRIVE ENGRENAGE, MENANT	1	1	1			
7	6AH–11557–00	WASHER 1 RONDELLE 1	1	1	1			
8	90170–30003	NUT ECROU	1	1	1			
9	90280–03M01	KEY, WOODRUFF CLAVETTE, DEMI-LUNE	2	2	2			
10	6AH–46241–00	BELT COURROIE TRAPEZOIDALE	1	1	1			
11	6AH–46297–00	COVER, DUST COUVERCLE, POUSSIERE	1	1	1			
12	90480–10627	GROMMET PASSE-FIL	3	3	3			
13	6AH–42617–00	DAMPER, FORM BOURRELET, CAOUTCHOUC	1	1	1			
14	90480–06M19	GROMMET PASSE-FIL	1	1	1			
15	6AH–13300–00	OIL PUMP ASSY POMPE A HUILE COMPLETE	1	1	1			
16	6AH–13329–10	GASKET, PUMP COVER JOINT, COUVERCLE DE POMPE	1	1	1			
17	90105–06035	BOLT, FLANGE BOULON	3	3	3			
18	93102–22010	OIL SEAL JOINT SPY	1	1	1			
19	6EE–81994–40	LABEL, SAFETY ETIQUETTE, SECURITE	1	1	1			
20	6EE–81994–50	LABEL, SAFETY ETIQUETTE, SECURITE	1	1	1			

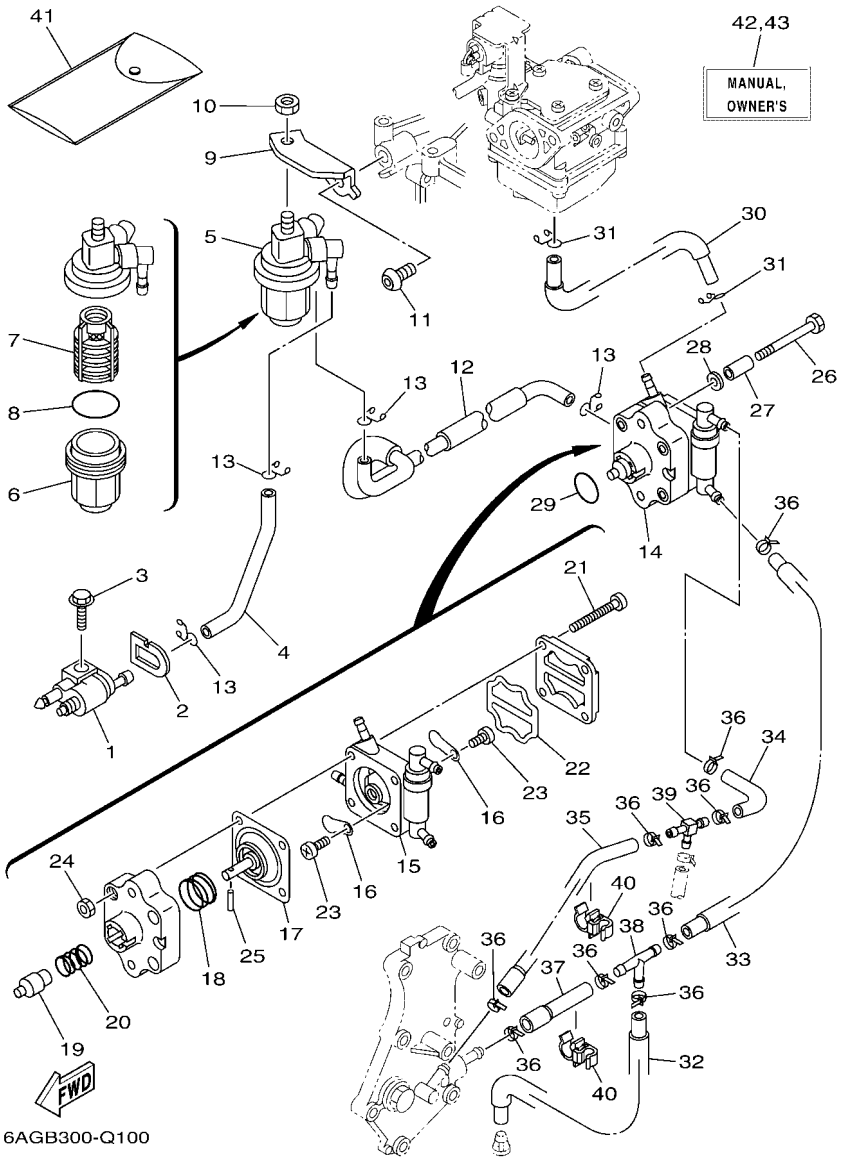

FIG. 10 FUEL — CARBURANT

REF. NO.	PART NO. N° PIECES	DESCRIPTION DESCRIPTION	MH	WH	E			REMARKS REMARQUES
1	6G1–24304–10	FUEL PIPE JOINT COMP. 1 DURITE RACCORDEMT. A ESSENCE	1	1	1			
2	61N–24329–00	SEAL JOINT	1	1	1			
3	95895–06020	BOLT, FLANGE BOULON	1	1	1			
4	6AH–24311–00	PIPE, FUEL 1 DURITE A ESSENCE	1	1	1			
5	61N–24560–10	FILTER ASSY ENS FILTRE	1	1	1			
6	61N–24521–00	.CUP, FILTER .CUVETTE, FILTRE	1	1	1			
7	61N–24563–10	.ELEMENT, FILTER .ELEMENT, FILTRE	1	1	1			
8	93210–32738	.O-RING .JOINT TORIQUE	1	1	1			
9	6AH–24566–00	BRACKET, FILTER SUPPORT, FILTRE	1	1	1			
10	95380–08600	NUT ECROU	1	1	1			
11	90111–08055	BOLT,HEX. SOCKET BUTTON BOULON	1	1	1			
12	6AH–24312–00	PIPE 2 DURITE 2	1	1	1			
13	90467–09M17	CLIP JONC	4	4	4			
14	6AH–24410–00	FUEL PUMP ASSY POMPE A ESSENCE	1	1	1			
15	6AH–24413–00	.BODY 2 .CORPS 2	1	1	1			
16	6A0–24421–01	.VALVE, CHECK .SOUPAPE, RETENUE	2	2	2			
17	66M–24411–11	.DIAPHRAGM .DIAPHRAGME	1	1	1			
18	66M–24423–00	.SPRING, DIAPHRAGM .RESSORT, DIAPHRAGME	1	1	1			
19	66M–13131–10	.PLUNGER .PLONGEUR	1	1	1			
20	66M–24454–00	.SPRING .RESSORT	1	1	1			
21	66M–24444–00	.SCREW .VIS	4	4	4			
22	66M–24471–01	.DIAPHRAGM .DIAPHRAGME	1	1	1			
23	6E7–14325–00	.SCREW, PAN HEAD .VIS TETE CONIQUE	2	2	2			
24	95380–04600	.NUT .ECROU	4	4	4			
25	66M–24374–00	.PIN .GOUPILLE	1	1	1			
26	90101–06032	BOLT BOULON	2	2	2			
27	90387–06M17	COLLAR COLLERETTE	2	2	2			

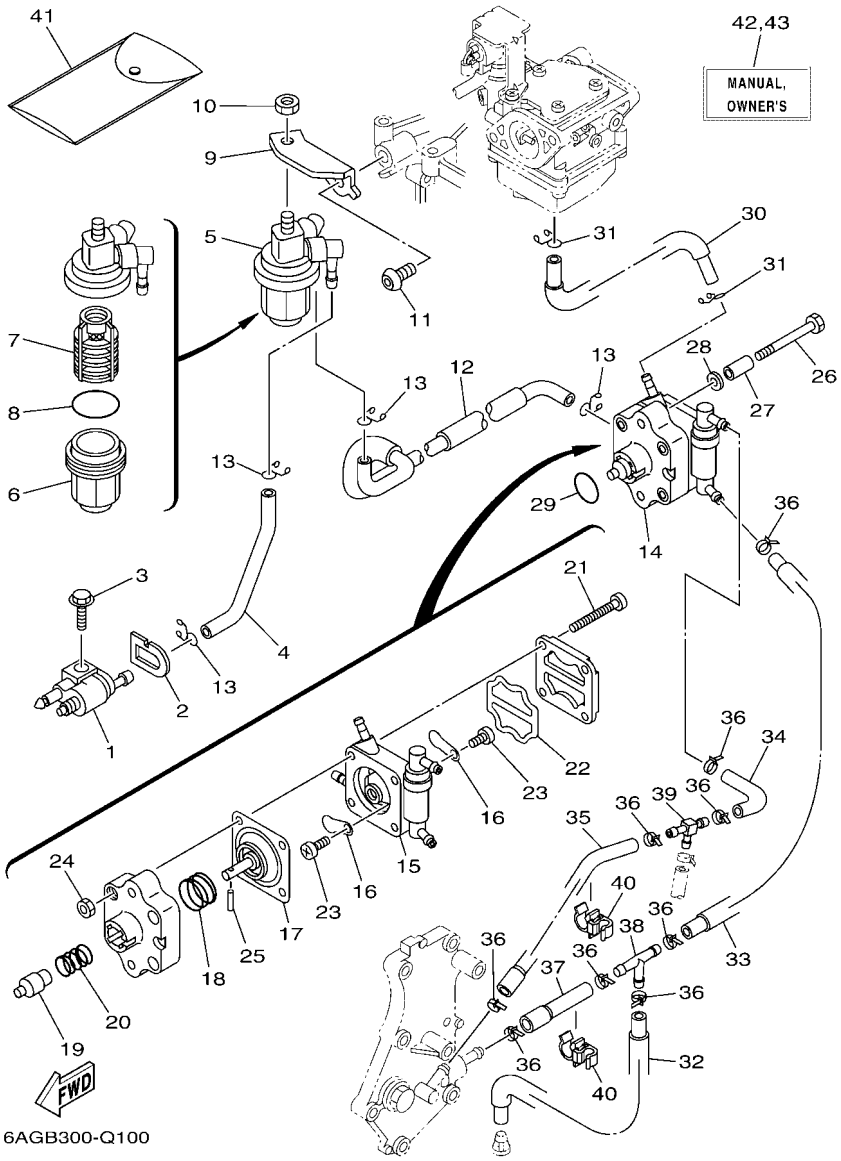

FIG. 10 FUEL — CARBURANT

REF. NO.	PART NO. N° PIECES	DESCRIPTION DESCRIPTION	MH	WH	E			REMARKS REMARQUES
28	90201–06106	WASHER, PLATE RONDELLE, PLATE	2	2	2			
29	93210–20M65	O-RING JOINT TORIQUE	1	1	1			
30	6AH–24313–00	PIPE 3 DURITE 3	1	1	1			
31	90467–09M17	CLIP JONC	2	2	2			
32	6AH–24321–00	PIPE 10 DURITE 10	1	1	1			
33	6AH–24322–00	PIPE 11 DURITE 11	1	1	1			
34	90445–09026	HOSE (L68) DURITE (L68)	1	1	1			
35	6AH–24323–00	PIPE 12 DURITE 12	1	1	1			
36	90465–11M10	CLAMP BRIDE	9	9	9			
37	6AH–24324–00	PIPE 13 DURITE 13	1	1	1			
38	688–24378–00	PIPE, JOINT 3 DURITE RACCORDEMENT 3	1	1	1			
39	6C5–24378–00	PIPE, JOINT 3 DURITE RACCORDEMENT 3	1	1	1			
40	90464–09018	CLAMP BRIDE	2	2	2			
41	62Y–28100–00	TOOL KIT TROUSSE A OUTILS	1	1	1			AP AP
42	6AG–28199–7B–E0	MANUAL,OWNER'S MANUEL D'UTILISATION	1	1	1			UR (E) UR (E)
	6AG–28199–7B–F0	MANUAL,OWNER'S MANUEL D'UTILISATION	1	1	1			UR (F) UR (F)
	6AG–28199–7B–S0	MANUAL,OWNER'S MANUEL D'UTILISATION	1	1	1			UR (ES) UR (ES)
	6AG–28199–7B–G0	MANUAL,OWNER'S MANUEL D'UTILISATION	1	1	1			UR (D) UR (D)
	6AG–28199–7B–D0	MANUAL,OWNER'S MANUEL D'UTILISATION	1	1	1			UR (NL) UR (NL)
	6AG–28199–7B–H0	MANUAL,OWNER'S MANUEL D'UTILISATION	1	1	1			UR (I) UR (I)
43	6AG–28199–8B–K0	MANUAL,OWNER'S MANUEL D'UTILISATION	1	1	1			UR (DK) UR (DK)
	6AG–28199–8B–R0	MANUAL,OWNER'S MANUEL D'UTILISATION	1	1	1			UR (GR) UR (GR)
	6AG–28199–8B–P0	MANUAL,OWNER'S MANUEL D'UTILISATION	1	1	1			UR (P) UR (P)
	6AG–28199–8B–N0	MANUAL,OWNER'S MANUEL D'UTILISATION	1	1	1			UR (N) UR (N)
	6AG–28199–8B–M0	MANUAL,OWNER'S MANUEL D'UTILISATION	1	1	1			UR (S) UR (S)
	6AG–28199–8B–L0	MANUAL,OWNER'S MANUEL D'UTILISATION	1	1	1			UR (SF) UR (SF)

FIG. 11 STARTER DEMARREUR

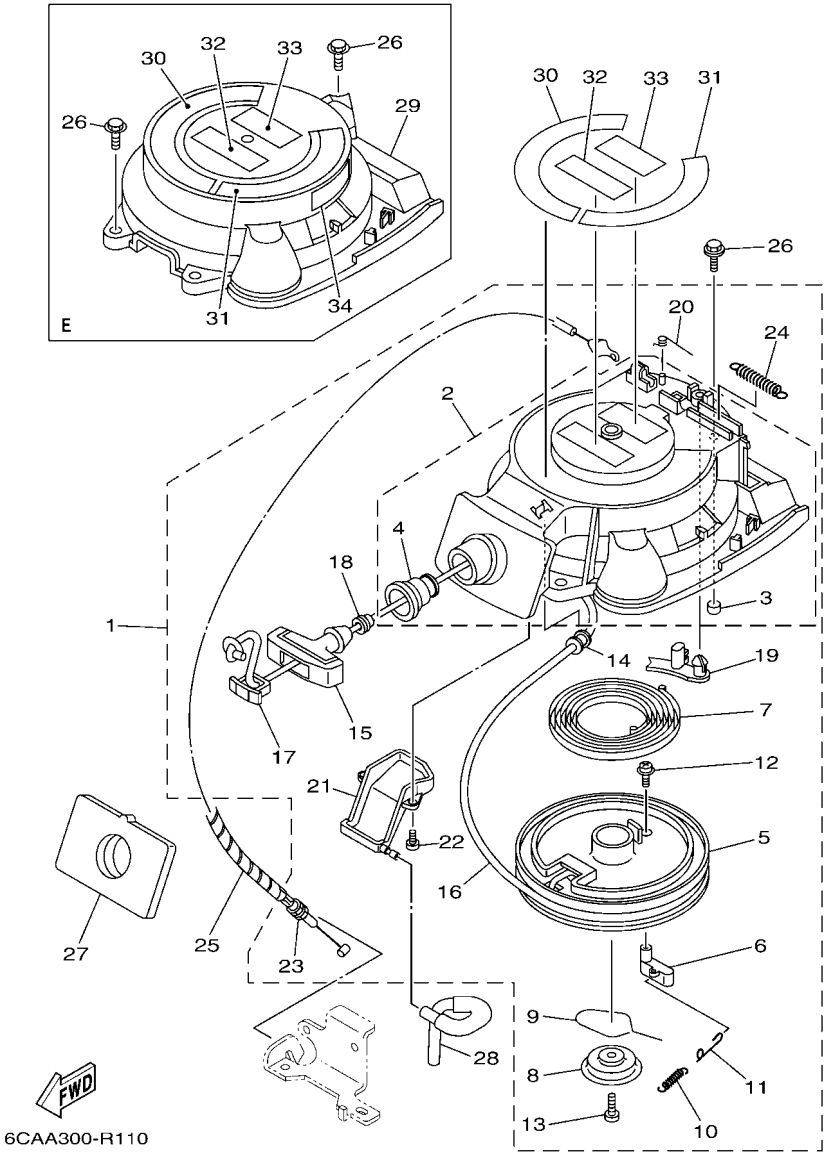

*1:CUT FROM 50M ROLLS,PART NO.90890-44373,CUTTING LENGTH 1.8M

*1:A PRELEVER SUR BOBINE 50M ,REFERENCE 90890-44373, LONGUEUR DE COUPE 1.8M

REF. NO.	PART NO. N° PIECES	DESCRIPTION DESCRIPTION	MH	WH	E			REMARKS REMARQUES
1	6AH–15710–01	STARTER ASSY DEMARREUR COMPLET	1	1				
2	6AH–15711–01	.CASE, STARTER .CARTER DE DEMARREUR	1	1				
3	6BL–15764–00	..COLLAR 1 ..COLLERETTE 1	3	3				
4	6AH–15795–00	..GUIDE, ROPE ..GUIDE DE CABLE	1	1				
5	63V–15714–00	.DRUM, SHEAVE .TAMBOUR, POULIE	1	1				
6	6AH–15741–10	.PAWL, DRIVE .CLIQUET, ENTRAINEMENT	1	1				
7	63V–15713–00	.SPRING, STARTER .RESSORT DE DEMARREUR	1	1				
8	68T–15716–00	.PLATE, DRIVE .PLAQUE, ENTRAINEMENT	1	1				
9	63V–15705–01	.SPRING, DRIVE PAWL .RESSORT DE CLIQUET	1	1				
10	63V–15767–01	.SPRING .RESSORT	1	1				
11	68T–15784–00	.SPRING, RETURN .RESSORT, RAPPEL	1	1				
12	63V–15793–00	.SCREW .VIS	1	1				
13	68T–15793–00	.SCREW .VIS	1	1				
14	68T–15764–00	.COLLAR 1 .COLLERETTE 1	1	1				
15	689–15755–01	.HANDLE, STARTER .POIGNEE, DE DEMARREUR	1	1				
16	*	.WIRE, STARTER (L:1800MM) .CABLE DE DEMARREUR (L:1800MM)	1	1				*1 *1
17	6F5–15779–02	.COVER .COUVERCLE	1	1				
18	6A0–15789–00	.DAMPER .AMORTISSEUR	1	1				
19	66T–15794–00	.STOPPER .BUTEE	1	1				
20	66T–15734–00	.SPRING, RETURN .RESSORT, RAPPEL	1	1				
21	6AH–15782–00	.COVER, SHEAVE .COUVERCLE, POULIE	1	1				
22	6AH–15793–00	.SCREW .VIS	2	2				
23	6AH–15770–00	.CABLE COMP., STARTER STOP .CABLE, BUTEE DE DEMAR	1	1				
24	66T–15731–00	.SPRING, RETURN .RESSORT, RAPPEL	1	1				
25	90446–06M90	HOSE (L120) DURITE (L120)	1	1				
26	97595–06520	BOLT, WITH WASHER VIS HEXAGONAL AVC RONDELLE	3	3				
	97595–06520	BOLT, WITH WASHER VIS HEXAGONAL AVC RONDELLE			3			

FIG. 11 STARTER DEMARREUR

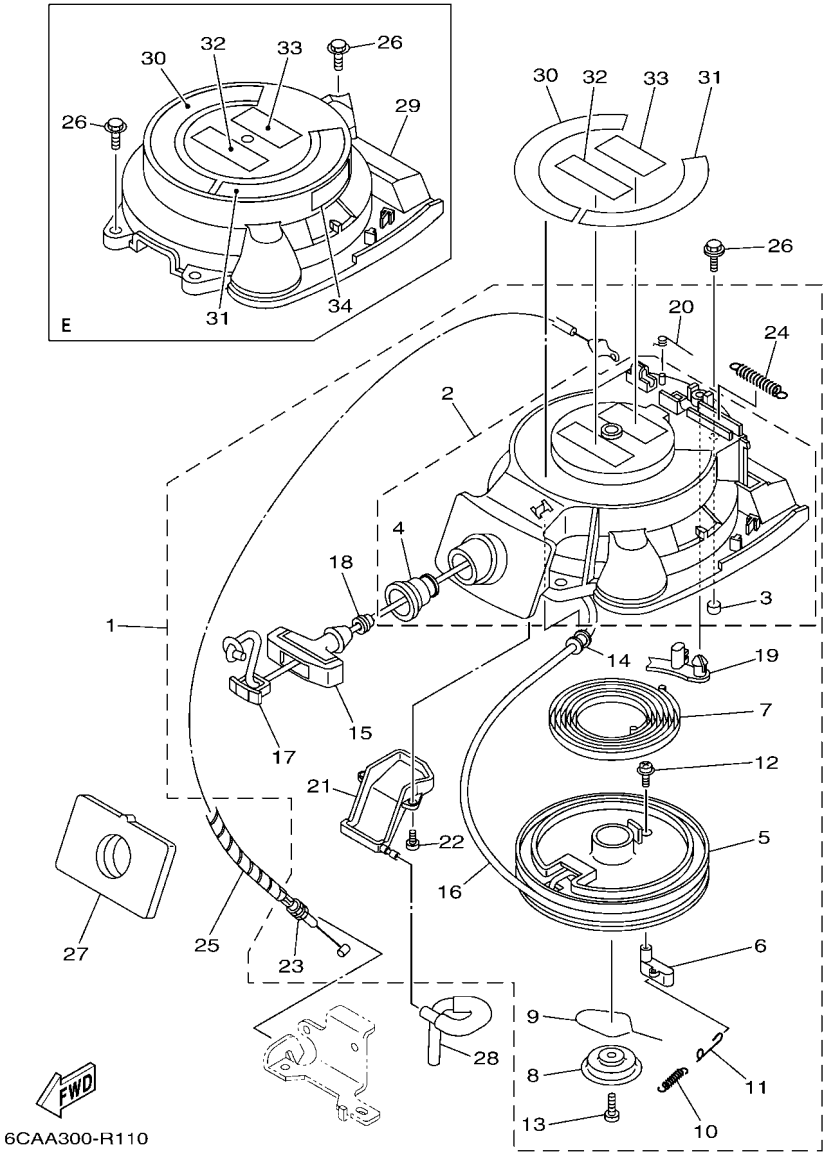

*1:CUT FROM 50M ROLLS,PART NO.90890-44373,CUTTING LENGTH 1.8M

*1:A PRELEVER SUR BOBINE 50M ,REFERENCE 90890-44373,
LONGUEUR DE COUPE 1.8M

REF. NO.	PART NO. N° PIECES	DESCRIPTION DESCRIPTION	MH	WH	E			REMARKS REMARQUES
27	6AH–15762–01	SEAL, RUBBER 2 JOINT CAOUTCHOUC 2	1	1				
28	6AH–24316–00	PIPE 6 DURITE 6	1	1				
29	6AH–81337–00	COVER, FLYWHEEL COUVERCLE, VOLANT			1			
30	6AH–14427–60	LABEL, INSTRUCTION ETIQUETTE, INSTRUCTION	1	1	1			
31	6AH–13437–60	MARK, CAUTION MAKER	1	1	1			
32	6EE–81995–40	LABEL, WARNING ETIQUETTE, AVERTISSEMENT	1	1	1			
33	6EE–81995–50	LABEL, WARNING ETIQUETTE, AVERTISSEMENT	1	1	1			
34	6AG–81996–00	MARK MARQUE			1			

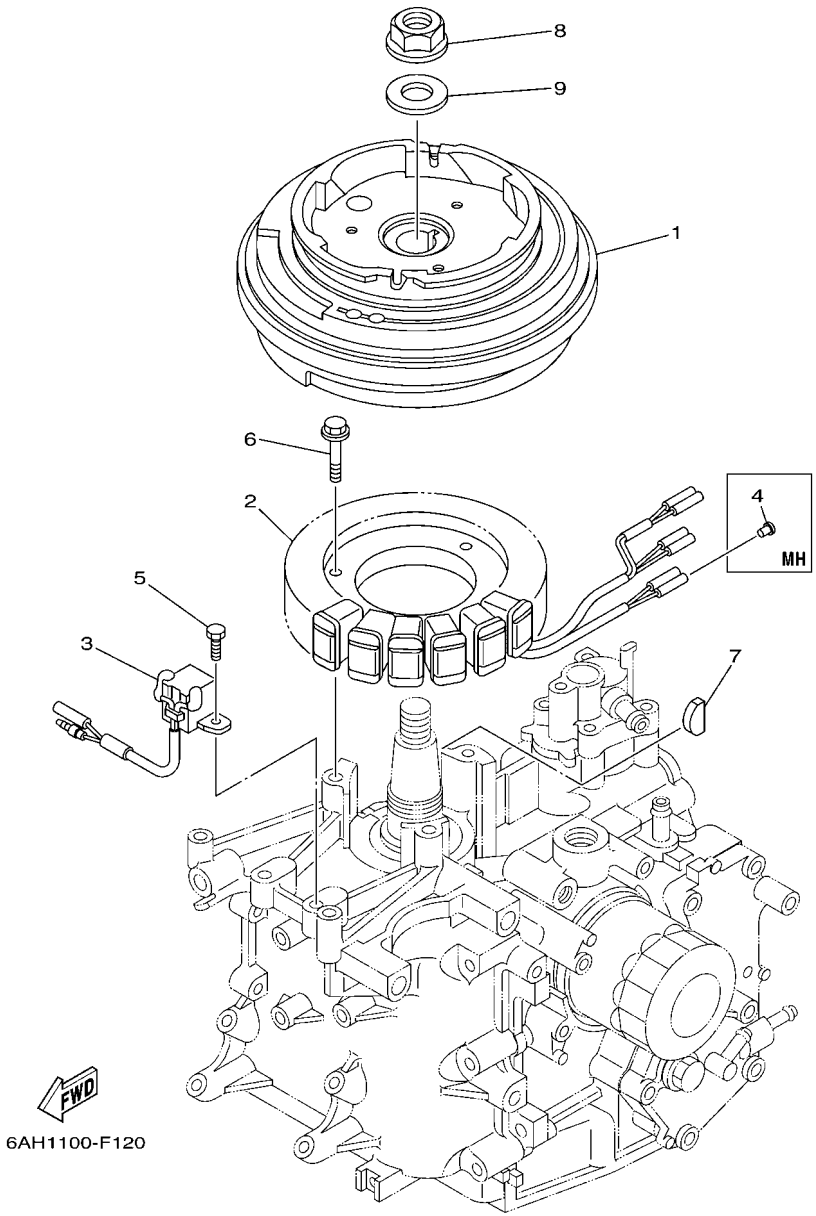

FIG. 12 GENERATOR — GENERATRICE

REF. NO.	PART NO. N° PIECES	DESCRIPTION DESCRIPTION	MH	WH	E			REMARKS REMARQUES
1	6AH–85550–00	ROTOR ASSY ROTOR CPLT	1					
	6AH–85550–10	ROTOR ASSY ROTOR CPLT		1	1			
2	6AH–85510–00	STATOR ASSY STATOR CPLT	1	1	1			
3	6AH–85580–00	COIL, PULSER BOBINE, PULSEUR	1	1	1			
4	703–82119–00	COVER, LEAD WIRE GARNITURE, FIL	2					
5	97095–05012	BOLT BOULON	2	2	2			
6	95895–06030	BOLT, FLANGE BOULON	3	3	3			
7	90280–05013	KEY, WOODRUFF CLAVETTE, DEMI-LUNE	1	1	1			
8	90179–16M05	NUT ECROU	1	1	1			
9	90201–16M44	WASHER, PLATE RONDELLE, PLATE	1	1	1			

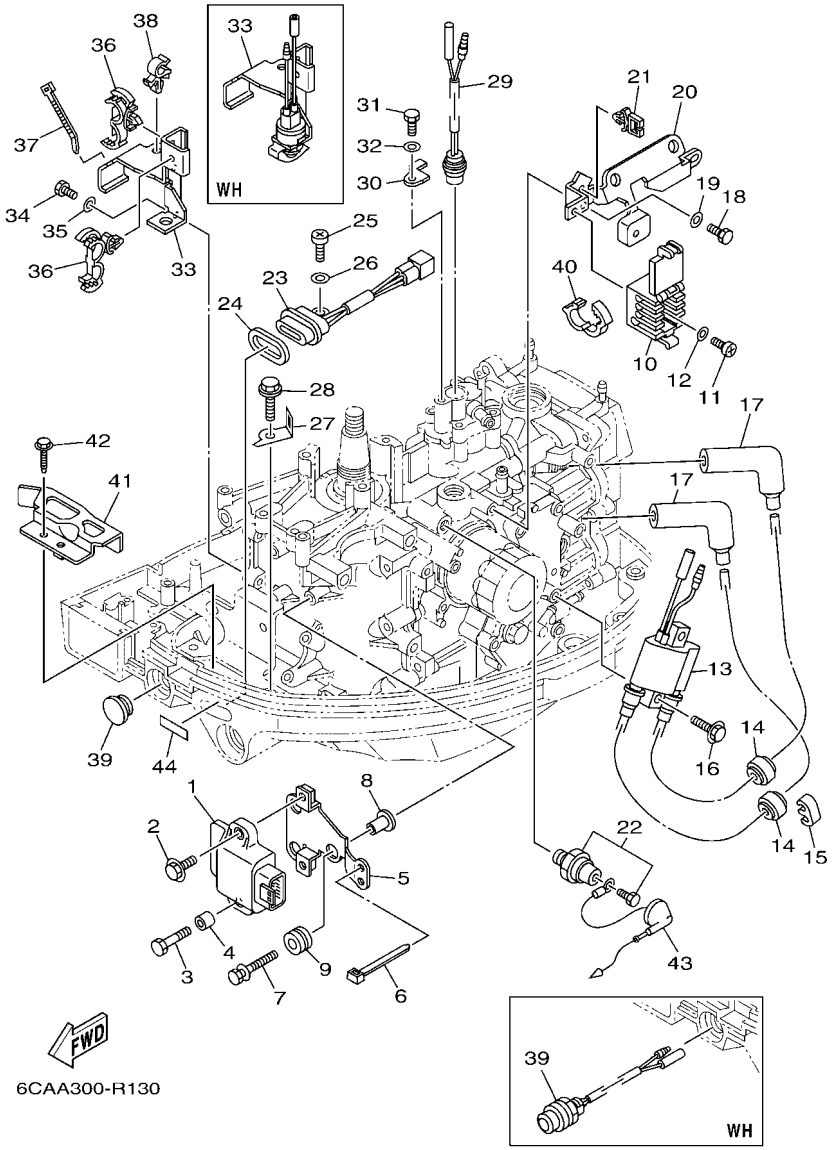

FIG. 13 ELECTRICAL 1 — PARTIE ELECTRIQUE 1

REF. NO.	PART NO. N° PIECES	DESCRIPTION DESCRIPTION	MH	WH	E			REMARKS REMARQUES
1	6AH–85540–00	C.D.I. UNIT ASSY BLOC C.D.I.	1	1	1			
2	97595–06520	BOLT, WITH WASHER VIS HEXAGONAL AVC RONDELLE	1	1	1			
3	97095–06030	BOLT BOULON	1	1	1			
4	90387–06M74	COLLAR COLLERETTE	1	1	1			
5	6AH–81948–00	BRACKET SUPPORT	1	1	1			
6	90465–13M18	CLAMP BRIDE	1	1	1			
7	90119–06M35	BOLT, WITH WASHER BOULON, AVEC RONDELLE	3	3	3			
8	90387–06289	COLLAR COLLERETTE	3	3	3			
9	90480–10M23	GROMMET PASSE-FIL	3	3	3			
10	6AH–82522–00	CLAMP, COUPLER BRIDE, DE CONNECTEUR	1	1	1			
11	97880–06010	SCREW, PAN HEAD VIS, TETE TRONCONIQUE	1	1	1			
12	90201–06M05	WASHER, PLATE RONDELLE, PLATE	1	1	1			
13	6F5–85570–13	IGNITION COIL ASSY BOBINE D'ALLUMAGE (ENS.)	1	1	1			
14	90480–25003	GROMMET PASSE-FIL	2	2	2			
15	67F–82361–00	CLAMP, CORD COLLIER, CORDON	1	1	1			
16	97595–06525	BOLT, WITH WASHER VIS HEXAGONAL AVC RONDELLE	2	2	2			
17	6AH–82370–00	PLUG CAP ASSY ANTIPARASITE	2	2	2			
18	97095–06014	BOLT BOULON	2	2	2			
19	92995–06600	WASHER RONDELLE	2	2	2			
20	6AH–85542–00	BRACKET SUPPORT	1	1	1			
21	90464–07M56	CLAMP BRIDE	2	2	2			
22	64J–82504–00	OIL PRESSURE SWITCH ASSY CONTACTEUR DE PRESSION D'HUILE	1	1	1			
23	62Y–84301–00	PILOT LIGHT ASSY 1 LAMPE-TEMOIN 1	1	1	1			
24	6H4–83589–00	GASKET GARNITURE	1	1	1			
25	97885–06012	SCREW, PAN HEAD VIS, A ENCOCHE	1	1	1			
26	92995–06600	WASHER RONDELLE	1	1	1			
27	6AH–82388–00	PLATE PLAQUETTE	1	1	1			

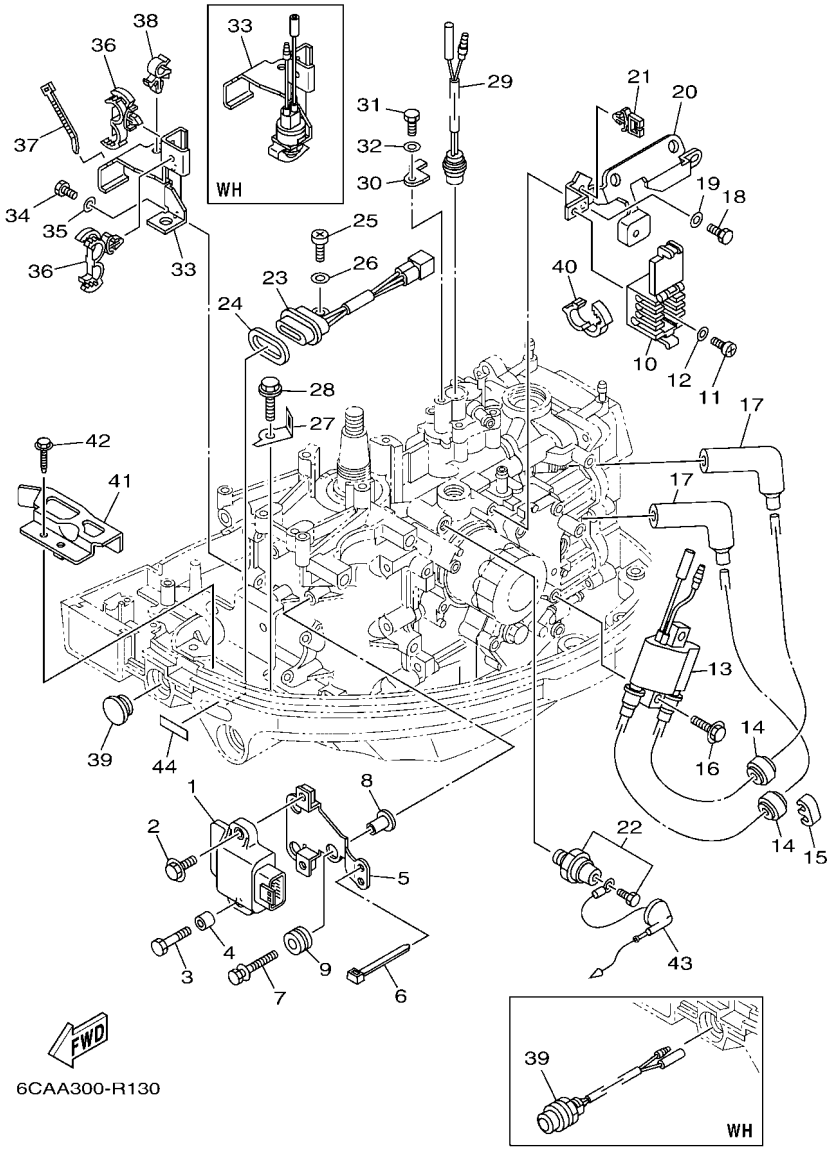

FIG. 13 ELECTRICAL 1 — PARTIE ELECTRIQUE 1

REF. NO.	PART NO. N° PIECES	DESCRIPTION DESCRIPTION	MH	WH	E			REMARKS REMARQUES
28	90109–06M86	BOLT BOULON	1	1	1			
29	6AH–82560–00	THERMO SWITCH ASSY THERMO-CONTACT COMPLET	1	1	1			
30	6AH–82588–00	PLATE PLAQUE	1	1	1			
31	97095–06014	BOLT BOULON	1	1	1			
32	92995–06600	WASHER RONDELLE	1	1	1			
33	6AH–82554–00	STAY, NEUTRAL SWITCH SUPPORT, CONT DE POINT-MORT	1		1			
	6AH–82540–01	NEUTRAL SWITCH ASSY CONTACTEUR DE POINT-MORT		1				
34	97095–06016	BOLT BOULON	2	2	2			
35	92995–06600	WASHER RONDELLE	2	2	2			
36	90464–18246	CLAMP BRIDE	2	2	2			
37	90465–13M18	CLAMP BRIDE	1	1				
38	90464–10M32	CLAMP BRIDE	1	1	1			
39	6G1–42725–00	GROMMET PASSE-FIL	1		1			
	68T–81870–00	STARTING SWITCH ASSY CONTACT A CLEF		1				
40	90464–16003	CLAMP BRIDE	1	1				
	90464–16001	CLAMP BRIDE			1			
41	6AH–82389–00	PLATE 2 PLAQUETTE 2	1	1	1			
42	90109–06M86	BOLT BOULON	1	1	1			
43	6AH–82553–10	EXTENSION, WIRE LEAD EXTENSION, FAISCEAU	1					
	6AH–82553–00	EXTENSION, WIRE LEAD EXTENSION, FAISCEAU		1	1			
44	67C–85415–00	MARK, SIGNAL LAMP ETIQUETTE	1	1	1			

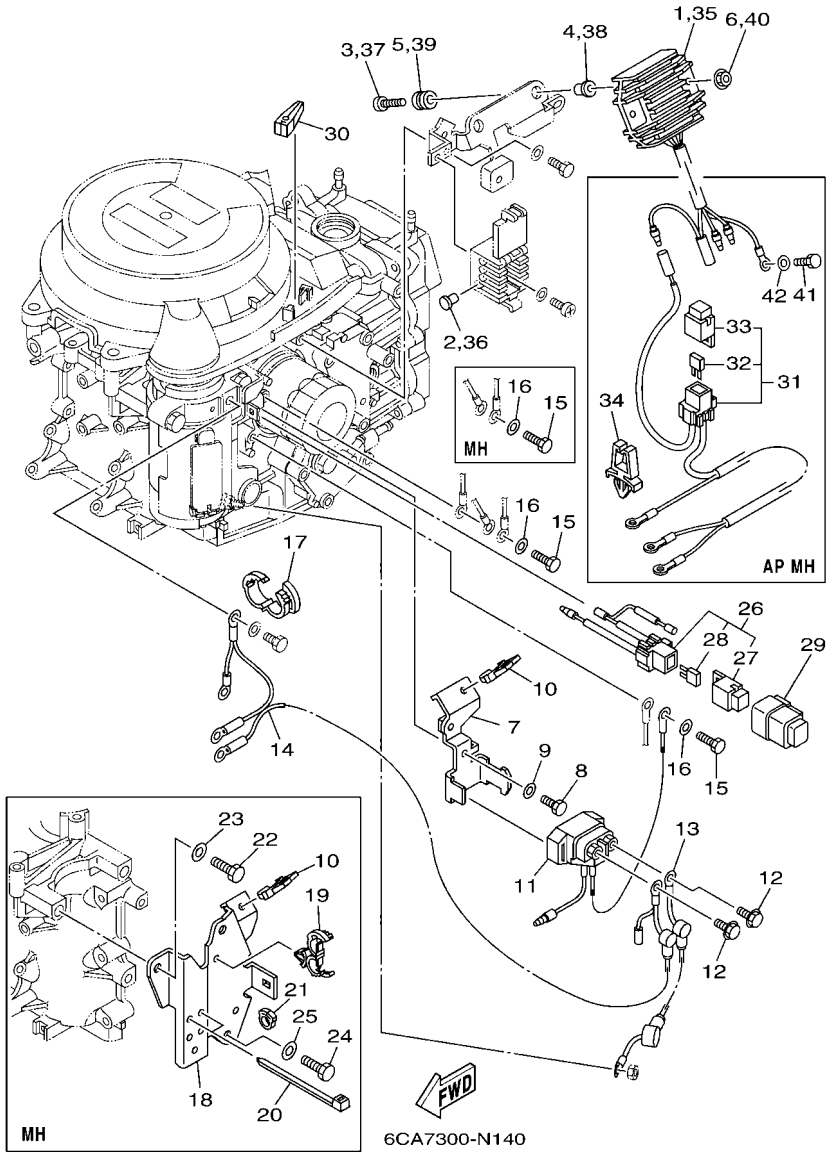

FIG. 14 ELECTRICAL 2 — PARTIE ELECTRIQUE 2

REF. NO.	PART NO. N° PIECES	DESCRIPTION DESCRIPTION	MH	WH	E			REMARKS REMARQUES
1	6AH–81960–00	RECTIFIER & REGULATOR ASSY REDRESSEUR REGULATEUR CPLT		1	1			
2	703–82119–00	COVER, LEAD WIRE GARNITURE, FIL		1	1			
3	98980–06030	SCREW, BIND VIS, DE PRESSION		2	2			
4	90387–06M70	COLLAR COLLERETTE		2	2			
5	90480–13M24	GROMMET PASSE-FIL		2	2			
6	95780–06500	NUT, FLANGE ECROU		2	2			
7	6AH–81945–00	PLATE, SWITCH FITTING PLAQUE, FIXATION DU RELAIS		1	1			
8	97095–06014	BOLT BOULON		1	1			
9	92995–06600	WASHER RONDELLE		1	1			
10	90464–08004	CLAMP BRIDE	1	1	1			
11	68T–81940–00	STARTER RELAY ASSY LANCEUR RELAIS (ENS.)		1	1			
12	97595–06610	BOLT, WITH WASHER VIS HEXAGONAL AVC RONDELLE		2	2			
13	6AH–82117–00	WIRE, LEAD FIL		1	1			
14	6AH–82105–01	BATTERY CABLE CABLE DE BATTERIE		1	1			
15	97095–06014	BOLT BOULON	1					
	97095–06014	BOLT BOULON		2	2			
16	92995–06600	WASHER RONDELLE	1					
	92995–06600	WASHER RONDELLE		2	2			
17	90464–16001	CLAMP BRIDE		1	1			
18	6AH–82398–00	PLATE 3 PLAQUETTE 3	1					
19	90464–18246	CLAMP BRIDE	1					
20	90465–13M18	CLAMP BRIDE	3					
21	90464–09010	CLAMP BRIDE	1					
22	97095–08025	BOLT BOULON	2					
23	92995–08600	WASHER RONDELLE	2					
24	97095–08016	BOLT BOULON	1					
25	92995–08600	WASHER RONDELLE	1					

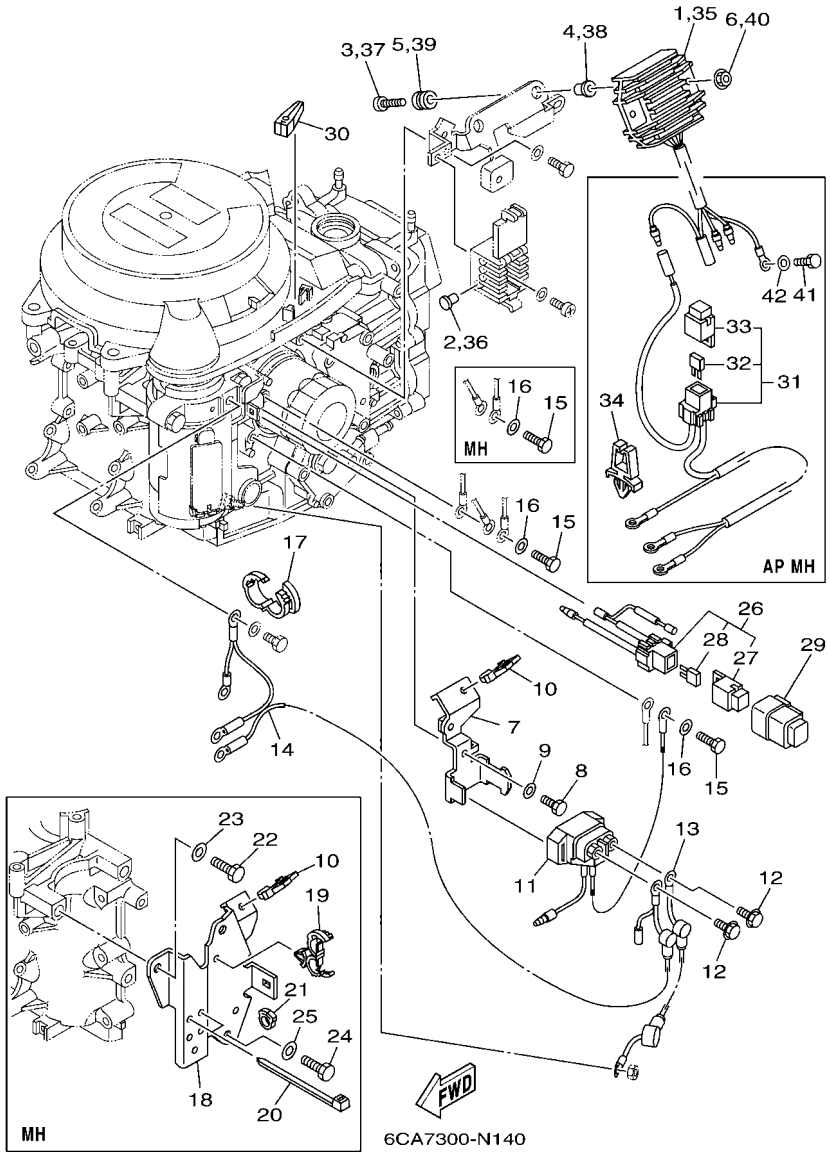

FIG. 14 ELECTRICAL 2 — PARTIE ELECTRIQUE 2

REF. NO.	PART NO. N° PIECES	DESCRIPTION DESCRIPTION	MH	WH	E			REMARKS REMARQUES
26	6AH–82150–00	FUSE HOLDER ASSY SUPPORT DE FUSIBLE		1	1			
27	67F–8215B–10	.CAP (YELLOW) .BOUCHON (YELLOW)		1	1			
28	67F–82151–00	.FUSE (20A) .FUSIBLE (20A)		2	2			
29	6AH–82157–00	DAMPER AMORTISSEUR		1	1			
30	67F–2812A–00	PULLER, FUSE TENDEUR, FUSIBLE		1	1			
31	6AH–81949–00	WIRE, LEAD FIL	1					AP AP
32	67F–82151–00	.FUSE (20A) .FUSIBLE (20A)	2					
33	67F–8215B–00	.CAP (BLACK) .BOUCHON (NOIR)	1					
34	90464–06001	CLAMP BRIDE	1					AP AP
35	6AH–81960–00	RECTIFIER & REGULATOR ASSY REDRESSEUR REGULATEUR CPLT	1					AP AP
36	703–82119–00	COVER, LEAD WIRE GARNITURE, FIL	1					AP AP
37	98980–06030	SCREW, BIND VIS, DE PRESSION	2					AP AP
38	90387–06M70	COLLAR COLLERETTE	2					AP AP
39	90480–13M24	GROMMET PASSE-FIL	2					AP AP
40	95780–06500	NUT, FLANGE ECROU	2					AP AP
41	97095–06014	BOLT BOULON	1					AP AP
42	92995–06600	WASHER RONDELLE	1					AP AP

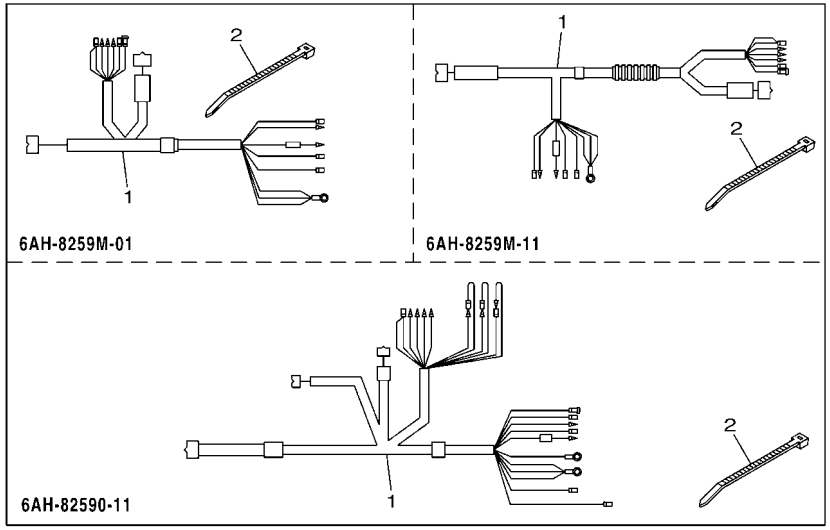

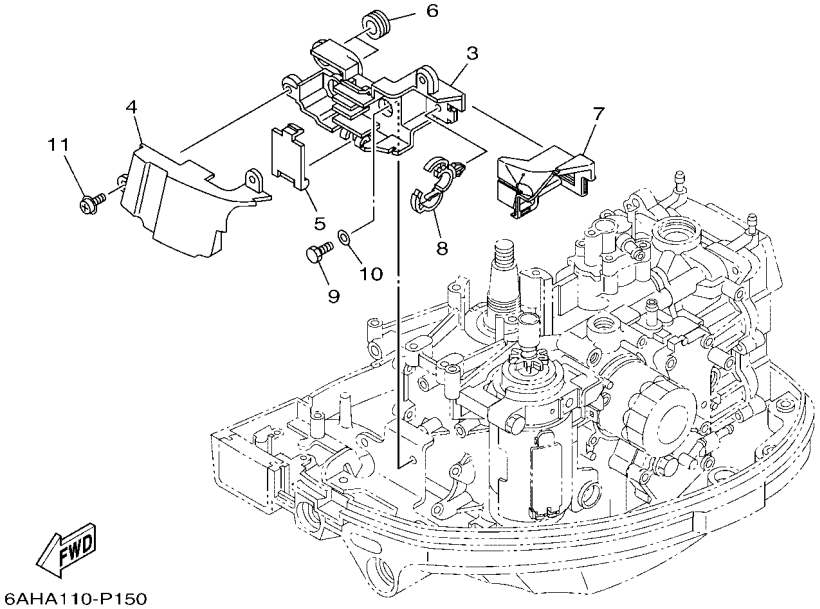

FIG. 15 ELECTRICAL 3 — PARTIE ELECTRIQUE 3

REF. NO.	PART NO. N° PIECES	DESCRIPTION DESCRIPTION	MH	WH	E			REMARKS REMARQUES
1	6AH–8259M–11	WIRE HARNESS ASSY 2 FAISCEAU DE FILS	1					
	6AH–8259M–01	WIRE HARNESS ASSY 2 FAISCEAU DE FILS		1				
	6AH–82590–11	WIRE HARNESS ASSY FAISCEAU DE FILS COMPLET			1			
2	90465–13M18	CLAMP BRIDE	1	1	1			
3	6AH–8552A–00	HOUSING CARTER	1	1	1			
4	6AH–8552E–00	COVER, CASE COUVERCLE	1	1	1			
5	6AH–85537–00	COVER COUVERCLE	1	1	1			
6	90480–19368	GROMMET PASSE-FIL	2	2	2			
7	6AH–85547–00	DAMPER AMORTISSEUR	1	1	1			
8	90464–20181	CLAMP BRIDE	1	1	1			
9	97095–06014	BOLT BOULON	2	2	2			
10	92995–06600	WASHER RONDELLE	2	2	2			
11	97985–06214	SCREW, WITH WASHER VIS, AVEC RONDELLE	2	2	2			

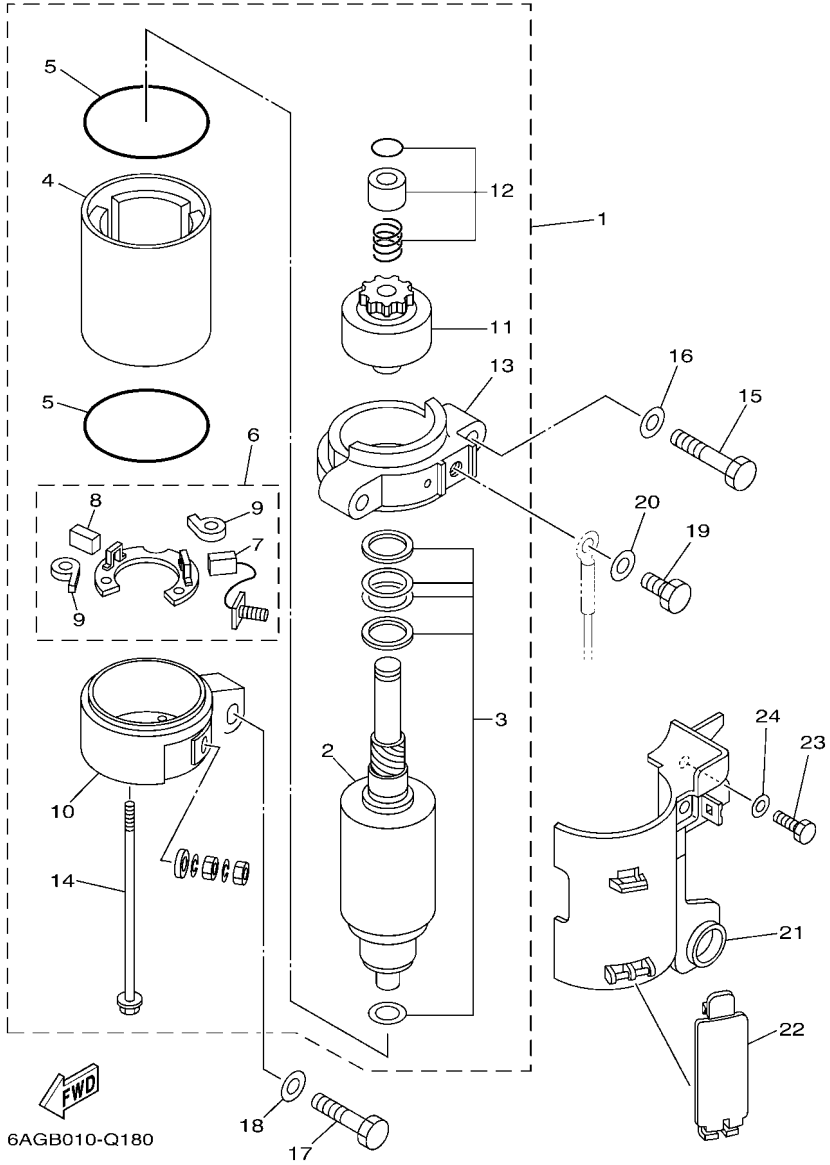

FIG. 16 STARTING MOTOR — DEMARREUR ELECTRIQUE

REF. NO.	PART NO. N° PIECES	DESCRIPTION DESCRIPTION	MH	WH	E			REMARKS REMARQUES
1	6AH–81800–01	STARTING MOTOR ASSY DEMARREUR ELECTRIQUE COMPLET		1	1			
2	689–81850–11	.ARMATURE ASSY .INDUIT		1	1			
3	689–81809–11	.WASHER KIT .JEU DE RONDELLES		1	1			
4	689–81810–11	.STATOR ASSY .STATOR COMPLET		1	1			
5	689–81847–11	.O-RING .JOINT TORIQUE		2	2			
6	689–81840–11	.BRUSH HOLDER ASSY .SUPPORT DE CHARBON		1	1			
7	689–81811–11	..BRUSH 1 ..CHARBON 1		1	1			
8	689–81812–11	..BRUSH 2 ..CHARBON 2		1	1			
9	689–81813–10	..SPRING, BRUSH ..RESSORT, DE CHARBON		2	2			
10	6AH–81820–01	.REAR BRACKET ASSY .SUPPORT ARRIERE COMPLET		1	1			
11	689–81807–12	.GEAR ASSY, STARTING MOTOR .PIGNON, DEMARREUR ELECTRIQUE		1	1			
12	68T–81857–00	.PINION STOPPER SET .BUTEE PIGNON		1	1			
13	6AH–81830–00	.FRONT BRACKET ASSY .SUPPORT AVANT		1	1			
14	689–81826–10	.BOLT .BOULON		2	2			
15	97013–08045	BOLT BOULON		2	2			
16	92903–08600	WASHER, PLATE RONDELLE, PLATE		2	2			
17	97013–08035	BOLT BOULON		1	1			
18	92903–08600	WASHER, PLATE RONDELLE, PLATE		1	1			
19	97095–08016	BOLT BOULON		1	1			
20	92995–08600	WASHER RONDELLE		1	1			
21	6AH–81942–00	COVER COUVERCLE		1	1			
22	6AH–82581–00	STAY, CORD CLAMP SUPPORT, COLLIER DE CORDON		1	1			
23	97095–06014	BOLT BOULON		1	1			
24	92995–06600	WASHER RONDELLE		1	1			

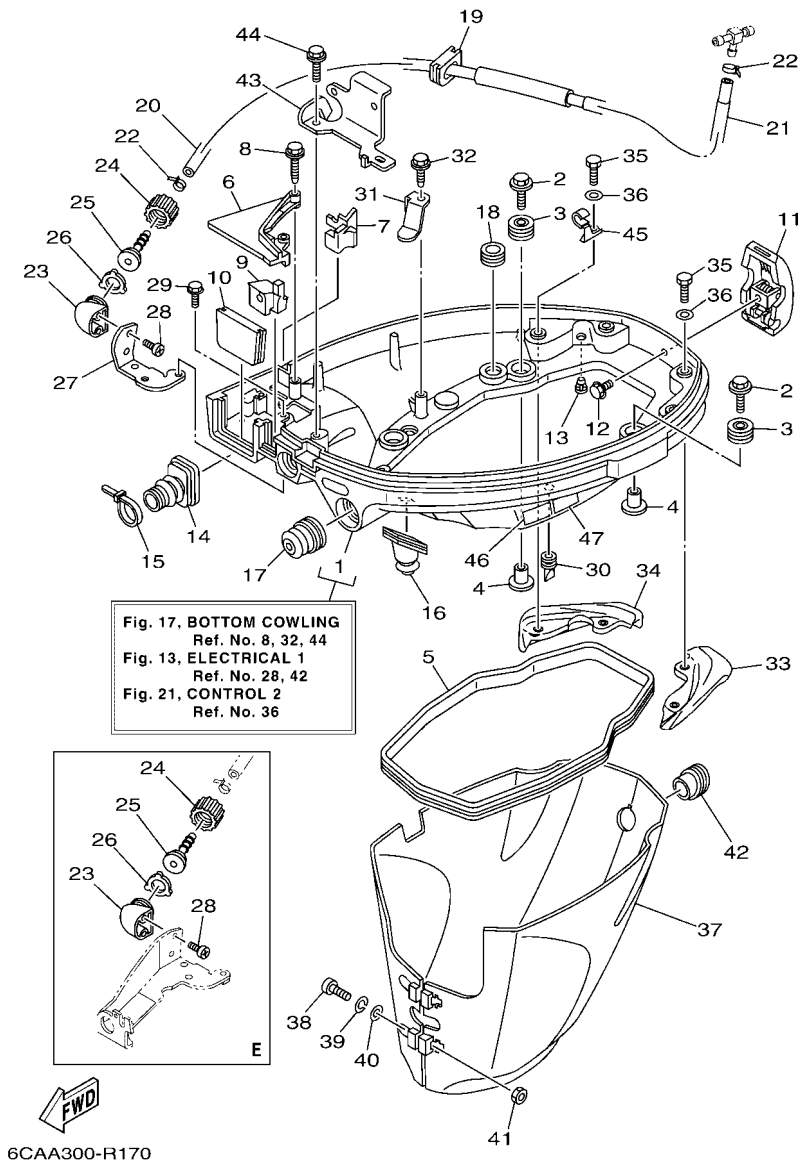

FIG. 17 BOTTOM COWLING — CAPOT INFERIEUR

REF. NO.	PART NO. N° PIECES	DESCRIPTION DESCRIPTION	MH	WH	E			REMARKS REMARQUES
1	6AH–42710–00–8D	BOTTOM COWLING ASSY ENS. EMBASE	1	1	1			
2	68F–85119–00	BOLT BOULON	4	4	4			
3	90480–21M82	GROMMET PASSE-FIL	4	4	4			
4	90387–06176	COLLAR COLLERETTE	4	4	4			
5	6AH–42716–00	RUBBER SEAL 1 JOINT EN CAOUTCHOUC 1	1	1	1			
6	6AH–42738–00–8D	PLATE, FITTING ETRIER	1	1	1			
7	6AH–42718–00	RUBBER, SEAL 3 JOINT	1	1	1			
8	90109–06M82	BOLT BOULON	2	2	2			
9	6AH–42725–00	GROMMET PASSE-FIL	1					
	6AH–42725–10	GROMMET PASSE-FIL		1				
	6AH–42725–20	GROMMET PASSE-FIL			1			
10	6AH–42724–00	GROMMET PASSE-FIL	1	1				
	6AH–42724–10	GROMMET PASSE-FIL			1			
11	6AH–42801–00	COWLING CLAMP COMP. BRIDE DE CAPOT COMP.	1	1	1			
12	97595–06512	BOLT, WITH WASHER VIS HEXAGONAL AVC RONDELLE	1	1	1			
13	6BL–44391–00	NIPPLE, HOSE RACCORD D'ESSENCE	1	1	1			
14	6AH–26326–00	GROMMET RONDELLE CAOUTCHOUC	1	1				
	6AH–26326–10	GROMMET RONDELLE CAOUTCHOUC			1			
15	90465–11M10	CLAMP BRIDE	1	1				
16	6AH–42727–00	GROMMET PASSE-FIL	1	1	1			
17	65W–42726–00	GROMMET PASSE-FIL	1	1				
	65W–42726–10	GROMMET PASSE-FIL			1			
18	90480–16007	GROMMET PASSE-FIL	1	1	1			
19	6AH–42726–00	GROMMET PASSE-FIL	1	1	1			
20	6AH–24314–01	PIPE 4 DURITE 4	1	1	1			
21	90445–15003	HOSE (L230) DURITE (L230)	1	1	1			
22	90465–11M10	CLAMP BRIDE	2	2	2			

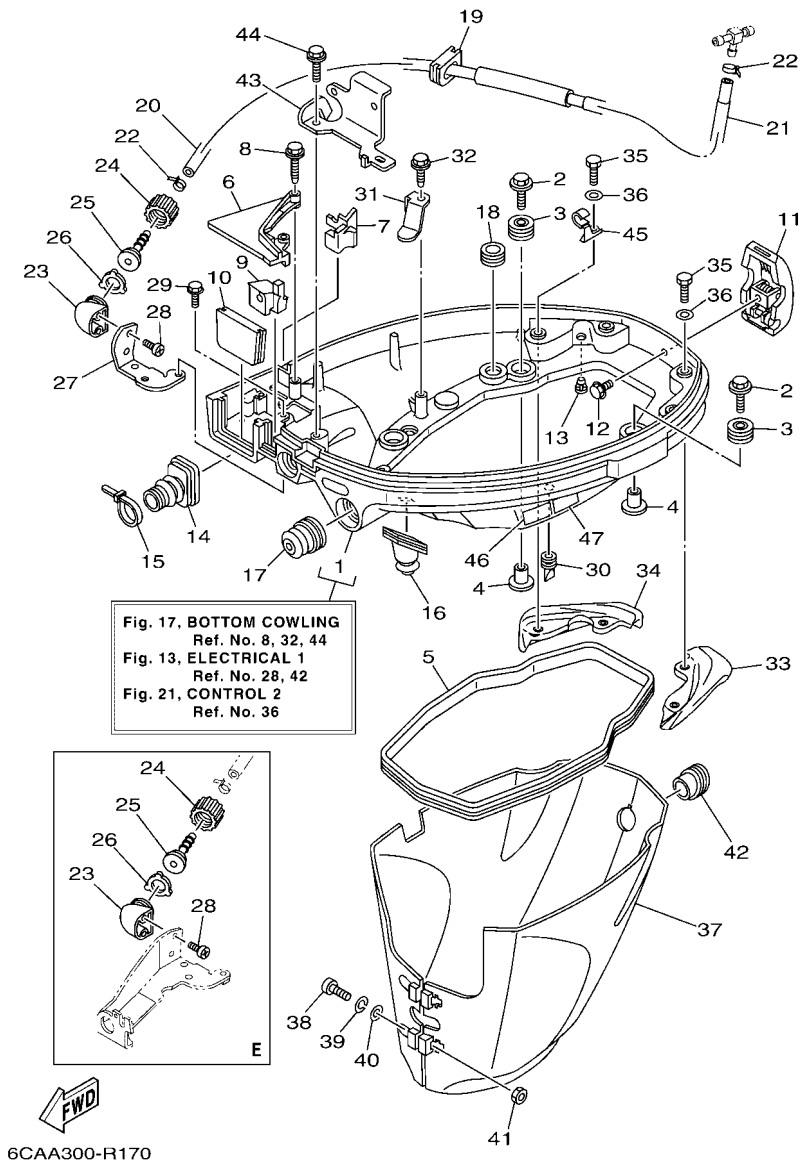

FIG. 17 BOTTOM COWLING — CAPOT INFERIEUR

REF. NO.	PART NO. N° PIECES	DESCRIPTION DESCRIPTION	MH	WH	E			REMARKS REMARQUES
23	6DR–12572–00	ADAPTER ADAPTATEUR	1	1	1			
24	6R3–12581–00	JOINT, HOSE 1 JOINT DE TUYAU	1	1	1			
25	6R3–12582–00	JOINT, HOSE 2 RACCORD DE TUYAU 1	1	1	1			
26	6R3–12583–00	GASKET, HOSE JOINT JOINT	1	1	1			
27	6AH–12535–00	PLATE PLAQUE	1	1				
28	90167–06002	SCREW, TAPPING VIS, TETE FRAISEE	2	2	2			
29	97595–06510	BOLT, WITH WASHER VIS HEXAGONAL AVC RONDELLE	2	2				
30	65W–42717–00	RUBBER, SEAL 2 JOINT EN CAOUTCHOUC 2	2	2	2			
31	6AH–42743–00	BRACKET SUPPORT	1	1	1			
32	90109–06M86	BOLT BOULON	1	1	1			
33	6AH–42761–A0	STOPPER PLAQUETTE	1	1	1			
34	6AH–42762–A0	STOPPER PLAQUETTE	1	1	1			
35	97075–06012	BOLT BOULON	4	4	4			
36	92995–06600	WASHER RONDELLE	4	4	4			
37	6AH–42741–00	APRON CAPOT LATERAL	1	1	1			
38	97885–06030	SCREW, PAN HEAD VIS, A ENCOCHE	2	2	2			
39	92995–06100	WASHER, SPRING RONDELLE, GROWER	2	2	2			
40	92995–06600	WASHER RONDELLE	2	2	2			
41	95380–06600	NUT, HEXAGON ECROU	2	2	2			
42	6AH–42717–00	RUBBER, SEAL 2 JOINT EN CAOUTCHOUC 2	1	1	1			
43	6AH–15774–00	STAY 4 SUPPORT 4	1	1	1			
44	90109–06M86	BOLT BOULON	1	1	1			
45	90465–08M82	CLAMP BRIDE	1	1	1			
46	6EE–42794–40	LABEL, WARNING (GENERAL) ETIQUETTE, AVERTISSEMENT	1	1	1			
47	6EE–42794–50	LABEL, WARNING (GENERAL) ETIQUETTE, AVERTISSEMENT	1	1	1			

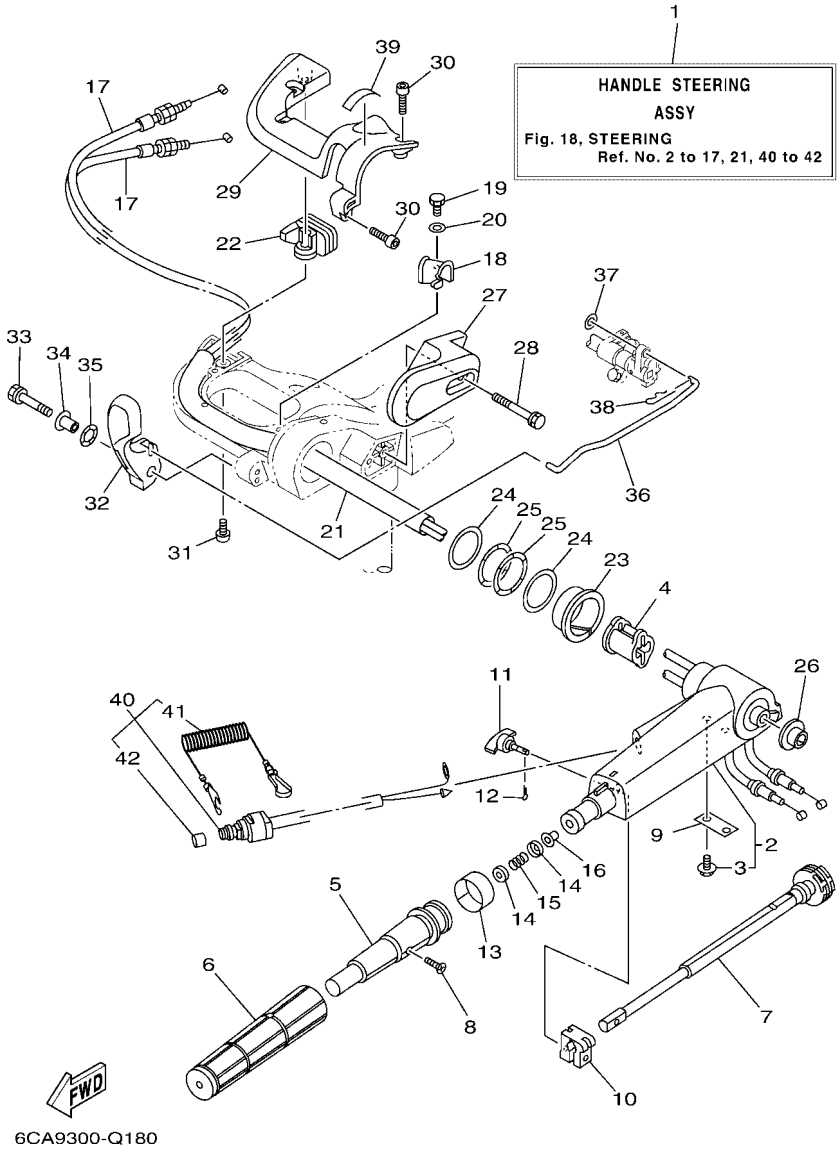

FIG. 18 STEERING — DIRECTION

REF. NO.	PART NO. N° PIECES	DESCRIPTION DESCRIPTION	MH	WH	E			REMARKS REMARQUES
1	6AH–W0084–03–8D	HANDLE STEERING ASSY BARRE FRANCHE (ENS.)	1	1				
2	6AH–42101–02–8D	HANDLE, STEERING POIGNEE	1	1				
3	90109–06M86	.BOLT .BOULON	2	2				
4	6AH–26288–00	GROMMET, CABLE OEILLET DE CABLE	1	1				
5	66M–42119–01	GRIP, STEERING HANDLE POIGNEE, BARRE FRANCHE	1	1				
6	67D–42177–00	RUBBER, HANDLE CAOUTCHOUC, POIGNEE	1	1				
7	65W–42138–00	LEVER, THROTTLE LEVIER, ACCELERATEUR	1	1				
8	90152–05011	SCREW, COUNTERSUNK VIS, TETE NOYEE	1	1				
9	65W–42159–00	STAY SUPPORT	1	1				
10	6G1–42126–00	FRICTION, STEERING HANDLE GRIP CUVETTE, POIGNEE DE DIRECTION	1	1				
11	65W–42125–00	BOLT, FRICTION ADJUSTING BOULON	1	1				
12	91490–16010	PIN. COTTER GOUPILLE	1	1				
13	6J0–42137–10	INDICATOR, THROTTLE INDICATEUR, ACCELERATION	1	1				
14	6X4–44188–00	WASHER RONDELLE	2	2				
15	90501–23215	SPRING, COMPRESSION RESSORT, COMPRESSION	1	1				
16	90386–08004	BUSH DOUILLE	1	1				
17	6AH–26311–00	CABLE, THROTTLE 1 CABLE 1, ACCELERATEUR	2	2				
18	6AH–44554–00	PLATE PLAQUETTE	1	1				
19	97095–06014	BOLT BOULON	1	1				
20	92995–06600	WASHER RONDELLE	1	1				
21	6AH–2634E–00	PROTECTOR 1 PROTECTEUR 1	1	1				
22	6AH–42551–00	GROMMET PASSE-FIL	1	1				
23	90386–45001	BUSH DOUILLE	1	1				
24	90201–39008	WASHER, PLATE RONDELLE, PLATE	2	2				
25	90206–39001	WASHER, WAVE RONDELLE, ONDULEE	2	2				
26	90381–20001	BUSH, SOLID DOUILLE, SOLIDE	1	1				
27	6AH–42131–00–8D	COVER, HANDLE STEERING COUVERCLE	1	1				

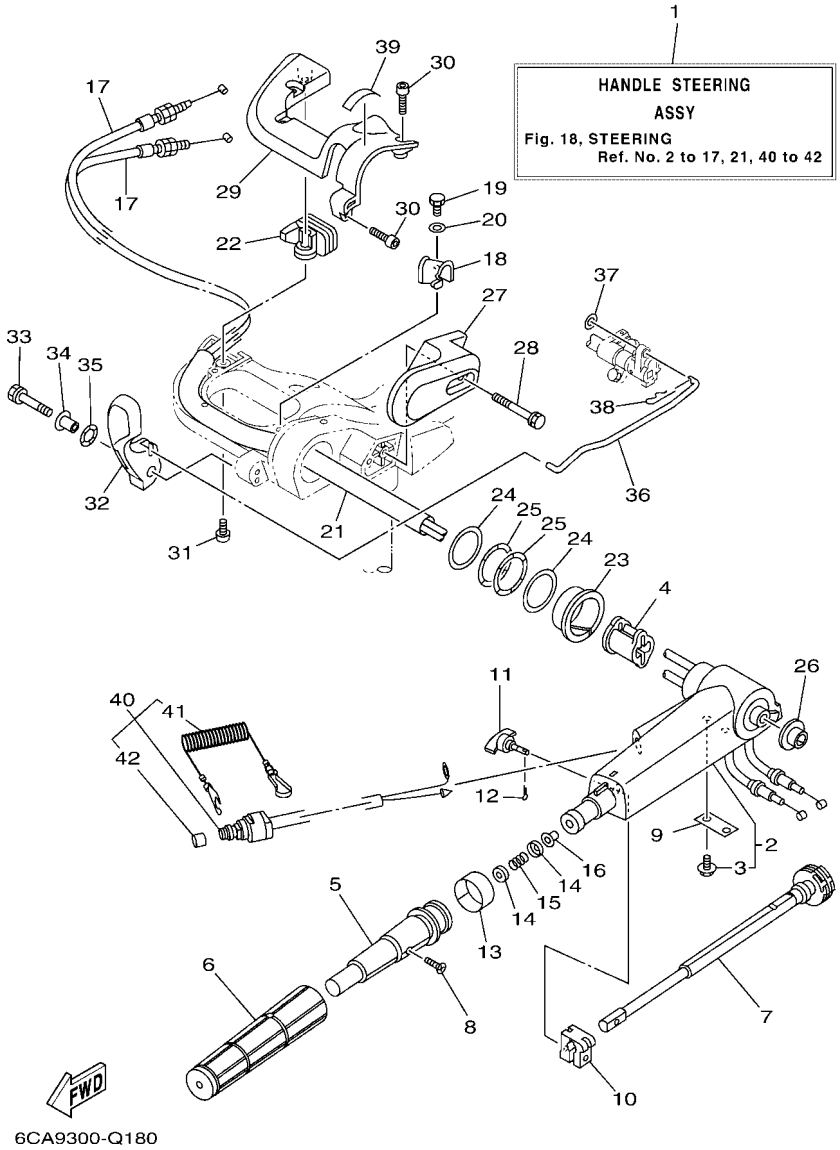

FIG. 18 STEERING

DIRECTION

REF. NO.	PART NO. N° PIECES	DESCRIPTION DESCRIPTION	MH	WH	E			REMARKS REMARQUES
28	97595–06555	BOLT, WITH WASHER VIS HEXAGONAL AVC RONDELLE	2	2				
29	6AH–42532–A0	COVER COUVERCLE	1	1				
30	90111–06072	BOLT,HEX. SOCKET BUTTON BOULON	4	4				
31	97780–60520	SCREW, TAPPING VIS, TETE BOMBEE	1	1				
32	6AH–44111–00	HANDLE, GEAR SHIFT POIGNEE, LEVIER D'EMBRAYAGE	1	1				
33	90119–06M05	BOLT, WITH WASHER BOULON, AVEC RONDELLE	1	1				
34	90387–06M86	COLLAR COLLERETTE	1	1				
35	90206–15M18	WASHER, WAVE RONDELLE, ONDULEE	1	1				
36	6AH–44124–00	LINK, SHIFT ROD BIELLETTE	1	1				
37	92990–06200	WASHER, PLAIN RONDELLE, PLATE	1	1				
38	90468–18008	CLIP JONC	1	1				
39	6X3–44191–00	INDICATOR, SHIFT ETIQUETTE, EMBRAYAGE	1	1				
40	6AH–82575–00	ENGINE STOP SWITCH ASSY COUPE CIRCUIT CPLT	1	1				
41	682–82556–00	.LANYARD, STOP SWITCH .CORDON DU COUPE CIRCUIT	1	1				
42	689–8257Y–00	.CAP .COUVERCLE	1	1				

FIG. 19 STEERING FRICTION — CUVETTE POIGNEE DE DIRECTION

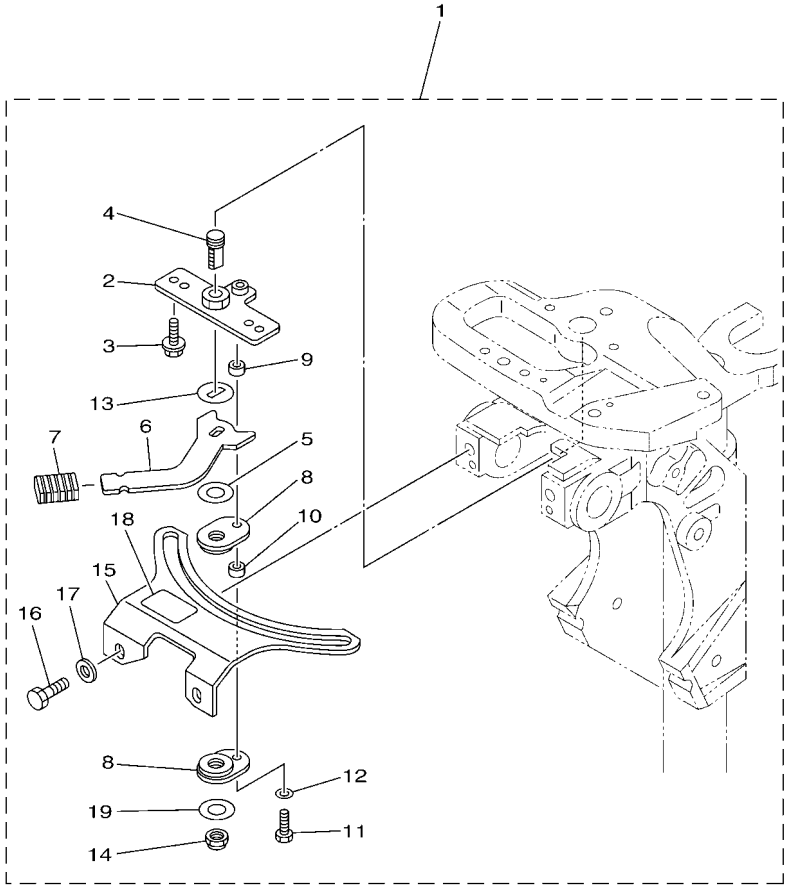

6AU5110-L180

REF. NO.	PART NO. N° PIECES	DESCRIPTION DESCRIPTION	MH	WH	E			REMARKS REMARQUES
1	6AH–42508–01	STEERING FRICTION ASSY DIRECTION FRICTION (ENS.)	1	1				
2	68T–42525–01	.PLATE, FRICTION .PLAQUE, FRICTION	1	1				
3	90119–05018	.BOLT, WITH WASHER .BOULON, AVEC RONDELLE	2	2				
4	67C–42562–00	.SHAFT, STEERING LOCK .ARBRE,ANTIVOL DE DIRECTION	1	1				
5	90202–10M56	.WASHER, PLATE .RONDELLE, PLATE	1	1				
6	68T–42561–00	.KNOB, STEERING LOCK .BOUTON	1	1				
7	689–43633–00	.COVER, TILT LEVER .COUVERCLE	1	1				
8	65W–42528–00	.PLATE, FRICTION .PLAQUE, FRICTION	2	2				
9	90387–05053	.COLLAR .COLLERETTE	1	1				
10	90387–05054	.COLLAR .COLLERETTE	1	1				
11	97095–05020	.BOLT .BOULON	1	1				
12	92995–05600	.WASHER .RONDELLE	1	1				
13	90209–10M26	.WASHER .RONDELLE	1	1				
14	90185–10M14	.NUT, SELF-LOCKING .ECROU,AUTO-BLOQUANT	1	1				
15	6AH–42527–00	.PLATE, FRICTION .PLAQUE, FRICTION	1	1				
16	90101–08022	.BOLT .BOULON	2	2				
17	90201–08065	.WASHER, PLATE .RONDELLE, PLATE	2	2				
18	68T–43155–00	.MARK 1 .ETIQUETTE 1	1	1				
19	90201–106M5	.WASHER, PLATE .RONDELLE, PLATE	1	1				

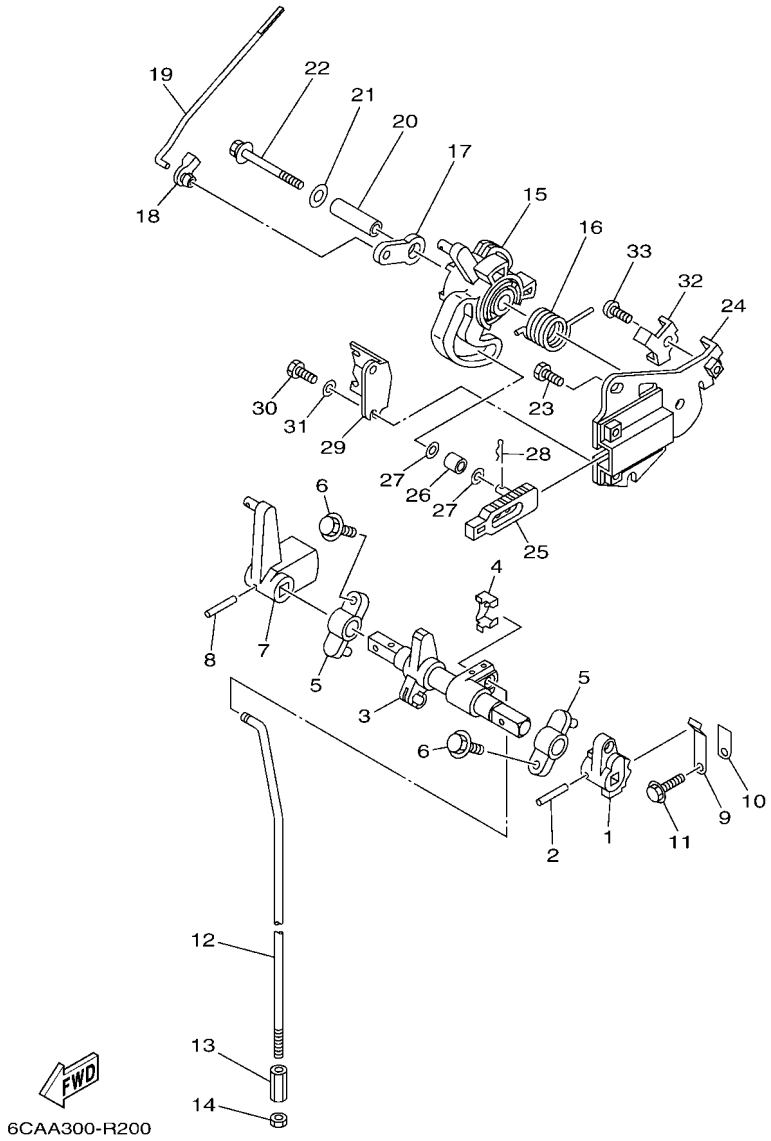

FIG. 20 CONTROL 1 — COMMANDE 1

REF. NO.	PART NO. N° PIECES	DESCRIPTION DESCRIPTION	MH	WH	E			REMARKS REMARQUES
1	6AH–44123–00	ARM, SHIFT ROD BRAS, TIGE D'INVERSION	1	1				
2	90254–03M05	PIN, SPRING RIVET, TETE TRONCONIQUE	1	1				
3	6AH–44121–01	LEVER, SHIFT ROD LEVIER, TIGE D'INVERSION	1	1				
4	6AH–26364–00	END, CABLE 2 EMBOUT, DE CABLE	1	1				
5	6G1–41662–01–94	BRACKET 2 SUPPORT 2	2	2				
6	97595–06520	BOLT, WITH WASHER VIS HEXAGONAL AVC RONDELLE	2	2				
7	6AH–44125–00	LEVER, SHIFT ROD LEVIER, TIGE D'INVERSION	1	1				
8	90254–03M05	PIN, SPRING RIVET, TETE TRONCONIQUE	1	1				
9	65W–44116–00	SPRING RESSORT	1	1				
10	66R–44114–00	STOPPER PLAQUETTE	1	1				
11	95895–06014	BOLT, FLANGE BOULON	1	1				
12	6AH–44143–00	ROD, SHIFT 1 TIGE D'EMBRAYAGE 1	1	1				S(17.1") S(17.1")
	6AH–44143–10	ROD, SHIFT 1 TIGE D'EMBRAYAGE 1	1	1				L(22.1") L(22.1")
13	90170–06015	NUT ECROU	1	1				
14	95380–06700	NUT ECROU	1	1				
15	6AH–41638–00	PULLEY POULIE	1	1				
16	90508–20M44	SPRING, TORSION RESSORT, TORSION	1	1				
17	65W–41283–00	LEVER, FREE ACCEL. LEVIER	1	1				
18	6J8–41262–00	JOINT, CHOKE LEVER RACCORD, LEVIER DE STARTER	1	1				
19	6AH–41211–00	LINK, ACCEL. BIELLETTE, ACCELERATION	1	1				
20	90387–06139	COLLAR COLLERETTE	1	1				
21	90201–06M31	WASHER, PLATE RONDELLE, PLATE	1	1				
22	97595–06555	BOLT, WITH WASHER VIS HEXAGONAL AVC RONDELLE	1	1				
23	97095–06014	BOLT BOULON	2	2				
24	6AH–14571–10	BRACKET, THROTTLE SUPPORT, ACCELERATEUR	1	1				
25	6AH–44167–10	PLUNGER, SHIFT CAM POUSSOIR D'EMBRAYAGE	1	1				
26	62Y–42171–00	BUSHING COUSSINET	1	1				

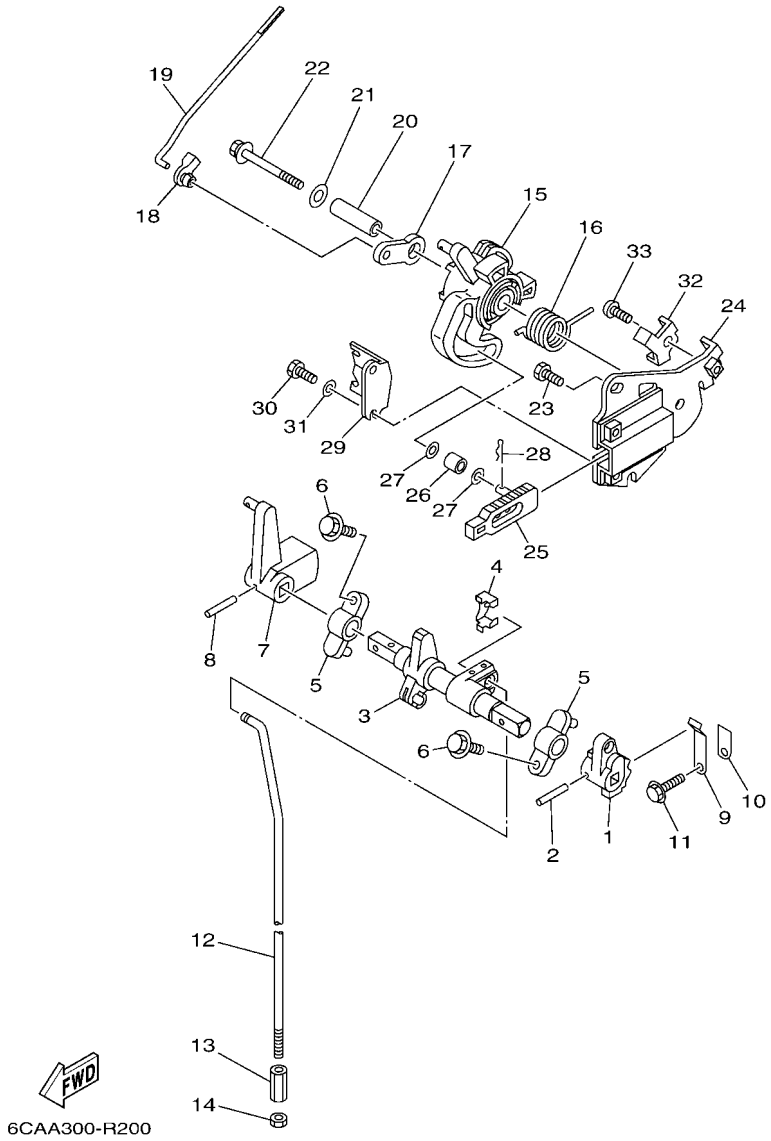

FIG. 20 CONTROL 1 — COMMANDE 1

REF. NO.	PART NO. N° PIECES	DESCRIPTION DESCRIPTION	MH	WH	E			REMARKS REMARQUES
27	90201–05M04	WASHER, PLATE RONDELLE, PLATE	2	2				
28	90468–10005	CLIP JONC	1	1				
29	6AH–14497–00	STAY, THROTTLE WIRE SUPPORT DE BOISSEAU	1	1				
30	97095–06014	BOLT BOULON	2	2				
31	92995–06600	WASHER RONDELLE	2	2				
32	6AH–41282–00	STOPPER, FREE ACCEL. LINK VERROU	1	1				
33	90149–06069	SCREW VIS	1	1				

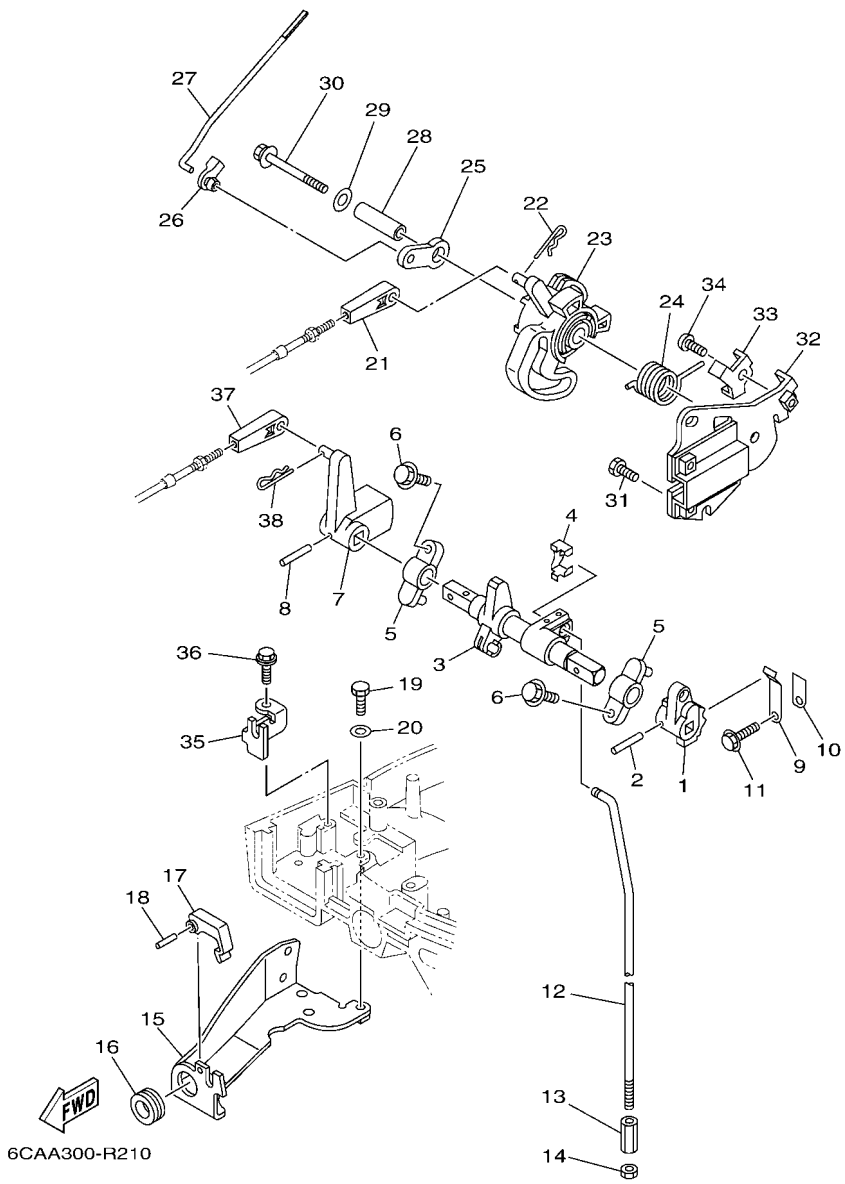

FIG. 21 CONTROL 2 — COMMANDE 2

REF. NO.	PART NO. N° PIECES	DESCRIPTION DESCRIPTION	MH	WH	E			REMARKS REMARQUES
1	6AH–44123–00	ARM, SHIFT ROD BRAS, TIGE D'INVERSION			1			
2	90254–03M05	PIN, SPRING RIVET, TETE TRONCONIQUE			1			
3	6AH–44121–01	LEVER, SHIFT ROD LEVIER, TIGE D'INVERSION			1			
4	6AH–26364–00	END, CABLE 2 EMBOUT, DE CABLE			1			
5	6G1–41662–01–94	BRACKET 2 SUPPORT 2			2			
6	97595–06520	BOLT, WITH WASHER VIS HEXAGONAL AVC RONDELLE			2			
7	6AH–44125–00	LEVER, SHIFT ROD LEVIER, TIGE D'INVERSION			1			
8	90254–03M05	PIN, SPRING RIVET, TETE TRONCONIQUE			1			
9	65W–44116–00	SPRING RESSORT			1			
10	66R–44114–00	STOPPER PLAQUETTE			1			
11	95895–06014	BOLT, FLANGE BOULON			1			
12	6AH–44143–00	ROD, SHIFT 1 TIGE D'EMBRAYAGE 1			1			S(17.1") S(17.1")
	6AH–44143–10	ROD, SHIFT 1 TIGE D'EMBRAYAGE 1			1			L(22.1") L(22.1")
13	90170–06015	NUT ECROU			1			
14	95380–06700	NUT ECROU			1			
15	6AH–48532–00	BRACKET, REMOTE CONTROL 2 ETRIER 2, COMMANDE A DISTANCE			1			
16	90480–19031	GROMMET PASSE-FIL			1			
17	682–48538–50	CLAMP, CABLE 1 COLLIER			1			
18	91690–30012	PIN, SPRING AGRAFFE			1			
19	97095–06014	BOLT BOULON			2			
20	92995–06600	WASHER RONDELLE			2			
21	6FM–48344–00	CABLE END, REMOTE CONTROL CHAPE CABLE			1			
22	90468–18008	CLIP JONC			1			
23	6AH–41638–00	PULLEY POULIE			1			
24	90508–20M44	SPRING, TORSION RESSORT, TORSION			1			
25	65W–41283–00	LEVER, FREE ACCEL. LEVIER			1			
26	6J8–41262–00	JOINT, CHOKE LEVER RACCORD, LEVIER DE STARTER			1			

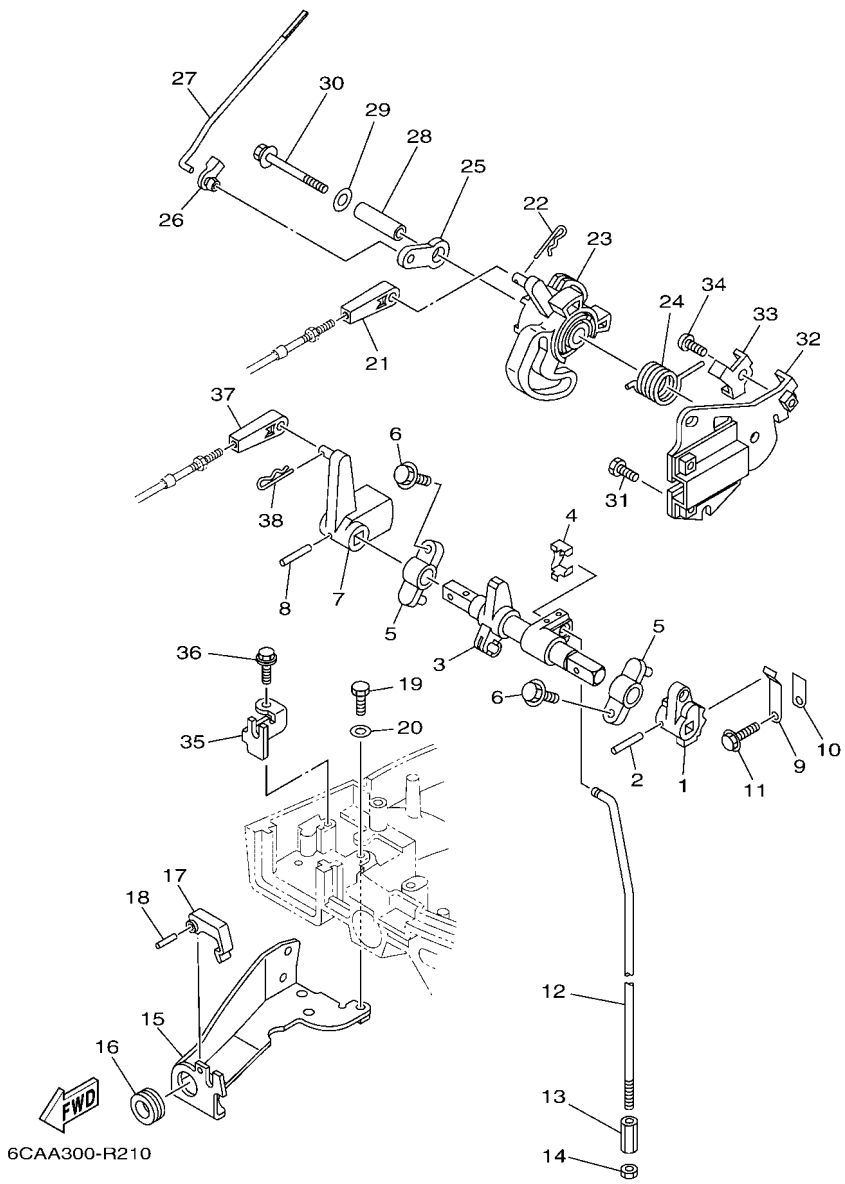

FIG. 21 CONTROL 2 — COMMANDE 2

REF. NO.	PART NO. N° PIECES	DESCRIPTION DESCRIPTION	MH	WH	E			REMARKS REMARQUES
27	6AH–41211–00	LINK, ACCEL. BIELLETTE, ACCELERATION			1			
28	90387–06139	COLLAR COLLERETTE			1			
29	90201–06M31	WASHER, PLATE RONDELLE, PLATE			1			
30	97595–06555	BOLT, WITH WASHER VIS HEXAGONAL AVC RONDELLE			1			
31	97095–06014	BOLT BOULON			2			
32	6AH–14571–10	BRACKET, THROTTLE SUPPORT, ACCELERATEUR			1			
33	6AH–41282–00	STOPPER, FREE ACCEL. LINK VERROU			1			
34	90149–06069	SCREW VIS			1			
35	6AH–48531–00	BRACKET, REMOTE CONTROL 1 ETRIER 1, COMMANDE A DISTANCE			1			
36	90109–06M86	BOLT BOULON			1			
37	6FM–48344–00	CABLE END, REMOTE CONTROL CHAPE CABLE			1			
38	90468–18008	CLIP JONC			1			

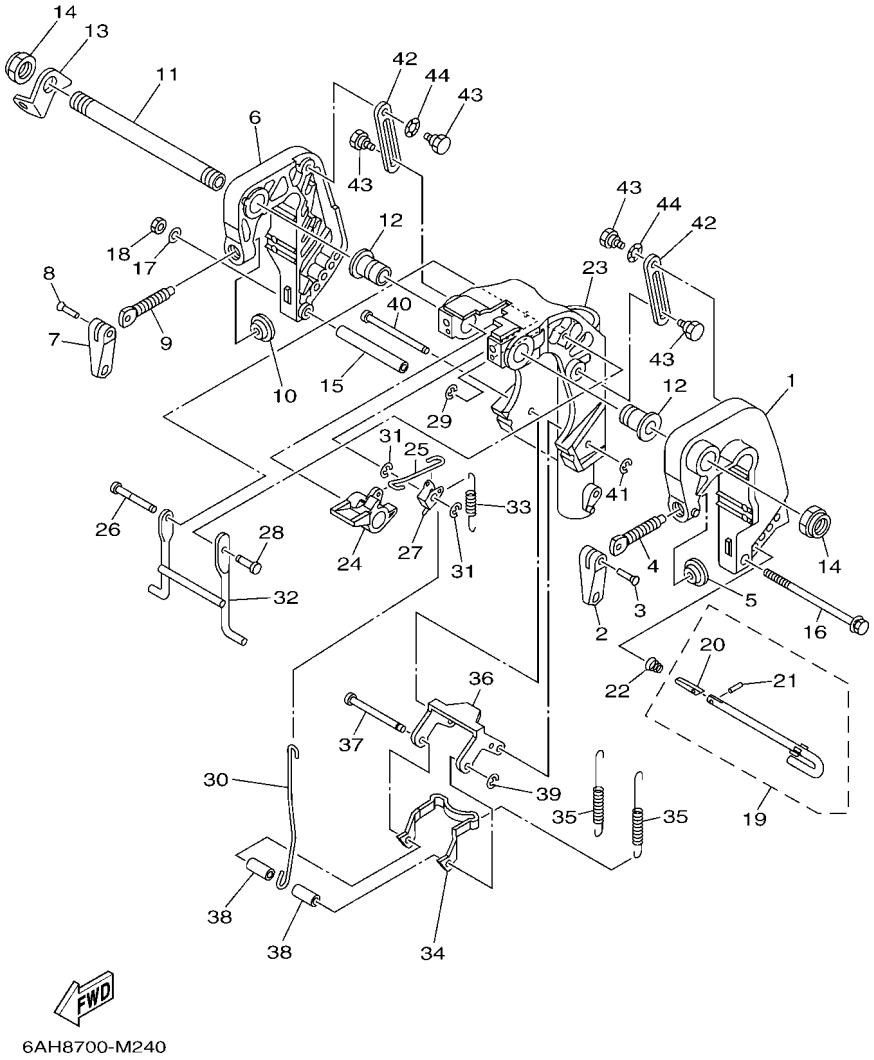

FIG. 22 BRACKET 1 — SUPPORT 1

REF. NO.	PART NO. N° PIECES	DESCRIPTION DESCRIPTION	MH	WH	E			REMARKS REMARQUES
1	6AH–43111–00–8D	BRACKET, CLAMP 1 PRESSE 1	1	1	1			
2	6E0–43118–01	HANDLE, TRANSOM CLAMP POIGNEE DE VIS DE PRESSE	1	1	1			
3	90243–04M01	PIN GOUPILLE	1	1	1			
4	6E7–43116–00	SCREW, TRANSOM CLAMP VIS DE PRESSE	1	1	1			
5	648–43114–01	PAD, TRANSOM CLAMP RONDELLE D'APPUI	1	1	1			
6	6AH–43112–00–8D	BRACKET, CLAMP 2 PRESSE 2	1	1	1			
7	6E0–43118–01	HANDLE, TRANSOM CLAMP POIGNEE DE VIS DE PRESSE	1	1	1			
8	90243–04M01	PIN GOUPILLE	1	1	1			
9	6E7–43116–00	SCREW, TRANSOM CLAMP VIS DE PRESSE	1	1	1			
10	648–43114–01	PAD, TRANSOM CLAMP RONDELLE D'APPUI	1	1	1			
11	69A–43131–00	BOLT, CLAMP BRACKET BOULON, PRESSE	1	1	1			FOR REMOTE CONTROL FOR REMOTE CONTROL
12	90386–22MA4	BUSH DOUILLE	2	2	2			
13	66R–43113–00	PLATE, CLAMP BRACKET PLAQUETTE, PRESSE	1	1	1			
14	90185–22043	NUT, SELF-LOCKING ECROU,AUTO-BLOQUANT	2	2	2			
15	90387–06M13	COLLAR COLLERETTE	1	1	1			
16	90101–06M18	BOLT BOULON	1	1	1			
17	92995–06600	WASHER RONDELLE	1	1	1			
18	95380–06700	NUT ECROU	1	1	1			
19	6L2–43160–01	TILT ROD ASSY BROCHE D'INCLINAISON (ENS.)	1	1	1			
20	689–43165–00	.PLATE, TILT LOCK .TAQUET, BROCHE INCLINAISON	1	1	1			
21	91690–30008	.PIN, SPRING .AGRAFFE	1	1	1			
22	90502–10M07	SPRING, CONICAL RESSORT, CONIQUE	1	1	1			
23	6AH–43311–00–8D	BRACKET, SWIVEL 1 SUPPORT, PIVOT 1	1	1	1			S(17.1") S(17.1")
	6AH–43311–10–8D	BRACKET, SWIVEL 1 SUPPORT, PIVOT 1	1	1	1			L(22.1") L(22.1")
24	6DR–43631–00	LEVER, TILT LEVIER, INCLINAISON	1	1	1			
25	6DR–43616–00	ROD, TILT LOCK TIGE	1	1	1			
26	6AH–43646–10	SHAFT, LEVER AXE, LEIVER	1	1	1			

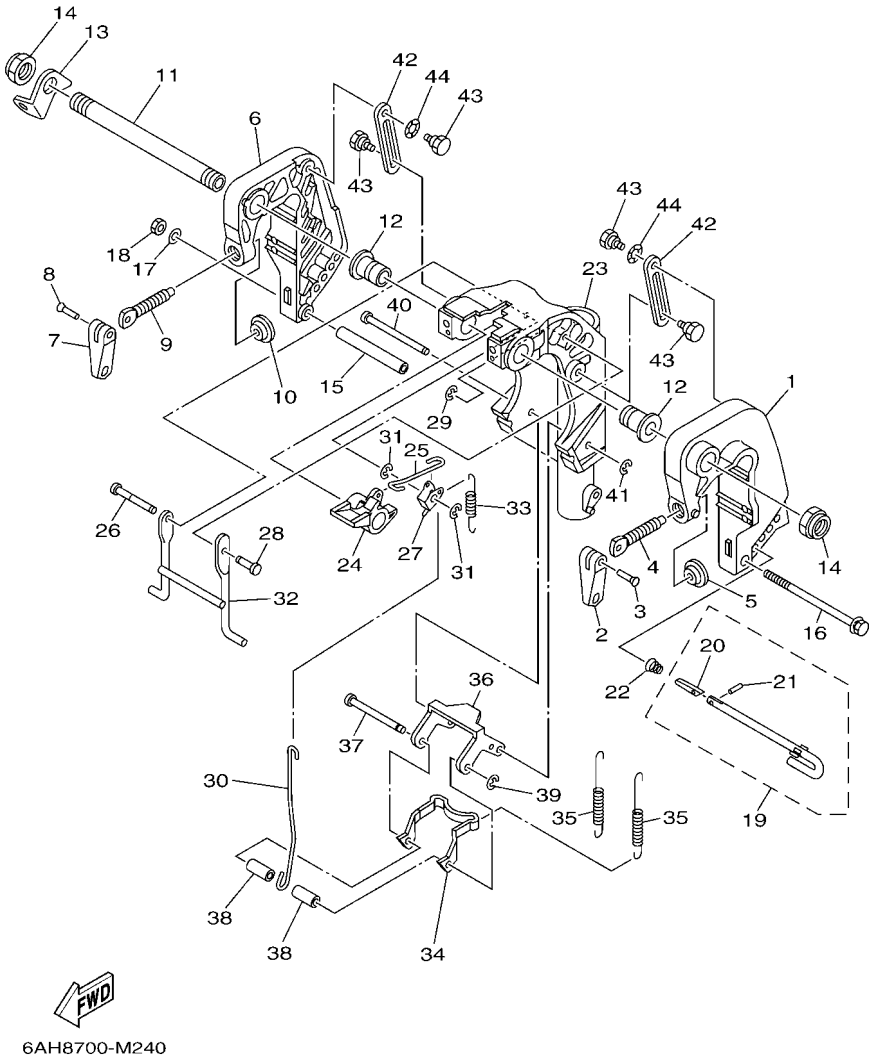

FIG. 22 BRACKET 1 SUPPORT 1

REF. NO.	PART NO. N° PIECES	DESCRIPTION DESCRIPTION	MH	WH	E			REMARKS REMARQUES
27	6DR–43641–00	LEVER, TILT LEVIER, INCLINAISON	1	1	1			
28	6AH–43191–10	SHAFT, STOPPER AXE, BUTEE	1	1	1			
29	99080–05600	CIRCLIP CIRCLIP	1	1	1			
30	6AH–43617–00	ROD, TILT LOCK TIGE	1	1	1			
31	99080–05600	CIRCLIP CIRCLIP	2	2	2			
32	6AH–43350–00	RECEIVER ASSY RECEIVER ASSY	1	1	1			
33	90506–18014	SPRING, TENSION RESSORT, TENSION	1	1	1			
34	6AH–43614–00	PLATE, TILT LOCK ETRIER, VERROUILLAGE MARCHE AR	1	1	1			
35	90506–20020	SPRING, TENSION RESSORT, TENSION	2	2	2			
36	6AH–43615–00	PLATE, TILT LOCK ETRIER, VERROUILLAGE MARCHE AR	1	1	1			
37	68T–43611–00	SHAFT, TILT LOCK AXE, VERROUILLAGE MARCHE AR	1	1	1			
38	90387–06138	COLLAR COLLERETTE	2	2	2			
39	93430–04M03	CIRCLIP CLIPS	1	1	1			
40	68T–43659–00	SHAFT, REVERSE LOCK AXE, VERROUILLAGE MARCHE AR	1	1	1			
41	99080–05600	CIRCLIP CIRCLIP	1	1	1			
42	6AH–43627–00	STOPPER PLAQUETTE	2	2	2			
43	90109–06M84	BOLT BOULON	4	4	4			
44	90206–10M24	WASHER, WAVE RONDELLE, ONDULEE	2	2	2			

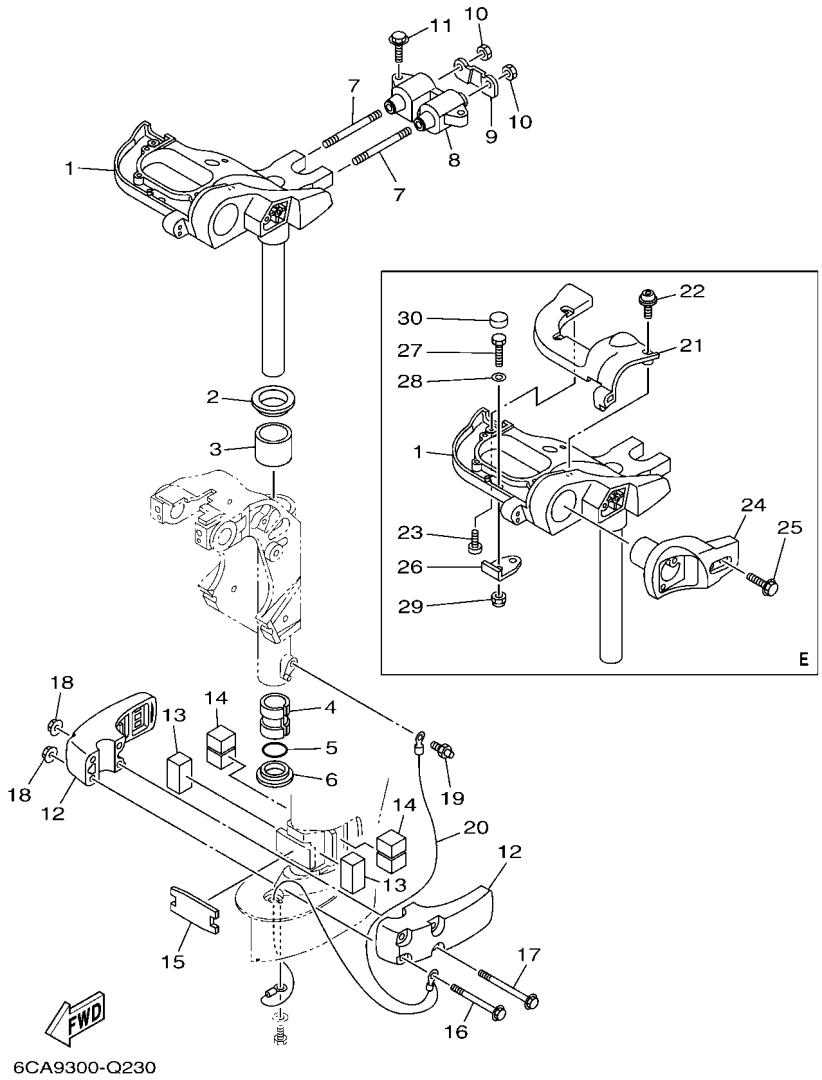

FIG. 23 BRACKET 2 SUPPORT 2

REF. NO.	PART NO. N° PIECES	DESCRIPTION DESCRIPTION	MH	WH	E			REMARKS REMARQUES
1	6AH–42510–00–8D	STEERING BRACKET ASSY DIRECTION SUPPORT (ENS.)	1	1	1			S(17.1") S(17.1")
	6AH–42510–10–8D	STEERING BRACKET ASSY DIRECTION SUPPORT (ENS.)	1	1	1			L(22.1") L(22.1")
2	90209–40008	WASHER RONDELLE	1	1	1			
3	90386–40001	BUSH DOUILLE	1	1	1			
4	90386–30048	BUSH DOUILLE	1	1	1			
5	93210–29M94	O-RING JOINT TORIQUE	1	1	1			
6	90386–30M60	BUSH DOUILLE	1	1	1			
7	90116–10033	BOLT, STUD GOUJON	2	2	2			
8	6AH–44514–00	MOUNT DAMPER, UPPER SIDE SILENT-BLOC, SUPERIEUR LATERAL	1	1	1			
9	6AH–44526–00	PLATE PLAQUE	1	1	1			
10	95380–10600	NUT ECROU	2	2	2			
11	90119–08094	BOLT, WITH WASHER BOULON, AVEC RONDELLE	2	2	2			
12	6AH–44551–A0–8D	HOUSING, LOWER MOUNT RUBBER 1 BOITIER, SILENT-BLOC INFERIEUR	2	2	2			
13	6AH–44557–00	MOUNT DAMPER, LOWER FRONT SILENT-BLOC, INFERIEUR AVANT	2	2	2			
14	6AH–44555–00	MOUNT DAMPER, LOWER SIDE SILENT-BLOC, INFERIEUR LATERAL	2	2	2			
15	6AH–44574–00	STOPPER, LOWER MOUNT RUBBER BUTEE	1	1	1			
16	90119–08M45	BOLT, WITH WASHER BOULON, AVEC RONDELLE	2	2	2			
17	90119–08M46	BOLT, WITH WASHER BOULON, AVEC RONDELLE	2	2	2			
18	90179–08M34	NUT ECROU	4	4	4			
19	93700–06M03	NIPPLE, GREASE PION	1	1	1			
20	6AH–82127–00	WIRE, LEAD 2 FIL 2	1	1	1			
21	6AH–42532–B0	COVER COUVERCLE			1			
22	90111–06072	BOLT,HEX. SOCKET BUTTON BOULON			4			
23	97780–60520	SCREW, TAPPING VIS, TETE BOMBEE			1			
24	6AH–83773–00	BRACKET, SWITCH JOINT TORIQUE, COMMUTATEUR			1			
25	97595–06530	BOLT, WITH WASHER VIS HEXAGONAL AVC RONDELLE			2			
26	6AH–48511–01	HOOK, STEERING ATTACHE, DIRECTION			1			

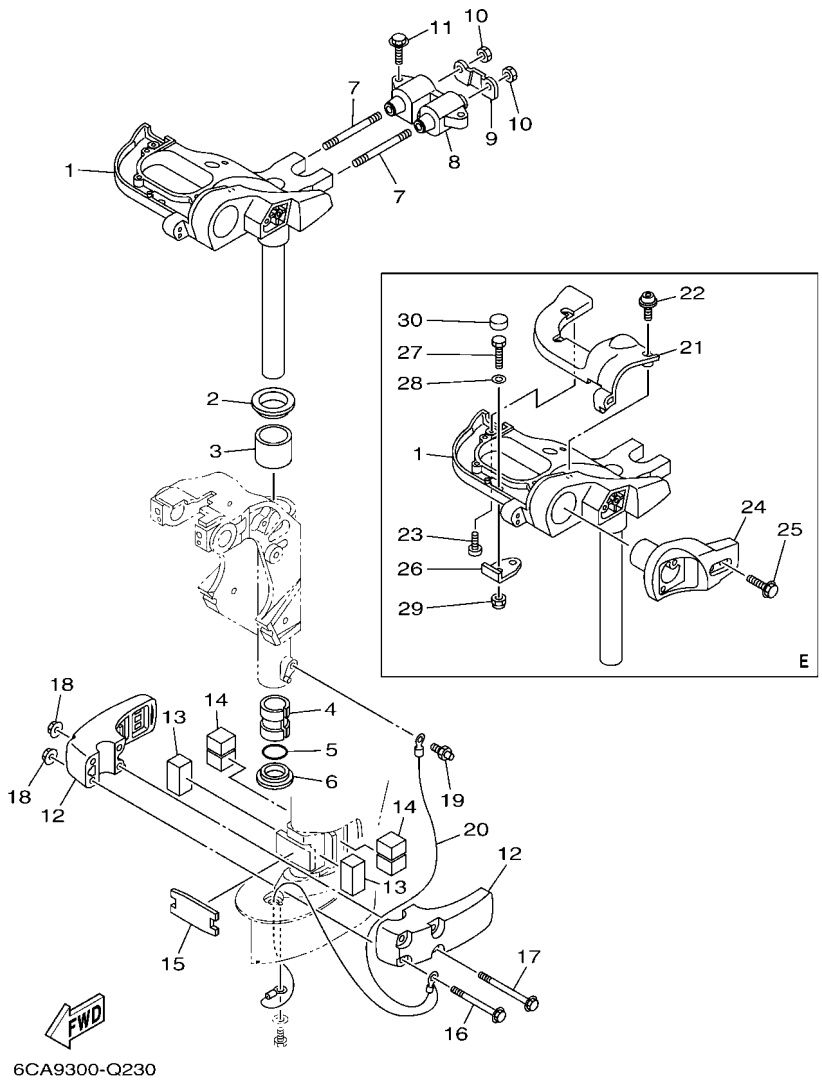

FIG. 23 BRACKET 2 — SUPPORT 2

REF. NO.	PART NO. N° PIECES	DESCRIPTION DESCRIPTION	MH	WH	E			REMARKS REMARQUES
27	97095–08025	BOLT BOULON			1			
28	92995–08600	WASHER RONDELLE			1			
29	90185–08057	NUT, SELF-LOCKING ECROU,AUTO-BLOQUANT			1			
30	6AH–44194–00	CAP CAPUCHON			1			

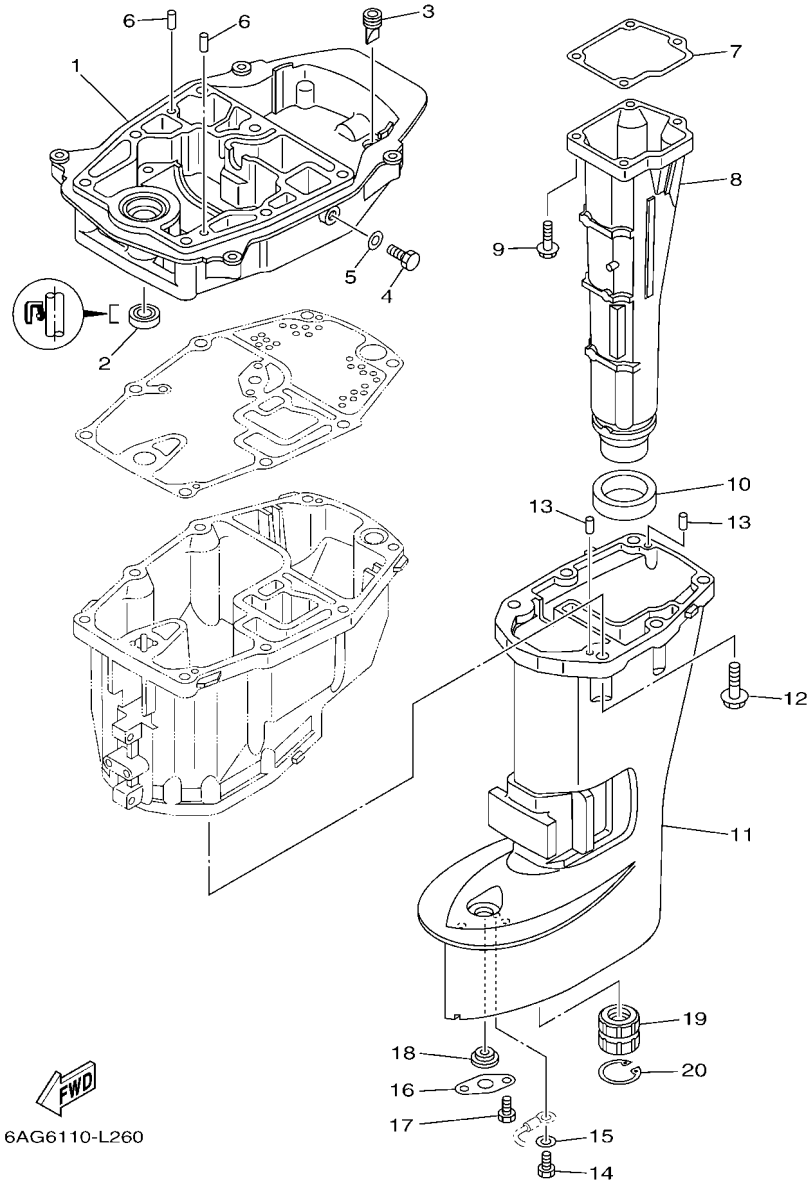

FIG. 24 UPPER CASING FOURREAU

REF. NO.	PART NO. N° PIECES	DESCRIPTION DESCRIPTION	MH	WH	E			REMARKS REMARQUES
1	6AH–41137–00–CA	GUIDE, EXHAUST COLLECTEUR D'ECHAPPEMENT	1	1	1			
2	93101–12M63	OIL SEAL JOINT SPY	1	1	1			
3	65W–42717–00	RUBBER, SEAL 2 JOINT EN CAOUTCHOUC 2	1	1	1			
4	97095–08014	BOLT BOULON	1	1	1			
5	90430–08143	GASKET JOINT	1	1	1			
6	93606–19M23	PIN, DOWEL GOUPILLE	2	2	2			
7	6AH–41134–00	GASKET, EXHAUST MANIFOLD JOINT, PIPE D'ECHAPPEMENT	1	1	1			
8	6AH–14711–00–CA	MUFFLER 1 POT D'ECHAPPEMENT 1	1	1	1			S(17.1") S(17.1")
	6AH–14711–A0–CA	MUFFLER 1 POT D'ECHAPPEMENT 1	1	1	1			L(22.1") L(22.1")
9	97575–06525	BOLT, WITH WASHER VIS HEXAGONAL AVC RONDELLE	4	4	4			
10	6AH–41138–00	SEAL, EXT. 1 JOINT DE GROUPE 1	1	1	1			
11	6AH–45111–00–8D	CASING, UPPER FOURREAU	1	1	1			S(17.1") S(17.1")
	6AH–45111–10–8D	CASING, UPPER FOURREAU	1	1	1			L(22.1") L(22.1")
12	97575–08530	BOLT, WITH WASHER VIS HEXAGONAL AVC RONDELLE	6	6	6			
13	93604–12M07	PIN, DOWEL CLAVETTE	2	2	2			
14	97095–05010	BOLT BOULON	1	1	1			
15	92995–05600	WASHER RONDELLE	1	1	1			
16	68T–45321–00	PLATE PLAQUETTE	1	1	1			
17	97095–06008	BOLT BOULON	1	1	1			
18	90480–14M54	GROMMET PASSE-FIL	1	1	1			
19	682–45318–00	BUSHING, DRIVE SHAFT DOUILLE, ARBRE MOTEUR	1	1	1			L(22.1") L(22.1")
20	93420–30042	CIRCLIP CIRCLIP, TYPE S	1	1	1			L(22.1") L(22.1")

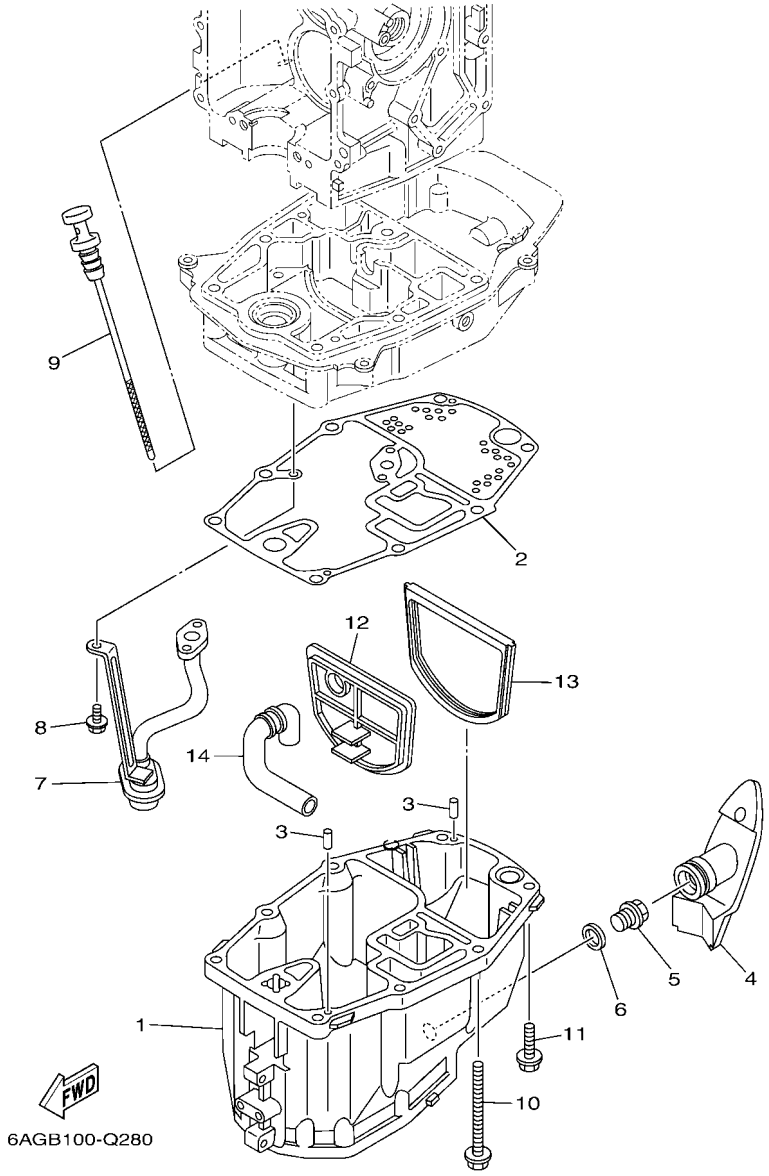

FIG. 25 OIL PAN — VENTILATEUR D'HUILE

REF. NO.	PART NO. N° PIECES	DESCRIPTION DESCRIPTION	MH	WH	E			REMARKS REMARQUES
1	6AH–15311–00–CA	OIL PAN VENTILATEUR D'HUILE	1	1	1			
2	6AH–15312–10	GASKET, OIL PAN JOINT DE VENTILATEUR D'HUILE	1	1	1			
3	93604–12M07	PIN, DOWEL CLAVETTE	2	2	2			
4	6AH–15316–00	DAMPER 1 AMORTISSEUR 1	1	1	1			
5	90340–14M06	PLUG, STRAIGHT SCREW PLOT, FILETE DROIT	1	1	1			
6	90430–14M09	GASKET JOINT	1	1	1			
7	6AH–13411–00	STRAINER, OIL FILTRE, HUILE	1	1	1			
8	97513–06516	BOLT, WITH WASHER VIS HEXAGONAL AVC RONDELLE	3	3	3			
9	6AH–15362–10	PLUG, OIL LEVEL PLOT, NIVEAU D'HUILE	1	1	1			
10	90119–08103	BOLT, WITH WASHER BOULON, AVEC RONDELLE	6	6	6			
11	97575–08530	BOLT, WITH WASHER VIS HEXAGONAL AVC RONDELLE	2	2	2			
12	6AH–45126–00	PLATE, SEAL DAMPER PLAQUETTE	1	1	1			
13	6AH–45115–00	GASKET, UPPER CASING JOINT, TUBE D'ARBRE	1	1	1			
14	6AH–45135–00	PIPE TUYAU	1	1	1			

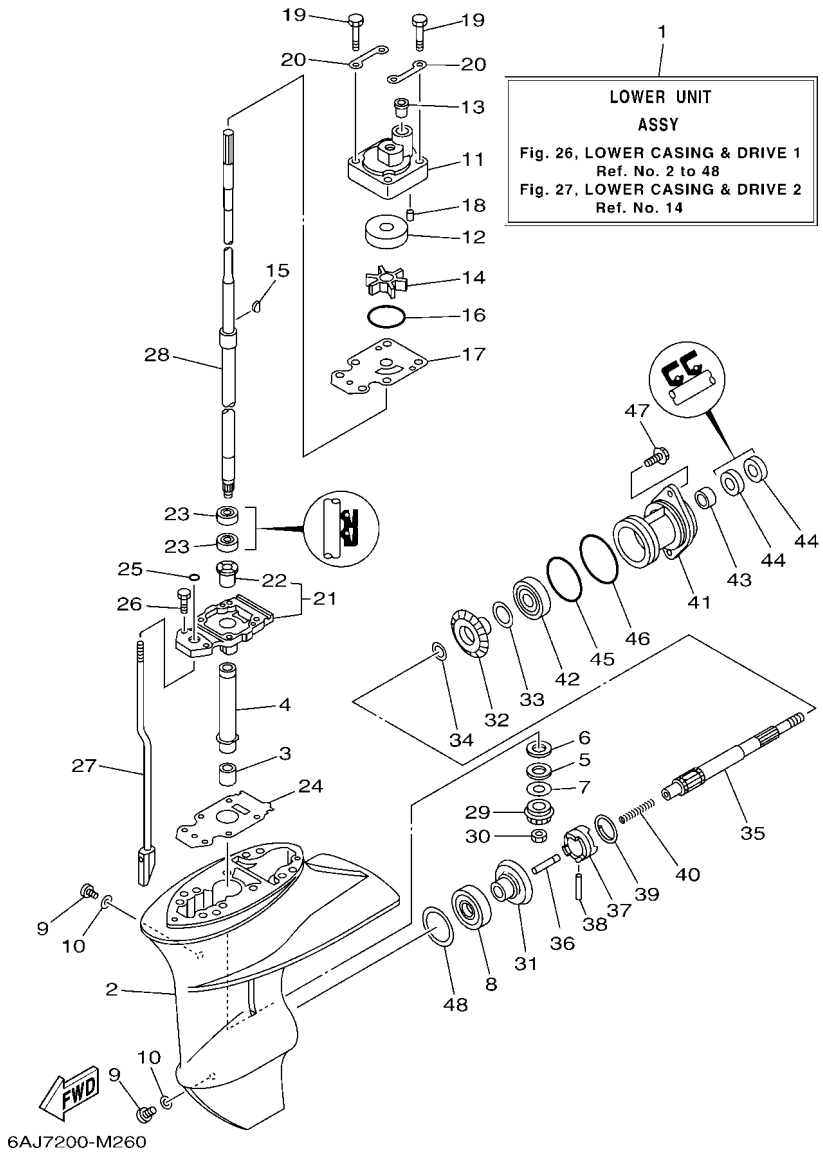

FIG. 26 LOWER CASING & DRIVE 1 — BOITIER D'HELICE TRANSMISSION1

REF. NO.	PART NO. N° PIECES	DESCRIPTION DESCRIPTION	MH	WH	E			REMARKS REMARQUES
1	6AH–45300–00–8D	LOWER UNIT ASSY UNITE INFERIEURE (ENS.)	1	1	1			S(17.1") S(17.1")
	6AH–45300–10–8D	LOWER UNIT ASSY UNITE INFERIEURE (ENS.)	1	1	1			L(22.1") L(22.1")
2	6AH–45311–00–8D	CASING, LOWER BOITIER D'HELICE	1	1	1			
3	93315–314V8	BEARING ROULEMENT	1	1	1			
4	63V–45536–00	SLEEVE, DRIVE SHAFT MANCHON, ARBRE MOTEUR	1	1	1			
5	90209–14011	WASHER RONDELLE	1	1	1			
6	90201–15017	WASHER, PLATE RONDELLE, PLATE	1	1	1			
7	6E8–45587–10	SHIM (T:1.13MM) CALE (T:1.13MM)	1	1	1			UR UR
	6E8–45587–30	SHIM (T:1.20MM) CALE (T:1.20MM)	1	1	1			UR UR
8	93332–00005	BEARING ROULEMENT	1	1	1			
9	90340–08002	PLUG, STRAIGHT SCREW PLOT, FILETE DROIT	2	2	2			
10	90430–08003	GASKET JOINT	2	2	2			
11	6AH–44311–00	HOUSING, WATER PUMP CORPS, POMPE A EAU	1	1	1			
12	63V–44322–00	INSERT, CARTRIDGE CUVETTE	1	1	1			
13	6L2–44367–00	DAMPER, WATER SEAL 3 JOINT TUBE D'EAU 3	1	1	1			
14	63V–44352–01	IMPELLER TURBINE	1	1	1			
15	664–44338–00	KEY, WOODRUFF CLAVETTE, VOLANT	1	1	1			
16	93210–49046	O-RING JOINT TORIQUE	1	1	1			
17	68T–44323–00	OUTER PLATE, CARTRIDGE PLAQUE EXTERIEURE	1	1	1			
18	93604–12M07	PIN, DOWEL CLAVETTE	2	2	2			
19	97095–08045	BOLT BOULON	4	4	4			
20	63V–44328–01	PLATE PLAQUETTE	2	2	2			
21	69G–45331–01–CA	HOUSING, BEARING FLASQUE, ROULEMENT	1	1	1			
22	626–45316–09	.BUSHING, DRIVE SHAFT .DOUILLE, ARBRE MOTEUR	1	1	1			
23	93101–20001	OIL SEAL JOINT SPY	2	2	2			
24	69G–45315–A0	PACKING, LOWER CASING JOINT, BOITIER D'HELICE	1	1	1			
25	93210–06ME6	O-RING JOINT TORIQUE	1	1	1			

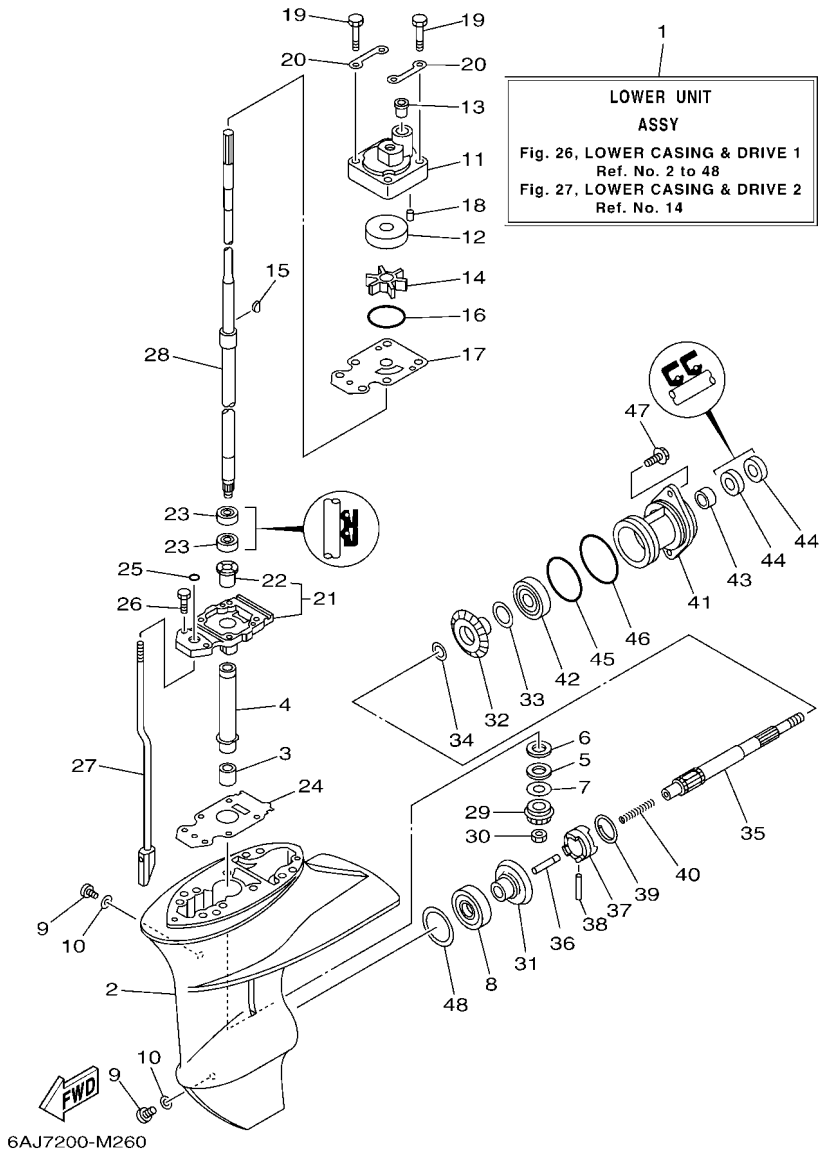

FIG. 26 LOWER CASING & DRIVE 1 — BOITIER D'HELICE TRANSMISSION1

REF. NO.	PART NO. N° PIECES	DESCRIPTION DESCRIPTION	MH	WH	E			REMARKS REMARQUES
26	97080–08025	BOLT BOULON	2	2	2			
27	6AH–44150–00	SHIFT CAM ASSY CAME D'INVERSION	1	1	1			S(17.1") S(17.1")
	6AH–44150–10	SHIFT CAM ASSY CAME D'INVERSION	1	1	1			L(22.1") L(22.1")
28	6AH–45510–00	DRIVE SHAFT ASSY ARBRE MOTEUR (ENS.)	1	1	1			S(17.1") S(17.1")
	6AH–45510–10	DRIVE SHAFT ASSY ARBRE MOTEUR (ENS.)	1	1	1			L(22.1") L(22.1")
29	63V–45551–00	PINION (13T) PIGNON D'ATTAQUE (13D)	1	1	1			
30	90179–08M06	NUT ECROU	1	1	1			
31	6E7–45560–01	GEAR 1 (27T) PIGNON 1 (27T)	1	1	1			
32	6E7–45571–00	GEAR 2 (27T) PIGNON 2 (27T)	1	1	1			
33	626–45577–00	SHIM (T:0.10MM) CALE (T:0.10MM)	1	1	1			UR UR
	626–45577–10	SHIM (T:0.20MM) CALE (T:0.20MM)	1	1	1			UR UR
	626–45577–20	SHIM (T:0.30MM) CALE (T:0.30MM)	1	1	1			UR UR
	626–45577–30	SHIM (T:0.40MM) CALE (T:0.40MM)	1	1	1			UR UR
	626–45577–40	SHIM (T:0.50MM) CALE (T:0.50MM)	1	1	1			UR UR
34	90201–17682	WASHER, PLATE RONDELLE, PLATE	1	1	1			
35	683–45611–00	SHAFT, PROPELLER ARBRE, HELICE	1	1	1			
36	650–45635–00	PLUNGER, SHIFT POUSSOIR D'EMBRAYAGE	1	1	1			
37	682–45631–00	CLUTCH, DOG CRABOT	1	1	1			
38	90250–05010	PIN, STRAIGHT GOUPILLE, DROITE	1	1	1			
39	648–45633–11	RING, CROSS PIN JONC, GOUPILLE CRABOT	1	1	1			
40	90501–150A0	SPRING, COMPRESSION RESSORT, COMPRESSION	1	1	1			
41	683–45361–02–8D	CAP, LOWER CASING COUVERCLE, BOITIER D'HELICE	1	1	1			
42	93306–00501	BEARING ROULEMENT	1	1	1			
43	93315–317U2	BEARING ROULEMENT	1	1	1			
44	93101–17054	OIL SEAL JOINT SPY	2	2	2			
45	93210–57M09	O-RING JOINT TORIQUE	1	1	1			
46	93210–56M80	O-RING JOINT TORIQUE	1	1	1			

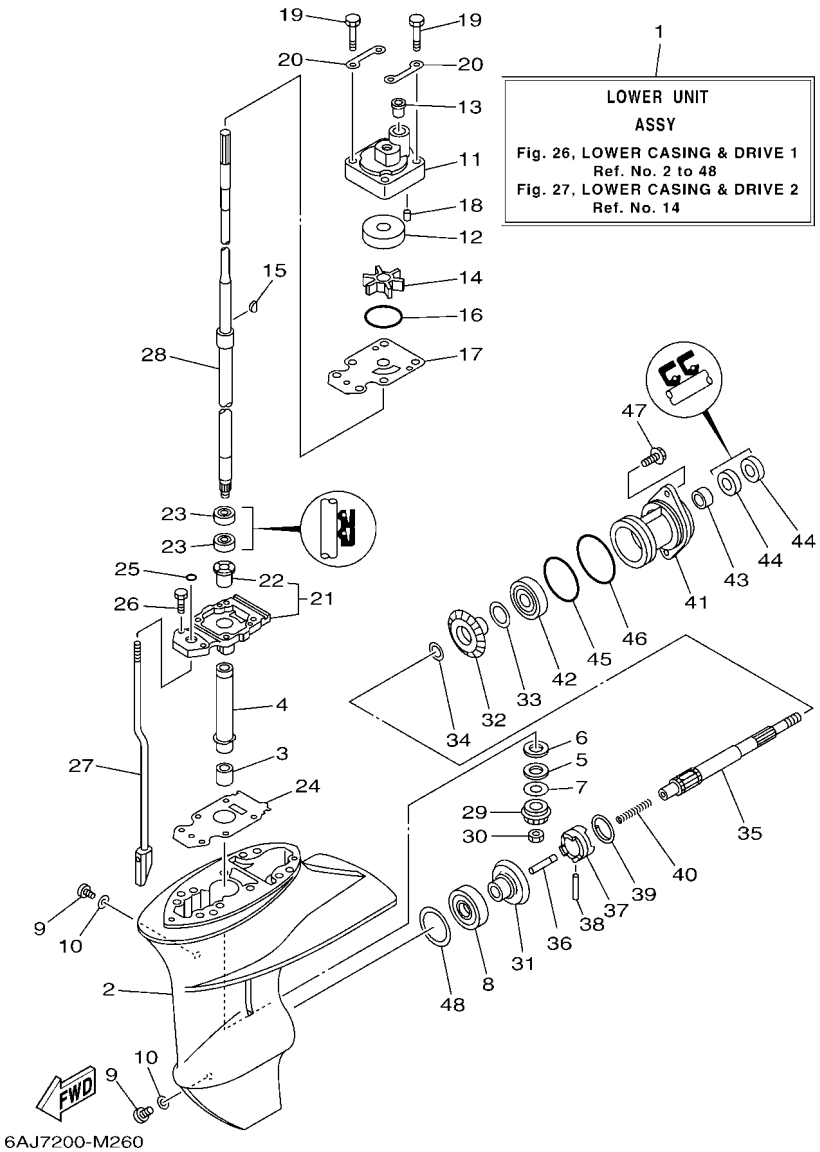

FIG. 26 LOWER CASING & DRIVE 1 — BOITIER D'HELICE TRANSMISSION1

REF. NO.	PART NO. N° PIECES	DESCRIPTION DESCRIPTION	MH	WH	E			REMARKS REMARQUES
47	97575–06520	BOLT, WITH WASHER VIS HEXAGONAL AVC RONDELLE	2	2	2			
48	664–45567–01	SHIM (T:0.10MM) CALE (T:0.10MM)	1	1	1			UR UR
	664–45567–10	SHIM (T:0.12MM) CALE (T:0.12MM)	1	1	1			UR UR
	664–45567–20	SHIM (T:0.15MM) CALE (T:0.15MM)	1	1	1			UR UR
	664–45567–30	SHIM (T:0.18MM) CALE (T:0.18MM)	1	1	1			UR UR
	664–45567–40	SHIM (T:0.30MM) CALE (T:0.30MM)	1	1	1			UR UR
	664–45567–50	SHIM (T:0.40MM) CALE (T:0.40MM)	1	1	1			UR UR
	664–45567–60	SHIM (T:0.50MM) CALE (T:0.50MM)	1	1	1			UR UR

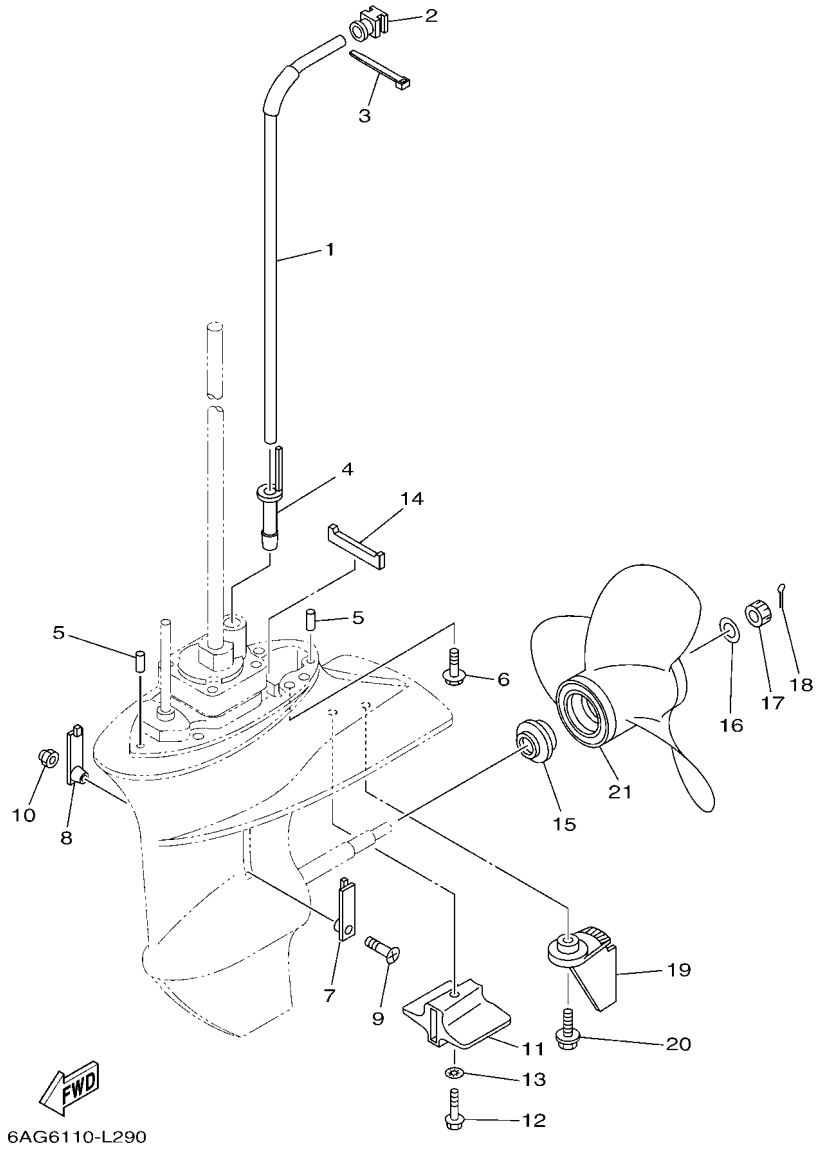

FIG. 27 LOWER CASING & DRIVE 2 — BOITIER D'HELICE TRANSMISSION2

REF. NO.	PART NO. N° PIECES	DESCRIPTION DESCRIPTION	MH	WH	E			REMARKS REMARQUES
1	6AH–44361–01	TUBE, WATER 1 TUBE D'EAU 1	1	1	1			S(17.1") S(17.1")
	6AH–44361–11	TUBE, WATER 1 TUBE D'EAU 1	1	1	1			L(22.1") L(22.1")
2	6AH–44365–00	DAMPER, WATER SEAL 1 JOINT, TUBE D'EAU 1	1	1	1			
3	90465–11M10	CLAMP BRIDE	1	1	1			
4	6AH–44368–00	RUBBER, WATER SEAL 4 CAOUTCHOUC EAU JUNTA 4	1	1	1			
5	93604–12M07	PIN, DOWEL CLAVETTE	2	2	2			
6	97575–08530	BOLT, WITH WASHER VIS HEXAGONAL AVC RONDELLE	4	4	4			
7	6G1–45214–00	COVER, WATER INLET 1 GRILLE, ENTREE D'EAU 1	1	1	1			
8	63V–45215–00	COVER, WATER INLET 2 GRILLE, ENTREE D'EAU 2	1	1	1			
9	90152–05011	SCREW, COUNTERSUNK VIS, TETE NOYEE	1	1	1			
10	90185–05002	NUT, NYLON ECROU,AUTO-BLOQUANT	1	1	1			
11	6AH–45251–00	ANODE ANODE	1	1	1			
12	95895–06035	BOLT, FLANGE BOULON	1	1	1			
13	92990–06300	WASHER, INTERNAL TOOTH RONDELLE, DENTURE INTERNE	1	1	1			
14	63V–45375–00	DAMPER, SEAL BOURRELET, CAOUTCHOUC	1	1	1			
15	6E7–45987–01	SPACER 1 ENTRETOISE 1	1	1	1			
16	90201–10M01	WASHER, PLATE RONDELLE, PLATE	1	1	1			
17	90171–10M01	NUT, CASTLE ECROU, CRENELE	1	1	1			
18	91490–30020	PIN. COTTER GOUPILLE	1	1	1			
19	6AH–45371–A0–8D	TAB-TRIM ANODE DERIVE	1	1	1			
20	90119–06M88	BOLT, WITH WASHER BOULON, AVEC RONDELLE	1	1	1			
21	63V–45945–10	PROPELLER (3X9-1/4"X9"-J1) HELICE (3X9-1/4"X9"-J1)	1	1	1			UR UR
	683–45952–00	PROPELLER (3X9-1/4"X9-3/4"-J) HELICE (3X9-1/4"X9-3/4"-J)	1	1	1			UR UR
	63V–45952–10	PROPELLER (3X9-1/4"X10"-J1) HELICE (3X9-1/4"X10"-J1)	1	1	1			UR UR
	683–45943–00	PROPELLER (3X9-1/4"X10-1/2"-J) HELICE (3X9-1/4"X10-1/2"-J)	1	1	1			UR UR
	63V–45943–10	PROPELLER (3X9-1/4"X11"-J1) HELICE (3X9-1/4"X11"-J1)	1	1	1			UR UR
	63V–45941–10	PROPELLER (3X9-1/4"X12"-J1) HELICE (3X9-1/4"X12"-J1)	1	1	1			UR UR

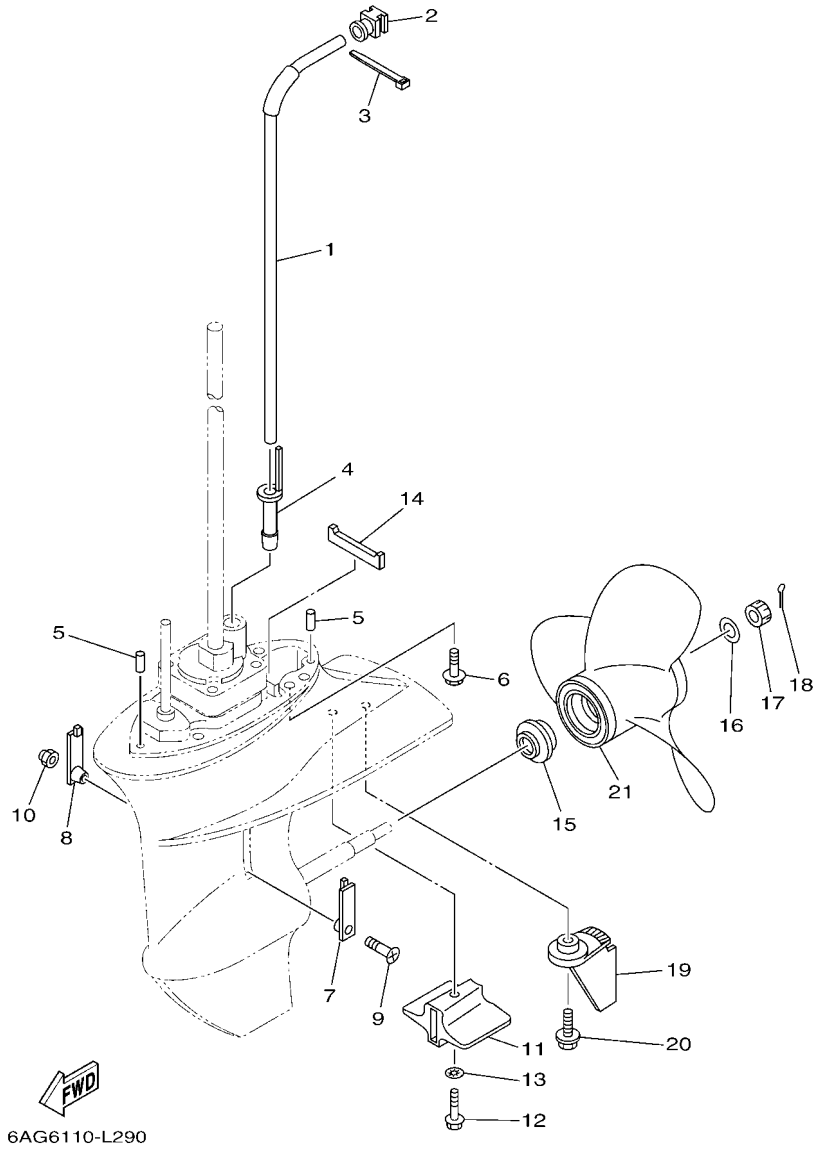

FIG. 27 LOWER CASING & DRIVE 2 — BOITIER D'HELICE TRANSMISSION2

REF. NO.	PART NO. N° PIECES	DESCRIPTION DESCRIPTION	MH	WH	E			REMARKS REMARQUES
21	683–45941–00	PROPELLER (3X9-1/4"X12"-J) HELICE (3X9-1/4"X12"-J)	1	1	1			UR UR

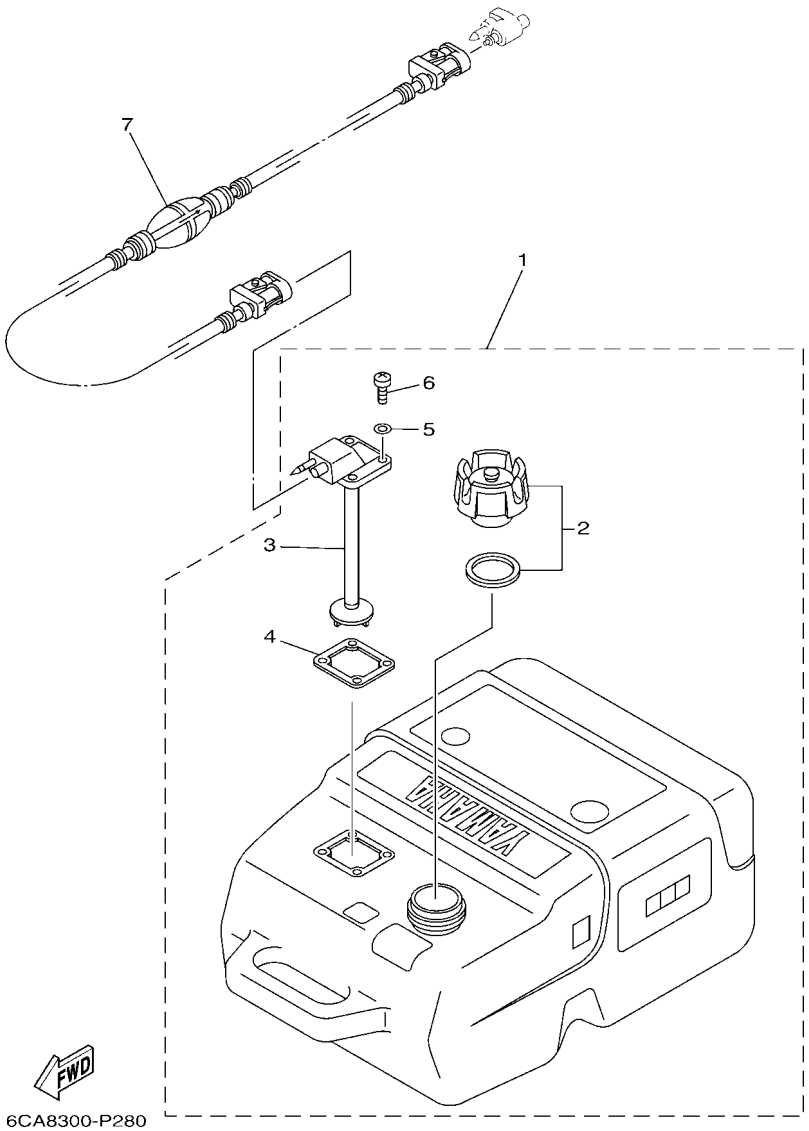

FIG. 28 FUEL TANK — RESERVOIR A CARBURANT

REF. NO.	PART NO. N° PIECES	DESCRIPTION DESCRIPTION	MH	WH	E			REMARKS REMARQUES
1	6YK–24201–04	FUEL TANK ASSY (25L) RESERVOIR A ESSENCE (ENS.) 25L	1	1	1			AP AP
2	6YK–24610–01	.CAP ASSY .BOUCHON	1	1	1			
3	6YK–24260–10	.FUEL METER ASSY .INDICATEUR DE CARBURANT	1	1	1			
4	6YL–24268–01	.GASKET, FUEL METER .JOINT, JAUGE A CARBURANT	1	1	1			
5	6YL–24329–00	.SEAL .JOINT	4	4	4			
6	90157–05M16	.SCREW, PAN HEAD .VIS, TETE TRONCONIQUE	4	4	4			
7	6YL–24306–54	FUEL PIPE COMP. 1 DURITE A ESSENCE 1	1	1	1			AP AP

FIG. 29 STEERING GUIDE — FIXATION DE DIRECTION

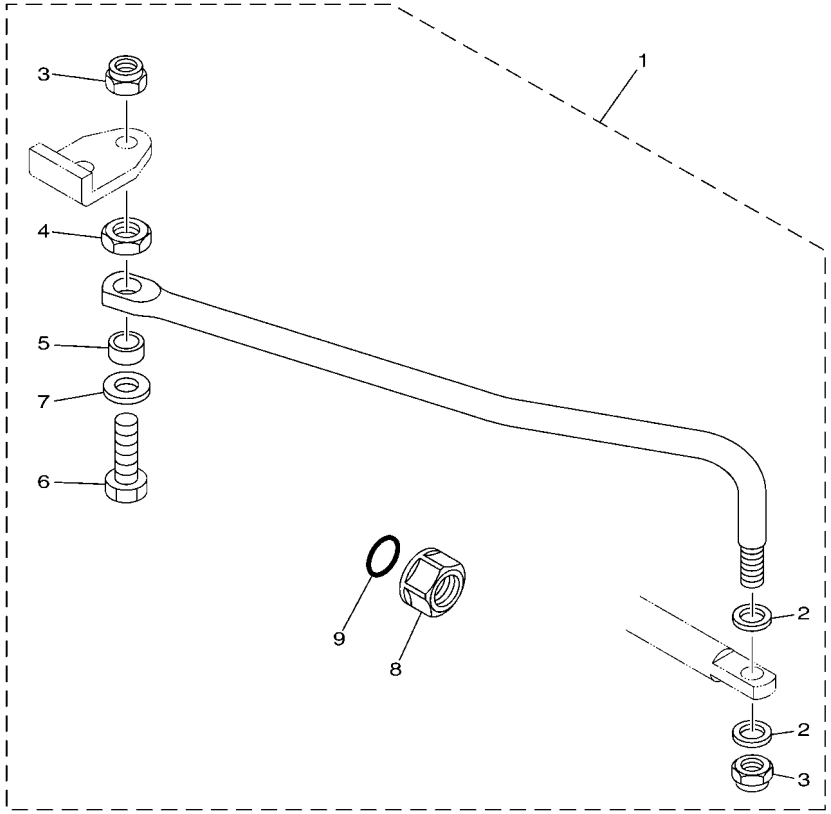

6AH1100-F341

REF. NO.	PART NO. N° PIECES	DESCRIPTION DESCRIPTION	MH	WH	E			REMARKS REMARQUES
1	6AH–61350–00	STEERING GUIDE ATTACHMENT KIT FIXATIONS DE DIRECTION			1			AP AP
2	90201–10M20	.WASHER, PLATE .RONDELLE, PLATE			2			
3	90185–09M01	.NUT, SELF-LOCKING .ECROU,AUTO-BLOQUANT			2			
4	90170–09M03	.NUT .ECROU			1			
5	90387–10M42	.COLLAR .COLLERETTE			1			
6	6E5–61355–00	.BOLT .BOULON			1			
7	90201–10M63	.WASHER, PLATE .RONDELLE, PLATE			1			
8	6E5–43145–01	.CAP, CLAMP BRACKET .CAPUCHON, PRESSE			1			
9	93210–16275	.O-RING .JOINT TORIQUE			1			

FIG. 30 REMOTE CONTROL BOX — BOITIER DE COMMANDE A DISTANCE

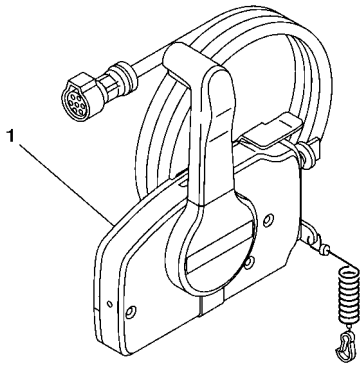

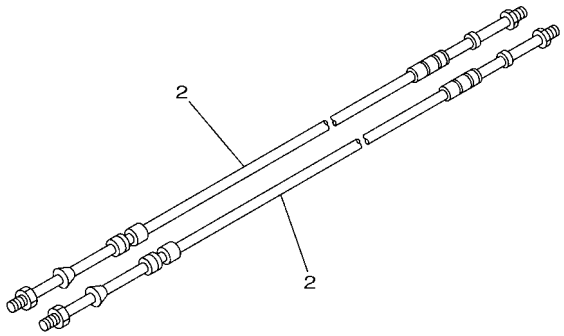

6DR3300-P300

REF. NO.	PART NO. N° PIECES	DESCRIPTION DESCRIPTION	MH	WH	E			REMARKS REMARQUES
1	703–48201–B1	REMOTE CONTROL ASSY (10P) BOITIER DE COMMANDE A DISTANCE			1			AP WITHOUT PT/T SW. AP WITHOUT PT/T SW.
2	701–48310–90	CABLE, REMOTE CONTROL L=11F CABLE, COMMANDE A DISTANCE:11F			2			UR UR
	701–48320–00	CABLE, REMOTE CONTROL L=12F CABLE, COMMANDE A DISTANCE:12F			2			UR UR
	701–48320–20	CABLE, REMOTE CONTROL L=13F CABLE, COMMANDE A DISTANCE:13F			2			UR UR
	701–48320–50	CABLE, REMOTE CONTROL L=15F CABLE, COMMANDE A DISTANCE:15F			2			UR UR

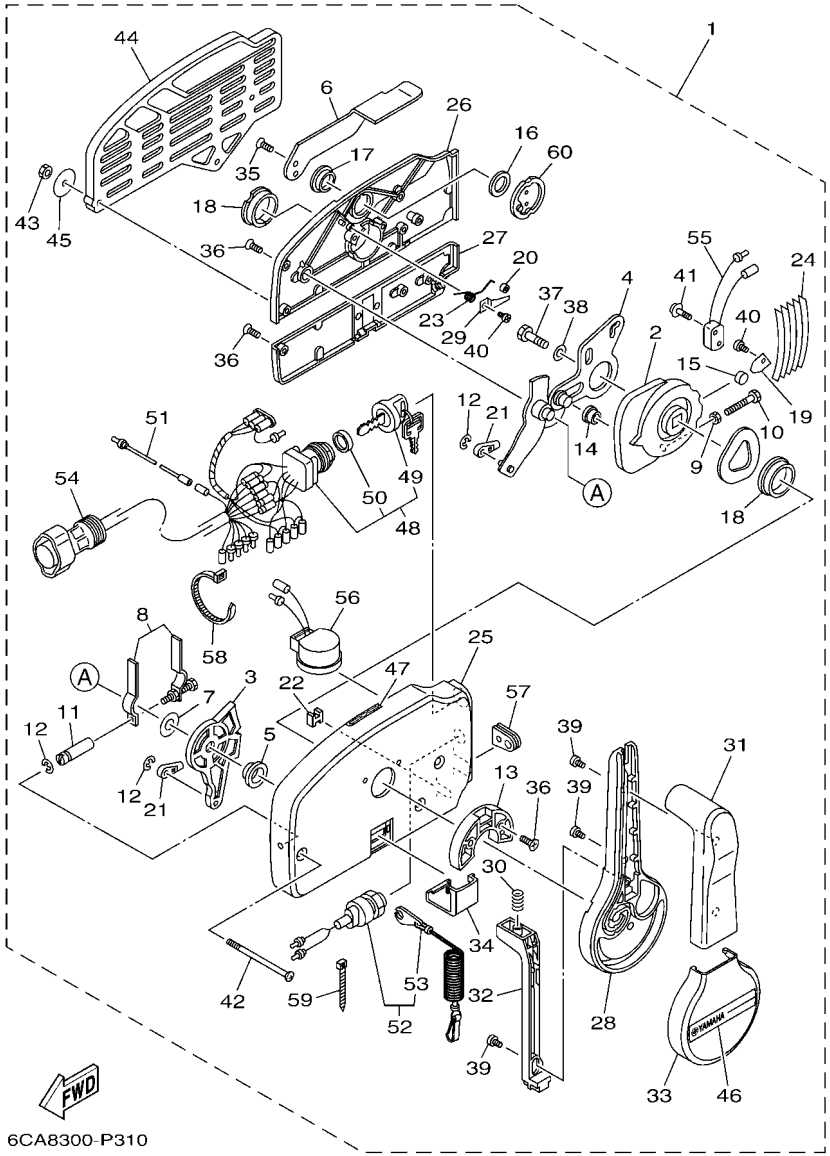

FIG. 31 REMOTE CONTROL ASSY — BOITIER DE COMMANDE A DISTANCE

REF. NO.	PART NO. N° PIECES	DESCRIPTION DESCRIPTION	MH	WH	E			REMARKS REMARQUES
1	703–48201–B1	REMOTE CONTROL ASSY (10P) BOITIER DE COMMANDE A DISTANCE			1			AP WITHOUT PT/T SW. AP WITHOUT PT/T SW.
2	703–48232–00	.GEAR .PIGNON			1			
3	703–48271–00	.ARM, SHIFT .BRAS			1			
4	703–48261–01	.ARM, THROTTLE .BRAS, ACCELERATION			1			
5	703–48235–00	.BUSHING .COUSSINET			1			
6	703–48152–10	.KNOB, FREE ACCEL. .BOUTON			1			
7	703–48268–00	.SPACER .ENTRETOISE			1			
8	703–48264–00	.FRICTION, THROTTLE .FRICTION, ACCELERATION			1			
9	95380–05600	.NUT .ECROU			1			
10	97380–05025	.BOLT .BOULON, HEXAGONAL			1			
11	703–48265–10	.SHAFT, FRICTION .AXE, COPILOTE			1			
12	93430–06024	.CIRCLIP .CLIPS			3			
13	703–48245–00	.PLATE, LOCK .PLAQUE, VERROU			1			
14	703–48252–00	.ROLLER, CAM .POULIE			1			
15	701–48248–00	.ROLLER, FREE ACCEL. .POULIE			1			
16	703–48198–00	.WASHER, WAVE .RONDELLE, ELASTIQUE ONDULEE			1			
17	703–48243–00	.BUSHING .COUSSINET			1			
18	703–48236–00	.BUSHING 1 .POULIE			2			
19	703–48189–00	.RETAINER .FLASQUE			1			
20	703–48234–00	.ROLLER, DETENT .POULIE			1			
21	703–48345–01	.CABLE END, REMOTE CONTROL 2 .CHAPE CABLE			2			
22	703–48358–00	.ANCHOR, CABLE .COLLIER			1			
23	703–48244–00	.SPRING, FREE ACCEL. .RESSORT			1			
24	703–48238–00	.SPRING, DETENT .RESSORT			5			
25	703–48211–10	.HOUSING,1 .CORPS			1			
26	703–48212–10	.BACK PLATE 1 .PLAQUETTE 1			1			
27	703–48213–10	.BACK PLATE 2 .PLAQUETTE 2			1			

FIG. 31 REMOTE CONTROL ASSY — BOITIER DE COMMANDE A DISTANCE

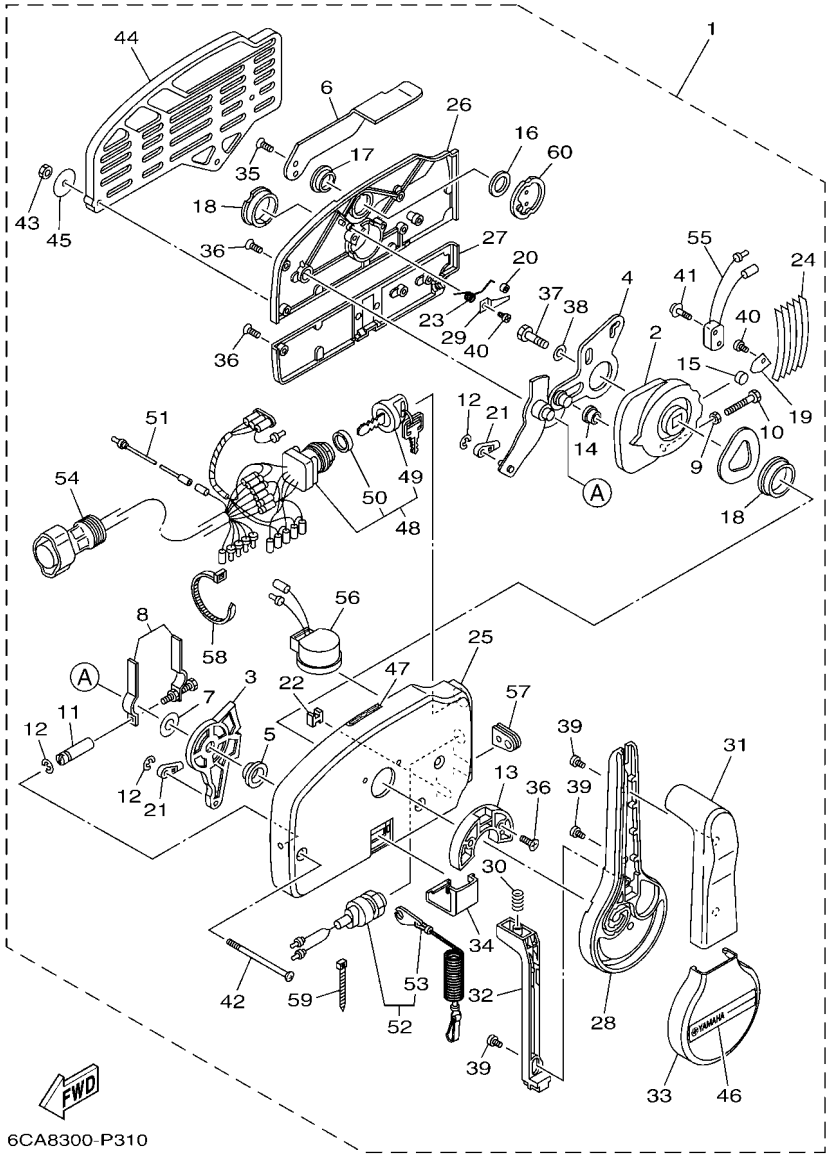

REF. NO.	PART NO. N° PIECES	DESCRIPTION DESCRIPTION	MH	WH	E			REMARKS REMARQUES
28	703–48221–10	.LEVER, CONTROL .LEVIER, COMMANDE			1			
29	703–48246–00	.SPACER .ENTRETOISE			1			
30	703–48227–00	.SPRING, NEUTRAL LOCK .RESSORT			1			
31	703–48222–30	.GRIP, CONTROL LEVER .POIGNEE, COMMANDE LEVIER			1			SINGLE SINGLE
32	703–48223–10	.LOCK, NEUTRAL .VERROU, NEUTRAL			1			
33	703–48225–10	.COVER .COUVERCLE			1			
34	703–48219–10	.COVER, LEAD .COUVERCLE			1			
35	703–48281–00	.SCREW .VIS			2			
36	703–44189–20	.SCREW .VIS			7			
37	97380–08030	.BOLT .BOULON, HEXAGONAL			1			
38	92990–08600	.WASHER, PLATE .RONDELLE, PLATE			1			
39	703–48128–10	.SCREW 2 .VIS 2			3			
40	98580–04006	.SCREW, PAN HEAD .VIS			2			
41	703–48129–00	.SCREW 3 .VIS 3			2			
42	703–44189–30	.SCREW .VIS			3			
43	95380–06600	.NUT, HEXAGON .ECROU			3			
44	703–48293–10	.SPACER, REMOTE CONTROL .ENTRETOISE			1			SINGLE SINGLE
45	701–48287–00	.WASHER .RONDELLE			3			
46	703–48215–10	.GRAPHIC .ADHESIF			1			
47	6X3–44191–00	.INDICATOR, SHIFT .ETIQUETTE, EMBRAYAGE			1			
48	703–82510–13	.MAIN SWITCH ASSY .CONTACTEUR A CLEF COMPLET			1			PRIME START PRIME START
49	676–82577–01	..CAP, KEY ..CABOCHON			1			
50	703–82532–00	..CAP ..COUVERCLE			1			
51	703–82531–00	.WIRE, LEAD (L70) .FIL (L70)			1			
52	688–82575–02	.ENGINE STOP SWITCH ASSY .COUPE CIRCUIT CPLT			1			
53	682–82556–00	..LANYARD, STOP SWITCH ..CORDON DU COUPE CIRCUIT			1			
54	688–8258A–20	.EXTENSION, WIRE HARNESS (4.9M) .EXTENSION, FAISCEAU DE FILS (4			1			(10P) (10P)

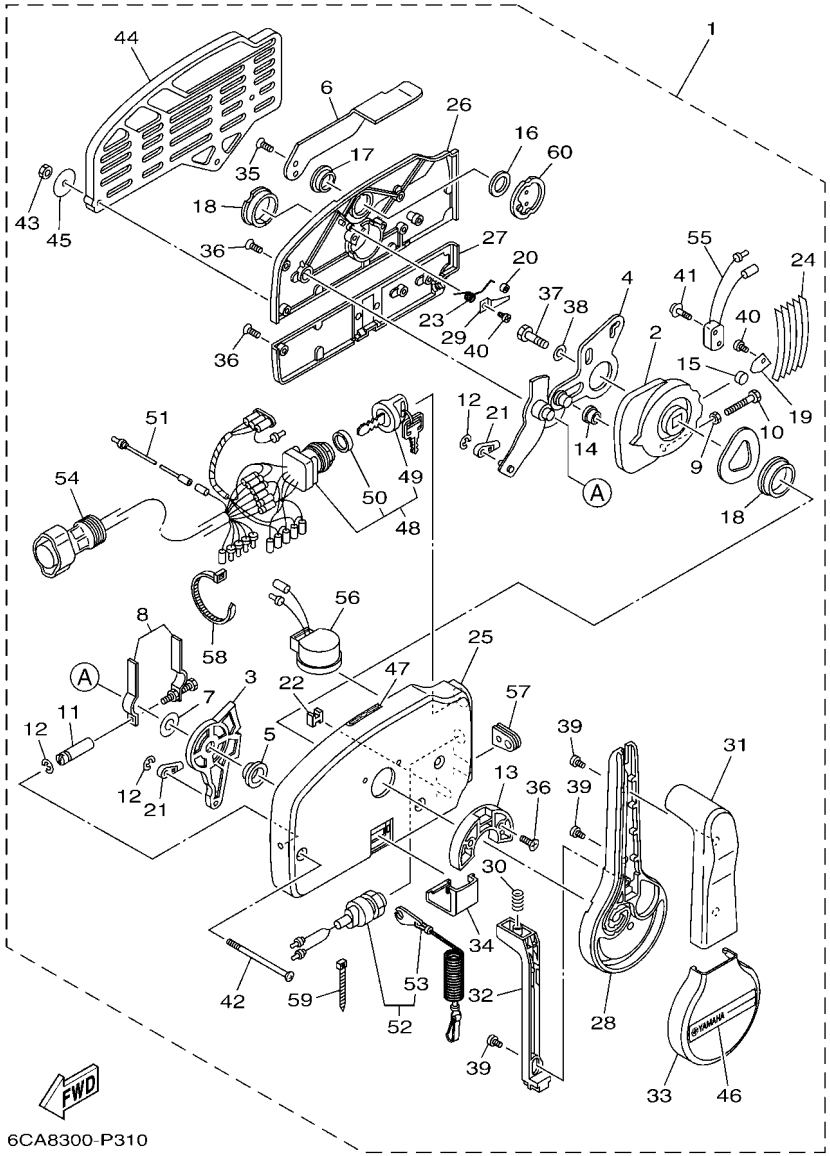

FIG. 31 REMOTE CONTROL ASSY — BOITIER DE COMMANDE A DISTANCE

REF. NO.	PART NO. N° PIECES	DESCRIPTION DESCRIPTION	MH	WH	E			REMARKS REMARQUES
55	703–82540–00	.NEUTRAL SWITCH ASSY .CONTACTEUR DE POINT-MORT			1			
56	703–83383–11	.BUZZER .RONFLEUR			1			
57	703–48284–00	.GROMMET .PASSE-FIL			1			
58	703–82591–00	.BAND .COLLIER			1			
59	703–82592–00	.BAND .COLLIER			1			
60	703–48153–00	.SHAFT, FREE ACCEL. .AXE			1			

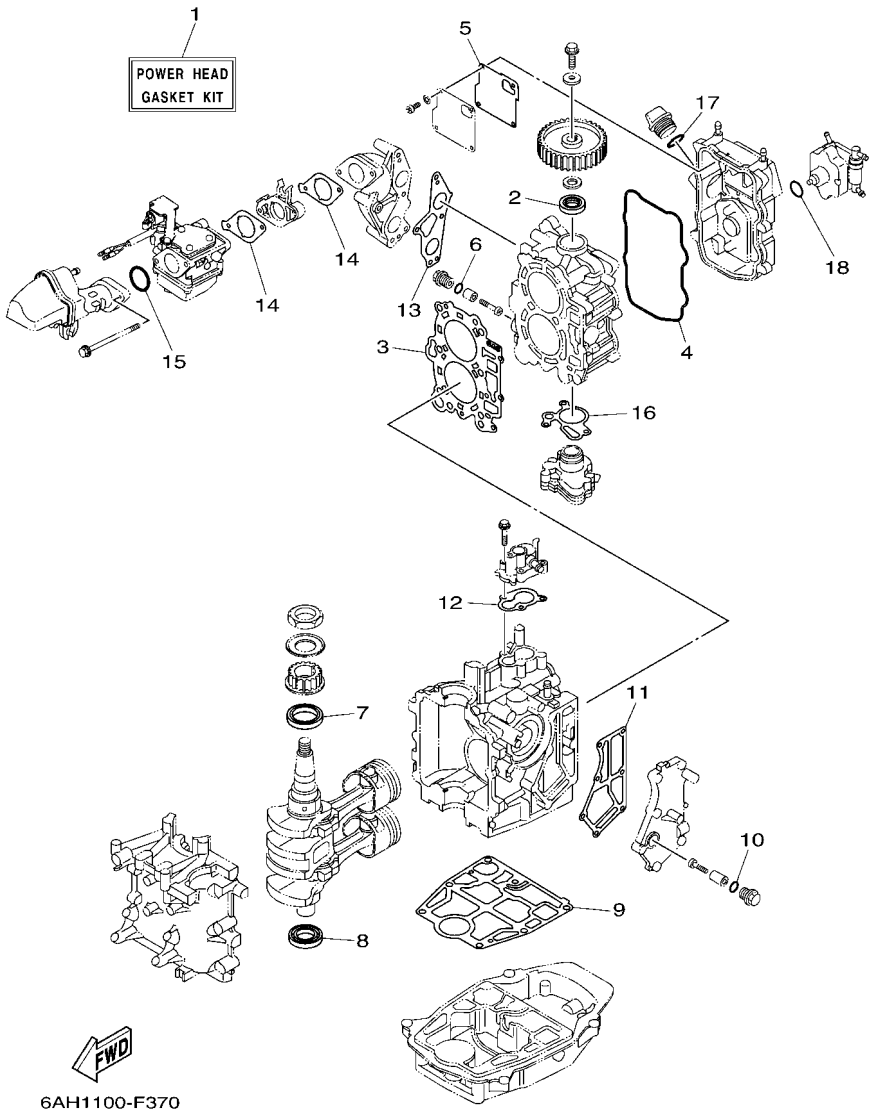

FIG. 32 REPAIR KIT 1 — KITS DE REPARATION 1

REF. NO.	PART NO. N° PIECES	DESCRIPTION DESCRIPTION	MH	WH	E			REMARKS REMARQUES
1	6AG–W0001–00	POWER HEAD GASKET KIT POCHETTE DE JINTS TETE MOTRICE	1	1	1			
2	93102–22010	.OIL SEAL .JOINT SPY	1	1	1			
3	6AG–11181–10	.GASKET, CYLINDER HEAD 1 .JOINT, DE CULASSE 1	1	1	1			
4	6AH–11356–00	.SEAL, CYLINDER 2 .JOINT, SPY CYLINDRE	1	1	1			
5	6AH–11169–00	.GASKET, BREATHER COVER .JOINT, COUVERCLE DE RENIFLARD	1	1	1			
6	93210–13M63	.O-RING .JOINT TORIQUE	2	2	2			
7	93102–37004	.OIL SEAL .JOINT SPY	1	1	1			
8	93102–25014	.OIL SEAL .JOINT SPY	1	1	1			
9	6AH–11351–10	.GASKET, CYLINDER .JOINT, D'EMBASE	1	1	1			
10	93210–13M63	.O-RING .JOINT TORIQUE	1	1	1			
11	6AH–41114–00	.GASKET, EXHAUST OUTER COVER .JOINT, COUVERCLE D'ECHAPPEMENT	1	1	1			
12	6AH–12414–00	.GASKET, COVER .JOINT, COUVERCLE	1	1	1			
13	6AH–13645–00	.GASKET, MANIFOLD 1 .JOINT, TUBULURE 1	1	1	1			
14	6AH–13646–00	.GASKET, MANIFOLD 2 .JOINT, TUBULURE 2	2	2	2			
15	93210–35M86	.O-RING .JOINT TORIQUE	1	1	1			
16	6AH–13329–10	.GASKET, PUMP COVER .JOINT, COUVERCLE DE POMPE	1	1	1			
17	93210–24M79	.O-RING .JOINT TORIQUE	1	1	1			
18	93210–20M65	.O-RING .JOINT TORIQUE	1	1	1			

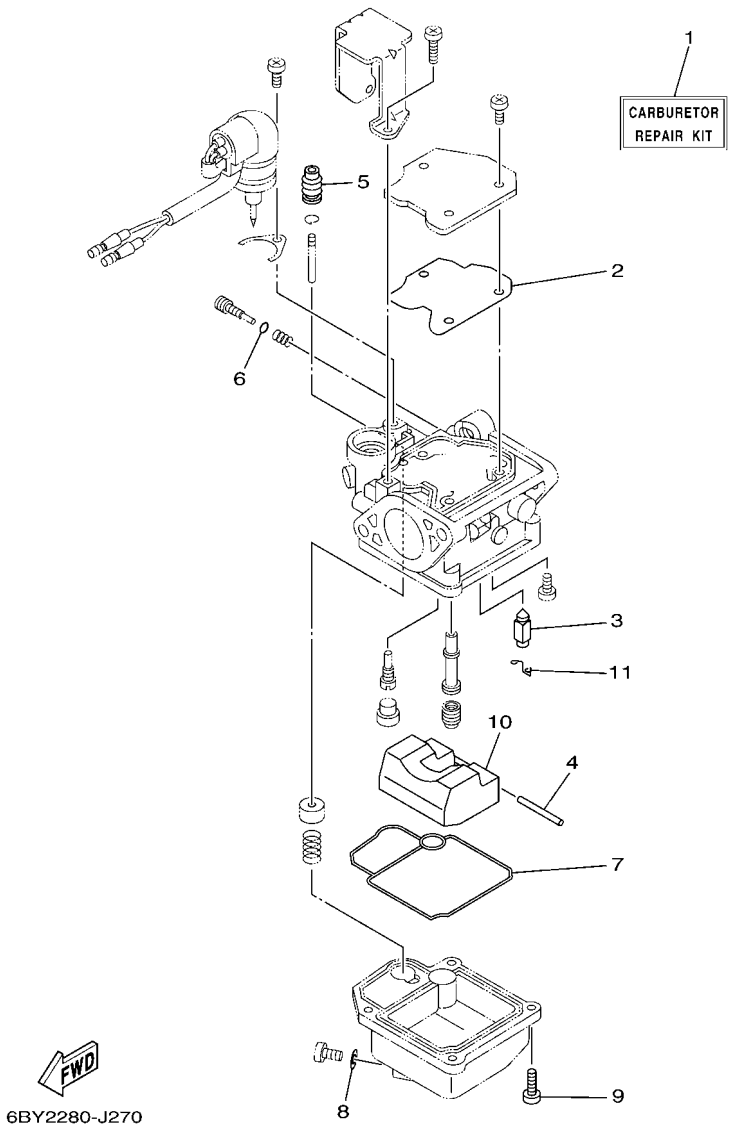

FIG. 33 REPAIR KIT 2 — KITS DE REPARATION 2

REF. NO.	PART NO. N° PIECES	DESCRIPTION DESCRIPTION	MH	WH	E			REMARKS REMARQUES
1	6AH–W0093–01	CARBURETOR REPAIR KIT KIT DE REPARATION CARBURATEUR	1	1	1			
2	65W–14126–10	.GASKET .JOINT	1	1	1			
3	6AH–14546–00	.VALVE, NEEDLE .POINTEAU	1	1	1			
4	6H4–14548–00	.PIN, FLOAT ARM .AXE, BRAS DE FLOTTEUR	1	1	1			
5	65W–14373–02	.COVER, PLUNGER CAP .COUVERCLE DE PLONGEUR	1	1	1			
6	67F–14398–10	.O-RING .JOINT TORIQUE	1	1	1			
7	6AH–14384–00	.GASKET, FLOAT CHAMBER .JOINT, CUVE DE FLOTTEUR	1	1	1			
8	65W–14398–00	.GASKET .JOINT	1	1	1			
9	97980–04114	.SCREW, WITH WASHER .VIS, AVEC RONDELLE	4	4	4			
10	6AH–14985–00	.FLOAT .FLOTTEUR	1	1	1			
11	633–14159–00	.CLIP .JONC	1	1	1			

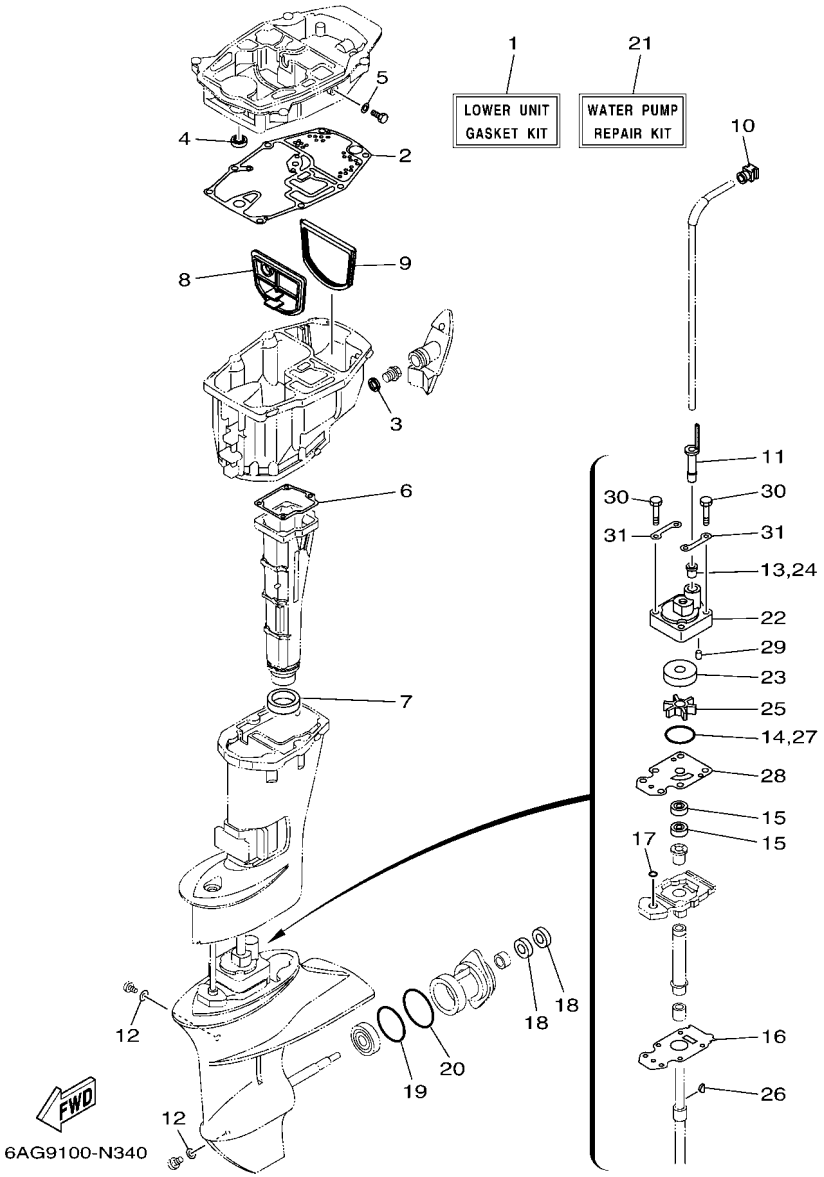

FIG. 34 REPAIR KIT 3 — KITS DE PEPARATION 3

REF. NO.	PART NO. N° PIECES	DESCRIPTION DESCRIPTION	MH	WH	E			REMARKS REMARQUES
1	6AH–W0001–20	LOWER UNIT GASKET KIT POCHETTE DE JOINTS EMBASE	1	1	1			
2	6AH–15312–10	.GASKET, OIL PAN .JOINT DE VENTILATEUR D'HUILE	1	1	1			
3	90430–14M09	.GASKET .JOINT	1	1	1			
4	93101–12M63	.OIL SEAL .JOINT SPY	1	1	1			
5	90430–08143	.GASKET .JOINT	1	1	1			
6	6AH–41134–00	.GASKET, EXHAUST MANIFOLD .JOINT, PIPE D'ECHAPPEMENT	1	1	1			
7	6AH–41138–00	.SEAL, EXT. 1 .JOINT DE GROUPE 1	1	1	1			
8	6AH–45126–00	.PLATE, SEAL DAMPER .PLAQUETTE	1	1	1			
9	6AH–45115–00	.GASKET, UPPER CASING .JOINT, TUBE D'ARBRE	1	1	1			
10	6AH–44365–00	.DAMPER, WATER SEAL 1 .JOINT, TUBE D'EAU 1	1	1	1			
11	6AH–44368–00	.RUBBER, WATER SEAL 4 .CAOUTCHOUC EAU JUNTA 4	1	1	1			
12	90430–08003	.GASKET .JOINT	2	2	2			
13	6L2–44367–00	.DAMPER, WATER SEAL 3 .JOINT TUBE D'EAU 3	1	1	1			
14	93210–49046	.O-RING .JOINT TORIQUE	1	1	1			
15	93101–20001	.OIL SEAL .JOINT SPY	2	2	2			
16	69G–45315–A0	.PACKING, LOWER CASING .JOINT, BOITIER D'HELICE	1	1	1			
17	93210–06ME6	.O-RING .JOINT TORIQUE	1	1	1			
18	93101–17054	.OIL SEAL .JOINT SPY	2	2	2			
19	93210–57M09	.O-RING .JOINT TORIQUE	1	1	1			
20	93210–56M80	.O-RING .JOINT TORIQUE	1	1	1			
21	6AH–W0078–00	WATER PUMP REPAIR KIT KIT DE REPARATION DE LA POMPE	1	1	1			
22	6AH–44311–00	.HOUSING, WATER PUMP .CORPS, POMPE A EAU	1	1	1			
23	63V–44322–00	.INSERT, CARTRIDGE .CUVETTE	1	1	1			
24	6L2–44367–00	.DAMPER, WATER SEAL 3 .JOINT TUBE D'EAU 3	1	1	1			
25	63V–44352–01	.IMPELLER .TURBINE	1	1	1			
26	664–44338–00	.KEY, WOODRUFF .CLAVETTE, VOLANT	1	1	1			
27	93210–49046	.O-RING .JOINT TORIQUE	1	1	1			

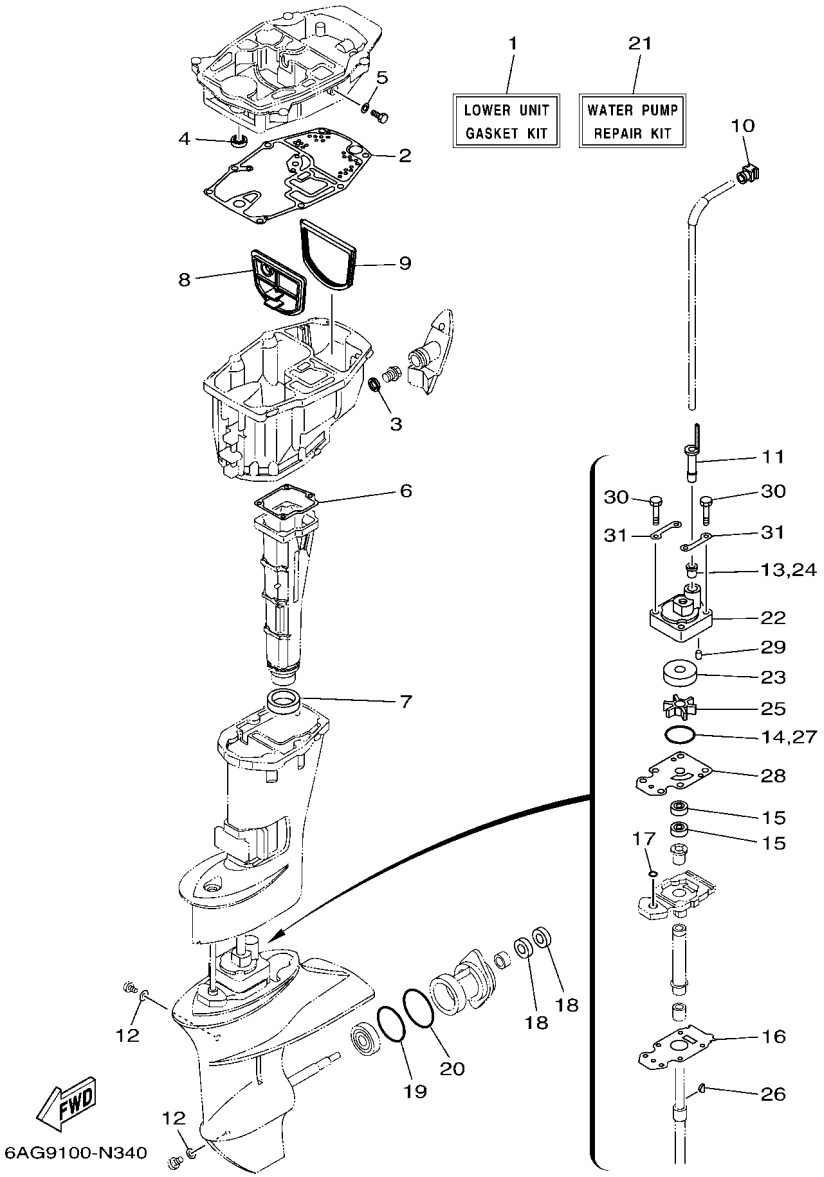

FIG. 34 REPAIR KIT 3 — KITS DE PEPARATION 3

REF. NO.	PART NO. N° PIECES	DESCRIPTION DESCRIPTION	MH	WH	E			REMARKS REMARQUES
28	68T–44323–00	.OUTER PLATE, CARTRIDGE .PLAQUE EXTERIEURE	1	1	1			
29	93604–12M07	.PIN, DOWEL .CLAVETTE	2	2	2			
30	97095–08045	.BOLT .BOULON	4	4	4			
31	63V–44328–01	.PLATE .PLAQUETTE	2	2	2			

NUMERICAL INDEX
INDEX NUMERIQUE

PART NO. N° PIECES	REF. NO.
6AH–11111–10–1S	5 – 2
6AH–11133–10	5 – 3
6AH–11168–00	5 – 12
6AH–11169–00	5 – 13
	32 – 5
6AG–11181–10	5 – 4
	32 – 3
6AH–11191–00–1S	5 – 8
6G8–11197–A0	3 – 13
	5 – 18
6E5–11325–00	1 – 5
	3 – 26
6G8–11325–00	1 – 1
	1 – 4
	1 – 7
	3 – 11
	3 – 22
	5 – 16
6AH–11351–10	3 – 7
	32 – 9
6AH–11356–00	5 – 10
	32 – 4
6AH–11372–00	5 – 9
6H1–11372–00	3 – 10
6AH–11411–00	4 – 1
6AH–11416–00	4 – 2
6AH–11416–10	4 – 2
6AH–11416–20	4 – 2
6AH–11536–00	9 – 6
6AH–11537–00	9 – 2
6AH–11557–00	9 – 7
6AH–11603–00	4 – 6
6AH–11604–00	4 – 6
6AH–11605–00	4 – 6
6AH–11631–00	4 – 5
137–11633–10	4 – 7
6AH–11635–00	4 – 5
6AH–11636–00	4 – 5
6AH–11650–10	4 – 3
6AH–11654–00	4 – 4
6AH–12111–00	6 – 1
3YF–12113–00	6 – 4
62Y–12116–00	6 – 3
30X–12117–00	6 – 5
30X–12118–00	6 – 6
51Y–12119–00	6 – 7
6AH–12121–10	6 – 2
66M–12146–00	6 – 8

PART NO. N° PIECES	REF. NO.
6AH–12151–00	6 – 13
62Y–12158–00	6 – 15
64J–12159–00	6 – 14
6AG–12170–00	9 – 1
6AH–12279–00	6 – 9
6AH–12411–00	1 – 2
	3 – 17
688–12412–00	3 – 18
6AH–12413–00–1S	3 – 19
6AH–12414–00	1 – 3
	3 – 20
	32 – 12
6AH–12481–00	3 – 24
6AH–12535–00	17 – 27
6DR–12572–00	17 – 23
6R3–12581–00	17 – 24
6R3–12582–00	17 – 25
6R3–12583–00	17 – 26
6C5–12858–00	3 – 29
66M–13131–10	10 – 19
6AH–13300–00	9 – 15
6AH–13329–10	9 – 16
	32 – 16
6AH–13411–00	25 – 7
6AH–13437–60	11 – 31
5GH–13440–60	1 – 6
	3 – 28
6AH–13641–00–94	7 – 1
6AH–13645–00	7 – 2
	32 – 13
6AH–13646–00	7 – 7
	32 – 14
65W–14126–10	8 – 4
	33 – 2
633–14159–00	8 – 14
	33 – 11
6AH–14271–00	7 – 8
6AG–14301–B0	8 – 1
6AG–14301–F0	8 – 1
6E7–14325–00	10 – 23
65W–14335–00	8 – 22
65W–14346–00	8 – 33
6AH–14346–00	8 – 31
6AH–14371–00	8 – 23
65W–14373–02	8 – 17
	33 – 5
6AH–14379–00	8 – 18
6AH–14380–01	8 – 29

PART NO. N° PIECES	REF. NO.
6AH–14380–11	8 – 29
6AH–14384–00	8 – 24
	33 – 7
65W–14398–00	8 – 26
	33 – 8
67F–14398–10	8 – 20
	33 – 6
65W–1439G–00	8 – 34
6AH–14427–60	11 – 30
6AH–14440–00	7 – 9
6AH–14497–00	20 – 29
63V–14523–00	8 – 9
6AH–14546–00	8 – 13
	33 – 3
6H4–14548–00	8 – 16
	33 – 4
67C–14555–00	8 – 21
67C–14567–00	8 – 32
6AH–14571–10	20 – 24
	21 – 32
65W–14572–00	8 – 3
6AH–14711–00–CA	24 – 8
6AH–14711–A0–CA	24 – 8
6AH–14923–20	8 – 19
676–14943–19	8 – 11
6AH–14947–20	8 – 10
6AG–14948–02	8 – 6
6AH–14948–02	8 – 6
679–14966–00	8 – 7
6AH–14980–00	8 – 25
6AH–14985–00	8 – 12
	33 – 10
65W–14992–00	8 – 27
6AH–15100–00	3 – 2
6AH–15311–00–CA	25 – 1
6AH–15312–10	25 – 2
	34 – 2
6AH–15316–00	25 – 4
6AH–15362–10	25 – 9
6G8–15363–00	5 – 20
6AH–15373–00	7 – 12
63V–15705–01	11 – 9
6AH–15710–02	11 – 1
6AH–15711–01	11 – 2
63V–15713–00	11 – 7
63V–15714–00	11 – 5
68T–15716–00	11 – 8
66T–15731–00	11 – 24

PART NO. N° PIECES	REF. NO.
66T–15734–00	11 – 20
6AH–15741–10	11 – 6
689–15755–01	11 – 15
6AH–15762–01	11 – 27
68T–15764–00	11 – 14
6BL–15764–00	11 – 3
63V–15767–01	11 – 10
6AH–15770–00	11 – 23
6AH–15774–00	17 – 43
6F5–15779–02	11 – 17
6AH–15782–00	11 – 21
68T–15784–00	11 – 11
6A0–15789–00	11 – 18
63V–15793–00	11 – 12
68T–15793–00	11 – 13
6AH–15793–00	11 – 22
66T–15794–00	11 – 19
6AH–15795–00	11 – 4
6YK–24201–04	28 – 1
6YK–24260–10	28 – 3
6YL–24268–01	28 – 4
6G1–24304–10	10 – 1
6YL–24306–54	28 – 7
6AH–24311–00	10 – 4
6AH–24312–00	10 – 12
6AH–24313–00	10 – 30
6AH–24314–01	17 – 20
6AH–24316–00	11 – 28
6AH–24321–00	10 – 32
6AH–24322–00	10 – 33
6AH–24323–00	10 – 35
6AH–24324–00	10 – 37
61N–24329–00	10 – 2
6YL–24329–00	28 – 5
66M–24374–00	10 – 25
688–24378–00	10 – 38
6C5–24378–00	10 – 39
6E9–24378–00	3 – 9
6AH–24410–00	10 – 14
66M–24411–11	10 – 17
6AH–24413–00	10 – 15
6A0–24421–01	10 – 16
66M–24423–00	10 – 18
66M–24444–00	10 – 21
66M–24454–00	10 – 20
66M–24471–01	10 – 22
61N–24521–00	10 – 6
61N–24560–10	10 – 5

PART NO. N° PIECES	REF. NO.
61N–24563–10	1 – 9
	10 – 7
6AH–24566–00	10 – 9
6YK–24610–01	28 – 2
6AH–26288–00	18 – 4
6AH–26311–00	18 – 17
6AH–26326–00	17 – 14
6AH–26326–10	17 – 14
6AH–2634E–00	18 – 21
6AH–26364–00	20 – 4
	21 – 4
62Y–28100–00	10 – 41
67F–2812A–00	14 – 30
6AG–28199–7B–D0	10 – 42
6AG–28199–7B–E0	10 – 42
6AG–28199–7B–F0	10 – 42
6AG–28199–7B–G0	10 – 42
6AG–28199–7B–H0	10 – 42
6AG–28199–7B–S0	10 – 42
6AG–28199–8B–K0	10 – 43
6AG–28199–8B–L0	10 – 43
6AG–28199–8B–M0	10 – 43
6AG–28199–8B–N0	10 – 43
6AG–28199–8B–P0	10 – 43
6AG–28199–8B–R0	10 – 43
6AH–41113–01–1S	3 – 8
6AH–41114–00	3 – 15
	32 – 11
6AH–41134–00	24 – 7
	34 – 6
6AH–41137–00–CA	24 – 1
6AH–41138–00	24 – 10
	34 – 7
6AH–41211–00	20 – 19
	21 – 27
6J8–41262–00	20 – 18
	21 – 26
6AH–41282–00	20 – 32
	21 – 33
65W–41283–00	20 – 17
	21 – 25
6AH–41638–00	20 – 15
	21 – 23
6G1–41662–01–94	20 – 5
	21 – 5
6AH–42101–02–8D	18 – 2
66M–42119–01	18 – 5
65W–42125–00	18 – 11

PART NO. N° PIECES	REF. NO.
6G1–42126–00	18 – 10
6AH–42131–00–8D	18 – 27
6J0–42137–10	18 – 13
65W–42138–00	18 – 7
65W–42159–00	18 – 9
62Y–42171–00	20 – 26
67D–42177–00	18 – 6
6AH–42508–01	19 – 1
6AH–42510–00–8D	23 – 1
6AH–42510–10–8D	23 – 1
68T–42525–01	19 – 2
6AH–42527–00	19 – 15
65W–42528–00	19 – 8
6AH–42532–A0	18 – 29
6AH–42532–B0	23 – 21
6AH–42551–00	18 – 22
68T–42561–00	19 – 6
67C–42562–00	19 – 4
6CA–42610–20	2 – 1
6CA–42610–30	2 – 1
6AH–42615–00	2 – 5
6AH–42617–00	9 – 13
6CA–4261A–00	2 – 2
6CA–4261A–10	2 – 2
6AH–42649–00	2 – 8
6AH–42651–00	2 – 3
60R–42652–00	2 – 6
6AH–42656–00	2 – 11
6CA–42675–V0	2 – 13
6CA–42676–V0	2 – 14
6EA–42677–V0	2 – 12
	2 – 12
6AH–42697–10	2 – 9
6AH–42710–00–8D	17 – 1
6AH–42716–00	17 – 5
65W–42717–00	17 – 30
	24 – 3
6AH–42717–00	17 – 42
6AH–42718–00	17 – 7
6AH–42724–00	17 – 10
6AH–42724–10	17 – 10
6AH–42725–00	17 – 9
6G1–42725–00	13 – 39
6AH–42725–10	17 – 9
6AH–42725–20	17 – 9
65W–42726–00	17 – 17
6AH–42726–00	17 – 19
65W–42726–10	17 – 17

NUMERICAL INDEX
INDEX NUMERIQUE

PART NO. N° PIECES	REF. NO.
6AH–42727–00	17 – 16
6AH–42735–00	2 – 10
6AH–42738–00–8D	17 – 6
6AH–42741–00	17 – 37
6AH–42743–00	17 – 31
6AH–42761–A0	17 – 33
6AH–42762–A0	17 – 34
6EE–42794–40	17 – 46
6EE–42794–50	17 – 47
6AH–42801–00	17 – 11
6AH–43111–00–8D	22 – 1
6AH–43112–00–8D	22 – 6
66R–43113–00	22 – 13
648–43114–01	22 – 5
	22 – 10
6E7–43116–00	22 – 4
	22 – 9
6E0–43118–01	22 – 2
	22 – 7
69A–43131–00	22 – 11
6E5–43145–01	29 – 8
68T–43155–00	19 – 18
6L2–43160–01	22 – 19
689–43165–00	22 – 20
6AH–43191–10	22 – 28
6AH–43311–00–8D	22 – 23
6AH–43311–10–8D	22 – 23
6AH–43350–00	22 – 32
68T–43611–00	22 – 37
6AH–43614–00	22 – 34
6AH–43615–00	22 – 36
6DR–43616–00	22 – 25
6AH–43617–00	22 – 30
6AH–43627–00	22 – 42
6DR–43631–00	22 – 24
689–43633–00	19 – 7
6DR–43641–00	22 – 27
6AH–43646–10	22 – 26
68T–43659–00	22 – 40
6AH–44111–00	18 – 32
66R–44114–00	20 – 10
	21 – 10
65W–44116–00	20 – 9
	21 – 9
6AH–44121–01	20 – 3
	21 – 3
6AH–44123–00	20 – 1
	21 – 1

PART NO. N° PIECES	REF. NO.
6AH–44124–00	18 – 36
6AH–44125–00	20 – 7
	21 – 7
6AH–44143–00	20 – 12
	21 – 12
6AH–44143–10	20 – 12
	21 – 12
6AH–44150–00	26 – 27
6AH–44150–10	26 – 27
6AH–44167–10	20 – 25
6X4–44188–00	18 – 14
703–44189–20	31 – 36
703–44189–30	31 – 42
6X3–44191–00	18 – 39
	31 – 47
6AH–44194–00	23 – 30
6AH–44311–00	26 – 11
	34 – 22
63V–44322–00	26 – 12
	34 – 23
68T–44323–00	26 – 17
	34 – 28
63V–44328–01	26 – 20
	34 – 31
664–44338–00	26 – 15
	34 – 26
63V–44352–01	26 – 14
	34 – 25
6AH–44361–01	27 – 1
6AH–44361–11	27 – 1
6AH–44365–00	27 – 2
	34 – 10
6L2–44367–00	26 – 13
	34 – 13
	34 – 24
6AH–44368–00	27 – 4
	34 – 11
6BL–44391–00	17 – 13
6AH–44514–00	23 – 8
6AH–44526–00	23 – 9
6AH–44551–A0–8D	23 – 12
6AH–44554–00	18 – 18
6AH–44555–00	23 – 14
6AH–44557–00	23 – 13
6AH–44574–00	23 – 15
6AH–45111–00–8D	24 – 11
6AH–45111–10–8D	24 – 11
6AH–45115–00	25 – 13

PART NO. N° PIECES	REF. NO.
6AH–45115–00	34 – 9
6AH–45126–00	25 – 12
	34 – 8
6AH–45135–00	25 – 14
6G1–45214–00	27 – 7
63V–45215–00	27 – 8
6AH–45251–00	1 – 13
	27 – 11
6AH–45300–00–8D	26 – 1
6AH–45300–10–8D	26 – 1
6AH–45311–00–8D	26 – 2
69G–45315–A0	26 – 24
	34 – 16
626–45316–09	26 – 22
682–45318–00	24 – 19
68T–45321–00	24 – 16
69G–45331–01–CA	26 – 21
683–45361–02–8D	26 – 41
6AH–45371–A0–8D	27 – 19
63V–45375–00	27 – 14
6AH–45510–00	26 – 28
6AH–45510–10	26 – 28
63V–45536–00	26 – 4
63V–45551–00	26 – 29
6E7–45560–01	26 – 31
664–45567–01	26 – 48
664–45567–10	26 – 48
664–45567–20	26 – 48
664–45567–30	26 – 48
664–45567–40	26 – 48
664–45567–50	26 – 48
664–45567–60	26 – 48
6E7–45571–00	26 – 32
626–45577–00	26 – 33
626–45577–10	26 – 33
626–45577–20	26 – 33
626–45577–30	26 – 33
626–45577–40	26 – 33
6E8–45587–10	26 – 7
6E8–45587–30	26 – 7
683–45611–00	26 – 35
682–45631–00	26 – 37
648–45633–11	26 – 39
650–45635–00	26 – 36
683–45941–00	27 – 21
63V–45941–10	27 – 21
683–45943–00	27 – 21
63V–45943–10	27 – 21

PART NO. N° PIECES	REF. NO.
63V–45945–10	27 – 21
683–45952–00	27 – 21
63V–45952–10	27 – 21
6E7–45987–01	27 – 15
6AH–46241–00	9 – 10
6AH–46297–00	9 – 11
703–48128–10	31 – 39
703–48129–00	31 – 41
703–48152–10	31 – 6
703–48153–00	31 – 60
703–48189–00	31 – 19
703–48198–00	31 – 16
703–48201–B1	30 – 1
	31 – 1
703–48211–10	31 – 25
703–48212–10	31 – 26
703–48213–10	31 – 27
703–48215–10	31 – 46
703–48219–10	31 – 34
703–48221–10	31 – 28
703–48222–30	31 – 31
703–48223–10	31 – 32
703–48225–10	31 – 33
703–48227–00	31 – 30
703–48232–00	31 – 2
703–48234–00	31 – 20
703–48235–00	31 – 5
703–48236–00	31 – 18
703–48238–00	31 – 24
703–48243–00	31 – 17
703–48244–00	31 – 23
703–48245–00	31 – 13
703–48246–00	31 – 29
701–48248–00	31 – 15
703–48252–00	31 – 14
703–48261–01	31 – 4
703–48264–00	31 – 8
703–48265–10	31 – 11
703–48268–00	31 – 7
703–48271–00	31 – 3
703–48281–00	31 – 35
703–48284–00	31 – 57
701–48287–00	31 – 45
703–48293–10	31 – 44
701–48310–90	30 – 2
701–48320–00	30 – 2
701–48320–20	30 – 2
701–48320–50	30 – 2

PART NO. N° PIECES	REF. NO.
6FM–48344–00	21 – 21
	21 – 37
703–48345–01	31 – 21
703–48358–00	31 – 22
6AH–48511–01	23 – 26
6AH–48531–00	21 – 35
6AH–48532–00	21 – 15
682–48538–50	21 – 17
6AH–61350–00	29 – 1
6E5–61355–00	29 – 6
6AH–81337–00	11 – 29
6AH–81800–01	16 – 1
689–81807–12	16 – 11
689–81809–11	16 – 3
689–81810–11	16 – 4
689–81811–11	16 – 7
689–81812–11	16 – 8
689–81813–10	16 – 9
6AH–81820–01	16 – 10
689–81826–10	16 – 14
6AH–81830–00	16 – 13
689–81840–11	16 – 6
689–81847–11	16 – 5
689–81850–11	16 – 2
68T–81857–00	16 – 12
68T–81870–00	13 – 39
68T–81940–00	14 – 11
6AH–81942–00	16 – 21
6AH–81945–00	14 – 7
6AH–81948–00	13 – 5
6AH–81949–00	14 – 31
6AH–81960–00	14 – 1
	14 – 35
6EE–81994–40	9 – 19
6EE–81994–50	9 – 20
6EE–81995–40	11 – 32
6EE–81995–50	11 – 33
6AG–81996–00	11 – 34
6AH–82105–01	14 – 14
6AH–82117–00	14 – 13
703–82119–00	12 – 4
	14 – 2
	14 – 36
6AH–82127–00	23 – 20
6AH–82150–00	14 – 26
67F–82151–00	14 – 28
	14 – 32
6AH–82157–00	14 – 29

PART NO. N° PIECES	REF. NO.
67F–8215B–00	14 – 33
67F–8215B–10	14 – 27
67F–82361–00	13 – 15
6AH–82370–00	13 – 17
6AH–82388–00	13 – 27
6AH–82389–00	13 – 41
6AH–82398–00	14 – 18
64J–82504–00	13 – 22
703–82510–13	31 – 48
6AH–82522–00	13 – 10
703–82531–00	31 – 51
703–82532–00	31 – 50
703–82540–00	31 – 55
6AH–82540–01	13 – 33
6AH–82553–00	13 – 43
6AH–82553–10	13 – 43
6AH–82554–00	13 – 33
682–82556–00	18 – 41
	31 – 53
6AH–82560–00	13 – 29
6AH–82575–00	18 – 40
688–82575–02	31 – 52
676–82577–01	31 – 49
689–8257Y–00	18 – 42
6AH–82581–00	16 – 22
6AH–82588–00	13 – 30
688–8258A–20	31 – 54
6AH–82590–11	15 – 1
703–82591–00	31 – 58
703–82592–00	31 – 59
6AH–8259M–01	15 – 1
6AH–8259M–11	15 – 1
703–83383–11	31 – 56
6H4–83589–00	13 – 24
6AH–83773–00	23 – 24
62Y–84301–00	13 – 23
68F–85119–00	17 – 2
67C–85415–00	13 – 44
6AH–85510–00	12 – 2
6AH–8552A–00	15 – 3
6AH–8552E–00	15 – 4
6AH–85537–00	15 – 5
6AH–85540–00	13 – 1
6AH–85542–00	13 – 20
6AH–85547–00	15 – 7
6AH–85550–00	12 – 1
6AH–85550–10	12 – 1
6F5–85570–13	13 – 13

NUMERICAL INDEX
INDEX NUMERIQUE

PART NO. N° PIECES	REF. NO.
6AH–85580–00	12 – 3
6AG–W0001–00	32 – 1
6AH–W0001–20	34 – 1
6AH–W0078–00	1 – 14
	34 – 21
6AH–W0084–03–8D	18 – 1
6AH–W0093–01	33 – 1
6AG–W009A–01–1S	5 – 1
6AH–W009B–02–1S	3 – 1
90101–06032	10 – 26
90101–06M18	22 – 16
90101–08022	19 – 16
90105–06035	9 – 17
90105–081A7	9 – 3
90105–09006	5 – 6
90109–06M82	17 – 8
90109–06M84	22 – 43
90109–06M86	13 – 28
	13 – 42
	17 – 32
	17 – 44
	18 – 3
	21 – 36
90109–06MA1	7 – 13
90111–06072	18 – 30
	23 – 22
90111–08055	10 – 11
90116–10033	23 – 7
90119–05018	19 – 3
90119–06M05	18 – 33
90119–06M35	13 – 7
90119–06M88	27 – 20
90119–06MA3	3 – 16
	3 – 21
	5 – 7
90119–08093	3 – 4
90119–08094	23 – 11
90119–08103	25 – 10
90119–08M45	23 – 16
90119–08M46	23 – 17
90149–06069	20 – 33
	21 – 34
90152–05011	18 – 8
	27 – 9
90157–05M16	28 – 6
90167–06002	17 – 28
90170–06015	20 – 13
	21 – 13

PART NO. N° PIECES	REF. NO.
90170–09M03	29 – 4
90170–30003	9 – 8
90171–10M01	27 – 17
90179–08M06	26 – 30
90179–08M34	23 – 18
90179–16M05	12 – 8
90185–05002	27 – 10
90185–08057	23 – 29
90185–09M01	29 – 3
90185–10M14	19 – 14
90185–22043	22 – 14
90201–05M04	20 – 27
90201–06106	10 – 28
90201–06M05	13 – 12
90201–06M31	20 – 21
	21 – 29
90201–08065	19 – 17
90201–08784	9 – 4
90201–106M5	19 – 19
90201–10M01	27 – 16
90201–10M20	29 – 2
90201–10M63	29 – 7
90201–15017	26 – 6
90201–15423	9 – 5
90201–16M44	12 – 9
90201–17682	26 – 34
90201–39008	18 – 24
90202–10M56	19 – 5
90206–10M24	22 – 44
90206–15M18	18 – 35
90206–39001	18 – 25
90209–10M26	19 – 13
90209–14011	26 – 5
90209–40008	23 – 2
90243–04M01	22 – 3
	22 – 8
90250–05010	26 – 38
90254–03M05	20 – 2
	20 – 8
	21 – 2
	21 – 8
90266–06M02	2 – 4
90280–03M01	9 – 9
90280–05013	12 – 7
90340–08002	26 – 9
90340–14M06	25 – 5
90381–20001	18 – 26
90386–08004	18 – 16

PART NO. N° PIECES	REF. NO.
90386–22MA4	22 – 12
90386–30048	23 – 4
90386–30048	23 – 6
90386–40001	23 – 3
90386–45001	18 – 23
90387–05053	19 – 9
90387–05054	19 – 10
90387–06138	22 – 38
90387–06139	20 – 20
	21 – 28
90387–06176	17 – 4
90387–06289	13 – 8
90387–06M13	22 – 15
90387–06M17	10 – 27
90387–06M70	14 – 4
	14 – 38
90387–06M74	13 – 4
90387–06M86	18 – 34
90387–10M42	29 – 5
90387–13006	6 – 11
90430–08003	1 – 12
	26 – 10
	34 – 12
90430–08143	24 – 5
	34 – 5
90430–14M09	1 – 11
	25 – 6
	34 – 3
90445–09026	10 – 34
90445–15003	17 – 21
90446–06M90	11 – 25
90464–06001	14 – 34
90464–07M56	13 – 21
90464–08004	14 – 10
90464–09010	14 – 21
90464–09018	10 – 40
90464–10M32	13 – 38
90464–16001	13 – 40
	14 – 17
90464–16003	13 – 40
90464–18246	13 – 36
	14 – 19
90464–20181	15 – 8
90465–08059	5 – 22
90465–08M82	17 – 45
90465–08M83	7 – 5
90465–11M10	3 – 25
	10 – 36

PART NO. N° PIECES	REF. NO.
90465–11M10	17 – 15
	17 – 22
	27 – 3
90465–13M18	7 – 15
	13 – 6
	13 – 37
	14 – 20
	15 – 2
90467–09M17	10 – 13
	10 – 31
90468–10005	20 – 28
90468–18008	18 – 38
	21 – 22
	21 – 38
90480–06M19	9 – 14
90480–10627	9 – 12
90480–10M23	13 – 9
90480–13M24	14 – 5
	14 – 39
90480–14M54	24 – 18
90480–16007	17 – 18
90480–16616	7 – 14
90480–19031	21 – 16
90480–19368	15 – 6
90480–21M82	17 – 3
90480–25003	13 – 14
90501–10326	8 – 8
90501–120A5	6 – 12
90501–150A0	26 – 40
90501–23215	18 – 15
90502–10M07	22 – 22
90506–18014	22 – 33
90506–20020	22 – 35
90508–20M44	20 – 16
	21 – 24
91490–16010	18 – 12
91490–30020	27 – 18
91690–30008	22 – 21
91690–30012	21 – 18
91690–50014	7 – 4
92903–06600	3 – 6
92903–08600	16 – 16
	16 – 18
92907–04600	5 – 15
92990–06200	18 – 37
92990–06300	27 – 13
92990–08600	31 – 38
92995–05600	19 – 12

PART NO. N° PIECES	REF. NO.
92995–05600	24 – 15
92995–06100	17 – 39
92995–06600	13 – 19
	13 – 26
	13 – 32
	13 – 35
	14 – 9
	14 – 16
	14 – 16
	14 – 42
	15 – 10
	16 – 24
	17 – 36
	17 – 40
	18 – 20
	20 – 31
	21 – 20
	22 – 17
92995–08600	14 – 23
	14 – 25
	16 – 20
	23 – 28
93101–12M63	24 – 2
	34 – 4
93101–17054	26 – 44
	34 – 18
93101–20001	26 – 23
	34 – 15
93102–22010	9 – 18
	32 – 2
93102–25014	4 – 10
	32 – 8
93102–37004	4 – 9
	32 – 7
93210–06ME6	26 – 25
	34 – 17
93210–13M63	3 – 14
	5 – 19
	32 – 6
	32 – 10
93210–16275	29 – 9
93210–20M65	10 – 29
	32 – 18
93210–24M79	5 – 21
	32 – 17
93210–29M94	23 – 5
93210–32738	1 – 10
	10 – 8

PART NO. N° PIECES	REF. NO.
93210–35M86	7 – 10
	32 – 15
93210–49046	26 – 16
	34 – 14
	34 – 27
93210–56M80	26 – 46
	34 – 20
93210–57M09	26 – 45
	34 – 19
93306–00501	26 – 42
93315–314V8	26 – 3
93315–317U2	26 – 43
93332–00005	26 – 8
93420–30042	24 – 20
93430–04M03	22 – 39
93430–06024	31 – 12
93450–17129	4 – 8
93604–12M07	24 – 13
	25 – 3
	26 – 18
	27 – 5
	34 – 29
93606–12019	3 – 3
	5 – 5
93606–19M23	24 – 6
93700–06M03	23 – 19
94702–00418	1 – 8
	5 – 23
95380–04600	10 – 24
95380–05600	31 – 9
95380–06600	17 – 41
	31 – 43
95380–06700	20 – 14
	21 – 14
	22 – 18
95380–08600	10 – 10
95380–10600	23 – 10
95780–06500	14 – 6
	14 – 40
95875–06020	11 – 26
95895–06014	20 – 11
	21 – 11
95895–06020	10 – 3
95895–06030	12 – 6
95895–06035	27 – 12
95895–06100	7 – 11
97013–06012	6 – 10
97013–06040	3 – 5

PART NO. N° PIECES	REF. NO.
97013–08035	16 – 17
97013–08045	16 – 15
97075–06012	17 – 35
97080–08025	26 – 26
97095–05010	24 – 14
97095–05012	12 – 5
97095–05020	19 – 11
97095–06008	24 – 17
97095–06014	13 – 18
	13 – 31
	14 – 8
	14 – 15
	14 – 15
	14 – 41
	15 – 9
	16 – 23
	18 – 19
	20 – 23
	20 – 30
	21 – 19
	21 – 31
97095–06016	13 – 34
97095–06030	13 – 3
97095–08014	24 – 4
97095–08016	14 – 24
	16 – 19
97095–08025	14 – 22
	23 – 27
97095–08045	26 – 19
	34 – 30
97380–05025	31 – 10
97380–08030	31 – 37
97513–06516	25 – 8
97575–06520	26 – 47
97575–06525	24 – 9
97575–08530	24 – 12
	25 – 11
	27 – 6
97595–05514	2 – 7
97595–06510	17 – 29
97595–06512	7 – 6
	17 – 12
97595–06520	5 – 11
	11 – 26
	13 – 2
	20 – 6
	21 – 6
97595–06525	13 – 16

PART NO. N° PIECES	REF. NO.
97595–06530	23 – 25
97595–06555	7 – 3
	18 – 28
	20 – 22
	21 – 30
97595–06610	14 – 12
97780–60520	18 – 31
	23 – 23
97880–06010	13 – 11
97885–06012	13 – 25
97885–06030	17 – 38
97980–04108	8 – 30
97980–04110	8 – 5
97980–04114	8 – 28
	33 – 9
97985–06214	15 – 11
98507–04010	5 – 14
98580–04006	8 – 2
	31 – 40
98580–04008	8 – 15
98780–04016	3 – 27
98980–05025	3 – 12
	3 – 23
	5 – 17
98980–06030	14 – 3
	14 – 37
99080–05600	22 – 29
	22 – 31
	22 – 41