YAMAHA

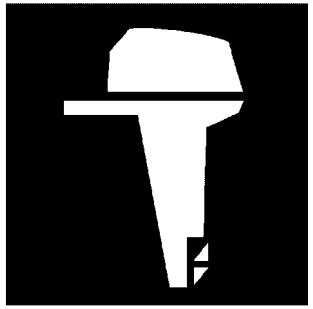

PARTS CATALOGUE
CATALOGUE DE PIECES DETACHEES

F150DET'18 (63PG)
FL150DET'18 (64PG)

1S63P-300FA

( )

YAMAHA
GENUINE
Parts & Accessories

F150DET/FL150DET
PARTS CATALOGUE
©2023 by Yamaha Motor Co., Ltd.
1st edition, April 2023
All rights reserved.
Any reprinting or unauthorized use
without the written permission of
Yamaha Motor Co., Ltd.
is expressly prohibited.
Printed in Japan.

F150DET/FL150DET
CATALOGUE DE PIECES DETACHEES
©2023 par Yamaha Motor Co., Ltd.
1re édition, avril 2023
Tous droits réservés
Toute réimpression ou utilisation
non autorisée sans la permission écrite
de la Yamaha Motor Co., Ltd.
est formellement interdite.
Imprimé au Japon

FOREWORD

This Parts Catalogue is related to the parts for the model(s) on the cover page. When you are ordering replacement parts, please refer to this Parts Catalogue and quote both part numbers and part names correctly.

1. Modifications or additions which have been made after the issue of the Parts Catalogue will be announced in the Parts News.
   It is advisable that you make the necessary corrections to the Parts Catalogue according to the Parts News.

2. Abbreviations
   The following abbreviations are used in this Parts Catalogue.
   "UR" Use specified parts number.
   "UN" Use as many as needed.
   "AP" Alternate Parts
   "LM" Locally Made (Parts need to be ordered locally)
   "F#" Frame No. (Applicable machine No.)
   "O/S" Over Size

3. The number of components for assembly
   - Parts, which are to be supplied in an assembly, are listed with a dot (.) in front of the part name as shown below.
   - The numeral appearing to the right of each component part indicates the quantity of parts for each assembly unit.

PART NO.	DESCRIPTION	Q'TY	REMARKS
2F5–83310–60	FRONT FLASHER LIGHT ASSY	2	
115–83311–60	.BULB (6V–18W)	1	

4. Applicable colours of graphics are represented in the "REMARKS" as shown below.

PART NO.	DESCRIPTION	Q'TY	REMARKS
2N4–24110–00–X5	FUEL TANK COMP.	2	MXR
3J1–24240–10	.GRAPHIC, FUEL TANK	1	FOR MXR

5. Note that the illustrations for reference in finding parts numbers are not to be used for assembling. When assembling, please use the applicable service manual.

6. The asterisk (*) before a reference number indicates modified items after the first edition.

7. Applicable Serial No.
   Engine Serial No.

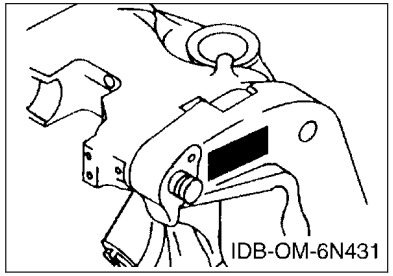

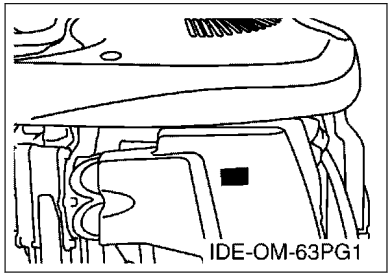

8. Applicable Engine Starting Serial No.

Model	Serial No.	Model	Serial No.
F150D	63P-1203895	FL150D	64P-1022342

9. Applicable Colour Code

Abbreviation	Colour Name	Colour Code
DBN1	DARK BLUISH GRAY 1	008D

10. Quantity Column Information

Column No.	Name Of Q'ty Column	Applicable Model
1	63PG	F150DET
2	64PG	FL150DET

AVANT–PROPOS

Ce catalogue de pièces détachées concerne les pièces pour le(s) modèle(s) indiqué(s) sur la page de couverture. Lorsque vous commandez des pièces de rechange, veuillez vous référer à ce catalogue de pieces détachées et indiquer clairement les numéros et les noms des pièces détachées.

1. Les modifications ou ajouts ayant été effectués après la parution du catalogue de pièces détachées seront décrits dans les Bulletins d'information concernant les pièces détachées.
   Il est recommandé que vous apportiez les corrections nécessaires au catalogue des pièces détachées en vous référant aux Bulletins d'information.

2. Abréviations
   Dans ce catalogue, les abréviations suivantes sont utilisées:
   "UR" Utiliser le numéro de pièces spécifié.
   "UN" Utiliser autant que nécessaire.
   "AP" Pièces de substitution
   "LM" Fabrication locale (les pièces doivent être commandées localement.)
   "F#" N° de cadre (applicable au N° de série)
   "O/S" Surdimensionné

3. Nombre de pièces d'un assemblage
   - Les pièces fournies comme composants d'un assemblage sont précédées d'un point (.) de la manière indiquée ci–dessous.
   - Le chiffre apparaissant à la droite de chaque composant indique la quantité de pièces pour chaque unité d'assemblage.

N° PIECES	DESCRIPTION	QTE	REMARQUES
2F5–83310–60	ENS. CLIGNOTANT AVANT	2	
115–83311–60	.AMPOULE (6V–18W)	1	

4. Les couleurs concernant les graphiques sont indiquées dans la colonne "REMARQUES", comme indiqué ci–dessous.

N° PIECES	DESCRIPTION	QTE	REMARQUES
2N4–24110–00–X5	RESERVOIR A ESSENCE.	2	MXR
3J1–24240–10	.GRAPHIQUE	1	POUR MXR

5. Veuillez noter que les illustrations sont indiquées à titre de référence pour trouver les numéros de pièces, non pour être utilisées lors de l'assemblage. Lors de l'assemblage, veuillez utiliser le manuel d'entretien adéquat.

6. L'astérisque (*) placé devant un numéro de référence indique des éléments qui ont été modifiés après la première édition.

7. N° de série applicable
   N° de Série du moteur

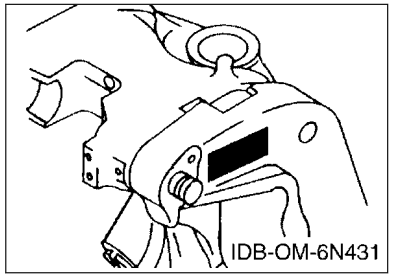

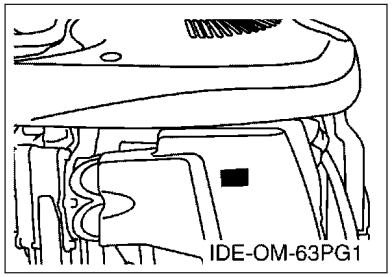

8. N° de série initial du moteur applicable

Modèle	N° de série	Modèle	N° de série
F150D	63P-1203895	FL150D	64P-1022342

9. Code couleur applicable

Abréviation	Nom de la couleur	Code couleur
DBN1	DARK BLUISH GRAY 1	008D

10. Informations relatives à la colonne Quantité

N° de la colonne	Nom de la colonne Qté	Modèle applicable
1	63PG	F150DET
2	64PG	FL150DET

CONTENTS

SCHEDULED SERVICE PARTS.....1
TOP COWLING.....2
CYLINDER & CRANKCASE 1.....3
CRANKSHAFT & PISTON.....5
CYLINDER & CRANKCASE 2.....6
CYLINDER & CRANKCASE 3.....8
VALVE.....10
INTAKE 1.....13
INTAKE 2.....14
INTAKE 3.....15
FUEL INJECTION PUMP 1.....17
FUEL INJECTION PUMP 2.....19
FUEL 1.....20
FUEL 2.....22
GENERATOR.....23
ELECTRICAL 1.....24
ELECTRICAL 2.....25
ELECTRICAL 3.....27
STARTING MOTOR.....28
BOTTOM COWLING 1.....30
BOTTOM COWLING 2.....32
CONTROL.....33
BRACKET 1.....35
BRACKET 2.....37
POWER TRIM & TILT ASSY 1.....39
POWER TRIM & TILT ASSY 2.....42
UPPER CASING.....43
OIL PAN.....45
LOWER CASING & DRIVE 1.....46
LOWER CASING & DRIVE 2.....50
LOWER CASING & DRIVE 3.....51
LOWER CASING & DRIVE 4.....55
STEERING GUIDE.....56
OPTIONAL PARTS 1.....57
OPTIONAL PARTS 2.....58
REPAIR KIT 1.....59
REPAIR KIT 2.....60

INDEX

NUMERICAL INDEX.....62

TABLE DES MATIERES

PIECES MAINTENANCE PERIODIQUE.....1
CAPOT SUPERIEUR..... 2
CYLINDRE & CARTER 1..... 3
VILEBREQUIN & PISTON.....5
CYLINDRE & CARTER 2..... 6
CYLINDRE & CARTER 3..... 8
SOUPAPE..... 10
ADMISSION 1.....13
ADMISSION 2.....14
ADMISSION 3.....15
POMPE A INJECTEUR 1..... 17
POMPE A INJECTEUR 2..... 19
CARBURANT 1..... 20
CARBURANT 2..... 22
GENERATRICE.....23
PARTIE ELECTRIQUE 1.....24
PARTIE ELECTRIQUE 2.....25
PARTIE ELECTRIQUE 3.....27
DEMARREUR ELECTRIQUE.....28
CAPOT INFERIEUR 1.....30
CAPOT INFERIEUR 2.....32
COMMANDE..... 33
SUPPORT 1..... 35
SUPPORT 2..... 37
PUISSANCE PARER ET INCLINER 1..... 39
PUISSANCE PARER ET INCLINER 2..... 42
FOURREAU.....43
VENTILATEUR D'HUILE..... 45
BOITIER D'HELICE TRANSMISSION1.....46
BOITIER D'HELICE TRANSMISSION2.....50
BOITIER D'HELICE TRANSMISSION3.....51
BOITIER D'HELICE TRANSMISSION4.....55
FIXATION DE DIRECTION..... 56
PIECES OPTIONNELLES 1.....57
PIECES OPTIONNELLES 2.....58
KITS DE REPARATION 1..... 59
KITS DE REPARATION 2..... 60

INDEX

INDEX NUMERIQUE.....62

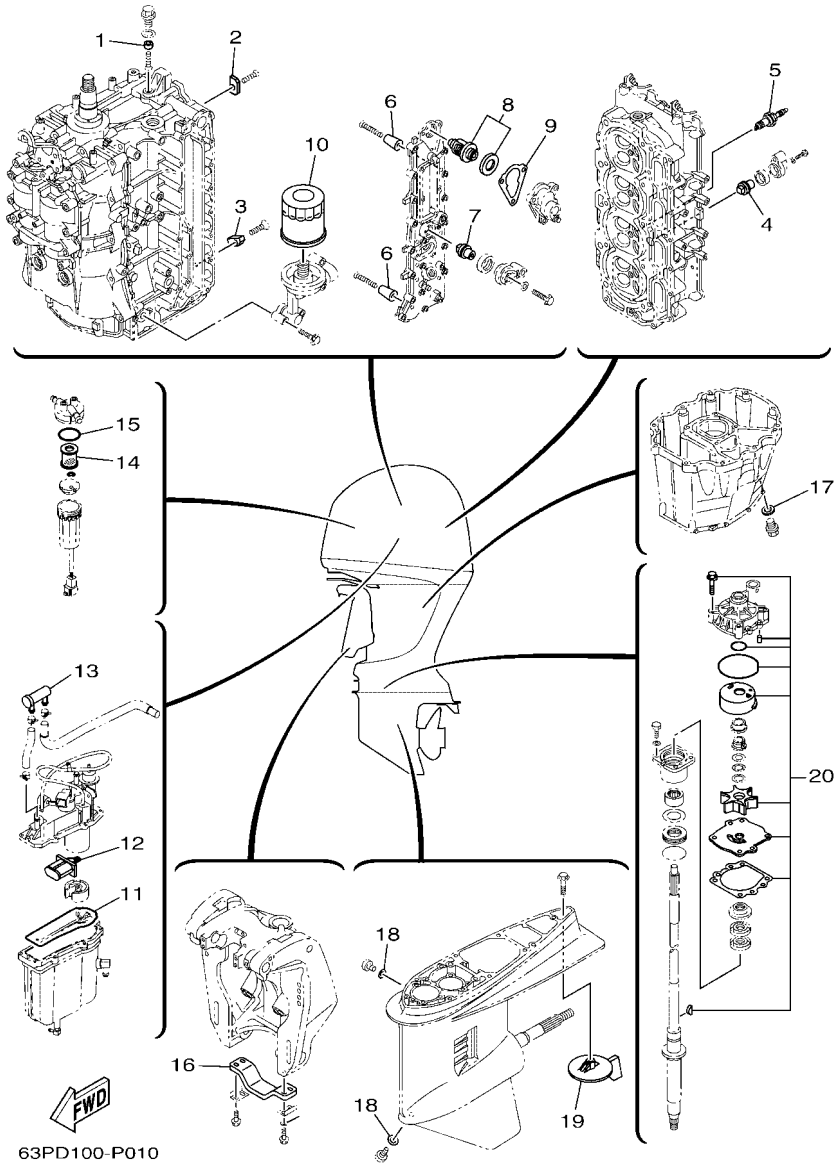

FIG. 1 SCHEDULED SERVICE PARTS — PIECES MAINTENANCE PERIODIQUE

REF. NO.	PART NO. N° PIECES	DESCRIPTION DESCRIPTION	63PG	64PG				REMARKS REMARQUES
1	63P–11325–21	ANODE ANODE	1	1				
2	63P–11325–11	ANODE ANODE	4	4				
3	63P–11325–01	ANODE ANODE	1	1				
4	67F–11325–01	ANODE ANODE	2	2				
5	94702–00391	PLUG, SPARK (NGK LFR5A-11) BOUGIE D'ALLUMAGE(NGK LFR5A-11	4	4				
6	68T–11325–00	ANODE ANODE	8	8				
7	67F–11325–01	ANODE ANODE	1	1				
8	67F–12411–01	THERMOSTAT THERMOSTAT	1	1				
9	63P–12414–00	GASKET, COVER JOINT, COUVERCLE	1	1				
10	69J–13440–03	ELEMENT ASSY, OIL CLEANER ELEMENT, FILTRE A HUILE	1	1				
11	63P–14984–00	GASKET, FLOAT CHAMBER JOINT, CUVE DE FLOTTEUR	1	1				
12	63P–13915–00	FILTER FILTRE	1	1				
13	69J–24501–10	FILTER, FUEL FILTRE	1	1				
14	6P3–24563–01	ELEMENT, FILTER ELEMENT, FILTRE	1	1				
15	6P3–24564–00	GASKET JOINT	1	1				
16	6G5–45251–02	ANODE ANODE	1	1				
17	90430–14M09	GASKET JOINT	1	1				
18	90430–08003	GASKET JOINT	2	2				
19	6J9–45371–01	TAB-TRIM ANODE DERIVE	1					
	6K1–45371–02	TAB-TRIM ANODE DERIVE		1				
20	61A–W0078–A3	WATER PUMP REPAIR KIT KIT DE REPARATION DE LA POMPE	1	1				

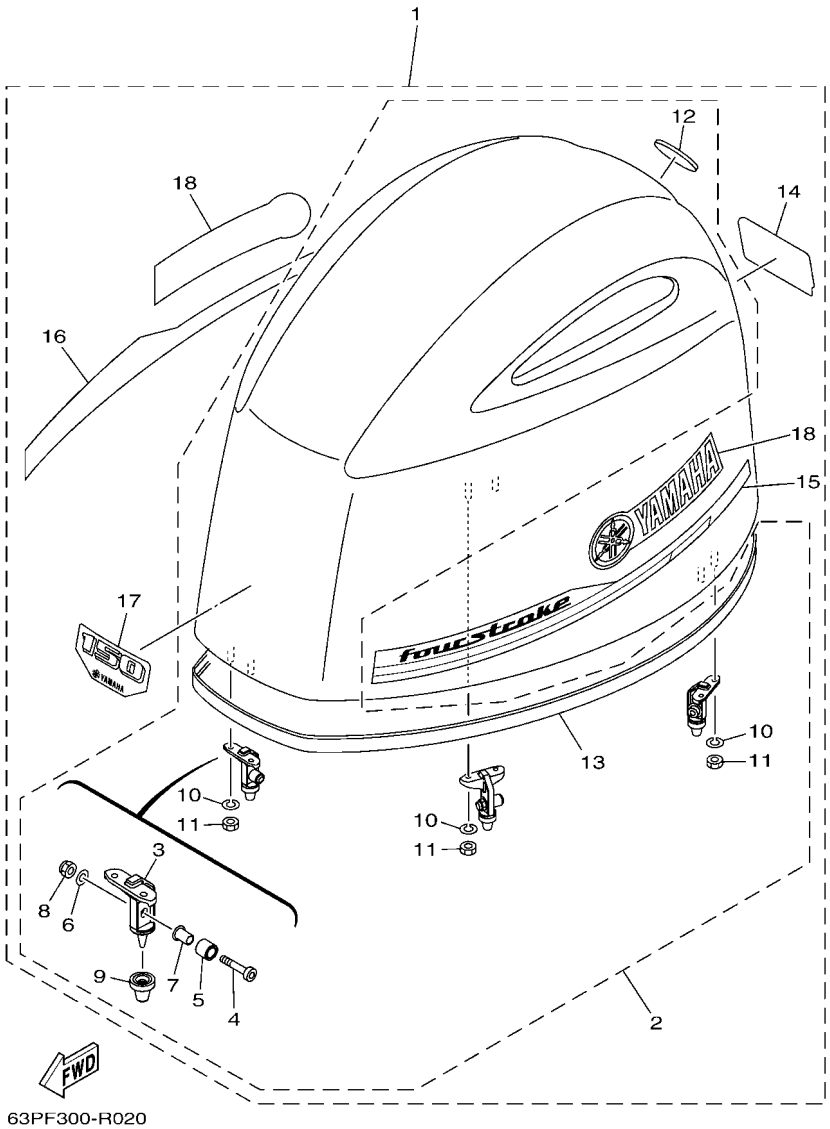

FIG. 2 TOP COWLING — CAPOT SUPERIEUR

REF. NO.	PART NO. N° PIECES	DESCRIPTION DESCRIPTION	63PG	64PG				REMARKS REMARQUES
1	63P–42610–70	TOP COWLING ASSY CAPOT (ENS.)	1	1				
2	63P–4261A–10	.TOP COWLING W/O GRAPHICS .CAPOT SUPERIEUR SANS GRAPHIQUE	1	1				
3	6CB–42647–A0	..HOLDER, CLAMP BAND ..SUPPORT, SANDOW DE SERRAGE	3	3				
4	90111–08078	..BOLT,HEX. SOCKET BUTTON ..BOULON	3	3				
5	90387–10094	..COLLAR ..COLLERETTE	3	3				
6	92990–08600	..WASHER, PLATE ..RONDELLE, PLATE	3	3				
7	90387–08M45	..COLLAR ..COLLERETTE	3	3				
8	95780–08300	..NUT, FLANGE ..ECROU	3	3				
9	6AW–42663–00	..DAMPER 2 ..AMORTISSEUR 2	3	3				
10	92990–06100	..WASHER, SPRING ..RONDELLE, GROWER	6	6				
11	95380–06600	..NUT, HEXAGON ..ECROU	6	6				
12	6DA–42697–00	..TUNING FORK MARK ..MARQUE, YAMAHA	1	1				
13	6CB–42628–00	..SEAL ..JOINT	1	1				
14	63P–42678–60	.GRAPHIC, REAR .ADHESIF, ARRIERE	1	1				
15	6DA–42675–00	.GRAPHIC, SIDE 1 .EMBLEME	1	1				
16	6DA–42676–00	.GRAPHIC, SIDE 2 .EMBLEME	1	1				
17	63P–42677–60	.GRAPHIC, FRONT .ADHESIF, AVANT	1	1				
18	63P–42681–20	.MARK, COWLING .ADHESIF, CAPOT	2	2				

FIG. 3 CYLINDER & CRANKCASE 1 — CYLINDRE & CARTER 1

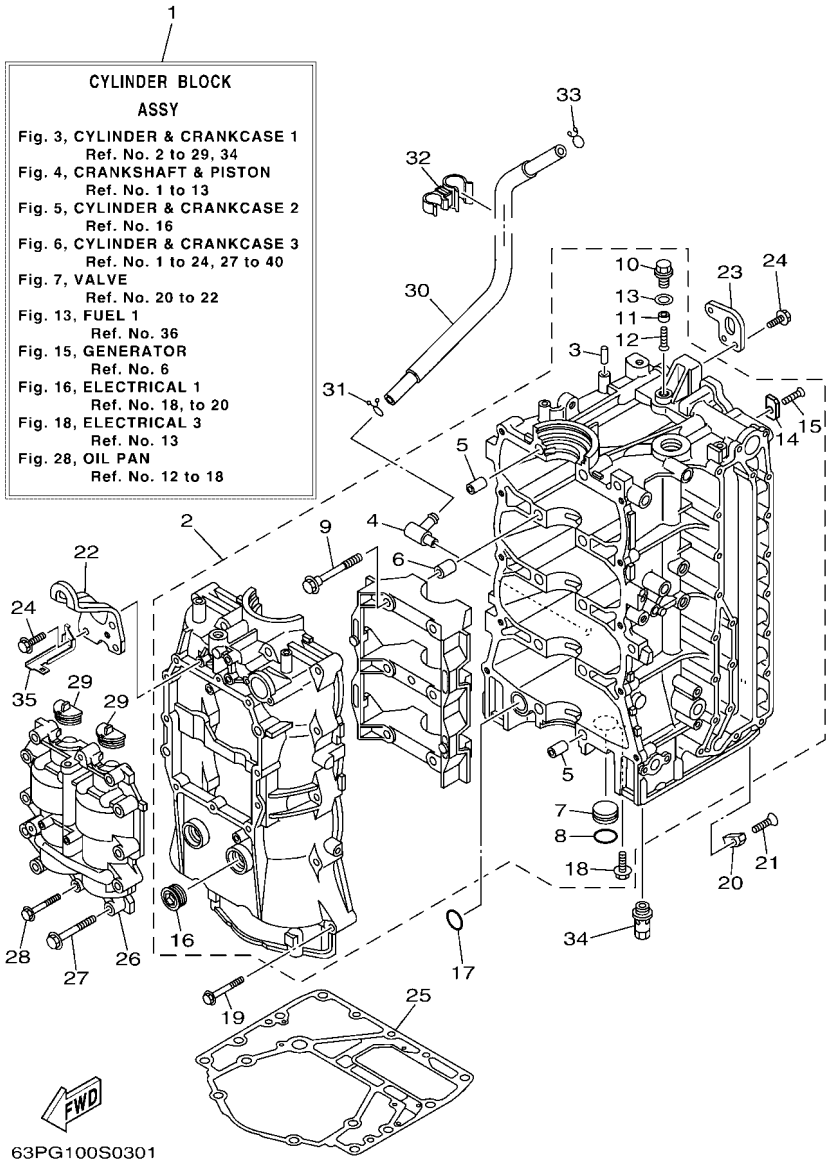

REF. NO.	PART NO. N° PIECES	DESCRIPTION DESCRIPTION	63PG	64PG				REMARKS REMARQUES
1	63P–W009B–12–9S	CYLINDER BLOCK ASSY CYLINDRE GROUPE (ENS.)	1	1				
2	63P–W1510–04–9S	CRANKCASE ASSY CARTER DE MOTEUR COMPLET	1	1				
3	93606–12019	.PIN, DOWEL .GOUPILLE	1	1				
4	63P–11372–00	.NIPPLE, HOSE .RACCORD, TUYAU	1	1				
5	91814–18002	.PIN, DOWEL .GOUJON, D'ASSEMBLAGE	4	4				
6	91814–18002	.PIN, DOWEL .GOUJON, D'ASSEMBLAGE	6	6				
7	90338–25004	.PLUG .PLOT	1	1				
8	93210–25647	.O-RING .JOINT TORIQUE	1	1				
9	90105–10071	.BOLT, FLANGE .BOULON, A COLLERETTE	10	10				
10	63P–11197–A0	.PLUG, BLIND .PLOT, BORGNE	1	1				
11	63P–11325–21	.ANODE .ANODE	1	1				
12	98780–05016	.SCREW, FLAT HEAD .VIS A TETE FRAISEE	1	1				
13	90430–14115	.GASKET .JOINT	1	1				
14	63P–11325–11	.ANODE .ANODE	4	4				
15	90151–06M02	.SCREW, COUNTERSUNK .VIS, TETE NOYEE	4	4				
16	90340–27129	.PLUG, STRAIGHT SCREW .PLOT, FILETE DROIT	2	2				
17	93210–25552	O-RING JOINT TORIQUE	1	1				
18	90119–06M81	.BOLT, WITH WASHER .BOULON, AVEC RONDELLE	1	1				
19	90119–08M66	BOLT, WITH WASHER BOULON, AVEC RONDELLE	10	10				
20	63P–11325–01	ANODE ANODE	1	1				
21	90151–06M02	SCREW, COUNTERSUNK VIS, TETE NOYEE	1	1				
22	63P–11119–00	HANGER, ENGINE ANNEAU, LEVAGE	1	1				
23	63P–11119–10	HANGER, ENGINE ANNEAU, LEVAGE	1	1				
24	90119–06MA2	BOLT, WITH WASHER BOULON, AVEC RONDELLE	5	5				
25	63P–11351–03	GASKET, CYLINDER JOINT, D'EMBASE	1	1				
26	63P–11500–04	BALANCER ASSY ARBRE D'EQUILIBRAGE COMPLET	1	1				
27	90119–08M66	BOLT, WITH WASHER BOULON, AVEC RONDELLE	10	10				

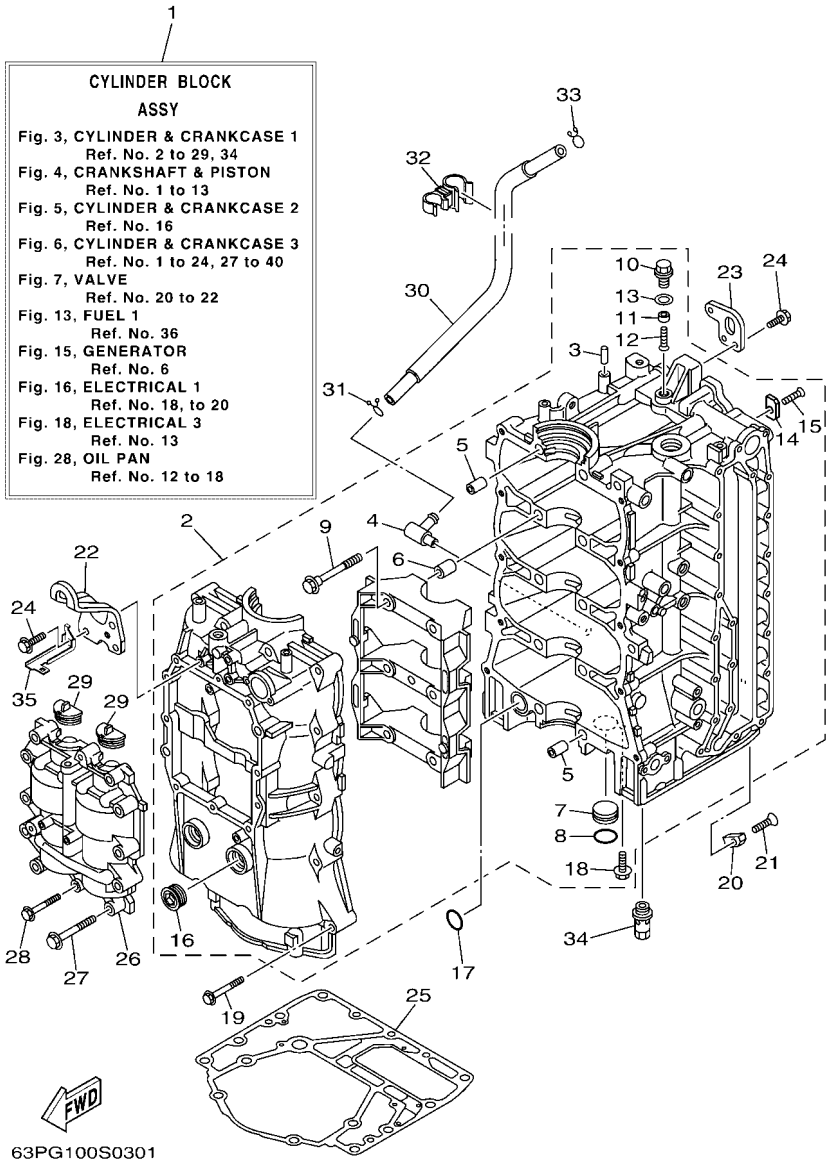

FIG. 3 CYLINDER & CRANKCASE 1 — CYLINDRE & CARTER 1

REF. NO.	PART NO. N° PIECES	DESCRIPTION DESCRIPTION	63PG	64PG				REMARKS REMARQUES
28	90119–06MA6	BOLT, WITH WASHER BOULON, AVEC RONDELLE	2	2				
29	63P–11512–00	SEAL, CRANK COVER JOINT, COUV DE VILEBREQUIN	2	2				
30	63P–11377–10	HOSE DURITE	1	1				
31	90467–15M14	CLIP JONC	1	1				
32	90464–15007	CLAMP BRIDE	1	1				
33	90467–15M14	CLIP JONC	1	1				
34	63P–13490–00	RELIEF VALVE ASSY SOUPAPE DE SECURITE COMPLET	1	1				
35	63P–82588–00	PLATE PLAQUE	1	1				

FIG. 4 CRANKSHAFT & PISTON — VILEBREQUIN & PISTON

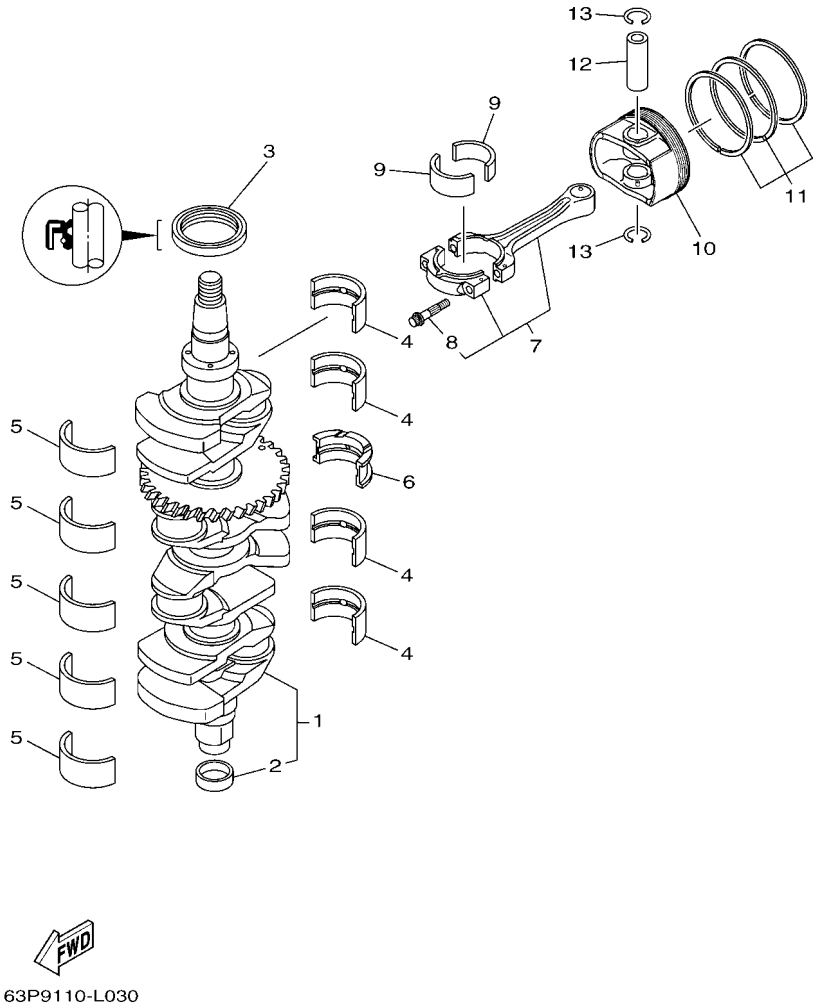

REF. NO.	PART NO. N° PIECES	DESCRIPTION DESCRIPTION	63PG	64PG				REMARKS REMARQUES
1	63P–11410–04	CRANKSHAFT VILEBREQUIN COMPLET	1	1				
2	6CB–11478–00	.COLLAR .COLLERETTE	1	1				
3	93102–60004	OIL SEAL JOINT SPY	1	1				
4	63P–11416–31	PLANE BEARING, CRANKSHAFT 1 COUSSINET DE VILEBREQUIN 1	4	4				UR GREEN UR GREEN
	63P–11416–41	PLANE BEARING, CRANKSHAFT 1 COUSSINET DE VILEBREQUIN 1	4	4				UR RED UR RED
	63P–11416–51	PLANE BEARING, CRANKSHAFT 1 COUSSINET DE VILEBREQUIN 1	4	4				UR YELLOW UR YELLOW
5	63P–11417–41	PLANE BEARING, CRANKSHAFT 2 COUSSINET DE VILEBREQUIN 2	5	5				UR BROWN UR BROWN
	63P–11417–51	PLANE BEARING, CRANKSHAFT 2 COUSSINET DE VILEBREQUIN 2	5	5				UR GREEN UR GREEN
	63P–11417–61	PLANE BEARING, CRANKSHAFT 2 COUSSINET DE VILEBREQUIN 2	5	5				UR RED UR RED
	63P–11417–71	PLANE BEARING, CRANKSHAFT 2 COUSSINET DE VILEBREQUIN 2	5	5				UR YELLOW UR YELLOW
	63P–11417–81	PLANE BEARING, CRANKSHAFT 2 COUSSINET DE VILEBREQUIN 2	5	5				UR BLUE UR BLUE
6	63P–11426–31	BEARING, THRUST 1 ROULEMENT DE BUTEE 1	1	1				UR GREEN UR GREEN
	63P–11426–41	BEARING, THRUST 1 ROULEMENT DE BUTEE 1	1	1				UR RED UR RED
	63P–11426–51	BEARING, THRUST 1 ROULEMENT DE BUTEE 1	1	1				UR YELLOW UR YELLOW
7	63P–W1165–10	CONNECTING ROD ASSY BIELLE COMPLETTE	4	4				
8	63P–11654–10	.BOLT, CONNECTING ROD .BOULON, BIELLE	2	2				
9	63P–11656–30	PLANE BEARING, CONNECTING ROD ROULEMENT DE BIELLE	8	8				UR GREEN UR GREEN
	63P–11656–40	PLANE BEARING, CONNECTING ROD ROULEMENT DE BIELLE	8	8				UR BLUE UR BLUE
	63P–11656–50	PLANE BEARING, CONNECTING ROD ROULEMENT DE BIELLE	8	8				UR RED UR RED
10	63P–11631–10–93	PISTON (STD) PISTON (STD)	4	4				
	63P–11635–10	PISTON (0.25MM O/S) PISTON (0.25MM O/S)	4	4				AP AP
11	63P–11603–01	PISTON RING SET (STD) JEU DE SEGMENTS (STD)	4	4				
	63P–11604–00	PISTON RING SET (0.25MM O/S) JEU DE SEGMENTS (0.25MM O/S)	4	4				AP AP
12	63P–11633–10	PIN, PISTON AXE, PISTON	4	4				
13	63P–11634–00	CLIP, PISTON PIN AGRAFE, AXE DE PISTON	8	8				

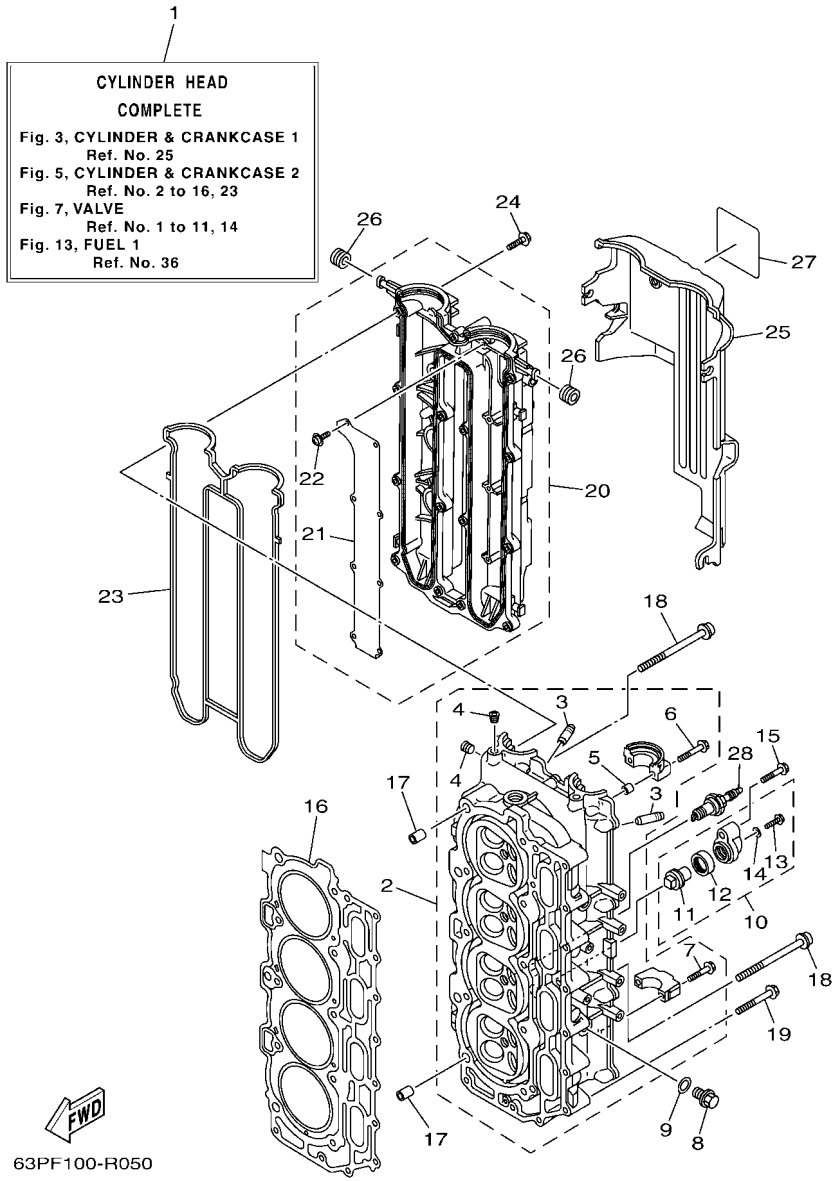

FIG. 5 CYLINDER & CRANKCASE 2 — CYLINDRE & CARTER 2

REF. NO.	PART NO. N° PIECES	DESCRIPTION DESCRIPTION	63PG	64PG				REMARKS REMARQUES
1	63P–W009A–04–9S	CYLINDER HEAD COMPLETE CULASSE (ENS.)	1	1				
2	63P–11110–11–9S	CYLINDER HEAD ASSY JEU DE CULASSE	1	1				
3	6DA–11133–10	.GUIDE, VALVE 1 .GUIDE, SOUPAPE 1	16	16				
4	90344–51019	.PLUG, TAPER SCREW .PLOT, FILETE CONIQUE	3	3				
5	91809–08006	.PIN, DOWEL .GOUJON, D'ASSEMBLAGE	4	4				
6	90119–07235	.BOLT/WASHER-CAM CAPS .BOULON, AVEC RONDELLE	4	4				
7	90119–07234	.BOLT, WITH WASHER .BOULON, AVEC RONDELLE	16	16				
8	90340–14M06	PLUG, STRAIGHT SCREW PLOT, FILETE DROIT	2	2				
9	90430–14115	GASKET JOINT	2	2				
10	69J–11301–00	ANODE COVER ASSY COUVERCLE ANODE (ENS.)	2	2				
11	67F–11325–01	.ANODE .ANODE	1	1				
12	67F–11328–00	.GROMMET, ANODE .PASSE-FIL	1	1				
13	90105–06M07	.BOLT, FLANGE .BOULON, A COLLERETTE	1	1				
14	90430–06M03	.GASKET .JOINT	1	1				
15	97575–08540	BOLT, WITH WASHER VIS HEXAGONAL AVC RONDELLE	2	2				
16	63P–11181–00	GASKET, CYLINDER HEAD 1 JOINT, DE CULASSE 1	1	1				
17	99530–14016	PIN, DOWEL GOUJON, D'ASSEMBLAGE	2	2				
18	90155–10006	SCREW, FLAT FILLISTER VIS, TETE OVALE PLATE	10	10				
19	90119–08M91	BOLT, WITH WASHER BOULON, AVEC RONDELLE	10	10				
20	63P–11191–00–9S	COVER, CYLINDER HEAD 1 COUVERCLE, CULASSE 1	1	1				
21	63P–11135–00	.PLATE, BREATHER 3 .PLAQUE, RENIFLARD 3	1	1				
22	97607–04208	.SCREW, WITH WASHER .VIS HEXAGONAL	8	8				
23	63P–11193–00	GASKET, HEAD COVER 1 JOINT, COUVERCLE DE CULASSE 1	1	1				
24	97595–06530	BOLT, WITH WASHER VIS HEXAGONAL AVC RONDELLE	13	13				
25	63P–11192–01	COVER, CYLINDER HEAD 2 COUVERCLE, CULASSE 2	1	1				
26	90480–12314	GROMMET PASSE-FIL	5	5				
27	63P–83626–00	MARK 6 MARK 6	1	1				

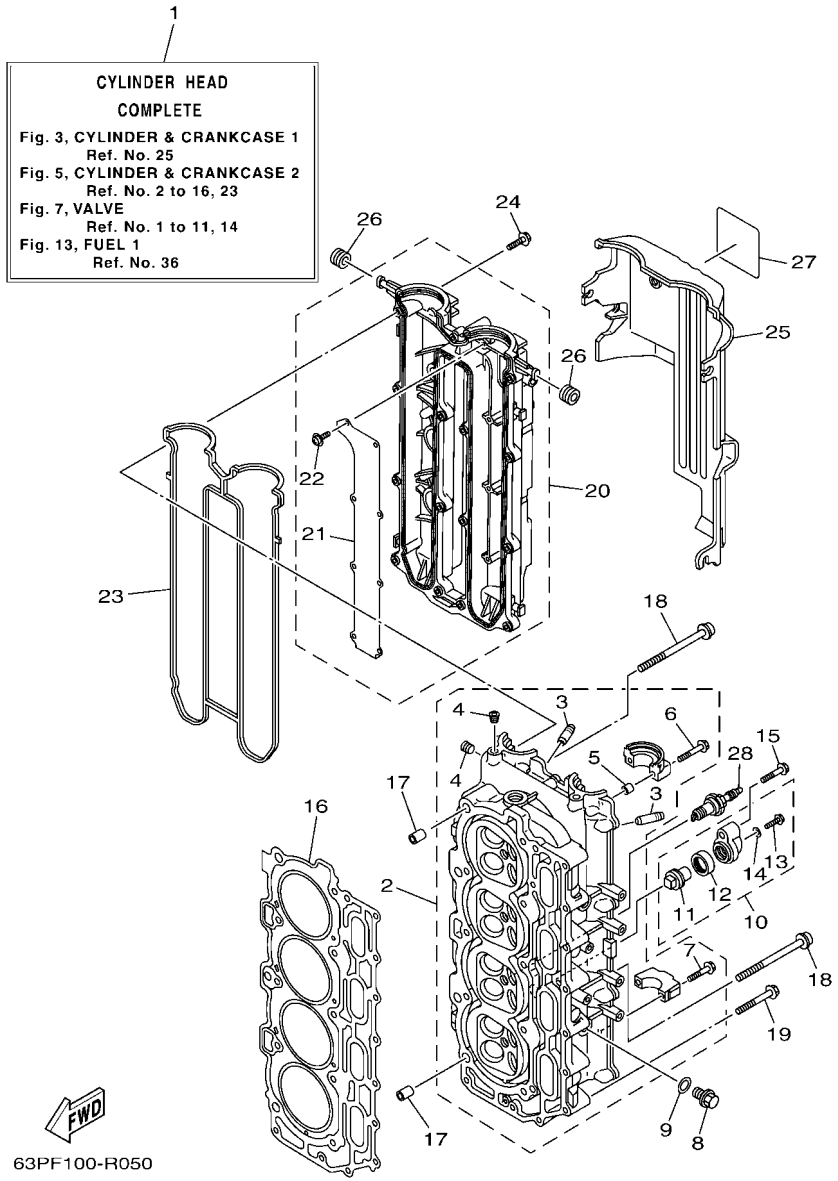

FIG. 5 CYLINDER & CRANKCASE 2 — CYLINDRE & CARTER 2

REF. NO.	PART NO. N° PIECES	DESCRIPTION DESCRIPTION	63PG	64PG				REMARKS REMARQUES
28	94702–00391	PLUG, SPARK (NGK LFR5A-11) BOUGIE D'ALLUMAGE(NGK LFR5A-11	4	4				

FIG. 6 CYLINDER & CRANKCASE 3 — CYLINDRE & CARTER 3

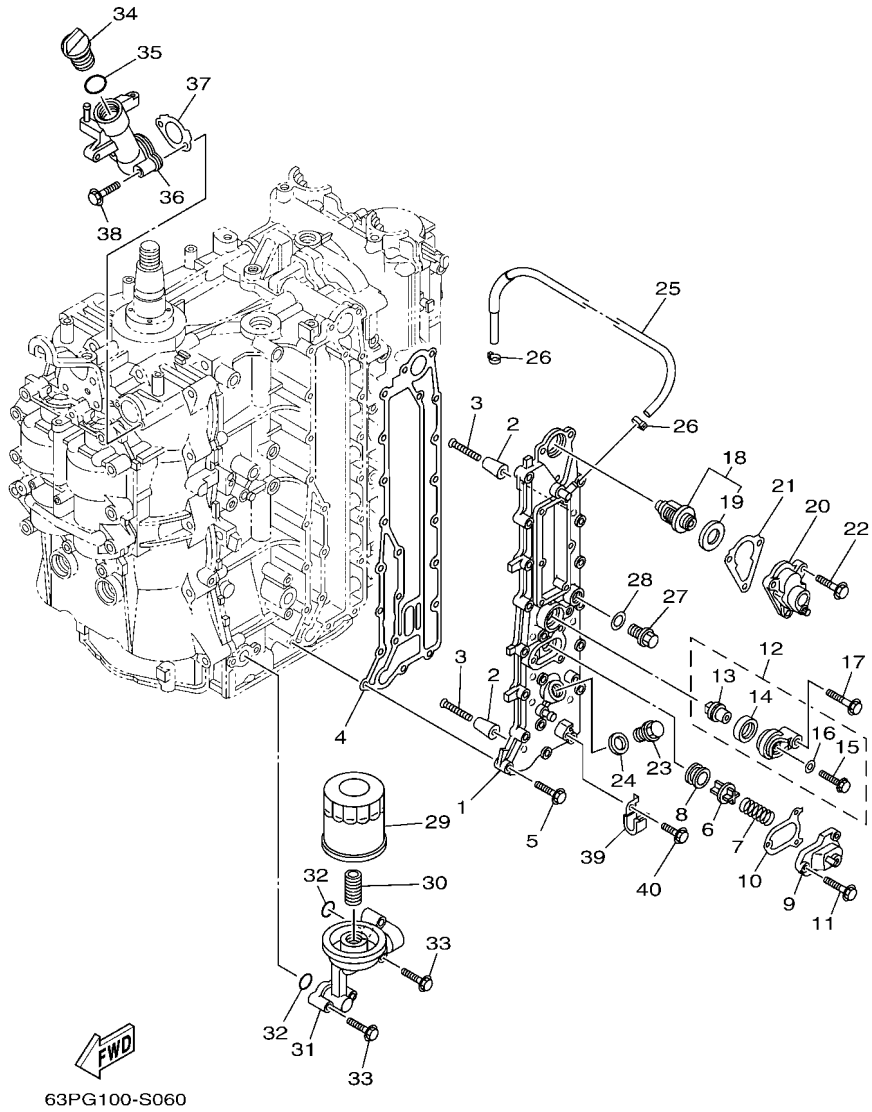

REF. NO.	PART NO. N° PIECES	DESCRIPTION DESCRIPTION	63PG	64PG				REMARKS REMARQUES
1	63P–41113–04–9S	OUTER COVER, EXHAUST COUVERCLE, ECHAPPEMENT	1	1				
2	68T–11325–00	ANODE ANODE	8	8				
3	90151–05M05	SCREW, COUNTERSUNK VIS, TETE NOYEE	8	8				
4	63P–41114–A3	GASKET, EXHAUST OUTER COVER JOINT, COUVERCLE D'ECHAPPEMENT	1	1				
5	90119–06MA4	BOLT, WITH WASHER BOULON, AVEC RONDELLE	19	19				
6	6G5–12416–00	VALVE, PRESSURE CONTROL SOUPAPE DE CONTROLEUR PRESS	1	1				
7	90501–16M11	SPRING, COMPRESSION RESSORT, COMPRESSION	1	1				
8	90480–20M05	GROMMET PASSE-FIL	1	1				
9	67F–1246A–A0–9S	COVER 1 COUVERCLE 1	1	1				
10	67F–12435–A0	GASKET JOINT	1	1				
11	90119–06MA2	BOLT, WITH WASHER BOULON, AVEC RONDELLE	3	3				
12	69J–11301–00	ANODE COVER ASSY COUVERCLE ANODE (ENS.)	1	1				
13	67F–11325–01	.ANODE .ANODE	1	1				
14	67F–11328–00	.GROMMET, ANODE .PASSE-FIL	1	1				
15	90105–06M07	.BOLT, FLANGE .BOULON, A COLLERETTE	1	1				
16	90430–06M03	.GASKET .JOINT	1	1				
17	97575–08540	BOLT, WITH WASHER VIS HEXAGONAL AVC RONDELLE	1	1				
18	67F–12411–01	THERMOSTAT THERMOSTAT	1	1				
19	67F–12412–00	.SEAL, THERMOSTAT .JOINT, THERMOSTAT	1	1				
20	63P–1240H–01–9S	COVER ASSEMBLY BOITIER DISTRIBUTEUR COMPLET	1	1				
21	63P–12414–00	GASKET, COVER JOINT, COUVERCLE	1	1				
22	90119–06MA4	BOLT, WITH WASHER BOULON, AVEC RONDELLE	3	3				
23	90340–18M09	PLUG, STRAIGHT SCREW PLOT, FILETE DROIT	1	1				
24	90201–186F1	WASHER, PLATE RONDELLE, PLATE	1	1				
25	63P–1243A–00	HOSE 1 DURITE 1	1	1				
26	90465–11M10	CLAMP BRIDE	2	2				
27	90340–14M06	PLUG, STRAIGHT SCREW PLOT, FILETE DROIT	1	1				

FIG. 6 CYLINDER & CRANKCASE 3 — CYLINDRE & CARTER 3

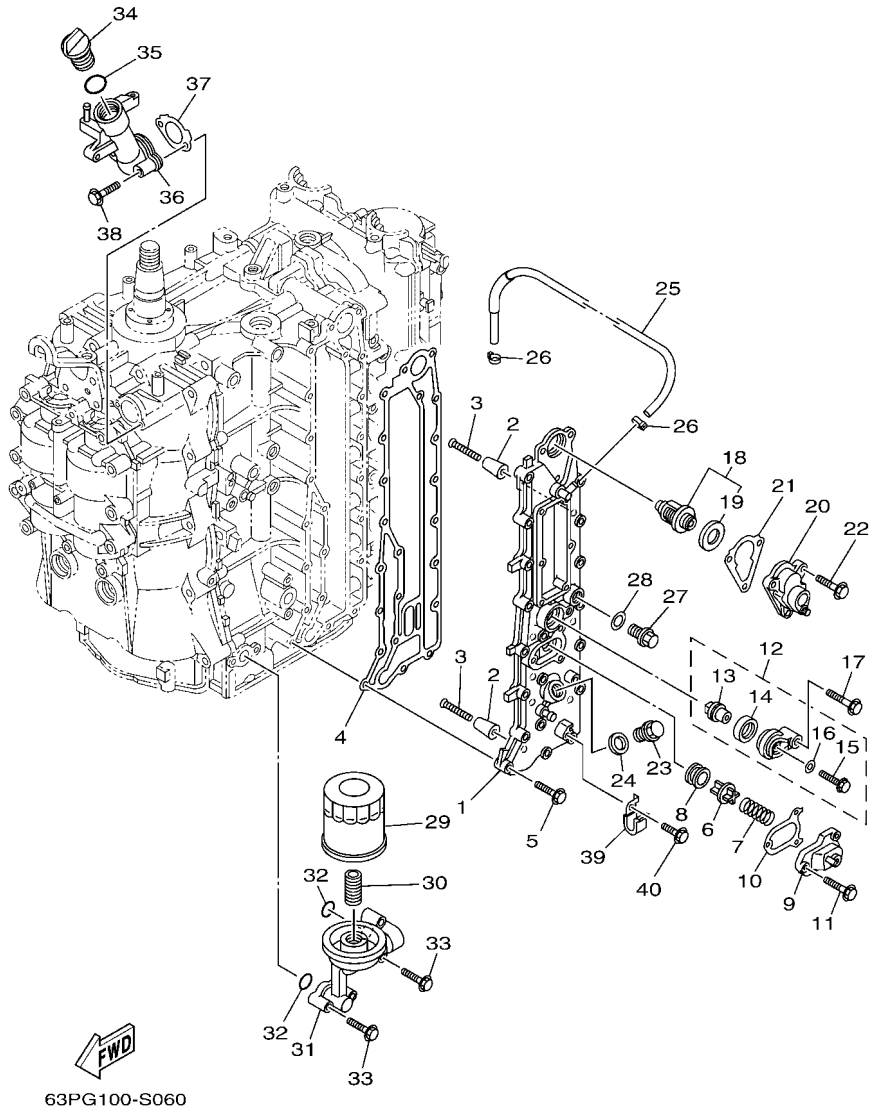

REF. NO.	PART NO. N° PIECES	DESCRIPTION DESCRIPTION	63PG	64PG				REMARKS REMARQUES
28	90430–14115	GASKET JOINT	1	1				
29	69J–13440–03	ELEMENT ASSY, OIL CLEANER ELEMENT, FILTRE A HUILE	1	1				
30	6S5–12858–00	BOLT, UNION BOULON, RACCORD	1	1				
31	63P–13446–01	CONNECTOR CONNECTEUR	1	1				
32	93210–19MJ1	O-RING JOINT TORIQUE	2	2				
33	97575–06540	BOLT, WITH WASHER VIS HEXAGONAL AVC RONDELLE	4	4				
34	6G8–15363–00	PLUG, OIL PLOT, HUILE	1	1				
35	93210–24M79	O-RING JOINT TORIQUE	1	1				
36	63P–15319–00–9S	JOINT JOINT	1	1				
37	63P–15364–A0	GASKET, OIL PLUG JOINT, PLOT D'HUILE	1	1				
38	97595–06545	BOLT, WITH WASHER VIS HEXAGONAL AVC RONDELLE	2	2				
39	90462–06013	CLAMP BRIDE	1	1				
40	97595–06512	BOLT, WITH WASHER VIS HEXAGONAL AVC RONDELLE	1	1				

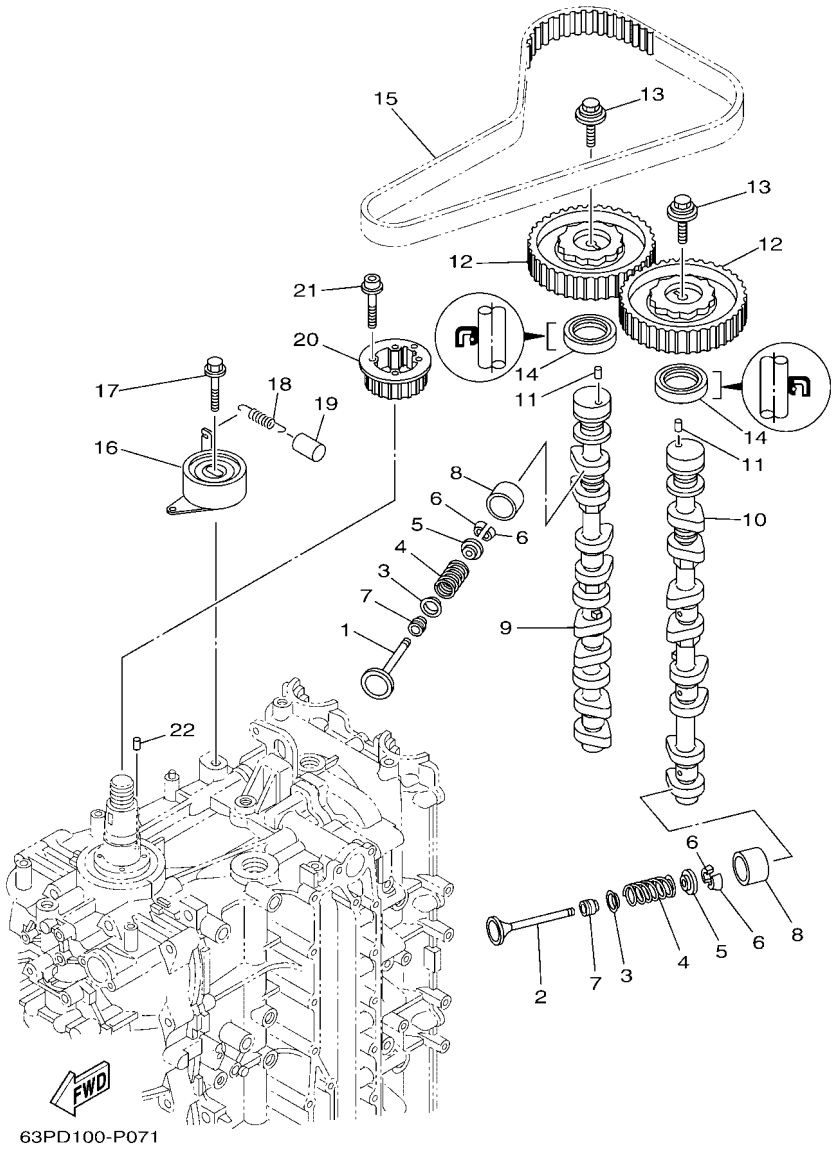

FIG. 7 VALVE SOUPAPE

REF. NO.	PART NO. N° PIECES	DESCRIPTION DESCRIPTION	63PG	64PG				REMARKS REMARQUES
1	63P–12111–00	VALVE, INTAKE SOUPAPE, ADMISSION	8	8				
2	63P–12121–00	VALVE, EXHAUST SOUPAPE, ECHAPPEMENT	8	8				
3	K0F–A3743–00	SEAT, VALVE SPRING SIEGE, RESSORT DE SOUPAPE	16	16				
4	6CB–12113–00	SPRING, VALVE INNER RESSORT DE SOUPAPE, INTERNE	16	16				
5	K0F–A3741–00	RETAINER, VALVE SPRING BUTEE DE RESSORT DE SOUPAPA	16	16				
6	K0F–A3742–00	LOCK, VALVE SPRING RETAINER FRAISE, SOUPAPE	32	32				
7	51Y–12119–00	SEAL, VALVE STEM JOINT, QUEUE DE SOUPAPE	16	16				
8	K0F–A3751–00	LIFTER, VALVE (3.000) LEVE-SOUPAPE (3.000)	16	16				UR UR
	K0F–A3751–10	LIFTER, VALVE (3.025) LEVE-SOUPAPE (3.025)	16	16				UR UR
	K0F–A3751–20	LIFTER, VALVE (3.050) LEVE-SOUPAPE (3.050)	16	16				UR UR
	K0F–A3751–30	LIFTER, VALVE (3.075) LEVE-SOUPAPE (3.075)	16	16				UR UR
	K0F–A3751–40	LIFTER, VALVE (3.100) LEVE-SOUPAPE (3.100)	16	16				UR UR
	K0F–A3751–50	LIFTER, VALVE (3.122) LEVE-SOUPAPE (3.122)	16	16				UR UR
	K0F–A3751–60	LIFTER, VALVE (3.142) LEVE-SOUPAPE (3.142)	16	16				UR UR
	K0F–A3751–70	LIFTER, VALVE (3.162) LEVE-SOUPAPE (3.162)	16	16				UR UR
	K0F–A3751–80	LIFTER, VALVE (3.182) LEVE-SOUPAPE (3.182)	16	16				UR UR
	K0F–A3751–90	LIFTER, VALVE (3.202) LEVE-SOUPAPE (3.202)	16	16				UR UR
	K0F–A3751–A0	LIFTER, VALVE (3.222) LEVE-SOUPAPE (3.222)	16	16				UR UR
	K0F–A3751–B0	LIFTER, VALVE (3.242) LEVE-SOUPAPE (3.242)	16	16				UR UR
	K0F–A3751–C0	LIFTER, VALVE (3.262) LEVE-SOUPAPE (3.262)	16	16				UR UR
	K0F–A3751–D0	LIFTER, VALVE (3.282) LEVE-SOUPAPE (3.282)	16	16				UR UR
	K0F–A3751–E0	LIFTER, VALVE (3.302) LEVE-SOUPAPE (3.302)	16	16				UR UR
	K0F–A3751–F0	LIFTER, VALVE (3.322) LEVE-SOUPAPE (3.322)	16	16				UR UR
	K0F–A3751–G0	LIFTER, VALVE (3.342) LEVE-SOUPAPE (3.342)	16	16				UR UR
	K0F–A3751–H0	LIFTER, VALVE (3.362) LEVE-SOUPAPE (3.362)	16	16				UR UR
	K0F–A3751–J0	LIFTER, VALVE (3.382) LEVE-SOUPAPE (3.382)	16	16				UR UR
	K0F–A3751–K0	LIFTER, VALVE (3.402) LEVE-SOUPAPE (3.402)	16	16				UR UR

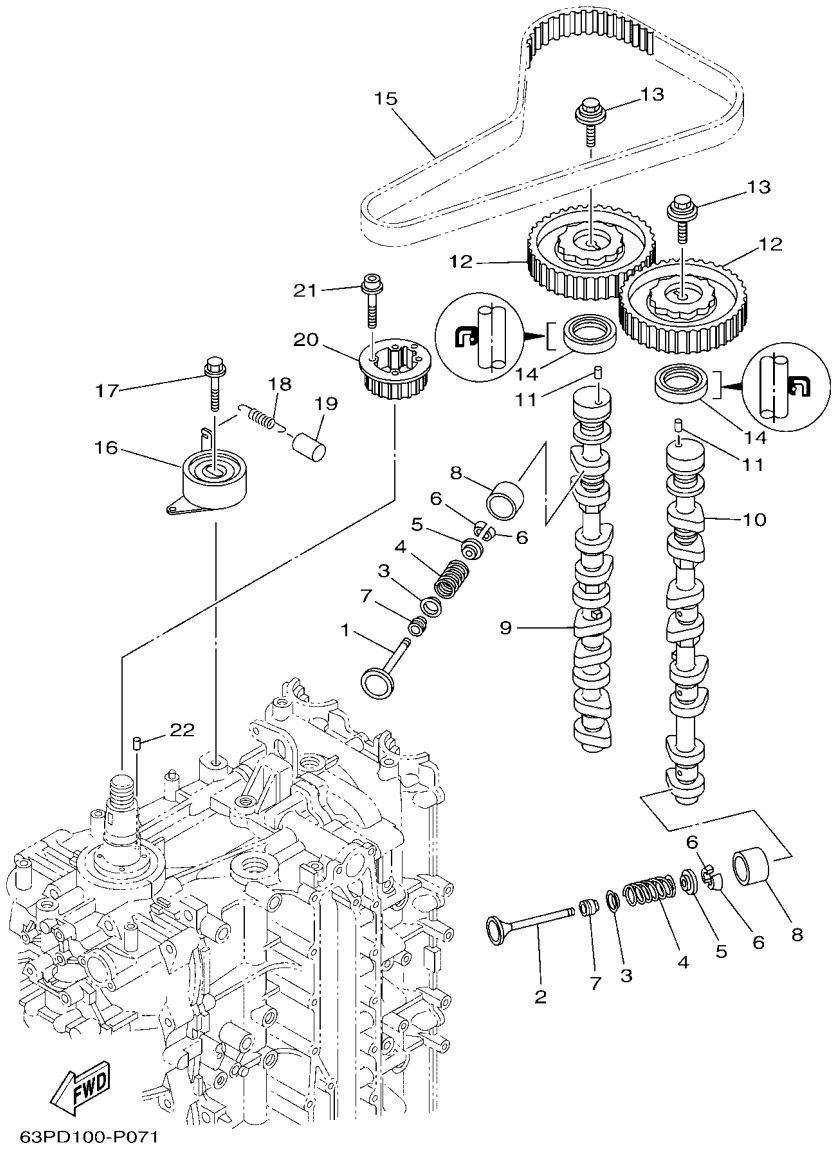

FIG. 7 VALVE SOUPAPE

REF. NO.	PART NO. N° PIECES	DESCRIPTION DESCRIPTION	63PG	64PG				REMARKS REMARQUES
8	K0F–A3751–L0	LIFTER, VALVE (3.422) LEVE-SOUPAPE (3.422)	16	16				UR UR
	K0F–A3751–M0	LIFTER, VALVE (3.442) LEVE-SOUPAPE (3.442)	16	16				UR UR
	K0F–A3751–N0	LIFTER, VALVE (3.462) LEVE-SOUPAPE (3.462)	16	16				UR UR
	K0F–A3751–P0	LIFTER, VALVE (3.482) LEVE-SOUPAPE (3.482)	16	16				UR UR
	K0F–A3751–R0	LIFTER, VALVE (3.502) LEVE-SOUPAPE (3.502)	16	16				UR UR
	K0F–A3751–S0	LIFTER, VALVE (3.522) LEVE-SOUPAPE (3.522)	16	16				UR UR
	K0F–A3751–T0	LIFTER, VALVE (3.542) LEVE-SOUPAPE (3.542)	16	16				UR UR
	K0F–A3753–00	LIFTER, VALVE (3.562) LEVE-SOUPAPE (3.562)	16	16				UR UR
	K0F–A3753–10	LIFTER, VALVE (3.582) LEVE-SOUPAPE (3.582)	16	16				UR UR
	K0F–A3753–20	LIFTER, VALVE (3.602) LEVE-SOUPAPE (3.602)	16	16				UR UR
	K0F–A3753–30	LIFTER, VALVE (3.625) LEVE-SOUPAPE (3.625)	16	16				UR UR
	K0F–A3753–40	LIFTER, VALVE (3.650) LEVE-SOUPAPE (3.650)	16	16				UR UR
	K0F–A3753–50	LIFTER, VALVE (3.675) LEVE-SOUPAPE (3.675)	16	16				UR UR
	K0F–A3753–60	LIFTER, VALVE (3.700) LEVE-SOUPAPE (3.700)	16	16				UR UR
	K0F–A3753–70	LIFTER, VALVE (3.725) LEVE-SOUPAPE (3.725)	16	16				UR UR
9	63P–12171–10	CAMSHAFT 1 ARBRE A CAMES 1	1	1				
10	63P–12181–10	CAMSHAFT 2 ARBRE A CAMES 2	1	1				
11	93605–10108	PIN, DOWEL AXE	2	2				
12	63P–11537–00	GEAR, DRIVEN PIGNON SECONDAIRE	2	2				
13	90119–10050	BOLT, WITH WASHER BOULON, AVEC RONDELLE	2	2				
14	93102–38008	OIL SEAL JOINT SPY	2	2				
15	63P–46241–00	BELT COURROIE TRAPEZOIDALE	1	1				
16	63P–11590–10	TENSIONER ASSY TENDEUR (ENS.)	1	1				
17	90119–10M07	BOLT, WITH WASHER BOULON, AVEC RONDELLE	1	1				
18	90506–16M39	SPRING, TENSION RESSORT, TENSION	1	1				
19	90445–15M03	HOSE (L23) DURITE (L23)	1	1				
20	63P–11536–01	GEAR, DRIVE ENGRENAGE, MENANT	1	1				

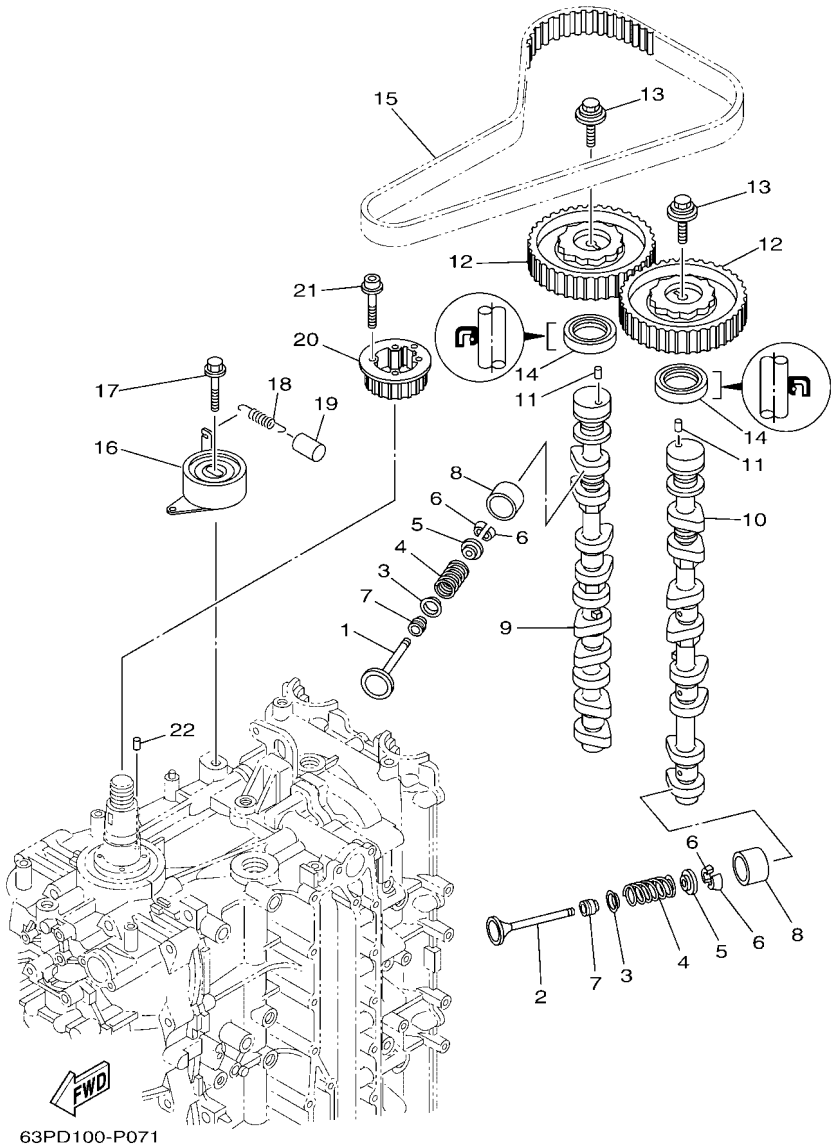

FIG. 7 VALVE SOUPAPE

REF. NO.	PART NO. N° PIECES	DESCRIPTION DESCRIPTION	63PG	64PG				REMARKS REMARQUES
21	90110–05020	BOLT, HEXAGON SOCKET HEAD BOULON, TETE HEXAGONALE CREUSE	4	4				
22	93605–17002	PIN, DOWEL AXE	1	1				

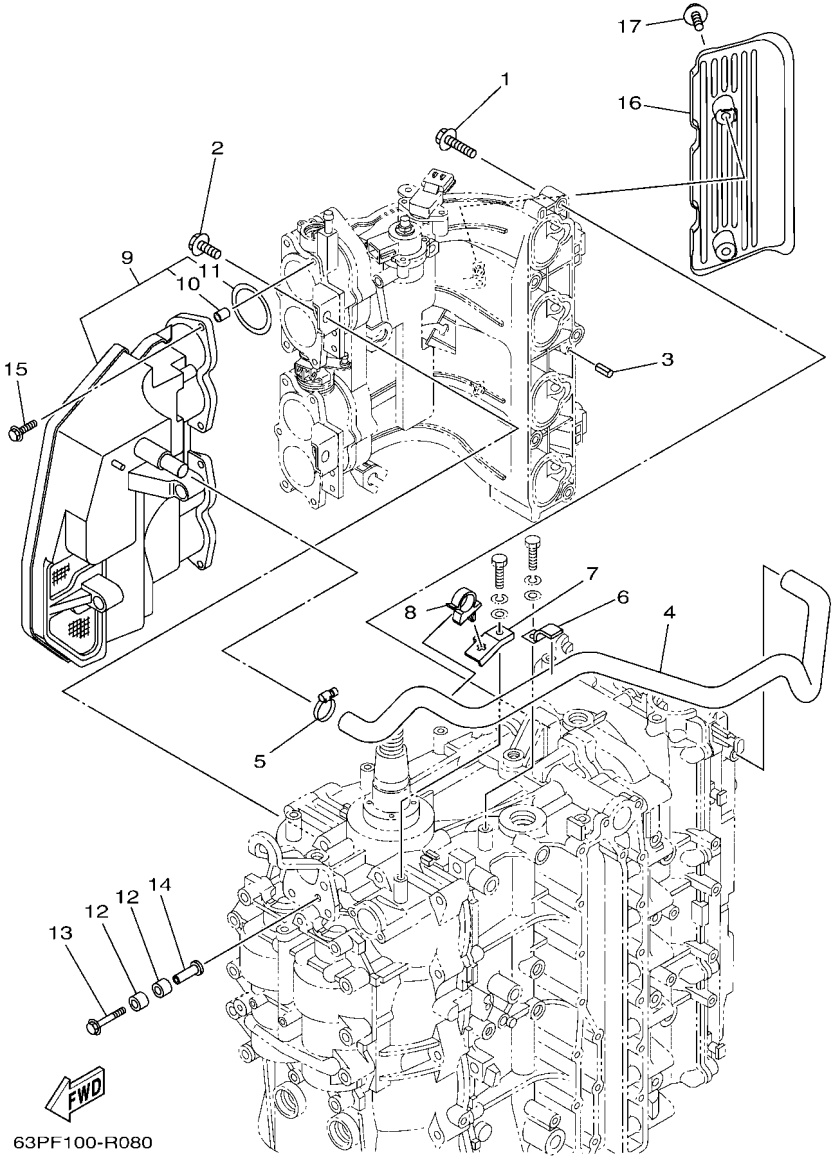

FIG. 8 INTAKE 1 — ADMISSION 1

REF. NO.	PART NO. N° PIECES	DESCRIPTION DESCRIPTION	63PG	64PG				REMARKS REMARQUES
1	97575–08540	BOLT, WITH WASHER VIS HEXAGONAL AVC RONDELLE	5	5				
2	97513–08520	BOLT, WITH WASHER VIS HEXAGONAL AVC RONDELLE	2	2				
3	91690–50014	PIN, SPRING AGRAFFE	2	2				
4	63P–15373–00	PIPE, BREATHER DURITE DE RENIFLARD	1	1				
5	90450–22M14	HOSE CLAMP ASSY BRIDE, DE DURITE	1	1				
6	90462–10023	CLAMP BRIDE	1	1				
7	63P–15378–00	HOLDER SUPPORT	1	1				
8	90464–20006	CLAMP BRIDE	1	1				
9	63P–14440–00	SILENCER ASSY, INTAKE SIENCIEUX D'ADMISSION	1	1				
10	63P–14449–00	.COLLAR .COLLERETTE	6	6				
11	63P–14457–00	.SEAL .JOINT	4	4				
12	90386–08001	BUSH DOUILLE	4	4				
13	90119–06076	BOLT, WITH WASHER BOULON, AVEC RONDELLE	2	2				
14	90387–06280	COLLAR COLLERETTE	2	2				
15	90119–06M82	BOLT, WITH WASHER BOULON, AVEC RONDELLE	6	6				
16	63P–13564–00	COVER, MANIFOLD COUVERCLE, TUBULURE	1	1				
17	95895–06016	BOLT, FLANGE BOULON	2	2				

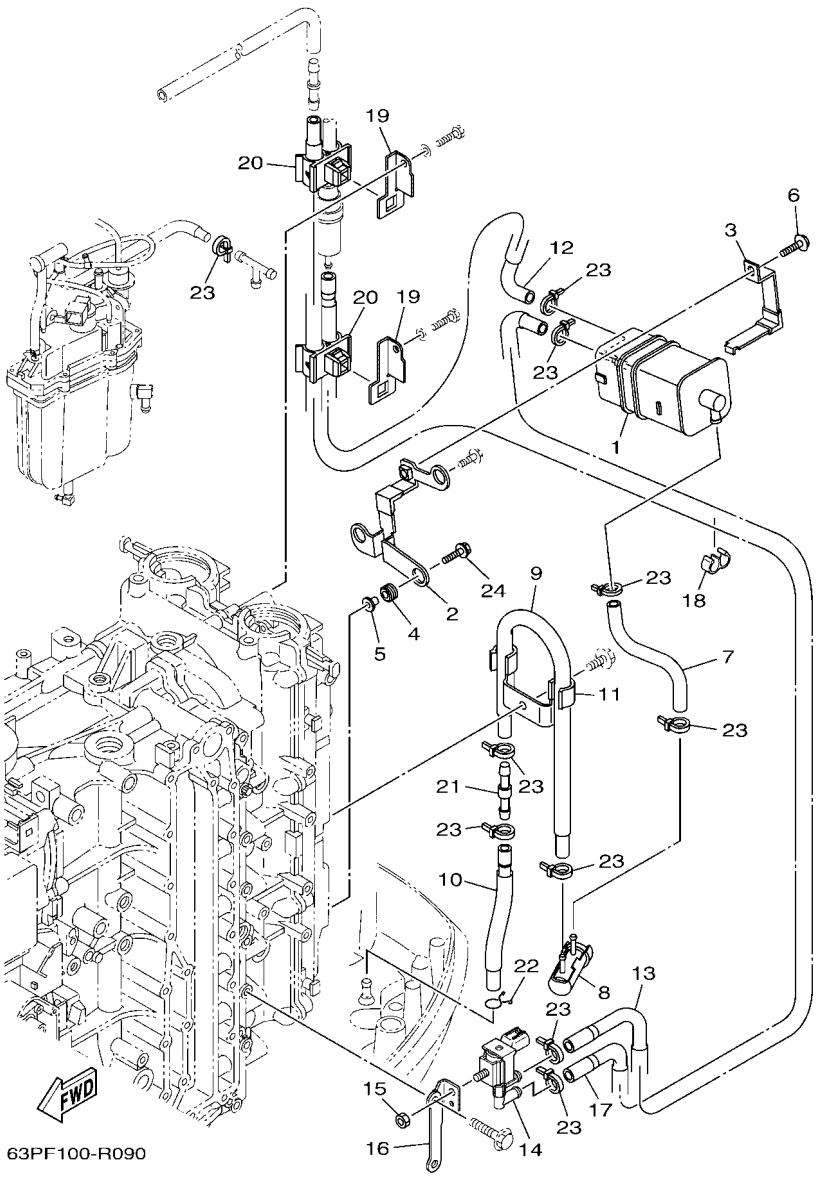

FIG. 9 INTAKE 2 — ADMISSION 2

REF. NO.	PART NO. N° PIECES	DESCRIPTION DESCRIPTION	63PG	64PG				REMARKS REMARQUES
1	6P2–24170–00	CANISTER ASSY BANDE, RASERVOIR A ESSENCE	1	1				
2	63P–2134X–00	BRACKET, CANISTER SUPPORT	1	1				
3	63P–2419A–01	HOLDER SUPPORT	1	1				
4	90480–10M23	GROMMET PASSE-FIL	3	3				
5	90387–06289	COLLAR COLLERETTE	3	3				
6	97595–06516	BOLT, WITH WASHER VIS HEXAGONAL AVC RONDELLE	1	1				
7	64P–24313–00	PIPE 3 DURITE 3	1	1				
8	69J–24502–00	FILTER, FUEL FILTRE	1	1				
9	64P–24312–00	PIPE 2 DURITE 2	1	1				
10	64P–24311–10	PIPE, FUEL 1 DURITE A ESSENCE	1	1				
11	63P–24367–01	CLAMP, FUEL PIPE 2 COLLIER DE DURITE A ESSENCE	1	1				
12	64P–24315–00	PIPE 5 DURITE 5	1	1				
13	64P–24316–10	PIPE 6 DURITE 6	1	1				
14	6C5–86120–00	SOLENOID VALVE ASSY SOLENOIDE	1	1				
15	95380–06600	NUT, HEXAGON ECROU	1	1				
16	63P–81845–20	PLATE PLAQUE	1	1				
17	64P–24314–10	PIPE 4 DURITE 4	1	1				
18	90464–09M31	CLAMP BRIDE	1	1				
19	63P–24364–01	STAY SUPPORT	2	2				
20	90464–11012	CLAMP BRIDE	2	2				
21	6E5–24379–00	PIPE, JOINT 4 DURITE RACCORDEMENT 4	1	1				
22	90467–09M09	CLIP JONC	1	1				
23	90465–11M10	CLAMP BRIDE	10	10				
24	90119–06135	BOLT, WITH WASHER BOULON, AVEC RONDELLE	2	2				

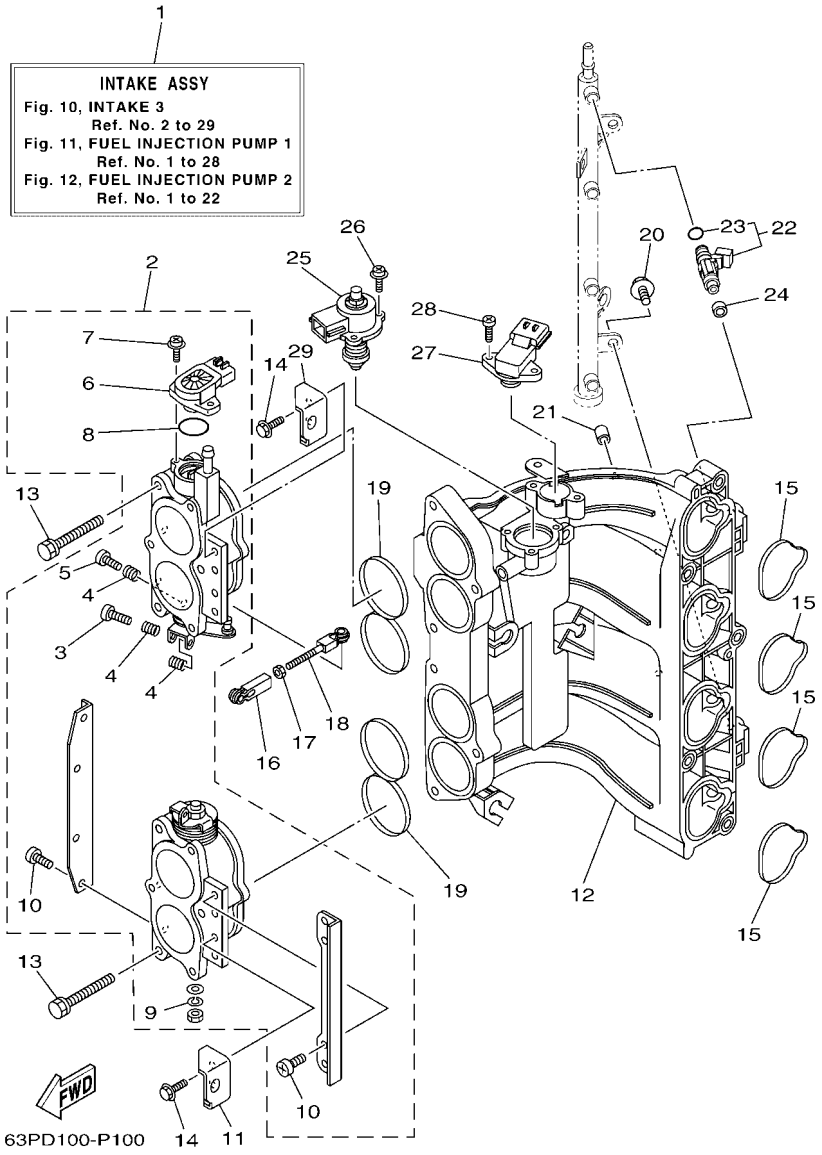

FIG. 10 INTAKE 3 — ADMISSION 3

REF. NO.	PART NO. N° PIECES	DESCRIPTION DESCRIPTION	63PG	64PG				REMARKS REMARQUES
1	63P–14200–80	INTAKE ASSY ADMISSION (ENS.)	1	1				
2	63P–13751–20	BODY, THROTTLE 1 CARTER 1	1	1				
3	69J–14321–00	.SCREW, THROTTLE .VIS, ACCELERATEUR	1	1				
4	68V–14331–00	.SPRING, THROTTLE VALVE .RESSORT, BOISSEAU	3	3				
5	68V–14323–00	.SCREW, AIR ADJUSTING .VIS DE DOSEUR D'AIR	1	1				
6	6S1–85885–00	.THROTTLE SENSOR ASSY .SENSITOMETRE (ENS.)	1	1				
7	68V–81145–01	.SCREW 1 .VIS 1	2	2				
8	68V–8182L–00	.O-RING 1 .JOINT TORIQUE 1	1	1				
9	68V–14356–00	.WASHER, SPRING .RONDELLE	1	1				
10	68V–14565–00	.SCREW .VIS	8	8				
11	63P–14291–00	BRACKET 1 SUPPORT 1	1	1				
12	63P–13641–10	MANIFOLD, INTAKE 1 TUBULURE, ADMISSION 1	1	1				
13	63P–14496–00	BOLT BOULON	6	6				
14	97595–06516	BOLT, WITH WASHER VIS HEXAGONAL AVC RONDELLE	4	4				
15	63P–13645–00	GASKET, MANIFOLD 1 JOINT, TUBULURE 1	4	4				
16	6H4–41237–00	JOINT, LINK RACCORD	1	1				
17	95380–05700	NUT ECROU	1	1				
18	682–41238–01	JOINT, LINK RACCORD	1	1				
19	63P–13557–00	GASKET JOINT	2	2				
20	6P2–14446–00	BOLT BOULON	2	2				
21	63P–13643–00	COVER, MANIFOLD COUVERCLE, TUBULURE	4	4				
22	63P–13761–01	INJECTOR INJECTEUR	4	4				
23	68V–1416A–00	.O-RING .JOINT TORIQUE	1	1				
24	68V–13766–00	RUBBER, INJECTOR RONDELLE CAOUTCHOUC	4	4				
25	63P–1312A–01	VALVE, CONTROL SOUPAPE,CONTROLE	1	1				
26	68V–81146–01	SCREW 2 VIS 2	3	3				
27	63P–82380–00	SENSOR, PRESSURE SONDE DE PRESSION	1	1				

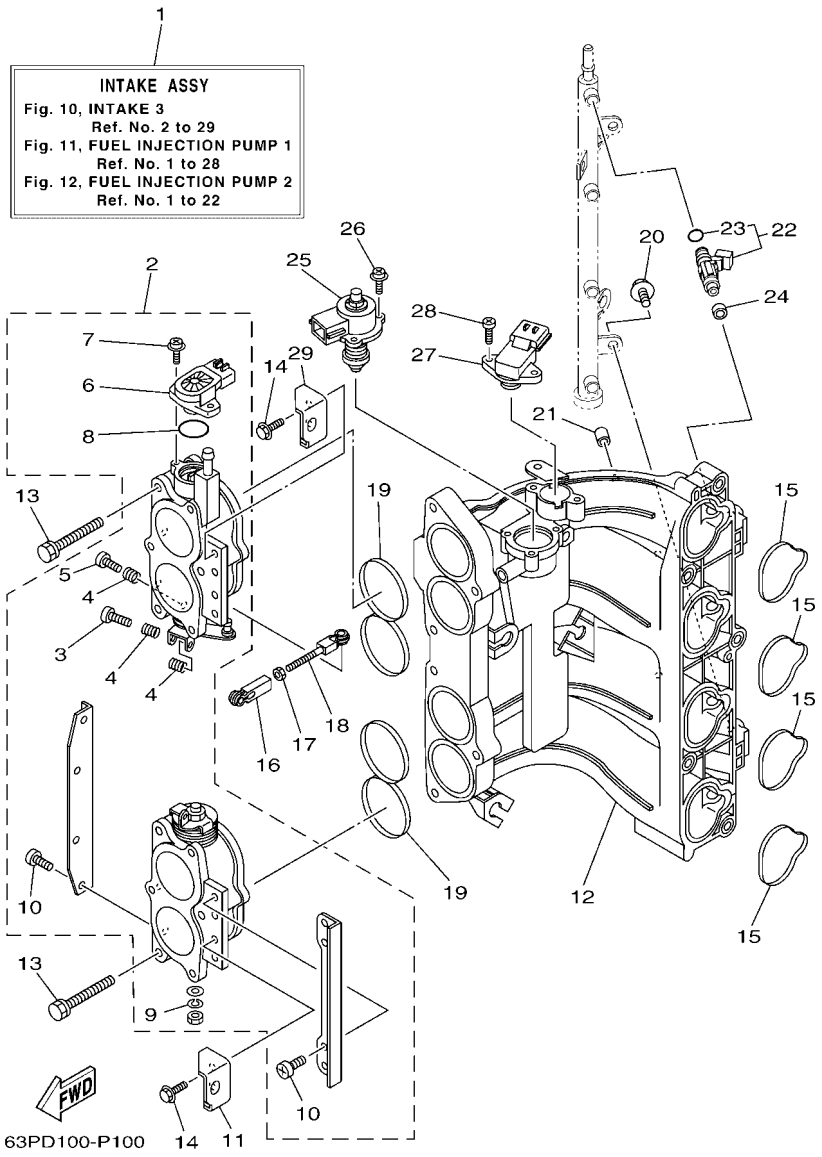

FIG. 10 INTAKE 3 — ADMISSION 3

REF. NO.	PART NO. N° PIECES	DESCRIPTION DESCRIPTION	63PG	64PG				REMARKS REMARQUES
28	68V–81147–00	SCREW 3 VIS 3	2	2				
29	63P–14292–00	BRACKET 2 SUPPORT 2	1	1				

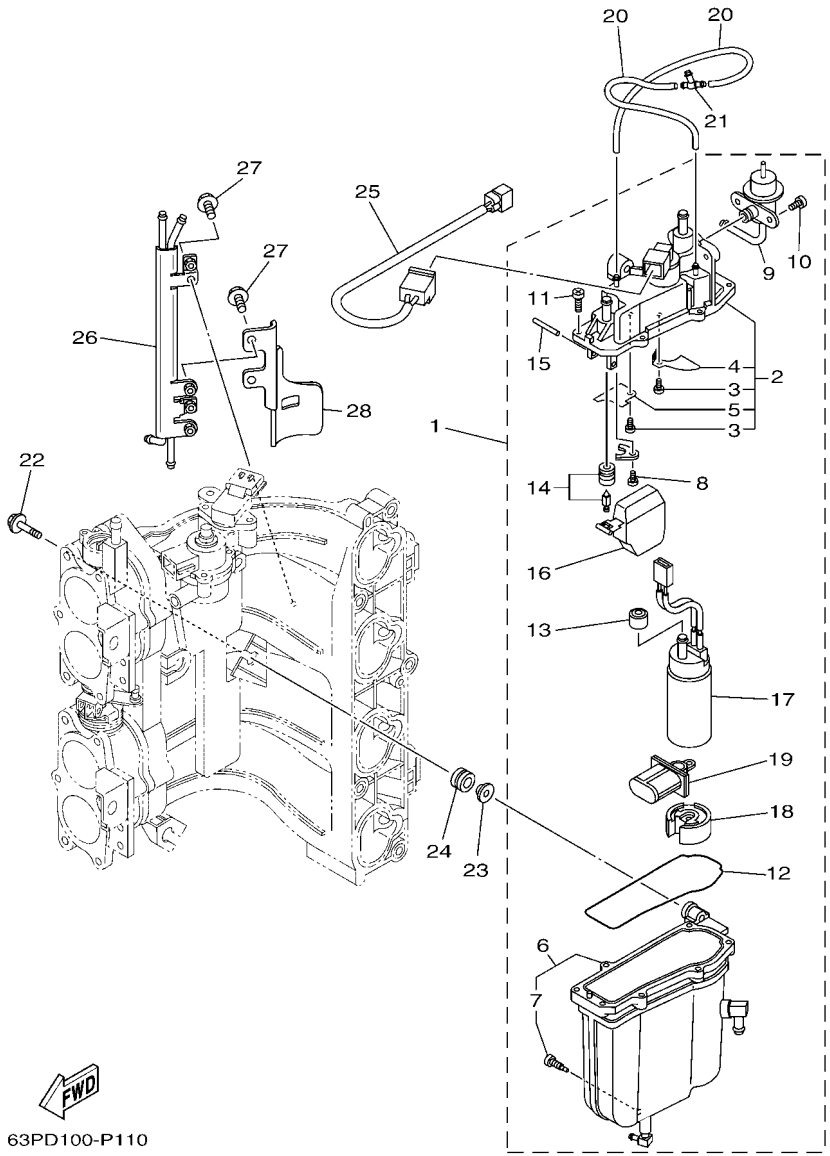

FIG. 11 FUEL INJECTION PUMP 1 POMPE A INJECTEUR 1

REF. NO.	PART NO. N° PIECES	DESCRIPTION DESCRIPTION	63PG	64PG				REMARKS REMARQUES
1	63P–14180–20	FLOAT CHAMBER ASSY CUVE DE FLOTTEUR	1	1				
2	63P–14182–20	.COVER, FLOAT CHAMBER .COUVERCLE, CUVE DE FLOTTEUR	1	1				
3	4SV–24453–00	..SCREW ..VIS	2	2				
4	63P–2411R–00	..PLATE 1 ..PLAQUE 1	1	1				
5	63P–2411T–00	..PLATE 2 ..PLAQUE 2	1	1				
6	63P–14181–20	.BODY, FLOAT CHAMBER 1 .CORPS, CUVE DE FLOTTEUR 1	1	1				
7	63P–14191–00	..PLUG, DRAIN ..PLOT, VIDANGE	1	1				
8	4SV–24453–00	.SCREW .VIS	1	1				
9	63P–13906–00	.REGULATOR, PRESSURE .REGULATEUR DE PRESSION	1	1				
10	63P–14565–00	.SCREW .VIS	1	1				
11	63P–14567–00	.SCREW .VIS	7	7				
12	63P–14984–00	.GASKET, FLOAT CHAMBER .JOINT, CUVE DE FLOTTEUR	1	1				
13	68V–13781–20	.GROMMET & COLLAR SET .PASSE-FIL ET COLLERETTE	1	1				
14	63P–14546–00	.VALVE, NEEDLE .POINTEAU	1	1				
15	68V–14386–00	.PIN, FLOAT .AXE, FLOTTEUR	1	1				
16	63P–14985–00	.FLOAT .FLOTTEUR	1	1				
17	63P–13907–03	.FUEL PUMP COMP. .POMPE A CARBURANT COMP.	1	1				
18	63P–13784–00	.COVER, PUMP .COUVERCLE, POMPE	1	1				
19	63P–13915–00	.FILTER .FILTRE	1	1				
20	63P–14148–00	PIPE DURITE	2	2				
21	69J–24379–00	PIPE, JOINT 4 DURITE RACCORDEMENT 4	1	1				
22	90119–06269	BOLT, WITH WASHER BOULON, AVEC RONDELLE	3	3				
23	63P–13716–00	COLLAR COLLERETTE	3	3				
24	6BM–13593–00	DAMPER AMORTISSEUR	3	3				
25	63P–8259L–00	WIRE HARNESS ASSY 1 FAISCEAU DE FILS COMPLET 1	1	1				
26	63P–21841–10	COOLER RADIATEUR	1	1				
27	63P–13573–00	BOLT 1 BOULON 1	3	3				

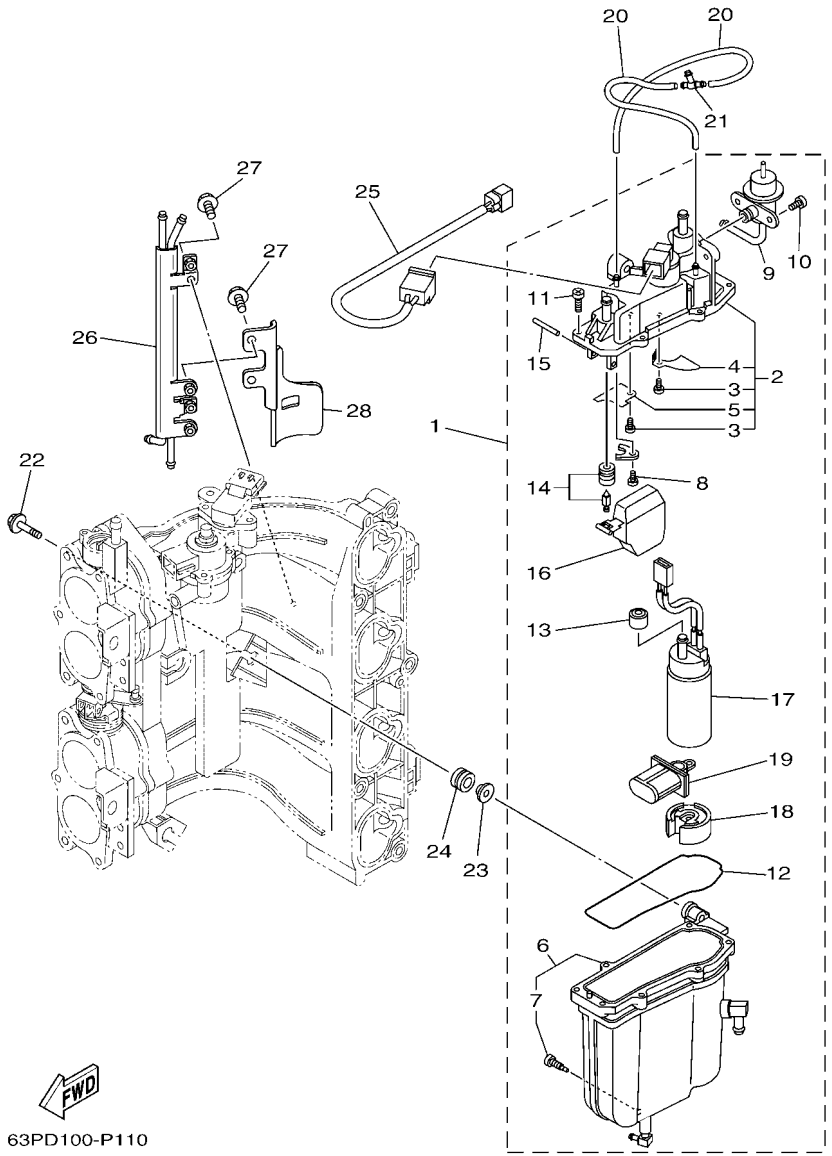

FIG. 11 FUEL INJECTION PUMP 1 — POMPE A INJECTEUR 1

REF. NO.	PART NO. N° PIECES	DESCRIPTION DESCRIPTION	63PG	64PG				REMARKS REMARQUES
28	63P–13882–00	COVER 2 COUVERCLE 2	1	1				

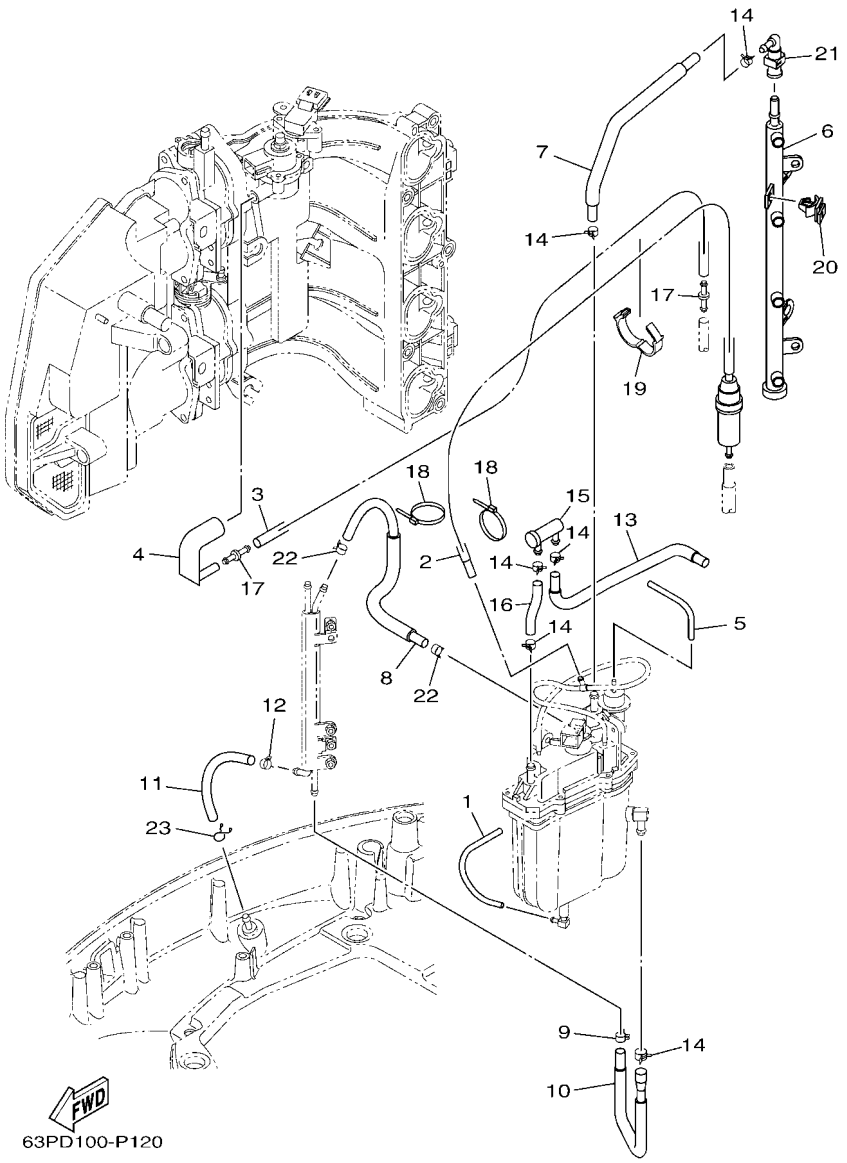

FIG. 12 FUEL INJECTION PUMP 2 — POMPE A INJECTEUR 2

REF. NO.	PART NO. N° PIECES	DESCRIPTION DESCRIPTION	63PG	64PG				REMARKS REMARQUES
1	63P–14149–00	PIPE DURITE	1	1				
2	63P–13971–10	PIPE, FUEL 1 TUBE 1, CARBURANT	1	1				WITH FILTER WITH FILTER
3	63P–13546–00	HOSE 2 DURITE 2	1	1				
4	63P–13545–00	HOSE 1 DURITE 1	1	1				
5	63P–13532–10	HOSE, VACUUM SENSING 3 DURITE 3	1	1				
6	63P–13160–10	DELIVERY PIPE ASSY 1 ENS. TUBE DE REFOULEMENT 1	1	1				
7	63P–13974–40	PIPE, FUEL 4 TUBE 4, CARBURANT	1	1				
8	63P–13976–50	PIPE, FUEL 6 TUBE 6, CARBURANT	1	1				
9	68V–2411M–00	CLIP JONC	1	1				
10	63P–24317–40	PIPE 7 DURITE 7	1	1				
11	63P–2247B–10	HOSE 2 DURITE 2	1	1				
12	68V–24519–00	CLIP JONC	1	1				
13	63P–24325–50	PIPE 14 DURITE 14	1	1				
14	68V–13577–00	CLIP AGRAFE	6	6				
15	69J–24501–10	FILTER, FUEL FILTRE	1	1				
16	63P–13975–50	PIPE, FUEL 5 TUBE 5, CARBURANT	1	1				
17	6P2–13758–00	PIPE, JOINT DURITE	2	2				
18	68V–2481H–00	CLAMP BRIDE	2	2				
19	90464–26001	CLAMP BRIDE	1	1				
20	90464–12002	CLAMP BRIDE	1	1				
21	6AW–24300–00	FUEL PIPE JOINT DURITE RACCORDEMT. A ESSENCE	1	1				
22	63P–24519–00	CLIP JONC	2	2				
23	90467–09M09	CLIP JONC	1	1				

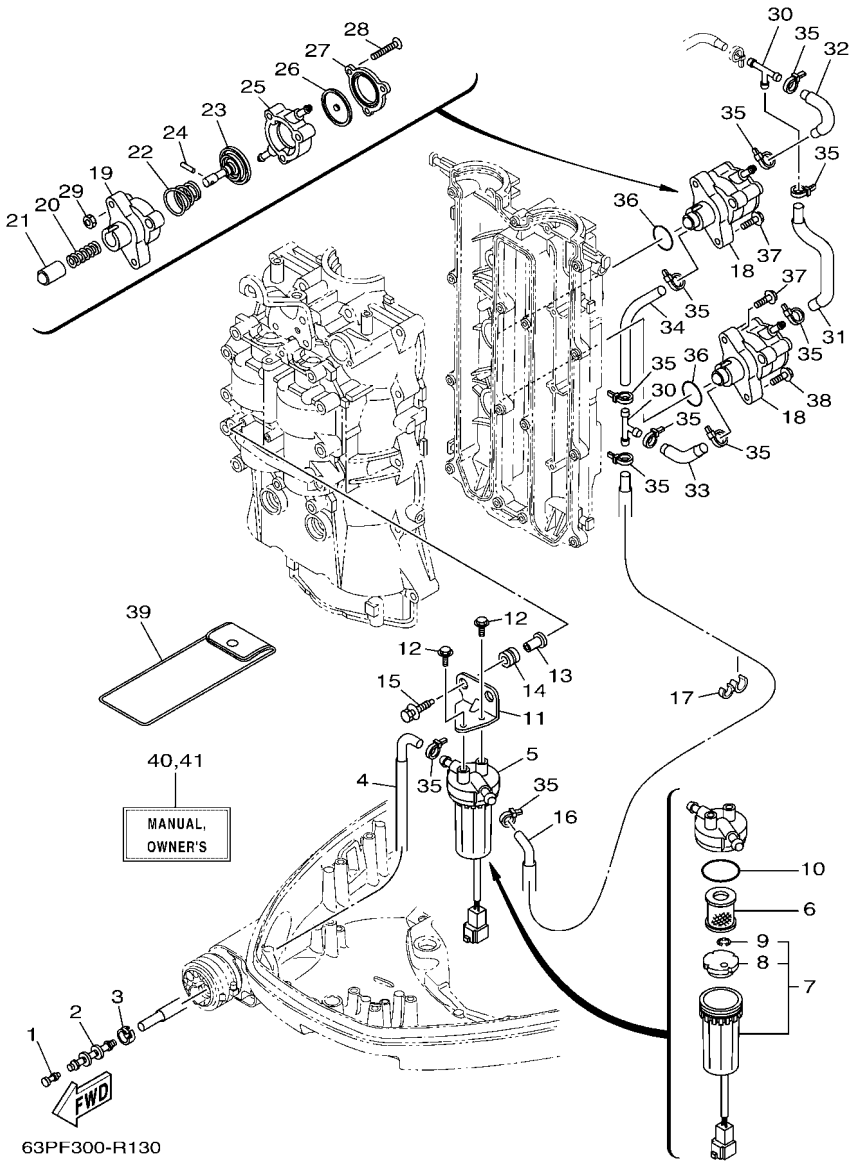

FIG. 13 FUEL 1 — CARBURANT 1

REF. NO.	PART NO. N° PIECES	DESCRIPTION DESCRIPTION	63PG	64PG				REMARKS REMARQUES
1	689–85547–00	DAMPER AMORTISSEUR	1	1				
2	6AW–24377–01	PIPE, JOINT 2 DURITE RACCORDEMENT 2	1	1				
3	6E5–24351–51	BAND 1 COLLIER 1	1	1				
4	63P–24316–40	PIPE 6 DURITE 6	1	1				
5	6P3–24560–03	FILTER ASSY ENS FILTRE	1	1				
6	6P3–24563–01	.ELEMENT, FILTER .ELEMENT, FILTRE	1	1				
7	6P3–24562–03	.CUP, FILTER .CUVETTE, FILTRE	1	1				
8	6P3–24469–00	..FLOAT, WATER LEVEL ..FLOTTEUR	1	1				
9	6P3–24519–00	..CLIP ..JONC	1	1				
10	6P3–24564–00	.GASKET .JOINT	1	1				
11	63P–24566–00	BRACKET, FILTER SUPPORT, FILTRE	1	1				
12	97595–06514	BOLT, WITH WASHER VIS HEXAGONAL AVC RONDELLE	2	2				
13	90387–06289	COLLAR COLLERETTE	2	2				
14	90480–10M23	GROMMET PASSE-FIL	2	2				
15	90119–06071	BOLT, WITH WASHER BOULON, AVEC RONDELLE	2	2				
16	63P–24311–20	PIPE, FUEL 1 DURITE A ESSENCE	1	1				
17	90464–13M34	CLAMP BRIDE	1	1				
18	63P–24410–20	FUEL PUMP ASSY POMPE A ESSENCE	2	2				
19	68V–24412–00	.BODY 1 .CORPS 1	1	1				
20	68V–24454–00	.SPRING .RESSORT	1	1				
21	63P–13131–00	.PLUNGER .PLONGEUR	1	1				
22	63P–24423–00	.SPRING, DIAPHRAGM .RESSORT, DIAPHRAGME	1	1				
23	68V–24411–00	.DIAPHRAGM .DIAPHRAGME	1	1				
24	68V–24374–00	.PIN .GOUPILLE	1	1				
25	63P–24413–00	.BODY 2 .CORPS 2	1	1				
26	68V–24471–10	.DIAPHRAGM .DIAPHRAGME	1	1				
27	63P–24414–00	.BODY 3 .CORPS 3	1	1				

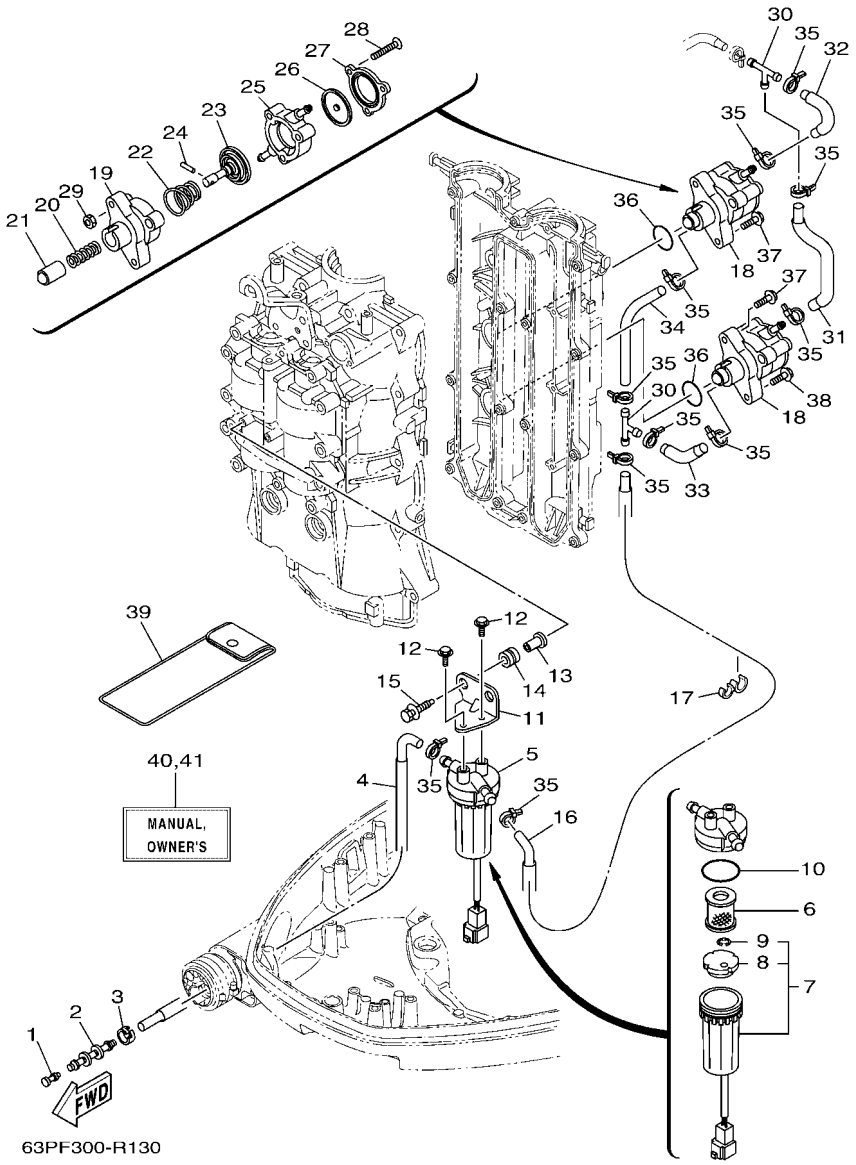

FIG. 13 FUEL 1 — CARBURANT 1

REF. NO.	PART NO. N° PIECES	DESCRIPTION DESCRIPTION	63PG	64PG				REMARKS REMARQUES
28	68V–24444–00	.SCREW .VIS	3	3				
29	68V–24149–00	.NUT .ECROU	3	3				
30	6E5–24378–00	PIPE, JOINT 3 DURITE, RACCORDEMENT 3	2	2				
31	63P–24314–10	PIPE 4 DURITE 4	1	1				
32	63P–24315–10	PIPE 5 DURITE 5	1	1				
33	63P–24312–20	PIPE 2 DURITE 2	1	1				
34	63P–24313–20	PIPE 3 DURITE 3	1	1				
35	90465–11M10	CLAMP BRIDE	11	11				
36	93210–30682	O-RING JOINT TORIQUE	2	2				
37	90119–06M83	BOLT, WITH WASHER BOULON, AVEC RONDELLE	3	3				
38	90119–06135	BOLT, WITH WASHER BOULON, AVEC RONDELLE	1	1				
39	67F–28100–01	TOOL KIT TROUSSE A OUTILS	1	1				AP AP
40	63P–28199–7K–E0	MANUAL,OWNER'S MANUEL D'UTILISATION	1	1				UR (E) UR (E)
	63P–28199–7K–F0	MANUAL,OWNER'S MANUEL D'UTILISATION	1	1				UR (F) UR (F)
	63P–28199–7K–S0	MANUAL,OWNER'S MANUEL D'UTILISATION	1	1				UR (ES) UR (ES)
	63P–28199–7K–G0	MANUAL,OWNER'S MANUEL D'UTILISATION	1	1				UR (D) UR (D)
	63P–28199–7K–D0	MANUAL,OWNER'S MANUEL D'UTILISATION	1	1				UR (NL) UR (NL)
	63P–28199–7K–H0	MANUAL,OWNER'S MANUEL D'UTILISATION	1	1				UR (I) UR (I)
41	63P–28199–8K–K0	MANUAL,OWNER'S MANUEL D'UTILISATION	1	1				UR (DK) UR (DK)
	63P–28199–8K–R0	MANUAL,OWNER'S MANUEL D'UTILISATION	1	1				UR (GR) UR (GR)
	63P–28199–8K–P0	MANUAL,OWNER'S MANUEL D'UTILISATION	1	1				UR (P) UR (P)
	63P–28199–8K–N0	MANUAL,OWNER'S MANUEL D'UTILISATION	1	1				UR (N) UR (N)
	63P–28199–8K–M0	MANUAL,OWNER'S MANUEL D'UTILISATION	1	1				UR (S) UR (S)
	63P–28199–8K–L0	MANUAL,OWNER'S MANUEL D'UTILISATION	1	1				UR (SF) UR (SF)

FIG. 14 FUEL 2 — CARBURANT 2

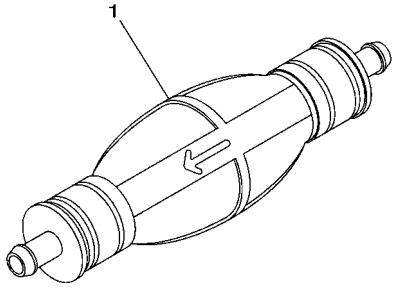

68VC100-L120

REF. NO.	PART NO. N° PIECES	DESCRIPTION DESCRIPTION	63PG	64PG				REMARKS REMARQUES
1	6YK–24360–73	PRIMER PUMP ASSY POMPE D'AMORCAGE	1	1				AP AP

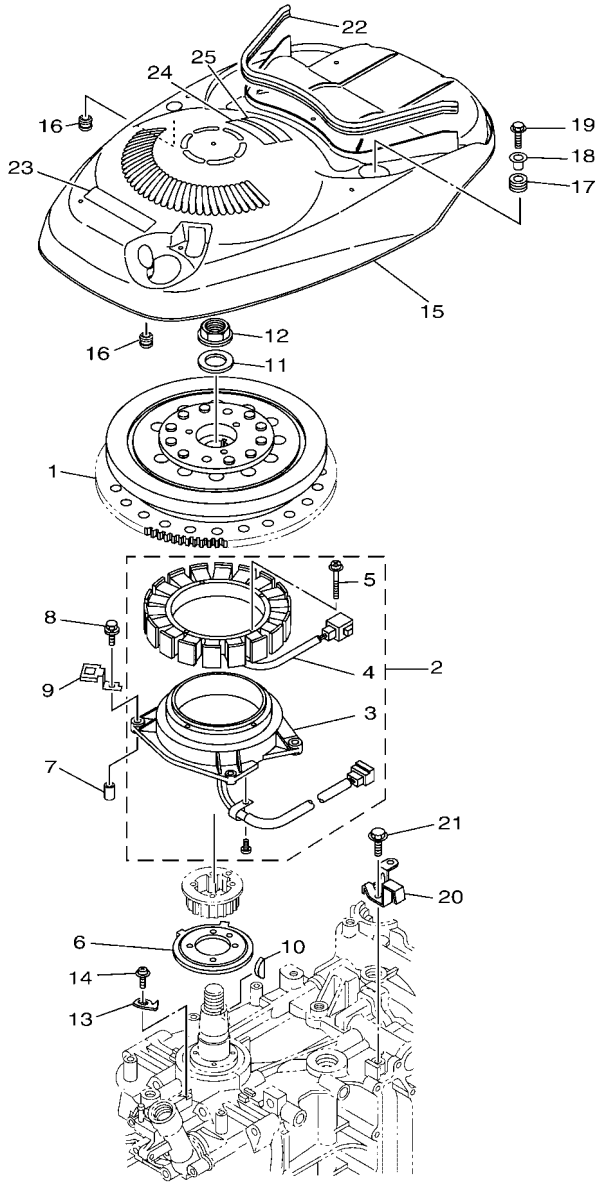

63PF100-R150

FIG. 15 GENERATOR — GENERATRICE

REF. NO.	PART NO. N° PIECES	DESCRIPTION DESCRIPTION	63PG	64PG				REMARKS REMARQUES
1	63P–81450–00	ROTOR ASSY ROTOR COMPLET	1	1				
2	63P–81460–00	BASE ASSY ENS. FLASQUE	1	1				
3	63P–85580–00	.COIL, PULSER .BOBINE, PULSEUR	1	1				
4	63P–81410–00	.STATOR ASSY .STATOR COMPLET	1	1				
5	63D–81345–20	.SCREW, WITH WASHER (M6X30) .VIS, AVEC RONDELLE (M6X30)	4	4				
6	63P–81673–01	ROTOR ROTOR	1	1				
7	99530–08012	PIN, DOWEL GOUJON, D'ASSEMBLAGE	2	2				
8	97595–06635	BOLT, WITH WASHER VIS HEXAGONAL AVC RONDELLE	4	4				
9	63P–81845–00	PLATE PLAQUE	2	2				
10	90280–05015	KEY, WOODRUFF CLAVETTE, DEMI-LUNE	1	1				
11	90201–24014	WASHER, PLATE RONDELLE, PLATE	1	1				
12	90179–24002	NUT ECROU	1	1				
13	6P2–81332–00	PLATE, TIMING PLATEAU, ALLUMAGE	1	1				
14	97985–06210	SCREW, WITH WASHER VIS, AVEC RONDELLE	1	1				
15	63P–81337–10	COVER, FLYWHEEL COUVERCLE, VOLANT	1	1				
16	6A0–82317–00	DAMPER, IGNITION COIL AMORTISSEUR, BOBINE D'ALLUM	2	2				
17	90480–15M31	GROMMET PASSE-FIL	1	1				
18	90387–06285	COLLAR COLLERETTE	1	1				
19	95895–06020	BOLT, FLANGE BOULON	1	1				
20	63P–8132G–10	PLATE PLAQUE	1	1				
21	97595–06516	BOLT, WITH WASHER VIS HEXAGONAL AVC RONDELLE	1	1				
22	6DA–42617–00	DAMPER, FORM BOURRELET, CAOUTCHOUC	1	1				
23	63P–13437–63	MARK, CAUTION MAKER	1	1				
24	6EE–81994–40	LABEL, SAFETY ETIQUETTE, SECURITE	1	1				
25	6EE–81994–50	LABEL, SAFETY ETIQUETTE, SECURITE	1	1				

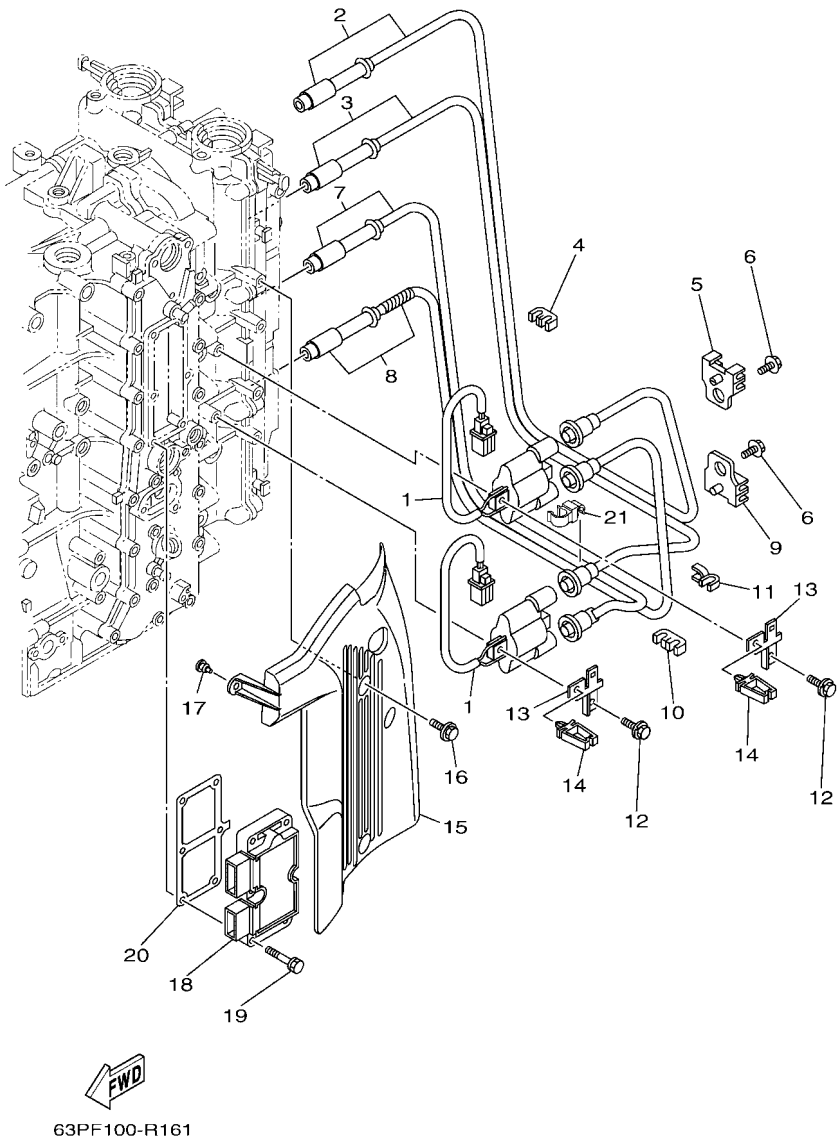

FIG. 16 ELECTRICAL 1 — PARTIE ELECTRIQUE 1

REF. NO.	PART NO. N° PIECES	DESCRIPTION DESCRIPTION	63PG	64PG				REMARKS REMARQUES
1	63P–82310–01	IGNITION COIL ASSY BOBINE D'ALLUMAGE	2	2				
2	63P–W823A–00	CORD, HIGH TENSION 1 CORDON, HAUTE-TENSION 1	1	1				
3	63P–W823B–00	CORD, HIGH TENSION 2 CORDON, HAUTE-TENSION 2	1	1				
4	67F–82361–00	CLAMP, CORD COLLIER, CORDON	1	1				
5	67F–82362–00	CLAMP, CORD 2 COLLIER, CABLE 2	1	1				
6	90119–06M09	BOLT, WITH WASHER BOULON, AVEC RONDELLE	2	2				
7	63P–W823C–00	CORD, HIGH TENSION 3 CORDON, HAUTE-TENSION 3	1	1				
8	63P–W823D–00	CORD, HIGH TENSION 4 CORDON, HAUTE TENSION 4	1	1				
9	67F–82362–00	CLAMP, CORD 2 COLLIER, CABLE 2	1	1				
10	67F–82361–00	CLAMP, CORD COLLIER, CORDON	1	1				
11	90464–07M41	CLAMP BRIDE	1	1				
12	97595–06625	BOLT, WITH WASHER VIS HEXAGONAL AVC RONDELLE	4	4				
13	63P–82388–00	PLATE PLAQUETTE	2	2				
14	90464–05141	CLAMP BRIDE	2	2				
15	63P–82314–00	COVER, IGNITION COIL COUVERCLE, BOBINE D'ALLUMAGE	1	1				
16	95895–06020	BOLT, FLANGE BOULON	2	2				
17	90480–06M19	GROMMET PASSE-FIL	1	1				
18	63P–81960–02	RECTIFIER & REGULATOR ASSY REDRESSEUR REGULATEUR CPLT	1	1				
19	90119–06MA4	BOLT, WITH WASHER BOULON, AVEC RONDELLE	6	6				
20	63P–81975–00	PLATE, RECTIFIER FITTING PLAQUE, FIXATION DU REDRESSEUR	1	1				
21	90464–12017	CLAMP BRIDE	1	1				

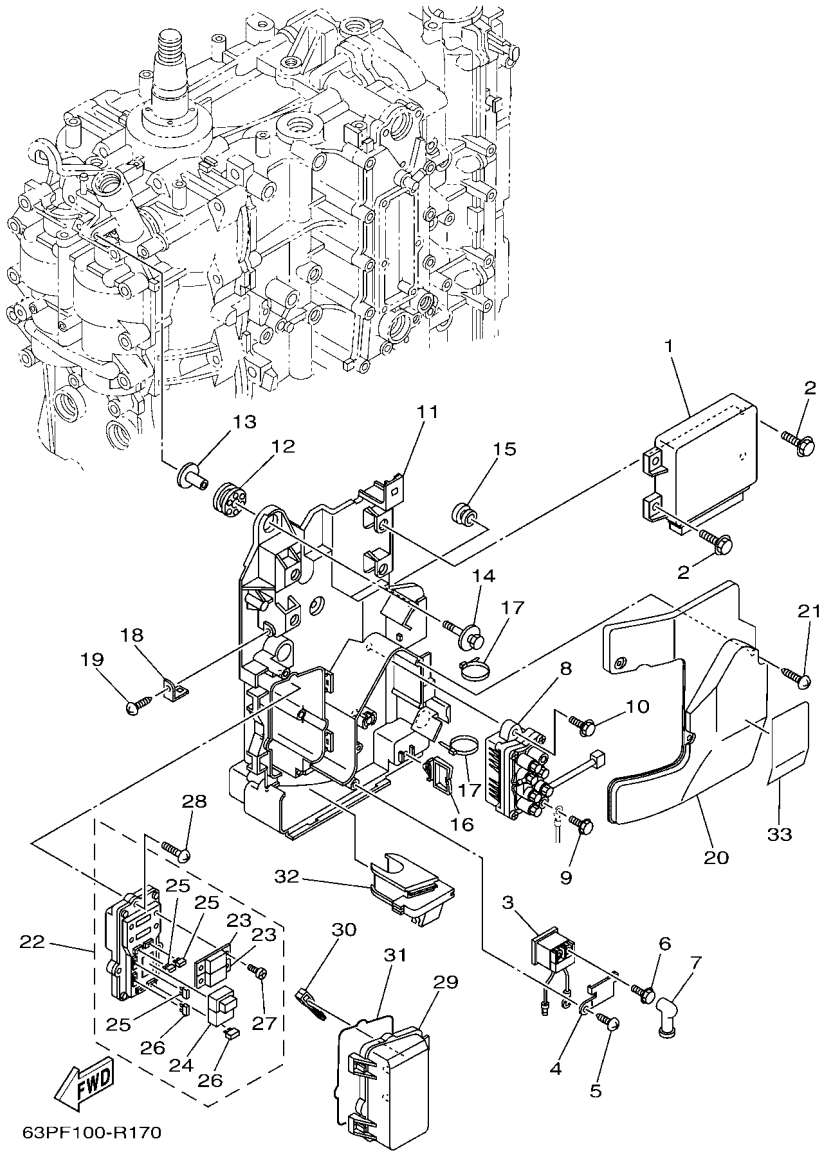

FIG. 17 ELECTRICAL 2 — PARTIE ELECTRIQUE 2

REF. NO.	PART NO. N° PIECES	DESCRIPTION DESCRIPTION	63PG	64PG				REMARKS REMARQUES
1	63P–8591A–38	ENGINE CONTROL UNIT ASSY BLOC DE CONTROL	1	1				
2	97595–06516	BOLT, WITH WASHER VIS HEXAGONAL AVC RONDELLE	4	4				
3	68V–8194A–00	RELAY RELAIS	1	1				
4	68V–81953–00	STAY, RELAY SUPPORT, RELAIS	1	1				
5	97780–60620	SCREW, TAPPING VIS, TETE BOMBEE	1	1				
6	97595–06610	BOLT, WITH WASHER VIS HEXAGONAL AVC RONDELLE	2	2				
7	6G5–82119–00	COVER, LEAD WIRE GARNITURE, FIL	2	2				
8	63P–81950–00	RELAY ASSY RELAIS COMPLET	1	1				
9	97595–06610	BOLT, WITH WASHER VIS HEXAGONAL AVC RONDELLE	2	2				
10	97513–06520	BOLT, WITH WASHER VIS HEXAGONAL AVC RONDELLE	2	2				
11	63P–81948–00	BRACKET SUPPORT	1	1				
12	68F–85516–01	SPACER ENTRETOISE	3	3				
13	90387–06176	COLLAR COLLERETTE	3	3				
14	68F–85119–00	BOLT BOULON	3	3				
15	90480–10627	GROMMET PASSE-FIL	1	1				
16	90464–23199	CLAMP BRIDE	1	1				
17	90465–13M18	CLAMP BRIDE	3	3				
18	68V–85548–01	HOLDER SUPPORT	1	1				
19	97780–60620	SCREW, TAPPING VIS, TETE BOMBEE	1	1				
20	63P–81942–00	COVER COUVERCLE	1	1				
21	90169–05M00	SCREW, TRUSS HEAD TAPPING VIS, TETE FRAISEE	3	3				
22	63P–82170–02	FUSE BOX ASSY BOITE A FUSIBLES	1	1				
23	63P–82151–00	.FUSE (50A) .FUSIBLE (50A)	2	2				
24	6AW–8195A–00	.RELAY ASSY .RELAIS COMPLET	1	1				
25	67F–82151–00	.FUSE (20A) .FUSIBLE (20A)	3	3				
26	67F–82151–10	.FUSE (30A) .FUSIBLE (30A)	2	2				
27	68F–82846–00	.SCREW, PAN HEAD (M5) .VIS, TETE TRONCONIQUE (M5)	4	4				

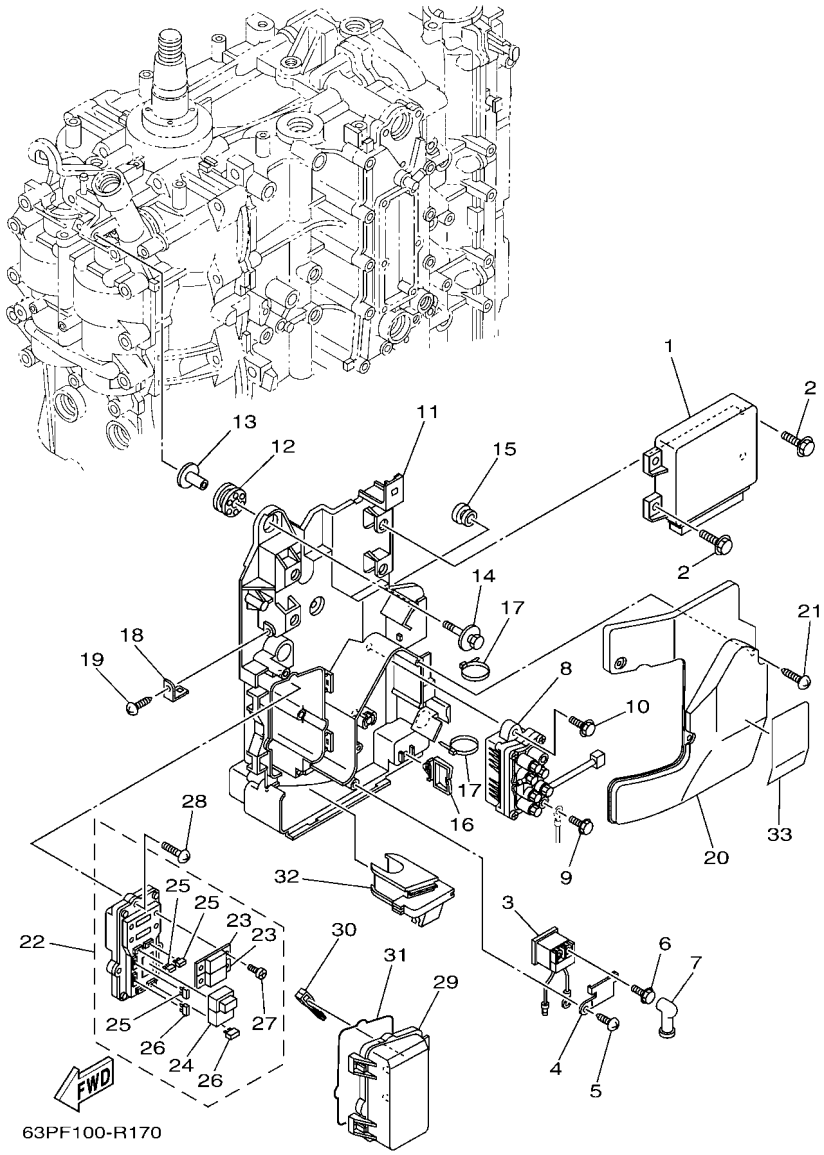

FIG. 17 ELECTRICAL 2 — PARTIE ELECTRIQUE 2

REF. NO.	PART NO. N° PIECES	DESCRIPTION DESCRIPTION	63PG	64PG				REMARKS REMARQUES
28	97780–50620	SCREW, TAPPING VIS, TETE BOMBEE	3	3				
29	60V–85544–00	CASE BOITIER	1	1				
30	67F–2812A–00	PULLER, FUSE TENDEUR, FUSIBLE	1	1				
31	68F–82176–00	DAMPER AMORTISSEUR	1	1				
32	63P–81336–00	GROMMET OEILLET CAOUTCHOUC	1	1				
33	63P–81919–00	GRAPHIC, REGULATOR ADHESIF, REGULATEUR	1	1				

FIG. 18 ELECTRICAL 3 — PARTIE ELECTRIQUE 3

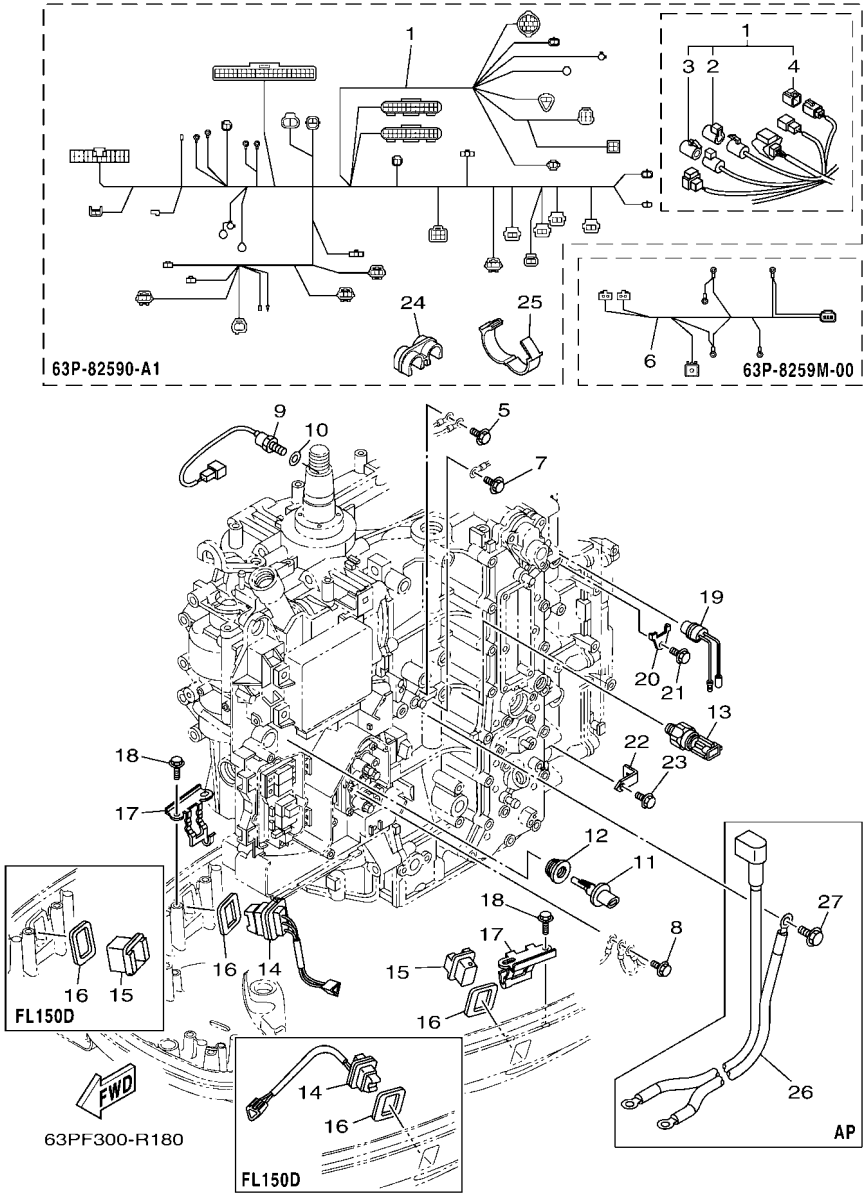

REF. NO.	PART NO. N° PIECES	DESCRIPTION DESCRIPTION	63PG	64PG				REMARKS REMARQUES
1	63P–82590–A1	WIRE HARNESS ASSY FAISCEAU DE FILS COMPLET	1	1				FOR TILT LIMIT FOR TILT LIMIT
2	6DA–82582–00	.CAP 1 (FEMALE) .BOUCHON 1 (FEMME)	1	1				
3	6DA–82582–10	.CAP 1 (MALE) .BOUCHON 1 (MALE)	1	1				
4	6Y8–82582–11	.CAP 1 (4PIN) .COUVERCLE, FAISCEAU DE FILS	1	1				
5	97595–06516	BOLT, WITH WASHER VIS HEXAGONAL AVC RONDELLE	1	1				
6	63P–8259M–00	WIRE HARNESS ASSY 2 FAISCEAU DE FILS	1	1				
7	97595–06516	BOLT, WITH WASHER VIS HEXAGONAL AVC RONDELLE	1	1				
8	97595–06512	BOLT, WITH WASHER VIS HEXAGONAL AVC RONDELLE	1	1				
9	61A–85790–00	THERMOSENSOR ASSY SENSITOMETRE	1	1				
10	92990–10600	WASHER, PLATE RONDELLE, PLATE	1	1				
11	63P–85886–00	SENSOR, AIR TEMPERATURE SONDE	1	1				
12	63P–14435–00	GROMMET RONDELLE CAOUTCHOUC	1	1				
13	6AW–83651–00	SENDER, OIL PRESSURE RACCORD, PRESSION D'HUILE	1	1				
14	69J–82563–01	TRIM & TILT SWITCH ASSY INCLINER ET PARER COMMUTATEUR	1	1				
15	69J–42723–01	COVER, BOTTOM COUVERCLE	1	1				
16	69J–82587–00	GASKET JOINT	2	2				
17	63P–83614–01	BRACKET SUPPORT	2	2				
18	90109–06M86	BOLT BOULON	4	4				
19	6P2–82560–01	THERMO SWITCH ASSY THERMO-CONTACT COMPLET	1	1				
20	6E9–82588–00	PLATE PLAQUE	1	1				
21	90109–06M80	BOLT BOULON	1	1				
22	63P–8366P–01	BRACKET 4 SUPPORT 4	1	1				
23	97595–06512	BOLT, WITH WASHER VIS HEXAGONAL AVC RONDELLE	1	1				
24	90464–12224	CLAMP BRIDE	1	1				
25	90464–26001	CLAMP BRIDE	1	1				
26	6DA–82105–01	BATTERY CABLE CABLE DE BATTERIE	1	1				AP AP
27	97595–08516	BOLT, WITH WASHER VIS HEXAGONAL AVC RONDELLE	1	1				AP AP

FIG. 19 STARTING MOTOR — DEMARREUR ELECTRIQUE

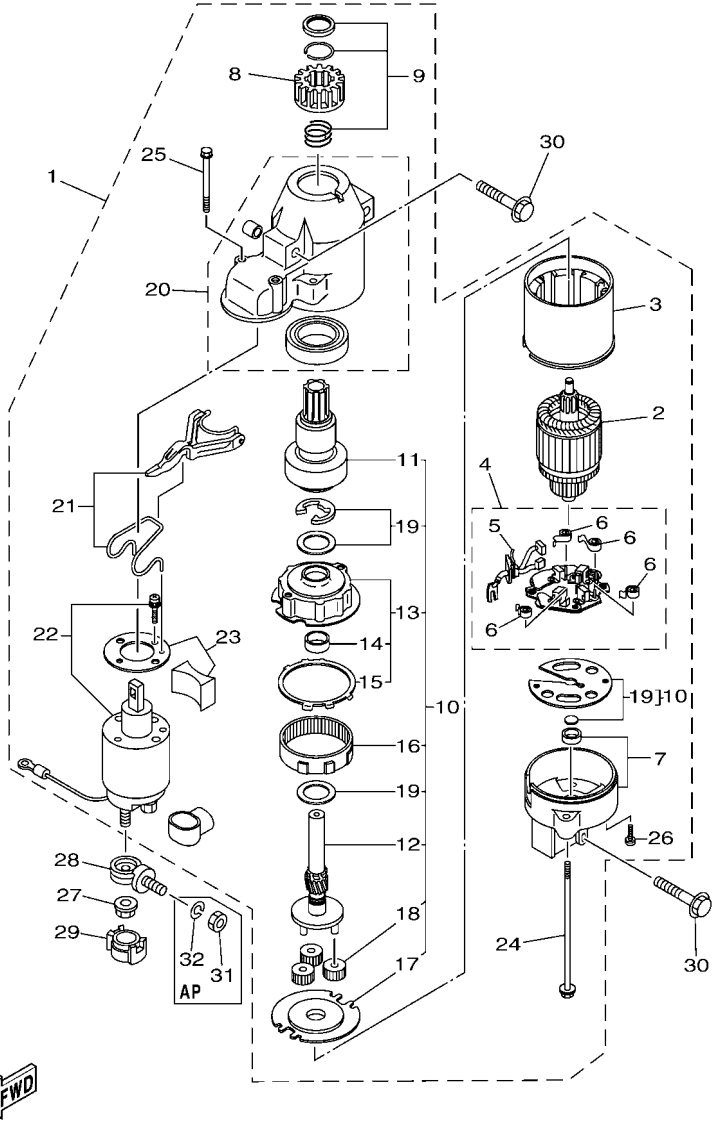

63PF100-R190

REF. NO.	PART NO. N° PIECES	DESCRIPTION DESCRIPTION	63PG	64PG				REMARKS REMARQUES
1	6BR–81800–01	STARTING MOTOR ASSY DEMARREUR ELECTRIQUE COMPLET	1	1				
2	67F–81850–00	.ARMATURE ASSY .INDUIT	1	1				
3	67F–81810–00	.STATOR ASSY .STATOR COMPLET	1	1				
4	69J–81840–00	.BRUSH HOLDER ASSY .SUPPORT DE CHARBON	1	1				
5	69J–81801–00	..BRUSH SET ..CHARBON	1	1				
6	67F–81813–00	..SPRING, BRUSH ..RESSORT, DE CHARBON	4	4				
7	67F–81820–00	.REAR BRACKET ASSY .SUPPORT ARRIERE COMPLET	1	1				
8	67F–81808–00	.PINION ASSY .PIGNON	1	1				
9	67F–81857–00	.PINION STOPPER SET .BUTEE PIGNON	1	1				
10	67F–81807–00	.GEAR ASSY, STARTING MOTOR .PIGNON, DEMARREUR ELECTRIQUE	1	1				
11	67F–81832–00	..CLUTCH, OVER RUN ..EMBRAYAGE, ROUE LIBRE	1	1				
12	67F–81836–00	..SHAFT, PINION ..AXE, PIGNON	1	1				
13	67F–81821–00	..BRACKET, CENTER 1 ..SUPPORT, CENTRE 1	1	1				
14	67F–81841–00	...BEARING ...ROULEMENT	1	1				
15	67F–8183R–00	...GASKET ...JOINT	1	1				
16	67F–81891–00	..GEAR, RING ..ROUE DENTEE	1	1				WITH 67F-8183R-00 WITH 67F-8183R-00
17	67F–81830–00	..BRACKET, CENTER 2 ..SUPPORT, CENTRE 2	1	1				
18	60V–8183T–00	..GEAR, IDLER ..PIGNON, INTERMEDIAIRE	3	3				
19	67F–81809–00	..WASHER KIT ..JEU DE RONDELLES	1	1				
20	69J–81842–00	.COVER .COUVERCLE	1	1				
21	6C5–81839–00	.LEVER ASSY .LEVIER COMPLET	1	1				
22	63P–81941–00	.STARTER RELAY ASSY .LANCEUR RELAIS (ENS.)	1	1				
23	6C5–81869–00	.COVER, DUST .COUVERCLE, POUSSIERE	1	1				
24	6K7–81826–11	.BOLT .BOULON	2	2				
25	69J–81828–00	.SCREW 2 .VIS 2	2	2				
26	67F–81846–00	.SCREW .VIS	2	2				
27	90179–08003	NUT ECROU	1	1				

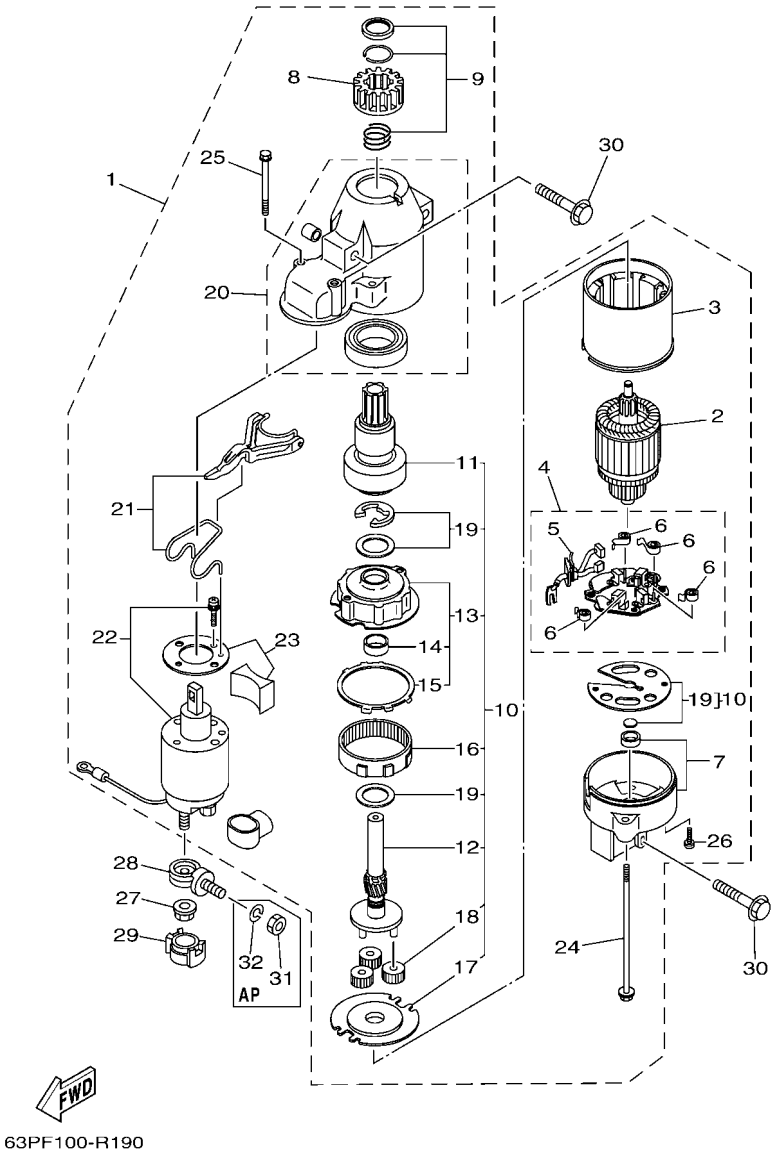

FIG. 19 STARTING MOTOR — DEMARREUR ELECTRIQUE

REF. NO.	PART NO. N° PIECES	DESCRIPTION DESCRIPTION	63PG	64PG				REMARKS REMARQUES
28	60V–81925–00	TERMINAL BORNE	1	1				
29	68F–82582–00	COVER, WIRE HARNESS COUVERCLE, FAISCEAU DE FILS	1	1				
30	97513–08545	BOLT, WITH WASHER VIS HEXAGONAL AVC RONDELLE	3	3				
31	95333–08600	NUT ECROU	1	1				AP AP
32	92903–08100	WASHER, SPRING RONDELLE, GROWER	1	1				AP AP

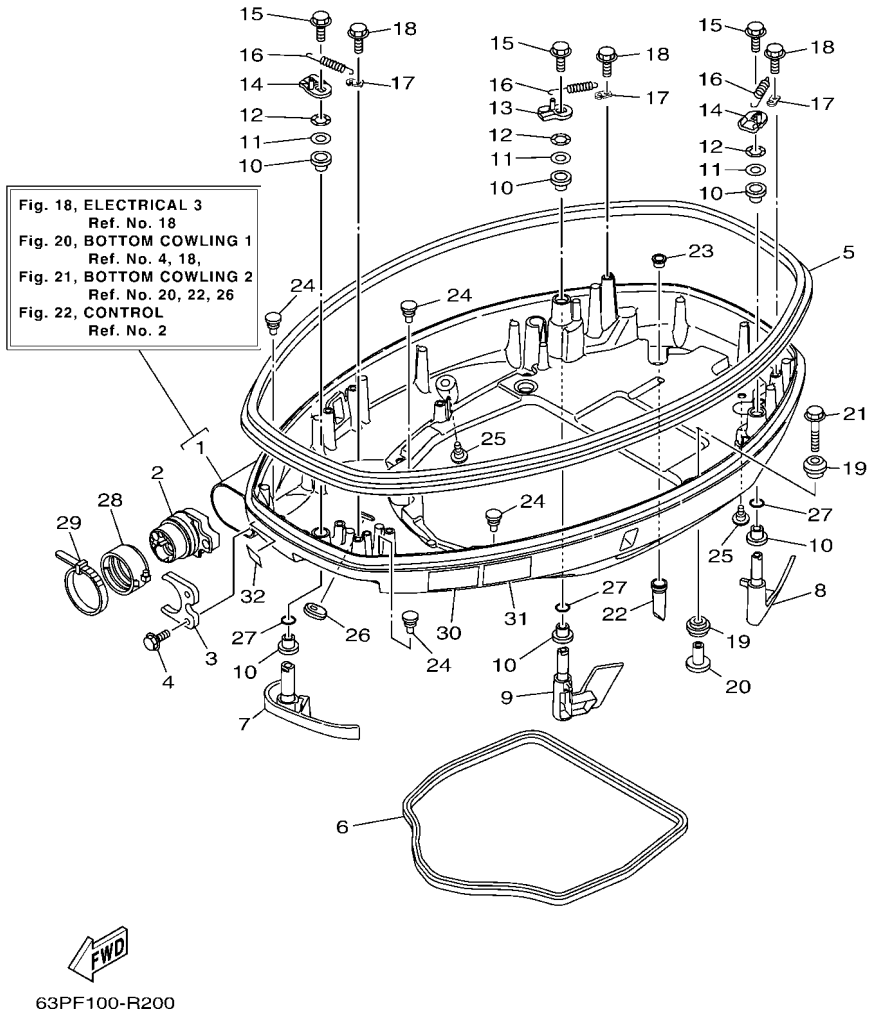

FIG. 20 BOTTOM COWLING 1 — CAPOT INFERIEUR 1

REF. NO.	PART NO. N° PIECES	DESCRIPTION DESCRIPTION	63PG	64PG				REMARKS REMARQUES
1	63P–42710–10–8D	BOTTOM COWLING ASSY ENS. EMBASE	1	1				
2	6DA–42725–00	GROMMET PASSE-FIL	1	1				
3	6CB–42761–00	STOPPER PLAQUETTE	1	1				
4	90109–06M86	BOLT BOULON	2	2				
5	63P–42615–10	SEAL JOINT	1	1				
6	63P–42716–00	RUBBER SEAL 1 JOINT EN CAOUTCHOUC 1	1	1				
7	63P–42815–11–8D	LEVER, CLAMP 1 LEVIER, PRESSE 1	1	1				
8	6DA–42816–02–8D	LEVER, CLAMP 2 LEVIER, PRESSE 2	1	1				
9	6DA–42817–02–8D	LEVER, CLAMP 3 LEVIER, PRESSE 3	1	1				
10	90386–15M73	BUSH DOUILLE	6	6				
11	90201–156J2	WASHER, PLATE RONDELLE, PLATE	3	3				
12	90206–15M18	WASHER, WAVE RONDELLE, ONDULEE	3	3				
13	6CB–42818–00	LEVER, CLAMP 4 LEVIER, PRESSE 4	1	1				
14	6CB–42819–00	LEVER, CLAMP 5 LEVIER, PRESSE 5	2	2				
15	95895–08012	BOLT, FLANGE BOULON	3	3				
16	90506–22001	SPRING, TENSION RESSORT, TENSION	3	3				
17	66T–43144–00	HOOK, SPRING CROCHET	3	3				
18	90109–06M86	BOLT BOULON	3	3				
19	90480–22M81	GROMMET PASSE-FIL	8	8				
20	90387–08M37	COLLAR COLLERETTE	4	4				
21	90119–08M22	BOLT, WITH WASHER BOULON, AVEC RONDELLE	4	4				
22	6DA–42717–00	RUBBER, SEAL 2 JOINT EN CAOUTCHOUC 2	4	4				
23	6DA–42384–00	SEAL, CAP JOINT, CAPUCHON	4	4				
24	6H4–42748–00	GROMMET PASSE-FIL	4	4				
25	6P2–44391–00	NIPPLE, HOSE RACCORD D'ESSENCE	2	2				
26	61A–42727–00	GROMMET PASSE-FIL	1	1				
27	93210–13M63	O-RING JOINT TORIQUE	3	3				

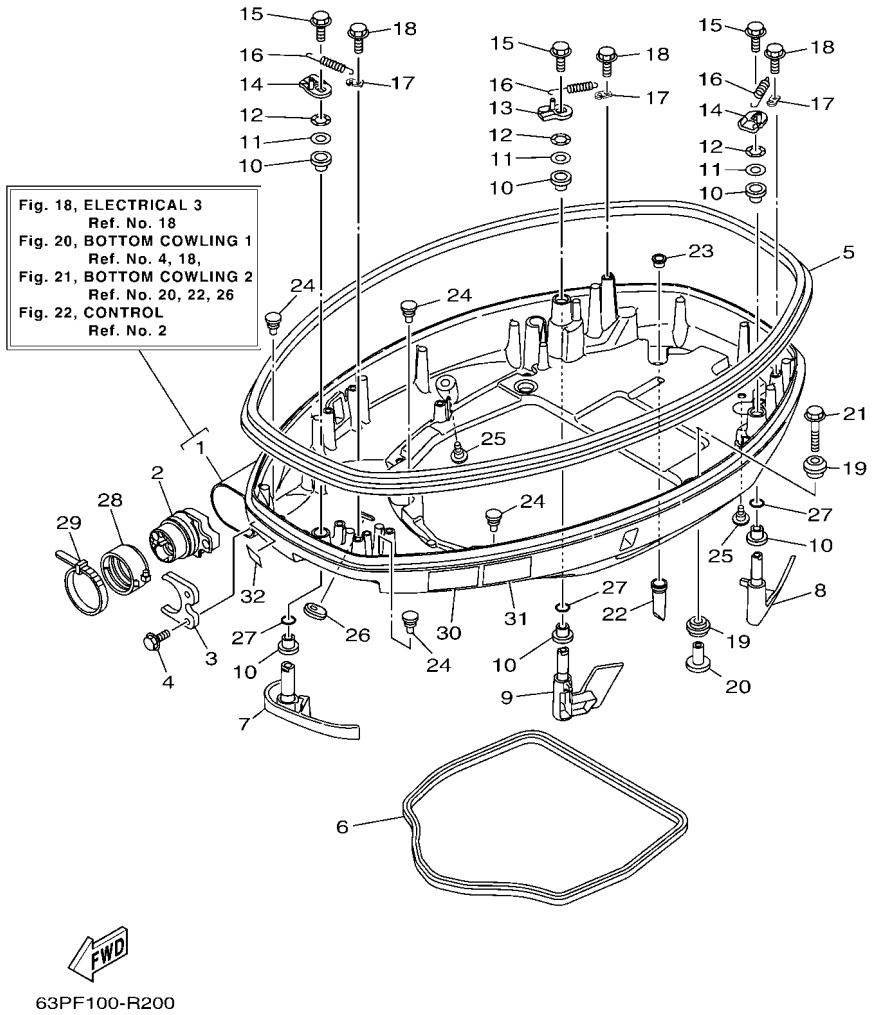

FIG. 20 BOTTOM COWLING 1 — CAPOT INFERIEUR 1

REF. NO.	PART NO. N° PIECES	DESCRIPTION DESCRIPTION	63PG	64PG				REMARKS REMARQUES
28	68F–42753–00	FASTNER ATTACHE	1	1				AP AP
29	90464–20258	CLAMP BRIDE	1	1				AP AP
30	6EE–42794–40	LABEL, WARNING (GENERAL) ETIQUETTE, AVERTISSEMENT	1	1				
31	6EE–42794–50	LABEL, WARNING (GENERAL) ETIQUETTE, AVERTISSEMENT	1	1				
32	6AH–81996–00	MARK MARQUE	1	1				

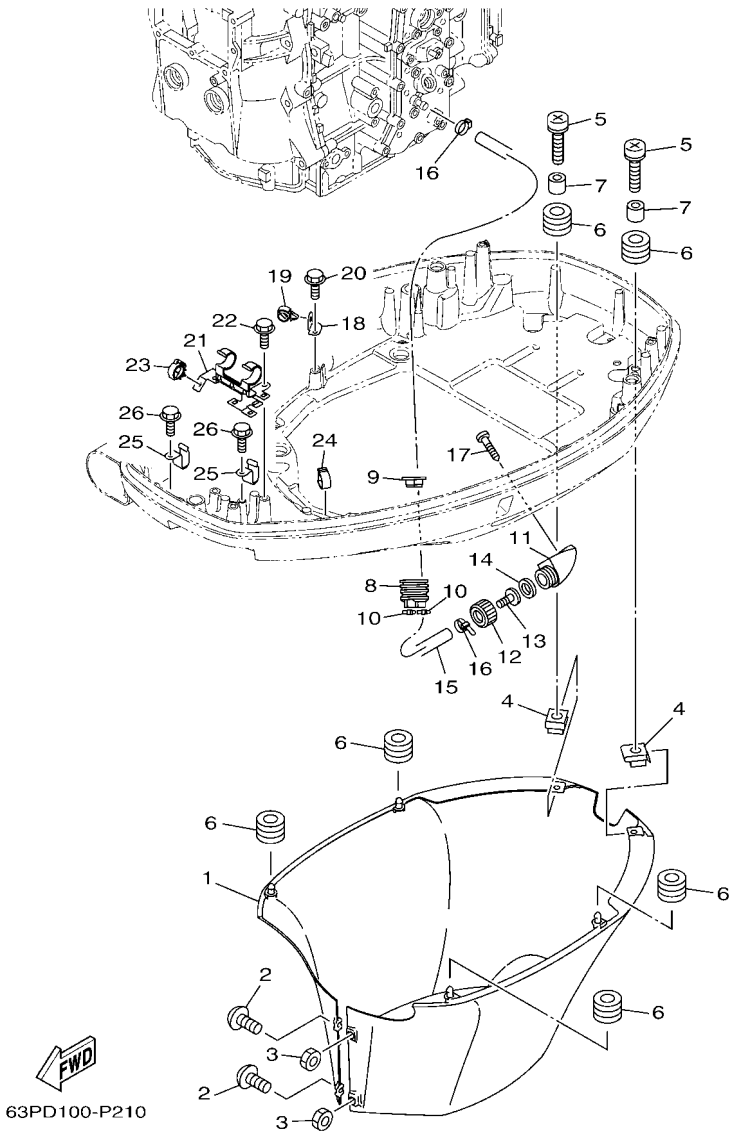

FIG. 21 BOTTOM COWLING 2 — CAPOT INFERIEUR 2

REF. NO.	PART NO. N° PIECES	DESCRIPTION DESCRIPTION	63PG	64PG				REMARKS REMARQUES
1	6DA–42741–10–8D	APRON CAPOT LATERAL	1	1				
2	90159–06M28	SCREW, WITH WASHER VIS, AVEC RONDELLE	2	2				
3	95380–06600	NUT, HEXAGON ECROU	2	2				
4	90183–061A6	NUT, SPRING ECROU, RESSORT	2	2				
5	90159–06053	SCREW, WITH WASHER VIS, AVEC RONDELLE	2	2				
6	90480–13M24	GROMMET PASSE-FIL	6	6				
7	90387–06M43	COLLAR COLLERETTE	2	2				
8	6H1–42726–21	GROMMET PASSE-FIL	1	1				
9	6BG–42384–00	SEAL, CAP JOINT, CAPUCHON	1	1				
10	90465–11M10	CLAMP BRIDE	2	2				
11	6AW–12572–00	ADAPTER ADAPTATEUR	1	1				
12	6R3–12581–00	JOINT, HOSE 1 JOINT DE TUYAU	1	1				
13	6R3–12582–00	JOINT, HOSE 2 RACCORD DE TUYAU 1	1	1				
14	6R3–12583–00	GASKET, HOSE JOINT JOINT	1	1				
15	63P–42541–10	PIPE 1 TUYAU 1	1	1				
16	90465–11M10	CLAMP BRIDE	2	2				
17	97780–60520	SCREW, TAPPING VIS, TETE BOMBEE	2	2				
18	63P–42756–00	STAY, CLAMP SUPPORT, COLLIER	1	1				
19	90464–13249	CLAMP BRIDE	1	1				
20	90109–06M86	BOLT BOULON	1	1				
21	63P–8366G–00	BRACKET 3 SUPPORT 3	1	1				
22	90109–06M86	BOLT BOULON	2	2				
23	90464–18246	CLAMP BRIDE	2	2				
24	90464–18004	CLAMP BRIDE	1	1				
25	90462–12013	CLAMP BRIDE	2	2				
26	90109–06M86	BOLT BOULON	2	2				

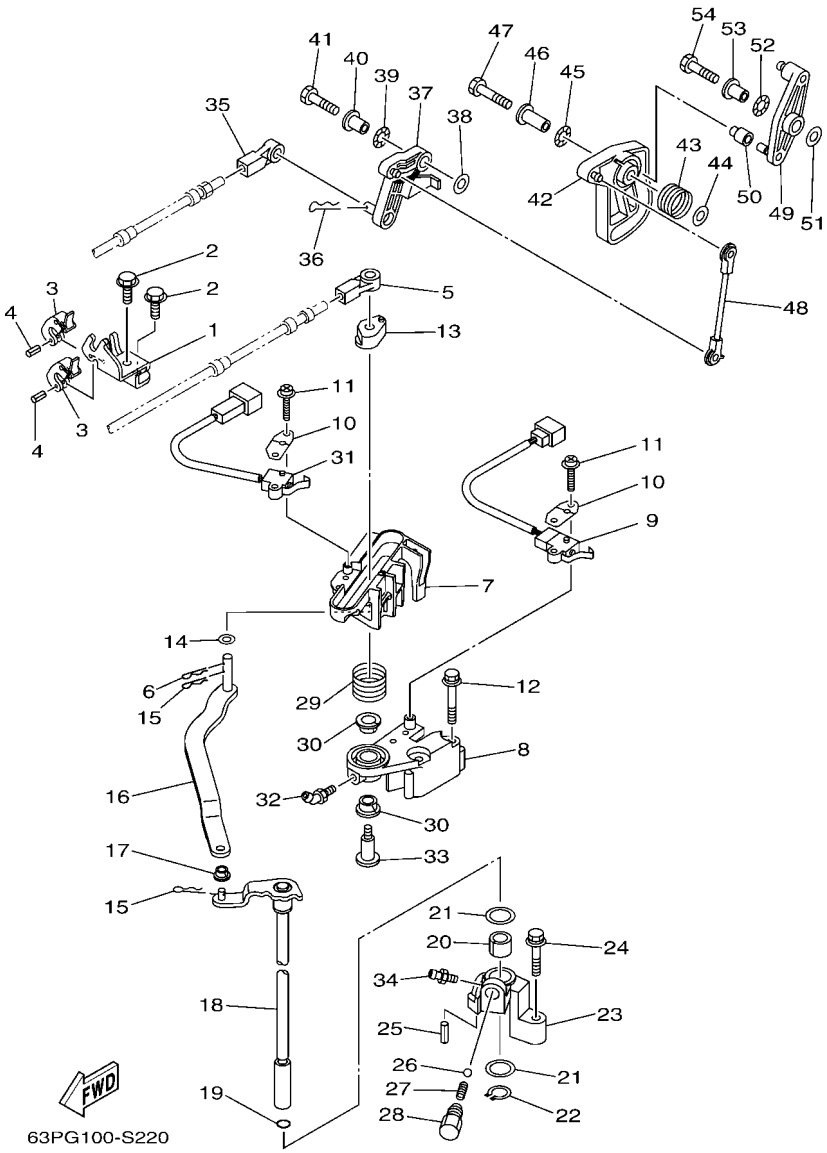

FIG. 22 CONTROL — COMMANDE

REF. NO.	PART NO. N° PIECES	DESCRIPTION DESCRIPTION	63PG	64PG				REMARKS REMARQUES
1	63P–48531–10	BRACKET, REMOTE CONTROL 1 ETRIER 1, COMMANDE A DISTANCE	1	1				
2	90109–06M86	BOLT BOULON	2	2				
3	6E5–48538–00	CLAMP, CABLE COLLIER	2	2				
4	91690–30010	PIN, SPRING AGRAFFE	2	2				
5	6E5–48344–00	CABLE END, REMOTE CONTROL CHAPE CABLE	1	1				
6	90468–18008	CLIP JONC	1	1				
7	6DA–44176–00	BRACKET SUPPORT	1	1				
8	63P–44117–01	BRACKET SUPPORT	1	1				
9	69J–8259F–00	SWITCH ASSY COMMUTATEUR	1	1				
10	61A–82588–01	PLATE PLAQUE	2	2				
11	97985–04116	SCREW, WITH WASHER VIS, AVEC RONDELLE	4	4				
12	97595–06550	BOLT, WITH WASHER VIS HEXAGONAL AVC RONDELLE	2	2				
13	63P–44122–00	BUSHING, SHIFT ROD LEVER DOUILLE, LEVIER D'EMBRAYAGE	1	1				
14	90202–08M20	WASHER, PLATE RONDELLE, PLATE	1	1				
15	90468–18008	CLIP JONC	2	2				
16	6DA–44121–00	LEVER, SHIFT ROD LEVIER, TIGE D'INVERSION	1	1				
17	90386–06M12	BUSH DOUILLE	1	1				
18	6DA–44120–11	HANDLE GEAR SHIFT ASSY LEVIER D'EMBRAYAGE	1	1				
19	93210–09165	O-RING JOINT TORIQUE	1	1				
20	90386–16M66	BUSH DOUILLE	1	1				
21	90202–16061	WASHER, PLATE RONDELLE, PLATE	2	2				
22	93410–16006	CIRCLIP CLIPS	1	1				
23	63P–44118–00	BRACKET SUPPORT	1	1				
24	97575–06535	BOLT, WITH WASHER VIS HEXAGONAL AVC RONDELLE	1	1				
25	91690–30010	PIN, SPRING AGRAFFE	1	1				
26	93501–04M02	BALL BILLE	1	1				
27	90501–12082	SPRING, COMPRESSION RESSORT, COMPRESSION	1	1				

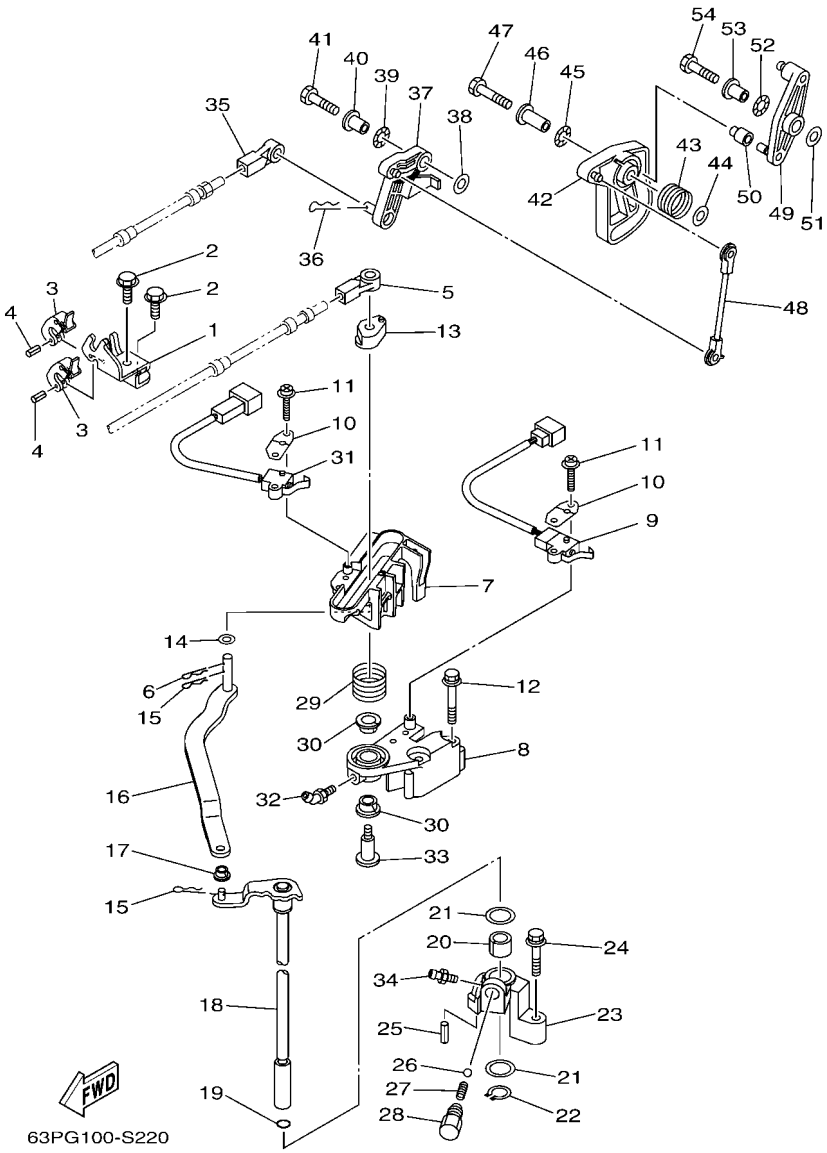

FIG. 22 CONTROL — COMMANDE

REF. NO.	PART NO. N° PIECES	DESCRIPTION DESCRIPTION	63PG	64PG				REMARKS REMARQUES
28	648–42715–00	BUSHING COUSSINET	1	1				
29	90508–20M31	SPRING, TORSION RESSORT, TORSION	1	1				
30	90386–12069	BUSH DOUILLE	2	2				
31	60V–8259F–00	SWITCH ASSY COMMUTATEUR	1	1				
32	93700–06M01	NIPPLE, GREASE PION	1	1				
33	90109–08019	BOLT BOULON	1	1				
34	93700–06M03	NIPPLE, GREASE PION	1	1				
35	6E5–48344–00	CABLE END, REMOTE CONTROL CHAPE CABLE	1	1				
36	90468–18008	CLIP JONC	1	1				
37	63P–42154–10	LEVER, THROTTLE CONTROL LEVIER DE COMMANDE D'AVANCE	1	1				
38	90201–06M31	WASHER, PLATE RONDELLE, PLATE	1	1				
39	90206–10M04	WASHER, WAVE RONDELLE, ONDULEE	1	1				
40	90387–06M29	COLLAR COLLERETTE	1	1				
41	97095–06025	BOLT BOULON	1	1				
42	63P–41213–00	CAM, ACCEL. CAME, ACCELERATION	1	1				
43	69J–44135–00	SPRING RESSORT	1	1				
44	90201–06M31	WASHER, PLATE RONDELLE, PLATE	1	1				
45	90206–10M04	WASHER, WAVE RONDELLE, ONDULEE	1	1				
46	90387–06M82	COLLAR COLLERETTE	1	1				
47	97095–06035	BOLT BOULON	1	1				
48	63P–41237–00	JOINT, LINK RACCORD	1	1				
49	63P–42157–00	LEVER, THROTTLE LEVIER DE AVANCE	1	1				
50	68V–42171–00	BUSHING COUSSINET	1	1				
51	90201–06M31	WASHER, PLATE RONDELLE, PLATE	1	1				
52	90206–10M04	WASHER, WAVE RONDELLE, ONDULEE	1	1				
53	90387–06M29	COLLAR COLLERETTE	1	1				
54	97095–06025	BOLT BOULON	1	1				

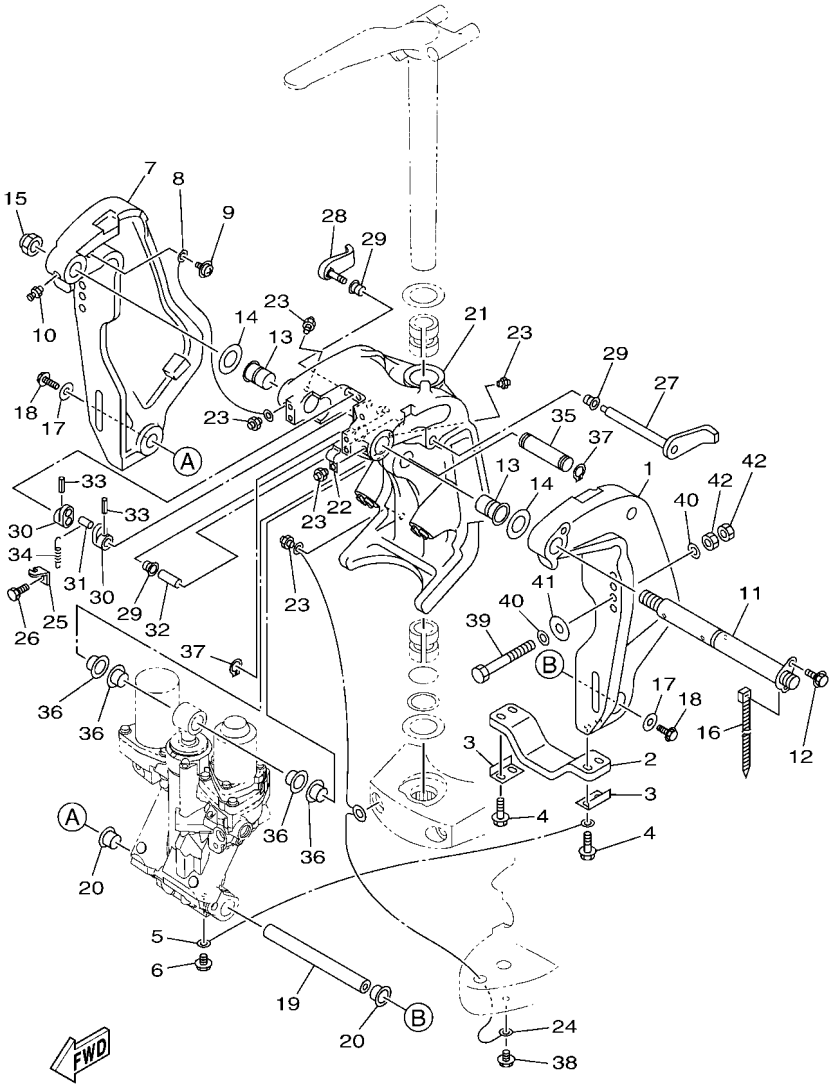

63PG100-S230

FIG. 23 BRACKET 1 — SUPPORT 1

REF. NO.	PART NO. N° PIECES	DESCRIPTION DESCRIPTION	63PG	64PG				REMARKS REMARQUES
1	64E–43111–02–8D	BRACKET, CLAMP 1 PRESSE 1	1	1				
2	6G5–45251–02	ANODE ANODE	1	1				
3	6G5–44526–00	PLATE PLAQUE	2	2				
4	97595–06530	BOLT, WITH WASHER VIS HEXAGONAL AVC RONDELLE	4	4				
5	6E5–82148–00	WIRE, LEAD 4 FIL 4	1	1				
6	97595–06510	BOLT, WITH WASHER VIS HEXAGONAL AVC RONDELLE	1	1				
7	64E–43112–02–8D	BRACKET, CLAMP 2 PRESSE 2	1	1				
8	6E5–82148–00	WIRE, LEAD 4 FIL 4	1	1				
9	97985–06212	SCREW, WITH WASHER VIS, AVEC RONDELLE	1	1				
10	93700–06M03	NIPPLE, GREASE PION	1	1				
11	64E–43131–30	BOLT, CLAMP BRACKET BOULON, PRESSE	1	1				FOR TILT LIMIT FOR TILT LIMIT
12	97595–08520	BOLT, WITH WASHER VIS HEXAGONAL AVC RONDELLE	1	1				
13	90386–25M31	BUSH DOUILLE	2	2				
14	90201–26M59	WASHER, PLATE RONDELLE, PLATE	2	2				
15	90185–22M11	NUT, SELF-LOCKING ECROU,AUTO-BLOQUANT	1	1				
16	90465–11M10	CLAMP BRIDE	1	1				
17	90201–10060	WASHER, PLATE RONDELLE, PLATE	2	2				
18	90119–10054	BOLT, WITH WASHER BOULON, AVEC RONDELLE	2	2				
19	6BC–43818–00	PIN, LOWER SHOCK MOUNT AXE, INFERIEUR AMORTISSEUR	1	1				
20	90386–22M98	BUSH DOUILLE	2	2				
21	64E–43311–10–8D	BRACKET, SWIVEL 1 SUPPORT, PIVOT 1	1	1				
22	90465–08M63	CLAMP BRIDE	1	1				
23	93700–06M03	NIPPLE, GREASE PION	5	5				
24	66K–82149–00	WIRE, LEAD 3 FIL 3	1	1				
25	6G5–43144–00	HOOK, SPRING CROCHET	1	1				
26	97095–06010	BOLT BOULON	1	1				
27	6G5–43181–02	LEVER, TILT STOP 1 LEVIER VERROUILLAGE RELEVAGE 1	1	1				

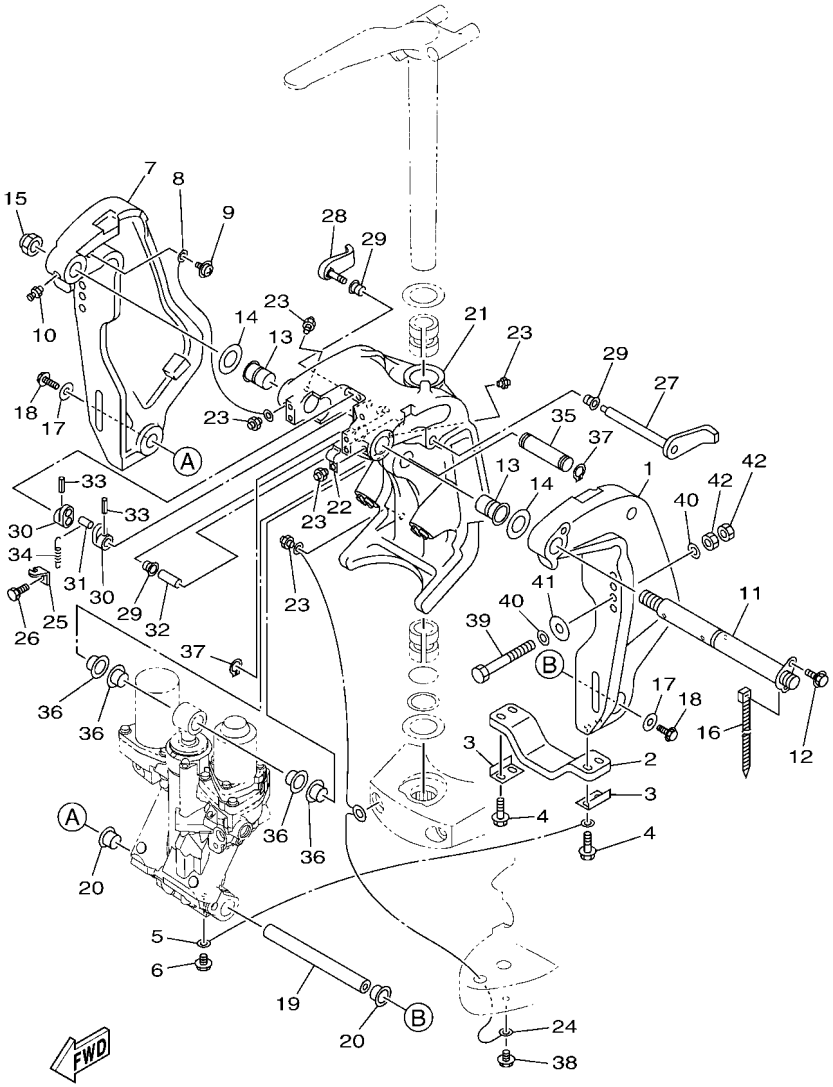

63PG100-S230

FIG. 23 BRACKET 1 SUPPORT 1

REF. NO.	PART NO. N° PIECES	DESCRIPTION DESCRIPTION	63PG	64PG				REMARKS REMARQUES
28	6G5–43185–02	LEVER, TILT STOP 2 LEVIER VERROUILLAGE RELEVAGE 2	1	1				
29	90386–10M16	BUSH DOUILLE	3	3				
30	6G5–43148–00	COLLAR, DISTANCE ENTRETOISE	2	2				
31	90249–06M19	PIN GOUPILLE	1	1				
32	90387–10M05	COLLAR COLLERETTE	1	1				
33	91690–30020	PIN, SPRING AGRAFFE	2	2				
34	90506–16003	SPRING, TENSION RESSORT, TENSION	1	1				
35	64E–43126–10	PIN, UPPER SHOCK MOUNT AXE, SUPERIEUR AMORTISSEUR	1	1				
36	90386–22M98	BUSH DOUILLE	4	4				
37	93410–22M11	CIRCLIP CLIPS	2	2				
38	95895–06010	BOLT, FLANGE BOULON	1	1				
39	90101–12M05	BOLT (L:130MM) BOULON (L:130MM)	4	4				UR L(20.3") UR L(20.3")
	90101–12M05	BOLT (L:130MM) BOULON (L:130MM)	2	2				UR X(25.3") UR X(25.3")
	90101–12047	BOLT (L:150MM) BOULON (L:150MM)	2	2				UR UR
40	90201–13M01	WASHER, PLATE RONDELLE, PLATE	8	8				
41	90201–12426	WASHER, PLATE RONDELLE, PLATE	4	4				
42	95380–12600	NUT ECROU	8	8				

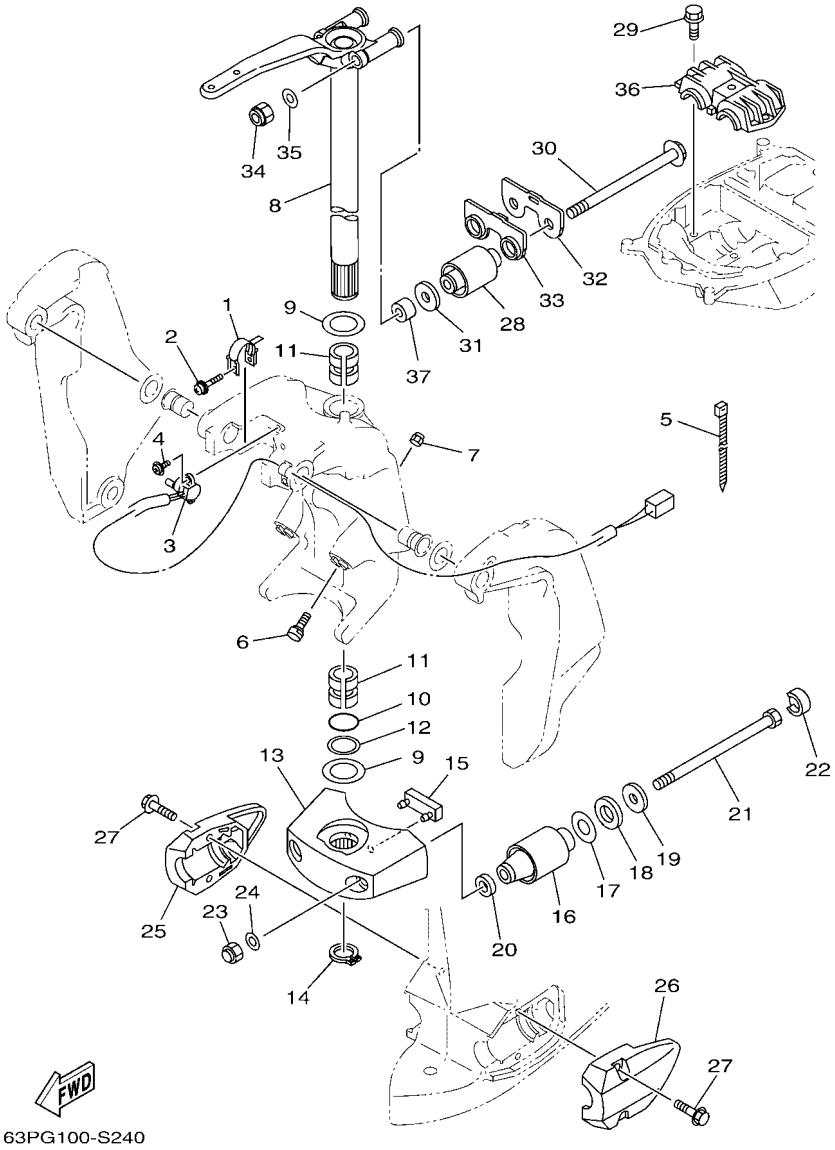

63PG100-S240

FIG. 24 BRACKET 2 — SUPPORT 2

REF. NO.	PART NO. N° PIECES	DESCRIPTION DESCRIPTION	63PG	64PG				REMARKS REMARQUES
1	64E–43139–10	CAM, TRIM SENDER VILEBREQUIN TRUM	1	1				
2	90159–05059	SCREW, WITH WASHER VIS, AVEC RONDELLE	1	1				
3	67H–83672–01	TRIM SENDER INCLINER RACCORD	1	1				
4	97985–06216	SCREW, WITH WASHER VIS, AVEC RONDELLE	2	2				
5	90465–11M10	CLAMP BRIDE	3	3				
6	61A–43376–00	BOLT, THRUST RECEIVER BOULON	2	2				
7	95780–10300	NUT, FLANGE ECROU	2	2				
8	6DA–42510–10–8D	STEERING BRACKET ASSY DIRECTION SUPPORT (ENS.)	1	1				
9	90201–38M60	WASHER, PLATE RONDELLE, PLATE	2	2				
10	93210–37MH7	O-RING JOINT TORIQUE	1	1				
11	90386–38M32	BUSH DOUILLE	2	2				
12	90202–40M47	WASHER, PLATE RONDELLE, PLATE	1	1				
13	68V–44551–00–8D	HOUSING, LOWER MOUNT RUBBER 1 BOITIER, SILENT-BLOC INFERIEUR	1	1				
14	93410–37M04	CIRCLIP CLIPS	1	1				
15	61A–44575–00	DAMPER, LOWER MOUNT RUBBER SILENT-BLOC, INFERIEUR	1	1				
16	60V–44555–00	MOUNT DAMPER, LOWER SIDE SILENT-BLOC, INFERIEUR LATERAL	2	2				L(20.3") L(20.3")
	63P–44555–00	MOUNT DAMPER, LOWER SIDE SILENT-BLOC, INFERIEUR LATERAL	2	2				X(25.3") X(25.3")
17	90201–35008	WASHER, PLATE RONDELLE, PLATE	2	2				
18	90202–32M19	WASHER, PLATE RONDELLE, PLATE	2	2				
19	90201–16M55	WASHER, PLATE RONDELLE, PLATE	2	2				
20	90201–15M58	WASHER, PLATE RONDELLE, PLATE	2	2				
21	90109–14007	BOLT BOULON	2	2				
22	69J–44533–00	DAMPER, UPPER MOUNT RUBBER COUVERCLE, SUSPENSION INFERIEU	2	2				
23	90176–14003	NUT, CROWN ECROU BORGNE	2	2				
24	92995–14600	WASHER RONDELLE	2	2				
25	63P–44553–00–8D	COVER, LOWER MOUNT COUVERCLE, SUSPENSION INFERIEU	1	1				
26	63P–44556–00–8D	COVER, LOWER MOUNT 2 COUVERCLE,SUSPENSION INFERIEU	1	1				

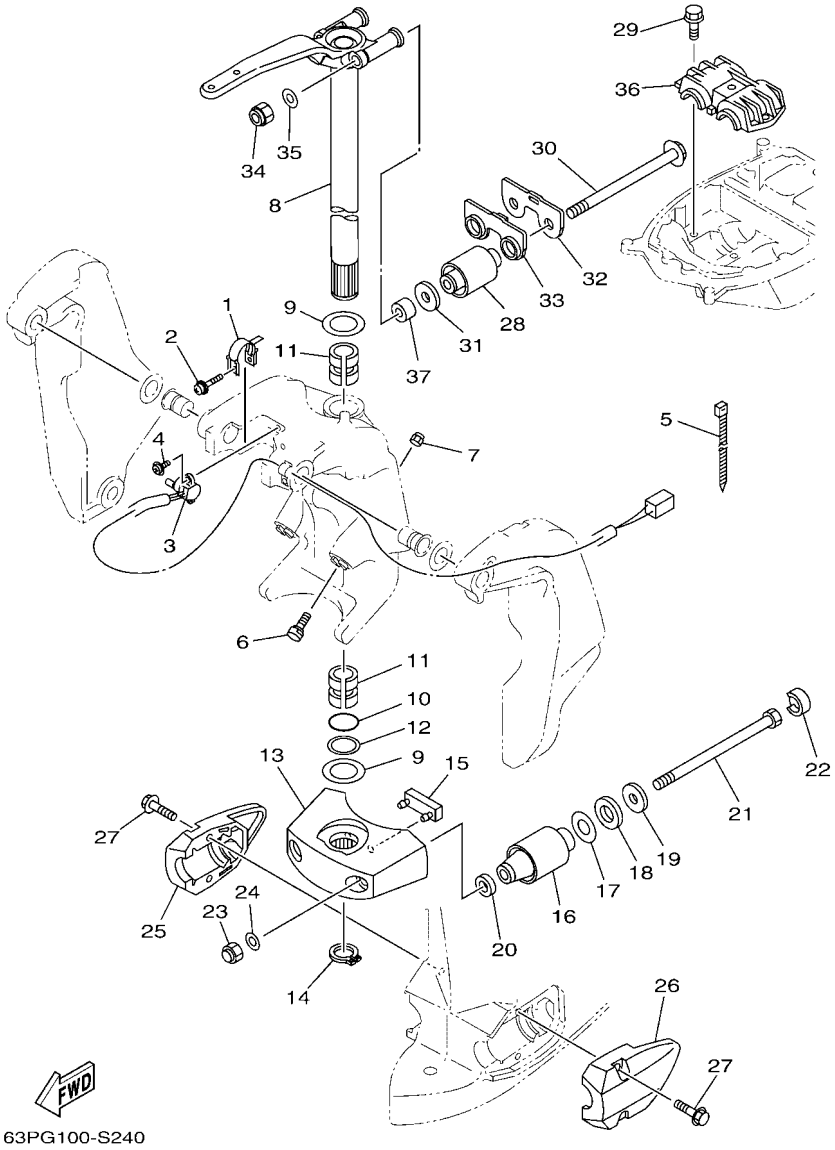

FIG. 24 BRACKET 2 — SUPPORT 2

REF. NO.	PART NO. N° PIECES	DESCRIPTION DESCRIPTION	63PG	64PG				REMARKS REMARQUES
27	90119–10058	BOLT, WITH WASHER BOULON, AVEC RONDELLE	4	4				
28	6DA–44514–00	MOUNT DAMPER, UPPER SIDE SILENT-BLOC, SUPERIEUR LATERAL	2	2				
29	90119–10024	BOLT, WITH WASHER BOULON, AVEC RONDELLE	3	3				
30	90105–14009	BOLT, FLANGE BOULON, A COLLERETTE	2	2				
31	90201–16M01	WASHER, PLATE RONDELLE, PLATE	2	2				
32	6DA–44526–00	PLATE PLAQUE	1	1				
33	6DA–44532–00	STOPPER, UPPER MOUNT PLAQUETTE	1	1				
34	90185–14M00	NUT, SELF-LOCKING ECROU,AUTO-BLOQUANT	2	2				
35	92995–14600	WASHER RONDELLE	2	2				
36	63P–44511–00	COVER, UPPER MOUNT COUVERCLE, SUSPENSION SUPERIEU	1	1				
37	90387–14004	COLLAR COLLERETTE	2	2				

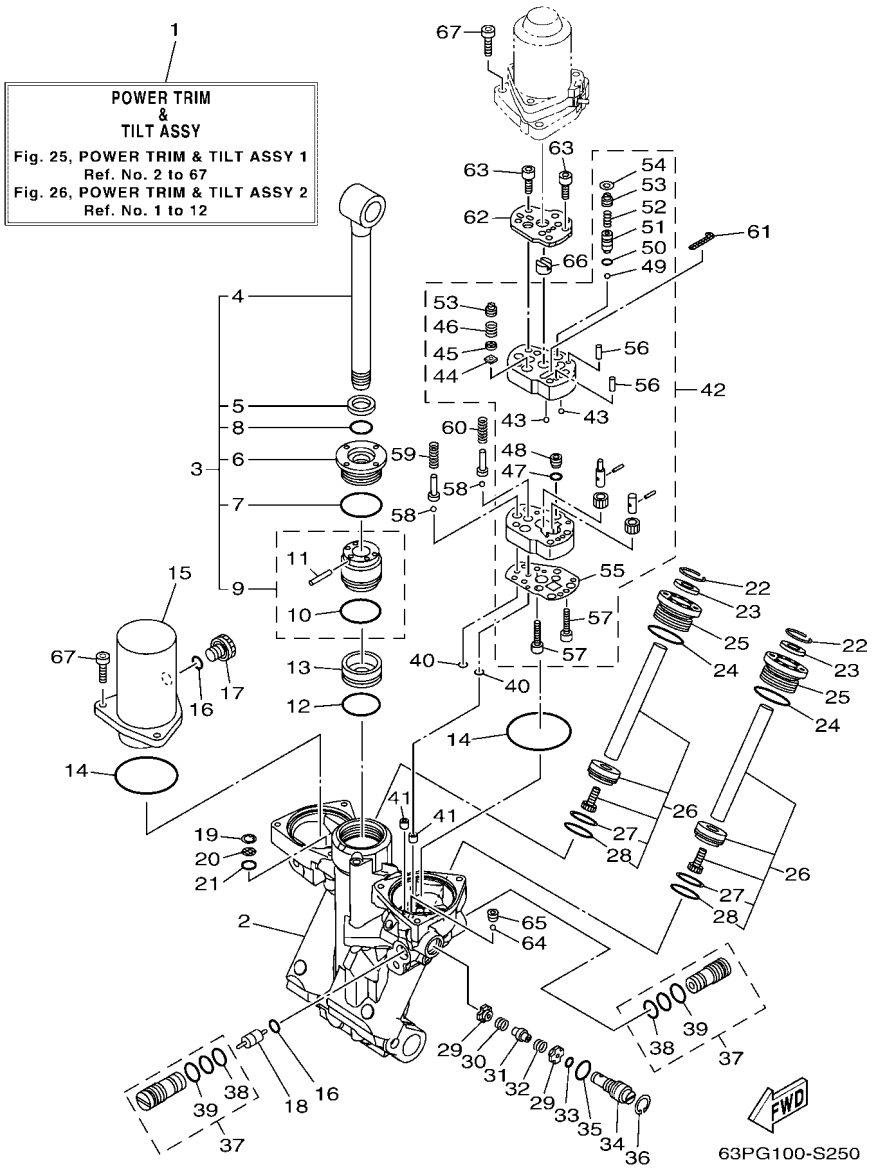

FIG. 25 POWER TRIM & TILT ASSY 1 — PUISSANCE PARER ET INCLINER 1

REF. NO.	PART NO. N° PIECES	DESCRIPTION DESCRIPTION	63PG	64PG				REMARKS REMARQUES
1	63P–43800–20	POWER TRIM & TILT ASSY PUISSANCE PARER ET INCLINER (E	1	1				
2	63P–4380L–20	HOUSING, TRIM & TILT SUB ASSY CARTER	1	1				
3	63P–43810–20	TILT PISTON SUB ASSY INCLINER PISTON AUXILIAIRE(ENS	1	1				
4	63P–43801–10	.ROD .TIGE	1	1				
5	93106–19N50	.OIL SEAL .JOINT SPY	1	1				
6	63P–43811–20	.SCREW, CYLINDER END .VIS, CYLINDRE RACCORD	1	1				
7	63P–43861–20	.O-RING .JOINT TORIQUE	1	1				
8	63P–43863–10	.O-RING .JOINT TORIQUE	1	1				
9	63P–4380P–20	.PISTON SUB ASSY .PISTON AUXILIAIRE (ENS.)	1	1				
10	6H1–43862–00	..O-RING ..JOINT TORIQUE	1	1				
11	91609–16010	..PIN, SPRING ..AXE DE RESSORT	1	1				
12	6H1–43862–00	O-RING JOINT TORIQUE	1	1				
13	63P–43814–20	PISTON, FREE PISTON	1	1				
14	93210–68N50	O-RING JOINT TORIQUE	2	2				
15	63P–4382C–20	BODY, RESERVOIR 2 CORPS 2	1	1				
16	93210–09165	O-RING JOINT TORIQUE	2	2				
17	6CJ–43829–10	PLUG, RESERVOIR BOUCHON	1	1				
18	6H1–43841–11	PISTON, SHUTTLE PISTON	1	1				
19	63P–43876–10	RING, SNAP RESSORT	1	1				
20	63P–43816–10	FILTER 1 FILTRE 1	1	1				
21	93210–11N52	O-RING JOINT TORIQUE	1	1				
22	63P–43875–20	RING, SNAP RESSORT	2	2				
23	63P–43822–20	SEAL, TRIM DUST JOINT	2	2				
24	63P–43862–10	O-RING JOINT TORIQUE	2	2				
25	63P–43821–20	SCREW, TRIM CYLINDER END VIS	2	2				
26	63P–43820–20	TRIM PISTON SUB ASSY PARER PISTON AUXILIAIRE (ENS.)	2	2				
27	62X–43871–00	.RING, BACK UP .SEGMENT	1	1				

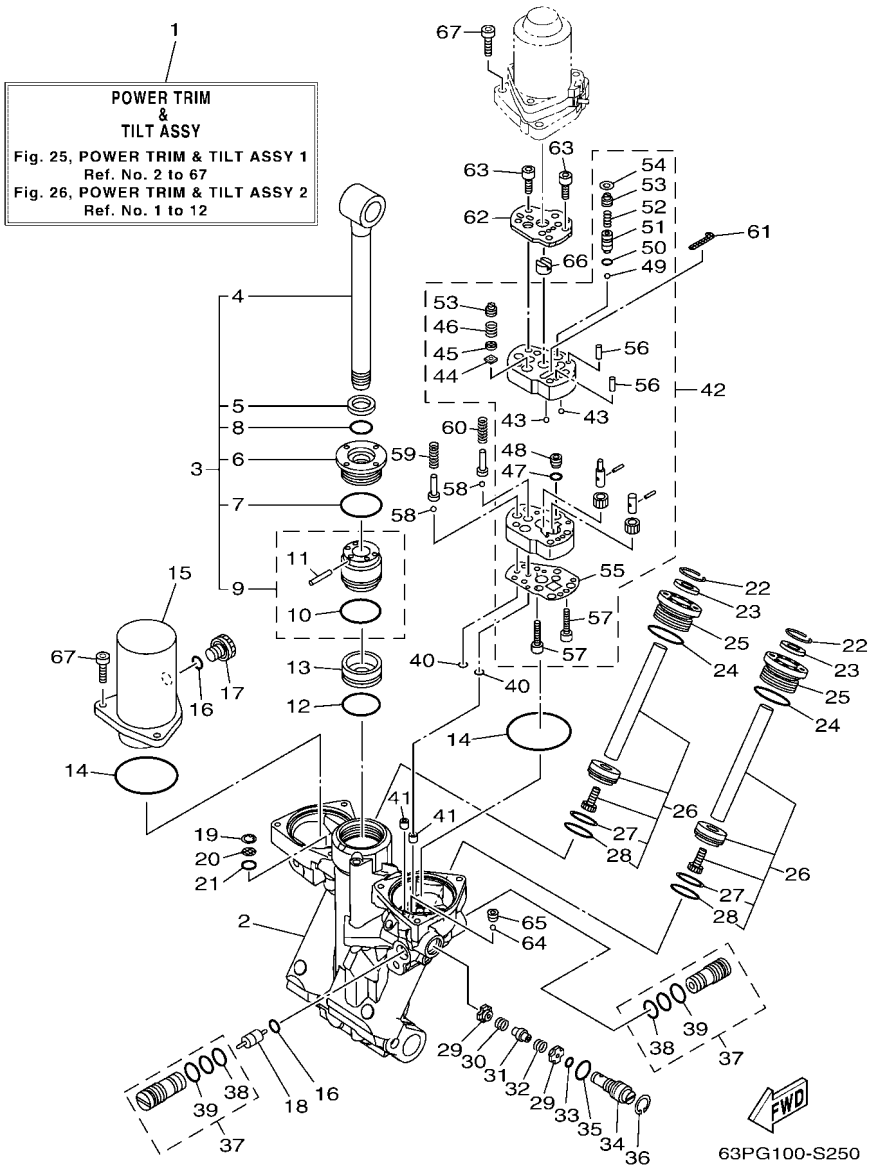

FIG. 25 POWER TRIM & TILT ASSY 1 — PUISSANCE PARER ET INCLINER 1

REF. NO.	PART NO. N° PIECES	DESCRIPTION DESCRIPTION	63PG	64PG				REMARKS REMARQUES
28	93210–29375	.O-RING .JOINT TORIQUE	1	1				
29	63P–43847–10	SEAT, MANUAL VALVE SIEGE	2	2				
30	63P–43854–10	SPRING, MANUAL RELEASE RESSORT	1	1				
31	63P–4382A–10	ADAPTOR 1 ADAPTEUR 1	1	1				
32	63P–4384H–10	SPRING RESSORT	1	1				
33	69J–4389J–00	O-RING JOINT TORIQUE	1	1				
34	63P–43845–20	SCREW, MANUAL RELEASE VIS	1	1				
35	93210–12327	O-RING JOINT TORIQUE	1	1				
36	61A–43876–00	RING, SNAP RESSORT	1	1				
37	63P–43802–20	VALVE SUB ASSY CLAPET AUXILIAIRE (ENS.)	2	2				
38	93210–12N52	.O-RING .JOINT TORIQUE	1	1				
39	6H1–43866–01	.O-RING .JOINT TORIQUE	1	1				
40	93210–064A5	O-RING JOINT TORIQUE	2	2				
41	63P–4381C–20	FILTER 3 FILTRE 3	2	2				
42	63P–43830–20	GEAR PUMP ASSY POMPE A PIGNON (ENS.)	1	1				
43	93503–16003	.BALL .BILLES	2	2				
44	6H1–4384G–11	.SEAL, RELIEF VALVE .JOINT	1	1				
45	6H1–43844–10	.PIN, VALVE SUPPORT .GOUPILLE	1	1				
46	6H1–43856–10	.SPRING, DOWN RELIEF .RESSORT	1	1				
47	93210–07N51	.O-RING .JOINT TORIQUE	1	1				
48	63P–43851–20	.SEAT, RELIEF VALVE .SIEGE	1	1				
49	93501–08001	.BALL .BILLE	1	1				
50	93210–064A5	.O-RING .JOINT TORIQUE	1	1				
51	63P–43844–20	.PIN, VALVE SUPPORT .GOUPILLE	1	1				
52	69J–43855–00	.SPRING, UP RELIEF .RESSORT	1	1				
53	63P–43843–10	.SCREW, VALVE LOCK .VIS	2	2				
54	63P–43338–10	.WASHER, WAVE .RONDELLE, ONDULEE	1	1				

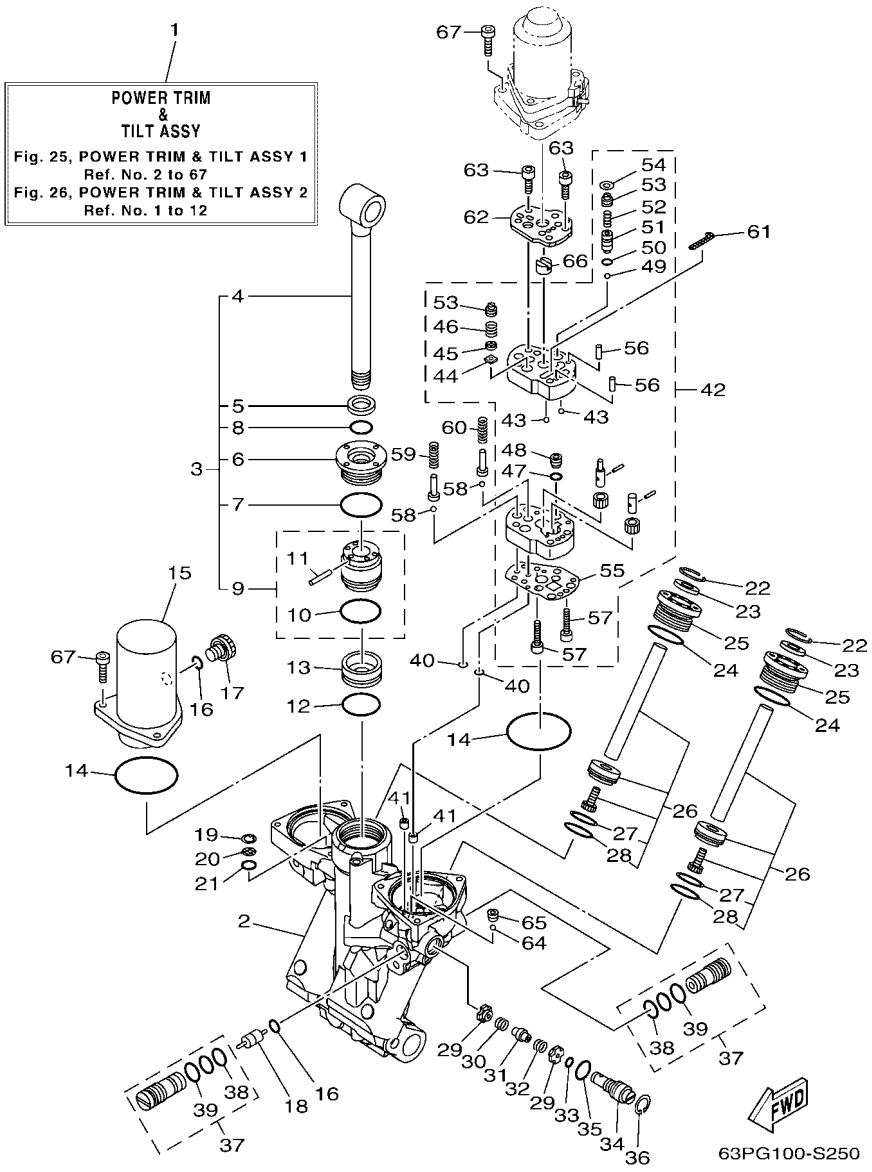

FIG. 25 POWER TRIM & TILT ASSY 1 — PUISSANCE PARER ET INCLINER 1

REF. NO.	PART NO. N° PIECES	DESCRIPTION DESCRIPTION	63PG	64PG				REMARKS REMARQUES
55	63P–4384G–20	.SEAL, RELIEF VALVE .JOINT	1	1				
56	93604–10011	.PIN, DOWEL .CLAVETTE	2	2				
57	91312–04020	.BOLT, HEXAGON SOCKET HEAD .BOULON, TETE HEXAGONALE CREUSE	2	2				
58	93501–08001	BALL BILLE	2	2				
59	63P–43857–10	SPRING, ABSORBER VALVE RESSORT	1	1				
60	63P–4385H–10	SPRING, SEAL RESSORT	1	1				
61	6CJ–43816–00	FILTER 1 FILTRE 1	1	1				
62	63P–4381J–10	PLATE PLAQUE	1	1				
63	91312–05035	BOLT, HEXAGON SOCKET HEAD BOULON, TETE HEXAGONALE CREUSE	4	4				
64	93505–32038	BALL BILLE	1	1				
65	61A–43878–00	BOLT, SOCKET BOULON	1	1				
66	69J–43831–00	CONNECTOR, SHAFT RACCORD	1	1				
67	91380–06025	BOLT BOULON	6	6				

FIG. 26 POWER TRIM & TILT ASSY 2 — PUISSANCE PARER ET INCLINER 2

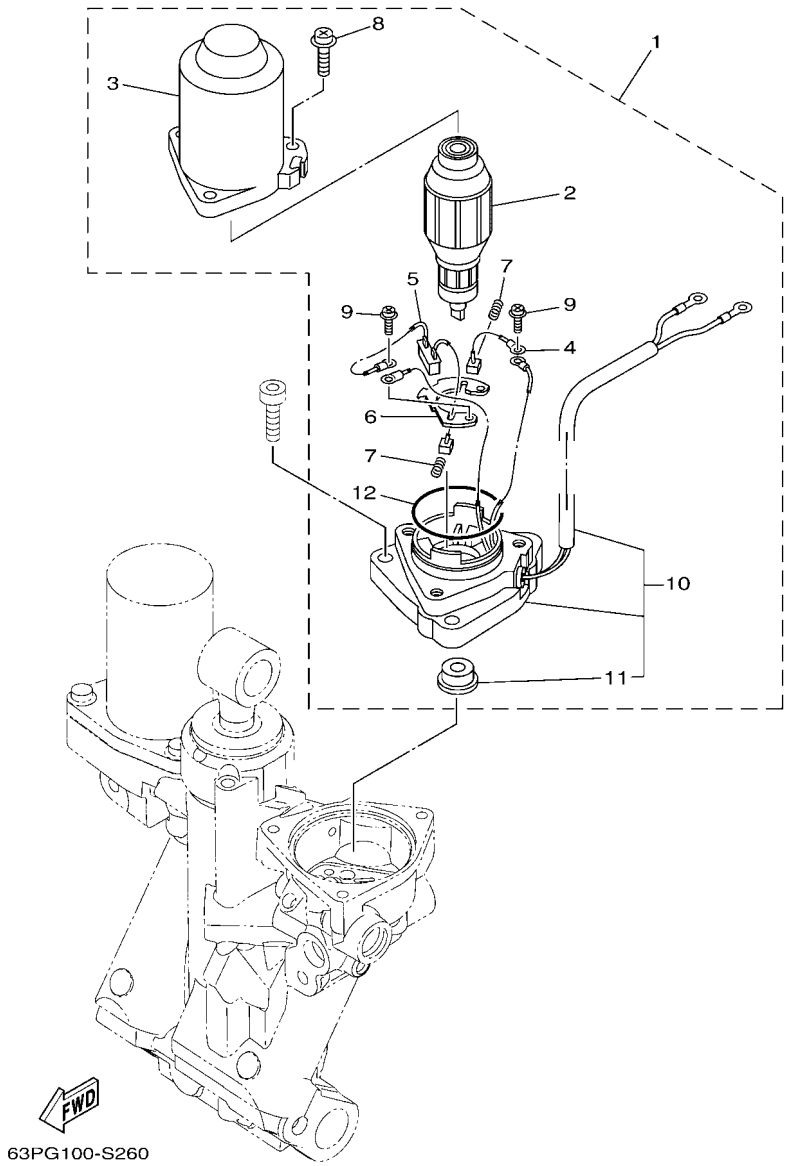

REF. NO.	PART NO. N° PIECES	DESCRIPTION DESCRIPTION	63PG	64PG				REMARKS REMARQUES
1	63P–43880–22	MOTOR ASSY MOTEUR (ENS.)	1	1				
2	6EK–43805–00	.ARMATURE ASSY .INDUIT (ENS.)	1	1				
3	6EK–43804–11	.STATOR ASSY .STATOR (ENS.)	1	1				
4	6EK–43892–00	.BRUSH 2 .BALAI 2	1	1				
5	63P–82181–20	.CIRCUIT BREAKER COMP. .RUPTEUR COMPLET	1	1				
6	6EK–4380F–00	.PLATE, BRUSH HOLDER .PLAQUE	1	1				
7	62X–4386K–00	.SPRING, BRUSH .RESSORT, BALAI	2	2				
8	63P–43879–10	.SCREW, WITH WASHER .VIS, AVEC RONDELLE	3	3				
9	97602–04316	.SCREW, PAN HEAD WITH WASHER .VIS	2	2				
10	63P–43881–21	.FRAME, END .BATI	1	1				
11	6EK–43882–00	..OIL SEAL ..JOINT SPI	1	1				
12	93210–554A9	.O-RING .JOINT TORIQUE	1	1				

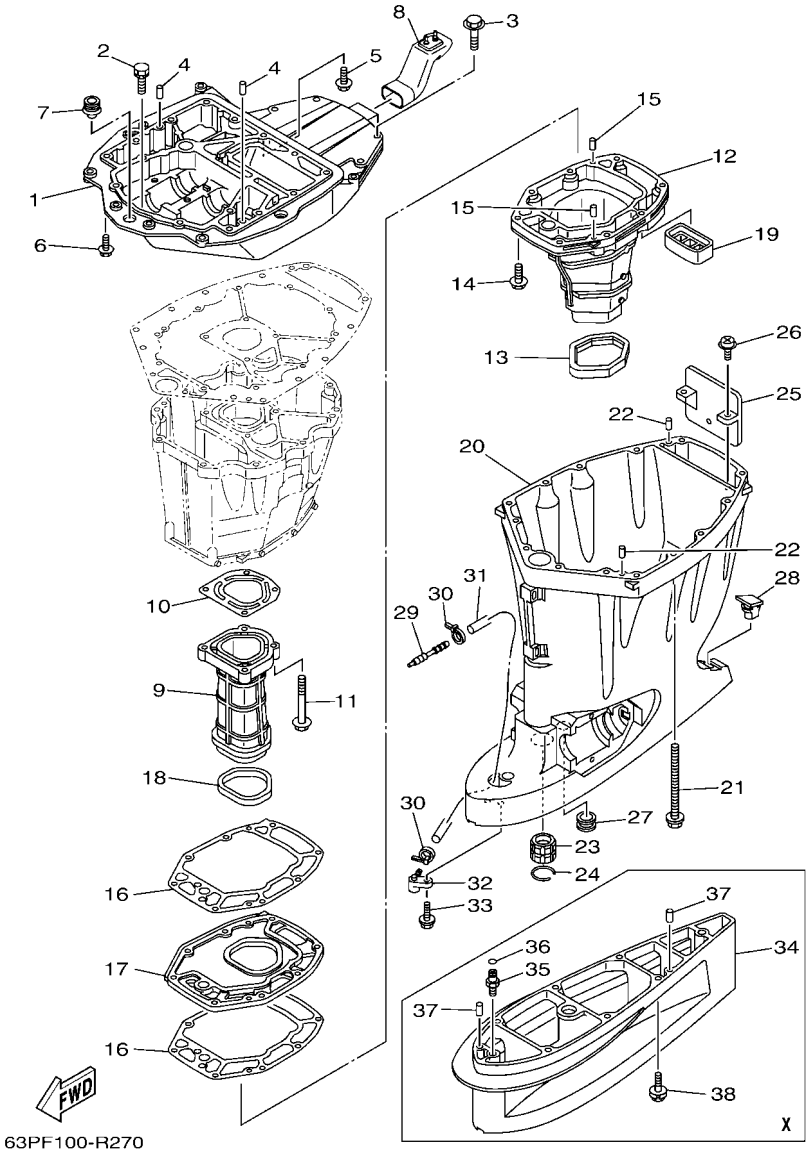

63PF100-R270

FIG. 27 UPPER CASING — FOURREAU

REF. NO.	PART NO. N° PIECES	DESCRIPTION DESCRIPTION	63PG	64PG				REMARKS REMARQUES
1	63P–41137–05	GUIDE, EXHAUST COLLECTEUR D'ECHAPPEMENT	1	1				
2	90119–08102	BOLT, WITH WASHER BOULON, AVEC RONDELLE	2	2				
3	97575–10545	BOLT, WITH WASHER VIS HEXAGONAL AVC RONDELLE	4	4				
4	93608–16M16	PIN, DOWEL AXE	2	2				
5	90119–08M58	BOLT, WITH WASHER BOULON, AVEC RONDELLE	3	3				
6	97575–10535	BOLT, WITH WASHER VIS HEXAGONAL AVC RONDELLE	4	4				
7	6E5–42724–00	GROMMET PASSE-FIL	1	1				
8	6DA–42769–00	SEAL, RUBBER BOURRELET, CAOUTCHOUC	1	1				
9	63P–41131–02	MANIFOLD, EXT. 1 PIPE D'ECHAPPEMENT	1	1				
10	63P–41133–A0	GASKET, EXHAUST MANIFOLD 1 JOINT, PIPE D'ECHAPPEMENT	1	1				
11	97575–08560	BOLT, WITH WASHER VIS HEXAGONAL AVC RONDELLE	4	4				
12	63P–14711–02	MUFFLER 1 POT D'ECHAPPEMENT 1	1	1				
13	69J–45123–00	GASKET, MUFFLER JOINT, POT DE DETENTE	1	1				
14	97575–08535	BOLT, WITH WASHER VIS HEXAGONAL AVC RONDELLE	8	8				
15	93606–19M23	PIN, DOWEL GOUPILLE	2	2				
16	63P–41134–A1	GASKET, EXHAUST MANIFOLD JOINT, PIPE D'ECHAPPEMENT	2	2				
17	63P–45181–02	PLATE PLAQUETTE	1	1				
18	63P–41138–00	SEAL, EXT. 1 JOINT DE GROUPE 1	1	1				
19	69J–45127–00	SEAL JOINT	1	1				
20	63P–45111–00–8D	CASING, UPPER FOURREAU	1	1				
21	90119–10007	BOLT, WITH WASHER BOULON, AVEC RONDELLE	8	8				
22	93608–16M16	PIN, DOWEL AXE	2	2				
23	6E5–45318–00	BUSHING, DRIVE SHAFT DOUILLE, ARBRE MOTEUR	1	1				
24	93420–36M01	CIRCLIP CIRCLIP, TYPE S	1	1				
25	69J–14624–01	COVER, EXHAUST CACHE D'ECHAPPEMENT	1	1				
26	97980–06216	SCREW, WITH WASHER VIS, AVEC RONDELLE	2	2				
27	6E5–44366–00	DAMPER, WATER SEAL 2 JOINT, TUBE D'EAU 2	1	1				

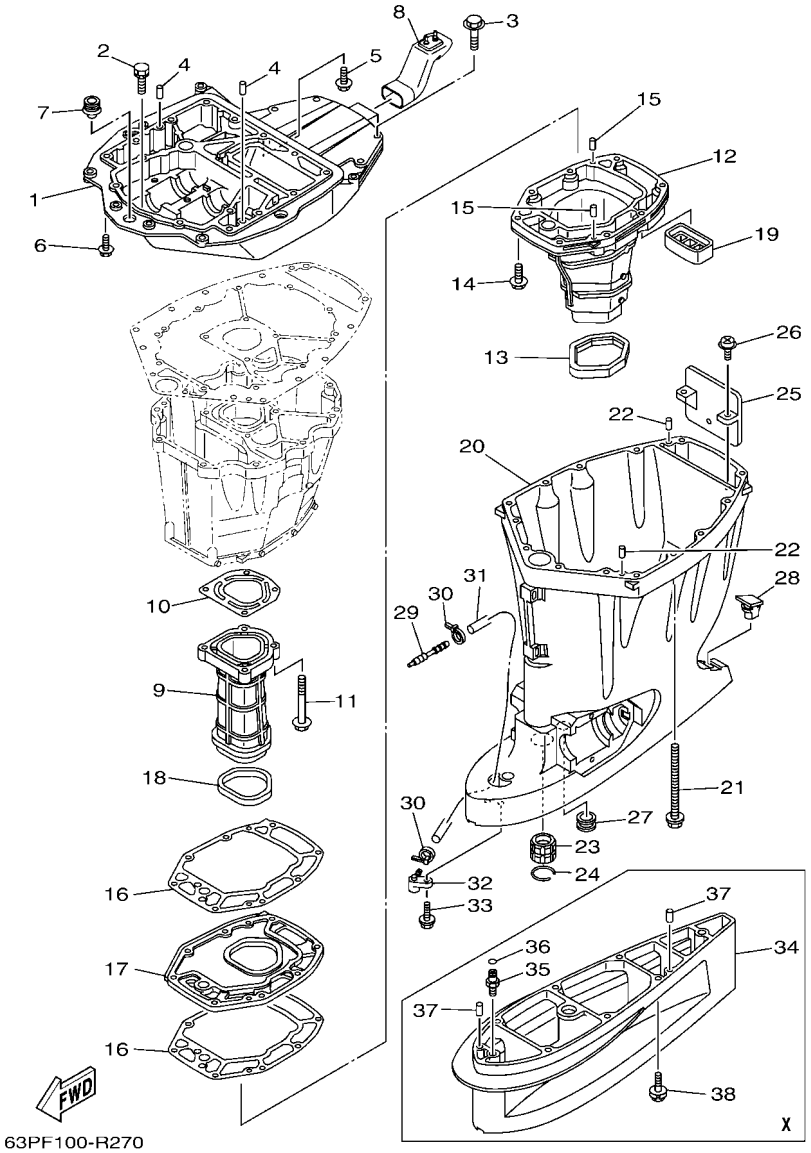

63PF100-R270

FIG. 27 UPPER CASING FOURREAU

REF. NO.	PART NO. N° PIECES	DESCRIPTION DESCRIPTION	63PG	64PG				REMARKS REMARQUES
28	6C5–45155–00	CAP CAPUCHON	1	1				
29	6E5–83558–00	END, NIPPLE RACCORD DE NIPPLE	1	1				
30	90465–11M10	CLAMP BRIDE	2	2				
31	90445–070F1	HOSE (L950) DURITE (L950)	1	1				
32	63P–45379–00	NIPPLE, HOSE RACCORD D'ESSENCE	1	1				
33	90119–06M18	BOLT, WITH WASHER BOULON, AVEC RONDELLE	1	1				
34	63P–45211–00–8D	EXTENSION EXTENSION	1	1				X(25.3") X(25.3")
35	63P–45378–00	NIPPLE, HOSE RACCORD, TUYAU	1	1				X(25.3") X(25.3")
36	93210–07003	O-RING JOINT TORIQUE	1	1				X(25.3") X(25.3")
37	93608–16M16	PIN, DOWEL AXE	2	2				X(25.3") X(25.3")
38	97595–10645	BOLT, WITH WASHER VIS HEXAGONAL AVC RONDELLE	6	6				X(25.3") X(25.3")

FIG. 28 OIL PAN — VENTILATEUR D'HUILE

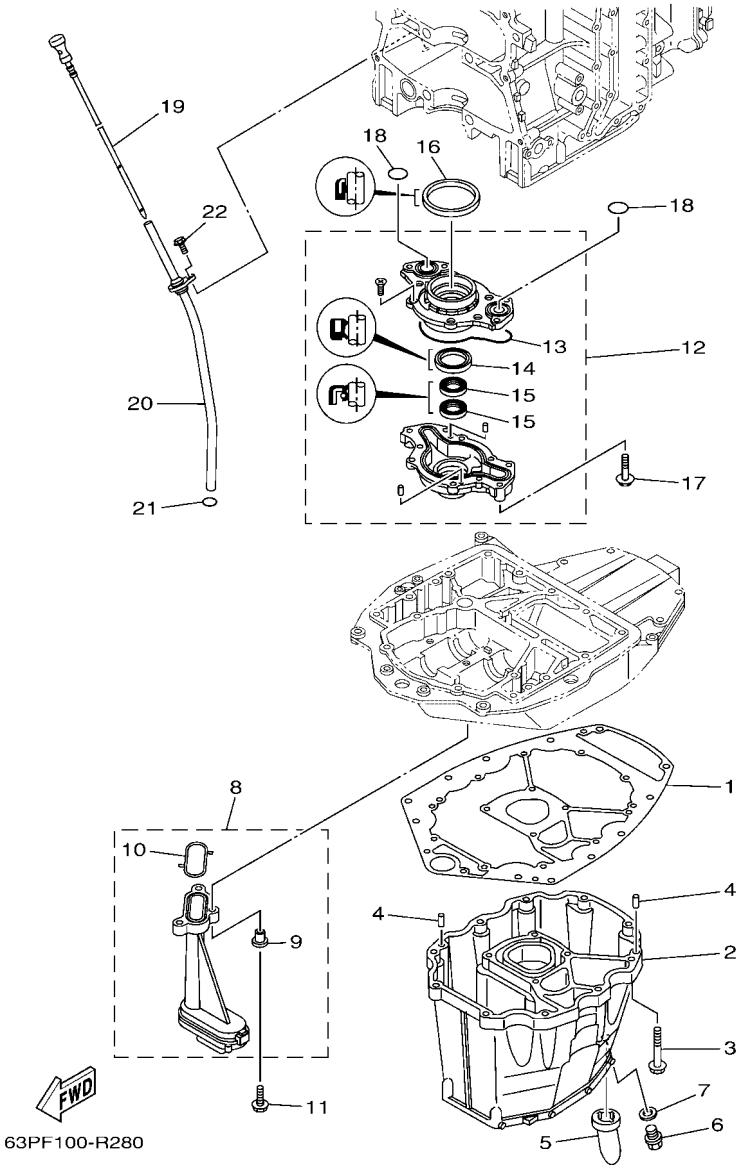

REF. NO.	PART NO. N° PIECES	DESCRIPTION DESCRIPTION	63PG	64PG				REMARKS REMARQUES
1	63P–15312–02	GASKET, OIL PAN JOINT DE VENTILATEUR D'HUILE	1	1				
2	63P–15311–11	OIL PAN VENTILATEUR D'HUILE	1	1				
3	97575–08535	BOLT, WITH WASHER VIS HEXAGONAL AVC RONDELLE	10	10				
4	93608–16M16	PIN, DOWEL AXE	2	2				
5	63P–15316–00	DAMPER 1 AMORTISSEUR 1	1	1				
6	90340–14M06	PLUG, STRAIGHT SCREW PLOT, FILETE DROIT	1	1				
7	90430–14M09	GASKET JOINT	1	1				
8	63P–13411–00	STRAINER, OIL FILTRE, HUILE	1	1				
9	90387–06263	.COLLAR .COLLERETTE	3	3				
10	63P–13415–00	.SEAL, OIL STRAINER .JOINT, FILTRE A HUILE	1	1				
11	95812–06025	BOLT, FLANGE BOULON	3	3				
12	63P–13300–02	OIL PUMP ASSY POMPE A HUILE COMPLETE	1	1				
13	63P–13329–00	.GASKET, PUMP COVER .JOINT, COUVERCLE DE POMPE	1	1				
14	6AW–13119–00	.OIL SEAL .JOINT SPY	1	1				
15	69J–13631–00	.OIL SEAL .JOINT SPY	2	2				
16	69J–11355–00	SEAL, CYLINDER 1 JOINT, SPY CYLINDRE	1	1				
17	97595–06540	BOLT, WITH WASHER VIS HEXAGONAL AVC RONDELLE	4	4				
18	93210–25552	O-RING JOINT TORIQUE	2	2				
19	63P–15362–10	PLUG, OIL LEVEL PLOT, NIVEAU D'HUILE	1	1				
20	63P–15377–10	GUIDE, INLET GUIDE D'ADMISSION	1	1				
21	93210–19MJ3	O-RING JOINT TORIQUE	1	1				
22	95895–06016	BOLT, FLANGE BOULON	1	1				

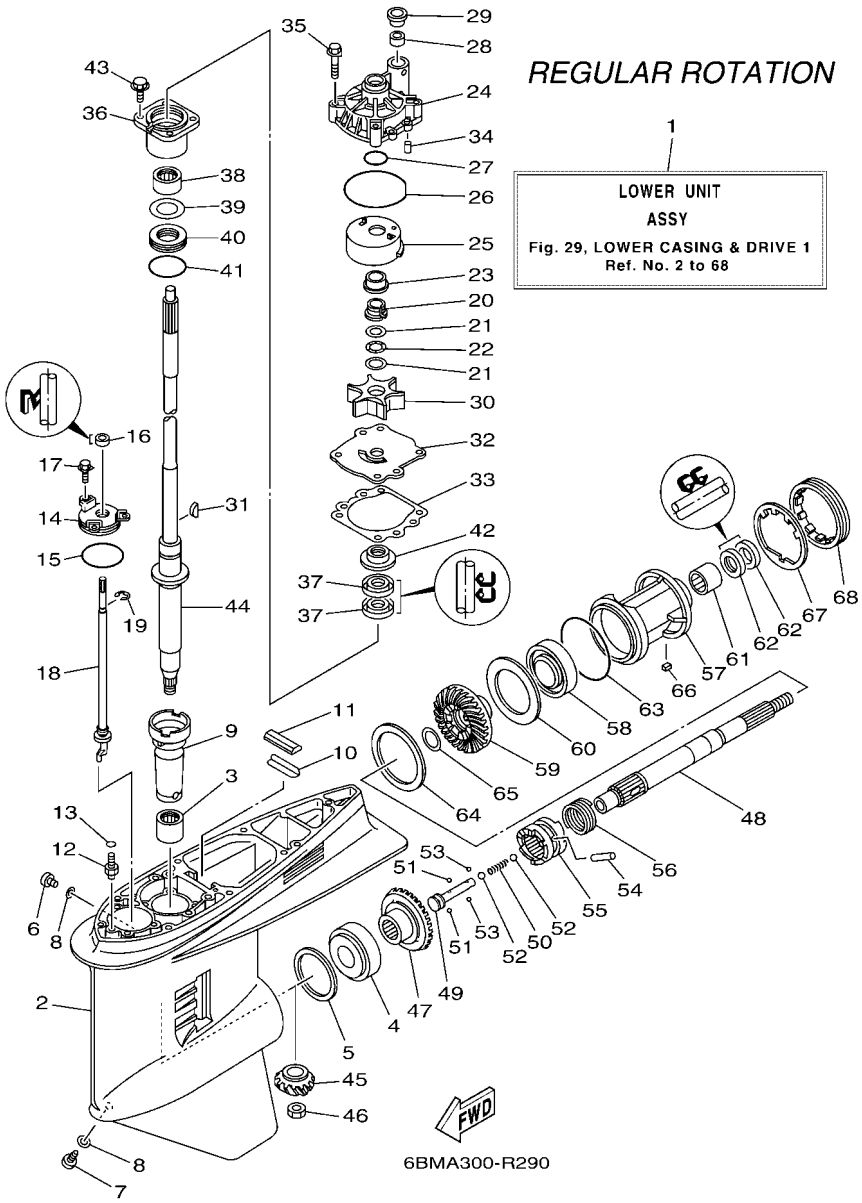

FIG. 29 LOWER CASING & DRIVE 1 — BOITIER D'HELICE TRANSMISSION1

REF. NO.	PART NO. N° PIECES	DESCRIPTION DESCRIPTION	63PG	64PG				REMARKS REMARQUES
1	63P–45300–04–8D	LOWER UNIT ASSY UNITE INFERIEURE (ENS.)	1					L(20.3"),RH L(20.3"),RH
	63P–45300–14–8D	LOWER UNIT ASSY UNITE INFERIEURE (ENS.)	1					X(25.3"),RH X(25.3"),RH
2	6J9–45301–07–8D	CASING, LOWER BEQUILLE	1					
3	93311–928U5	BEARING ROULEMENT	1					
4	93332–000V3	BEARING ROULEMENT	1					
5	6G5–45567–01	SHIM (T:0.10MM) CALE (T:0.10MM)	1					UR UR
	6G5–45567–10	SHIM (T:0.12MM) CALE (T:0.12MM)	1					UR UR
	6G5–45567–20	SHIM (T:0.15MM) CALE (T:0.15MM)	1					UR UR
	6G5–45567–30	SHIM (T:0.18MM) CALE (T:0.18MM)	1					UR UR
	6G5–45567–40	SHIM (T:0.30MM) CALE (T:0.30MM)	1					UR UR
	6G5–45567–50	SHIM (T:0.40MM) CALE (T:0.40MM)	1					UR UR
	6G5–45567–60	SHIM (T:0.50MM) CALE (T:0.50MM)	1					UR UR
6	90340–08002	PLUG, STRAIGHT SCREW PLOT, FILETE DROIT	1					
7	688–45341–10	PLUG, DRAIN BOUCHON DE VIDANGE	1					
8	90430–08003	GASKET JOINT	2					
9	6G5–45536–01	SLEEVE, DRIVE SHAFT MANCHON, ARBRE MOTEUR	1					
10	663–45376–00	GUIDE, SEAL DAMPER BUTEE, JOINT CAOUTCHOUC	1					
11	688–45375–00	DAMPER, SEAL BOURRELET, CAOUTCHOUC	1					
12	63P–45378–00	NIPPLE, HOSE RACCORD, TUYAU	1					
13	93210–07003	O-RING JOINT TORIQUE	1					
14	6E5–45321–00	PLATE PLAQUETTE	1					
15	93210–58144	O-RING JOINT TORIQUE	1					
16	93106–09014	OIL SEAL JOINT SPY	1					
17	90119–06M10	BOLT, WITH WASHER BOULON, AVEC RONDELLE	3					
18	63P–44150–01	SHIFT CAM ASSY CAME D'INVERSION	1					L(20.3"),RH L(20.3"),RH
	63P–44150–11	SHIFT CAM ASSY CAME D'INVERSION	1					X(25.3"),RH X(25.3"),RH
19	99001–08600	CIRCLIP CIRCLIP	1					

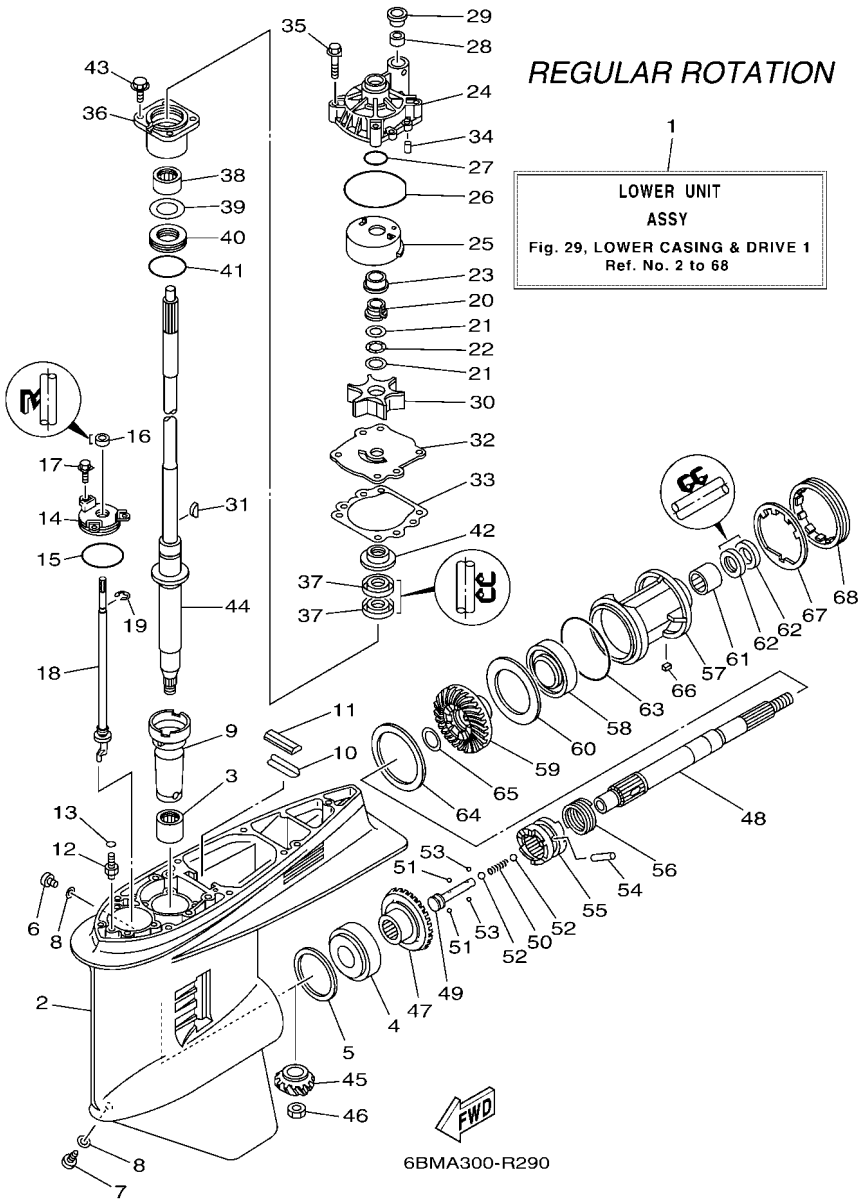

FIG. 29 LOWER CASING & DRIVE 1 — BOITIER D'HELICE TRANSMISSION1

REF. NO.	PART NO. N° PIECES	DESCRIPTION DESCRIPTION	63PG	64PG				REMARKS REMARQUES
20	61A–45538–00	SPACER 1 ENTRETOISE	1					
21	90201–22M01	WASHER, PLATE RONDELLE, PLATE	2					
22	90206–22M19	WASHER, WAVE RONDELLE, ONDULEE	1					
23	61A–45527–00	COLLAR, DRIVE SHAFT ENTRETOISE	1					
24	61A–44311–01	HOUSING, WATER PUMP CORPS, POMPE A EAU	1					
25	61A–44322–02	INSERT, CARTRIDGE CUVETTE	1					
26	93210–86M38	O-RING JOINT TORIQUE	1					
27	93210–37160	O-RING JOINT TORIQUE	1					
28	6E5–44365–00	DAMPER, WATER SEAL 1 JOINT, TUBE D'EAU 1	1					
29	6E5–44312–00	COVER, WATER PUMP HOUSING COUVERCLE	1					
30	6E5–44352–01	IMPELLER TURBINE	1					
31	90280–04M05	KEY, WOODRUFF CLAVETTE, DEMI-LUNE	1					
32	6G5–44323–01	OUTER PLATE, CARTRIDGE PLAQUE EXTERIEURE	1					
33	6E5–44315–A0	GASKET, WATER PUMP JOINT, POMPE A EAU	1					
34	93606–12019	PIN, DOWEL GOUPILLE	2					
35	90119–08M14	BOLT, WITH WASHER BOULON, AVEC RONDELLE	4					
36	6E5–45331–00–9S	HOUSING, BEARING FLASQUE, ROULEMENT	1					
37	93101–28M16	OIL SEAL JOINT SPY	2					
38	93317–330U2	BEARING ROULEMENT	1					
39	6E5–45587–01	SHIM (T:0.10MM) CALE (T:0.10MM)	1					UR UR
	6E5–45587–10	SHIM (T:0.12MM) CALE (T:0.12MM)	1					UR UR
	6E5–45587–20	SHIM (T:0.15MM) CALE (T:0.15MM)	1					UR UR
	6E5–45587–30	SHIM (T:0.18MM) CALE (T:0.18MM)	1					UR UR
	6E5–45587–40	SHIM (T:0.30MM) CALE (T:0.30MM)	1					UR UR
	6E5–45587–50	SHIM (T:0.40MM) CALE (T:0.40MM)	1					UR UR
	6E5–45587–60	SHIM (T:0.50MM) CALE (T:0.50MM)	1					UR UR
40	93341–930V2	BEARING CERVEAUX DE DIRECTION	1					

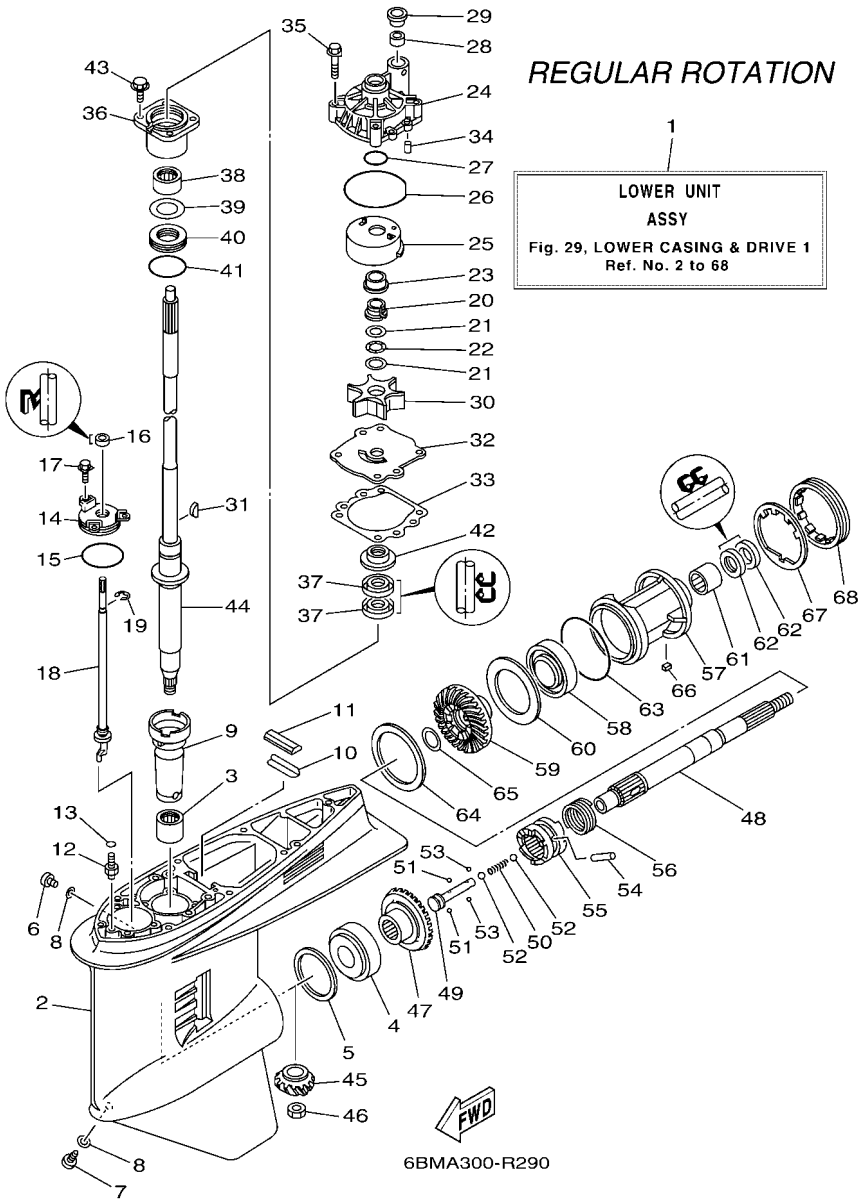

FIG. 29 LOWER CASING & DRIVE 1 — BOITIER D'HELICE TRANSMISSION1

REF. NO.	PART NO. N° PIECES	DESCRIPTION DESCRIPTION	63PG	64PG				REMARKS REMARQUES
41	93210–55M14	O-RING JOINT TORIQUE	1					
42	6E5–45344–00	COVER, OIL SEAL FLASQE, JOINT D'HUILE	1					
43	97595–08525	BOLT, WITH WASHER VIS HEXAGONAL AVC RONDELLE	4					
44	63P–45501–01	DRIVE SHAFT COMP. ARBRE MOTEUR COMP.	1					L(20.3") L(20.3")
	63P–45501–11	DRIVE SHAFT COMP. ARBRE MOTEUR COMP.	1					X(25.3") X(25.3")
45	63P–45551–00	PINION (14T) PIGNON D'ATTAQUE (14D)	1					
46	90170–16M01	NUT ECROU	1					
47	6EH–45560–00	GEAR 1 (28T) PIGNON 1 (28T)	1					
48	6J9–45611–01	SHAFT, PROPELLER ARBRE, HELICE	1					
49	6E5–45634–02	SLIDE, SHIFT CONTRE-POUSSOIR	1					
50	90501–16M37	SPRING, COMPRESSION RESSORT, COMPRESSION	1					
51	93507–32009	BALL BILLE	2					
52	93511–32017	BALL BILLES	2					
53	93503–16003	BALL BILLES	2					
54	90250–08M07	PIN, STRAIGHT GOUPILLE, DROITE	1					
55	6DA–45631–00	CLUTCH, DOG CRABOT	1					
56	6E5–45633–01	RING, CROSS PIN JONC, GOUPILLE CRABOT	1					
57	6J9–45332–00–CA	HOUSING, BEARING FLASQUE, ROULEMENT	1					
58	93306–209U0	BEARING ROULEMENT	1					
59	6EH–45571–00	GEAR 2 (28T) PIGNON 2 (28T)	1					
60	6G5–45576–10	WASHER, THRUST 2 RONDELLE DE CALAGE 2	1					
61	93315–43061	BEARING ROULEMENT	1					
62	93101–30M17	OIL SEAL JOINT SPY	2					
63	93210–97M55	O-RING JOINT TORIQUE	1					
64	6G5–45577–02	SHIM (T:0.10MM) CALE (T:0.10MM)	1					UR UR
	6G5–45577–10	SHIM (T:0.12MM) CALE (T:0.12MM)	1					UR UR
	6G5–45577–20	SHIM (T:0.15MM) CALE (T:0.15MM)	1					UR UR

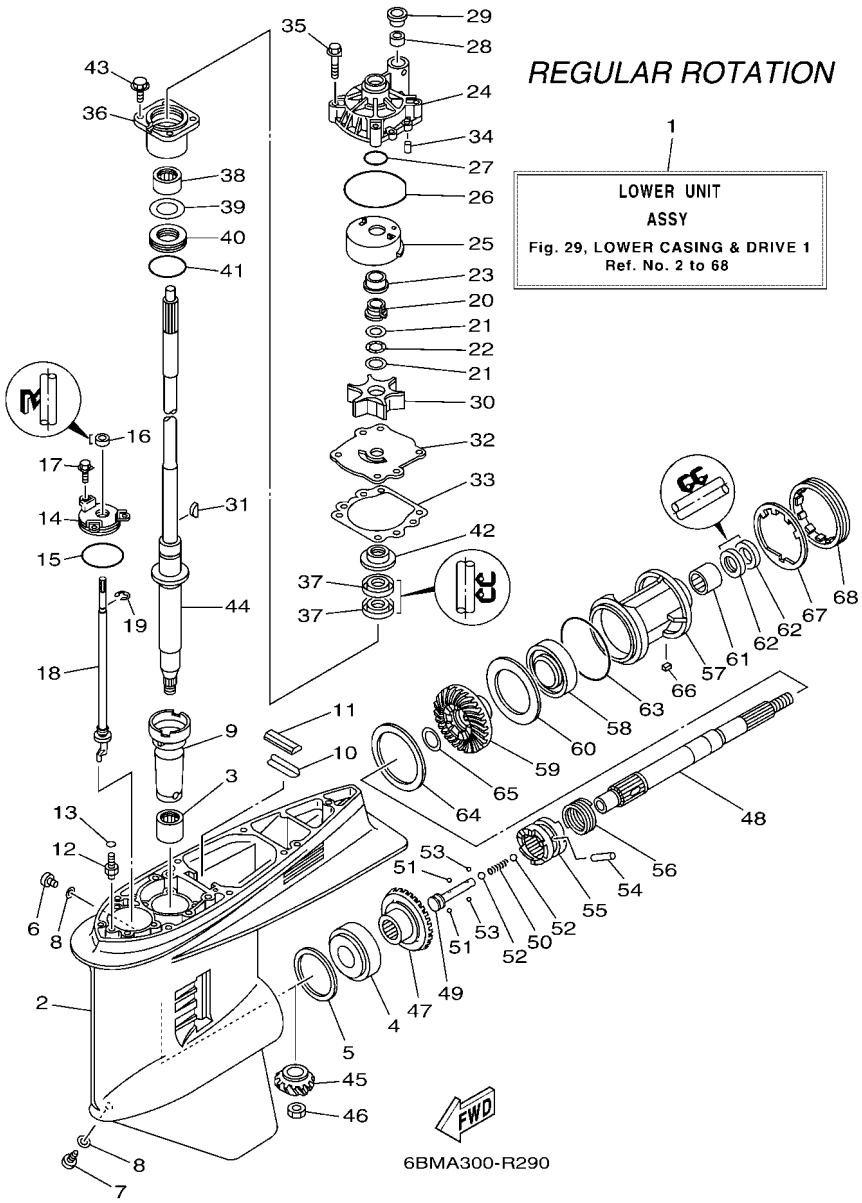

FIG. 29 LOWER CASING & DRIVE 1 — BOITIER D'HELICE TRANSMISSION1

REF. NO.	PART NO. N° PIECES	DESCRIPTION DESCRIPTION	63PG	64PG				REMARKS REMARQUES
64	6G5–45577–30	SHIM (T:0.18MM) CALE (T:0.18MM)	1					UR UR
	6G5–45577–40	SHIM (T:0.30MM) CALE (T:0.30MM)	1					UR UR
	6G5–45577–50	SHIM (T:0.40MM) CALE (T:0.40MM)	1					UR UR
	6G5–45577–60	SHIM (T:0.50MM) CALE (T:0.50MM)	1					UR UR
65	90201–30M92	WASHER, PLATE RONDELLE, PLATE	1					
66	90282–04M00	KEY, STRAIGHT CLAVETTE, DROITE	1					
67	6G5–45383–01	WASHER, CLAW FREIN D'ECROU	1					
68	6G5–45384–02	NUT ECROU	1					

FIG. 30 LOWER CASING & DRIVE 2 — BOITIER D'HELICE TRANSMISSION2

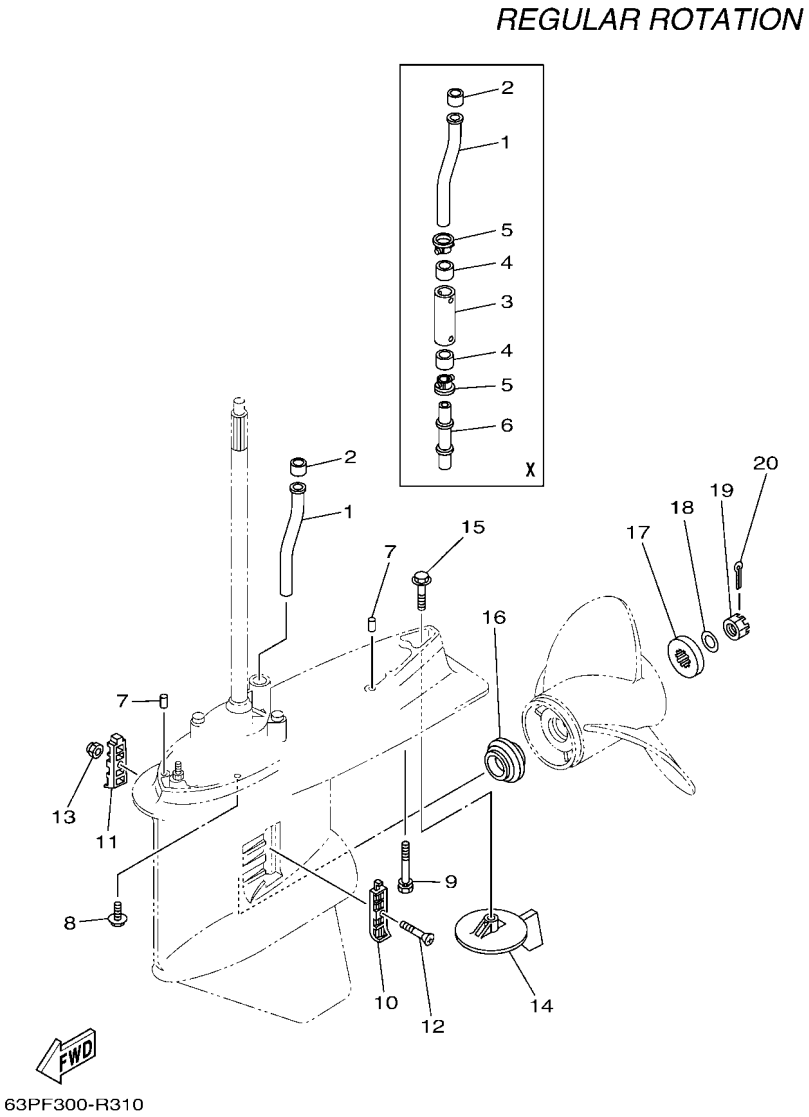

REF. NO.	PART NO. N° PIECES	DESCRIPTION DESCRIPTION	63PG	64PG				REMARKS REMARQUES
1	63P–44361–00	TUBE, WATER 1 TUBE D'EAU 1	1					
2	6E5–44365–00	DAMPER, WATER SEAL 1 JOINT, TUBE D'EAU 1	1					
3	63P–44362–00	TUBE, WATER 2 TUBE D'EAU 2	1					X(25.3") X(25.3")
4	6E5–44365–00	DAMPER, WATER SEAL 1 JOINT, TUBE D'EAU 1	2					X(25.3") X(25.3")
5	6E5–44312–00	COVER, WATER PUMP HOUSING COUVERCLE	2					X(25.3") X(25.3")
6	63P–44363–00	TUBE, WATER 3 TUBE D'EAU 3	1					X(25.3") X(25.3")
7	93608–16M16	PIN, DOWEL AXE	2					
8	97595–10645	BOLT, WITH WASHER VIS HEXAGONAL AVC RONDELLE	6					
9	90119–10MA2	BOLT, WITH WASHER BOULON, AVEC RONDELLE	1					L(20.3") L(20.3")
	90119–10008	BOLT, WITH WASHER BOULON, AVEC RONDELLE	1					X(25.3") X(25.3")
10	6J9–45214–00	COVER, WATER INLET 1 GRILLE, ENTREE D'EAU 1	1					
11	6J9–45215–00	COVER, WATER INLET 2 GRILLE, ENTREE D'EAU 2	1					
12	90152–05M08	SCREW, COUNTERSUNK VIS, TETE NOYEE	1					
13	90185–05002	NUT, NYLON ECROU,AUTO-BLOQUANT	1					
14	6J9–45371–01	TAB-TRIM ANODE DERIVE	1					
15	90105–10M00	BOLT, FLANGE BOULON, A COLLERETTE	1					
16	63P–45987–00	SPACER 1 ENTRETOISE 1	1					
17	688–45997–01	SPACER 2 ENTRETOISE 2	1					
18	92990–18200	WASHER RONDELLE, PLATE	1					
19	90171–18M04	NUT, CASTLE ECROU, CRENELE	1					
20	91490–40030	PIN. COTTER GOUPILLE	1					

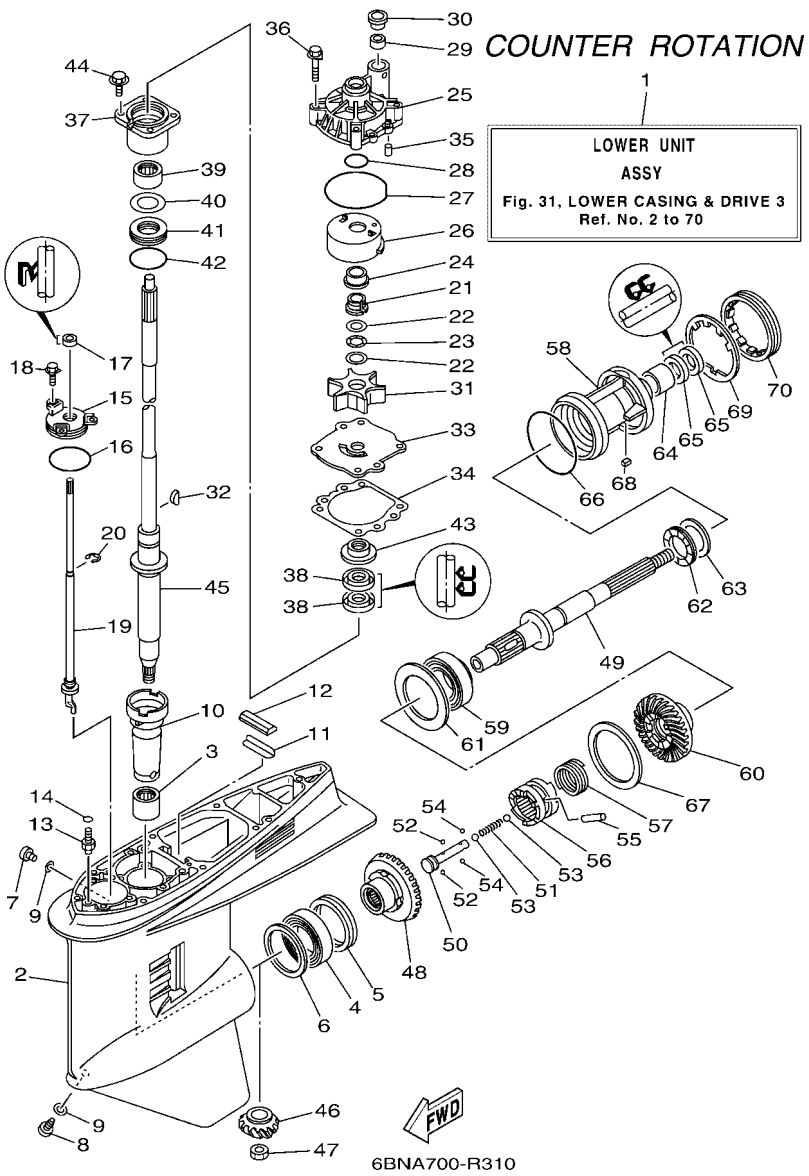

FIG. 31 LOWER CASING & DRIVE 3 — BOITIER D'HELICE TRANSMISSION3

REF. NO.	PART NO. N° PIECES	DESCRIPTION DESCRIPTION	63PG	64PG				REMARKS REMARQUES
1	64P–45300–03–8D	LOWER UNIT ASSY UNITE INFERIEURE (ENS.)		1				L(20.3"),LH L(20.3"),LH
	64P–45300–13–8D	LOWER UNIT ASSY UNITE INFERIEURE (ENS.)		1				X(25.3"),LH X(25.3"),LH
2	6J9–45301–07–8D	CASING, LOWER BEQUILLE		1				
3	93311–928U5	BEARING ROULEMENT		1				
4	93390–000U2	BEARING ROULEMENT		1				
5	93341–465U4	BEARING CERVEAUX DE DIRECTION		1				
6	6G5–45567–01	SHIM (T:0.10MM) CALE (T:0.10MM)		1				UR UR
	6G5–45567–10	SHIM (T:0.12MM) CALE (T:0.12MM)		1				UR UR
	6G5–45567–20	SHIM (T:0.15MM) CALE (T:0.15MM)		1				UR UR
	6G5–45567–30	SHIM (T:0.18MM) CALE (T:0.18MM)		1				UR UR
	6G5–45567–40	SHIM (T:0.30MM) CALE (T:0.30MM)		1				UR UR
	6G5–45567–50	SHIM (T:0.40MM) CALE (T:0.40MM)		1				UR UR
	6G5–45567–60	SHIM (T:0.50MM) CALE (T:0.50MM)		1				UR UR
7	90340–08002	PLUG, STRAIGHT SCREW PLOT, FILETE DROIT		1				
8	688–45341–10	PLUG, DRAIN BOUCHON DE VIDANGE		1				
9	90430–08003	GASKET JOINT		2				
10	6G5–45536–01	SLEEVE, DRIVE SHAFT MANCHON, ARBRE MOTEUR		1				
11	663–45376–00	GUIDE, SEAL DAMPER BUTEE, JOINT CAOUTCHOUC		1				
12	688–45375–00	DAMPER, SEAL BOURRELET, CAOUTCHOUC		1				
13	63P–45378–00	NIPPLE, HOSE RACCORD, TUYAU		1				
14	93210–07003	O-RING JOINT TORIQUE		1				
15	6E5–45321–00	PLATE PLAQUETTE		1				
16	93210–58144	O-RING JOINT TORIQUE		1				
17	93106–09014	OIL SEAL JOINT SPY		1				
18	90119–06M10	BOLT, WITH WASHER BOULON, AVEC RONDELLE		3				
19	64P–44150–01	SHIFT CAM ASSY CAME D'INVERSION		1				L(20.3"),LH L(20.3"),LH
	64P–44150–11	SHIFT CAM ASSY CAME D'INVERSION		1				X(25.3"),LH X(25.3"),LH

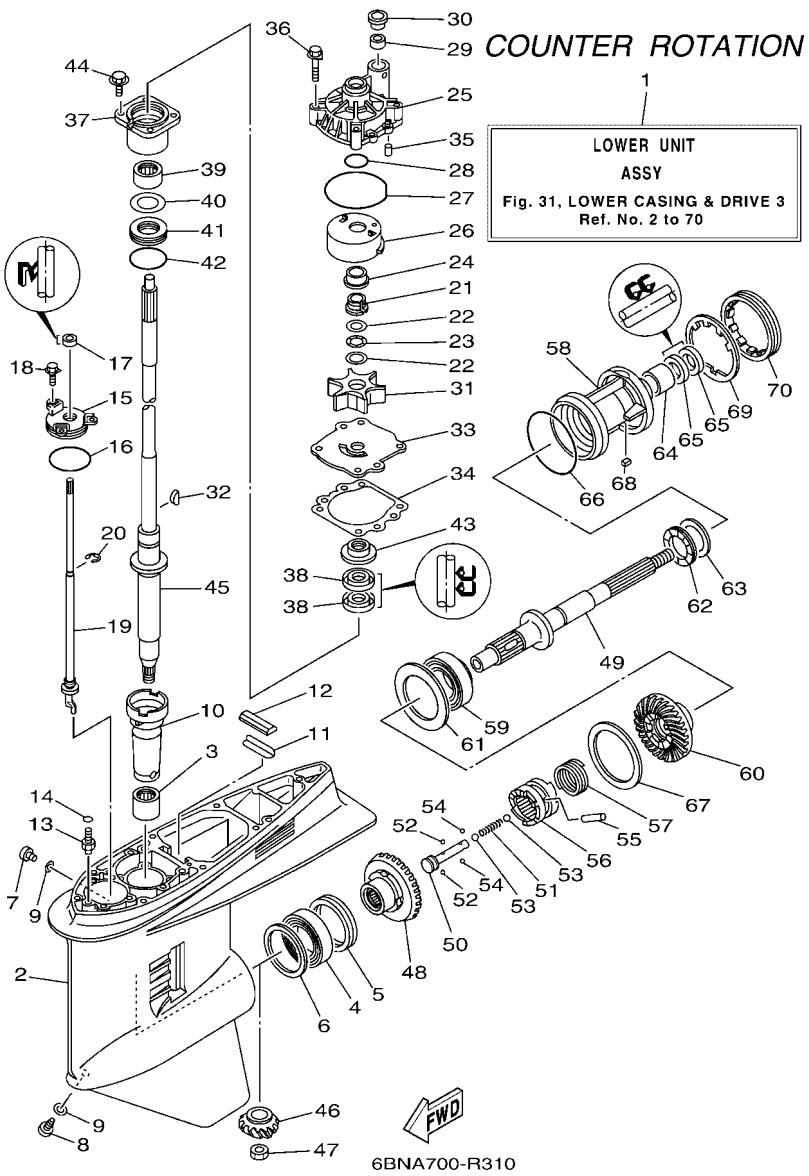

FIG. 31 LOWER CASING & DRIVE 3 — BOITIER D'HELICE TRANSMISSION3

REF. NO.	PART NO. N° PIECES	DESCRIPTION DESCRIPTION	63PG	64PG				REMARKS REMARQUES
20	99001–08600	CIRCLIP CIRCLIP		1				
21	61A–45538–00	SPACER 1 ENTRETOISE		1				
22	90201–22M01	WASHER, PLATE RONDELLE, PLATE		2				
23	90206–22M19	WASHER, WAVE RONDELLE, ONDULEE		1				
24	61A–45527–00	COLLAR, DRIVE SHAFT ENTRETOISE		1				
25	61A–44311–01	HOUSING, WATER PUMP CORPS, POMPE A EAU		1				
26	61A–44322–02	INSERT, CARTRIDGE CUVETTE		1				
27	93210–86M38	O-RING JOINT TORIQUE		1				
28	93210–37160	O-RING JOINT TORIQUE		1				
29	6E5–44365–00	DAMPER, WATER SEAL 1 JOINT, TUBE D'EAU 1		1				
30	6E5–44312–00	COVER, WATER PUMP HOUSING COUVERCLE		1				
31	6E5–44352–01	IMPELLER TURBINE		1				
32	90280–04M05	KEY, WOODRUFF CLAVETTE, DEMI-LUNE		1				
33	6G5–44323–01	OUTER PLATE, CARTRIDGE PLAQUE EXTERIEURE		1				
34	6E5–44315–A0	GASKET, WATER PUMP JOINT, POMPE A EAU		1				
35	93606–12019	PIN, DOWEL GOUPILLE		2				
36	90119–08M14	BOLT, WITH WASHER BOULON, AVEC RONDELLE		4				
37	6E5–45331–00–9S	HOUSING, BEARING FLASQUE, ROULEMENT		1				
38	93101–28M16	OIL SEAL JOINT SPY		2				
39	93317–330U2	BEARING ROULEMENT		1				
40	6E5–45587–01	SHIM (T:0.10MM) CALE (T:0.10MM)		1				UR UR
	6E5–45587–10	SHIM (T:0.12MM) CALE (T:0.12MM)		1				UR UR
	6E5–45587–20	SHIM (T:0.15MM) CALE (T:0.15MM)		1				UR UR
	6E5–45587–30	SHIM (T:0.18MM) CALE (T:0.18MM)		1				UR UR
	6E5–45587–40	SHIM (T:0.30MM) CALE (T:0.30MM)		1				UR UR
	6E5–45587–50	SHIM (T:0.40MM) CALE (T:0.40MM)		1				UR UR
	6E5–45587–60	SHIM (T:0.50MM) CALE (T:0.50MM)		1				UR UR

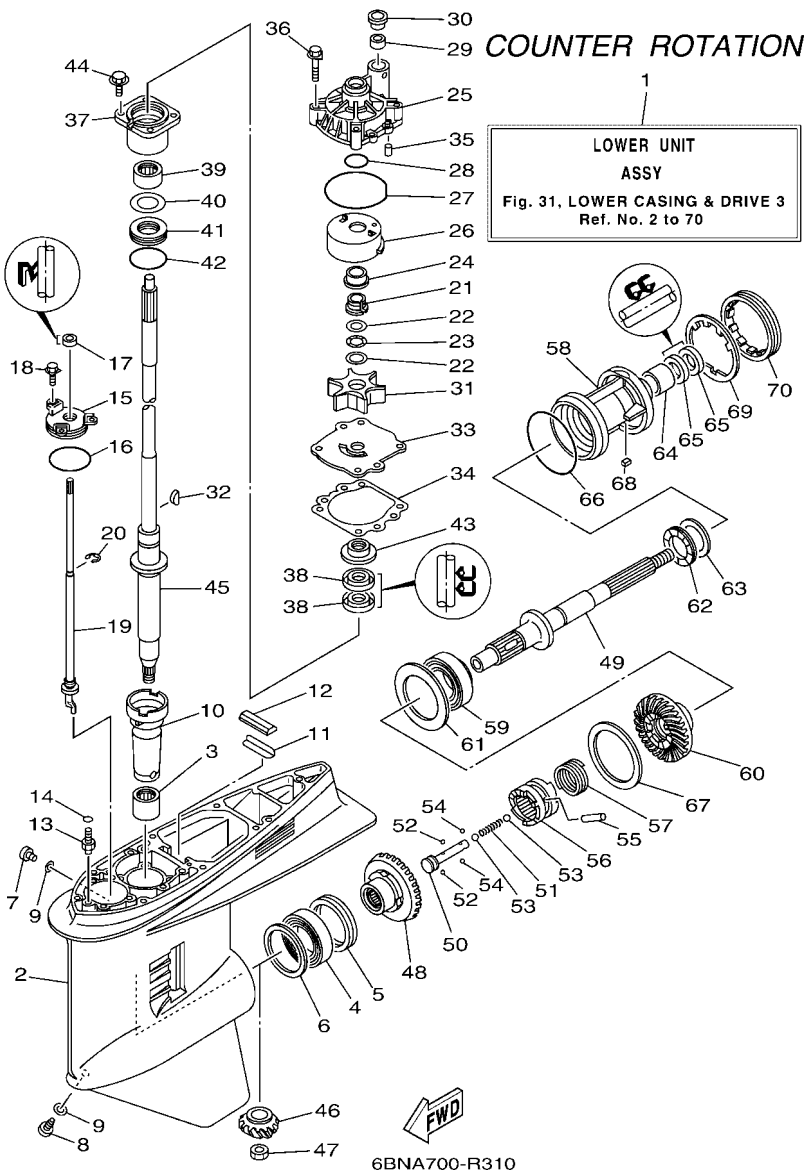

FIG. 31 LOWER CASING & DRIVE 3 — BOITIER D'HELICE TRANSMISSION3

REF. NO.	PART NO. N° PIECES	DESCRIPTION DESCRIPTION	63PG	64PG				REMARKS REMARQUES
41	93341–930V2	BEARING CERVEAUX DE DIRECTION		1				
42	93210–55M14	O-RING JOINT TORIQUE		1				
43	6E5–45344–00	COVER, OIL SEAL FLASQE, JOINT D'HUILE		1				
44	97595–08525	BOLT, WITH WASHER VIS HEXAGONAL AVC RONDELLE		4				
45	63P–45501–01	DRIVE SHAFT COMP. ARBRE MOTEUR COMP.		1				L(20.3") L(20.3")
	63P–45501–11	DRIVE SHAFT COMP. ARBRE MOTEUR COMP.		1				X(25.3") X(25.3")
46	63P–45551–00	PINION (14T) PIGNON D'ATTAQUE (14D)		1				
47	90170–16M01	NUT ECROU		1				
48	64P–45560–10	GEAR 1 (28T) PIGNON 1 (28T)		1				
49	6K1–45611–10	SHAFT, PROPELLER ARBRE, HELICE		1				
50	6E5–45634–02	SLIDE, SHIFT CONTRE-POUSSOIR		1				
51	90501–16M37	SPRING, COMPRESSION RESSORT, COMPRESSION		1				
52	93507–32009	BALL BILLE		2				
53	93511–32017	BALL BILLES		2				
54	93503–16003	BALL BILLES		2				
55	90250–08M07	PIN, STRAIGHT GOUPILLE, DROITE		1				
56	6DA–45631–00	CLUTCH, DOG CRABOT		1				
57	6E5–45633–01	RING, CROSS PIN JONC, GOUPILLE CRABOT		1				
58	6K1–45332–01–CA	HOUSING, BEARING FLASQUE, ROULEMENT		1				
59	93332–00048	BEARING ROULEMENT		1				
60	64P–45570–10	GEAR 2 (28T) PIGNON 2 (28T)		1				
61	6K1–45576–00	WASHER, THRUST 2 RONDELLE DE CALAGE 2		1				
62	93341–440U5	BEARING CERVEAUX DE DIRECTION		1				
63	6K1–45578–01	SHIM (T:0.10MM) CALE (T:0.10MM)		1				UR UR
	6K1–45578–10	SHIM (T:0.12MM) CALE (T:0.12MM)		1				UR UR
	6K1–45578–20	SHIM (T:0.15MM) CALE (T:0.15MM)		1				UR UR
	6K1–45578–30	SHIM (T:0.18MM) CALE (T:0.18MM)		1				UR UR

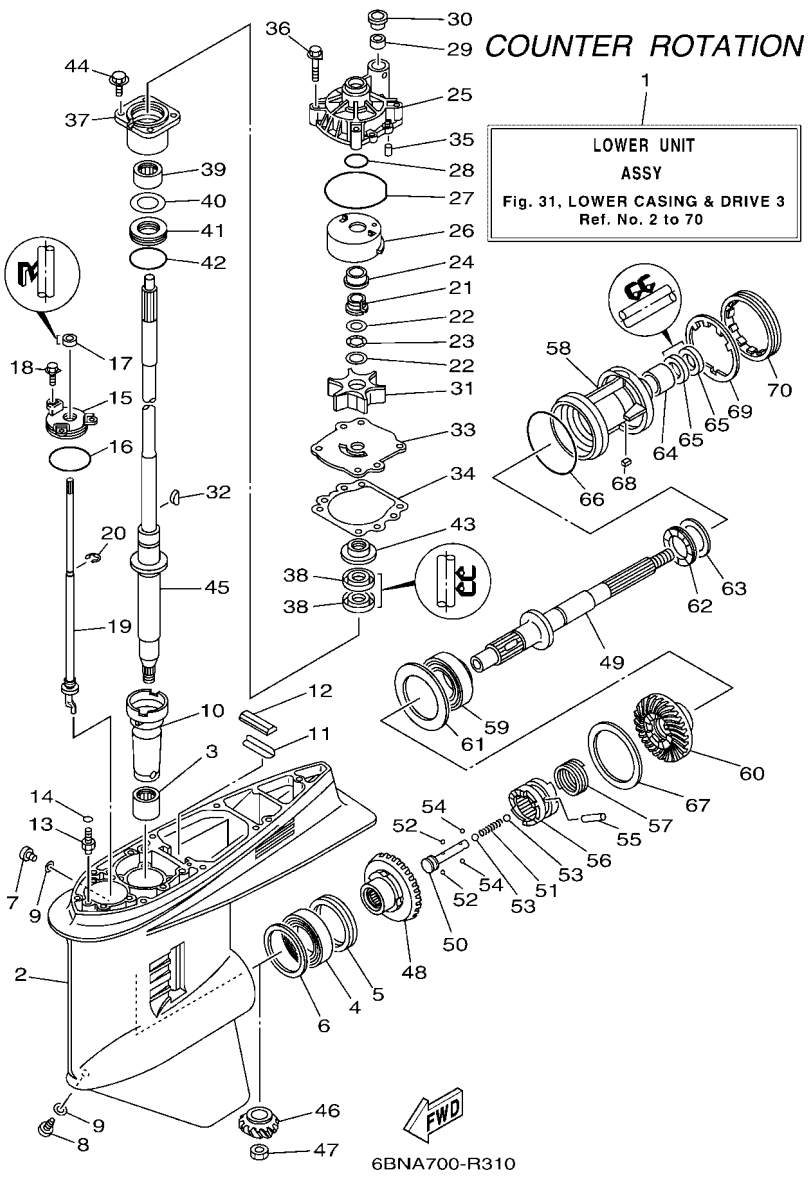

FIG. 31 LOWER CASING & DRIVE 3 — BOITIER D'HELICE TRANSMISSION3

REF. NO.	PART NO. N° PIECES	DESCRIPTION DESCRIPTION	63PG	64PG				REMARKS REMARQUES
63	6K1–45578–40	SHIM (T:0.30MM) CALE (T:0.30MM)		1				UR UR
	6K1–45578–50	SHIM (T:0.40MM) CALE (T:0.40MM)		1				UR UR
	6K1–45578–60	SHIM (T:0.50MM) CALE (T:0.50MM)		1				UR UR
64	93315–43061	BEARING ROULEMENT		1				
65	93101–30M17	OIL SEAL JOINT SPY		2				
66	93210–97M55	O-RING JOINT TORIQUE		1				
67	6G5–45577–02	SHIM (T:0.10MM) CALE (T:0.10MM)		1				UR UR
	6G5–45577–10	SHIM (T:0.12MM) CALE (T:0.12MM)		1				UR UR
	6G5–45577–20	SHIM (T:0.15MM) CALE (T:0.15MM)		1				UR UR
	6G5–45577–30	SHIM (T:0.18MM) CALE (T:0.18MM)		1				UR UR
	6G5–45577–40	SHIM (T:0.30MM) CALE (T:0.30MM)		1				UR UR
	6G5–45577–50	SHIM (T:0.40MM) CALE (T:0.40MM)		1				UR UR
	6G5–45577–60	SHIM (T:0.50MM) CALE (T:0.50MM)		1				UR UR
68	90282–04M00	KEY, STRAIGHT CLAVETTE, DROITE		1				
69	6G5–45383–01	WASHER, CLAW FREIN D'ECROU		1				
70	6G5–45384–02	NUT ECROU		1				

FIG. 32 LOWER CASING & DRIVE 4 — BOITIER D'HELICE TRANSMISSION4

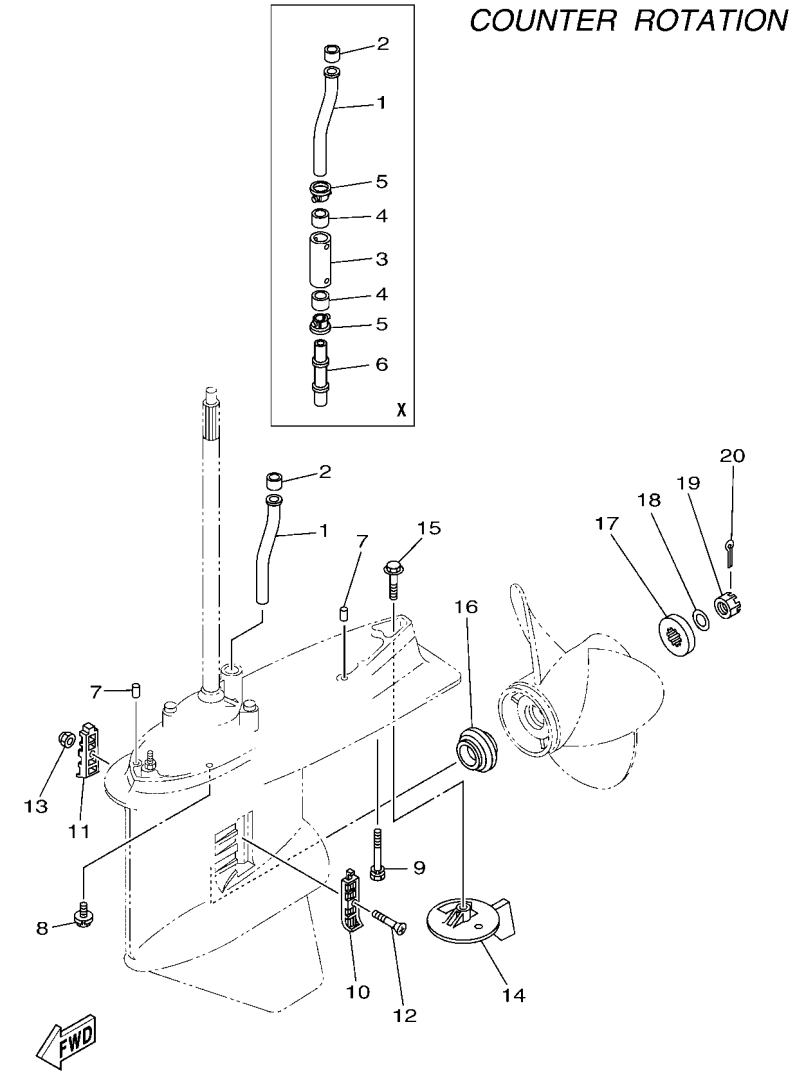

64PF300-R330

REF. NO.	PART NO. N° PIECES	DESCRIPTION DESCRIPTION	63PG	64PG				REMARKS REMARQUES
1	63P–44361–00	TUBE, WATER 1 TUBE D'EAU 1		1				
2	6E5–44365–00	DAMPER, WATER SEAL 1 JOINT, TUBE D'EAU 1		1				
3	63P–44362–00	TUBE, WATER 2 TUBE D'EAU 2		1				X(25.3") X(25.3")
4	6E5–44365–00	DAMPER, WATER SEAL 1 JOINT, TUBE D'EAU 1		2				X(25.3") X(25.3")
5	6E5–44312–00	COVER, WATER PUMP HOUSING COUVERCLE		2				X(25.3") X(25.3")
6	63P–44363–00	TUBE, WATER 3 TUBE D'EAU 3		1				X(25.3") X(25.3")
7	93608–16M16	PIN, DOWEL AXE		2				
8	97595–10645	BOLT, WITH WASHER VIS HEXAGONAL AVC RONDELLE		6				
9	90119–10MA2	BOLT, WITH WASHER BOULON, AVEC RONDELLE		1				L(20.3") L(20.3")
	90119–10008	BOLT, WITH WASHER BOULON, AVEC RONDELLE		1				X(25.3") X(25.3")
10	6J9–45214–00	COVER, WATER INLET 1 GRILLE, ENTREE D'EAU 1		1				
11	6J9–45215–00	COVER, WATER INLET 2 GRILLE, ENTREE D'EAU 2		1				
12	90152–05M08	SCREW, COUNTERSUNK VIS, TETE NOYEE		1				
13	90185–05002	NUT, NYLON ECROU,AUTO-BLOQUANT		1				
14	6K1–45371–02	TAB-TRIM ANODE DERIVE		1				
15	90105–10M00	BOLT, FLANGE BOULON, A COLLERETTE		1				
16	63P–45987–00	SPACER 1 ENTRETOISE 1		1				
17	688–45997–01	SPACER 2 ENTRETOISE 2		1				
18	92990–18200	WASHER RONDELLE, PLATE		1				
19	90171–18M04	NUT, CASTLE ECROU, CRENELE		1				
20	91490–40030	PIN. COTTER GOUPILLE		1				

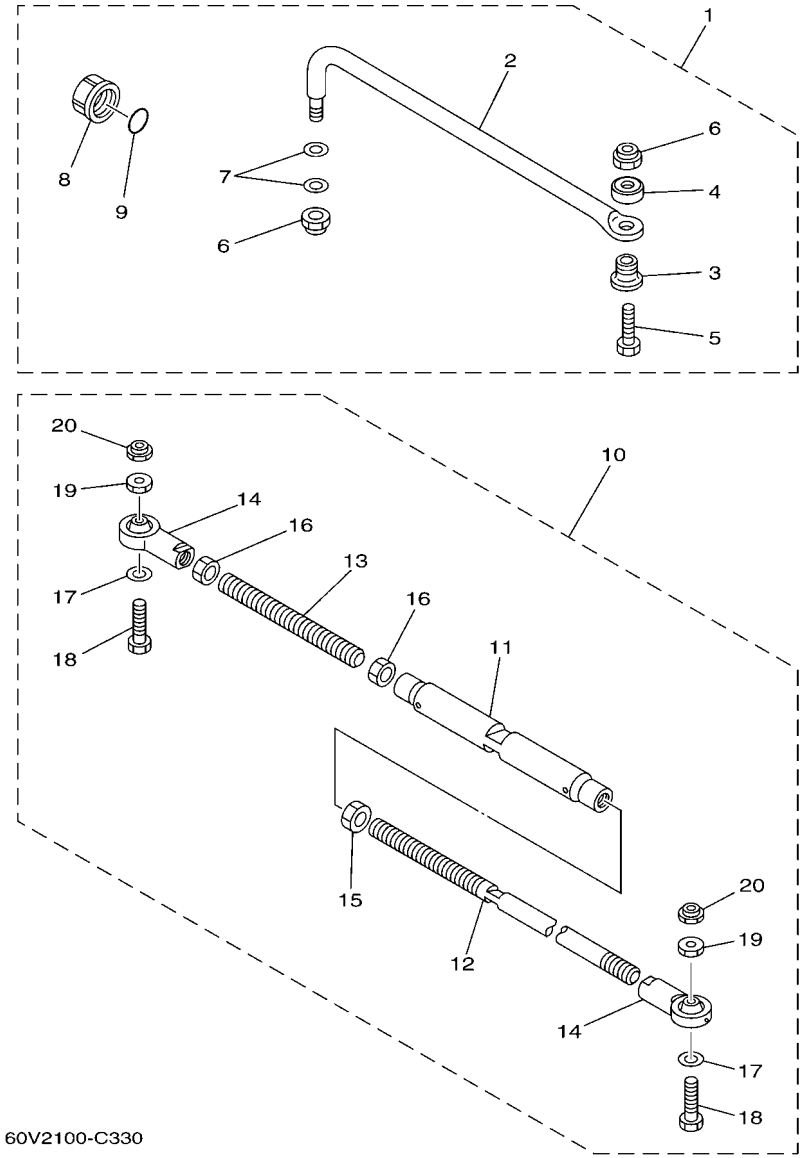

FIG. 33 STEERING GUIDE — FIXATION DE DIRECTION

REF. NO.	PART NO. N° PIECES	DESCRIPTION DESCRIPTION	63PG	64PG				REMARKS REMARQUES
1	6E5–61350–02	STEERING GUIDE ATTACHMENT KIT FIXATIONS DE DIRECTION	1					AP AP
2	6E5–61351–01	.ROD, STEERING LINK .RENVOI DE DIRECTION	1					
3	90387–10M61	.COLLAR .COLLERETTE	1					
4	90560–12M01	.SPACER .ENTRETOISE	1					
5	6E5–61355–00	.BOLT .BOULON	1					
6	90185–09M01	.NUT, SELF-LOCKING .ECROU,AUTO-BLOQUANT	2					
7	90201–10M20	.WASHER, PLATE .RONDELLE, PLATE	2					
8	6E5–43145–01	.CAP, CLAMP BRACKET .CAPUCHON, PRESSE	1					
9	93210–16275	.O-RING .JOINT TORIQUE	1					
10	6E5–61301–01	TWIN KIT (L:600-800MM) JUMELE KIT (L:600-800MM)		1				AP AP
11	6E5–61313–00	.ADJUSTER .TENDEUR		1				
12	6E5–61311–11	.TIE BAR .BARRE D'ACCOUPLEMENT		1				
13	6E5–61315–00	.TIE BAR .BARRE D'ACCOUPLEMENT		1				
14	6E5–61303–00	.STEERING AXLE COMP. .AXLE COMP.		2				
15	90170–14M06	.NUT .ECROU		1				
16	95380–14700	.NUT .ECROU		2				
17	90201–10M76	.WASHER, PLATE .RONDELLE, PLATE		2				
18	90101–09M70	.BOLT .BOULON		2				
19	90170–09M05	.NUT .ECROU		2				
20	90185–09M01	.NUT, SELF-LOCKING .ECROU,AUTO-BLOQUANT		2				

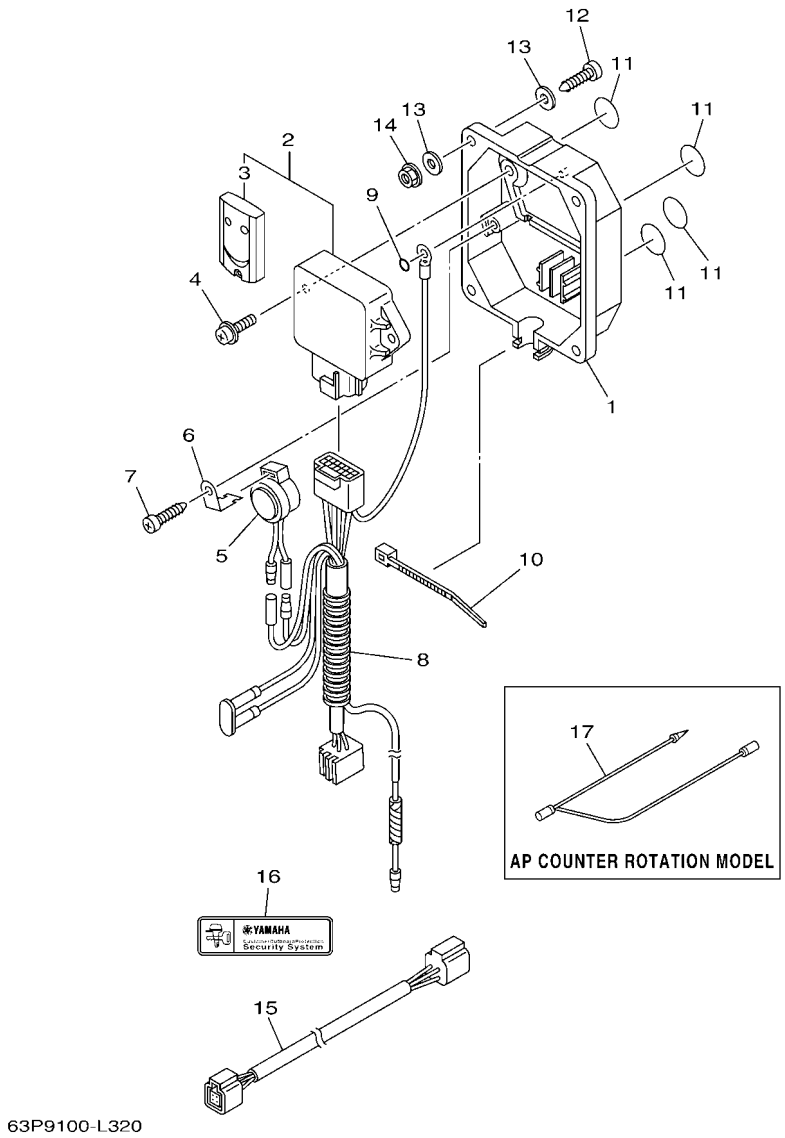

FIG. 34 OPTIONAL PARTS 1 — PIECES OPTIONNELLES 1

REF. NO.	PART NO. N° PIECES	DESCRIPTION DESCRIPTION	63PG	64PG				REMARKS REMARQUES
1	6Y8–86267–00	CASE COMPLETE 1 CARTER (ENS.) 1	1					
2	6Y8–86260–03	REMOTE CONTROL UNIT ASSY UNITE DE TELECOMMANDE (ENS.)	1					
3	6AA–86261–01	.XMTR. COMP. .XMTR. COMP.	2					
4	97980–06216	SCREW, WITH WASHER VIS, AVEC RONDELLE	2					
5	6X4–83383–00	BUZZER RONFLEUR	1					
6	6X4–83386–00	STAY, BUZZER SUPPOR, RONFLEUR	1					
7	97780–60620	SCREW, TAPPING VIS, TETE BOMBEE	1					
8	6Y8–82509–10	WIRE, SUB LEAD FIL, SECONDAIRE	1					
9	93210–04279	O-RING JOINT TORIQUE	1					
10	90465–11M10	CLAMP BRIDE	1					
11	6Y8–8454G–00	PATCH 1 TAMPON 1	4					
12	90167–06M00	SCREW, TAPPING VIS, TETE FRAISEE	4					UR UR
	97880–06035	SCREW, PAN HEAD VIS, TETE TRONCONIQUE	4					UR UR
13	90201–06M30	WASHER, PLATE RONDELLE, PLATE	8					
14	95780–06300	NUT, FLANGE ECROU	4					
15	6Y8–82521–11	2FT PIGTAIL BUS FAISCEAU (L: 2FT.)	1					
16	6Y8–48277–00	STICKER 1 ETIQUETTE 1	4					
17	6H5–81315–00	LEAD WIRE ASSY FIL		1				AP AP

FIG. 35 OPTIONAL PARTS 2 — PIECES OPTIONNELLES 2

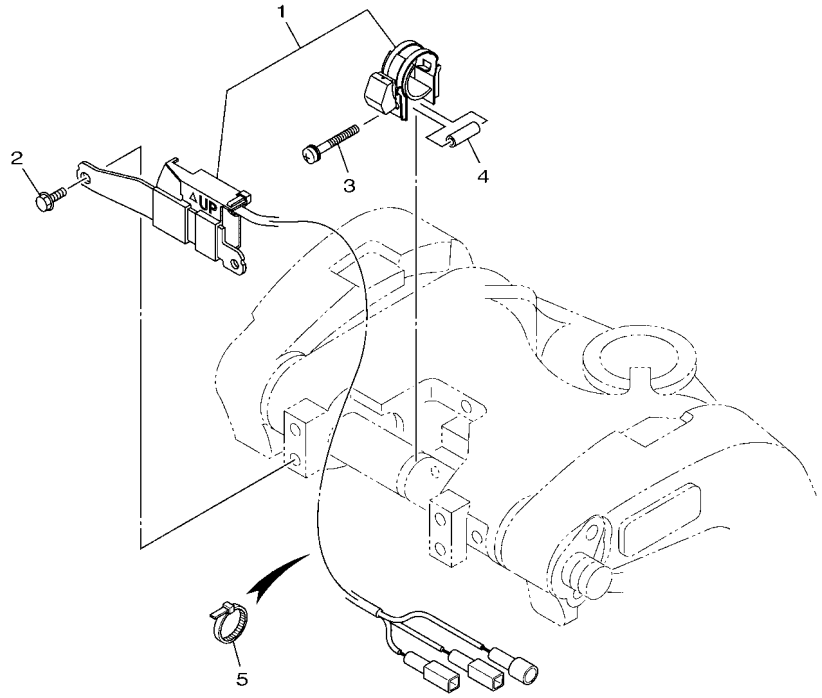

6DA4100-Q370

REF. NO.	PART NO. N° PIECES	DESCRIPTION DESCRIPTION	63PG	64PG				REMARKS REMARQUES
1	63P–825E0–01	TILT LIMIT SWITCH ASSY COMMUTATEUR, LIMIT INCLINAISON	1	1				
2	97595–06516	BOLT, WITH WASHER VIS HEXAGONAL AVC RONDELLE	2	2				
3	90159–05059	SCREW, WITH WASHER VIS, AVEC RONDELLE	1	1				
4	90387–05004	COLLAR COLLERETTE	1	1				
5	90465–11M10	CLAMP BRIDE	5	5				

FIG. 36 REPAIR KIT 1 — KITS DE REPARATION 1

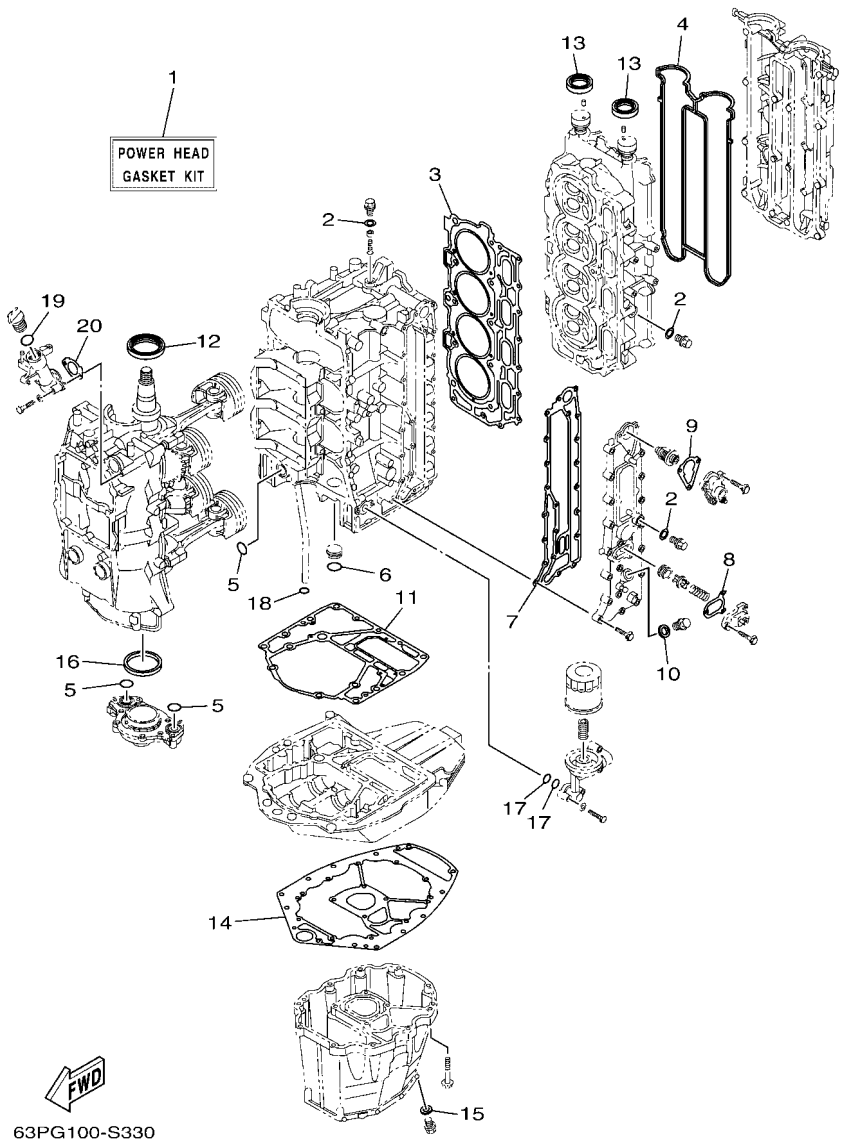

REF. NO.	PART NO. N° PIECES	DESCRIPTION DESCRIPTION	63PG	64PG				REMARKS REMARQUES
1	63P–W0001–04	POWER HEAD GASKET KIT POCHETTE DE JINTS TETE MOTRICE	1	1				
2	90430–14115	.GASKET .JOINT	4	4				
3	63P–11181–00	.GASKET, CYLINDER HEAD 1 .JOINT, DE CULASSE 1	1	1				
4	63P–11193–00	.GASKET, HEAD COVER 1 .JOINT, COUVERCLE DE CULASSE 1	1	1				
5	93210–25552	.O-RING .JOINT TORIQUE	3	3				
6	93210–25647	.O-RING .JOINT TORIQUE	1	1				
7	63P–41114–A3	.GASKET, EXHAUST OUTER COVER .JOINT, COUVERCLE D'ECHAPPEMENT	1	1				
8	67F–12435–A0	.GASKET .JOINT	1	1				
9	63P–12414–00	.GASKET, COVER .JOINT, COUVERCLE	1	1				
10	90201–186F1	.WASHER, PLATE .RONDELLE, PLATE	1	1				
11	63P–11351–03	.GASKET, CYLINDER .JOINT, D'EMBASE	1	1				
12	93102–60004	.OIL SEAL .JOINT SPY	1	1				
13	93102–38008	.OIL SEAL .JOINT SPY	2	2				
14	63P–15312–02	.GASKET, OIL PAN .JOINT DE VENTILATEUR D'HUILE	1	1				
15	90430–14M09	.GASKET .JOINT	1	1				
16	69J–11355–00	.SEAL, CYLINDER 1 .JOINT, SPY CYLINDRE	1	1				
17	93210–19MJ1	.O-RING .JOINT TORIQUE	2	2				
18	93210–19MJ3	.O-RING .JOINT TORIQUE	1	1				
19	93210–24M79	.O-RING .JOINT TORIQUE	1	1				
20	63P–15364–A0	.GASKET, OIL PLUG .JOINT, PLOT D'HUILE	1	1				

FIG. 37 REPAIR KIT 2 — KITS DE REPARATION 2

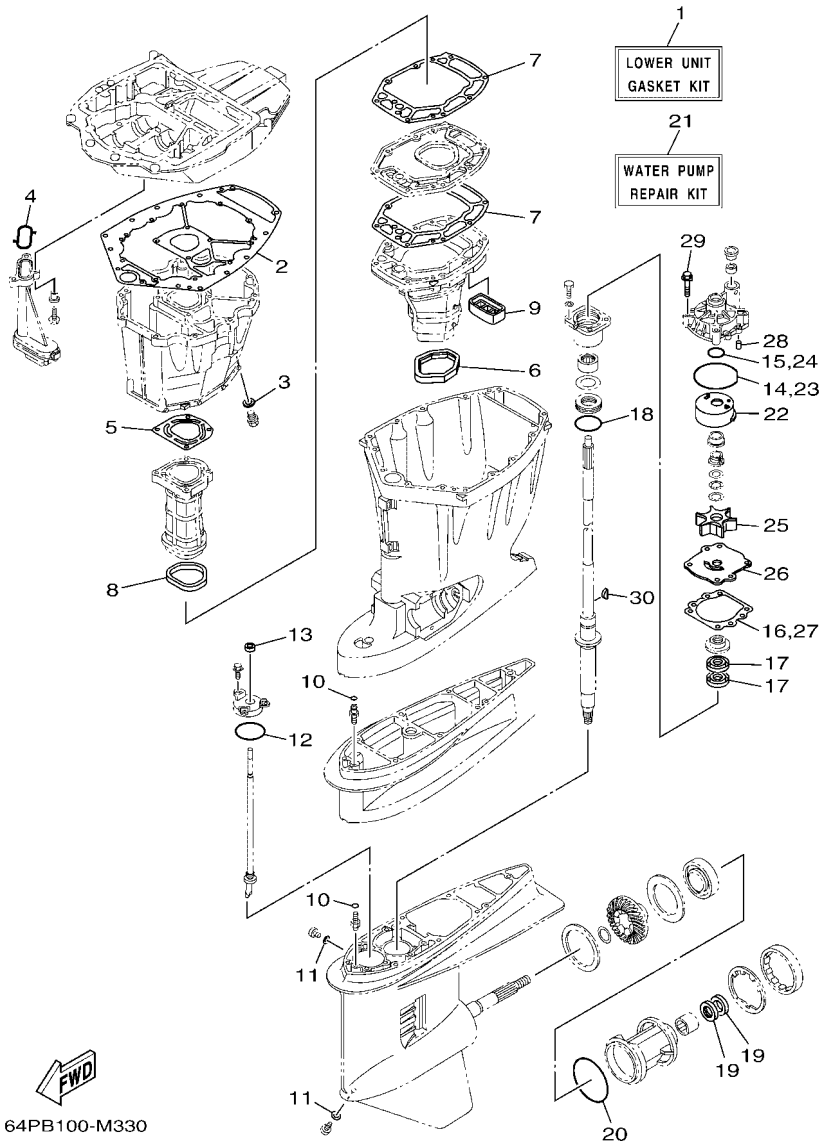

REF. NO.	PART NO. N° PIECES	DESCRIPTION DESCRIPTION	63PG	64PG				REMARKS REMARQUES
1	63P–W0001–21	LOWER UNIT GASKET KIT POCHETTE DE JOINTS EMBASE	1	1				
2	63P–15312–02	.GASKET, OIL PAN .JOINT DE VENTILATEUR D'HUILE	1	1				
3	90430–14M09	.GASKET .JOINT	1	1				
4	63P–13415–00	.SEAL, OIL STRAINER .JOINT, FILTRE A HUILE	1	1				
5	63P–41133–A0	.GASKET, EXHAUST MANIFOLD 1 .JOINT, PIPE D'ECHAPPEMENT	1	1				
6	69J–45123–00	.GASKET, MUFFLER .JOINT, POT DE DETENTE	1	1				
7	63P–41134–A1	.GASKET, EXHAUST MANIFOLD .JOINT, PIPE D'ECHAPPEMENT	2	2				
8	63P–41138–00	.SEAL, EXT. 1 .JOINT DE GROUPE 1	1	1				
9	69J–45127–00	.SEAL .JOINT	1	1				
10	93210–07003	.O-RING .JOINT TORIQUE	2	2				
11	90430–08003	.GASKET .JOINT	2	2				
12	93210–58144	.O-RING .JOINT TORIQUE	1	1				
13	93106–09014	.OIL SEAL .JOINT SPY	1	1				
14	93210–86M38	.O-RING .JOINT TORIQUE	1	1				
15	93210–37160	.O-RING .JOINT TORIQUE	1	1				
16	6E5–44315–A0	.GASKET, WATER PUMP .JOINT, POMPE A EAU	1	1				
17	93101–28M16	.OIL SEAL .JOINT SPY	2	2				
18	93210–55M14	.O-RING .JOINT TORIQUE	1	1				
19	93101–30M17	.OIL SEAL .JOINT SPY	2	2				
20	93210–97M55	.O-RING .JOINT TORIQUE	1	1				
21	61A–W0078–A3	WATER PUMP REPAIR KIT KIT DE REPARATION DE LA POMPE	1	1				
22	61A–44322–02	.INSERT, CARTRIDGE .CUVETTE	1	1				
23	93210–86M38	.O-RING .JOINT TORIQUE	1	1				
24	93210–37160	.O-RING .JOINT TORIQUE	1	1				
25	6E5–44352–01	.IMPELLER .TURBINE	1	1				
26	6G5–44323–01	.OUTER PLATE, CARTRIDGE .PLAQUE EXTERIEURE	1	1				
27	6E5–44315–A0	.GASKET, WATER PUMP .JOINT, POMPE A EAU	1	1				

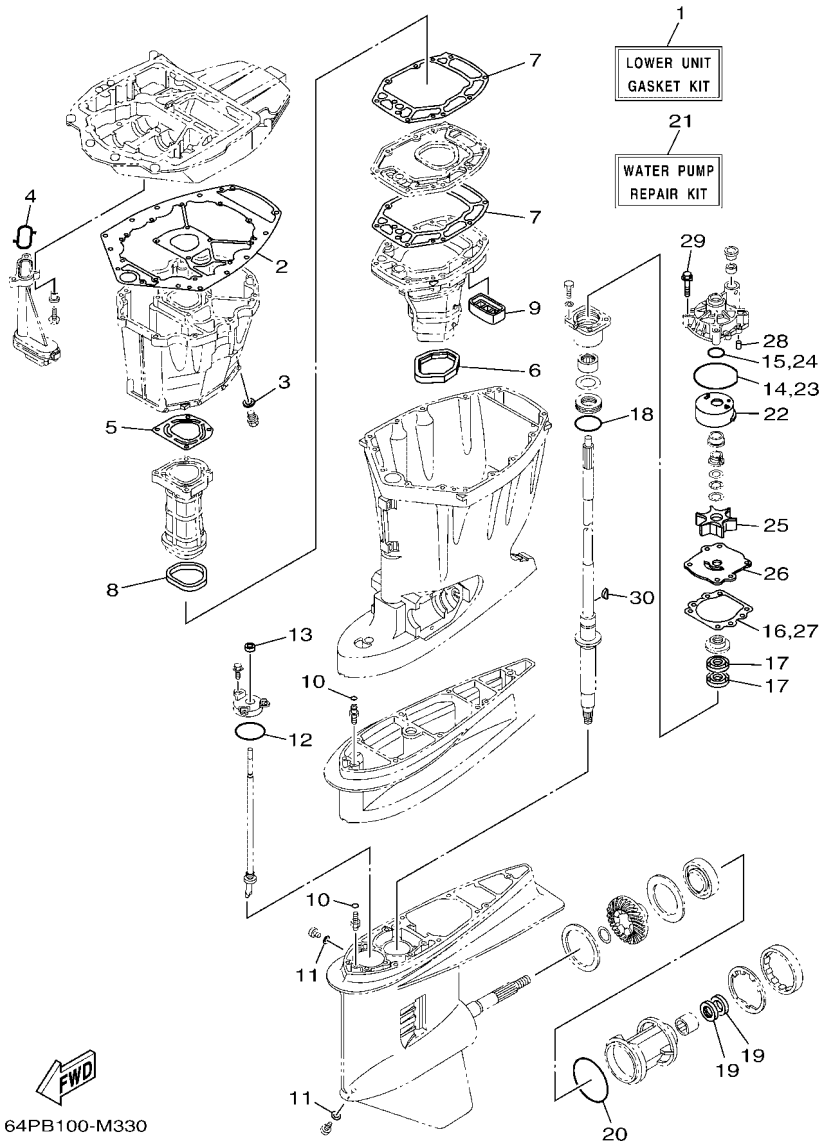

FIG. 37 REPAIR KIT 2 — KITS DE REPARATION 2

REF. NO.	PART NO. N° PIECES	DESCRIPTION DESCRIPTION	63PG	64PG				REMARKS REMARQUES
28	93606–12019	.PIN, DOWEL .GOUPILLE	2	2				
29	90119–08M14	.BOLT, WITH WASHER .BOULON, AVEC RONDELLE	4	4				
30	90280–04M05	.KEY, WOODRUFF .CLAVETTE, DEMI-LUNE	1	1				

NUMERICAL INDEX
INDEX NUMERIQUE

PART NO. N° PIECES	REF. NO.
63P–11110–11–9S	5 – 2
63P–11119–00	3 – 22
63P–11119–10	3 – 23
6DA–11133–10	5 – 3
63P–11135–00	5 – 21
63P–11181–00	5 – 16
	36 – 3
63P–11191–00–9S	5 – 20
63P–11192–01	5 – 25
63P–11193–00	5 – 23
	36 – 4
63P–11197–A0	3 – 10
69J–11301–00	5 – 10
	6 – 12
68T–11325–00	1 – 6
	6 – 2
63P–11325–01	1 – 3
	3 – 20
67F–11325–01	1 – 4
	1 – 7
	5 – 11
	6 – 13
63P–11325–11	1 – 2
	3 – 14
63P–11325–21	1 – 1
	3 – 11
67F–11328–00	5 – 12
	6 – 14
63P–11351–03	3 – 25
	36 – 11
69J–11355–00	28 – 16
	36 – 16
63P–11372–00	3 – 4
63P–11377–10	3 – 30
63P–11410–04	4 – 1
63P–11416–31	4 – 4
63P–11416–41	4 – 4
63P–11416–51	4 – 4
63P–11417–41	4 – 5
63P–11417–51	4 – 5
63P–11417–61	4 – 5
63P–11417–71	4 – 5
63P–11417–81	4 – 5
63P–11426–31	4 – 6
63P–11426–41	4 – 6
63P–11426–51	4 – 6
6CB–11478–00	4 – 2
63P–11500–04	3 – 26

PART NO. N° PIECES	REF. NO.
63P–11512–00	3 – 29
63P–11536–01	7 – 20
63P–11537–00	7 – 12
63P–11590–10	7 – 16
63P–11603–01	4 – 11
63P–11604–00	4 – 11
63P–11631–10–93	4 – 10
63P–11633–10	4 – 12
63P–11634–00	4 – 13
63P–11635–10	4 – 10
63P–11654–10	4 – 8
63P–11656–30	4 – 9
63P–11656–40	4 – 9
63P–11656–50	4 – 9
63P–12111–00	7 – 1
6CB–12113–00	7 – 4
51Y–12119–00	7 – 7
63P–12121–00	7 – 2
63P–12171–10	7 – 9
63P–12181–10	7 – 10
63P–1240H–01–9S	6 – 20
67F–12411–01	1 – 8
	6 – 18
67F–12412–00	6 – 19
63P–12414–00	1 – 9
	6 – 21
	36 – 9
6G5–12416–00	6 – 6
67F–12435–A0	6 – 10
	36 – 8
63P–1243A–00	6 – 25
67F–1246A–A0–9S	6 – 9
6AW–12572–00	21 – 11
6R3–12581–00	21 – 12
6R3–12582–00	21 – 13
6R3–12583–00	21 – 14
6S5–12858–00	6 – 30
6AW–13119–00	28 – 14
63P–1312A–01	10 – 25
63P–13131–00	13 – 21
63P–13160–10	12 – 6
63P–13300–02	28 – 12
63P–13329–00	28 – 13
63P–13411–00	28 – 8
63P–13415–00	28 – 10
	37 – 4
63P–13437–63	15 – 23
69J–13440–03	1 – 10

PART NO. N° PIECES	REF. NO.
69J–13440–03	6 – 29
63P–13446–01	6 – 31
63P–13490–00	3 – 34
63P–13532–10	12 – 5
63P–13545–00	12 – 4
63P–13546–00	12 – 3
63P–13557–00	10 – 19
63P–13564–00	8 – 16
63P–13573–00	11 – 27
68V–13577–00	12 – 14
6BM–13593–00	11 – 24
69J–13631–00	28 – 15
63P–13641–10	10 – 12
63P–13643–00	10 – 21
63P–13645–00	10 – 15
63P–13716–00	11 – 23
63P–13751–20	10 – 2
6P2–13758–00	12 – 17
63P–13761–01	10 – 22
68V–13766–00	10 – 24
68V–13781–20	11 – 13
63P–13784–00	11 – 18
63P–13882–00	11 – 28
63P–13906–00	11 – 9
63P–13907–03	11 – 17
63P–13915–00	1 – 12
	11 – 19
63P–13971–10	12 – 2
63P–13974–40	12 – 7
63P–13975–50	12 – 16
63P–13976–50	12 – 8
63P–14148–00	11 – 20
63P–14149–00	12 – 1
68V–1416A–00	10 – 23
63P–14180–20	11 – 1
63P–14181–20	11 – 6
63P–14182–20	11 – 2
63P–14191–00	11 – 7
63P–14200–80	10 – 1
63P–14291–00	10 – 11
63P–14292–00	10 – 29
69J–14321–00	10 – 3
68V–14323–00	10 – 5
68V–14331–00	10 – 4
68V–14356–00	10 – 9
68V–14386–00	11 – 15
63P–14435–00	18 – 12
63P–14440–00	8 – 9

PART NO. N° PIECES	REF. NO.
6P2–14446–00	10 – 20
63P–14449–00	8 – 10
63P–14457–00	8 – 11
63P–14496–00	10 – 13
63P–14546–00	11 – 14
63P–14565–00	11 – 10
68V–14565–00	10 – 10
63P–14567–00	11 – 11
69J–14624–01	27 – 25
63P–14711–02	27 – 12
63P–14984–00	1 – 11
	11 – 12
63P–14985–00	11 – 16
63P–15311–11	28 – 2
63P–15312–02	28 – 1
	36 – 14
	37 – 2
63P–15316–00	28 – 5
63P–15319–00–9S	6 – 36
63P–15362–10	28 – 19
6G8–15363–00	6 – 34
63P–15364–A0	6 – 37
	36 – 20
63P–15373–00	8 – 4
63P–15377–10	28 – 20
63P–15378–00	8 – 7
63P–2134X–00	9 – 2
63P–21841–10	11 – 26
63P–2247B–10	12 – 11
68V–2411M–00	12 – 9
63P–2411R–00	11 – 4
63P–2411T–00	11 – 5
68V–24149–00	13 – 29
6P2–24170–00	9 – 1
63P–2419A–01	9 – 3
6AW–24300–00	12 – 21
64P–24311–10	9 – 10
63P–24311–20	13 – 16
64P–24312–00	9 – 9
63P–24312–20	13 – 33
64P–24313–00	9 – 7
63P–24313–20	13 – 34
63P–24314–10	13 – 31
64P–24314–10	9 – 17
64P–24315–00	9 – 12
63P–24315–10	13 – 32
64P–24316–10	9 – 13
63P–24316–40	13 – 4

PART NO. N° PIECES	REF. NO.
63P–24317–40	12 – 10
63P–24325–50	12 – 13
6E5–24351–51	13 – 3
6YK–24360–73	14 – 1
63P–24364–01	9 – 19
63P–24367–01	9 – 11
68V–24374–00	13 – 24
6AW–24377–01	13 – 2
6E5–24378–00	13 – 30
69J–24379–00	11 – 21
6E5–24379–00	9 – 21
63P–24410–20	13 – 18
68V–24411–00	13 – 23
68V–24412–00	13 – 19
63P–24413–00	13 – 25
63P–24414–00	13 – 27
63P–24423–00	13 – 22
68V–24444–00	13 – 28
4SV–24453–00	11 – 3
	11 – 8
68V–24454–00	13 – 20
6P3–24469–00	13 – 8
68V–24471–10	13 – 26
69J–24501–10	1 – 13
	12 – 15
69J–24502–00	9 – 8
63P–24519–00	12 – 22
68V–24519–00	12 – 12
6P3–24519–00	13 – 9
6P3–24560–03	13 – 5
6P3–24562–03	13 – 7
6P3–24563–01	1 – 14
	13 – 6
6P3–24564–00	1 – 15
	13 – 10
63P–24566–00	13 – 11
68V–2481H–00	12 – 18
67F–28100–01	13 – 39
67F–2812A–00	17 – 30
63P–28199–7K–D0	13 – 40
63P–28199–7K–E0	13 – 40
63P–28199–7K–F0	13 – 40
63P–28199–7K–G0	13 – 40
63P–28199–7K–H0	13 – 40
63P–28199–7K–S0	13 – 40
63P–28199–8K–K0	13 – 41
63P–28199–8K–L0	13 – 41
63P–28199–8K–M0	13 – 41

PART NO. N° PIECES	REF. NO.
63P–28199–8K–N0	13 – 41
63P–28199–8K–P0	13 – 41
63P–28199–8K–R0	13 – 41
63P–41113–04–9S	6 – 1
63P–41114–A3	6 – 4
	36 – 7
63P–41131–02	27 – 9
63P–41133–A0	27 – 10
	37 – 5
63P–41134–A1	27 – 16
	37 – 7
63P–41137–05	27 – 1
63P–41138–00	27 – 18
	37 – 8
63P–41213–00	22 – 42
63P–41237–00	22 – 48
6H4–41237–00	10 – 16
682–41238–01	10 – 18
63P–42154–10	22 – 37
63P–42157–00	22 – 49
68V–42171–00	22 – 50
6BG–42384–00	21 – 9
6DA–42384–00	20 – 23
6DA–42510–10–8D	24 – 8
63P–42541–10	21 – 15
63P–42610–70	2 – 1
63P–42615–10	20 – 5
6DA–42617–00	15 – 22
63P–4261A–10	2 – 2
6CB–42628–00	2 – 13
6CB–42647–A0	2 – 3
6AW–42663–00	2 – 9
6DA–42675–00	2 – 15
6DA–42676–00	2 – 16
63P–42677–60	2 – 17
63P–42678–60	2 – 14
63P–42681–20	2 – 18
6DA–42697–00	2 – 12
63P–42710–10–8D	20 – 1
648–42715–00	22 – 28
63P–42716–00	20 – 6
6DA–42717–00	20 – 22
69J–42723–01	18 – 15
6E5–42724–00	27 – 7
6DA–42725–00	20 – 2
6H1–42726–21	21 – 8
61A–42727–00	20 – 26
6DA–42741–10–8D	21 – 1

PART NO. N° PIECES	REF. NO.
6H4–42748–00	20 – 24
68F–42753–00	20 – 28
63P–42756–00	21 – 18
6CB–42761–00	20 – 3
6DA–42769–00	27 – 8
6EE–42794–40	20 – 30
6EE–42794–50	20 – 31
63P–42815–11–8D	20 – 7
6DA–42816–02–8D	20 – 8
6DA–42817–02–8D	20 – 9
6CB–42818–00	20 – 13
6CB–42819–00	20 – 14
64E–43111–02–8D	23 – 1
64E–43112–02–8D	23 – 7
64E–43126–10	23 – 35
64E–43131–30	23 – 11
64E–43139–10	24 – 1
66T–43144–00	20 – 17
6G5–43144–00	23 – 25
6E5–43145–01	33 – 8
6G5–43148–00	23 – 30
6G5–43181–02	23 – 27
6G5–43185–02	23 – 28
64E–43311–10–8D	23 – 21
63P–43338–10	25 – 54
61A–43376–00	24 – 6
63P–43800–20	25 – 1
63P–43801–10	25 – 4
63P–43802–20	25 – 37
6EK–43804–11	26 – 3
6EK–43805–00	26 – 2
6EK–4380F–00	26 – 6
63P–4380L–20	25 – 2
63P–4380P–20	25 – 9
63P–43810–20	25 – 3
63P–43811–20	25 – 6
63P–43814–20	25 – 13
6CJ–43816–00	25 – 61
63P–43816–10	25 – 20
6BC–43818–00	23 – 19
63P–4381C–20	25 – 41
63P–4381J–10	25 – 62
63P–43820–20	25 – 26
63P–43821–20	25 – 25
63P–43822–20	25 – 23
6CJ–43829–10	25 – 17
63P–4382A–10	25 – 31
63P–4382C–20	25 – 15

PART NO. N° PIECES	REF. NO.
63P–43830–20	25 – 42
69J–43831–00	25 – 66
6H1–43841–11	25 – 18
63P–43843–10	25 – 53
6H1–43844–10	25 – 45
63P–43844–20	25 – 51
63P–43845–20	25 – 34
63P–43847–10	25 – 29
6H1–4384G–11	25 – 44
63P–4384G–20	25 – 55
63P–4384H–10	25 – 32
63P–43851–20	25 – 48
63P–43854–10	25 – 30
69J–43855–00	25 – 52
6H1–43856–10	25 – 46
63P–43857–10	25 – 59
63P–4385H–10	25 – 60
63P–43861–20	25 – 7
6H1–43862–00	25 – 10
	25 – 12
63P–43862–10	25 – 24
63P–43863–10	25 – 8
6H1–43866–01	25 – 39
62X–4386K–00	26 – 7
62X–43871–00	25 – 27
63P–43875–20	25 – 22
61A–43876–00	25 – 36
63P–43876–10	25 – 19
61A–43878–00	25 – 65
63P–43879–10	26 – 8
63P–43880–22	26 – 1
63P–43881–21	26 – 10
6EK–43882–00	26 – 11
6EK–43892–00	26 – 4
69J–4389J–00	25 – 33
63P–44117–01	22 – 8
63P–44118–00	22 – 23
6DA–44120–11	22 – 18
6DA–44121–00	22 – 16
63P–44122–00	22 – 13
69J–44135–00	22 – 43
63P–44150–01	29 – 18
64P–44150–01	31 – 19
63P–44150–11	29 – 18
64P–44150–11	31 – 19
6DA–44176–00	22 – 7
61A–44311–01	29 – 24
	31 – 25

PART NO. N° PIECES	REF. NO.
6E5–44312–00	29 – 29
	30 – 5
	31 – 30
	32 – 5
6E5–44315–A0	29 – 33
	31 – 34
	37 – 16
	37 – 27
61A–44322–02	29 – 25
	31 – 26
	37 – 22
6G5–44323–01	29 – 32
	31 – 33
	37 – 26
6E5–44352–01	29 – 30
	31 – 31
	37 – 25
63P–44361–00	30 – 1
	32 – 1
63P–44362–00	30 – 3
	32 – 3
63P–44363–00	30 – 6
	32 – 6
6E5–44365–00	29 – 28
	30 – 2
	30 – 4
	31 – 29
	32 – 2
	32 – 4
6E5–44366–00	27 – 27
6P2–44391–00	20 – 25
63P–44511–00	24 – 36
6DA–44514–00	24 – 28
6DA–44526–00	24 – 32
6G5–44526–00	23 – 3
6DA–44532–00	24 – 33
69J–44533–00	24 – 22
68V–44551–00–8D	24 – 13
63P–44553–00–8D	24 – 25
60V–44555–00	24 – 16
63P–44555–00	24 – 16
63P–44556–00–8D	24 – 26
61A–44575–00	24 – 15
63P–45111–00–8D	27 – 20
69J–45123–00	27 – 13
	37 – 6
69J–45127–00	27 – 19
	37 – 9

PART NO. N° PIECES	REF. NO.
6C5–45155–00	27 – 28
63P–45181–02	27 – 17
63P–45211–00–8D	27 – 34
6J9–45214–00	30 – 10
	32 – 10
6J9–45215–00	30 – 11
	32 – 11
6G5–45251–02	1 – 16
	23 – 2
64P–45300–03–8D	31 – 1
63P–45300–04–8D	29 – 1
64P–45300–13–8D	31 – 1
63P–45300–14–8D	29 – 1
6J9–45301–07–8D	29 – 2
	31 – 2
6E5–45318–00	27 – 23
6E5–45321–00	29 – 14
	31 – 15
6E5–45331–00–9S	29 – 36
	31 – 37
6J9–45332–00–CA	29 – 57
6K1–45332–01–CA	31 – 58
688–45341–10	29 – 7
	31 – 8
6E5–45344–00	29 – 42
	31 – 43
6J9–45371–01	1 – 19
	30 – 14
6K1–45371–02	1 – 19
	32 – 14
688–45375–00	29 – 11
	31 – 12
663–45376–00	29 – 10
	31 – 11
63P–45378–00	27 – 35
	29 – 12
	31 – 13
63P–45379–00	27 – 32
6G5–45383–01	29 – 67
	31 – 69
6G5–45384–02	29 – 68
	31 – 70
63P–45501–01	29 – 44
	31 – 45
63P–45501–11	29 – 44
	31 – 45
61A–45527–00	29 – 23
	31 – 24

PART NO. N° PIECES	REF. NO.
6G5–45536–01	29 – 9
	31 – 10
61A–45538–00	29 – 20
	31 – 21
63P–45551–00	29 – 45
	31 – 46
6EH–45560–00	29 – 47
64P–45560–10	31 – 48
6G5–45567–01	29 – 5
	31 – 6
6G5–45567–10	29 – 5
	31 – 6
6G5–45567–20	29 – 5
	31 – 6
6G5–45567–30	29 – 5
	31 – 6
6G5–45567–40	29 – 5
	31 – 6
6G5–45567–50	29 – 5
	31 – 6
6G5–45567–60	29 – 5
	31 – 6
64P–45570–10	31 – 60
6EH–45571–00	29 – 59
6K1–45576–00	31 – 61
6G5–45576–10	29 – 60
6G5–45577–02	29 – 64
	31 – 67
6G5–45577–10	29 – 64
	31 – 67
6G5–45577–20	29 – 64
	31 – 67
6G5–45577–30	29 – 64
	31 – 67
6G5–45577–40	29 – 64
	31 – 67
6G5–45577–50	29 – 64
	31 – 67
6G5–45577–60	29 – 64
	31 – 67
6K1–45578–01	31 – 63
6K1–45578–10	31 – 63
6K1–45578–20	31 – 63
6K1–45578–30	31 – 63
6K1–45578–40	31 – 63
6K1–45578–50	31 – 63
6K1–45578–60	31 – 63
6E5–45587–01	29 – 39

PART NO. N° PIECES	REF. NO.
6E5–45587–01	31 – 40
6E5–45587–10	29 – 39
	31 – 40
6E5–45587–20	29 – 39
	31 – 40
6E5–45587–30	29 – 39
	31 – 40
6E5–45587–40	29 – 39
	31 – 40
6E5–45587–50	29 – 39
	31 – 40
6E5–45587–60	29 – 39
	31 – 40
6J9–45611–01	29 – 48
6K1–45611–10	31 – 49
6DA–45631–00	29 – 55
	31 – 56
6E5–45633–01	29 – 56
	31 – 57
6E5–45634–02	29 – 49
	31 – 50
63P–45987–00	30 – 16
	32 – 16
688–45997–01	30 – 17
	32 – 17
63P–46241–00	7 – 15
6Y8–48277–00	34 – 16
6E5–48344–00	22 – 5
	22 – 35
63P–48531–10	22 – 1
6E5–48538–00	22 – 3
6E5–61301–01	33 – 10
6E5–61303–00	33 – 14
6E5–61311–11	33 – 12
6E5–61313–00	33 – 11
6E5–61315–00	33 – 13
6E5–61350–02	33 – 1
6E5–61351–01	33 – 2
6E5–61355–00	33 – 5
68V–81145–01	10 – 7
68V–81146–01	10 – 26
68V–81147–00	10 – 28
6H5–81315–00	34 – 17
63P–8132G–10	15 – 20
6P2–81332–00	15 – 13
63P–81336–00	17 – 32
63P–81337–10	15 – 15
63D–81345–20	15 – 5

NUMERICAL INDEX
INDEX NUMERIQUE

PART NO. N° PIECES	REF. NO.
63P–81410–00	15 – 4
63P–81450–00	15 – 1
63P–81460–00	15 – 2
63P–81673–01	15 – 6
6BR–81800–01	19 – 1
69J–81801–00	19 – 5
67F–81807–00	19 – 10
67F–81808–00	19 – 8
67F–81809–00	19 – 19
67F–81810–00	19 – 3
67F–81813–00	19 – 6
67F–81820–00	19 – 7
67F–81821–00	19 – 13
6K7–81826–11	19 – 24
69J–81828–00	19 – 25
68V–8182L–00	10 – 8
67F–81830–00	19 – 17
67F–81832–00	19 – 11
67F–81836–00	19 – 12
6C5–81839–00	19 – 21
67F–8183R–00	19 – 15
60V–8183T–00	19 – 18
69J–81840–00	19 – 4
67F–81841–00	19 – 14
69J–81842–00	19 – 20
63P–81845–00	15 – 9
63P–81845–20	9 – 16
67F–81846–00	19 – 26
67F–81850–00	19 – 2
67F–81857–00	19 – 9
6C5–81869–00	19 – 23
67F–81891–00	19 – 16
63P–81919–00	17 – 33
60V–81925–00	19 – 28
63P–81941–00	19 – 22
63P–81942–00	17 – 20
63P–81948–00	17 – 11
68V–8194A–00	17 – 3
63P–81950–00	17 – 8
68V–81953–00	17 – 4
6AW–8195A–00	17 – 24
63P–81960–02	16 – 18
63P–81975–00	16 – 20
6EE–81994–40	15 – 24
6EE–81994–50	15 – 25
6AH–81996–00	20 – 32
6DA–82105–01	18 – 26
6G5–82119–00	17 – 7

PART NO. N° PIECES	REF. NO.
6E5–82148–00	23 – 5
	23 – 8
66K–82149–00	23 – 24
63P–82151–00	17 – 23
67F–82151–00	17 – 25
67F–82151–10	17 – 26
63P–82170–02	17 – 22
68F–82176–00	17 – 31
63P–82181–20	26 – 5
63P–82310–01	16 – 1
63P–82314–00	16 – 15
6A0–82317–00	15 – 16
67F–82361–00	16 – 4
	16 – 10
67F–82362–00	16 – 5
	16 – 9
63P–82380–00	10 – 27
63P–82388–00	16 – 13
6Y8–82509–10	34 – 8
6Y8–82521–11	34 – 15
6P2–82560–01	18 – 19
69J–82563–01	18 – 14
68F–82582–00	19 – 29
6DA–82582–00	18 – 2
6DA–82582–10	18 – 3
6Y8–82582–11	18 – 4
69J–82587–00	18 – 16
63P–82588–00	3 – 35
6E9–82588–00	18 – 20
61A–82588–01	22 – 10
63P–82590–A1	18 – 1
60V–8259F–00	22 – 31
69J–8259F–00	22 – 9
63P–8259L–00	11 – 25
63P–8259M–00	18 – 6
63P–825E0–01	35 – 1
68F–82846–00	17 – 27
6X4–83383–00	34 – 5
6X4–83386–00	34 – 6
6E5–83558–00	27 – 29
63P–83614–01	18 – 17
63P–83626–00	5 – 27
6AW–83651–00	18 – 13
63P–8366G–00	21 – 21
63P–8366P–01	18 – 22
67H–83672–01	24 – 3
6Y8–8454G–00	34 – 11
68F–85119–00	17 – 14

PART NO. N° PIECES	REF. NO.
68F–85516–01	17 – 12
60V–85544–00	17 – 29
689–85547–00	13 – 1
68V–85548–01	17 – 18
63P–85580–00	15 – 3
61A–85790–00	18 – 9
6S1–85885–00	10 – 6
63P–85886–00	18 – 11
63P–8591A–38	17 – 1
6C5–86120–00	9 – 14
6Y8–86260–03	34 – 2
6AA–86261–01	34 – 3
6Y8–86267–00	34 – 1
K0F–A3741–00	7 – 5
K0F–A3742–00	7 – 6
K0F–A3743–00	7 – 3
K0F–A3751–00	7 – 8
K0F–A3751–10	7 – 8
K0F–A3751–20	7 – 8
K0F–A3751–30	7 – 8
K0F–A3751–40	7 – 8
K0F–A3751–50	7 – 8
K0F–A3751–60	7 – 8
K0F–A3751–70	7 – 8
K0F–A3751–80	7 – 8
K0F–A3751–90	7 – 8
K0F–A3751–A0	7 – 8
K0F–A3751–B0	7 – 8
K0F–A3751–C0	7 – 8
K0F–A3751–D0	7 – 8
K0F–A3751–E0	7 – 8
K0F–A3751–F0	7 – 8
K0F–A3751–G0	7 – 8
K0F–A3751–H0	7 – 8
K0F–A3751–J0	7 – 8
K0F–A3751–K0	7 – 8
K0F–A3751–L0	7 – 8
K0F–A3751–M0	7 – 8
K0F–A3751–N0	7 – 8
K0F–A3751–P0	7 – 8
K0F–A3751–R0	7 – 8
K0F–A3751–S0	7 – 8
K0F–A3751–T0	7 – 8
K0F–A3753–00	7 – 8
K0F–A3753–10	7 – 8
K0F–A3753–20	7 – 8
K0F–A3753–30	7 – 8
K0F–A3753–40	7 – 8

PART NO. N° PIECES	REF. NO.
K0F–A3753–50	7 – 8
K0F–A3753–60	7 – 8
K0F–A3753–70	7 – 8
63P–W0001–04	36 – 1
63P–W0001–21	37 – 1
61A–W0078–A3	1 – 20
	37 – 21
63P–W009A–04–9S	5 – 1
63P–W009B–12–9S	3 – 1
63P–W1165–10	4 – 7
63P–W1510–04–9S	3 – 2
63P–W823A–00	16 – 2
63P–W823B–00	16 – 3
63P–W823C–00	16 – 7
63P–W823D–00	16 – 8
90101–09M70	33 – 18
90101–12047	23 – 39
90101–12M05	23 – 39
	23 – 39
90105–06M07	5 – 13
	6 – 15
90105–10071	3 – 9
90105–10M00	30 – 15
	32 – 15
90105–14009	24 – 30
90109–06M80	18 – 21
90109–06M86	18 – 18
	20 – 4
	20 – 18
	21 – 20
	21 – 22
	21 – 26
	22 – 2
90109–08019	22 – 33
90109–14007	24 – 21
90110–05020	7 – 21
90111–08078	2 – 4
90119–06071	13 – 15
90119–06076	8 – 13
90119–06135	9 – 24
	13 – 38
90119–06269	11 – 22
90119–06M09	16 – 6
90119–06M10	29 – 17
	31 – 18
90119–06M18	27 – 33
90119–06M81	3 – 18
90119–06M82	8 – 15

PART NO. N° PIECES	REF. NO.
90119–06M83	13 – 37
90119–06MA2	3 – 24
	6 – 11
90119–06MA4	6 – 5
	6 – 22
	16 – 19
90119–06MA6	3 – 28
90119–07234	5 – 7
90119–07235	5 – 6
90119–08102	27 – 2
90119–08M14	29 – 35
	31 – 36
	37 – 29
90119–08M22	20 – 21
90119–08M58	27 – 5
90119–08M66	3 – 19
	3 – 27
90119–08M91	5 – 19
90119–10007	27 – 21
90119–10008	30 – 9
	32 – 9
90119–10024	24 – 29
90119–10050	7 – 13
90119–10054	23 – 18
90119–10058	24 – 27
90119–10M07	7 – 17
90119–10MA2	30 – 9
	32 – 9
90151–05M05	6 – 3
90151–06M02	3 – 15
	3 – 21
90152–05M08	30 – 12
	32 – 12
90155–10006	5 – 18
90159–05059	24 – 2
	35 – 3
90159–06053	21 – 5
90159–06M28	21 – 2
90167–06M00	34 – 12
90169–05M00	17 – 21
90170–09M05	33 – 19
90170–14M06	33 – 15
90170–16M01	29 – 46
	31 – 47
90171–18M04	30 – 19
	32 – 19
90176–14003	24 – 23
90179–08003	19 – 27

PART NO. N° PIECES	REF. NO.
90179–24002	15 – 12
90183–061A6	21 – 4
90185–05002	30 – 13
	32 – 13
90185–09M01	33 – 6
	33 – 20
90185–14M00	24 – 34
90185–22M11	23 – 15
90201–06M30	34 – 13
90201–06M31	22 – 38
	22 – 44
	22 – 51
90201–10060	23 – 17
90201–10M20	33 – 7
90201–10M76	33 – 17
90201–12426	23 – 41
90201–13M01	23 – 40
90201–156J2	20 – 11
90201–15M58	24 – 20
90201–16M01	24 – 31
90201–16M55	24 – 19
90201–186F1	6 – 24
	36 – 10
90201–22M01	29 – 21
	31 – 22
90201–24014	15 – 11
90201–26M59	23 – 14
90201–30M92	29 – 65
90201–35008	24 – 17
90201–38M60	24 – 9
90202–08M20	22 – 14
90202–16061	22 – 21
90202–32M19	24 – 18
90202–40M47	24 – 12
90206–10M04	22 – 39
	22 – 45
	22 – 52
90206–15M18	20 – 12
90206–22M19	29 – 22
	31 – 23
90249–06M19	23 – 31
90250–08M07	29 – 54
	31 – 55
90280–04M05	29 – 31
	31 – 32
	37 – 30
90280–05015	15 – 10
90282–04M00	29 – 66

PART NO. N° PIECES	REF. NO.
90282–04M00	31 – 68
90338–25004	3 – 7
90340–08002	29 – 6
	31 – 7
90340–14M06	5 – 8
	6 – 27
	28 – 6
90340–18M09	6 – 23
90340–27129	3 – 16
90344–51019	5 – 4
90386–06M12	22 – 17
90386–08001	8 – 12
90386–10M16	23 – 29
90386–12069	22 – 30
90386–15M73	20 – 10
90386–16M66	22 – 20
90386–22M98	23 – 20
	23 – 36
90386–25M31	23 – 13
90386–38M32	24 – 11
90387–05004	35 – 4
90387–06176	17 – 13
90387–06263	28 – 9
90387–06280	8 – 14
90387–06285	15 – 18
90387–06289	9 – 5
	13 – 13
90387–06M29	22 – 40
	22 – 53
90387–06M43	21 – 7
90387–06M82	22 – 46
90387–08M37	20 – 20
90387–08M45	2 – 7
90387–10094	2 – 5
90387–10M05	23 – 32
90387–10M61	33 – 3
90387–14004	24 – 37
90430–06M03	5 – 14
	6 – 16
90430–08003	1 – 18
	29 – 8
	31 – 9
	37 – 11
90430–14115	3 – 13
	5 – 9
	6 – 28
	36 – 2
90430–14M09	1 – 17

PART NO. N° PIECES	REF. NO.
90430–14M09	28 – 7
	36 – 15
	37 – 3
90445–070F1	27 – 31
90445–15M03	7 – 19
90450–22M14	8 – 5
90462–06013	6 – 39
90462–10023	8 – 6
90462–12013	21 – 25
90464–05141	16 – 14
90464–07M41	16 – 11
90464–09M31	9 – 18
90464–11012	9 – 20
90464–12002	12 – 20
90464–12017	16 – 21
90464–12224	18 – 24
90464–13249	21 – 19
90464–13M34	13 – 17
90464–15007	3 – 32
90464–18004	21 – 24
90464–18246	21 – 23
90464–20006	8 – 8
90464–20258	20 – 29
90464–23199	17 – 16
90464–26001	12 – 19
	18 – 25
90465–08M63	23 – 22
90465–11M10	6 – 26
	9 – 23
	13 – 35
	21 – 10
	21 – 16
	23 – 16
	24 – 5
	27 – 30
	34 – 10
	35 – 5
90465–13M18	17 – 17
90467–09M09	9 – 22
	12 – 23
90467–15M14	3 – 31
	3 – 33
90468–18008	22 – 6
	22 – 15
	22 – 36
90480–06M19	16 – 17
90480–10627	17 – 15
90480–10M23	9 – 4

PART NO. N° PIECES	REF. NO.
90480–10M23	13 – 14
90480–12314	5 – 26
90480–13M24	21 – 6
90480–15M31	15 – 17
90480–20M05	6 – 8
90480–22M81	20 – 19
90501–12082	22 – 27
90501–16M11	6 – 7
90501–16M37	29 – 50
	31 – 51
90506–16003	23 – 34
90506–16M39	7 – 18
90506–22001	20 – 16
90508–20M31	22 – 29
90560–12M01	33 – 4
91312–04020	25 – 57
91312–05035	25 – 63
91380–06025	25 – 67
91490–40030	30 – 20
	32 – 20
91609–16010	25 – 11
91690–30010	22 – 4
	22 – 25
91690–30020	23 – 33
91690–50014	8 – 3
91809–08006	5 – 5
91814–18002	3 – 5
	3 – 6
92903–08100	19 – 32
92990–06100	2 – 10
92990–08600	2 – 6
92990–10600	18 – 10
92990–18200	30 – 18
	32 – 18
92995–14600	24 – 24
	24 – 35
93101–28M16	29 – 37
	31 – 38
	37 – 17
93101–30M17	29 – 62
	31 – 65
	37 – 19
93102–38008	7 – 14
	36 – 13
93102–60004	4 – 3
	36 – 12
93106–09014	29 – 16
	31 – 17

PART NO. N° PIECES	REF. NO.
93106–09014	37 – 13
93106–19N50	25 – 5
93210–04279	34 – 9
93210–064A5	25 – 40
	25 – 50
93210–07003	27 – 36
	29 – 13
	31 – 14
	37 – 10
93210–07N51	25 – 47
93210–09165	22 – 19
	25 – 16
93210–11N52	25 – 21
93210–12327	25 – 35
93210–12N52	25 – 38
93210–13M63	20 – 27
93210–16275	33 – 9
93210–19MJ1	6 – 32
	36 – 17
93210–19MJ3	28 – 21
	36 – 18
93210–24M79	6 – 35
	36 – 19
93210–25552	3 – 17
	28 – 18
	36 – 5
93210–25647	3 – 8
	36 – 6
93210–29375	25 – 28
93210–30682	13 – 36
93210–37160	29 – 27
	31 – 28
	37 – 15
	37 – 24
93210–37MH7	24 – 10
93210–554A9	26 – 12
93210–55M14	29 – 41
	31 – 42
	37 – 18
93210–58144	29 – 15
	31 – 16
	37 – 12
93210–68N50	25 – 14
93210–86M38	29 – 26
	31 – 27
	37 – 14
	37 – 23
93210–97M55	29 – 63

PART NO. N° PIECES	REF. NO.
93210–97M55	31 – 66
	37 – 20
93306–209U0	29 – 58
93311–928U5	29 – 3
	31 – 3
93315–43061	29 – 61
	31 – 64
93317–330U2	29 – 38
	31 – 39
93332–00048	31 – 59
93332–000V3	29 – 4
93341–440U5	31 – 62
93341–465U4	31 – 5
93341–930V2	29 – 40
	31 – 41
93390–000U2	31 – 4
93410–16006	22 – 22
93410–22M11	23 – 37
93410–37M04	24 – 14
93420–36M01	27 – 24
93501–04M02	22 – 26
93501–08001	25 – 49
	25 – 58
93503–16003	25 – 43
	29 – 53
	31 – 54
93505–32038	25 – 64
93507–32009	29 – 51
	31 – 52
93511–32017	29 – 52
	31 – 53
93604–10011	25 – 56
93605–10108	7 – 11
93605–17002	7 – 22
93606–12019	3 – 3
	29 – 34
	31 – 35
	37 – 28
93606–19M23	27 – 15
93608–16M16	27 – 4
	27 – 22
	27 – 37
	28 – 4
	30 – 7
	32 – 7
93700–06M01	22 – 32
93700–06M03	22 – 34
	23 – 10

PART NO. N° PIECES	REF. NO.
93700–06M03	23 – 23
94702–00391	1 – 5
	5 – 28
95333–08600	19 – 31
95380–05700	10 – 17
95380–06600	2 – 11
	9 – 15
	21 – 3
95380–12600	23 – 42
95380–14700	33 – 16
95780–06300	34 – 14
95780–08300	2 – 8
95780–10300	24 – 7
95812–06025	28 – 11
95895–06010	23 – 38
95895–06016	8 – 17
	28 – 22
95895–06020	15 – 19
	16 – 16
95895–08012	20 – 15
97095–06010	23 – 26
97095–06025	22 – 41
	22 – 54
97095–06035	22 – 47
97513–06520	17 – 10
97513–08520	8 – 2
97513–08545	19 – 30
97575–06535	22 – 24
97575–06540	6 – 33
97575–08535	27 – 14
	28 – 3
97575–08540	5 – 15
	6 – 17
	8 – 1
97575–08560	27 – 11
97575–10535	27 – 6
97575–10545	27 – 3
97595–06510	23 – 6
97595–06512	6 – 40
	18 – 8
	18 – 23
97595–06514	13 – 12
97595–06516	9 – 6
	10 – 14
	15 – 21
	17 – 2
	18 – 5
	18 – 7

PART NO. N° PIECES	REF. NO.
97595–06516	35 – 2
97595–06530	5 – 24
	23 – 4
97595–06540	28 – 17
97595–06545	6 – 38
97595–06550	22 – 12
97595–06610	17 – 6
	17 – 9
97595–06625	16 – 12
97595–06635	15 – 8
97595–08516	18 – 27
97595–08520	23 – 12
97595–08525	29 – 43
	31 – 44
97595–10645	27 – 38
	30 – 8
	32 – 8
97602–04316	26 – 9
97607–04208	5 – 22
97780–50620	17 – 28
97780–60520	21 – 17
97780–60620	17 – 5
	17 – 19
	34 – 7
97880–06035	34 – 12
97980–06216	27 – 26
	34 – 4
97985–04116	22 – 11
97985–06210	15 – 14
97985–06212	23 – 9
97985–06216	24 – 4
98780–05016	3 – 12
99001–08600	29 – 19
	31 – 20
99530–08012	15 – 7
99530–14016	5 – 17