YAMAHA

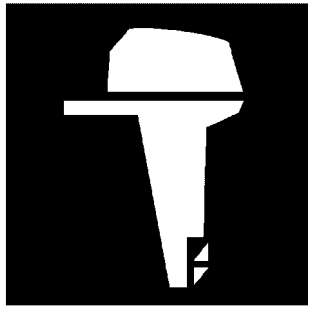

PARTS CATALOGUE
CATALOGUE DE PIECES DETACHEES

F4BMH'18 (6EC5)
F5AMH'18 (6ED5)
F6CMH'18 (6EE5)

YAMAHA
GENUINE
Parts & Accessories

1S6EC-300FA

( )

F4BMH
F5AMH/F6CMH
PARTS CATALOGUE
©2018 by Yamaha Motor Co., Ltd.
1st edition, May 2018
All rights reserved.
Any reprinting or unauthorized use
without the written permission of
Yamaha Motor Co., Ltd.
is expressly prohibited.
Printed in Japan.

F4BMH
F5AMH/F6CMH
CATALOGUE DE PIECES DETACHEES
©2018 par Yamaha Motor Co., Ltd.
1re édition, mai 2018
Tous droits réservés
Toute réimpression ou utilisation
non autorisée sans la permission écrite
de la Yamaha Motor Co., Ltd.
est formellement interdite.
Imprimé au Japon

FOREWORD

This Parts Catalogue is related to the parts for the model(s) on the cover page. When you are ordering replacement parts, please refer to this Parts Catalogue and quote both part numbers and part names correctly.

1. Modifications or additions which have been made after the issue of the Parts Catalogue will be announced in the Parts News.
   It is advisable that you make the necessary corrections to the Parts Catalogue according to the Parts News.

2. Abbreviations
   The following abbreviations are used in this Parts Catalogue.
   "UR" Use specified parts number.
   "UN" Use as many as needed.
   "AP" Alternate Parts
   "LM" Locally Made (Parts need to be ordered locally)
   "F#" Frame No. (Applicable machine No.)
   "O/S" Over Size

3. The number of components for assembly
   - Parts, which are to be supplied in an assembly, are listed with a dot (.) in front of the part name as shown below.
   - The numeral appearing to the right of each component part indicates the quantity of parts for each assembly unit.

PART NO.	DESCRIPTION	Q'TY	REMARKS
2F5–83310–60	FRONT FLASHER LIGHT ASSY	2	
115–83311–60	.BULB (6V–18W)	1	

4. Applicable colours of graphics are represented in the "REMARKS" as shown below.

PART NO.	DESCRIPTION	Q'TY	REMARKS
2N4–24110–00–X5	FUEL TANK COMP.	2	MXR
3J1–24240–10	.GRAPHIC, FUEL TANK	1	FOR MXR

5. Note that the illustrations for reference in finding parts numbers are not to be used for assembling. When assembling, please use the applicable service manual.

6. The asterisk (*) before a reference number indicates modified items after the first edition.

7. Applicable Serial No.
   Engine Serial No.

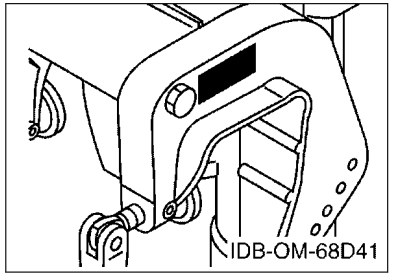

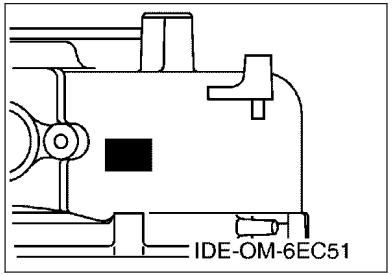

8. Applicable Engine Starting Serial No.

Model	Serial No.	Model	Serial No.
F4B	6EC-1013911	F5A	6ED-1011526
F6C	6EE-1030551		

9. Applicable Colour Code

Abbreviation	Colour Name	Colour Code
DBN1	DARK BLUISH GRAY 1	008D

10. Quantity Column Information

Column No.	Name Of Q'ty Column	Applicable Model
1	6EC5	F4BMH
2	6ED5	F5AMH
3	6EE5	F6CMH

AVANT–PROPOS

Ce catalogue de pièces détachées concerne les pièces pour le(s) modèle(s) indiqué(s) sur la page de couverture. Lorsque vous commandez des pièces de rechange, veuillez vous référer à ce catalogue de pieces détachées et indiquer clairement les numéros et les noms des pièces détachées.

1. Les modifications ou ajouts ayant été effectués après la parution du catalogue de pièces détachées seront décrits dans les Bulletins d'information concernant les pièces détachées.
   Il est recommandé que vous apportiez les corrections nécessaires au catalogue des pièces détachées en vous référant aux Bulletins d'information.

2. Abréviations
   Dans ce catalogue, les abréviations suivantes sont utilisées:
   "UR" Utiliser le numéro de pièces spécifié.
   "UN" Utiliser autant que nécessaire.
   "AP" Pièces de substitution
   "LM" Fabrication locale (les pièces doivent être commandées localement.)
   "F#" N° de cadre (applicable au N° de série)
   "O/S" Surdimensionné

3. Nombre de pièces d'un assemblage
   - Les pièces fournies comme composants d'un assemblage sont précédées d'un point (.) de la manière indiquée ci–dessous.
   - Le chiffre apparaissant à la droite de chaque composant indique la quantité de pièces pour chaque unité d'assemblage.

N° PIECES	DESCRIPTION	QTE	REMARQUES
2F5–83310–60	ENS. CLIGNOTANT AVANT	2	
115–83311–60	.AMPOULE (6V–18W)	1	

4. Les couleurs concernant les graphiques sont indiquées dans la colonne "REMARQUES", comme indiqué ci–dessous.

N° PIECES	DESCRIPTION	QTE	REMARQUES
2N4–24110–00–X5	RESERVOIR A ESSENCE.	2	MXR
3J1–24240–10	.GRAPHIQUE	1	POUR MXR

5. Veuillez noter que les illustrations sont indiquées à titre de référence pour trouver les numéros de pièces, non pour être utilisées lors de l'assemblage. Lors de l'assemblage, veuillez utiliser le manuel d'entretien adéquat.

6. L'astérisque (*) placé devant un numéro de référence indique des éléments qui ont été modifiés après la première édition.

7. N° de série applicable
   N° de Série du moteur

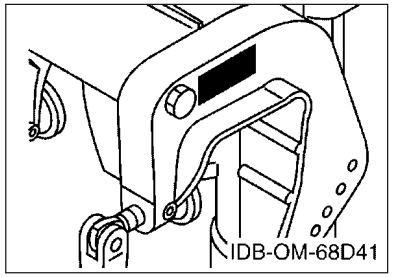

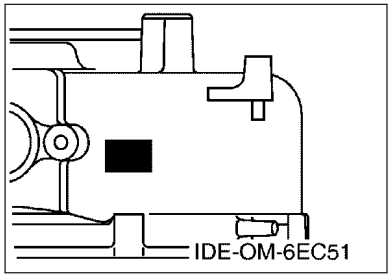

8. N° de série initial du moteur applicable

Modèle	N° de série	Modèle	N° de série
F4B	6EC-1013911	F5A	6ED-1011526
F6C	6EE-1030551		

9. Code couleur applicable

Abréviation	Nom de la couleur	Code couleur
DBN1	DARK BLUISH GRAY 1	008D

10. Informations relatives à la colonne Quantité

N° de la colonne	Nom de la colonne Qté	Modèle applicable
1	6EC5	F4BMH
2	6ED5	F5AMH
3	6EE5	F6CMH

CONTENTS

SCHEDULED SERVICE PARTS.....1
TOP COWLING.....2
CYLINDER & CRANKCASE 1.....3
CRANKSHAFT & PISTON.....4
CYLINDER & CRANKCASE 2.....5
VALVE.....7
INTAKE.....8
CARBURETOR.....9
FUEL 1.....10
FUEL 2.....11
STARTER.....14
GENERATOR.....15
ELECTRICAL.....16
BOTTOM COWLING.....17
STEERING.....18
CONTROL.....20
BRACKET.....21
UPPER CASING.....23
LOWER CASING & DRIVE 1.....24
LOWER CASING & DRIVE 2.....26
FUEL TANK.....27
OPTIONAL PARTS.....28
REPAIR KIT 1.....29
REPAIR KIT 2.....30
REPAIR KIT 3.....31

INDEX

NUMERICAL INDEX.....32

TABLE DES MATIERES

PIECES MAINTENANCE PERIODIQUE.....1
CAPOT SUPERIEUR..... 2
CYLINDRE & CARTER 1..... 3
VILEBREQUIN & PISTON.....4
CYLINDRE & CARTER 2..... 5
SOUPAPE..... 7
ADMISSION.....8
CARBURATEUR..... 9
CARBURANT 1..... 10
CARBURANT 2..... 11
DEMARREUR.....14
GENERATRICE.....15
ELECTRIQUE.....16
CAPOT INFERIEUR.....17
DIRECTION.....18
COMMANDE..... 20
SUPPORT..... 21
FOURREAU.....23
BOITIER D'HELICE TRANSMISSION1.....24
BOITIER D'HELICE TRANSMISSION2.....26
RESERVOIR A CARBURANT.....27
PIECES OPTIONNELLES.....28
KITS DE REPARATION 1..... 29
KITS DE REPARATION 2..... 30
KITS DE PEPARATION 3.....31

INDEX

INDEX NUMERIQUE.....32

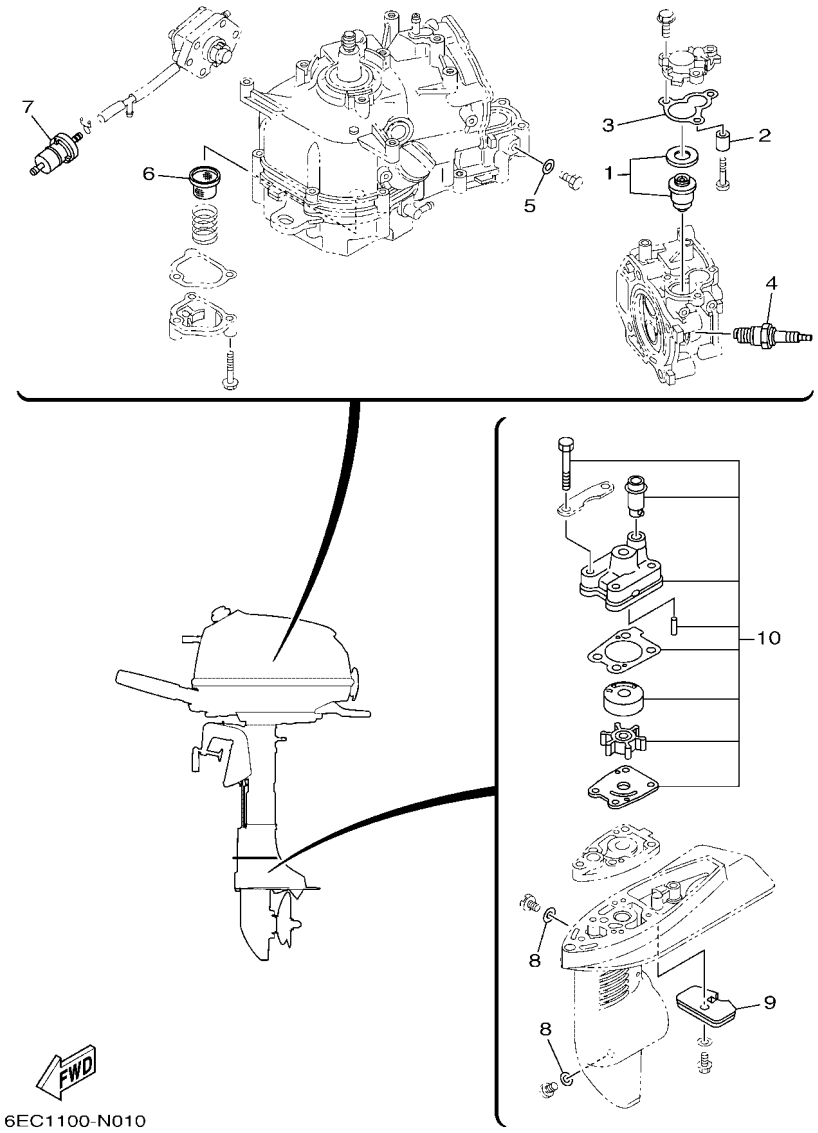

FIG. 1 SCHEDULED SERVICE PARTS — PIECES MAINTENANCE PERIODIQUE

REF. NO.	PART NO. N° PIECES	DESCRIPTION DESCRIPTION	6EC5	6ED5	6EE5			REMARKS REMARQUES
1	66M–12411–01	THERMOSTAT THERMOSTAT	1	1	1			
2	6G8–11325–00	ANODE ANODE	1	1	1			
3	67D–12414–A0	GASKET, COVER JOINT, COUVERCLE	1	1	1			
4	94702–00372	PLUG, SPARK (NGK CR6HSB) BOUGIE D,ALLUMAGE	1	1	1			
5	90430–08143	GASKET JOINT	1	1	1			
6	5YP–E3411–00	STRAINER, OIL FILTRE, HUILE	1	1	1			
7	6EE–F4251–00	STRAINER 1 FILTRE 1	1	1	1			
8	90430–08003	GASKET JOINT	3	3	3			
9	6L5–45251–03	ANODE ANODE	1	1	1			
10	6EE–W0078–00	WATER PUMP REPAIR KIT KIT DE REPARATION DE LA POMPE	1	1	1			

FIG. 2 TOP COWLING — CAPOT SUPERIEUR

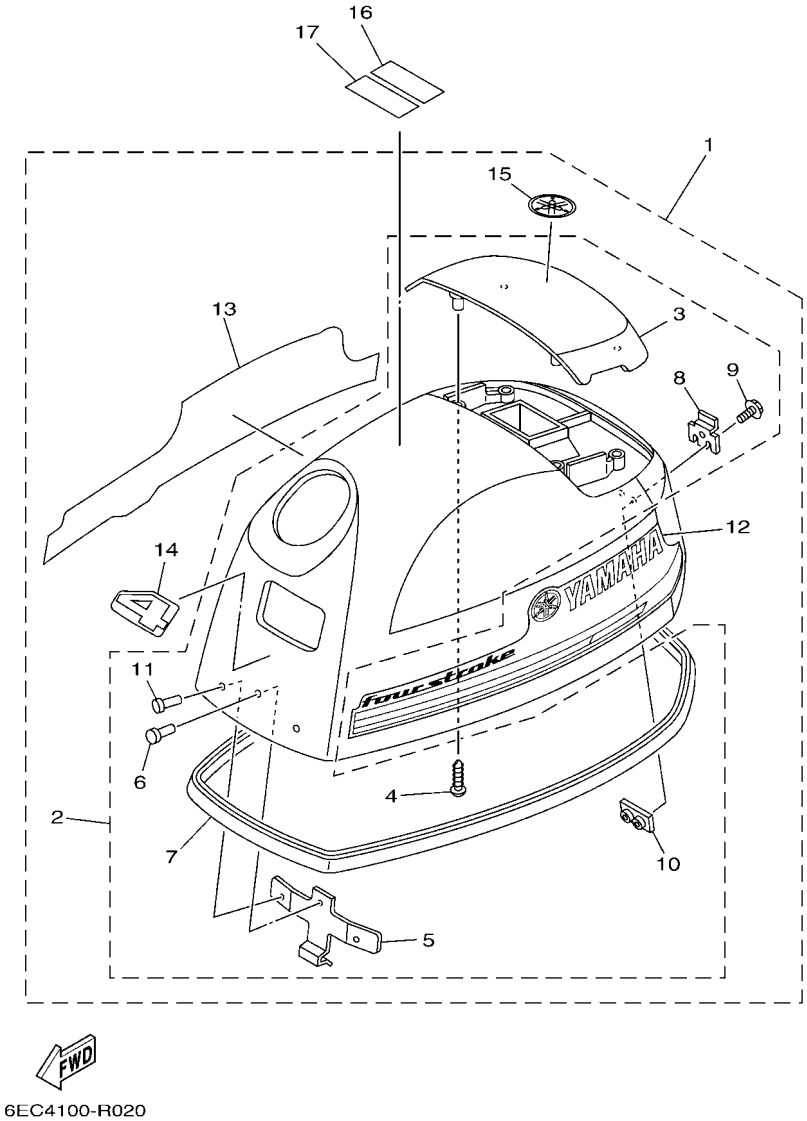

6EC4100-R020

REF. NO.	PART NO. N° PIECES	DESCRIPTION DESCRIPTION	6EC5	6ED5	6EE5			REMARKS REMARQUES
1	6EC–G2610–01	TOP COWLING ASSY CAPOT (ENS.)	1					
	6ED–G2610–01	TOP COWLING ASSY CAPOT (ENS.)		1				
	6EE–G2610–01	TOP COWLING ASSY CAPOT (ENS.)			1			
2	6EC–G261A–01	.TOP COWLING W/O GRAPHICS .CAPOT SUPERIEUR SANS GRAPHIQUE	1	1	1			
3	6EE–G2613–01	..MOLDING, AIR DUCT ..MANCHON A AIR	1	1	1			
4	97780–40012	..SCREW, TAPPING ..VIS, TETE BOMBEE	4	4	4			
5	6EE–G2651–00	..HOOK ..CROCHET	1	1	1			
6	90266–04M04	..RIVET ..RIVET	1	1	1			
7	6BX–42615–00	..SEAL ..JOINT	1	1	1			
8	6EE–G2652–00	..HOOK ..CROCHET	1	1	1			
9	97595–05514	..BOLT, WITH WASHER ..VIS HEXAGONAL AVC RONDELLE	2	2	2			
10	6EE–G2649–00	..HOLDER, CLAMP BAND ..SUPPORT, SANDOW DE SERRAGE	1	1	1			
11	90266–04M00	..RIVET ..RIVET	2	2	2			
12	6EE–G2675–00	.GRAPHIC, SIDE 1 .EMBLEME	1	1	1			
13	6EE–G2676–00	.GRAPHIC, SIDE 2 .EMBLEME	1	1	1			
14	6EC–G2677–00	.GRAPHIC, FRONT .ADHESIF, AVANT	1					
	6ED–G2677–00	.GRAPHIC, FRONT .ADHESIF, AVANT		1				
	6EE–G2677–00	.GRAPHIC, FRONT .ADHESIF, AVANT			1			
15	6EE–G2697–00	.TUNING FORK MARK .MARQUE, YAMAHA	1	1	1			
16	6EE–G2698–40	LABEL, WARNING (FUEL) ETIQUETTE, AVERTISSEMENT	1	1	1			
17	6EE–G2698–50	LABEL, WARNING (FUEL) ETIQUETTE, AVERTISSEMENT	1	1	1			

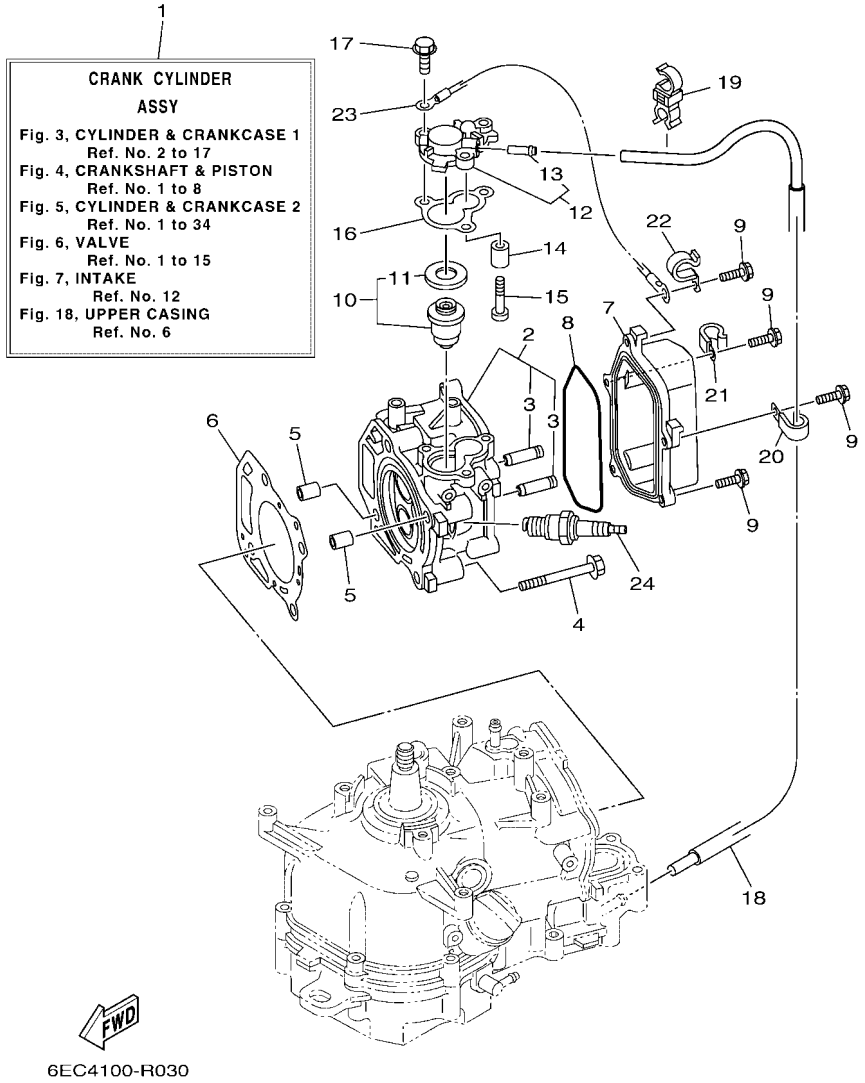

FIG. 3 CYLINDER & CRANKCASE 1 — CYLINDRE & CARTER 1

REF. NO.	PART NO. N° PIECES	DESCRIPTION DESCRIPTION	6EC5	6ED5	6EE5			REMARKS REMARQUES
1	6EE–WE090–00–1S	CRANK CYLINDER ASSY EMBIELLAGE CYLINDRE (ENS.)	1	1	1			
2	6EE–E1111–00–1S	HEAD, CYLINDER 1 CULASSE, 1	1	1	1			
3	6EE–E1133–10	.GUIDE, VALVE 1 .GUIDE, SOUPAPE 1	2	2	2			
4	90105–08M36	BOLT, FLANGE BOULON, A COLLERETTE	4	4	4			
5	99530–10114	PIN, DOWEL GOUJON, D'ASSEMBLAGE	2	2	2			
6	6BX–11181–00	GASKET, CYLINDER HEAD 1 JOINT, DE CULASSE 1	1	1	1			
7	6EE–E1191–00	COVER, CYLINDER HEAD 1 COUVERCLE, CULASSE 1	1	1	1			
8	6EE–E1356–00	SEAL, CYLINDER 2 JOINT, SPY CYLINDRE	1	1	1			
9	97595–06520	BOLT, WITH WASHER VIS HEXAGONAL AVC RONDELLE	5	5	5			
10	66M–12411–01	THERMOSTAT THERMOSTAT	1	1	1			
11	688–12412–00	.SEAL, THERMOSTAT .JOINT, THERMOSTAT	1	1	1			
12	6EE–E2413–00–1S	COVER, THERMOSTAT COUVERCLE, THERMOSTAT	1	1	1			
13	6EE–F4377–00	.PIPE, JOINT 2 .DURITE RACCORDEMENT 2	1	1	1			
14	6G8–11325–00	ANODE ANODE	1	1	1			
15	97880–05025	SCREW, PAN HEAD VIS, TETE TRONCONIQUE	1	1	1			
16	67D–12414–A0	GASKET, COVER JOINT, COUVERCLE	1	1	1			
17	90119–06MA2	BOLT, WITH WASHER BOULON, AVEC RONDELLE	3	3	3			
18	6EE–F4323–00	PIPE 12 DURITE 12	1	1	1			
19	90464–09021	CLAMP BRIDE	1	1	1			
20	90465–06M86	CLAMP BRIDE	1	1	1			
21	90465–06M86	CLAMP BRIDE	1	1	1			
22	90465–08371	CLAMP BRIDE	1	1	1			
23	6EE–H2519–00	WIRE, EARTH LEAD FIL, MASSE	1	1	1			
24	94702–00372	PLUG, SPARK (NGK CR6HSB) BOUGIE D,ALLUMAGE	1	1	1			

FIG. 4 CRANKSHAFT & PISTON — VILEBREQUIN & PISTON

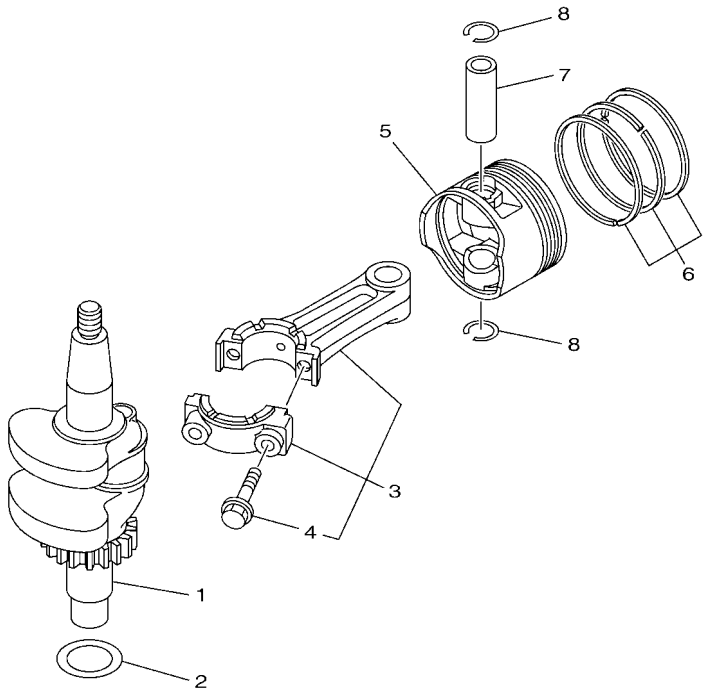

6BV1100-J030

REF. NO.	PART NO. N° PIECES	DESCRIPTION DESCRIPTION	6EC5	6ED5	6EE5			REMARKS REMARQUES
1	6BX–E1410–00	CRANKSHAFT VILEBREQUIN COMPLET	1	1	1			
2	90201–266P2	WASHER, PLATE RONDELLE, PLATE	1	1	1			
3	6EE–E1650–00	CONNECTING ROD ASSY BIELLE COMPLETTE	1	1	1			
4	7CN–E1654–00	.BOLT, CONNECTING ROD .BOULON, BIELLE	2	2	2			
5	6EE–E1631–00–96	PISTON (STD) PISTON (STD)	1	1	1			
	6EE–E1635–00	PISTON (0.25MM O/S) PISTON (0.25MM O/S)	1	1	1			AP AP
	6EE–E1636–00	PISTON (0.50MM O/S) PISTON (0.50MM O/S)	1	1	1			AP AP
6	6EE–E1603–00	PISTON RING SET (STD) JEU DE SEGMENTS (STD)	1	1	1			
	6EE–E1604–00	PISTON RING SET (0.25MM O/S) JEU DE SEGMENTS (0.25MM O/S)	1	1	1			AP AP
	6EE–E1605–00	PISTON RING SET (0.50MM O/S) JEU DE SEGMENTS (0.50MM O/S)	1	1	1			AP AP
7	6EE–E1633–00	PIN, PISTON AXE, PISTON	1	1	1			
8	93450–16068	CIRCLIP CIRCLIP	2	2	2			

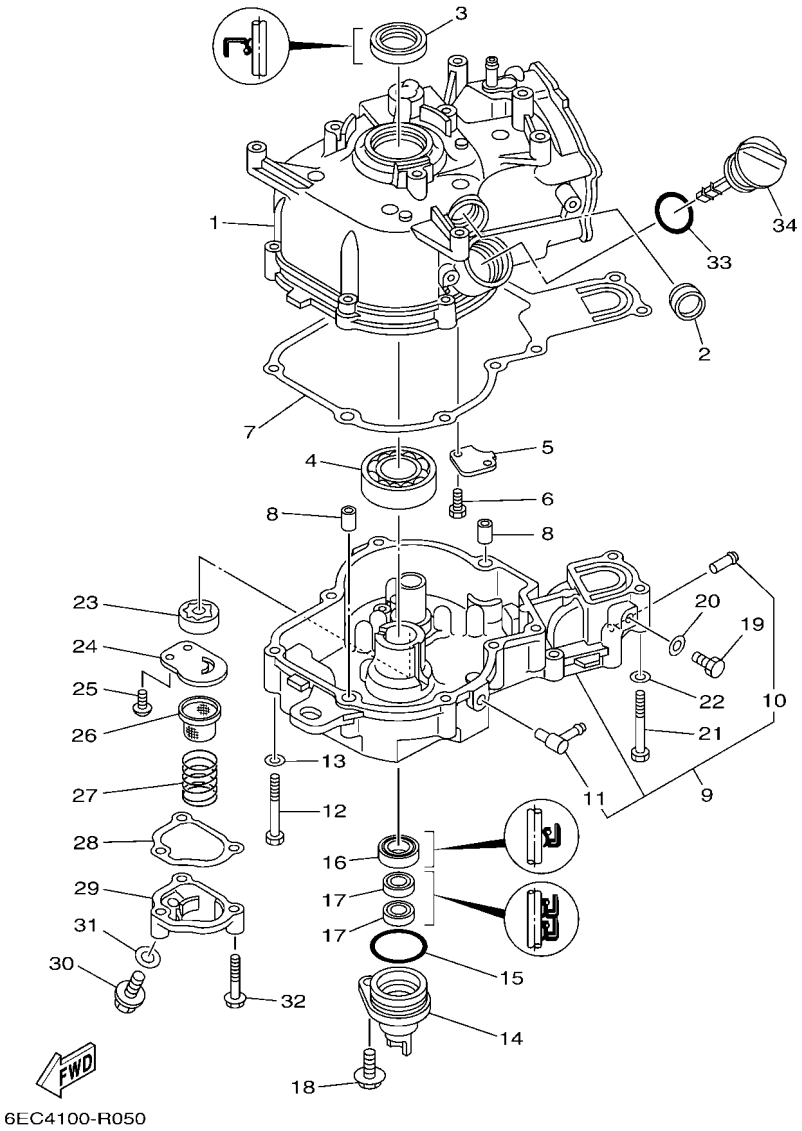

FIG. 5 CYLINDER & CRANKCASE 2 — CYLINDRE & CARTER 2

REF. NO.	PART NO. N° PIECES	DESCRIPTION DESCRIPTION	6EC5	6ED5	6EE5			REMARKS REMARQUES
1	6EE–E1311–00–1S	CYLINDER 1 CYLINDRE 1	1	1	1			
2	3Y6–15361–00	GAUGE, LEVEL JAUGE A HUILE	1	1	1			
3	93102–25821	OIL SEAL JOINT SPY	1	1	1			
4	93306–255X0	BEARING ROULEMENT	1	1	1			
5	6EE–E1168–00	COVER, BREATHER COUVERCLE, RENIFLARD	1	1	1			
6	97013–05010	BOLT BOULON	2	2	2			
7	6BX–11351–00	GASKET, CYLINDER JOINT, D'EMBASE	1	1	1			
8	99530–10114	PIN, DOWEL GOUJON, D'ASSEMBLAGE	2	2	2			
9	6EE–E5111–00–1S	CRANKCASE 1 CARTER DE MOTEUR	1	1	1			
10	6EE–F4377–00	.PIPE, JOINT 2 .DURITE RACCORDEMENT 2	1	1	1			
11	676–11372–00	.NIPPLE, HOSE .RACCORD, TUYAU	1	1	1			
12	97013–06050	BOLT BOULON	8	8	8			
13	92903–06600	WASHER, PLATE RONDELLE, PLATE	8	8	8			
14	6EE–E5396–00–CA	HOUSING, OIL SEAL LOGEMENT DE JOINT SPY	1	1	1			
15	93210–35803	O-RING JOINT TORIQUE	1	1	1			
16	93102–20814	OIL SEAL JOINT SPY	1	1	1			
17	93102–10800	OIL SEAL JOINT SPY	2	2	2			
18	97595–08520	BOLT, WITH WASHER VIS HEXAGONAL AVC RONDELLE	1	1	1			
19	97095–08014	BOLT BOULON	1	1	1			
20	90430–08143	GASKET JOINT	1	1	1			
21	97013–06050	BOLT BOULON	2	2	2			
22	92903–06600	WASHER, PLATE RONDELLE, PLATE	2	2	2			
23	6BX–E3310–00	ROTOR ASSY 1 ROTOR COMPLET	1	1	1			
24	6EE–E3316–00	COVER, PUMP COUVERCLE DE POMPE	1	1	1			
25	98517–06012	SCREW, PAN HEAD VIS, TETE TRONCONIQUE	2	2	2			
26	5YP–E3411–00	STRAINER, OIL FILTRE, HUILE	1	1	1			
27	90501–18576	SPRING, COMPRESSION RESSORT, COMPRESSION	1	1	1			

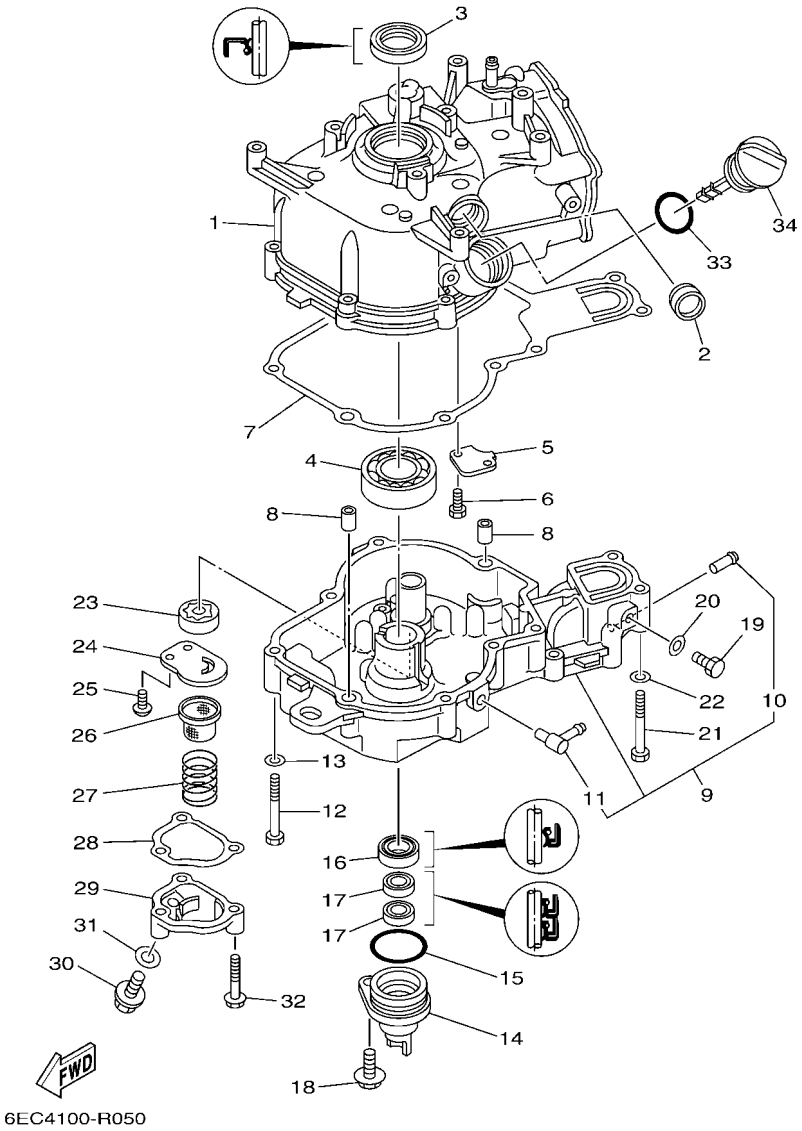

FIG. 5 CYLINDER & CRANKCASE 2 — CYLINDRE & CARTER 2

REF. NO.	PART NO. N° PIECES	DESCRIPTION DESCRIPTION	6EC5	6ED5	6EE5			REMARKS REMARQUES
28	6EE–E3475–00	GASKET JOINT	1	1	1			
29	6EE–E3417–00–1S	COVER, STRAINER COUVERCLE, FILTRE	1	1	1			
30	90105–08M76	BOLT, FLANGE BOULON, A COLLERETTE	1	1	1			
31	90201–08818	WASHER, PLATE RONDELLE, PLATE	1	1	1			
32	97575–06535	BOLT, WITH WASHER VIS HEXAGONAL AVC RONDELLE	3	3	3			
33	93210–24800	O-RING JOINT TORIQUE	1	1	1			
34	6EE–E5362–00	PLUG, OIL LEVEL PLOT, NIVEAU D'HUILE	1	1	1			

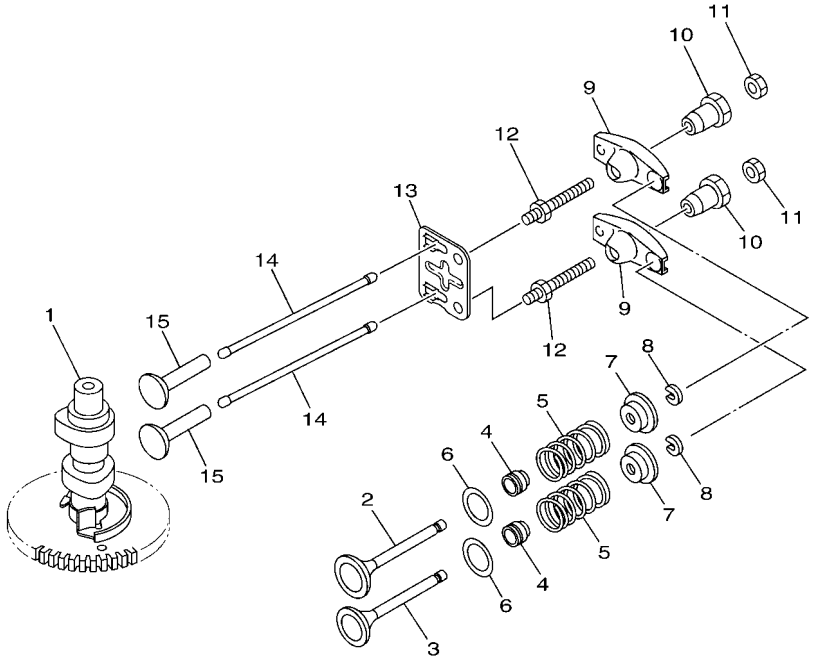

6EC1100-N060

FIG. 6 VALVE — SOUPAPE

REF. NO.	PART NO. N° PIECES	DESCRIPTION DESCRIPTION	6EC5	6ED5	6EE5			REMARKS REMARQUES
1	6EE–E2170–00	CAMSHAFT ASSY 1 ENS ARBRE A CAMES 1	1	1	1			
2	6EE–E2111–00	VALVE, INTAKE SOUPAPE, ADMISSION	1	1	1			
3	6EE–E2121–00	VALVE, EXHAUST SOUPAPE, ECHAPPEMENT	1	1	1			
4	6EE–E2119–00	SEAL, VALVE STEM JOINT, QUEUE DE SOUPAPE	2	2	2			
5	6EE–E2113–00	SPRING, VALVE INNER RESSORT DE SOUPAPE, INTERNE	2	2	2			
6	6EE–E2116–00	SEAT, VALVE SPRING SIEGE, RESSORT DE SOUPAPE	2	2	2			
7	7NJ–12117–00	RETAINER, VALVE SPRING BUTEE DE RESSORT DE SOUPAPE	2	2	2			
8	7NJ–12118–00	LOCK, VALVE SPRING RETAINER FRAISE, SOUPAPE	2	2	2			
9	67D–12151–00	ARM, VALVE ROCKER CULBUTEUR	2	2	2			
10	6EE–E2165–00	PIVOT, ROCKER ARM PIVOT, CULBUTEUR	2	2	2			
11	6EE–E2158–00	NUT, LOCK CONTRE-ECROU	2	2	2			
12	67D–12157–00	BOLT BOULON	2	2	2			
13	6EE–E2155–00	GUIDE, PUSH ROD GUIDE, TIGE-POUSSOIR	1	1	1			
14	6EE–E2154–00	ROD, VALVE PUSH TIGE DE LEVE-SOUPAPE	2	2	2			
15	6EE–E2153–00	LIFTER, VALVE LEVE-SOUPAPE	2	2	2			

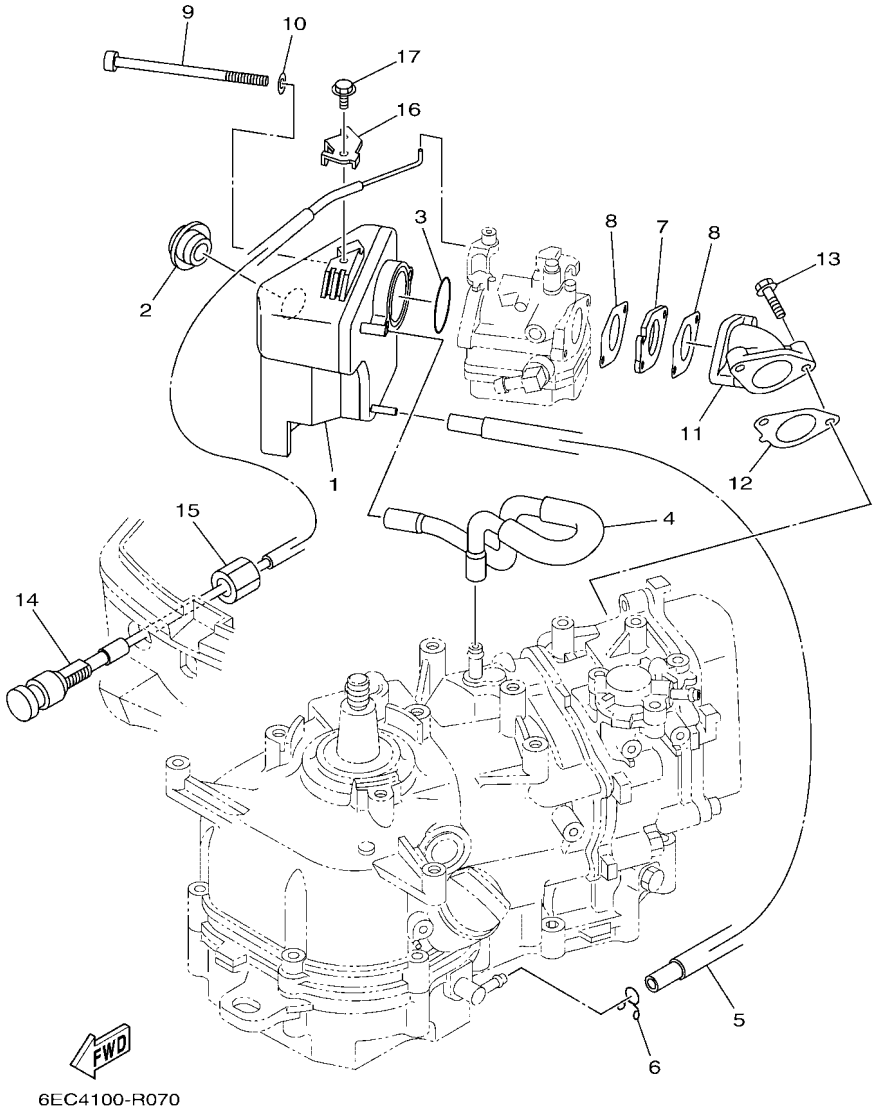

FIG. 7 INTAKE — ADMISSION

REF. NO.	PART NO. N° PIECES	DESCRIPTION DESCRIPTION	6EC5	6ED5	6EE5			REMARKS REMARQUES
1	6BX–14440–00	SILENCER ASSY, INTAKE SIENCIEUX D'ADMISSION	1	1	1			
2	90480–18M74	GROMMET PASSE-FIL	1	1	1			
3	93210–32817	O-RING JOINT TORIQUE	1	1	1			
4	6EE–F4314–00	PIPE 4 DURITE 4	1	1	1			
5	6EE–E316F–00	HOSE, OIL 1 DURITE A HUILE 1	1	1	1			
6	90467–09M09	CLIP JONC	1	1	1			
7	6EE–E3647–00	GASKET, MANIFOLD 3 JOINT, TUBULURE 3	1	1	1			
8	6EE–E3646–00	GASKET, MANIFOLD 2 JOINT, TUBULURE 2	2	2	2			
9	90110–06350	BOLT, HEXAGON SOCKET HEAD BOULON, TETE HEXAGONALE CREUSE	2	2	2			
10	90201–06106	WASHER, PLATE RONDELLE, PLATE	2	2	2			
11	6BX–E3641–10	MANIFOLD, INTAKE 1 TUBULURE, ADMISSION 1	1	1	1			
12	6EE–E3645–00	GASKET, MANIFOLD 1 JOINT, TUBULURE 1	1	1	1			
13	90119–06MA3	BOLT, WITH WASHER BOULON, AVEC RONDELLE	2	2	2			
14	6EE–F6330–00	STARTER CABLE ASSY CABLE DE STARTER	1	1	1			
15	90179–11001	NUT ECROU	1	1	1			
16	6EE–E3151–00	STAY SUPPORT	1	1	1			
17	97595–05510	BOLT HEX. HEAD VIS HEXAGONAL AVC RONDELLE	1	1	1			

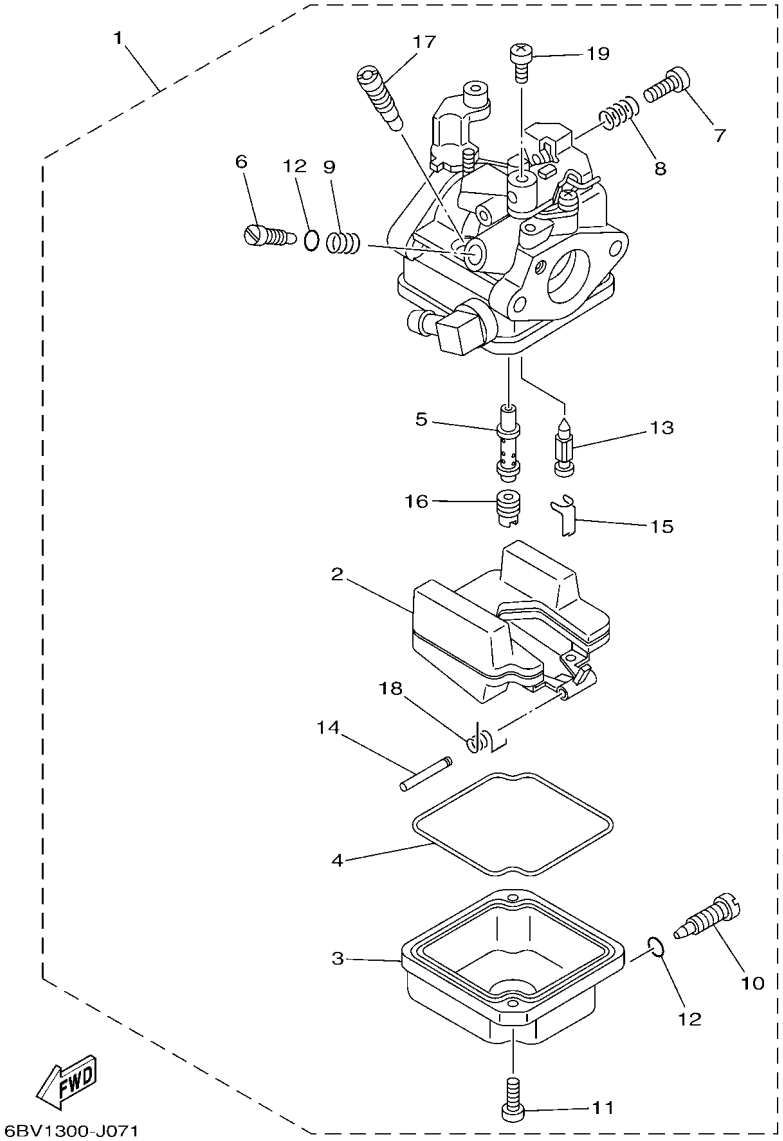

FIG. 8 CARBURETOR — CARBURATEUR

REF. NO.	PART NO. N° PIECES	DESCRIPTION DESCRIPTION	6EC5	6ED5	6EE5			REMARKS REMARQUES
1	6BV–14301–01	CARBURETOR ASSY 1 CARBURATEUR COMPLET 1	1					
	6BW–14301–01	CARBURETOR ASSY 1 CARBURATEUR COMPLET 1		1				
	6BX–14301–00	CARBURETOR ASSY 1 CARBURATEUR COMPLET 1			1			
2	6BX–14985–00	.FLOAT .FLOTTEUR	1	1	1			
3	6BX–14980–00	.BODY, FLOAT CHAMBER .CORPS, CUVE DE FLOTTEUR	1	1	1			
4	6BX–14984–00	.GASKET, FLOAT CHAMBER .JOINT, CUVE DE FLOTTEUR	1	1	1			
5	6BV–14947–00	.JET, NEEDLE .GICLEUR DE STARTER	1					
	6BW–14947–00	.JET, NEEDLE .GICLEUR DE STARTER		1				
	6BX–14947–00	.JET, NEEDLE .GICLEUR DE STARTER			1			
6	6BW–14923–20	.SCREW, PILOT .VIS, RALENTI	1	1				
	6BX–14923–20	.SCREW, PILOT .VIS, RALENTI			1			
7	6BX–14523–00	.SCREW, STOP .VIS, BUTEE	1	1	1			
8	6BX–14555–00	.SPRING .RESSORT	1	1	1			
9	6BX–14935–00	.SPRING .RESSORT	1	1	1			
10	6BX–14991–00	.SCREW .VIS	1	1	1			
11	6BX–14592–00	.SCREW .VIS	2	2	2			
12	4JH–14562–00	.O-RING .JOINT TORIQUE	2	2	2			
13	6BX–14546–00	.VALVE, NEEDLE .POINTEAU	1	1	1			
14	6BX–14548–00	.PIN, FLOAT ARM .AXE, BRAS DE FLOTTEUR	1	1	1			
15	6BX–14937–00	.CLIP .JONC	1	1	1			
16	6BV–14943–11	.JET, MAIN (#60) .GICLEUR, PRINCIPAL (#60)	1					
	6BW–14943–15	.JET, MAIN (#70) .GICLEUR, PRINCIPAL (#70)		1				
	6BX–14943–17	.JET, MAIN (#75) .GICLEUR, PRINCIPAL (#75)			1			
17	6BV–14948–01	.JET (#35) .GICLEUR (#35)	1	1				
	6BX–14948–04	.JET (#42) .GICLEUR (#42)			1			
18	6BX–14556–00	.SPRING .RESSORT	1	1	1			
19	98580–04006	.SCREW, PAN HEAD .VIS	1	1	1			

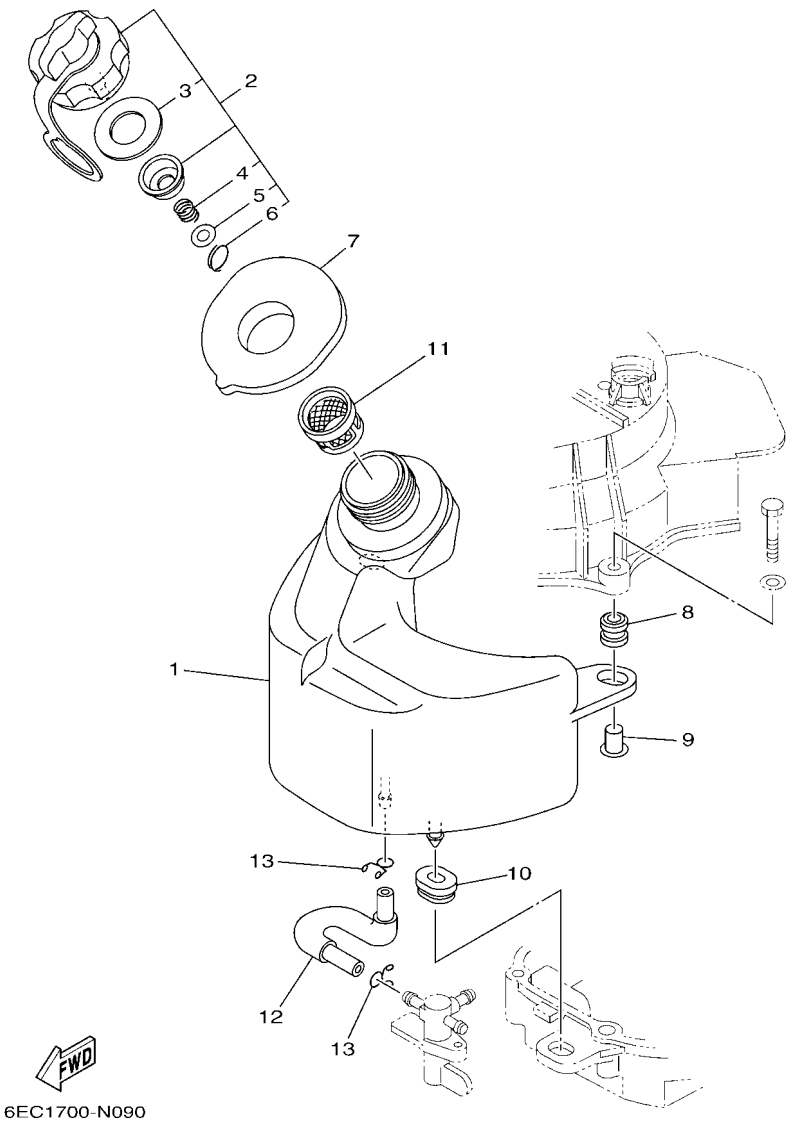

FIG. 9 FUEL 1 — CARBURANT 1

REF. NO.	PART NO. N° PIECES	DESCRIPTION DESCRIPTION	6EC5	6ED5	6EE5			REMARKS REMARQUES
1	6EE–F4111–01	TANK, FUEL RESERVOIR, A ESSENCE	1	1	1			
2	6BX–24610–01	CAP ASSY BOUCHON	1	1	1			
3	68D–24612–00	.PACKING, CAP .JOINT, BOUCHON	1	1	1			
4	90501–100A5	.SPRING, COMPRESSION .RESSORT, COMPRESSION	1	1	1			
5	92990–04200	.WASHER, PLAIN .RONDELLE, PLATE	1	1	1			
6	90468–100A0	.CLIP .JONC	1	1	1			
7	6BX–24641–00	GASKET, CAP 1 JOINT 1, BOUCHON	1	1	1			
8	6A0–82317–00	DAMPER, IGNITION COIL AMORTISSEUR, BOBINE D'ALLUM	2	2	2			
9	90387–06119	COLLAR COLLERETTE	2	2	2			
10	90480–01559	GROMMET PASSE-FIL	1	1	1			
11	6EE–F4167–00	STRAINER FILTRE	1	1	1			
12	6EE–F4311–00	PIPE, FUEL 1 DURITE A ESSENCE	1	1	1			
13	90467–09M09	CLIP JONC	2	2	2			

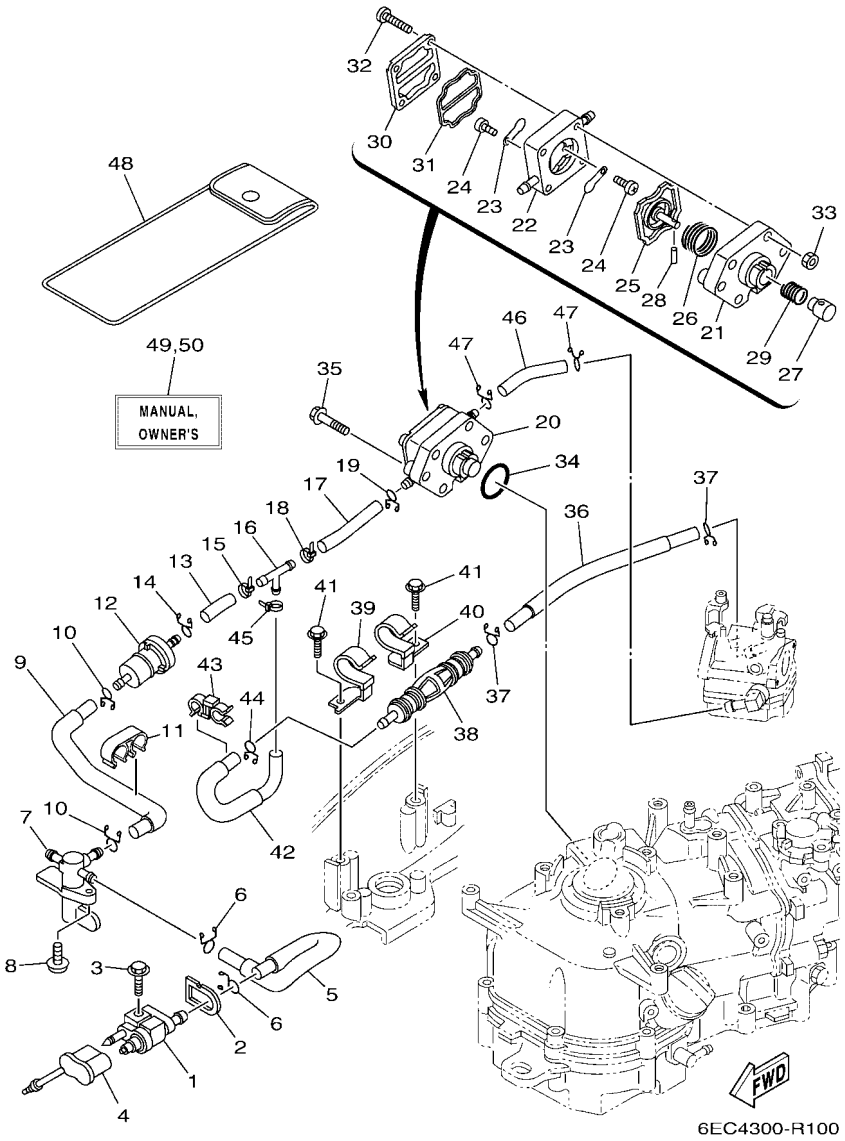

FIG. 10 FUEL 2 — CARBURANT 2

REF. NO.	PART NO. N° PIECES	DESCRIPTION DESCRIPTION	6EC5	6ED5	6EE5			REMARKS REMARQUES
1	6G1–24304–10	FUEL PIPE JOINT COMP. 1 DURITE RACCORDEMT. A ESSENCE	1	1	1			
2	6EE–F4329–00	SEAL JOINT	1	1	1			
3	97595–06525	BOLT, WITH WASHER VIS HEXAGONAL AVC RONDELLE	1	1	1			
4	6BX–2476U–00	PROTECTOR 1 PROTECTEUR 1	1	1	1			
5	6EE–F4312–00	PIPE 2 DURITE 2	1	1	1			
6	90467–09M09	CLIP JONC	2	2	2			
7	6EE–F4500–00	FUEL COCK ASSY 1 ROBINET A ESSENCE COMPLETE 1	1	1	1			
8	97985–06212	SCREW, WITH WASHER VIS, AVEC RONDELLE	1	1	1			
9	6EE–F4313–00	PIPE 3 DURITE 3	1	1	1			
10	90467–09M09	CLIP JONC	2	2	2			
11	90464–12016	CLAMP BRIDE	1	1	1			
12	6EE–F4251–00	STRAINER 1 FILTRE 1	1	1	1			
13	6EE–F247C–00	HOSE 3 DURITE 3	1	1	1			
14	90467–09M09	CLIP JONC	1	1	1			
15	90465–11M10	CLAMP BRIDE	1	1	1			
16	688–24378–00	PIPE, JOINT 3 DURITE RACCORDEMENT 3	1	1	1			
17	6EE–F247D–00	HOSE 4 DURITE 4	1	1	1			
18	90465–11M10	CLAMP BRIDE	1	1	1			
19	90467–09M09	CLIP JONC	1	1	1			
20	6BX–24410–00	FUEL PUMP ASSY POMPE A ESSENCE	1	1	1			
21	67D–24412–00	.BODY 1 .CORPS 1	1	1	1			
22	67D–24413–02	.BODY 2 .CORPS 2	1	1	1			
23	6A0–24421–01	.VALVE, CHECK .SOUPAPE, RETENUE	2	2	2			
24	6E7–14325–00	.SCREW, PAN HEAD .VIS TETE CONIQUE	2	2	2			
25	6BX–24411–00	.DIAPHRAGM .DIAPHRAGME	1	1	1			
26	67D–24423–00	.SPRING, DIAPHRAGM .RESSORT, DIAPHRAGME	1	1	1			
27	6BX–13131–00	.PLUNGER .PLONGEUR	1	1	1			

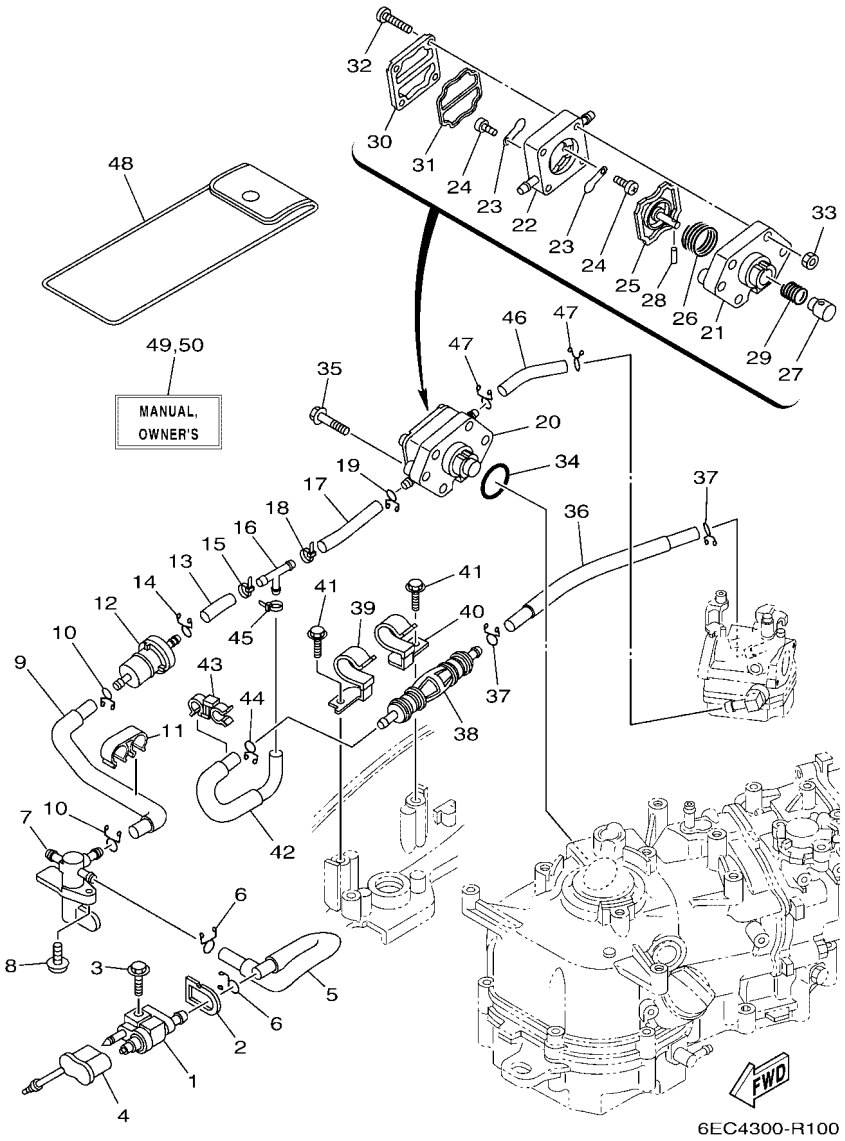

FIG. 10 FUEL 2 — CARBURANT 2

REF. NO.	PART NO. N° PIECES	DESCRIPTION DESCRIPTION	6EC5	6ED5	6EE5			REMARKS REMARQUES
28	66M–24374–00	.PIN .GOUPILLE	1	1	1			
29	6BX–24454–00	.SPRING .RESSORT	1	1	1			
30	67D–24414–01	.BODY 3 .CORPS 3	1	1	1			
31	66M–24471–01	.DIAPHRAGM .DIAPHRAGME	1	1	1			
32	67D–24444–00	.SCREW .VIS	4	4	4			
33	95380–04600	.NUT .ECROU	4	4	4			
34	93210–27806	O-RING JOINT TORIQUE	1	1	1			
35	97595–06630	BOLT, WITH WASHER VIS HEXAGONAL AVC RONDELLE	2	2	2			
36	6EE–F247B–00	HOSE 2 DURITE 2	1	1	1			
37	90467–09M09	CLIP JONC	2	2	2			
38	6BX–24360–00	PRIMER PUMP ASSY POMPE D'AMORCAGE	1	1	1			
39	6EE–F4135–00	CLAMP 1 COLLIER 1	1	1	1			
40	6EE–F4136–00	CLAMP 2 COLLIER 2	1	1	1			
41	90109–06M80	BOLT BOULON	2	2	2			
42	6EE–F247A–00	HOSE 1 DURITE 1	1	1	1			
43	90464–09021	CLAMP BRIDE	1	1	1			
44	90467–09M09	CLIP JONC	1	1	1			
45	90465–11M10	CLAMP BRIDE	1	1	1			
46	6EE–E3971–00	PIPE, FUEL 1 TUBE 1, CARBURANT	1	1	1			
47	90467–09M09	CLIP JONC	2	2	2			
48	6EE–F8100–00	TOOL KIT TROUSSE A OUTILS	1	1	1			AP AP
49	6EC–F8199–73–E0	MANUAL,OWNER'S MANUEL D'UTILISATION	1	1	1			UR (E) UR (E)
	6EC–F8199–73–F0	MANUAL,OWNER'S MANUEL D'UTILISATION	1	1	1			UR (F) UR (F)
	6EC–F8199–73–S0	MANUAL,OWNER'S MANUEL D'UTILISATION	1	1	1			UR (ES) UR (ES)
	6EC–F8199–73–G0	MANUAL,OWNER'S MANUEL D'UTILISATION	1	1	1			UR (D) UR (D)
	6EC–F8199–73–D0	MANUAL,OWNER'S MANUEL D'UTILISATION	1	1	1			UR (NL) UR (NL)
	6EC–F8199–73–H0	MANUAL,OWNER'S MANUEL D'UTILISATION	1	1	1			UR (I) UR (I)

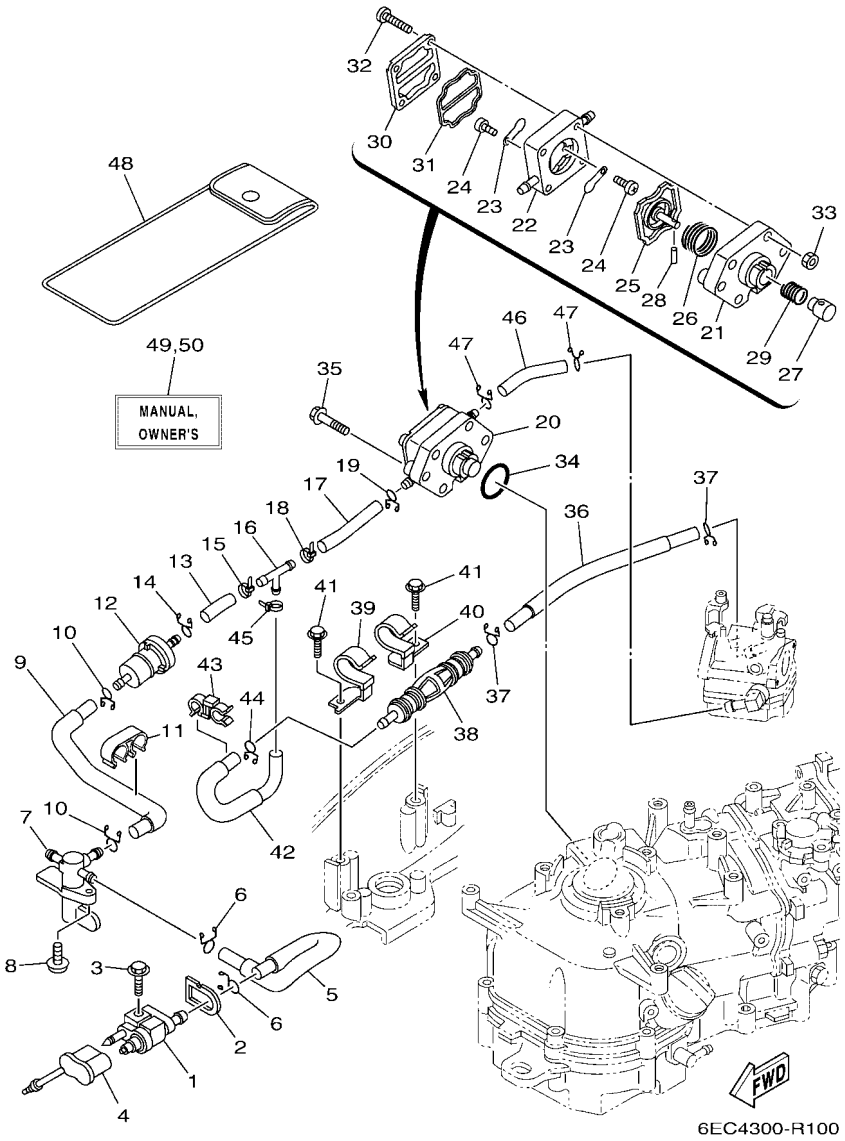

FIG. 10 FUEL 2 — CARBURANT 2

REF. NO.	PART NO. N° PIECES	DESCRIPTION DESCRIPTION	6EC5	6ED5	6EE5			REMARKS REMARQUES
50	6EC–F8199–83–K0	MANUAL,OWNER'S MANUEL D'UTILISATION	1	1	1			UR (DK) UR (DK)
	6EC–F8199–83–R0	MANUAL,OWNER'S MANUEL D'UTILISATION	1	1	1			UR (GR) UR (GR)
	6EC–F8199–83–P0	MANUAL,OWNER'S MANUEL D'UTILISATION	1	1	1			UR (P) UR (P)
	6EC–F8199–83–N0	MANUAL,OWNER'S MANUEL D'UTILISATION	1	1	1			UR (N) UR (N)
	6EC–F8199–83–M0	MANUAL,OWNER'S MANUEL D'UTILISATION	1	1	1			UR (S) UR (S)
	6EC–F8199–83–L0	MANUAL,OWNER'S MANUEL D'UTILISATION	1	1	1			UR (SF) UR (SF)

FIG. 11 STARTER DEMARREUR

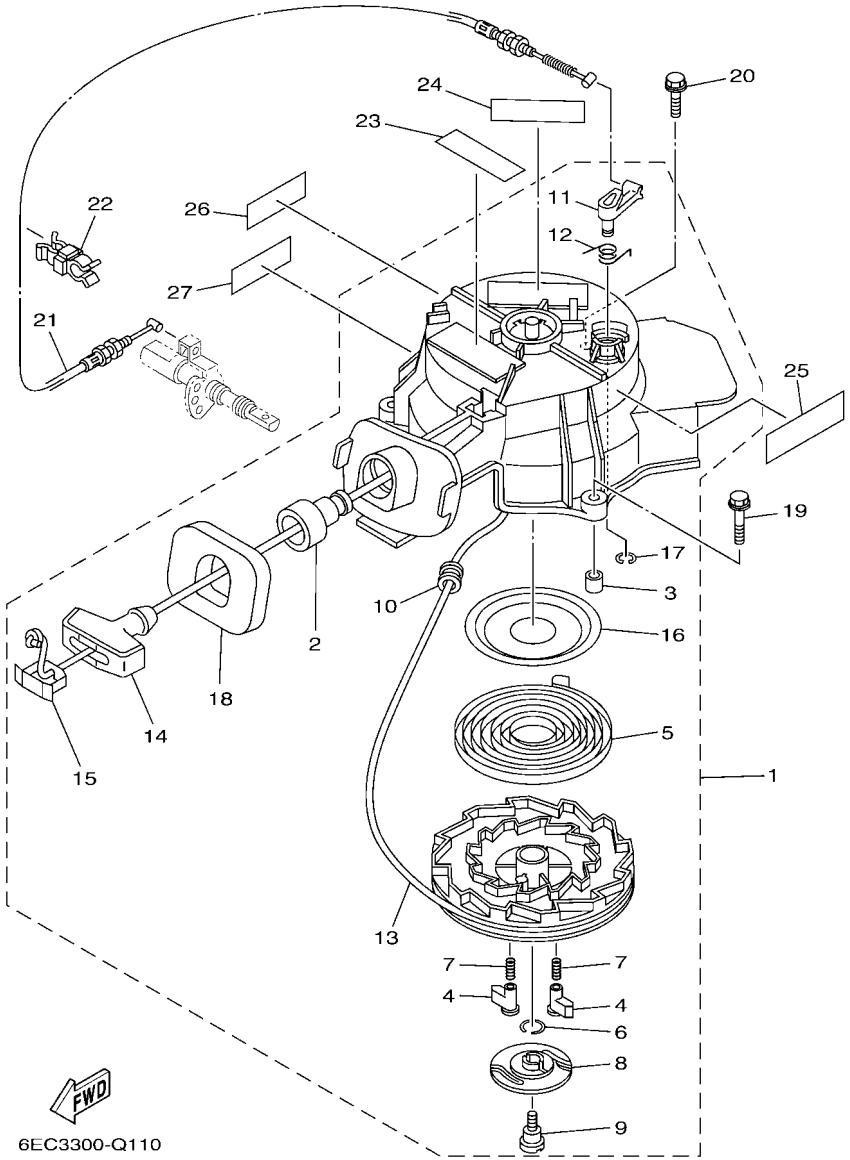

*1:CUT FROM 50M ROLLS,PART NO.90790-48192,CUTTING LENGTH 1.8M

*1:A PRELEVER SUR BOBINE 50M ,REFERENCE 90790-48192, LONGUEUR DE COUPE 1.8M

REF. NO.	PART NO. N° PIECES	DESCRIPTION DESCRIPTION	6EC5	6ED5	6EE5			REMARKS REMARQUES
1	6EE–E5710–00	STARTER ASSY DEMARREUR COMPLET	1	1	1			
2	63V–15795–01	.GUIDE, ROPE .GUIDE DE CABLE	1	1	1			
3	67D–15764–00	.COLLAR 1 .COLLERETTE 1	3	3	3			
4	67D–15741–00	.PAWL, DRIVE .CLIQUET, ENTRAINEMENT	2	2	2			
5	67D–15713–00	.SPRING, STARTER .RESSORT DE DEMARREUR	1	1	1			
6	6BX–15705–00	.SPRING, DRIVE PAWL .RESSORT DE CLIQUET	1	1	1			
7	67D–15767–00	.SPRING .RESSORT	2	2	2			
8	67D–15735–00	.GUIDE, CAM .COULISSEAU	1	1	1			
9	67D–15793–00	.SCREW .VIS	1	1	1			
10	68T–15764–00	.COLLAR 1 .COLLERETTE 1	1	1	1			
11	67D–15794–01	.STOPPER .BUTEE	1	1	1			
12	67D–15734–00	.SPRING, RETURN .RESSORT, RAPPEL	1	1	1			
13	*	.WIRE, STARTER (L:1800MM) .CABLE DE DEMARREUR (L:1800MM)	1	1	1			*1 *1
14	6G1–15755–00	.HANDLE, STARTER .POIGNEE, DE DEMARREUR	1	1	1			
15	6G1–15779–00	.COVER .COUVERCLE	1	1	1			
16	67D–15739–00	.WASHER, THRUST .RONDELLE, DE BUTEE	1	1	1			
17	67D–15744–00	.CIRCLIP .CIRCLIP	1	1	1			
18	6BX–15762–00	.SEAL, RUBBER 2 .JOINT CAOUTCHOUC 2	1	1	1			
19	97595–06535	BOLT, WITH WASHER VIS HEXAGONAL AVC RONDELLE	2	2	2			
20	97595–06520	BOLT, WITH WASHER VIS HEXAGONAL AVC RONDELLE	1	1	1			
21	6BX–E5770–00	CABLE COMP., STARTER STOP CABLE, BUTEE DE DEMAR	1	1	1			
22	90464–07008	CLAMP BRIDE	1	1	1			
23	6EE–H1995–40	LABEL, WARNING ETIQUETTE, AVERTISSEMENT	1	1	1			
24	6EE–H1995–50	LABEL, WARNING ETIQUETTE, AVERTISSEMENT	1	1	1			
25	6EE–E4427–60	LABEL, INSTRUCTION ETIQUETTE, INSTRUCTION	1	1	1			
26	6EE–H1994–40	LABEL, SAFETY ETIQUETTE, SECURITE	1	1	1			
27	6EE–H1994–50	LABEL, SAFETY ETIQUETTE, SECURITE	1	1	1			

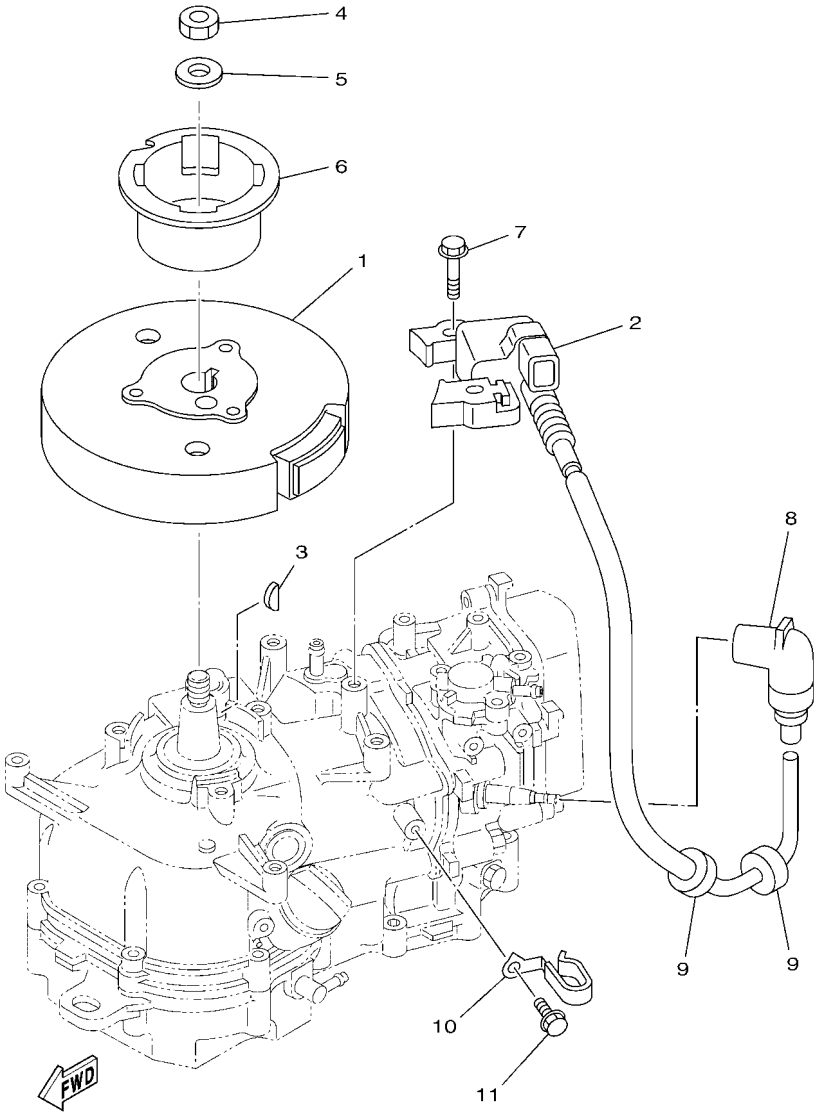

6EC1100-N120

FIG. 12 GENERATOR — GENERATRICE

REF. NO.	PART NO. N° PIECES	DESCRIPTION DESCRIPTION	6EC5	6ED5	6EE5			REMARKS REMARQUES
1	6BX–85550–00	ROTOR ASSY ROTOR CPLT	1	1	1			
2	6BV–85571–01	IGNITION COIL WITH CDI UNIT BOBINE D'ALLUMAGE AVEC CDI	1					
	6BW–85571–01	IGNITION COIL WITH CDI UNIT BOBINE D'ALLUMAGE AVEC CDI		1				
	6BX–85571–00	IGNITION COIL WITH CDI UNIT BOBINE D'ALLUMAGE AVEC CDI			1			
3	90280–04M06	KEY, WOODRUFF CLAVETTE, DEMI-LUNE	1	1	1			
4	90170–12066	NUT ECROU	1	1	1			
5	90201–12472	WASHER, PLATE RONDELLE, PLATE	1	1	1			
6	6BX–15723–00	PULLEY, STARTER POULIE DE DEMARREUR	1	1	1			
7	90105–06037	BOLT, FLANGE BOULON, A COLLERETTE	2	2	2			
8	6BX–82370–00	PLUG CAP ASSY ANTIPARASITE	1	1	1			
9	90480–25161	GROMMET PASSE-FIL	2	2	2			
10	90465–08361	CLAMP BRIDE	1	1	1			
11	97595–06512	BOLT, WITH WASHER VIS HEXAGONAL AVC RONDELLE	1	1	1			

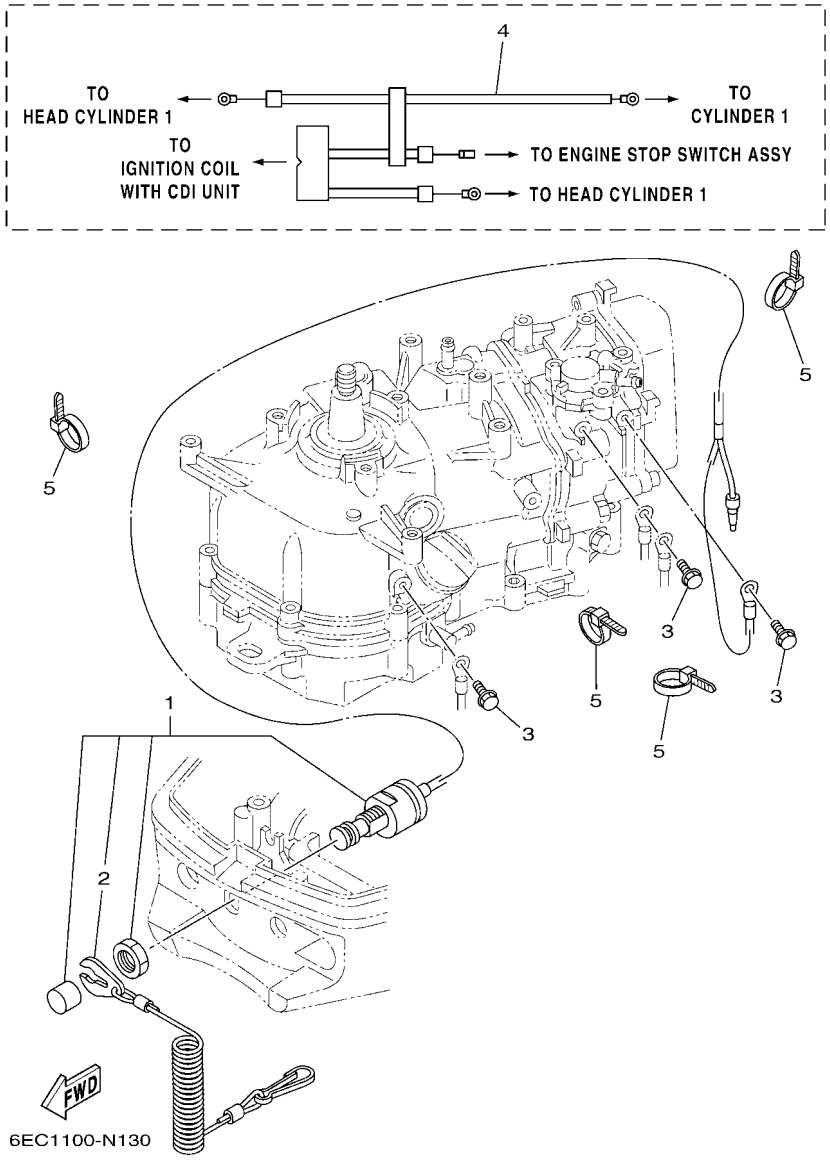

FIG. 13 ELECTRICAL — ELECTRIQUE

REF. NO.	PART NO. N° PIECES	DESCRIPTION DESCRIPTION	6EC5	6ED5	6EE5			REMARKS REMARQUES
1	6EE–H2575–01	ENGINE STOP SWITCH ASSY COUPE CIRCUIT CPLT	1	1	1			
2	6EE–H2556–00	.LANYARD, STOP SWITCH .CORDON DU COUPE CIRCUIT	1	1	1			
3	97595–06512	BOLT, WITH WASHER VIS HEXAGONAL AVC RONDELLE	3	3	3			
4	6EE–H2531–00	WIRE, LEAD FIL	1	1	1			
5	90465–13M97	CLAMP BRIDE	4	4	4			

FIG. 14 BOTTOM COWLING — CAPOT INFERIEUR

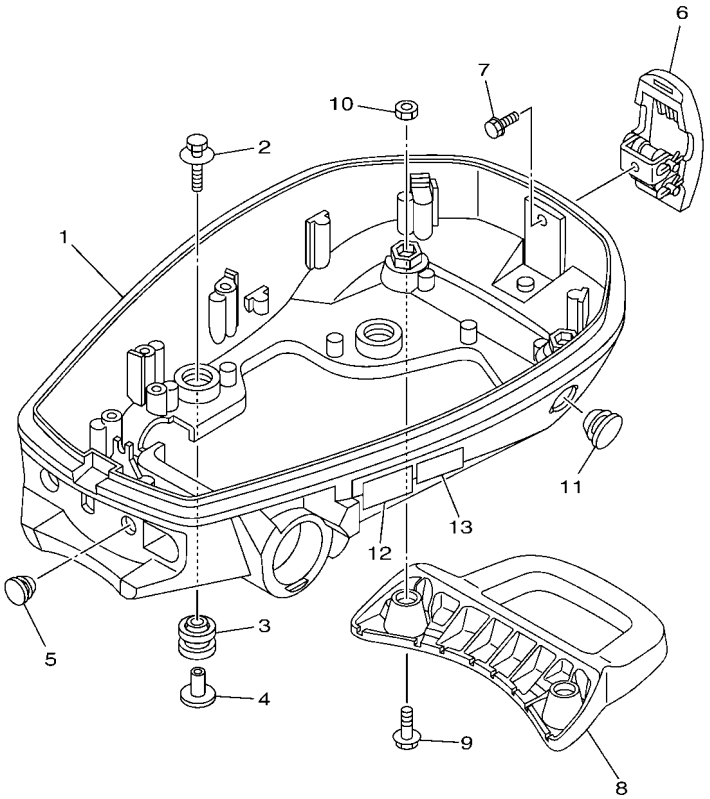

6EC4100-R140

REF. NO.	PART NO. N° PIECES	DESCRIPTION DESCRIPTION	6EC5	6ED5	6EE5			REMARKS REMARQUES
1	6EE–G2711–00–8D	COWLING, BOTTOM 1 CUVETTE 1	1	1	1			
2	90119–06098	BOLT, WITH WASHER BOULON, AVEC RONDELLE	4	4	4			
3	90480–21M82	GROMMET PASSE-FIL	4	4	4			
4	90387–06176	COLLAR COLLERETTE	4	4	4			
5	90480–14M14	GROMMET PASSE-FIL	1	1	1			
6	68T–42801–00	COWLING CLAMP COMP. BRIDE DE CAPOT COMP.	1	1	1			
7	97595–06512	BOLT, WITH WASHER VIS HEXAGONAL AVC RONDELLE	1	1	1			
8	6EE–G2731–00	CARRYING HANDLE POIGNEE DE PORTAGE	1	1	1			
9	97595–08520	BOLT, WITH WASHER VIS HEXAGONAL AVC RONDELLE	2	2	2			
10	95380–08600	NUT ECROU	2	2	2			
11	90480–22M72	GROMMET PASSE-FIL	1	1	1			
12	6EE–G2794–50	LABEL, WARNING (GENERAL) ETIQUETTE, AVERTISSEMENT	1	1	1			
13	6EE–E3437–61	MARK, CAUTION MAKER	1	1	1			

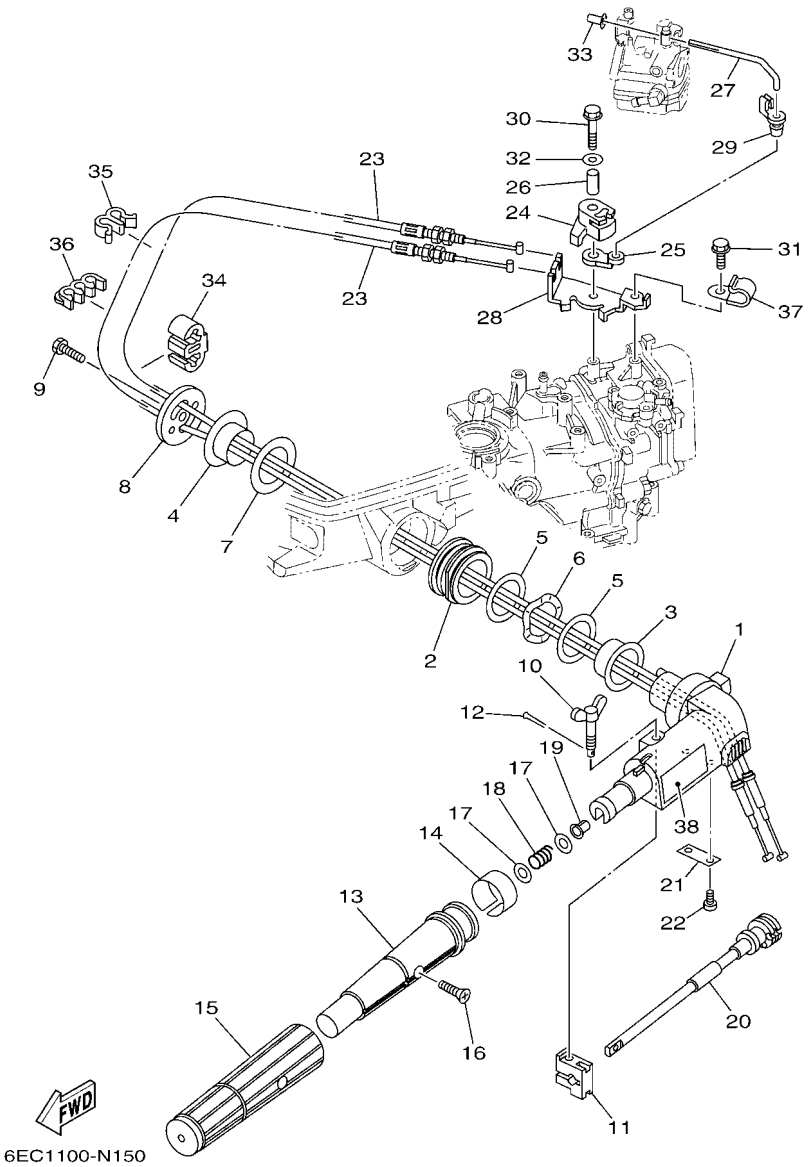

FIG. 15 STEERING — DIRECTION

REF. NO.	PART NO. N° PIECES	DESCRIPTION DESCRIPTION	6EC5	6ED5	6EE5			REMARKS REMARQUES
1	6EE–G2111–00–8D	HANDLE, STEERING POIGNEE	1	1	1			
2	6BX–42129–00	BUSHING, RUBBER DOUILLE, CAOUTCHOUC	1	1	1			
3	6EE–G2171–00	BUSHING COUSSINET	1	1	1			
4	6EE–G2172–00	BUSHING 2 DOUILLE 2	1	1	1			
5	6EE–G2181–00	WASHER RONDELLE	2	2	2			
6	6EE–G2188–00	WASHER, WAVE RONDELLE, ONDULEE	1	1	1			
7	6EE–G2182–00	WASHER 2 RONDELLE 2	1	1	1			
8	6EE–G2131–00	COVER, HANDLE STEERING COUVERCLE	1	1	1			
9	97075–08025	BOLT BOULON	1	1	1			
10	6G1–42125–01	BOLT, FRICTION ADJUSTING BOULON	1	1	1			
11	6EE–G2126–00	FRICTION, STEERING HANDLE GRIP CUVETTE, POIGNEE DE DIRECTION	1	1	1			
12	91490–16010	PIN. COTTER GOUPILLE	1	1	1			
13	6EE–G2119–00	GRIP, STEERING HANDLE POIGNEE, BARRE FRANCHE	1	1	1			
14	6EE–G2137–00	INDICATOR, THROTTLE INDICATEUR, ACCELERATION	1	1	1			
15	6EE–G2177–00	RUBBER, HANDLE CAOUTCHOUC, POIGNEE	1	1	1			
16	90152–05014	SCREW, COUNTERSUNK VIS, TETE NOYEE	1	1	1			
17	90201–10M02	WASHER, PLATE RONDELLE, PLATE	2	2	2			
18	90501–23215	SPRING, COMPRESSION RESSORT, COMPRESSION	1	1	1			
19	90386–08032	BUSH DOUILLE	1	1	1			
20	6EE–G2138–00	LEVER, THROTTLE LEVIER, ACCELERATEUR	1	1	1			
21	6EE–G2159–00	STAY SUPPORT	1	1	1			
22	97885–05012	SCREW, PAN HEAD VIS, A ENCOCHE	2	2	2			
23	6EE–F6301–00	THROTTLE CABLE ASSY CABLE D'ACCELERATEUR	2	2	2			
24	6EE–G1638–00	PULLEY POULIE	1	1	1			
25	6EE–G1283–00	LEVER, FREE ACCEL. LEVIER	1	1	1			
26	90387–06252	COLLAR COLLERETTE	1	1	1			
27	6EE–G1211–00	LINK, ACCEL. BIELLETTE, ACCELERATION	1	1	1			

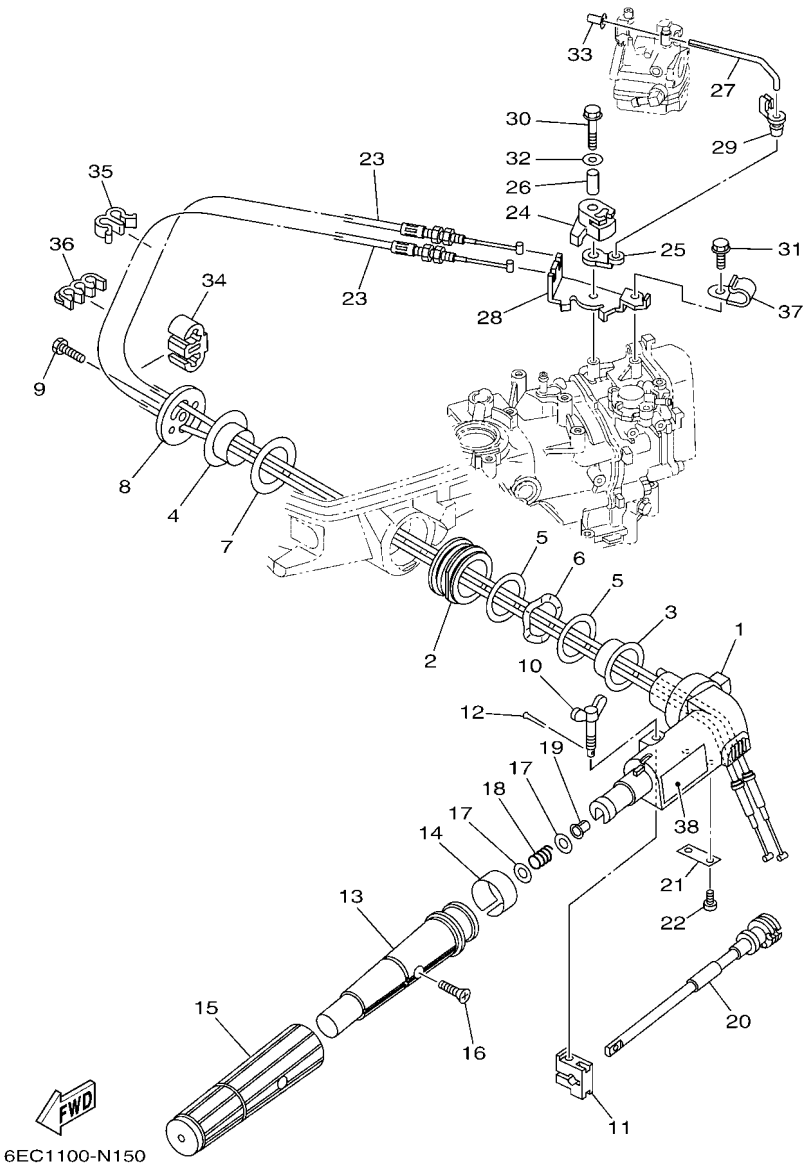

FIG. 15 STEERING — DIRECTION

REF. NO.	PART NO. N° PIECES	DESCRIPTION DESCRIPTION	6EC5	6ED5	6EE5			REMARKS REMARQUES
28	6EE–E4497–00	STAY, THROTTLE WIRE SUPPORT DE BOISSEAU	1	1	1			
29	661–41262–02	JOINT, CHOKE LEVER RACCORD, LEVIER DE STARTER	1	1	1			
30	97595–06535	BOLT, WITH WASHER VIS HEXAGONAL AVC RONDELLE	1	1	1			
31	97595–06512	BOLT, WITH WASHER VIS HEXAGONAL AVC RONDELLE	1	1	1			
32	90201–06M62	WASHER, PLATE RONDELLE, PLATE	1	1	1			
33	647–14395–60	CAP, OVERFLOW PIPE COUVRE DE DURITE REFOULEMENT	1	1	1			
34	90464–06006	CLAMP BRIDE	2	2	2			
35	90464–07M20	CLAMP BRIDE	1	1	1			
36	90464–07M05	CLAMP BRIDE	1	1	1			
37	90465–08395	CLAMP BRIDE	1	1	1			
38	6EE–G2794–40	LABEL, WARNING (GENERAL) ETIQUETTE, AVERTISSEMENT	1	1	1			

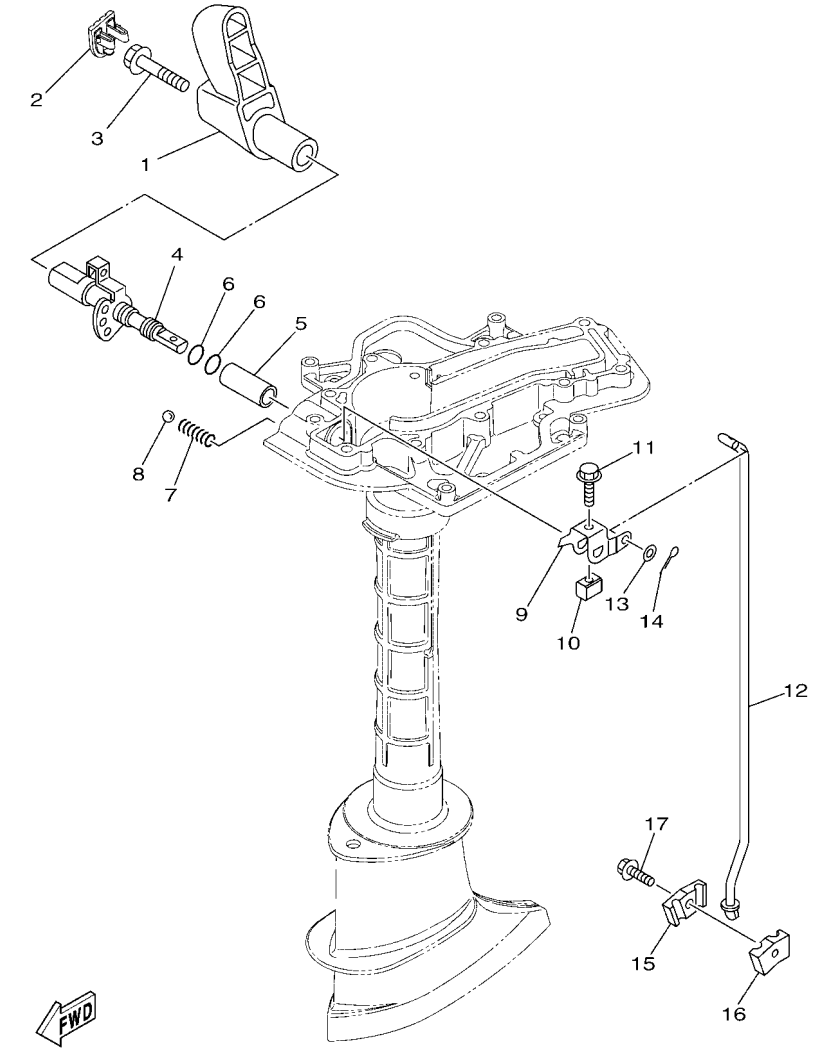

6EC1100-N160

FIG. 16 CONTROL COMMANDE

REF. NO.	PART NO. N° PIECES	DESCRIPTION DESCRIPTION	6EC5	6ED5	6EE5			REMARKS REMARQUES
1	6EE–G4111–00	HANDLE, GEAR SHIFT POIGNEE, LEVIER D'EMBRAYAGE	1	1	1			
2	6EE–G3679–00	COVER COUVERCLE	1	1	1			
3	90105–08046	BOLT, FLANGE BOULON, A COLLERETTE	1	1	1			
4	6EE–G4119–00–8D	SHAFT, CHANGE ARBRE, SELECTION	1	1	1			
5	6EE–G4122–00	BUSHING, SHIFT ROD LEVER DOUILLE, LEVIER D'EMBRAYAGE	1	1	1			
6	93210–09811	O-RING JOINT TORIQUE	2	2	2			
7	90501–12802	SPRING, COMPRESSION RESSORT, COMPRESSION	1	1	1			
8	93505–16024	BALL BILLE	1	1	1			
9	6EE–G4121–00	LEVER, SHIFT ROD LEVIER, TIGE D'INVERSION	1	1	1			
10	6EE–E8175–00	SPACER ENTRETOISE	1	1	1			
11	90119–05M04	BOLT, WITH WASHER BOULON, AVEC RONDELLE	1	1	1			
12	6EE–G4143–00	ROD, SHIFT 1 TIGE D'EMBRAYAGE 1	1	1	1			
13	92990–05600	WASHER, PLATE RONDELLE, PLATE	1	1	1			
14	91490–16010	PIN. COTTER GOUPILLE	1	1	1			
15	68D–G4145–00	CONNECTOR, SHIFT ROD 1 CONNECTEUR, TIGE D'INVERSION 1	1	1	1			
16	68D–G4146–00	CONNECTOR, SHIFT ROD 2 CONNECTEUR, TIGE D'INVERSION 2	1	1	1			
17	90119–06256	BOLT, WITH WASHER BOULON, AVEC RONDELLE	1	1	1			

FIG. 17 BRACKET SUPPORT

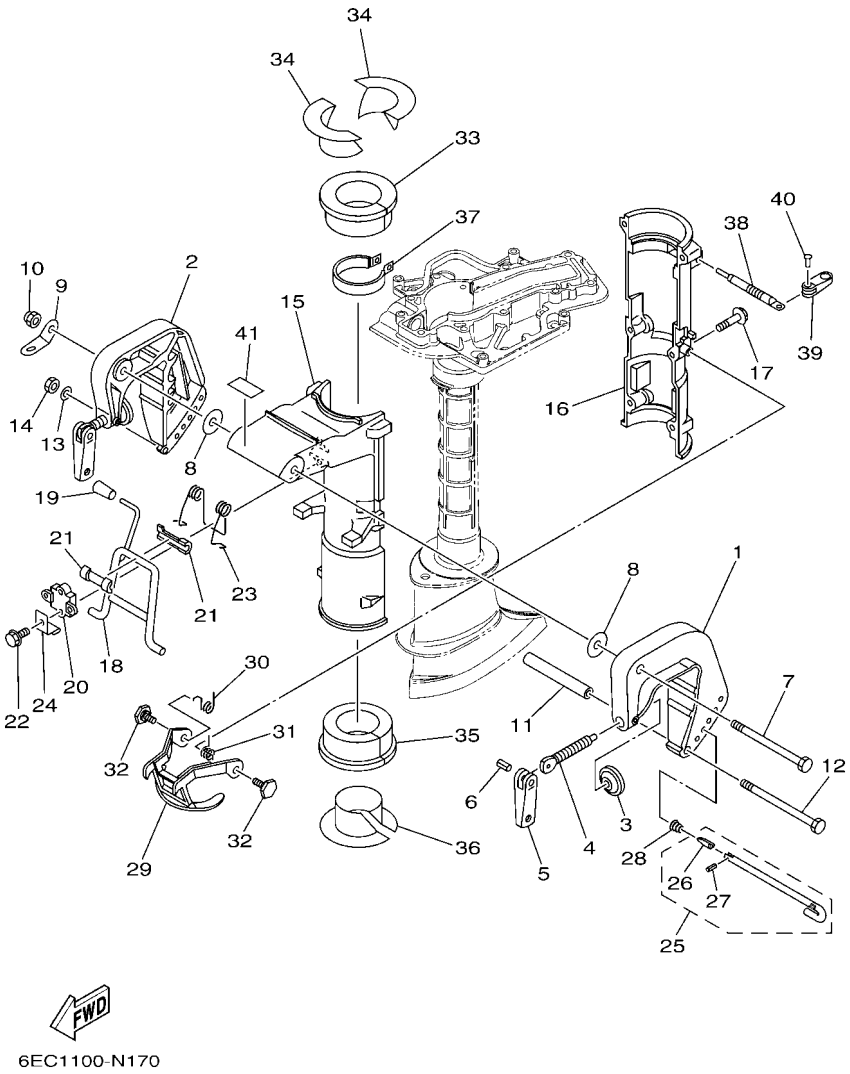

REF. NO.	PART NO. N° PIECES	DESCRIPTION DESCRIPTION	6EC5	6ED5	6EE5			REMARKS REMARQUES
1	6EE–G3111–00–8D	BRACKET, CLAMP 1 PRESSE 1	1	1	1			
2	6EE–G3112–00–8D	BRACKET, CLAMP 2 PRESSE 2	1	1	1			
3	648–43114–01	PAD, TRANSOM CLAMP RONDELLE D'APPUI	2	2	2			
4	6E0–43116–01	SCREW, TRANSOM CLAMP VIS DE PRESSE	2	2	2			
5	6EE–G3118–00	HANDLE, TRANSOM CLAMP POIGNEE DE VIS DE PRESSE	2	2	2			
6	90243–04M01	PIN GOUPILLE	2	2	2			
7	90101–08M07	BOLT BOULON	1	1	1			
8	90202–08M58	WASHER, PLATE RONDELLE, PLATE	2	2	2			
9	6EE–G3113–00	PLATE, CLAMP BRACKET PLAQUETTE, PRESSE	1	1	1			
10	90185–08057	NUT, SELF-LOCKING ECROU,AUTO-BLOQUANT	1	1	1			
11	6EE–G3122–00	COLLAR, CLAMP BRACKET COLLERETTE, SUPPORT	1	1	1			
12	90101–06335	BOLT BOULON	1	1	1			
13	92990–06600	WASHER, PLATE RONDELLE, PLATE	1	1	1			
14	95380–06600	NUT, HEXAGON ECROU	1	1	1			
15	6EE–G3311–00–8D	BRACKET, SWIVEL 1 SUPPORT, PIVOT 1	1	1	1			
16	6EE–G3312–00–8D	BRACKET, SWIVEL 2 SUPPORT, PIVOT 2	1	1	1			
17	95895–06035	BOLT, FLANGE BOULON	6	6	6			
18	6EE–G3181–00–8D	LEVER, TILT STOP 1 LEVIER VERROUILLAGE RELEVAGE 1	1	1	1			
19	6E0–43632–00	KNOB, TILT POIGNEE, LEVIER DE RELEVAGE	1	1	1			
20	6EE–G3313–01–8D	BRACKET, SWIVEL 3 SUPPORT, PIVOT 3	1	1	1			
21	620–43189–00	BUSHING COUSSINET	2	2	2			
22	95895–06020	BOLT, FLANGE BOULON	2	2	2			
23	6EE–G8561–00	SPRING 1 RESSORT 1	1	1	1			
24	6EE–G3319–00	PLATE PLAQUE	1	1	1			
25	6EE–G3160–00	TILT ROD ASSY BROCHE D'INCLINAISON (ENS.)	1	1	1			
26	6EE–G3165–00	.PLATE, TILT LOCK .TAQUET, BROCHE INCLINAISON	1	1	1			
27	91690–30006	.PIN, SPRING .AGRAFFE	1	1	1			

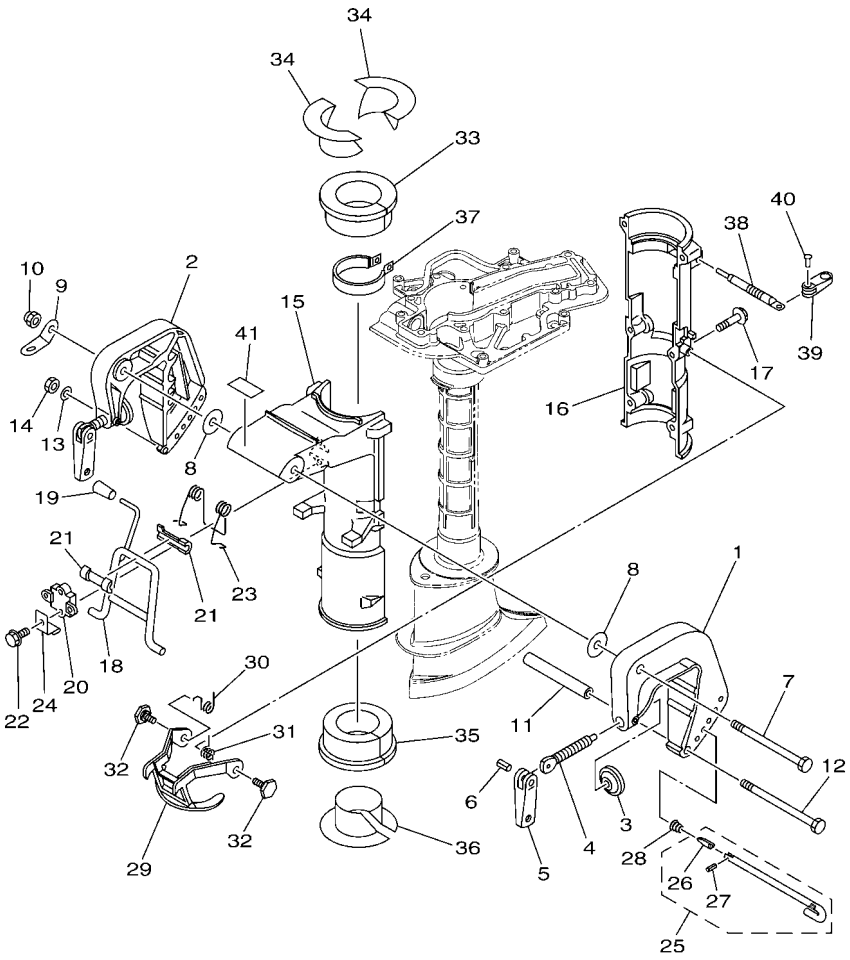

FIG. 17 BRACKET SUPPORT

REF. NO.	PART NO. N° PIECES	DESCRIPTION DESCRIPTION	6EC5	6ED5	6EE5			REMARKS REMARQUES
28	90502–08M05	SPRING, CONICAL RESSORT, CONIQUE	1	1	1			
29	6EE–G3614–00	PLATE, TILT LOCK ETRIER, VERROUILLAGE MARCHE AR	1	1	1			
30	6EE–G3188–00	SPRING RESSORT	1	1	1			
31	6EE–G3198–00	SPRING 2 RESSORT 2	1	1	1			
32	90109–06M84	BOLT BOULON	2	2	2			
33	6EE–G2537–00	BUSHING, PIVOT SHAFT COUSSINET	1	1	1			
34	6EE–G2539–00	BUSHING, PIVOT SHAFT COUSSINET	2	2	2			
35	6EE–G2538–00	BUSHING, PIVOT SHAFT COUSSINET	1	1	1			
36	6EE–G2549–00	BUSHING, PIVOT SHAFT COUSSINET	1	1	1			
37	6E0–42528–03	PLATE, FRICTION PLAQUE, FRICTION	1	1	1			
38	6L5–42529–01	SCREW, FRICTION PIECE VIS, PIECE DE FRICTION	1	1	1			
39	6EE–G2561–00	KNOB, STEERING LOCK BOUTON	1	1	1			
40	90266–04M05	RIVET RIVET	1	1	1			
41	6EE–F4591–00	EMBLEM, FUEL COCK ADHESIF	1	1	1			

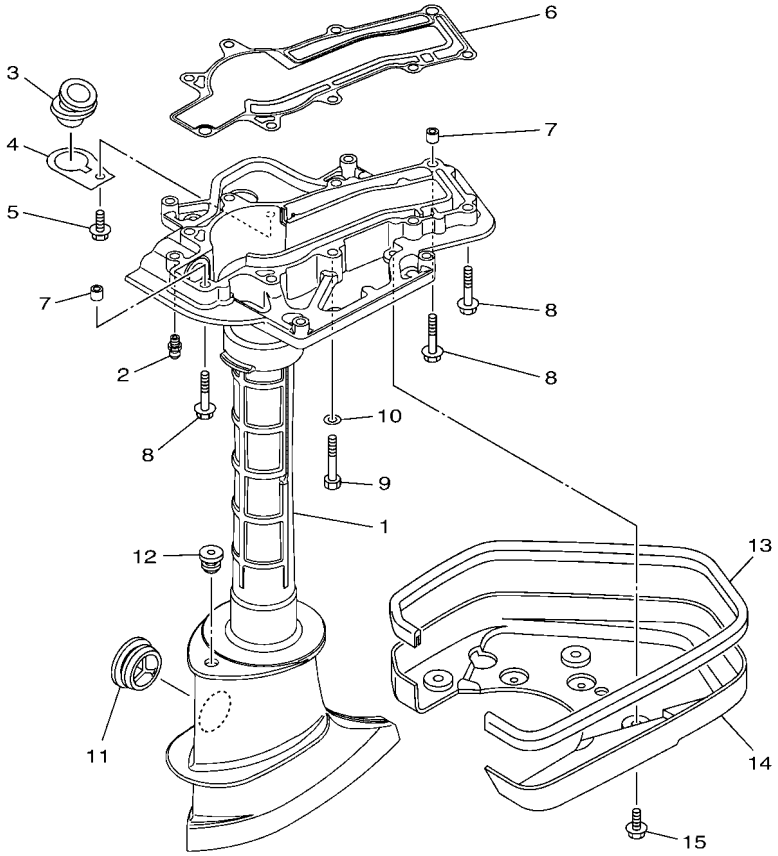

6EC4100-R180

FIG. 18 UPPER CASING FOURREAU

REF. NO.	PART NO. N° PIECES	DESCRIPTION DESCRIPTION	6EC5	6ED5	6EE5			REMARKS REMARQUES
1	6EE–G5111–01–8D	CASING, UPPER FOURREAU	1	1	1			
2	93700–06M03	NIPPLE, GREASE PION	1	1	1			
3	6EE–E5316–00	DAMPER 1 AMORTISSEUR 1	1	1	1			
4	6EE–G5181–00	PLATE PLAQUETTE	1	1	1			
5	97595–06514	BOLT, WITH WASHER VIS HEXAGONAL AVC RONDELLE	1	1	1			
6	6EE–45113–00	GASKET, UPPER CASING JOINT, TUBE D'ARBRE	1	1	1			
7	90387–06M14	COLLAR COLLERETTE	2	2	2			
8	97575–06540	BOLT, WITH WASHER VIS HEXAGONAL AVC RONDELLE	5	5	5			
9	97075–06050	BOLT BOULON	4	4	4			
10	92995–06600	WASHER RONDELLE	4	4	4			
11	647–45151–01	COVER, UPPER CASING CAPUCHON, FOURREAU	2	2	2			
12	90480–10M13	GROMMET PASSE-FIL	1	1	1			
13	6EE–G2716–00	RUBBER SEAL 1 JOINT EN CAOUTCHOUC 1	1	1	1			
14	6EE–G2723–00	COVER, BOTTOM COUVERCLE	1	1	1			
15	97595–06514	BOLT, WITH WASHER VIS HEXAGONAL AVC RONDELLE	4	4	4			

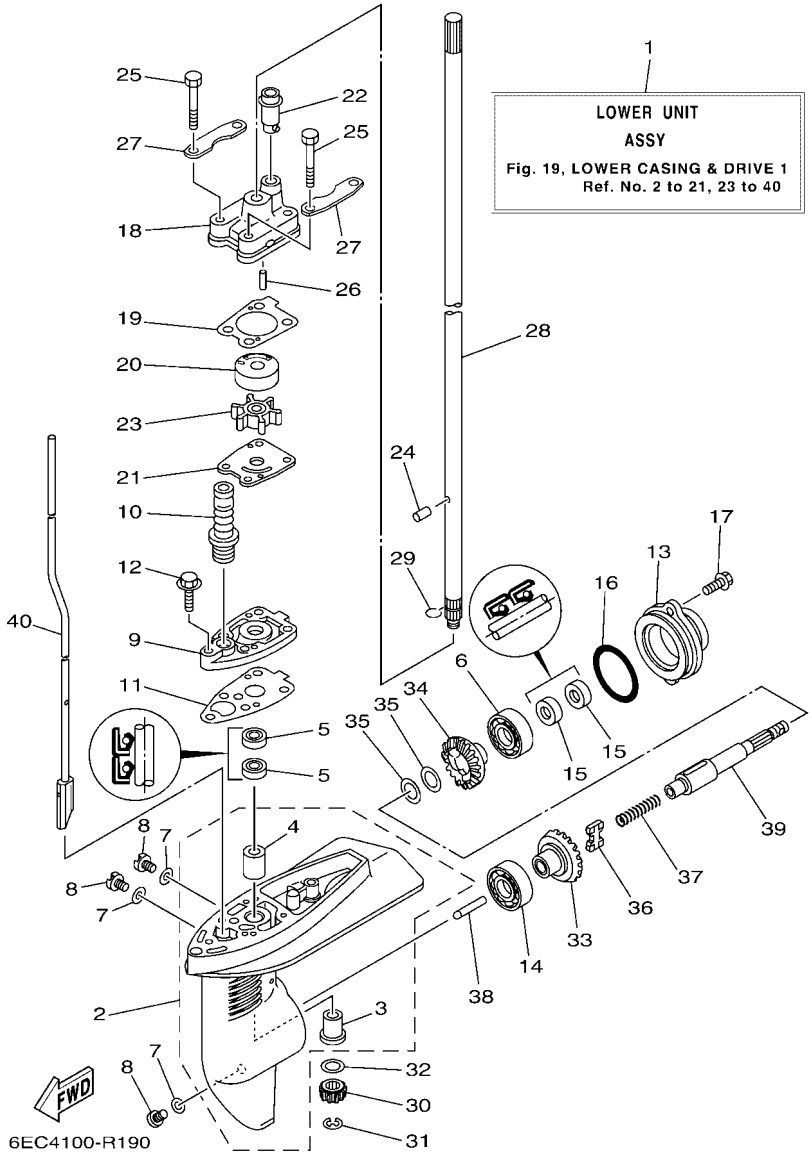

FIG. 19 LOWER CASING & DRIVE 1 — BOITIER D'HELICE TRANSMISSION1

REF. NO.	PART NO. N° PIECES	DESCRIPTION DESCRIPTION	6EC5	6ED5	6EE5			REMARKS REMARQUES
1	6EE–G5300–00–8D	LOWER UNIT ASSY UNITE INFERIEURE (ENS.)	1	1	1			S(17.2") S(17.2")
	6EE–G5300–10–8D	LOWER UNIT ASSY UNITE INFERIEURE (ENS.)	1	1	1			L(22.2") L(22.2")
2	6EE–G5311–00–8D	CASING, LOWER BOITIER D'HELICE	1	1	1			
3	6E0–45317–09	.BUSHING, DRIVE SHAFT .DOUILLE, ARBRE MOTEUR	1	1	1			
4	6E0–45316–09	.BUSHING, DRIVE SHAFT .DOUILLE, ARBRE MOTEUR	1	1	1			
5	93101–10811	OIL SEAL JOINT SPY	2	2	2			
6	93306–054YU	BEARING ROULEMENT	1	1	1			
7	90430–08003	GASKET JOINT	3	3	3			
8	90340–08002	PLUG, STRAIGHT SCREW PLOT, FILETE DROIT	3	3	3			
9	6EE–G5321–00–CA	PLATE PLAQUETTE	1	1	1			
10	6EE–G4147–00	BOOT, SHIFT ROD SOUFFLET, TIGE D'INVERSION	1	1	1			
11	6EE–G5315–00	PACKING, LOWER CASING JOINT, BOITIER D'HELICE	1	1	1			
12	97595–06525	BOLT, WITH WASHER VIS HEXAGONAL AVC RONDELLE	1	1	1			
13	6EE–G5361–00–8D	CAP, LOWER CASING COUVERCLE, BOITIER D'HELICE	1	1	1			
14	93306–054YU	BEARING ROULEMENT	1	1	1			
15	93101–13800	OIL SEAL JOINT SPY	2	2	2			
16	93210–48800	O-RING JOINT TORIQUE	1	1	1			
17	95895–06016	BOLT, FLANGE BOULON	2	2	2			
18	6EE–G4311–00	HOUSING, WATER PUMP CORPS, POMPE A EAU	1	1	1			
19	6EE–G4315–00	GASKET, WATER PUMP JOINT, POMPE A EAU	1	1	1			
20	6EE–G4322–00	INSERT, CARTRIDGE CUVETTE	1	1	1			
21	6EE–G4323–00	OUTER PLATE, CARTRIDGE PLAQUE EXTERIEURE	1	1	1			
22	6EE–G4366–00	DAMPER, WATER SEAL 2 JOINT, TUBE D'EAU 2	1	1	1			
23	6E0–44352–00	IMPELLER TURBINE	1	1	1			
24	93604–09066	PIN, DOWEL CLAVETTE	1	1	1			
25	97095–06045	BOLT BOULON	4	4	4			
26	93604–18080	PIN, DOWEL CLAVETTE	2	2	2			

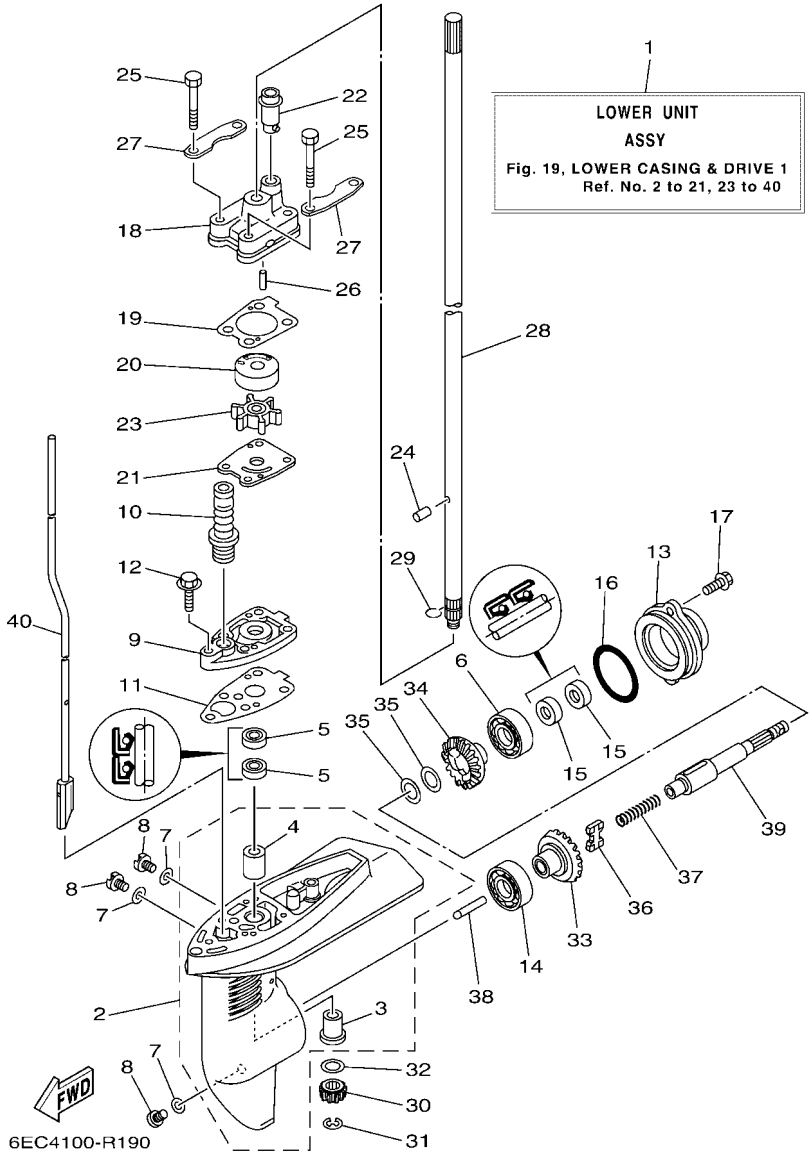

FIG. 19 LOWER CASING & DRIVE 1 — BOITIER D'HELICE TRANSMISSION1

REF. NO.	PART NO. N° PIECES	DESCRIPTION DESCRIPTION	6EC5	6ED5	6EE5			REMARKS REMARQUES
27	6EE–G4328–00	PLATE PLAQUETTE	2	2	2			
28	6E0–45511–01	SHAFT, DRIVE ARBRE, MOTEUR	1	1	1			S(17.2") S(17.2")
	6E0–45511–11	SHAFT, DRIVE ARBRE, MOTEUR	1	1	1			L(22.2") L(22.2")
29	90467–08M01	CLIP JONC	1	1	1			
30	6BX–45551–00	PINION (13T) PIGNON D'ATTAQUE (13D)	1	1	1			
31	99001–06600	CIRCLIP CIRCLIP	1	1	1			
32	90201–11M49	WASHER, PLATE RONDELLE, PLATE	1	1	1			
33	67D–45560–00	GEAR 1 (27T) PIGNON 1 (27T)	1	1	1			
34	67D–45570–00	GEAR 2 (27T) PIGNON 2 (27T)	1	1	1			
35	6EE–G5576–00	WASHER, THRUST 2 RONDELLE DE CALAGE 2	2	2	2			
36	67D–45631–01	CLUTCH, DOG CRABOT	1	1	1			
37	90501–120A9	SPRING, COMPRESSION RESSORT, COMPRESSION	1	1	1			
38	6EE–G5635–00	PLUNGER, SHIFT POUSSOIR D'EMBRAYAGE	1	1	1			
39	6EE–G5611–00	SHAFT, PROPELLER ARBRE, HELICE	1	1	1			
40	6EE–G4150–00	SHIFT CAM ASSY CAME D'INVERSION	1	1	1			S(17.2") S(17.2")
	6EE–G4150–10	SHIFT CAM ASSY CAME D'INVERSION	1	1	1			L(22.2") L(22.2")

FIG. 20 LOWER CASING & DRIVE 2 — BOITIER D'HELICE TRANSMISSION2

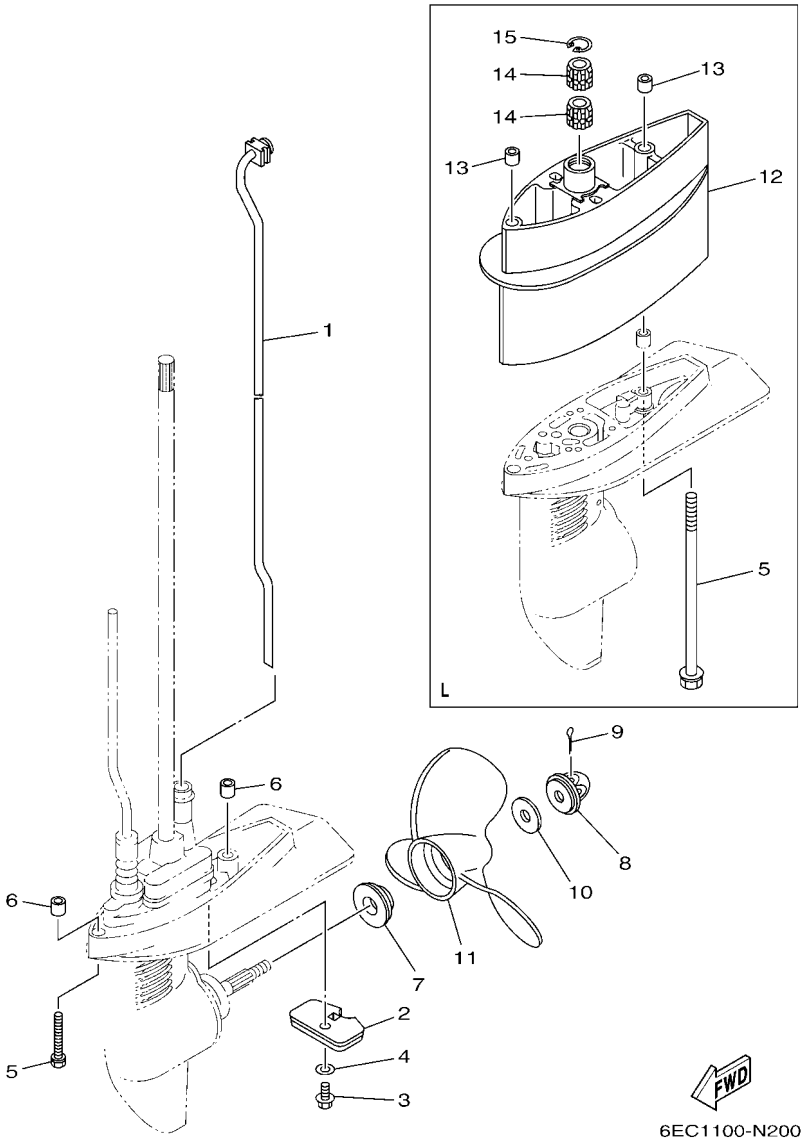

REF. NO.	PART NO. N° PIECES	DESCRIPTION DESCRIPTION	6EC5	6ED5	6EE5			REMARKS REMARQUES
1	6EE–G4360–00	WATER TUBE ASSY TUYAU,EAU	1	1	1			S(17.2") S(17.2")
	6EE–G4360–10	WATER TUBE ASSY TUYAU,EAU	1	1	1			L(22.2") L(22.2")
2	6L5–45251–03	ANODE ANODE	1	1	1			
3	95895–06012	BOLT, FLANGE BOULON	1	1	1			
4	92990–06300	WASHER, INTERNAL TOOTH RONDELLE, DENTURE INTERNE	1	1	1			
5	90119–06253	BOLT, WITH WASHER BOULON, AVEC RONDELLE	2	2	2			S(17.2") S(17.2")
	90119–06254	BOLT, WITH WASHER BOULON, AVEC RONDELLE	2	2	2			L(22.2") L(22.2")
6	90387–06M14	COLLAR COLLERETTE	2	2	2			
7	6EE–G5987–00	SPACER 1 ENTRETOISE 1	1	1	1			
8	6EE–G5616–00	NUT, PROPELLER CONE, HELICE	1	1	1			
9	91490–25030	PIN. COTTER GOUPILLE	1	1	1			
10	90201–08M54	WASHER, PLATE RONDELLE, PLATE	1	1	1			
11	6E0–45949–00	PROPELLER (3X7-1/4"X6-1/2"-BA) HELICE (3X7-1/4"X6-1/2"-BA)	1	1	1			UR UR
	6E0–45943–01	PROPELLER (3X7-1/2"X7"-BA) HELICE (3X7-1/2"X7"-BA)	1	1	1			UR UR
	6E0–45941–01	PROPELLER (3X7-1/2"X8"-BA) HELICE (3X7-1/2"X8"-BA)	1	1	1			UR UR
	6E0–45952–00	PROPELLER (3X7-1/4"X8-1/4"-BA) HELICE (3X7-1/4"X8-1/4"-BA)	1	1	1			UR UR
	6E0–45954–00	PROPELLER (3X7-1/2"X9"-BA) HELICE (3X7-1/2"X9"-BA)	1	1	1			UR UR
12	6EE–G5211–00–8D	EXTENSION EXTENSION	1	1	1			L(22.2") L(22.2")
13	90387–06M14	COLLAR COLLERETTE	2	2	2			L(22.2") L(22.2")
14	6BX–45318–01	BUSHING, DRIVE SHAFT DOUILLE, ARBRE MOTEUR	2	2	2			L(22.2") L(22.2")
15	93420–22M03	CIRCLIP CIRCLIP, TYPE S	1	1	1			L(22.2") L(22.2")

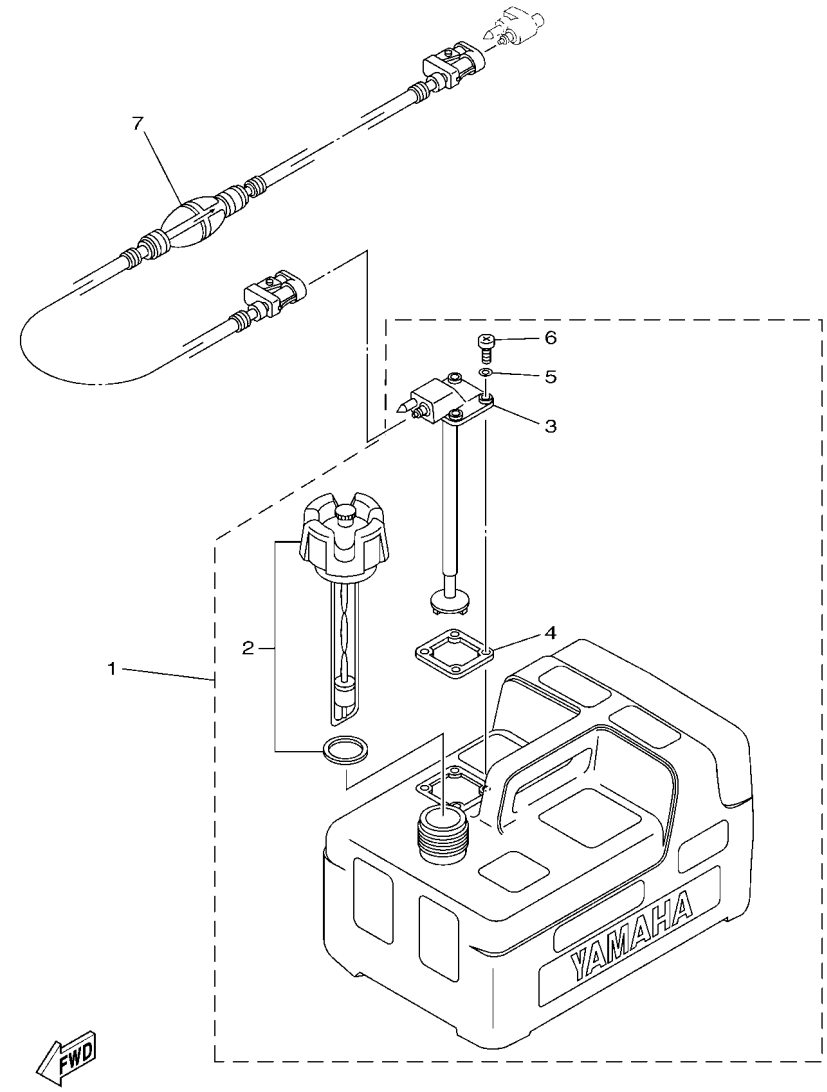

6FW1700-P250

FIG. 21 FUEL TANK — RESERVOIR A CARBURANT

REF. NO.	PART NO. N° PIECES	DESCRIPTION DESCRIPTION	6EC5	6ED5	6EE5			REMARKS REMARQUES
1	6YL–24201–06	FUEL TANK ASSY (12L) RESERVOIR A ESSENCE (ENS.) 12L	1	1	1			AP EXCEPT FOR RUS AP EXCEPT FOR RUS
2	6YL–24610–02	.CAP ASSY .BOUCHON	1	1	1			
3	6YL–24260–10	.FUEL METER ASSY .INDICATEUR DE CARBURANT	1	1	1			
4	6YL–24268–01	.GASKET, FUEL METER .JOINT, JAUGE A CARBURANT	1	1	1			
5	6YL–24329–00	.SEAL .JOINT	4	4	4			
6	90157–05M16	.SCREW, PAN HEAD .VIS, TETE TRONCONIQUE	4	4	4			
7	6YL–24306–54	FUEL PIPE COMP. 1 DURITE A ESSENCE 1	1	1	1			AP EXCEPT FOR RUS AP EXCEPT FOR RUS

FIG. 22 OPTIONAL PARTS — PIECES OPTIONNELLES

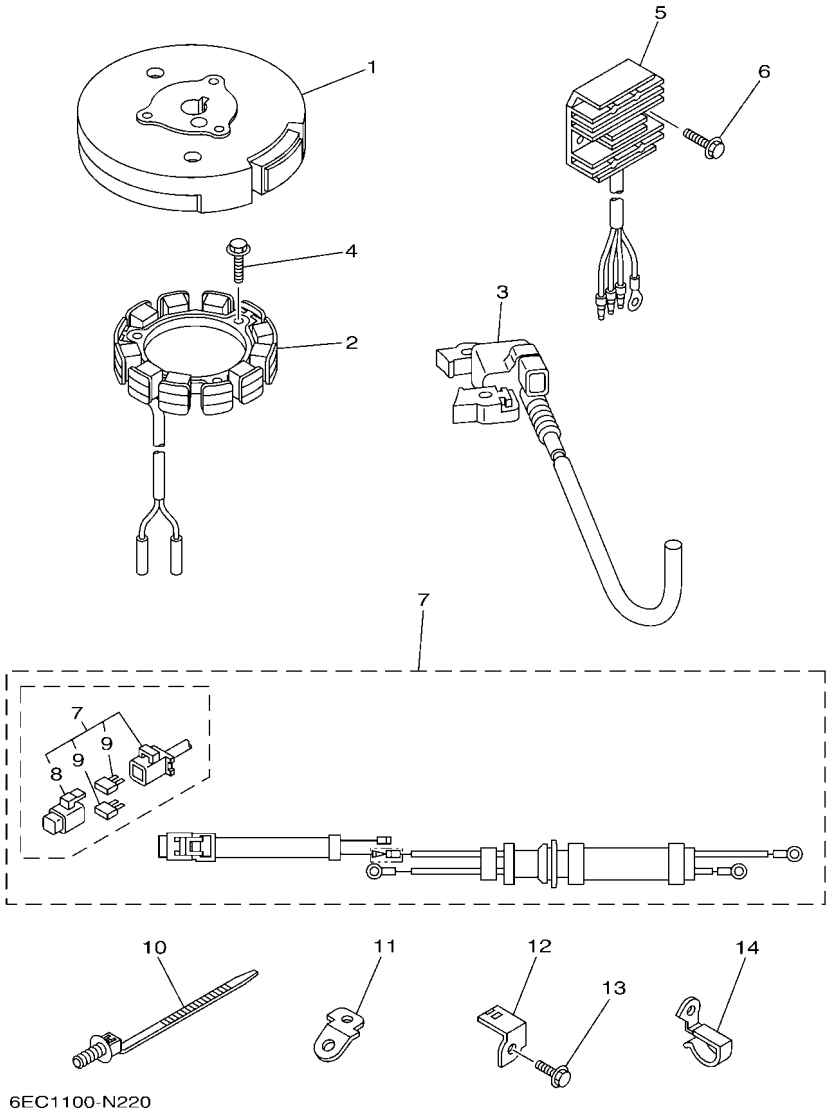

REF. NO.	PART NO. N° PIECES	DESCRIPTION DESCRIPTION	6EC5	6ED5	6EE5			REMARKS REMARQUES
1	6BX–85550–A0	ROTOR ASSY ROTOR CPLT	1	1	1			EXCEPT FOR RUS EXCEPT FOR RUS
2	6BX–85510–A0	LIGHTING COIL ASSY BOBINE D'ECLAIRAGE	1	1	1			EXCEPT FOR RUS EXCEPT FOR RUS
3	6BV–85571–01	IGNITION COIL WITH CDI UNIT BOBINE D'ALLUMAGE AVEC CDI	1					EXCEPT FOR RUS EXCEPT FOR RUS
	6BW–85571–01	IGNITION COIL WITH CDI UNIT BOBINE D'ALLUMAGE AVEC CDI		1				EXCEPT FOR RUS EXCEPT FOR RUS
	6BX–85571–00	IGNITION COIL WITH CDI UNIT BOBINE D'ALLUMAGE AVEC CDI			1			EXCEPT FOR RUS EXCEPT FOR RUS
4	97595–06520	BOLT, WITH WASHER VIS HEXAGONAL AVC RONDELLE	3	3	3			EXCEPT FOR RUS EXCEPT FOR RUS
5	6BX–81960–00	RECTIFIER & REGULATOR ASSY REDRESSEUR REGULATEUR CPLT	1	1	1			EXCEPT FOR RUS EXCEPT FOR RUS
6	97595–06516	BOLT, WITH WASHER VIS HEXAGONAL AVC RONDELLE	2	2	2			EXCEPT FOR RUS EXCEPT FOR RUS
7	6BX–81949–00	WIRE, LEAD FIL	1	1	1			EXCEPT FOR RUS EXCEPT FOR RUS
8	67F–8215B–00	.CAP (BLACK) .BOUCHON (NOIR)	1	1	1			
9	67F–82151–00	.FUSE (20A) .FUSIBLE (20A)	2	2	2			
10	90464–30009	CLAMP BRIDE	1	1	1			EXCEPT FOR RUS EXCEPT FOR RUS
11	6BX–82581–00	STAY, CORD CLAMP SUPPORT, COLLIER DE CORDON	1	1	1			EXCEPT FOR RUS EXCEPT FOR RUS
12	6BX–82388–00	PLATE PLAQUETTE	1	1	1			EXCEPT FOR RUS EXCEPT FOR RUS
13	90109–06M80	BOLT BOULON	1	1	1			EXCEPT FOR RUS EXCEPT FOR RUS
14	90465–08371	CLAMP BRIDE	1	1	1			EXCEPT FOR RUS EXCEPT FOR RUS

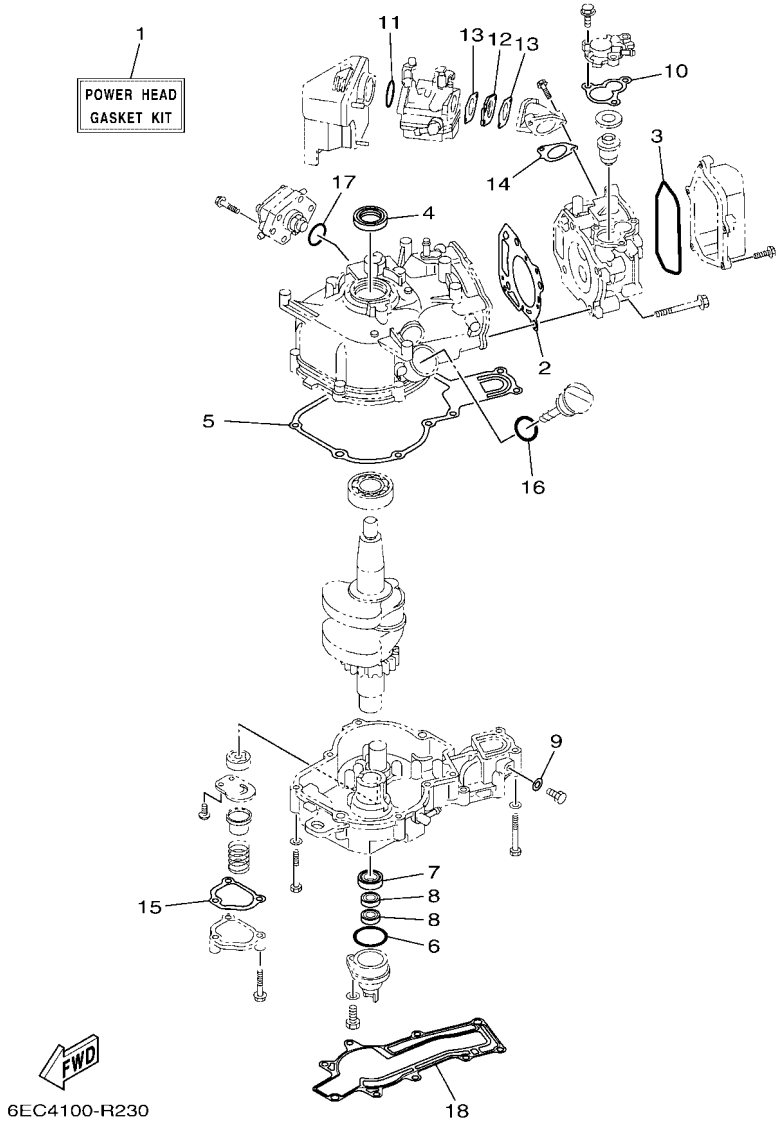

FIG. 23 REPAIR KIT 1 — KITS DE REPARATION 1

REF. NO.	PART NO. N° PIECES	DESCRIPTION DESCRIPTION	6EC5	6ED5	6EE5			REMARKS REMARQUES
1	6EE–W0001–00	POWER HEAD GASKET KIT POCHETTE DE JINTS TETE MOTRICE	1	1	1			
2	6BX–11181–00	.GASKET, CYLINDER HEAD 1 .JOINT, DE CULASSE 1	1	1	1			
3	6EE–E1356–00	.SEAL, CYLINDER 2 .JOINT, SPY CYLINDRE	1	1	1			
4	93102–25821	.OIL SEAL .JOINT SPY	1	1	1			
5	6BX–11351–00	.GASKET, CYLINDER .JOINT, D'EMBASE	1	1	1			
6	93210–35803	.O-RING .JOINT TORIQUE	1	1	1			
7	93102–20814	.OIL SEAL .JOINT SPY	1	1	1			
8	93102–10800	.OIL SEAL .JOINT SPY	2	2	2			
9	90430–08143	.GASKET .JOINT	1	1	1			
10	67D–12414–A0	.GASKET, COVER .JOINT, COUVERCLE	1	1	1			
11	93210–32817	.O-RING .JOINT TORIQUE	1	1	1			
12	6EE–E3647–00	.GASKET, MANIFOLD 3 .JOINT, TUBULURE 3	1	1	1			
13	6EE–E3646–00	.GASKET, MANIFOLD 2 .JOINT, TUBULURE 2	2	2	2			
14	6EE–E3645–00	.GASKET, MANIFOLD 1 .JOINT, TUBULURE 1	1	1	1			
15	6EE–E3475–00	.GASKET .JOINT	1	1	1			
16	93210–24800	.O-RING .JOINT TORIQUE	1	1	1			
17	93210–27806	.O-RING .JOINT TORIQUE	1	1	1			
18	6EE–45113–00	.GASKET, UPPER CASING .JOINT, TUBE D'ARBRE	1	1	1			

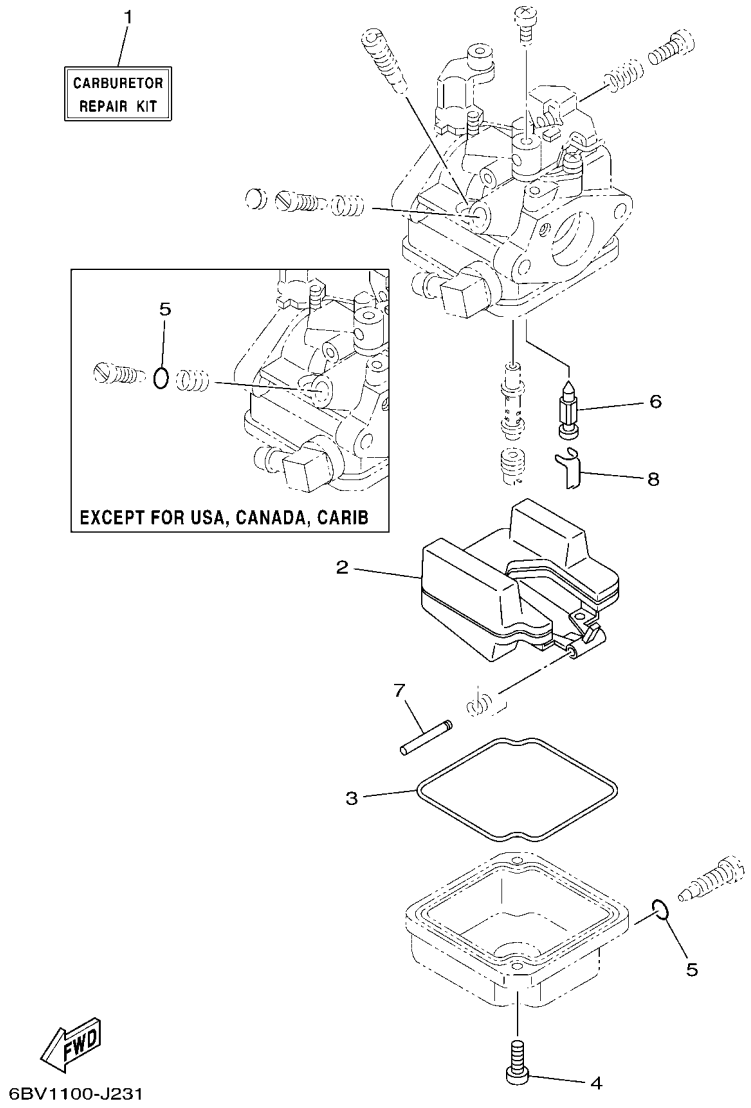

FIG. 24 REPAIR KIT 2 — KITS DE REPARATION 2

REF. NO.	PART NO. N° PIECES	DESCRIPTION DESCRIPTION	6EC5	6ED5	6EE5			REMARKS REMARQUES
1	6BX–W0093–00	CARBURETOR REPAIR KIT KIT DE REPARATION CARBURATEUR	1	1	1			
2	6BX–14985–00	.FLOAT .FLOTTEUR	1	1	1			
3	6BX–14984–00	.GASKET, FLOAT CHAMBER .JOINT, CUVE DE FLOTTEUR	1	1	1			
4	6BX–14592–00	.SCREW .VIS	2	2	2			
5	4JH–14562–00	.O-RING .JOINT TORIQUE	2	2	2			
6	6BX–14546–00	.VALVE, NEEDLE .POINTEAU	1	1	1			
7	6BX–14548–00	.PIN, FLOAT ARM .AXE, BRAS DE FLOTTEUR	1	1	1			
8	6BX–14937–00	.CLIP .JONC	1	1	1			

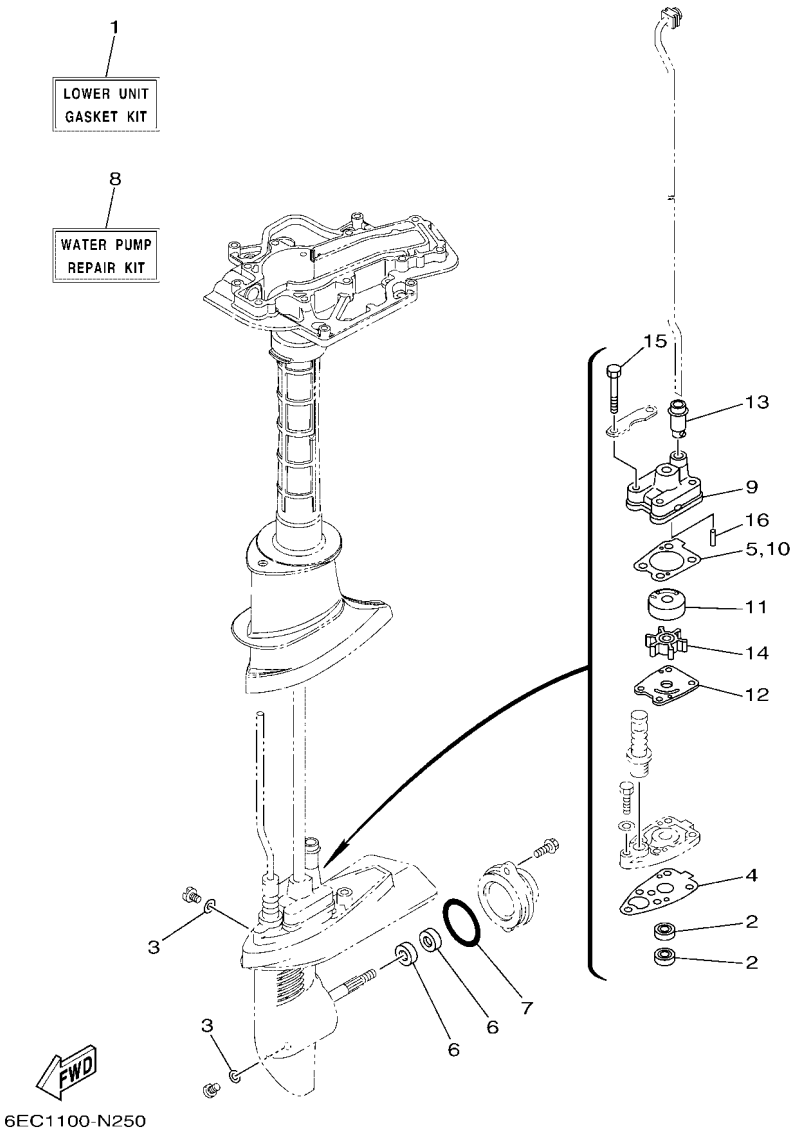

FIG. 25 REPAIR KIT 3 — KITS DE PEPARATION 3

REF. NO.	PART NO. N° PIECES	DESCRIPTION DESCRIPTION	6EC5	6ED5	6EE5			REMARKS REMARQUES
1	6EE–W0001–20	LOWER UNIT GASKET KIT POCHETTE DE JOINTS EMBASE	1	1	1			
2	93101–10811	.OIL SEAL .JOINT SPY	2	2	2			
3	90430–08003	.GASKET .JOINT	3	3	3			
4	6EE–G5315–00	.PACKING, LOWER CASING .JOINT, BOITIER D'HELICE	1	1	1			
5	6EE–G4315–00	.GASKET, WATER PUMP .JOINT, POMPE A EAU	1	1	1			
6	93101–13800	.OIL SEAL .JOINT SPY	2	2	2			
7	93210–48800	.O-RING .JOINT TORIQUE	1	1	1			
8	6EE–W0078–00	WATER PUMP REPAIR KIT KIT DE REPARATION DE LA POMPE	1	1	1			
9	6EE–G4311–00	.HOUSING, WATER PUMP .CORPS, POMPE A EAU	1	1	1			
10	6EE–G4315–00	.GASKET, WATER PUMP .JOINT, POMPE A EAU	1	1	1			
11	6EE–G4322–00	.INSERT, CARTRIDGE .CUVETTE	1	1	1			
12	6EE–G4323–00	.OUTER PLATE, CARTRIDGE .PLAQUE EXTERIEURE	1	1	1			
13	6EE–G4366–00	.DAMPER, WATER SEAL 2 .JOINT, TUBE D'EAU 2	1	1	1			
14	6E0–44352–00	.IMPELLER .TURBINE	1	1	1			
15	97095–06045	.BOLT .BOULON	4	4	4			
16	93604–18080	.PIN, DOWEL .CLAVETTE	2	2	2			

NUMERICAL INDEX
INDEX NUMERIQUE

PART NO. N° PIECES	REF. NO.
6BX–11181–00	3 – 6
	23 – 2
6G8–11325–00	1 – 2
	3 – 14
6BX–11351–00	5 – 7
	23 – 5
676–11372–00	5 – 11
7NJ–12117–00	6 – 7
7NJ–12118–00	6 – 8
67D–12151–00	6 – 9
67D–12157–00	6 – 12
66M–12411–01	1 – 1
	3 – 10
688–12412–00	3 – 11
67D–12414–A0	1 – 3
	3 – 16
	23 – 10
6BX–13131–00	10 – 27
6BX–14301–00	8 – 1
6BV–14301–01	8 – 1
6BW–14301–01	8 – 1
6E7–14325–00	10 – 24
647–14395–60	15 – 33
6BX–14440–00	7 – 1
6BX–14523–00	8 – 7
6BX–14546–00	8 – 13
	24 – 6
6BX–14548–00	8 – 14
	24 – 7
6BX–14555–00	8 – 8
6BX–14556–00	8 – 18
4JH–14562–00	8 – 12
	24 – 5
6BX–14592–00	8 – 11
	24 – 4
6BW–14923–20	8 – 6
6BX–14923–20	8 – 6
6BX–14935–00	8 – 9
6BX–14937–00	8 – 15
	24 – 8
6BV–14943–11	8 – 16
6BW–14943–15	8 – 16
6BX–14943–17	8 – 16
6BV–14947–00	8 – 5
6BW–14947–00	8 – 5
6BX–14947–00	8 – 5
6BV–14948–01	8 – 17
6BX–14948–04	8 – 17

PART NO. N° PIECES	REF. NO.
6BX–14980–00	8 – 3
6BX–14984–00	8 – 4
	24 – 3
6BX–14985–00	8 – 2
	24 – 2
6BX–14991–00	8 – 10
3Y6–15361–00	5 – 2
6BX–15705–00	11 – 6
67D–15713–00	11 – 5
6BX–15723–00	12 – 6
67D–15734–00	11 – 12
67D–15735–00	11 – 8
67D–15739–00	11 – 16
67D–15741–00	11 – 4
67D–15744–00	11 – 17
6G1–15755–00	11 – 14
6BX–15762–00	11 – 18
67D–15764–00	11 – 3
68T–15764–00	11 – 10
67D–15767–00	11 – 7
6G1–15779–00	11 – 15
67D–15793–00	11 – 9
67D–15794–01	11 – 11
63V–15795–01	11 – 2
6YL–24201–06	21 – 1
6YL–24260–10	21 – 3
6YL–24268–01	21 – 4
6G1–24304–10	10 – 1
6YL–24306–54	21 – 7
6YL–24329–00	21 – 5
6BX–24360–00	10 – 38
66M–24374–00	10 – 28
688–24378–00	10 – 16
6BX–24410–00	10 – 20
6BX–24411–00	10 – 25
67D–24412–00	10 – 21
67D–24413–02	10 – 22
67D–24414–01	10 – 30
6A0–24421–01	10 – 23
67D–24423–00	10 – 26
67D–24444–00	10 – 32
6BX–24454–00	10 – 29
66M–24471–01	10 – 31
6BX–24610–01	9 – 2
6YL–24610–02	21 – 2
68D–24612–00	9 – 3
6BX–24641–00	9 – 7
6BX–2476U–00	10 – 4

PART NO. N° PIECES	REF. NO.
661–41262–02	15 – 29
6G1–42125–01	15 – 10
6G1–42125–01	15 – 2
6E0–42528–03	17 – 37
6L5–42529–01	17 – 38
6BX–42615–00	2 – 7
68T–42801–00	14 – 6
648–43114–01	17 – 3
6E0–43116–01	17 – 4
620–43189–00	17 – 21
6E0–43632–00	17 – 19
6E0–44352–00	19 – 23
	25 – 14
6EE–45113–00	18 – 6
	23 – 18
647–45151–01	18 – 11
6L5–45251–03	1 – 9
	20 – 2
6E0–45316–09	19 – 4
6E0–45317–09	19 – 3
6BX–45318–01	20 – 14
6E0–45511–01	19 – 28
6E0–45511–11	19 – 28
6BX–45551–00	19 – 30
67D–45560–00	19 – 33
67D–45570–00	19 – 34
67D–45631–01	19 – 36
6E0–45941–01	20 – 11
6E0–45943–01	20 – 11
6E0–45949–00	20 – 11
6E0–45952–00	20 – 11
6E0–45954–00	20 – 11
6BX–81949–00	22 – 7
6BX–81960–00	22 – 5
67F–82151–00	22 – 9
67F–8215B–00	22 – 8
6A0–82317–00	9 – 8
6BX–82370–00	12 – 8
6BX–82388–00	22 – 12
6BX–82581–00	22 – 11
6BX–85510–A0	22 – 2
6BX–85550–00	12 – 1
6BX–85550–A0	22 – 1
6BX–85571–00	12 – 2
	22 – 3
6BV–85571–01	12 – 2
	22 – 3
6BW–85571–01	12 – 2

PART NO. N° PIECES	REF. NO.
6BW–85571–01	22 – 3
6EE–E1111–00–1S	3 – 2
6EE–E1133–10	3 – 3
6EE–E1168–00	5 – 5
6EE–E1191–00	3 – 7
6EE–E1311–00–1S	5 – 1
6EE–E1356–00	3 – 8
	23 – 3
6BX–E1410–00	4 – 1
6EE–E1603–00	4 – 6
6EE–E1604–00	4 – 6
6EE–E1605–00	4 – 6
6EE–E1631–00–96	4 – 5
6EE–E1633–00	4 – 7
6EE–E1635–00	4 – 5
6EE–E1636–00	4 – 5
6EE–E1650–00	4 – 3
7CN–E1654–00	4 – 4
6EE–E2111–00	6 – 2
6EE–E2113–00	6 – 5
6EE–E2116–00	6 – 6
6EE–E2119–00	6 – 4
6EE–E2121–00	6 – 3
6EE–E2153–00	6 – 15
6EE–E2154–00	6 – 14
6EE–E2155–00	6 – 13
6EE–E2158–00	6 – 11
6EE–E2165–00	6 – 10
6EE–E2170–00	6 – 1
6EE–E2413–00–1S	3 – 12
6EE–E3151–00	7 – 16
6EE–E316F–00	7 – 5
6BX–E3310–00	5 – 23
6EE–E3316–00	5 – 24
5YP–E3411–00	1 – 6
	5 – 26
6EE–E3417–00–1S	5 – 29
6EE–E3437–61	14 – 13
6EE–E3475–00	5 – 28
	23 – 15
6BX–E3641–10	7 – 11
6EE–E3645–00	7 – 12
	23 – 14
6EE–E3646–00	7 – 8
	23 – 13
6EE–E3647–00	7 – 7
	23 – 12
6EE–E3971–00	10 – 46

PART NO. N° PIECES	REF. NO.
6EE–E4427–60	11 – 25
6EE–E4497–00	15 – 28
6EE–E5111–00–1S	5 – 9
6EE–E5316–00	18 – 3
6EE–E5362–00	5 – 34
6EE–E5396–00–CA	5 – 14
6EE–E5710–00	11 – 1
6BX–E5770–00	11 – 21
6EE–E8175–00	16 – 10
6EE–F247A–00	10 – 42
6EE–F247B–00	10 – 36
6EE–F247C–00	10 – 13
6EE–F247D–00	10 – 17
6EE–F4111–01	9 – 1
6EE–F4135–00	10 – 39
6EE–F4136–00	10 – 40
6EE–F4167–00	9 – 11
6EE–F4251–00	1 – 7
	10 – 12
6EE–F4311–00	9 – 12
6EE–F4312–00	10 – 5
6EE–F4313–00	10 – 9
6EE–F4314–00	7 – 4
6EE–F4323–00	3 – 18
6EE–F4329–00	10 – 2
6EE–F4377–00	3 – 13
	5 – 10
6EE–F4500–00	10 – 7
6EE–F4591–00	17 – 41
6EE–F6301–00	15 – 23
6EE–F6330–00	7 – 14
6EE–F8100–00	10 – 48
6EC–F8199–73–D0	10 – 49
6EC–F8199–73–E0	10 – 49
6EC–F8199–73–F0	10 – 49
6EC–F8199–73–G0	10 – 49
6EC–F8199–73–H0	10 – 49
6EC–F8199–73–S0	10 – 49
6EC–F8199–83–K0	10 – 50
6EC–F8199–83–L0	10 – 50
6EC–F8199–83–M0	10 – 50
6EC–F8199–83–N0	10 – 50
6EC–F8199–83–P0	10 – 50
6EC–F8199–83–R0	10 – 50
6EE–G1211–00	15 – 27
6EE–G1283–00	15 – 25
6EE–G1638–00	15 – 24
6EE–G2111–00–8D	15 – 1

PART NO. N° PIECES	REF. NO.
6EE–G2119–00	15 – 13
6EE–G2126–00	15 – 11
6EE–G2131–00	15 – 8
6EE–G2137–00	15 – 14
6EE–G2138–00	15 – 20
6EE–G2159–00	15 – 21
6EE–G2171–00	15 – 3
6EE–G2172–00	15 – 4
6EE–G2177–00	15 – 15
6EE–G2181–00	15 – 5
6EE–G2182–00	15 – 7
6EE–G2188–00	15 – 6
6EE–G2537–00	17 – 33
6EE–G2538–00	17 – 35
6EE–G2539–00	17 – 34
6EE–G2549–00	17 – 36
6EE–G2561–00	17 – 39
6EC–G2610–01	2 – 1
6ED–G2610–01	2 – 1
6EE–G2610–01	2 – 1
6EE–G2613–01	2 – 3
6EC–G261A–01	2 – 2
6EE–G2649–00	2 – 10
6EE–G2651–00	2 – 5
6EE–G2652–00	2 – 8
6EE–G2675–00	2 – 12
6EE–G2676–00	2 – 13
6EC–G2677–00	2 – 14
6ED–G2677–00	2 – 14
6EE–G2677–00	2 – 14
6EE–G2697–00	2 – 15
6EE–G2698–40	2 – 16
6EE–G2698–50	2 – 17
6EE–G2711–00–8D	14 – 1
6EE–G2716–00	18 – 13
6EE–G2723–00	18 – 14
6EE–G2731–00	14 – 8
6EE–G2794–40	15 – 38
6EE–G2794–50	14 – 12
6EE–G3111–00–8D	17 – 1
6EE–G3112–00–8D	17 – 2
6EE–G3113–00	17 – 9
6EE–G3118–00	17 – 5
6EE–G3122–00	17 – 11
6EE–G3160–00	17 – 25
6EE–G3165–00	17 – 26
6EE–G3181–00–8D	17 – 18
6EE–G3188–00	17 – 30

NUMERICAL INDEX
INDEX NUMERIQUE

PART NO. N° PIECES	REF. NO.
6EE–G3198–00	17 – 31
6EE–G3311–00–8D	17 – 15
6EE–G3312–00–8D	17 – 16
6EE–G3313–01–8D	17 – 20
6EE–G3319–00	17 – 24
6EE–G3614–00	17 – 29
6EE–G3679–00	16 – 2
6EE–G4111–00	16 – 1
6EE–G4119–00–8D	16 – 4
6EE–G4121–00	16 – 9
6EE–G4122–00	16 – 5
6EE–G4143–00	16 – 12
68D–G4145–00	16 – 15
68D–G4146–00	16 – 16
6EE–G4147–00	19 – 10
6EE–G4150–00	19 – 40
6EE–G4150–10	19 – 40
6EE–G4311–00	19 – 18
	25 – 9
6EE–G4315–00	19 – 19
	25 – 5
	25 – 10
6EE–G4322–00	19 – 20
	25 – 11
6EE–G4323–00	19 – 21
	25 – 12
6EE–G4328–00	19 – 27
6EE–G4360–00	20 – 1
6EE–G4360–10	20 – 1
6EE–G4366–00	19 – 22
	25 – 13
6EE–G5111–01–8D	18 – 1
6EE–G5181–00	18 – 4
6EE–G5211–00–8D	20 – 12
6EE–G5300–00–8D	19 – 1
6EE–G5300–10–8D	19 – 1
6EE–G5311–00–8D	19 – 2
6EE–G5315–00	19 – 11
	25 – 4
6EE–G5321–00–CA	19 – 9
6EE–G5361–00–8D	19 – 13
6EE–G5576–00	19 – 35
6EE–G5611–00	19 – 39
6EE–G5616–00	20 – 8
6EE–G5635–00	19 – 38
6EE–G5987–00	20 – 7
6EE–G8561–00	17 – 23
6EE–H1994–40	11 – 26

PART NO. N° PIECES	REF. NO.
6EE–H1994–50	11 – 27
6EE–H1995–40	11 – 23
6EE–H1995–50	11 – 24
6EE–H2519–00	3 – 23
6EE–H2531–00	13 – 4
6EE–H2556–00	13 – 2
6EE–H2575–01	13 – 1
6EE–W0001–00	23 – 1
6EE–W0001–20	25 – 1
6EE–W0078–00	1 – 10
	25 – 8
6BX–W0093–00	24 – 1
6EE–WE090–00–1S	3 – 1
90101–06335	17 – 12
90101–08M07	17 – 7
90105–06037	12 – 7
90105–08046	16 – 3
90105–08M36	3 – 4
90105–08M76	5 – 30
90109–06M80	10 – 41
	22 – 13
90109–06M84	17 – 32
90110–06350	7 – 9
90119–05M04	16 – 11
90119–06098	14 – 2
90119–06253	20 – 5
90119–06254	20 – 5
90119–06256	16 – 17
90119–06MA2	3 – 17
90119–06MA3	7 – 13
90152–05014	15 – 16
90157–05M16	21 – 6
90170–12066	12 – 4
90179–11001	7 – 15
90185–08057	17 – 10
90201–06106	7 – 10
90201–06M62	15 – 32
90201–08818	5 – 31
90201–08M54	20 – 10
90201–10M02	15 – 17
90201–11M49	19 – 32
90201–12472	12 – 5
90201–266P2	4 – 2
90202–08M58	17 – 8
90243–04M01	17 – 6
90266–04M00	2 – 11
90266–04M04	2 – 6
90266–04M05	17 – 40

PART NO. N° PIECES	REF. NO.
90280–04M06	12 – 3
90340–08002	19 – 8
90340–08002	15 – 19
90387–06119	9 – 9
90387–06176	14 – 4
90387–06252	15 – 26
90387–06M14	18 – 7
	20 – 6
	20 – 13
90430–08003	1 – 8
	19 – 7
	25 – 3
90430–08143	1 – 5
	5 – 20
	23 – 9
90464–06006	15 – 34
90464–07008	11 – 22
90464–07M05	15 – 36
90464–07M20	15 – 35
90464–09021	3 – 19
	10 – 43
90464–12016	10 – 11
90464–30009	22 – 10
90465–06M86	3 – 20
	3 – 21
90465–08361	12 – 10
90465–08371	3 – 22
	22 – 14
90465–08395	15 – 37
90465–11M10	10 – 15
	10 – 18
	10 – 45
90465–13M97	13 – 5
90467–08M01	19 – 29
90467–09M09	7 – 6
	9 – 13
	10 – 6
	10 – 10
	10 – 14
	10 – 19
	10 – 37
	10 – 44
	10 – 47
90468–100A0	9 – 6
90480–01559	9 – 10
90480–10M13	18 – 12
90480–14M14	14 – 5
90480–18M74	7 – 2

PART NO. N° PIECES	REF. NO.
90480–21M82	14 – 3
90480–22M72	14 – 11
90480–25161	12 – 9
90501–100A5	9 – 4
90501–120A9	19 – 37
90501–12802	16 – 7
90501–18576	5 – 27
90501–23215	15 – 18
90502–08M05	17 – 28
91490–16010	15 – 12
	16 – 14
91490–25030	20 – 9
91690–30006	17 – 27
92903–06600	5 – 13
	5 – 22
92990–04200	9 – 5
92990–05600	16 – 13
92990–06300	20 – 4
92990–06600	17 – 13
92995–06600	18 – 10
93101–10811	19 – 5
	25 – 2
93101–13800	19 – 15
	25 – 6
93102–10800	5 – 17
	23 – 8
93102–20814	5 – 16
	23 – 7
93102–25821	5 – 3
	23 – 4
93210–09811	16 – 6
93210–24800	5 – 33
	23 – 16
93210–27806	10 – 34
	23 – 17
93210–32817	7 – 3
	23 – 11
93210–35803	5 – 15
	23 – 6
93210–48800	19 – 16
	25 – 7
93306–054YU	19 – 6
	19 – 14
93306–255X0	5 – 4
93420–22M03	20 – 15
93450–16068	4 – 8
93505–16024	16 – 8
93604–09066	19 – 24

PART NO. N° PIECES	REF. NO.
93604–18080	19 – 26
	25 – 16
93700–06M03	18 – 2
94702–00372	1 – 4
	3 – 24
95380–04600	10 – 33
95380–06600	17 – 14
95380–08600	14 – 10
95895–06012	20 – 3
95895–06016	19 – 17
95895–06020	17 – 22
95895–06035	17 – 17
97013–05010	5 – 6
97013–06050	5 – 12
	5 – 21
97075–06050	18 – 9
97075–08025	15 – 9
97095–06045	19 – 25
	25 – 15
97095–08014	5 – 19
97575–06535	5 – 32
97575–06540	18 – 8
97595–05510	7 – 17
97595–05514	2 – 9
97595–06512	12 – 11
	13 – 3
	14 – 7
	15 – 31
97595–06514	18 – 5
	18 – 15
97595–06516	22 – 6
97595–06520	3 – 9
	11 – 20
	22 – 4
97595–06525	10 – 3
	19 – 12
97595–06535	11 – 19
	15 – 30
97595–06630	10 – 35
97595–08520	5 – 18
	14 – 9
97780–40012	2 – 4
97880–05025	3 – 15
97885–05012	15 – 22
97985–06212	10 – 8
98517–06012	5 – 25
98580–04006	8 – 19
99001–06600	19 – 31

PART NO. N° PIECES	REF. NO.
99530–10114	3 – 5
	5 – 8