YAMAHA

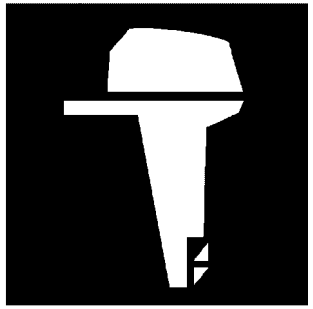

# PARTS CATALOGUE
# CATALOGUE DE PIECES DETACHEES

# FT8GMH'18 ( 6FX4 )
# FT8GE'18 ( 6FX4 )
# FT8GEP'18 ( 6FX4 )

YAMAHA
GENUINE
Parts & Accessories

1S6FX-300FA

( )

FT8GMH
FT8GE/FT8GEP
PARTS CATALOGUE
©2018 by Yamaha Motor Co., Ltd.
1st edition, March 2018
All rights reserved.
Any reprinting or unauthorized use
without the written permission of
Yamaha Motor Co., Ltd.
is expressly prohibited.
Printed in Japan.

FT8GMH
FT8GE/FT8GEP
CATALOGUE DE PIECES DETACHEES
©2018 par Yamaha Motor Co., Ltd.
1re édition, mars 2018
Tous droits réservés
Toute réimpression ou utilisation
non autorisée sans la permission écrite
de la Yamaha Motor Co., Ltd.
est formellement interdite.
Imprimé au Japon

# FOREWORD

This Parts Catalogue is related to the parts for the model(s) on the cover page. When you are ordering replacement parts, please refer to this Parts Catalogue and quote both part numbers and part names correctly.

1. Modifications or additions which have been made after the issue of the Parts Catalogue will be announced in the Parts News.
   It is advisable that you make the necessary corrections to the Parts Catalogue according to the Parts News.

2. Abbreviations
   The following abbreviations are used in this Parts Catalogue.
   "UR" Use specified parts number.
   "UN" Use as many as needed.
   "AP" Alternate Parts
   "LM" Locally Made (Parts need to be ordered locally)
   "F#" Frame No. (Applicable machine No.)
   "O/S" Over Size

3. The number of components for assembly
   - Parts, which are to be supplied in an assembly, are listed with a dot (.) in front of the part name as shown below.
   - The numeral appearing to the right of each component part indicates the quantity of parts for each assembly unit.

| PART NO. | DESCRIPTION | Q'TY | REMARKS |
|---|---|---|---|
| 2F5–83310–60 | FRONT FLASHER LIGHT ASSY | 2 | |
| 115–83311–60 | .BULB (6V–18W) | 1 | |

4. Applicable colours of graphics are represented in the "REMARKS" as shown below.

| PART NO. | DESCRIPTION | Q'TY | REMARKS |
|---|---|---|---|
| 2N4–24110–00–X5 | FUEL TANK COMP. | 2 | MXR |
| 3J1–24240–10 | .GRAPHIC, FUEL TANK | 1 | FOR MXR |

5. Note that the illustrations for reference in finding parts numbers are not to be used for assembling. When assembling, please use the applicable service manual.

6. The asterisk (*) before a reference number indicates modified items after the first edition.

7. Applicable Serial No.
   Engine Serial No.

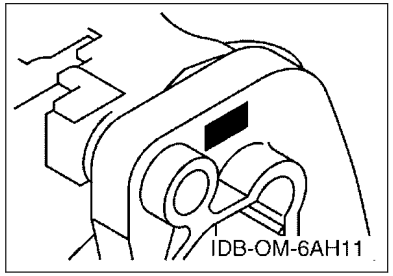


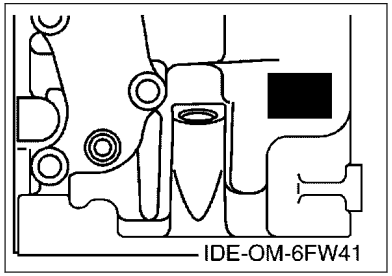


8. Applicable Engine Starting Serial No.

| Model | Serial No. | Model | Serial No. |
|---|---|---|---|
| FT8G | 6FXK-1000699 | | |
| | | | |
| | | | |
| | | | |
| | | | |

9. Applicable Colour Code

| Abbreviation | Colour Name | Colour Code |
|---|---|---|
| DBN1 | DARK BLUISH GRAY 1 | 008D |

10. Quantity Column Information

| Column No. | Name Of Q'ty Column | Applicable Model |
|---|---|---|
| 1 | MH | FT8GMH |
| 2 | E | FT8GE |
| 3 | EP | FT8GEP |
| | | |
| | | |

# AVANT–PROPOS

Ce catalogue de pièces détachées concerne les pièces pour le(s) modèle(s) indiqué(s) sur la page de couverture. Lorsque vous commandez des pièces de rechange, veuillez vous référer à ce catalogue de pieces détachées et indiquer clairement les numéros et les noms des pièces détachées.

1. Les modifications ou ajouts ayant été effectués après la parution du catalogue de pièces détachées seront décrits dans les Bulletins d'information concernant les pièces détachées.
   Il est recommandé que vous apportiez les corrections nécessaires au catalogue des pièces détachées en vous référant aux Bulletins d'information.

2. Abréviations
   Dans ce catalogue, les abréviations suivantes sont utilisées:
   "UR" Utiliser le numéro de pièces spécifié.
   "UN" Utiliser autant que nécessaire.
   "AP" Pièces de substitution
   "LM" Fabrication locale (les pièces doivent être commandées localement.)
   "F#" N° de cadre (applicable au N° de série)
   "O/S" Surdimensionné

3. Nombre de pièces d'un assemblage
   - Les pièces fournies comme composants d'un assemblage sont précédées d'un point (.) de la manière indiquée ci–dessous.
   - Le chiffre apparaissant à la droite de chaque composant indique la quantité de pièces pour chaque unité d'assemblage.

| N° PIECES | DESCRIPTION | QTE | REMARQUES |
|---|---|---|---|
| 2F5–83310–60 | ENS. CLIGNOTANT AVANT | 2 | |
| 115–83311–60 | .AMPOULE (6V–18W) | 1 | |

4. Les couleurs concernant les graphiques sont indiquées dans la colonne "REMARQUES", comme indiqué ci–dessous.

| N° PIECES | DESCRIPTION | QTE | REMARQUES |
|---|---|---|---|
| 2N4–24110–00–X5 | RESERVOIR A ESSENCE. | 2 | MXR |
| 3J1–24240–10 | .GRAPHIQUE | 1 | POUR MXR |

5. Veuillez noter que les illustrations sont indiquées à titre de référence pour trouver les numéros de pièces, non pour être utilisées lors de l'assemblage. Lors de l'assemblage, veuillez utiliser le manuel d'entretien adéquat.

6. L'astérisque (*) placé devant un numéro de référence indique des éléments qui ont été modifiés après la première édition.

7. N° de série applicable
   N° de Série du moteur

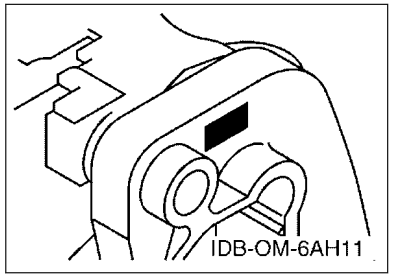


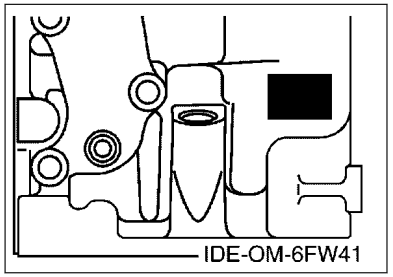


8. N° de série initial du moteur applicable

| Modèle | N° de série | Modèle | N° de série |
|---|---|---|---|
| FT8G | 6FXK-1000699 | | |
| | | | |
| | | | |
| | | | |
| | | | |

9. Code couleur applicable

| Abréviation | Nom de la couleur | Code couleur |
|---|---|---|
| DBN1 | DARK BLUISH GRAY 1 | 008D |

10. Informations relatives à la colonne Quantité

| N° de la colonne | Nom de la colonne Qté | Modèle applicable |
|---|---|---|
| 1 | MH | FT8GMH |
| 2 | E | FT8GE |
| 3 | EP | FT8GEP |
| | | |
| | | |

# CONTENTS

SCHEDULED SERVICE PARTS....1
TOP COWLING....2
CYLINDER & CRANKCASE 1....3
CRANKSHAFT & PISTON....4
CYLINDER & CRANKCASE 2....5
VALVE....6
INTAKE....7
CARBURETOR....8
OIL PUMP....9
FUEL....10
STARTER....12
GENERATOR....14
ELECTRICAL 1....15
ELECTRICAL 2....16
ELECTRICAL 3....17
ELECTRICAL 4....19
STARTING MOTOR....20
BOTTOM COWLING....21
STEERING....23
STEERING FRICTION....25
CONTROL 1....26
CONTROL 2....28
REMO CON ATTACHMENT....30
BRACKET 1....31
BRACKET 2....33
BRACKET 3....35
POWER TILT ASSY....36
UPPER CASING....39
OIL PAN....40
LOWER CASING & DRIVE 1....41
LOWER CASING & DRIVE 2....44
FUEL TANK....45
STEERING GUIDE....46
REMOTE CONTROL BOX....47
REMOTE CONTROL ASSY 1....48
REMOTE CONTROL ASSY 2....51
OPTIONAL PARTS 1....54
OPTIONAL PARTS 2....56
OPTIONAL PARTS 3....57
REPAIR KIT 1....58
REPAIR KIT 2....59
REPAIR KIT 3....60

## INDEX

NUMERICAL INDEX....61

# TABLE DES MATIERES

PIECES MAINTENANCE PERIODIQUE.....1
CAPOT SUPERIEUR..... 2
CYLINDRE & CARTER 1..... 3
VILEBREQUIN & PISTON.....4
CYLINDRE & CARTER 2..... 5
SOUPAPE..... 6
ADMISSION.....7
CARBURATEUR..... 8
POMPE A HUILE.....9
CARBURANT..... 10
DEMARREUR.....12
GENERATRICE.....14
PARTIE ELECTRIQUE 1.....15
PARTIE ELECTRIQUE 2.....16
PARTIE ELECTRIQUE 3.....17
PARTIE ELECTRIQUE 4.....19
DEMARREUR ELECTRIQUE.....20
CAPOT INFERIEUR.....21
DIRECTION.....23
CUVETTE POIGNEE DE DIRECTION.....25
COMMANDE 1..... 26
COMMANDE 2..... 28
COMMANDE A DISTANCE.....30
SUPPORT 1..... 31
SUPPORT 2..... 33
SUPPORT 3..... 35
PUISSANCE PARER ET INCLINER..... 36
FOURREAU.....39
VENTILATEUR D'HUILE..... 40
BOITIER D'HELICE TRANSMISSION1.....41
BOITIER D'HELICE TRANSMISSION2.....44
RESERVOIR A CARBURANT.....45
FIXATION DE DIRECTION..... 46
BOITIER DE COMMANDE A DISTANCE..... 47
BOITIER DE COMMANDE A DISTANCE..... 48
BOITIER DE COMMANDE A DISTANCE..... 51
PIECES OPTIONNELLES 1.....54
PIECES OPTIONNELLES 2.....56
PIECES OPTIONNELLES 3.....57
KITS DE REPARATION 1..... 58
KITS DE REPARATION 2..... 59
KITS DE PEPARATION 3.....60

## INDEX

INDEX NUMERIQUE.....61

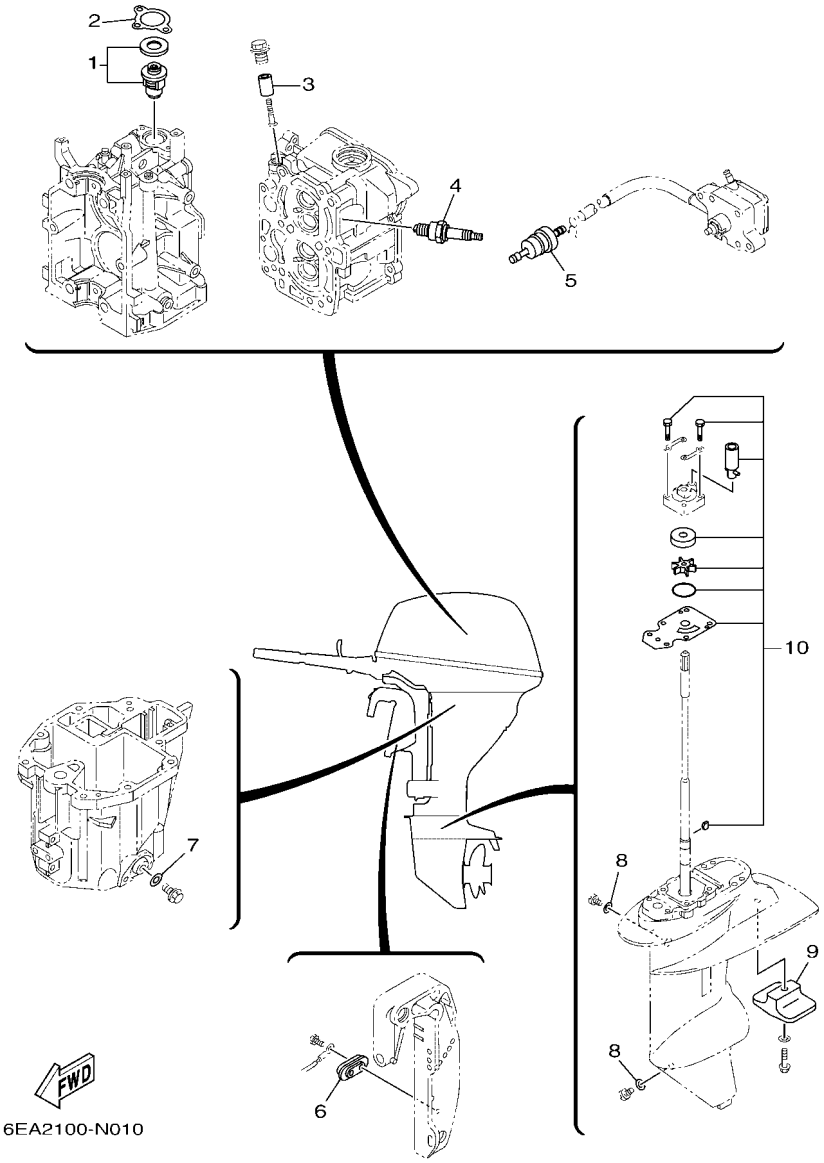


## FIG. 1 SCHEDULED SERVICE PARTS — PIECES MAINTENANCE PERIODIQUE

| REF. NO. | PART NO. N° PIECES | DESCRIPTION DESCRIPTION | MH | E | EP | | | REMARKS REMARQUES |
|---|---|---|---|---|---|---|---|---|
| 1 | 66M–12411–01 | THERMOSTAT<br>THERMOSTAT | 1 | 1 | 1 | | | |
| 2 | 6G8–12414–A0 | GASKET, COVER<br>JOINT, COUVERCLE | 1 | 1 | 1 | | | |
| 3 | 6G8–11325–00 | ANODE<br>ANODE | 1 | 1 | 1 | | | |
| 4 | 94702–00274 | PLUG, SPARK (NGK BR6HS-10)<br>BOUGIE D'ALLUMAGE(NGK BR6HS-10 | 2 | 2 | 2 | | | |
| 5 | 68T–24251–01 | STRAINER 1<br>FILTRE 1 | 1 | 1 | 1 | | | |
| 6 | 65W–45251–00 | ANODE<br>ANODE | | | 1 | | | |
| 7 | 90430–10M11 | GASKET<br>JOINT | 1 | 1 | 1 | | | |
| 8 | 90430–08003 | GASKET<br>JOINT | 2 | 2 | 2 | | | |
| 9 | 61N–45251–01 | ANODE<br>ANODE | 1 | 1 | 1 | | | |
| 10 | 69G–W0078–00 | WATER PUMP REPAIR KIT<br>KIT DE REPARATION DE LA POMPE | 1 | 1 | 1 | | | |

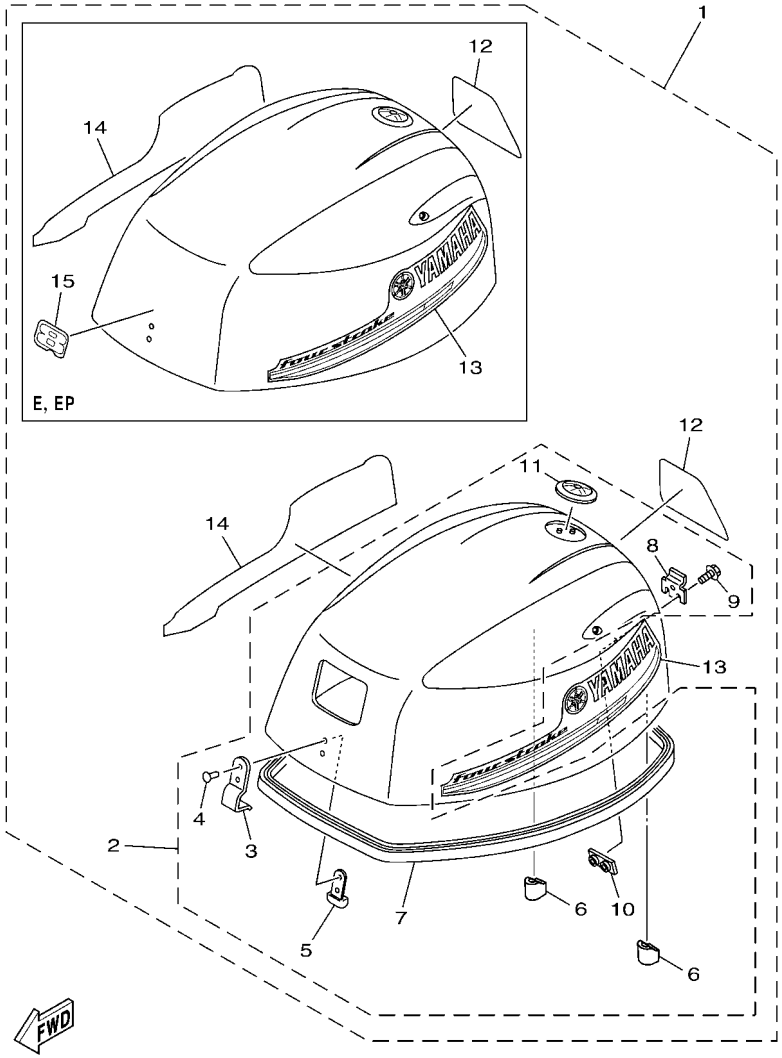


6FX3300-R020

## FIG. 2 TOP COWLING — CAPOT SUPERIEUR

| REF. NO. | PART NO. N° PIECES | DESCRIPTION DESCRIPTION | MH | E | EP | | | REMARKS REMARQUES |
|---|---|---|---|---|---|---|---|---|
| 1 | 6FX–42610–00 | TOP COWLING ASSY<br>CAPOT (ENS.) | 1 | | | | | |
| | 6FX–42610–10 | TOP COWLING ASSY<br>CAPOT (ENS.) | | 1 | 1 | | | |
| 2 | 6DR–4261A–00 | .TOP COWLING W/O GRAPHICS<br>.CAPOT SUPERIEUR SANS GRAPHIQUE | 1 | | | | | |
| | 6DR–4261A–10 | .TOP COWLING W/O GRAPHICS<br>.CAPOT SUPERIEUR SANS GRAPHIQUE | | 1 | 1 | | | |
| 3 | 6DR–42651–00 | ..HOOK<br>..CROCHET | 1 | 1 | 1 | | | |
| 4 | 90266–04005 | ..RIVET<br>..RIVET | 2 | 2 | 2 | | | |
| 5 | 6DR–42649–00 | ..HOLDER, CLAMP BAND<br>..SUPPORT, SANDOW DE SERRAGE | 1 | 1 | 1 | | | |
| 6 | 6BG–42662–00 | ..DAMPER<br>..AMORTISSEUR | 2 | 2 | 2 | | | |
| 7 | 60R–42615–00 | ..SEAL<br>..JOINT | 1 | 1 | 1 | | | |
| 8 | 60R–42652–00 | ..HOOK<br>..CROCHET | 1 | 1 | 1 | | | |
| 9 | 97595–05514 | ..BOLT, WITH WASHER<br>..VIS HEXAGONAL AVC RONDELLE | 2 | 2 | 2 | | | |
| 10 | 68T–42649–00 | ..HOLDER, CLAMP BAND<br>..SUPPORT, SANDOW DE SERRAGE | 1 | 1 | 1 | | | |
| 11 | 6AH–42697–10 | ..TUNING FORK MARK<br>..MARQUE, YAMAHA | 1 | 1 | 1 | | | |
| 12 | 60S–42678–10 | .GRAPHIC, REAR<br>.ADHESIF, ARRIERE | 1 | 1 | 1 | | | |
| 13 | 60R–42675–00 | .GRAPHIC, SIDE 1<br>.EMBLEME | 1 | 1 | 1 | | | |
| 14 | 60R–42676–10 | .GRAPHIC, SIDE 2<br>.EMBLEME | 1 | 1 | 1 | | | |
| 15 | 60R–42678–10 | .GRAPHIC, REAR<br>.ADHESIF, ARRIERE | | 1 | 1 | | | |

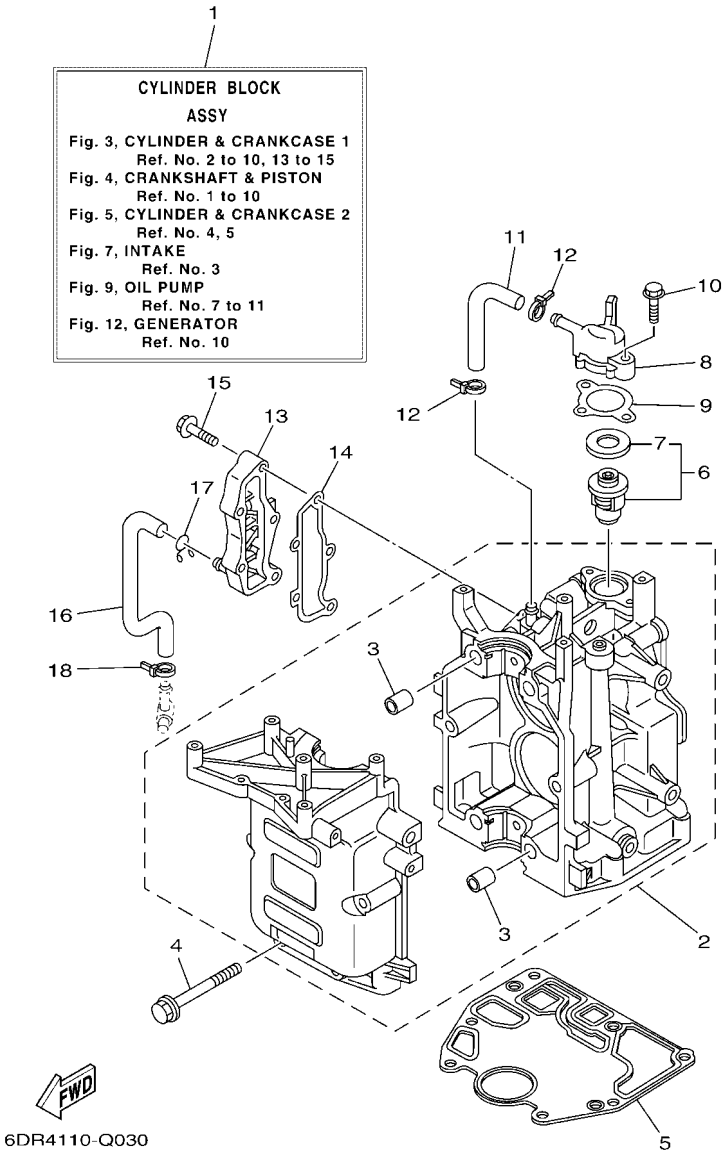


## FIG. 3 CYLINDER & CRANKCASE 1 — CYLINDRE & CARTER 1

| REF. NO. | PART NO. N° PIECES | DESCRIPTION DESCRIPTION | MH | E | EP | | | REMARKS REMARQUES |
|---|---|---|---|---|---|---|---|---|
| 1 | 6AU–W009B–00–1S | CYLINDER BLOCK ASSY<br>CYLINDRE GROUPE (ENS.) | 1 | 1 | 1 | | | |
| 2 | 6AU–15100–00 | CRANKCASE ASSY<br>CARTER DE MOTEUR COMPLET | 1 | 1 | 1 | | | |
| 3 | 99530–12016 | .PIN, DOWEL<br>.GOUJON, D'ASSEMBLAGE | 4 | 4 | 4 | | | |
| 4 | 90119–08M29 | BOLT, WITH WASHER<br>BOULON, AVEC RONDELLE | 6 | 6 | 6 | | | |
| 5 | 68T–11351–00 | GASKET, CYLINDER<br>JOINT, D'EMBASE | 1 | 1 | 1 | | | |
| 6 | 66M–12411–01 | THERMOSTAT<br>THERMOSTAT | 1 | 1 | 1 | | | |
| 7 | 688–12412–00 | .SEAL, THERMOSTAT<br>.JOINT, THERMOSTAT | 1 | 1 | 1 | | | |
| 8 | 68T–12413–00–1S | COVER, THERMOSTAT<br>COUVERCLE, THERMOSTAT | 1 | 1 | 1 | | | |
| 9 | 6G8–12414–A0 | GASKET, COVER<br>JOINT, COUVERCLE | 1 | 1 | 1 | | | |
| 10 | 90119–06MA2 | BOLT, WITH WASHER<br>BOULON, AVEC RONDELLE | 2 | 2 | 2 | | | |
| 11 | 68T–12481–00 | PIPE 1<br>DURITE 1 | 1 | 1 | 1 | | | |
| 12 | 90465–11M10 | CLAMP<br>BRIDE | 2 | 2 | 2 | | | |
| 13 | 6AU–41113–00–1S | OUTER COVER, EXHAUST<br>COUVERCLE, ECHAPPEMENT | 1 | 1 | 1 | | | |
| 14 | 68T–41114–A0 | GASKET, EXHAUST OUTER COVER<br>JOINT, COUVERCLE D'ECHAPPEMENT | 1 | 1 | 1 | | | |
| 15 | 90119–06MA3 | BOLT, WITH WASHER<br>BOULON, AVEC RONDELLE | 5 | 5 | 5 | | | |
| 16 | 68T–12482–00 | PIPE 2<br>DURITE 2 | 1 | 1 | 1 | | | |
| 17 | 90467–10M04 | CLIP<br>JONC | 1 | 1 | 1 | | | |
| 18 | 90465–11M10 | CLAMP<br>BRIDE | 1 | 1 | 1 | | | |

## FIG. 4 CRANKSHAFT & PISTON — VILEBREQUIN & PISTON

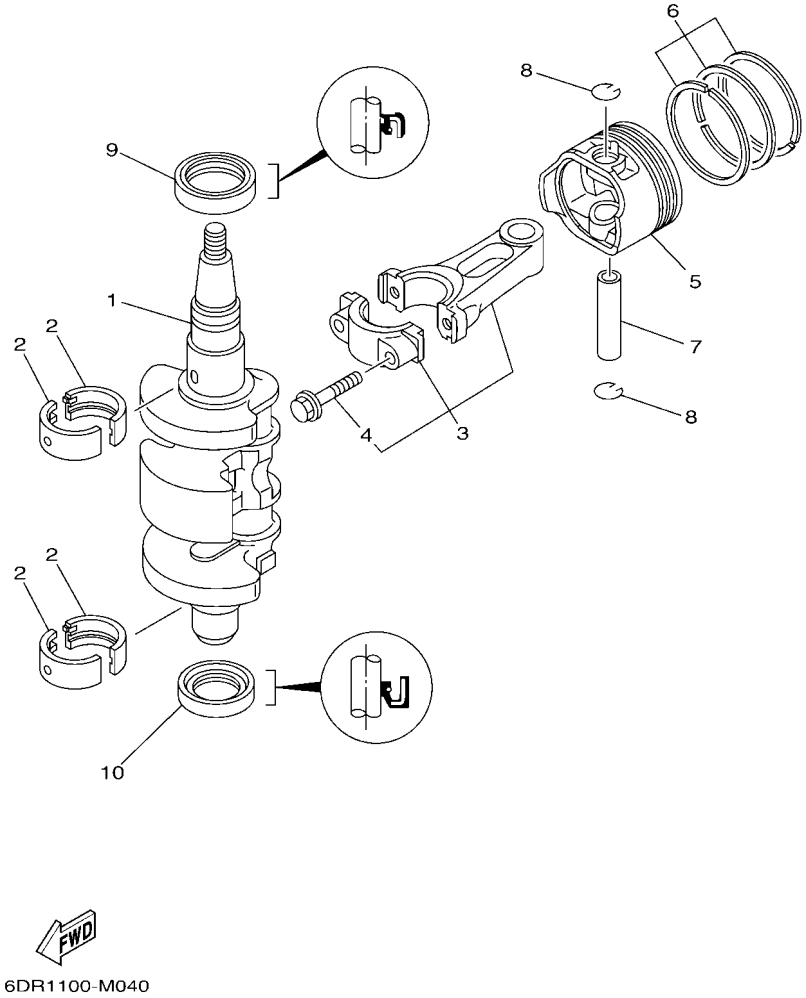


| REF. NO. | PART NO. N° PIECES | DESCRIPTION DESCRIPTION | MH | E | EP | | | REMARKS REMARQUES |
|---|---|---|---|---|---|---|---|---|
| 1 | 6AU–11411–00 | CRANKSHAFT<br>VILEBREQUIN COMPLET | 1 | 1 | 1 | | | |
| 2 | 68T–11416–01 | PLANE BEARING, CRANKSHAFT 1<br>COUSSINET DE VILEBREQUIN 1 | 4 | 4 | 4 | | | UR BROWN<br>UR BROWN |
| | 68T–11416–11 | PLANE BEARING, CRANKSHAFT 1<br>COUSSINET DE VILEBREQUIN 1 | 4 | 4 | 4 | | | UR BLACK<br>UR BLACK |
| | 68T–11416–21 | PLANE BEARING, CRANKSHAFT 1<br>COUSSINET DE VILEBREQUIN 1 | 4 | 4 | 4 | | | UR BLUE<br>UR BLUE |
| 3 | 6AU–11650–00 | CONNECTING ROD ASSY<br>BIELLE COMPLETTE | 2 | 2 | 2 | | | |
| 4 | 67D–11654–00 | .BOLT, CONNECTING ROD<br>.BOULON, BIELLE | 2 | 2 | 2 | | | |
| 5 | 6AU–11631–00–96 | PISTON (STD)<br>PISTON (STD) | 2 | 2 | 2 | | | |
| | 6AU–11635–00 | PISTON (0.25MM O/S)<br>PISTON (0.25MM O/S) | 2 | 2 | 2 | | | AP<br>AP |
| | 6AU–11636–00 | PISTON (0.50MM O/S)<br>PISTON (0.50MM O/S) | 2 | 2 | 2 | | | AP<br>AP |
| 6 | 68T–11603–01 | PISTON RING SET (STD)<br>JEU DE SEGMENTS (STD) | 2 | 2 | 2 | | | |
| | 68T–11604–01 | PISTON RING SET (0.25MM O/S)<br>JEU DE SEGMENTS (0.25MM O/S) | 2 | 2 | 2 | | | AP<br>AP |
| | 68T–11605–01 | PISTON RING SET (0.50MM O/S)<br>JEU DE SEGMENTS (0.50MM O/S) | 2 | 2 | 2 | | | AP<br>AP |
| 7 | 68T–11633–00 | PIN, PISTON<br>AXE, PISTON | 2 | 2 | 2 | | | |
| 8 | 93450–15023 | CIRCLIP<br>CIRCLIP | 4 | 4 | 4 | | | |
| 9 | 93102–30M22 | OIL SEAL<br>JOINT SPY | 1 | 1 | 1 | | | |
| 10 | 93101–25M69 | OIL SEAL<br>JOINT SPY | 1 | 1 | 1 | | | |

## FIG. 5 CYLINDER & CRANKCASE 2 — CYLINDRE & CARTER 2

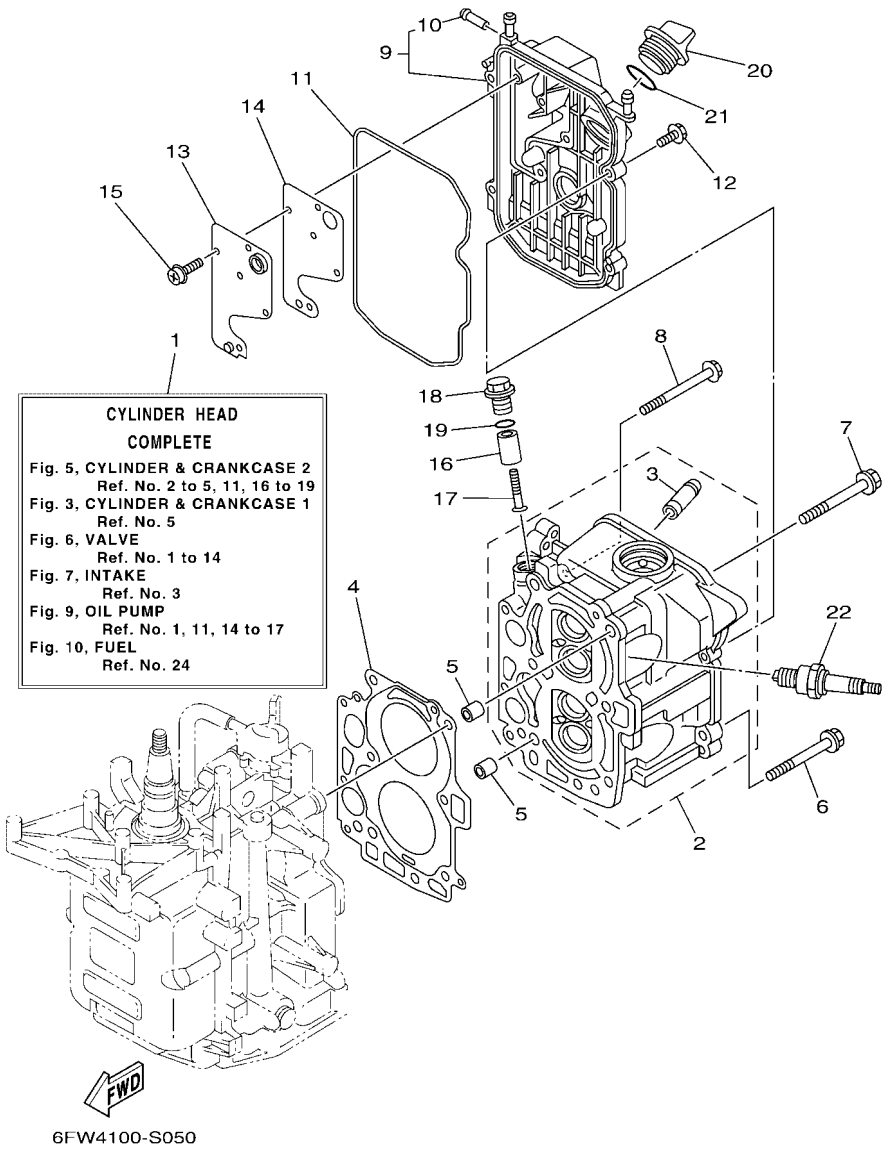


| REF. NO. | PART NO. N° PIECES | DESCRIPTION DESCRIPTION | MH | E | EP | | | REMARKS REMARQUES |
|---|---|---|---|---|---|---|---|---|
| 1 | 6AU–W009A–01–1S | CYLINDER HEAD COMPLETE<br>CULASSE (ENS.) | 1 | 1 | 1 | | | |
| 2 | 6AU–11111–00–1S | HEAD, CYLINDER 1<br>CULASSE, 1 | 1 | 1 | 1 | | | |
| 3 | 6AU–11133–10 | .GUIDE, VALVE 1<br>.GUIDE, SOUPAPE 1 | 4 | 4 | 4 | | | |
| 4 | 68T–11181–00 | GASKET, CYLINDER HEAD 1<br>JOINT, DE CULASSE 1 | 1 | 1 | 1 | | | |
| 5 | 99530–10114 | PIN, DOWEL<br>GOUJON, D'ASSEMBLAGE | 2 | 2 | 2 | | | |
| 6 | 90105–08M36 | BOLT, FLANGE<br>BOULON, A COLLERETTE | 2 | 2 | 2 | | | |
| 7 | 90105–08M78 | BOLT, FLANGE<br>BOULON, A COLLERETTE | 4 | 4 | 4 | | | |
| 8 | 90119–06049 | BOLT, WITH WASHER<br>BOULON, AVEC RONDELLE | 3 | 3 | 3 | | | |
| 9 | 68T–11191–00–1S | COVER, CYLINDER HEAD 1<br>COUVERCLE, CULASSE 1 | 1 | 1 | 1 | | | |
| 10 | 650–24378–00 | .PIPE, JOINT 4<br>.DURITE RACCORDEMENT 3 | 1 | 1 | 1 | | | |
| 11 | 68T–11356–00 | SEAL, CYLINDER 2<br>JOINT, SPY CYLINDRE | 1 | 1 | 1 | | | |
| 12 | 97595–06520 | BOLT, WITH WASHER<br>VIS HEXAGONAL AVC RONDELLE | 4 | 4 | 4 | | | |
| 13 | 68T–11168–00 | COVER, BREATHER<br>COUVERCLE, RENIFLARD | 1 | 1 | 1 | | | |
| 14 | 68T–11169–A0 | GASKET, BREATHER COVER<br>JOINT, COUVERCLE DE RENIFLARD | 1 | 1 | 1 | | | |
| 15 | 97607–04210 | SCREW, WITH WASHER<br>VIS, AVEC RONDELLE | 5 | 5 | 5 | | | |
| 16 | 6G8–11325–00 | ANODE<br>ANODE | 1 | 1 | 1 | | | |
| 17 | 98980–05025 | SCREW, BIND<br>VIS, DE PRESSION | 1 | 1 | 1 | | | |
| 18 | 6G8–11197–A0 | PLUG, BLIND<br>PLOT, BORGNE | 1 | 1 | 1 | | | |
| 19 | 93210–13M63 | O-RING<br>JOINT TORIQUE | 1 | 1 | 1 | | | |
| 20 | 6G8–15363–00 | PLUG, OIL<br>PLOT, HUILE | 1 | 1 | 1 | | | |
| 21 | 93210–24M79 | O-RING<br>JOINT TORIQUE | 1 | 1 | 1 | | | |
| 22 | 94702–00274 | PLUG, SPARK (NGK BR6HS-10)<br>BOUGIE D'ALLUMAGE(NGK BR6HS-10 | 2 | 2 | 2 | | | |

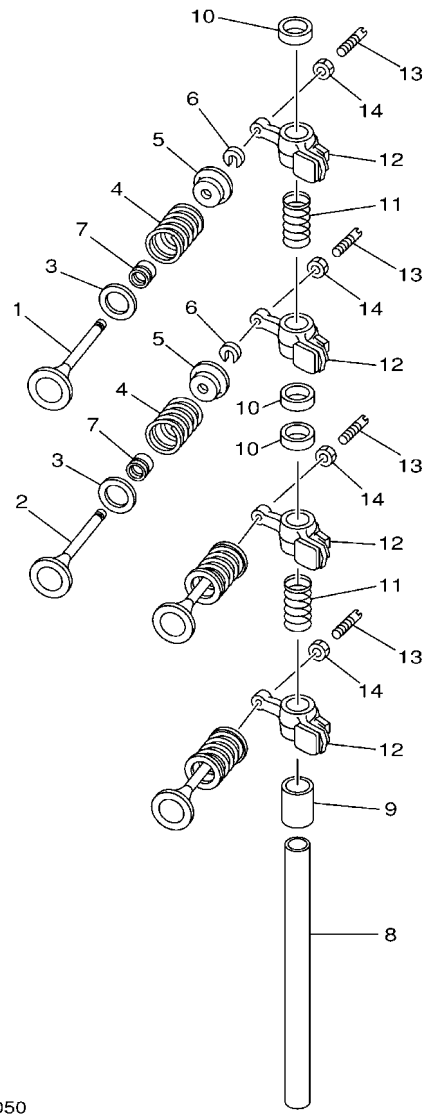


68R0010-0050

## FIG. 6 VALVE SOUPAPE

| REF. NO. | PART NO. N° PIECES | DESCRIPTION DESCRIPTION | MH | E | EP | | | REMARKS REMARQUES |
|---|---|---|---|---|---|---|---|---|
| 1 | 6AU–12111–00 | VALVE, INTAKE<br>SOUPAPE, ADMISSION | 2 | 2 | 2 | | | |
| 2 | 6AU–12121–00 | VALVE, EXHAUST<br>SOUPAPE, ECHAPPEMENT | 2 | 2 | 2 | | | |
| 3 | 68T–12116–00 | SEAT, VALVE SPRING<br>SIEGE, RESSORT DE SOUPAPE | 4 | 4 | 4 | | | |
| 4 | 60R–12113–00 | SPRING, VALVE INNER<br>RESSORT DE SOUPAPE, INTERNE | 4 | 4 | 4 | | | |
| 5 | 7NJ–12117–00 | RETAINER, VALVE SPRING<br>BUTEE DE RESSORT DE SOUPAPE | 4 | 4 | 4 | | | |
| 6 | 7NJ–12118–00 | LOCK, VALVE SPRING RETAINER<br>FRAISE, SOUPAPE | 4 | 4 | 4 | | | |
| 7 | 51Y–12119–00 | SEAL, VALVE STEM<br>JOINT, QUEUE DE SOUPAPE | 4 | 4 | 4 | | | |
| 8 | 68T–12146–00 | SHAFT, ROCKER<br>AXE, CULBUTEUR | 1 | 1 | 1 | | | |
| 9 | 90387–13M56 | COLLAR<br>COLLERETTE | 1 | 1 | 1 | | | |
| 10 | 90387–14M03 | COLLAR<br>COLLERETTE | 3 | 3 | 3 | | | |
| 11 | 90501–12M40 | SPRING, COMPRESSION<br>RESSORT, COMPRESSION | 2 | 2 | 2 | | | |
| 12 | 68T–12151–00 | ARM, VALVE ROCKER<br>CULBUTEUR | 4 | 4 | 4 | | | |
| 13 | 6G8–12159–00 | SCREW, VALVE ADJUSTING<br>VIS, REGLAGE DE SOUPAPE | 4 | 4 | 4 | | | |
| 14 | 6G8–12158–00 | NUT, LOCK<br>CONTRE-ECROU | 4 | 4 | 4 | | | |

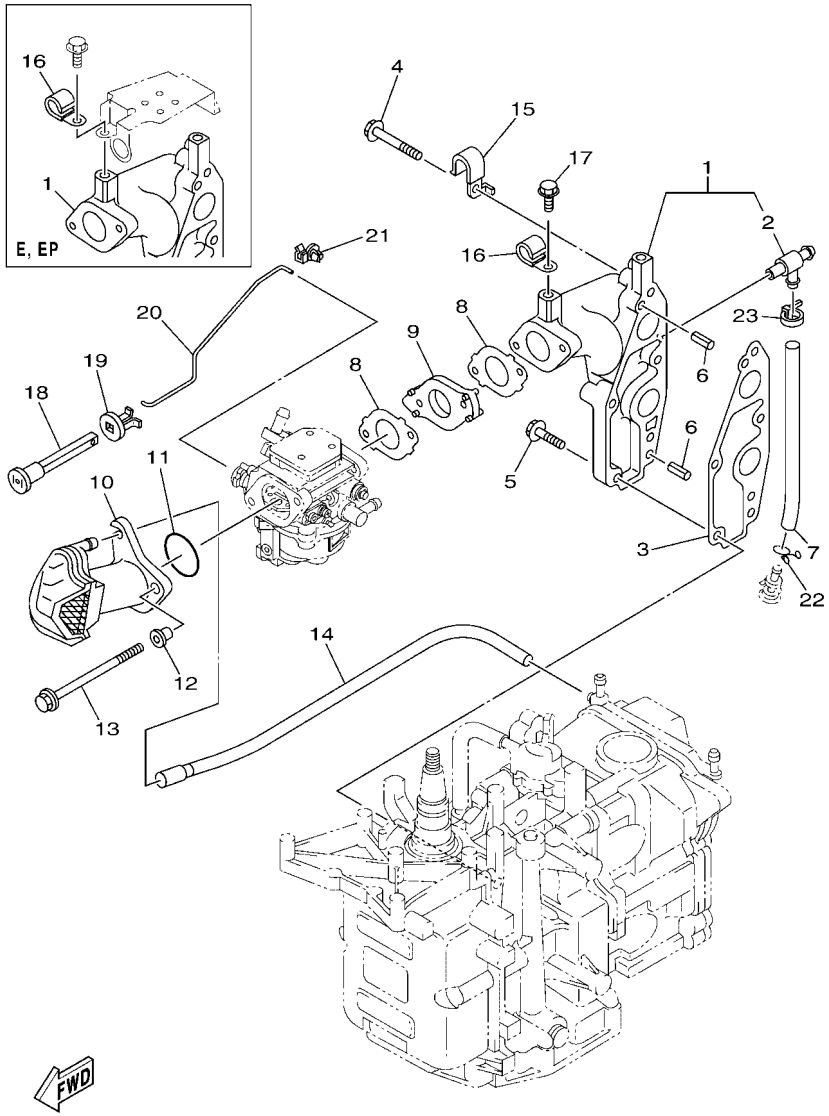


6EA4300-Q070

## FIG. 7 INTAKE — ADMISSION

| REF. NO. | PART NO. N° PIECES | DESCRIPTION DESCRIPTION | MH | E | EP | | | REMARKS REMARQUES |
|---|---|---|---|---|---|---|---|---|
| 1 | 68T–13641–20–1S | MANIFOLD, INTAKE 1<br>TUBULURE, ADMISSION 1 | 1 | 1 | 1 | | | FLUSHING KIT<br>FLUSHING KIT |
| 2 | 67F–12482–00 | .PIPE 2<br>.DURITE 2 | 1 | 1 | 1 | | | |
| 3 | 68T–13645–00 | GASKET, MANIFOLD 1<br>JOINT, TUBULURE 1 | 1 | 1 | 1 | | | |
| 4 | 90119–06MA5 | BOLT, WITH WASHER<br>BOULON, AVEC RONDELLE | 3 | 3 | 3 | | | |
| 5 | 90119–06MA3 | BOLT, WITH WASHER<br>BOULON, AVEC RONDELLE | 2 | 2 | 2 | | | |
| 6 | 91690–50014 | PIN, SPRING<br>AGRAFFE | 2 | 2 | 2 | | | |
| 7 | 90445–09M20 | HOSE (L95)<br>DURITE (L95) | 1 | 1 | 1 | | | FLUSHING KIT<br>FLUSHING KIT |
| 8 | 68T–13646–A0 | GASKET, MANIFOLD 2<br>JOINT, TUBULURE 2 | 2 | 2 | 2 | | | |
| 9 | 68T–14271–00 | INSULATOR<br>ISOLATEUR | 1 | 1 | 1 | | | |
| 10 | 6AU–14440–00 | SILENCER ASSY, INTAKE<br>SIENCIEUX D'ADMISSION | 1 | 1 | 1 | | | |
| 11 | 93210–31MJ5 | O-RING<br>JOINT TORIQUE | 1 | 1 | 1 | | | |
| 12 | 90387–06M70 | COLLAR<br>COLLERETTE | 2 | 2 | 2 | | | |
| 13 | 90105–06188 | BOLT, FLANGE<br>BOULON, A COLLERETTE | 2 | 2 | 2 | | | |
| 14 | 68T–12483–00 | PIPE 3<br>DURITE 3 | 1 | 1 | 1 | | | |
| 15 | 90465–08M99 | CLAMP<br>BRIDE | 1 | 1 | 1 | | | |
| 16 | 90465–08M83 | CLAMP<br>BRIDE | 1 | 1 | 1 | | | FLUSHING KIT<br>FLUSHING KIT |
| 17 | 97595–06510 | BOLT, WITH WASHER<br>VIS HEXAGONAL AVC RONDELLE | 1 | | | | | FLUSHING KIT<br>FLUSHING KIT |
| 18 | 6H4–41271–02 | KNOB, CHOKE<br>BOUTON DE STARTER | 1 | | | | | |
| 19 | 689–41273–00 | GROMMET<br>PASSE-FIL | 1 | | | | | |
| 20 | 68T–41256–00 | ROD, CHOKE 1<br>TRINGLE 1, STARTER | 1 | | | | | |
| 21 | 6J8–41262–00 | JOINT, CHOKE LEVER<br>RACCORD, LEVIER DE STARTER | 1 | | | | | |
| 22 | 90467–08M18 | CLIP<br>JONC | 1 | 1 | 1 | | | |
| 23 | 90465–11M10 | CLAMP<br>BRIDE | 1 | 1 | 1 | | | |

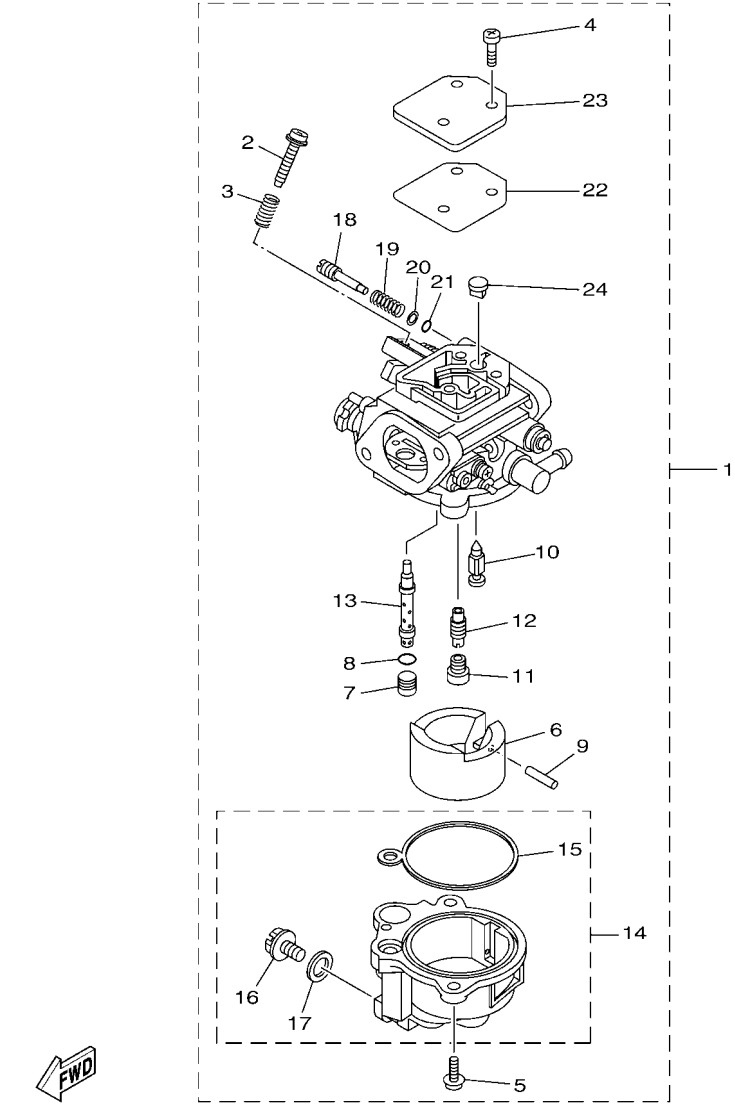


60RA700-M080

## FIG. 8 CARBURETOR CARBURATEUR

| REF. NO. | PART NO. N° PIECES | DESCRIPTION DESCRIPTION | MH | E | EP | | | REMARKS REMARQUES |
|---|---|---|---|---|---|---|---|---|
| 1 | 6FW–14301–21 | CARBURETOR ASSY 1<br>CARBURATEUR COMPLET 1 | 1 | | | | | |
| | 6FW–14301–51 | CARBURETOR ASSY 1<br>CARBURATEUR COMPLET 1 | | 1 | 1 | | | |
| 2 | 69W–14321–00 | .SCREW, THROTTLE<br>.VIS, ACCELERATEUR | 1 | 1 | 1 | | | |
| 3 | 62Y–14212–00 | .SPRING, PILOT ADJUSTING<br>.RESSORT, VIS DE RALENTI | 1 | 1 | 1 | | | |
| 4 | 6DR–14321–00 | .SCREW, THROTTLE<br>.VIS, ACCELERATEUR | 3 | 3 | 3 | | | |
| 5 | 62Y–14321–00 | .SCREW, THROTTLE<br>.VIS, ACCELERATEUR | 2 | 2 | 2 | | | |
| 6 | 6DR–14385–00 | .FLOAT<br>.FLOTTEUR | 1 | 1 | 1 | | | |
| 7 | 6DR–1432A–00 | .PLUG<br>.PLOT | 1 | 1 | 1 | | | |
| 8 | 6DR–14561–00 | .O-RING<br>.JOINT TORIQUE | 1 | 1 | 1 | | | |
| 9 | 4FP–14386–00 | .PIN, FLOAT<br>.AXE, FLOTTEUR | 1 | 1 | 1 | | | |
| 10 | 6DR–14336–00 | .NEEDLE<br>.AIGUILLE | 1 | 1 | 1 | | | |
| 11 | 6FW–14343–37 | .JET, MAIN (#74)<br>.GICLEUR, PRINCIPAL (#74) | 1 | 1 | 1 | | | |
| 12 | 6FW–14342–21 | .JET, PILOT (#41)<br>.GICLEUR, RALENTI (#41) | 1 | 1 | 1 | | | |
| 13 | 6FW–14341–00 | .NOZZLE, MAIN<br>.PUITS D'AIGUILLE | 1 | 1 | 1 | | | |
| 14 | 60S–14381–00 | .BODY, FLOAT CHAMBER<br>.CORPS, CUVE DE FLOTTEUR | 1 | 1 | 1 | | | |
| 15 | 6DR–14984–00 | ..GASKET, FLOAT CHAMBER<br>..JOINT, CUVE DE FLOTTEUR | 1 | 1 | 1 | | | |
| 16 | 62Y–14383–30 | ..SCREW, DRAIN<br>..BOUCHON, PURGE | 1 | 1 | 1 | | | |
| 17 | 652–14397–00 | ..O-RING<br>..JOINT TORIQUE | 1 | 1 | 1 | | | |
| 18 | 6DR–14323–10 | .SCREW, AIR ADJUSTING<br>.VIS DE DOSEUR D'AIR | 1 | 1 | 1 | | | |
| 19 | 6DR–14334–00 | .SPRING, AIR ADJUSTING<br>.RESSORT, VIS DE DOSEUR D'AIR | 1 | 1 | 1 | | | |
| 20 | 6DR–14285–00 | .WASHER<br>.RONDELLE | 1 | 1 | 1 | | | |
| 21 | 6DR–14397–00 | .O-RING<br>.JOINT TORIQUE | 1 | 1 | 1 | | | |
| 22 | 6DR–14818–00 | .COVER GASKET<br>.JOINT DE COURERCLE | 1 | 1 | 1 | | | |
| 23 | 6DR–14157–00 | .COVER, MIXING<br>.COUVERCLE DE CHAMBRE | 1 | 1 | 1 | | | |
| 24 | 6DR–14862–00 | .PLUG<br>.PLOT | 1 | 1 | 1 | | | |

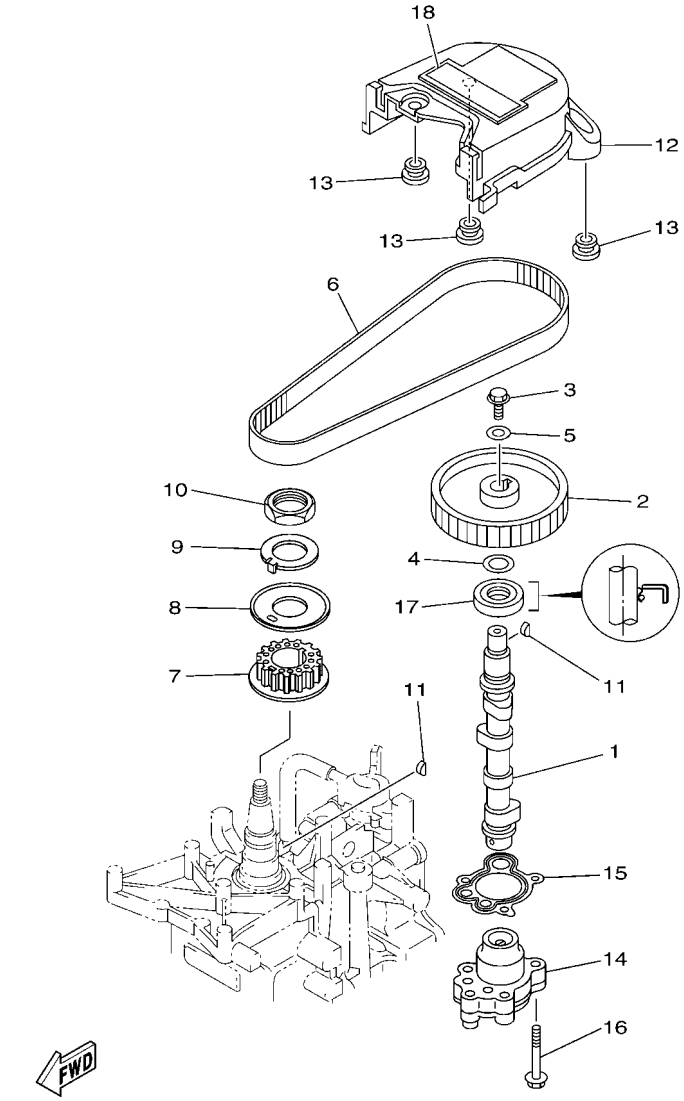


6DR4110-Q090

## FIG. 9 OIL PUMP — POMPE A HUILE

| REF. NO. | PART NO. N° PIECES | DESCRIPTION DESCRIPTION | MH | E | EP | | | REMARKS REMARQUES |
|---|---|---|---|---|---|---|---|---|
| 1 | 68T–12171–00 | CAMSHAFT 1<br>ARBRE A CAMES 1 | 1 | 1 | 1 | | | |
| 2 | 66M–11537–00 | GEAR, DRIVEN<br>PIGNON SECONDAIRE | 1 | 1 | 1 | | | |
| 3 | 90105–06M14 | BOLT FLANGE<br>BOULON, A COLLERETTE | 1 | 1 | 1 | | | |
| 4 | 90201–13201 | WASHER, PLATE<br>RONDELLE, PLATE | 1 | 1 | 1 | | | |
| 5 | 90201–06M94 | WASHER, PLATE<br>RONDELLE, PLATE | 1 | 1 | 1 | | | |
| 6 | 68T–46241–00 | BELT<br>COURROIE TRAPEZOIDALE | 1 | 1 | 1 | | | |
| 7 | 68T–11536–00 | GEAR, DRIVE<br>ENGRENAGE, MENANT | 1 | 1 | 1 | | | |
| 8 | 68T–11557–00 | WASHER 1<br>RONDELLE 1 | 1 | 1 | 1 | | | |
| 9 | 6G8–11587–01 | WASHER, LOCK<br>RONDELLE, FREIN | 1 | 1 | 1 | | | |
| 10 | 90170–24M09 | NUT<br>ECROU | 1 | 1 | 1 | | | |
| 11 | 90280–03M01 | KEY, WOODRUFF<br>CLAVETTE, DEMI-LUNE | 2 | 2 | 2 | | | |
| 12 | 6AU–46297–00 | COVER, DUST<br>COUVERCLE, POUSSIERE | 1 | 1 | 1 | | | |
| 13 | 90480–10627 | GROMMET<br>PASSE-FIL | 3 | 3 | 3 | | | |
| 14 | 68T–13300–00 | OIL PUMP ASSY<br>POMPE A HUILE COMPLETE | 1 | 1 | 1 | | | |
| 15 | 68T–13329–00 | GASKET, PUMP COVER<br>JOINT, COUVERCLE DE POMPE | 1 | 1 | 1 | | | |
| 16 | 97595–06530 | BOLT, WITH WASHER<br>VIS HEXAGONAL AVC RONDELLE | 3 | 3 | 3 | | | |
| 17 | 93102–18M21 | OIL SEAL<br>JOINT SPY | 1 | 1 | 1 | | | |
| 18 | 6AU–13437–61 | MARK, CAUTION<br>MAKER | 1 | 1 | 1 | | | |

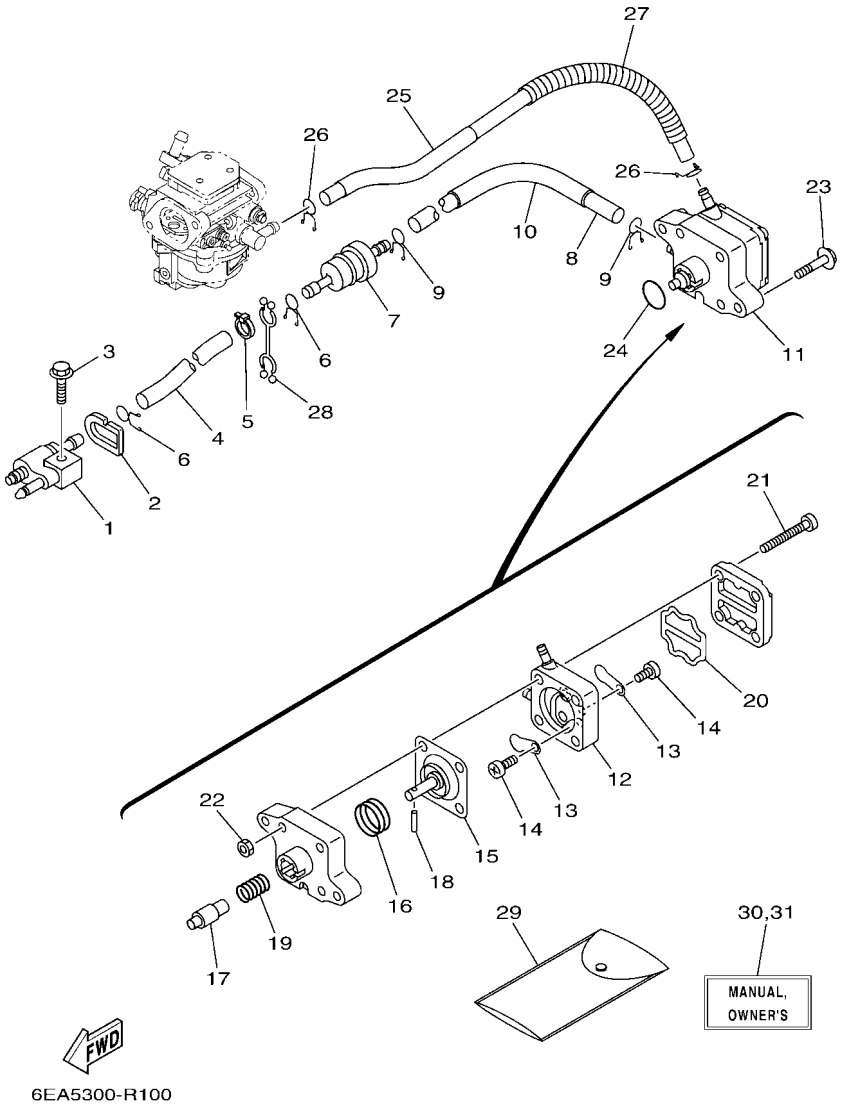


## FIG. 10 FUEL — CARBURANT

| REF. NO. | PART NO. N° PIECES | DESCRIPTION DESCRIPTION | MH | E | EP | | | REMARKS REMARQUES |
|---|---|---|---|---|---|---|---|---|
| 1 | 6G1–24304–10 | FUEL PIPE JOINT COMP. 1<br>DURITE RACCORDEMT. A ESSENCE | 1 | 1 | 1 | | | |
| 2 | 61N–24329–00 | SEAL<br>JOINT | 1 | 1 | 1 | | | |
| 3 | 97595–06525 | BOLT, WITH WASHER<br>VIS HEXAGONAL AVC RONDELLE | 1 | 1 | 1 | | | |
| 4 | 90445–10046 | HOSE (L295)<br>DURITE (L295) | 1 | 1 | 1 | | | |
| 5 | 90465–11M10 | CLAMP<br>BRIDE | 1 | 1 | 1 | | | |
| 6 | 90467–09M09 | CLIP<br>JONC | 2 | 2 | 2 | | | |
| 7 | 68T–24251–01 | STRAINER 1<br>FILTRE 1 | 1 | 1 | 1 | | | |
| 8 | 90445–10M50 | HOSE (L170)<br>DURITE (L170) | 1 | 1 | 1 | | | |
| 9 | 90467–09M09 | CLIP<br>JONC | 2 | 2 | 2 | | | |
| 10 | 90445–16010 | HOSE (L140)<br>DURITE (L140) | 1 | 1 | 1 | | | |
| 11 | 68T–24410–01 | FUEL PUMP ASSY<br>POMPE A ESSENCE | 1 | 1 | 1 | | | |
| 12 | 66M–24413–01 | .BODY 2<br>.CORPS 2 | 1 | 1 | 1 | | | |
| 13 | 6A0–24421–01 | .VALVE, CHECK<br>.SOUPAPE, RETENUE | 2 | 2 | 2 | | | |
| 14 | 6E7–14325–00 | .SCREW, PAN HEAD<br>.VIS TETE CONIQUE | 2 | 2 | 2 | | | |
| 15 | 66M–24411–01 | .DIAPHRAGM<br>.DIAPHRAGME | 1 | 1 | 1 | | | |
| 16 | 66M–24423–00 | .SPRING, DIAPHRAGM<br>.RESSORT, DIAPHRAGME | 1 | 1 | 1 | | | |
| 17 | 66M–13131–00 | .PLUNGER<br>.PLONGEUR | 1 | 1 | 1 | | | |
| 18 | 66M–24374–00 | .PIN<br>.GOUPILLE | 1 | 1 | 1 | | | |
| 19 | 66M–24454–00 | .SPRING<br>.RESSORT | 1 | 1 | 1 | | | |
| 20 | 66M–24471–01 | .DIAPHRAGM<br>.DIAPHRAGME | 1 | 1 | 1 | | | |
| 21 | 66M–24444–00 | .SCREW<br>.VIS | 4 | 4 | 4 | | | |
| 22 | 95380–04600 | .NUT<br>.ECROU | 4 | 4 | 4 | | | |
| 23 | 97595–06630 | BOLT, WITH WASHER<br>VIS HEXAGONAL AVC RONDELLE | 2 | 2 | 2 | | | |
| 24 | 93210–20M65 | O-RING<br>JOINT TORIQUE | 1 | 1 | 1 | | | |
| 25 | 6AU–24311–00 | PIPE, FUEL 1<br>DURITE A ESSENCE | 1 | 1 | 1 | | | |
| 26 | 90467–09M09 | CLIP<br>JONC | 2 | 2 | 2 | | | |
| 27 | 90447–13014 | TUBE<br>DURITE | 1 | 1 | 1 | | | |

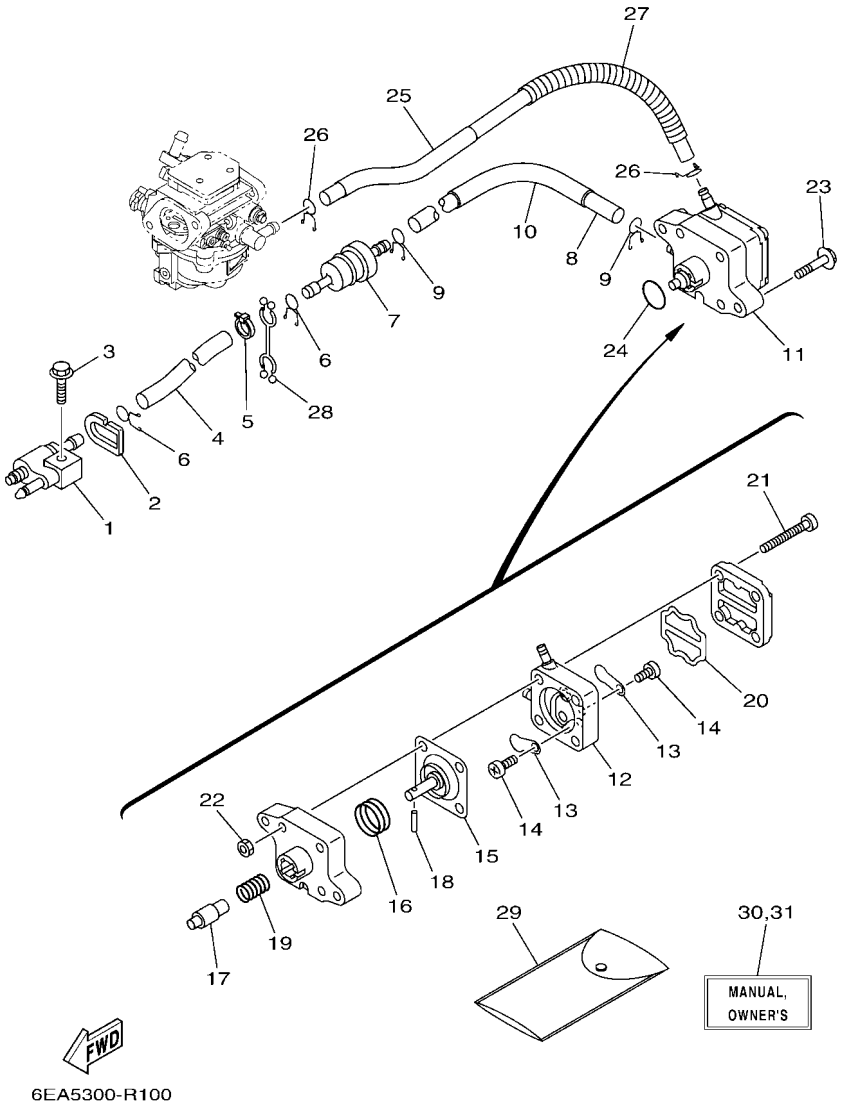


## FIG. 10 FUEL — CARBURANT

| REF. NO. | PART NO. N° PIECES | DESCRIPTION DESCRIPTION | MH | E | EP | | | REMARKS REMARQUES |
|---|---|---|---|---|---|---|---|---|
| 28 | 90464–10M53 | CLAMP<br>BRIDE | 1 | 1 | 1 | | | |
| 29 | 68T–28100–00 | TOOL KIT<br>TROUSSE A OUTILS | 1 | 1 | 1 | | | AP<br>AP |
| 30 | 6FW–28199–73–E0 | MANUAL,OWNER'S<br>MANUEL D'UTILISATION | 1 | 1 | 1 | | | UR (E)<br>UR (E) |
| | 6FW–28199–73–F0 | MANUAL,OWNER'S<br>MANUEL D'UTILISATION | 1 | 1 | 1 | | | UR (F)<br>UR (F) |
| | 6FW–28199–73–S0 | MANUAL,OWNER'S<br>MANUEL D'UTILISATION | 1 | 1 | 1 | | | UR (ES)<br>UR (ES) |
| | 6FW–28199–73–G0 | MANUAL,OWNER'S<br>MANUEL D'UTILISATION | 1 | 1 | 1 | | | UR (D)<br>UR (D) |
| | 6FW–28199–73–D0 | MANUAL,OWNER'S<br>MANUEL D'UTILISATION | 1 | 1 | 1 | | | UR (NL)<br>UR (NL) |
| | 6FW–28199–73–H0 | MANUAL,OWNER'S<br>MANUEL D'UTILISATION | 1 | 1 | 1 | | | UR (I)<br>UR (I) |
| 31 | 6FW–28199–83–K0 | MANUAL,OWNER'S<br>MANUEL D'UTILISATION | 1 | 1 | 1 | | | UR (DK)<br>UR (DK) |
| | 6FW–28199–83–R0 | MANUAL,OWNER'S<br>MANUEL D'UTILISATION | 1 | 1 | 1 | | | UR (GR)<br>UR (GR) |
| | 6FW–28199–83–P0 | MANUAL,OWNER'S<br>MANUEL D'UTILISATION | 1 | 1 | 1 | | | UR (P)<br>UR (P) |
| | 6FW–28199–83–N0 | MANUAL,OWNER'S<br>MANUEL D'UTILISATION | 1 | 1 | 1 | | | UR (N)<br>UR (N) |
| | 6FW–28199–83–M0 | MANUAL,OWNER'S<br>MANUEL D'UTILISATION | 1 | 1 | 1 | | | UR (S)<br>UR (S) |
| | 6FW–28199–83–L0 | MANUAL,OWNER'S<br>MANUEL D'UTILISATION | 1 | 1 | 1 | | | UR (SF)<br>UR (SF) |

## FIG. 11 STARTER DEMARREUR

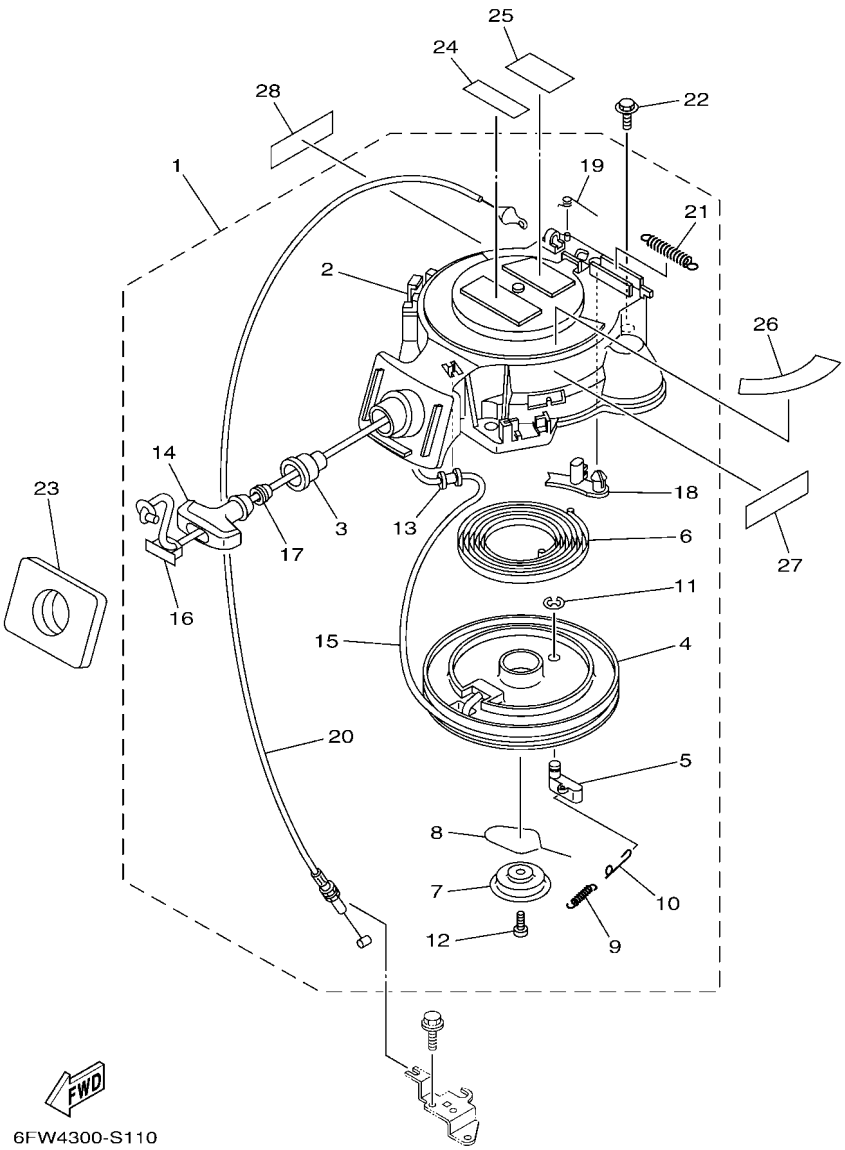


*1:CUT FROM 50M ROLLS,PART NO.90890-44373,CUTTING LENGTH 1.8M

*1:A PRELEVER SUR BOBINE 50M ,REFERENCE 90890-44373,
LONGUEUR DE COUPE 1.8M

| REF. NO. | PART NO. N° PIECES | DESCRIPTION DESCRIPTION | MH | E | EP | | | REMARKS REMARQUES |
|---|---|---|---|---|---|---|---|---|
| 1 | 68T–15710–13 | STARTER ASSY<br>DEMARREUR COMPLET | 1 | | | | | |
| 2 | 68T–15711–03 | .CASE, STARTER<br>.CARTER DE DEMARREUR | 1 | | | | | |
| 3 | 68T–15795–00 | .GUIDE, ROPE<br>.GUIDE DE CABLE | 1 | | | | | |
| 4 | 63V–15714–00 | .DRUM, SHEAVE<br>.TAMBOUR, POULIE | 1 | | | | | |
| 5 | 63V–15741–00 | .PAWL, DRIVE<br>.CLIQUET, ENTRAINEMENT | 1 | | | | | |
| 6 | 63V–15713–00 | .SPRING, STARTER<br>.RESSORT DE DEMARREUR | 1 | | | | | |
| 7 | 68T–15716–00 | .PLATE, DRIVE<br>.PLAQUE, ENTRAINEMENT | 1 | | | | | |
| 8 | 63V–15705–01 | .SPRING, DRIVE PAWL<br>.RESSORT DE CLIQUET | 1 | | | | | |
| 9 | 63V–15767–01 | .SPRING<br>.RESSORT | 1 | | | | | |
| 10 | 68T–15784–00 | .SPRING, RETURN<br>.RESSORT, RAPPEL | 1 | | | | | |
| 11 | 63V–15744–00 | .CIRCLIP<br>.CIRCLIP | 1 | | | | | |
| 12 | 68T–15793–00 | .SCREW<br>.VIS | 1 | | | | | |
| 13 | 68T–15764–00 | .COLLAR 1<br>.COLLERETTE 1 | 1 | | | | | |
| 14 | 6G1–15755–00 | .HANDLE, STARTER<br>.POIGNEE, DE DEMARREUR | 1 | | | | | |
| 15 | * | .WIRE, STARTER (L:1800MM)<br>.CABLE DE DEMARREUR (L:1800MM) | 1 | | | | | *1<br>*1 |
| 16 | 6G1–15779–00 | .COVER<br>.COUVERCLE | 1 | | | | | |
| 17 | 6A0–15789–00 | .DAMPER<br>.AMORTISSEUR | 1 | | | | | |
| 18 | 68T–15794–00 | .STOPPER<br>.BUTEE | 1 | | | | | |
| 19 | 66T–15734–00 | .SPRING, RETURN<br>.RESSORT, RAPPEL | 1 | | | | | |
| 20 | 68T–15770–00 | .CABLE COMP., STARTER STOP<br>.CABLE, BUTEE DE DEMAR | 1 | | | | | |
| 21 | 66T–15731–00 | .SPRING, RETURN<br>.RESSORT, RAPPEL | 1 | | | | | |
| 22 | 97595–06520 | BOLT, WITH WASHER<br>VIS HEXAGONAL AVC RONDELLE | 3 | | | | | |
| 23 | 68T–15762–00 | SEAL, RUBBER 2<br>JOINT CAOUTCHOUC 2 | 1 | | | | | |
| 24 | 6EE–81995–40 | LABEL, WARNING<br>ETIQUETTE, AVERTISSEMENT | 1 | | | | | |
| 25 | 6EE–81995–50 | LABEL, WARNING<br>ETIQUETTE, AVERTISSEMENT | 1 | | | | | |
| 26 | 68T–85711–60 | MARK, CAUTION<br>MAKER | 1 | | | | | |
| 27 | 6EE–81994–40 | LABEL, SAFETY<br>ETIQUETTE, SECURITE | 1 | | | | | |

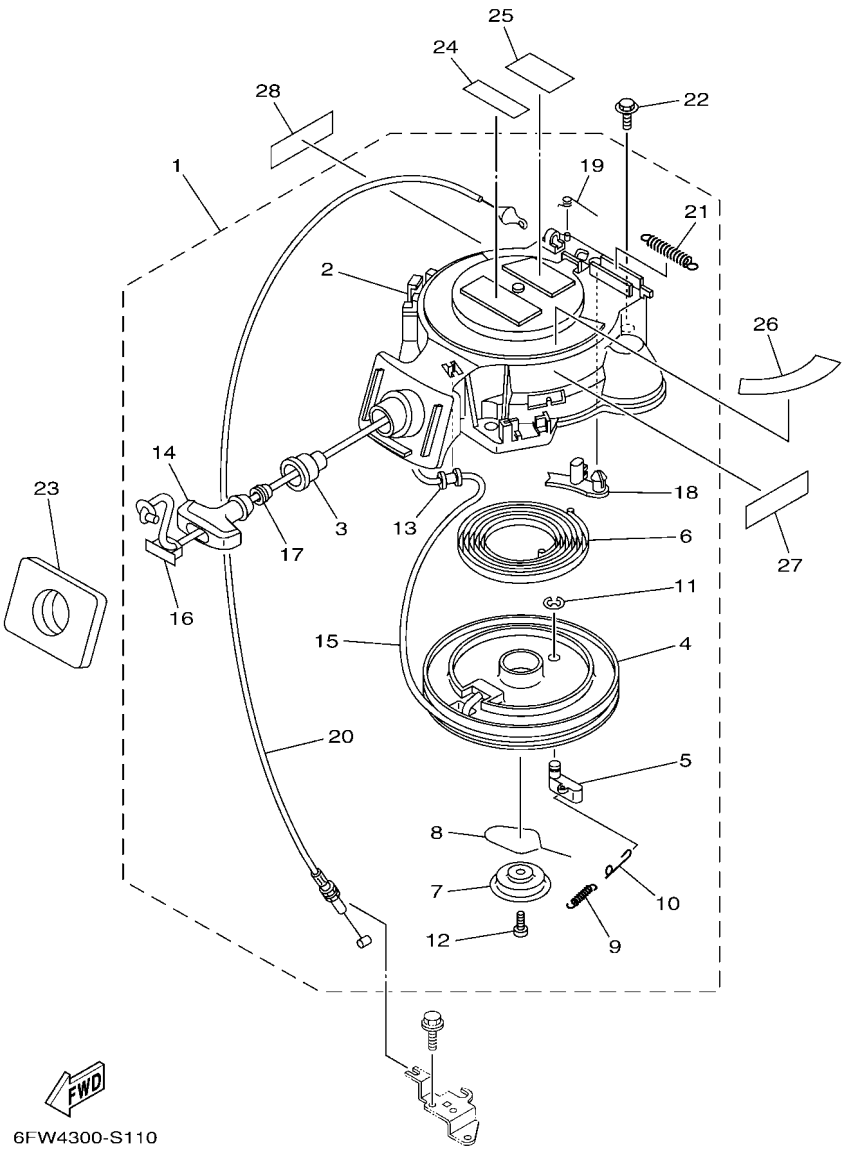


*1:CUT FROM 50M ROLLS,PART NO.90890-44373,CUTTING LENGTH 1.8M

*1:A PRELEVER SUR BOBINE 50M ,REFERENCE 90890-44373,
LONGUEUR DE COUPE 1.8M

## FIG. 11 STARTER DEMARREUR

| REF. NO. | PART NO. N° PIECES | DESCRIPTION DESCRIPTION | MH | E | EP | | | REMARKS REMARQUES |
|---|---|---|---|---|---|---|---|---|
| 28 | 6EE–81994–50 | LABEL, SAFETY<br>ETIQUETTE, SECURITE | 1 | | | | | |

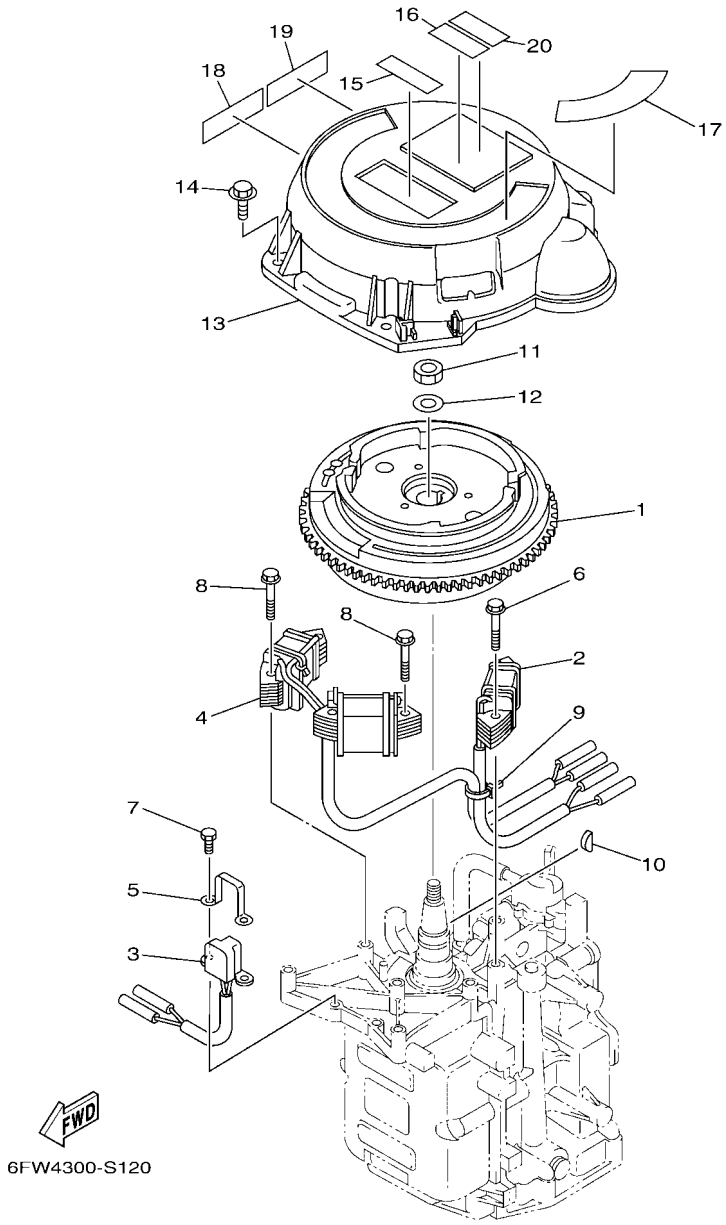


## FIG. 12 GENERATOR — GENERATRICE

| REF. NO. | PART NO. N° PIECES | DESCRIPTION DESCRIPTION | MH | E | EP | | | REMARKS REMARQUES |
|---|---|---|---|---|---|---|---|---|
| 1 | 6DR–85550–10 | ROTOR ASSY<br>ROTOR CPLT | 1 | 1 | 1 | | | |
| 2 | 68T–85520–00 | COIL, CHARGE<br>BOBINE, CHARGE | 1 | 1 | 1 | | | |
| 3 | 68T–85580–01 | COIL, PULSER<br>BOBINE, PULSEUR | 1 | 1 | 1 | | | |
| 4 | 68T–85533–10 | COIL, LIGHTING<br>BOBINE, ECLAIRAGE | 1 | 1 | 1 | | | |
| 5 | 6H2–85582–00 | ATTACHMENT, PULSER<br>SUPPORT, PULSEUR | 1 | 1 | 1 | | | |
| 6 | 90119–06014 | BOLT, WITH WASHER<br>BOULON, AVEC RONDELLE | 2 | 2 | 2 | | | |
| 7 | 97095–05010 | BOLT<br>BOULON | 2 | 2 | 2 | | | |
| 8 | 90119–06MA1 | BOLT, WITH WASHER<br>BOULON, AVEC RONDELLE | 4 | 4 | 4 | | | |
| 9 | 90465–11M10 | CLAMP<br>BRIDE | 1 | 1 | 1 | | | |
| 10 | 90280–04M06 | KEY, WOODRUFF<br>CLAVETTE, DEMI-LUNE | 1 | 1 | 1 | | | |
| 11 | 90170–12066 | NUT<br>ECROU | 1 | 1 | 1 | | | |
| 12 | 90201–12472 | WASHER, PLATE<br>RONDELLE, PLATE | 1 | 1 | 1 | | | |
| 13 | 6AV–81337–00 | COVER, FLYWHEEL<br>COUVERCLE, VOLANT | | 1 | 1 | | | |
| 14 | 97595–06520 | BOLT, WITH WASHER<br>VIS HEXAGONAL AVC RONDELLE | | 3 | 3 | | | |
| 15 | 6EE–81995–40 | LABEL, WARNING<br>ETIQUETTE, AVERTISSEMENT | | 1 | 1 | | | |
| 16 | 6EE–81995–50 | LABEL, WARNING<br>ETIQUETTE, AVERTISSEMENT | | 1 | 1 | | | |
| 17 | 68T–85711–60 | MARK, CAUTION<br>MAKER | | 1 | 1 | | | |
| 18 | 6EE–81994–40 | LABEL, SAFETY<br>ETIQUETTE, SECURITE | | 1 | 1 | | | |
| 19 | 6EE–81994–50 | LABEL, SAFETY<br>ETIQUETTE, SECURITE | | 1 | 1 | | | |
| 20 | 6AG–81996–00 | MARK<br>MARQUE | | 1 | 1 | | | |

## FIG. 13 ELECTRICAL 1 — PARTIE ELECTRIQUE 1

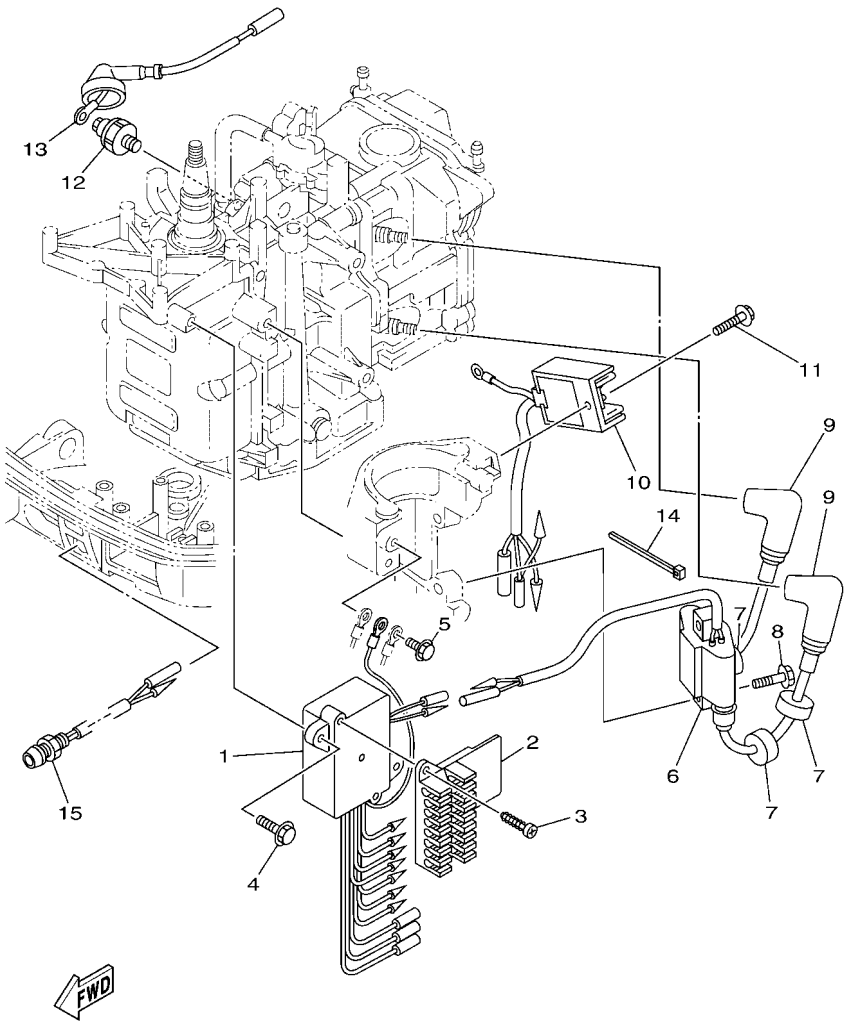


6EA5100-R120

| REF. NO. | PART NO. N° PIECES | DESCRIPTION DESCRIPTION | MH | E | EP | | | REMARKS REMARQUES |
|---|---|---|---|---|---|---|---|---|
| 1 | 68T–85540–00 | C.D.I. UNIT ASSY<br>BLOC C.D.I. | 1 | 1 | 1 | | | |
| 2 | 68T–82522–00 | CLAMP, COUPLER<br>BRIDE, DE CONNECTEUR | 1 | 1 | 1 | | | |
| 3 | 97780–40512 | SCREW, TAPPING<br>VIS, TETE BOMBEE | 2 | 2 | 2 | | | |
| 4 | 97595–06520 | BOLT, WITH WASHER<br>VIS HEXAGONAL AVC RONDELLE | 2 | 2 | 2 | | | |
| 5 | 97595–06512 | BOLT, WITH WASHER<br>VIS HEXAGONAL AVC RONDELLE | 1 | 1 | 1 | | | |
| 6 | 680–85570–02 | IGNITION COIL ASSY<br>BOBINE D'ALLUMAGE (ENS.) | 1 | 1 | 1 | | | |
| 7 | 90480–25003 | GROMMET<br>PASSE-FIL | 3 | 3 | 3 | | | |
| 8 | 90119–06MA3 | BOLT, WITH WASHER<br>BOULON, AVEC RONDELLE | 2 | 2 | 2 | | | |
| 9 | 6E3–82370–21 | PLUG CAP ASSY<br>ANTIPARASITE | 2 | 2 | 2 | | | |
| 10 | 68T–81960–00 | RECTIFIER & REGULATOR ASSY<br>REDRESSEUR REGULATEUR CPLT | | 1 | 1 | | | |
| 11 | 97595–06512 | BOLT, WITH WASHER<br>VIS HEXAGONAL AVC RONDELLE | | 1 | 1 | | | |
| 12 | 67F–82504–00 | OIL PRESSURE SWITCH ASSY<br>CONTACTEUR DE PRESSION D'HUILE | 1 | 1 | 1 | | | |
| 13 | 68T–82127–10 | WIRE, LEAD 2<br>FIL 2 | 1 | 1 | 1 | | | |
| 14 | 90465–11M10 | CLAMP<br>BRIDE | 1 | 1 | 1 | | | |
| 15 | 68T–85410–00 | EMERGENCY SIGNAL LIGHT ASSY<br>FEU DE DETRESSE | 1 | 1 | 1 | | | |

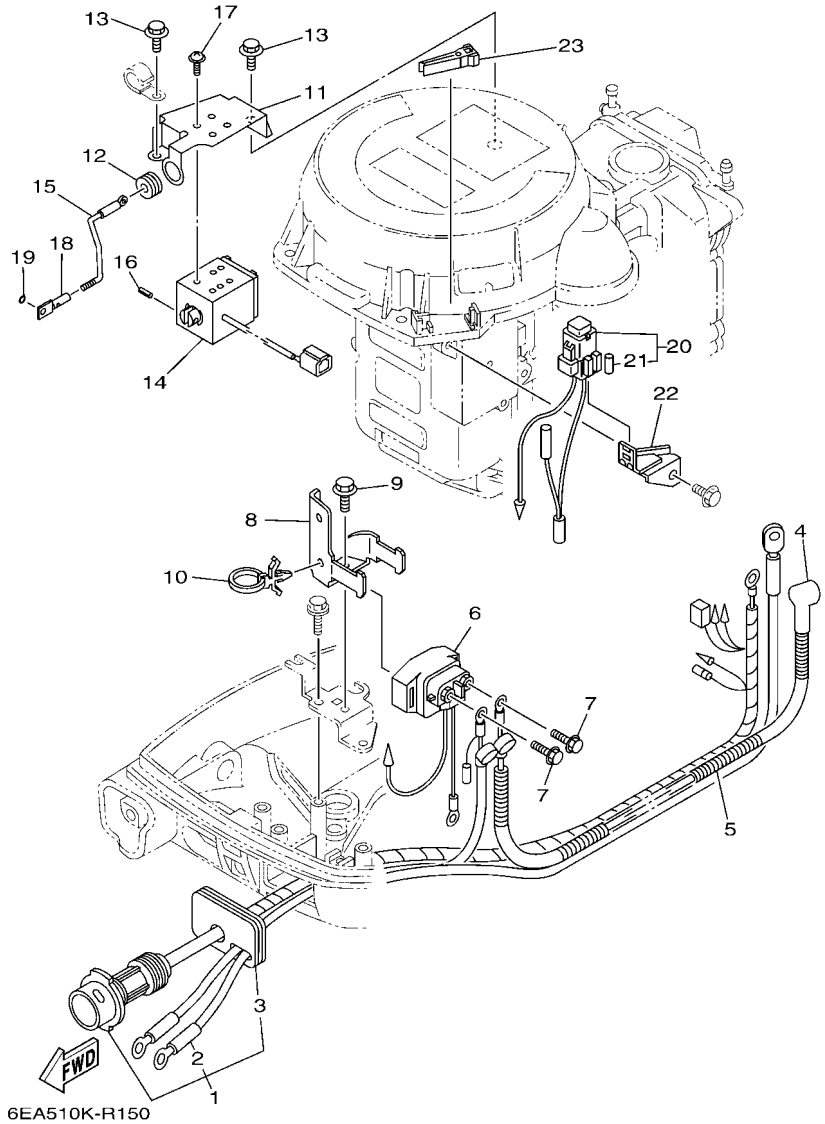


## FIG. 14 ELECTRICAL 2 — PARTIE ELECTRIQUE 2

| REF. NO. | PART NO. N° PIECES | DESCRIPTION DESCRIPTION | MH | E | EP | | | REMARKS REMARQUES |
|---|---|---|---|---|---|---|---|---|
| 1 | 69G–82580–00 | WIRE HARNESS ASSY 2<br>FAISCEAU DE FILS 2 CPLT | | 1 | | | | |
| 2 | 69G–82105–01 | .BATTERY CABLE (L: 3.0M)<br>.CABLE DE BATTERIE (L: 3.0M) | | 1 | | | | |
| 3 | 68T–42724–40 | .GROMMET<br>.PASSE-FIL | | 1 | | | | |
| 4 | 6G8–82117–00 | WIRE, LEAD<br>FIL | | 1 | | | | |
| 5 | 90446–10M86 | HOSE (L140)<br>DURITE (L140) | | 1 | | | | |
| 6 | 68T–81940–00 | STARTER RELAY ASSY<br>LANCEUR RELAIS (ENS.) | | 1 | | | | |
| 7 | 97595–06610 | BOLT, WITH WASHER<br>VIS HEXAGONAL AVC RONDELLE | | 2 | | | | |
| 8 | 68T–81945–01 | PLATE, SWITCH FITTING<br>PLAQUE, FIXATION DU RELAIS | | 1 | | | | |
| 9 | 97595–06512 | BOLT, WITH WASHER<br>VIS HEXAGONAL AVC RONDELLE | | 1 | | | | |
| 10 | 90465–12M56 | CLAMP<br>BRIDE | | 1 | | | | |
| 11 | 68T–86112–00 | STAY, SOLENOID<br>SUPPORT, SOLENOIDE | | 1 | | | | |
| 12 | 90480–13018 | GROMMET<br>PASSE-FIL | | 1 | | | | |
| 13 | 97595–06512 | BOLT, WITH WASHER<br>VIS HEXAGONAL AVC RONDELLE | | 2 | | | | |
| 14 | 68T–86111–00 | COIL, SOLENOID<br>BOBINE | | 1 | | | | |
| 15 | 68T–41237–00 | JOINT, LINK<br>RACCORD | | 1 | | | | |
| 16 | 91690–30010 | PIN, SPRING<br>AGRAFFE | | 1 | | | | |
| 17 | 97980–04208 | SCREW, WITH WASHER<br>VIS, AVEC RONDELLE | | 4 | | | | |
| 18 | 68T–86117–00 | HOOK, WIRE PULL<br>CROCHET, TENSION DE CABLE | | 1 | | | | |
| 19 | 93210–03261 | O-RING<br>JOINT TORIQUE | | 1 | | | | |
| 20 | 68T–82150–00 | FUSE HOLDER ASSY<br>SUPPORT DE FUSIBLE | | 1 | | | | |
| 21 | 66V–82151–00 | .FUSE (10A-BL)<br>.FUSIBLE (10A-BL) | | 2 | | | | |
| 22 | 68T–82171–01 | STAY, FUSE BOX<br>SUPPORT, BOITE A FUSIBLES | | 1 | | | | |
| 23 | 67F–2812A–00 | PULLER, FUSE<br>TENDEUR, FUSIBLE | | 1 | | | | |

## FIG. 15 ELECTRICAL 3 — PARTIE ELECTRIQUE 3

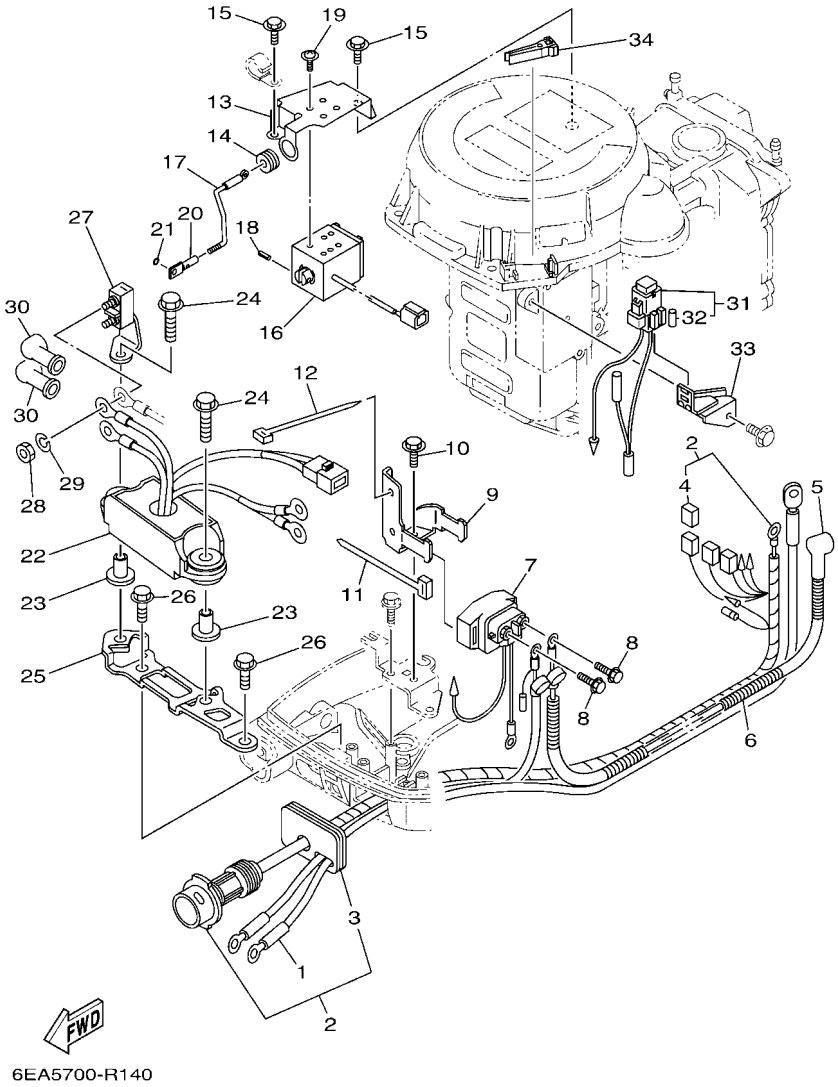


| REF. NO. | PART NO. N° PIECES | DESCRIPTION DESCRIPTION | MH | E | EP | | | REMARKS REMARQUES |
|---|---|---|---|---|---|---|---|---|
| 1 | 69G–82105–01 | BATTERY CABLE (L: 3.0M)<br>CABLE DE BATTERIE (L: 3.0M) | | | 1 | | | |
| 2 | 69G–82590–10 | WIRE HARNESS ASSY<br>FAISCEAU DE FILS COMPLET | | | 1 | | | |
| 3 | 68T–42724–40 | .GROMMET<br>.PASSE-FIL | | | 1 | | | |
| 4 | 6N6–82582–00 | .CAP,1<br>.COUVERCLE 1 | | | 1 | | | |
| 5 | 6G8–82117–00 | WIRE, LEAD<br>FIL | | | 1 | | | |
| 6 | 90446–10M86 | HOSE (L140)<br>DURITE (L140) | | | 1 | | | |
| 7 | 68T–81940–00 | STARTER RELAY ASSY<br>LANCEUR RELAIS (ENS.) | | | 1 | | | |
| 8 | 97595–06610 | BOLT, WITH WASHER<br>VIS HEXAGONAL AVC RONDELLE | | | 2 | | | |
| 9 | 68T–81945–01 | PLATE, SWITCH FITTING<br>PLAQUE, FIXATION DU RELAIS | | | 1 | | | |
| 10 | 97595–06512 | BOLT, WITH WASHER<br>VIS HEXAGONAL AVC RONDELLE | | | 1 | | | |
| 11 | 90465–13M11 | CLAMP<br>BRIDE | | | 1 | | | |
| 12 | 90465–13M11 | CLAMP<br>BRIDE | | | 1 | | | |
| 13 | 68T–86112–00 | STAY, SOLENOID<br>SUPPORT, SOLENOIDE | | | 1 | | | |
| 14 | 90480–13018 | GROMMET<br>PASSE-FIL | | | 1 | | | |
| 15 | 97595–06512 | BOLT, WITH WASHER<br>VIS HEXAGONAL AVC RONDELLE | | | 2 | | | |
| 16 | 68T–86111–00 | COIL, SOLENOID<br>BOBINE | | | 1 | | | |
| 17 | 68T–41237–00 | JOINT, LINK<br>RACCORD | | | 1 | | | |
| 18 | 91690–30010 | PIN, SPRING<br>AGRAFFE | | | 1 | | | |
| 19 | 97980–04208 | SCREW, WITH WASHER<br>VIS, AVEC RONDELLE | | | 4 | | | |
| 20 | 68T–86117–00 | HOOK, WIRE PULL<br>CROCHET, TENSION DE CABLE | | | 1 | | | |
| 21 | 93210–03261 | O-RING<br>JOINT TORIQUE | | | 1 | | | |
| 22 | 69G–81950–00 | RELAY ASSY<br>RELAIS COMPLET | | | 1 | | | |
| 23 | 90387–06M03 | COLLAR<br>COLLERETTE | | | 2 | | | |
| 24 | 90119–06M56 | BOLT, WITH WASHER<br>BOULON, AVEC RONDELLE | | | 2 | | | |
| 25 | 69G–81948–01 | BRACKET<br>SUPPORT | | | 1 | | | |
| 26 | 90109–06M86 | BOLT<br>BOULON | | | 2 | | | |
| 27 | 69G–81925–00 | TERMINAL<br>BORNE | | | 1 | | | |

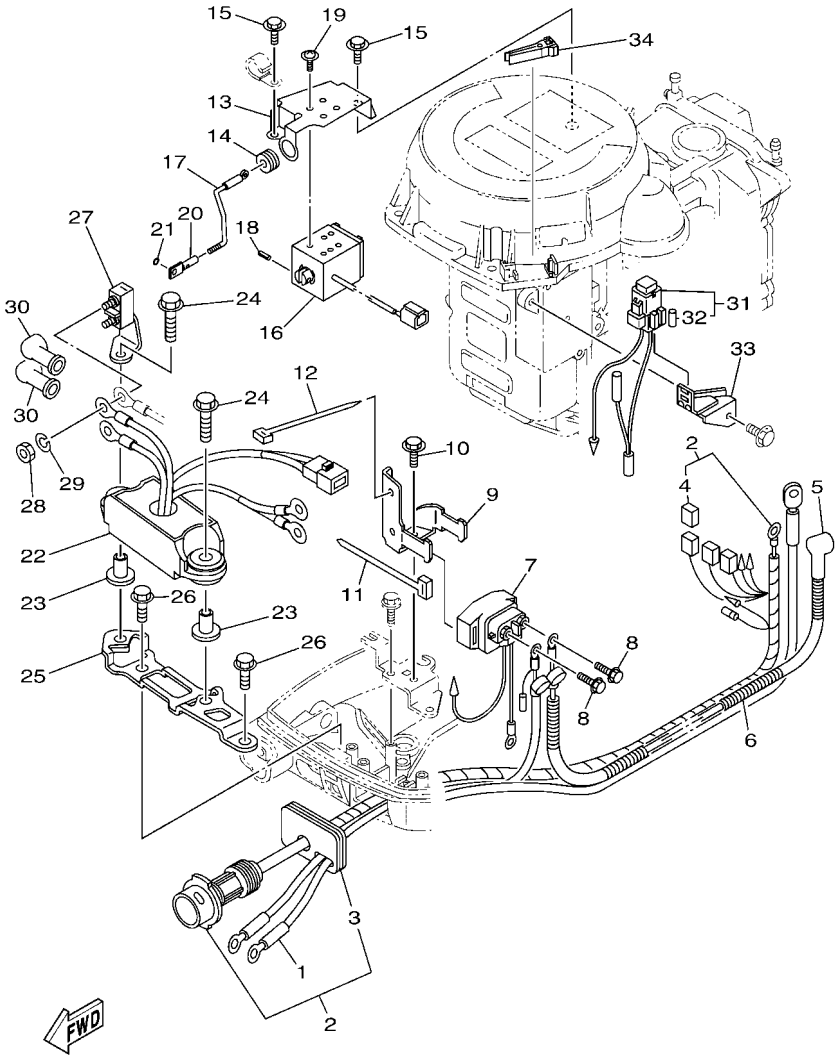


## FIG. 15 ELECTRICAL 3 — PARTIE ELECTRIQUE 3

| REF. NO. | PART NO. N° PIECES | DESCRIPTION DESCRIPTION | MH | E | EP | | | REMARKS REMARQUES |
|---|---|---|---|---|---|---|---|---|
| 28 | 90170–06M30 | NUT<br>ECROU | | | 2 | | | |
| 29 | 90204–06M00 | WASHER, SPRING<br>RONDELLE, GROWER | | | 2 | | | |
| 30 | 6G5–82119–00 | COVER, LEAD WIRE<br>GARNITURE, FIL | | | 2 | | | |
| 31 | 68T–82150–00 | FUSE HOLDER ASSY<br>SUPPORT DE FUSIBLE | | | 1 | | | |
| 32 | 66V–82151–00 | .FUSE (10A-BL)<br>.FUSIBLE (10A-BL) | | | 2 | | | |
| 33 | 68T–82171–01 | STAY, FUSE BOX<br>SUPPORT, BOITE A FUSIBLES | | | 1 | | | |
| 34 | 67F–2812A–00 | PULLER, FUSE<br>TENDEUR, FUSIBLE | | | 1 | | | |

## FIG. 16 ELECTRICAL 4 — PARTIE ELECTRIQUE 4

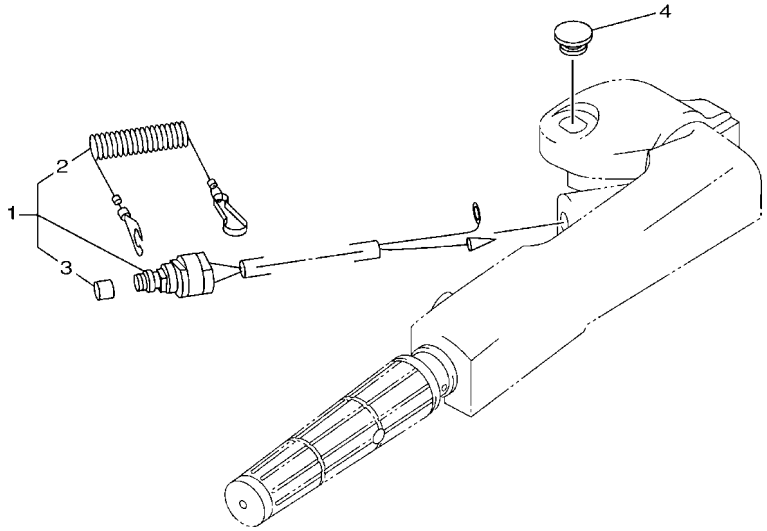

68R0100-0130

| REF. NO. | PART NO. N° PIECES | DESCRIPTION DESCRIPTION | MH | E | EP | | | REMARKS REMARQUES |
|---|---|---|---|---|---|---|---|---|
| 1 | 65W–82575–01 | ENGINE STOP SWITCH ASSY<br>COUPE CIRCUIT CPLT | 1 | | | | | |
| 2 | 682–82556–00 | .LANYARD, STOP SWITCH<br>.CORDON DU COUPE CIRCUIT | 1 | | | | | |
| 3 | 689–8257Y–00 | .CAP<br>.COUVERCLE | 1 | | | | | |
| 4 | 6G1–42725–00 | GROMMET<br>PASSE-FIL | 1 | | | | | |

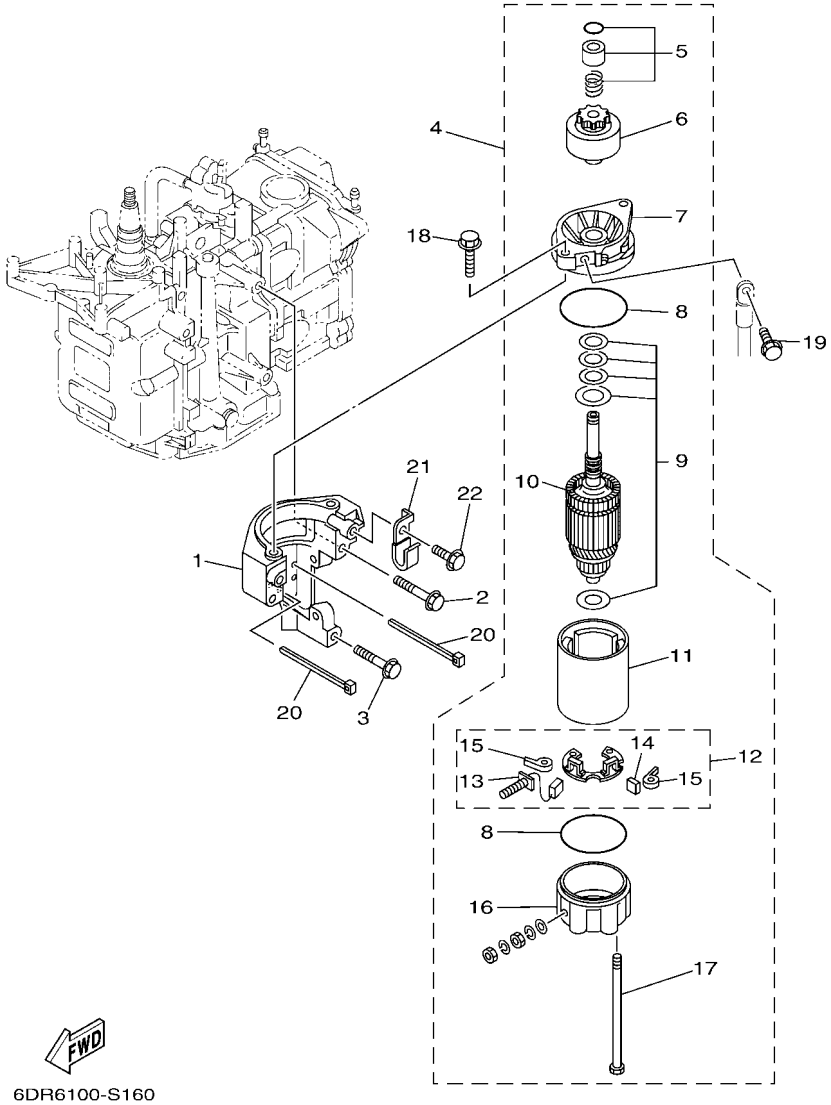


## FIG. 17 STARTING MOTOR — DEMARREUR ELECTRIQUE

| REF. NO. | PART NO. N° PIECES | DESCRIPTION DESCRIPTION | MH | E | EP | | | REMARKS REMARQUES |
|---|---|---|---|---|---|---|---|---|
| 1 | 68T–81822–01 | BRACKET, STARTING MOTOR<br>SUPPORT, DEMARREUR ELECTRIQUE | 1 | 1 | 1 | | | |
| 2 | 90119–08046 | BOLT, WITH WASHER<br>BOULON, AVEC RONDELLE | 2 | 2 | 2 | | | |
| 3 | 90119–08020 | BOLT, WITH WASHER<br>BOULON, AVEC RONDELLE | 1 | 1 | 1 | | | |
| 4 | 68T–81800–00 | STARTING MOTOR ASSY<br>DEMARREUR ELECTRIQUE COMPLET | | 1 | 1 | | | |
| 5 | 68T–81857–00 | .PINION STOPPER SET<br>.BUTEE PIGNON | | 1 | 1 | | | |
| 6 | 689–81807–12 | .GEAR ASSY, STARTING MOTOR<br>.PIGNON, DEMARREUR ELECTRIQUE | | 1 | 1 | | | |
| 7 | 6F5–81830–10 | .FRONT BRACKET ASSY<br>.SUPPORT AVANT | | 1 | 1 | | | |
| 8 | 689–81847–11 | .O-RING<br>.JOINT TORIQUE | | 2 | 2 | | | |
| 9 | 689–81809–11 | .WASHER KIT<br>.JEU DE RONDELLES | | 1 | 1 | | | |
| 10 | 689–81850–11 | .ARMATURE ASSY<br>.INDUIT | | 1 | 1 | | | |
| 11 | 689–81810–11 | .STATOR ASSY<br>.STATOR COMPLET | | 1 | 1 | | | |
| 12 | 689–81840–11 | .BRUSH HOLDER ASSY<br>.SUPPORT DE CHARBON | | 1 | 1 | | | |
| 13 | 689–81811–11 | ..BRUSH 1<br>..CHARBON 1 | | 1 | 1 | | | |
| 14 | 689–81812–11 | ..BRUSH 2<br>..CHARBON 2 | | 1 | 1 | | | |
| 15 | 689–81813–10 | ..SPRING, BRUSH<br>..RESSORT, DE CHARBON | | 2 | 2 | | | |
| 16 | 689–81820–11 | .REAR BRACKET ASSY<br>.SUPPORT ARRIERE COMPLET | | 1 | 1 | | | |
| 17 | 689–81826–10 | .BOLT<br>.BOULON | | 2 | 2 | | | |
| 18 | 90119–08M76 | BOLT, WITH WASHER<br>BOULON, AVEC RONDELLE | | 2 | 2 | | | |
| 19 | 97595–08516 | BOLT, WITH WASHER<br>VIS HEXAGONAL AVC RONDELLE | | 1 | 1 | | | |
| 20 | 90465–11M10 | CLAMP<br>BRIDE | | 2 | 2 | | | |
| 21 | 90465–08M99 | CLAMP<br>BRIDE | 1 | 1 | 1 | | | |
| 22 | 97595–06512 | BOLT, WITH WASHER<br>VIS HEXAGONAL AVC RONDELLE | 1 | 1 | 1 | | | |

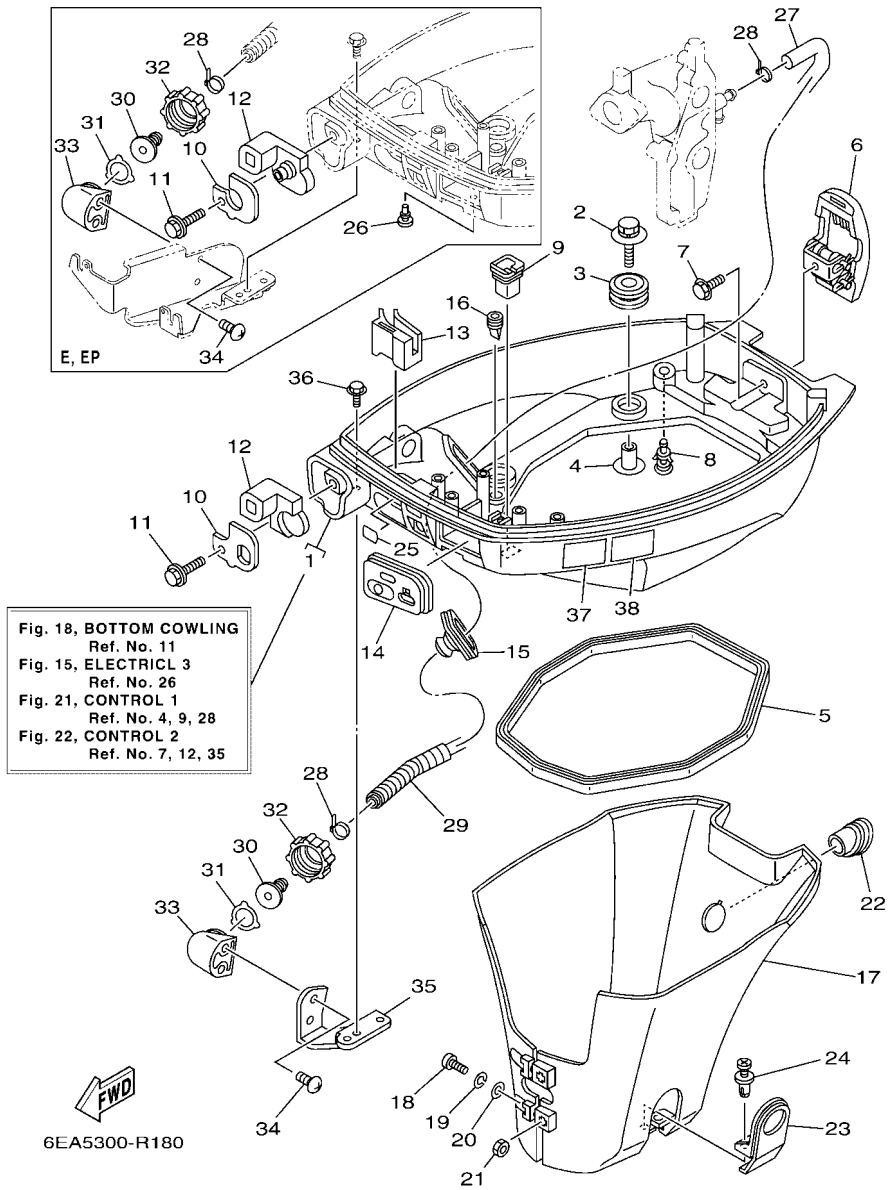


## FIG. 18 BOTTOM COWLING — CAPOT INFERIEUR

| REF. NO. | PART NO. N° PIECES | DESCRIPTION DESCRIPTION | MH | E | EP | | | REMARKS REMARQUES |
|---|---|---|---|---|---|---|---|---|
| 1 | 6DR–42710–00–8D | BOTTOM COWLING ASSY<br>ENS. EMBASE | 1 | 1 | 1 | | | |
| 2 | 68F–85119–00 | BOLT<br>BOULON | 4 | 4 | 4 | | | |
| 3 | 90480–21M82 | GROMMET<br>PASSE-FIL | 4 | 4 | 4 | | | |
| 4 | 90387–06176 | COLLAR<br>COLLERETTE | 4 | 4 | 4 | | | |
| 5 | 68T–42716–10 | RUBBER SEAL 1<br>JOINT EN CAOUTCHOUC 1 | 1 | 1 | 1 | | | |
| 6 | 6AU–42801–00 | COWLING CLAMP COMP.<br>BRIDE DE CAPOT COMP. | 1 | 1 | 1 | | | |
| 7 | 97595–06512 | BOLT, WITH WASHER<br>VIS HEXAGONAL AVC RONDELLE | 1 | 1 | 1 | | | |
| 8 | 6BL–44391–00 | NIPPLE, HOSE<br>RACCORD D'ESSENCE | 1 | 1 | 1 | | | |
| 9 | 682–42727–00 | GROMMET<br>PASSE-FIL | 1 | 1 | 1 | | | |
| 10 | 6DR–42761–00 | STOPPER<br>PLAQUETTE | 1 | | | | | |
| | 6DR–42761–10 | STOPPER<br>PLAQUETTE | | 1 | 1 | | | |
| 11 | 90109–06M86 | BOLT<br>BOULON | 1 | 1 | 1 | | | |
| 12 | 6DR–42725–00 | GROMMET<br>PASSE-FIL | 1 | | | | | |
| | 6DR–42725–10 | GROMMET<br>PASSE-FIL | | 1 | 1 | | | |
| 13 | 68T–26367–00 | PROTECTOR<br>PROTECTEUR | 1 | | | | | |
| 14 | 68T–42724–20 | GROMMET<br>PASSE-FIL | 1 | | | | | |
| 15 | 688–42726–10 | GROMMET<br>PASSE-FIL | 1 | 1 | | | | FLUSHING KIT<br>FLUSHING KIT |
| | 69G–42726–00 | GROMMET<br>PASSE-FIL | | | 1 | | | FLUSHING KIT<br>FLUSHING KIT |
| 16 | 65W–42717–00 | RUBBER, SEAL 2<br>JOINT EN CAOUTCHOUC 2 | 2 | 2 | 2 | | | |
| 17 | 68T–42741–00 | APRON<br>CAPOT LATERAL | 1 | 1 | 1 | | | |
| 18 | 97885–06030 | SCREW, PAN HEAD<br>VIS, A ENCOCHE | 2 | 2 | 2 | | | |
| 19 | 92995–06100 | WASHER, SPRING<br>RONDELLE, GROWER | 2 | 2 | 2 | | | |
| 20 | 92995–06600 | WASHER<br>RONDELLE | 2 | 2 | 2 | | | |
| 21 | 95380–06600 | NUT, HEXAGON<br>ECROU | 2 | 2 | 2 | | | |
| 22 | 68T–42717–00 | RUBBER, SEAL 2<br>JOINT EN CAOUTCHOUC 2 | 1 | 1 | 1 | | | |
| 23 | 68T–42771–00 | APRON<br>CAPOT LATERAL | 1 | 1 | 1 | | | |
| 24 | 90338–06M20 | PLUG<br>PLOT | 2 | 2 | 2 | | | |

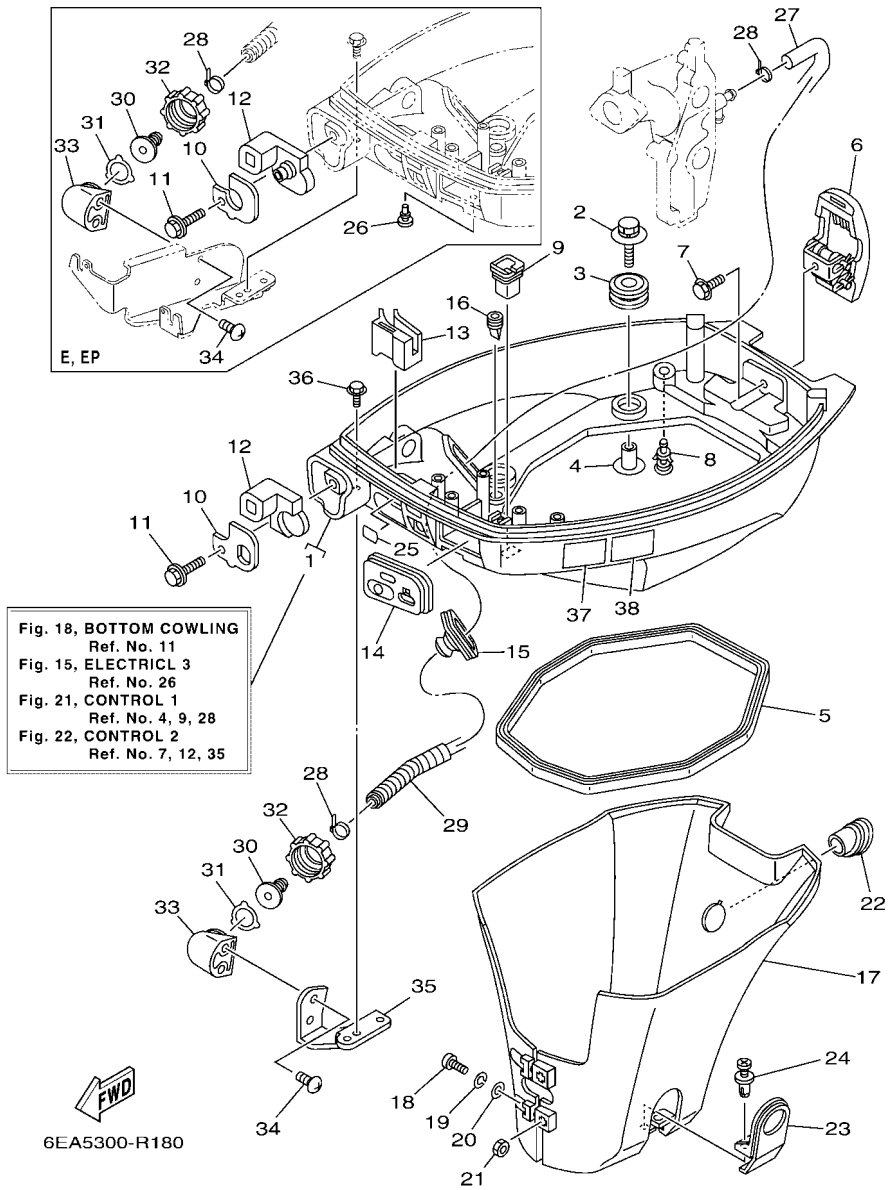


## FIG. 18 BOTTOM COWLING — CAPOT INFERIEUR

| REF. NO. | PART NO. N° PIECES | DESCRIPTION DESCRIPTION | MH | E | EP | | | REMARKS REMARQUES |
|---|---|---|---|---|---|---|---|---|
| 25 | 65W–84342–00 | SEAT, EMBLEM<br>SIEGE, EMBLEME | 1 | 1 | 1 | | | |
| 26 | 90480–06M19 | GROMMET<br>PASSE-FIL | | 1 | 1 | | | |
| 27 | 6E5–12481–00 | PIPE 1<br>DURITE 1 | 1 | 1 | 1 | | | FLUSHING KIT<br>FLUSHING KIT |
| 28 | 90465–11M10 | CLAMP<br>BRIDE | 2 | 2 | 2 | | | FLUSHING KIT<br>FLUSHING KIT |
| 29 | 90447–13M00 | TUBE<br>DURITE | 1 | 1 | 1 | | | FLUSHING KIT<br>FLUSHING KIT |
| 30 | 6R3–12582–00 | JOINT, HOSE 2<br>RACCORD DE TUYAU 1 | 1 | 1 | 1 | | | FLUSHING KIT<br>FLUSHING KIT |
| 31 | 6R3–12583–00 | GASKET, HOSE JOINT<br>JOINT | 1 | 1 | 1 | | | FLUSHING KIT<br>FLUSHING KIT |
| 32 | 6R3–12581–00 | JOINT, HOSE 1<br>JOINT DE TUYAU | 1 | 1 | 1 | | | FLUSHING KIT<br>FLUSHING KIT |
| 33 | 6DR–12572–00 | ADAPTER<br>ADAPTATEUR | 1 | 1 | 1 | | | FLUSHING KIT<br>FLUSHING KIT |
| 34 | 90167–06002 | SCREW, TAPPING<br>VIS, TETE FRAISEE | 2 | 2 | 2 | | | FLUSHING KIT<br>FLUSHING KIT |
| 35 | 68T–12535–20 | PLATE<br>PLAQUE | 1 | | | | | FLUSHING KIT<br>FLUSHING KIT |
| 36 | 97595–06512 | BOLT, WITH WASHER<br>VIS HEXAGONAL AVC RONDELLE | 2 | | | | | FLUSHING KIT<br>FLUSHING KIT |
| 37 | 6EE–42794–40 | LABEL, WARNING (GENERAL)<br>ETIQUETTE, AVERTISSEMENT | 1 | 1 | 1 | | | |
| 38 | 6EE–42794–50 | LABEL, WARNING (GENERAL)<br>ETIQUETTE, AVERTISSEMENT | 1 | 1 | 1 | | | |

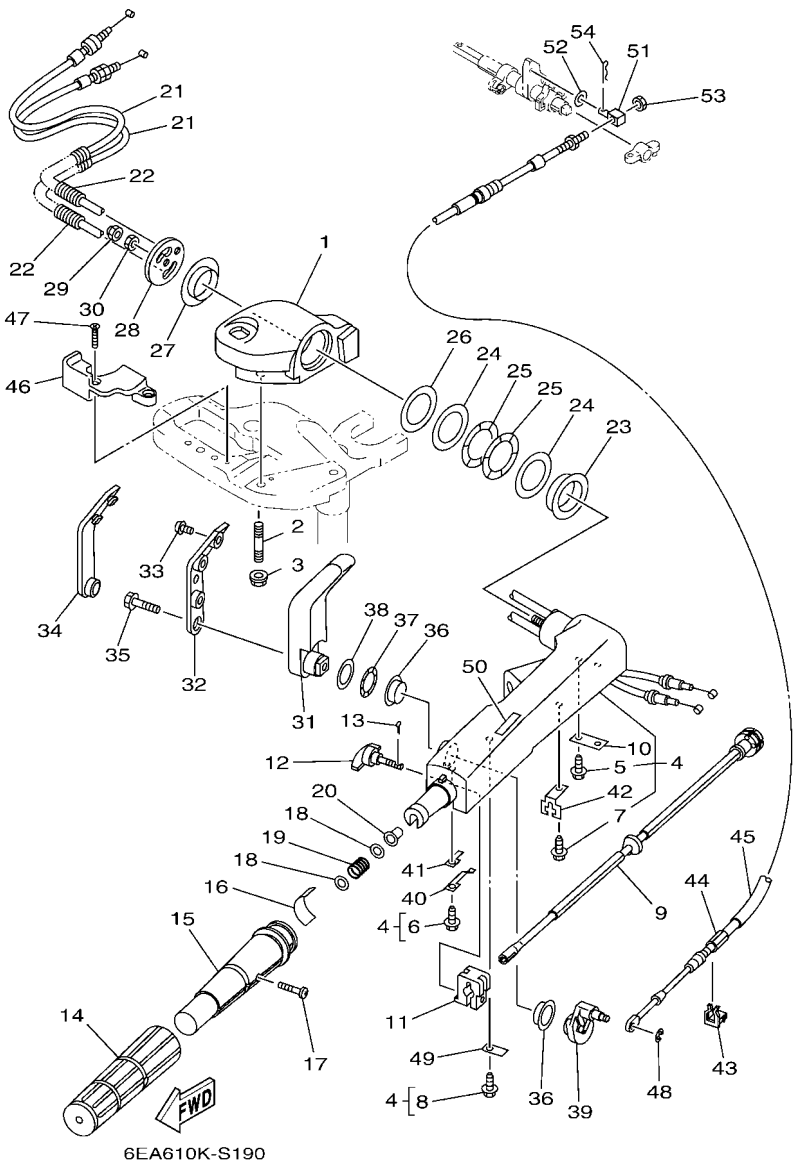


## FIG. 19 STEERING — DIRECTION

| REF. NO. | PART NO. N° PIECES | DESCRIPTION DESCRIPTION | MH | E | EP | | | REMARKS REMARQUES |
|---|---|---|---|---|---|---|---|---|
| 1 | 6AU–42121–10–8D | BRACKET<br>SUPPORT | 1 | | | | | |
| 2 | 90116–10040 | BOLT, STUD<br>GOUJON | 2 | | | | | |
| 3 | 90179–10M33 | NUT<br>ECROU | 2 | | | | | |
| 4 | 66R–42101–01–8D | HANDLE, STEERING<br>POIGNEE | 1 | | | | | |
| 5 | 90109–06M86 | .BOLT<br>.BOULON | 2 | | | | | |
| 6 | 90109–06M80 | .BOLT<br>.BOULON | 1 | | | | | |
| 7 | 90109–06M80 | .BOLT<br>.BOULON | 1 | | | | | |
| 8 | 90109–06M80 | .BOLT<br>.BOULON | 1 | | | | | |
| 9 | 68T–42138–01 | LEVER, THROTTLE<br>LEVIER, ACCELERATEUR | 1 | | | | | |
| 10 | 65W–42159–00 | STAY<br>SUPPORT | 1 | | | | | |
| 11 | 6G1–42126–00 | FRICTION, STEERING HANDLE GRIP<br>CUVETTE, POIGNEE DE DIRECTION | 1 | | | | | |
| 12 | 65W–42125–00 | BOLT, FRICTION ADJUSTING<br>BOULON | 1 | | | | | |
| 13 | 91490–16010 | PIN. COTTER<br>GOUPILLE | 1 | | | | | |
| 14 | 67D–42177–00 | RUBBER, HANDLE<br>CAOUTCHOUC, POIGNEE | 1 | | | | | |
| 15 | 67D–42119–01 | GRIP, STEERING HANDLE<br>POIGNEE, BARRE FRANCHE | 1 | | | | | |
| 16 | 6FW–42137–00 | INDICATOR, THROTTLE<br>INDICATEUR, ACCELERATION | 1 | | | | | |
| 17 | 90152–05011 | SCREW, COUNTERSUNK<br>VIS, TETE NOYEE | 1 | | | | | |
| 18 | 90201–10M02 | WASHER, PLATE<br>RONDELLE, PLATE | 2 | | | | | |
| 19 | 90501–23215 | SPRING, COMPRESSION<br>RESSORT, COMPRESSION | 1 | | | | | |
| 20 | 90386–08032 | BUSH<br>DOUILLE | 1 | | | | | |
| 21 | 6DR–26301–00 | THROTTLE CABLE ASSY<br>CABLE D'ACCELERATEUR | 2 | | | | | |
| 22 | 90447–07005 | TUBE<br>DURITE | 2 | | | | | |
| 23 | 66R–42171–00 | BUSHING<br>COUSSINET | 1 | | | | | |
| 24 | 90201–43M00 | WASHER, PLATE<br>RONDELLE, PLATE | 2 | | | | | |
| 25 | 90206–43M22 | WASHER, WAVE<br>RONDELLE, ONDULEE | 2 | | | | | |
| 26 | 90202–43M57 | WASHER, PLATE<br>RONDELLE, PLATE | 1 | | | | | |
| 27 | 90386–40M99 | BUSH<br>DOUILLE | 1 | | | | | |

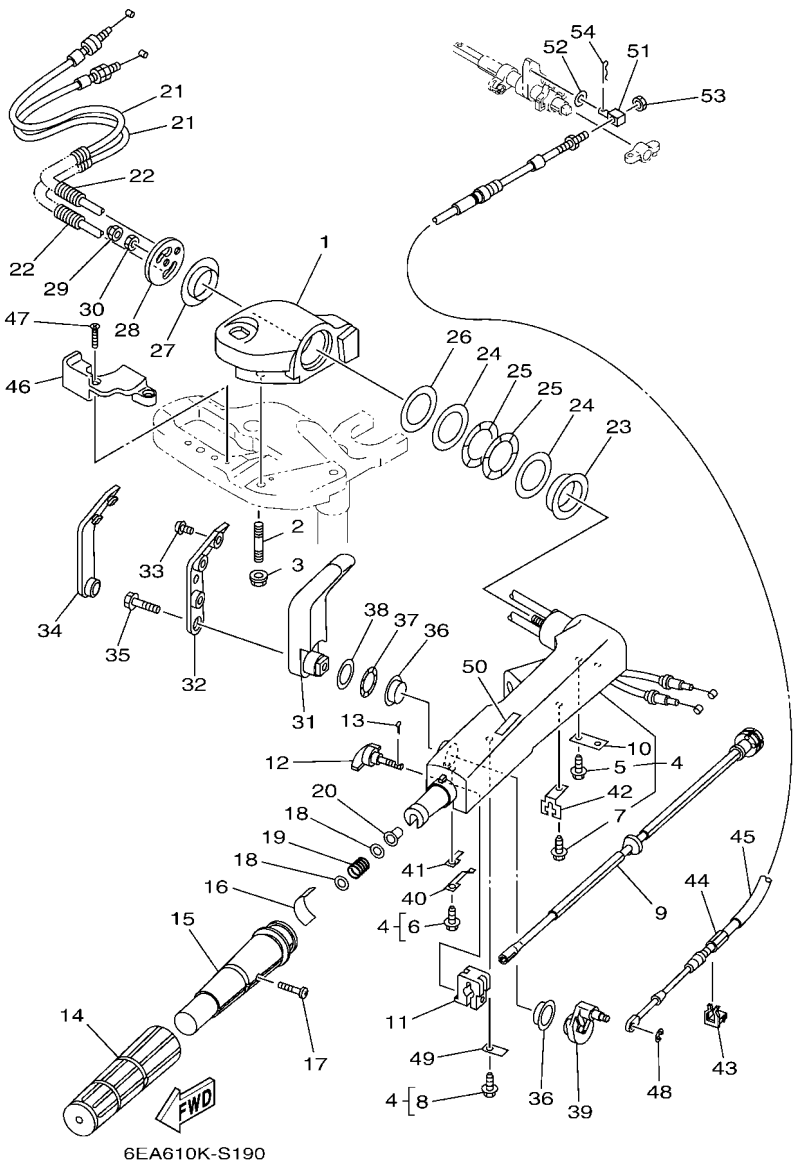


## FIG. 19 STEERING — DIRECTION

| REF. NO. | PART NO. N° PIECES | DESCRIPTION DESCRIPTION | MH | E | EP | | | REMARKS REMARQUES |
|---|---|---|---|---|---|---|---|---|
| 28 | 65W–42131–01 | COVER, HANDLE STEERING<br>COUVERCLE | 1 | | | | | |
| 29 | 95780–10300 | NUT, FLANGE<br>ECROU | 1 | | | | | |
| 30 | 95380–10700 | NUT<br>ECROU | 1 | | | | | |
| 31 | 66R–44111–00–8D | HANDLE, GEAR SHIFT<br>POIGNEE, LEVIER D'EMBRAYAGE | 1 | | | | | |
| 32 | 66R–44173–00 | LEVER, SHIFT CONTROL<br>POIGNEE, INVERSION | 1 | | | | | |
| 33 | 90159–06M18 | SCREW, WITH WASHER<br>VIS, AVEC RONDELLE | 3 | | | | | |
| 34 | 66R–42129–00 | BUSHING, RUBBER<br>DOUILLE, CAOUTCHOUC | 1 | | | | | |
| 35 | 97595–08530 | BOLT, WITH WASHER<br>VIS HEXAGONAL AVC RONDELLE | 1 | | | | | |
| 36 | 90386–26MA3 | BUSH<br>DOUILLE | 2 | | | | | |
| 37 | 90206–26M25 | WASHER, WAVE<br>RONDELLE, ONDULEE | 1 | | | | | |
| 38 | 90202–26M59 | WASHER, PLATE<br>RONDELLE, PLATE | 1 | | | | | |
| 39 | 6DR–44113–A0 | CAM PLATE, HANDLE<br>CAME, VERROUILLAGE | 1 | | | | | |
| 40 | 66R–44116–00 | SPRING<br>RESSORT | 1 | | | | | |
| 41 | 66R–44118–00 | BRACKET<br>SUPPORT | 1 | | | | | |
| 42 | 66R–48538–00 | CLAMP, CABLE 1<br>COLLIER | 1 | | | | | |
| 43 | 63D–48538–00 | CLAMP, CABLE 1<br>COLLIER | 1 | | | | | |
| 44 | 68T–48321–01 | CABLE<br>CABLE | 1 | | | | | |
| 45 | 90446–15002 | HOSE<br>DURITE | 1 | | | | | |
| 46 | 6DR–82594–00 | CLAMP<br>BRIDE | 1 | | | | | |
| 47 | 90151–05003 | SCREW, COUNTERSUNK<br>VIS, TETE NOYEE | 2 | | | | | |
| 48 | 99080–04600 | CIRCLIP<br>CIRCLIP | 1 | | | | | |
| 49 | 66R–44114–00 | STOPPER<br>PLAQUETTE | 1 | | | | | |
| 50 | 6X3–44191–00 | INDICATOR, SHIFT<br>ETIQUETTE, EMBRAYAGE | 1 | | | | | |
| 51 | 66R–48344–00 | CABLE END, REMOTE CONTROL<br>CHAPE CABLE | 1 | | | | | |
| 52 | 90201–06M62 | WASHER, PLATE<br>RONDELLE, PLATE | 1 | | | | | |
| 53 | 90170–05M38 | NUT<br>ECROU | 1 | | | | | |
| 54 | 91490–20012 | PIN. COTTER<br>GOUPILLE | 1 | | | | | |

## FIG. 20 STEERING FRICTION — CUVETTE POIGNEE DE DIRECTION

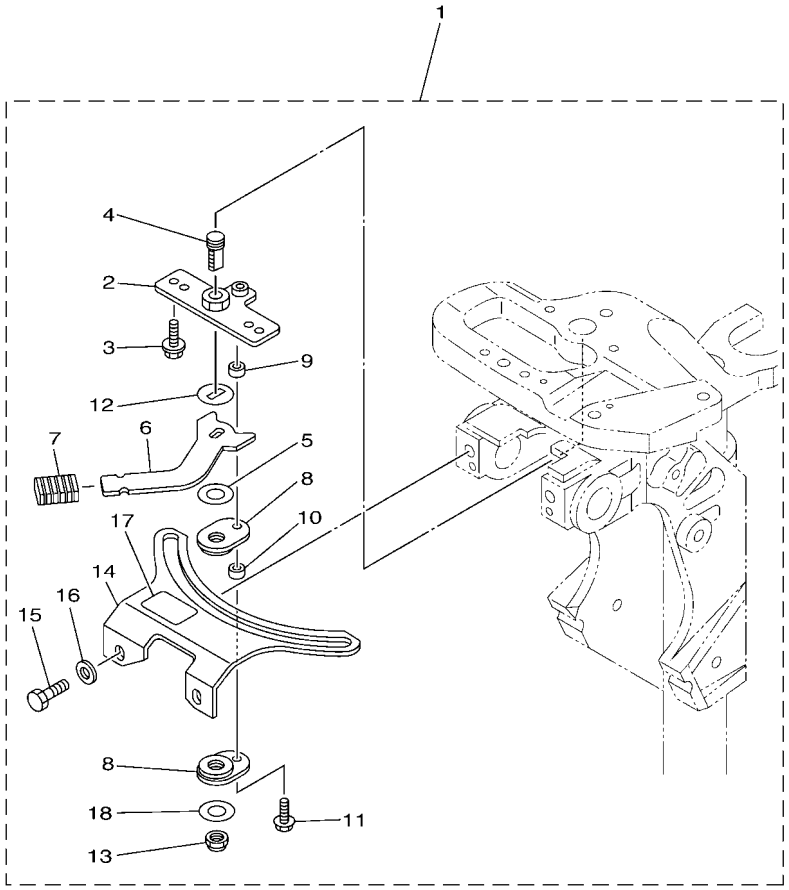

6AGD100-S210

| REF. NO. | PART NO. N° PIECES | DESCRIPTION DESCRIPTION | MH | E | EP | | | REMARKS REMARQUES |
|---|---|---|---|---|---|---|---|---|
| 1 | 6AH–42508–01 | STEERING FRICTION ASSY<br>DIRECTION FRICTION (ENS.) | 1 | | | | | |
| 2 | 68T–42525–01 | .PLATE, FRICTION<br>.PLAQUE, FRICTION | 1 | | | | | |
| 3 | 90119–05018 | .BOLT, WITH WASHER<br>.BOULON, AVEC RONDELLE | 2 | | | | | |
| 4 | 67C–42562–00 | .SHAFT, STEERING LOCK<br>.ARBRE,ANTIVOL DE DIRECTION | 1 | | | | | |
| 5 | 90202–10M56 | .WASHER, PLATE<br>.RONDELLE, PLATE | 1 | | | | | |
| 6 | 68T–42561–00 | .KNOB, STEERING LOCK<br>.BOUTON | 1 | | | | | |
| 7 | 689–43633–00 | .COVER, TILT LEVER<br>.COUVERCLE | 1 | | | | | |
| 8 | 65W–42528–00 | .PLATE, FRICTION<br>.PLAQUE, FRICTION | 2 | | | | | |
| 9 | 90387–05053 | .COLLAR<br>.COLLERETTE | 1 | | | | | |
| 10 | 90387–05054 | .COLLAR<br>.COLLERETTE | 1 | | | | | |
| 11 | 97595–05520 | .BOLT, WITH WASHER<br>.VIS HEXAGONAL AVC RONDELLE | 1 | | | | | |
| 12 | 90209–10M26 | .WASHER<br>.RONDELLE | 1 | | | | | |
| 13 | 90185–10M14 | .NUT, SELF-LOCKING<br>.ECROU,AUTO-BLOQUANT | 1 | | | | | |
| 14 | 6AH–42527–00 | .PLATE, FRICTION<br>.PLAQUE, FRICTION | 1 | | | | | |
| 15 | 90101–08022 | .BOLT<br>.BOULON | 2 | | | | | |
| 16 | 90201–08065 | .WASHER, PLATE<br>.RONDELLE, PLATE | 2 | | | | | |
| 17 | 68T–43155–00 | .MARK 1<br>.ETIQUETTE 1 | 1 | | | | | |
| 18 | 90201–106M5 | .WASHER, PLATE<br>.RONDELLE, PLATE | 1 | | | | | |

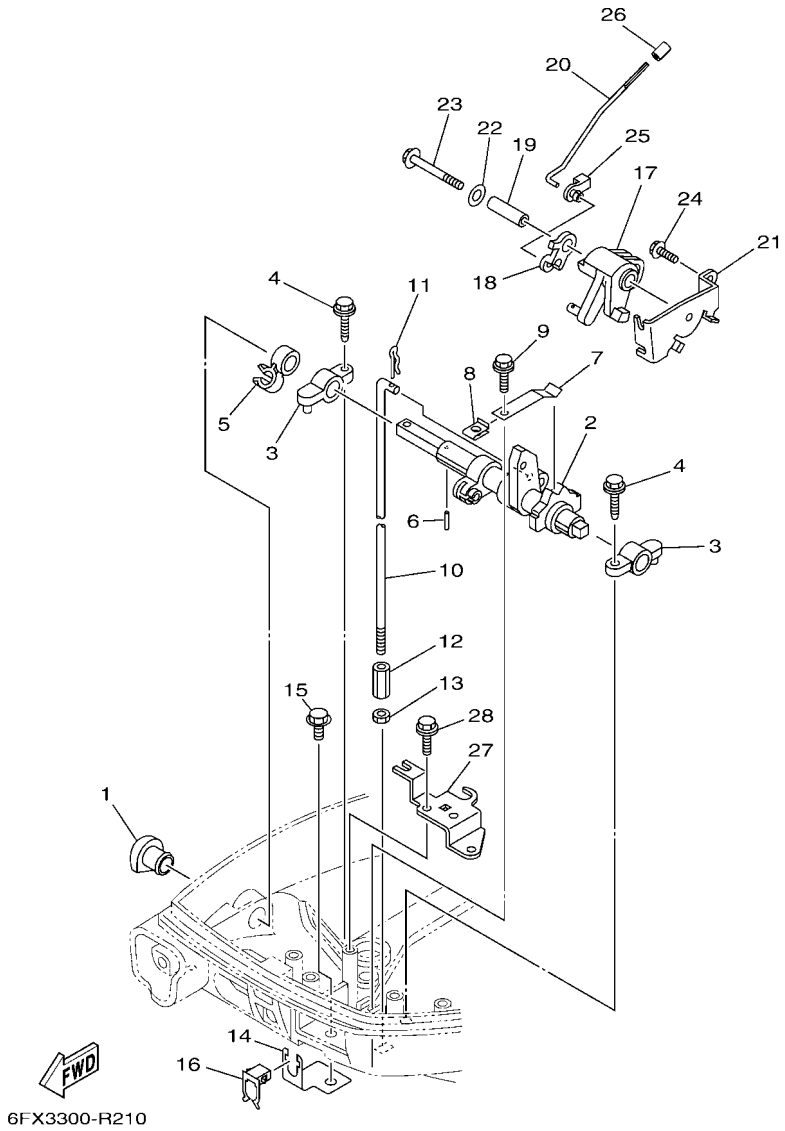


## FIG. 21 CONTROL 1 — COMMANDE 1

| REF. NO. | PART NO. N° PIECES | DESCRIPTION DESCRIPTION | MH | E | EP | | | REMARKS REMARQUES |
|---|---|---|---|---|---|---|---|---|
| 1 | 68T–42726–00 | GROMMET<br>PASSE-FIL | 1 | | | | | |
| 2 | 68T–44121–03 | LEVER, SHIFT ROD<br>LEVIER, TIGE D'INVERSION | 1 | | | | | |
| 3 | 6G1–41662–01–94 | BRACKET 2<br>SUPPORT 2 | 2 | | | | | |
| 4 | 90109–06M81 | BOLT<br>BOULON | 2 | | | | | |
| 5 | 90464–10M60 | CLAMP<br>BRIDE | 1 | | | | | |
| 6 | 91690–30014 | PIN, SPRING<br>AGRAFFE | 1 | | | | | |
| 7 | 65W–44116–00 | SPRING<br>RESSORT | 1 | | | | | |
| 8 | 6DR–44117–00 | BRACKET<br>SUPPORT | 1 | | | | | |
| 9 | 90109–06M86 | BOLT<br>BOULON | 1 | | | | | |
| 10 | 68T–44143–10 | ROD, SHIFT 1<br>TIGE D'EMBRAYAGE 1 | 1 | | | | | |
| 11 | 90468–18001 | CLIP<br>JONC | 1 | | | | | |
| 12 | 61N–44146–00 | CONNECTOR, SHIFT ROD 2<br>CONNECTEUR, TIGE D'INVERSION 2 | 1 | | | | | |
| 13 | 95380–06700 | NUT<br>ECROU | 1 | | | | | |
| 14 | 68T–48538–00 | CLAMP, CABLE 1<br>COLLIER | 1 | | | | | |
| 15 | 97595–06512 | BOLT, WITH WASHER<br>VIS HEXAGONAL AVC RONDELLE | 1 | | | | | |
| 16 | 63D–48538–00 | CLAMP, CABLE 1<br>COLLIER | 1 | | | | | |
| 17 | 68T–41638–00 | PULLEY<br>POULIE | 1 | | | | | |
| 18 | 68T–41283–00 | LEVER, FREE ACCEL.<br>LEVIER | 1 | | | | | |
| 19 | 90387–06M59 | COLLAR<br>COLLERETTE | 1 | | | | | |
| 20 | 6AU–41211–00 | LINK, ACCEL.<br>BIELLETTE, ACCELERATION | 1 | | | | | |
| 21 | 68T–14497–00 | STAY, THROTTLE WIRE<br>SUPPORT DE BOISSEAU | 1 | | | | | |
| 22 | 90201–06M62 | WASHER, PLATE<br>RONDELLE, PLATE | 1 | | | | | |
| 23 | 97595–06545 | BOLT, WITH WASHER<br>VIS HEXAGONAL AVC RONDELLE | 1 | | | | | |
| 24 | 97595–06512 | BOLT, WITH WASHER<br>VIS HEXAGONAL AVC RONDELLE | 1 | | | | | |
| 25 | 6J8–41262–00 | JOINT, CHOKE LEVER<br>RACCORD, LEVIER DE STARTER | 1 | | | | | |
| 26 | 6FW–13448–00 | CAP<br>CAPUCHON | 1 | | | | | |
| 27 | 68T–15774–10 | STAY 4<br>SUPPORT 4 | 1 | | | | | |

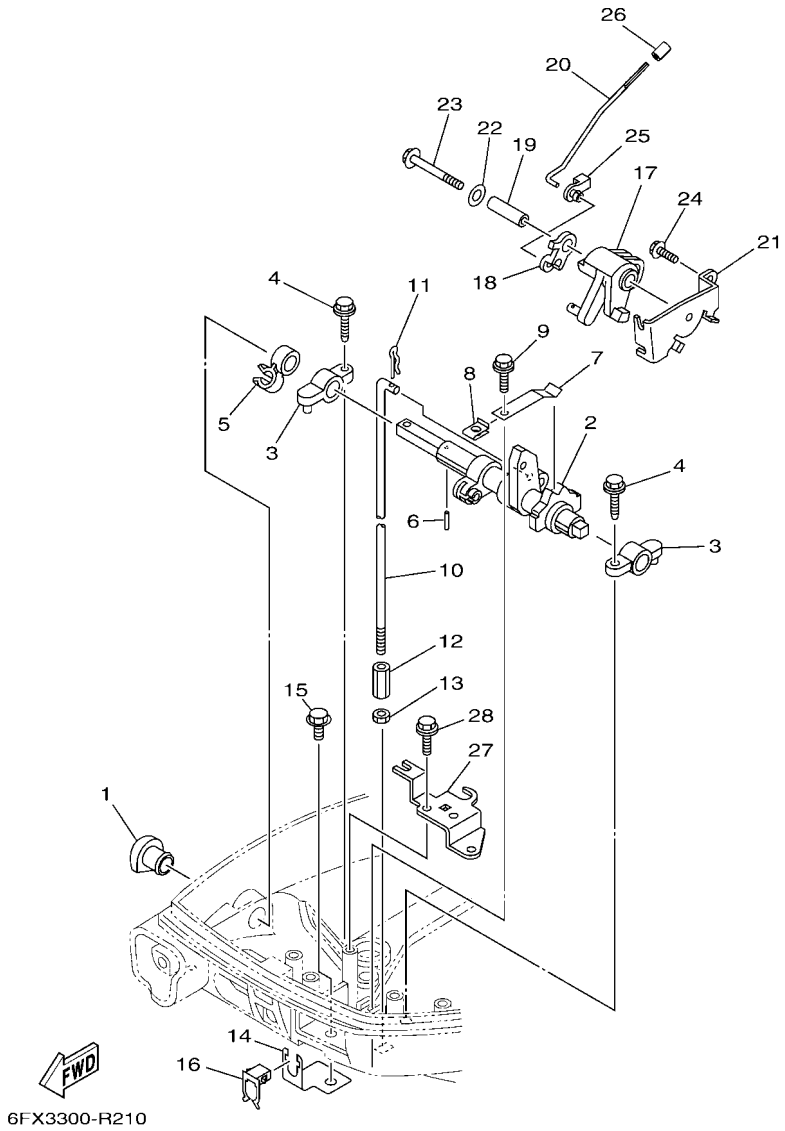


## FIG. 21 CONTROL 1 — COMMANDE 1

| REF. NO. | PART NO. N° PIECES | DESCRIPTION DESCRIPTION | MH | E | EP | | | REMARKS REMARQUES |
|---|---|---|---|---|---|---|---|---|
| 28 | 90109–06M86 | BOLT BOULON | 2 | | | | | |

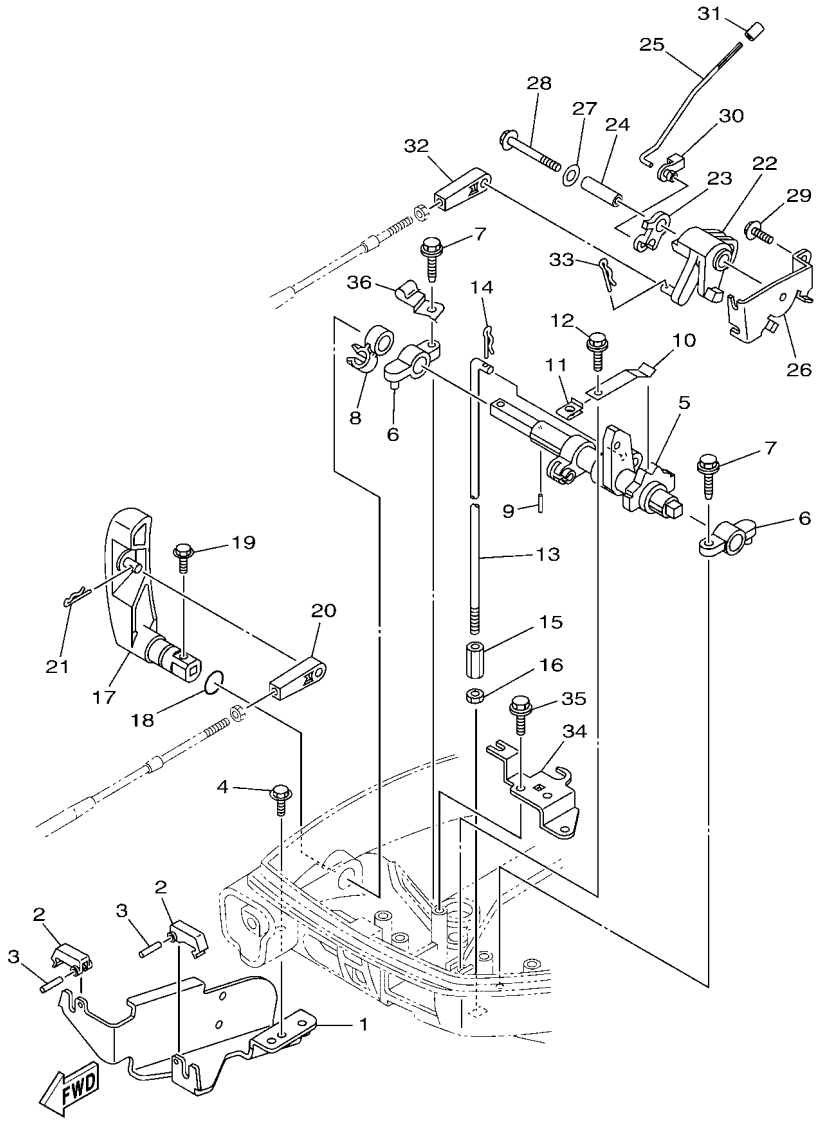


6FX3300-R220

## FIG. 22 CONTROL 2 — COMMANDE 2

| REF. NO. | PART NO. N° PIECES | DESCRIPTION DESCRIPTION | MH | E | EP | | | REMARKS REMARQUES |
|---|---|---|---|---|---|---|---|---|
| 1 | 6DR–48531–01 | BRACKET, REMOTE CONTROL 1<br>ETRIER 1, COMMANDE A DISTANCE | | 1 | 1 | | | |
| 2 | 682–48538–50 | CLAMP, CABLE 1<br>COLLIER | | 2 | 2 | | | |
| 3 | 91690–30012 | PIN, SPRING<br>AGRAFFE | | 2 | 2 | | | |
| 4 | 97595–06512 | BOLT, WITH WASHER<br>VIS HEXAGONAL AVC RONDELLE | | 2 | 2 | | | |
| 5 | 68T–44121–03 | LEVER, SHIFT ROD<br>LEVIER, TIGE D'INVERSION | | 1 | 1 | | | |
| 6 | 6G1–41662–01–94 | BRACKET 2<br>SUPPORT 2 | | 2 | 2 | | | |
| 7 | 90109–06M81 | BOLT<br>BOULON | | 2 | 2 | | | |
| 8 | 90464–10M60 | CLAMP<br>BRIDE | | 1 | 1 | | | |
| 9 | 91690–30014 | PIN, SPRING<br>AGRAFFE | | 1 | 1 | | | |
| 10 | 65W–44116–00 | SPRING<br>RESSORT | | 1 | 1 | | | |
| 11 | 6DR–44117–00 | BRACKET<br>SUPPORT | | 1 | 1 | | | |
| 12 | 90109–06M86 | BOLT<br>BOULON | | 1 | 1 | | | |
| 13 | 68T–44143–10 | ROD, SHIFT 1<br>TIGE D'EMBRAYAGE 1 | | 1 | 1 | | | |
| 14 | 90468–18001 | CLIP<br>JONC | | 1 | 1 | | | |
| 15 | 61N–44146–00 | CONNECTOR, SHIFT ROD 2<br>CONNECTEUR, TIGE D'INVERSION 2 | | 1 | 1 | | | |
| 16 | 95380–06700 | NUT<br>ECROU | | 1 | 1 | | | |
| 17 | 6AU–44111–10 | HANDLE, GEAR SHIFT<br>POIGNEE, LEVIER D'EMBRAYAGE | | 1 | 1 | | | |
| 18 | 93210–12327 | O-RING<br>JOINT TORIQUE | | 1 | 1 | | | |
| 19 | 97595–05516 | BOLT, WITH WASHER<br>VIS HEXAGONAL AVC RONDELLE | | 1 | 1 | | | |
| 20 | 6FM–48344–00 | CABLE END, REMOTE CONTROL<br>CHAPE CABLE | | 1 | 1 | | | |
| 21 | 90468–18008 | CLIP<br>JONC | | 1 | 1 | | | |
| 22 | 68T–41638–00 | PULLEY<br>POULIE | | 1 | 1 | | | |
| 23 | 68T–41283–00 | LEVER, FREE ACCEL.<br>LEVIER | | 1 | 1 | | | |
| 24 | 90387–06M59 | COLLAR<br>COLLERETTE | | 1 | 1 | | | |
| 25 | 6AU–41211–00 | LINK, ACCEL.<br>BIELLETTE, ACCELERATION | | 1 | 1 | | | |
| 26 | 68T–14497–00 | STAY, THROTTLE WIRE<br>SUPPORT DE BOISSEAU | | 1 | 1 | | | |
| 27 | 90201–06M62 | WASHER, PLATE<br>RONDELLE, PLATE | | 1 | 1 | | | |

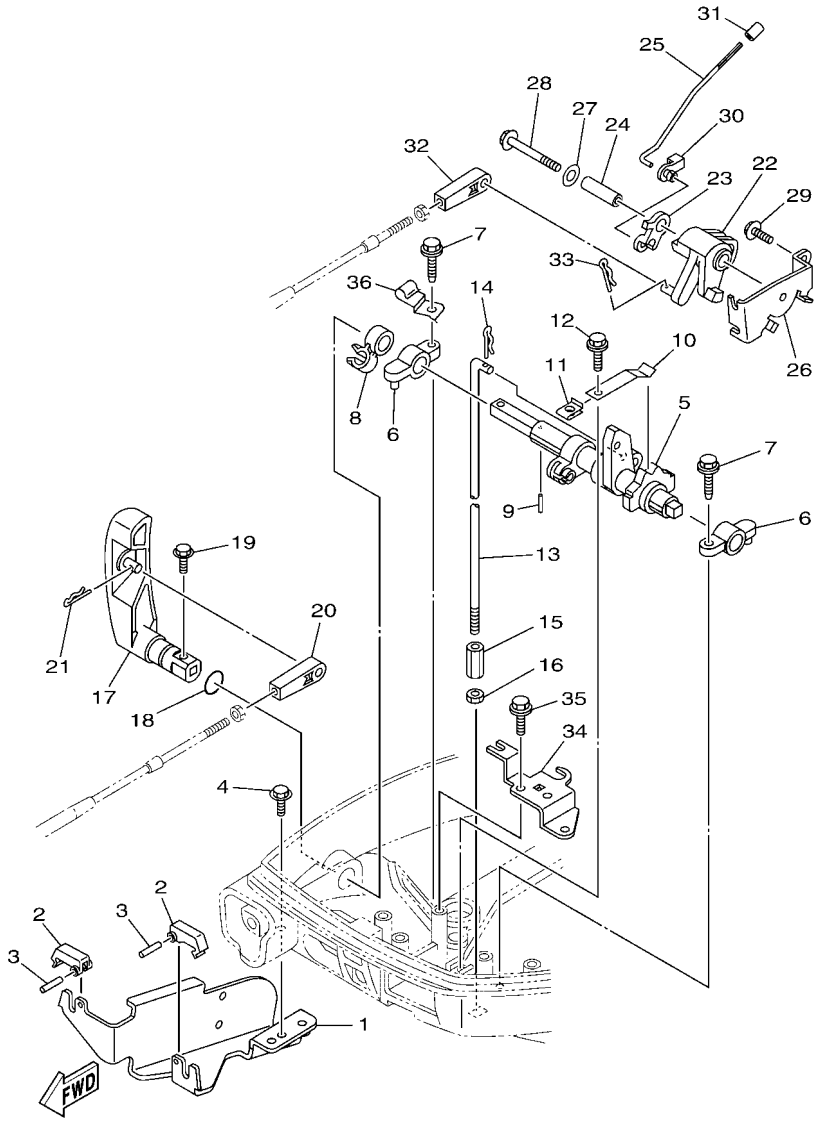


6FX3300-R220

## FIG. 22 CONTROL 2 — COMMANDE 2

| REF. NO. | PART NO. N° PIECES | DESCRIPTION DESCRIPTION | MH | E | EP | | | REMARKS REMARQUES |
|---|---|---|---|---|---|---|---|---|
| 28 | 97595–06545 | BOLT, WITH WASHER<br>VIS HEXAGONAL AVC RONDELLE | | 1 | 1 | | | |
| 29 | 97595–06512 | BOLT, WITH WASHER<br>VIS HEXAGONAL AVC RONDELLE | | 1 | 1 | | | |
| 30 | 6J8–41262–00 | JOINT, CHOKE LEVER<br>RACCORD, LEVIER DE STARTER | | 1 | 1 | | | |
| 31 | 6FW–13448–00 | CAP<br>CAPUCHON | | 1 | 1 | | | |
| 32 | 6FM–48344–00 | CABLE END, REMOTE CONTROL<br>CHAPE CABLE | | 1 | 1 | | | |
| 33 | 90468–18008 | CLIP<br>JONC | | 1 | 1 | | | |
| 34 | 68T–15774–10 | STAY 4<br>SUPPORT 4 | | 1 | 1 | | | |
| 35 | 90109–06M86 | BOLT<br>BOULON | | 2 | 2 | | | |
| 36 | 90465–08027 | CLAMP<br>BRIDE | | | 1 | | | |

## FIG. 23 REMO CON ATTACHMENT — COMMANDE A DISTANCE

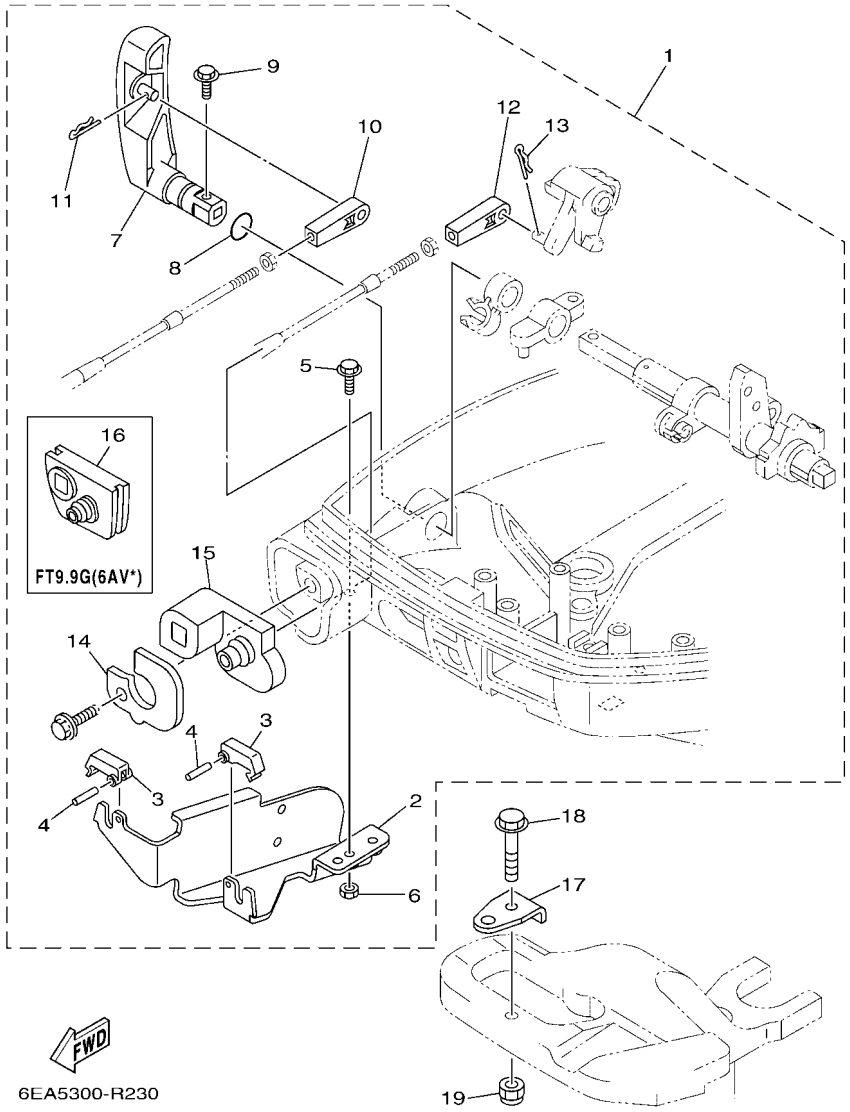


| REF. NO. | PART NO. N° PIECES | DESCRIPTION DESCRIPTION | MH | E | EP | | | REMARKS REMARQUES |
|---|---|---|---|---|---|---|---|---|
| 1 | 6DR–48501–01 | REMOTE CONT. ATTACHMENT ASSY.<br>COMMANDE A DISTANCE (KIT) | 1 | | | | | AP<br>AP |
| 2 | 68T–48531–01 | .BRACKET, REMOTE CONTROL 1<br>.ETRIER 1, COMMANDE A DISTANCE | 1 | | | | | |
| 3 | 682–48538–50 | .CLAMP, CABLE 1<br>.COLLIER | 2 | | | | | |
| 4 | 91690–30012 | .PIN, SPRING<br>.AGRAFFE | 2 | | | | | |
| 5 | 97595–06512 | .BOLT, WITH WASHER<br>.VIS HEXAGONAL AVC RONDELLE | 2 | | | | | |
| 6 | 95380–06600 | .NUT, HEXAGON<br>.ECROU | 2 | | | | | |
| 7 | 6AU–44111–10 | .HANDLE, GEAR SHIFT<br>.POIGNEE, LEVIER D'EMBRAYAGE | 1 | | | | | |
| 8 | 93210–12327 | .O-RING<br>.JOINT TORIQUE | 1 | | | | | |
| 9 | 97595–05516 | .BOLT, WITH WASHER<br>.VIS HEXAGONAL AVC RONDELLE | 1 | | | | | |
| 10 | 6FM–48344–00 | .CABLE END, REMOTE CONTROL<br>.CHAPE CABLE | 1 | | | | | |
| 11 | 90468–18008 | .CLIP<br>.JONC | 1 | | | | | |
| 12 | 6FM–48344–00 | .CABLE END, REMOTE CONTROL<br>.CHAPE CABLE | 1 | | | | | |
| 13 | 90468–18008 | .CLIP<br>.JONC | 1 | | | | | |
| 14 | 6DR–42761–10 | .STOPPER<br>.PLAQUETTE | 1 | | | | | |
| 15 | 6DR–42725–10 | .GROMMET<br>.PASSE-FIL | 1 | | | | | |
| 16 | 68T–42725–10 | .GROMMET<br>.PASSE-FIL | 1 | | | | | |
| 17 | 63V–48511–01 | HOOK, STEERING<br>ATTACHE, DIRECTION | 1 | | | | | AP<br>AP |
| 18 | 97575–08535 | BOLT, WITH WASHER<br>VIS HEXAGONAL AVC RONDELLE | 1 | | | | | AP<br>AP |
| 19 | 90185–08057 | NUT, SELF-LOCKING<br>ECROU,AUTO-BLOQUANT | 1 | | | | | AP<br>AP |

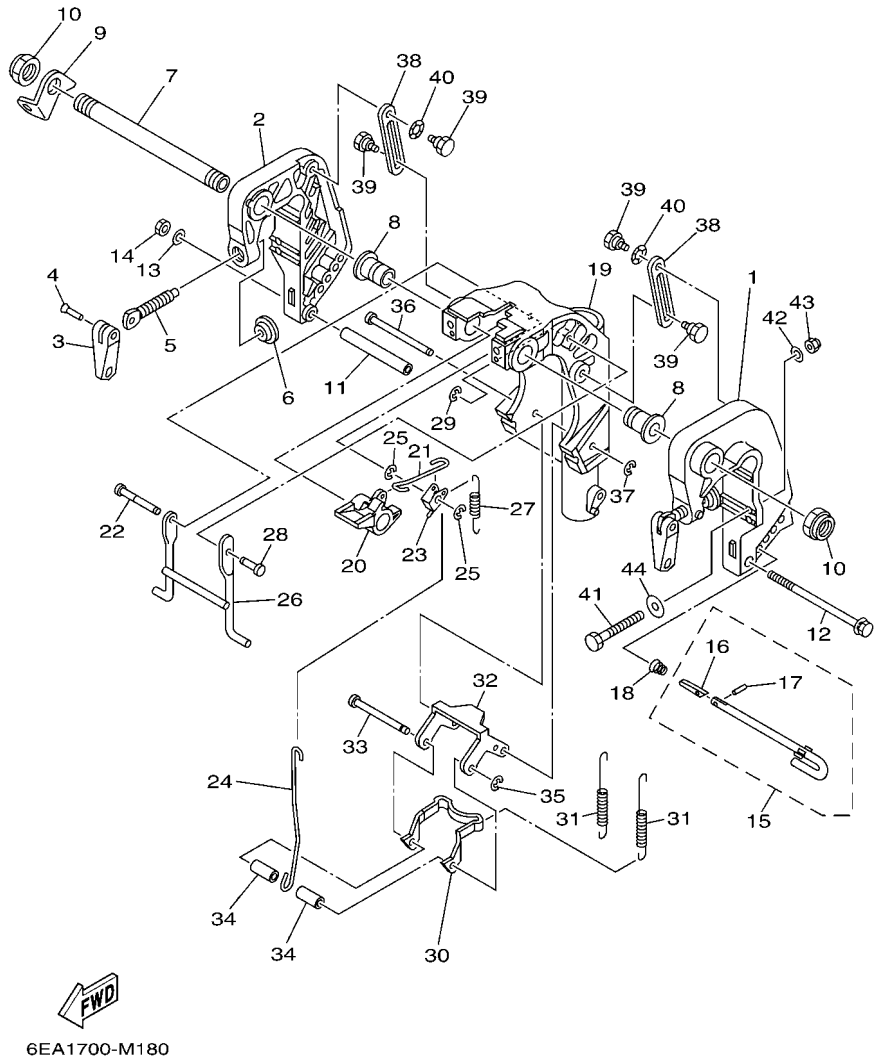


## FIG. 24 BRACKET 1 — SUPPORT 1

| REF. NO. | PART NO. N° PIECES | DESCRIPTION DESCRIPTION | MH | E | EP | | | REMARKS REMARQUES |
|---|---|---|---|---|---|---|---|---|
| 1 | 6AH–43111–00–8D | BRACKET, CLAMP 1<br>PRESSE 1 | 1 | 1 | | | | |
| 2 | 6AH–43112–00–8D | BRACKET, CLAMP 2<br>PRESSE 2 | 1 | 1 | | | | |
| 3 | 6E0–43118–01 | HANDLE, TRANSOM CLAMP<br>POIGNEE DE VIS DE PRESSE | 2 | 2 | | | | |
| 4 | 90243–04M01 | PIN<br>GOUPILLE | 2 | 2 | | | | |
| 5 | 6E7–43116–00 | SCREW, TRANSOM CLAMP<br>VIS DE PRESSE | 2 | 2 | | | | |
| 6 | 648–43114–01 | PAD, TRANSOM CLAMP<br>RONDELLE D'APPUI | 2 | 2 | | | | |
| 7 | 69A–43131–00 | BOLT, CLAMP BRACKET<br>BOULON, PRESSE | 1 | 1 | | | | FOR RIDE GUIDE<br>FOR RIDE GUIDE |
| 8 | 90386–22MA4 | BUSH<br>DOUILLE | 2 | 2 | | | | |
| 9 | 66R–43113–00 | PLATE, CLAMP BRACKET<br>PLAQUETTE, PRESSE | 1 | 1 | | | | |
| 10 | 90185–22043 | NUT, SELF-LOCKING<br>ECROU,AUTO-BLOQUANT | 2 | 2 | | | | |
| 11 | 90387–06M13 | COLLAR<br>COLLERETTE | 1 | 1 | | | | |
| 12 | 90101–06M18 | BOLT<br>BOULON | 1 | 1 | | | | |
| 13 | 92995–06600 | WASHER<br>RONDELLE | 1 | 1 | | | | |
| 14 | 95380–06700 | NUT<br>ECROU | 1 | 1 | | | | |
| 15 | 6L2–43160–01 | TILT ROD ASSY<br>BROCHE D'INCLINAISON (ENS.) | 1 | 1 | | | | |
| 16 | 689–43165–00 | .PLATE, TILT LOCK<br>.TAQUET, BROCHE INCLINAISON | 1 | 1 | | | | |
| 17 | 91690–30008 | .PIN, SPRING<br>.AGRAFFE | 1 | 1 | | | | |
| 18 | 90502–10M07 | SPRING, CONICAL<br>RESSORT, CONIQUE | 1 | 1 | | | | |
| 19 | 6AU–43311–10–8D | BRACKET, SWIVEL 1<br>SUPPORT, PIVOT 1 | 1 | 1 | | | | |
| 20 | 6DR–43631–00 | LEVER, TILT<br>LEVIER, INCLINAISON | 1 | 1 | | | | |
| 21 | 6DR–43616–00 | ROD, TILT LOCK<br>TIGE | 1 | 1 | | | | |
| 22 | 68T–43646–00 | SHAFT, LEVER<br>AXE, LEIVER | 1 | 1 | | | | |
| 23 | 6DR–43641–00 | LEVER, TILT<br>LEVIER, INCLINAISON | 1 | 1 | | | | |
| 24 | 6AH–43617–00 | ROD, TILT LOCK<br>TIGE | 1 | 1 | | | | |
| 25 | 99080–05600 | CIRCLIP<br>CIRCLIP | 2 | 2 | | | | |
| 26 | 6AH–43350–00 | RECEIVER ASSY<br>RECEIVER ASSY | 1 | 1 | | | | |
| 27 | 90506–20025 | SPRING, TENSION<br>RESSORT, TENSION | 1 | 1 | | | | |

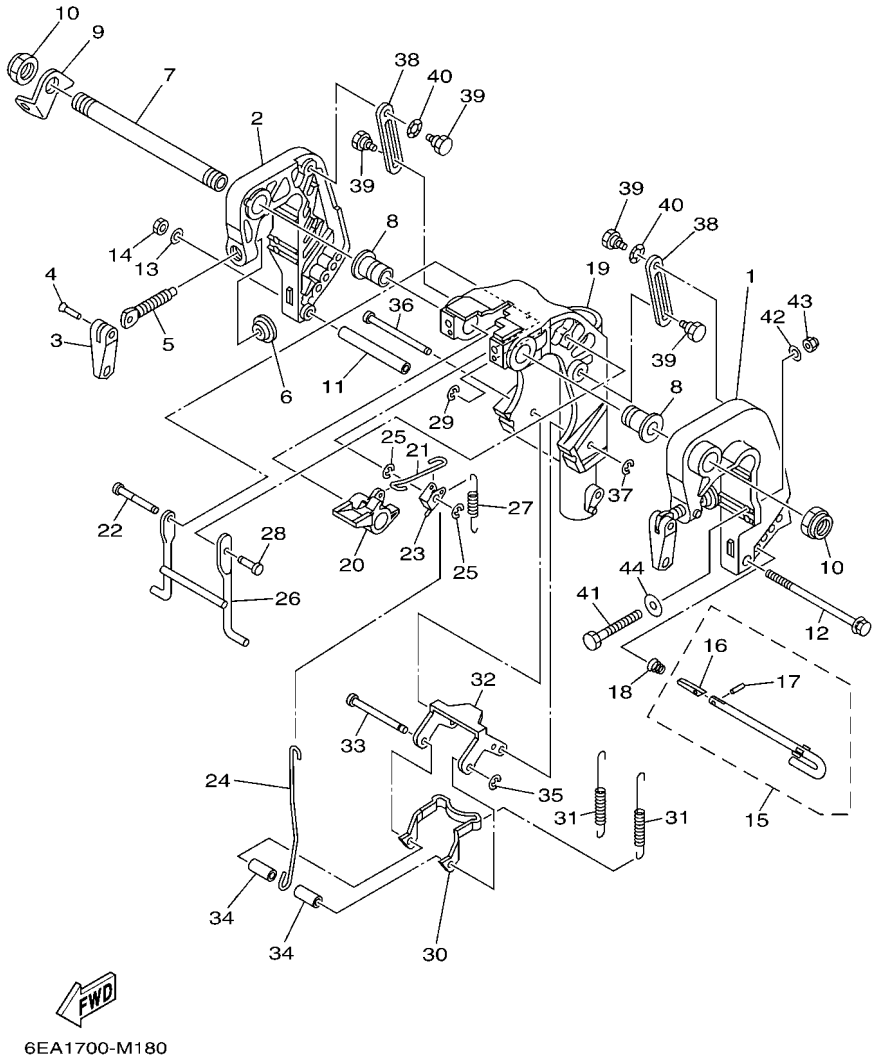


## FIG. 24 BRACKET 1 — SUPPORT 1

| REF. NO. | PART NO. N° PIECES | DESCRIPTION DESCRIPTION | MH | E | EP | | | REMARKS REMARQUES |
|---|---|---|---|---|---|---|---|---|
| 28 | 63V–43191–00 | SHAFT, STOPPER<br>AXE, BUTEE | 1 | 1 | | | | |
| 29 | 99080–05600 | CIRCLIP<br>CIRCLIP | 1 | 1 | | | | |
| 30 | 6AH–43614–00 | PLATE, TILT LOCK<br>ETRIER, VERROUILLAGE MARCHE AR | 1 | 1 | | | | |
| 31 | 90506–23016 | SPRING, TENSION<br>RESSORT, TENSION | 2 | 2 | | | | |
| 32 | 6AH–43615–00 | PLATE, TILT LOCK<br>ETRIER, VERROUILLAGE MARCHE AR | 1 | 1 | | | | |
| 33 | 68T–43611–00 | SHAFT, TILT LOCK<br>AXE, VERROUILLAGE MARCHE AR | 1 | 1 | | | | |
| 34 | 90387–06138 | COLLAR<br>COLLERETTE | 2 | 2 | | | | |
| 35 | 93430–04M03 | CIRCLIP<br>CLIPS | 1 | 1 | | | | |
| 36 | 68T–43659–00 | SHAFT, REVERSE LOCK<br>AXE, VERROUILLAGE MARCHE AR | 1 | 1 | | | | |
| 37 | 99080–05600 | CIRCLIP<br>CIRCLIP | 1 | 1 | | | | |
| 38 | 6AH–43627–00 | STOPPER<br>PLAQUETTE | 2 | 2 | | | | |
| 39 | 90109–06M84 | BOLT<br>BOULON | 4 | 4 | | | | |
| 40 | 90206–10M24 | WASHER, WAVE<br>RONDELLE, ONDULEE | 2 | 2 | | | | |
| 41 | 90101–08M88 | BOLT<br>BOULON | 2 | 2 | | | | |
| 42 | 92990–08600 | WASHER, PLATE<br>RONDELLE, PLATE | 2 | 2 | | | | |
| 43 | 90185–08057 | NUT, SELF-LOCKING<br>ECROU,AUTO-BLOQUANT | 2 | 2 | | | | |
| 44 | 90201–08MA4 | WASHER, PLATE<br>RONDELLE, PLATE | 2 | 2 | | | | |

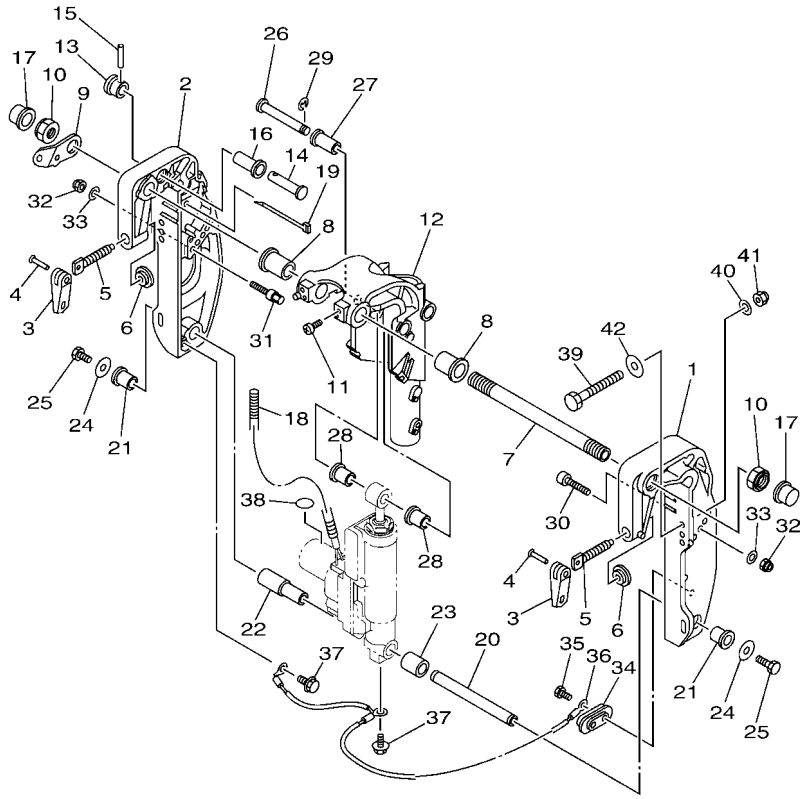


6EA4100-Q230

## FIG. 25 BRACKET 2 — SUPPORT 2

| REF. NO. | PART NO. N° PIECES | DESCRIPTION DESCRIPTION | MH | E | EP | | | REMARKS REMARQUES |
|---|---|---|---|---|---|---|---|---|
| 1 | 69A–43111–01–8D | BRACKET, CLAMP 1<br>PRESSE 1 | | | 1 | | | |
| 2 | 69A–43112–02–8D | BRACKET, CLAMP 2<br>PRESSE 2 | | | 1 | | | |
| 3 | 6E0–43118–01 | HANDLE, TRANSOM CLAMP<br>POIGNEE DE VIS DE PRESSE | | | 2 | | | |
| 4 | 90243–04M01 | PIN<br>GOUPILLE | | | 2 | | | |
| 5 | 6E7–43116–00 | SCREW, TRANSOM CLAMP<br>VIS DE PRESSE | | | 2 | | | |
| 6 | 648–43114–01 | PAD, TRANSOM CLAMP<br>RONDELLE D'APPUI | | | 2 | | | |
| 7 | 69A–43131–00 | BOLT, CLAMP BRACKET<br>BOULON, PRESSE | | | 1 | | | FOR RIDE GUIDE<br>FOR RIDE GUIDE |
| 8 | 90386–22MA4 | BUSH<br>DOUILLE | | | 2 | | | |
| 9 | 69A–43113–00 | PLATE, CLAMP BRACKET<br>PLAQUETTE, PRESSE | | | 1 | | | |
| 10 | 90185–22043 | NUT, SELF-LOCKING<br>ECROU,AUTO-BLOQUANT | | | 2 | | | |
| 11 | 97885–08010 | SCREW, PAN HEAD<br>VIS, A ENCOCHE | | | 2 | | | |
| 12 | 69G–43311–11–8D | BRACKET, SWIVEL 1<br>SUPPORT, PIVOT 1 | | | 1 | | | |
| 13 | 65W–43192–00 | KNOB, STOPPER<br>BOUTON, BUTEE DE RELEVAGE | | | 1 | | | |
| 14 | 65W–43191–00 | SHAFT, STOPPER<br>AXE, BUTEE | | | 1 | | | |
| 15 | 91690–30018 | PIN, SPRING<br>AGRAFFE | | | 1 | | | |
| 16 | 90386–14MA1 | BUSH<br>DOUILLE | | | 1 | | | |
| 17 | 6G5–43145–01 | CAP, CLAMP BRACKET<br>CAPUCHON, PRESSE | | | 2 | | | |
| 18 | 90447–10001 | TUBE<br>DURITE | | | 1 | | | |
| 19 | 90465–13M97 | CLAMP<br>BRIDE | | | 1 | | | |
| 20 | 69G–43818–00 | PIN, LOWER SHOCK MOUNT<br>AXE, INFERIEUR AMORTISSEUR | | | 1 | | | |
| 21 | 90386–16MA7 | BUSH<br>DOUILLE | | | 2 | | | |
| 22 | 90386–16MA8 | BUSH<br>DOUILLE | | | 1 | | | |
| 23 | 90387–16M02 | COLLAR<br>COLLERETTE | | | 1 | | | |
| 24 | 90201–08M00 | WASHER, PLATE<br>RONDELLE, PLATE | | | 2 | | | |
| 25 | 97080–08016 | BOLT<br>BOULON | | | 2 | | | |
| 26 | 90249–12M36 | PIN<br>GOUPILLE | | | 1 | | | |
| 27 | 90381–12M10 | BUSH, SOLID<br>DOUILLE, SOLIDE | | | 1 | | | |

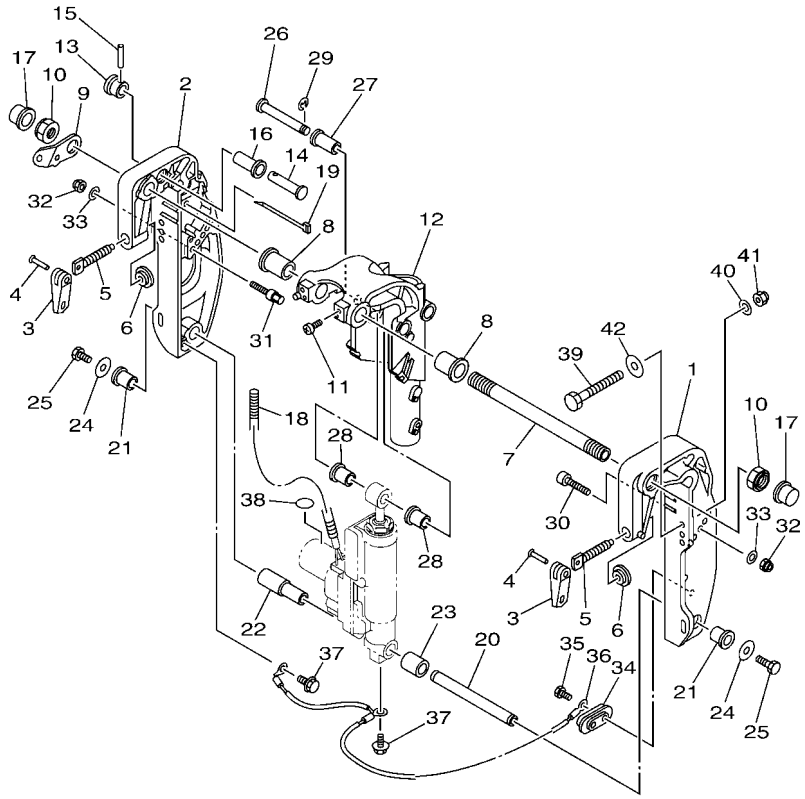


6EA4100-Q230

## FIG. 25 BRACKET 2 — SUPPORT 2

| REF. NO. | PART NO. N° PIECES | DESCRIPTION DESCRIPTION | MH | E | EP | | | REMARKS REMARQUES |
|---|---|---|---|---|---|---|---|---|
| 28 | 90381–12M11 | BUSH, SOLID<br>DOUILLE, SOLIDE | | | 2 | | | |
| 29 | 99080–10600 | CIRCLIP<br>CIRCLIP | | | 1 | | | |
| 30 | 90110–08M05 | BOLT, HEXAGON SOCKET HEAD<br>BOULON, TETE HEXAGONALE CREUSE | | | 1 | | | |
| 31 | 90109–08010 | BOLT<br>BOULON | | | 1 | | | |
| 32 | 90185–08057 | NUT, SELF-LOCKING<br>ECROU,AUTO-BLOQUANT | | | 2 | | | |
| 33 | 92990–08600 | WASHER, PLATE<br>RONDELLE, PLATE | | | 2 | | | |
| 34 | 65W–45251–00 | ANODE<br>ANODE | | | 1 | | | |
| 35 | 90101–06020 | BOLT<br>BOULON | | | 2 | | | |
| 36 | 63V–82127–00 | WIRE, LEAD 2<br>FIL 2 | | | 1 | | | |
| 37 | 97595–06510 | BOLT, WITH WASHER<br>VIS HEXAGONAL AVC RONDELLE | | | 2 | | | |
| 38 | 69A–43155–00 | MARK 1<br>ETIQUETTE 1 | | | 1 | | | |
| 39 | 90101–08M88 | BOLT<br>BOULON | | | 2 | | | |
| 40 | 92990–08600 | WASHER, PLATE<br>RONDELLE, PLATE | | | 2 | | | |
| 41 | 90185–08057 | NUT, SELF-LOCKING<br>ECROU,AUTO-BLOQUANT | | | 2 | | | |
| 42 | 90201–08MA4 | WASHER, PLATE<br>RONDELLE, PLATE | | | 2 | | | |

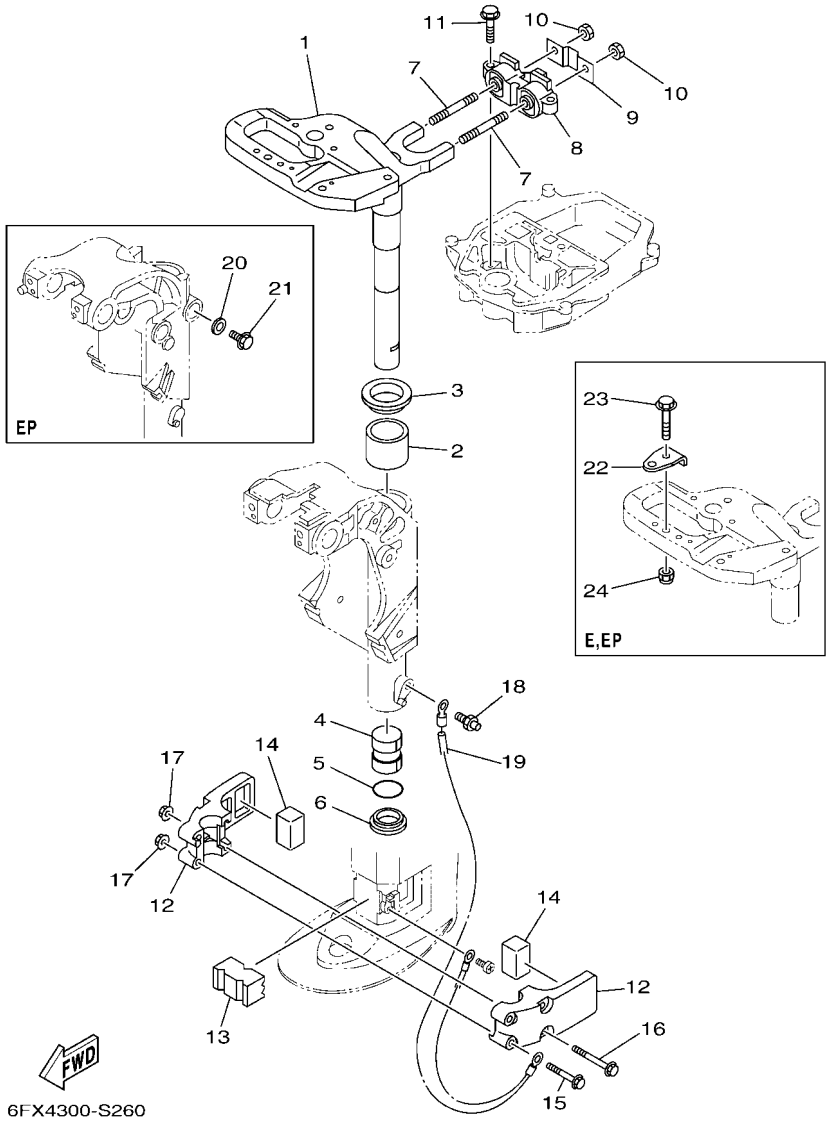


## FIG. 26 BRACKET 3 — SUPPORT 3

| REF. NO. | PART NO. N° PIECES | DESCRIPTION DESCRIPTION | MH | E | EP | | | REMARKS REMARQUES |
|---|---|---|---|---|---|---|---|---|
| 1 | 6AU–42511–10–8D | BRACKET, STEERING<br>CADRE, DIRECTION | 1 | 1 | 1 | | | |
| 2 | 90386–40001 | BUSH<br>DOUILLE | 1 | 1 | 1 | | | |
| 3 | 90209–40008 | WASHER<br>RONDELLE | 1 | 1 | 1 | | | |
| 4 | 90386–30048 | BUSH<br>DOUILLE | 1 | 1 | 1 | | | |
| 5 | 93210–29M94 | O-RING<br>JOINT TORIQUE | 1 | 1 | 1 | | | |
| 6 | 90386–30M60 | BUSH<br>DOUILLE | 1 | 1 | 1 | | | |
| 7 | 90116–08M54 | BOLT, STUD<br>GOUJON | 2 | 2 | 2 | | | |
| 8 | 68T–44517–10 | MOUNT RUBBER<br>SILENT-BLOC | 1 | 1 | 1 | | | |
| 9 | 68T–44526–00 | PLATE<br>PLAQUE | 1 | 1 | 1 | | | |
| 10 | 95380–08600 | NUT<br>ECROU | 2 | 2 | 2 | | | |
| 11 | 97575–06525 | BOLT, WITH WASHER<br>VIS HEXAGONAL AVC RONDELLE | 2 | 2 | 2 | | | |
| 12 | 6AU–44551–00–8D | HOUSING, LOWER MOUNT RUBBER 1<br>BOITIER, SILENT-BLOC INFERIEUR | 2 | 2 | 2 | | | |
| 13 | 6AU–44557–00 | MOUNT DAMPER, LOWER FRONT<br>SILENT-BLOC, INFERIEUR AVANT | 1 | 1 | 1 | | | |
| 14 | 682–44555–30 | MOUNT DAMPER, LOWER SIDE<br>SILENT-BLOC, INFERIEUR LATERAL | 2 | 2 | 2 | | | |
| 15 | 90119–06012 | BOLT, WITH WASHER<br>BOULON, AVEC RONDELLE | 2 | 2 | 2 | | | |
| 16 | 90119–06198 | BOLT, WITH WASHER<br>BOULON, AVEC RONDELLE | 2 | 2 | 2 | | | |
| 17 | 90179–06M28 | NUT<br>ECROU | 4 | 4 | 4 | | | |
| 18 | 93700–06M03 | NIPPLE, GREASE<br>PION | 1 | 1 | 1 | | | |
| 19 | 68T–82127–00 | WIRE, LEAD 2<br>FIL 2 | 1 | 1 | 1 | | | |
| 20 | 92995–06600 | WASHER<br>RONDELLE | | | 1 | | | |
| 21 | 97595–06514 | BOLT, WITH WASHER<br>VIS HEXAGONAL AVC RONDELLE | | | 1 | | | |
| 22 | 63V–48511–01 | HOOK, STEERING<br>ATTACHE, DIRECTION | | 1 | 1 | | | |
| 23 | 97575–08535 | BOLT, WITH WASHER<br>VIS HEXAGONAL AVC RONDELLE | | 1 | 1 | | | |
| 24 | 90185–08057 | NUT, SELF-LOCKING<br>ECROU,AUTO-BLOQUANT | | 1 | 1 | | | |

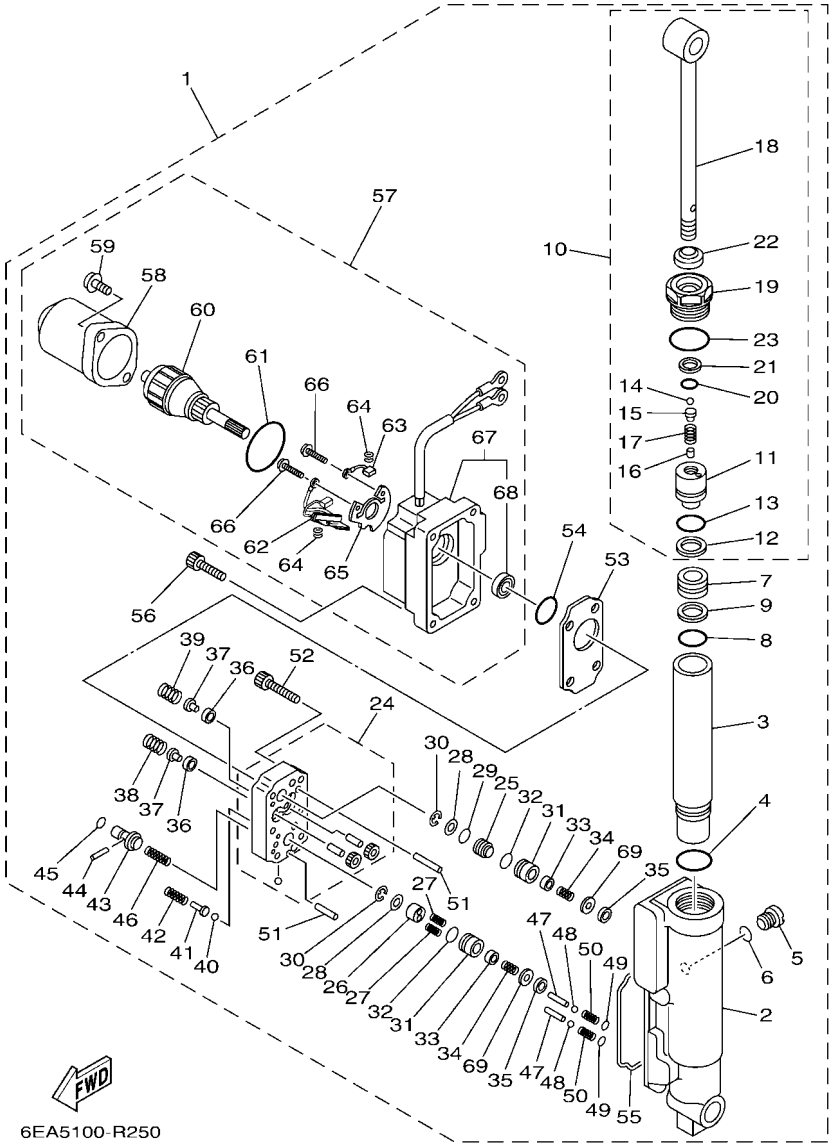


## FIG. 27 POWER TILT ASSY — PUISSANCE PARER ET INCLINER

| REF. NO. | PART NO. N° PIECES | DESCRIPTION DESCRIPTION | MH | E | EP | | | REMARKS REMARQUES |
|---|---|---|---|---|---|---|---|---|
| 1 | 69G–43840–03–8D | POWER TILT ASSY<br>PUISSANCE INCLINER (ENS.) | | | 1 | | | |
| 2 | 69A–4380K–00 | .CYLINDER, TILT SUB ASSY<br>.CYLINDRE | | | 1 | | | |
| 3 | 69A–22471–00 | .CASE, CYLINDER<br>.BOITIER, CYLINDRE | | | 1 | | | |
| 4 | 93210–27666 | .O-RING<br>.JOINT TORIQUE | | | 1 | | | |
| 5 | 6H1–4388E–11 | .PLUG, TAPER SCREW<br>.BOUCHON | | | 1 | | | |
| 6 | 93210–07003 | .O-RING<br>.JOINT TORIQUE | | | 1 | | | |
| 7 | 69A–43814–00 | .PISTON, FREE<br>.PISTON | | | 1 | | | |
| 8 | 93210–21276 | .O-RING<br>.JOINT TORIQUE | | | 1 | | | |
| 9 | 69A–43872–00 | .RING, BACK UP<br>.RESSORT | | | 1 | | | |
| 10 | 69A–43810–00 | .TILT PISTON SUB ASSY<br>.INCLINER PISTON AUXILIAIRE(ENS | | | 1 | | | |
| 11 | 69A–4380D–00 | ..PISTON COMP.<br>..PISTON COMP. | | | 1 | | | |
| 12 | 93210–21276 | ..O-RING<br>..JOINT TORIQUE | | | 1 | | | |
| 13 | 69A–43872–00 | ..RING, BACK UP<br>..RESSORT | | | 1 | | | |
| 14 | 93505–32038 | ..BALL<br>..BILLE | | | 1 | | | |
| 15 | 65W–4386A–00 | ..PIN, ABSORBER VALVE<br>..GOUPILLE, SOUPAPE | | | 1 | | | |
| 16 | 93604–06136 | ..PIN, DOWEL<br>..CLAVETTE | | | 1 | | | |
| 17 | 69A–43857–00 | ..SPRING, ABSORBER VALVE<br>..RESSORT | | | 1 | | | |
| 18 | 69A–43801–00 | ..ROD<br>..TIGE | | | 1 | | | |
| 19 | 69A–43811–01 | ..SCREW, CYLINDER END<br>..VIS, CYLINDRE RACCORD | | | 1 | | | |
| 20 | 6H1–43866–01 | ..O-RING<br>..JOINT TORIQUE | | | 1 | | | |
| 21 | 69A–43871–00 | ..RING, BACK UP<br>..SEGMENT | | | 1 | | | |
| 22 | 69A–43812–00 | ..SEAL, DUST<br>..JOINT | | | 1 | | | |
| 23 | 69A–43869–00 | ..O-RING<br>..JOINT TORIQUE | | | 1 | | | |
| 24 | 69A–43830–00 | .GEAR PUMP ASSY<br>.POMPE A PIGNON (ENS.) | | | 1 | | | |
| 25 | 69A–43841–00 | .PISTON, SHUTTLE<br>.PISTON | | | 1 | | | |
| 26 | 69A–4384M–00 | .PISTON, SHUTTLE 2<br>.PISTON 2 | | | 1 | | | |
| 27 | 62Y–43894–00 | .SPRING, SHUTTLE RETURN<br>.RESSORT | | | 2 | | | |

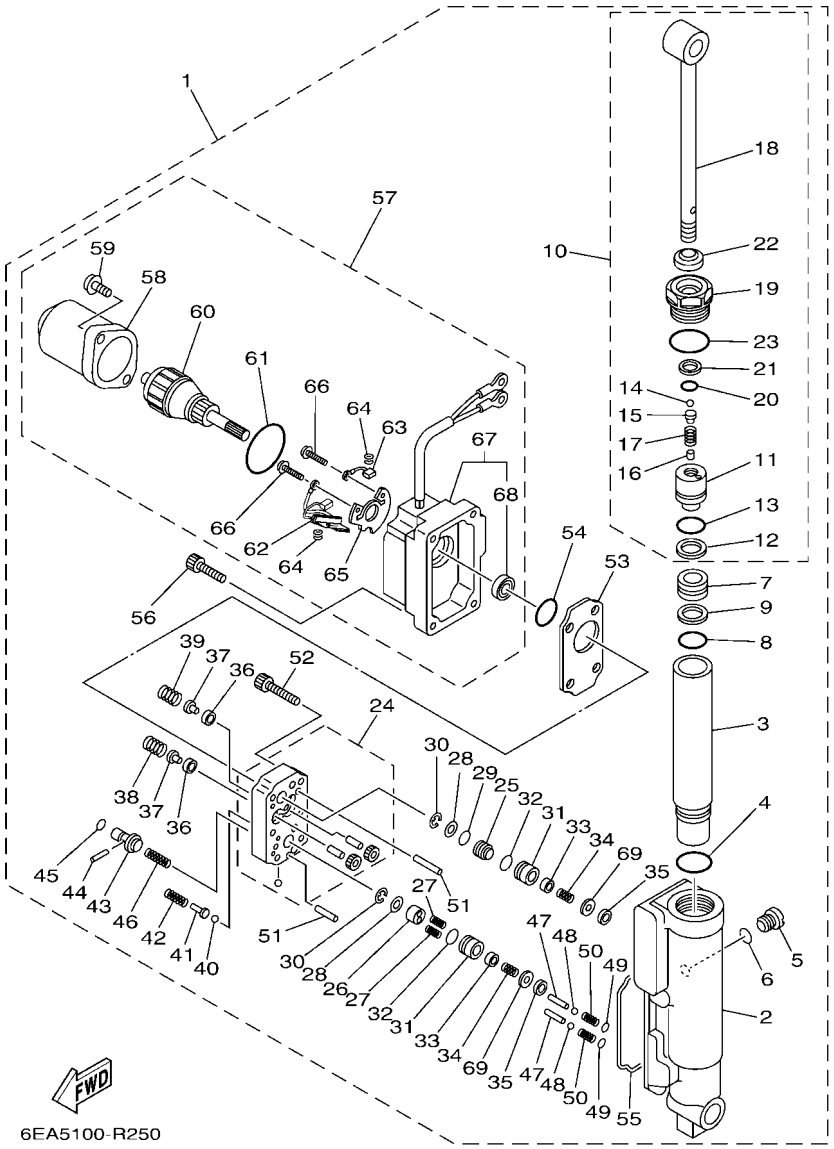


## FIG. 27 POWER TILT ASSY — PUISSANCE PARER ET INCLINER

| REF. NO. | PART NO. N° PIECES | DESCRIPTION DESCRIPTION | MH | E | EP | | | REMARKS REMARQUES |
|---|---|---|---|---|---|---|---|---|
| 28 | 69A–4384F–00 | .SEAL, MAIN VALVE<br>.JOINT | | | 2 | | | |
| 29 | 6H1–43883–00 | .O-RING<br>.JOINT TORIQUE | | | 1 | | | |
| 30 | 99002–03600 | .CIRCLIP<br>.CIRCLIP | | | 2 | | | |
| 31 | 69G–4382G–00 | .VALVE SEAT<br>.JEU DE POINTEAUX | | | 2 | | | |
| 32 | 93210–12N52 | .O-RING<br>.JOINT TORIQUE | | | 2 | | | |
| 33 | 6T4–43808–00 | .SEAT VALVE COMP. 1<br>.SIEGE VALVE COMP. 1 | | | 2 | | | |
| 34 | 69G–43853–00 | .SPRING, MAIN VALVE<br>.RESSORT | | | 2 | | | |
| 35 | 69J–4381C–00 | .FILTER 3<br>.FILTRE 3 | | | 2 | | | |
| 36 | 6H1–4384G–11 | .SEAL, RELIEF VALVE<br>.JOINT | | | 2 | | | |
| 37 | 6H1–43844–10 | .PIN, VALVE SUPPORT<br>.GOUPILLE | | | 2 | | | |
| 38 | 69A–43855–00 | .SPRING, UP RELIEF<br>.RESSORT | | | 1 | | | |
| 39 | 6H1–43856–10 | .SPRING, DOWN RELIEF<br>.RESSORT | | | 1 | | | |
| 40 | 93501–08001 | .BALL<br>.BILLE | | | 2 | | | |
| 41 | 69A–4386A–00 | .PIN, ABSORBER VALVE<br>.GOUPILLE, SOUPAPE | | | 2 | | | |
| 42 | 69A–43824–00 | .SPRING, DOWN RELIEF 2<br>.RESSORT 2 | | | 2 | | | |
| 43 | 69A–43848–10 | .ROD, MANUAL RELEASE<br>.TIGE | | | 1 | | | |
| 44 | 93602–15250 | .PIN, DOWEL<br>.GOUJON | | | 1 | | | |
| 45 | 93210–06001 | .O-RING<br>.JOINT TORIQUE | | | 1 | | | |
| 46 | 69A–43854–00 | .SPRING, MANUAL RELEASE<br>.RESSORT | | | 1 | | | |
| 47 | 69A–4381G–00 | .PIN 1<br>.GOUPILLE 1 | | | 2 | | | |
| 48 | 93501–08001 | .BALL<br>.BILLE | | | 2 | | | |
| 49 | 6H1–43883–00 | .O-RING<br>.JOINT TORIQUE | | | 2 | | | |
| 50 | 69A–4384H–00 | .SPRING<br>.RESSORT | | | 2 | | | |
| 51 | 93606–14081 | .PIN, DOWEL<br>.GOUPILLE | | | 2 | | | |
| 52 | 91312–05025 | .BOLT, HEXAGON SOCKET HEAD<br>.BOULON, TETE HEXAGONALE CREUSE | | | 6 | | | |
| 53 | 69A–43816–01 | .FILTER 1<br>.FILTRE 1 | | | 1 | | | |
| 54 | N35–43862–10 | .O-RING<br>.JOINT TORIQUE | | | 1 | | | |

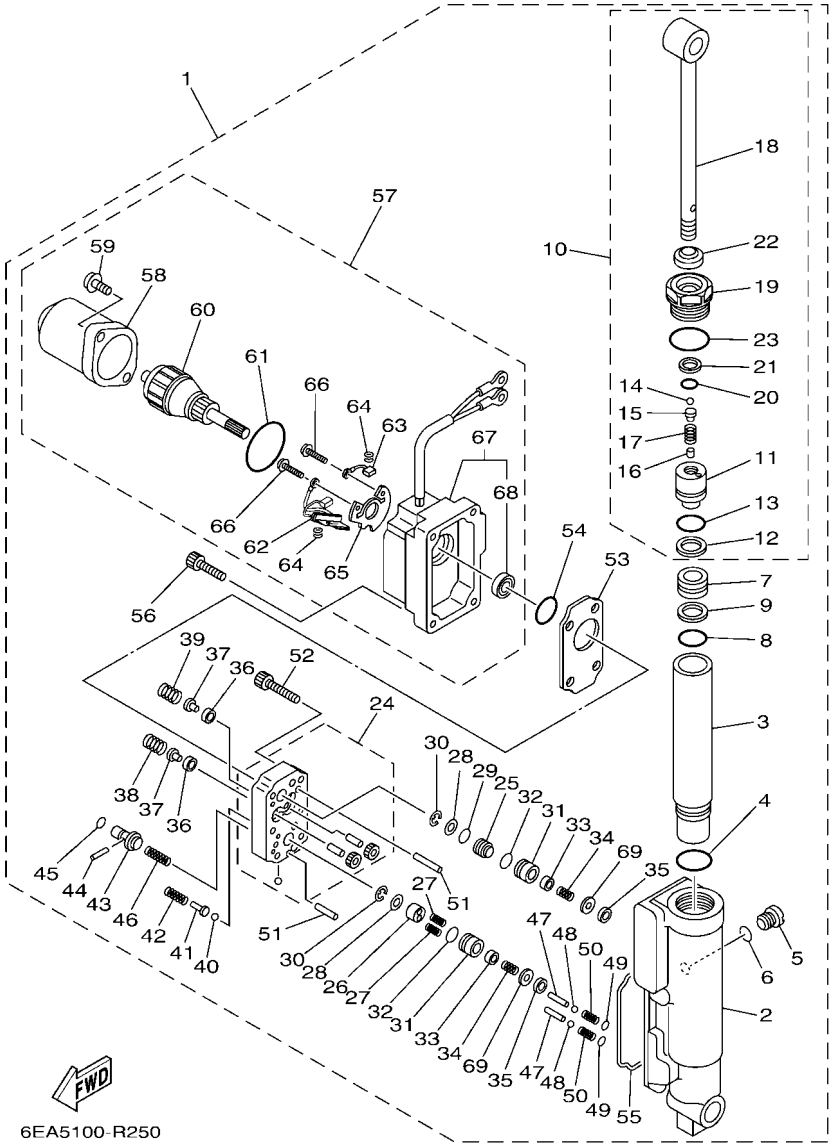


## FIG. 27 POWER TILT ASSY — PUISSANCE PARER ET INCLINER

| REF. NO. | PART NO. N° PIECES | DESCRIPTION DESCRIPTION | MH | E | EP | | | REMARKS REMARQUES |
|---|---|---|---|---|---|---|---|---|
| 55 | 69A–23129–00 | .GASKET, DRAIN PLUG<br>.JOINT, PLOT DE VIDANGE | | | 1 | | | |
| 56 | 69A–43878–00 | .BOLT, SOCKET<br>.BOULON | | | 4 | | | |
| 57 | 69G–43880–10 | .MOTOR ASSY<br>.MOTEUR (ENS.) | | | 1 | | | |
| 58 | 6AH–43804–00 | ..STATOR ASSY<br>..STATOR (ENS.) | | | 1 | | | |
| 59 | 67C–43879–10 | ..SCREW, WITH WASHER<br>..VIS, AVEC RONDELLE | | | 2 | | | |
| 60 | 67C–43805–10 | ..ARMATURE ASSY<br>..INDUIT (ENS.) | | | 1 | | | |
| 61 | 67C–43862–10 | ..O-RING<br>..JOINT TORIQUE | | | 1 | | | |
| 62 | 67C–82181–10 | ..CIRCUIT BREAKER COMP.<br>..RUPTEUR COMPLET | | | 1 | | | |
| 63 | 67C–43892–10 | ..BRUSH 2<br>..BALAI 2 | | | 1 | | | |
| 64 | 67C–4386K–10 | ..SPRING, BRUSH<br>..RESSORT, BALAI | | | 2 | | | |
| 65 | 67C–4380F–10 | ..PLATE, BRUSH HOLDER<br>..PLAQUE | | | 1 | | | |
| 66 | 97602–04316 | ..SCREW, PAN HEAD WITH WASHER<br>..VIS, AVEC RONDELLE | | | 2 | | | |
| 67 | 69G–43881–10 | ..FRAME, END<br>..BATI | | | 1 | | | |
| 68 | 67C–43882–10 | ...OIL SEAL<br>...JOINT SPI | | | 1 | | | |
| 69 | 69G–4388F–00 | .SPACER<br>.ENTRETOISE | | | 2 | | | |

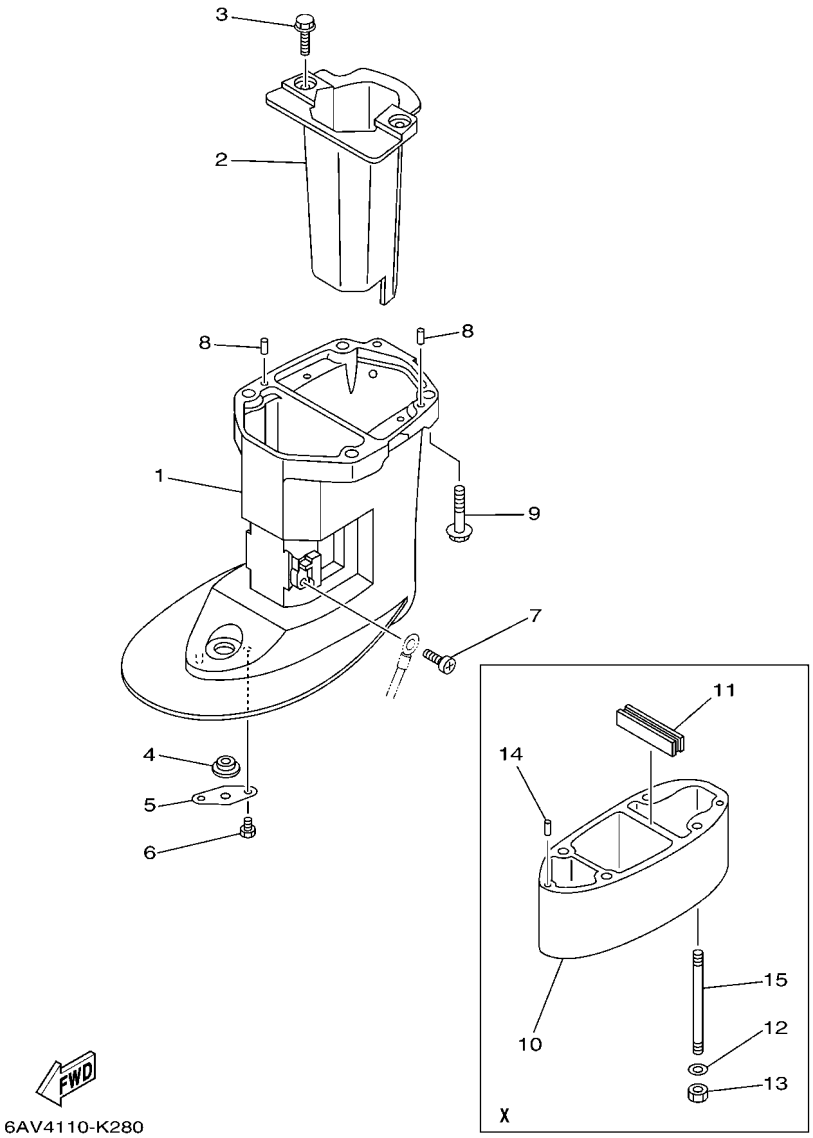


## FIG. 28 UPPER CASING FOURREAU

| REF. NO. | PART NO. N° PIECES | DESCRIPTION DESCRIPTION | MH | E | EP | | | REMARKS REMARQUES |
|---|---|---|---|---|---|---|---|---|
| 1 | 6AU–45111–10–8D | CASING, UPPER<br>FOURREAU | 1 | 1 | 1 | | | |
| 2 | 6AU–14711–00–CA | MUFFLER 1<br>POT D'ECHAPPEMENT 1 | 1 | 1 | 1 | | | |
| 3 | 97575–06514 | BOLT, WITH WASHER<br>VIS HEXAGONAL AVC RONDELLE | 2 | 2 | 2 | | | |
| 4 | 90480–14M54 | GROMMET<br>PASSE-FIL | 1 | 1 | 1 | | | |
| 5 | 68T–45321–00 | PLATE<br>PLAQUETTE | 1 | 1 | 1 | | | |
| 6 | 97095–06008 | BOLT<br>BOULON | 1 | 1 | 1 | | | |
| 7 | 97885–05008 | SCREW, PAN HEAD<br>VIS, A ENCOCHE | 1 | 1 | 1 | | | |
| 8 | 93604–12M07 | PIN, DOWEL<br>CLAVETTE | 2 | 2 | 2 | | | |
| 9 | 97575–08535 | BOLT, WITH WASHER<br>VIS HEXAGONAL AVC RONDELLE | 4 | 4 | 4 | | | |
| 10 | 69G–45211–20–8D | EXTENSION<br>EXTENSION | 1 | 1 | | | | X(24.4")<br>X(24.4") |
| 11 | 63V–45127–00 | SEAL<br>JOINT | 1 | 1 | | | | X(24.4")<br>X(24.4") |
| 12 | 92990–08600 | WASHER, PLATE<br>RONDELLE, PLATE | 4 | 4 | | | | X(24.4")<br>X(24.4") |
| 13 | 95380–08600 | NUT<br>ECROU | 4 | 4 | | | | X(24.4")<br>X(24.4") |
| 14 | 93604–12M07 | PIN, DOWEL<br>CLAVETTE | 2 | 2 | | | | X(24.4")<br>X(24.4") |
| 15 | 90116–08M62 | BOLT, STUD<br>GOUJON | 4 | 4 | | | | X(24.4")<br>X(24.4") |

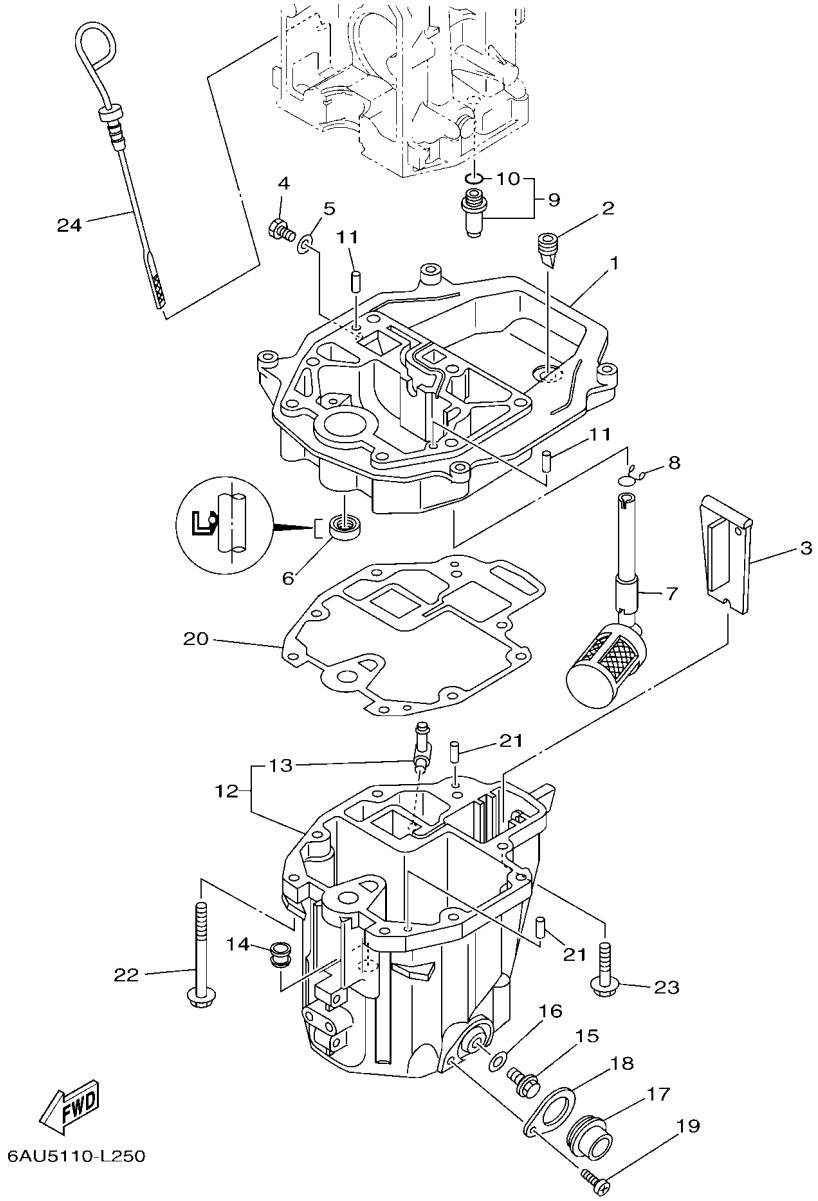


## FIG. 29 OIL PAN — VENTILATEUR D'HUILE

| REF. NO. | PART NO. N° PIECES | DESCRIPTION DESCRIPTION | MH | E | EP | | | REMARKS REMARQUES |
|---|---|---|---|---|---|---|---|---|
| 1 | 68T–41137–00–CA | GUIDE, EXHAUST<br>COLLECTEUR D'ECHAPPEMENT | 1 | 1 | 1 | | | |
| 2 | 65W–42717–00 | RUBBER, SEAL 2<br>JOINT EN CAOUTCHOUC 2 | 1 | 1 | 1 | | | |
| 3 | 68T–45181–00 | PLATE<br>PLAQUETTE | 1 | 1 | 1 | | | |
| 4 | 97095–08014 | BOLT<br>BOULON | 1 | 1 | 1 | | | |
| 5 | 90430–08143 | GASKET<br>JOINT | 1 | 1 | 1 | | | |
| 6 | 93101–12M70 | OIL SEAL<br>JOINT SPY | 1 | 1 | 1 | | | |
| 7 | 68T–13421–01 | STRAINER 2<br>FILTRE 2 | 1 | 1 | 1 | | | |
| 8 | 90467–11M08 | CLIP<br>JONC | 1 | 1 | 1 | | | |
| 9 | 6G8–11575–00 | RELIEF VALVE ASSY<br>SOUPAPE DE RENTREE D'AIR | 1 | 1 | 1 | | | |
| 10 | 93210–12M62 | .O-RING<br>.JOINT TORIQUE | 1 | 1 | 1 | | | |
| 11 | 93606–19M23 | PIN, DOWEL<br>GOUPILLE | 2 | 2 | 2 | | | |
| 12 | 68T–15311–01–CA | OIL PAN<br>VENTILATEUR D'HUILE | 1 | 1 | 1 | | | |
| 13 | 6H1–11372–00 | .NIPPLE, HOSE<br>.RACCORD, TUYAU | 1 | 1 | 1 | | | |
| 14 | 90480–10M28 | GROMMET<br>PASSE-FIL | 1 | 1 | 1 | | | |
| 15 | 90340–10M10 | PLUG, STRAIGHT SCREW<br>PLOT, FILETE DROIT | 1 | 1 | 1 | | | |
| 16 | 90430–10M11 | GASKET<br>JOINT | 1 | 1 | 1 | | | |
| 17 | 68T–15316–00 | DAMPER 1<br>AMORTISSEUR 1 | 1 | 1 | 1 | | | |
| 18 | 68T–15317–00 | SPACER, ENGINE MOUNT<br>ENTRETOISE DE SUPPORT | 1 | 1 | 1 | | | |
| 19 | 97885–05008 | SCREW, PAN HEAD<br>VIS, A ENCOCHE | 1 | 1 | 1 | | | |
| 20 | 68T–13475–00 | GASKET<br>JOINT | 1 | 1 | 1 | | | |
| 21 | 93604–12M07 | PIN, DOWEL<br>CLAVETTE | 2 | 2 | 2 | | | |
| 22 | 90119–08005 | BOLT, WITH WASHER<br>BOULON, AVEC RONDELLE | 6 | 6 | 6 | | | |
| 23 | 97575–08530 | BOLT, WITH WASHER<br>VIS HEXAGONAL AVC RONDELLE | 2 | 2 | 2 | | | |
| 24 | 68T–15362–00 | PLUG, OIL LEVEL<br>PLOT, NIVEAU D'HUILE | 1 | 1 | 1 | | | |

## FIG. 30 LOWER CASING & DRIVE 1 — BOITIER D'HELICE TRANSMISSION1

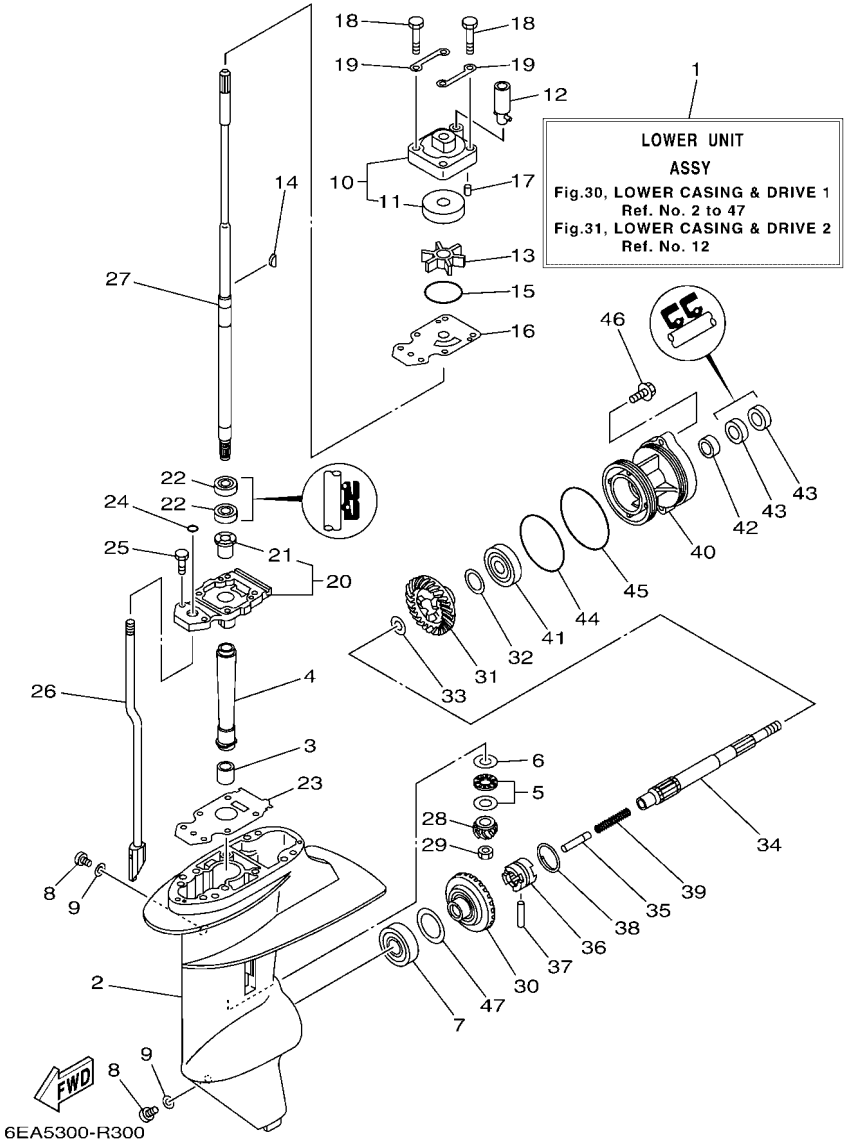


| REF. NO. | PART NO. N° PIECES | DESCRIPTION DESCRIPTION | MH | E | EP | | | REMARKS REMARQUES |
|---|---|---|---|---|---|---|---|---|
| 1 | 69G–45300–11–8D | LOWER UNIT ASSY<br>UNITE INFERIEURE (ENS.) | 1 | 1 | 1 | | | L(21.7")<br>L(21.7") |
| | 69G–45300–21–8D | LOWER UNIT ASSY<br>UNITE INFERIEURE (ENS.) | 1 | 1 | | | | X(24.4")<br>X(24.4") |
| 2 | 66R–45311–01–8D | CASING, LOWER<br>BOITIER D'HELICE | 1 | 1 | 1 | | | |
| 3 | 93315–314V8 | BEARING<br>ROULEMENT | 1 | 1 | 1 | | | |
| 4 | 66R–45536–00 | SLEEVE, DRIVE SHAFT<br>MANCHON, ARBRE MOTEUR | 1 | 1 | 1 | | | |
| 5 | 93341–41416 | BEARING<br>CERVEAUX DE DIRECTION | 1 | 1 | 1 | | | |
| 6 | 66R–45587–00 | SHIM (T:1.13MM)<br>CALE (T:1.13MM) | 1 | 1 | 1 | | | UR<br>UR |
| | 66R–45587–10 | SHIM (T:1.20MM)<br>CALE (T:1.20MM) | 1 | 1 | 1 | | | UR<br>UR |
| 7 | 93332–00005 | BEARING<br>ROULEMENT | 1 | 1 | 1 | | | |
| 8 | 90340–08002 | PLUG, STRAIGHT SCREW<br>PLOT, FILETE DROIT | 2 | 2 | 2 | | | |
| 9 | 90430–08003 | GASKET<br>JOINT | 2 | 2 | 2 | | | |
| 10 | 63V–44301–00 | WATER PUMP HOUSING COMP.<br>CARTER, POMPE A EAU (ENS) | 1 | 1 | 1 | | | |
| 11 | 63V–44322–00 | .INSERT, CARTRIDGE<br>.CUVETTE | 1 | 1 | 1 | | | |
| 12 | 68T–44366–00 | DAMPER, WATER SEAL 2<br>JOINT, TUBE D'EAU 2 | 1 | 1 | 1 | | | |
| 13 | 63V–44352–01 | IMPELLER<br>TURBINE | 1 | 1 | 1 | | | |
| 14 | 664–44338–00 | KEY, WOODRUFF<br>CLAVETTE, VOLANT | 1 | 1 | 1 | | | |
| 15 | 93210–44398 | O-RING<br>JOINT TORIQUE | 1 | 1 | 1 | | | |
| 16 | 68T–44323–00 | OUTER PLATE, CARTRIDGE<br>PLAQUE EXTERIEURE | 1 | 1 | 1 | | | |
| 17 | 93604–12M07 | PIN, DOWEL<br>CLAVETTE | 2 | 2 | 2 | | | |
| 18 | 97095–08045 | BOLT<br>BOULON | 4 | 4 | 4 | | | |
| 19 | 63V–44328–01 | PLATE<br>PLAQUETTE | 2 | 2 | 2 | | | |
| 20 | 69G–45331–01–CA | HOUSING, BEARING<br>FLASQUE, ROULEMENT | 1 | 1 | 1 | | | |
| 21 | 626–45316–09 | .BUSHING, DRIVE SHAFT<br>.DOUILLE, ARBRE MOTEUR | 1 | 1 | 1 | | | |
| 22 | 93101–20048 | OIL SEAL<br>JOINT SPY | 2 | 2 | 2 | | | |
| 23 | 69G–45315–A0 | PACKING, LOWER CASING<br>JOINT, BOITIER D'HELICE | 1 | 1 | 1 | | | |
| 24 | 93210–06ME6 | O-RING<br>JOINT TORIQUE | 1 | 1 | 1 | | | |
| 25 | 97080–08025 | BOLT<br>BOULON | 2 | 2 | 2 | | | |

## FIG. 30 LOWER CASING & DRIVE 1 — BOITIER D'HELICE TRANSMISSION1

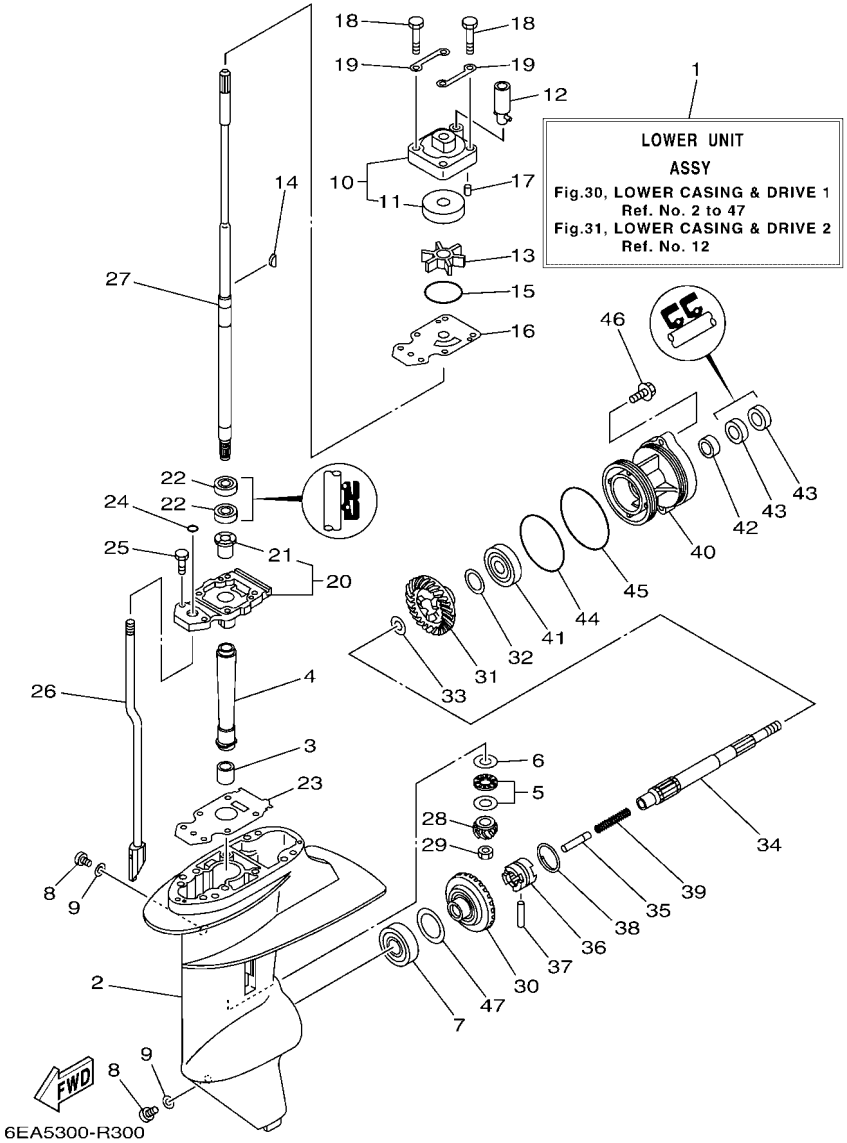


| REF. NO. | PART NO. N° PIECES | DESCRIPTION DESCRIPTION | MH | E | EP | | | REMARKS REMARQUES |
|---|---|---|---|---|---|---|---|---|
| 26 | 69G–44150–10 | SHIFT CAM ASSY<br>CAME D'INVERSION | 1 | 1 | 1 | | | L(21.7")<br>L(21.7") |
| | 69G–44150–20 | SHIFT CAM ASSY<br>CAME D'INVERSION | 1 | 1 | | | | X(24.4")<br>X(24.4") |
| 27 | 69G–45510–10 | DRIVE SHAFT ASSY<br>ARBRE MOTEUR (ENS.) | 1 | 1 | 1 | | | L(21.7")<br>L(21.7") |
| | 69G–45510–20 | DRIVE SHAFT ASSY<br>ARBRE MOTEUR (ENS.) | 1 | 1 | | | | X(24.4")<br>X(24.4") |
| 28 | 66R–45551–00 | PINION (13T)<br>PIGNON D'ATTAQUE (13D) | 1 | 1 | 1 | | | |
| 29 | 90179–08M06 | NUT<br>ECROU | 1 | 1 | 1 | | | |
| 30 | 66R–45560–01 | GEAR 1 (38T)<br>PIGNON 1 (38T) | 1 | 1 | 1 | | | |
| 31 | 66R–45571–00 | GEAR 2 (38T)<br>PIGNON 2 (38T) | 1 | 1 | 1 | | | |
| 32 | 626–45577–00 | SHIM (T:0.10MM)<br>CALE (T:0.10MM) | 1 | 1 | 1 | | | UR<br>UR |
| | 626–45577–10 | SHIM (T:0.20MM)<br>CALE (T:0.20MM) | 1 | 1 | 1 | | | UR<br>UR |
| | 626–45577–20 | SHIM (T:0.30MM)<br>CALE (T:0.30MM) | 1 | 1 | 1 | | | UR<br>UR |
| | 626–45577–30 | SHIM (T:0.40MM)<br>CALE (T:0.40MM) | 1 | 1 | 1 | | | UR<br>UR |
| | 626–45577–40 | SHIM (T:0.50MM)<br>CALE (T:0.50MM) | 1 | 1 | 1 | | | UR<br>UR |
| 33 | 90201–17682 | WASHER, PLATE<br>RONDELLE, PLATE | 1 | 1 | 1 | | | |
| 34 | 683–45611–00 | SHAFT, PROPELLER<br>ARBRE, HELICE | 1 | 1 | 1 | | | |
| 35 | 650–45635–00 | PLUNGER, SHIFT<br>POUSSOIR D'EMBRAYAGE | 1 | 1 | 1 | | | |
| 36 | 69G–45631–00 | CLUTCH, DOG<br>CRABOT | 1 | 1 | 1 | | | |
| 37 | 90250–05010 | PIN, STRAIGHT<br>GOUPILLE, DROITE | 1 | 1 | 1 | | | |
| 38 | 648–45633–11 | RING, CROSS PIN<br>JONC, GOUPILLE CRABOT | 1 | 1 | 1 | | | |
| 39 | 90501–14M09 | SPRING, COMPRESSION<br>RESSORT, COMPRESSION | 1 | 1 | 1 | | | |
| 40 | 66R–45361–00–8D | CAP, LOWER CASING<br>COUVERCLE, BOITIER D'HELICE | 1 | 1 | 1 | | | |
| 41 | 93306–00501 | BEARING<br>ROULEMENT | 1 | 1 | 1 | | | |
| 42 | 93315–317U2 | BEARING<br>ROULEMENT | 1 | 1 | 1 | | | |
| 43 | 93101–17054 | OIL SEAL<br>JOINT SPY | 2 | 2 | 2 | | | |
| 44 | 93210–74M68 | O-RING<br>JOINT TORIQUE | 1 | 1 | 1 | | | |
| 45 | 93210–74316 | O-RING<br>JOINT TORIQUE | 1 | 1 | 1 | | | |
| 46 | 97595–06525 | BOLT, WITH WASHER<br>VIS HEXAGONAL AVC RONDELLE | 2 | 2 | 2 | | | |

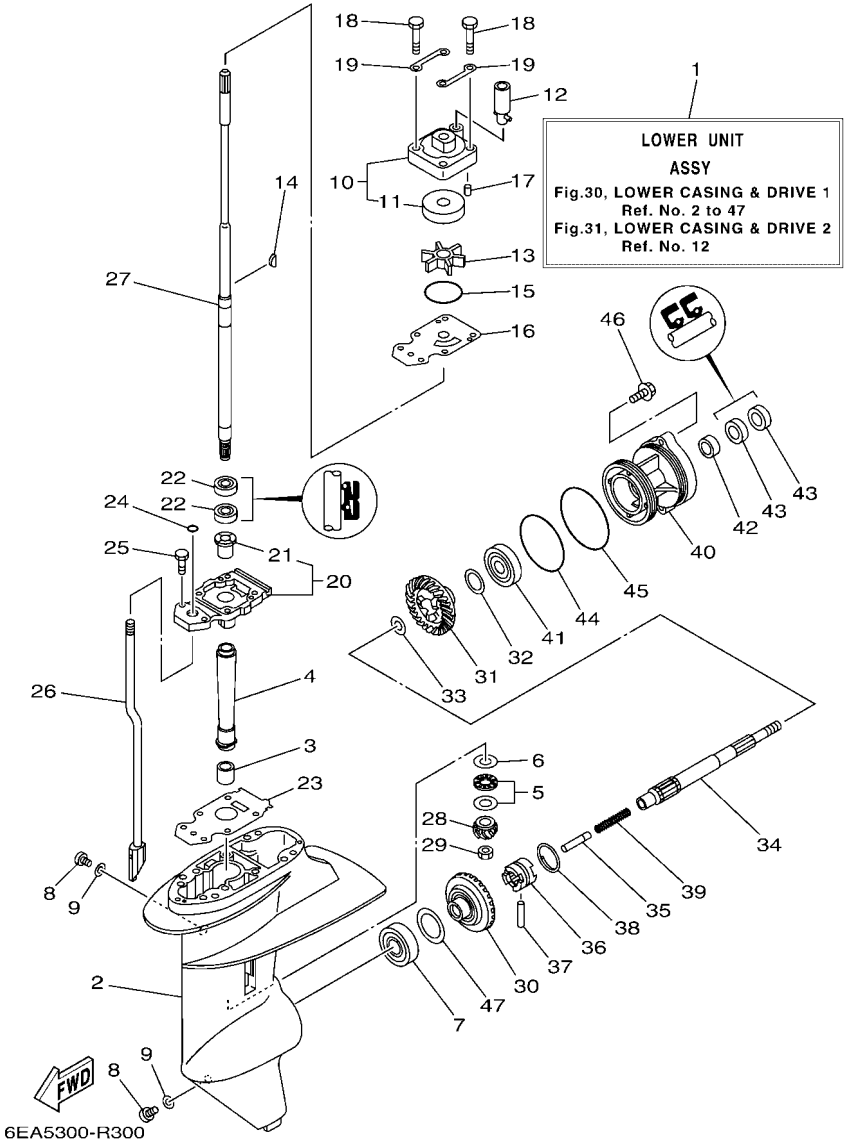


## FIG. 30 LOWER CASING & DRIVE 1 — BOITIER D'HELICE TRANSMISSION1

| REF. NO. | PART NO. N° PIECES | DESCRIPTION DESCRIPTION | MH | E | EP | | | REMARKS REMARQUES |
|---|---|---|---|---|---|---|---|---|
| 47 | 626–45577–00 | SHIM (T:0.10MM) | 1 | 1 | 1 | | | UR |
| | | CALE (T:0.10MM) | | | | | | UR |
| | 626–45577–10 | SHIM (T:0.20MM) | 1 | 1 | 1 | | | UR |
| | | CALE (T:0.20MM) | | | | | | UR |
| | 626–45577–20 | SHIM (T:0.30MM) | 1 | 1 | 1 | | | UR |
| | | CALE (T:0.30MM) | | | | | | UR |
| | 626–45577–30 | SHIM (T:0.40MM) | 1 | 1 | 1 | | | UR |
| | | CALE (T:0.40MM) | | | | | | UR |
| | 626–45577–40 | SHIM (T:0.50MM) | 1 | 1 | 1 | | | UR |
| | | CALE (T:0.50MM) | | | | | | UR |

## FIG. 31 LOWER CASING & DRIVE 2 — BOITIER D'HELICE TRANSMISSION2

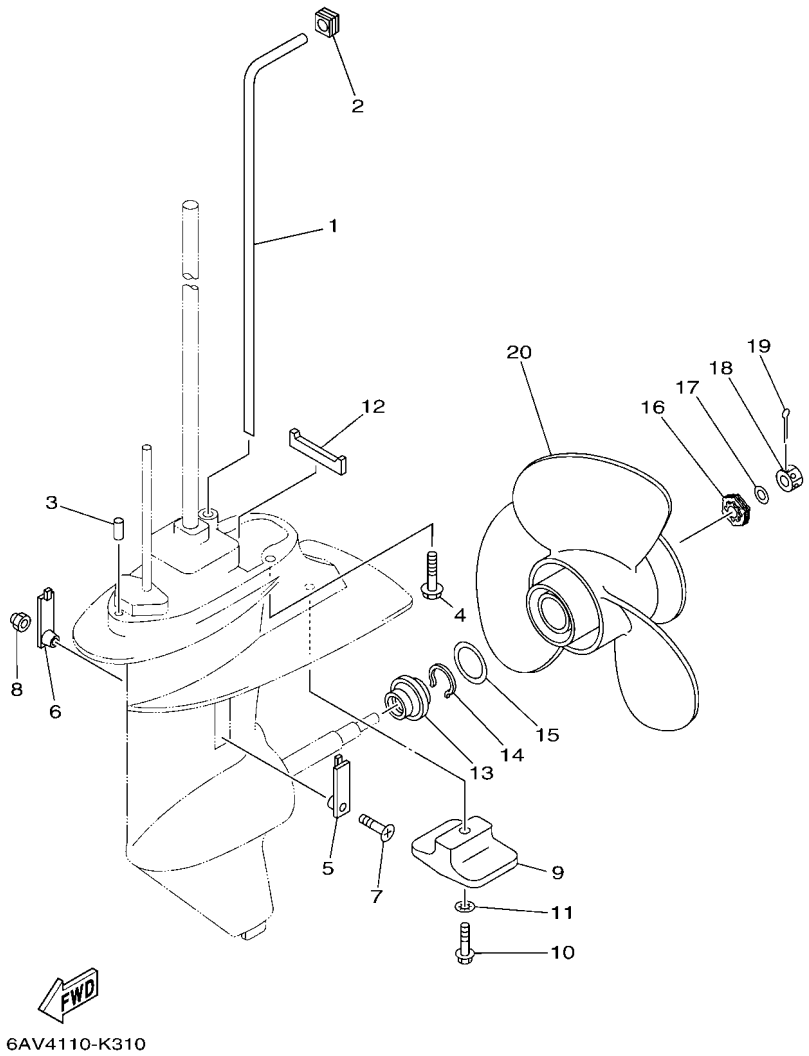


| REF. NO. | PART NO. N° PIECES | DESCRIPTION DESCRIPTION | MH | E | EP | | | REMARKS REMARQUES |
|---|---|---|---|---|---|---|---|---|
| 1 | 68T–44361–10 | TUBE, WATER 1<br>TUBE D'EAU 1 | 1 | 1 | 1 | | | L(21.7")<br>L(21.7") |
| | 69G–44361–20 | TUBE, WATER 1<br>TUBE D'EAU 1 | 1 | 1 | | | | X(24.4")<br>X(24.4") |
| 2 | 63V–44365–10 | DAMPER, WATER SEAL 1<br>JOINT, TUBE D'EAU 1 | 1 | 1 | 1 | | | |
| 3 | 93604–12M07 | PIN, DOWEL<br>CLAVETTE | 2 | 2 | 2 | | | |
| 4 | 97575–08535 | BOLT, WITH WASHER<br>VIS HEXAGONAL AVC RONDELLE | 4 | 4 | 4 | | | L(21.7")<br>L(21.7") |
| 5 | 6G1–45214–00 | COVER, WATER INLET 1<br>GRILLE, ENTREE D'EAU 1 | 1 | 1 | 1 | | | |
| 6 | 63V–45215–00 | COVER, WATER INLET 2<br>GRILLE, ENTREE D'EAU 2 | 1 | 1 | 1 | | | |
| 7 | 90152–05011 | SCREW, COUNTERSUNK<br>VIS, TETE NOYEE | 1 | 1 | 1 | | | |
| 8 | 90185–05002 | NUT, NYLON<br>ECROU,AUTO-BLOQUANT | 1 | 1 | 1 | | | |
| 9 | 61N–45251–01 | ANODE<br>ANODE | 1 | 1 | 1 | | | |
| 10 | 95895–06030 | BOLT, FLANGE<br>BOULON | 1 | 1 | 1 | | | |
| 11 | 92990–06300 | WASHER, INTERNAL TOOTH<br>RONDELLE, DENTURE INTERNE | 1 | 1 | 1 | | | |
| 12 | 63V–45375–00 | DAMPER, SEAL<br>BOURRELET, CAOUTCHOUC | 1 | 1 | 1 | | | |
| 13 | 6G8–45987–02 | SPACER 1<br>ENTRETOISE 1 | 1 | 1 | 1 | | | |
| 14 | 93450–10M04 | CIRCLIP<br>CIRCLIP | 1 | 1 | 1 | | | |
| 15 | 90201–31MA3 | WASHER, PLATE<br>RONDELLE, PLATE | 1 | 1 | 1 | | | |
| 16 | 6G8–45997–00 | SPACER 2<br>ENTRETOISE 2 | 1 | 1 | 1 | | | |
| 17 | 90201–10M02 | WASHER, PLATE<br>RONDELLE, PLATE | 1 | 1 | 1 | | | |
| 18 | 90171–10M07 | NUT, CASTLE<br>ECROU, CRENELE | 1 | 1 | 1 | | | |
| 19 | 91490–30025 | PIN. COTTER<br>GOUPILLE | 1 | 1 | 1 | | | |
| 20 | 69G–45941–00 | PROPELLER (3X11-3/4"X5-3/4"-R)<br>HELICE (3X11-3/4"X5-3/4"-R) | 1 | 1 | 1 | | | |

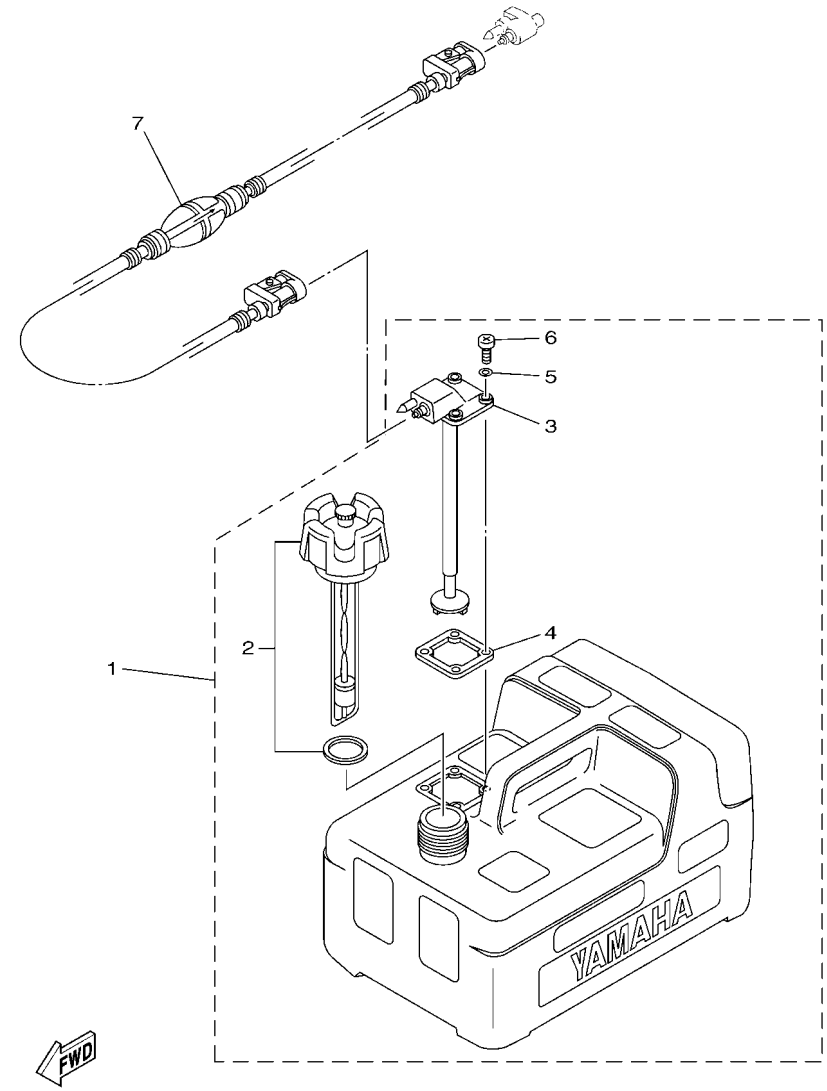


6FW1700-P250

## FIG. 32 FUEL TANK — RESERVOIR A CARBURANT

| REF. NO. | PART NO. N° PIECES | DESCRIPTION DESCRIPTION | MH | E | EP | | | REMARKS REMARQUES |
|---|---|---|---|---|---|---|---|---|
| 1 | 6YL–24201–06 | FUEL TANK ASSY (12L)<br>RESERVOIR A ESSENCE (ENS.) 12L | 1 | 1 | 1 | | | AP<br>AP |
| 2 | 6YL–24610–02 | .CAP ASSY<br>.BOUCHON | 1 | 1 | 1 | | | |
| 3 | 6YL–24260–10 | .FUEL METER ASSY<br>.INDICATEUR DE CARBURANT | 1 | 1 | 1 | | | |
| 4 | 6YL–24268–01 | .GASKET, FUEL METER<br>.JOINT, JAUGE A CARBURANT | 1 | 1 | 1 | | | |
| 5 | 6YL–24329–00 | .SEAL<br>.JOINT | 4 | 4 | 4 | | | |
| 6 | 90157–05M16 | .SCREW, PAN HEAD<br>.VIS, TETE TRONCONIQUE | 4 | 4 | 4 | | | |
| 7 | 6YL–24306–54 | FUEL PIPE COMP. 1<br>DURITE A ESSENCE 1 | 1 | 1 | 1 | | | AP<br>AP |

## FIG. 33 STEERING GUIDE — FIXATION DE DIRECTION

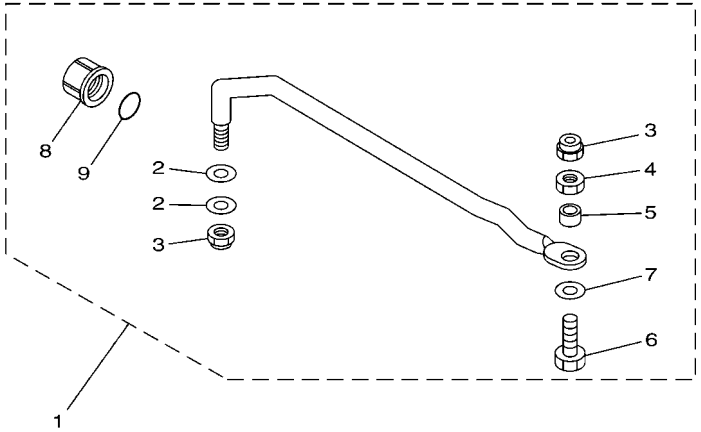


6AU1100-G300

| REF. NO. | PART NO. N° PIECES | DESCRIPTION DESCRIPTION | MH | E | EP | | | REMARKS REMARQUES |
|---|---|---|---|---|---|---|---|---|
| 1 | 68T–61350–10 | STEERING GUIDE ATTACHMENT KIT<br>FIXATIONS DE DIRECTION | 1 | 1 | 1 | | | AP<br>AP |
| 2 | 90201–10M20 | .WASHER, PLATE<br>.RONDELLE, PLATE | 2 | 2 | 2 | | | |
| 3 | 90185–09M01 | .NUT, SELF-LOCKING<br>.ECROU,AUTO-BLOQUANT | 2 | 2 | 2 | | | |
| 4 | 90170–09M03 | .NUT<br>.ECROU | 1 | 1 | 1 | | | |
| 5 | 90387–10M42 | .COLLAR<br>.COLLERETTE | 1 | 1 | 1 | | | |
| 6 | 6E5–61355–00 | .BOLT<br>.BOULON | 1 | 1 | 1 | | | |
| 7 | 90201–10M63 | .WASHER, PLATE<br>.RONDELLE, PLATE | 1 | 1 | 1 | | | |
| 8 | 6E5–43145–01 | .CAP, CLAMP BRACKET<br>.CAPUCHON, PRESSE | 1 | 1 | 1 | | | |
| 9 | 93210–16275 | .O-RING<br>.JOINT TORIQUE | 1 | 1 | 1 | | | |

## FIG. 34 REMOTE CONTROL BOX — BOITIER DE COMMANDE A DISTANCE

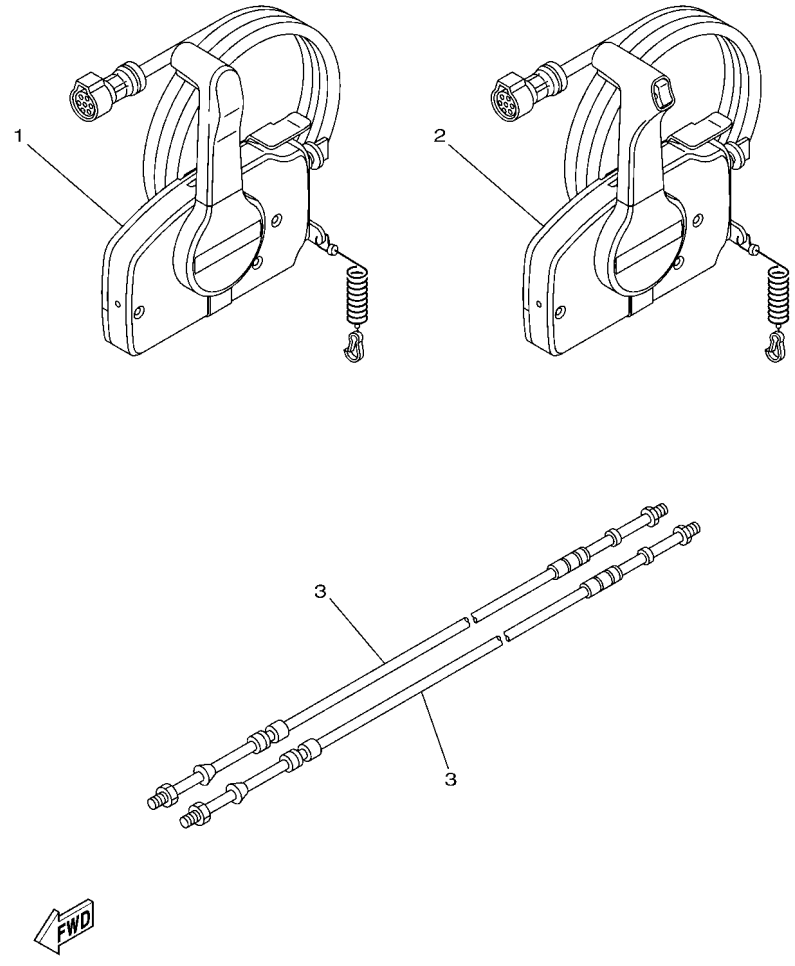


| REF. NO. | PART NO. N° PIECES | DESCRIPTION DESCRIPTION | MH | E | EP | | | REMARKS REMARQUES |
|---|---|---|---|---|---|---|---|---|
| 1 | 703–48201–21 | REMOTE CONTROL ASSY (10P)<br>BOITIER DE COMMANDE A DISTANCE | | 1 | | | | AP WITHOUT PT/T SW.<br>AP WITHOUT PT/T SW. |
| 2 | 703–48205–22 | REMOTE CONTROL ASSY (10P, PTT)<br>BOITIER DE COMMANDE A DISTANCE | | | 1 | | | AP WITH PT/T SW.<br>AP WITH PT/T SW. |
| 3 | 701–48310–80 | CABLE, REMOTE CONTROL L=10F<br>CABLE, COMMANDE A DISTANCE:10F | | 2 | 2 | | | UR<br>UR |
| | 701–48310–90 | CABLE, REMOTE CONTROL L=11F<br>CABLE, COMMANDE A DISTANCE:11F | | 2 | 2 | | | UR<br>UR |
| | 701–48320–00 | CABLE, REMOTE CONTROL L=12F<br>CABLE, COMMANDE A DISTANCE:12F | | 2 | 2 | | | UR<br>UR |

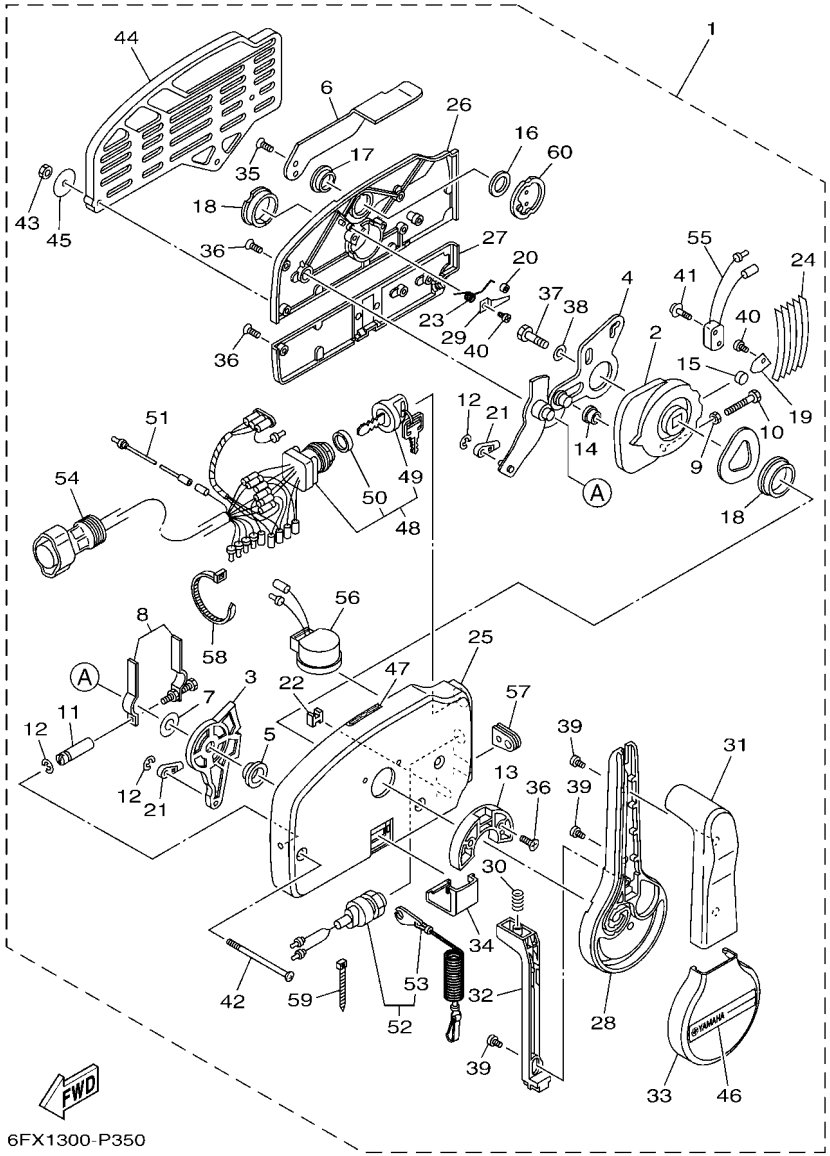


## FIG. 35 REMOTE CONTROL ASSY 1 — BOITIER DE COMMANDE A DISTANCE

| REF. NO. | PART NO. N° PIECES | DESCRIPTION DESCRIPTION | MH | E | EP | | | REMARKS REMARQUES |
|---|---|---|---|---|---|---|---|---|
| 1 | 703–48201–21 | REMOTE CONTROL ASSY (10P)<br>BOITIER DE COMMANDE A DISTANCE | | 1 | | | | AP WITHOUT PT/T SW.<br>AP WITHOUT PT/T SW. |
| 2 | 703–48232–00 | .GEAR<br>.PIGNON | | 1 | | | | |
| 3 | 703–48271–00 | .ARM, SHIFT<br>.BRAS | | 1 | | | | |
| 4 | 703–48261–01 | .ARM, THROTTLE<br>.BRAS, ACCELERATION | | 1 | | | | |
| 5 | 703–48235–00 | .BUSHING<br>.COUSSINET | | 1 | | | | |
| 6 | 703–48152–10 | .KNOB, FREE ACCEL.<br>.BOUTON | | 1 | | | | |
| 7 | 703–48268–00 | .SPACER<br>.ENTRETOISE | | 1 | | | | |
| 8 | 703–48264–00 | .FRICTION, THROTTLE<br>.FRICTION, ACCELERATION | | 1 | | | | |
| 9 | 95380–05600 | .NUT<br>.ECROU | | 1 | | | | |
| 10 | 97380–05025 | .BOLT<br>.BOULON, HEXAGONAL | | 1 | | | | |
| 11 | 703–48265–10 | .SHAFT, FRICTION<br>.AXE, COPILOTE | | 1 | | | | |
| 12 | 93430–06024 | .CIRCLIP<br>.CLIPS | | 3 | | | | |
| 13 | 703–48245–00 | .PLATE, LOCK<br>.PLAQUE, VERROU | | 1 | | | | |
| 14 | 703–48252–00 | .ROLLER, CAM<br>.POULIE | | 1 | | | | |
| 15 | 701–48248–00 | .ROLLER, FREE ACCEL.<br>.POULIE | | 1 | | | | |
| 16 | 703–48198–00 | .WASHER, WAVE<br>.RONDELLE, ELASTIQUE ONDULEE | | 1 | | | | |
| 17 | 703–48243–00 | .BUSHING<br>.COUSSINET | | 1 | | | | |
| 18 | 703–48236–00 | .BUSHING 1<br>.POULIE | | 2 | | | | |
| 19 | 703–48189–00 | .RETAINER<br>.FLASQUE | | 1 | | | | |
| 20 | 703–48234–00 | .ROLLER, DETENT<br>.POULIE | | 1 | | | | |
| 21 | 703–48345–01 | .CABLE END, REMOTE CONTROL 2<br>.CHAPE CABLE | | 2 | | | | |
| 22 | 703–48358–00 | .ANCHOR, CABLE<br>.COLLIER | | 1 | | | | |
| 23 | 703–48244–00 | .SPRING, FREE ACCEL.<br>.RESSORT | | 1 | | | | |
| 24 | 703–48238–00 | .SPRING, DETENT<br>.RESSORT | | 5 | | | | |
| 25 | 703–48211–10 | .HOUSING,1<br>.CORPS | | 1 | | | | |
| 26 | 703–48212–10 | .BACK PLATE 1<br>.PLAQUETTE 1 | | 1 | | | | |
| 27 | 703–48213–10 | .BACK PLATE 2<br>.PLAQUETTE 2 | | 1 | | | | |

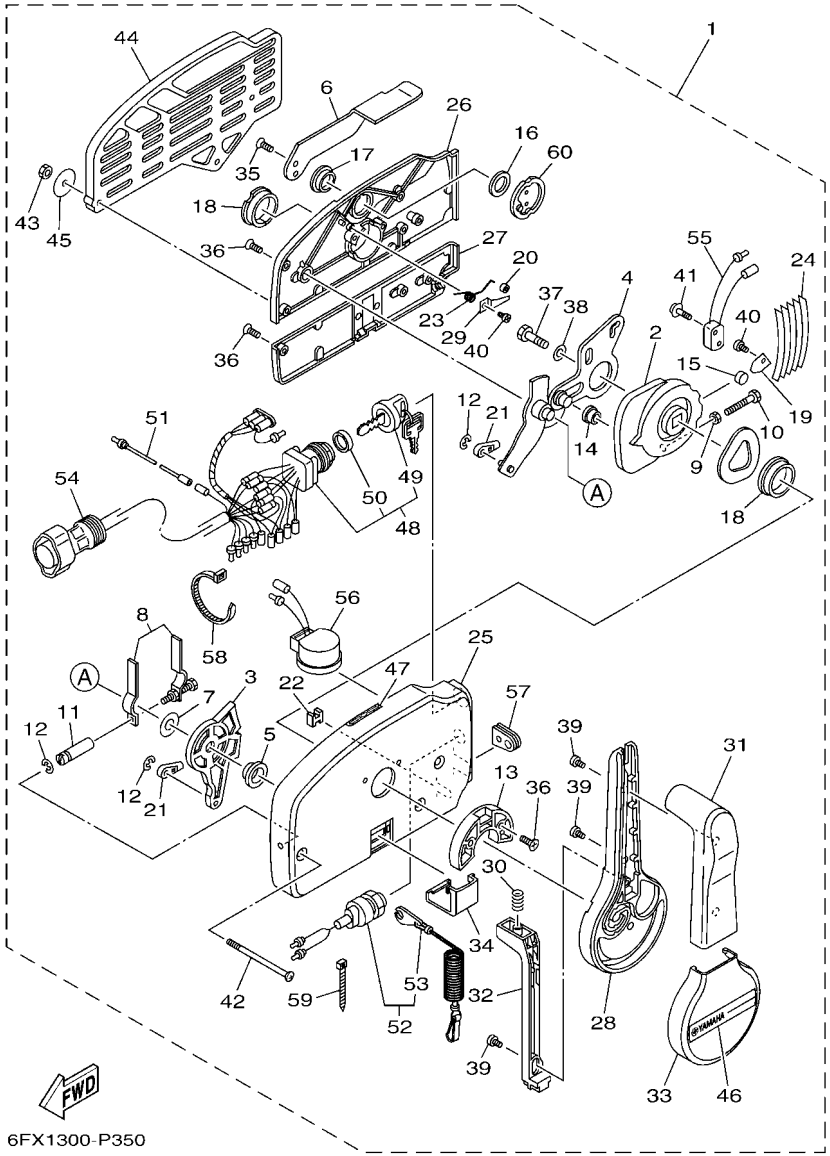


## FIG. 35 REMOTE CONTROL ASSY 1 — BOITIER DE COMMANDE A DISTANCE

| REF. NO. | PART NO. N° PIECES | DESCRIPTION DESCRIPTION | MH | E | EP | | | REMARKS REMARQUES |
|---|---|---|---|---|---|---|---|---|
| 28 | 703–48221–10 | .LEVER, CONTROL<br>.LEVIER, COMMANDE | | 1 | | | | |
| 29 | 703–48246–00 | .SPACER<br>.ENTRETOISE | | 1 | | | | |
| 30 | 703–48227–00 | .SPRING, NEUTRAL LOCK<br>.RESSORT | | 1 | | | | |
| 31 | 703–48222–30 | .GRIP, CONTROL LEVER<br>.POIGNEE, COMMANDE LEVIER | | 1 | | | | SINGLE<br>SINGLE |
| 32 | 703–48223–10 | .LOCK, NEUTRAL<br>.VERROU, NEUTRAL | | 1 | | | | |
| 33 | 703–48225–10 | .COVER<br>.COUVERCLE | | 1 | | | | |
| 34 | 703–48219–10 | .COVER, LEAD<br>.COUVERCLE | | 1 | | | | |
| 35 | 703–48281–00 | .SCREW<br>.VIS | | 2 | | | | |
| 36 | 703–44189–20 | .SCREW<br>.VIS | | 7 | | | | |
| 37 | 97380–08030 | .BOLT<br>.BOULON, HEXAGONAL | | 1 | | | | |
| 38 | 92990–08600 | .WASHER, PLATE<br>.RONDELLE, PLATE | | 1 | | | | |
| 39 | 703–48128–10 | .SCREW 2<br>.VIS 2 | | 3 | | | | |
| 40 | 98580–04006 | .SCREW, PAN HEAD<br>.VIS | | 2 | | | | |
| 41 | 703–48129–00 | .SCREW 3<br>.VIS 3 | | 2 | | | | |
| 42 | 703–44189–30 | .SCREW<br>.VIS | | 3 | | | | |
| 43 | 95380–06600 | .NUT, HEXAGON<br>.ECROU | | 3 | | | | |
| 44 | 703–48293–10 | .SPACER, REMOTE CONTROL<br>.ENTRETOISE | | 1 | | | | SINGLE<br>SINGLE |
| 45 | 701–48287–00 | .WASHER<br>.RONDELLE | | 3 | | | | |
| 46 | 703–48215–10 | .GRAPHIC<br>.ADHESIF | | 1 | | | | |
| 47 | 6X3–44191–00 | .INDICATOR, SHIFT<br>.ETIQUETTE, EMBRAYAGE | | 1 | | | | |
| 48 | 703–82510–44 | .MAIN SWITCH ASSY<br>.CONTACTEUR A CLEF COMPLET | | 1 | | | | |
| 49 | 703–82577–00 | ..CAP, KEY<br>..CABOCHON | | 1 | | | | |
| 50 | 6K1–82532–00 | ..CAP<br>..COUVERCLE | | 1 | | | | |
| 51 | 703–82531–00 | .WIRE, LEAD (L70)<br>.FIL (L70) | | 1 | | | | |
| 52 | 688–82575–02 | .ENGINE STOP SWITCH ASSY<br>.COUPE CIRCUIT CPLT | | 1 | | | | |
| 53 | 682–82556–00 | ..LANYARD, STOP SWITCH<br>..CORDON DU COUPE CIRCUIT | | 1 | | | | |
| 54 | 688–8258A–20 | .EXTENSION, WIRE HARNESS (4.9M)<br>.EXTENSION, FAISCEAU DE FILS (4 | | 1 | | | | (10P)<br>(10P) |

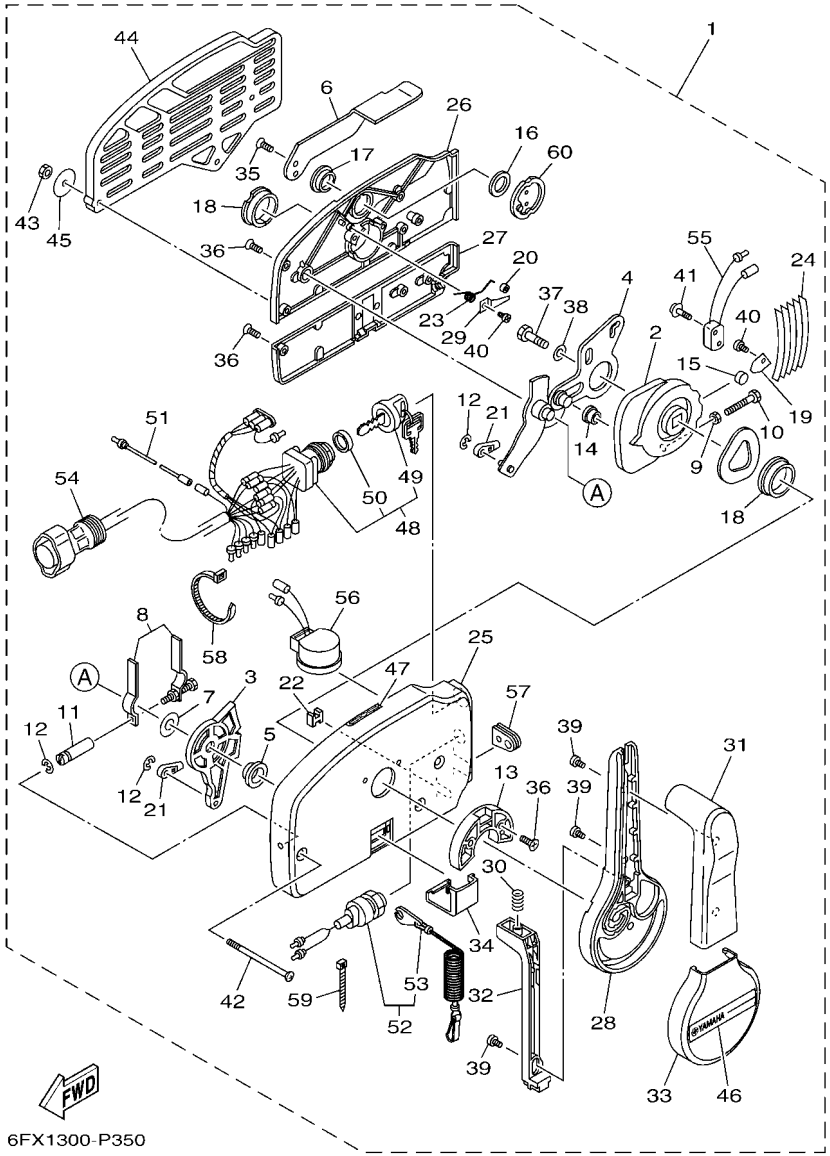


## FIG. 35 REMOTE CONTROL ASSY 1 — BOITIER DE COMMANDE A DISTANCE

| REF. NO. | PART NO. N° PIECES | DESCRIPTION DESCRIPTION | MH | E | EP | | | REMARKS REMARQUES |
|---|---|---|---|---|---|---|---|---|
| 55 | 703–82540–00 | .NEUTRAL SWITCH ASSY<br>.CONTACTEUR DE POINT-MORT | | 1 | | | | |
| 56 | 703–83383–11 | .BUZZER<br>.RONFLEUR | | 1 | | | | |
| 57 | 703–48284–00 | .GROMMET<br>.PASSE-FIL | | 1 | | | | |
| 58 | 703–82591–00 | .BAND<br>.COLLIER | | 1 | | | | |
| 59 | 703–82592–00 | .BAND<br>.COLLIER | | 1 | | | | |
| 60 | 703–48153–00 | .SHAFT, FREE ACCEL.<br>.AXE | | 1 | | | | |

## FIG. 36 REMOTE CONTROL ASSY 2 — BOITIER DE COMMANDE A DISTANCE

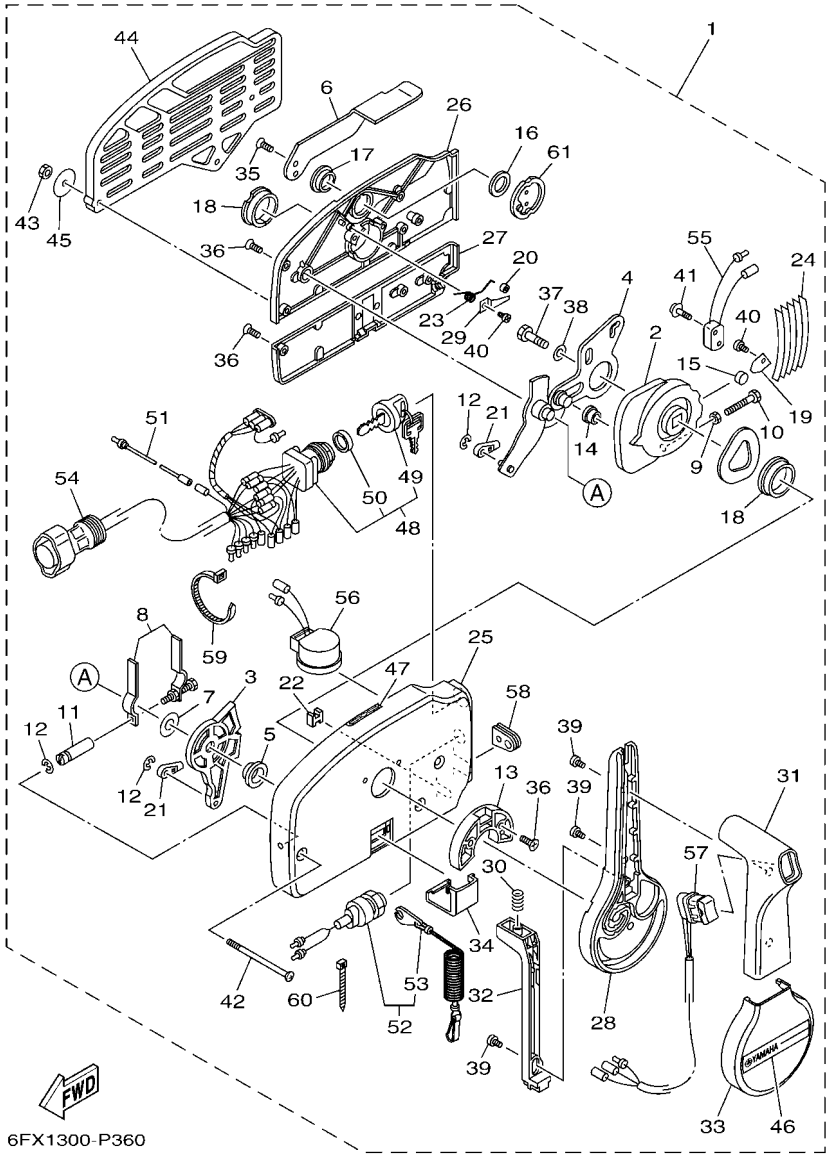


| REF. NO. | PART NO. N° PIECES | DESCRIPTION DESCRIPTION | MH | E | EP | | | REMARKS REMARQUES |
|---|---|---|---|---|---|---|---|---|
| 1 | 703–48205–22 | REMOTE CONTROL ASSY (10P, PTT)<br>BOITIER DE COMMANDE A DISTANCE | | | 1 | | | AP WITH PT/T SW.<br>AP WITH PT/T SW. |
| 2 | 703–48232–00 | .GEAR<br>.PIGNON | | | 1 | | | |
| 3 | 703–48271–00 | .ARM, SHIFT<br>.BRAS | | | 1 | | | |
| 4 | 703–48261–01 | .ARM, THROTTLE<br>.BRAS, ACCELERATION | | | 1 | | | |
| 5 | 703–48235–00 | .BUSHING<br>.COUSSINET | | | 1 | | | |
| 6 | 703–48152–10 | .KNOB, FREE ACCEL.<br>.BOUTON | | | 1 | | | |
| 7 | 703–48268–00 | .SPACER<br>.ENTRETOISE | | | 1 | | | |
| 8 | 703–48264–00 | .FRICTION, THROTTLE<br>.FRICTION, ACCELERATION | | | 1 | | | |
| 9 | 95380–05600 | .NUT<br>.ECROU | | | 1 | | | |
| 10 | 97380–05025 | .BOLT<br>.BOULON, HEXAGONAL | | | 1 | | | |
| 11 | 703–48265–10 | .SHAFT, FRICTION<br>.AXE, COPILOTE | | | 1 | | | |
| 12 | 93430–06024 | .CIRCLIP<br>.CLIPS | | | 3 | | | |
| 13 | 703–48245–00 | .PLATE, LOCK<br>.PLAQUE, VERROU | | | 1 | | | |
| 14 | 703–48252–00 | .ROLLER, CAM<br>.POULIE | | | 1 | | | |
| 15 | 701–48248–00 | .ROLLER, FREE ACCEL.<br>.POULIE | | | 1 | | | |
| 16 | 703–48198–00 | .WASHER, WAVE<br>.RONDELLE, ELASTIQUE ONDULEE | | | 1 | | | |
| 17 | 703–48243–00 | .BUSHING<br>.COUSSINET | | | 1 | | | |
| 18 | 703–48236–00 | .BUSHING 1<br>.POULIE | | | 2 | | | |
| 19 | 703–48189–00 | .RETAINER<br>.FLASQUE | | | 1 | | | |
| 20 | 703–48234–00 | .ROLLER, DETENT<br>.POULIE | | | 1 | | | |
| 21 | 703–48345–01 | .CABLE END, REMOTE CONTROL 2<br>.CHAPE CABLE | | | 2 | | | |
| 22 | 703–48358–00 | .ANCHOR, CABLE<br>.COLLIER | | | 1 | | | |
| 23 | 703–48244–00 | .SPRING, FREE ACCEL.<br>.RESSORT | | | 1 | | | |
| 24 | 703–48238–00 | .SPRING, DETENT<br>.RESSORT | | | 5 | | | |
| 25 | 703–48211–10 | .HOUSING,1<br>.CORPS | | | 1 | | | |
| 26 | 703–48212–10 | .BACK PLATE 1<br>.PLAQUETTE 1 | | | 1 | | | |
| 27 | 703–48213–10 | .BACK PLATE 2<br>.PLAQUETTE 2 | | | 1 | | | |

## FIG. 36 REMOTE CONTROL ASSY 2 — BOITIER DE COMMANDE A DISTANCE

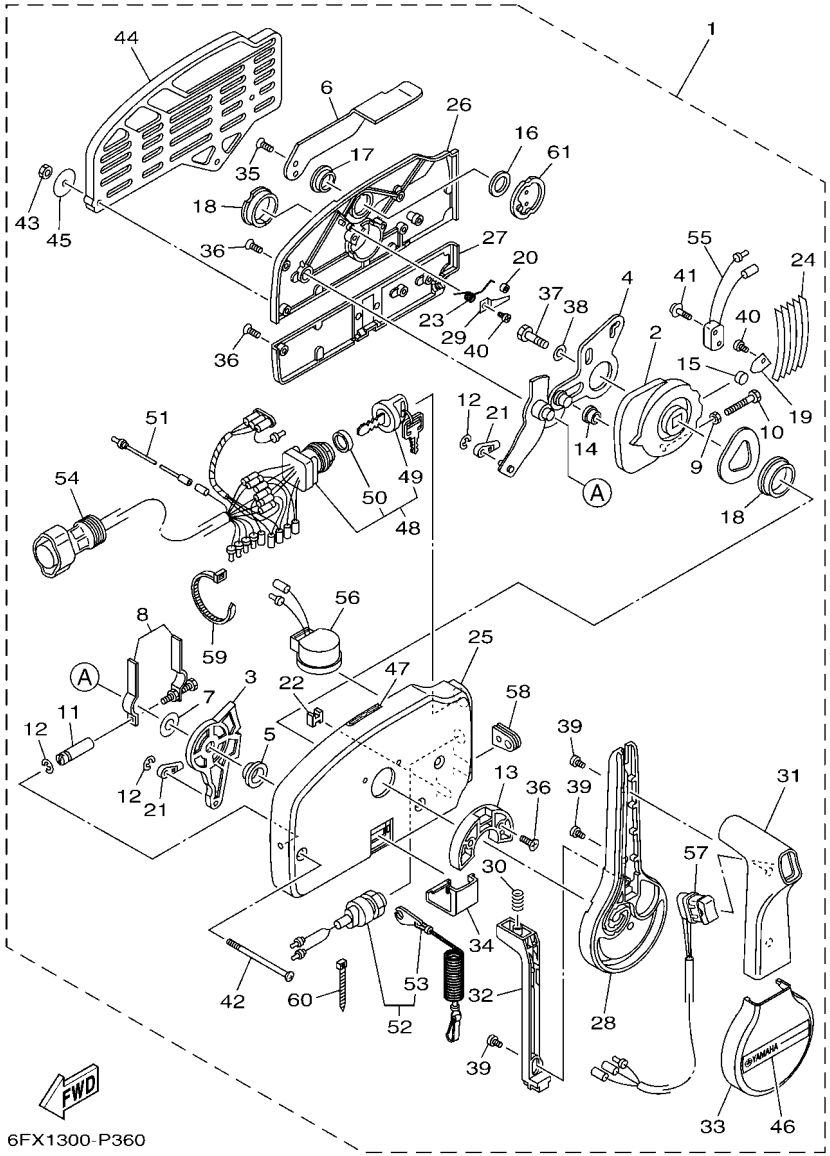


| REF. NO. | PART NO. N° PIECES | DESCRIPTION DESCRIPTION | MH | E | EP | | | REMARKS REMARQUES |
|---|---|---|---|---|---|---|---|---|
| 28 | 703–48221–10 | .LEVER, CONTROL<br>.LEVIER, COMMANDE | | | 1 | | | |
| 29 | 703–48246–00 | .SPACER<br>.ENTRETOISE | | | 1 | | | |
| 30 | 703–48227–00 | .SPRING, NEUTRAL LOCK<br>.RESSORT | | | 1 | | | |
| 31 | 703–48222–20 | .GRIP, CONTROL LEVER<br>.POIGNEE, COMMANDE LEVIER | | | 1 | | | SINGLE<br>SINGLE |
| 32 | 703–48223–10 | .LOCK, NEUTRAL<br>.VERROU, NEUTRAL | | | 1 | | | |
| 33 | 703–48225–10 | .COVER<br>.COUVERCLE | | | 1 | | | |
| 34 | 703–48219–10 | .COVER, LEAD<br>.COUVERCLE | | | 1 | | | |
| 35 | 703–48281–00 | .SCREW<br>.VIS | | | 2 | | | |
| 36 | 703–44189–20 | .SCREW<br>.VIS | | | 7 | | | |
| 37 | 97380–08030 | .BOLT<br>.BOULON, HEXAGONAL | | | 1 | | | |
| 38 | 92990–08600 | .WASHER, PLATE<br>.RONDELLE, PLATE | | | 1 | | | |
| 39 | 703–48128–10 | .SCREW 2<br>.VIS 2 | | | 3 | | | |
| 40 | 98580–04006 | .SCREW, PAN HEAD<br>.VIS | | | 2 | | | |
| 41 | 703–48129–00 | .SCREW 3<br>.VIS 3 | | | 2 | | | |
| 42 | 703–44189–30 | .SCREW<br>.VIS | | | 3 | | | |
| 43 | 95380–06600 | .NUT, HEXAGON<br>.ECROU | | | 3 | | | |
| 44 | 703–48293–10 | .SPACER, REMOTE CONTROL<br>.ENTRETOISE | | | 1 | | | SINGLE<br>SINGLE |
| 45 | 701–48287–00 | .WASHER<br>.RONDELLE | | | 3 | | | |
| 46 | 703–48215–10 | .GRAPHIC<br>.ADHESIF | | | 1 | | | |
| 47 | 6X3–44191–00 | .INDICATOR, SHIFT<br>.ETIQUETTE, EMBRAYAGE | | | 1 | | | |
| 48 | 703–82510–44 | .MAIN SWITCH ASSY<br>.CONTACTEUR A CLEF COMPLET | | | 1 | | | |
| 49 | 703–82577–00 | ..CAP, KEY<br>..CABOCHON | | | 1 | | | |
| 50 | 6K1–82532–00 | ..CAP<br>..COUVERCLE | | | 1 | | | |
| 51 | 703–82531–00 | .WIRE, LEAD (L70)<br>.FIL (L70) | | | 1 | | | |
| 52 | 688–82575–02 | .ENGINE STOP SWITCH ASSY<br>.COUPE CIRCUIT CPLT | | | 1 | | | |
| 53 | 682–82556–00 | ..LANYARD, STOP SWITCH<br>..CORDON DU COUPE CIRCUIT | | | 1 | | | |
| 54 | 688–8258A–20 | .EXTENSION, WIRE HARNESS (4.9M)<br>.EXTENSION, FAISCEAU DE FILS (4 | | | 1 | | | (10P)<br>(10P) |

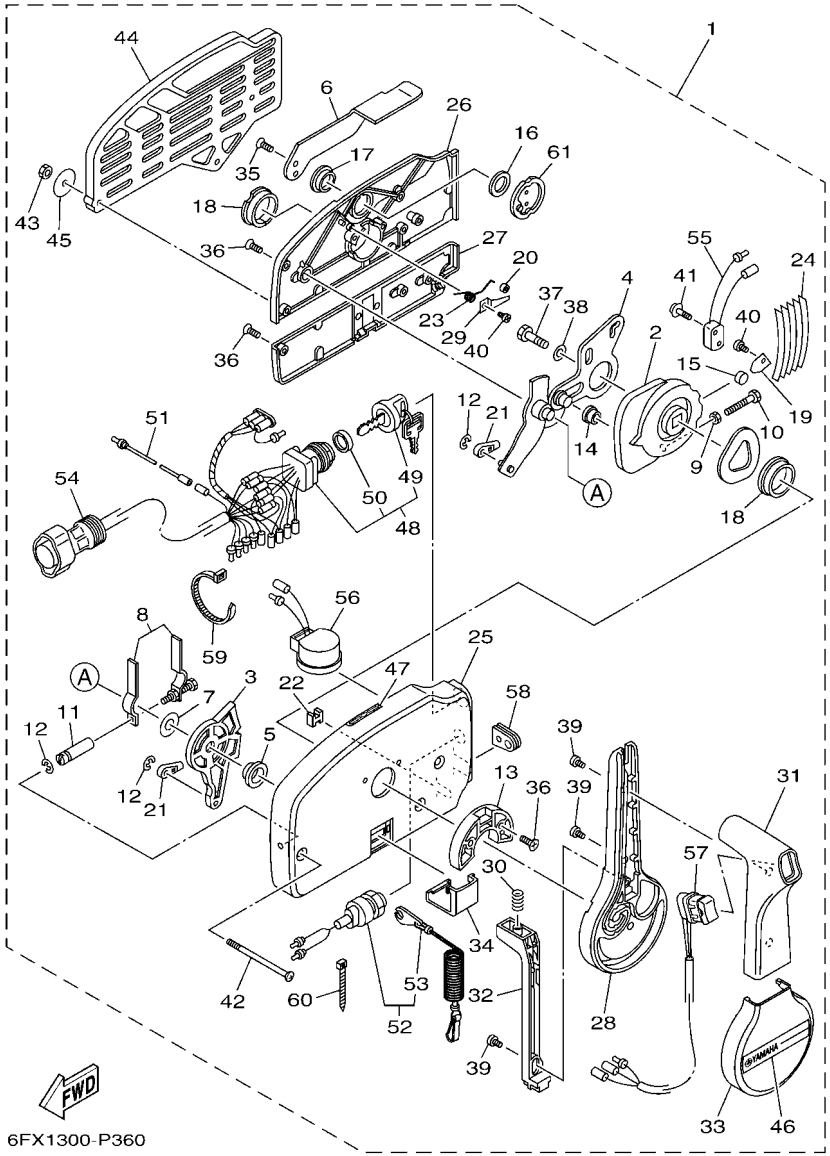


| REF. NO. | PART NO. N° PIECES | DESCRIPTION DESCRIPTION | MH | E | EP | | | REMARKS REMARQUES |
|---|---|---|---|---|---|---|---|---|
| 55 | 703–82540–00 | .NEUTRAL SWITCH ASSY<br>.CONTACTEUR DE POINT-MORT | | | 1 | | | |
| 56 | 703–83383–11 | .BUZZER<br>.RONFLEUR | | | 1 | | | |
| 57 | 703–82563–31 | .TRIM & TILT SWITCH ASSY<br>.INCLINER ET PARER COMMUTATEUR | | | 1 | | | |
| 58 | 703–48284–00 | .GROMMET<br>.PASSE-FIL | | | 1 | | | |
| 59 | 703–82591–00 | .BAND<br>.COLLIER | | | 1 | | | |
| 60 | 703–82592–00 | .BAND<br>.COLLIER | | | 1 | | | |
| 61 | 703–48153–00 | .SHAFT, FREE ACCEL.<br>.AXE | | | 1 | | | |

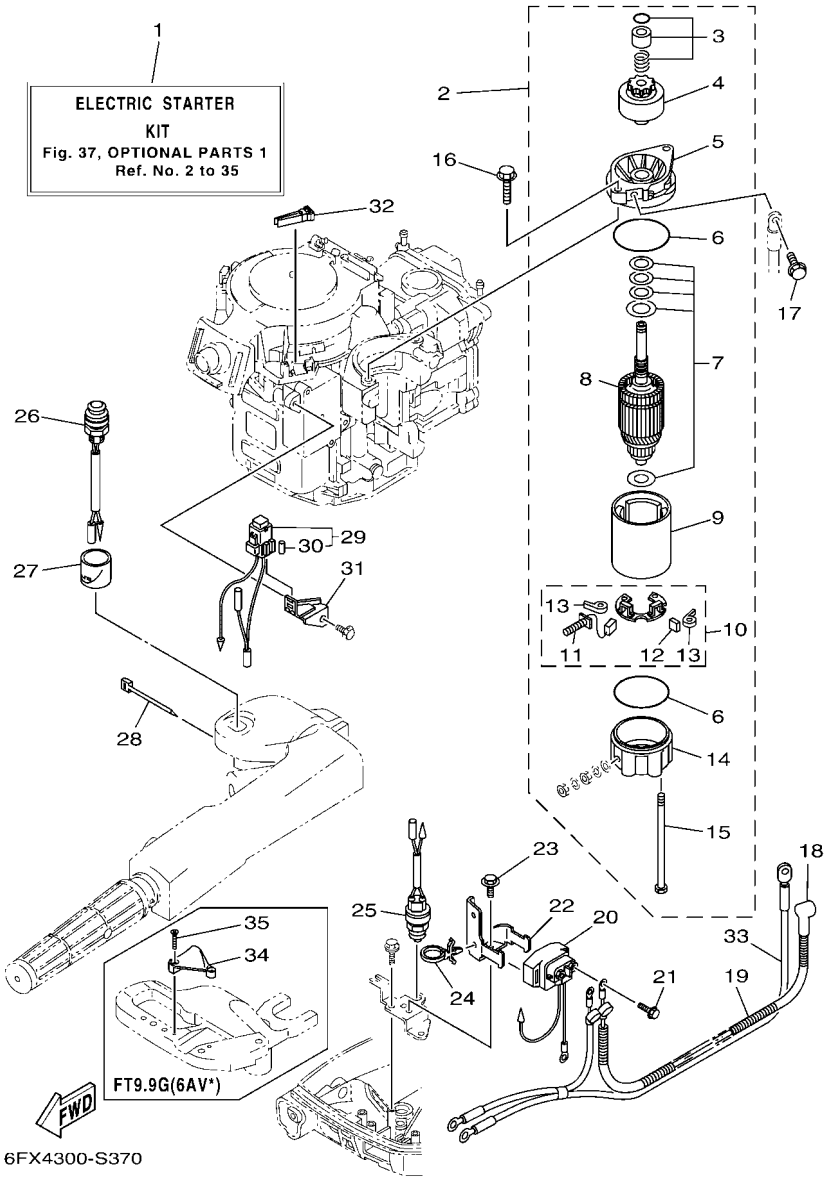


## FIG. 37 OPTIONAL PARTS 1 — PIECES OPTIONNELLES 1

| REF. NO. | PART NO. N° PIECES | DESCRIPTION DESCRIPTION | MH | E | EP | | | REMARKS REMARQUES |
|---|---|---|---|---|---|---|---|---|
| 1 | 6DR–W8180–00 | ELECTRIC STARTER KIT<br>KIT DEMARREUR ELECTRIQUE | 1 | | | | | |
| 2 | 68T–81800–00 | STARTING MOTOR ASSY<br>DEMARREUR ELECTRIQUE COMPLET | 1 | | | | | |
| 3 | 68T–81857–00 | .PINION STOPPER SET<br>.BUTEE PIGNON | 1 | | | | | |
| 4 | 689–81807–12 | .GEAR ASSY, STARTING MOTOR<br>.PIGNON, DEMARREUR ELECTRIQUE | 1 | | | | | |
| 5 | 6F5–81830–10 | .FRONT BRACKET ASSY<br>.SUPPORT AVANT | 1 | | | | | |
| 6 | 689–81847–11 | .O-RING<br>.JOINT TORIQUE | 2 | | | | | |
| 7 | 689–81809–11 | .WASHER KIT<br>.JEU DE RONDELLES | 1 | | | | | |
| 8 | 689–81850–11 | .ARMATURE ASSY<br>.INDUIT | 1 | | | | | |
| 9 | 689–81810–11 | .STATOR ASSY<br>.STATOR COMPLET | 1 | | | | | |
| 10 | 689–81840–11 | .BRUSH HOLDER ASSY<br>.SUPPORT DE CHARBON | 1 | | | | | |
| 11 | 689–81811–11 | ..BRUSH 1<br>..CHARBON 1 | 1 | | | | | |
| 12 | 689–81812–11 | ..BRUSH 2<br>..CHARBON 2 | 1 | | | | | |
| 13 | 689–81813–10 | ..SPRING, BRUSH<br>..RESSORT, DE CHARBON | 2 | | | | | |
| 14 | 689–81820–11 | .REAR BRACKET ASSY<br>.SUPPORT ARRIERE COMPLET | 1 | | | | | |
| 15 | 689–81826–10 | .BOLT<br>.BOULON | 2 | | | | | |
| 16 | 90119–08M76 | BOLT, WITH WASHER<br>BOULON, AVEC RONDELLE | 2 | | | | | |
| 17 | 97595–08516 | BOLT, WITH WASHER<br>VIS HEXAGONAL AVC RONDELLE | 1 | | | | | |
| 18 | 6G8–82117–00 | WIRE, LEAD<br>FIL | 1 | | | | | |
| 19 | 90446–10M86 | HOSE (L140)<br>DURITE (L140) | 1 | | | | | |
| 20 | 68T–81940–00 | STARTER RELAY ASSY<br>LANCEUR RELAIS (ENS.) | 1 | | | | | |
| 21 | 97595–06610 | BOLT, WITH WASHER<br>VIS HEXAGONAL AVC RONDELLE | 2 | | | | | |
| 22 | 68T–81945–01 | PLATE, SWITCH FITTING<br>PLAQUE, FIXATION DU RELAIS | 1 | | | | | |
| 23 | 97595–06512 | BOLT, WITH WASHER<br>VIS HEXAGONAL AVC RONDELLE | 1 | | | | | |
| 24 | 90465–12M56 | CLAMP<br>BRIDE | 1 | | | | | |
| 25 | 6F5–82540–01 | NEUTRAL SWITCH ASSY<br>CONTACTEUR DE POINT-MORT | 1 | | | | | |
| 26 | 68T–81870–00 | STARTING SWITCH ASSY<br>CONTACT A CLEF | 1 | | | | | |
| 27 | 68T–81821–00 | COVER, SWITCH<br>COUVERCLE, COMMUTATEUR | 1 | | | | | |

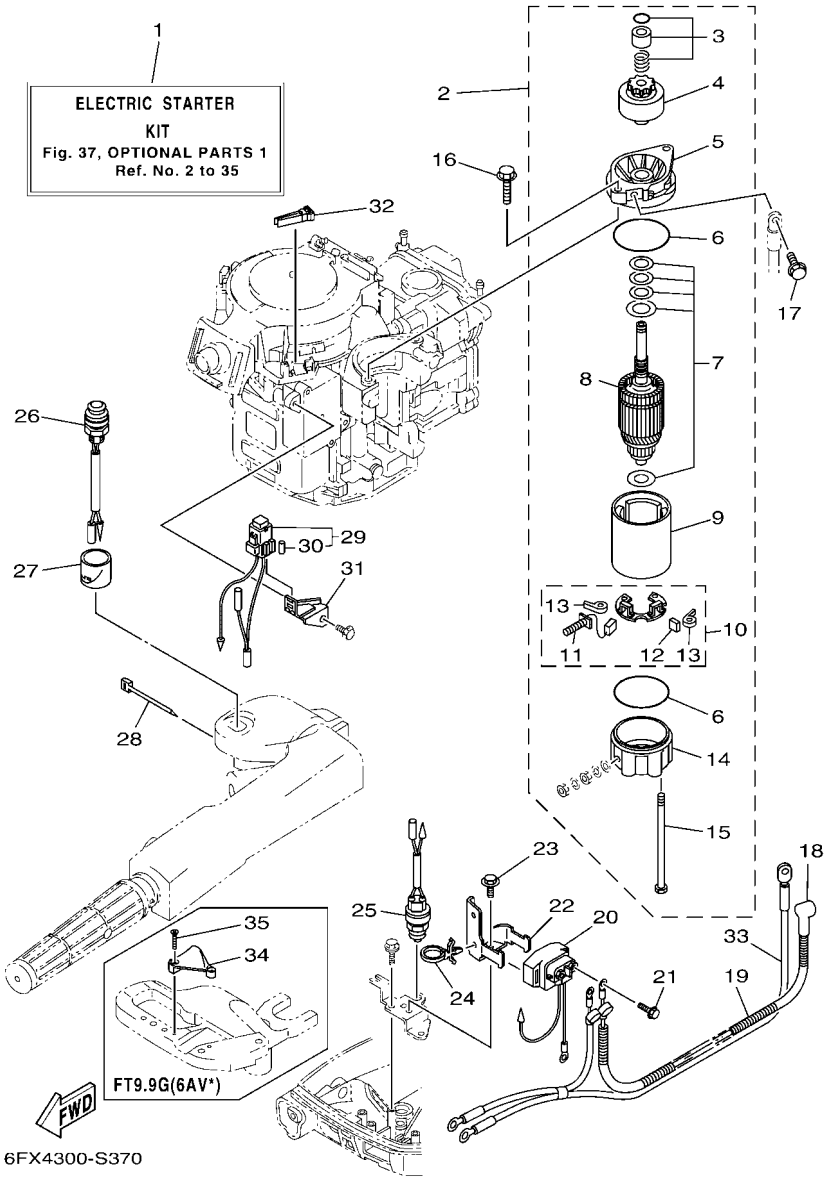


## FIG. 37 OPTIONAL PARTS 1 — PIECES OPTIONNELLES 1

| REF. NO. | PART NO. N° PIECES | DESCRIPTION DESCRIPTION | MH | E | EP | | | REMARKS REMARQUES |
|---|---|---|---|---|---|---|---|---|
| 28 | 90465–11M10 | CLAMP<br>BRIDE | 1 | | | | | |
| 29 | 68T–82150–00 | FUSE HOLDER ASSY<br>SUPPORT DE FUSIBLE | 1 | | | | | |
| 30 | 66V–82151–00 | .FUSE (10A-BL)<br>.FUSIBLE (10A-BL) | 2 | | | | | |
| 31 | 68T–82171–01 | STAY, FUSE BOX<br>SUPPORT, BOITE A FUSIBLES | 1 | | | | | |
| 32 | 67F–2812A–00 | PULLER, FUSE<br>TENDEUR, FUSIBLE | 1 | | | | | |
| 33 | 68T–82105–01 | BATTERY CABLE (L: 2.1M)<br>CABLE DE BATTERIE (L: 2.1M) | 1 | | | | | |
| 34 | 68T–82594–00 | CLAMP<br>BRIDE | 1 | | | | | |
| 35 | 90151–05003 | SCREW, COUNTERSUNK<br>VIS, TETE NOYEE | 2 | | | | | |

## FIG. 38 OPTIONAL PARTS 2 — PIECES OPTIONNELLES 2

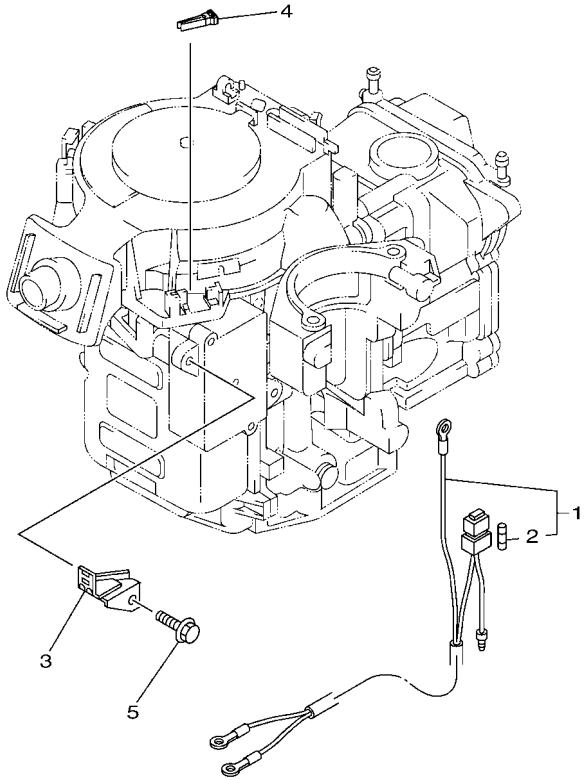

6EA510K-R330

| REF. NO. | PART NO. N° PIECES | DESCRIPTION DESCRIPTION | MH | E | EP | | | REMARKS REMARQUES |
|---|---|---|---|---|---|---|---|---|
| 1 | 68T–81949–00 | WIRE, LEAD<br>FIL | 1 | | | | | |
| 2 | 66V–82151–00 | .FUSE (10A-BL)<br>.FUSIBLE (10A-BL) | 2 | | | | | |
| 3 | 68T–82171–01 | STAY, FUSE BOX<br>SUPPORT, BOITE A FUSIBLES | 1 | | | | | |
| 4 | 67F–2812A–00 | PULLER, FUSE<br>TENDEUR, FUSIBLE | 1 | | | | | |
| 5 | 97595–06512 | BOLT, WITH WASHER<br>VIS HEXAGONAL AVC RONDELLE | 1 | | | | | |

## FIG. 39 OPTIONAL PARTS 3 — PIECES OPTIONNELLES 3

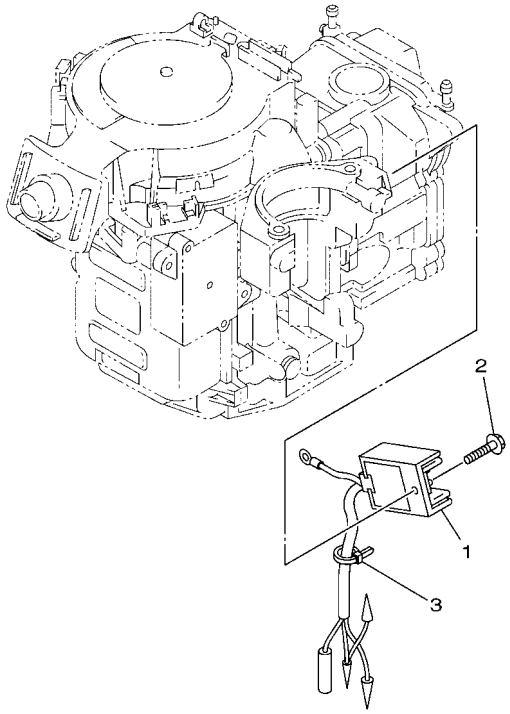

6EA5300-R390

| REF. NO. | PART NO. N° PIECES | DESCRIPTION DESCRIPTION | MH | E | EP | | | REMARKS REMARQUES |
|---|---|---|---|---|---|---|---|---|
| 1 | 68T–81960–00 | RECTIFIER & REGULATOR ASSY<br>REDRESSEUR REGULATEUR CPLT | 1 | | | | | FOR REC/REG KIT<br>FOR REC/REG KIT |
| 2 | 97595–06512 | BOLT, WITH WASHER<br>VIS HEXAGONAL AVC RONDELLE | 1 | | | | | FOR REC/REG KIT<br>FOR REC/REG KIT |
| 3 | 90465–11M10 | CLAMP<br>BRIDE | 2 | | | | | FOR REC/REG KIT<br>FOR REC/REG KIT |

## FIG. 40 REPAIR KIT 1 — KITS DE REPARATION 1

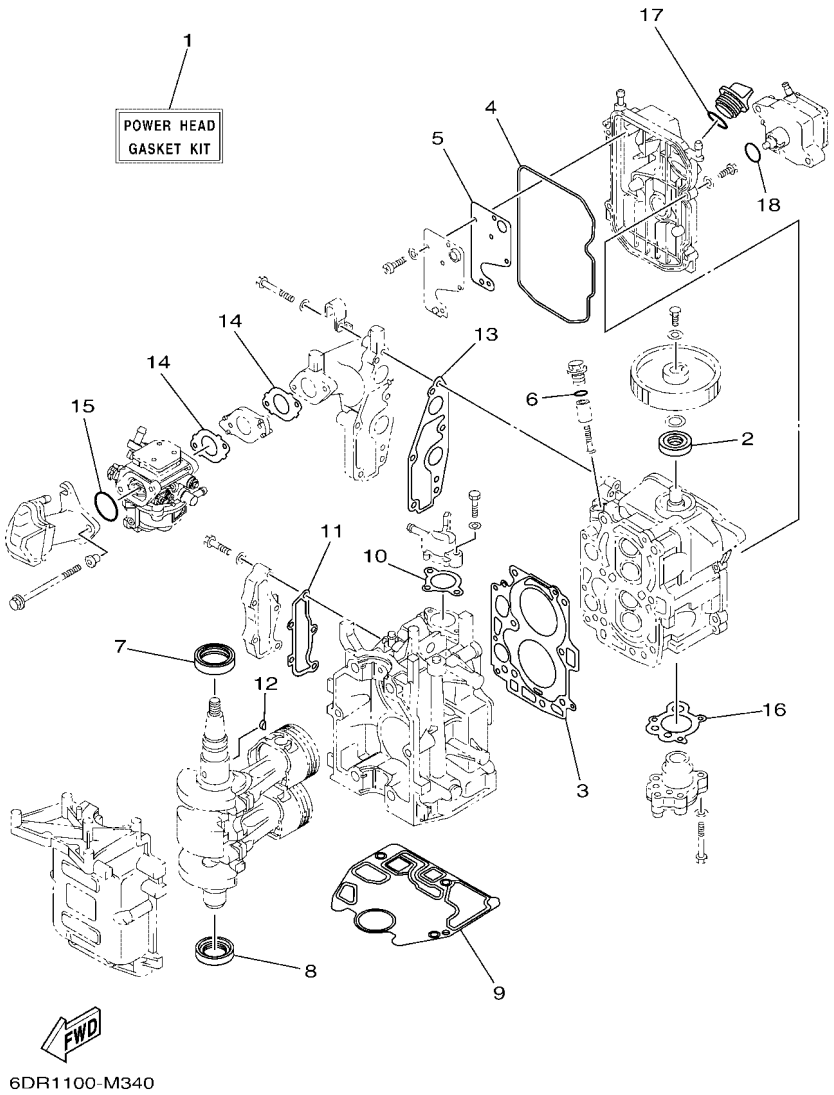


| REF. NO. | PART NO. N° PIECES | DESCRIPTION DESCRIPTION | MH | E | EP | | | REMARKS REMARQUES |
|---|---|---|---|---|---|---|---|---|
| 1 | 6AU–W0001–00 | POWER HEAD GASKET KIT<br>POCHETTE DE JINTS TETE MOTRICE | 1 | 1 | 1 | | | |
| 2 | 93102–18M21 | .OIL SEAL<br>.JOINT SPY | 1 | 1 | 1 | | | |
| 3 | 68T–11181–00 | .GASKET, CYLINDER HEAD 1<br>.JOINT, DE CULASSE 1 | 1 | 1 | 1 | | | |
| 4 | 68T–11356–00 | .SEAL, CYLINDER 2<br>.JOINT, SPY CYLINDRE | 1 | 1 | 1 | | | |
| 5 | 68T–11169–A0 | .GASKET, BREATHER COVER<br>.JOINT, COUVERCLE DE RENIFLARD | 1 | 1 | 1 | | | |
| 6 | 93210–13M63 | .O-RING<br>.JOINT TORIQUE | 1 | 1 | 1 | | | |
| 7 | 93102–30M22 | .OIL SEAL<br>.JOINT SPY | 1 | 1 | 1 | | | |
| 8 | 93101–25M69 | .OIL SEAL<br>.JOINT SPY | 1 | 1 | 1 | | | |
| 9 | 68T–11351–00 | .GASKET, CYLINDER<br>.JOINT, D'EMBASE | 1 | 1 | 1 | | | |
| 10 | 6G8–12414–A0 | .GASKET, COVER<br>.JOINT, COUVERCLE | 1 | 1 | 1 | | | |
| 11 | 68T–41114–A0 | .GASKET, EXHAUST OUTER COVER<br>.JOINT, COUVERCLE D'ECHAPPEMENT | 1 | 1 | 1 | | | |
| 12 | 90280–03M01 | .KEY, WOODRUFF<br>.CLAVETTE, DEMI-LUNE | 1 | 1 | 1 | | | |
| 13 | 68T–13645–00 | .GASKET, MANIFOLD 1<br>.JOINT, TUBULURE 1 | 1 | 1 | 1 | | | |
| 14 | 68T–13646–A0 | .GASKET, MANIFOLD 2<br>.JOINT, TUBULURE 2 | 2 | 2 | 2 | | | |
| 15 | 93210–31MJ5 | .O-RING<br>.JOINT TORIQUE | 1 | 1 | 1 | | | |
| 16 | 68T–13329–00 | .GASKET, PUMP COVER<br>.JOINT, COUVERCLE DE POMPE | 1 | 1 | 1 | | | |
| 17 | 93210–24M79 | .O-RING<br>.JOINT TORIQUE | 1 | 1 | 1 | | | |
| 18 | 93210–20M65 | .O-RING<br>.JOINT TORIQUE | 1 | 1 | 1 | | | |

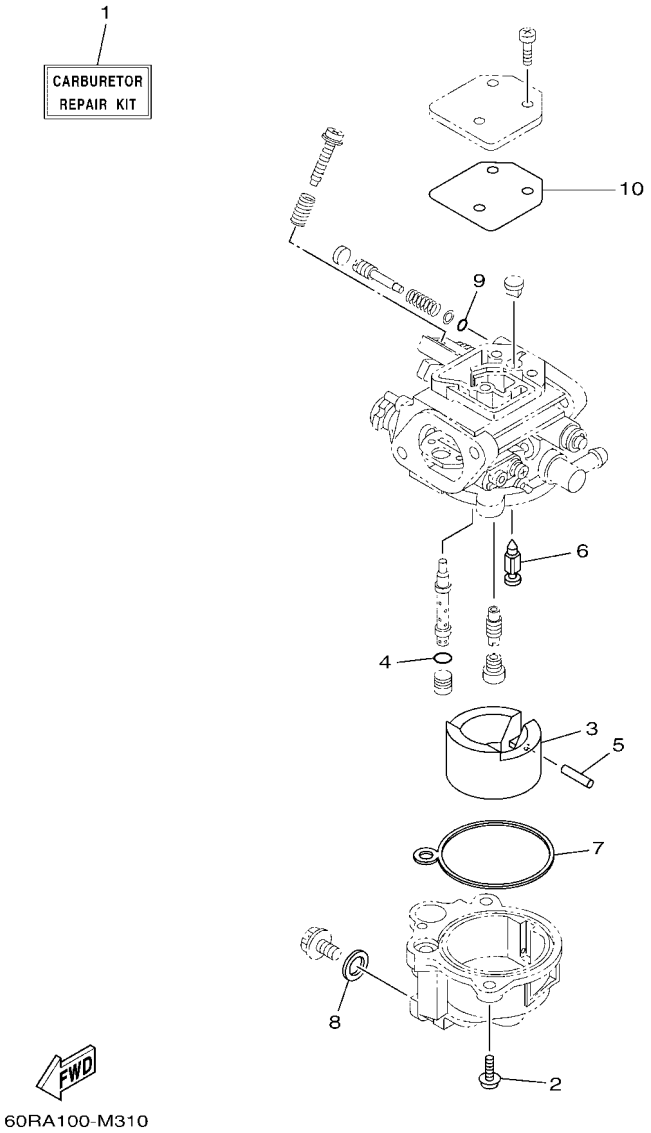


## FIG. 41 REPAIR KIT 2 — KITS DE REPARATION 2

| REF. NO. | PART NO. N° PIECES | DESCRIPTION DESCRIPTION | MH | E | EP | | | REMARKS REMARQUES |
|---|---|---|---|---|---|---|---|---|
| 1 | 6DR–W0093–00 | CARBURETOR REPAIR KIT<br>KIT DE REPARATION CARBURATEUR | 1 | 1 | 1 | | | |
| 2 | 62Y–14321–00 | .SCREW, THROTTLE<br>.VIS, ACCELERATEUR | 2 | 2 | 2 | | | |
| 3 | 6DR–14385–00 | .FLOAT<br>.FLOTTEUR | 1 | 1 | 1 | | | |
| 4 | 6DR–14561–00 | .O-RING<br>.JOINT TORIQUE | 1 | 1 | 1 | | | |
| 5 | 4FP–14386–00 | .PIN, FLOAT<br>.AXE, FLOTTEUR | 1 | 1 | 1 | | | |
| 6 | 6DR–14336–00 | .NEEDLE<br>.AIGUILLE | 1 | 1 | 1 | | | |
| 7 | 6DR–14984–00 | .GASKET, FLOAT CHAMBER<br>.JOINT, CUVE DE FLOTTEUR | 1 | 1 | 1 | | | |
| 8 | 652–14397–00 | .O-RING<br>.JOINT TORIQUE | 1 | 1 | 1 | | | |
| 9 | 6DR–14397–00 | .O-RING<br>.JOINT TORIQUE | 1 | 1 | 1 | | | |
| 10 | 6DR–14818–00 | .COVER GASKET<br>.JOINT DE COURERCLE | 1 | 1 | 1 | | | |

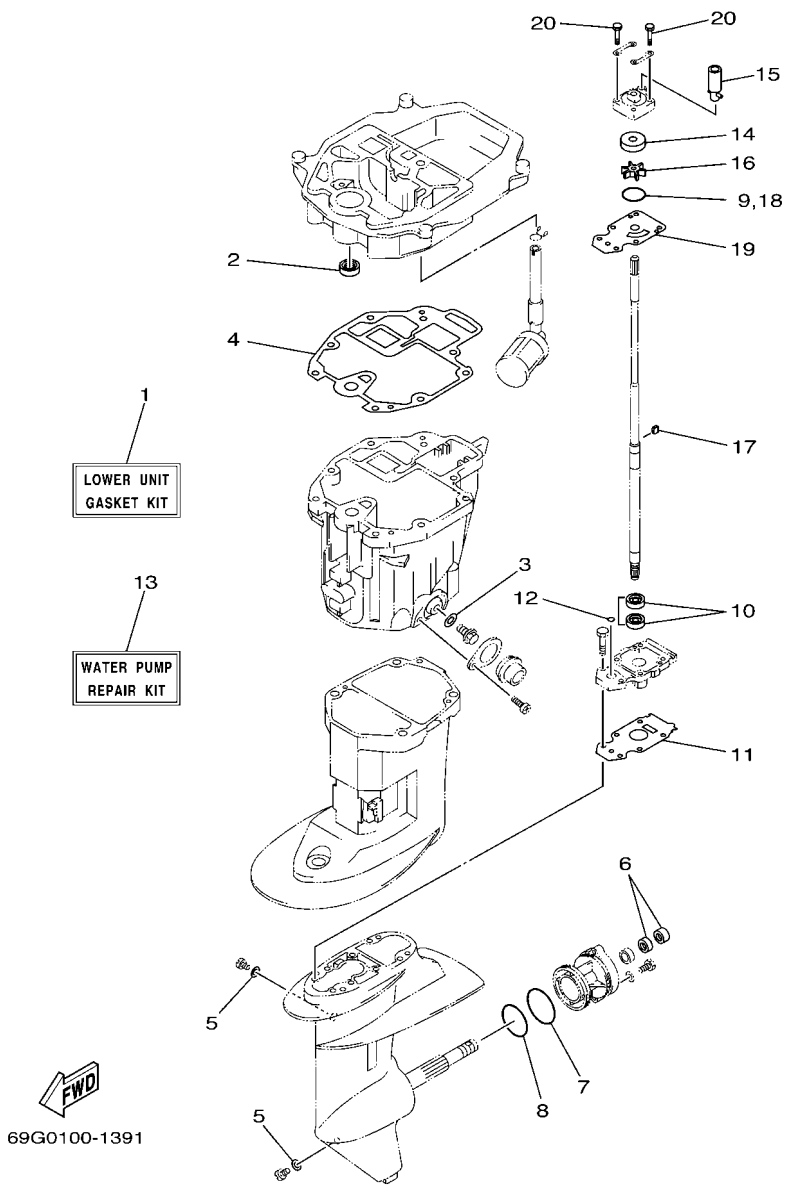


## FIG. 42 REPAIR KIT 3 — KITS DE PEPARATION 3

| REF. NO. | PART NO. N° PIECES | DESCRIPTION DESCRIPTION | MH | E | EP | | | REMARKS REMARQUES |
|---|---|---|---|---|---|---|---|---|
| 1 | 69G–W0001–20 | LOWER UNIT GASKET KIT<br>POCHETTE DE JOINTS EMBASE | 1 | 1 | 1 | | | |
| 2 | 93101–12M70 | .OIL SEAL<br>.JOINT SPY | 1 | 1 | 1 | | | |
| 3 | 90430–10M11 | .GASKET<br>.JOINT | 1 | 1 | 1 | | | |
| 4 | 68T–13475–00 | .GASKET<br>.JOINT | 1 | 1 | 1 | | | |
| 5 | 90430–08003 | .GASKET<br>.JOINT | 2 | 2 | 2 | | | |
| 6 | 93101–17054 | .OIL SEAL<br>.JOINT SPY | 2 | 2 | 2 | | | |
| 7 | 93210–74316 | .O-RING<br>.JOINT TORIQUE | 1 | 1 | 1 | | | |
| 8 | 93210–74M68 | .O-RING<br>.JOINT TORIQUE | 1 | 1 | 1 | | | |
| 9 | 93210–44398 | .O-RING<br>.JOINT TORIQUE | 1 | 1 | 1 | | | |
| 10 | 93101–20048 | .OIL SEAL<br>.JOINT SPY | 2 | 2 | 2 | | | |
| 11 | 69G–45315–A0 | .PACKING, LOWER CASING<br>.JOINT, BOITIER D'HELICE | 1 | 1 | 1 | | | |
| 12 | 93210–06ME6 | .O-RING<br>.JOINT TORIQUE | 1 | 1 | 1 | | | |
| 13 | 69G–W0078–00 | WATER PUMP REPAIR KIT<br>KIT DE REPARATION DE LA POMPE | 1 | 1 | 1 | | | |
| 14 | 63V–44322–00 | .INSERT, CARTRIDGE<br>.CUVETTE | 1 | 1 | 1 | | | |
| 15 | 68T–44366–00 | .DAMPER, WATER SEAL 2<br>.JOINT, TUBE D'EAU 2 | 1 | 1 | 1 | | | |
| 16 | 63V–44352–01 | .IMPELLER<br>.TURBINE | 1 | 1 | 1 | | | |
| 17 | 664–44338–00 | .KEY, WOODRUFF<br>.CLAVETTE, VOLANT | 1 | 1 | 1 | | | |
| 18 | 93210–44398 | .O-RING<br>.JOINT TORIQUE | 1 | 1 | 1 | | | |
| 19 | 68T–44323–00 | .OUTER PLATE, CARTRIDGE<br>.PLAQUE EXTERIEURE | 1 | 1 | 1 | | | |
| 20 | 97095–08045 | .BOLT<br>.BOULON | 4 | 4 | 4 | | | |

NUMERICAL INDEX
INDEX NUMERIQUE

| PART NO. N° PIECES | REF. NO. |
|---|---|
| 6AU–11111–00–1S | 5 – 2 |
| 6AU–11133–10 | 5 – 3 |
| 68T–11168–00 | 5 – 13 |
| 68T–11169–A0 | 5 – 14 |
| | 40 – 5 |
| 68T–11181–00 | 5 – 4 |
| | 40 – 3 |
| 68T–11191–00–1S | 5 – 9 |
| 6G8–11197–A0 | 5 – 18 |
| 6G8–11325–00 | 1 – 3 |
| | 5 – 16 |
| 68T–11351–00 | 3 – 5 |
| | 40 – 9 |
| 68T–11356–00 | 5 – 11 |
| | 40 – 4 |
| 6H1–11372–00 | 29 – 13 |
| 6AU–11411–00 | 4 – 1 |
| 68T–11416–01 | 4 – 2 |
| 68T–11416–11 | 4 – 2 |
| 68T–11416–21 | 4 – 2 |
| 68T–11536–00 | 9 – 7 |
| 66M–11537–00 | 9 – 2 |
| 68T–11557–00 | 9 – 8 |
| 6G8–11575–00 | 29 – 9 |
| 6G8–11587–01 | 9 – 9 |
| 68T–11603–01 | 4 – 6 |
| 68T–11604–01 | 4 – 6 |
| 68T–11605–01 | 4 – 6 |
| 6AU–11631–00–96 | 4 – 5 |
| 68T–11633–00 | 4 – 7 |
| 6AU–11635–00 | 4 – 5 |
| 6AU–11636–00 | 4 – 5 |
| 6AU–11650–00 | 4 – 3 |
| 67D–11654–00 | 4 – 4 |
| 6AU–12111–00 | 6 – 1 |
| 60R–12113–00 | 6 – 4 |
| 68T–12116–00 | 6 – 3 |
| 7NJ–12117–00 | 6 – 5 |
| 7NJ–12118–00 | 6 – 6 |
| 51Y–12119–00 | 6 – 7 |
| 6AU–12121–00 | 6 – 2 |
| 68T–12146–00 | 6 – 8 |
| 68T–12151–00 | 6 – 12 |
| 6G8–12158–00 | 6 – 14 |
| 6G8–12159–00 | 6 – 13 |
| 68T–12171–00 | 9 – 1 |
| 66M–12411–01 | 1 – 1 |
| | 3 – 6 |

| PART NO. N° PIECES | REF. NO. |
|---|---|
| 688–12412–00 | 3 – 7 |
| 68T–12413–00–1S | 3 – 8 |
| 6G8–12414–A0 | 1 – 2 |
| | 3 – 9 |
| | 40 – 10 |
| 68T–12481–00 | 3 – 11 |
| 6E5–12481–00 | 18 – 27 |
| 67F–12482–00 | 7 – 2 |
| 68T–12482–00 | 3 – 16 |
| 68T–12483–00 | 7 – 14 |
| 68T–12535–20 | 18 – 35 |
| 6DR–12572–00 | 18 – 33 |
| 6R3–12581–00 | 18 – 32 |
| 6R3–12582–00 | 18 – 30 |
| 6R3–12583–00 | 18 – 31 |
| 66M–13131–00 | 10 – 17 |
| 68T–13300–00 | 9 – 14 |
| 68T–13329–00 | 9 – 15 |
| | 40 – 16 |
| 68T–13421–01 | 29 – 7 |
| 6AU–13437–61 | 9 – 18 |
| 6FW–13448–00 | 21 – 26 |
| | 22 – 31 |
| 68T–13475–00 | 29 – 20 |
| | 42 – 4 |
| 68T–13641–20–1S | 7 – 1 |
| 68T–13645–00 | 7 – 3 |
| | 40 – 13 |
| 68T–13646–A0 | 7 – 8 |
| | 40 – 14 |
| 6DR–14157–00 | 8 – 23 |
| 62Y–14212–00 | 8 – 3 |
| 68T–14271–00 | 7 – 9 |
| 6DR–14285–00 | 8 – 20 |
| 6FW–14301–21 | 8 – 1 |
| 6FW–14301–51 | 8 – 1 |
| 62Y–14321–00 | 8 – 5 |
| | 41 – 2 |
| 69W–14321–00 | 8 – 2 |
| 6DR–14321–00 | 8 – 4 |
| 6DR–14323–10 | 8 – 18 |
| 6E7–14325–00 | 10 – 14 |
| 6DR–1432A–00 | 8 – 7 |
| 6DR–14334–00 | 8 – 19 |
| 6DR–14336–00 | 8 – 10 |
| | 41 – 6 |
| 6FW–14341–00 | 8 – 13 |
| 6FW–14342–21 | 8 – 12 |

| PART NO. N° PIECES | REF. NO. |
|---|---|
| 6FW–14343–37 | 8 – 11 |
| 60S–14381–00 | 8 – 14 |
| 60S–14381–00 | 8 – 16 |
| 6DR–14385–00 | 8 – 6 |
| | 41 – 3 |
| 4FP–14386–00 | 8 – 9 |
| | 41 – 5 |
| 652–14397–00 | 8 – 17 |
| | 41 – 8 |
| 6DR–14397–00 | 8 – 21 |
| | 41 – 9 |
| 6AU–14440–00 | 7 – 10 |
| 68T–14497–00 | 21 – 21 |
| | 22 – 26 |
| 6DR–14561–00 | 8 – 8 |
| | 41 – 4 |
| 6AU–14711–00–CA | 28 – 2 |
| 6DR–14818–00 | 8 – 22 |
| | 41 – 10 |
| 6DR–14862–00 | 8 – 24 |
| 6DR–14984–00 | 8 – 15 |
| | 41 – 7 |
| 6AU–15100–00 | 3 – 2 |
| 68T–15311–01–CA | 29 – 12 |
| 68T–15316–00 | 29 – 17 |
| 68T–15317–00 | 29 – 18 |
| 68T–15362–00 | 29 – 24 |
| 6G8–15363–00 | 5 – 20 |
| 63V–15705–01 | 11 – 8 |
| 68T–15710–13 | 11 – 1 |
| 68T–15711–03 | 11 – 2 |
| 63V–15713–00 | 11 – 6 |
| 63V–15714–00 | 11 – 4 |
| 68T–15716–00 | 11 – 7 |
| 66T–15731–00 | 11 – 21 |
| 66T–15734–00 | 11 – 19 |
| 63V–15741–00 | 11 – 5 |
| 63V–15744–00 | 11 – 11 |
| 6G1–15755–00 | 11 – 14 |
| 68T–15762–00 | 11 – 23 |
| 68T–15764–00 | 11 – 13 |
| 63V–15767–01 | 11 – 9 |
| 68T–15770–00 | 11 – 20 |
| 68T–15774–10 | 21 – 27 |
| | 22 – 34 |
| 6G1–15779–00 | 11 – 16 |
| 68T–15784–00 | 11 – 10 |
| 6A0–15789–00 | 11 – 17 |

| PART NO. N° PIECES | REF. NO. |
|---|---|
| 68T–15793–00 | 11 – 12 |
| 68T–15794–00 | 11 – 18 |
| 68T–15795–00 | 11 – 3 |
| 69A–22471–00 | 27 – 3 |
| 69A–23129–00 | 27 – 55 |
| 6YL–24201–06 | 32 – 1 |
| 68T–24251–01 | 1 – 5 |
| | 10 – 7 |
| 6YL–24260–10 | 32 – 3 |
| 6YL–24268–01 | 32 – 4 |
| 6G1–24304–10 | 10 – 1 |
| 6YL–24306–54 | 32 – 7 |
| 6AU–24311–00 | 10 – 25 |
| 61N–24329–00 | 10 – 2 |
| 6YL–24329–00 | 32 – 5 |
| 66M–24374–00 | 10 – 18 |
| 650–24378–00 | 5 – 10 |
| 68T–24410–01 | 10 – 11 |
| 66M–24411–01 | 10 – 15 |
| 66M–24413–01 | 10 – 12 |
| 6A0–24421–01 | 10 – 13 |
| 66M–24423–00 | 10 – 16 |
| 66M–24444–00 | 10 – 21 |
| 66M–24454–00 | 10 – 19 |
| 66M–24471–01 | 10 – 20 |
| 6YL–24610–02 | 32 – 2 |
| 6DR–26301–00 | 19 – 21 |
| 68T–26367–00 | 18 – 13 |
| 68T–28100–00 | 10 – 29 |
| 67F–2812A–00 | 14 – 23 |
| | 15 – 34 |
| | 37 – 32 |
| | 38 – 4 |
| 6FW–28199–73–D0 | 10 – 30 |
| 6FW–28199–73–E0 | 10 – 30 |
| 6FW–28199–73–F0 | 10 – 30 |
| 6FW–28199–73–G0 | 10 – 30 |
| 6FW–28199–73–H0 | 10 – 30 |
| 6FW–28199–73–S0 | 10 – 30 |
| 6FW–28199–83–K0 | 10 – 31 |
| 6FW–28199–83–L0 | 10 – 31 |
| 6FW–28199–83–M0 | 10 – 31 |
| 6FW–28199–83–N0 | 10 – 31 |
| 6FW–28199–83–P0 | 10 – 31 |
| 6FW–28199–83–R0 | 10 – 31 |
| 6AU–41113–00–1S | 3 – 13 |
| 68T–41114–A0 | 3 – 14 |
| | 40 – 11 |

| PART NO. N° PIECES | REF. NO. |
|---|---|
| 68T–41137–00–CA | 29 – 1 |
| 6AU–41211–00 | 21 – 20 |
| | 22 – 25 |
| 68T–41237–00 | 14 – 15 |
| | 15 – 17 |
| 68T–41256–00 | 7 – 20 |
| 6J8–41262–00 | 7 – 21 |
| | 21 – 25 |
| | 22 – 30 |
| 6H4–41271–02 | 7 – 18 |
| 689–41273–00 | 7 – 19 |
| 68T–41283–00 | 21 – 18 |
| | 22 – 23 |
| 68T–41638–00 | 21 – 17 |
| | 22 – 22 |
| 6G1–41662–01–94 | 21 – 3 |
| | 22 – 6 |
| 66R–42101–01–8D | 19 – 4 |
| 67D–42119–01 | 19 – 15 |
| 6AU–42121–10–8D | 19 – 1 |
| 65W–42125–00 | 19 – 12 |
| 6G1–42126–00 | 19 – 11 |
| 66R–42129–00 | 19 – 34 |
| 65W–42131–01 | 19 – 28 |
| 6FW–42137–00 | 19 – 16 |
| 68T–42138–01 | 19 – 9 |
| 65W–42159–00 | 19 – 10 |
| 66R–42171–00 | 19 – 23 |
| 67D–42177–00 | 19 – 14 |
| 6AH–42508–01 | 20 – 1 |
| 6AU–42511–10–8D | 26 – 1 |
| 68T–42525–01 | 20 – 2 |
| 6AH–42527–00 | 20 – 14 |
| 65W–42528–00 | 20 – 8 |
| 68T–42561–00 | 20 – 6 |
| 67C–42562–00 | 20 – 4 |
| 6FX–42610–00 | 2 – 1 |
| 6FX–42610–10 | 2 – 1 |
| 60R–42615–00 | 2 – 7 |
| 6DR–4261A–00 | 2 – 2 |
| 6DR–4261A–10 | 2 – 2 |
| 68T–42649–00 | 2 – 10 |
| 6DR–42649–00 | 2 – 5 |
| 6DR–42651–00 | 2 – 3 |
| 60R–42652–00 | 2 – 8 |
| 6BG–42662–00 | 2 – 6 |
| 60R–42675–00 | 2 – 13 |
| 60R–42676–10 | 2 – 14 |

| PART NO. N° PIECES | REF. NO. |
|---|---|
| 60R–42678–10 | 2 – 15 |
| 60S–42678–10 | 2 – 12 |
| 6AH–42697–10 | 2 – 11 |
| 6DR–42710–00–8D | 18 – 1 |
| 68T–42716–10 | 18 – 5 |
| 65W–42717–00 | 18 – 16 |
| | 29 – 2 |
| 68T–42717–00 | 18 – 22 |
| 68T–42724–20 | 18 – 14 |
| 68T–42724–40 | 14 – 3 |
| | 15 – 3 |
| 6DR–42725–00 | 18 – 12 |
| 6G1–42725–00 | 16 – 4 |
| 68T–42725–10 | 23 – 16 |
| 6DR–42725–10 | 18 – 12 |
| | 23 – 15 |
| 68T–42726–00 | 21 – 1 |
| 69G–42726–00 | 18 – 15 |
| 688–42726–10 | 18 – 15 |
| 682–42727–00 | 18 – 9 |
| 68T–42741–00 | 18 – 17 |
| 6DR–42761–00 | 18 – 10 |
| 6DR–42761–10 | 18 – 10 |
| | 23 – 14 |
| 68T–42771–00 | 18 – 23 |
| 6EE–42794–40 | 18 – 37 |
| 6EE–42794–50 | 18 – 38 |
| 6AU–42801–00 | 18 – 6 |
| 6AH–43111–00–8D | 24 – 1 |
| 69A–43111–01–8D | 25 – 1 |
| 6AH–43112–00–8D | 24 – 2 |
| 69A–43112–02–8D | 25 – 2 |
| 66R–43113–00 | 24 – 9 |
| 69A–43113–00 | 25 – 9 |
| 648–43114–01 | 24 – 6 |
| | 25 – 6 |
| 6E7–43116–00 | 24 – 5 |
| | 25 – 5 |
| 6E0–43118–01 | 24 – 3 |
| | 25 – 3 |
| 69A–43131–00 | 24 – 7 |
| | 25 – 7 |
| 6E5–43145–01 | 33 – 8 |
| 6G5–43145–01 | 25 – 17 |
| 68T–43155–00 | 20 – 17 |
| 69A–43155–00 | 25 – 38 |
| 6L2–43160–01 | 24 – 15 |
| 689–43165–00 | 24 – 16 |

NUMERICAL INDEX
INDEX NUMERIQUE


| PART NO. N° PIECES | REF. NO. |
|---|---|
| 63V–43191–00 | 24 – 28 |
| 65W–43191–00 | 25 – 14 |
| 65W–43192–00 | 25 – 13 |
| 6AU–43311–10–8D | 24 – 19 |
| 69G–43311–11–8D | 25 – 12 |
| 6AH–43350–00 | 24 – 26 |
| 68T–43611–00 | 24 – 33 |
| 6AH–43614–00 | 24 – 30 |
| 6AH–43615–00 | 24 – 32 |
| 6DR–43616–00 | 24 – 21 |
| 6AH–43617–00 | 24 – 24 |
| 6AH–43627–00 | 24 – 38 |
| 6DR–43631–00 | 24 – 20 |
| 689–43633–00 | 20 – 7 |
| 6DR–43641–00 | 24 – 23 |
| 68T–43646–00 | 24 – 22 |
| 68T–43659–00 | 24 – 36 |
| 69A–43801–00 | 27 – 18 |
| 6AH–43804–00 | 27 – 58 |
| 67C–43805–10 | 27 – 60 |
| 6T4–43808–00 | 27 – 33 |
| 69A–4380D–00 | 27 – 11 |
| 67C–4380F–10 | 27 – 65 |
| 69A–4380K–00 | 27 – 2 |
| 69A–43810–00 | 27 – 10 |
| 69A–43811–01 | 27 – 19 |
| 69A–43812–00 | 27 – 22 |
| 69A–43814–00 | 27 – 7 |
| 69A–43816–01 | 27 – 53 |
| 69G–43818–00 | 25 – 20 |
| 69J–4381C–00 | 27 – 35 |
| 69A–4381G–00 | 27 – 47 |
| 69A–43824–00 | 27 – 42 |
| 69G–4382G–00 | 27 – 31 |
| 69A–43830–00 | 27 – 24 |
| 69G–43840–03–8D | 27 – 1 |
| 69A–43841–00 | 27 – 25 |
| 6H1–43844–10 | 27 – 37 |
| 69A–43848–10 | 27 – 43 |
| 69A–4384F–00 | 27 – 28 |
| 6H1–4384G–11 | 27 – 36 |
| 69A–4384H–00 | 27 – 50 |
| 69A–4384M–00 | 27 – 26 |
| 69G–43853–00 | 27 – 34 |
| 69A–43854–00 | 27 – 46 |
| 69A–43855–00 | 27 – 38 |
| 6H1–43856–10 | 27 – 39 |
| 69A–43857–00 | 27 – 17 |
| 67C–43862–10 | 27 – 61 |
| N35–43862–10 | 27 – 54 |
| 6H1–43866–01 | 27 – 20 |
| 69A–43869–00 | 27 – 23 |
| 65W–4386A–00 | 27 – 15 |
| 69A–4386A–00 | 27 – 41 |
| 67C–4386K–10 | 27 – 64 |
| 69A–43871–00 | 27 – 21 |
| 69A–43872–00 | 27 – 9 |
| | 27 – 13 |
| 69A–43878–00 | 27 – 56 |
| 67C–43879–10 | 27 – 59 |
| 69G–43880–10 | 27 – 57 |
| 69G–43881–10 | 27 – 67 |
| 67C–43882–10 | 27 – 68 |
| 6H1–43883–00 | 27 – 29 |
| | 27 – 49 |
| 6H1–4388E–11 | 27 – 5 |
| 69G–4388F–00 | 27 – 69 |
| 67C–43892–10 | 27 – 63 |
| 62Y–43894–00 | 27 – 27 |
| 66R–44111–00–8D | 19 – 31 |
| 6AU–44111–10 | 22 – 17 |
| | 23 – 7 |
| 6DR–44113–A0 | 19 – 39 |
| 66R–44114–00 | 19 – 49 |
| 65W–44116–00 | 21 – 7 |
| | 22 – 10 |
| 66R–44116–00 | 19 – 40 |
| 6DR–44117–00 | 21 – 8 |
| | 22 – 11 |
| 66R–44118–00 | 19 – 41 |
| 68T–44121–03 | 21 – 2 |
| | 22 – 5 |
| 68T–44143–10 | 21 – 10 |
| | 22 – 13 |
| 61N–44146–00 | 21 – 12 |
| | 22 – 15 |
| 69G–44150–10 | 30 – 26 |
| 69G–44150–20 | 30 – 26 |
| 66R–44173–00 | 19 – 32 |
| 703–44189–20 | 35 – 36 |
| | 36 – 36 |
| 703–44189–30 | 35 – 42 |
| | 36 – 42 |
| 6X3–44191–00 | 19 – 50 |
| | 35 – 47 |
| | 36 – 47 |
| 63V–44301–00 | 30 – 10 |
| 63V–44322–00 | 30 – 11 |
| | 42 – 14 |
| 68T–44323–00 | 30 – 16 |
| | 42 – 19 |
| 63V–44328–01 | 30 – 19 |
| 664–44338–00 | 30 – 14 |
| | 42 – 17 |
| 63V–44352–01 | 30 – 13 |
| | 42 – 16 |
| 68T–44361–10 | 31 – 1 |
| 69G–44361–20 | 31 – 1 |
| 63V–44365–10 | 31 – 2 |
| 68T–44366–00 | 30 – 12 |
| | 42 – 15 |
| 6BL–44391–00 | 18 – 8 |
| 68T–44517–10 | 26 – 8 |
| 68T–44526–00 | 26 – 9 |
| 6AU–44551–00–8D | 26 – 12 |
| 682–44555–30 | 26 – 14 |
| 6AU–44557–00 | 26 – 13 |
| 6AU–45111–10–8D | 28 – 1 |
| 63V–45127–00 | 28 – 11 |
| 68T–45181–00 | 29 – 3 |
| 69G–45211–20–8D | 28 – 10 |
| 6G1–45214–00 | 31 – 5 |
| 63V–45215–00 | 31 – 6 |
| 65W–45251–00 | 1 – 6 |
| | 25 – 34 |
| 61N–45251–01 | 1 – 9 |
| | 31 – 9 |
| 69G–45300–11–8D | 30 – 1 |
| 69G–45300–21–8D | 30 – 1 |
| 66R–45311–01–8D | 30 – 2 |
| 69G–45315–A0 | 30 – 23 |
| | 42 – 11 |
| 626–45316–09 | 30 – 21 |
| 68T–45321–00 | 28 – 5 |
| 69G–45331–01–CA | 30 – 20 |
| 66R–45361–00–8D | 30 – 40 |
| 63V–45375–00 | 31 – 12 |
| 69G–45510–10 | 30 – 27 |
| 69G–45510–20 | 30 – 27 |
| 66R–45536–00 | 30 – 4 |
| 66R–45551–00 | 30 – 28 |
| 66R–45560–01 | 30 – 30 |
| 66R–45571–00 | 30 – 31 |
| 626–45577–00 | 30 – 32 |
| 626–45577–00 | 30 – 47 |
| 626–45577–10 | 30 – 32 |
| | 30 – 47 |
| 626–45577–20 | 30 – 32 |
| | 30 – 47 |
| 626–45577–30 | 30 – 32 |
| | 30 – 47 |
| 626–45577–40 | 30 – 32 |
| | 30 – 47 |
| 66R–45587–00 | 30 – 6 |
| 66R–45587–10 | 30 – 6 |
| 683–45611–00 | 30 – 34 |
| 69G–45631–00 | 30 – 36 |
| 648–45633–11 | 30 – 38 |
| 650–45635–00 | 30 – 35 |
| 69G–45941–00 | 31 – 20 |
| 6G8–45987–02 | 31 – 13 |
| 6G8–45997–00 | 31 – 16 |
| 68T–46241–00 | 9 – 6 |
| 6AU–46297–00 | 9 – 12 |
| 703–48128–10 | 35 – 39 |
| | 36 – 39 |
| 703–48129–00 | 35 – 41 |
| | 36 – 41 |
| 703–48152–10 | 35 – 6 |
| | 36 – 6 |
| 703–48153–00 | 35 – 60 |
| | 36 – 61 |
| 703–48189–00 | 35 – 19 |
| | 36 – 19 |
| 703–48198–00 | 35 – 16 |
| | 36 – 16 |
| 703–48201–21 | 34 – 1 |
| | 35 – 1 |
| 703–48205–22 | 34 – 2 |
| | 36 – 1 |
| 703–48211–10 | 35 – 25 |
| | 36 – 25 |
| 703–48212–10 | 35 – 26 |
| | 36 – 26 |
| 703–48213–10 | 35 – 27 |
| | 36 – 27 |
| 703–48215–10 | 35 – 46 |
| | 36 – 46 |
| 703–48219–10 | 35 – 34 |
| | 36 – 34 |
| 703–48221–10 | 35 – 28 |
| | 36 – 28 |
| 703–48222–20 | 36 – 31 |
| 703–48222–30 | 35 – 31 |
| 703–48223–10 | 35 – 32 |
| | 36 – 32 |
| 703–48225–10 | 35 – 33 |
| | 36 – 33 |
| 703–48227–00 | 35 – 30 |
| | 36 – 30 |
| 703–48232–00 | 35 – 2 |
| | 36 – 2 |
| 703–48234–00 | 35 – 20 |
| | 36 – 20 |
| 703–48235–00 | 35 – 5 |
| | 36 – 5 |
| 703–48236–00 | 35 – 18 |
| | 36 – 18 |
| 703–48238–00 | 35 – 24 |
| | 36 – 24 |
| 703–48243–00 | 35 – 17 |
| | 36 – 17 |
| 703–48244–00 | 35 – 23 |
| | 36 – 23 |
| 703–48245–00 | 35 – 13 |
| | 36 – 13 |
| 703–48246–00 | 35 – 29 |
| | 36 – 29 |
| 701–48248–00 | 35 – 15 |
| | 36 – 15 |
| 703–48252–00 | 35 – 14 |
| | 36 – 14 |
| 703–48261–01 | 35 – 4 |
| | 36 – 4 |
| 703–48264–00 | 35 – 8 |
| | 36 – 8 |
| 703–48265–10 | 35 – 11 |
| | 36 – 11 |
| 703–48268–00 | 35 – 7 |
| | 36 – 7 |
| 703–48271–00 | 35 – 3 |
| | 36 – 3 |
| 703–48281–00 | 35 – 35 |
| | 36 – 35 |
| 703–48284–00 | 35 – 57 |
| | 36 – 58 |
| 701–48287–00 | 35 – 45 |
| | 36 – 45 |
| 703–48293–10 | 35 – 44 |
| | 36 – 44 |
| 701–48310–80 | 34 – 3 |
| 701–48310–90 | 34 – 3 |
| 701–48320–00 | 34 – 3 |
| 68T–48321–01 | 19 – 44 |
| 66R–48344–00 | 19 – 51 |
| 6FM–48344–00 | 22 – 20 |
| | 22 – 32 |
| | 23 – 10 |
| | 23 – 12 |
| 703–48345–01 | 35 – 21 |
| | 36 – 21 |
| 703–48358–00 | 35 – 22 |
| | 36 – 22 |
| 6DR–48501–01 | 23 – 1 |
| 63V–48511–01 | 23 – 17 |
| | 26 – 22 |
| 68T–48531–01 | 23 – 2 |
| 6DR–48531–01 | 22 – 1 |
| 63D–48538–00 | 19 – 43 |
| | 21 – 16 |
| 66R–48538–00 | 19 – 42 |
| 68T–48538–00 | 21 – 14 |
| 682–48538–50 | 22 – 2 |
| | 23 – 3 |
| 68T–61350–10 | 33 – 1 |
| 6E5–61355–00 | 33 – 6 |
| 6AV–81337–00 | 12 – 13 |
| 68T–81800–00 | 17 – 4 |
| | 37 – 2 |
| 689–81807–12 | 17 – 6 |
| | 37 – 4 |
| 689–81809–11 | 17 – 9 |
| | 37 – 7 |
| 689–81810–11 | 17 – 11 |
| | 37 – 9 |
| 689–81811–11 | 17 – 13 |
| | 37 – 11 |
| 689–81812–11 | 17 – 14 |
| | 37 – 12 |
| 689–81813–10 | 17 – 15 |
| | 37 – 13 |
| 689–81820–11 | 17 – 16 |
| | 37 – 14 |
| 68T–81821–00 | 37 – 27 |
| 68T–81822–01 | 17 – 1 |
| 689–81826–10 | 17 – 17 |
| | 37 – 15 |
| 6F5–81830–10 | 17 – 7 |

NUMERICAL INDEX
INDEX NUMERIQUE

| PART NO. N° PIECES | REF. NO. |
|---|---|
| 6F5–81830–10 | 37 – 5 |
| 689–81840–11 | 17 – 12 |
| | 37 – 10 |
| 689–81847–11 | 17 – 8 |
| | 37 – 6 |
| 689–81850–11 | 17 – 10 |
| | 37 – 8 |
| 68T–81857–00 | 17 – 5 |
| | 37 – 3 |
| 68T–81870–00 | 37 – 26 |
| 69G–81925–00 | 15 – 27 |
| 68T–81940–00 | 14 – 6 |
| | 15 – 7 |
| | 37 – 20 |
| 68T–81945–01 | 14 – 8 |
| | 15 – 9 |
| | 37 – 22 |
| 69G–81948–01 | 15 – 25 |
| 68T–81949–00 | 38 – 1 |
| 69G–81950–00 | 15 – 22 |
| 68T–81960–00 | 13 – 10 |
| | 39 – 1 |
| 6EE–81994–40 | 11 – 27 |
| | 12 – 18 |
| 6EE–81994–50 | 11 – 28 |
| | 12 – 19 |
| 6EE–81995–40 | 11 – 24 |
| | 12 – 15 |
| 6EE–81995–50 | 11 – 25 |
| | 12 – 16 |
| 6AG–81996–00 | 12 – 20 |
| 68T–82105–01 | 37 – 33 |
| 69G–82105–01 | 14 – 2 |
| | 15 – 1 |
| 6G8–82117–00 | 14 – 4 |
| | 15 – 5 |
| | 37 – 18 |
| 6G5–82119–00 | 15 – 30 |
| 63V–82127–00 | 25 – 36 |
| 68T–82127–00 | 26 – 19 |
| 68T–82127–10 | 13 – 13 |
| 68T–82150–00 | 14 – 20 |
| | 15 – 31 |
| | 37 – 29 |
| 66V–82151–00 | 14 – 21 |
| | 15 – 32 |
| | 37 – 30 |
| | 38 – 2 |

| PART NO. N° PIECES | REF. NO. |
|---|---|
| 68T–82171–01 | 14 – 22 |
| | 15 – 33 |
| | 37 – 31 |
| | 38 – 3 |
| 67C–82181–10 | 27 – 62 |
| 6E3–82370–21 | 13 – 9 |
| 67F–82504–00 | 13 – 12 |
| 703–82510–44 | 35 – 48 |
| | 36 – 48 |
| 68T–82522–00 | 13 – 2 |
| 703–82531–00 | 35 – 51 |
| | 36 – 51 |
| 6K1–82532–00 | 35 – 50 |
| | 36 – 50 |
| 703–82540–00 | 35 – 55 |
| | 36 – 55 |
| 6F5–82540–01 | 37 – 25 |
| 682–82556–00 | 16 – 2 |
| | 35 – 53 |
| | 36 – 53 |
| 703–82563–31 | 36 – 57 |
| 65W–82575–01 | 16 – 1 |
| 688–82575–02 | 35 – 52 |
| | 36 – 52 |
| 703–82577–00 | 35 – 49 |
| | 36 – 49 |
| 689–8257Y–00 | 16 – 3 |
| 69G–82580–00 | 14 – 1 |
| 6N6–82582–00 | 15 – 4 |
| 688–8258A–20 | 35 – 54 |
| | 36 – 54 |
| 69G–82590–10 | 15 – 2 |
| 703–82591–00 | 35 – 58 |
| | 36 – 59 |
| 703–82592–00 | 35 – 59 |
| | 36 – 60 |
| 68T–82594–00 | 37 – 34 |
| 6DR–82594–00 | 19 – 46 |
| 703–83383–11 | 35 – 56 |
| | 36 – 56 |
| 65W–84342–00 | 18 – 25 |
| 68F–85119–00 | 18 – 2 |
| 68T–85410–00 | 13 – 15 |
| 68T–85520–00 | 12 – 2 |
| 68T–85533–10 | 12 – 4 |
| 68T–85540–00 | 13 – 1 |
| 6DR–85550–10 | 12 – 1 |
| 680–85570–02 | 13 – 6 |

| PART NO. N° PIECES | REF. NO. |
|---|---|
| 68T–85580–01 | 12 – 3 |
| 6H2–85582–00 | 12 – 5 |
| 6H2–85582–00 | 11 – 26 |
| | 12 – 17 |
| 68T–86111–00 | 14 – 14 |
| | 15 – 16 |
| 68T–86112–00 | 14 – 11 |
| | 15 – 13 |
| 68T–86117–00 | 14 – 18 |
| | 15 – 20 |
| 6AU–W0001–00 | 40 – 1 |
| 69G–W0001–20 | 42 – 1 |
| 69G–W0078–00 | 1 – 10 |
| | 42 – 13 |
| 6DR–W0093–00 | 41 – 1 |
| 6AU–W009A–01–1S | 5 – 1 |
| 6AU–W009B–00–1S | 3 – 1 |
| 6DR–W8180–00 | 37 – 1 |
| 90101–06020 | 25 – 35 |
| 90101–06M18 | 24 – 12 |
| 90101–08022 | 20 – 15 |
| 90101–08M88 | 24 – 41 |
| | 25 – 39 |
| 90105–06188 | 7 – 13 |
| 90105–06M14 | 9 – 3 |
| 90105–08M36 | 5 – 6 |
| 90105–08M78 | 5 – 7 |
| 90109–06M80 | 19 – 6 |
| | 19 – 7 |
| | 19 – 8 |
| 90109–06M81 | 21 – 4 |
| | 22 – 7 |
| 90109–06M84 | 24 – 39 |
| 90109–06M86 | 15 – 26 |
| | 18 – 11 |
| | 19 – 5 |
| | 21 – 9 |
| | 21 – 28 |
| | 22 – 12 |
| | 22 – 35 |
| 90109–08010 | 25 – 31 |
| 90110–08M05 | 25 – 30 |
| 90116–08M54 | 26 – 7 |
| 90116–08M62 | 28 – 15 |
| 90116–10040 | 19 – 2 |
| 90119–05018 | 20 – 3 |
| 90119–06012 | 26 – 15 |
| 90119–06014 | 12 – 6 |

| PART NO. N° PIECES | REF. NO. |
|---|---|
| 90119–06049 | 5 – 8 |
| 90119–06198 | 26 – 16 |
| 90119–06M56 | 15 – 24 |
| 90119–06MA1 | 12 – 8 |
| 90119–06MA2 | 3 – 10 |
| 90119–06MA3 | 3 – 15 |
| | 7 – 5 |
| | 13 – 8 |
| 90119–06MA5 | 7 – 4 |
| 90119–08005 | 29 – 22 |
| 90119–08020 | 17 – 3 |
| 90119–08046 | 17 – 2 |
| 90119–08M29 | 3 – 4 |
| 90119–08M76 | 17 – 18 |
| | 37 – 16 |
| 90151–05003 | 19 – 47 |
| | 37 – 35 |
| 90152–05011 | 19 – 17 |
| | 31 – 7 |
| 90157–05M16 | 32 – 6 |
| 90159–06M18 | 19 – 33 |
| 90167–06002 | 18 – 34 |
| 90170–05M38 | 19 – 53 |
| 90170–06M30 | 15 – 28 |
| 90170–09M03 | 33 – 4 |
| 90170–12066 | 12 – 11 |
| 90170–24M09 | 9 – 10 |
| 90171–10M07 | 31 – 18 |
| 90179–06M28 | 26 – 17 |
| 90179–08M06 | 30 – 29 |
| 90179–10M33 | 19 – 3 |
| 90185–05002 | 31 – 8 |
| 90185–08057 | 23 – 19 |
| | 24 – 43 |
| | 25 – 32 |
| | 25 – 41 |
| | 26 – 24 |
| 90185–09M01 | 33 – 3 |
| 90185–10M14 | 20 – 13 |
| 90185–22043 | 24 – 10 |
| | 25 – 10 |
| 90201–06M62 | 19 – 52 |
| | 21 – 22 |
| | 22 – 27 |
| 90201–06M94 | 9 – 5 |
| 90201–08065 | 20 – 16 |
| 90201–08M00 | 25 – 24 |
| 90201–08MA4 | 24 – 44 |

| PART NO. N° PIECES | REF. NO. |
|---|---|
| 90201–08MA4 | 25 – 42 |
| 90201–106M5 | 20 – 18 |
| 90201–10M02 | 19 – 18 |
| | 31 – 17 |
| 90201–10M20 | 33 – 2 |
| 90201–10M63 | 33 – 7 |
| 90201–12472 | 12 – 12 |
| 90201–13201 | 9 – 4 |
| 90201–17682 | 30 – 33 |
| 90201–31MA3 | 31 – 15 |
| 90201–43M00 | 19 – 24 |
| 90202–10M56 | 20 – 5 |
| 90202–26M59 | 19 – 38 |
| 90202–43M57 | 19 – 26 |
| 90204–06M00 | 15 – 29 |
| 90206–10M24 | 24 – 40 |
| 90206–26M25 | 19 – 37 |
| 90206–43M22 | 19 – 25 |
| 90209–10M26 | 20 – 12 |
| 90209–40008 | 26 – 3 |
| 90243–04M01 | 24 – 4 |
| | 25 – 4 |
| 90249–12M36 | 25 – 26 |
| 90250–05010 | 30 – 37 |
| 90266–04005 | 2 – 4 |
| 90280–03M01 | 9 – 11 |
| | 40 – 12 |
| 90280–04M06 | 12 – 10 |
| 90338–06M20 | 18 – 24 |
| 90340–08002 | 30 – 8 |
| 90340–10M10 | 29 – 15 |
| 90381–12M10 | 25 – 27 |
| 90381–12M11 | 25 – 28 |
| 90386–08032 | 19 – 20 |
| 90386–14MA1 | 25 – 16 |
| 90386–16MA7 | 25 – 21 |
| 90386–16MA8 | 25 – 22 |
| 90386–22MA4 | 24 – 8 |
| | 25 – 8 |
| 90386–26MA3 | 19 – 36 |
| 90386–30048 | 26 – 4 |
| 90386–30M60 | 26 – 6 |
| 90386–40001 | 26 – 2 |
| 90386–40M99 | 19 – 27 |
| 90387–05053 | 20 – 9 |
| 90387–05054 | 20 – 10 |
| 90387–06138 | 24 – 34 |
| 90387–06176 | 18 – 4 |

| PART NO. N° PIECES | REF. NO. |
|---|---|
| 90387–06M03 | 15 – 23 |
| 90387–06M13 | 24 – 11 |
| 90387–06M59 | 21 – 19 |
| | 22 – 24 |
| 90387–06M70 | 7 – 12 |
| 90387–10M42 | 33 – 5 |
| 90387–13M56 | 6 – 9 |
| 90387–14M03 | 6 – 10 |
| 90387–16M02 | 25 – 23 |
| 90430–08003 | 1 – 8 |
| | 30 – 9 |
| | 42 – 5 |
| 90430–08143 | 29 – 5 |
| 90430–10M11 | 1 – 7 |
| | 29 – 16 |
| | 42 – 3 |
| 90445–09M20 | 7 – 7 |
| 90445–10046 | 10 – 4 |
| 90445–10M50 | 10 – 8 |
| 90445–16010 | 10 – 10 |
| 90446–10M86 | 14 – 5 |
| | 15 – 6 |
| | 37 – 19 |
| 90446–15002 | 19 – 45 |
| 90447–07005 | 19 – 22 |
| 90447–10001 | 25 – 18 |
| 90447–13014 | 10 – 27 |
| 90447–13M00 | 18 – 29 |
| 90464–10M53 | 10 – 28 |
| 90464–10M60 | 21 – 5 |
| | 22 – 8 |
| 90465–08027 | 22 – 36 |
| 90465–08M83 | 7 – 16 |
| 90465–08M99 | 7 – 15 |
| | 17 – 21 |
| 90465–11M10 | 3 – 12 |
| | 3 – 18 |
| | 7 – 23 |
| | 10 – 5 |
| | 12 – 9 |
| | 13 – 14 |
| | 17 – 20 |
| | 18 – 28 |
| | 37 – 28 |
| | 39 – 3 |
| 90465–12M56 | 14 – 10 |
| | 37 – 24 |
| 90465–13M11 | 15 – 11 |

NUMERICAL INDEX
INDEX NUMERIQUE


| PART NO. N° PIECES | REF. NO. |
|---|---|
| 90465–13M11 | 15 – 12 |
| 90465–13M97 | 25 – 19 |
| 90467–08M18 | 7 – 22 |
| 90467–09M09 | 10 – 6 |
| | 10 – 9 |
| | 10 – 26 |
| 90467–10M04 | 3 – 17 |
| 90467–11M08 | 29 – 8 |
| 90468–18001 | 21 – 11 |
| | 22 – 14 |
| 90468–18008 | 22 – 21 |
| | 22 – 33 |
| | 23 – 11 |
| | 23 – 13 |
| 90480–06M19 | 18 – 26 |
| 90480–10627 | 9 – 13 |
| 90480–10M28 | 29 – 14 |
| 90480–13018 | 14 – 12 |
| | 15 – 14 |
| 90480–14M54 | 28 – 4 |
| 90480–21M82 | 18 – 3 |
| 90480–25003 | 13 – 7 |
| 90501–12M40 | 6 – 11 |
| 90501–14M09 | 30 – 39 |
| 90501–23215 | 19 – 19 |
| 90502–10M07 | 24 – 18 |
| 90506–20025 | 24 – 27 |
| 90506–23016 | 24 – 31 |
| 91312–05025 | 27 – 52 |
| 91490–16010 | 19 – 13 |
| 91490–20012 | 19 – 54 |
| 91490–30025 | 31 – 19 |
| 91690–30008 | 24 – 17 |
| 91690–30010 | 14 – 16 |
| | 15 – 18 |
| 91690–30012 | 22 – 3 |
| | 23 – 4 |
| 91690–30014 | 21 – 6 |
| | 22 – 9 |
| 91690–30018 | 25 – 15 |
| 91690–50014 | 7 – 6 |
| 92990–06300 | 31 – 11 |
| 92990–08600 | 24 – 42 |
| | 25 – 33 |
| | 25 – 40 |
| | 28 – 12 |
| | 35 – 38 |
| | 36 – 38 |

| PART NO. N° PIECES | REF. NO. |
|---|---|
| 92995–06100 | 18 – 19 |
| 92995–06600 | 18 – 20 |
| | 24 – 13 |
| | 26 – 20 |
| 93101–12M70 | 29 – 6 |
| | 42 – 2 |
| 93101–17054 | 30 – 43 |
| | 42 – 6 |
| 93101–20048 | 30 – 22 |
| | 42 – 10 |
| 93101–25M69 | 4 – 10 |
| | 40 – 8 |
| 93102–18M21 | 9 – 17 |
| | 40 – 2 |
| 93102–30M22 | 4 – 9 |
| | 40 – 7 |
| 93210–03261 | 14 – 19 |
| | 15 – 21 |
| 93210–06001 | 27 – 45 |
| 93210–06ME6 | 30 – 24 |
| | 42 – 12 |
| 93210–07003 | 27 – 6 |
| 93210–12327 | 22 – 18 |
| | 23 – 8 |
| 93210–12M62 | 29 – 10 |
| 93210–12N52 | 27 – 32 |
| 93210–13M63 | 5 – 19 |
| | 40 – 6 |
| 93210–16275 | 33 – 9 |
| 93210–20M65 | 10 – 24 |
| | 40 – 18 |
| 93210–21276 | 27 – 8 |
| | 27 – 12 |
| 93210–24M79 | 5 – 21 |
| | 40 – 17 |
| 93210–27666 | 27 – 4 |
| 93210–29M94 | 26 – 5 |
| 93210–31MJ5 | 7 – 11 |
| | 40 – 15 |
| 93210–44398 | 30 – 15 |
| | 42 – 9 |
| | 42 – 18 |
| 93210–74316 | 30 – 45 |
| | 42 – 7 |
| 93210–74M68 | 30 – 44 |
| | 42 – 8 |
| 93306–00501 | 30 – 41 |
| 93315–314V8 | 30 – 3 |

| PART NO. N° PIECES | REF. NO. |
|---|---|
| 93315–317U2 | 30 – 42 |
| 93332–00005 | 30 – 7 |
| 93332–00005 | 30 – 5 |
| 93430–04M03 | 24 – 35 |
| 93430–06024 | 35 – 12 |
| | 36 – 12 |
| 93450–10M04 | 31 – 14 |
| 93450–15023 | 4 – 8 |
| 93501–08001 | 27 – 40 |
| | 27 – 48 |
| 93505–32038 | 27 – 14 |
| 93602–15250 | 27 – 44 |
| 93604–06136 | 27 – 16 |
| 93604–12M07 | 28 – 8 |
| | 28 – 14 |
| | 29 – 21 |
| | 30 – 17 |
| | 31 – 3 |
| 93606–14081 | 27 – 51 |
| 93606–19M23 | 29 – 11 |
| 93700–06M03 | 26 – 18 |
| 94702–00274 | 1 – 4 |
| | 5 – 22 |
| 95380–04600 | 10 – 22 |
| 95380–05600 | 35 – 9 |
| | 36 – 9 |
| 95380–06600 | 18 – 21 |
| | 23 – 6 |
| | 35 – 43 |
| | 36 – 43 |
| 95380–06700 | 21 – 13 |
| | 22 – 16 |
| | 24 – 14 |
| 95380–08600 | 26 – 10 |
| | 28 – 13 |
| 95380–10700 | 19 – 30 |
| 95780–10300 | 19 – 29 |
| 95895–06030 | 31 – 10 |
| 97080–08016 | 25 – 25 |
| 97080–08025 | 30 – 25 |
| 97095–05010 | 12 – 7 |
| 97095–06008 | 28 – 6 |
| 97095–08014 | 29 – 4 |
| 97095–08045 | 30 – 18 |
| | 42 – 20 |
| 97380–05025 | 35 – 10 |
| | 36 – 10 |
| 97380–08030 | 35 – 37 |

| PART NO. N° PIECES | REF. NO. |
|---|---|
| 97380–08030 | 36 – 37 |
| 97575–06514 | 28 – 3 |
| 97575–06525 | 26 – 11 |
| 97575–08530 | 29 – 23 |
| 97575–08535 | 23 – 18 |
| | 26 – 23 |
| | 28 – 9 |
| | 31 – 4 |
| 97595–05514 | 2 – 9 |
| 97595–05516 | 22 – 19 |
| | 23 – 9 |
| 97595–05520 | 20 – 11 |
| 97595–06510 | 7 – 17 |
| | 25 – 37 |
| 97595–06512 | 13 – 5 |
| | 13 – 11 |
| | 14 – 9 |
| | 14 – 13 |
| | 15 – 10 |
| | 15 – 15 |
| | 17 – 22 |
| | 18 – 7 |
| | 18 – 36 |
| | 21 – 15 |
| | 21 – 24 |
| | 22 – 4 |
| | 22 – 29 |
| | 23 – 5 |
| | 37 – 23 |
| | 38 – 5 |
| | 39 – 2 |
| 97595–06514 | 26 – 21 |
| 97595–06520 | 5 – 12 |
| | 11 – 22 |
| | 12 – 14 |
| 97595–06525 | 10 – 3 |
| | 30 – 46 |
| 97595–06530 | 9 – 16 |
| 97595–06545 | 21 – 23 |
| | 22 – 28 |
| 97595–06610 | 14 – 7 |
| | 15 – 8 |
| | 37 – 21 |
| 97595–06630 | 10 – 23 |
| 97595–08516 | 17 – 19 |
| | 37 – 17 |
| 97595–08530 | 19 – 35 |

| PART NO. N° PIECES | REF. NO. |
|---|---|
| 97602–04316 | 27 – 66 |
| 97607–04210 | 5 – 15 |
| 97780–40512 | 13 – 3 |
| 97885–05008 | 28 – 7 |
| | 29 – 19 |
| 97885–06030 | 18 – 18 |
| 97885–08010 | 25 – 11 |
| 97980–04208 | 14 – 17 |
| | 15 – 19 |
| 98580–04006 | 35 – 40 |
| | 36 – 40 |
| 98980–05025 | 5 – 17 |
| 99002–03600 | 27 – 30 |
| 99080–04600 | 19 – 48 |
| 99080–05600 | 24 – 25 |
| | 24 – 29 |
| | 24 – 37 |
| 99080–10600 | 25 – 29 |
| 99530–10114 | 5 – 5 |
| 99530–12016 | 3 – 3 |

| PART NO. N° PIECES | REF. NO. |
|---|---|